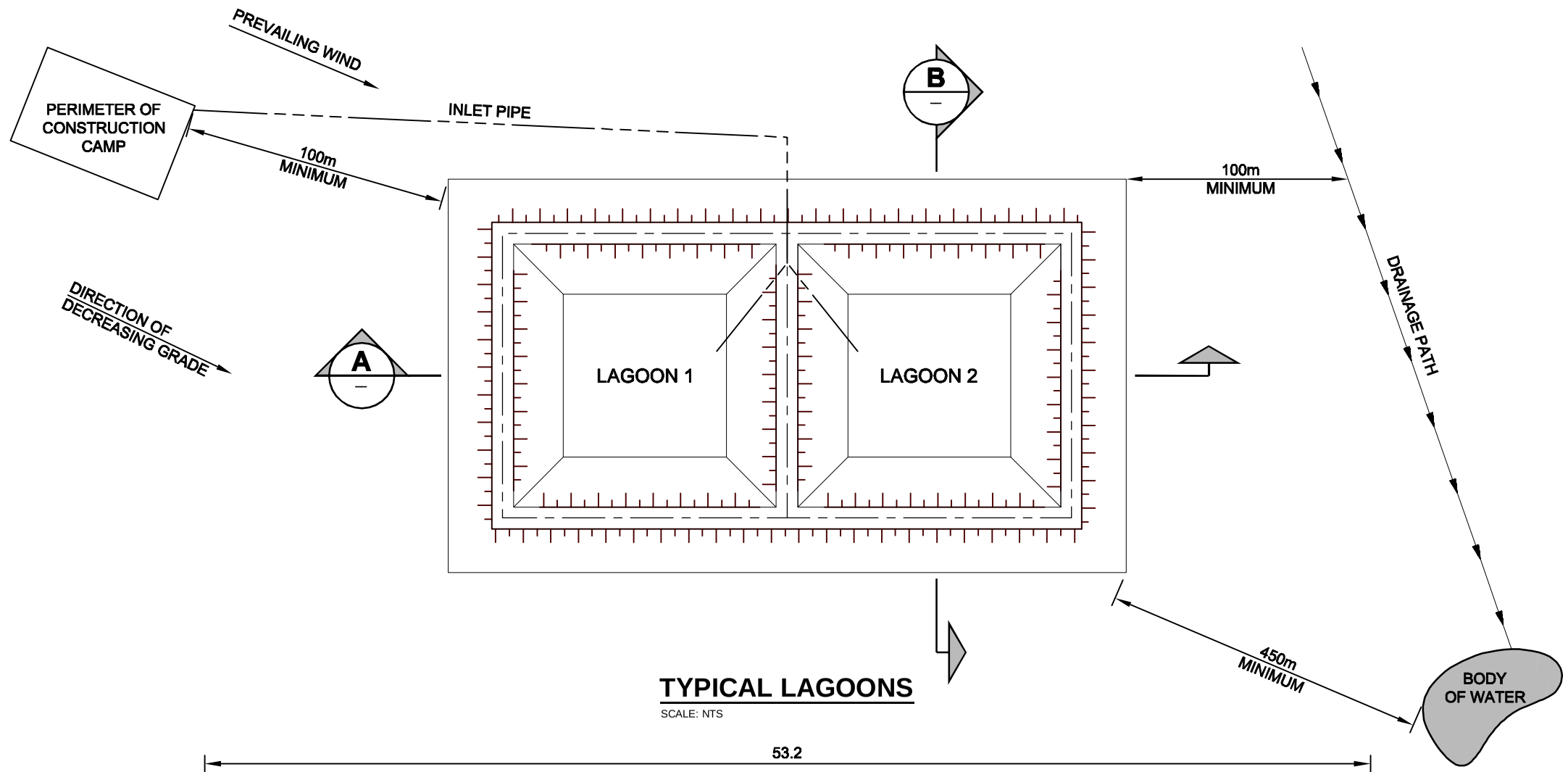

TYPICAL LAGOONS

SCALE: NTS

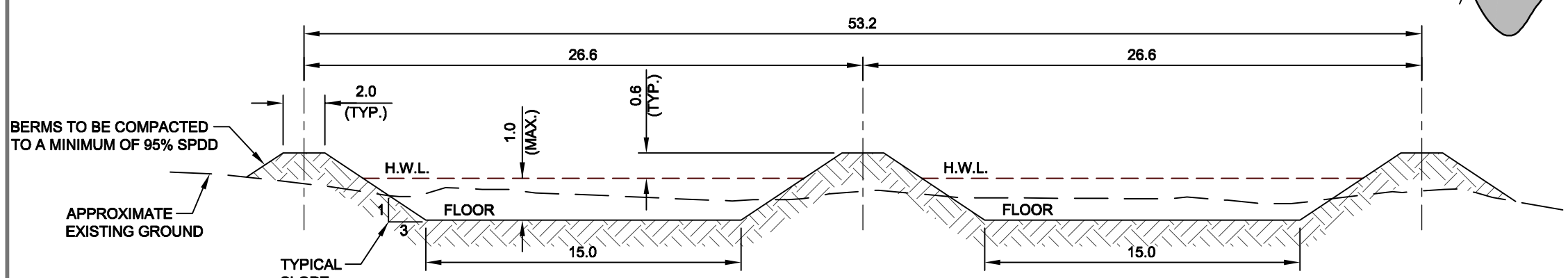

SECTION A

SCALE: NTS

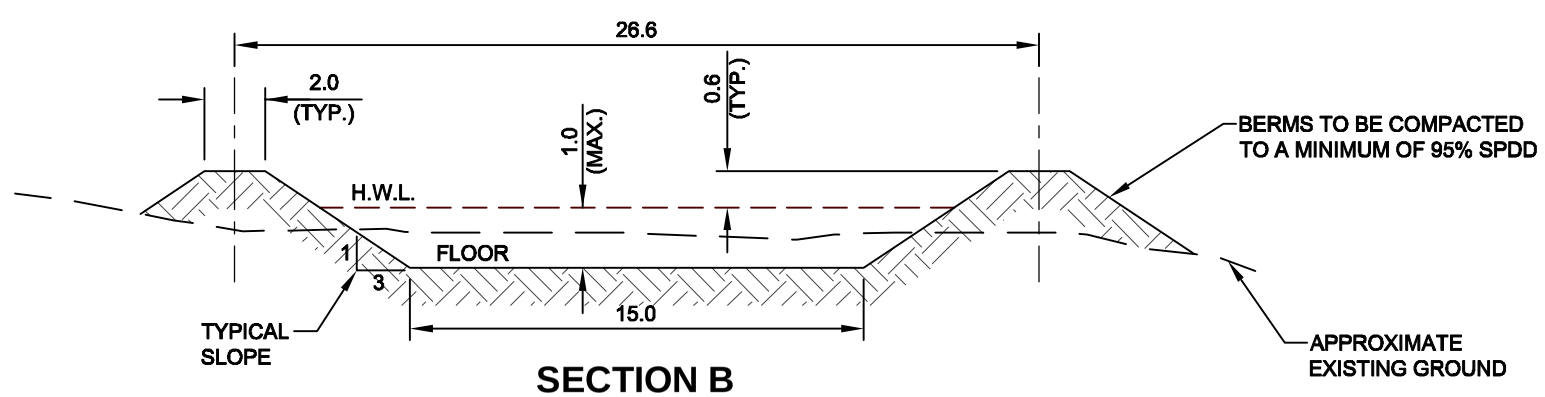

SECTION B

SCALE: NTS

GENERAL NOTES:

1. ALL DIMENSIONS ARE IN METRES UNLESS NOTED OTHERWISE.
2. IN THE EVENT OF SHALLOW BEDROCK, WHERE FLOOR OF THE LAGOON IS JUST BELOW ORIGINAL GROUND, USE 3m WIDE TOP OF BERM.
3. COMPACTED BERMS TO 95% OF STANDARD PROCTOR DRY DENSITY (SPDD), AT OPTIMUM MOISTURE CONTENT.
4. DISCHARGE WASTEWATER FROM CORNER OPPOSITE OF INLET.
5. MAXIMUM FLUID DEPTH = NOT TO EXCEED 1m.
6. LAGOON TO BE LOCATED A MINIMUM OF 100m FROM CAMP AND DOWNWIND, BASED ON PREVAILING WINDS.

ASSUMPTIONS:

1. LAGOON SIZED FOR HALF OF THE TIME THAT THE CAMP IS OCCUPIED.
2. AVERAGE CAMP OCCUPANCY OF 35 PEOPLE.
3. LOADING = 0.175m^3/PERSON/DAY.
4. FREEBOARD ≥ 0.6m.

SAMPLE CALCULATIONS:

LOADING	0.175m^3/PERSON/DAY
CAMP SIZE	x 35 PEOPLE
HALF CONSTRUCTION SEASON	x 50 DAYS
REQUIRED CAPACITY OF EACH LAGOON (NOT INCLUDING FREEBOARD)	= 307m^3
LENGTH (AT 0.5m ABOVE BASE) x WIDTH (AT O.5m ABOVE BASE) x 1m	≥ REQUIRED CAPACITY

FOR INFORMATION ONLY
NOT FOR CONSTRUCTION

National Defence / Défense nationale

DEW LINE CLEAN UP

TYPICAL SEWAGE LAGOON PLAN AND SECTIONS

Figure 1.0

AECOM

FILE NAME: Typical Lagoon.DWG IC - 2009/06/08