APPENDIX 5:

PIN-E CAPE PEEL INTERMEDIATE
DISTANT EARLY WARNING (DEW)
LINE SITE REMEDIATION PROJECT SITE

MAPS & DRAWINGS

Public Works and Government Services Canada

Travaux publics et Services gouvernementaux Canada

Indian and Northern Affairs Canada

Affaires indiennes et du Nord Canada

REAL PROPERTY SERVICES
Western Region

Canadä

REMEDIATION PROJECT

DRAWING INDEX			
SHEET NO.	TITLE	SHEET NO.	TITLE
CIVIL		CIVIL	
R.031527.013 C00	COVER SHEET	R.031527.013 C08	LANDFARM CROSS SECTION
R.031527.013 C01	SITE LOCATION PLAN	R.031527.013 C09	GENERAL DETAILS
R.031527.013 C02	OVERALL SITE PLAN	STRUCTURAL	
R.031527.013 C03	WEST OF STATION AREA SITE PLAN	R.031527.013 S01	STATION AREA DEMOLITION SITE PLAN
R.031527.013 C04	STATION AREA SITE PLAN	R.031527.013 S02	AIRSTRIP AREA DEMOLITION SITE PLAN
R.031527.013 C05	EAST OF STATION AREA SITE PLAN	R.031527.013 S03	BEACH AREA DEMOLITION SITE PLAN
R.031527.013 C06	BEACH AREA SITE PLAN	R.031527.013 S04	WAREHOUSE AND GARAGE FOUNDATION PLANS
R.031527.013 C07	NORTHEAST OF BEACH AREA SITE PLAN	R.031527.013 S05	WINDCONE DETAIL, POWERHOUSE MODULE PLAN AND ELEVATION

PIN-E, CAPE PEEL, NUNAVUT
ISSUED FOR TENDER

AECOM

JULY, 2010

PLOT: Friday, July 30, 2010 3:04:36 PM
Saved by: Hassler, Brad
AECOM FILE NO.: R-031527-013_C00-R0C.DWG
R.031527.013-C000.DWG

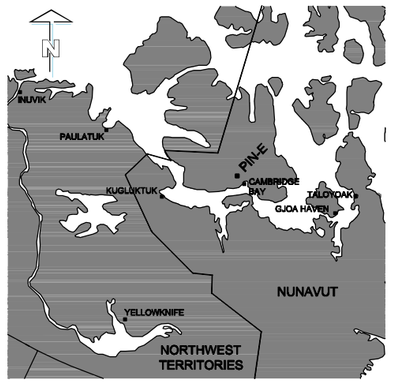

KEY PLAN

POTENTIAL SOURCE FOR GRANULAR MATERIAL					
BORROW AREA	GRANULAR TYPE (SEE SECTION 310517 IN SPECIFICATION)				
	TYPE 2	TYPE 2A	TYPE 3	TYPE 4	TYPE 6
1	✔		✔		✔
2 *			✔	✔	
3 *			✔	✔	
4 **			✔	✔	
5	✔	✔	✔		
6		✔	✔	✔	
7 **	✔	✔	✔		✔
8	✔		✔		✔
9	✔		✔		
10 **	✔		✔		
11 *			✔	✔	

* BORROW AREA 2, 3 AND 11 ARE WITHIN INUIT OWNED LANDS AND ARE NOT AVAILABLE AS SOURCE GRANULAR MATERIAL (NOT SHOWN ON DRAWING).

** BORROW AREA 4, 7 AND 10 LIMITS HAVE BEEN ADJUSTED TO AVOID INUIT OWNED LANDS.

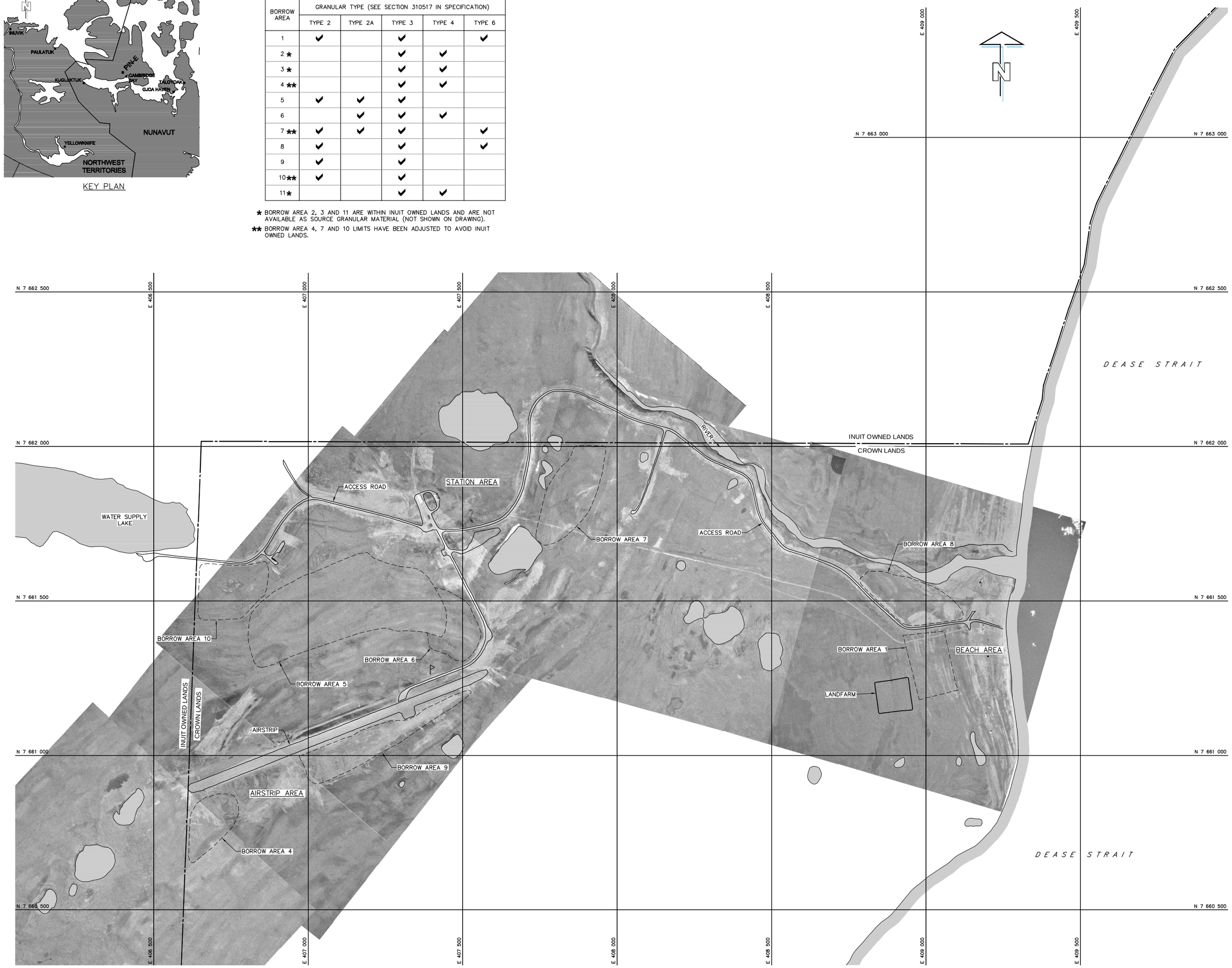

Public Works and Government Services Canada / Travaux publics et Services gouvernementaux Canada

REAL PROPERTY SERVICES
Western Region
SERVICES IMMOBILIERS
Région de l'ouest

PRELIMINARY
NOT FOR CONSTRUCTION

AECOM

This drawing has been prepared for the use of AECOM's client and may not be used, reproduced or relied upon by third parties, except as agreed by AECOM and its client, as required by law or for use by governmental reviewing agencies.
AECOM accepts no responsibility, and denies any liability whatsoever, to any party that modifies this drawing without AECOM's express written consent.
Do not scale this document. All measurements must be obtained from stated dimensions.

GENERAL NOTES:

1. ALL COORDINATES ARE REFERENCED TO NAD83 (CSRS), UTM ZONE 13N. ELEVATIONS ARE REFERENCED TO MEAN SEA LEVEL RELATIVE TO GEOID MODEL CANADIAN HT2_0.
2. ALL DIMENSIONS ARE IN METRES UNLESS NOTED OTHERWISE.

LEGEND:

- BODY OF WATER
- SITE GRID (500m INTERVAL)
- APPROXIMATE LOCATION OF PROPERTY BOUNDARIES
- APPROXIMATE EXTENT OF BORROW AREA

Professional Seals / Sceaux

DO NOT SCALE DRAWINGS

Revision/ Revision	Description/Description	Date/Date
F		
E		
D		
C	ISSUED FOR TENDER	10/07/30
B	ISSUED FOR 99% REVIEW	10/07/05
A	ISSUED FOR 75% REVIEW	10/06/18

Client/client

PUBLIC WORKS AND GOVERNMENT SERVICES CANADA

Project title/Titre du projet

PIN-E REMEDIATION PROJECT

Approved by/Approuvé par: **B. FEDORAK**

Designed by/Concept par: **T. ESHPETER**

Drawn by/Dessiné par: **I. CECH**

PWGSC Project Manager/Administrateur de Projets TPSGC: **M. McELWAINE**

PWGSC, Architectural and Engineering Resources Manager/ Ressources Architectural et de Directeur d'ingénierie, TPSGC

Client/client: **PUBLIC WORKS AND GOVERNMENT SERVICES CANADA**

Drawing title/Titre du dessin

SITE LOCATION PLAN

Project No./No. du projet	Sheet/Feuille	Revision no./ La Révision no.
R.031527.013	C01 OF 09	C

R.031527.013-C01

PLOT: Friday, July 30, 2010 3:05:04 PM
Saved by: Hassler, Brad
AECOM FILE NO.: R-031527-013_C01-R0C.DWG

81 – 1000 x 707

SURVEY CONTROL MONUMENTS				
NO.	COORDINATES		ELEVATION	DESCRIPTION
	NORTHING	EASTING		
CM3745	7 662 007.664	409 331.004	1.548	GEODETIC BENCHMARK
CM10782	7 662 016.660	406 653.159	59.795	GEODETIC BENCHMARK
CM809131	7 661 737.166	407 402.030	58.806	GEODETIC BENCHMARK

TEMPORARY BENCHMARKS				
NO.	COORDINATES		ELEVATION	DESCRIPTION
	NORTHING	EASTING		
TBM192	7 661 796.063	407 400.565	58.892	IRON BAR
TBM3985	7 662 376.493	409 035.732	10.642	IRON BAR
TBM4210	7 662 536.793	408 079.972	40.866	IRON BAR
TBM9002	7 661 907.484	407 351.100	58.041	IRON BAR
TBM9005	7 662 143.598	408 006.581	42.365	IRON BAR

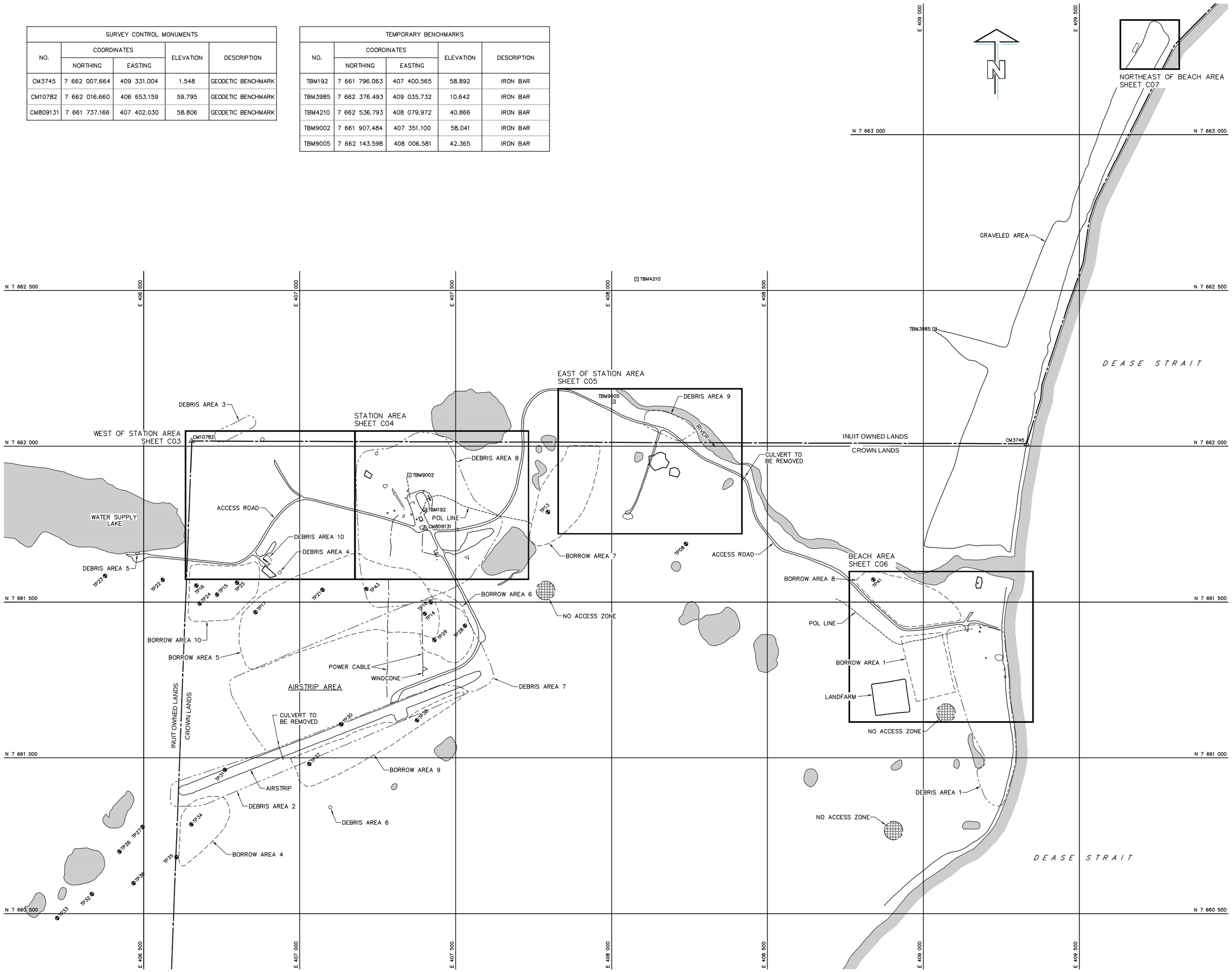

Public Works and Government Services Canada / Travaux publics et Services gouvernementaux Canada

REAL PROPERTY SERVICES
Western Region
SERVICES IMMOBILIERS
Région de l'ouest

PRELIMINARY
NOT FOR CONSTRUCTION

AECOM

This drawing has been prepared for the use of AECOM's client and may not be used, reproduced or relied upon by third parties, except as agreed by AECOM and its client, as required by law or for use by governmental reviewing agencies.
AECOM accepts no responsibility, and denies any liability whatsoever, to any party that modifies this drawing without AECOM's express written consent.
Do not scale this document. All measurements must be obtained from stated dimensions.

GENERAL NOTES:

1. ALL COORDINATES ARE REFERENCED TO NAD83 (CSRS), UTM ZONE 13N. ELEVATIONS ARE REFERENCED TO MEAN SEA LEVEL RELATIVE TO GEOID MODEL CANADIAN HT2_0.
2. ALL DIMENSIONS ARE IN METRES UNLESS NOTED OTHERWISE.
3. CULVERTS TO BE REMOVED AND CULVERT AREA TO BE GRADED TO DRAIN PRIOR TO PROJECT COMPLETION.
4. ALL NON-HAZARDOUS WASTE, TIER I, AND TYPE A CONTAMINATED SOILS FROM PIN-E TO BE TRANSPORTED AND DISPOSED OF AT THE NON-HAZARDOUS WASTE LANDFILL AT PIN-D, ROSS POINT.

LEGEND:

- BODY OF WATER
- SITE GRID (500m INTERVAL)
- APPROXIMATE LOCATION OF PROPERTY BOUNDARIES
- APPROXIMATE EXTENT OF BORROW AREA
- APPROXIMATE EXTENT OF DEBRIS AREA
- NO ACCESS ZONE
- SURVEY CONTROL MONUMENT
- TEMPORARY BENCHMARK
- TESTPIT LOCATION

DO NOT SCALE DRAWINGS

Revision/ Revision	Description/Description	Date/Date
F		
E		
D		
C	ISSUED FOR TENDER	10/07/30
B	ISSUED FOR 99% REVIEW	10/07/05
A	ISSUED FOR 75% REVIEW	10/06/18

Client/client
PUBLIC WORKS AND GOVERNMENT SERVICES CANADA

Project title/Titre du projet
PIN-E REMEDIATION PROJECT

Approved by/Approuve par: **B. FEDORAK**
Designed by/Concept par: **T. ESHPETER**
Drawn by/Dessine par: **I. CECH**
PWGSC Project Manager/Administrateur de Projets TPSGC: **M. McELWAINE**
PWGSC, Architectural and Engineering Resources Manager/ Ressources Architectural et de Directeur d'Ingénierie, TPSGC
Client/client: **PUBLIC WORKS AND GOVERNMENT SERVICES CANADA**
Drawing title/Titre du dessin: **OVERALL SITE PLAN**

Project No./No. du projet	Sheet/Feuille	Revision no./ La Révision no.
R.031527.013	C02 OF 09	C

R.031527.013-C02

PLOT: Friday, July 30, 2010 3:10:00 PM
Saved by: Hassler, Brad
AECOM FILE NO.: R-031527-013_C02-ROC.DWG
B1 – 1000 x 707

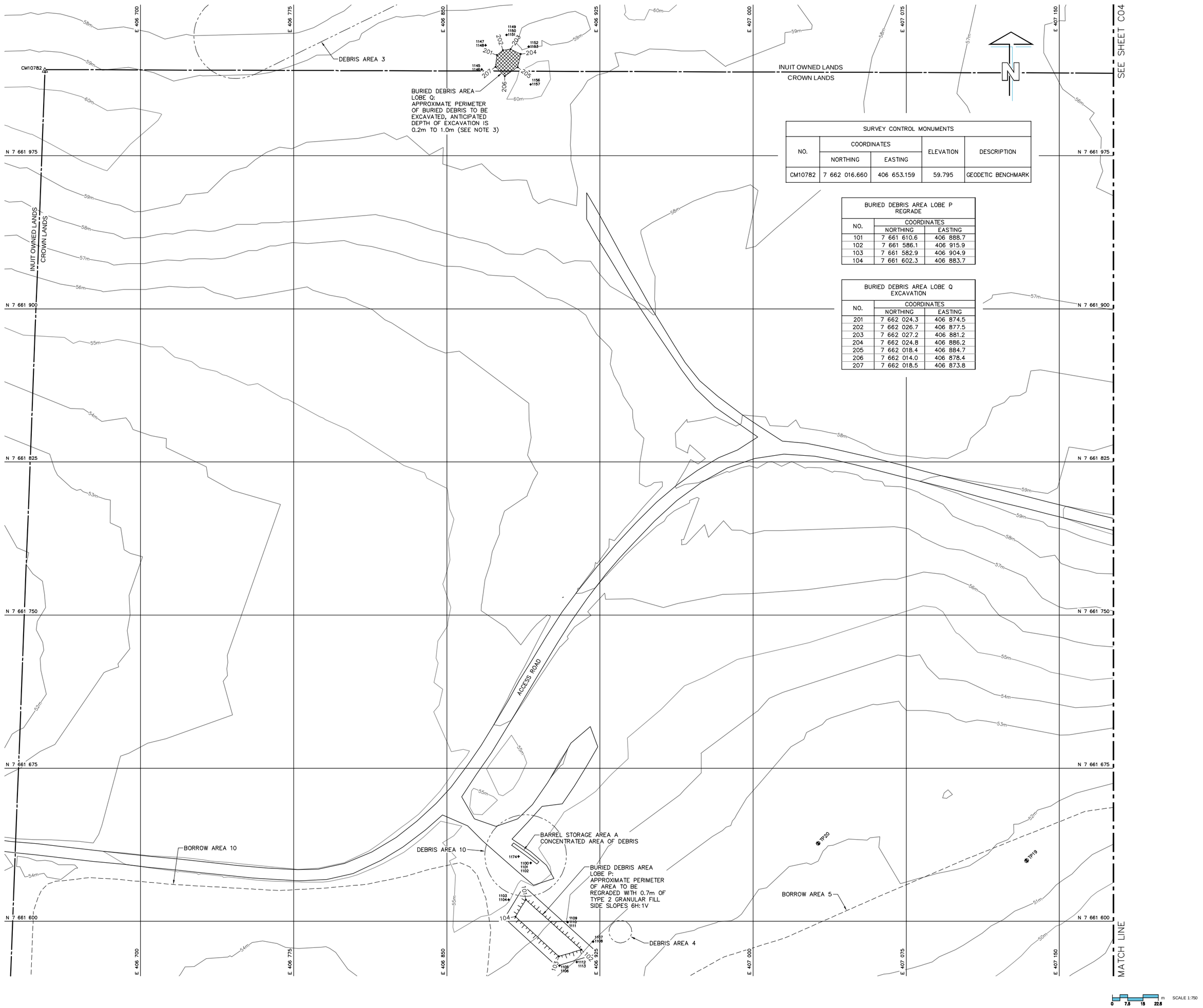

SURVEY CONTROL MONUMENTS				
NO.	COORDINATES		ELEVATION	DESCRIPTION
	NORTHING	EASTING		
CM10782	7 662 016.660	406 653.159	59.795	GEODETIC BENCHMARK

BURIED DEBRIS AREA LOBE P REGRADE		
NO.	COORDINATES	
	NORTHING	EASTING
101	7 661 610.6	406 888.7
102	7 661 586.1	406 915.9
103	7 661 582.9	406 904.9
104	7 661 602.3	406 883.7

BURIED DEBRIS AREA LOBE Q EXCAVATION		
NO.	COORDINATES	
	NORTHING	EASTING
201	7 662 024.3	406 874.5
202	7 662 026.7	406 877.5
203	7 662 027.2	406 881.2
204	7 662 024.8	406 886.2
205	7 662 018.4	406 884.7
206	7 662 014.0	406 878.4
207	7 662 018.5	406 873.8

Public Works and Government Services Canada / Travaux publics et Services gouvernementaux Canada

REAL PROPERTY SERVICES
Western Region
SERVICES IMMOBILIERS
Région de l'ouest

PRELIMINARY
NOT FOR CONSTRUCTION

AECOM

This drawing has been prepared for the use of AECOM's client and may not be used, reproduced or relied upon by third parties, except as agreed by AECOM and its client, as required by law or for use by governmental reviewing agencies.
AECOM accepts no responsibility, and denies any liability whatsoever, to any party that modifies this drawing without AECOM's express written consent.
Do not scale this document. All measurements must be obtained from stated dimensions.

GENERAL NOTES:

1. ALL COORDINATES ARE REFERENCED TO NAD83 (CSRS), UTM ZONE 13N. ELEVATIONS ARE REFERENCED TO MEAN SEA LEVEL RELATIVE TO GEOID MODEL CANADIAN HT2_0.
2. ALL DIMENSIONS AND ELEVATIONS ARE IN METRES UNLESS NOTED OTHERWISE.
3. REPLACE CLEAN LANDFILL EXCAVATION SOILS FROM THE EXCAVATION OF LOBE Q AS BACKFILL. CAP WITH 0.3m MINIMUM TYPE 3 GRANULAR FILL OVER THE CLEAN BACKFILL TO MATCH SURROUNDING TERRAIN AND PREVENT PONDING.
4. ALL NON-HAZARDOUS WASTE, TIER I, AND TYPE A CONTAMINATED SOILS FROM PIN-E TO BE TRANSPORTED AND DISPOSED OF AT THE NON-HAZARDOUS WASTE LANDFILL AT PIN-D, ROSS POINT.
5. ALL SURFACE DEBRIS IS TO BE REMOVED FROM ALL CONTAMINATED SOIL AREAS AND EXISTING AND NEW LANDFILL AREAS PRIOR TO ANY FILL PLACEMENT OR EXCAVATION TAKING PLACE.

LEGEND:

- SITE GRID (75m INTERVAL)
- APPROXIMATE LOCATION OF PROPERTY BOUNDARIES
- APPROXIMATE EXTENT OF BORROW AREA
- APPROXIMATE EXTENT OF DEBRIS AREA
- BURIED DEBRIS EXCAVATION
- SURVEY CONTROL MONUMENT
- TESTPIT LOCATION
- •504 SAMPLE LOCATION

DO NOT SCALE DRAWINGS

Revision/ Révision	Description/Description	Date/Date
F		
E		
D		
C	ISSUED FOR TENDER	10/07/30
B	ISSUED FOR 99% REVIEW	10/07/05
A	ISSUED FOR 75% REVIEW	10/06/18

Client/client
PUBLIC WORKS AND GOVERNMENT SERVICES CANADA

Project title/Titre du projet
PIN-E REMEDIATION PROJECT

Approved by/Approuvé par: **B. FEDORAK**
Designed by/Concept par: **T. ESHPETER**
Drawn by/Dessiné par: **I. CECH**
PWGSC Project Manager/Administrateur de Projets TPSGC: **M. McELWAINE**
PWGSC, Architectural and Engineering Resources Manager/ Ressources Architectural et de Directeur d'ingénierie, TPSGC
Client/client: **PUBLIC WORKS AND GOVERNMENT SERVICES CANADA**

Drawing title/Titre du dessin
WEST OF STATION AREA SITE PLAN

Project No./No. du projet	Sheet/Feuille	Revision no./ La Révision no.
R.031527.013	C03 OF 09	C

PLOT: Friday, July 30, 2010 3:10:31 PM
Saved by: Hassler, Brad
AECOM FILE NO.: R-031527-013_C03-R0C.DWG
B1 – 1000 x 707
R.031527.013-C03

CONTAMINATED SOIL TO BE EXCAVATED							
AREA NAME	APPROX. AREA (m^2)	ESTIMATED DEPTH OF CONTAMINATION (m)	ESTIMATED VOLUME OF EXCAVATION (m^3)	CONTAINMENT CLASSIFICATION	COMMENTS	REFERENCE POINTS	
						NORTHING	EASTING
SO-1132	25	0.3	9	TIER II	OFF-SITE DISPOSAL	7 662 011	407 348
SPOL-1047	568	0.9	550	TYPE B	ON-SITE LANDFARM	7 661 831	407 422

BURIED DEBRIS AREA LOBE L EXCAVATION		
NO.	COORDINATES	
	NORTHING	EASTING
301	7 661 644.1	407 529.2
302	7 661 648.8	407 540.6
303	7 661 637.7	407 541.7

BURIED DEBRIS AREA LOBE N REGRADE		
NO.	COORDINATES	
	NORTHING	EASTING
501	7 661 916.5	407 214.2
502	7 661 907.6	407 226.6
503	7 661 902.1	407 223.5
504	7 661 908.0	407 211.3

TIER II CONTAMINATED SOIL EXCAVATION (SO-1132)		
NO.	COORDINATES	
	NORTHING	EASTING
A1	7 662 011.2	407 345.0
A2	7 662 014.6	407 348.7
A3	7 662 010.9	407 352.0
A4	7 662 007.5	407 348.4

BURIED DEBRIS AREA LOBE M EXCAVATION		
NO.	COORDINATES	
	NORTHING	EASTING
401	7 661 980.3	407 242.8
402	7 661 983.6	407 247.7
403	7 661 980.2	407 249.8
404	7 661 975.7	407 249.7
405	7 661 971.2	407 245.8
406	7 661 972.8	407 241.8

BURIED DEBRIS AREA LOBE O EXCAVATION		
NO.	COORDINATES	
	NORTHING	EASTING
601	7 661 876.7	407 267.5
602	7 661 878.4	407 279.1
603	7 661 873.2	407 281.3
604	7 661 865.1	407 272.6
605	7 661 871.8	407 266.5

TYPE B CONTAMINATED SOIL EXCAVATION (SPOL-1047)		
NO.	COORDINATES	
	NORTHING	EASTING
B1	7 661 834.2	407 404.2
B2	7 661 846.2	407 433.2
B3	7 661 839.4	407 436.3
B4	7 661 826.7	407 434.3
B5	7 661 819.1	407 420.5
B6	7 661 820.8	407 407.3

SURVEY CONTROL MONUMENTS				
NO.	COORDINATES		ELEVATION	DESCRIPTION
	NORTHING	EASTING		
CM809131	7 661 737.166	407 402.030	58.806	GEODETIC BENCHMARK

TEMPORARY BENCHMARKS				
NO.	COORDINATES		ELEVATION	DESCRIPTION
	NORTHING	EASTING		
TBM192	7 661 796.063	407 400.565	58.892	IRON BAR
TBM9002	7 661 907.484	407 351.100	58.041	IRON BAR

Public Works and Government Services Canada / Travaux publics et Services gouvernementaux Canada

REAL PROPERTY SERVICES
Western Region
SERVICES IMMOBILIERS
Région de l'ouest

PRELIMINARY
NOT FOR CONSTRUCTION

AECOM

This drawing has been prepared for the use of AECOM's client and may not be used, reproduced or relied upon by third parties, except as agreed by AECOM and its client, as required by law or for use by governmental reviewing agencies. AECOM accepts no responsibility, and denies any liability whatsoever, to any party that modifies this drawing without AECOM's express written consent.
Do not scale this document. All measurements must be obtained from stated dimensions.

GENERAL NOTES:

1. ALL COORDINATES ARE REFERENCED TO NAD83 (CSRS), UTM ZONE 13N. ELEVATIONS ARE REFERENCED TO MEAN SEA LEVEL RELATIVE TO GEOID MODEL CANADIAN HT2_0.
2. ALL DIMENSIONS AND ELEVATIONS ARE IN METRES UNLESS NOTED OTHERWISE.
3. REPLACE CLEAN LANDFILL EXCAVATION SOILS FROM THE EXCAVATION OF LOBES L, M AND O AS BACKFILL. CAP WITH 0.3m MINIMUM TYPE 3 GRANULAR FILL OVER THE CLEAN BACKFILL TO MATCH SURROUNDING TERRAIN AND PREVENT PONDING.
4. ALL NON-HAZARDOUS WASTE, TIER I, AND TYPE A CONTAMINATED SOILS FROM PIN-E TO BE TRANSPORTED AND DISPOSED OF AT THE NON-HAZARDOUS WASTE LANDFILL AT PIN-D, ROSS POINT.
5. ALL SURFACE DEBRIS IS TO BE REMOVED FROM ALL CONTAMINATED SOIL AREAS AND EXISTING AND NEW LANDFILL AREAS PRIOR TO ANY FILL PLACEMENT OR EXCAVATION TAKING PLACE.

LEGEND:

- BODY OF WATER
- SITE GRID (75m INTERVAL)
- APPROXIMATE LOCATION OF PROPERTY BOUNDARIES
- APPROXIMATE EXTENT OF BORROW AREA
- APPROXIMATE EXTENT OF DEBRIS AREA
- BURIED DEBRIS EXCAVATION
- TIER II CONTAMINATED SOIL
- TYPE B CONTAMINATED SOIL
- SURVEY CONTROL MONUMENT
- TEMPORARY BENCHMARK
- TESTPIT LOCATION
- 504 SAMPLE LOCATION

DO NOT SCALE DRAWINGS

Revision/Revision	Description/Description	Date/Date
F		
E		
D		
C	ISSUED FOR TENDER	10/07/30
B	ISSUED FOR 99% REVIEW	10/07/05
A	ISSUED FOR 75% REVIEW	10/06/18

Client/client
PUBLIC WORKS AND GOVERNMENT SERVICES CANADA

Project title/Titre du projet
PIN-E REMEDIATION PROJECT

Approved by/Approuvé par: **B. FEDORAK**
Designed by/Concept par: **T. ESHPETER**
Drawn by/Dessiné par: **I. CECH**
PWGSC Project Manager/Administrateur de Projets TPSGC: **M. McELWAINE**
PWGSC, Architectural and Engineering Resources Manager/ Ressources Architectural et de Directeur d'ingénierie, TPSGC
Client/client: **PUBLIC WORKS AND GOVERNMENT SERVICES CANADA**
Drawing title/Titre du dessin: **STATION AREA SITE PLAN**

Project No./No. du projet	Sheet/Feuille	Revision no./ La Révision no.
R.031527.013	C04 OF 09	C

SCALE 1:750

PLOT: Friday, July 30, 2010 3:11:55 PM
Saved by: Hassler, Brad
AECOM FILE NO.: R-031527-013_C04-R0C.DWG
B1 – 1000 x 707
R.031527.013-C04

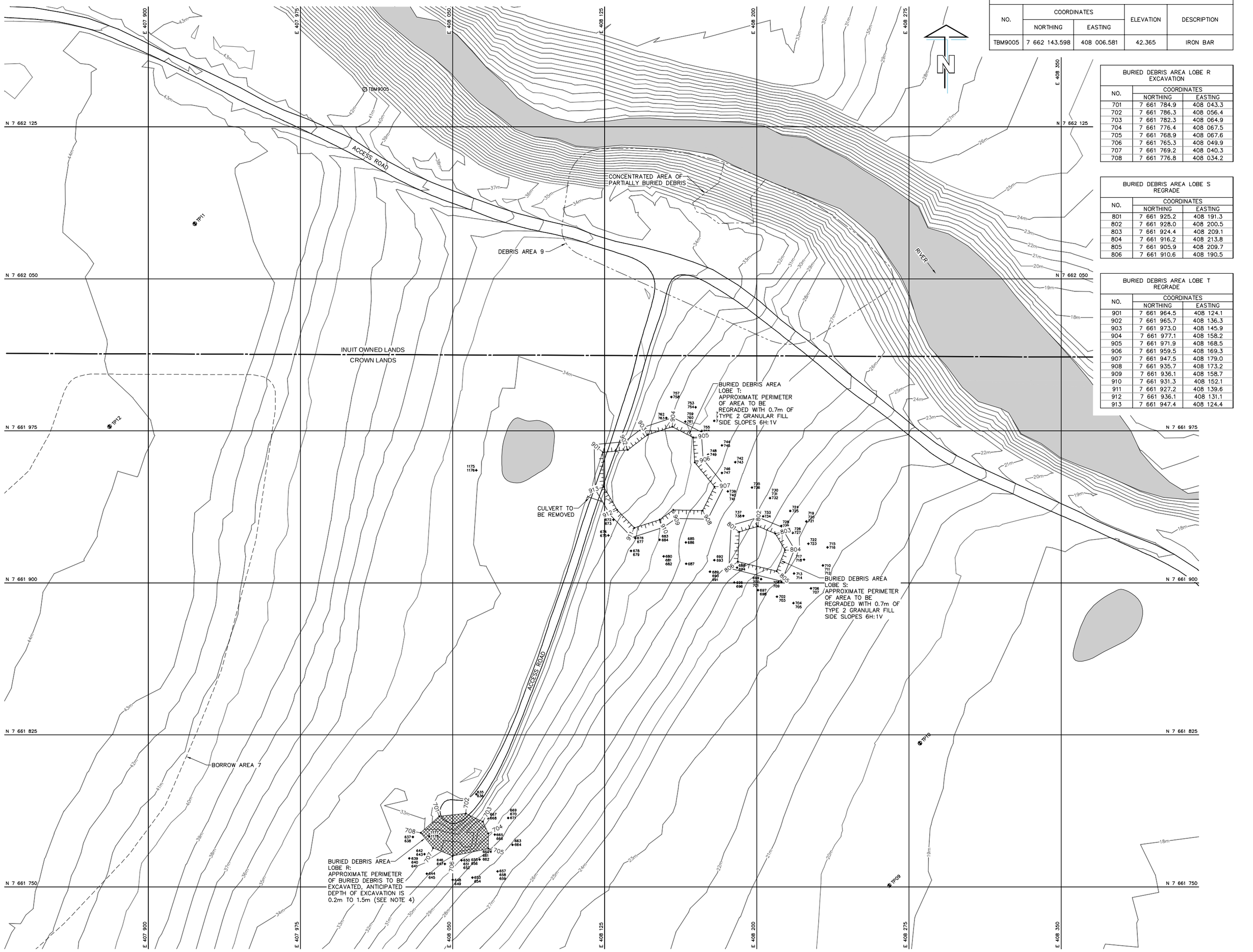

TEMPORARY BENCHMARKS				
NO.	COORDINATES		ELEVATION	DESCRIPTION
	NORTHING	EASTING		
TBM9005	7 662 143.598	408 006.581	42.365	IRON BAR

BURIED DEBRIS AREA LOBE R EXCAVATION		
NO.	COORDINATES	
	NORTHING	EASTING
701	7 661 784.9	408 043.3
702	7 661 786.3	408 056.4
703	7 661 782.3	408 064.9
704	7 661 776.4	408 067.5
705	7 661 768.9	408 067.6
706	7 661 765.3	408 049.9
707	7 661 769.2	408 040.3
708	7 661 776.8	408 034.2

BURIED DEBRIS AREA LOBE S REGRADE		
NO.	COORDINATES	
	NORTHING	EASTING
801	7 661 925.2	408 191.3
802	7 661 928.0	408 200.5
803	7 661 924.4	408 209.1
804	7 661 916.2	408 213.8
805	7 661 905.9	408 209.7
806	7 661 910.6	408 190.5

BURIED DEBRIS AREA LOBE T REGRADE		
NO.	COORDINATES	
	NORTHING	EASTING
901	7 661 964.5	408 124.1
902	7 661 965.7	408 136.3
903	7 661 973.0	408 145.9
904	7 661 977.1	408 158.2
905	7 661 971.9	408 168.5
906	7 661 959.5	408 169.3
907	7 661 947.5	408 179.0
908	7 661 935.7	408 173.2
909	7 661 936.1	408 158.7
910	7 661 931.3	408 152.1
911	7 661 927.2	408 139.6
912	7 661 936.1	408 131.1
913	7 661 947.4	408 124.4

Public Works and Government Services Canada / Travaux publics et Services gouvernementaux Canada

REAL PROPERTY SERVICES
Western Region
SERVICES IMMOBILIERS
Région de l'ouest

PRELIMINARY
NOT FOR CONSTRUCTION

AECOM

This drawing has been prepared for the use of AECOM's client and may not be used, reproduced or relied upon by third parties, except as agreed by AECOM and its client, as required by law or for use by gov-ernmental reviewing agencies.
AECOM accepts no responsibility, and denies any liability whatsoever, to any party that modifies this drawing without AECOM's express written consent.
Do not scale this document. All measurements must be obtained from stated dimensions.

GENERAL NOTES:

1. ALL COORDINATES ARE REFERENCED TO NAD83 (CSRS), UTM ZONE 13N. ELEVATIONS ARE REFERENCED TO MEAN SEA LEVEL RELATIVE TO GEOID MODEL CANADIAN HT2_0.
2. ALL DIMENSIONS AND ELEVATIONS ARE IN METRES UNLESS NOTED OTHERWISE.
3. CULVERT TO BE REMOVED AND CULVERT AREA TO BE GRADED TO DRAIN PRIOR TO PROJECT COMPLETION.
4. REPLACE CLEAN LANDFILL EXCAVATION SOILS FROM THE EXCAVATION OF LOBE R AS BACKFILL. CAP WITH 0.3m MINIMUM TYPE 3 GRANULAR FILL OVER THE CLEAN BACKFILL TO MATCH SURROUNDING TERRAIN AND PREVENT PONDING.
5. ALL NON-HAZARDOUS WASTE, TIER I, AND TYPE A CONTAMINATED SOILS FROM PIN-E TO BE TRANSPORTED AND DISPOSED OF AT THE NON-HAZARDOUS WASTE LANDFILL AT PIN-D, ROSS POINT.
6. ALL SURFACE DEBRIS IS TO BE REMOVED FROM ALL CONTAMINATED SOIL AREAS AND EXISTING AND NEW LANDFILL AREAS PRIOR TO ANY FILL PLACEMENT OR EXCAVATION TAKING PLACE.

LEGEND:

- BODY OF WATER
- SITE GRID (75m INTERVAL)
- APPROXIMATE LOCATION OF PROPERTY BOUNDARIES
- APPROXIMATE EXTENT OF BORROW AREA
- APPROXIMATE EXTENT OF DEBRIS AREA
- BURIED DEBRIS EXCAVATION
- TEMPORARY BENCHMARK
- TESTPIT LOCATION
- SAMPLE LOCATION

DO NOT SCALE DRAWINGS

Revision/ Revision	Description/Description	Date/Date
F		
E		
D		
C	ISSUED FOR TENDER	10/07/30
B	ISSUED FOR 99% REVIEW	10/07/05
A	ISSUED FOR 75% REVIEW	10/06/18

Client/client

PUBLIC WORKS AND GOVERNMENT SERVICES CANADA

Project title/Titre du projet

PIN-E REMEDIATION PROJECT

Approved by/Approuve par: **B. FEDORAK**

Designed by/Concept par: **T. ESHPETER**

Drawn by/Dessine par: **I. CECH**

PWGSC Project Manager/Administrateur de Projets TPSGC: **M. McELWAINE**

PWGSC, Architectural and Engineering Resources Manager/ Ressources Architectural et de Directeur d'Ingénierie, TPSGC

Client/client: **PUBLIC WORKS AND GOVERNMENT SERVICES CANADA**

Drawing title/Titre du dessin

EAST OF STATION AREA SITE PLAN

Project No./No. du projet	Sheet/Feuille	Revision no./ La Révision no.
R.031527.013	C05 OF 09	C

PLOT: Friday, July 30, 2010 3:12:19 PM
Saved by: Hassler, Brad
AECOM FILE NO.: R-031527-013_C05-ROC.DWG

B1 – 1000 x 707

R.031527.013-C05

CONTAMINATED SOIL TO BE EXCAVATED							
AREA NAME	APPROX. AREA (m^2)	ESTIMATED DEPTH OF CONTAMINATION (m)	ESTIMATED VOLUME OF EXCAVATION (m^3)	CONTAINMENT CLASSIFICATION	COMMENTS	REFERENCE POINTS	
						NORTHING	EASTING
BH-788	32	0.3	11	TIER I	DISPOSAL AT PIN-D	7 661 126	409 195
BPOL-505	1512	1.0	1598	TYPE B	ON-SITE LANDFARM	7 661 404	409 179

PROPOSED LANDFARM			
NO.	COORDINATES		ELEV.
	NORTHING	EASTING	
1001	7 661 233.9	408 836.1	12.7
1002	7 661 240.7	408 886.9	11.2
1003	7 661 247.6	408 937.7	11.2
1004	7 661 152.4	408 950.5	11.2
1005	7 661 145.6	408 899.7	11.2
1006	7 661 138.7	408 848.9	13.0

BURIED DEBRIS AREA LOBE Y REGRADE		
NO.	COORDINATES	
	NORTHING	EASTING
1401	7 661 576.2	409 176.4
1402	7 661 574.2	409 182.6
1403	7 661 564.8	409 183.9
1404	7 661 549.2	409 180.7
1405	7 661 548.8	409 173.1
1406	7 661 553.1	409 171.7

BURIED DEBRIS AREA LOBE V EXCAVATION		
NO.	COORDINATES	
	NORTHING	EASTING
1101	7 661 260.9	409 258.7
1102	7 661 263.0	409 260.4
1103	7 661 262.4	409 264.8
1104	7 661 259.7	409 265.1
1105	7 661 256.3	409 264.3
1106	7 661 257.4	409 260.6

TYPE B CONTAMINATED SOIL EXCAVATION (BPOL-505)		
NO.	COORDINATES	
	NORTHING	EASTING
C1	7 661 414.7	409 149.5
C2	7 661 420.0	409 154.9
C3	7 661 418.3	409 189.3
C4	7 661 424.5	409 199.8
C5	7 661 423.4	409 203.7
C6	7 661 416.9	409 202.5
C7	7 661 392.6	409 203.0
C8	7 661 389.7	409 199.5
C9	7 661 391.8	409 186.9
C10	7 661 384.7	409 178.8
C11	7 661 389.1	409 158.2
C12	7 661 401.2	409 159.9
C13	7 661 403.5	409 151.7

BURIED DEBRIS AREA LOBE W EXCAVATION		
NO.	COORDINATES	
	NORTHING	EASTING
1201	7 661 286.1	409 258.6
1202	7 661 286.9	409 262.0
1203	7 661 283.4	409 261.7
1204	7 661 281.5	409 258.8

TIER I CONTAMINATED SOIL EXCAVATION (BH-788)		
NO.	COORDINATES	
	NORTHING	EASTING
D1	7 661 129.0	409 192.1
D2	7 661 129.0	409 197.8
D3	7 661 123.3	409 197.8
D4	7 661 123.3	409 192.1

BURIED DEBRIS AREA LOBE X EXCAVATION		
NO.	COORDINATES	
	NORTHING	EASTING
1301	7 661 328.1	409 230.5
1302	7 661 330.9	409 235.6
1303	7 661 331.3	409 244.1
1304	7 661 329.6	409 253.6
1305	7 661 315.2	409 253.8
1306	7 661 312.5	409 245.7
1307	7 661 311.5	409 238.6
1308	7 661 317.0	409 232.9
1309	7 661 322.8	409 229.5

Public Works and Government Services Canada / Travaux publics et Services gouvernementaux Canada

REAL PROPERTY SERVICES
Western Region
SERVICES IMMOBILIERS
Région de l'ouest

PRELIMINARY
NOT FOR CONSTRUCTION

AECOM

This drawing has been prepared for the use of AECOM's client and may not be used, reproduced or relied upon by third parties, except as agreed by AECOM and its client, as required by law or for use by governmental reviewing agencies. AECOM accepts no responsibility, and denies any liability whatsoever, to any party that modifies this drawing without AECOM's express written consent.
Do not scale this document. All measurements must be obtained from stated dimensions.

GENERAL NOTES:

1. ALL COORDINATES ARE REFERENCED TO NAD83 (CSRS), UTM ZONE 13N. ELEVATIONS ARE REFERENCED TO MEAN SEA LEVEL RELATIVE TO GEOID MODEL CANADIAN HT2_0.
2. ALL DIMENSIONS AND ELEVATIONS ARE IN METRES UNLESS NOTED OTHERWISE.
3. ALL CLEAN LANDFILL EXCAVATION SOILS FROM THE EXCAVATION OF LOBES V, W AND X ARE TO BE PLACED AS THE BOTTOM LIFT OF BACKFILL IN CONTAMINATED SOIL AREA BPOL-505. BACKFILL THE EXCAVATION OF LOBES V, W AND X WITH TYPE 3 GRANULAR FILL TO MATCH SURROUNDING TERRAIN AND PREVENT PONDING.
4. ALL NON-HAZARDOUS WASTE, TIER I, AND TYPE A CONTAMINATED SOILS FROM PIN-E TO BE TRANSPORTED AND DISPOSED OF AT THE NON-HAZARDOUS WASTE LANDFILL AT PIN-D, ROSS POINT.
5. ALL SURFACE DEBRIS IS TO BE REMOVED FROM ALL CONTAMINATED SOIL AREAS AND EXISTING AND NEW LANDFILL AREAS PRIOR TO ANY FILL PLACEMENT OR EXCAVATION TAKING PLACE.
6. FOR MONITORING WELL INSTALLATION DETAILS, SEE SHEET C09. EXACT LOCATIONS TO BE FIELD DETERMINED BY THE DEPARTMENTAL REPRESENTATIVE.

LEGEND:

- BODY OF WATER
- SITE GRID (75m INTERVAL)
- APPROXIMATE EXTENT OF BORROW AREA
- APPROXIMATE EXTENT OF DEBRIS AREA
- BURIED DEBRIS EXCAVATION
- TIER I CONTAMINATED SOIL
- TYPE B CONTAMINATED SOIL
- NO ACCESS ZONE
- TESTPIT LOCATION
- •504 SAMPLE LOCATION
- PROPOSED MONITORING WELL LOCATION (3)
- B PROPOSED BACKGROUND MONITORING WELL LOCATION (1)

DO NOT SCALE DRAWINGS

Revision/ Revision	Description/Description	Date/Date
F		
E		
D		
C	ISSUED FOR TENDER	10/07/30
B	ISSUED FOR 99% REVIEW	10/07/05
A	ISSUED FOR 75% REVIEW	10/06/18

Client/client
PUBLIC WORKS AND GOVERNMENT SERVICES CANADA

Project title/Titre du projet
PIN-E REMEDIATION PROJECT

Approved by/Approuvé par: **B. FEDORAK**
Designed by/Concept par: **T. ESHPETER**
Drawn by/Dessiné par: **I. CECH**
PWGSC Project Manager/Administrateur de Projets TPSGC: **M. McELWAINE**
PWGSC, Architectural and Engineering Resources Manager/ Ressources Architectural et de Directeur d'Ingénierie, TPSGC
Client/client: **PUBLIC WORKS AND GOVERNMENT SERVICES CANADA**
Drawing title/Titre du dessin: **BEACH AREA SITE PLAN**

Project No./No. du projet	Sheet/Feuille	Revision no./ La Révision no.
R.031527.013	C06 OF 09	C

PLOT: Friday, July 30, 2010 3:12:49 PM
Saved by: Hassler, Brad
AECOM FILE NO.: R-031527-013_C06-R0C.DWG
B1 – 1000 x 707
R.031527.013-C06

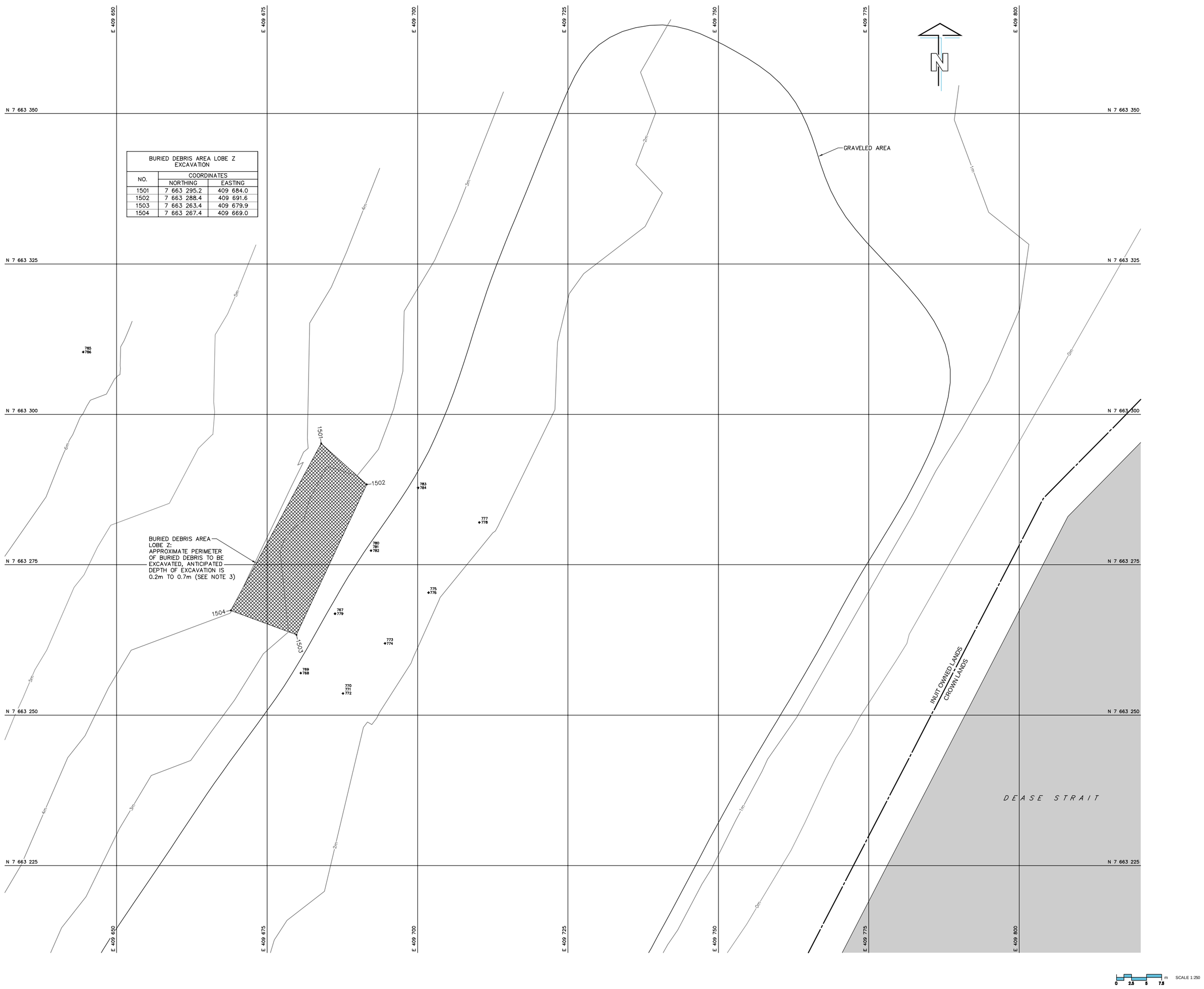

BURIED DEBRIS AREA LOBE Z EXCAVATION		
NO.	COORDINATES	
	NORTHING	EASTING
1501	7 663 295.2	409 684.0
1502	7 663 288.4	409 691.6
1503	7 663 263.4	409 679.9
1504	7 663 267.4	409 669.0

0 2.5 5 7.5 m SCALE 1:250

Public Works and Government Services Canada / Travaux publics et Services gouvernementaux Canada

REAL PROPERTY SERVICES
Western Region
SERVICES IMMOBILIERS
Région de l'ouest

PRELIMINARY
NOT FOR CONSTRUCTION

AECOM

This drawing has been prepared for the use of AECOM's client and may not be used, reproduced or relied upon by third parties, except as agreed by AECOM and its client, as required by law or for use by gov-ernmental reviewing agencies.
AECOM accepts no responsibility, and denies any liability whatsoever, to any party that modifies this drawing without AECOM's express written consent.
Do not scale this document. All measurements must be obtained from stated dimensions.

GENERAL NOTES:

1. ALL COORDINATES ARE REFERENCED TO NAD83 (CSRS), UTM ZONE 13N. ELEVATIONS ARE REFERENCED TO MEAN SEA LEVEL RELATIVE TO GEOID MODEL CANADIAN HT2_0.
2. ALL DIMENSIONS AND ELEVATIONS ARE IN METRES UNLESS NOTED OTHERWISE.
3. REPLACE CLEAN LANDFILL EXCAVATION SOILS FROM THE EXCAVATION OF LOBE Z AS BACKFILL. CAP WITH 0.3m MINIMUM TYPE 3 GRANULAR FILL OVER THE CLEAN BACKFILL TO MATCH SURROUNDING TERRAIN AND PREVENT PONDING.
4. ALL NON-HAZARDOUS WASTE, TIER I, AND TYPE A CONTAMINATED SOILS FROM PIN-E TO BE TRANSPORTED AND DISPOSED OF AT THE NON-HAZARDOUS WASTE LANDFILL AT PIN-D, ROSS POINT.
5. ALL SURFACE DEBRIS IS TO BE REMOVED FROM ALL CONTAMINATED SOIL AREAS AND EXISTING AND NEW LANDFILL AREAS PRIOR TO ANY FILL PLACEMENT OR EXCAVATION TAKING PLACE.

LEGEND:

- BODY OF WATER
- SITE GRID (25m INTERVAL)
- APPROXIMATE LOCATION OF PROPERTY BOUNDARIES
- BURIED DEBRIS EXCAVATION
- ◆504 SAMPLE LOCATION

Professional Seals / Sceaux

DO NOT SCALE DRAWINGS

Revision/ Revision	Description/Description	Date/Date
F		
E		
D		
C	ISSUED FOR TENDER	10/07/30
B	ISSUED FOR 99% REVIEW	10/07/05
A	ISSUED FOR 75% REVIEW	10/06/18

Client/client
PUBLIC WORKS AND GOVERNMENT SERVICES CANADA

Project title/Titre du projet
PIN-E REMEDIATION PROJECT

Approved by/Approuve par
B. FEDORAK

Designed by/Concept par
T. ESHPETER

Drawn by/Dessine par
I. CECH

PWGSC Project Manager/Administrateur de Projets TPSGC
M. McELWAINE

PWGSC, Architectural and Engineering Resources Manager/ Ressources Architectural et de Directeur d'Ingénierie, TPSGC

Client/client
PUBLIC WORKS AND GOVERNMENT SERVICES CANADA

Drawing title/Titre du dessin
NORTHEAST OF BEACH AREA SITE PLAN

Project No./No. du projet	Sheet/Feuille	Revision no./ La Révision no.
R.031527.013	C07 OF 09	C

R.031527.013-C07

PLOT: Friday, July 30, 2010 3:13:19 PM
Saved by: Hassler, Brad
AECOM FILE NO.: R-031527-013_C07-R0C.DWG
B1 – 1000 x 707
0 10 20 30 40 50 60 70 80 90 100 mm

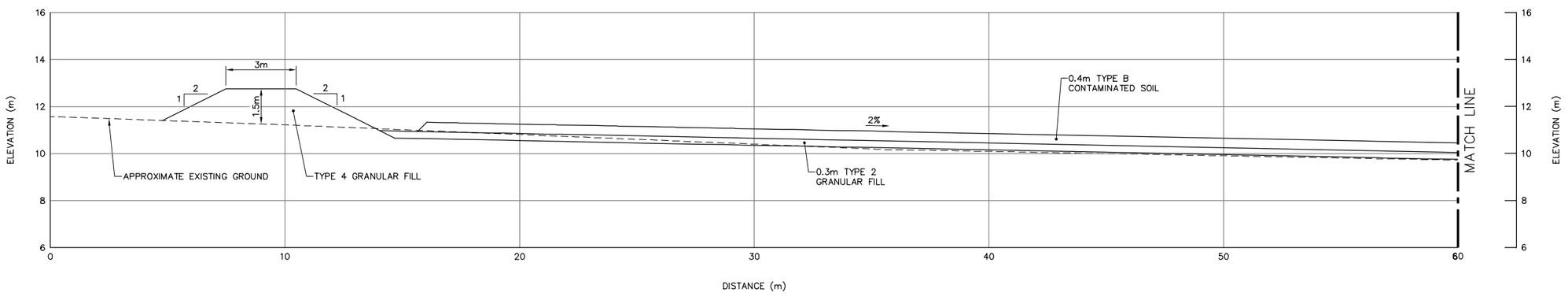

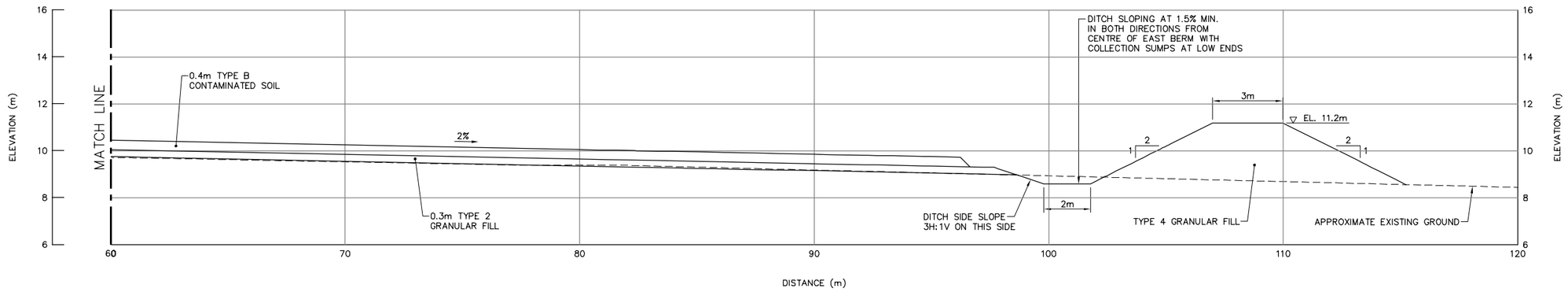

SECTION A C06

0 1 2 3 m SCALE 1:100

Public Works and Government Services Canada / Travaux publics et Services gouvernementaux Canada

REAL PROPERTY SERVICES
Western Region
SERVICES IMMOBILIERS
Région de l'ouest

PRELIMINARY
NOT FOR CONSTRUCTION

AECOM

This drawing has been prepared for the use of AECOM's client and may not be used, reproduced or relied upon by third parties, except as agreed by AECOM and its client, as required by law or for use by governmental reviewing agencies.
AECOM accepts no responsibility, and denies any liability whatsoever, to any party that modifies this drawing without AECOM's express written consent.
Do not scale this document. All measurements must be obtained from stated dimensions.

GENERAL NOTES:

1. ALL DIMENSIONS AND ELEVATIONS ARE IN METRES UNLESS NOTED OTHERWISE.

Professional Seals / Sceaux

DO NOT SCALE DRAWINGS

Revision/ Revision	Description/Description	Date/Date
F		
E		
D		
C	ISSUED FOR TENDER	10/07/30
B	ISSUED FOR 99% REVIEW	10/07/05
A	ISSUED FOR 75% REVIEW	10/06/18

Client/client

PUBLIC WORKS AND GOVERNMENT SERVICES CANADA

Project title/Titre du projet

PIN-E REMEDIATION PROJECT

Approved by/Approuve par
B. FEDORAK

Designed by/Concept par
T. ESHPETER

Drawn by/Dessine par
I. CECH

PWGSC Project Manager/Administrateur de Projets TPSGC
M. McELWAINE

PWGSC, Architectural and Engineering Resources Manager/ Ressources Architectural et de Directeur d'Ingénierie, TPSGC

Client/client
PUBLIC WORKS AND GOVERNMENT SERVICES CANADA

Drawing title/Titre du dessin

LANDFARM CROSS SECTION

Project No./No. du projet	Sheet/Feuille	Revision no./ Le Révision no.
R.031527.013	C08 OF 09	C

R.031527.013-C08

PLOT: Friday, July 30, 2010 3:13:40 PM
Saved by: Hassler, Brad
AECOM FILE NO.: R-031527-013_C08-R0C.DWG

81 – 1000 x 707

0 10 20 30 40 50 60 70 80 90 100 mm

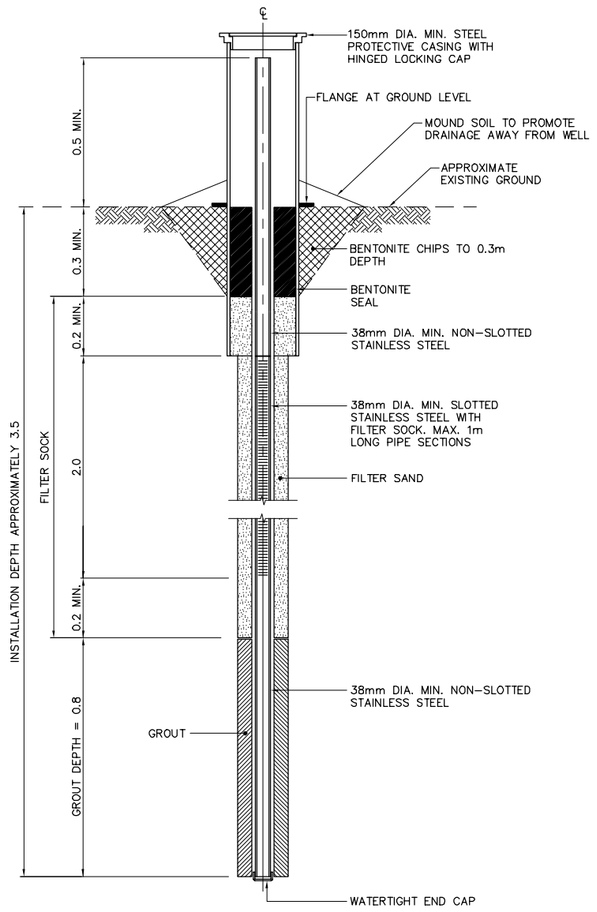

TYPICAL MONITORING WELL / BACKGROUND MONITORING WELL
SCALE: N.T.S.
(FOR BEDROCK DEPTH > 0.7m)

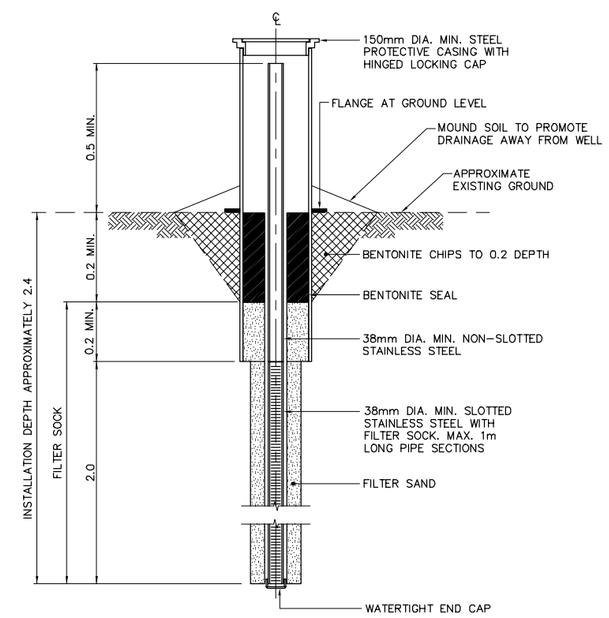

TYPICAL MONITORING WELL / BACKGROUND MONITORING WELL
SCALE: N.T.S.
(FOR BEDROCK DEPTH < 0.7m)

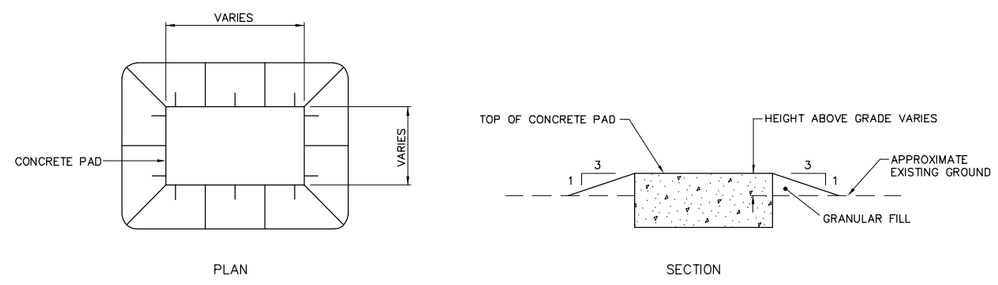

TYPICAL CONCRETE PAD REGRADING DETAIL
SCALE: N.T.S.

Public Works and Government Services Canada / Travaux publics et Services gouvernementaux Canada

REAL PROPERTY SERVICES
Western Region
SERVICES IMMOBILIERS
Région de l'ouest

PRELIMINARY
NOT FOR CONSTRUCTION

AECOM

This drawing has been prepared for the use of AECOM's client and may not be used, reproduced or relied upon by third parties, except as agreed by AECOM and its client, as required by law or for use by governmental reviewing agencies.
AECOM accepts no responsibility, and denies any liability whatsoever, to any party that modifies this drawing without AECOM's express written consent.
Do not scale this document. All measurements must be obtained from stated dimensions.

GENERAL NOTES:

1. ALL DIMENSIONS ARE IN METRES UNLESS NOTED OTHERWISE.

Professional Seals / Sceaux

DO NOT SCALE DRAWINGS

Revision/ Révision	Description/Description	Date/Date
F		
E		
D		
C	ISSUED FOR TENDER	10/07/30
B	ISSUED FOR 99% REVIEW	10/07/05
A	ISSUED FOR 75% REVIEW	10/06/18

Client/client
PUBLIC WORKS AND GOVERNMENT SERVICES CANADA

Project title/Titre du projet
PIN-E REMEDIATION PROJECT

Approved by/Approuvé par
B. FEDORAK

Designed by/Concept par
T. ESHPETER

Drawn by/Dessiné par
I. CECH

PWGSC Project Manager/Administrateur de Projets TPSGC
M. McELWAINE

PWGSC, Architectural and Engineering Resources Manager/ Ressources Architectural et de Directeur d'ingénierie, TPSGC

Client/client
PUBLIC WORKS AND GOVERNMENT SERVICES CANADA

Drawing title/Titre du dessin
GENERAL DETAILS

Project No./No. du projet	Sheet/Feuille	Revision no./ La Révision no.
R.031527.013	C09 OF 09	C

R.031527.013-C09

PLOT: Friday, July 30, 2010 3:14:05 PM
Saved by: Hassler, Brad
AECOM FILE NO.: R-031527-013_C09-R0C.DWG

81 – 1000 x 707

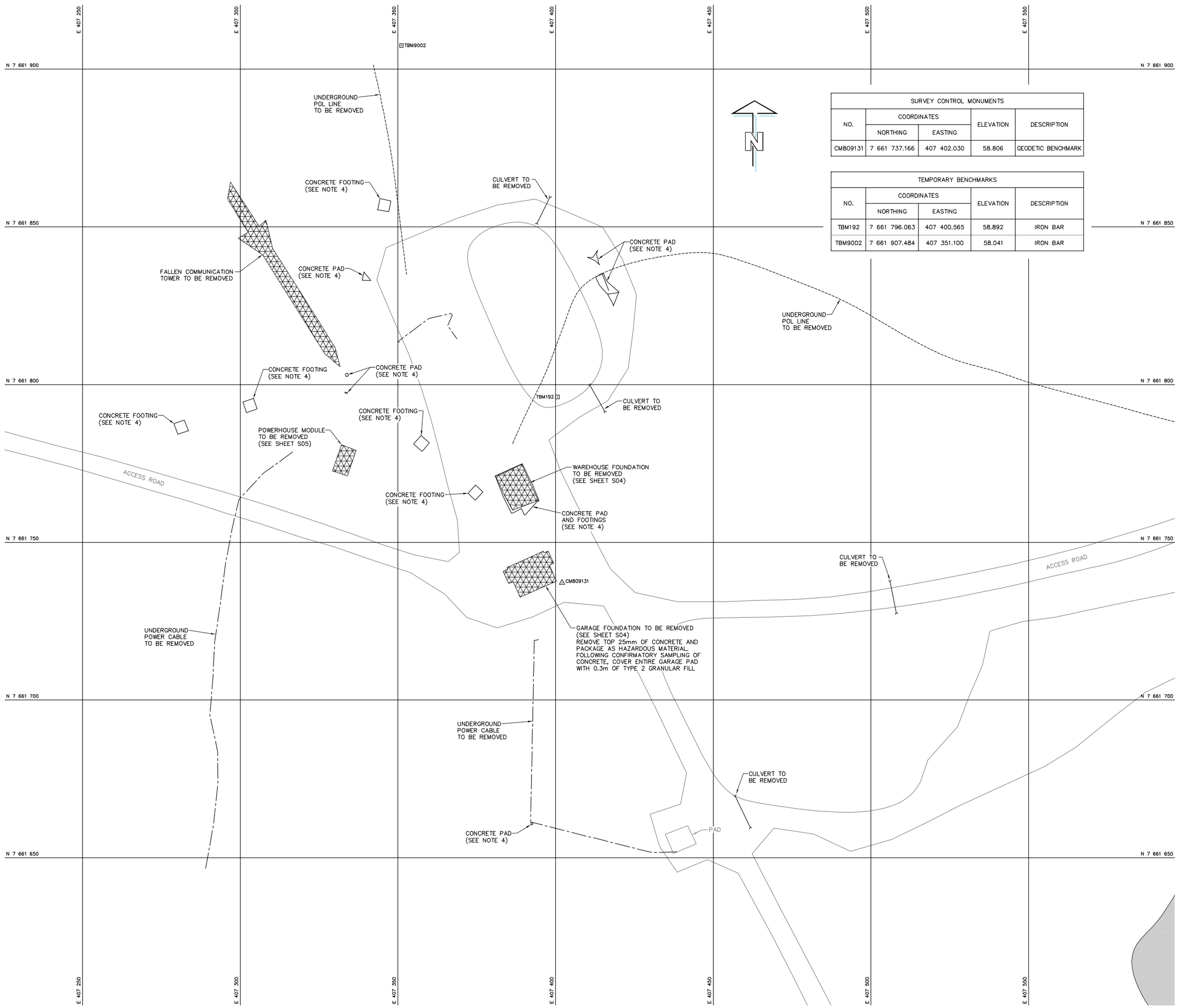

SURVEY CONTROL MONUMENTS				
NO.	COORDINATES		ELEVATION	DESCRIPTION
	NORTHING	EASTING		
CM809131	7 661 737.166	407 402.030	58.806	GEODETIC BENCHMARK

TEMPORARY BENCHMARKS				
NO.	COORDINATES		ELEVATION	DESCRIPTION
	NORTHING	EASTING		
TBM192	7 661 796.063	407 400.565	58.892	IRON BAR
TBM9002	7 661 907.484	407 351.100	58.041	IRON BAR

GENERAL NOTES:

1. ALL COORDINATES ARE REFERENCED TO NAD83 (CSRS), UTM ZONE 13N. ELEVATIONS ARE REFERENCED TO MEAN SEA LEVEL RELATIVE TO GEOID MODEL CANADIAN HT2_0.
2. ALL DIMENSIONS ARE IN METRES UNLESS NOTED OTHERWISE.
3. DEMOLITION INCLUDES HATCHED STRUCTURES AND ANY ADDITIONAL STRUCTURES OTHER THAN ARCHAEOLOGICAL FEATURES IDENTIFIED UPON MOBILIZATION.
4. PROVIDE REGRADING AROUND ALL CONCRETE PADS AS PER TYPICAL DETAIL ON SHEET C09, THAT ARE DESIGNATED TO REMAIN.
5. PORTIONS OF THE POL LINES AND POWER COMMUNICATION CABLES MAY BE PARTIALLY OR FULLY BURIED.
6. ALL NON-HAZARDOUS WASTE, TIER I, AND TYPE A CONTAMINATED SOILS FROM PIN-E TO BE TRANSPORTED AND DISPOSED OF AT THE NON-HAZARDOUS WASTE LANDFILL AT PIN-D, ROSS POINT.
7. CULVERTS TO BE REMOVED AND CULVERT AREA TO BE GRADED TO DRAIN PRIOR TO PROJECT COMPLETION.

LEGEND:

- BODY OF WATER
- SITE GRID (50m INTERVAL)
- STRUCTURE TO BE DEMOLISHED
- SURVEY CONTROL MONUMENT
- TEMPORARY BENCHMARK

Professional Seals / Sceaux

DO NOT SCALE DRAWINGS

Revision/ Revision	Description/Description	Date/Date
F		
E		
D		
C	ISSUED FOR TENDER	10/07/30
B	ISSUED FOR 99% REVIEW	10/07/05
A	ISSUED FOR 75% REVIEW	10/06/18

Client/client

PUBLIC WORKS AND GOVERNMENT SERVICES CANADA

Project title/Titre du projet

PIN-E REMEDIATION PROJECT

Approved by/Approuve par: **B. FEDORAK**

Designed by/Concept par: **T. ESHPETER**

Drawn by/Dessine par: **I. CECH**

PWGSC Project Manager/Administrateur de Projets TPSGC: **M. McELWAINE**

PWGSC, Architectural and Engineering Resources Manager/ Ressources Architectural et de Directeur d'Ingénierie, TPSGC

Client/client: **PUBLIC WORKS AND GOVERNMENT SERVICES CANADA**

Drawing title/Titre du dessin

STATION AREA DEMOLITION SITE PLAN

Project No./No. du projet	Sheet/Feuille	Revision no./ La Révision no.
R.031527.013	S01 OF 05	C

Public Works and Government Services Canada / Travaux publics et Services gouvernementaux Canada

REAL PROPERTY SERVICES Western Region
SERVICES IMMOBILIERS Région de l'ouest

PRELIMINARY
NOT FOR CONSTRUCTION

AECOM

This drawing has been prepared for the use of AECOM's client and may not be used, reproduced or relied upon by third parties, except as agreed by AECOM and its client, as required by law or for use by governmental reviewing agencies. AECOM accepts no responsibility, and denies any liability whatsoever, to any party that modifies this drawing without AECOM's express written consent. Do not scale this document. All measurements must be obtained from stated dimensions.

PLOT: Friday, July 30, 2010 3:14:29 PM
Saved by: Hassler, Brad
AECOM FILE NO.: R-031527-013_S01-R0C.DWG
B1 – 1000 x 707
R.031527.013-S01

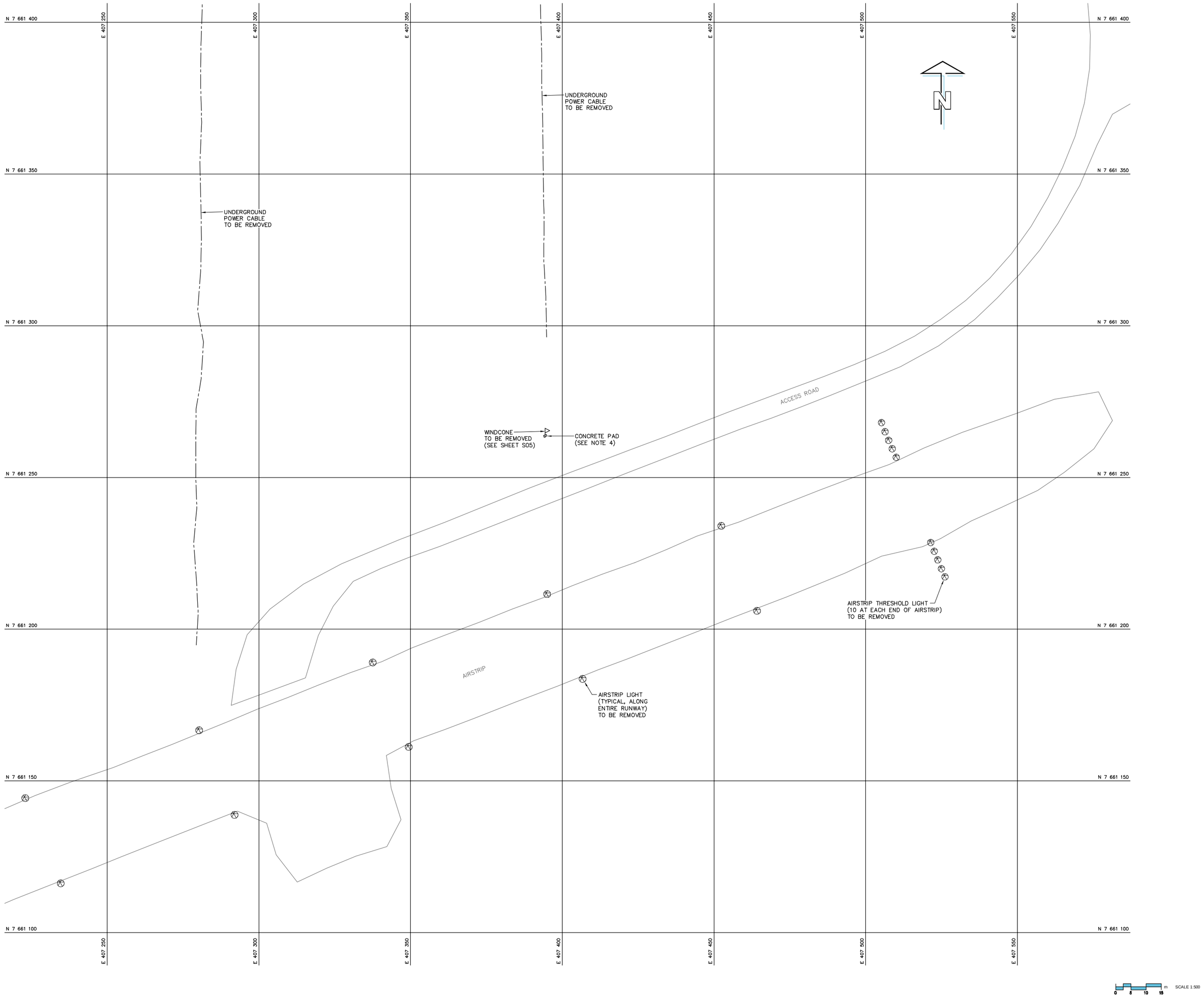

Public Works and Government Services Canada / Travaux publics et Services gouvernementaux Canada

REAL PROPERTY SERVICES
Western Region
SERVICES IMMOBILIERS
Région de l'ouest

PRELIMINARY
NOT FOR CONSTRUCTION

AECOM

This drawing has been prepared for the use of AECOM's client and may not be used, reproduced or relied upon by third parties, except as agreed by AECOM and its client, as required by law or for use by governmental reviewing agencies.
AECOM accepts no responsibility, and denies any liability whatsoever, to any party that modifies this drawing without AECOM's express written consent.
Do not scale this document. All measurements must be obtained from stated dimensions.

GENERAL NOTES:

1. ALL COORDINATES ARE REFERENCED TO NAD83 (CSRS), UTM ZONE 13N. ELEVATIONS ARE REFERENCED TO MEAN SEA LEVEL RELATIVE TO GEOID MODEL CANADIAN HT2_0.
2. ALL DIMENSIONS ARE IN METRES UNLESS NOTED OTHERWISE.
3. DEMOLITION INCLUDES HATCHED STRUCTURES AND ANY ADDITIONAL STRUCTURES OTHER THAN ARCHAEOLOGICAL FEATURES IDENTIFIED UPON MOBILIZATION.
4. PROVIDE REGRADING AROUND ALL CONCRETE PADS AS PER TYPICAL DETAIL ON SHEET C09, THAT ARE DESIGNATED TO REMAIN.
5. PORTIONS OF THE POL LINES AND POWER COMMUNICATION CABLES MAY BE PARTIALLY OR FULLY BURIED.
6. ALL NON-HAZARDOUS WASTE, TIER I, AND TYPE A CONTAMINATED SOILS FROM PIN-E TO BE TRANSPORTED AND DISPOSED OF AT THE NON-HAZARDOUS WASTE LANDFILL AT PIN-D, ROSS POINT.

LEGEND:

- BODY OF WATER
- SITE GRID (50m INTERVAL)
- STRUCTURE TO BE DEMOLISHED
- AIRSTRIP LIGHT/THRESHOLD LIGHT TO BE DEMOLISHED

Professional Seals / Sceaux

DO NOT SCALE DRAWINGS

Revision/ Révision	Description/Description	Date/Date
F		
E		
D		
C	ISSUED FOR TENDER	10/07/30
B	ISSUED FOR 99% REVIEW	10/07/05
A	ISSUED FOR 75% REVIEW	10/06/18

Client/client

PUBLIC WORKS AND GOVERNMENT SERVICES CANADA

Project title/Titre du projet

PIN-E REMEDIATION PROJECT

Approved by/Approuvé par
B. FEDORAK

Designed by/Concept par
T. ESHPETER

Drawn by/Dessiné par
I. CECH

PWGSC Project Manager/Administrateur de Projets TPSGC
M. McELWAINE

PWGSC, Architectural and Engineering Resources Manager/ Ressources Architectural et de Directeur d'ingénierie, TPSGC

Client/client
PUBLIC WORKS AND GOVERNMENT SERVICES CANADA

Drawing title/Titre du dessin

AIRSTRIP AREA DEMOLITION SITE PLAN

Project No./No. du projet	Sheet/Feuille	Revision no./ La Révision no.
R.031527.013	S02 OF 05	C

PLOT: Friday, July 30, 2010 3:15:01 PM
Saved by: Hassler, Brad
AECOM FILE NO.: R-031527-013_S02-ROC.DWG

B1 – 1000 x 707

0 10 20 30 40 50 60 70 80 90 100 mm

R.031527.013-S02

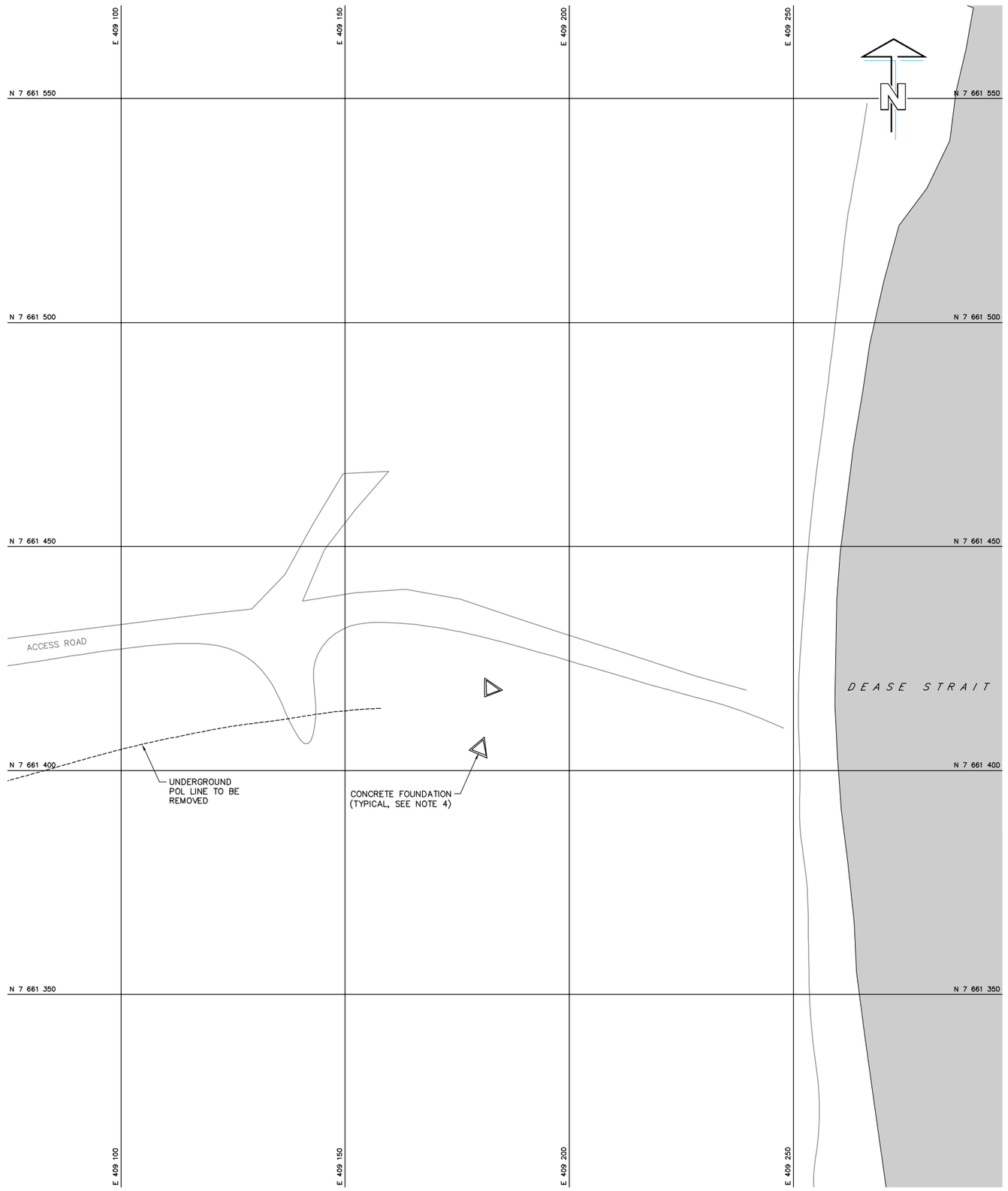

0 5 10 15 m SCALE 1:500

Public Works and Government Services Canada / Travaux publics et Services gouvernementaux Canada

REAL PROPERTY SERVICES
Western Region
SERVICES IMMOBILIERS
Région de l'ouest

PRELIMINARY
NOT FOR CONSTRUCTION

AECOM

This drawing has been prepared for the use of AECOM's client and may not be used, reproduced or relied upon by third parties, except as agreed by AECOM and its client, as required by law or for use by governmental reviewing agencies.
AECOM accepts no responsibility, and denies any liability whatsoever, to any party that modifies this drawing without AECOM's express written consent.
Do not scale this document. All measurements must be obtained from stated dimensions.

GENERAL NOTES:

1. ALL COORDINATES ARE REFERENCED TO NAD83 (CSRS), UTM ZONE 13N. ELEVATIONS ARE REFERENCED TO MEAN SEA LEVEL RELATIVE TO GEOID MODEL CANADIAN HT2_0.
2. ALL DIMENSIONS ARE IN METRES UNLESS NOTED OTHERWISE.
3. DEMOLITION INCLUDES HATCHED STRUCTURES AND ANY ADDITIONAL STRUCTURES OTHER THAN ARCHAEOLOGICAL FEATURES IDENTIFIED UPON MOBILIZATION.
4. PROVIDE REGRADING AROUND ALL CONCRETE PADS AS PER TYPICAL DETAIL ON SHEET C09, THAT ARE DESIGNATED TO REMAIN.
5. PORTIONS OF THE POL LINES AND POWER COMMUNICATION CABLES MAY BE PARTIALLY OR FULLY BURIED.
6. ALL NON-HAZARDOUS WASTE, TIER I, AND TYPE A CONTAMINATED SOILS FROM PIN-E TO BE TRANSPORTED AND DISPOSED OF AT THE NON-HAZARDOUS WASTE LANDFILL AT PIN-D, ROSS POINT.

LEGEND:

BODY OF WATER

SITE GRID (50m INTERVALS)

Professional Seals / Sceaux

DO NOT SCALE DRAWINGS

Revision/ Revision	Description/Description	Date/Date
F		
E		
D		
C	ISSUED FOR TENDER	10/07/30
B	ISSUED FOR 99% REVIEW	10/07/05
A	ISSUED FOR 75% REVIEW	10/06/18

Client/client
PUBLIC WORKS AND GOVERNMENT SERVICES CANADA

Project title/Titre du projet
PIN-E REMEDIATION PROJECT

Approved by/Approuvé par
B. FEDORAK

Designed by/Concept par
T. ESHPETER

Drawn by/Dessiné par
I. CECH

PWGSC Project Manager/Administrateur de Projets TPSGC
M. McELWAINE

PWGSC, Architectural and Engineering Resources Manager/ Ressources Architectural et de Directeur d'Ingénierie, TPSGC

Client/client
PUBLIC WORKS AND GOVERNMENT SERVICES CANADA

Drawing title/Titre du dessin
BEACH AREA DEMOLITION SITE PLAN

Project No./No. du projet	Sheet/Feuille	Revision no./ La Révision no.
R.031527.013	S03 OF 05	C

R.031527.013-S03

PLOT: Friday, July 30, 2010 3:15:26 PM
Saved by: Hassler, Brad
AECOM FILE NO.: R-031527-013_S03-R0C.DWG

B1 – 1000 x 707

0 10 20 30 40 50 60 70 80 90 100 mm

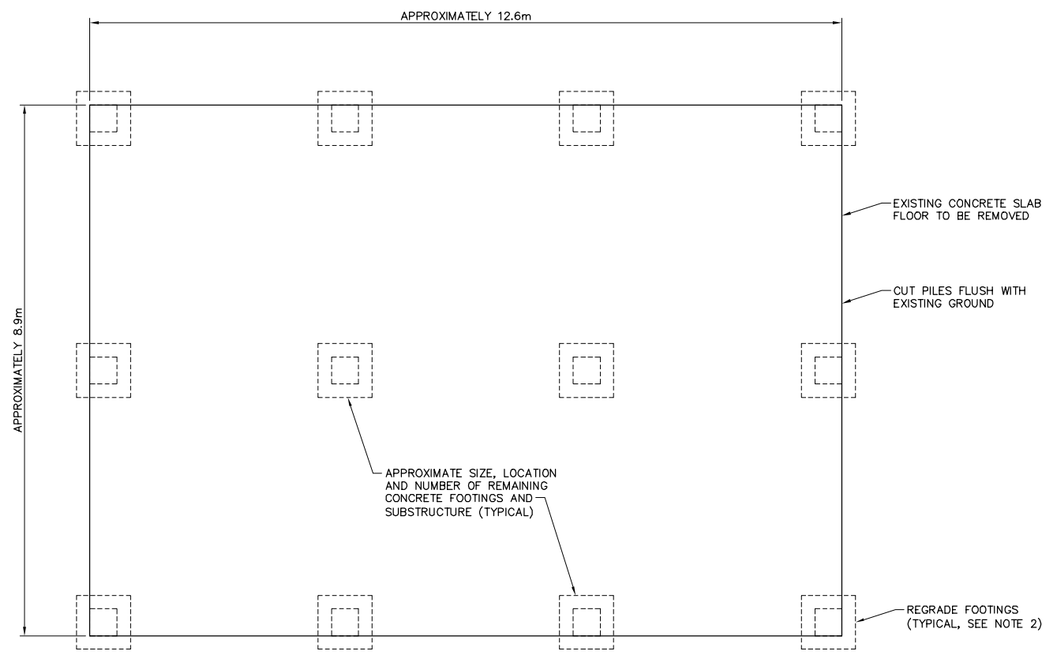

WAREHOUSE FOUNDATION PLAN

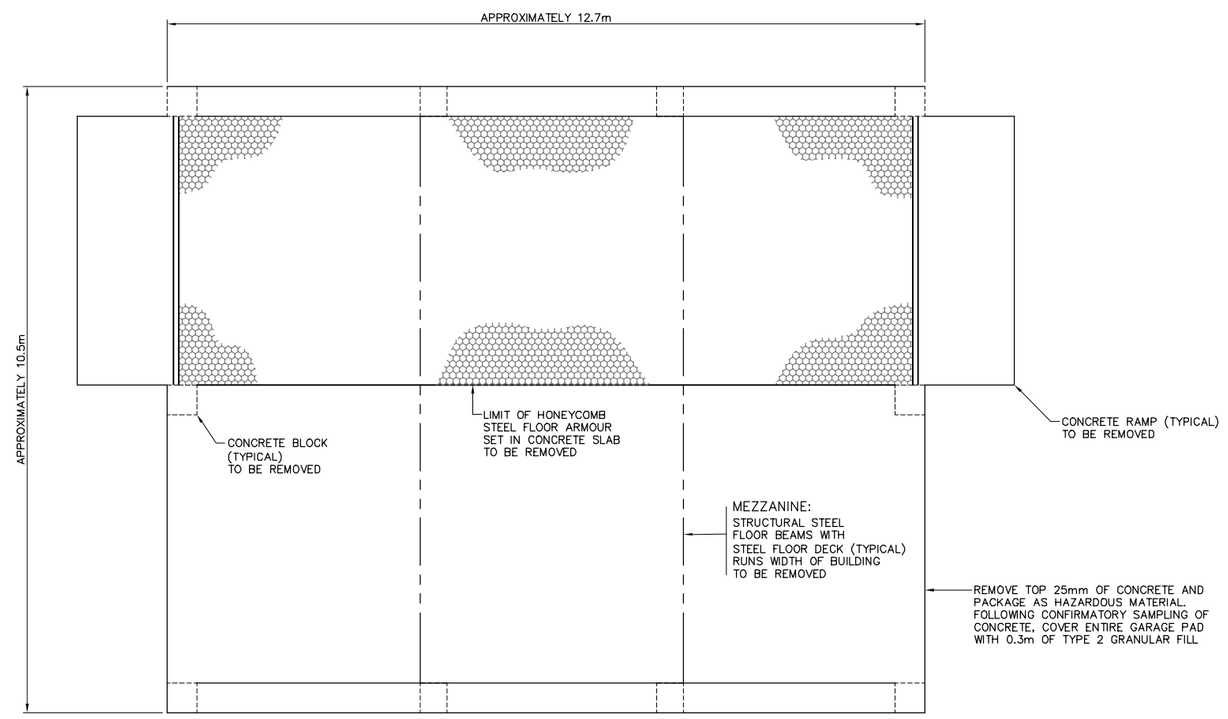

GARAGE FOUNDATION PLAN

0 0.5 1 1.5 m SCALE 1:50

Public Works and Government Services Canada / Travaux publics et Services gouvernementaux Canada

REAL PROPERTY SERVICES
Western Region
SERVICES IMMOBILIERS
Région de l'ouest

PRELIMINARY
NOT FOR CONSTRUCTION

AECOM

This drawing has been prepared for the use of AECOM's client and may not be used, reproduced or relied upon by third parties, except as agreed by AECOM and its client, as required by law or for use by governmental reviewing agencies.
AECOM accepts no responsibility, and denies any liability whatsoever, to any party that modifies this drawing without AECOM's express written consent.
Do not scale this document. All measurements must be obtained from stated dimensions.

GENERAL NOTES:

1. ALL DIMENSIONS ARE IN METRES UNLESS NOTED OTHERWISE.
2. PROVIDE REGRADING AROUND ALL CONCRETE FOOTINGS AS PER TYPICAL DETAIL ON SHEET C09, THAT ARE DESIGNATED TO REMAIN.

Professional Seals / Sceaux

DO NOT SCALE DRAWINGS

Revision/ Revision	Description/Description	Date/Date
F		
E		
D		
C	ISSUED FOR TENDER	10/07/30
B	ISSUED FOR 99% REVIEW	10/07/05
A	ISSUED FOR 75% REVIEW	10/06/18

Client/client
PUBLIC WORKS AND GOVERNMENT SERVICES CANADA

Project title/Titre du projet
PIN-E REMEDIATION PROJECT

Approved by/Approuve par: **B. FEDORAK**
Designed by/Concept par: **T. ESHPETER**
Drawn by/Dessine par: **I. CECH**
PWGSC Project Manager/Administrateur de Projets TPSGC: **M. McELWAINE**
PWGSC, Architectural and Engineering Resources Manager/ Ressources Architectural et de Directeur d'Ingénierie, TPSGC
Client/client: **PUBLIC WORKS AND GOVERNMENT SERVICES CANADA**

Drawing title/Titre du dessin
WAREHOUSE AND GARAGE FOUNDATION PLANS

Project No./No. du projet	Sheet/Feuille	Revision no./ La Révision no.
R.031527.013	S04 OF 05	C

R.031527.013-S04

PLOT: Friday, July 30, 2010 3:15:52 PM
Saved by: Hassler, Brad
AECOM FILE NO.: R-031527-013_S04-R0C.DWG

81 – 1000 x 707

0 10 20 30 40 50 60 70 80 90 100 mm

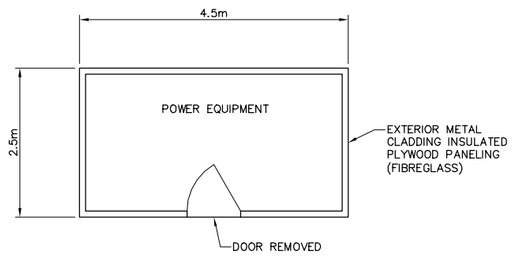

PLAN

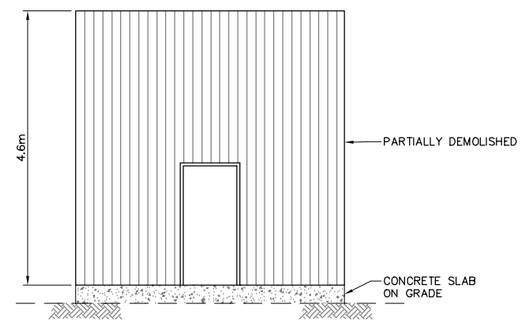

ELEVATION

POWERHOUSE MODULE

0 0.5 1 1.5 m SCALE 1:50

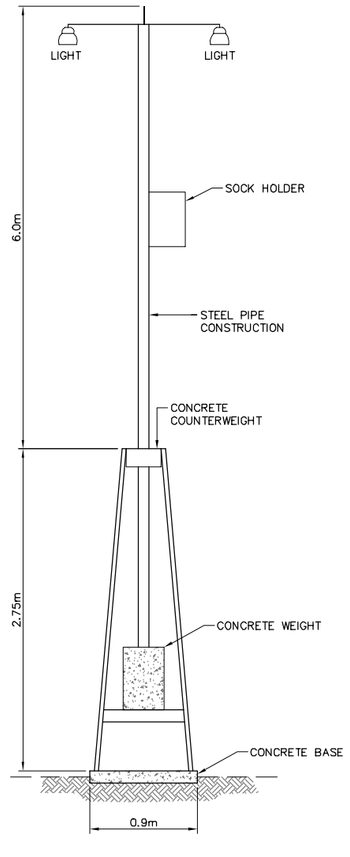

WINDCONE DETAIL

SCALE: NTS

Public Works and Government Services Canada / Travaux publics et Services gouvernementaux Canada

REAL PROPERTY SERVICES
Western Region
SERVICES IMMOBILIERS
Région de l'ouest

PRELIMINARY
NOT FOR CONSTRUCTION

AECOM

This drawing has been prepared for the use of AECOM's client and may not be used, reproduced or relied upon by third parties, except as agreed by AECOM and its client, as required by law or for use by governmental reviewing agencies.
AECOM accepts no responsibility, and denies any liability whatsoever, to any party that modifies this drawing without AECOM's express written consent.
Do not scale this document. All measurements must be obtained from stated dimensions.

GENERAL NOTES:

1. ALL DIMENSIONS ARE IN METRES UNLESS NOTED OTHERWISE.
2. FACILITIES TO BE DEMOLISHED MAY CONTAIN PCB AND LEAD CONTAMINATED PAINT.
3. MECHANICAL AND DUCTING ARE NOT SHOWN.

Professional Seals / Sceaux

DO NOT SCALE DRAWINGS

Revision/ Révision	Description/Description	Date/Date
F		
E		
D		
C	ISSUED FOR TENDER	10/07/30
B	ISSUED FOR 99% REVIEW	10/07/05
A	ISSUED FOR 75% REVIEW	10/06/18

Client/client

PUBLIC WORKS AND GOVERNMENT SERVICES CANADA

Project title/Titre du projet

PIN-E REMEDIATION PROJECT

Approved by/Approuvé par
B. FEDORAK

Designed by/Concept par
T. ESHPETER

Drawn by/Dessiné par
I. CECH

PWGSC Project Manager/Administrateur de Projets TPSGC
M. McELWAINE

PWGSC, Architectural and Engineering Resources Manager/ Ressources Architectural et de Directeur d'Ingénierie, TPSGC

Client/client
PUBLIC WORKS AND GOVERNMENT SERVICES CANADA

Drawing title/Titre du dessin

WINDCONE DETAIL, POWERHOUSE MODULE PLAN AND ELEVATION

Project No./No. du projet	Sheet/Feuille	Revision no./ La Révision no.
R.031527.013	S05 OF 05	C

PLOT: Friday, July 30, 2010 3:16:26 PM
Saved by: Hassler, Brad
AECOM FILE NO.: R-031527-013_S05-ROC.DWG

B1 – 1000 x 707

0 10 20 30 40 50 60 70 80 90 100 mm

R.031527.013-S05

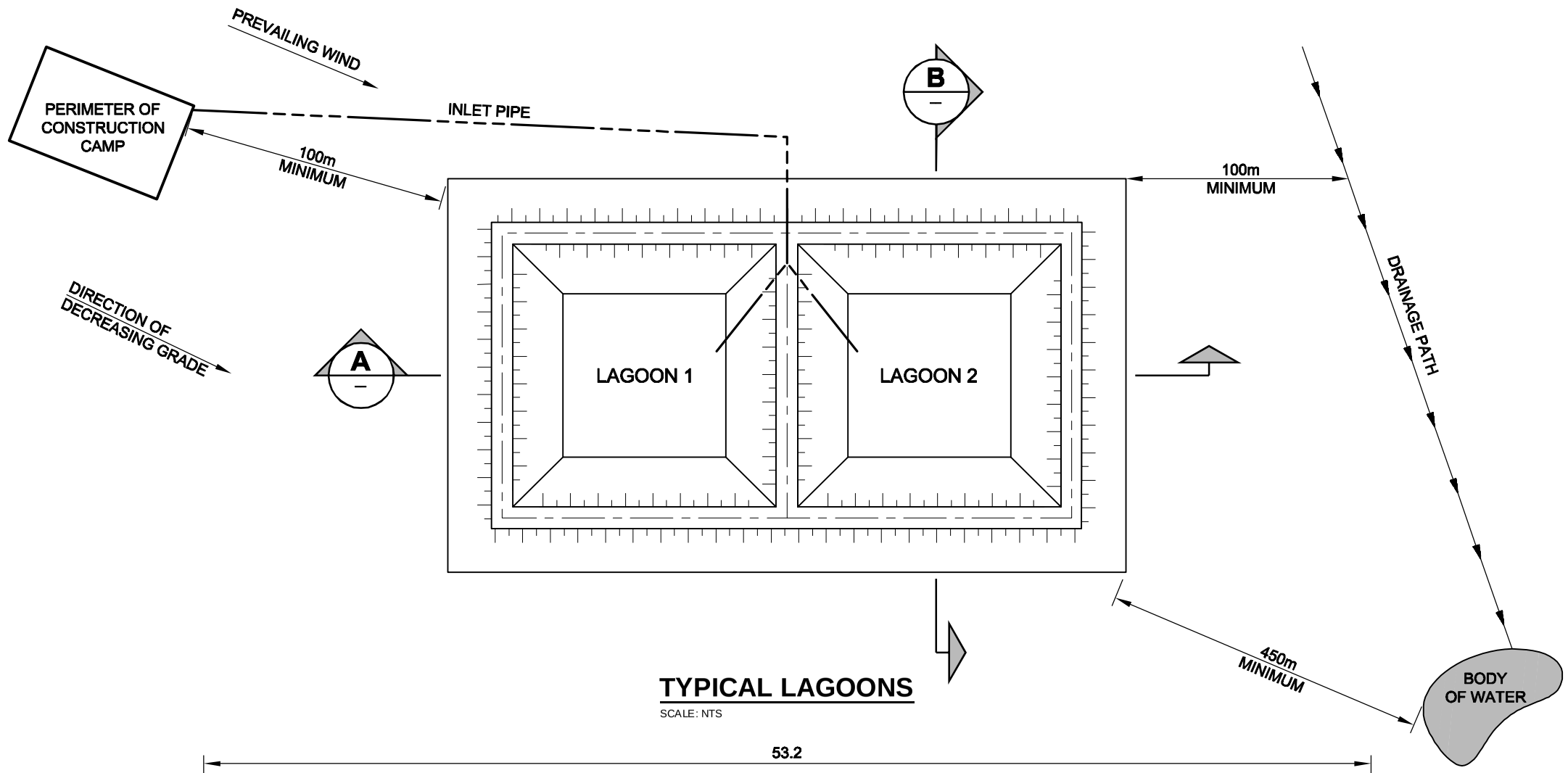

TYPICAL LAGOONS

SCALE: NTS

GENERAL NOTES:

1. ALL DIMENSIONS ARE IN METRES UNLESS NOTED OTHERWISE.
2. IN THE EVENT OF SHALLOW BEDROCK, WHERE FLOOR OF THE LAGOON IS JUST BELOW ORIGINAL GROUND, USE 3m WIDE TOP OF BERM.
3. COMPACTED BERMS TO 95% OF STANDARD PROCTOR DRY DENSITY (SPDD), AT OPTIMUM MOISTURE CONTENT.
4. DISCHARGE WASTEWATER FROM CORNER OPPOSITE OF INLET.

ASSUMPTIONS AND DETAILS:

1. CAPACITY OF EACH LAGOON = 50 DAYS
2. AVERAGE CAMP SIZE = 35 PERSONS
3. MAXIMUM FLUID DEPTH = NOT TO EXCEED 1m
4. FREEBOARD = 0.6m
5. LAGOON TO BE LOCATED 100m FROM CAMP AND DOWNWIND, BASED ON PREVAILING WINDS.
6. ASSUME GROUND SLOPES AWAY FROM CAMP.
7. LOADING = 0.175m^3/PERSON/DAY

CALCULATIONS:

LOADING	0.175m^3/PERSON/DAY
CAMP SIZE	x 35 PERSONS
CONSTRUCTION SEASON	x 50 DAYS
REQUIRED CAPACITY OF EACH LAGOON (NOT INCLUDING FREEBOARD)	= 307m^3

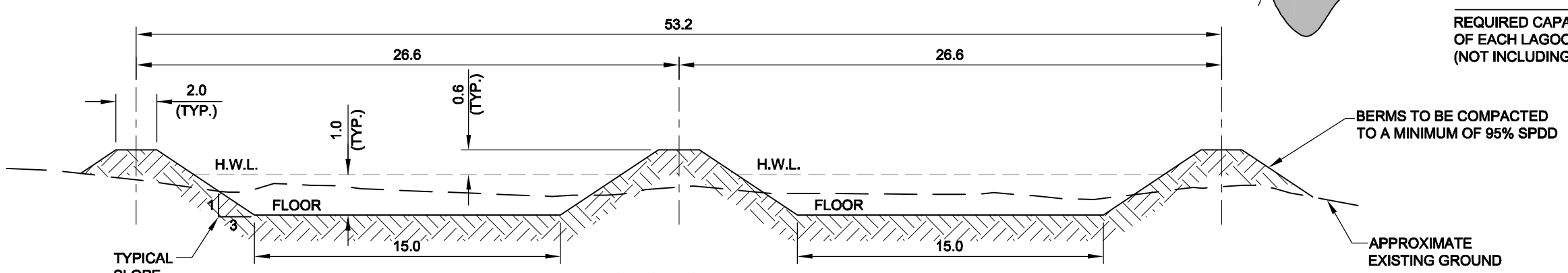

SECTION A

SCALE: NTS

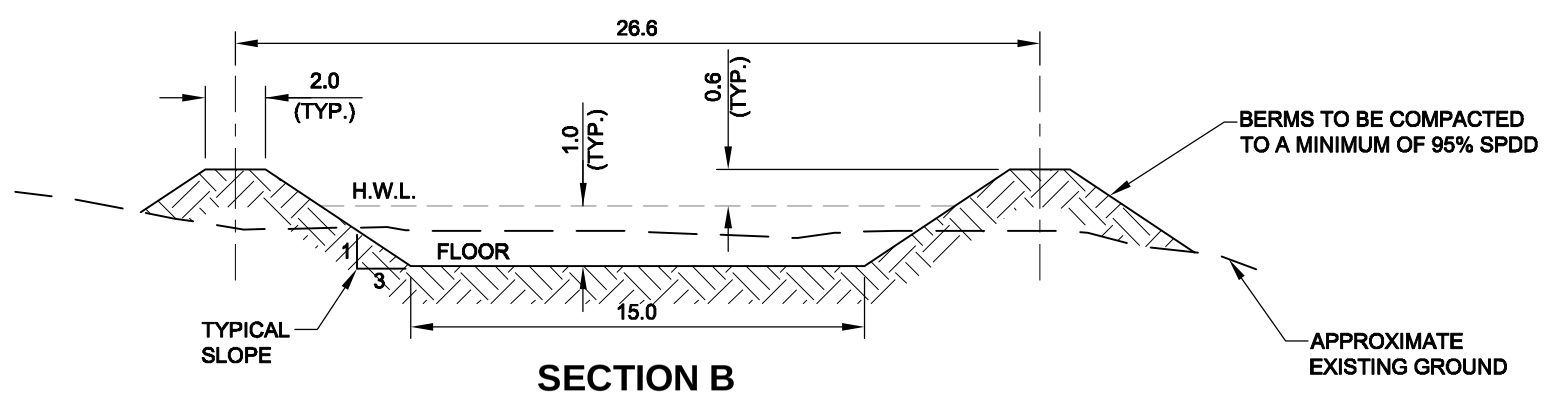

SECTION B

SCALE: NTS

Public Works and Government Services Canada

Typical Lagoon Plan and Sections
Figure 1.0

AECOM

B SIZE 11" x 17" (279.4mm x 431.8mm)
PLOT: 08/11/07 4:03:04 PM
Saved By: chaob
ISS/REV: B
UMA FILE NAME: 2977-365-00_01-B-F100_RB.dwg
THIS DOCUMENT IS PROTECTED BY COPYRIGHT LAW AND MAY NOT BE USED, REPRODUCED OR MODIFIED IN ANY MANNER OR FOR ANY PURPOSE EXCEPT WITH THE WRITTEN PERMISSION OF UMA ENGINEERING LTD. DOING BUSINESS AS AECOM ("AECOM") OR A PARTY TO WHICH ITS COPYRIGHT HAS BEEN ASSIGNED. AECOM ACCEPTS NO RESPONSIBILITY, AND DENIES ANY LIABILITY WHATSOEVER, TO ANY PARTY THAT USES, REPRODUCES, MODIFIES, OR RELIES ON THIS DOCUMENT WITHOUT AECOM'S EXPRESS WRITTEN CONSENT.