Operations and Maintenance Plan for Sewage Disposal Facility

The sewage disposal facility to be used at Roberts Bay to treat the sewage from camp operations is the NOMADIC™ Sewage Wastewater System.

Estimated black water generation during the remediation activities is as follows:

- 2008 (Ida Bay) – 150 man days x 10 liters/man day = 1,500 liters
- 2009 (Roberts Bay) – 728 man days x 10 liters/man day = 7,280 liters

As back up, approximately 3000 gallons (13,500 liters) of tankage will be available in case of system failure along with approximately 200 square meters of liner (for construction of a sewage lagoon if required).

A mechanic will be trained in dealing with maintenance/repair of the WWTS prior to mobilization.

A complete parts/maintenance package will be shipped with the system. The residual waste sludge will be disposed of off site.

Attached as Appendix A is a letter from Pinnacle (WWTS manufacturer) providing additional detail on the WWTS and client references. Also included is some performance test data, drawings and a copy of the owners' manual and a description of the operation and treatment process.

Appendix A

PINNACLE ENVIRONMENTAL TECHNOLOGIES INC.
22765 - A Fraser Highway, Langley, BC, Canada

Telephone: 604.514.7555
Toll Free: 866.514.7555
Fax: 604.514.7595
Mailing Address: P.O. Box 3070
Langley, BC, Canada, V3A 4R3

www.peti.ca

NOMADIC™

MOBILE SEWAGE WASTEWATER TREATMENT SYSTEM

DS Series	# of Persons
NOMADIC DS 10	10
NOMADIC DS 15	15
NOMADIC DS 20	20
NOMADIC DS 25	25
HS Series	
NOMADIC HS 21/25	25
NOMADIC HS 26/50	50
NOMADIC HS 51/75	75
NOMADIC HS 100	100
NOMADIC HS 150	150
NOMADIC HS 250	250
NOMADIC HS 500	500
NOMADIC HS 750	750
$ASCO_2R$ Series	
$ASCO_2R$ Series 1000 - 2500	>1000

NOMADIC™ DS and HS Series have, at the core of the treatment process, the **Fixed Activated Sludge Treatment System** known as FAST® and as available from Bio-Microbics Inc.

Pinnacle Environmental Technologies Inc. is the exclusive Canadian Distributor of the FAST® system and employs the technology in a wide variety of designs and settings to provide solutions for sewage wastewater treatment across Canada and offshore.

The NOMADIC™ DS and HS Series are a tested and true result of the Pinnacle design to meet the specific needs of the mobile work camp market, satisfy regulatory requirements and provide easy maintenance at an affordable cost.

NOMADIC™

MOBILE SEWAGE WASTEWATER TREATMENT SYSTEM

TO PROTECT PUBLIC HEALTH AND THE ENVIRONMENT WE ALL SHARE

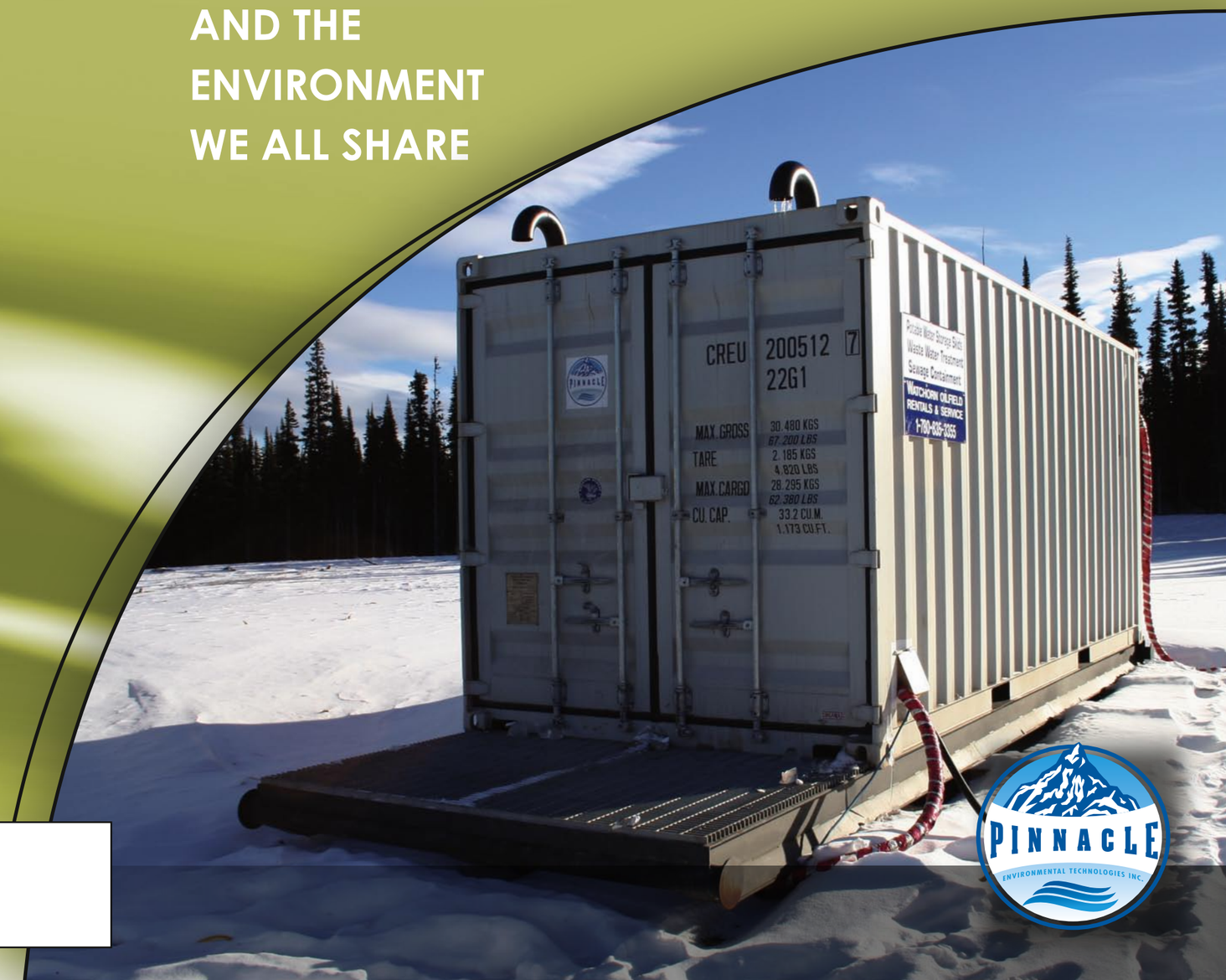

NOMADIC™

MOBILE SEWAGE WASTEWATER TREATMENT SYSTEM

Mobile and Portable Systems

The NOMADIC™ series is designed for mobile work camps and disaster relief. The systems are available for a variety of applications such as mobile, portable in permanent arrangements, semi-permanent or short-term temporary installations.

The NOMADIC™ system design takes into account the following design considerations:

- High-strength sewage wastewater characteristics
- Fats, oils and greases from the centralized kitchen works
- Power availability
- Fresh water supply and characteristics
- Cold weather climate conditions
- High altitude conditions
- Above-ground, free-standing arrangements
  - Outdoor installation
  - Indoor installation
- In-ground installations
- Pump and dosing packages
  - pumping into the system
  - pumping or dosing within the system
  - pumping or dosing to the discharge point
- Flow equalization
- Pre-settling and trash collector chamber
- Effluent disinfection
- Automated grease interceptor

900 Person Siberia, Russia Mining Camp

NOMADIC™ DS Series

NOMADIC™ DS Series are for work camps up to 25 persons and which do not utilize a commericial-grade kitchen.

Design and Build

Our knowledgeable and experienced design team consult with you to design and build the system that meets specific unique needs and requirements. Largest system, at time of printing, is for 1,800 person camp.

Standard Series

Available in 3 series.

- NOMADIC™ DS
- NOMADIC™ HS
- NOMADIC™ $ASCO_2R$

Emergency Response/Disaster Relief

The NOMADIC™ system is easily portable for fast mobilization to areas that need immediate response to a disaster or crisis. Connection to power supply is simple. Effluent quality is suitable for safe and clean discharge even into surface water if required.

Applications

- Forestry
- Mining
- Gas and Oil Drilling
- Remote Fishing Resorts
- Fire Fighting Camps

Installation Locations

- Northern Alberta
- Northern Canada
- United States of America
- Siberia, Russia
- USA-FEMA

Benefits

- High treatment levels
- Low sludge production
- Low maintenance skill level
- Performance pure and simple
- Rapid deployment

Rugged Construction

Heavy gauge steel construction with skid mounts and roll bars allows for multiple moves and long term use.

NOMADIC™ DS Model

NOMADIC™ Work Camp

Systems for
Industry on the Move
and
Sanitation for Disaster Relief

PINNACLE ENVIRONMENTAL TECHNOLOGIES INC.

NOMADIC™

MOBILE SEWAGE WASTEWATER TREATMENT SYSTEM

peti@canada.com

www.peti.ca

Pinnacle Environmental Technologies Inc.

H/O Mailing Address	H/O Location Address	H/O Contact Numbers
P. O. Box 12112	22765-A Fraser Hwy.	Ph: 604-514-7555
Langley, B.C. V3A 9J5	Langley, BC.	Toll Free 866-514-7555
WebSite: www.peti.ca	**Email:** info@peti.ca	Fx: 604-514-7595

June 10, 2008

Vijay Lanji
Quantum Murray LP
400 – 4400 Dominion Street
Burnaby, BC V5G 4G3

Re: Nomadic Workcamp

Mr. Lanji

As requested, here is some information regarding the Nomadic Workcamp and references for operation.

As you are aware the Nomadic™ system has been in use for over 5 years in cold-climate Northern Canada as well as installations in Europe and Asia. The system is built upon traditional septic treatment processes, which have been in use in North America for over 50 years, with special consideration for cold-weather environments and potential portable applications.

Treatment Process

- Influent enters the system into a larger, course-bubble aeration chamber. This chamber (combined with the settling chamber) is sized appropriately for 1 to 1-1/2 days of aeration for the sewage volume.
- We then enter a settling chamber where we can settle out some of the non-organic materials before we enter the treatment chamber.
- The third step in the process is the FAST® treatment process. This is a hybrid treatment process where we use both attached and suspended growth to treat our waste. The FAST® system uses an air-blower to create an air-lift where the sewage is constantly re-cycled through the system, pulling waste from the bottom of the tank and distributing it on top of the media. The air helps to accelerate activity and growth of the biology while the air-lift is constantly cleaning the media with the aggressive action. Note that there is no required maintenance for the media other than pumping out the tanks on a semi-regular basis.
- Effluent exits the treatment center through a mid-height "clarified-zone" and is run through a UV system before entering the pump chamber. The UV system is sized based upon the expected flows of the system.
- Effluent is pumped out to the field through a duplex pumping system. Note that we have also recently installed a re-circulation system where 20% of the pump cycle is sent back to the aeration chamber. This is just a further step in our treatment process which we have found works effectively to further reduce our BOD^5 and TSS test results.

NOMADIC System

Table: Typical Performance Criteria		
	Nomadic® 25	
Application:	Mobile Workcamp Environment	
PERFORMANCE PERAMETER	INFLUENT VALUE	EFFLUENT VALUE
Daily Sewage Flow (Max)	Est. 1250 Imperial Gal/ Day	
BOD_5	< 450	< 30
TSS	< 350	< 30
Fats, Oils and Grease	<35	

**Performance parameters not listed in this table have no guarantee of reduction or treatment.*

FLOW PATH

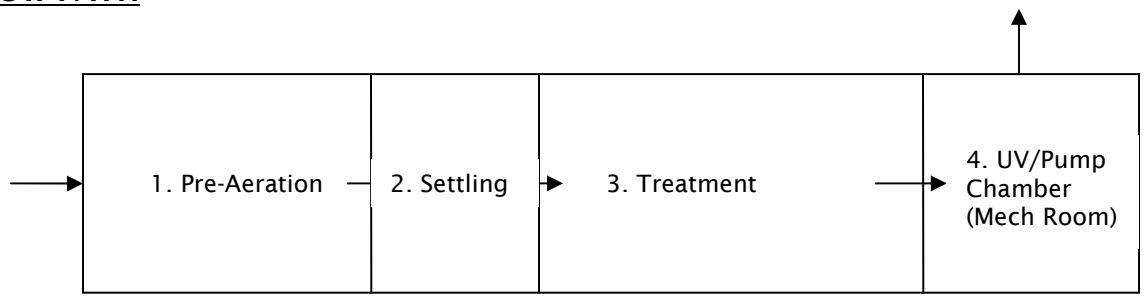

Engineering

All MicroFAST® systems are shipped with a stamped engineers drawing detailing their design parameters and operational capabilities.

Components

1. **Pre-Aeration**
   The Pre-Aeration uses a Lixor™ Course-Bubble Aerator with a 0.5hp – 1.5hp, 120/240v single phase blower motor (depending on the size of the chamber). No moving parts are submerged in the sewage; rather the Lixor unit is fed air from the blower sitting in the Mechanical room.
   The Lixor™ unit creates a "mixed-liquor" whereas the biological material is suspended in the liquid thereby beginning the treatment process.

2. **Settling**
   The Settling Chamber has no mechanical components. This is a small chamber where sludge is able to begin settling at the bottom of the chamber. Treatment continues in sludge and the mixed liquor however non-organic materials that are non-biodegradable are settled to the bottom of the chamber where they remain until the unit is cleaned out with a vacuum truck.

3. **Treatment**
The treatment chamber contains the MicroFAST® Bioreactor media (see attached drawing for a typical cross-section view of the MicroFAST media). This media is an area where the biological material can attach, grow, consume and die. This is the heart of the treatment process. Using an air-lift design; air is pumped through the center of the media, hitting a stop block and creating an air vacuum. Liquid is then lifted from the bottom of the chamber, through the center of the media and to the top of the chamber where it hits a splash plate, dispersing over the top of the media. The media never needs to be cleaned or washed due to the vigorous splashing action which consistently cleans and renews the media.
There are no moving parts in this chambers as the air is pumped from a blower in the mechanical room.
Note that I have also attached a file showing the testing process and results of the NSF™ certification process and data received from the

4. **UV / Pump Chamber / Mechanical Room**
As the effluent exits the treatment chamber it goes through a UV sterilization unit, the Protector™. This final polishing step eliminates harmful pathogens such as fecal coliforms and other bacteria which can infiltrate the local watercourse.
As the pump chamber fills the floats or transducer evacuates this chamber using a duplex (two pumps) pumping system. In the event of high flows or pump failure the system will give warnings however it will still be able to keep up with demand.
The mechanical room contains all electrical components and any serviceable parts that are contained in the Nomadic™ system. Other items not previously noted include: Electrical panel, heater, 4" chamber clean-out ports and all relevant control panels.

References

As requested here are a couple of references that use our Nomadic™ technology extensively. Both have extensive experience using the Nomadic system in all types of environments, summer and winter operation.

Tim Watchorn
Watchorn Oilfield Rentals
780-834-0055

Gerry Vassuer
Arrow Septic
780-835-0415

Test Results

Attached are a couple of test results that Pinnacle Environmental Technologies Inc. took ourselves at a site that we operated near Bragg Creek, Alberta. Test results are from November 2007 and January 2008 while the system was in operation. I have requested that

some of our customers send us some of their test results and they are mailing and faxing them to me as we speak. As soon as these are in my possession I will forward them to you. These results will include samples from cold-weather operation in Northern Alberta.

If you have any additional questions, please do not hesitate to contact me at any time.

Yours truly,

PINNACLE ENVIRONMENTAL TECHNOLOGIES INC.

Michael D Harkin
Alberta Area Manager
780-964-8755

Pinnacle Environmental Technologies Inc.

Mailing Address	Location Address	Contact Numbers
P. O. Box 12112	22765-A Fraser Hwy.	Ph: 604-514-7555
Langley, B.C. V3A 9J5	Langley, BC.	Toll Free 866-514-7555
WebSite: www.peti.ca	**Email:** info@peti.ca	Fx: 604-514-7595

NOMADIC™
Sewage Wastewater System

Owner's Manual

Publication Date: September 18, 2006

INDEX

Section	Title	Page
1.0	Process Description	3
	Design Criteria	3
	Process	4
	Typical Flow Path	5
2.0	Models & Flow Rates	6
	Table 1 – Models	
3.0	Professional Engineer Review	6
4.0	Operation & Maintenance Plan	7
	Responsibility of Owner / User	7
	Typical Maintenance Schedule	8
	Types of Alarm	9
	System Redundancies	9
	Spare Parts	9
5.0	Management Plan	10
	Qualified Maintenance Personnel	10
	Sewage Lift Station Design	10
	Start-Up Procedures	10
	Shut-Down Procedures	11
	Sludge Removal Test Procedure	11
	Pump Out Procedure	11
APPENDIX	Typical NOMADIC™ "Cowboy" Layout	13
	Typical NOMADIC™ Layout	15
	Standards of Good Practice	18

1.0 PROCESS DESCRIPTION

1.1 Design Criteria

The mobile / portable work camp sewage wastewater treatment plant design criteria are:

(1) Units must be robust for loading, placing and relocation by flat bed truck using winches to load and drop into place.

(2) Units are to be heated and insulated for cold weather conditions

(3) Units sole energy source is electricity as supplied by others on 24/7 basis.

(4) Hydraulic and Organic Loading rates are:
- (a) 225 litres per man (60 us gals)
- (b) NOMADIC™ "Cowboy" series are for work camps with less than 25 men and do NOT have a commercial grade central kitchen works.
- (c) For NOMADIC™ "Cowboy" Series the influent sewage characteristics are to be
  - BOD5 = 250 mg/l
  - TSS = 250 mg/l
  - FOG = 35 mg/l
- (d) For NOMADIC™ Series the influent sewage characteristics are to be
  - BOD5 = 650 mg/l
  - TSS = 350 mg/l
  - FOG = 35 mg/l

(5) The Alberta Private Sewage Disposal Systems Regulation refers to the National Sanitation Foundation International (NSF) Standard 40, Class 1. The FAST® BioFilter system is certified by NSF as meeting this standard. If operated and maintained in accordance with this manual, the NOMADIC™ system should meet or exceed the NSF Standard plus fecal coliform of < 400 CFU/100 ml.

(6) Disinfection is by Ultra-Violet Light.

(7) Fats, oils and grease (FOG) are to be intercepted PRIOR to entering the Nomadic™ system.

(8) Discharge from the Nomadic™ system is pump using a minimum of ½ HP effluent pump.

(9) An event recorder function is to allow for assessment and monitoring of systems flow, discharge pump and float switch operation on a daily and minute-by-minute basis.

(10) Laundry is NOT to have caustic mud waste enter the NOMADIC™ system.

1.2 Process

To accomplish the above, the sewage wastewater flow and treatment process is as follows:

(1) For "Cowboy" series NOMADIC™ systems, all kitchen, laundry, washing and toilet waste enter a sewage lift station with a grinder pump (or a 2" solids handling pump) as supplied by others. The lift station pumps into the NOMADIC™ system that contains a trash collection chamber (a.k.a. a settling chamber). From the trash collection chamber the biomass flows by gravity into the main treatment chamber that contains a FAST® BioFilter.

(2) For all other NOMADIC™ systems the central kitchen is to be fitted with Pinnacle's automated grease interceptor (AGI) at all scullery and pot washing sinks. The AGI is NOT fitted to the automated hot water dishwasher.

(3) All kitchen, laundry, washing and toilet waste enter a sewage lift station with a grinder pump (or a 2" solids handling pump) as supplied by others. The lift station pumps into the NOMADIC™ system that contains a Pre-Aeration chamber. The Pre-Aeration chamber is sized to hold a minimum of ½ day's design flow and contains a coarse air diffuser system with a volume of air to match the incoming organic load and reduce the BOD5. By gravity the biomass flows into a second chamber that is a settling chamber sized to be a minimum of ½ of the day's design flow rate. After the Pre-Aeration and Settling Chamber the BOD5 is to be 250 mg/l.

(4) The settling chamber allows for some separation of liquids and solids. From the settling chamber the biomass flows by gravity into the main treatment chamber that contains a FAST® BioFilter.

(5) FAST® stands for Fixed Activated Sludge Treatment. In the FAST® process, a large colony of bacteria, referred to as the biomass, breaks down biodegradable waste into carbon dioxide and water. The process occurs continuously as long as the biomass is supplied with food (incoming waste) and oxygen (air) in a suitable environment. Solid material that the biomass cannot process and bacteria that die settle in the bottom of the tank for normal pump-out removal.

The FAST® process consists of the BioFilter and the air pump (air source). The air pumps provide continuous air to the treatment tank through the air supply pipe. The air supply pipe combines with the draft tube to create an airlift. This airlift is the means by which air and wastewater are mixed within the tank. The airlift assembly lifts the wastewater to the splash plate. The wastewater is cascaded off the splash plate across the surface of the honeycomb plastic media.

The honeycomb plastic media is the heart of the FAST® process and is suspended in the wastewater. The media provides the high surface area on which the required biomass layer develops. Growing on the honeycomb media, and receiving food and oxygen necessary for growth from the airlift, this "bio-layer" biomass degrades (stabilizes) the waste before it is discharged to the drain field or other dispersal site.

The Fixed Activated Sludge Treatment system is designed to keep the active biomass on the media and not in the water. This allows for cleaner water to be discharged to the drain field.

A vent allows for venting the air and non-harmful carbon dioxide created by the process.

As the biomass layer thickens and accumulates on the media, some of it sloughs off the media and the airlift picks up the activated sludge particles and returns them to the media to aid in sewage absorption.

Eventually, there is an accumulation of "non-activated" sludge (or dead biomass and/or ash) at the bottom of the chamber and the tank will need to be pumped out.

1.3 Typical Flow Path

NOMADIC™

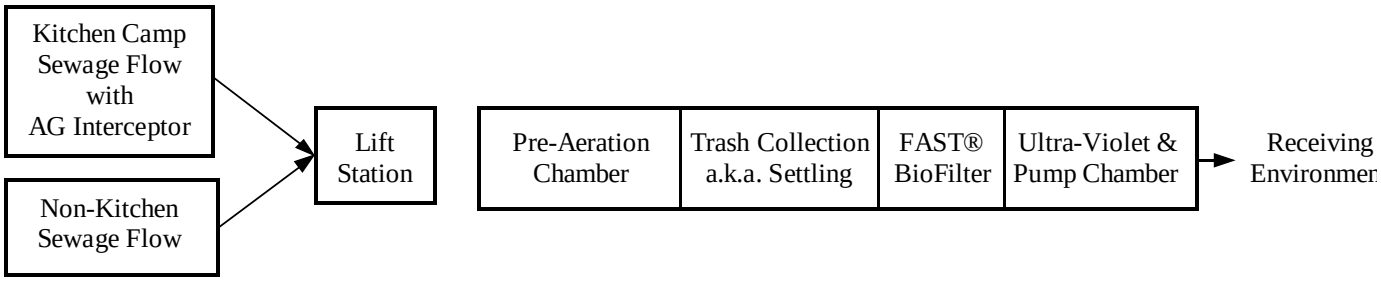

2.0 MODELS & FLOW RATES

(1) The following table sets out the typical various standard models and their respective daily flow rates based on the above stated design criteria:

2.1 TABLE 1 for NOMADIC™ SYSTEMS

Model No. Number	AGI Required (yes or no)	Max. Number of Person	Daily Flow Rate Litres	US Gals
Nomadic™ 21/25	YES	25	5,625	1,486
Nomadic™ 26/50	YES	50	11,250	2,972
Nomadic™ 51/75	YES	75	16,875	4,458

(2) Custom-built systems to meet larger flow rates or into different arrangements of containers (a.k.a. SeaCan) due to shipping, handling or placement issues follow the above described treatment process and design criteria.

(3) For systems with higher levels of incoming sewage wastewater strengths than described above are also are designed and built using the same flow path, but with increased pre-aeration and FAST® BioFilter.

(4) Refer to the appendix for general arrangement drawings and specifications for each of the NOMADIC™ Models listed in Table 1 above.

3.0 PROFESSIONAL ENGINEER REVIEW

A Professional Engineer may be required to provide a design for the dispersal site given site and soil conditions. Confirm with the appropriate authorities.

4.0 OPERATION & MAINTENANCE PLAN

It is the sole responsibility of the system's owner or user to operate and maintain the system in accordance with:

(1) The Standards of Good Practice as published from time to time by Pinnacle Environmental Technologies Inc.,
(2) in accordance with the system's design criteria, and,
(3) in accordance with any instructions issued by Pinnacle Environmental Technologies Inc.

4.1 Refer to Standards of Good Practice in the Appendix

4.2 The system owner or user MUST use Pinnacle's Automated Grease Interceptor (AGI) in any commercial grade central kitchen works.

4.3 TABLE 2 - Typical Maintenance Schedule

ITEM	FREQUENCY
AG Interceptor	
Remove Food Particles	Daily or more subject to usage
Empty Grease from Container	Daily or more subject to usage
Wipe Down Entire Unit	Bi-Weekly or more subject to usage
Pre-Aeration	
Empty Chamber Contents	Prior to moving System
Empty and wash-down Chamber	Annually
Air Blower Operation	Bi-weekly confirm amps and ohms are OK
Air Blower Air Intake Filter	B-Weekly remove, clean or replace
Settling / Trash Collection	
Empty Chamber Contents	Prior to moving System
Empty and wash-down Chamber	Annually
FAST® BioFilter	
Empty Chamber Contents	Prior to moving System
Empty and wash-down Chamber	Annually during non-use periods or every 2 – 3 years if system is used continuously since placement. Follow sludge judge assessment procedures.
Wash-down media	Only if during annual shut-down and storage and only as best as possible.
Air Blower Operation	Bi-weekly confirm amps and ohms are OK
Air Blower Air Intake Filter	B-Weekly remove, clean or replace
Ultra-Violet Light & Pump Chamber	
Empty Chamber Contents	Prior to moving System
Empty and wash-down Chamber	Annually
Ultra-Violet Light	
Lamps c/w sheath	Replace after 12 months of usage (being on) Replace if gauge drops to zero Bi-weekly check lamp & wash as needed
Discharge Pump	
Pump Operation	Bi-weekly confirm amps and ohms are OK
Heater	
Operation	Bi-weekly confirm amps and ohms are OK

4.4 TABLE 3 – Types of Alarms

Alarm Description (Audible or Visual)	Problem Indicated
Pre-Aeration Blower Alarm	Air Blower NOT operating
FAST® BioFilter Alarm	Air Blower NOT operating
Ultra-Violet Light Gauge Drops to Zero	UV Lamp NOT operating
High Level Alarm in Discharge Pump Chamber	Pump not discharging effluent

4.5 TABLE 4 – System Redundancies

ITEM	REDUNDANCY
Pre-Aeration Air Blower	none
FAST® BioFilter Air Blower	none
Ultra-Violet Light	none
Discharge Pump	Duplex alternating pumps for redundancy

4.6 Spare Parts

Spare parts available that can be supplied on order:

ITEM	ITEM
Circuit Breakers 60 AMP 20 AMP 15 AMP	Air Blower (Pre-Aeration / FAST®) 1/3 HP 110-220-/1/60 ½ HP 110-220/1/60 1 HP 220/1/60 1 ½ HP 220/1/60 2 ½ HP 220-440/1/60 5 HP 220-440/1/60
Air In-Take Filter for 1/3 HP Air Blower ½ HP Air Blower 1 HP Air Blower 1 ½ HP Air Blower 2 ½ HP Air Blower 5 HP Air Blower	Ultra-Violet Light Lamp Combo Lamp/Sheath/electrical pigtail
	4" Knife Gate Brass Valve
½ HP 110/1/60 Myers ME50 Discharge Pump	Float Switch 20 ft cord

5.0 MANAGEMENT PLAN

5.1 Only qualified maintenance personnel are to be used to conduct the system's maintenance and to provide instructions to either camp maintenance staff or kitchen staff in the safe and proper operation and use of any and all appliances or facilities in the work camp that create sewage wastewater entering the NOMADIC™ System.

Qualified maintenance personnel are to meet or exceed the training, education or experience as determined by Provincial regulation. In the event there is no provincial regulation determining the qualifications of maintenance personnel, then such persons shall be:

(a) registered with Applied Science Technologists and Technicians of British Columbia (ASTTBC) as a Registered Onsite Wastewater Practitioner (ROWP) for the maintenance of work camps, or

(b) recognized by the British Columbia Director of the Environmental Management Act, Municipal Sewage Regulation as being suitably qualified in the safe and proper operation of the facility for the protection of the environment and human health.

5.2 Sewage lift stations pumping into the NOMADIC™ raw sewage from the work camp shall be designed in accordance with the following:

1. Pump Dose Volume is to be determined by the following calculation/formula:
   Total Design Daily Flow x 0.075 = Pump Dose Volume per Occasion
2. Pump Dose Frequency
   Allow not less than 5 minutes between dosing events
3. Pump GPM
   Pump not to exceed 80 us gal./min.
   May also be achieved by using 2" diameter PVC pipe

5.3 Recommended Start-Up and Shut-Down Procedures

<u>Start-Up</u>

1. Fill all chambers at least half full of fresh water.
2. Connect electrical power supply for lighting only and switch off circuit breaker to discharge pump control panel.
3. In Pump Chamber, unwrap float switches and suspended and then switch on circuit breaker to discharge pump control panel. Not to do this in this order will cause the panel to alarm. If this occurs, simply turn circuit breaker off and wait a 30 seconds and turn circuit breaker on. The panel will re-set.
4. Turn on all air blowers, ultra-violet lights, discharge pumps and heaters.
5. Ensure AG Interceptor, if required, is installed and operational in the kitchen.
6. Start using the system.

Shut-Down

1. Through the drain valves empty all chambers.
2. Disconnect electrical power supply
3. In Pump Chamber, wrap-up and protect float switches from being tossed about during move, as they may crack and break.
4. All air blowers, ultra-violet lights, discharge pumps and heaters should be off.
5. Remove the AG INTERCEPTOR from kitchen works and store in SeaCan and secure for move.

5.4 LIQUIDS & SLUDGE SOLIDS REMOVAL TEST PROCEDURE

Using a "sludge judge" type, draw samples of the sludge levels in the trash collector / settling chamber through the access hatch on top of the NOMADIC™. Consult drawings of system as needed to locate the correct hatch.

If the sludge level at the bottom of the trash collection / settling chamber is **equal to or greater than 24 inches**, have the liquid contents of all chambers emptied.

5.5 PUMP OUT PROCEDURE

1. Turn off all air blowers 30 minutes prior to emptying.
2. Empty contents from all chambers through the knife / gate valves provided.
3. Wash down pre-aeration and trash collection / settling chamber if needed
4. Fill half full the Pre-Aeration Chamber and trash collection / settling chamber with clean water.
5. Turn on all blowers

DO NOT wash down BioFilter or attempt to vacuum it

NOTE: ALWAYS USE A LICENSED QUALIFIED PUMPER / HAULER

NOTE: THE COST ASSOCIATED WITH PUMPING THE TREATMENT SYSTEM IS NOT COVERED UNDER WARRANTY AND IS NOT INCLUDED IN THE SERVICE POLICY.

APPENDIX

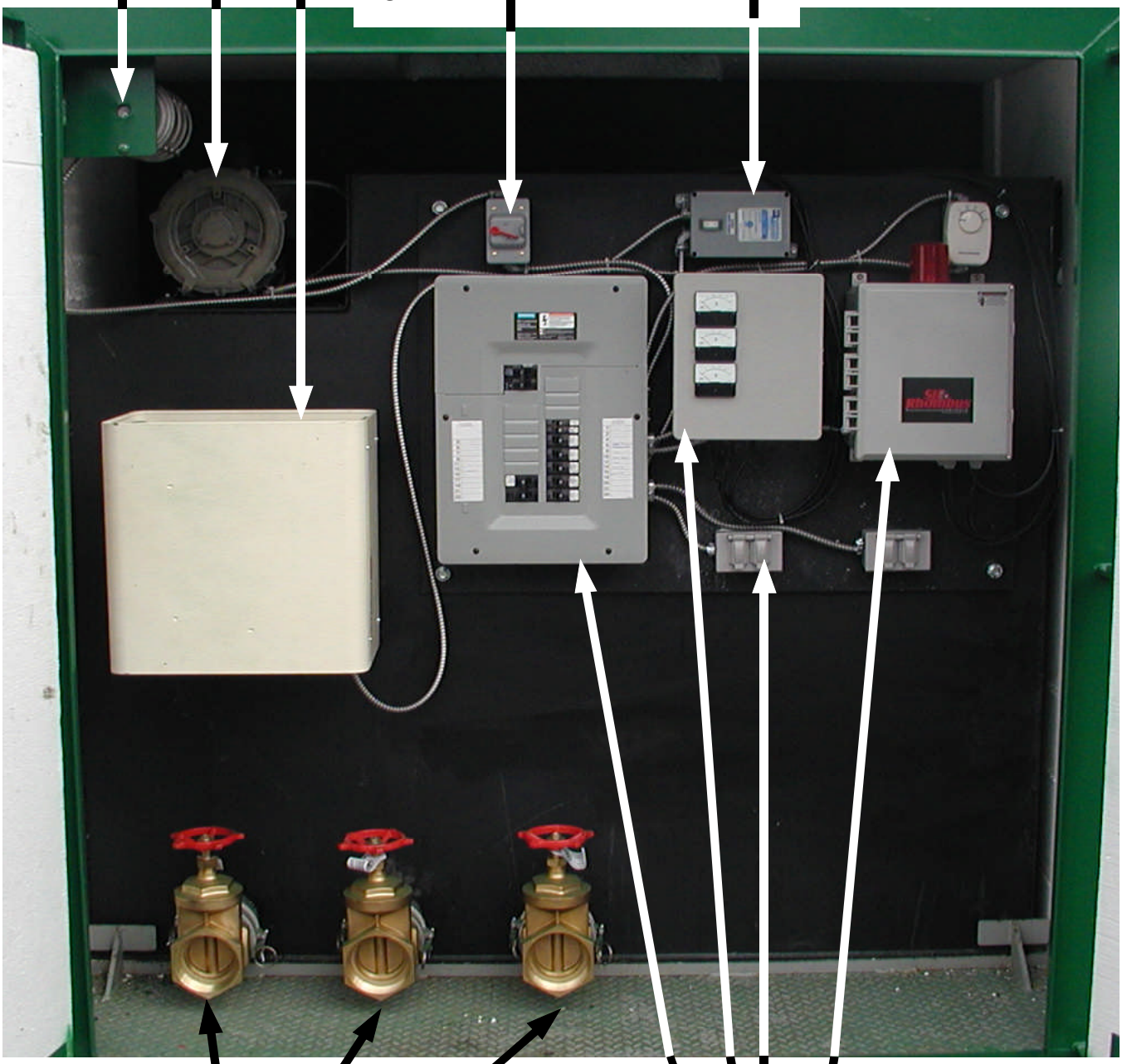
Interior Light
FAST® BioFilter Air Blower
FAST® Air Blower Alarm
Heater c/w Thermostat
Light Switch
Duplex Alternating Discharge Pump Panel
Duplex 110 Receptacle
3 Lamp UV Gauges
Circuit Breaker Panel
Chamber 1 Drain Valve
Chamber 2 Drain Valve
Chamber 3 Drain Valve

TYPICAL NOMADIC™ LAYOUT

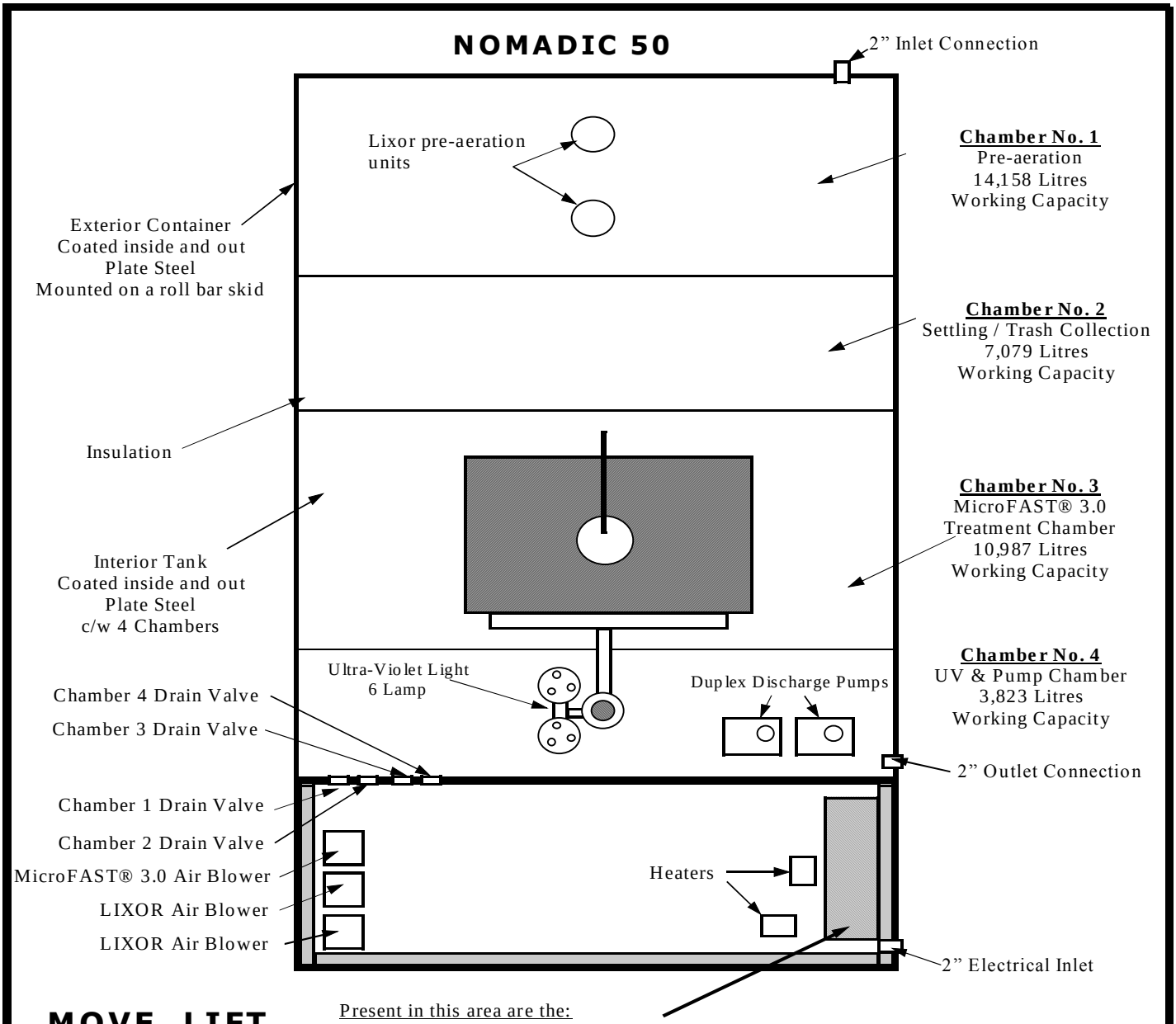

MOVE, LIFT, OR HANDLE ONLY WHEN EMPTY

Present in this area are the:
Main electrical panel
Air Blower Control & Alarm Panels
UV Gauges & Alarm Panel
Discharge Pump Control & Alarm Panel
Heat trace plug-ins

Drawing Title	NOMADIC 26/50 General Layout
Project	
Scale	N.T.S.
Drawn By	Frank Hay
Date	Sept 2006
Drawing No	NOMADIC 26/50 - 000

Pinnacle Environmental Technologies Inc.
22765-A Fraser Highway Ph: 604-514-7555
P. O. Box 3070 Fx: 604-514-7595
Langley, BC V3A 4R3 Email: peti@canada.com
WebSite: www.peti.ca

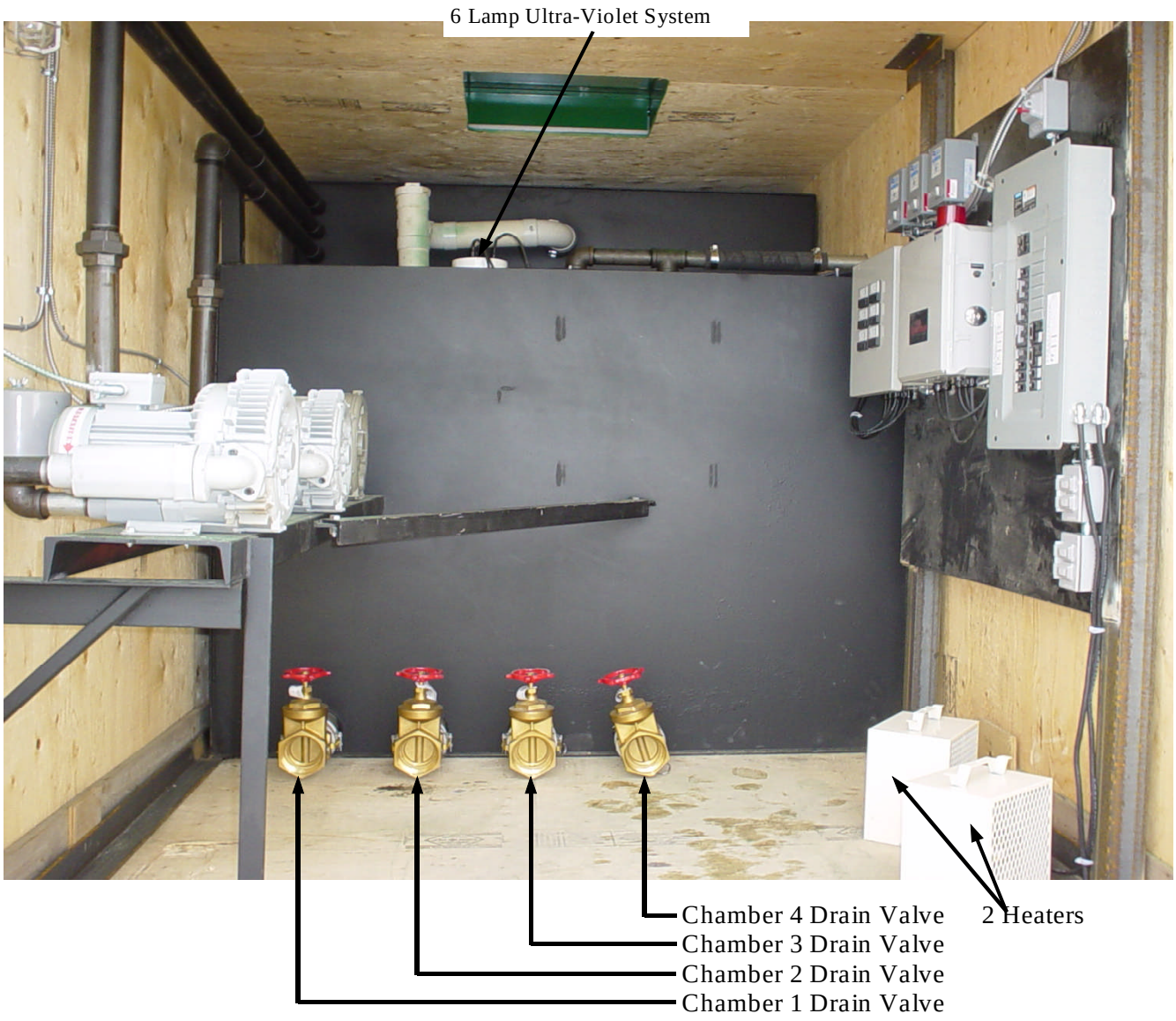
6 Lamp Ultra-Violet System
Chamber 4 Drain Valve
Chamber 3 Drain Valve
Chamber 2 Drain Valve
Chamber 1 Drain Valve
2 Heaters

NOMADIC 50

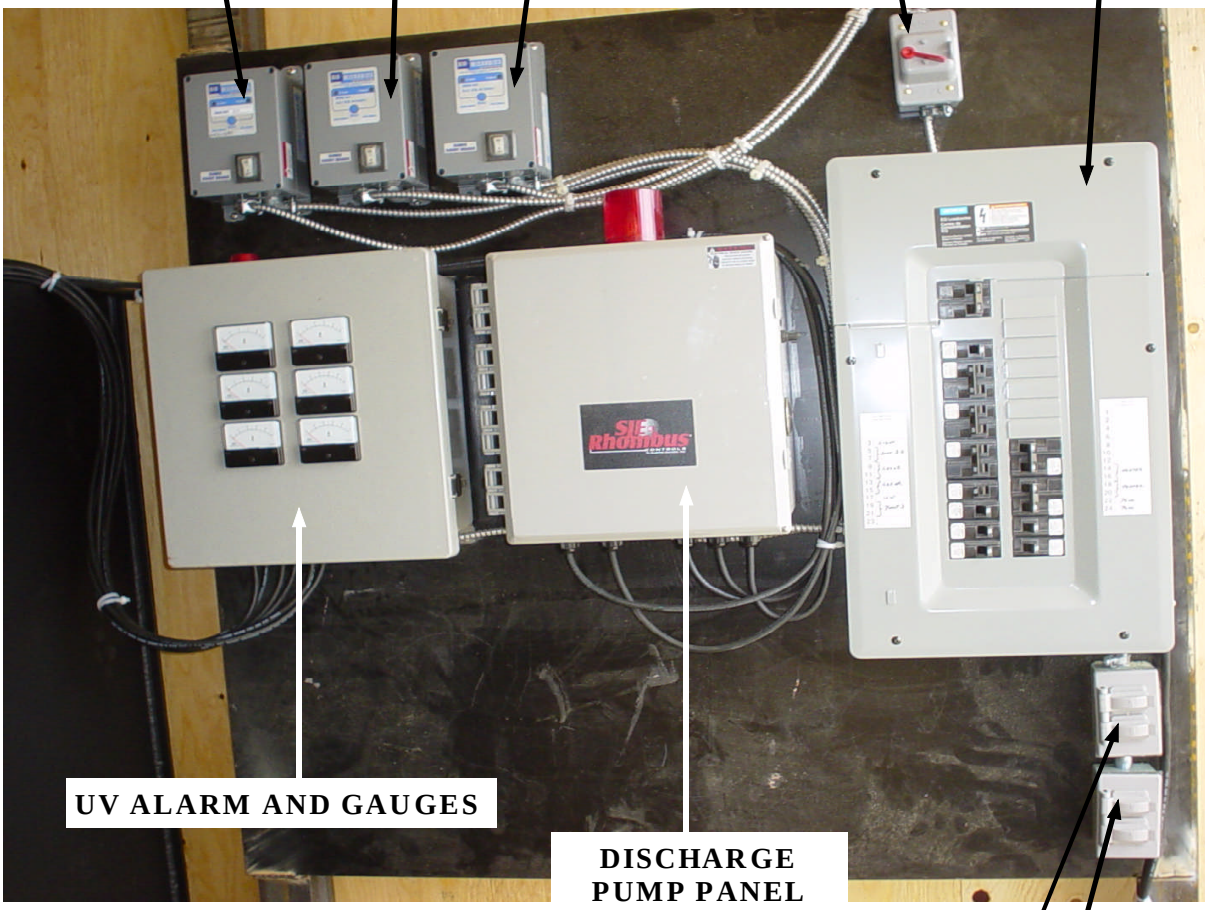
MicroFAST® 3.0 AIR BLOWER ALARM PANEL
LIXOR AIR BLOWER ALARM PANELS
LIGHT SWITCH
MAIN ELECTRICAL PANEL
UV ALARM AND GAUGES
DISCHARGE PUMP PANEL
2 OF DUPLEX RECEPTACLE

NOMADIC 50

STANDARD OF GOOD PRACTICE

OWNER CARE AND OPERATION INSTRUCTIONS

The ***FAST®*** system has been designed and built to provide long term, reliable and efficient service. Once the unit has been installed, the unit will operate with a minimum amount of attention.

ITEMS TO MINIMIZE OR TO CONTROL USAGE OF

DISINFECTANTS OR BLEACHES

Use in small quantities only. Use non-chlorine cleaners that are biodegradable and non-toxic.

ALL DETERGENTS

Should be low-sudsing, biodegradable, and low phosphate and contain either Baking Soda or Washing Soda. (some examples are: Arm & Hammer, VIM, ALL, and "Ecolab®" or Harris Products)

PAPER PRODUCTS

Use only white paper products. Natural bacteria do not eat colour dyes in paper and therefore do not breakdown coloured paper. Non-bleached paper (brown in colour) take a long time to breakdown and can therefore clog septic tanks and treatment systems.

NO LIQUID FABRIC SOFTENERS should be used. These products typically contain quaternary ammonia that is toxic to the bacteria. PLEASE USE DRYER SHEETS.

NO TOILET BOWL TABLETS SHOULD BE USED.

NO BACKWASH DISCHARGE FROM WATER SOFTENERS.

NO OILS, GREASES, CHEMICAL WASTES OR LATEX PAINTS.

NO HARSH CHEMICALS OR TOXINS SHOULD BE PUT INTO THE SYSTEM

(paints / solvents / thinners / caustic cleaners / pesticides / herbicides etc)

OBJECTS NOT TO BE PUT INTO THE SYSTEM

SANITARY NAPKINS	HAIR	BANDAGES
RAGS	COTTON BALLS	STRING
CONDOMS	PLASTICS	COFFEE GROUNDS
CIGARETTE BUTTS	METAL OBJECTS	MUD
STICKS	PAPER TOWELS	AUTOMOTIVE FLUIDS
CHEMICAL WASTES	EGG SHELLS	BONES
CORN COBS	WATER SOFTENER BACKWASH	

STANDARD OF GOOD PRACTICE

In-sink garbage disposal units

The use of this appliance increases both the organic matter and water entering the sewage system that in turn may upset the performance and treatment and may cause damage to the drain field. Therefore, it is recommended that there be a limited use of this appliance. All solid waste should be disposed of through composting or garbage collection.

The frequency of pumping out the system will in all likelihood increase.

VIOLATIONS OF THE STANDARD OF GOOD PRACTICE MAY VOID THE PRODUCT WARRANTY AND DAMAGE THE EFFLUENT RECEIVING SITE

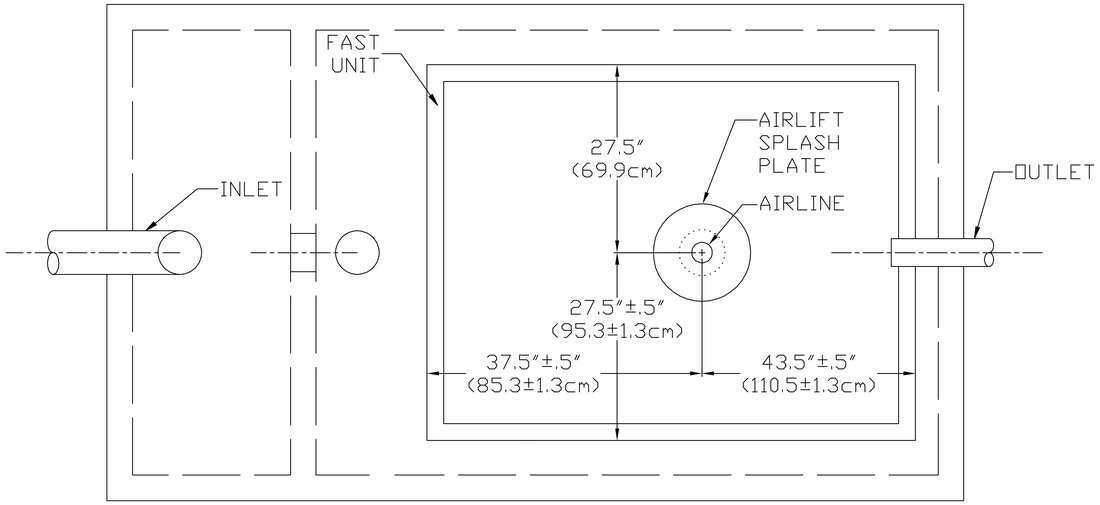

PLAN VIEW

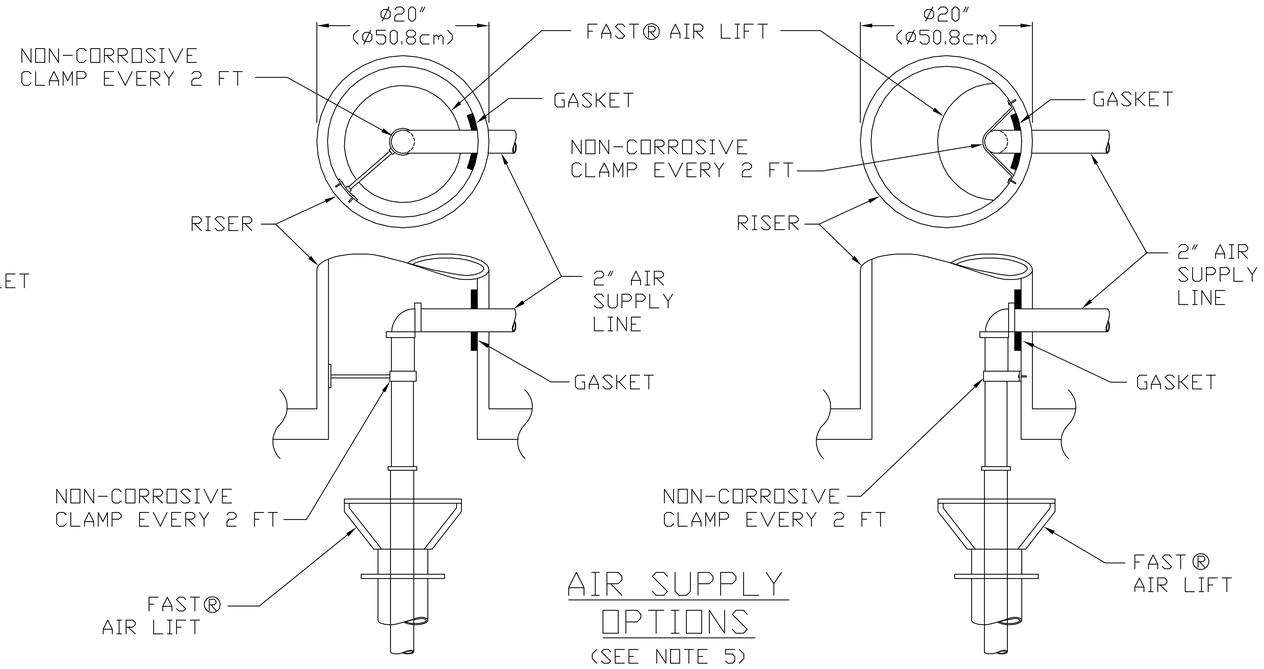

AIR SUPPLY
OPTIONS
(SEE NOTE 5)

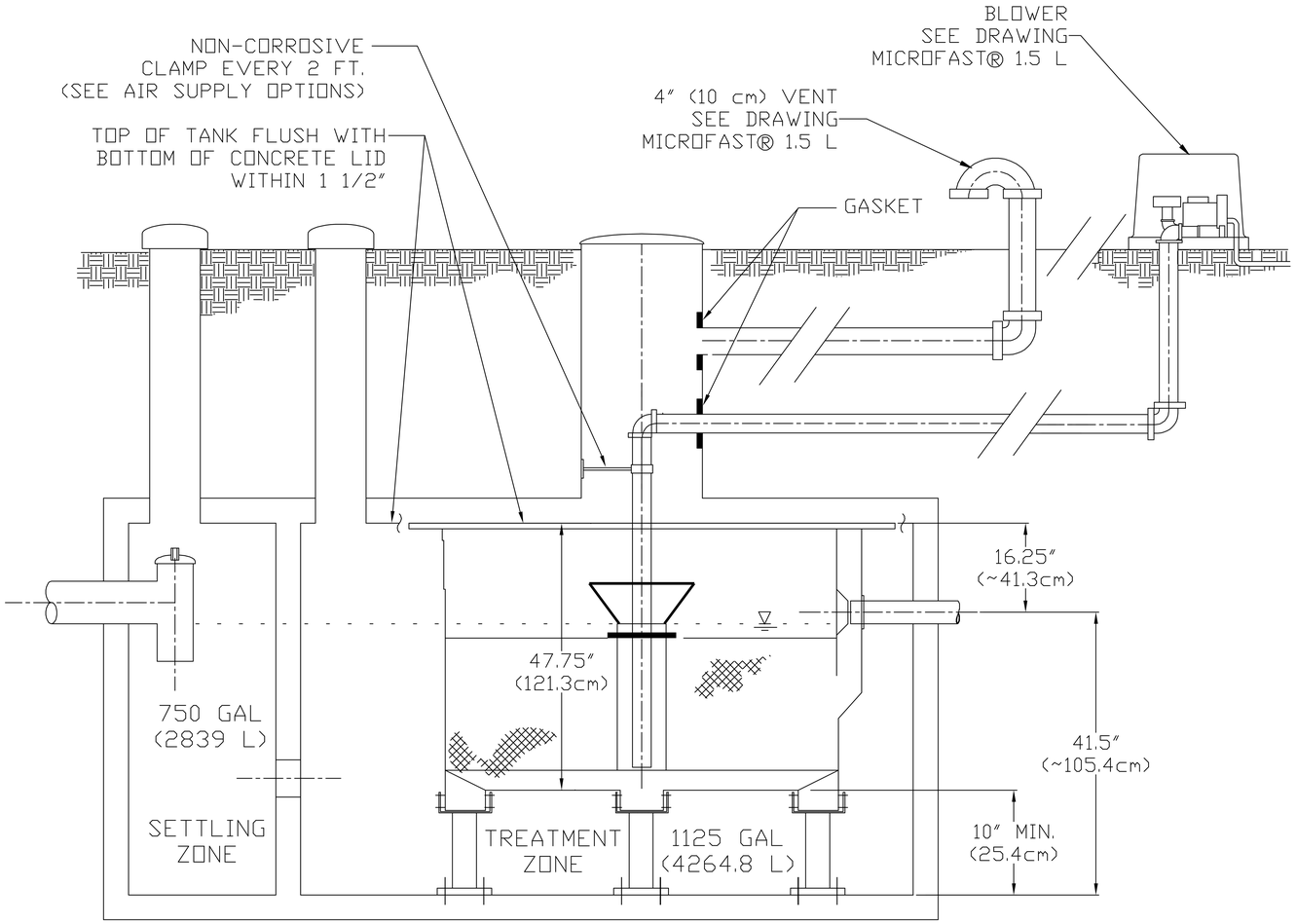

ELEVATION

NOTES

1. SECURE ORIGINAL 7″ X 7″ FOOT TO LEG EXTENSION BY PLACING TWO (2) SCREWS IN EACH SIDE OF THE LEG EXTENSION. EIGHT (8) SCREWS PER FOOT ARE INCLUDED AND SHOULD BE USED ON EACH OF THE FOUR (4) CORNER LEG EXTENSIONS.
2. ANCHOR THE LEG EXTENSIONS (4 CORNER LEGS ONLY) TO THE BASE OF THE TANK. PLACE BOLTS AT OPPOSITE CORNERS OF THE LEG EXTENSION BASE.
3. TO ELONGATE FOOT PAST THE PROVIDED 12″, CUT THE 3.9″ LEG EXTENSION IN THE CENTER INTO TWO SEPARATE PIECES. THEN CUT A SCH 40 PVC PIPE TO THE DESIRED LENGTH AND SLIP THE PIPE OVER THE TOP AND BOTTOM CUT SECTIONS OF THE LEG EXTENSIONS.
4. ATTACH PIPES WITH STAINLESS STEEL SCREWS.
5. THE AIR SUPPLY LINE INTO THE FAST® UNIT MUST BE SECURED SO AS TO PREVENT DAMAGE FROM PIPE VIBRATION.
6. SEE ALL NOTES ON MCF 1.5 L DRAWING.
7. IF LEGS ARE EXTENDED PAST 48″, USE OF SCHED 80 OR STRONGER PIPE IS RECOMMENDED.

IN THE INTEREST OF TECHNOLOGICAL PROGRESS, ALL PRODUCTS ARE SUBJECT TO DESIGN AND/OR MATERIAL CHANGE WITHOUT NOTICE.

Date 01-03-05

BIO-MICROBICS® INCORPORATED
1-800-753-FAST(3278)

MicroFAST® 1.5 F

© Bio-Microbics, Inc. 2003

THE DESIGN AND DETAIL OF THIS DRAWING IS THE PROPERTY OF BIO-MICROBICS, INC. AND IS NOT TO BE USED EXCEPT IN CONNECTION WITH OUR WORK. DESIGN AND INVENTION RIGHTS ARE RESERVED.
DIMENSIONS ARE IN INCHES UNLESS OTHERWISE NOTED.

Drawn by BMI

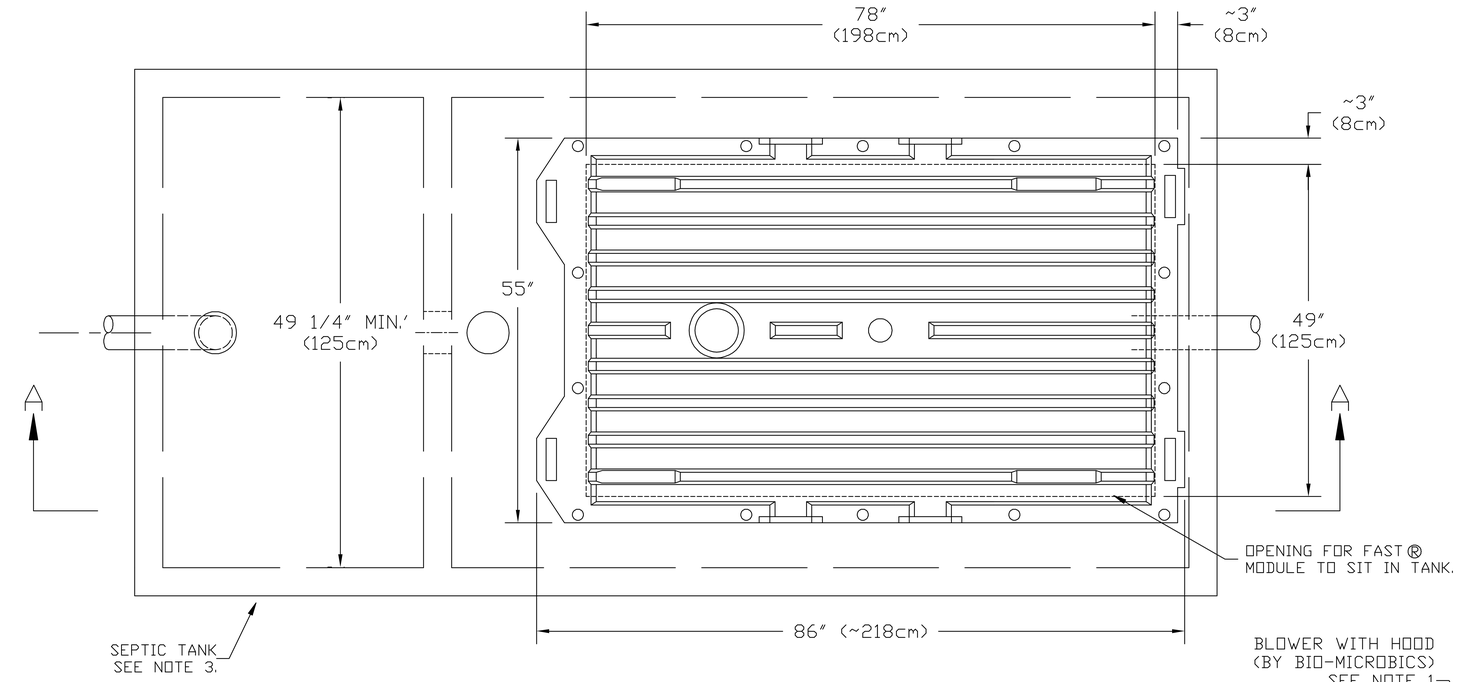

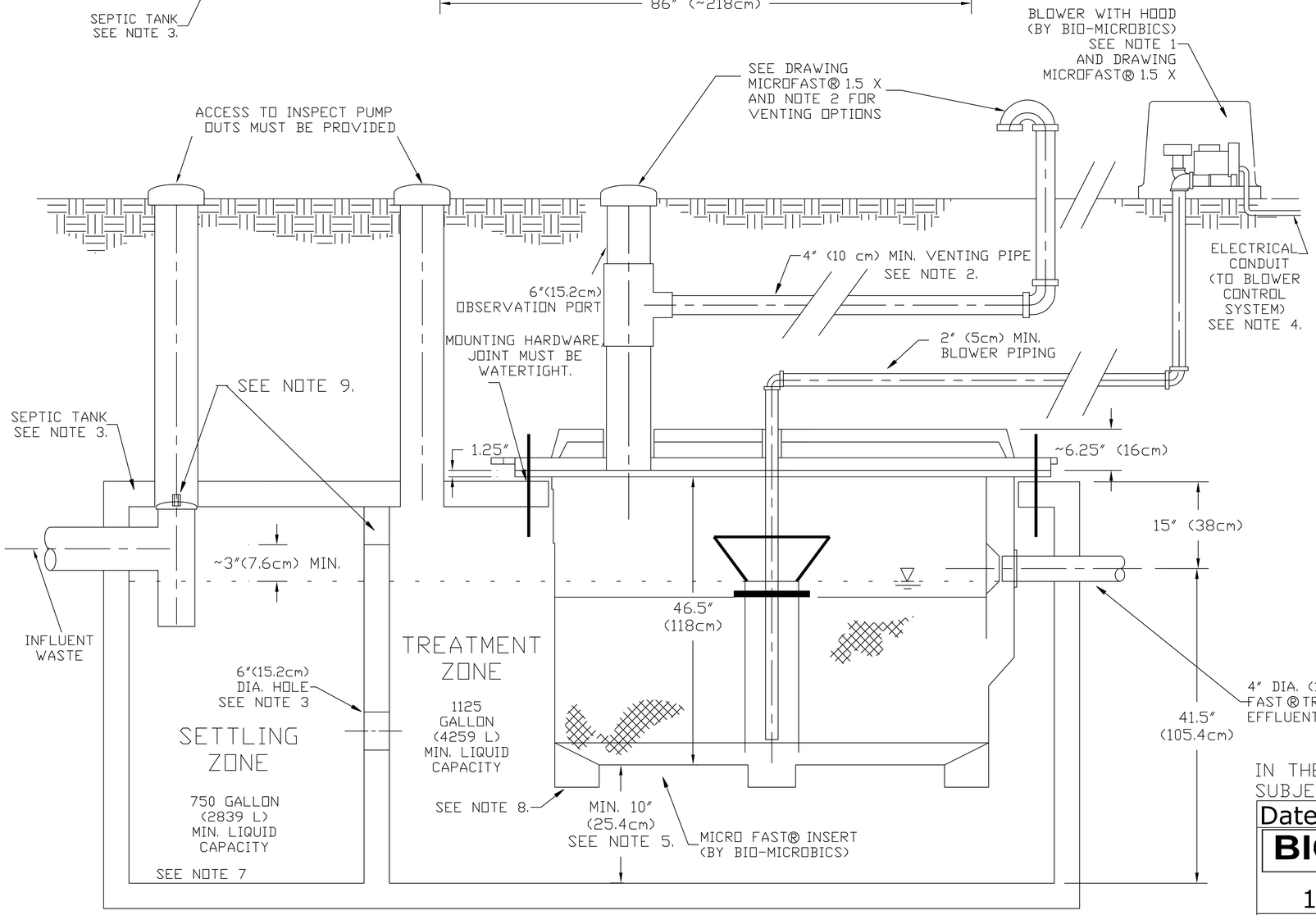

VIEW A-A

NOTES

1. BLOWER PIPING TO FAST® MAY NOT EXCEED 100 FT (30.5m) TOTAL LENGTH AND USE A MAXIMUM OF 4 ELBOWS IN THE PIPING SYSTEM (@ 100 FT). FOR DISTANCES GREATER THAN 100 FT--CONSULT FACTORY. BLOWER MUST BE LOCATED ABOVE FLOOD LEVELS.

2. VENT TO BE LOCATED ABOVE FINISH GRADE OR HIGHER TO AVOID INFILTRATION. CAP WITH 6″ VENT GRATE W/AT LEAST 9.1 SQ. IN. OPEN SURFACE AREA. SECURE WITH STAINLESS STEEL SCREWS (SEE MCF 1.5 X DRAWING).
   OR:
   RUN VENT TO DESIRED LOCATION AND COVER OPENING WITH MIN. 4″ VENT GRATE W/AT LEAST 9.1 SQ. IN. OPEN SURFACE AREA. SECURE WITH STAINLESS STEEL SCREWS. VENT MUST NOT ALLOW EXCESS MOISTURE BUILDUP OR BACK PRESSURE.

3. ALL APPURTENANCES TO FAST® (e.g. SEPTIC TANK, PUMPOUTS, ETC.) MUST CONFORM TO ALL COUNTRY, STATE, PROVINCE, AND LOCAL CODES.

4. BLOWER CONTROL SYSTEM BY BIO-MICROBICS, INC.

5. COPYRIGHT (C) 2005, BIO-MICROBICS, INC.

6. MUST INCREASE TANK SIZE BY 20% IF MINIMUM OF 10 INCHES IS USED BETWEEN THE UNIT AND THE BASE OF TANK. CONSULT FACTORY FOR APPROVAL.

7. THE PRIMARY COMPARTMENT MAY BE A SEPARATE TANK.

8. NO MORE THAN 4 FT OF FILL MAY BE PLACED OVER FAST LID. UNIT MAY STAND INSIDE TANK. SEE MCF 1.5 X & F DRAWING AND REFER TO INSTALLATION MANUAL FOR MORE DETAILS.

9. THERE IS AN OPTION OF EITHER PLACING A PIPE CAP ON THE TOP OF THE INFLUENT TEE OR EXTENDING THE BAFFLE SEPARATING THE TWO ZONES ALL THE WAY TO THE TOP OF THE CONCRETE TANK. IF USING THE PIPE CAP OPTION, THE BAFFLE MUST EXTEND AT LEAST 3″ PAST THE WATER LEVEL IN THE TANK AS SHOWN IN THE DRAWING.

IN THE INTEREST OF TECHNOLOGICAL PROGRESS, ALL PRODUCTS ARE SUBJECT TO DESIGN AND/OR MATERIAL CHANGE WITHOUT NOTICE.

Date 01-03-05

BIO-MICROBICS® INCORPORATED
1-800-753-FAST(3278)

© Bio-Microbics, Inc. 2003

THE DESIGN AND DETAIL OF THIS DRAWING IS THE PROPERTY OF BIO-MICROBICS, INC. AND IS NOT TO BE USED EXCEPT IN CONNECTION WITH OUR WORK. DESIGN AND INVENTION RIGHTS ARE RESERVED.
DIMENSIONS ARE IN INCHES UNLESS OTHERWISE NOTED.

MicroFAST® 1.5 L

Drawn by BMI

Specifications For MicroFAST 1.5 Wastewater Treatment System

1. GENERAL

The contractor shall furnish and install (1) MicroFAST 1.5 treatment system as manufactured by Bio-Microbics, Inc. The treatment system shall be complete with all needed equipment as shown on the drawings and specified herein.

The principal items of equipment shall include FAST System insert, insert lid (or leg extensions if that option is chosen), blower assembly, blower controls and alarms. The MicroFAST 1.5 unit shall be situated within a 1125 gallon minimum compartment in a two compartment tank as shown on the plans, or in a 1875 gallon one compartment tank. Tank(s) must conform to local, state, and all other applicable codes. The contractor shall provide coordination between the FAST system and tank supplier with regard to fabrication of the tank, installation of the FAST unit and delivery to the job site.

2. OPERATING CONDITIONS

The MicroFAST 1.5 treatment system shall be capable of treating the wastewater produced by typical family activities (bath, laundry, kitchen, etc.) ranging from (6) six to (21) twenty-one persons and not to exceed 1,500 US Gallons per day (5678 LPD).

3. MEDIA

The FAST media shall be manufactured of rigid PVC, polyethylene or polypropylene and it shall be supported by the polyethylene insert. The media shall be fixed in position and contain no moving or wearing parts and shall not corrode. The media shall be designed and installed to ensure that sloughed solids immediately descend through the media to the bottom of the septic tank.

4. BLOWER

The MicroFAST 1.5 unit shall come equipped with a regenerative type blower capable of delivering 25-40 CFM. The blower assembly shall include an inlet filter with metal filter element.

5. REMOTE MOUNTED BLOWER

The blower may be mounted remote withno more than 100 feet (30.5 M) of piping and no more than four elbows, from the FAST unit on a contractor supplied concrete base. The blower must not set in standing water and its elevation must be higher than the normal flood level. A two-piece, rectangular housing shall be provided with tamper-proof screws. The discharge air line from the blower to the RetroFAST shall be provided and installed by the contractor.

6. ELECTRICAL

The electrical source should be within 150 feet of the blower. Consult local code for longer wiring distances. All wiring must conform to code. The input power required for the blower is 115/230 Volts, Single Phase, 60/50 Hertz, 5.6/2.8 Full Load Amps, minimum wire size is 14 A.W.G. (Locked Rotor Amps are 23.2/11.6). All conduit and wiring between the electrical control panel (optional), the power supply, and the blower shall be furnished and installed by the contractor.

7. ALARMS

The alarm system shall consist of a visual and audible alarm to indicate loss of power to the blower and/or high water level. A manual silence switch is included.

8. INSTALLATION AND OPERATING INSTRUCTIONS

All work must be done in accordance with local codes and regulations. Installation of the MicroFAST 1.5 shall be done in accordance with the written instructions provided by the manufacturer. No more than four feet of fill may be placed over the FAST lid.

9. FLOW AND PIPE SIZING

Each FAST module is provided with a standard (4) four inch effluent pipe hole and gasket. The maximum free or unrestricted flow with a four inch effluent pipe is 90 U.S. Gallons per minute (341 LPM), or 45 U.S. GPM (170 LPM) with a 2.0 design safety factor. An optional (6) six inch hole and gasket can be utilized on the same centerline dimension or up to 2 inches (5 cm) higher. Maximum free or unrestricted flow with a 6 inch effluent pipe is 260 GPM (984 LPM) or 130 GPM (492 LPM) with a 2.0 design safety factor.

Wastewater treatment systems work best when influent flow is delivered as consistently as possible. FAST systems have been successfully designed, tested and certified recieving gravity, demand-based influent flow. However when influent flow is controlled (either by pump or other means) to the FAST system to help with highly variable flow conditions, then multiple feeding events should be used to help assure even flow, optimum performance, and reliability.

10. WARRANTY

In the event a mechanical component fails to perform as specified or is proven defective in service during the warranty period, the manufacturer shall repair or replace such defective parts. (Cost of labor on repair/replacement is not covered under this warranty.) The replacement or repair of those items normally consumed in service such as air filter, etc., shall be considered as part of routine maintenance and upkeep.

It is not intended that the manufacturer assume responsibility for contingent liabilities or consequential damages of any nature resulting from defects in design, material or workmanship, or delays in delivery, replacement, or otherwise.

IN THE INTEREST OF TECHNOLOGICAL PROGRESS, ALL PRODUCTS ARE SUBJECT TO DESIGN AND/OR MATERIAL CHANGE WITHOUT NOTICE.

Date 01-03-05

BIO-MICROBICS® INCORPORATED

1-800-753-FAST (3278)

© Bio-Microbics, Inc. 2003

MicroFAST® 1.5 S

THE DESIGN AND DETAIL OF THIS DRAWING IS THE PROPERTY OF BIO-MICROBICS, INC. AND IS NOT TO BE USED EXCEPT IN CONNECTION WITH OUR WORK. DESIGN AND INVENTION RIGHTS ARE RESERVED.
DIMENSIONS ARE IN INCHES UNLESS OTHERWISE NOTED.

Drawn by BMI

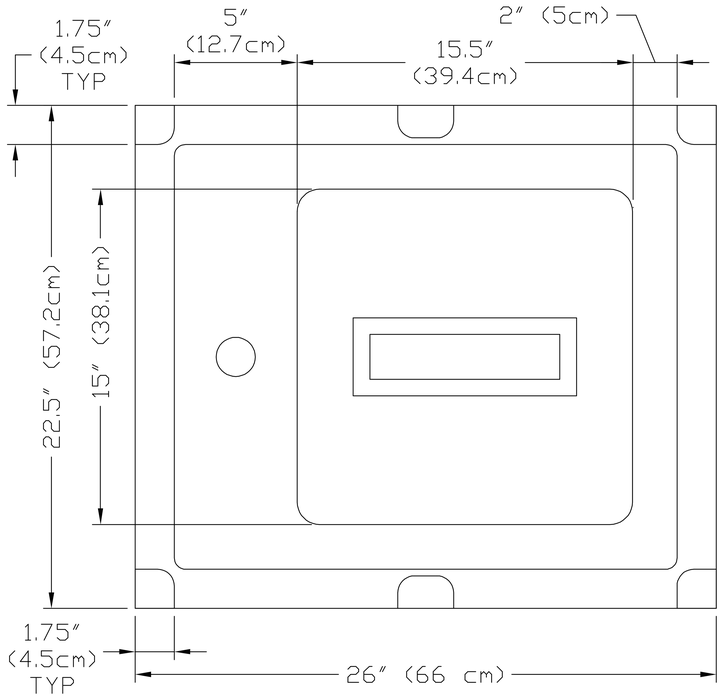

BLOWER HOUSING BASE
DIMENSIONS (SECTION A-A)

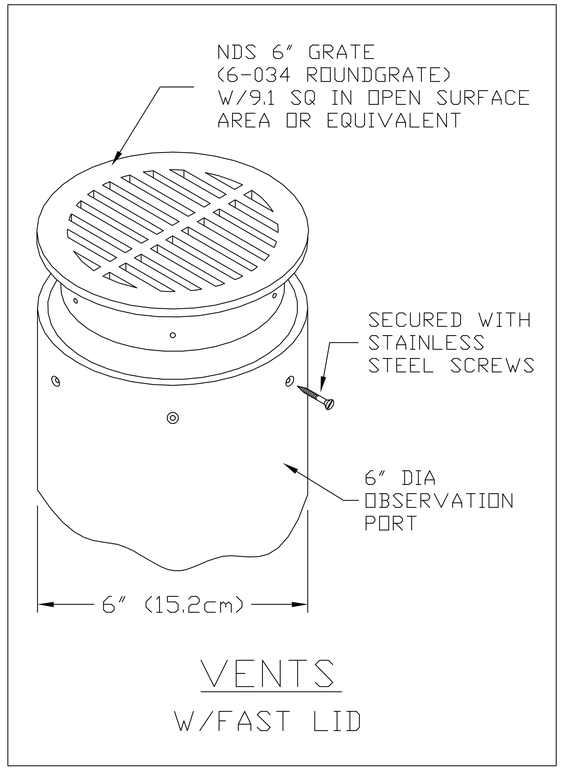

VENTS
W/FAST LID

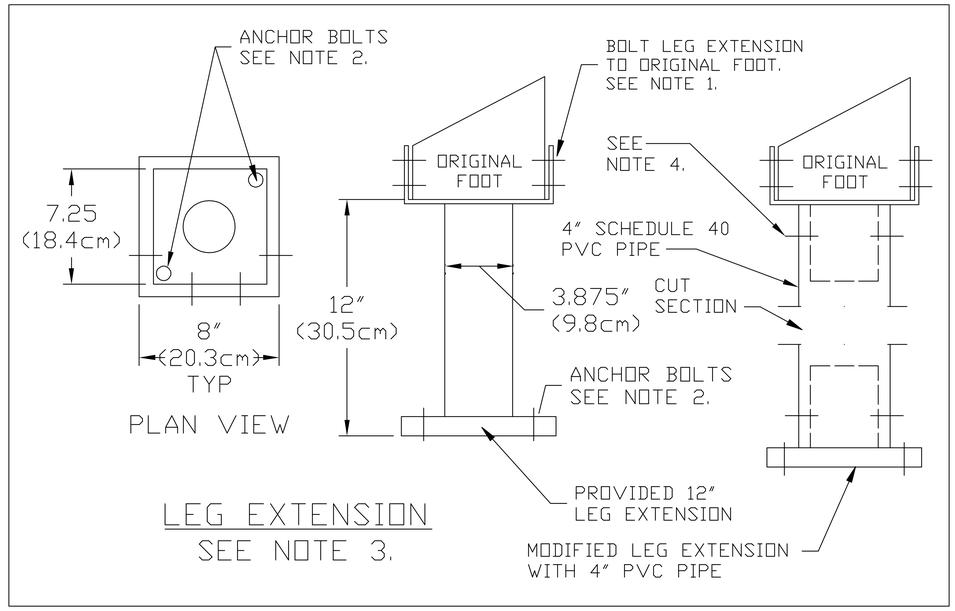

LEG EXTENSION
SEE NOTE 3.

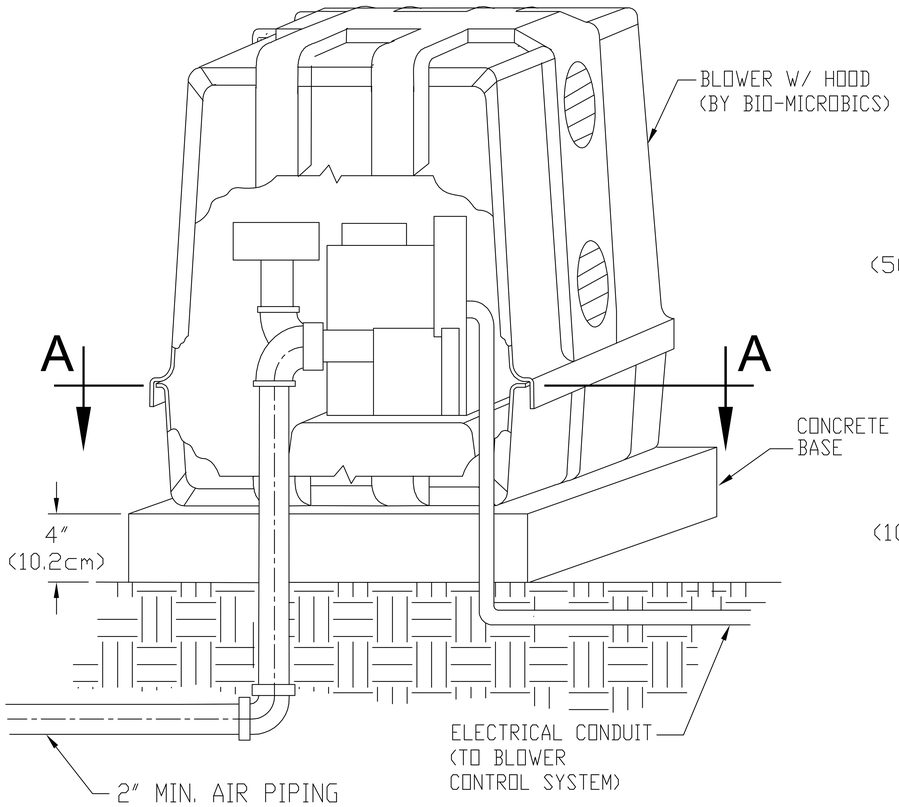

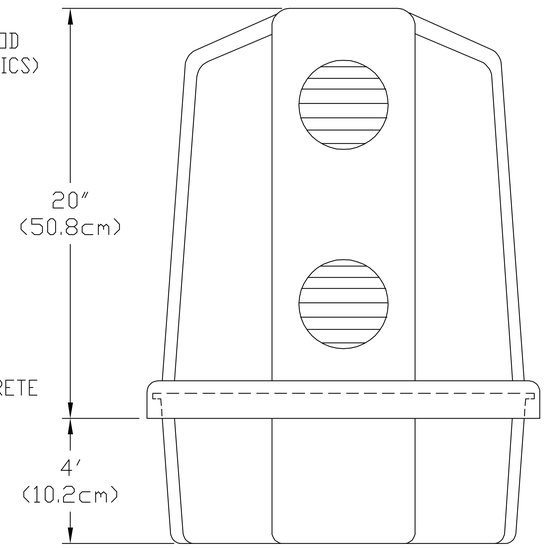

BLOWER
HOUSING
DIMENSIONS

NOTES

1. SECURE ORIGINAL 7″ X 7″ FOOT TO LEG EXTENSION BY PLACING TWO (2) SCREWS IN EACH SIDE OF THE LEG EXTENSION. EIGHT (8) SCREWS PER FOOT ARE INCLUDED AND SHOULD BE USED ON EACH OF THE FOUR (4) CORNER LEG EXTENSIONS.

2. ANCHOR THE LEG EXTENSIONS (4 CORNER LEGS ONLY) TO THE BASE OF THE TANK. PLACE BOLTS AT OPPOSITE CORNERS OF THE LEG EXTENSION BASE.

3. TO ELONGATE FOOT PAST THE PROVIDED 12″, CUT THE 3.9″ LEG EXTENSION IN THE CENTER INTO TWO SEPARATE PIECES. THEN CUT A SCH 40 PVC PIPE TO THE DESIRED LENGTH AND SLIP THE PIPE OVER THE TOP AND BOTTOM CUT SECTIONS OF THE LEG EXTENSIONS.

4. ATTACH PIPES WITH STAINLESS STEEL SCREWS.

5. VENT TO BE LOCATED ABOVE FINISH GRADE OR HIGHER TO AVOID INFILTRATION. CAP WITH 6″ VENT GRATE W/AT LEAST 9.1 SQ. IN. OF OPEN SURFACE AREA. SECURE WITH STAINLESS STEEL SCREWS (SEE MCF 1.5 L DWG)

   OR:

   RUN VENT TO DESIRED LOCATION AND COVER OPENING WITH MIN. 4″ VENT GRATE W/AT LEAST 9.1 SQ. IN. OPEN SURFACE AREA. SECURE WITH STAINLESS STEEL SCREWS. VENT MUST NOT ALLOW EXCESS MOISTURE BUILDUP OR BACK PRESSURE.

IN THE INTEREST OF TECHNOLOGICAL PROGRESS, ALL PRODUCTS ARE SUBJECT TO DESIGN AND/OR MATERIAL CHANGE WITHOUT NOTICE.

Date 01-03-05

BIO-MICROBICS® INCORPORATED
1-800-753-FAST(3278)

MicroFAST® 1.5 X

© Bio-Microbics, Inc. 2003

THE DESIGN AND DETAIL OF THIS DRAWING IS THE PROPERTY OF BIO-MICROBICS, INC. AND IS NOT TO BE USED EXCEPT IN CONNECTION WITH OUR WORK. DESIGN AND INVENTION RIGHTS ARE RESERVED.
DIMENSIONS ARE IN INCHES UNLESS OTHERWISE NOTED.

Drawn by BMI

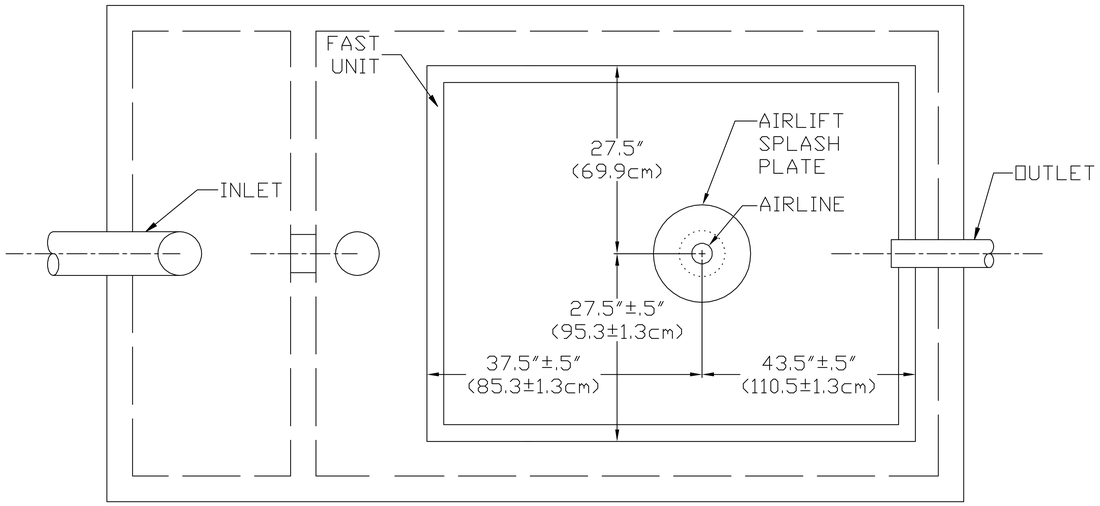

PLAN VIEW

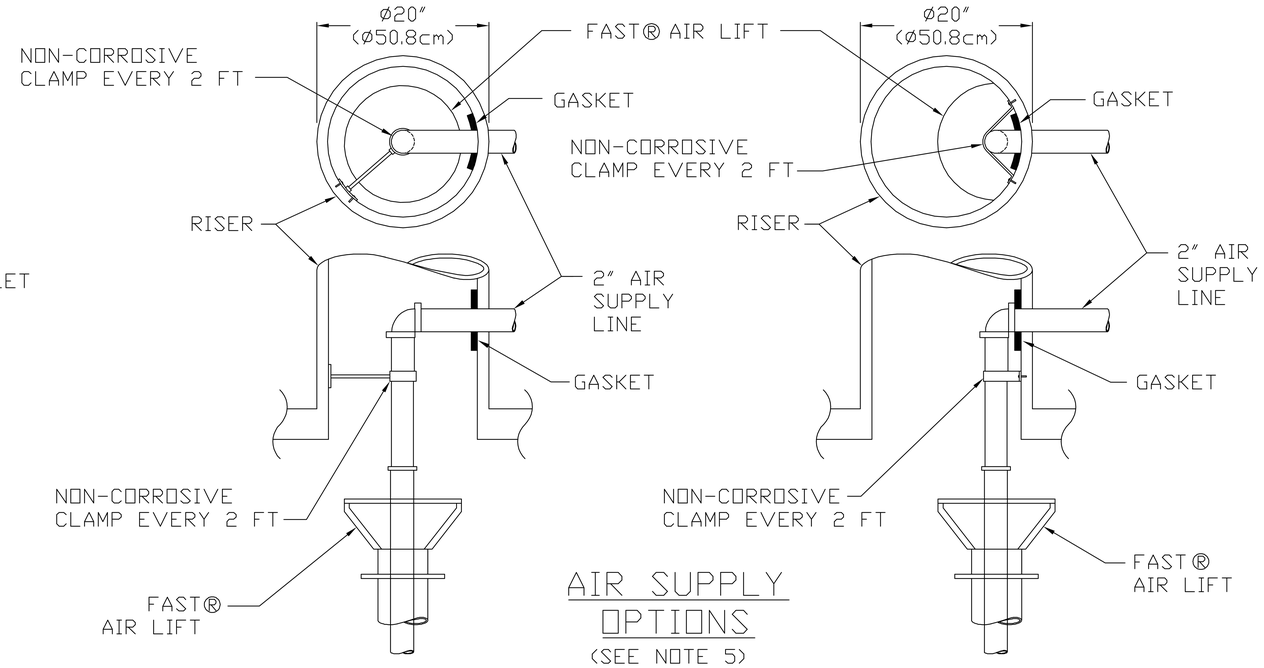

AIR SUPPLY
OPTIONS
(SEE NOTE 5)

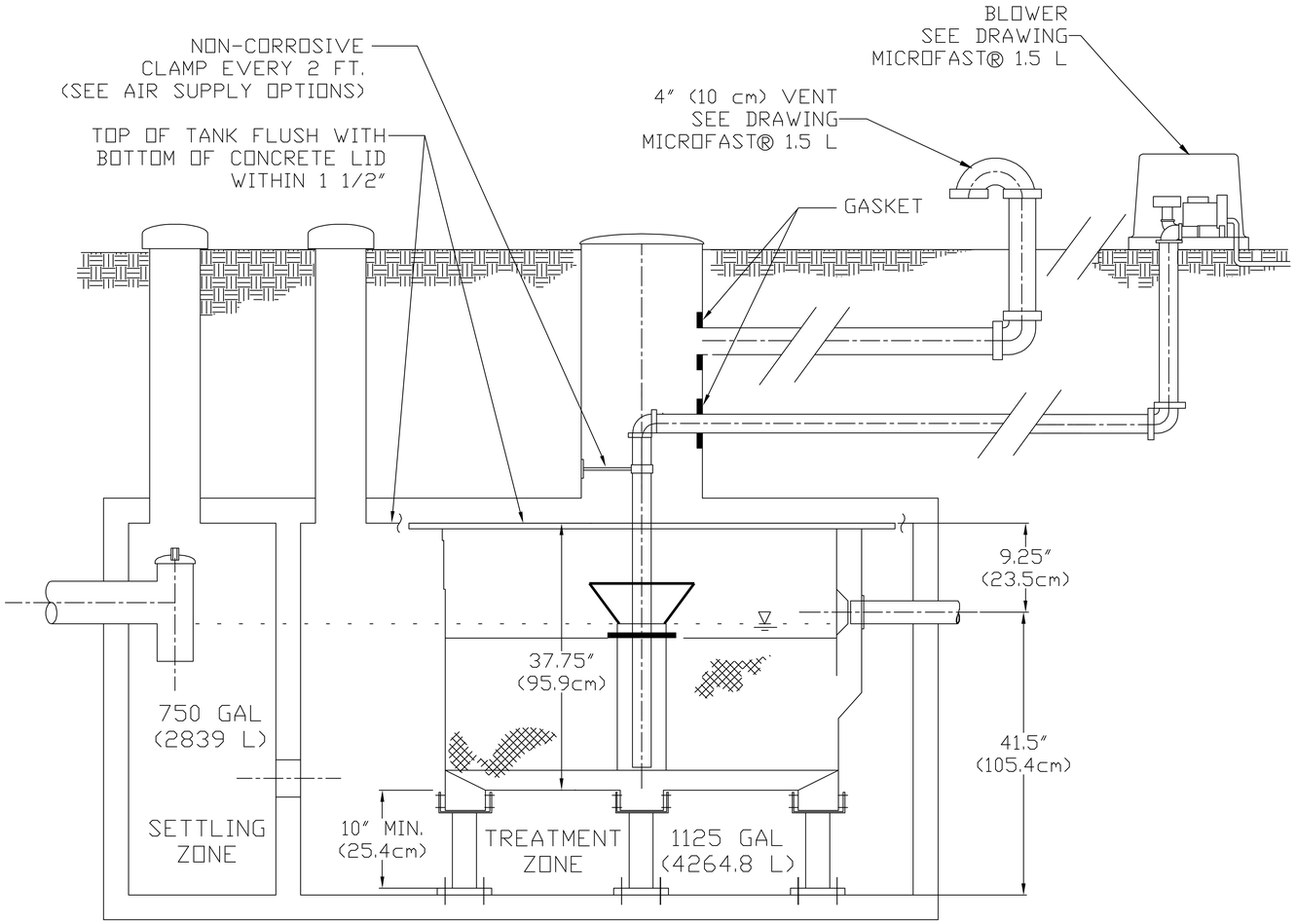

ELEVATION

NOTES

1. SECURE ORIGINAL 7″ X 7″ FOOT TO LEG EXTENSION BY PLACING TWO (2) SCREWS IN EACH SIDE OF THE LEG EXTENSION. EIGHT (8) SCREWS PER FOOT ARE INCLUDED AND SHOULD BE USED ON EACH OF THE FOUR (4) CORNER LEG EXTENSIONS.
2. ANCHOR THE LEG EXTENSIONS (4 CORNER LEGS ONLY) TO THE BASE OF THE TANK. PLACE BOLTS AT OPPOSITE CORNERS OF THE LEG EXTENSION BASE.
3. TO ELONGATE FOOT PAST THE PROVIDED 12″, CUT THE 3.9″ LEG EXTENSION IN THE CENTER INTO TWO SEPARATE PIECES. THEN CUT A SCH 40 PVC PIPE TO THE DESIRED LENGTH AND SLIP THE PIPE OVER THE TOP AND BOTTOM CUT SECTIONS OF THE LEG EXTENSIONS.
4. ATTACH PIPES WITH STAINLESS STEEL SCREWS.
5. THE AIR SUPPLY LINE INTO THE FAST® UNIT MUST BE SECURED SO AS TO PREVENT DAMAGE FROM PIPE VIBRATION.
6. SEE ALL NOTES ON MCF 1.5 L DRAWING.
7. IF LEGS ARE EXTENDED PAST 48″, USE OF SCHED 80 OR STRONGER PIPE IS RECOMMENDED.

IN THE INTEREST OF TECHNOLOGICAL PROGRESS, ALL PRODUCTS ARE SUBJECT TO DESIGN AND/OR MATERIAL CHANGE WITHOUT NOTICE.

Date 01-03-05

BIO-MICROBICS® INCORPORATED
1-800-753-FAST(3278)

MicroFAST® 1.5 F
Short

© Bio-Microbics, Inc. 2003

THE DESIGN AND DETAIL OF THIS DRAWING IS THE PROPERTY OF BIO-MICROBICS, INC. AND IS NOT TO BE USED EXCEPT IN CONNECTION WITH OUR WORK. DESIGN AND INVENTION RIGHTS ARE RESERVED.
DIMENSIONS ARE IN INCHES UNLESS OTHERWISE NOTED.

Drawn by BMI

Pinnacle Environmental Technologies Inc.

~~Mailing Address~~
P. O. Box 3070
Langley, B.C. V3A 4R3

~~Location Address~~
22765-A Fraser Hwy.
Langley, BC.

~~Contact Numbers~~
Ph: 604-514-7555 (866-514-7555)
Fx: 604-514-7595 (toll free)

WebSite: www.peti.ca
Email: info@peti.ca

FAST®

SEWAGE WASTEWATER TREATMENT SYSTEM

PERFORMANCE TEST DATA

Head Office:
22765-A Fraser Hwy- Box 3070
Langley, BC, V3A 4R3
Ph: Toll Free 866-514-7555

Eastern Regional Office:
Suite 426 - 31- 130 Cedar Street
Cambridge, Ontario N1S 5A5
Ph: Toll Free 866-514-7555

Prairie Regional Office:
935 Dowker Street
Winnipeg, Manitoba R3F 1R7
Ph: Toll Free 866-514-7555

The **National Sanitation Foundation *International*** is a world class recognized independent agency for testing the performance capabilities of water and wastewater treatment equipment technologies. They have specific standards that these technologies must meet in order to be certified by NSF *International*.

For the sewage wastewater technologies, NSF *International* has several standards. The standard that has the toughest effluent quality criteria is Standard 40, Class 1.

The FAST® technology was submitted to the NSF *International* for testing to determine whether it met the Standard 40, Class 1. The testing period is for at least 6 months. The FAST® was tested during the months from November to June in Ann Harbour, Michigan that is an area in cold winter climate conditions.

The following is a summary of the test results. The FAST® is listed and certified as meeting this standard. A copy of the full report is available to professional engineers and government regulators on request.

SUMMARY OF NSF TEST RESULTS OF THE MicroFAST SEWAGE TREATMENT PLANT

	Average	Std. Dev.	Minimum	Maximum	Median	Interquartile Range
BOD_5 (mg/l)						
Influent	144	34	89	280	140	120 - 160
Effluent	9	4	<5	24	8	6 – 11
Suspended Solids (mg/l)						
Influent	197	85	85	740	180	150 - 220
Effluent	7	3	<5	27	5	5 – 8
Volatile Suspended Solids (mg/l)						
Influent	159	54	68	430	150	130 - 180
Effluent	6	3	<5	29	<5	<5 – 7
pH						
Influent	-	-	7.3	7.7	7.5	7.5 - 7.5
Effluent	-	-	7.5	8.2	7.8	7.8 - 7.9
Temperature (^{0}C)						
Influent	12	2	10	17	12	11 - 13
Effluent	11	4	6	21	10	8 - 13
Dissolved Oxygen (mg/l)						
Effluent	6.8	1.4	2.8	9.9	6.9	6.2 - 7.8

Notes: The median is the point where half of the values are greater and half are less.

The interquartile range is the range of values about the median between the upper and lower 25 percent of all values.

This information found in TABLE 1 Summary of Analytical Results, Page 10 of the NSF Test Results of the MicroFAST MODEL .5, dated July 1997.

Other independent testing agencies and groups, working on behalf of either governments or onsite sewage treatment system owners, have conducted testing of systems in service as required by their regulation or a government lead study.

When and where these test results are submitted back to BioMicrobics Incorporated in Kansas, USA, they are additional confirmation of the capabilities and performance capabilities of the FAST® unit.

The following is a summary of a collection of these submitted results.

Site Details: Florida Owners Project — Phase 1. Actual residences of several single family homes.

Date	BOD_5		CBOD		TSS		TKN		Total Phosphorus	
	Influent	Effluent	Influent	Effluent	Influent	Effluent	Influent	Effluent	Influent	Effluent
11/20/96	137.00	3.26	176.00	2.48	60.00	no data	19.20	1.23	4.32	3.22
12/18/96	148.00	7.75	136.00	8.85	86.00	no data	46.90	1.77	7.09	4.21
1/29/97	299.00	10.00	215.00	9.01	345.00	4.00	62.50	1.82	11.00	4.52
2/26/97	139.00	10.00	183.00	6.00	70.00	4.00	37.40	0.64	7.07	5.22
4/2/97	170.00	2.20	150.00	1.00	17.00	1.00	32.00	1.60	6.60	5.60
4/23/97	210.00	1.40	200.00	1.00	203.00	1.00	46.00	1.10	7.80	5.60
5/8/97 (1)	230.00	1.70	220.00	1.00	170.00	2.50	39.00	1.10	7.10	5.40
5/21/97	62.00	2.70	59.00	1.00	162.00	1.00	33.00	1.60	5.80	5.30
5/29/97 (2)	240.00	1.00	130.00	1.00	80.00	1.00	44.00	1.60	26.00	5.80
6/11/97	100.00	1.40	67.00	1.00	123.00	1.00	36.00	0.83	5.80	7.10
7/17/97	150.00	1.00	130.00	1.00	74.00	3.00	33.00	1.10	7.10	4.50
8/28/97	100.00	1.00	71.00	1.00	20.00	1.00	32.00	0.81	5.00	4.20
Average	165.42	3.62	144.75	2.86	117.50	1.95	38.42	1.27	8.39	5.06
Reduction	97.8%		98%		98.3%		96.7%		39.7%	

(1) sample collected after vacation stress test simulation
(2) sample collected after wash day stress test simulation

Site Details: Single Family Home in Washington State. 2 adults and 2 adolescent boys.
Effluent discharged to drip irrigation dispersal system

EFFLUENT ONLY RESULTS REPORTED

Date	BOD	TSS	TKN	Total Phosphorus
04/06/99	<3.0	2.0		
04/18/99	<3.0	2.0	<1.6	2.80
04/23/99	3.0	2.0		
04/28/99	3.0	2.0	1.8	2.60
05/13/99	<3.0	2.0	1.5	2.78
05/20/99	<3.0	3.0		
06/03/99	<3.0	3.0	1.8	2.26

High Strength Sewage Wastewater is typically considered to be where the influent BOD and TSS exceeds 250 mg/l respectively. The FAST® product is available in a design specially constructed to handle high strength wastewater. Each project is considered on its own particular needs and the appropriate FAST® high strength wastewater treatment model is selected.

Test results from systems in place are available upon the submission of the data to BioMicrobics which is not mandatory and provided voluntarily by the system user.

Site Details: Elementary school in the eastern USA. School has cafeteria to service the students and teachers.
The total daily flow is 4,000 imp gals (18 cu. m.)

Date	CBOD		TSS	
	Influent	Effluent	Influent	Effluent
01/18/01	894.00	10.40	216.00	11.50
01/24/01	707.00	4.70	243.00	2.00
02/01/01	740.00	1.98	232.20	3.00
02/06/01	623.00	1.67	467.40	3.70
02/14/01	416.00	4.87	154.70	4.70
03/07/01	662.00	1.61	96.00	5.00
03/14/01	514.70	1.13	149.50	6.30
03/21/01	578.00	1.97	103.00	7.70
03/28/01	596.00	5.20	153.00	5.00
04/04/01	738.00	2.90	241.00	6.00
04/11/01	789.00	4.40	98.70	3.70
04/18/01	427.60	2.00	255.00	5.30
04/25/01	523.00	3.10	117.50	4.00
05/16/01	579.70	4.30	116.00	5.00
Average	627.71	3.59	188.79	5.21
Reduction	99.4%		97.2%	