DWG. NO. H349000-4134-10-035-0002

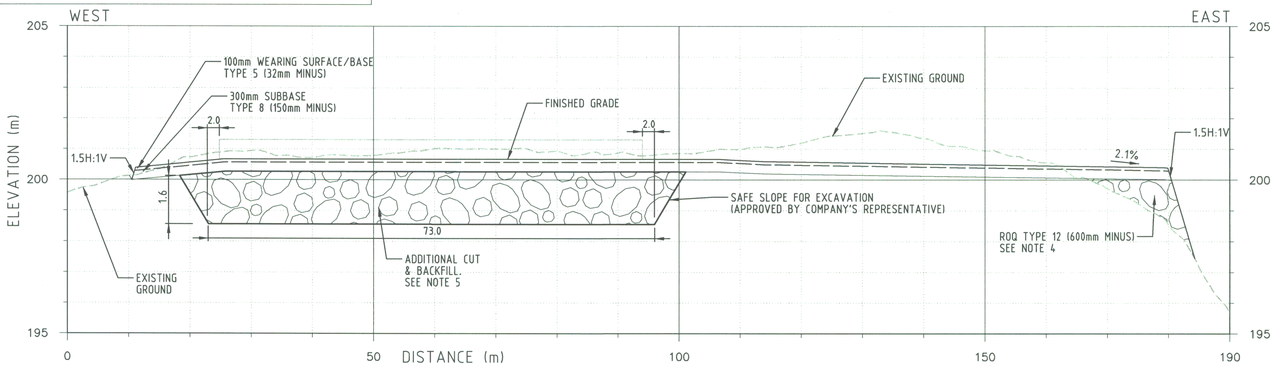

SECTION A (4134-10-035-0001)
1:500 H
1:100 V

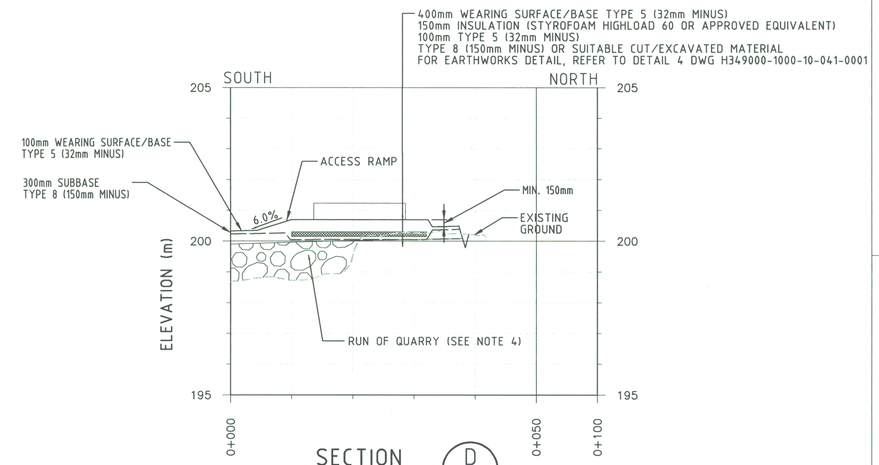

SECTION D (TYP.)
1:500 H
1:100 V

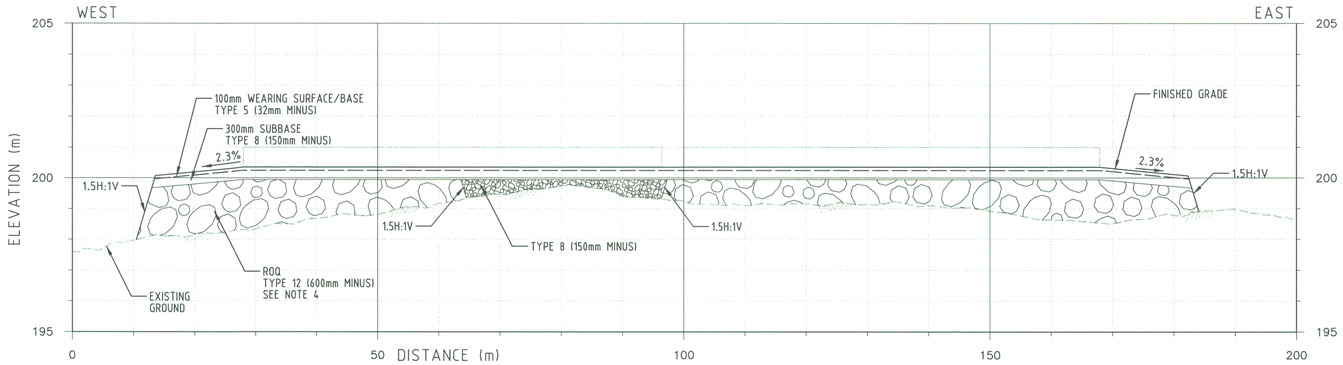

SECTION B (4134-10-035-0001)
1:500 H
1:100 V

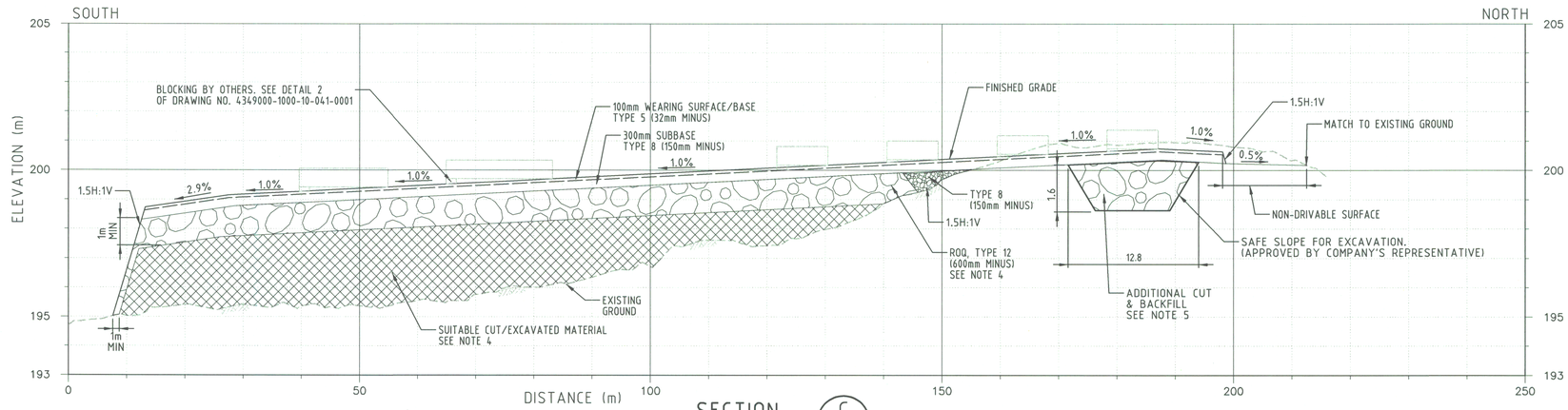

SECTION C (4134-10-035-0001)
1:500 H
1:100 V

LEGEND:

- % — GRADING SLOPE
- BUILDING FOUNDATIONS BY OTHERS
- RUN OF QUARRY TYPE 12 (600mm MINUS)
- TYPE 8 (150mm MINUS)
- SUITABLE CUT/EXCAVATED MATERIAL

NOTES:

1. ALL DIMENSIONS AND ELEVATIONS SHOWN ARE IN METRES UNLESS NOTED OTHERWISE.
2. SERVICES/SKIDDED BUILDINGS SHOWN ON THIS DRAWING ARE PRELIMINARY AND SHOULD BE VALIDATED AFTER FINALIZING BUILDINGS/STRUCTURES.
3. FOR TYPICAL EARTHWORK DETAILS REFER TO DRAWINGS H349000-1000-10-041-0001 AND H349000-1000-10-041-0002.
4. FOR FILL DEPTH > 600mm AND DEPENDING ON FILL EXTENT, TYPE 12 I.E. RUN OF QUARRY (600mm MINUS) OR SUITABLE CUT/EXCAVATED MATERIAL SHOULD BE USED AS APPROVED BY COMPANY'S REPRESENTATIVE.
5. EXCAVATE ALL FROST SUSCEPTIBLE (FS) AND ALL ICE RICH SOILS TO THE EXTENT SHOWN. BACKFILL WITH TYPE 12 (600mm) ROCK. NON-FROST SUSCEPTIBLE SOILS WITH NO VISIBLE ICE SHALL NOT BE EXCAVATED WHERE APPROVED BY THE COMPANY'S REPRESENTATIVE.

FOR CONSTRUCTION

DRAWING NO.	DRAWING TITLE

REFERENCE DRAWINGS

THIS DRAWING WAS PREPARED FOR THE EXCLUSIVE USE OF BAFFINLAND IRON CORPORATION (CLIENT) AND IS ISSUED PURSUANT TO THE AGREEMENT BETWEEN CLIENT AND HATCH (EC "MATCH"). UNLESS OTHERWISE AGREED IN WRITING WITH CLIENT OR SPECIFIED ON THIS DRAWING: (A) HATCH DOES NOT ACCEPT AND DISCLAIMS ANY AND ALL LIABILITY OR RESPONSIBILITY ARISING FROM ANY USE OF OR RELIANCE ON THIS DRAWING BY ANY PARTY OTHER THAN CLIENT, AND (B) THIS DRAWING IS CONFIDENTIAL AND ALL INTELLECTUAL PROPERTY RIGHTS EMBODIED OR REFERENCED IN THIS DRAWING REMAIN THE PROPERTY OF HATCH.

NO.	DESCRIPTION	BY	CHK'D	APP'D	DATE

REVISIONS

REGISTERED PROFESSIONAL ENGINEER — M. M. S. HASSAN — LICENSEE — 29/May/13 — NT/NU

REV.	ISSUE FOR	AUTH. BY		DATE
0	CONSTRUCTION	SH	GJ	2013-05-29

ISSUE AUTHORIZATION

HATCH™

DESIGNED BY for K. FALLAH DATE 2013-05-27	DRAWN BY G. JUBINVILLE DATE 2013-05-27
CHECKED BY for A. SAHELI DATE 2013-05-29	DISCIP. ENGR. S. HASSAN DATE 2013-05-29
PROJ. DES. COORD. T. KIERTON DATE 2013-05-29	PROJ. ENGR. J. CLELAND DATE 2013-05-29
PROJ. MGR. S. PERRY DATE 2013-05-29	

Baffinland — IRON MINES CORPORATION

MARY RIVER PROJECT

MINE SITE
ACCOMMODATION CAMP
EARTHWORKS & DRAINAGE – SECTIONS

SCALE	DWG. NO.	REV.
1:500 OR AS NOTED	H349000-4134-10-035-0002	0

ORIGINAL SHEET SIZE: ISO A1 (841 x 594)

c:\pr\projectwise\jub70836\dms74793\H349000-4134-10-035-0002.dgn
5/29/2013 4:38:20 PM
jub70836