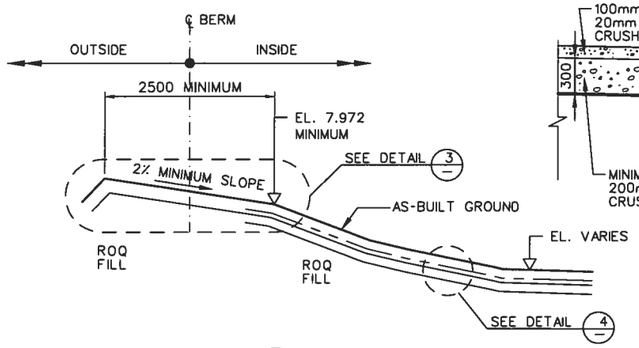

SECTION A
SCALE: N.T.S. D003

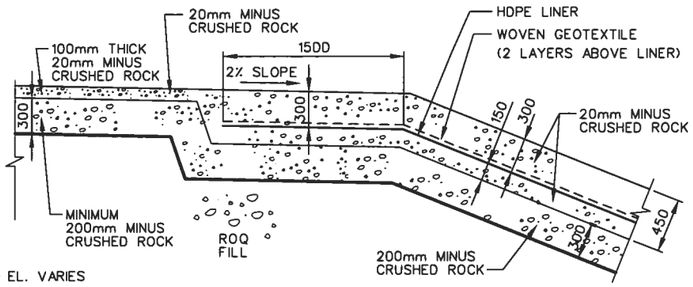

LINER ANCHOR TRENCH
TYPICAL DETAIL

DETAIL 3
SCALE: N.T.S.

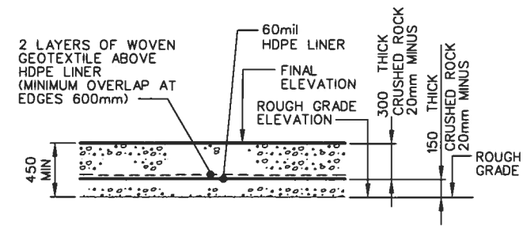

TYPICAL LINER PROTECTION DETAIL

DETAIL 4
SCALE: N.T.S..

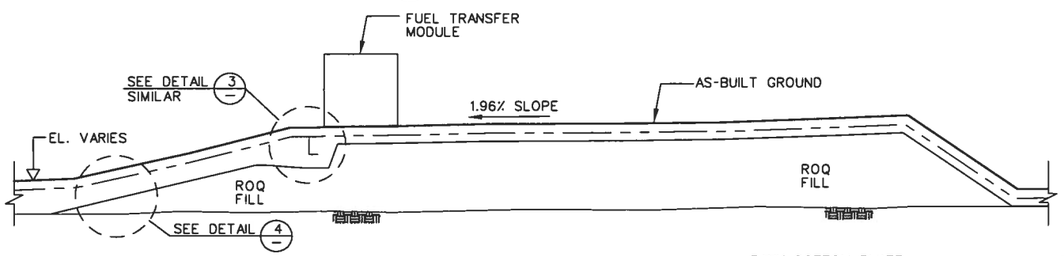

SECTION B
SCALE: 1:100 0003

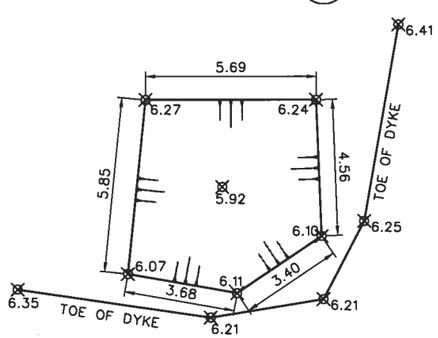

DETAIL 4
SCALE: N.T.S. 0003

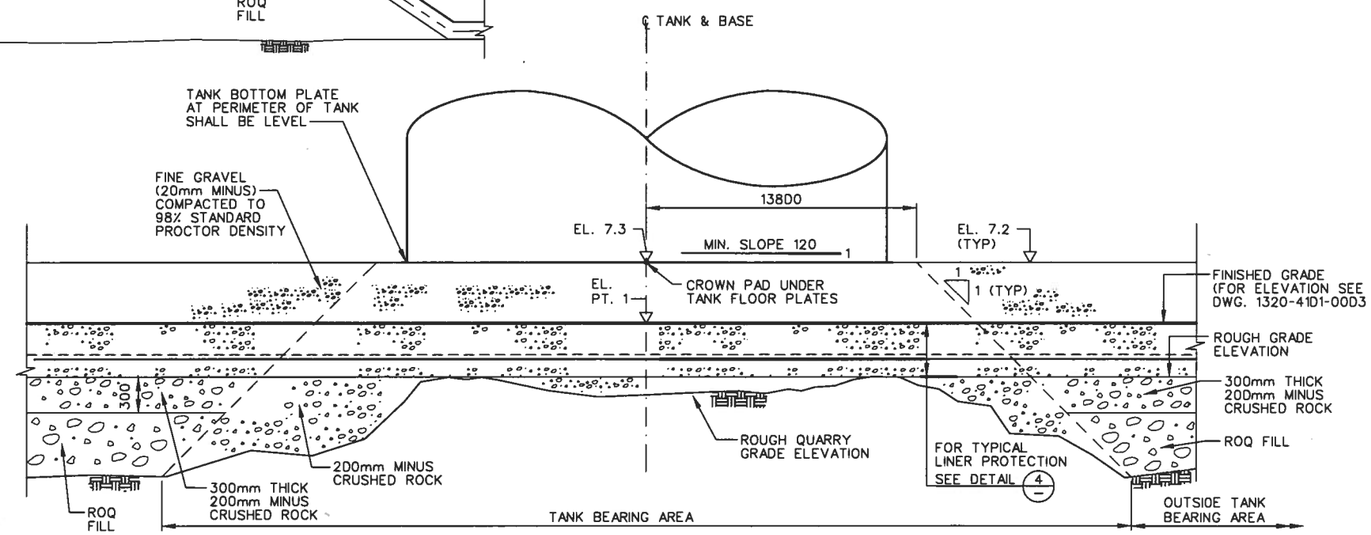

TYPICAL TANK SECTION

DETAIL 5
SCALE: N.T.S. 0003

NOTES:

1. ALL DIMENSIONS ARE IN MILLIMETRES AND ELEVATIONS ARE IN METRES UNLESS NOTED OTHERWISE.
2. ROCK SURFACE BELOW TANK TO BE INSPECTED AND APPROVED BY GEOTECHNICAL ENGINEER PRIOR TO CONSTRUCTION OF TANK PAD.
3. USE 60mil HDPE LINER AS PER SPECIFICATION.
4. SEE SPECIFICATION 334499-0000-60EF-2701 FOR GRADING AND COMPACTION LIMITS FOR CRUSHED ROCK PRODUCTS.
5. TANK PAD FINAL GRADING TO COMPLY WITH API 650 REQUIREMENTS.
6. TANK BASE CRUSHED ROCK TO BE COMPACTED TO 98% STANDARD PROCTOR DENSITY.
7. MINIMUM 300mm OVERLAP WITH EXISTING LINER. WELD ALL JOINTS IN ACCORDANCE WITH SPECIFICATION.
8. TANK CONTAINMENT ELEVATIONS TO BE CONFIRMED ON SITE BY SITE ENGINEER BASED ON FINAL QUARRY ELEVATIONS. ROUGH GRADE TO BE SET AT HIGH POINT IN QUARRY FLOOR. SEE DETAIL 5/D004 FOR SITE PREPARATION TO ROUGH GRADE.
9. REFER TO THE FOLLOWING CONSTRUCTION SPECIFICATIONS:
   a) 334499-0000-60EF-1140 MEMBRANE LINERS
   b) 334499-0000-60EF-2220 EXCAVATION & FILL - GENERAL
   c) 334499-0000-60EF-2281 ROCK DRILLING & BLASTING
   d) 334499-0000-60EF-2545 GRANULAR SURFACING, BASE & SUB-BASE
   e) 334499-0000-60EF-2701 AGGREGATE & GRANULAR MATERIALS
10. AS-BUILT SURVEY PROVIDED BY SUB ARCTIC SURVEYS LTD. - 2008.

AS-BUILT

ESL/GRURU

DWG. NO.	REFERENCES	NO.	DATE	REVISIONS	BY	CHK	LEAD DISCPL.	ENG. MAN.	AREA MAN.	CLIENT ENG.	CLIENT AREA	NO.	DATE	REVISIONS	BY	CHK	LEAD DISCPL.	ENG. MAN.	AREA MAN.	CLIENT ENG.	CLIENT AREA	NO.	DATE	REVISIONS	BY	CHK	LEAD DISCPL.	ENG. MAN.	AREA MAN.	CLIENT ENG.	CLIENT AREA
												5	09/02/09	AS-BUILT	ESL	JMG	RU	RU	GA	TL	
												4	08/07/12	REVISED SECTIONS 'A' & 'B' AND DETAIL 3	CHL	RU	RU	RU	GA	TL	
												3	08/07/05	REVISED AS PER CLIENT'S COMMENT	PS	RU	RU	RU	GA	TL	
												2	08/07/03	REVISED GEOTEXTILE TYPE	PS	RU					
												1	08/06/23	REVISED ELEVATIONS	CHL	RU	RU	RU			
1320-4101-0003	ROBERTS BAY TANK FARM FINAL GRADING PLAN											0	08/06/11	ISSUED FOR CONSTRUCTION	CHL	RU					

SNC-LAVALIN INC.					
DESIGNED	C.H. LEONOR	CHL	08/06/05
DRAWN	C.H. LEONOR	CHL	08/06/05
CHECKED	R. UMENO	RU	08/06/11
APPROVED LEAD ENG.	R. UMENO	RU	08/07/03
APPROVED ENG MAN.	R. UMENO	RU	08/07/12
APPROVED AREA MAN.	G. AKEHURST	GA	08/07/12
CLIENT			
APPROVED ENG. COORD.			
APPROVED AREA MAN.	T. LOGAN	TL	08/07/04
SCALE AS SHOWN	NAME (PRINT)	INIT.	DATE

ENGINEER'S STAMP
REGISTERED PROFESSIONAL ENGINEER ORIGINAL SIGNED BY R.C. UMENO LICENSE 11/06/2008 NWT #L1158

NEWMONT. The Gold Company

CLIENT HOPE BAY MINING LTD.
CLIENT DWG. NO.

SNC·LAVALIN

THIS DRAWING IS THE PROPERTY OF SNC-LAVALIN INC., AND THE USE AND COPYING THEREOF IS SUBJECT TO THE TERMS OF THE AGREEMENT UNDER WHICH IT WAS PREPARED. THIS DRAWING MAY NOT BE COPIED EXCEPT AS EXPRESSLY PROVIDED THEREIN.

PROFESSIONAL ENGINEER | NAME | NO.

TITLE
HOPE BAY MINING LIMITED
DORIS 2008 PROJECT
ROBERTS BAY TANK FARM
FINAL GRADING
SECTIONS AND DETAILS

PROJECT NO.	AREA	DISCPL.	DOC.	DRAWING NUMBER	LOC.	REVISION NUMBER
334499	1320	41	D1	0005		5

Format: Metric D (TRUE SCALE)

DATE: 2009/02/11 - 11:03am
PATH: J:\334499 - HBML Doris 2008\00 - As-Builts 2009\334499-1320-4101-0005.dwg