Appendix 17

Meadowbank and Whale Tail Bulk Fuel Storage Facility: Environmental Performance Monitoring Plan Version 6.1

AGNICO EAGLE

MEADOWBANK GOLD PROJECT

Baker Lake Bulk Fuel Storage Facility: Environmental Performance Monitoring Plan

In Accordance with Water License 2AM-MEA1530

Prepared by:
Agnico Eagle Mines Limited – Meadowbank Complex

Version 6.1
March 2022

EXECUTIVE SUMMARY

Agnico Eagle Mines Limited – Meadowbank Complex (Agnico Eagle) is currently operating the Meadowbank Gold Project approximately 70 km north of the Hamlet of Baker Lake. Agnico Eagle is also operating the Amaruq property, approximately 150 kilometers (km) north of the hamlet of Baker Lake and approximately 50 km northwest of Meadowbank Mine, in the Kivalliq Region of Nunavut. The Whale Tail deposit is being mined and ore is hauled by truck to the approved infrastructure at Meadowbank Mine for milling. Agnico Eagle received approval on January 2019 to add two (2) 10 million liters diesel fuel storage tanks to the Marshalling Area Bulk Fuel Storage Facility in Baker Lake. Agnico has since built and commissioned the two approved tanks. In 2019, one of the approved tanks (Tank 7) was added to the facility, and in 2021, the second approved tank (Tank 8) was added to the facility. As part of the project, a total of eight (8) 10 million litres fuel storage tanks for diesel and eighteen (18) 100,000L fuel storage tank for Jet-A will receive and store bulk shipments of fuel for the Meadowbank Project at the Baker Lake Marshalling Area. Two (2) 100,000L fuel storage tank for Jet-A are scheduled to be re-added the system in 2022 as approved by the Water License.

To adequately assess the environmental performance of the bulk fuel storage tank at Meadowbank this report provides: a summary of the design, installation, operation and maintenance that follows the CCME (2003) Environmental Code of Practice for Aboveground Storage Tank Systems Containing Petroleum and Allied Petroleum Products; a summary of the location and environmental setting; a summary of the NWB Type A water license requirements; and an environmental assessment to support the recommended environmental monitoring for the ongoing evaluation of the secondary containment.

IMPLEMENTATION SCHEDULE

As required by Water License 2AM-MEA1530, Part B, Item 11, the proposed implementation schedule for this Plan is outlined below.

This Plan will be immediately implemented (March 2022) subject to any modifications proposed by the NWB as a result of the review and approval process.

DISTRIBUTION LIST

Agnico Eagle – General Mine Manager

Agnico Eagle – Superintendent of Environment and Critical Infrastructures

Agnico Eagle – Environment General Supervisor

Agnico Eagle – Environmental Coordinator

Agnico Eagle – Environmental Technician

Agnico Eagle – Energy and Infrastructures Superintendent

Agnico Eagle – Procurement Department

DOCUMENT CONTROL

Version	Date (YMD)	Section	Page	Revision
1	2009/12/22			Comprehensive plan for Baker Lake Bulk Fuel Storage Facility
2	2011/12/13			Update all items related to the Baker Lake Fuel Storage Installations: Final Report of Phase 3 (2010)
3	2014/06/30			Add Jet-A Tank information and 2014 comprehensive review
4	2018/08/16			Text updated to reflect proposal to add 2 diesel fuel tanks.
5	2020/01/17	1		Add Tank 7 information
		2		Deleted as it's a duplicate of Section 4 and 5.1
		Figure 1-2		Update Figure to add Tank 7 information +
		3		Adjust condition Part H Item 4 as per the Water License
		4.1		Add Tank 7 information
		5.1		Update with current monitoring / inspection
		6		Update reference section
6	2022/01/17	1		Add Tank 8 information
		Figure 1-1		Update Figure
		3		Adjust conditions to align with section numbers in Water License 2AM-MEA1530
		4.1		Add Tank 8 information
		5.1		Updated inspection frequency during summer and Freshet
		6		Added Tank 8 construction summary to references.
6.1	2022/03/03	Figure 1-1		Updated Figure to include tanks 7 and 8
		Figure 1-2		Updated Figure to include aerial image of entire tank farm facilities
		4.3.3		Preventative measures to ensure HDPE liner integrity added.
		5.1		Requirements from Part 6 of the CCME (2003) guidelines for monitoring and detection of leaks.

Prepared By: Environmental Department

Approved by: 

Alexandre Lavallee
Superintendent of Environment and Critical Infrastructures

Table of Contents

SECTION 1. INTRODUCTION 1
SECTION 2. ENVIRONMENTAL SETTING 4
2.1 TOPOGRAPHY 4
2.2 GEOLOGY 4
2.3 FLORA AND FAUNA 4
2.4 SUBSURFACE CONDITIONS 4
2.5 WATER QUALITY 5
SECTION 3. NWB TYPE A WATER LICENSE CONDITIONS 6
SECTION 4. ENVIRONMENTAL PERFORMANCE ASSESSMEnT 8
4.1 DESK-TOP REPORT REVIEW 8
4.2 SECONDARY CONTAINMENT VISUAL INSPECTION 9
4.3 ENVIRONMENTAL ASSESSMENT 9
4.3.1 Terrestrial Environment 9
4.3.2 Surface Water 10
4.3.3 Groundwater 10
SECTION 5. PERFORMANCE MONITORING PLAN 11
5.1 VISUAL AND OPERATIONAL INSPECTIONS 11
5.2 ROUTINE CONTACT WATER MONITORING 13
5.3 EVENT MONITORING 13
5.3.1 Soil Sampling 13
5.3.2 Water Sampling 13
5.3.3 Assessment of the Need for Groundwater Well Installation 14
SECTION 6. REFERENCES 15

LIST OF FIGURES

Figure 1-1: General Location of Baker Lake Bulk Fuel Storage Facilities 2
Figure 1-2: Baker Lake Bulk Fuel Storage Facility Site Layout 3

LIST OF APPENDICES

Appendix A1: Baker Lake Fuel Storage Installations: Interim Report Following Construction of Phase 1 (2007) and Phase 2-A (2008)

Appendix A2: Baker Lake Fuel Storage Installations: Final Report Following Construction of Phase 2- B (2009)

Appendix A3: Baker Lake Fuel Storage Installations tank #5 and #6: Final Report following the construction of Phase 3 (2010)

Appendix A4: Baker Lake Fuel Storage Installations: As-built Report (AEM 2013)

Appendix A5: Construction Summary Report: Baker Lake Fuel Storage Tank 7 and Containment Facilities (2020)

Appendix A6: Construction Summary Report: Baker Lake Fuel Storage Tank 8 (2021)

SECTION 1. INTRODUCTION

Agnico Eagle Mines Limited – Meadowbank Complex (Agnico Eagle) is currently operating the Meadowbank Gold Project approximately 70 km north of the Hamlet of Baker Lake. Agnico Eagle is also operating the Amaruq property, approximately 150 kilometers (km) north of the hamlet of Baker Lake and approximately 50 km northwest of Meadowbank Mine, in the Kivalliq Region of Nunavut. The Whale Tail deposit is being mined and ore is hauled by truck to the approved infrastructure at Meadowbank Mine for milling.

The Baker Lake Bulk Fuel Storage Tank Facility is located east of the hamlet of Baker Lake, on the north shore of Baker Lake. The GPS coordinates of these facilities is NAD 83 15W E 356874 N 7134486. A general site location is provided in Figure 1-1. An aerial photo depicting the site layout of the infrastructure and tanks is provided in Figure 1-2.

In 2007-2008, four (4) 10 million diesel tank were constructed. Following the amendment No.1 - Marshalling Area Bulk Fuel Storage Facility Expansion Water Licence 2AM-MEA0815 Type A, two (2) more 10 million liters bulk fuel storage tank (#5 and #6) were constructed in 2010. This amendment also permitted the construction, in 2013, of Jet A Fuel tanks.

Following a modification to the Water License 2AM-MEA1526, Agnico Eagle received approval in January 2019, to add two (2) 10 million liters diesel fuel storage tanks to the Marshalling Area Bulk Fuel Storage Facility in Baker Lake. In 2019, Agnico has built and commissioned one of the two approved tanks (Tank 7), and in 2021, the second approved tank (Tank 8) was added to the Fuel Storage Facility.

As part of the project, a total of eight (8) 10 million litres fuel storage tanks for diesel and eighteen (18) 100,000L fuel storage tank for Jet-A will receive and store bulk shipments of fuel for the Meadowbank Project at the Baker Lake Marshalling Area. Two (2) 100,000L fuel storage tank for Jet-A are scheduled to be re-added the system in 2022 as approved by the Water License.

To adequately assess the environmental performance of the bulk fuel storage tank at Meadowbank this report provides: a summary of the design, installation, operation and maintenance that follows the CCME (2003) Environmental Code of Practice for Aboveground Storage Tank Systems Containing Petroleum and Allied Petroleum Products; a summary of the location and environmental setting; a summary of the NWB Type A water license requirements; and an environmental assessment to support the recommended environmental monitoring for the ongoing evaluation of the secondary containment.

Figure 1-1: General Location of Baker Lake Bulk Fuel Storage Facilities



Figure 1-2: Baker Lake Bulk Fuel Storage Facility Site Layout



**Aerial photo taken in Summer 2021 during Tank 8 construction*

SECTION 2. ENVIRONMENTAL SETTING

2.1 TOPOGRAPHY

The bulk fuel storage area is located east of the Hamlet of Baker Lake, approximately 350 m north of Baker Lake. The storage facility sits on a low terrace parallel with the shoreline of the lake. There is a gradual slope (5 to 10% grade) toward Baker Lake with an approximate elevation change of 35 m from the bulk fuel storage facility to the Baker Lake shoreline.

The Baker Lake shoreline is gently sloping, well-drained and is lined with marine gravels, sands and boulders.

2.2 GEOLOGY

The regional surficial geology is characterized by sandy till, bedrock outcrops, felsenmeer (ice-shattered bedrock) and shallow lakes (Golder, 2007). The most common soil type in this region is glacial till. Marine beach deposits are found along the north shore of Baker Lake.

The soil near the bulk fuel storage facility is comprised of silts, sands, gravels, cobble and boulders and frost-susceptible glacial till overlying weathered bedrock (Golder, 2007). The soil thickness is typically less than 1.4 m with permafrost or bedrock encountered at less than 2 m. Approximately 60% of the surface area surrounding the bulk fuel storage facility is comprised of bedrock outcrop.

2.3 FLORA AND FAUNA

There are no trees and few shrubs in the area surrounding the bulk fuel storage facility. The site is covered by low-lying vegetation; predominated by grassy hummocks, dwarf willow, sedge, green moss and lichen.

Arctic ground squirrels, ptarmigan and songbirds are inhabitants in the area surrounding the bulk fuel storage facility. Lake cisco, lake trout, arctic char, lake whitefish, round whitefish, slimy sculpin and stickleback are predominant species found in Baker Lake.

2.4 SUBSURFACE CONDITIONS

Test pits excavated in 2005 near the bulk fuel storage facility and between the tanks and the shoreline indicate a saturated top layer (0.2 m) of organic material (primarily green moss) (Golder, 2005; 2007). A layer of grey to black medium sand is present up to 0.7 m thickness throughout the area, below which a saturated, grey brown, sand and silt layer is found.

Bedrock is exposed at shallow depths throughout the site in locations where topsoil or till soils are present (Golder, 2005). Bedrock is encountered at a maximum depth of 1.4 m. As predicted by the soil conditions, seepage flows in test pits indicate high site drainage.

2.5 WATER QUALITY

Baker Lake water quality closely resembles distilled water as many conventional water chemistry parameters are at or below detection limits (BAER, 2005). The water column is generally well mixed and the water chemistry homogenous. During the open water season there is limited vertical stratification in temperature and dissolved oxygen, with observed higher salinity in the bottom strata.

SECTION 3. NWB TYPE A WATER LICENSE CONDITIONS

The Nunavut Water Board (NWB) Type A Water License 2AM-MEA1530 requirements related to the bulk fuel storage facility in Baker Lake are provided below. Agnico Eagle is committed to achieving all of these requirements.

Part F: Conditions Applying to Waste Disposal and Management

9. The Discharge of Effluent to land from fuel containment facilities at the Baker Lake Bulk Fuel Storage Facility and Meadowbank Fuel Storage Facility (Monitoring Program Stations ST-37 through ST-40), shall not exceed the following Effluent quality limits:

Parameter	Maximum Average Concentration (MAC)	Maximum Concentration of any single Grab sample
pH	6.0 to 9.5	6.0 to 9.5
Total Arsenic (mg/L)	**0.5	1.0
Total Copper (mg/L)	**0.3	0.6
Total Nickel (mg/L)	**0.5	1.0
Total Zinc (mg/L)	*0.5	1.0
Total Suspended Solids (mg/L)	*15	30
Ammonia (mg/L)	6.0	6.0
Benzene (µg/L)	370	370
Toluene (µg/L)	2	2
Ethylbenzene (µg/L)	90	90
Lead (mg/L)	0.1	0.1
Oil and Grease (mg/L)	5 and no visible sheen	5 and no visible sheen

* Environmental Guideline for Industrial Waste Discharges in the NWT, 2004
** Metal and Diamond Mines Effluent Regulations (MDMER)

10. The Licensee shall, under Part F, Item 9, discharge Effluent in such a manner as to minimize surface erosion at a distance of at least thirty-one (31) meters above the ordinary High Water Mark of any Water body, where direct flow into a Water body is not possible and no additional impacts are created, or as otherwise approved by the Board in writing.

12. The Licensee shall confirm compliance with Effluent quality limits in Part F, Items 3, 4, 5, 7 and 9 prior to Discharge.

13. The Licensee shall provide at least ten (10) days' notice to the Inspector prior to any planned Discharges from any facilities. The notice shall include an estimated volume proposed for Discharge and the receiving location.

Part H: Conditions Applying to Emergency Response and Contingency Planning

2. The Licensee shall prevent any chemicals, petroleum product or unauthorized Wastes associated

with the project from entering Water.

3. The Licensee shall provide secondary containment for fuel and chemical storage as required by applicable standards and acceptable industry practice

4. The Licensee shall perform weekly inspections of petroleum products storage and containment facilities, fuel tanks and connectors, for leaks and settlement and shall keep a written log of inspections to be made available to an Inspector upon request. More frequent inspections may be requested by an Inspector.

SECTION 4. ENVIRONMENTAL PERFORMANCE ASSESSMENT

To adequately assess the environmental performance of the bulk fuel storage tanks and facilities, a desk-top review of the design and installation reports were completed. In addition, a consultant performed a geotechnical inspection to annually evaluate the site drainage, secondary containment and performed an environmental assessment of the bulk fuel storage facility.

4.1 DESK-TOP REPORT REVIEW

The installation/construction reports (Agnico Eagle, 2009a, b; Agnico Eagle, 2010; Agnico Eagle 2011, Agnico Eagle 2020, Agnico Eagle 2021 for diesel tank and Agnico Eagle, 2013 for Jet-A tanks; attached in Appendix A) indicated the use of best management practices during the installation of the aboveground fuel storage tanks.

During the summer of 2007, Agnico Eagle built bulk fuel tanks #1 and #2. Under the supervision of Hatch Engineering, the construction of the secondary containment berm was completed. Enviroline Services Inc. was hired in October 2007 to install the HDPE membrane liner in accordance with CCME (2003) specifications; this liner was subsequently covered with a surface layer of crushed stone. Tanks were commissioned in 2007.

Bulk fuel storage tanks #3 and #4 were completed in October 2008. Under the supervision of Stavibel Engineering, the secondary containment berms were constructed and the HDPE membrane liner was designed and installed for bulk fuel storage tanks #3 and #4 under the supervision of Luc Croisetière and Agnico Eagle. Works were completed for these tanks in July 2009 and tanks were commissioned the same year.

Bulk fuel storage tank #5 and #6 were completed in October 2010. Under the supervision of Stavibel Engineering, the construction of the secondary containment berms for tanks #5 and #6 was completed. Enviroline Services Inc. was hired in May 2010 to install the HDPE membrane liner. Tanks were commissioned the same year.

Construction of the bulk fuel storage tank #7 was completed in September 2019. Under the supervision of Agnico Eagle the secondary containment berms were constructed. The HDPE membrane liner was installed and tested by Geosynthetiques ZTG Inc. for bulk fuel storage tank #7.

Under the supervision of Agnico Eagle, construction of the bulk fuel storage tank #8 was completed in September 2021. Piping installation work associated with the tank system was finalized in October 2021.

All of the aboveground storage tanks were field erected. For the diesel tanks, construction activity was supervised by Hatch Engineering, Stavibel Engineering and Agnico Eagle and included qualified steel fabricators and installers. Following the diesel tank construction, X-Ray testing of horizontal and vertical welds was completed. For tanks #7 and #8, to attest welds quality, inspectors relied on visual inspection, magnetic particulate tests and high penetration oil tests. All of the welds met the specifications outlined in the API Standard 650 (Agnico Eagle, 2009a, b, 2020, 2021).

In 2013, the Jet-A tanks, the secondary containment enclosure and installation of the HDPE liner in accordance with CCME (2003) specifications was completed and commissioned. Stavibel Engineering provided the design, planning and construction oversight related to the installation of infrastructure of Agnico Eagle's Jet A Fuel Storage facility which consists of 100,000 liters double walled tanks, associated piping and pumping systems and secondary requirement. SM Construction had installed the Jet-A tanks and Texcel was hired in July 2013 to install the HDPE secondary containment membrane liner. After construction, all tanks were cleaned and washed inside and pressure tests were performed as per specifications.

A secondary containment volume calculation was completed to provide verification on the liquid storage capacity of the storage tank system. The CCME Environmental Code of Practice for Aboveground Storage Tanks (2003) states:

> *a storage tank system that consists of more than one storage tank which should have a volumetric capacity of not less than the sum of the capacity of the largest storage tank located in the contained space and 10% of the capacity of the largest tank or the aggregate capacity of all other storage tanks located in the contained space*.

In accordance with the CCME (2003) code of practice, the Baker Lake bulk fuel storage tanks meet the volumetric requirements for a storage tank system.

4.2 SECONDARY CONTAINMENT VISUAL INSPECTION

A consultant performs a geotechnical inspection annually and inspects the bulk fuel secondary containment structures, the report is sent to NWB annually as per requirement of the Water Licence.

4.3 ENVIRONMENTAL ASSESSMENT

The management of site drainage, surface water collection and water/fuel removal within the secondary containment area is an important measure in the protection of the terrestrial environment, surface water and ground water from potential sources of contamination. The environmental protection objectives, strategy and an evaluation of the potential of leaks or seepage to contaminate the terrestrial environment, surface water and ground water are provided in the following sections. Much of the environmental protection strategies focus on the control of contact water. In this report contact water is defined as any water that may be physically or chemically affected by the nearby operational activities.

4.3.1 Terrestrial Environment

The primary objective of the terrestrial management plan is to minimize any adverse impacts to the terrestrial (soil, flora and fauna) environment. To meet this objective, bulk fuel storage facility structures have been constructed to minimize the operational footprint and control contact run-off water within the secondary containment area. Due to the site grading, all water that comes into contact with the bulk fuel storage facility is intercepted and directed into the impermeable HDPE lined secondary containment area.

The ground beneath the secondary containment area has been adequately graded to ensure berm stability.

4.3.2 Surface Water

The objective of water management around the bulk fuel storage facility is to minimize impacts on the quantity and quality of surface water and groundwater. To meet this objective, the bulk fuel storage facility structures have been constructed to intercept and direct contact run-off water to the impermeable HDPE lined secondary containment area. As there is a high volume of fuel transfer and activity around the modular fuel dispenser, the pad below the modular fuel dispenser and refueling station is lined and sloped toward the secondary containment berm.

Seepage flows in test pits indicate high site drainage due to the high soil porosity. Therefore, should contact water reach the natural environment, the ultimate fate of the contaminants is likely to be in shallow groundwater or surface water (Golder, 2007).

4.3.3 Groundwater

It is not expected that groundwater would be impacted as there is no direct pathway for contaminated water to seep from the bulk fuel storage facility. Due to the site grading, all contact water from the bulk fuel storage facility is directed inside the HDPE lined secondary containment area. Preventative measures that are currently in place to ensure the integrity of the HDPE membrane liner include: limiting access into the area and prohibiting snow removal within the secondary containments to avoid accidental damage to the liner. Water levels within the secondary containment are monitored and kept to minimal levels to preserve the lifespan of the liner. Should the integrity of the liner become compromised, there could be leakage into the below grade soil; this would likely present the greatest source of hydrocarbon contamination to impact groundwater and receiving water. Should this occur, an implementation plan for repair would be initiated. Refer to Section 5 below for the visual and operational inspection performed within the facility.

SECTION 5. PERFORMANCE MONITORING PLAN

The environmental performance monitoring plan is a tiered approach with an emphasis on visual and operational inspections; routine surface water sampling to control and monitor the quality of the contact water; and event monitoring (in the case of a spill emergency or occurrence). Management of the bulk fuel storage facility will be guided by the monitoring results.

5.1 VISUAL AND OPERATIONAL INSPECTIONS

Visual and operational inspections are a central component of the environmental performance monitoring plan. Visual inspections of the secondary containment structure are important because if the integrity of the berm walls or liner is compromised this presents the greatest potential for leaks or seepage into groundwater and ultimately the receiving environment.

Inspections are logged and reported by the Environmental Department, these are conducted on a weekly basis and increased to a twice weekly frequency during Freshet and summer months. These inspections include, but are not limited to, assessment of the area for any spills, adherence to waste management procedures, adherence to proper fueling procedures, precipitation/ run-off accumulation, and visible sheens on contact water pools and crush material inside the secondary containment. Environmental staff follow-up with operations staff and advise the supervisor if any non-conformity is observed. A weekly written log is completed and available upon request. Weekly fuel leak inspections are conducted by the Energy and Infrastructure Department on the entire Baker Lake Fuel Storage Facility. Monthly owner/operator inspections to assure continued tank integrity, are also conducted by the Energy and Infrastructure Department. Inspection of the facilities include: leak detection, exterior paint assessment, tank and piping condition, condition of tank supports and foundation, functionality of monitoring gauges and alarms, condition of product dispenser components, secondary containment berm structure and integrity, indicators of liner damage, evidence of tampering or misuse, any structural abnormalities. Copies of these inspection reports are retained for reference. Continuous improvement to incorporate API 653 standards into preventative maintenance scheduling are on-going. Qualified API inspectors will also be involved in this process. Each of the 10 million liter diesel fuel tanks are also subject to a 10-year recertification schedule.

In-service monitoring, including inventory control of transfer and weekly volume inspections using manual or live gauge reconciliation are conducted by Meadowbank staff. Weekly visual inspections and inventory reconciliation are used to evaluate and determine bulk fuel tank leakage. Annual air tests are conducted on all systems.

An annual geotechnical inspection is also conducted annually by a third party to evaluate the site drainage, secondary containment including HDPE liner integrity and performed an environmental assessment of the bulk fuel storage facility. Corrective action/ maintenance may be necessary following the inspection to ensure optimal performance of the facility. The bulk fuel storage facility is maintained in accordance with best management practices.

Should a leak be suspected, visual leak detection and precision leak detection or API 653 standard approved test will be conducted on the aboveground storage tanks and a pressure liquid media leak detection test or high-pressure inert gas or vacuum leak detection test will be conducted on the aboveground piping.

The aforementioned monitoring and leak detection criteria is in alignment with the frequencies and methods outlined in Part 6 of the CCME (2003) Environmental Code of Practice for Aboveground and Underground Storage Tank Systems Containing Petroleum and Allied Petroleum Products. Tables 1 and 2 outline the details for in-service monitoring, periodic leak detection, and if a leak is suspected for applicable aboveground storage tanks and aboveground piping respectively.

Table 1 CCME Monitoring and Leak Detection Criteria for Aboveground Storage Tanks

Containment	In-Service Monitoring	Periodic Leak Detection	Leak Suspected
API Std 650-98 *(within approved secondary containment)*	Manual dip and inventory reconciliation; electronic dip and electronic inventory reconciliation; or electronic dip and manual inventory reconciliation in conformance with Section 8.3 of CCME (2003) and Visual leak detection (weekly) or High-technology *secondary containment* monitoring	API 653	Precision leak detection test of a storage tank; or API 653
Horizontal tanks	Manual dip and inventory reconciliation; electronic dip and electronic inventory reconciliation; or electronic dip and manual inventory reconciliation in conformance with Section 8.3 of CCME (2003) and Visual leak detection (weekly).	Not required	Visual leak detection (weekly) (where entire system including *piping* is visible); or Precision leak detection test of a storage tank

Table 2 CCME Monitoring and Leak Detection Criteria for Aboveground Piping

Containment	In-Service Monitoring	Periodic Leak Detection	Leak Suspected
All types	Visual leak detection (weekly).	Not required	Pressure liquid media leak detection test or High-pressure inert gas or vacuum leak detection test

The bulk fuel tanks are filled during barge season on an annual basis. During the period of re-filling there is the greatest risk of over-filling. Through regular visual inspections, inventory control and monitored fuel transfer, the risk is significantly reduced. The fuel transfer from ship to shore is detailed in the Oil Pollution Emergency Plan and Oil Pollution Prevention Plan (OPEP/OPPP) and the Product Transfer Area Assessment – Baker Lake Oil Handling Facility found in Spill Contingency Plan Appendix. In the case of a spill, the spill contingency plan and the OPEP/OPPP will be followed.

5.2 ROUTINE CONTACT WATER MONITORING

Due to snow accumulation, melting and precipitation, contact water will unavoidably collect inside the secondary containment area. Contact water from inside the secondary containment area will be sampled as described in Section 3 above prior to its release into the terrestrial environment. During water discharge, piping will be directed onto the nearby tundra at least 31 m above the ordinary High Water Mark, to allow for natural attenuation and drainage (i.e. surface water will never be pumped directly into Baker Lake).

During visual inspections, the quantity of contact water collected inside the secondary containment area will be evaluated. When water withdrawal is deemed necessary, water samples will be collected and analyzed for the parameters: pH, Total Arsenic, Total Copper, Total Lead, Total Nickel, Total Zinc, Total Suspended Solids, Ammonia, Benzene, Toluene, Ethylbenzene, Xylene, and Oil and Grease. If the contact water exceeds the licensed limits detailed in Section 3 above, the portable oil-water separator will be used to treat the water prior to discharge to the receiving environment or water will be pumped and disposed at the Meadowbank Tailings Storage Facility or Stormwater Management Pond. Prior to withdrawal, samples will be analyzed at a certified laboratory.

In addition, water samples from Baker Lake are collected as part of the Core Receiving Environment Management Program (CREMP). The results of these analyzes are included in the annual report. These samples are used to evaluate the performance of the overall water management plan for the Baker Lake Marshalling Area.

5.3 EVENT MONITORING

In the event of a spill occurrence at the bulk fuel storage facility, the spill contingency plan and the OPEP/OPPP will be followed. As a follow-up to the spill response, the environmental staff will conduct an environmental assessment to determine the extent of impacts of the spill occurrence on the nearby environment. This will include the identification of the potential environmental pathways of concern that may result in impacts to surface water (i.e. Baker Lake near-shore surface water), soil or groundwater.

5.3.1 Soil Sampling

Following the unlikely event where a spill is not contained within the secondary containment area, soil sampling may be required to locate and prevent further impact to the terrestrial and aquatic receiving environment. Depending on the quantity of the spill, the organic surface soils and silt-containing till below the surface are a likely sink for hydrocarbons, thus soil samples will be taken at selected locations to horizontally and vertically delineate the impacted areas. Furthermore, the soil samples will provide valuable information used to determine the necessity of installing groundwater wells (see Section 5.3.3 below).

5.3.2 Water Sampling

Following a spill event, an environmental assessment could be conducted. Similar to routine contact water sampling (inside the secondary containment area), water samples will be collected and analyzed for the following parameters: pH, Total Arsenic, Total Copper, Total Lead, Total Nickel, Total Zinc, Total Suspended Solids, Ammonia, Benzene, Toluene, Ethylbenzene, Xylene, and Oil and Grease.

As part of the CREMP, receiving environment surface and at- depth water samples will be taken in Baker Lake and analyzed for the same parameters as listed above.

5.3.3 Assessment of the Need for Groundwater Well Installation

Following a spill event, if soil sample results identify elevated concentrations of contaminants (i.e. exceeding the industrial standard levels outlined in the CCME Canada-Wide Standard (CWS) for Petroleum Hydrocarbons (PHC) in Soil, 2008) and/or if water samples identify elevated receiving environment water samples (i.e. exceeding licensed limits caused as a result of the spill event), an assessment of the need for groundwater wells will be conducted. The assessment, and if required, design for installation, monitoring and maintenance of vertical ground water monitoring wells will be in accordance with CCME (2003) procedures.

SECTION 6. REFERENCES

Agnico Eagle (2009a). Baker Lake Fuel Storage Installations: Interim Report of Phase 1 (2007) and Phase 2- A (2008). April 2009.

Agnico Eagle (2009b). Baker Lake Fuel Storage Installations: Final Report of Phase 2-B (2009). December 2009.

Agnico Eagle (2010). Baker Lake Fuel Storage Installations: Final Report of Phase 3 (2010). January 2011.

Agnico Eagle (2015). Core-Receiving Environment Monitoring Program: Meadowbank Gold Project. November 2015.

Agnico Eagle (2020). Construction Summary Report: Baker Lake Fuel Storage Tank 7 and Containment Facilities. January 2020.

Agnico Eagle (2021). Construction Summary Report: Baker Lake Fuel Storage Tank 8. December 2021.

API Standard 653 (2014). Tank Inspection, Repair, Alteration, and Reconstruction. November 2021. PN C65305

BAER (2005). Meadowbank Gold Project Baseline Aquatic Ecosystem Report. October 2005.

CCME (2008). Canadian Council of Ministers of the Environment: Canada Wide Standards for Petroleum Hydrocarbons in Soil. PN 1398. January 2008.

CCME (2003). Canadian Council of Ministers of the Environment: Environmental Code of Practice for Aboveground and Underground Storage Tank Systems Containing Petroleum and Allied Petroleum Products. PN 1326

Golder Associates Ltd. (2007). Water Use and Management Plan: Baker Lake Marshalling Area Meadowbank Gold Project. March 2007.

Golder Associates Ltd (2005). Field Geotechnical Investigations Baker Lake Staging Area, Meadowbank Gold Project. Report N. 05-1413-040.

Appendix A1

Baker Lake Diesel Fuel Storage Installations: Interim Report Following Construction of Phase 1 (2007) and Phase 2-A (2008)

AEM

AGNICO-EAGLE MINES LTD
MEADOWBANK DIVISION

BAKER LAKE FUEL STORAGE INSTALLATIONS

INTERIM REPORT

FOLLOWING THE CONSTRUCTION

OF

PHASE 1 (2007)
PHASE 2-A (2008)

AGNICO-EAGLE MINES LTD
MEADOWBANK DIVISION

BAKER LAKE FUEL STORAGE INSTALLATIONS

INTERIM REPORT

FOLLOWING THE CONSTRUCTION

OF

PHASE 1 (2007)
PHASE 2-A (2008)

PREPARED BY :



Patrick Giard, P.Eng., CCE
Supervisor, Construction Department
AGNICO-EAGLE MINES LTD, *Meadowbank Division*

AGNICO-EAGLE MINES LTD
MEADOWBANK DIVISION

BAKER LAKE FUEL STORAGE INSTALLATIONS

INTERIM REPORT
FOLLOWING THE CONSTRUCTION
OF PHASE 1 (2007) AND PHASE 2-A (2008)

TABLE OF CONTENTS

EXECUTIVE SUMMARY

DESCRIPTION OF THE MANDATE

A **DOCUMENTATION READILY AVAILABLE**

B **ADDITIONAL COLLECTION OF INFORMATION**

C **REVISION OF CONSTRUCTION DRAWINGS**

D **VERIFICATIONS TO STORAGE CAPACITY WITHIN BERMS**

APPENDIX 1 : DRAWINGS

VD2259-BKL-001	VD2259-BKL-002	VD2259-BKL-003	VD2259-BKL-004
VD2259-BKL-005	VD2259-BKL-006	VD2259-BKL-007	VD2259-BKL-008
VD2259-BKL-009	VD2259-BKL-010	VD2259-BKL-011	VD2259-BKL-012

VENDOR DRAWINGS FROM CHAMCO INDUSTRIES LTD

APPENDIX 2

SAFE FILL LEVEL FOR ALL FUEL TANKS

EXECUTIVE SUMMARY

Agnico-Eagle Mines Limited is currently in the process of building a gold mining project in the Kivalliq region of Nunavut, about 70 km north of Baker Lake.

The yearly operations of this mining operation requires the storage of a minimum of forty million (40 000 000) liters of diesel fuel, which represents four (4) bulk fuel storage tanks, each with a nominal capacity of ten million (10 000 000) liters.

PHASE 1

During the summer of 2007, Agnico-Eagle Mines Limited has built the first two (2) bulk fuel tanks, with a combined capacity twenty million (20 000 000) liters of diesel fuel. An impervious enclosure was built around it in order to provide secondary containment around the fuel tanks. These first two (2) bulk fuel tanks were then in condition to be filled.

PHASE 2-A

During the summer of 2008, Agnico-Eagle Mines Limited has built another two (2) bulk fuel tanks, for a total combined capacity of forty million (40 000 000) liters of diesel fuel. Only a portion of the enclosure was built around it, with the final purpose being to provide secondary containment around the fuel tanks. These other two (2) bulk fuel tanks were completed in late October 2008, and they remain empty as of April 2009.

PHASE 2-B

During 2009, Agnico-Eagle Mines Limited plans to complete the installation of an impermeable HDPE membrane, which will provide adequate secondary containment around the fuel tanks. This will allow to fill up all four (4) bulk fuel tanks in the summer of 2009, once the piping installation has been completed

DESCRIPTION OF THE MANDATE

Agnico-Eagle Mines has given a mandate to the undersigned in order to verify the compliance with applicable regulations of its fuel storage installations in Baker Lake, Nunavut.

According to the terms of reference, the mandate consists summarily in the following activities.

A. Review and compilation of the available documentation ;

B. Collection of any information that may be missing ;

C. REVISION OF CONSTRUCTION DRAWINGS

   a. Preparation of *AS BUILT* drawings of the construction of PHASE 1 ;

   b. Preparation of *AS BUILT* drawings of the construction of PHASE 2-A ;

   c. Preparation of *IFC* drawings for the construction of PHASE 2-B ;

D. Verifications to the storage capacity within the existing containment berms of PHASE 1 and verifications for PHASE 2 in regards to the applicable regulations.

A. DOCUMENTATION READILY AVAILABLE

GOLDER ASSOCIATES - Vancouver Office

For the Baker Lake bulk fuel storage facilities, this firm has produced some construction specifications on 2006-04-28, which were given reference SP-GAL-03 under their project number 06-1413-009.

NISHI-KHON / SNC-LAVALIN LTD - Vancouver Office

For the Baker Lake bulk fuel storage facilities, this firm has produced a set of drawings issued **for construction** on 2007-08-03, under their project number 017202. Some specifications for fuel piping and valves were also issued.

EARTHWORK DRAWINGS	017202-1000-41D1-0006	17202-1000-46ES-1001A	017202-8000-46DC-9150
017202-1000-41D1-0001	**FUEL PIPING DRAWINGS**	17202-1000-46ES-1001B	017202-8000-46DC-9152
017202-1000-41D1-0002	017202-1000-41D1-0007	**ELECTRICAL DRAWINGS**	017202-8000-46DC-9153
017202-1000-41D1-0003	017202-1000-46D4-1004	017202-1000-46D6-1001	017202-8000-46DC-9156
017202-1000-41D1-0004	017202-1000-46D4-1005	017202-1000-47D2-2001	017202-8000-46DC-9157
017202-1000-41D1-0005	017202-1000-46D4-1006	017202-8000-47DA-9004	017202-8000-46DC-9166

GEM STEEL EDMONTON LTD

This vendor has submitted a set of drawings issued **for review**, which consist in four (4) structural drawings showing the details of a fuel tank of 10 million liters nominal capacity. The original design of this fuel tank is shown on revision A of drawings BL-2007-1, BL-2007-2, BL-2007-3, and BL-2007-4.

CHAMCO INDUSTRIES LTD

This vendor has submitted a set of preliminary drawings issued **for approval** under their project number 1014938ABS, consisting of the following drawings .These documents have all been reviewed by HATCH.

DRAWING NUMBER	H325174-M268-VD-0040	H325174-M268-VD-0041	H325174-M268-VD-0010
H325174-M268-VD-0011	H325174-M268-VD-0012	**H325174-M268-VD-0013**	H325174-M268-VD-0014
H325174-M268-VD-0015	H325174-M268-VD-0016	H325174-M268-VD-0017	H325174-M268-VD-0019
H325174-M268-VD-0020	H325174-M268-VD-0021	H325174-M268-VD-0029	H325174-M268-VD-0030
H325174-M268-VD-0031	H325174-M268-VD-0032	H325174-M268-VD-0033	H325174-M268-VD-0034
H325174-M268-VD-0035	H325174-M268-VD-0036	H325174-M268-VD-0037	H325174-M268-VD-0039

B. ADDITIONAL COLLECTION OF INFORMATION

HATCH - Vancouver Office

Role during construction phase : Field Supervision during construction of PHASE 1 (2007).

Mr. Marlon Coakley and Jim Bonia, which were HATCH employees at the time, have supervised the construction of the fuel containment area around tanks #1 and #2, in phase 1 of this project. A specialized crew coming from Saskatoon (Enviroline Service inc.) was hired in October 2007 to install an HDPE membrane over the berms. This HDPE membrane has been covered with a layer of about 150 mm thickness of crushed stone. During August 2008, some additional HDPE membrane was installed under the tanks #3 and #4, but the final installation of the impermeable enclosure for phase 2-B remains to be done in 2009.

GEM STEEL EDMONTON LTD

Role during construction phase : Fabrication and field assembly of 10 M liters fuel tanks

Construction of phase 1 (tanks #1 and #2) took place from September to November 2007, with a crew of about 16 workers. During this time, a crew has welded a pipeline towards a booster pump and installed flanged connections and gate valves between fuel tank #1 and the fuel dispensing module manufactured by CHAMCO. The connection of the booster pump to the barge, using hoses, allowed for fuel tank #1 to be filled up in 2007. During August 2008, tanks #1 and #2 were also filled up with fuel by barge delivery.

Construction of phase 2-A (tanks #3 and #4) took place from August to October 2008. Following each phase of this field work, a crew from ACUREN has proceeded to X-RAY testing of horizontal and vertical welds according to specifications described in the latest edition of API Standard 650. According to the report made by ACUREN, no repairs of defective welds were required, either on the tank shell or nozzles.

MOSHER ENGINEERING LTD

Role during construction phase : Welding of pipelines and support brackets between the 10 M liters tanks and the sea hose connection.

In September 2008, a crew of four (4) workers has extended a pipeline towards the barge landing and installed pipes with flanged connections and gate valves between fuel tank #2 and the fuel dispensing module manufactured by CHAMCO. They have also installed check valves on both the inlet and outlet nozzles of tank #2, as well as a pressure relief valve set at 75 psi to bypass the gate valve on the outlet of tank #2.

This safety feature against thermal expansion of fuel inside the pipeline towards the fuel dispensing module remains to be installed on tank #1. The grade of material that was used for this pipeline was A333 cold temperature rated steel.

CHAMCO INDUSTRIES LTD

Role during construction phase : Manufacturing of the fuel dispensing module.

This fuel dispensing module was manufactured in 2006 and sent to the Meadowbank site. A representative from CHAMCO was present during the commissioning. Possibly due to vibrations during transport, there were many flanged connections that needed tightening.

C. REVISION OF CONSTRUCTION DRAWINGS

AEM has hired STAVIBEL Engineering Services, a firm based in Val-d'Or, in order to complete the drawings that were used in producing this report. Those twelve (12) drawings are enclosed in **Appendix 1** of this report.

Drawing VD2259-BKL-001 shows the general layout of fuel storage area. It has been compiled using surveying data collected by a crew from NUNA.

Drawing VD2259-BKL-002 shows the fuel storage area and existing piping for PHASE 1. It has been compiled using surveying data collected by NUNA.

Drawing VD2259-BKL-003 shows the fuel storage area and location of a sump for collection of surface water, to be built in PHASE 2-B. It shows the limits of the HDPE membrane that has been installed in 2008 under the fuel tanks.

Drawings VD2259-BKL-004, 005, and 006 show cross-sections of the containment area in PHASE 2 (to be completed in 2009). These cross-sections are derived from surfaces that were generated using the *Autocad Civil 3D* software, and are also based on information collected from existing land surveys. This drawing file was also used to verify containment volumes, as it is described further in section D.

Drawing VD2259-BKL-007 is an as-built version of structural drawing BL2007-1, which was designed and issued by Gem Steel Edmonton Limited. This drawing has been updated to reflect nozzle orientations that were noted during a visit. No significant changes were noted, except those made to the nozzle schedule.

Drawing VD2259-BKL-008 shows the proposed piping for PHASE 2. It contains a schedule of valves and fittings that remain to be installed.

Drawing VD2259-BKL-009 shows the location of the existing pipeline and sea hose connection with the barge for fuel unloading. Also, a spill containment sump is proposed on this drawing.

Drawing VD2259-BKL-010 is a process and instrumentation diagram. It shows the details of the existing and proposed piping, along with further details for the fuel dispensing module.

Drawing VD2259-BKL-011 is a general layout that shows the location of existing grounding wire and proposed layout to extend this grounding into PHASE 2.

Drawing VD2259-BKL-012 shows the details of the barge and laydown areas, along with the details of a ditch and culvert for diversion of surface water run-off.

Also enclosed are two (2) vendor drawings from CHAMCO INDUSTRIES LTD, which shows the piping details inside the fuel dispensing module.

D. VERIFICATIONS TO STORAGE CAPACITY WITHIN BERMS

STAVIBEL Engineering Services has completed verifications on the liquid storage capacity inside the containment berms, which create an impermeable enclosure around tank #1 and #2.

The method used was a volume calculation using *Autocad CIVIL 3D* software.

The maximum storage capacity of fuel tank #1 is 10 515 000 litres of diesel fuel at a standard temperature of fifteen degrees Celcius (15 °C).

The maximum storage capacity of fuel tank #2 is 10 480 000 litres of diesel fuel at a standard temperature of fifteen degrees Celcius (15 °C).

It has been verified using the above software that the impermeable enclosure built in PHASE 1 will effectively hold one hundred percent (100 %) of the maximum storage capacity of the biggest tank, plus ten percent (10 %) of the maximum storage capacity of the other tank. This calculation has been summarized in a worksheet that is shown on PAGE 8, hereunder.

The containment volume for tanks #1 and #2 is 11 586 cubic meters, of which 367 cubic meters were occupied by accumulation of surface water as of 2008-10-31.

Thus, the lowest point of the HDPE membrane that sits atop the containment area is sufficiently high (at elevation 33.86 m) to meet the above criteria.

A worst case scenario has been simulated, and consists in either a rupture of the first course of side plates in the tank shell, or a failure in the outlet piping, when either one of fuel tanks is 100% full.

This simulation shows that, in such a worst case scenario, the hydraulic balancing level inside the containment area would not exceed the point with the lowest elevation on the surrounding berms, providing that there is no substantial accumulation of surface water inside. There is a no additional safety margin.

However, with the upcoming completion in phase 2-B (summer 2009) of the impermeable enclosure around tanks #3 and #4, a breach will be made into the berm dividing the two containment areas. This is also shown on a sketch, hereby.

When phase 2-b is completed in summer of 2009, the containment volume for tanks #3 and #4 will be 10 855 cubic meters As a result, the new containment requirement of 130% of the biggest tank volume (or 13 647 cubic meters), expressed while considering all four (4) tanks as a whole, will then be exceeded.

DESIGN REVIEW - FOR FUEL SPILL CONTAINMENT BERMS AT BAKER LAKE

EQUIPMENT #	diam (ft)	rim el. (m)	radius (m)	surface (m2)	top el. (m)	height (m)	volume (m3)
740-TK-044 **TANK # 1**	110	32.99	16.764	882.89	44.90	11.910	**10 515**
740-TK-044 **TANK # 2**	110	33.03	16.764	882.89	44.90	11.870	**10 480**

Let's say berms are 5' 3" higher than the average tank floor (so 1.60 m total height) with variable slopes and that the tanks are sitting on cones made of crushed stone of 20 m diameter x 1.0 m height.

	Volume
Secondary Containment Requirement	**11 563 m3**
according to ref. PN-1326, Section 3.9.1(1) 2-b-ii	110%

DESIGN OF BERM DIMENSIONS

elevation	height (m)	width (m)	length (m)	surface (m2)			cumulative volume (m3)
32.00	0.00	**64.0**	**104.0**	6656.00	**slope ratio N-S**		0
32.66	0.66	69.3	107.6	7452.03	horizontal	vertical	4656
32.76	0.76	70.1	108.1	7575.93	4.0	1	5407
32.86	0.86	70.9	108.6	7700.69			6171
32.96	0.96	71.7	109.2	7826.31	**slope ratio E-W**		6947
33.06	1.06	72.5	109.7	7952.80	horizontal	vertical	7736
33.16	1.16	73.3	110.3	8080.15	2.7	1	8538
33.26	1.26	74.1	110.8	8208.36			9352
33.36	1.36	74.9	111.3	8337.44			10 180
33.46	1.46	75.7	111.9	8467.38			11 020
33.56	1.56	76.5	112.4	8598.19			11 873
33.66	1.66	77.3	113.0	8729.86			12 739
33.76	1.76	78.1	113.5	8862.39			13 619
33.86	1.86	78.9	114.0	8995.79		**GROSS CONTAINMENT**	**14 512**
34.00							**CUBIC METERS**

containment volume to be substracted for the two (2) cones made of crushed stone

	perimeter (m)	number	radius (m)	surface (m2)	height (m)	**volume (m3)**
CONES	126.0	2	20.05	1262.93	1.01	**-2680**
RAMP		1			variable	**-246**

containment volume to be substracted for accumulation of surface water

	elevation	**volume (m3)**
water level as of November 2008	**31.70**	**-367.0**

	Volume
NET CONTAINMENT	**11 219 m3**
	or **107%**

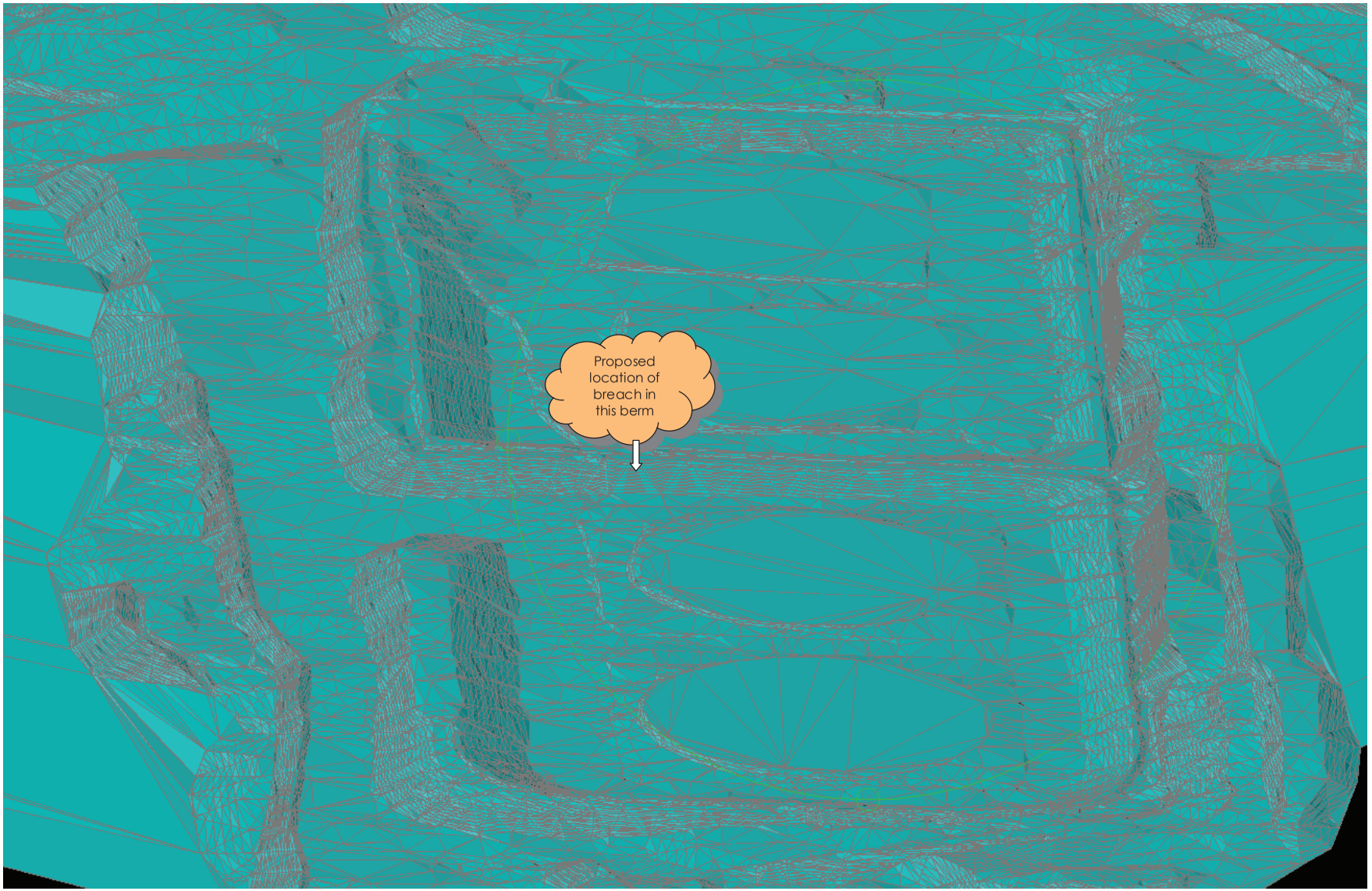
Proposed location of breach in this berm

APPENDIX 1

AS BUILT DRAWINGS for PHASE 2-A

IFC DRAWINGS (10) for PHASE 2-B

VD2259-BKL-001	VD2259-BKL-002	VD2259-BKL-003	VD2259-BKL-004
VD2259-BKL-005	VD2259-BKL-006	VD2259-BKL-007	VD2259-BKL-008
VD2259-BKL-009	VD2259-BKL-010	VD2259-BKL-011	VD2259-BKL-012

Plus two (2) drawings from CHAMCO INDUSTRIES LTD
Vendor ref. # CUP1014938-22
CUP1014938-25

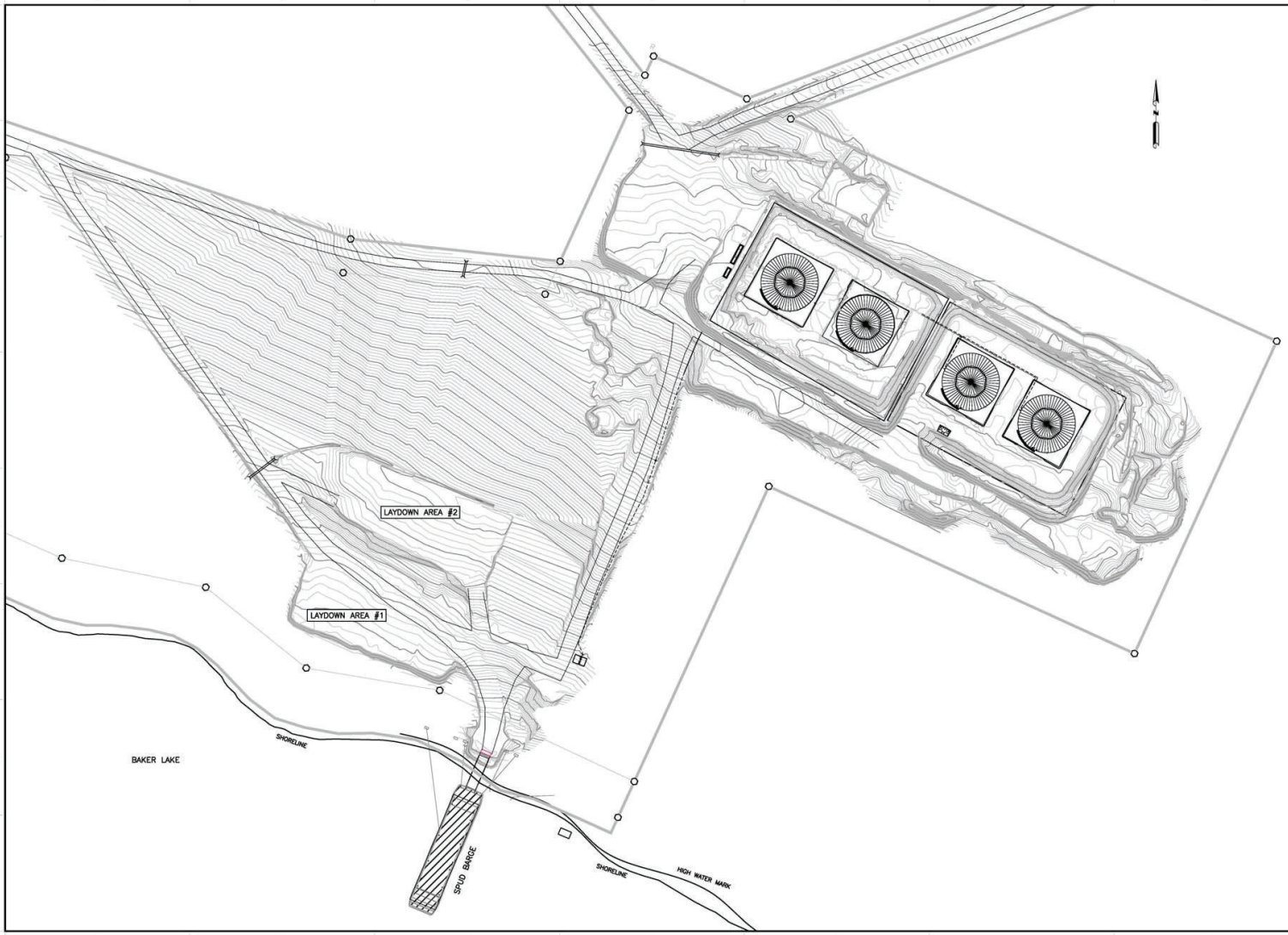

DRAWING NO.

FORMAT ARCH-D-LANDSCAPE

KEY PLAN

GENERAL NOTES

Groupe STAVIBEL
Consultants en ingénierie
1271, 7e Rue
Val-d'Or (Québec) J9P 3S1
Tél: (819) 825-2233 Télec: (819) 825-1322
Courriel : stavibel@stavibel.qc.ca
Site Internet : www.stavibel.qc.ca

TITLE	# DWG

REFERENCE DRAWINGS

NO.	DATE	DESCRIPTION	BY	APP.	CLIENT
1	09-03-27	FOR CONSTRUCTION	F.R.	P.G.	

REVISIONS

AGNICO-EAGLE
MEADOWBANK DIVISION

TITLE
AGNICO-EAGLE – MEADOWBANK DIVISION
BAKER LAKE AREA 740

GENERAL LAYOUT

DRAWN BY	FRANCIS ROSE, TECH	DATE 2009-03-27
CHECKED BY	PATRICK GIARD, P.ENG	
APPROVED BY	PATRICK GIARD, P.ENG	
SCALE	1:1000	DATE 2009-03-27

DRAWING NO.
VD2259-BKL-001

PROJECT NO.	REVISION	SHEET
VD2259-2	1	1/12

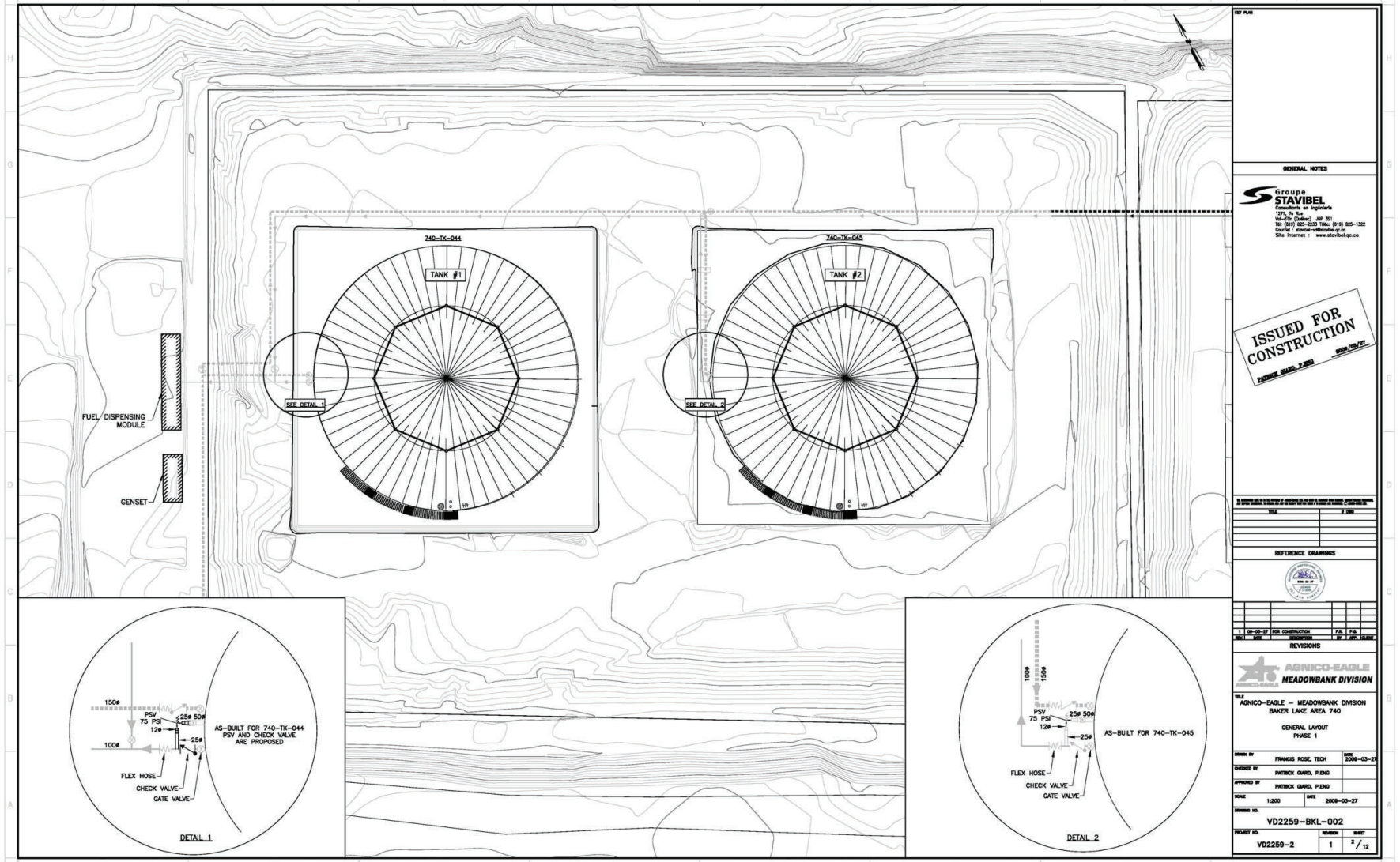
740-TK-044
TANK #1
SEE DETAIL 1
740-TK-045
TANK #2
SEE DETAIL 2
FUEL DISPENSING MODULE
GENSET
150ø
PSV
75 PSI
25ø 50ø
12ø
25ø
100ø
FLEX HOSE
CHECK VALVE
GATE VALVE
AS-BUILT FOR 740-TK-044
PSV AND CHECK VALVE
ARE PROPOSED
DETAIL 1
100ø
150ø
PSV
75 PSI
25ø 50ø
12ø
25ø
AS-BUILT FOR 740-TK-045
FLEX HOSE
CHECK VALVE
GATE VALVE
DETAIL 2
KEY PLAN
GENERAL NOTES
Groupe STAVIBEL
Consultants en Ingénierie
1271, 7e Rue
Val-d'Or (Québec) J9P 3S1
Tél: (819) 825-2233 Téléc: (819) 825-1322
Courriel : stavibel-val@stavibel.qc.ca
Site Internet : www.stavibel.qc.ca
ISSUED FOR CONSTRUCTION
PATRICK GUARD, P.ENG
2009/03/27
REFERENCE DRAWINGS
1 09-03-27 FOR CONSTRUCTION F.R. P.G.
REVISIONS
AGNICO-EAGLE
MEADOWBANK DIVISION
AGNICO-EAGLE – MEADOWBANK DMSION
BAKER LAKE AREA 740
GENERAL LAYOUT
PHASE 1
DRAWN BY FRANCIS ROSE, TECH DATE 2009-03-27
CHECKED BY PATRICK GUARD, P.ENG
APPROVED BY PATRICK GUARD, P.ENG
SCALE 1:200 DATE 2009-03-27
DRAWING NO. VD2259-BKL-002
PROJECT NO. VD2259-2
REVISION 1
SHEET 2/12

FORMAT ARCH-LANDSCAPE

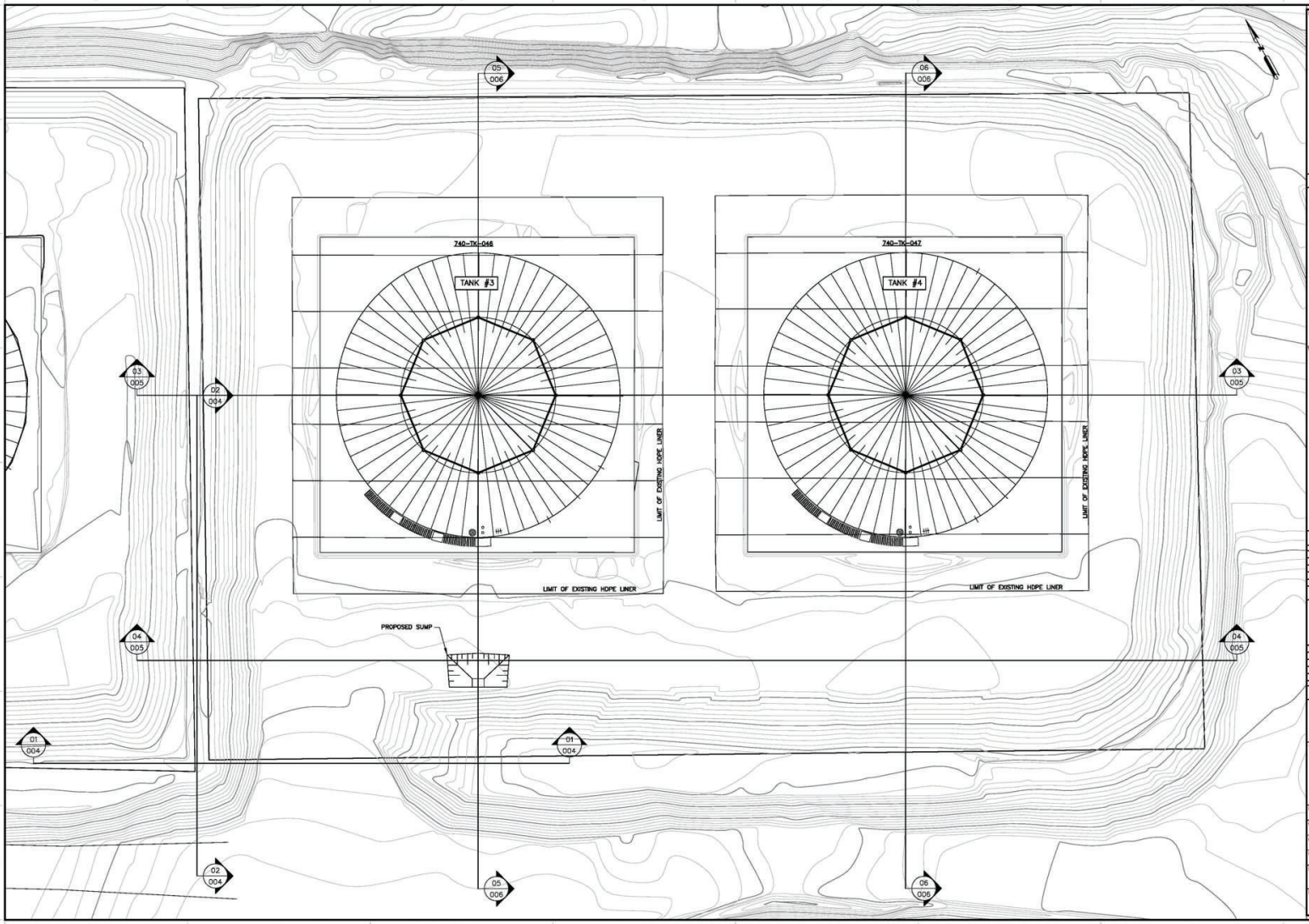

KEY PLAN

GENERAL NOTES

Groupe STAVIBEL
Consultants en ingénierie
1271, 7e Rue
Val-d'Or (Québec) J9P 3S1
Tél: (819) 825-2233 Télec: (819) 825-1322
Courriel : stavibel-val@stavibel.qc.ca
Site Internet : www.stavibel.qc.ca

ISSUED FOR CONSTRUCTION
PATRICK GUARD, P.ENG 2009/03/27

TITLE	# DWG

REFERENCE DRAWINGS

NO.	DATE	DESCRIPTION	BY	APP.
1	09-03-27	FOR CONSTRUCTION	F.R.	P.G.

REVISIONS

AGNICO-EAGLE
MEADOWBANK DIVISION

TITLE
AGNICO-EAGLE – MEADOWBANK DIVISION
BAKER LAKE AREA 740

GENERAL LAYOUT
PHASE 2-A (2008)

DRAWN BY	FRANCIS ROSE, TECH	DATE 2009-03-27
CHECKED BY	PATRICK GUARD, P.ENG	
APPROVED BY	PATRICK GUARD, P.ENG	
SCALE	1:200	DATE 2009-03-27

DRAWING NO.
VD2259-BKL-003

PROJECT NO.	REVISION	SHEET
VD2259-2	1	3/12

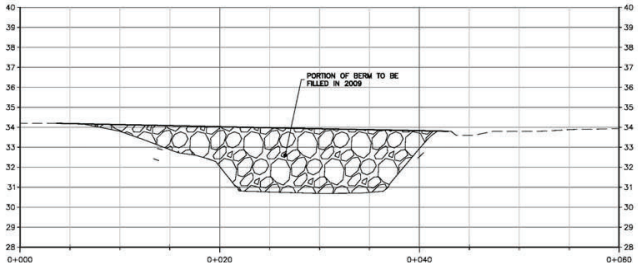

CROSS-SECTION 01/003

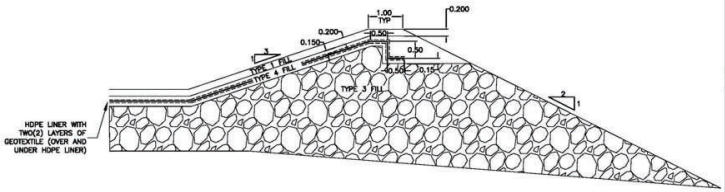

TYPE 1 FILL: MINUS 20mm CRUSHED
TYPE 2 FILL: MINUS 150mm ROCK
TYPE 3 FILL: BLASTED ROCK 0-200mm
TYPE 4 FILL: SCREENED SAND

TYPICAL CROSS-SECTION

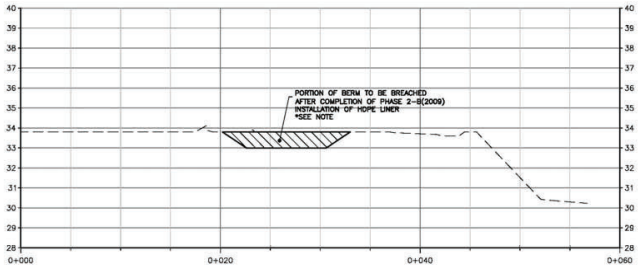

CROSS-SECTION 02/003

*NOTE:
HDPE LINER MUST BE WELDED BACK ON TOP OF EXISTING LINER ON BERM ONCE BREACH HAS BEEN EXCAVATED TO ENSURE IMPERMEABLE LINK BETWEEN BOTH BERM ENCLOSURES

KEY PLAN

GENERAL NOTES

Groupe STAVIBEL
Consultants en Ingénierie
1271, 7e Rue
Val-d'Or (Québec) J9P 3S1
Tél: (819) 825-2233 Télec: (819) 825-1322
Courriel : stavibel@stavibel.qc.ca
Site Internet : www.stavibel.qc.ca

ISSUED FOR CONSTRUCTION
PATRICK GUARD, P.ENG 2009/03/27

TITLE	# DWG

REFERENCE DRAWINGS

NO.	DATE	DESCRIPTION	BY	APP.
1	09-03-27	FOR CONSTRUCTION	FR	PG

REVISIONS

AGNICO-EAGLE
MEADOWBANK DIVISION

TITLE
AGNICO-EAGLE - MEADOWBANK DIVISION
BAKER LAKE AREA 740

CROSS-SECTIONS OF HDPE MEMBRANE
PHASE 2-B (2009)

DRAWN BY	FRANCIS ROSE, TECH	DATE 2009-03-27
CHECKED BY	PATRICK GUARD, P.ENG	
APPROVED BY	PATRICK GUARD, P.ENG	
SCALE	HOR:1:200 VER:1:100	DATE 2009-03-27

DRAWING NO.
VD2259-BKL-004

PROJECT NO.	REVISION	SHEET
VD2259-2	1	4/12

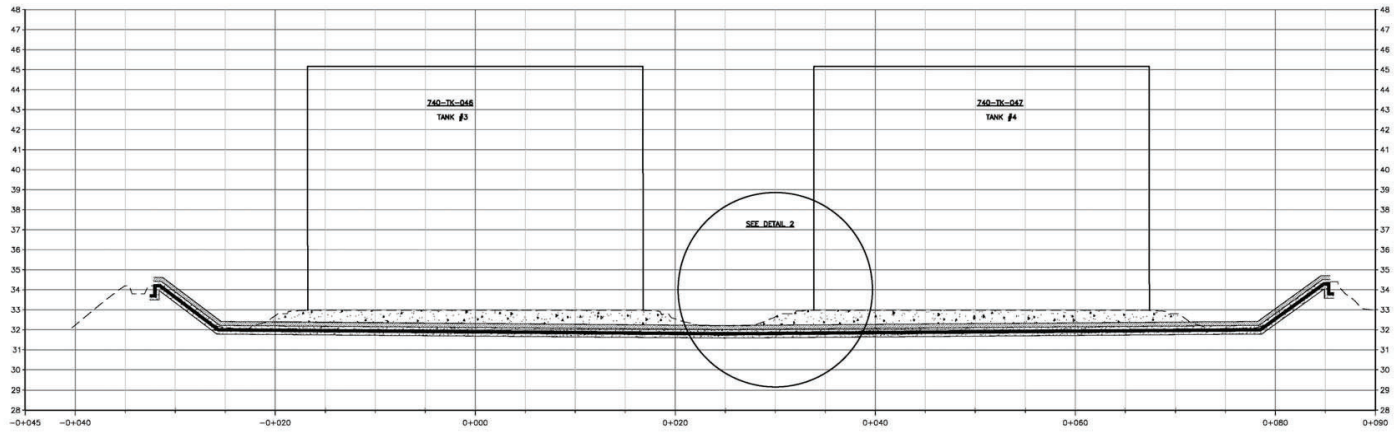

CROSS-SECTION 03/003

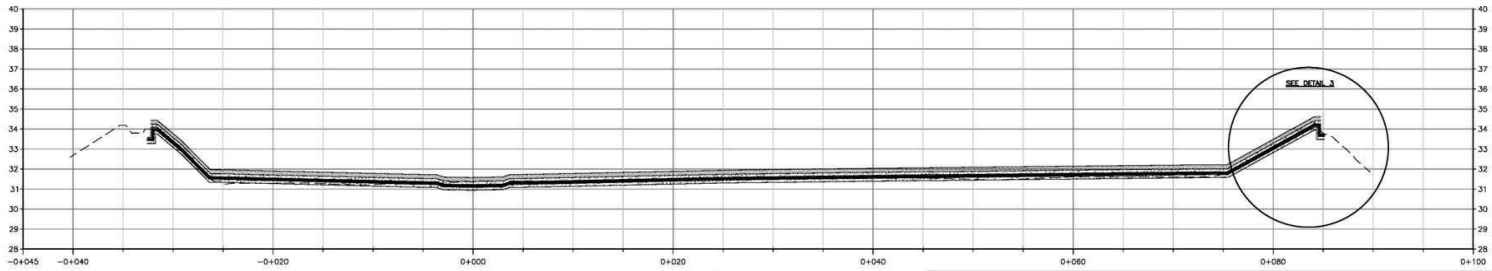

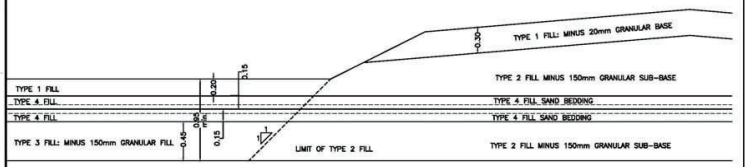

DETAIL 2

CROSS-SECTION 04/003

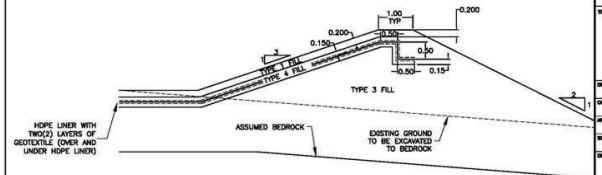

DETAIL 3

FORMAT ARCH-LANDSCAPE

KEY PLAN

GENERAL NOTES

Groupe STAVIBEL
Consultants en Ingénierie
1271, 7e Rue
Val-d'Or (Québec) J9P 3S1
Tél: (819) 825-2233 Télec: (819) 825-1322
Courriel : stavibel-val@stavibel.qc.ca
Site Internet : www.stavibel.qc.ca

ISSUED FOR CONSTRUCTION
PATRICK GUARD, P.ENG 2009/03/27

REFERENCE DRAWINGS

NO.	DATE	DESCRIPTION	BY	APP.
1	09-03-27	FOR CONSTRUCTION	F.R.	P.G.

REVISIONS

AGNICO-EAGLE MEADOWBANK DIVISION

TITLE
AGNICO-EAGLE – MEADOWBANK DIVISION
BAKER LAKE AREA 740

CROSS-SECTIONS
PHASE 2-9 (2009)

DRAWN BY	FRANCIS ROSE, TECH	DATE 2009-03-27
CHECKED BY	PATRICK GUARD, P.ENG	
APPROVED BY	PATRICK GUARD, P.ENG	
SCALE	HOR:1:200 VER:1:100	DATE 2009-03-27

DRAWING NO.
VD2259-BKL-005

PROJECT NO.	REVISION	SHEET
VD2259-2	1	5/12

DRAWING NO.

FORMAT ARCH-LANDSCAPE

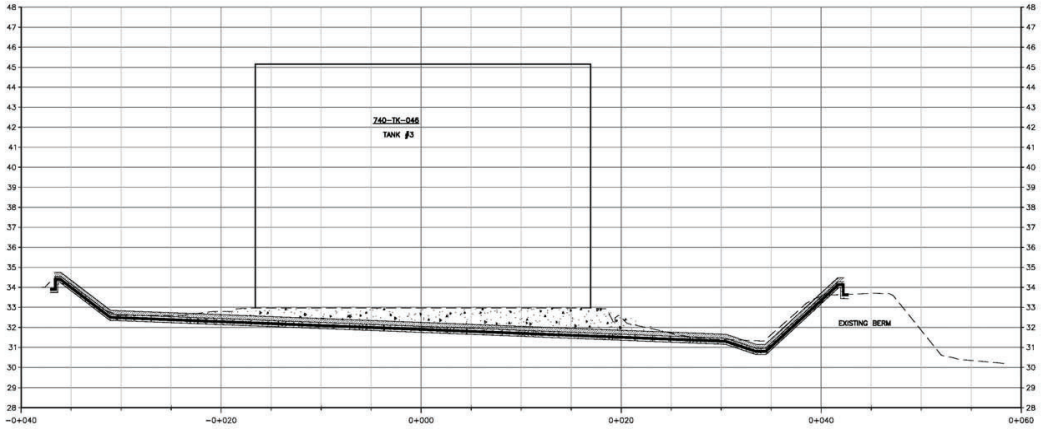

CROSS-SECTION 005/003

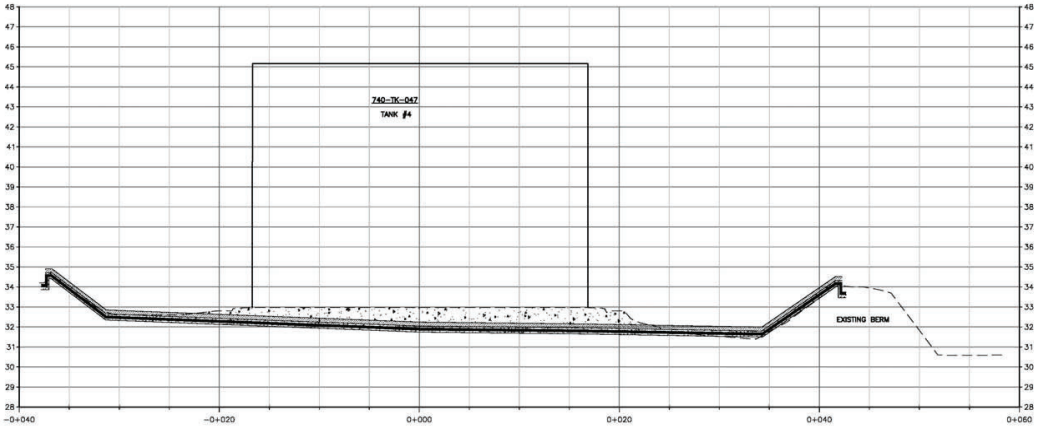

CROSS-SECTION 006/003

KEY PLAN

GENERAL NOTES

Groupe STAVIBEL
Consultants en Ingénierie
1271, 7e Rue
Val-d'Or (Québec) J9P 3S1
Tél. (819) 825-2233 Télec. (819) 825-1322
Courriel : stavibel-val@stavibel.qc.ca
Site Internet : www.stavibel.qc.ca

ISSUED FOR CONSTRUCTION
2009/03/27
PATRICK GIARD, P.ENG

TITLE	# DWG

REFERENCE DRAWINGS

NO.	DATE	DESCRIPTION	BY	APP.	CLIENT
1	09-03-27	FOR CONSTRUCTION	F.R.	P.G.	

REVISIONS

AGNICO-EAGLE
MEADOWBANK DIVISION

TITLE
AGNICO-EAGLE – MEADOWBANK DIVISION
BAKER LAKE AREA 740

CROSS-SECTIONS
PHASE 2-9 (2009)

DRAWN BY	FRANCIS ROSE, TECH	DATE 2009-03-27
CHECKED BY	PATRICK GIARD, P.ENG	
APPROVED BY	PATRICK GIARD, P.ENG	
SCALE HOR:1:200	VER:1:100	DATE 2009-03-27

DRAWING NO.
VD2259-BKL-006

PROJECT NO.	REVISION	SHEET
VD2259-2	1	6/12

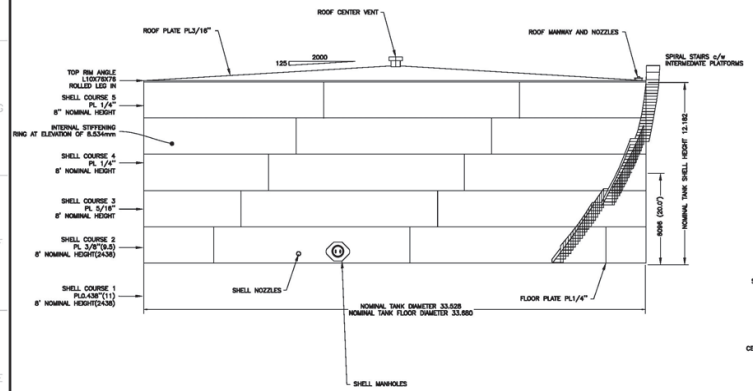

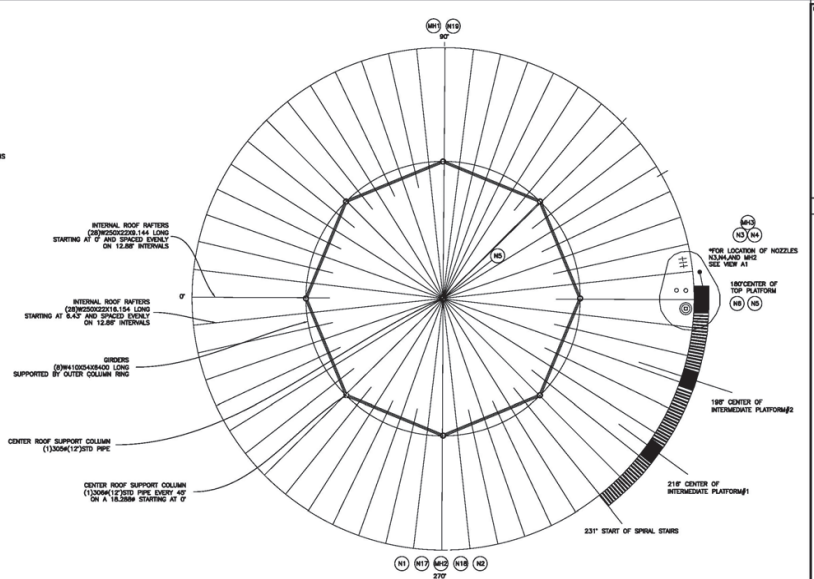

FOUR(4) TANKS WERE BUILT WITH IDENTICAL NOZZLE SPECS : 740-TK-045
740-TK-046
740-TK-047
740-TK-048

GENERAL NOTES

DESIGN

1. CODE OF CONSTRUCTION: API-650, LATEST EDITION
2. ALL DIMENSIONS ARE IN mm UNLESS NOTED OTHERWISE
3. PRODUCT STORED: DIESEL FUEL
4. DIAMETER 33.528mm#
5. HEIGHT: 12.192
6. NOMINAL CAPACITY: 10,780,000 LITRES
7. WORKING CAPACITY: 10,000,000 LITRES
8. DESIGN METAL TEMP: -40°C
9. PRODUCT SPECIFIC GRAVITY: 0.9@15°C

INSPECTION

1. VACUUM TESTING: FLOOR
2. RADIOGRAPHY: VERTICAL SHELL WELDS-SPOT AS PER API 650
3. AIR TEST: NOZZLES
4. VACUUM OR DIESEL TEST: SHELL WELDS

MATERIALS

1. BOLTS: A-325
2. PIPE NOZZLES: A333 Gr.6
3. FORGED FLANGES AND COUPLINGS:A350M, Gr.LF2 AND ANSI B16.5 LF2 CLASS D
4. PIPE FITTINGS: A420 Gr.WPC-6
5. STRUCTURAL STEEL: G40.21 300W
6. SHELL STEEL PLATE: G40.21M-260WT, KILLED AND FINE-GRAIN PRACTICE, IMPACT ENERGY 15ft/lbs(20J@-40°C)
7. FLOOR AND ROOF STEEL PLATE: G40.21M-250WT
8. TANK MANWAYS: STRUCTURAL GRADE PIPE OR BETTER

API STANDARD 650 STORAGE TANKS

CONNECTIONS

SHELL NOZZLES

MARK	NO REQ'D	SIZE	FLANGED	THREADED	REINFORCEMENT	ORIENTATION N=0	HEIGHT FROM BOTTOM (mm)	NAME/SERVICE
N1	1	6"	SFL 150RF		API 650 Fig 3-5	270°(OFFSET 450mm)	305	INLET FROM BARGE PIPELINE
N2	1	4"	SFL 150RF		API 650 Fig 3-5	270°(OFFSET 450mm)	305	OUTLET TO FUEL DISPENSING
N5	1	4"	SFL 150RF		API 650 Fig 3-5	180°	610	DRAIN PUMPOUT
MH1	2	24"			API 650 Fig 3-5	90°	762	SHELL MANHOLES
MH2	2	24"			API 650 Fig 3-5	270°	762	SHELL MANHOLES
N6	1	3"	SFL 150RF		API 650 Fig 3-5	180°	305	WATER DRAWOFF
N17	1	2"	SFL 150RF		API 650 Fig 3-5	270°(OFFSET 155mm)	1000	PSV DISCHARGE
N18	1	2"	SFL 150RF		API 650 Fig 3-5	270°(OFFSET 155mm)	1000	(SPARE) INTENDED PSV
N19	1	2"	SFL 150RF		API 650 Fig 3-5	90°	1000	(SPARE) INTENDED PSV

MARK	NO REQ'D	SIZE	FLANGED	THREADED	REINFORCEMENT	ORIENTATION N=0	HEIGHT FROM BOTTOM (mm)	NAME/SERVICE
N3	1	3"	SFL 150RF*		API 650 Fig 3-5	175°	15.656	SPARE
N4	1	256X480			API 650 Fig 3-5	175°	15.636	INSPECTION-HATCH**
MH3	1	24"	SFL 150RF		API 2000	185°	15.048	EMERGENCY VENT/MANHOLE*
N5	1	24"	SFL 150RF		API 2000	0	0	CENTRE ROOF VENT*
C1	1							VAREC 2500 LEVEL INDICATOR

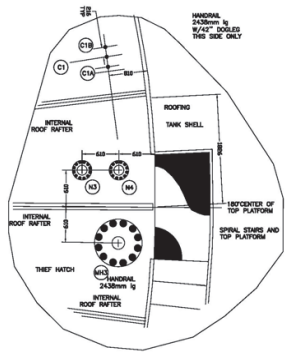

KEY PLAN

GENERAL NOTES

GEM STEEL

9060-24 STREET
EDMONTON, ALBERTA
CANADA T6P 1X8
PH. (780) 449-0000
FAX. (780) 449-0001

TITLE	# DWG
GENERAL TANK ELEVATION	SL2007-1
ROOF AND NOZZLE PLAN	SL2007-2
GENERAL TANK DETAILS	SL2007-3
GENERAL TANK DETAILS	SL2007-4

REFERENCE DRAWINGS

NO.	DATE	DESCRIPTION	BY	APP'D
1	09-03-30	AS-BUILT	F.R.	P.G.
0	07-05-17	FOR EDMONTON	A.D.C.	R.M.S.

REVISIONS

AGNICO-EAGLE MEADOWBANK DIVISION

TITLE
AGNICO-EAGLE – MEADOWBANK DIVISION
BAKER LAKE AREA 740

STRUCTURE

DRAWN BY	FRANCIS ROSE, TECH	DATE 2009-03-30
CHECKED BY	PATRICK GIARD, P.ENG	
APPROVED BY	GEM STEEL EDMONTON LTD	
SCALE	N.T.S.	DATE 2009-03-27

DRAWING NO.
VD2259-BKL-007

PROJECT NO.	REVISION	SHEET
VD2259-2	1	7/12

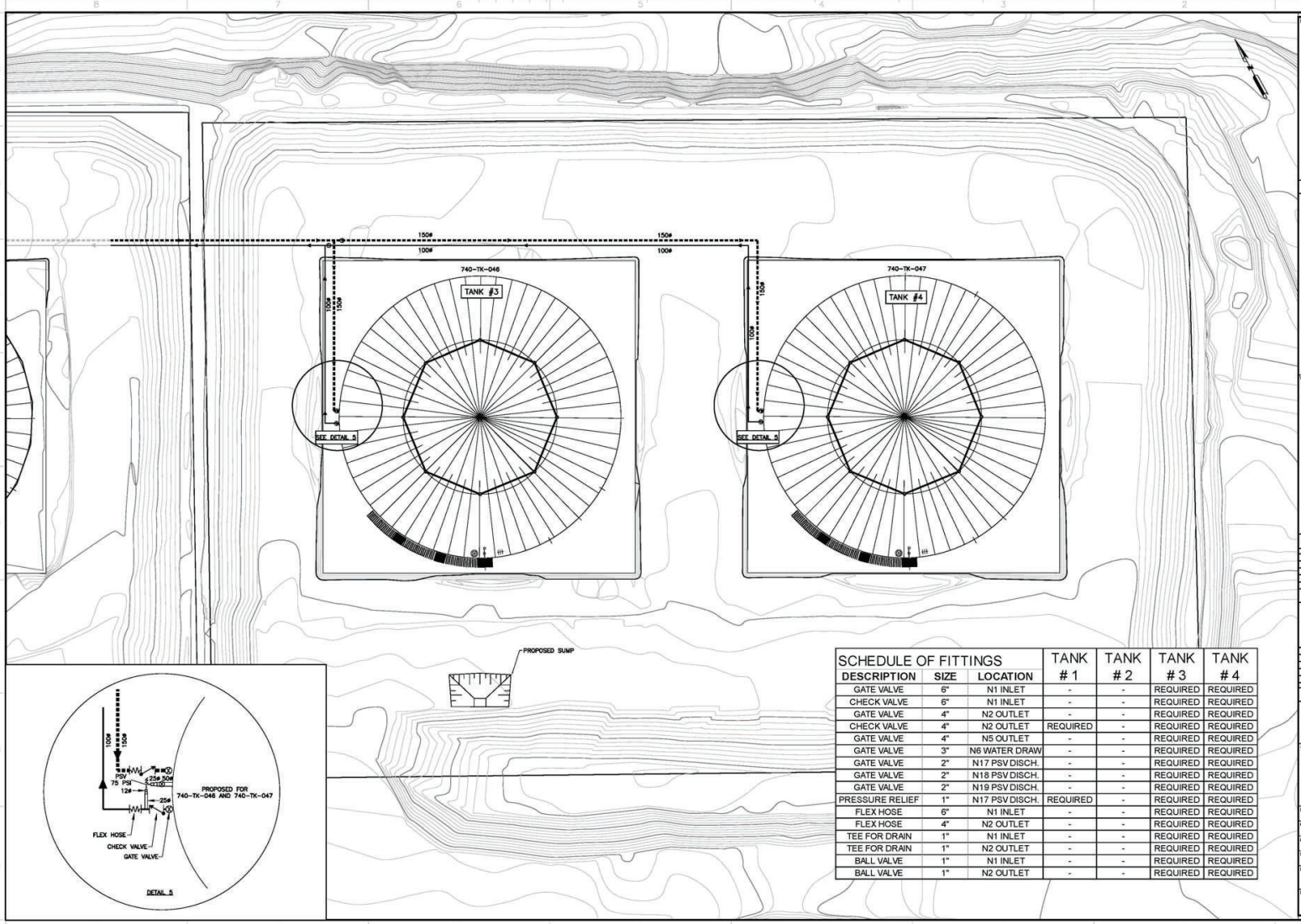

DETAIL 5

SCHEDULE OF FITTINGS			TANK	TANK	TANK	TANK
DESCRIPTION	SIZE	LOCATION	# 1	# 2	# 3	# 4
GATE VALVE	6"	N1 INLET	-	-	REQUIRED	REQUIRED
CHECK VALVE	6"	N1 INLET	-	-	REQUIRED	REQUIRED
GATE VALVE	4"	N2 OUTLET	-	-	REQUIRED	REQUIRED
CHECK VALVE	4"	N2 OUTLET	REQUIRED	-	REQUIRED	REQUIRED
GATE VALVE	4"	N5 OUTLET	-	-	REQUIRED	REQUIRED
GATE VALVE	3"	N6 WATER DRAW	-	-	REQUIRED	REQUIRED
GATE VALVE	2"	N17 PSV DISCH.	-	-	REQUIRED	REQUIRED
GATE VALVE	2"	N18 PSV DISCH.	-	-	REQUIRED	REQUIRED
GATE VALVE	2"	N19 PSV DISCH.	-	-	REQUIRED	REQUIRED
PRESSURE RELIEF	1"	N17 PSV DISCH.	REQUIRED	-	REQUIRED	REQUIRED
FLEX HOSE	6"	N1 INLET	-	-	REQUIRED	REQUIRED
FLEX HOSE	4"	N2 OUTLET	-	-	REQUIRED	REQUIRED
TEE FOR DRAIN	1"	N1 INLET	-	-	REQUIRED	REQUIRED
TEE FOR DRAIN	1"	N2 OUTLET	-	-	REQUIRED	REQUIRED
BALL VALVE	1"	N1 INLET	-	-	REQUIRED	REQUIRED
BALL VALVE	1"	N2 OUTLET	-	-	REQUIRED	REQUIRED

FORMAT ARCH-D-LANDSCAPE

KEY PLAN

GENERAL NOTES

Groupe STAVIBEL
Consultants en Ingénierie
1271, 7e Rue
Val-d'Or (Québec) J9P 3S1
Tél: (819) 825-2253 Télec: (819) 825-1322
Courriel : stavibel@stavibel.qc.ca
Site Internet : www.stavibel.qc.ca

ISSUED FOR CONSTRUCTION
PATRICK GIARD, P.ENG 2009/04/07

REFERENCE DRAWINGS

NO.	DATE	DESCRIPTION	BY	APP.	YY.MM.DD
1	2009-03-27	FOR CONSTRUCTION	F.R.	P.G.	

REVISIONS

AGNICO-EAGLE
MEADOWBANK DIVISION

TITLE
AGNICO-EAGLE – MEADOWBANK DIVISION
BAKER LAKE AREA 740

PIPING LAYOUT
FOR PHASE 2-B (2009)

DRAWN BY	FRANCIS ROSE, TECH	DATE 2009-03-27
CHECKED BY	PATRICK GIARD, P.ENG	
APPROVED BY	PATRICK GIARD, P.ENG	
SCALE	1:200	DATE 2009-03-27

DRAWING NO.
VD2259-BKL-008

PROJECT NO.	REVISION	SHEET
VD2259-2	1	5/12

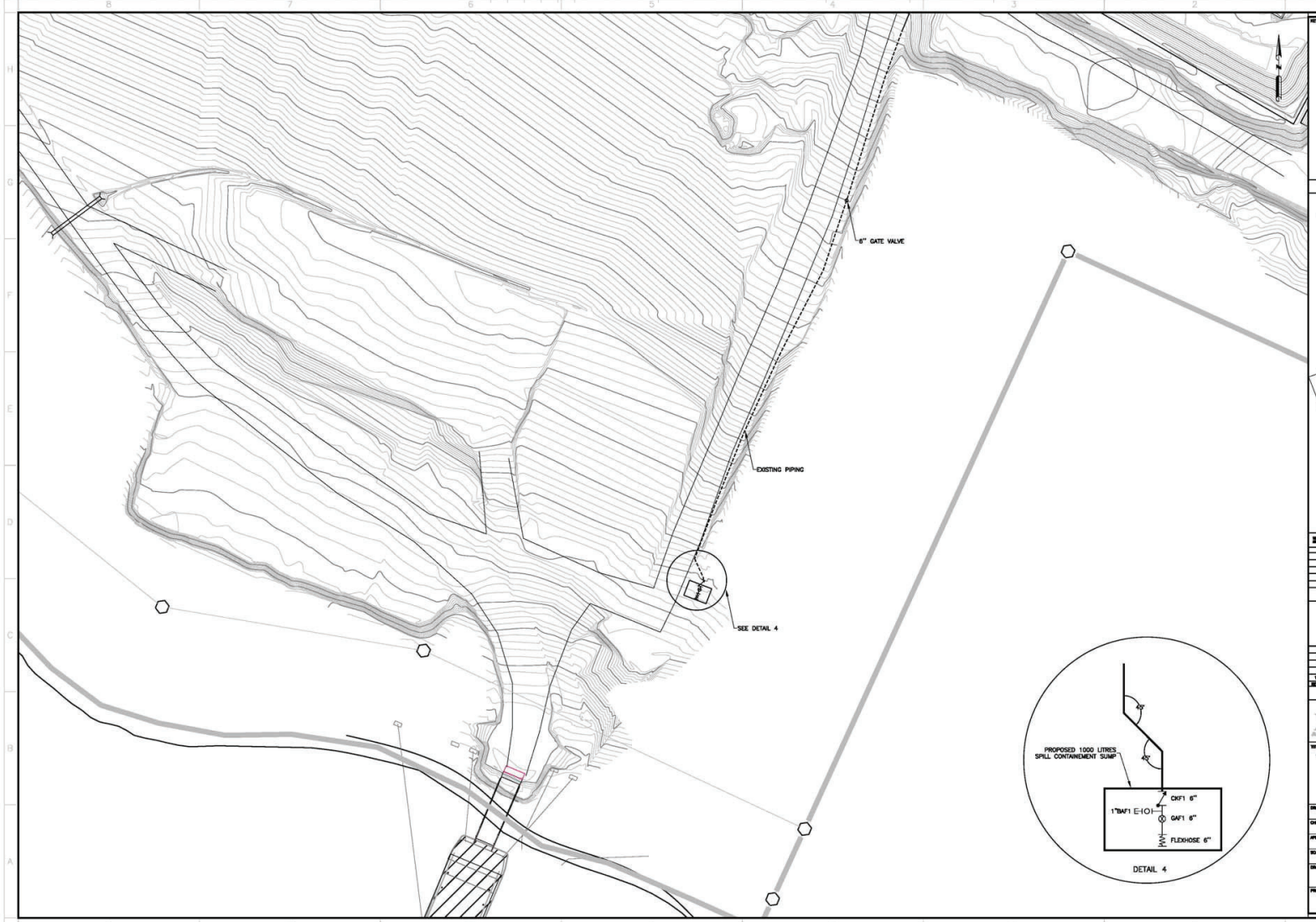

FORMAT ARCH-D-LANDSCAPE

KEY PLAN

GENERAL NOTES

Groupe STAVIBEL
Consultants en Ingénierie
1271, 1e Rue
Val-d'Or (Québec) J9P 3S1
Tél: (819) 825-2313 Télec: (819) 825-1322
Courriel : stavibel-val@stavibel.qc.ca
Site Internet : www.stavibel.qc.ca

ISSUED FOR CONSTRUCTION
PATRICK GUARD, P.ENG 2009/03/27

TITLE	# DWG

REFERENCE DRAWINGS

NO.	DATE	DESCRIPTION	BY	APP. CLIENT
1	09-03-27	FOR CONSTRUCTION	F.R.	P.G.

REVISIONS

AGNICO-EAGLE
MEADOWBANK DIVISION

TITLE
AGNICO-EAGLE – MEADOWBANK DIVISION
BAKER LAKE AREA 740

PIPING LAYOUT

DRAWN BY	FRANCIS ROSE, TECH	DATE 2009-03-27
CHECKED BY	PATRICK GUARD, P.ENG	
APPROVED BY	PATRICK GUARD, P.ENG	
SCALE	1:500	DATE 2009-03-27

DRAWING NO.
VD2259-BKL-009

PROJECT NO.	REVISION	SHEET
VD2259-2	1	9/12

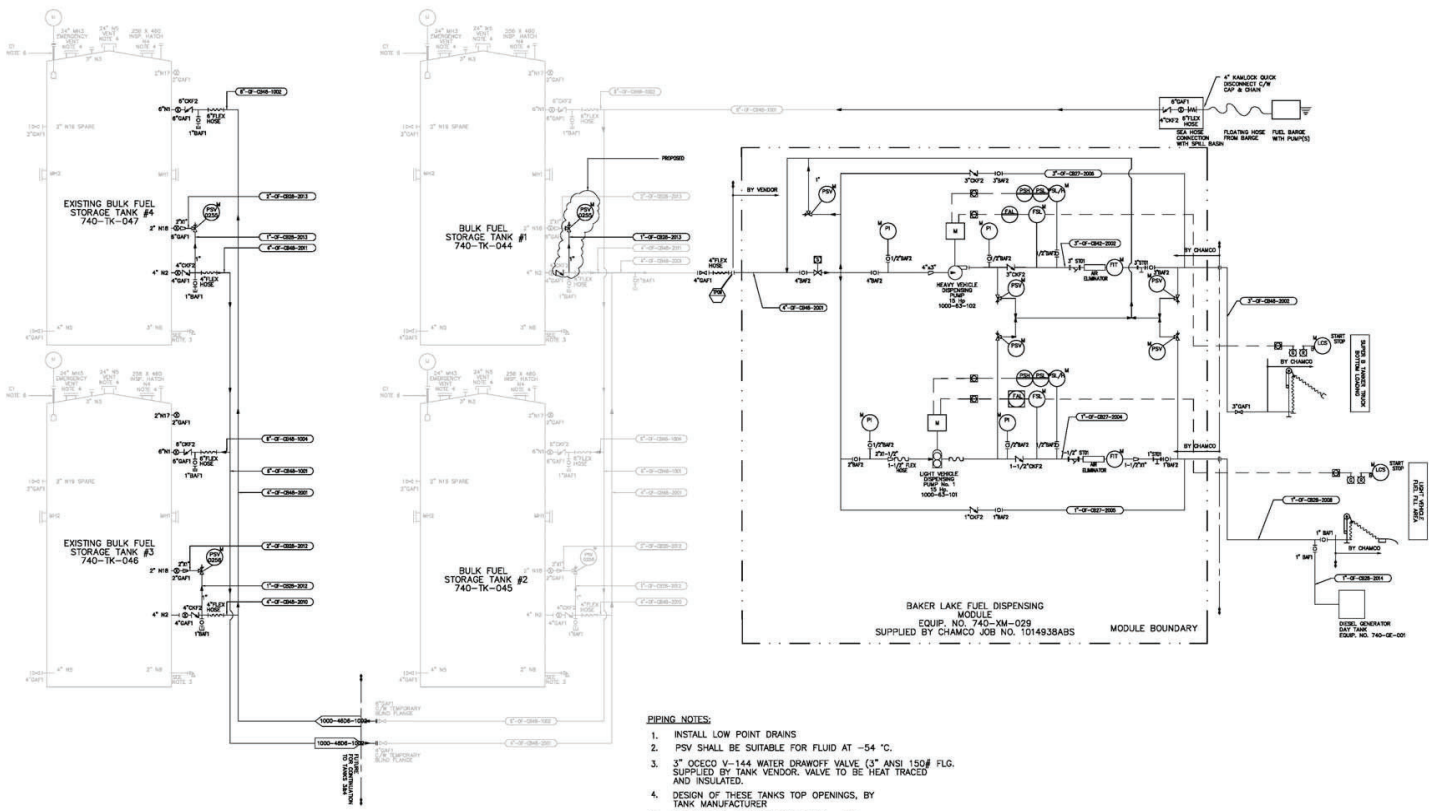

PIPING NOTES:

1. INSTALL LOW POINT DRAINS
2. PSV SHALL BE SUITABLE FOR FLUID AT -54 °C.
3. 3" OCECO V-144 WATER DRAWOFF VALVE (3" ANSI 150# FLG. SUPPLIED BY TANK VENDOR. VALVE TO BE HEAT TRACED AND INSULATED.
4. DESIGN OF THESE TANKS TOP OPENINGS, BY TANK MANUFACTURER
5. FLEXIBLE SS BRAIDED HOSE, 750mm LG. (FLEXONIC SENIOR, OR EQUAL)
6. VAREC 2500 LEVEL INDICATOR BY TANK MANUFACTURER

*SEE PLAN 008 FOR SCHEDULE OF FITTINGS

KEY PLAN

GENERAL NOTES

Groupe STAVIBEL
Consultants en ingénierie
1271, 7e Rue
Val-d'Or (Québec) J9P 3S1
Tél: (819) 825-2313 Télec: (819) 825-1322
Courriel : stavibel@stavibel.qc.ca
Site Internet : www.stavibel.qc.ca

ISSUED FOR CONSTRUCTION
PATRICK GUARD, P.ENG 2009/03/27

TITLE	# DWG

REFERENCE DRAWINGS

NO.	DATE	DESCRIPTION	BY	APP.	CLIENT
1	09-03-27	FOR CONSTRUCTION	F.R.	P.G.	

REVISIONS

AGNICO-EAGLE MEADOWBANK DIVISION

TITLE
AGNICO-EAGLE – MEADOWBANK DIVISION
BAKER LAKE AREA 740

PROCESS AND INSTRUMENTATION DIAGRAM

DRAWN BY	FRANCIS ROSE, TECH	DATE 2009-03-27
CHECKED BY	PATRICK GUARD, P.ENG	
APPROVED BY	PATRICK GUARD, P.ENG	
SCALE	N.T.S	DATE 2009-03-27

DRAWING NO.
VD2259-BKL-010

PROJECT NO.	REVISION	SHEET
VD2259-2	1	10/12

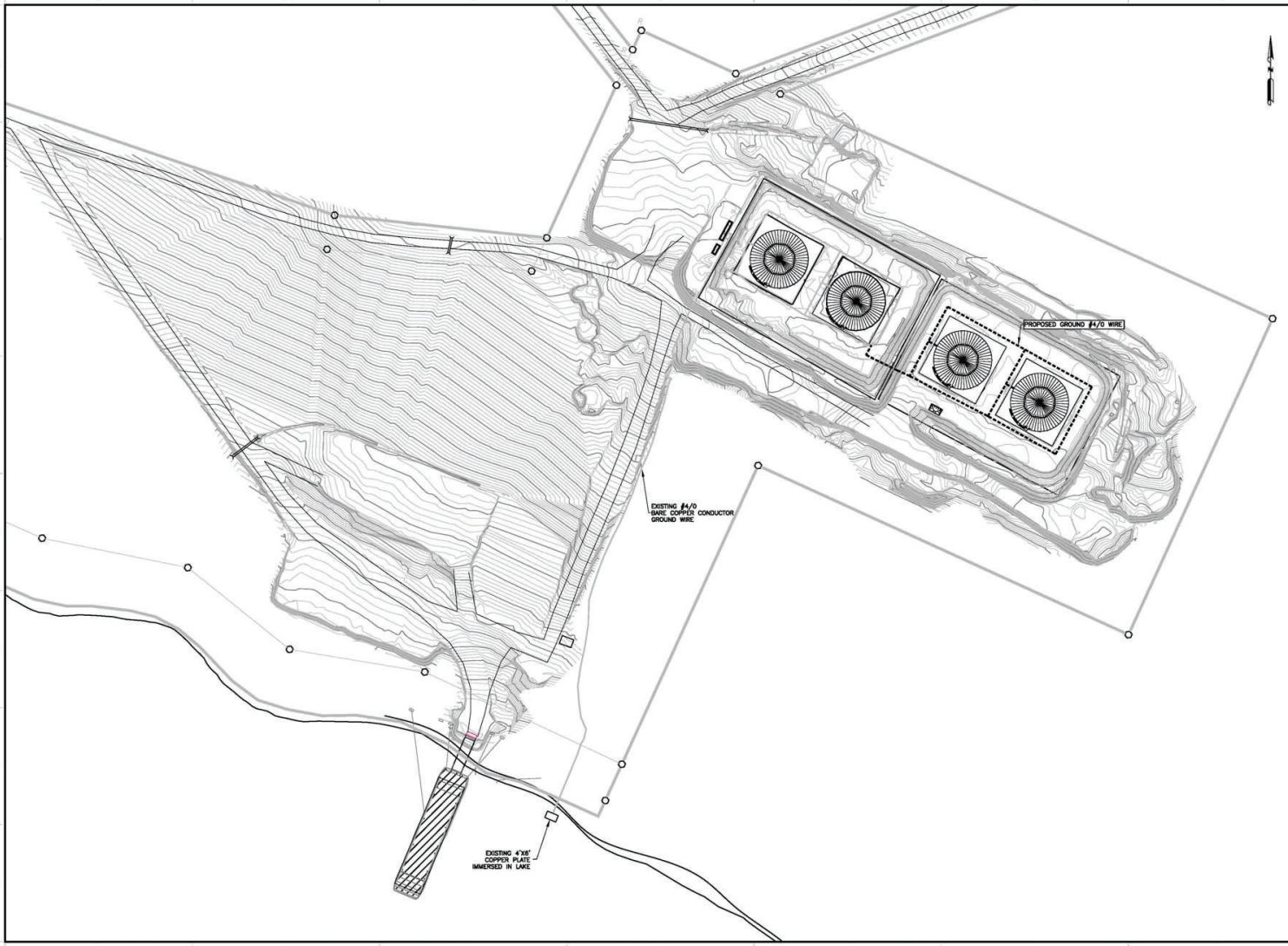

FORMAT ARCH-LANDSCAPE

KEY PLAN

GENERAL NOTES

Groupe
STAVIBEL
Consultants en Ingénierie
1271, 7e Rue
Val-d'Or (Québec) J9P 3S1
Tél: (819) 825-2113 Télec: (819) 825-1322
Courriel : stavibel-vd@stavibel.qc.ca
Site Internet : www.stavibel.qc.ca

ISSUED FOR CONSTRUCTION
PATRICK GUARD, P.ENG 2009/03/27

TITLE	# DWG

REFERENCE DRAWINGS

NO.	DATE	DESCRIPTION	BY	APP.
1	09-03-27	FOR CONSTRUCTION	F.R.	P.G.

REVISIONS

AGNICO-EAGLE
MEADOWBANK DIVISION

TITLE
AGNICO-EAGLE – MEADOWBANK DIVISION
BAKER LAKE AREA 740

GENERAL LAYOUT
ELECTRICAL GROUND

DRAWN BY	FRANCIS ROSE, TECH	DATE 2009-03-27
CHECKED BY	PATRICK GUARD, P.ENG	
APPROVED BY	PATRICK GUARD, P.ENG	
SCALE 1:1000	DATE 2009-03-27	

DRAWING NO.
VD2259-BKL-011

PROJECT NO.	REVISION	SHEET
VD2259-2	1	11/12

DRAWING NO.

FORMAT ARCH-D-LANDSCAPE

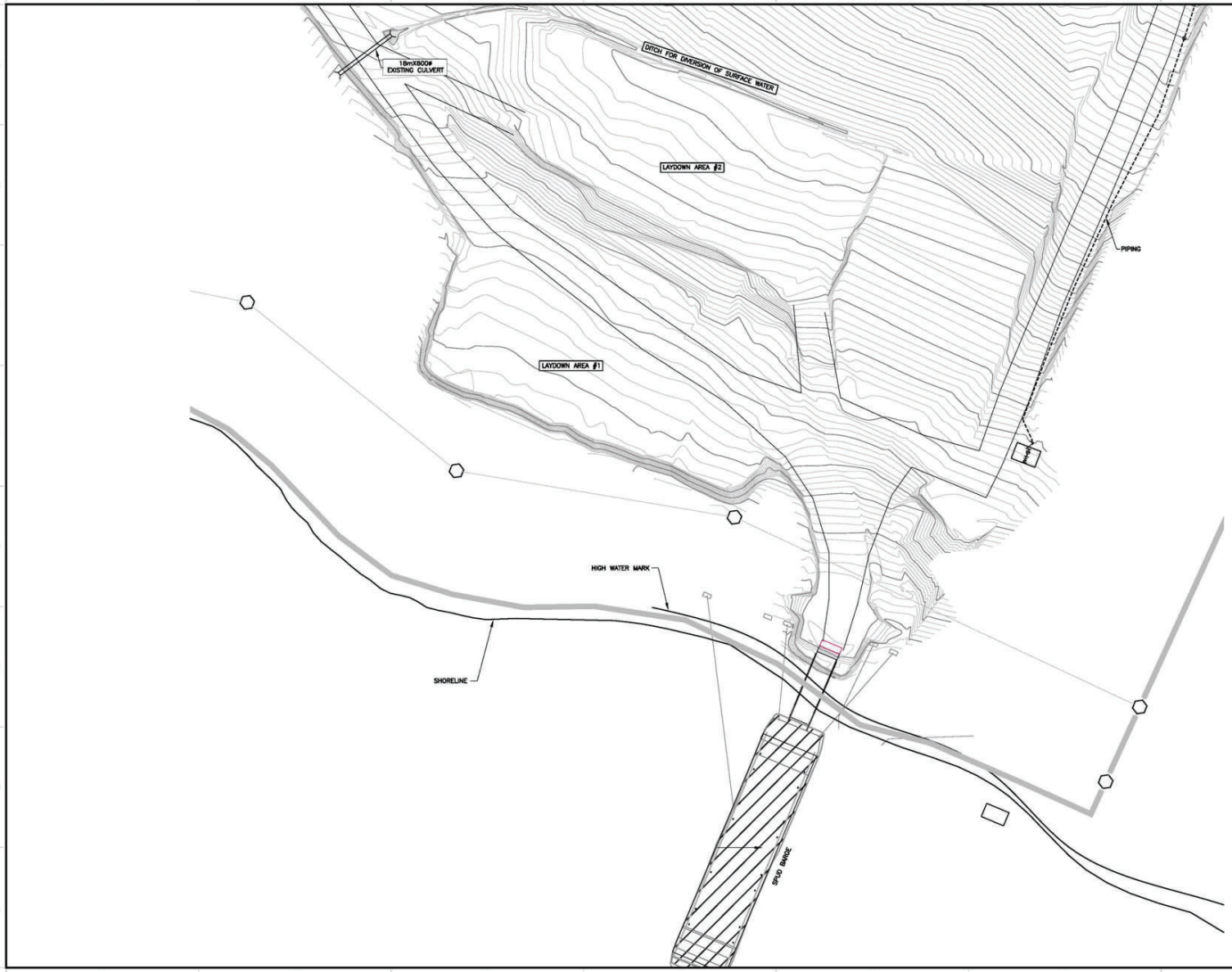

KEY PLAN

GENERAL NOTES

Groupe STAVIBEL
Consultants en Ingénierie
1271, 7e Rue
Val-d'Or (Québec) J9P 3S1
Tél: (819) 825-2313 Télec: (819) 825-1322
Courriel : stavibel-val@stavibel.qc.ca
Site Internet : www.stavibel.qc.ca

TITLE	# DWG

REFERENCE DRAWINGS

NO.	DATE	DESCRIPTION	BY	APP.	CLIENT
1	09-03-27	AS-BUILT	F.R.	P.G.	

REVISIONS

AGNICO-EAGLE
MEADOWBANK DIVISION

TITLE
AGNICO-EAGLE – MEADOWBANK DIVISION
BAKER LAKE AREA 740

GENERAL LAYOUT

DRAWN BY	FRANCIS ROSE, TECH	DATE 2009-03-27
CHECKED BY	PATRICK GIARD, P.ENG	
APPROVED BY	PATRICK GIARD, P.ENG	
SCALE 1:500	DATE 2009-03-27	

DRAWING NO.
VD2259-BKL-012

PROJECT NO.	REVISION	SHEET
VD2259-2	1	12/12

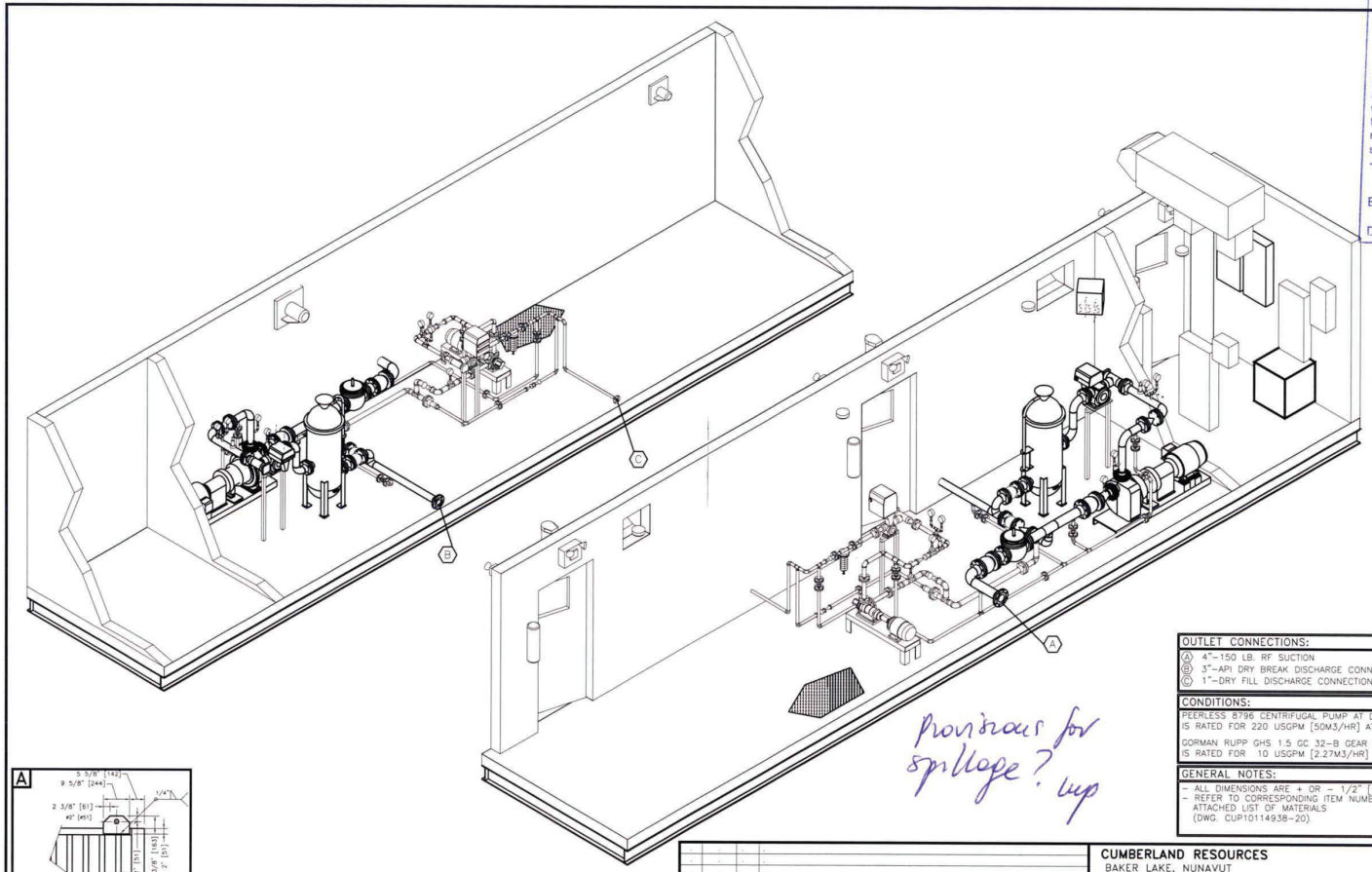

HATCH

☐ Code 1" Proceed, No Exception Taken"
☐ Code 2 "Proceed, with Exceptions as Noted and Re-submit"
☐ Code 3 "Do not Proceed, Revise as Noted and Re-submit"
☐ Code 4 "Information Only"

Reviewed only for general conformity with the drawings and specifications. The Consulting Engineer does not warrant or represent that the information contained on this drawing is either accurate or complete. Sole responsibility for correct design, details and dimensions shall remain with the party submitting the drawing.

HATCH

By _____

Date _____

RECEIVED
JUL 18 2007
DRAWING CONTROL
HATCH

OUTLET CONNECTIONS:
(A) 4"–150 LB. RF SUCTION (B) 3"–API DRY BREAK DISCHARGE CONNECTION (HEAVY FILL) (C) 1"–DRY FILL DISCHARGE CONNECTION (LIGHT FILL)

CONDITIONS:
PEERLESS 8796 CENTRIFUGAL PUMP AT DISCHARGE HEAD IS RATED FOR 220 USGPM [50M3/HR] AT 100' [30M] TDH. GORMAN RUPP GHS 1.5 GC 32–B GEAR PUMP AT DISCHARGE HEAD IS RATED FOR 10 USGPM [2.27M3/HR] AT 110' [33.53M] TDH.

GENERAL NOTES:
– ALL DIMENSIONS ARE + OR – 1/2" [13 mm]. – REFER TO CORRESPONDING ITEM NUMBER ON THE ATTACHED LIST OF MATERIALS (DWG. CUP10114938–20).

Provisions for spillage? cup

A

LOW TEMP
LIFTING LUGS
ONE LOCATED ON EACH CORNER OF PKG.

PRELIMINARY
FOR APPROVAL
CHAMCO INDUSTRIES LTD.

REV.	DATE	BY	DESCRIPTION
-	-	-	-

THIS PRINT IS THE PROPERTY OF CHAMCO INDUSTRIES LTD., IS CONFIDENTIAL, IS LENT ONLY FOR REFERENCE IN EQUIPMENT MAINTENANCE OR IN DEALINGS WITH CHAMCO INDUSTRIES LTD. AND IS NOT TO BE COPIED OR REPRODUCED WITHOUT OUR EXPRESS WRITTEN PERMISSION

CHAMCO
CHAMCO INDUSTRIES LTD.
VANCOUVER – CALGARY – EDMONTON – PRINCE GEORGE

CUMBERLAND RESOURCES
BAKER LAKE, NUNAVUT
P.O. No. M268

BAKER LAKE DISPENSING FUEL TRANSFER MODULE
PEERLESS 8796, 3x3x13MTP CENTRIFUGAL PUMP (1)
GORMAN RUPP GHS 1.5 GC 32–B GEAR PUMP (1)
ISOMETRIC VIEW GENERAL ARRANGEMENT

DESIGNED BY	D.J.C.
DRAWN BY	G.R.M.
CHECKED BY	.
JOB No.	1014938ABS
DATE	25–APRIL–07
SCALE	N.T.S.
DWG No.	CUP1014938–22
REV.	0

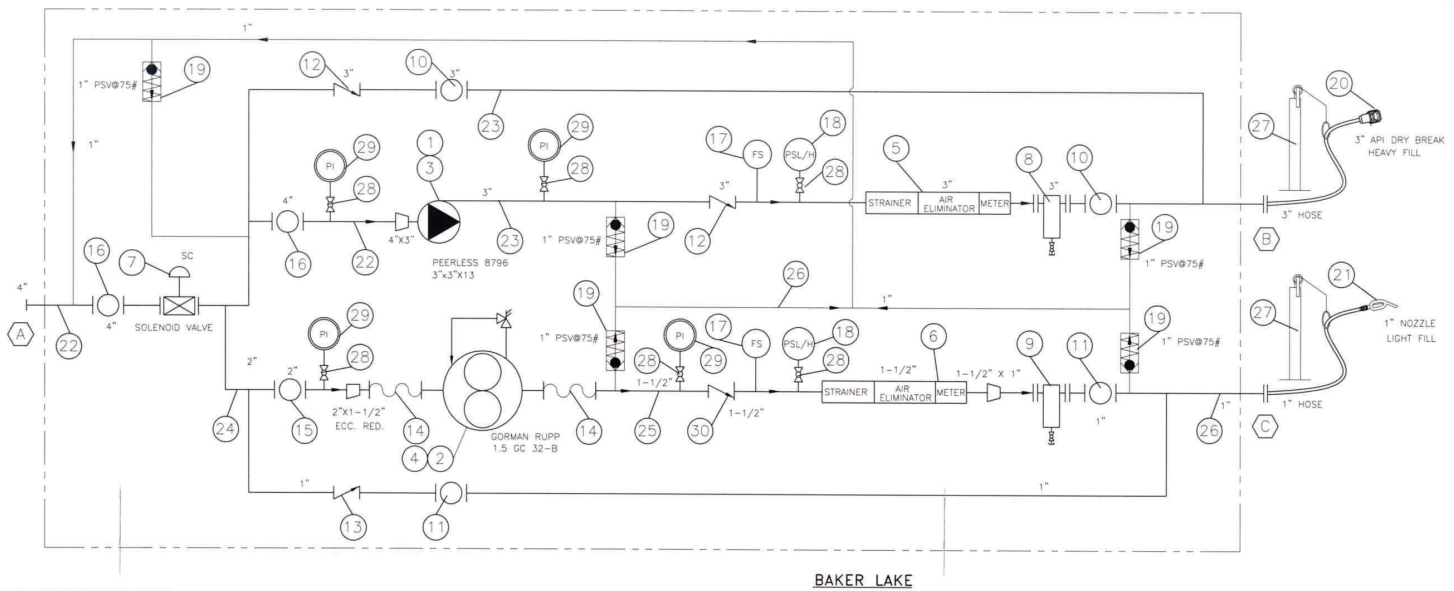

BAKER LAKE
DISPENSING MODULE

LEGEND

1. PEERLESS – 3" X 3" – 13 MTP 8796 HEAVY FILL PUMP RATED AT 220 USGPM (1)
2. GORMAN RUPP GHS 1.5 GC 32–B PUMP RATED AT 10 USGPM – LIGHT FILL (1)
3. ELECTRIC MOTOR (15HP, 1800 RPM, 254T, 3/60/575V) – NOT SHOWN
4. ELECTRIC MOTOR (1.5HP, 1200 RPM, 182T, 3/60/575V) – NOT SHOWN
5. TCS 700–30 3" AIR ELLIMINATOR, DISCHARGE STRAINER AND FLOW METER
6. TCS 700–15 1–1/2" ELLIMINATOR, DISCHARGE STRAINER AND FLOW METER
7. 4" 120VAC SOLENOID FIRE SAFE VALVE
8. 3" BASKET FILTER
9. 1" BASKET FILTER
10. 3" BALL VALVE
11. 1" BALL VALVE
12. 3" CHECK VALVE
13. 1" CHECK VALVE
14. 1–1/2" FLEX HOSE
15. 2" BALL VALVE
16. 4" BALL VALVE
17. FLOW SWITCH
18. PRESSURE SWITCH HIGH/LO DISCHARGE PRESSURE ALARM
19. 1" PSV SET AT 75PSI
20. 3" API DRY BREAK (HEAVY FILL)
21. 1" NOZZLE (LIGHT FILL)
22. 4" LOW TEMP PIPE AND FITTINGS
23. 3" LOW TEMP PIPE AND FITTINGS
24. 2" LOW TEMP PIPE AND FITTINGS
25. 1–1/2" LOW TEMP PIPE AND FITTINGS
26. 1" LOW TEMP PIPE AND FITTINGS
27. HIGH HOSE RETRIEVER AND BUN
28. 1/2" BALL VALVE
29. PRESSURE GAUGE
30. 1–1/2" CHECK VALVE

HATCH
- ☐ Code 1" Proceed, No Exception Taken"
- ☐ Code 2 "Proceed, with Exceptions as Noted and Re-submit"
- ☐ Code 3 "Do not Proceed, Revise as Noted and Re-submit"
- ☐ Code 4 "Information Only"

Reviewed only for general conformity with the drawings and specifications. The Consulting Engineer does not warrant or represent that the information contained on this drawing is either accurate or complete. Sole responsibility for correct design, details and dimensions shall remain with the part submitting the drawing.

HATCH
By _____
Date _____

RECEIVED
JUL 1 3 2007
DRAWING CONTROL
HATCH

OUTLET CONNECTIONS:
(A) 4"–150# RFWN FLANGE (B) 3"–API DRY BREAK– HEAVY FILL (C) 1"–DISCHARGE NOZZLE–LIGHT FILL

CONDITIONS:
EACH PEERLESS 8796 CENTRIFUGAL PUMP AT DISCHARGE HEAD IS RATED FOR 220 USgpm [50M3/HR] AT 100' [30M] TDH. EACH GORMANN RUPP GHS 1.5 GC 32–B GEAR PUMP AT DISCHARGE HEAD IS RATED FOR 10 USgpm[2.27M3/HR] AT 110'[33.53M] TDH.

GENERAL NOTES:
– ALL DIMENSIONS ARE + OR – 1/2" [13 mm].

REV.	DATE	BY	DESCRIPTION

THIS PRINT IS THE PROPERTY OF CHAMCO INDUSTRIES LTD., IS CONFIDENTIAL, IS LENT ONLY FOR REFERENCE IN EQUIPMENT MAINTENANCE OR IN DEALING WITH CHAMCO INDUSTRIES LTD. AND IS NOT TO BE COPIED OR REPRODUCED WITHOUT OUR EXPRESS WRITTEN PERMISSION

PRELIMINARY
FOR APPROVAL
CHAMCO INDUSTRIES LTD.

CHAMCO
CHAMCO INDUSTRIES LTD.
VANCOUVER – CALGARY – EDMONTON – PRINCE GEORGE

CUMBERLAND RESOURCES
BAKER LAKE, NUNAVUT
P.O. No. M268

BAKER LAKE DISPENSING FUEL TRANSFER MODULE
PEERLESS 8796, 3x3x13MTP CENTRIFUGAL PUMP (1)
GORMAN RUPP GHS 1.5 GC 32–B GEAR PUMP (1)
FLOW DIAGRAM

DESIGNED BY	D.J.C.
DRAWN BY	G.R.M.
CHECKED BY	.
JOB No.	1014938ABS
DATE	25–APRIL–07
SCALE	N.T.S.
DWG No.	CUP1014938–25
REV.	0

APPENDIX 2

SAFE FILL LEVELS FOR ALL FUEL TANKS

TEMPERATURE OF FUEL in the barge at discharge	MAXIMUM FUEL LEVEL to be read on the VAREC float level			
	TANK #1	**TANK #2**	**TANK #3**	**TANK #4**
0°C	11.68 m	11.64 m	11.70 m	11.70 m
+ 5°C	11.73 m	11.69 m	11.75 m	11.75 m
+10°C	11.79 m	11.75 m	11.81 m	11.81 m
+15°C	11.84 m	11.80 m	11.86 m	11.86 m

NOTE : EACH TANK HAS A SLIGHTLY DIFFERENT ELEVATION, SO CARE MUST BE TAKEN DURING HYDRAULIC BALANCING OF TANKS, ESPECIALLY WHEN THOSE ARE FULL.

Appendix A2

Baker Lake Diesel Fuel Storage Installations: Final Report Following Construction of Phase 2-B (2009)



AGNICO-EAGLE MINES LTD
MEADOWBANK DIVISION

BAKER LAKE FUEL STORAGE INSTALLATIONS

FINAL REPORT

FOLLOWING THE CONSTRUCTION

OF

PHASE 2-B (2009)

AEM

AGNICO-EAGLE MINES LTD
MEADOWBANK DIVISION

BAKER LAKE FUEL STORAGE INSTALLATIONS

FINAL REPORT

FOLLOWING THE CONSTRUCTION

OF

PHASE 2-B (2009)

PREPARED BY :

REGISTERED PROFESSIONAL ENGINEER
B.A.P. GIARD
LICENSEE
NWT/NU

Patrick Giard, P.Eng., CCE

2009-12-07

AGNICO-EAGLE MINES LTD

MEADOWBANK DIVISION

BAKER LAKE FUEL STORAGE INSTALLATIONS

FINAL REPORT

FOLLOWING THE CONSTRUCTION

TABLE OF CONTENTS

1.0 EXECUTIVE SUMMARY 2

2.0 SECONDARY CONTAINMENT BERMS 3

2.1 Final completion of berm enclosure 3

2.2 Breach in middle berm 3

3.0 HDPE MEMBRANE WELDING 3

4.0 GEOTEXTILE INSTALLATION 4

5.0 SCREENED SAND COVER 4

6.0 WELDING OF PIPELINE 4

7.0 PRESSURE TESTING OF PIPELINE 5

7.1 Selection of test method and suitable air pressure for testing 5

7.2 Results of air pressure testing of fuel piping 6

APPENDIX 1 : AS-BUILT DRAWINGS

VD2259-BKL-001 (revision 2), VD2259-BKL-008 (revision 3)

APPENDIX 2

QUALITY CONTROL DOCS : HDPE welding log and instrument qualification

1.0 EXECUTIVE SUMMARY

Agnico-Eagle Mines Limited has undertaken construction of a gold mining project in the Kivalliq region of Nunavut, about 70 km north of Baker Lake.

The yearly operations of this mining operation requires the storage of a minimum of forty million (40 000 000) liters of diesel fuel, which represents four (4) bulk fuel storage tanks, each with a nominal capacity of ten million (10 000 000) liters.

PHASE 1 (2007)

During the summer of 2007, Agnico-Eagle Mines Limited has built the first two (2) bulk fuel tanks, with a combined capacity twenty million (20 000 000) liters of diesel fuel. An impervious enclosure was built around it in order to provide secondary containment around the fuel tanks. These first two (2) bulk fuel tanks were then in condition to be filled.

PHASE 2-A (2008)

During the summer of 2008, Agnico-Eagle Mines Limited has built another two (2) bulk fuel tanks, for a total combined capacity of forty million (40 000 000) liters of diesel fuel. Only a portion of the enclosure was built around it, with the final purpose being to provide secondary containment around the fuel tanks. These other two (2) bulk fuel tanks were completed in late October 2008, and they have remained empty during the winter of 2008-09.

PHASE 2-B (2009)

During 2009, Agnico-Eagle Mines Limited has completed the installation of an impermeable HDPE membrane, which provides adequate secondary containment around the fuel tanks. This has allowed to fill up all four (4) bulk fuel tanks in the summer of 2009, with the piping installation towards tanks 3 and 4 being completed.

PHASE 3

Consideration is currently being given to an expansion project for the fuel storage facilities in Baker Lake. The scale of the project has been defined in a set of drawings and technical specifications, which will be used for the permitting process.

2.0 SECONDARY CONTAINMENT BERMS

2.1 Final completion of berm enclosure

During the construction of fuel tanks 3 and 4 there was a small part of the secondary containment enclosure built in 2008 had been left open to provide easy access.

The granular material and rock fill that was used for civil works was taken from an approved quarry, which has been demonstrated not to produce Acid Rock Drainage and to be non-Metal Leaching.

Given that theses fuel tanks were to be filled up in August 2009, the berm enclosure was fully completed in July 2009, exactly as shown on the construction drawings and at a minimal crest elevation of 34.20 m.

2.2 Breach in middle berm

Once the berm enclosure was fully completed, a breach was made in the middle berm between fuel tanks 2 and 3. At that moment, fuel tanks 1 and 2 had been fully drawn with truck tankers, and were totally empty. Meanwhile, the mine operations relied on the fuels tanks located at the Meadowbank site.

The breach section in this midside berm was capped with an HDPE membrane at the 33.00 m elevation mark, which is the same as the tank rim elevation. This HDPE membrane was welded to the existing ones on the berm crests, thus ensuring an impermeable transition from one side to the other of both secondary containment areas. An access ramp was built over this breach to provide vehicle access inside the secondary containment area around fuel tanks 3 and 4.

3.0 HDPE MEMBRANE WELDING

A specialized crew from Saskatchewan was mobilized to Baker Lake for the completion of the HDPE membrane installation. The contractor was Enviroline Services inc.

During July 2008, or prior to the construction of fuel tanks 3 and 4, some HDPE panels were laid out under the fuel tanks. The edges of this HDPE membrane had been protected with plywood sheets and covered with a layer of screened sand.

The work that took place in 2009 was to weld some HDPE membrane rolls to those existing panels, and extend all those HDPE membrane rolls right up to the berm crest. The membrane was anchored into a trench, as indicated on the construction drawings.

Detailed reports of wedge welder seam logs and qualification tests, as well as logs for extrusion welder and qualification tests are enclosed herein, in Appendix 1.

4.0 GEOTEXTILE INSTALLATION

As indicated on the construction drawings, a geotextile was placed directly under and over the HDPE membrane, as a means to reduce the risk of puncturing this membrane.

5.0 SCREENED SAND COVER

As indicated on the construction drawings, a layer of screened sand was placed directly under and over the geotextile, as an additional means to reduce the risk of puncturing the HDPE membrane. This sand was screened at the Blueberry Hill pit and hauled to the worksite by local truckers.

6.0 WELDING OF PIPELINE

A crew from the ABF Mines contractor, composed of a qualified welder and a pipefitter, have completed the extension of the barge discharge pipeline towards tanks 3 and 4.

Also, some additional piping was installed from the tank 3 and 4 towards the fuel dispensing module, thus allowing to draw fuel from these tanks, after barge delivery.

Some pressure release valves were installed on each of these pipelines, with a discharge pressure set at 75 psi and piped back into the fuel tanks. This constitutes a protection feature against the effects of thermal expansion of fuel which was indicated on the construction drawings.

Another feature of the modifications implemented in 2009 is the installation of some swing check valves at the N2 nipple outlets of all fuel tanks. This will most likely help the fuel dispensing pump keeps its prime when the fuel levels get low in the tanks.

The only exception to the complete compliance of these installations with the piping drawings is that the containment sump for the fuel sea hose connection shown on section A of drawing 017202-1000-46D4-1004 from SNC-Lavalin has not been installed.

The flanges and gaskets that were use for mechanical joints are rated for 150 psi.

7.0 PRESSURE TESTING OF PIPELINE

7.1 Selection of test method and suitable air pressure for testing

The purpose of the leak detection program is to proof the fuel delivery system in a non-destructive manner. Fuel pipelines were pressure tested with a non-inert gas, given that no petroleum product had ever entered the pipelines prior to testing.

Section 6.2 of CCME PN_1326 states that the testing pressure must be greater than 350 kPa (50.8 psi), but without exceeding the manufacturer specifications for flanges and gaskets of 1034 kPa (150 psi). For that purpose, an evaluation was made of the maximum operating pressure at the fuel sea hose connection of the barge discharge pipeline. The results are as follows :

Expected discharge flow rate : 0.090 m^3/s

Maximum operating pressure = static pressure + velocity pressure + friction loss

Maximum operating pressure = 29.64 m + 1.24 m + 35.80 m = **94.7 psi**

Whereas static pressure = elevation of (tank overflow - pump intake) x 0.8396
static pressure = (44.90 m - 9.60 m) x diesel fuel density @ 2°C

Whereas friction loss was evaluated to be :
Pressure Loss (psi): 50.95 psi **Head Loss (ft):** 139.83 ft of diesel fuel
for the barge discharge pipeline **Fluid:** diesel fuel **Pipe/Tubing ID (in):** 6" or 150 mm **Flow Rate (USGPM):** 1426.5 USGPM or 0.090 m^3/s **Dynamic Viscosity of diesel fuel (cP):** 5.0 cP **Specific Gravity (water=1):** 0.8396 at 35°F **Temperature (F):** 35°F or 2°C **Pipe Roughness (ft):** 0.00015 **Fluid Velocity (ft/sec):** 16.19 ft/s or 4.93 m/s **Friction Factor:** 0.019 **Piping Length (ft):** 900 **Pressure Loss (psi):** 50.84 psi **Head Loss (ft):** 139.88 ft or 42.64 m of diesel fuel @ 0.8396

7.2 Results of air pressure testing of fuel piping

The test pressure has been set at 690 kPa (100 psi), and the stabilization of pressure due to ambient temperature was noted after pressurization at 100 psi was achieved for testing. The piping system was not considered to be leaking due to a pressure variation occurrence of less than 2% within at least two (2) hours, after noted stabilization of air pressure. Detailed results are stated hereunder.

TESTING DAY ONE

Section of piping tested	100 mm pipe	from TANK 3 to TANK 4	
DATE OF TESTING :	2009-07-24	Air temperature :	N/A
TEST STARTED AT :	07:55 AM	TEST WAS ENDED AT :	02:57 PM
INITIAL PRESSURE	**99 PSI**	FINAL PRESSURE READING	**102 PSI**

Section of piping tested	150 mm pipe	from TANK 3 to TANK 4	
DATE OF TESTING :	2009-07-24	Air temperature :	N/A
TEST STARTED AT :	10:25 AM	TEST WAS ENDED AT :	02:55 PM
INITIAL PRESSURE	**99 PSI**	FINAL PRESSURE READING	**102 PSI**

TESTING DAY TWO

Section of piping tested	100 mm pipe	from TANK 2 to TANK 3	
DATE OF TESTING :	2009-07-25	Air temperature :	18°C
TEST STARTED AT :	01:08 PM	TEST WAS ENDED AT :	VOID TEST
INITIAL PRESSURE	**100 PSI**	FINAL PRESSURE READING	**NIL**

The cause of air pressure drop was located (missing gasket) and testing resumed.

Section of piping tested	100 mm pipe	from TANK 2 to TANK 3	
DATE OF TESTING :	2009-07-25	Air temperature :	18°C
TEST STARTED AT :	02:12 PM	TEST WAS ENDED AT :	06:15 PM
INITIAL PRESSURE	**100 PSI**	FINAL PRESSURE READING	**100 PSI**

TESTING DAY THREE

Section of piping tested	150 mm pipe	from TANK 2 to TANK 3	
DATE OF TESTING :	2009-07-26	Air temperature :	15°C
TEST STARTED AT :	09:30 AM	TEST WAS ENDED AT :	VOID TEST
INITIAL PRESSURE	**100 PSI**	FINAL PRESSURE READING	**80 PSI**

The cause of air pressure drop was located (tightening bolts) and testing resumed.

Section of piping tested	100 mm pipe	from TANK 2 to TANK 3	
DATE OF TESTING :	2009-07-26	Air temperature :	18°C
TEST STARTED AT :	11:45 AM	TEST WAS ENDED AT :	04:25 PM
INITIAL PRESSURE	**100 PSI**	FINAL PRESSURE READING	**101 PSI**

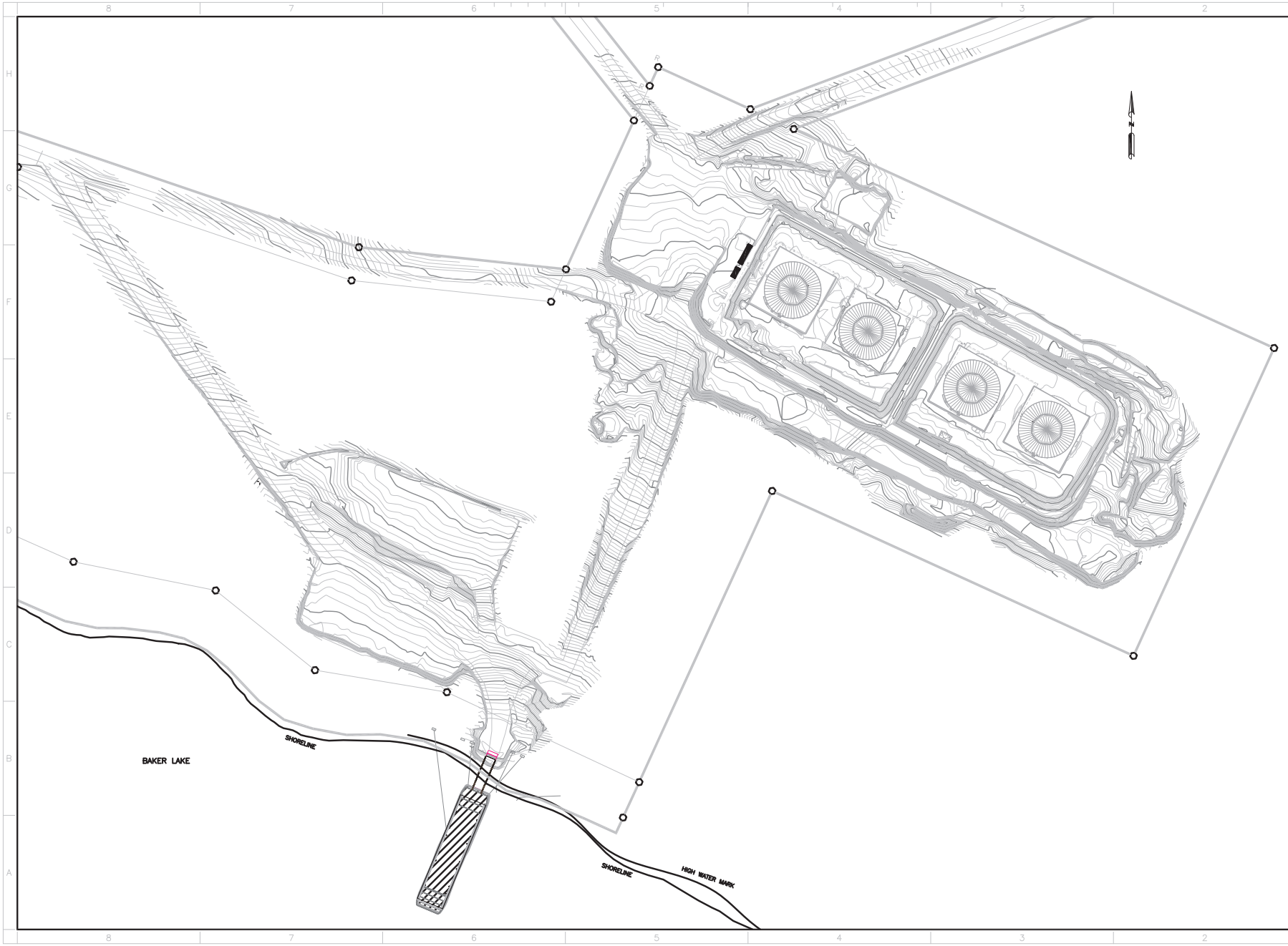

KEY PLAN

GENERAL NOTES

Groupe STAVIBEL
Consultants en Ingénierie
1271, 7e Rue
Val-d'Or (Québec) J9P 3S1
Tél: (819) 825-2233 Téléc: (819) 825-1322
Courriel : stavibel-vd@stavibel.qc.ca
Site internet : www.stavibel.qc.ca

AS BUILT
Groupe STAVIBEL
2009-12-07
PATRICK GIARD, P.ENG

TITLE	# REV

REFERENCE DRAWINGS

REV	DESC	DESCRIPTION	BY	APP.	CLIENT
2		AS BUILT	J.L.		P.G.

REVISIONS

AGNICO-EAGLE
MEADOWBANK DIVISION

TITLE
AGNICO-EAGLE – MEADOWBANK DIVISION
BAKER LAKE AREA 740

GENERAL LAYOUT

DRAWN BY	FRANCIS ROSE, TECH	DATE
CHECKED BY	PATRICK GIARD, P.ENG	
APPROVED BY	PATRICK GIARD, P.ENG	
SCALE	1:1000	DATE
DRAWING NO.	VD2259-BKL-001	
PROJECT NO.	VD2259-2	REVISION 2 / SHEET 1/10

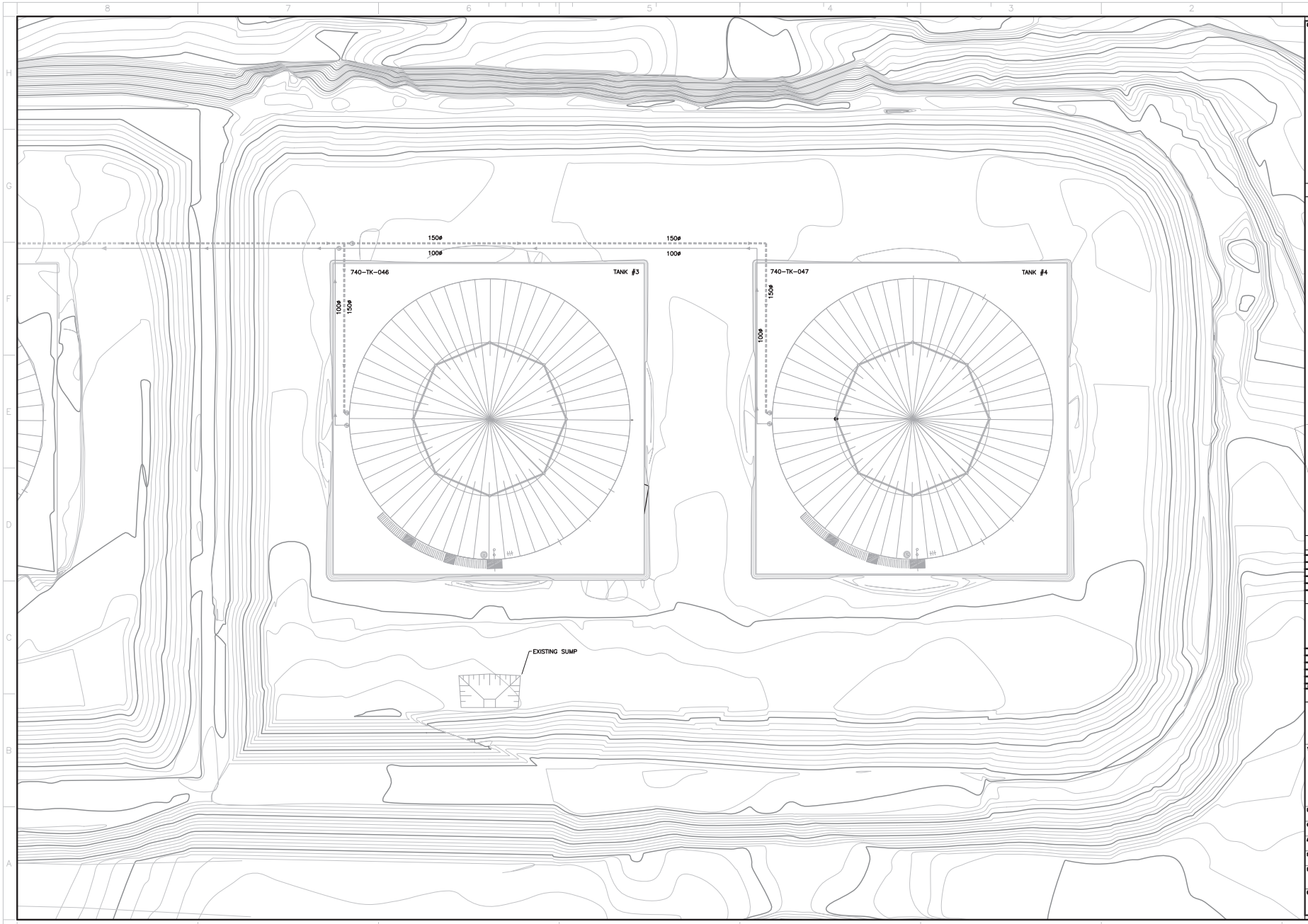

KEY PLAN

GENERAL NOTES

Groupe STAVIBEL
Consultants en Ingénierie
1271, 7e Rue
Val-d'Or (Québec) J9P 3S1
Tél: (819) 825-2233 Télec: (819) 825-1322
Courriel : stavibel-val@stavibel.qc.ca
Site internet : www.stavibel.qc.ca

AS BUILT
Groupe STAVIBEL
PATRICK GIARD, P.ENG. 2009-12-07

TITLE	# SHEET

REFERENCE DRAWINGS

2	AS BUILT	JL	P.G.	
1	FOR CONSTRUCTION	P.G.	P.G.	
NO.	DESCRIPTION	BY	APP.	DATE

REVISIONS

AGNICO-EAGLE
MEADOWBANK DIVISION

TITLE
AGNICO-EAGLE – MEADOWBANK DIVISION
BAKER LAKE AREA 740

PIPING LAYOUT
FOR PHASE 2-B (2009)

DRAWN BY	FRANCIS ROBY, TECH	DATE
CHECKED BY	PATRICK GIARD, P.ENG	
APPROVED BY	PATRICK GIARD, P.ENG	
SCALE	1:1000	DATE

DRAWING NO.
VD2259-BKL-002

PROJECT NO.	REVISION	SHEET
VD2259-2	2	9/10

AGNICO EAGLE MINES LTD
MEADOWBANK DIVISION
PROJECT REF. VD2415-000

BAKER LAKE: TANK FARM

IMPERMEABLE ENCLOSURE AROUND TANKS #3 AND #4

CONTRACTOR: ENVIROLINE SERVICES INC.

Contents

1) AS BUILT
2) WEDGE WELDER SEAM LOG
3) WEDGE WELDER QUALIFICATIONS
4) EXTRUSION LOG
5) EXTRUSION WELDER QUALIFICATIONS

JULY 08, 2009
ENVIROLINE

Enviroline Services Supervisor

DEREK PROVOST

2009/07/08

PATRICK GIARD, P.Eng.

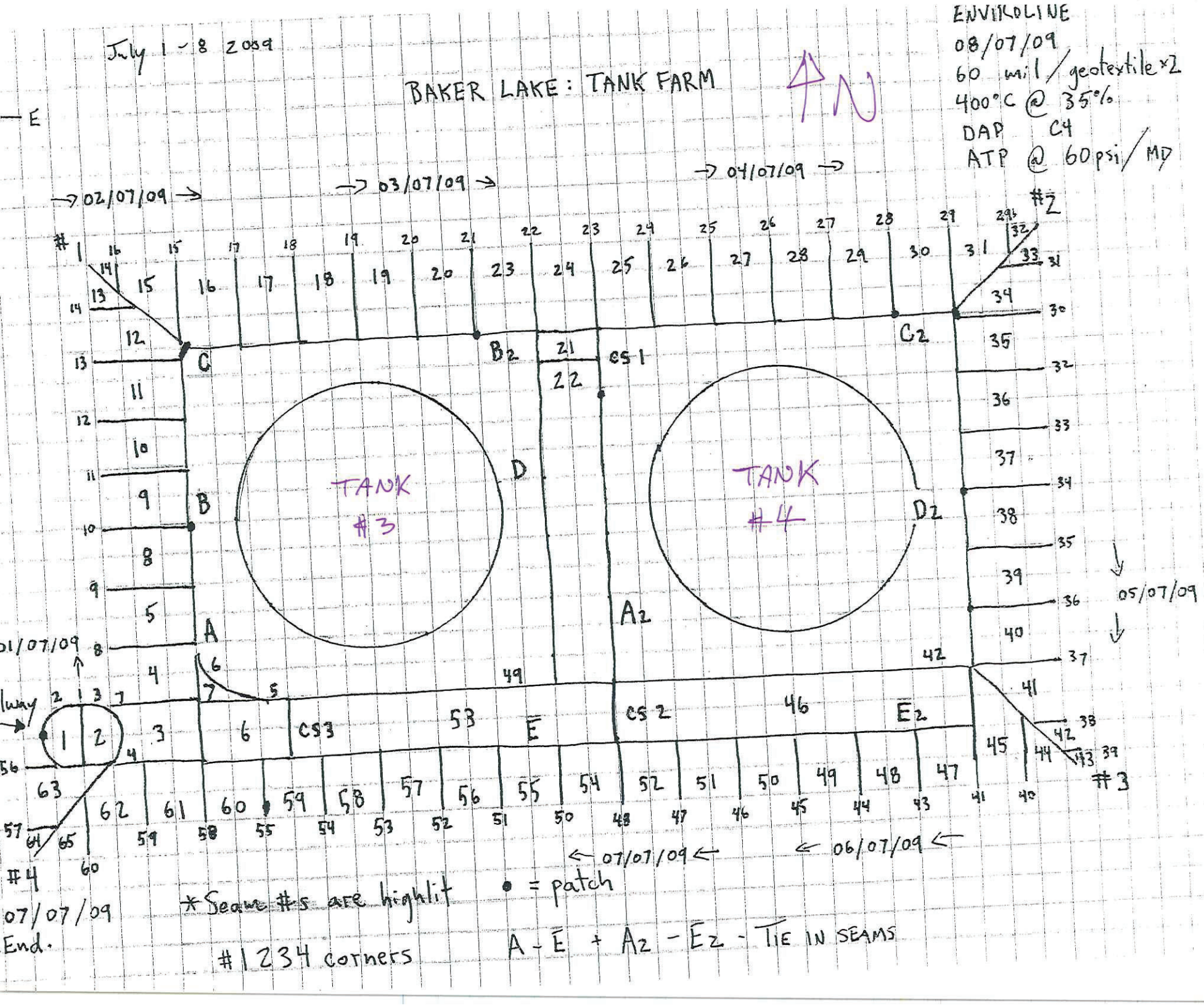
July 1 - 8 2009
BAKER LAKE : TANK FARM
N
ENVIROLINE
08/07/09
60 mil / geotextile x2
400°C @ 35%
DAP C4
ATP @ 60psi / MD
→ 02/07/09 →
→ 03/07/09 →
→ 04/07/09 →
05/07/09
01/07/09
TANK #3
TANK #4
#1
#2
#3
#4
A
B
C
D
E
A2
B2
C2
D2
E2
CS1
CS2
CS3
← 07/07/09 ←
← 06/07/09 ←
07/07/09
End.
* Seam #s are highlit
• = patch
#1234 corners
A - E + A2 - E2 - TIE IN SEAMS

nviroline services inc.
x 7539 Saskatoon, SK. S7K 4J4 Tel. 306 242 8836 Fax 306 249 6721 Email: dvhames@home.com

dge Welder Seam Log

ect	TANK FARM	QC Tech. MD	Drive Pressure 60
tion	BAKER LAKE	Wedge Temp. 400°C	Dwell Pressure
erial	60 mil	Wedge Gap	Comments

Fusion Information					Testing Information								
	HDPE Weld				Peel Test		Air Test		60 psi 60		Date 7/07/09	Date	
n #	Tech.	Temp	Speed	Vise Grip	Inside	Outside	Start	Finish	Start	Finish	Welded	Tested	Comments
	DAP	400	35%	✓	121	114	6:35	6:40	60	60	01	02	July 2009
2				✓	109	115	5:30?	5:35?			01	02	
3				✓	115	117	5:55	6:00			01	02	
4				✓	117	116	6:40	6:45			01	02	
5				✓	118	119	6:29	6:34			01	02	
6				✓	119	112	1:05	1:11			01	02	
7				✓	119	114	1:12	1:17			01	02	
8				✓	112	112	11:42	11:47			02	03	
9				✓	120	113	11:49	11:54			02	03	
10				✓	113	114	11:56	12:01			02	03	
11				✓	117	116	10:00	10:05			02	03	
12				✓	118	114	10:06	10:11			02	03	
13				✓	114	115	10:12	10:17			02	03	
14				✓	121	112	10:18	10:23			02	03	
15				✓	122	112	10:24	10:29			02	03	
16				✓	109	121	8:45	8:50			03	04	
17				✓	118	116	8:51	8:56			03	04	
18				✓	114	117	8:57	9:02			03	04	
19				✓	116	119	9:30	9:35			03	04	
20	↓	↓	↓	✓	120	118	9:03	9:08	↓	↓	03	04	

nviroline services inc.
ox 7539 Saskatoon, SK. S7K 4L4 Tel. 306 242 8836 Fax 306 249 6721 Email: dvbarnes@home.com

dge Welder Seam Log

ect	TANK FARM	QC Tech. MP	Drive Pressure 60
tion	BAKER LAKE	Wedge Temp. 400°C	Dwell Pressure
erial	60 mil	Wedge Gap	Comments

Fusion Information					Testing Information								
	HDPE Weld				Peel Test		Air Test		60 psi	60	Date -/07/09	Date	
m #	Tech.	Temp	Speed	Vise Grip	Inside	Outside	Start	Finish	Start	Finish	Welded	Tested	Comments
1	DAP	400	35%	✓	116	121	8:16	8:21	60	60	04	05	July 2009
2				✓	117	123	8:22	8:27			05	05	
3				✓	112	119	2:25	2:30			05	05	
4				✓	108	117	2:31	2:36			05	05	
5				✓	114	119	2:37	2:42			05	05	
6				✓	115	121	2:49	2:54			05	05	
27				✓	118	120	2:55	3:00			05	06	
28				✓	113	118	6:10	6:15			05	06	
29				✓	117	114	6:16	6:21			05	06	
30				✓	117	113	6:22	6:27			05	06	
31				✓	116	117	6:28	6:33			05	06	
32				✓	112	119	6:15	6:20			06	06	
33				✓	113	121	6:21	6:26			06	06	
34				✓	115	120	6:27	6:32			06	06	
35				✓	117	116	6:33	6:38			06	06	
36				✓	114	115	6:39	6:44			06	06	
37				✓	112	117	6:45	6:50			06	06	
38				✓	118	120	6:51	6:56			06	07	
39				✓	113	114	6:57	7:02			06	07	
40	↓	↓	↓	✓	113	118	7:03	7:08	↓	↓	06	07	

V..oline services inc.
539 Saskatoon, SK S7K 4L4 Tel 306 242 8838 Fax 306 249 6721 E-mail: dvbarnes@shaw.ca

ge Welder Seam Log

	TANK FARM	QC Tech. MJ	Drive Pressure 60
n	BAKER LAKE	Wedge Temp. 400°C	Dwell Pressure
l	60 mil	Wedge Gap	Comments

on Information	Testing Information

HDPE Weld | Peel Test | Air Test 60 psi 60 | Date | Date -/07/09

Tech.	Temp	Speed	Vise Grip	Inside	Outside	Start	Finish	Start	Finish	Welded	Tested	Comments
DAP	400	35%	✓	109	114	6:07	7:14	60	60	06	06	July 2009
			✓	114	118	2:30	2:35			06	06	
			✓	115	116	2:36	2:41			06	06	
			✓	114	118	2:42	2:47			06	06	
			✓	113	112	2:48	2:53			06	06	
			✓	112	111	3:00	3:05			06	06	
			✓	113	113	3:06	3:11			06	06	
			✓	110	115	3:12	3:17			06	06	
			✓	116	117	6:20	6:25			06	08	
			✓	118	118	6:26	6:31			06	08	
			✓	112	116	6:32	6:37			07	08	
			✓	114	117	6:38	6:43			07	08	
			✓	119	118	6:44	6:49			07	08	
			✓	117	116	6:50	6:55			07	08	
			✓	115	118	6:56	7:01			07	08	
			✓	114	115	7:06	7:11			07	08	
			✓	112	118	7:12	7:17			07	08	
			✓	109	119	7:18	7:23			07	08	
			✓	111	114	7:24	7:29			07	08	
↓	↓	↓	✓	115	117	7:30	7:35	↓	↓	07	08	

...oline services inc.
...539 Saskatoon, SK. S7K 4L4 Tel. 306 242 8838 Fax 306 249 6721 Email: dvbournes@home.com

...ge Welder Seam Log

	TANK FARM	QC Tech. MP	Drive Pressure 60
...n	BAKER LAKE	Wedge Temp. 400°C	Dwell Pressure
...l	60 mil	Wedge Gap	Comments

...on Information | Testing Information

	HDPE Weld				Peel Test		Air Test		psi		Date	Date	
	Tech.	Temp	Speed	Vise Grip	Inside	Outside	Start	Finish	Start	Finish	Welded	Tested	Comments
	DAP	400°C	35%	✓	116	117	11:30	11:35	60	60	02	02	July 2009
				✓	114	112	11:36	11:41			02	02	
				✓	119	114	11:42	11:47			02	02	
				✓	117	116	1:24	1:29			03	04	
				✓	113	119	1:30	1:35			04	04	
				✓	109	121	6:55	7:00			04	04	
				✓	111	109	7:00	7:05			05	05	
				✓	112	112	7:12	7:17			05	05	
				✓	118	117	7:18	7:23			05	05	
				✓	115	121	2:24	7:29			05	05	
				✓	112	119	11:42	11:47			02	02	
				✓	118	117	11:00	11:05			03	03	
				✓	116	112	1:10	1:15			06	07	
				✓	117	119	1:25	1:30			07	07	
				✓	116	114	2:31	2:36			03	03	
				✓	112	121	1:30	1:35			07	07	
				✓	119	117	8:00	8:05	↓	↓	07	08	
	↓	↓	↓	✓									
				✓									
				✓									

enviroline Services Inc.

P O Box 7539 Saskatoon, SK. S7K 4L4 Tel.306 242 8836 Fax 306 249 6721 Email: dybarnes@home.com

Wedge Welder Qualifiication Data

Date	July 1, 2009	Wedge Welder #	C4
Project	Tank Farm	Travel Speed	35%
Work Area	Baker Lake	Drive Pressure	* 60
Material	60 mil	Dwell Pressure	*
QC tech.	MD	Wedge Setting	*
Welder/Operator	DAP	Wedge Temp.	400°C
Test Identification	A.M.	Sheet Temp.	*
Test Location	ON SITE	Testing Temp.	14° C

Destructive Testing Results

Vice Grip Peel

Outside Track	Inside Track
✓	✓
✓	✓

Tensometer Peel

Outside Track		Inside Track		
Lb/Inch	%Separation	Lb/Inch	% Separation	Comments
118	0	117	0	P
104	0	107	0	P
116	0	116	0	P
102	0	122	0	P
107	0	104	0	P

Seam Tensile

Lb/Inch	% Enlongation	Comments
181	*	P
172	*	P

enviroline Services Inc.

P O Box 7539 Saskatoon, SK. S7K 4L4 Tel.306 242 8836 Fax 306 249 6721 Email: dybarnes@home.com

Wedge Welder Qualifiication Data

Date	July 2, 2009	Wedge Welder #	C4
Project	Baker Lake	Travel Speed	40%
Work Area	Tank Farm	Drive Pressure	60
Material	60 mil	Dwell Pressure	
QC tech.	MD	Wedge Setting	
Welder/Operator	DAP	Wedge Temp.	400°C
Test Identification	R.M.	Sheet Temp.	
Test Location	ON SITE	Testing Temp.	13°C

Destructive Testing Results

Vice Grip Peel

Outside Track	Inside Track
✓	✓
✓	✓

Tensometer Peel

Outside Track		Inside Track		
Lb/Inch	%Separation	Lb/Inch	% Separation	Comments
114	0	107	0	P
116	0	109	0	P
111	0	112	0	P
114	0	114	0	P
115	0	114	0	P

107 - 117

Seam Tensile

Lb/Inch	% Enlongation	Comments
179		P
188		P

enviroline Services Inc.

P O Box 7539 Saskatoon, SK. S7K 4L4 Tel.306 242 8836 Fax 306 249 6721 Email: dybarnes@home.com

Wedge Welder Qualifiication Data

Date	July 02, 2009	Wedge Welder #	C4
Project	Baker Lake	Travel Speed	35%
Work Area	Tank Farm	Drive Pressure	60
Material	60 mil	Dwell Pressure	
QC tech.	MD	Wedge Setting	
Welder/Operator	DAP	Wedge Temp.	400°C
Test Identification	P.M.	Sheet Temp.	
Test Location	ON SITE	Testing Temp.	18° C

Destructive Testing Results

Vice Grip Peel

Outside Track	Inside Track
✓	✓
/	/

Tensometer Peel

Outside Track		Inside Track		
Lb/Inch	%Separation	Lb/Inch	% Separation	Comments
113	0	116	0	P
112	0	115	0	P
114	0	114	0	P
110	0	111	0	P
119	0	113	0	P

Seam Tensile

Lb/Inch	% Enlongation	Comments
181		P
185		P

enviroline Services Inc.

P O Box 7539 Saskatoon, SK. S7K 4L4 Tel.306 242 8836 Fax 306 249 6721 Email: dybarnes@home.com

Wedge Welder Qualifiication Data

Date	July 03, 2009	Wedge Welder #	C4
Project	Baker Lake	Travel Speed	35%
Work Area	Tank Farm	Drive Pressure	60
Material	60 mil	Dwell Pressure	
QC tech.	MD	Wedge Setting	
Welder/Operator	DAP	Wedge Temp.	400°C
Test Identification	A.M.	Sheet Temp.	
Test Location	ON SITE	Testing Temp.	13°C

Destructive Testing Results

Vice Grip Peel

Outside Track	Inside Track
✓	✓
✓	✓

Tensometer Peel

Outside Track		Inside Track		
Lb/Inch	%Separation	Lb/Inch	% Separation	Comments
112	0	109	0	P
114	0	111	0	P
115	0	107	0	P
113	0	109	0	P
114	0	110	0	P

Seam Tensile

Lb/Inch	% Enlongation	Comments
183		P
185		P

enviroline Services Inc.

P O Box 7539 Saskatoon, SK. S7K 4L4 Tel.306 242 8836 Fax 306 249 6721 Email: dybarnes@home.com

Wedge Welder Qualifiication Data

Date	July 04, 2009	Wedge Welder #	C4
Project	Baker Lake	Travel Speed	35%
Work Area	Tank Farm	Drive Pressure	60
Material	60 mil	Dwell Pressure	
QC tech.	MP	Wedge Setting	
Welder/Operator	DAP	Wedge Temp.	400°C
Test Identification	A.M	Sheet Temp.	
Test Location	ON SITE	Testing Temp.	12° C

Destructive Testing Results

Vice Grip Peel

Outside Track	Inside Track
✓	✓
✓	✓

Tensometer Peel

Outside Track		Inside Track		
Lb/Inch	%Separation	Lb/Inch	% Separation	Comments
116	0	118	0	P
120	0	117	0	P
121	0	119	0	P
114	0	112	0	P
114	0	119	0	P

Seam Tensile

Lb/Inch	% Enlongation	Comments
191		P
188		P

enviroline Services Inc.

P O Box 7539 Saskatoon, SK. S7K 4L4 Tel.306 242 8836 Fax 306 249 6721 Email: dybarnes@home.com

Wedge Welder Qualifiication Data

Date	July 02, 2009	Wedge Welder #	C4
Project	Baker Lake	Travel Speed	35%
Work Area	Tank Farm	Drive Pressure	60
Material	60 mil	Dwell Pressure	
QC tech.	MD	Wedge Setting	
Welder/Operator	DAP	Wedge Temp.	400°C
Test Identification	P.M.	Sheet Temp.	
Test Location	ON SITE	Testing Temp.	18°C

Destructive Testing Results

Vice Grip Peel

Outside Track	Inside Track
✓	✓
✓	✓

Tensometer Peel

Outside Track		Inside Track		
Lb/Inch	%Separation	Lb/Inch	% Separation	Comments
119	0	113	0	P
116	0	119	0	P
118	0	115	0	P
112	0	114	0	P
113	0	116	0	P

Seam Tensile

Lb/Inch	% Enlongation	Comments
177	200	P
181	200	P

enviroline Services Inc.

P O Box 7539 Saskatoon, SK. S7K 4L4 Tel.306 242 8836 Fax 306 249 6721 Email: dybarnes@home.com

Wedge Welder Qualifiication Data

Date	July 07, 2009	Wedge Welder #	C4
Project	Baker Lake	Travel Speed	35%
Work Area	Tank Farm	Drive Pressure	60
Material	60 mil	Dwell Pressure	
QC tech.	MP	Wedge Setting	
Welder/Operator	DAP	Wedge Temp.	400°C
Test Identification	A.M.	Sheet Temp.	
Test Location	ON SITE	Testing Temp.	14°C

Destructive Testing Results

Vice Grip Peel

Outside Track	Inside Track
✓	✓
✓	✓

Tensometer Peel

Outside Track		Inside Track		
Lb/Inch	%Separation	Lb/Inch	% Separation	Comments
116	0	118	0	P
113	0	112	0	P
117	0	110	0	P
119	0	116	0	P
118	0	115	0	P

Seam Tensile

Lb/Inch	% Enlongation	Comments
184	200	P
180	200	P

enviroline Services Inc.

P O Box 7539 Saskatoon, SK. S7K 4L4 Tel.306 242 8836 Fax 306 249 6721 Email: dybarnes@home.com

Wedge Welder Qualifiication Data

Date	July 06, 2009	Wedge Welder #	C4
Project	Baker Lake	Travel Speed	35%
Work Area	Tank Farm	Drive Pressure	60
Material	60 mil	Dwell Pressure	
QC tech.	MD	Wedge Setting	
Welder/Operator	DAP	Wedge Temp.	400°C
Test Identification	A.M.	Sheet Temp.	
Test Location	ON SITE	Testing Temp.	14°C

Destructive Testing Results

Vice Grip Peel

Outside Track	Inside Track
✓	✓
✓	✓

Tensometer Peel

Outside Track		Inside Track		
Lb/Inch	%Separation	Lb/Inch	% Separation	Comments
116	0	115	0	P
113	0	115	0	P
112	0	119	0	P
119	0	121	0	P
117	0	113	0	P

Seam Tensile

Lb/Inch	% Enlongation	Comments
185	200	P
189	200	P

enviroline Services Inc.

P O Box 7539 Saskatoon, SK. S7K 4L4 Tel.306 242 8836 Fax 306 249 6721 Email: dvbarnes@home.com

Wedge Welder Qualifiication Data

Date	July 07, 2009	Wedge Welder #	C4
Project	Baker Lake	Travel Speed	35%
Work Area	Tank Farm	Drive Pressure	60
Material	60 mil	Dwell Pressure	
QC tech.	MD	Wedge Setting	
Welder/Operator	DAP	Wedge Temp.	400°C
Test Identification	A.M.	Sheet Temp.	
Test Location	ON SITE	Testing Temp.	12°C

Destructive Testing Results

Vice Grip Peel

Outside Track	Inside Track
✓	✓
✓	✓

Tensometer Peel

Outside Track		Inside Track		
Lb/Inch	%Separation	Lb/Inch	% Separation	Comments
112	0	119	0	P
119	0	116	0	P
116	0	111	0	P
117	0	117	0	P
114	0	113	0	

Seam Tensile

Lb/Inch	% Enlongation	Comments
180	200	P
184	200	P

enviroline Services Inc.

P O Box 7539 Saskatoon, SK. S7K 4L4 Tel.306 242 8836 Fax 306 249 6721 Email: dvbarnes@home.com

Wedge Welder Qualifiication Data

Date	July 07, 2009	Wedge Welder #	C4
Project	Baker Lake	Travel Speed	35%
Work Area	Tank Farm	Drive Pressure	60
Material	60 mil	Dwell Pressure	
QC tech.	MP	Wedge Setting	
Welder/Operator	DAP	Wedge Temp.	400°C
Test Identification	P.M	Sheet Temp.	
Test Location	ON SITE	Testing Temp.	16°C

Destructive Testing Results

Vice Grip Peel

Outside Track	Inside Track
✓	✓
✓	✓

Tensometer Peel

Outside Track		Inside Track		
Lb/Inch	%Separation	Lb/Inch	% Separation	Comments
112	0	112	0	P
117	0	111	0	P
114	0	116	0	P
116	0	121	0	P
115	0	112	0	P

Seam Tensile

Lb/Inch	% Enlongation	Comments
181	200	P
182	200	P

enviroline services Inc.
PO box 7539 Saskatoon SK. S7K 4L4 Tel 306 242 8836 Fax 306 249 6721 email:enviroline@sasktel.net

Extrusion Welding Log

Project: BAKER LAKE
Work Area: TANK FARM

QC Tech. MD
Material: 60 mil mil HDPE

Extrusion #	Type	Location	Weld Date	Operator	Test Date	Vac Test	Pik Test	QC	Comments
1	Patch	S 2	01/07/09	DAP	01/07	✓		MD	
2	↓	S 10	02/07/09	↓	02/07	✓			
3		Corner #1	02/07/09		02/07	✓			
4		S 21	03/07/09		03/07	✓			
5		S 23	03/07/09		03/07	✓			
6		S 28	04/07/09		04/07	✓			
7		Corner #2	04/07/09		05/07		✓		
8		S 34	05/07/09		05/07	✓			
9		S 36	05/07/09		05/07	✓	✓		
10		S 55	07/07/09		07/07	✓			
11	↓	Corner #4	07/07/09	↓	07/07	✓			

enviroline Services Inc.
PO Box 7539 Saskatoon SK. S7K 4L4
1306 242 8836 Fax 306 249 6721 email enviroline@ sasktel.net

Extrusion Welding Qualification Data

Date	July 1, 09	Extruder#	X2 - 2
Project	Baker Lake	Operator	DAP
QC Tech:	MP	Preheat Temp.	280°C
Material	60 mil	Barrel Temp.	245°C
Test Identification	P.M.	Shoe Height	1/4"
Temp.	20	Weld Type	Flat

Destructive Testing Results

Vice Grip Peel

Type of failure	Comments

Tensometer Peel

Lb/Inch	% Separation	Comments
106	0	P
115	0	P
115	0	P
107	0	P
114	0	P

Seam Tensile

Lb/inch	% Enlongation	Comments
181	200	P
172	200	P

enviroline Services Inc.
PO Box 7539 Saskatoon SK. S7K 4L4
) 306 242 8836 Fax 306 249 6721 email enviroline@ sasktel.net

Extrusion Welding Qualification Data

Date	July 2, 2009	Extruder#	X2-2
Project	Baker Lake	Operator	DAP
QC Tech:	MP	Preheat Temp.	280°C
Material	60 mil	Barrel Temp.	245°C
Test Identification	A.M.	Shoe Height	1/4"
Temp.	8°C	Weld Type	Flat

Destructive Testing Results

Vice Grip Peel

Type of failure	Comments

Tensometer Peel

Lb/Inch	% Separation	Comments
113	0	P
117	0	P
116	0	P
115	0	P
116	0	P

Seam Tensile

Lb/inch	% Enlongation	Comments
179	200	P
178	200	P

enviroline Services Inc.
PO Box 7539 Saskatoon SK. S7K 4L4
) 306 242 8836 Fax 306 249 6721 email enviroline@ sasktel.net

Extrusion Welding Qualification Data

Date	July 03, 2009	Extruder#	X2-2
Project	Baker Lake	Operator	PAP
QC Tech:	MD	Preheat Temp.	280°C
Material	60 mil	Barrel Temp.	230°C
Test Identification	A.M.	Shoe Height	1/4"
Temp.	10°	Weld Type	Flat

Destructive Testing Results

Vice Grip Peel

Type of failure	Comments

Tensometer Peel

Lb/Inch	% Separation	Comments
117	0	P
114	0	P
112	0	P
112	0	P
118	0	P

Seam Tensile

Lb/inch	% Enlongation	Comments
183	200	P
177	200	P

enviroline Services Inc.
PO Box 7539 Saskatoon SK. S7K 4L4
306 242 8836 Fax 306 249 6721 email enviroline@ sasktel.net

Extrusion Welding Qualification Data

Date	July 4 2009	Extruder#	X2-2
Project	Baker Lake	Operator	DAP
QC Tech:	MD	Preheat Temp.	280°C
Material	60 mil	Barrel Temp.	245°C
Test Identification	AM	Shoe Height	1/4"
Temp.	14°C	Weld Type	flat

Destructive Testing Results

Vice Grip Peel

Type of failure	Comments

Tensometer Peel

Lb/Inch	% Separation	Comments
117	0	P
114	0	P
116	0	P
112	0	P
113	0	P

Seam Tensile

Lb/inch	% Enlongation	Comments
183	200	P
177	200	P

enviroline Services Inc.
PO Box 7539 Saskatoon SK. S7K 4L4
) 306 242 8836 Fax 306 249 6721 email enviroline@ sasktel.net

Extrusion Welding Qualification Data

Date	July 5 2009	Extruder#	X2-2
Project	Baker Lake	Operator	DAP
QC Tech:	MP	Preheat Temp.	270°C
Material	60 mil	Barrel Temp.	235°C
Test Identification	A.M.	Shoe Height	1/4"
Temp.	7°	Weld Type	flat

Destructive Testing Results

Vice Grip Peel

Type of failure	Comments

Tensometer Peel

Lb/Inch	% Separation	Comments
110	0	P
117	0	P
109	0	P
111	0	P
118	0	P

Seam Tensile

Lb/inch	% Enlongation	Comments
178	200	P
173	200	P

enviroline Services Inc.
PO Box 7539 Saskatoon SK. S7K 4L4
) 306 242 8836 Fax 306 249 6721 email enviroline@ sasktel.net

Extrusion Welding Qualification Data

Date	July 6, 2009	Extruder#	X2-2
Project	Baker Lake	Operator	DAP
QC Tech:	MD	Preheat Temp.	272°C
Material	60 mil	Barrel Temp.	238°C
Test Identification	A.M.	Shoe Height	1/4"
Temp.	11°C	Weld Type	Flat

Destructive Testing Results

Vice Grip Peel

Type of failure	Comments

Tensometer Peel

Lb/Inch	% Separation	Comments
114	0	P
115	0	P
118	0	P
112	0	P
117		

Seam Tensile

Lb/inch	% Enlongation	Comments
181	200	P
176	200	P

enviroline Services Inc.
PO Box 7539 Saskatoon SK. S7K 4L4
1 306 242 8836 Fax 306 249 6721 email enviroline@ sasktel.net

Extrusion Welding Qualification Data

Date	July 2, 09	Extruder#	XZ-2
Project	Baker Lake	Operator	DAP
QC Tech:	MP	Preheat Temp.	270°C
Material	60 mil	Barrel Temp.	239°C
Test Identification	A.M.	Shoe Height	1/4"
Temp.	7°C	Weld Type	Flat

Destructive Testing Results

Vice Grip Peel

Type of failure	Comments

Tensometer Peel

Lb/Inch	% Separation	Comments
114	0	P
115	0	P
115	0	P
119	0	P
114	0	P

Seam Tensile

Lb/inch	% Enlongation	Comments
183	200	P
188	200	P

Appendix A3

Baker Lake Diesel Fuel Storage Installations: Final Report Following Construction of Phase 3 (2010)



AGNICO-EAGLE MINES LTD
MEADOWBANK DIVISION

BAKER LAKE FUEL STORAGE INSTALLATIONS
TANK # 5 AND # 6

2010

FINAL REPORT

FOLLOWING THE CONSTRUCTION

OF

PHASE 3 (2010)

JANUARY 2011

AGNICO-EAGLE MINES LTD
MEADOWBANK DIVISION

BAKER LAKE FUEL STORAGE INSTALLATIONS

FINAL REPORT

FOLLOWING THE CONSTRUCTION

OF

PHASE 3 (2010)

PREPARED BY :

France Bérubé,Eng..Jr
Civil
STAVIBEL

REGISTERED PROFESSIONAL ENGINEER
S.M. BEAULE
LICENSEE
NWT/NU
2011-02-23

Serge Beaulé, Eng. associate
Head Department Civil
STAVIBEL

JANUARY 2011

AGNICO-EAGLE MINES LTD
MEADOWBANK DIVISION

BAKER LAKE FUEL STORAGE INSTALLATIONS TANK # 5 AND # 6

FINAL REPORT

FOLLOWING THE CONSTRUCTION
PHASE 3 (2010)

TABLE OF CONTENTS

A. DESCRIPTION OF MANDATE 1

B. DOCUMENTATION READILY AVAILABLE 2

GOLDER ASSOCIATES – Vancouver office (phase 1, 2, 3) 2

NISHI-KHON/SNC LAVALIN LTD – Vancouver office (phase 1, 2) 2

GEM STEEL EDMONTON LTD (phase 1, 2, 3) 2

CHAMCO INDUSTRIES LTD (phase 1, 2) 2

C. STAVIBEL, ROUYN-NORANDA OFFICE (PHASE 3) 3

D. ADDITIONAL COLLECTION OF INFORMATION 4

E. REVISION OF CONSTRUCTION DRAWINGS 5

F. VERIFICATION TO STORAGE CAPACITY WITHIN BERMS 6

DESIGN REVIEW – FOR FUEL SPILL CONTAINMENT BERMS AT BAKER LAKE 7

APPENDIX 1 : DRAWINGS
APPENDIX 2 : SAFE FILL LEVEL FOR ALL FUEL TANK

A. DESCRIPTION OF MANDATE

Agnico-Eagle Mines has given a mandate to Stavibel, engineering services in order to verify the compliance with applicable regulations of its fuel storage installations in Baker Lake, Nunavut.

Accord to the terms of reference, the mandate consists summarily in the following activities.

A. Review and compilation of the available documentation;

B. Collection of any information that may be missing;

C. REVISION OF CONSTRUCTION DRAWINGS

- Preparation of « *AS BUILT* » drawing of the construction tank #5 and #6, of phase 3.

D. Verifications to the storage capacity within the existing containment berms of phase 3.

B. DOCUMENTATION READILY AVAILABLE

GOLDER ASSOCIATES – Vancouver office (phase 1, 2, 3)

For the Baker Lake bulk fuel storage facilities, this firm has produced some construction specifications on 2006-04-25, which were given reference SP-GAL-03 under their project number 06-1413-009.

NISHI-KHON/SNC LAVALIN LTD – Vancouver office (phase 1, 2)

For the Baker Lake bulk fuel facilities, this firm has produced a set of drawings issued **for construction** on 2007-08-03, under their project number 017202. Some specifications for fuel piping and valves were also issued.

EARTHWORK DRAWINGS	017202-1000-41D1-0006	17202-1000-46ES-1001A	017202-8000-46DC-9150
017202-1000-41D1-0001	**FUEL PIPING DRAWINGS**	17202-1000-46ES-1001B	017202-8000-46DC-9152
017202-1000-41D1-0002	017202-1000-41D1-0007	**ELECTRICAL DRAWINGS**	017202-8000-46DC-9153
017202-1000-41D1-0003	017202-1000-46D4-1004	017202-1000-46D6-1001	017202-8000-46DC-9156
017202-1000-41D1-0004	017202-1000-46D4-1005	017202-1000-47D2-2001	017202-8000-46DC-9157
017202-1000-41D1-0005	017202-1000-46D4-1006	017202-8000-47DA-9004	017202-8000-46DC-9166

GEM STEEL EDMONTON LTD (phase 1, 2, 3)

This vendor has submitted a set of « *AS BUILT* »drawings issued for the completion and permitting, which consist in four (4) structural drawings showing the details of a fuel tank of 10 million liters nominal capacity. These fuel tanks are shown on revision 1 of drawings BL-2010-1, BL210-2, BL-2010-3 and BL-2010-4.

CHAMCO INDUSTRIES LTD (phase 1, 2)

This vendor has submitted a set of drawings issued **for construction** under their project number 1014938ABS, consisting of the following drawings. These documents have all been received by HATCH and approved.

DRAWING NUMBER	H325174-M268-VD-0040	H325174-M268-VD-0041	H325174-M268-VD-0010
H325174-M268-VD-0011	H325174-M268-VD-0012	H325174-M268-VD-0013	H325174-M268-VD-0014
H325174-M268-VD-0015	H325174-M268-VD-0016	H325174-M268-VD-0017	H325174-M268-VD-0019
H325174-M268-VD-0020	H325174-M268-VD-0021	H325174-M268-VD-0029	H325174-M268-VD-0030
H325174-M268-VD-0031	H325174-M268-VD-0032	H325174-M268-VD-0033	H325174-M268-VD-0034
H325174-M268-VD-0035	H325174-M268-VD-0036	H325174-M268-VD-0037	H325174-M268-VD-0039

C. STAVIBEL, ROUYN-NORANDA OFFICE (phase 3)

This firm has produced a set of construction and has built drawings consisting of the following drawings.

Fuel tanks of phase 3 are shown on these drawing as well as the earthwork, the piping and electrical grounding details.

Earthwork drawings

DRAWING NUMBER
740-C-0123
740-C-0124
740-C-0125

Fuel piping drawings

DRAWING NUMBER
740-M-0100

Electrical drawings

DRAWING NUMBER
740-E-0120

D. ADDITIONAL COLLECTION OF INFORMATION

TECHNIC EXPERT INC.
Role during construction phase #3 : Field supervision during construction of phase 3 (2010)

Mr. Luc Croisetière, which is a civil consultant at the time and Julie Bacon (AEM employee), have supervised the construction of the fuel containment area around tank #5 and #6, in phase 3 of this project. A specialized crew coming from Saskatoon (Enviroline Service inc.) was hired in May 2010 to install an HDPE membrane over the berms. This HDPE membrane has been covered with a minimum layer of about 150 mm thickness of crushed stone.

The installation of the liners has been done and completed on October 5th 2010 before the blizzard and show arrival. Also, before any fuel fill in these new set of tank.

QAMANITTUAP, SANA, GILBERT GOUP.
Role during construction phase #3

In early May 2010, and considering a short window of time for the 2010 tanks construction, (2) diamond drills and (1) crew of blasters were required 24 hr/day considering an estimated ± 125 000 tons of rock to blast, excavate and haul to a dump area. The bottom final floor was cutted at the elevation ± 35.5 and completely on slip rock.

GEM STEEL EDMONTON LTD
Role during construction phase #3 : Fabrication and field assembly of 10 M liters fuel tanks

Construction of phase 3 (tanks #5 and #6) took place from July to September 2010, with a crew of about 16 workers.

Following phase 3 of this field word, a crew from ACUREN has proceeded to X-RAY testing of horizontal and vertical welds according to specifications described in the latest edition of API Standard 650. According to the report made by ACUREN, minor repairs of defective welds were required, either on the tank shell or nozzles.

SM CONSTRUCTION INC.
Role during construction phase #3

As the connection and pipe were already built in 2009 for the phase 3 futur development a crew of 4 welders have installed pipeline from existing tank #4 to reach tank #5 and #6. This work have been completed on September 30th 2010. The tank fuel filling planned in mid-october 2010.

E. REVISION OF CONSTRUCTION DRAWINGS

AEM has hired Stavibel Engineering Services, a firm based in Rouyn-Noranda, in order to complete the drawings that were used in producing this report. Those drawings are enclosed in Appendix 1 of this report.

Drawing 740-C-0123 shows the general layout of fuel storage area. It has been compiled using surveying data by a crew from NUNA and Agnico Eagle.

Drawing 740-C-0124 shows the cross sections of the containment area of phase 3. They are generated using AutoCad CIVIL 3D software and based on the informations collected by Agnico Eagle.

Drawing 740-C-0125 shows the details of the HDPE membrane, its limits and the components of the phase3.

Drawing 740-M-0100 G shows the general of the piping layout and also the specification of the main equipment (valves, check valves, etc.)

Drawing 740-E-0120 shows the layout and the details of the electrical grounding of fuel storage area. It's based on the informations collected by Agnico Eagle.

Drawing BL2010-01 shows the general tank elevation of the fuel storage tanks.

Drawing BL2010-02 shows the roof and the nozzle plan of the fuel storage tanks.

Drawing BL2010-03 shows the details of the assembly of the fuel storage tanks.

Drawing BL2010-04 shows also the details of the assembly of the fuel storage tanks.

F. VERIFICATION TO STORAGE CAPACITY WITHIN BERMS

Stavibel Engineering Services has completed verifications on the liquid storage capacity inside the containment berms, which create an impermeable enclosure around tank #5 and #6.

The method used was volume calculation using AutoCad CIVIL 3D software.

The maximum storage capacity of fuel tanks #5 and #6 is 15 500 m^3 of diesel fuel at a standard temperature of fifteen degrees Celcius (15 ^oC).

It has been verified using the above software that the impermeable enclosure built in phase 3 will effectively hold 100% of the maximum storage capacity of the biggest tank, plus 10% of the maximum storage of the other tank. This calculation has been summarized in a worksheet that is shown on page 7, here under.

The containment volume for tanks #3 and #4 is 15 500 m^3.

Thus, the lowest point of the HDPE membrane that sits atop the containment area is sufficiently high (at elevation 39.3 m) to meet the above criteria.

A worst case scenario has been simulated, and consists in either a rupture of the first course of side plates in the tank shell, or a failure in the outlet piping, when either one of fuel tank is 100% full.

This simulation shows that, in such a worst case scenario, the hydraulic balancing level inside the containment area would not exceed the point with the lowest elevation (39.3 m) on the surrounding berms, which is located on the south-west side. On north-east side, the berm gives more elevation at an elevation of approximative ±45 m.

The containment volume for tanks #5 and #6 is 15 500 m^3 as a result, this new containment requirement of 110% of the biggest tank volume (or 11 843 m^3), expressed while considering all two (2) tanks as a whole, will then be exceeded by 45%.

DESIGN REVIEW – FOR FUEL SPILL CONTAINMENT BERMS AT BAKER LAKE

ÉQUIPEMENTS	DIAM (ft)	RIM EL. (m)	Radius (m)	Surface (m^2)	TOP EL. (m)	Height (m)	Volume (m^3)
740-TK-044-**TANK** #5	110	*37.846	16.764	882.89	50.04	12.195	10.767
740-TK-044-**TANK** #5	110	*37.831	16.764	882.89	50.03	12.195	10.767

Let's say berms are 5' 3" higher than the average tank floor (so 1.60 m total height) with variable slopes and that the tanks are sitting on cones made of crushed stone of 20 m diameter x 1.0 m height.

*Average tank #5 = (37.839 + 37.846 + 37.848 + 37.852)/4 = 37.846
*Average tank #6 = (37.835 + 37.825 + 37.830 + 37.833)/4 = 37.831

Volume

Secondary Containment Requirement → 11 843 **m^3**
according to ref. PN-1326, Section 3.9.1 (1) 2-b-ii → 110%

Containment volume to be substracted for the two (2) cones made of crushed stone: already reducted from AutoCad 3D

Volume
NET CONTAINMENT 15 500 m^3
or 144% > 110%

APPENDIX 1

AS BUILT DRAWINGS FOR PHASE 3

DRAWINGS NUMBER			
Earthwork drawings	**Fuel piping drawing**	**GEM Steel drawings**	BL2010-4
740-C-0123	740-M-0100	BL2010-1	
740-C-0124	**Electrical drawings**	BL2010-2	
740-C-0125	740-E-0120	BL2010-3	

IFC DRAWING FOR PHASE 3

DRAWINGS NUMBER			
Earthwork drawings	**Fuel piping drawing**	**GEM Steel drawings**	BL2010-4
740-C-0123	740-M-0100	BL2010-1	
740-C-0124	**Electrical drawings**	BL2010-2	
740-C-0125	740-E-0120	BL2010-3	

NO. DESSIN
DRAWING NO. 740-C-0123-0125 TQC

FORMAT ARCHD

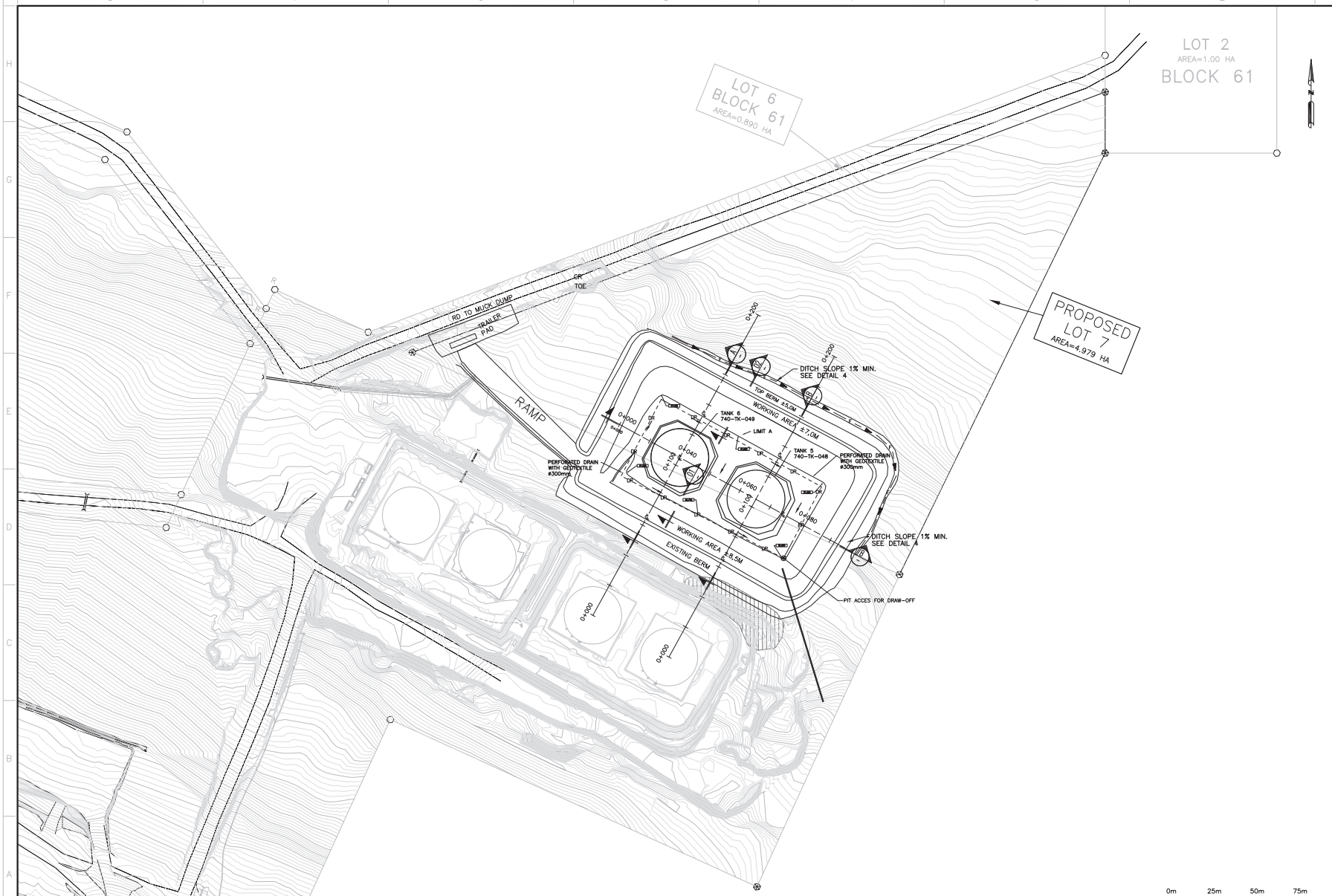

PLAN CLÉ
KEY PLAN

NOTES GÉNÉRAL / GENERAL NOTES

TEL QUE CONSTRUIT
AS BUILT
DATE : 21/01-2011

DESSINS EN RÉFÉRENCE / REFERENCE DRAWINGS

TITRE / TITLE	# DWG
–	–
–	–
–	–
–	–
–	–
–	–

AGNICO-EAGLE

REV.	DATE	DESCRIPTION	PAR/BY	APP.	CLIENT
C	21-01-2011	AS BUILT	J-F.S.	S.B.	
B	20-07-2010	APPROVAL	J-F.S.	S.B.	
A	16-07-2010	APPROVAL	J-F.S.	S.B.	

REVISIONS

STAVIBEL
Stavibel inc.
150, rue Gamble Ouest
Rouyn-Noranda (Québec) J9X 2R7
Tél. : 819 764-5181 Téléc. : 819 797-0158
Courriel : stavibel-m@stavibel.qc.ca
www.stavibel.qc.ca

Projet No. : - -

TITRE / TITLE
AGNICO-EAGLE – MEADOWBANK DIVISION
BAKER LAKE AREA 740
TANK #5 AND #6
GENERAL LAYOUT

DESSINÉ PAR / DRAWN BY	J-F SYLVESTRE, TECH.	DATE 2010-07-20
VERIFIÉ PAR / CHECKED BY	FRANCE BÉRUBÉ, ING. JR.	2010-07-20
APPROUVÉ PAR / APPROVED BY	SERGE BEAULÉ, ING.	2010-07-20
ÉCHELLE / SCALE	1:1000	DATE 30-06-2010
NO. DESSIN / DRAWING NO.	740-C-0123	
NO. PROJET / PROJECT NO.	MEAD-I-400	REVISION C / FEUILLE / SHT 1/3

AE-CART-ARCH D

P:\102622\001\Dessins maitres\30-Civ\740-C-0123-0125 TQC.dwg, 25 Jan 2011

FILE NO. 740-C-0123-0125 TQC.dwg

NO. DESSIN
DRAWING NO. 740-C-0123-0125 TQC

FORMAT ARCHD

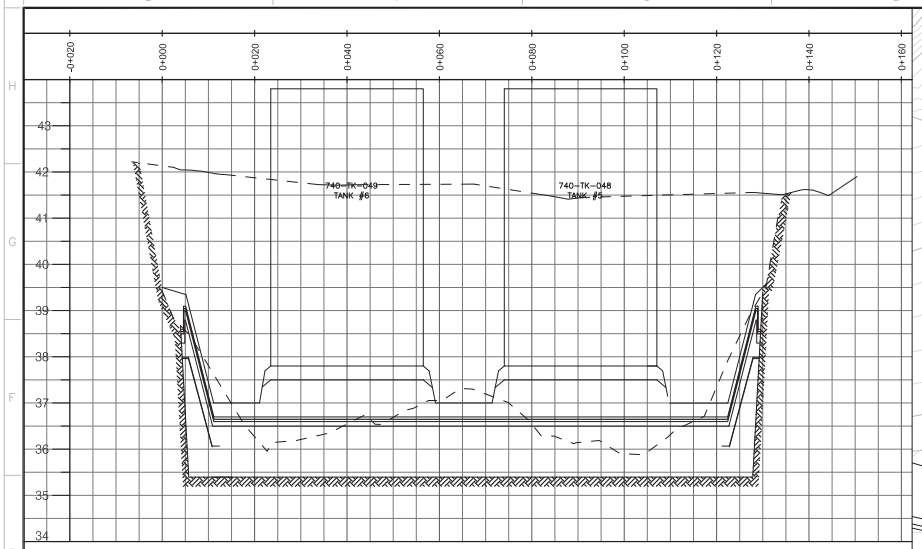

PROFIL TANK 5 & 6

CROSS SECTION C

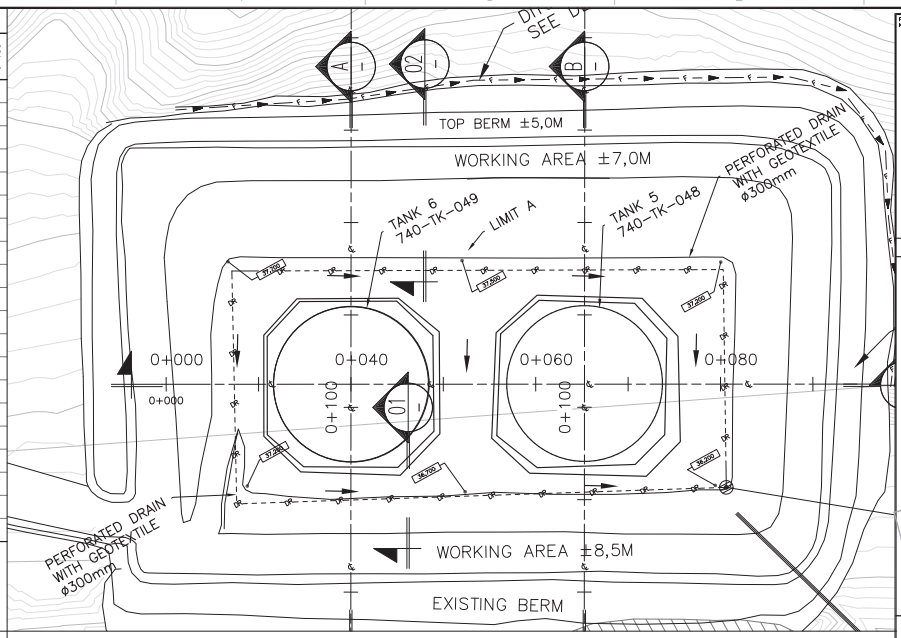

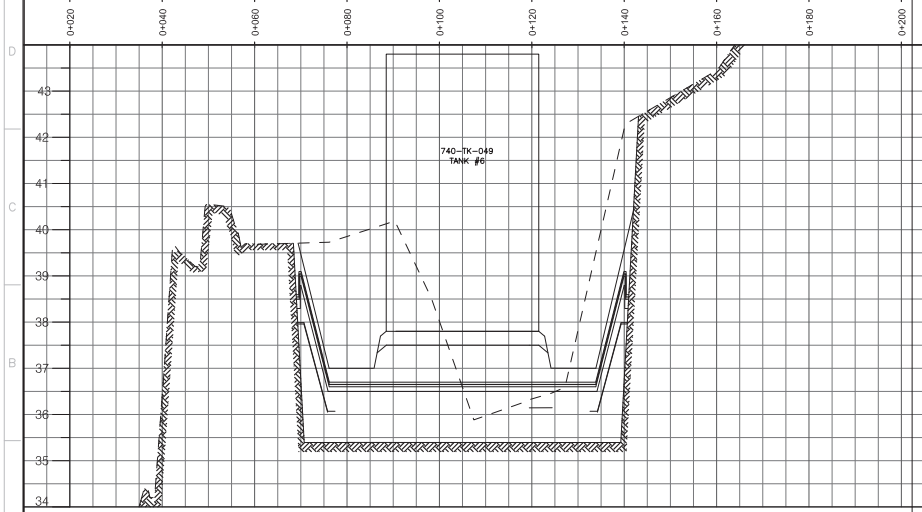

PROFIL TANK 6

CROSS SECTION A

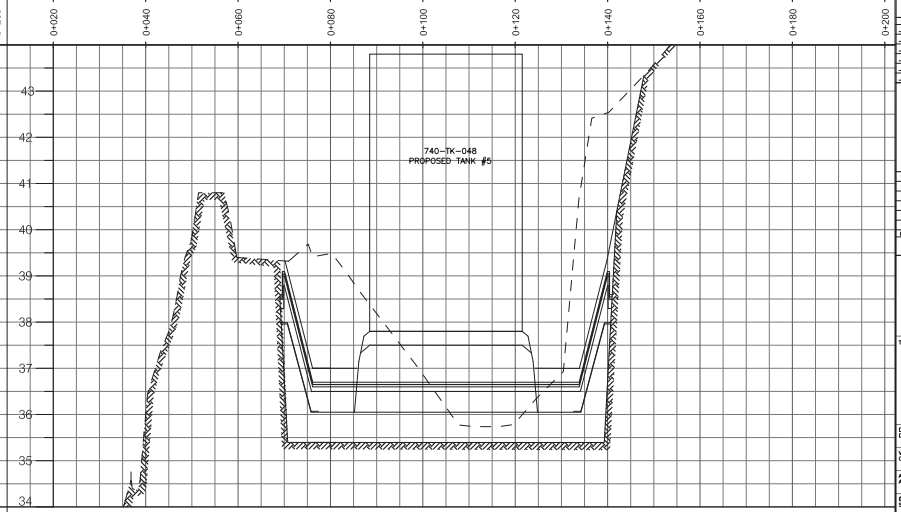

PROFIL TANK 5

CROSS SECTION B

PLAN CLÉ
KEY PLAN

NOTES GÉNÉRAL / GENERAL NOTES

TEL QUE CONSTRUIT
AS BUILT
DATE : 21/01-2011

DESSINS EN RÉFÉRENCE / REFERENCE DRAWINGS

TITRE / TITLE	# DWG
-	-
-	-
-	-
-	-
-	-
-	-

AGNICO-EAGLE

REV.	DATE	DESCRIPTION	PAR/BY	APP.	CLIENT
C	21-01-2011	AS BUILT	J-F.S.	S.B.	
B	20-07-2010	APPROVAL	J-F.S.	S.B.	
A	16-07-2010	APPROVAL	J-F.S.	S.B.	

REVISIONS

STAVIBEL
Stavibel inc.
150, rue Gamble Ouest
Rouyn-Noranda (Québec) J9X 2R7
Tél.: 819 764-5181 Téléc.: 819 797-0158
Courriel: stavibel@stavibel.qc.ca
www.stavibel.qc.ca

Projet No. : -

TITRE / TITLE
AGNICO-EAGLE – MEADOWBANK DIVISION
BAKER LAKE AREA 740
TANK #5 AND #6
PLAN VIEW AND CROSS SECTION

DESSINÉ PAR / DRAWN BY	J-F SYLVESTRE, TECH.	DATE 2010-07-20
VERIFIÉ PAR / CHECKED BY	FRANCE BÉRUBÉ, ING. JR.	2010-07-20
APPROUVÉ PAR / APPROVED BY	SERGE BEAULÉ, ING.	2010-07-20
ÉCHELLE / SCALE	N/A	DATE 30-06-2010

NO. DESSIN / DRAWING NO. 740-C-0124

NO. PROJET / PROJECT NO.	REVISION	FEUILLE / SHT
MEAD-I-400	C	2 / 3

AE-CART-ARCH D

P:\VG3622\001\Dessins maitres\30-Ch\740-C-0123-0125 TQC.dwg, 25 Jan 2011

FILE NO. 740-C-0123-0125 TQC.dwg

NO. DESSIN DRAWING NO. 740-C-0123-0125 TQC

FORMAT ARCHD

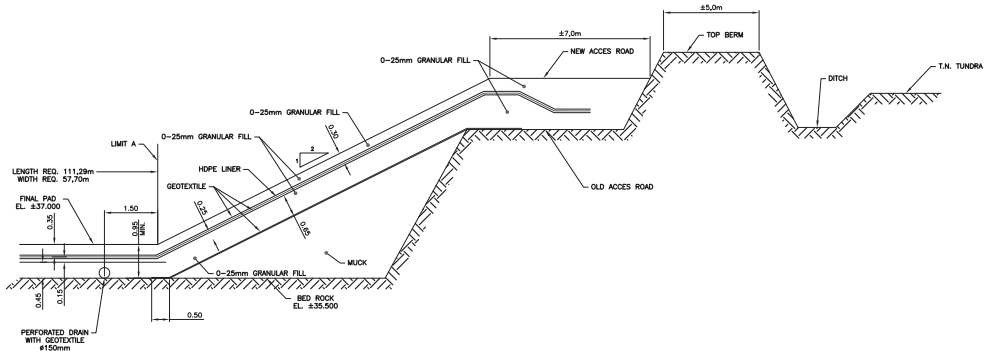

TYPICAL SECTION – DAM

SCALE : NONE

DETAIL 2

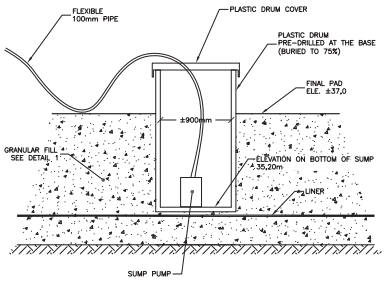

NOTES :

- THE WATER WILL BE REJECTED TO THE INFERIOR BASIN WHERE IT WILL BE TREATED WITH AN OIL SEPARATOR.

ACCESS WELL
FOR DRAINING

SCALE : NONE

DETAIL 3

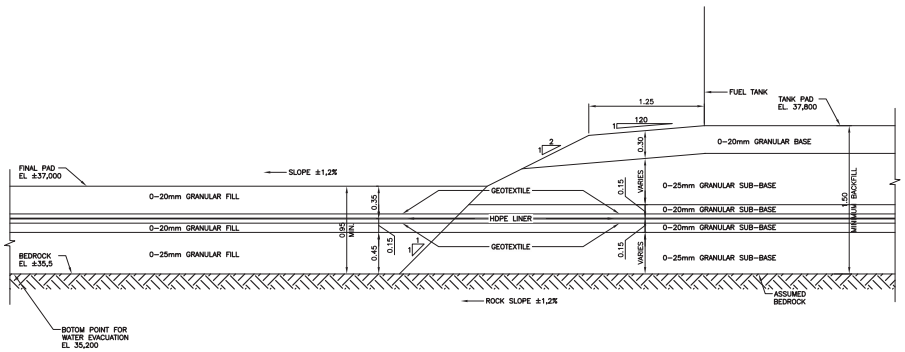

TYPICAL SECTION – PAD

SCALE : NONE

DETAIL 1

PLAN CLÉ
KEY PLAN

NOTES GÉNÉRAL / GENERAL NOTES

TEL QUE CONSTRUIT
AS BUILT
DATE : 21/01-2011

CONFIDENTIEL ET CONTENU ET LA PROPRIÉTÉ DE AGNICO-EAGLE LTÉE ET DOIT ÊTRE RETOURNÉE SUR DEMANDE. SANS AUTORISATION ÉCRITE PRÉALABLE, TOUTE TRANSMISSION DE COPIE(S) À AUTRUI ET TOUTE RÉVISION AUTRE QUE CELLE POUR LAQUELLE CONFIDENTIEL EST PRÊTÉE SONT INTERDITES. © AGNICO-EAGLE LTÉE

THE INFORMATION HERE ON IS THE PROPERTY OF AGNICO-EAGLE LTD. AND MUST BE RETURNED UPON REQUEST. WITHOUT WRITTEN PERMISSION, ANY COPYING TRANSMITTAL TO OTHERS AND ANY USE EXCEPT THAT FOR WHICH IT IS LOANED ARE PROHIBITED. © AGNICO-EAGLE LTD.

DESSINS EN RÉFÉRENCE / REFERENCE DRAWINGS

TITRE / TITLE	# DWG
–	–
–	–
–	–
–	–
–	–
–	–

AGNICO-EAGLE

REV.	DATE	DESCRIPTION	PAR/BY	APP.	CLIENT
C	21-01-2011	AS BUILT	J-F.S.	S.B.	
B	20-07-2010	APPROVAL	J-F.S.	S.B.	
A	16-07-2010	APPROVAL	J-F.S.	S.B.	

REVISIONS

STAVIBEL
Stavibel inc.
150, rue Gamble Ouest
Rouyn-Noranda (Québec) J9X 2R7
Tél.: 819 764-5181 Téléc.: 819 797-0158
Courriel: stavibel-rn@stavibel.qc.ca
www.stavibel.qc.ca

Projet No. : - -

TITRE / TITLE

AGNICO-EAGLE – MEADOWBANK DIVISION
BAKER LAKE AREA 740
TANK #5 AND #6
DETAILS

DESSINÉ PAR DRAWN BY	J-F SYLVESTRE, TECH.	DATE 2010-07-20
VERIFIÉ PAR CHECKED BY	FRANCE BÉRUBÉ, ING. JR.	2010-07-20
APPROUVÉ PAR APPROVED BY	SERGE BEAULÉ, ING.	2010-07-20
ÉCHELLE SCALE	N/A	DATE 30-06-2010
NO. DESSIN DRAWING NO.	740-C-0125	
NO. PROJET PROJECT NO.	MEAD-I-400	REVISION C / FEUILLE / SHT 3/3

AE-CART-ARCH D

P:\02622\001\Dessins maitres\30-Civ\740-C-0123-0125 TQC.dwg, 25 Jan 2011

FILE NO. 740-C-0123-0125 TQC.dwg

NO. DESSIN DRAWING NO. VD2622-001(MEAD-I-400)00

FORMAT ARCH D

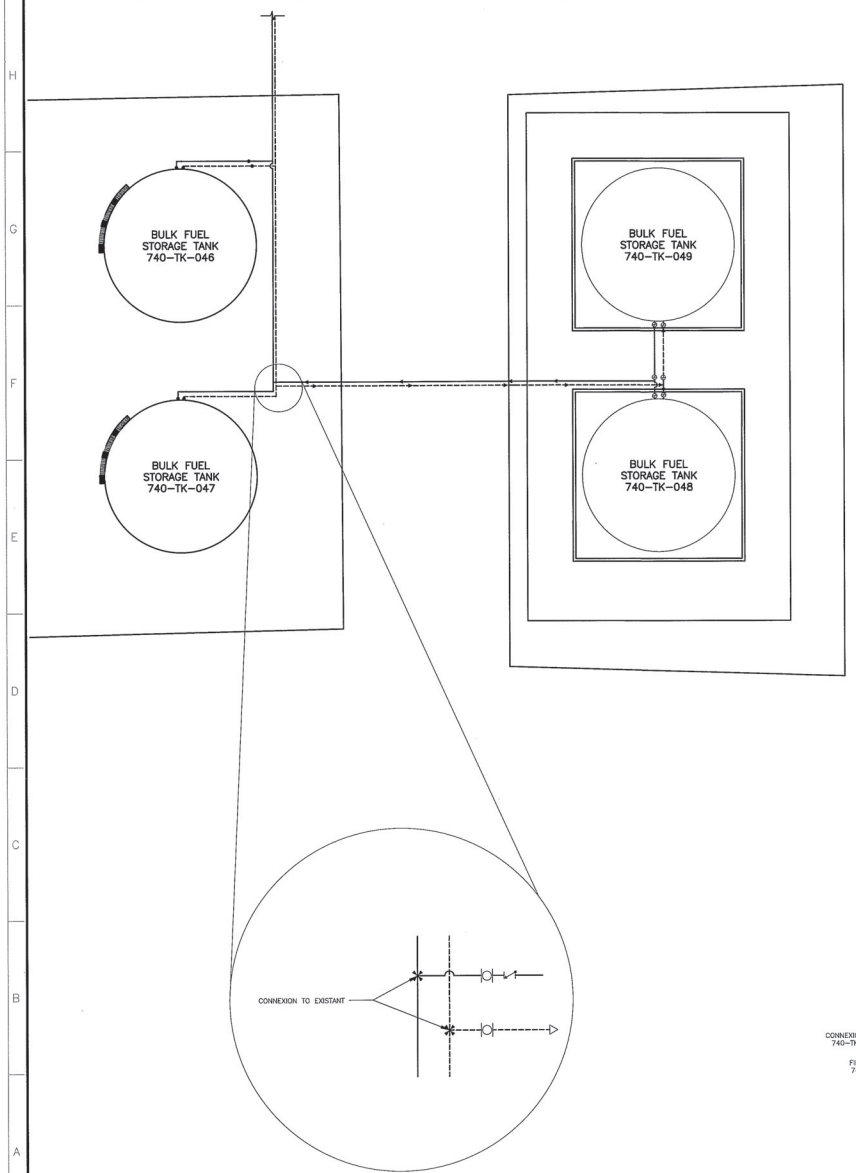

Piping	Symbol	Equipment	Details	Type	Models	Diameter	Quantity
Filling of Tank 740-TK-048 Tank 740-TK-049		Gate Valve	Integrally reinforced extended body gate, female socket weld outboard end; API STD 602; forged carbon steel; ASTM A 105/A 105M; OS&Y; welded bonnet or bolted bonnet with flexible graphite-filled spiral wound gasket; trim #8; flexible graphite packing; metal tagged V903; Class 800	NA	Velan W-DO-2-17-4W-02-TY (1") or equivalent	1"	2
		Gate Valve	Class 150; flanged, raised-face; API STD 600; carbon steel body, ASTM A 105/A 105M or ASTM A 216/A 216M Grade WCB; OS&Y; solid or flexible wedge; bolted bonnet with stainless steel reinforced flexible graphite bonnet gasket; trim #8; flexible graphite packing; metal tagged VGA01; full port.	NA	Velan F-DO-D-06-4C-02-TY (6") or equivalent	6"	7
		Flanged Mettalic flexible tube	- Flanges: Class 150, raised face and ANSI B16.5; - Metallic flexible tube: 18" length in Stainless Steel	NA	CONNECTALL AA1-006-0180 or equivalent	6"	4
		Motorized Valve	- 6" direct mount split body ball valve; - Body materieal: Carbon Steel Body; - SS 316 Trim, Seat Reinforced TFE Seats ; - Flanges: Class 150 raised face and ANSI B16.5; C/W: Actuator Electric Serie XE (XE-6900) ATEX certified for Flame Proof Exexd IIB T4 + Heater	NA	Matheson valves DSC-F1-600-XHES-XX 6.00	6"	2
		Gasket	Composition: Aramid fibers with a nitril binder Tickness: 1/8"	NA	Garlock Blue guard Style 3000	1" 6"	as required
		Piping	Carbon steel piping sch. 40 ASTM A53 gr.B seamless	NA	NA	1" 6"	as required
Distribution from Tank 740-TK-048 Tank 740-TK-049		Gate Valve	Class 150; flanged, raised-face; API STD 600; carbon steel body, ASTM A 105/A 105M or ASTM A 216/A 216M Grade WCB; OS&Y; solid or flexible wedge; bolted bonnet with stainless steel reinforced flexible graphite bonnet gasket; trim #8; flexible graphite packing; metal tagged VGA01; full port.	NA	Velan F-DO-D-06-4C-02-TY (4") or equivalent	4"	7
		Gate Valve	Integrally reinforced extended body gate, female socket weld outboard end; API STD 602; forged carbon steel; ASTM A 105/A 105M; OS&Y; welded bonnet or bolted bonnet with flexible graphite-filled spiral wound gasket; trim #8; flexible graphite packing; metal tagged V903; Class 800	NA	Velan W-DO-2-17-4W-02-TY (1") or equivalent	1"	2
		Flanged Mettalic flexible tube	- Flanges: Class 150, raised face and ANSI B16.5; - Metallic flexible tube: 18" length in Stainless Steel	NA	CONNECTALL AA1-004-0150 or equivalent	4"	4
		Check valve	- Cast steel flanged check valve ; - Body material: Low temperature cast carbon steel to ASTM A352, grade LCB; - Trim material: Disc - Stainless steel, 13% Cr Seat - Stainless steel, 13% Cr; - Valve: Face to face dimensions to ANSI B16.10; - Flanges: Class 150, raised face and ANSI B16.5.	CXF1 [1]	Kitz 150 SCORL or equivalent	4"	3
		Motorized Valve	- 4" direct mount split body ball valve; - Body materieal: Carbon Steel Body; - SS 316 Trim, Seat Reinforced TFE Seats ; - Flanges: Class 150raised face and ANSI B16.5; C/W: Actuator Electric Serie XE (XE-2640) ATEX certified for Flame Proof Exexd IIB T4 + Heater	NA	Matheson valves DSC-F1-400-XEE-1-XX 4.00	4"	2
		Gasket	Composition: Aramid fibers with a nitril binder Tickness: 1/8"	NA	Garlock Blue guard Style 3000	1" 4"	as required
		Piping	Carbon steel piping sch. 40 ASTM A53 gr.B seamless	NA	NA	1" 4"	as required
Overpressure line filling tank 740-TK-048 filling tank 740-TK-049		Gate Valve	Integrally reinforced extended body gate, female socket weld outboard end; API STD 602; forged carbon steel; ASTM A 105/A 105M; OS&Y; welded bonnet or bolted bonnet with flexible graphite-filled spiral wound gasket; trim #8; flexible graphite packing; metal tagged V903; Class 800	NA	Velan W-DO-2-17-4W-02-TY (¾") or equivalent	¾"	8
		Flanged Mettalic flexible tube	- Flanges: Class 150, raised face and ANSI B16.5; - Metallic flexible tube: 18" length in Stainless Steel	NA	CONNECTALL AA-B18B-1H04-0180-0150 or equivalent	½"	4
		Pressure safety valve	- Stainless steel; - Set pressure at 75 PSI	NA	Swagelok SS-RL4M8FB-BU	½"	2
		Gasket	Composition: Aramid fibers with a nitril binder Tickness: 1/8"	NA	Garlock Blue guard Style 3000	½"	as required
		Piping	Carbon steel piping sch. 40 ASTM A53 gr.B seamless	NA	NA	½"	as required

[1] Reference to "PIPE AND VALVE SPECIFICATION" #0 17202-0000-46ES-1001 by SNC Lavalin 15th August 2007

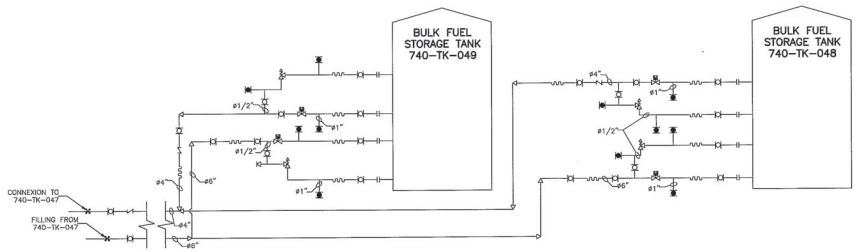

PIPING DETAILS

PLAN CLÉ KEY PLAN

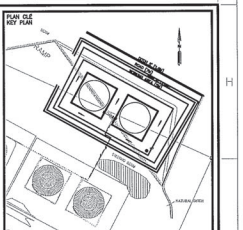

NOTES GENÉRAL / GENERAL NOTES

1—ALL THE PIPING CONNECTION MUST BE AT THE BOTTOM OF THE TANK

POUR CONSTRUCTION FOR CONSTRUCTION
DATE : 12/08/2010

CONFORMÉMENT AU CONTRAT QUI LE PRÉVOIT, LE DESSIN CI-JOINT EST LA PROPRIÉTÉ DE AGNICO-EAGLE LTÉE ET NE PEUT ÊTRE REPRODUIT NI UTILISÉ À D'AUTRES FINS QUE CELLE POUR LAQUELLE IL A ÉTÉ PRÉPARÉ SANS L'AUTORISATION ÉCRITE PRÉALABLE DE AGNICO-EAGLE LTÉE.

IN ACCORDANCE WITH THE CONTRACT, THE ATTACHED DRAWING IS THE PROPERTY OF AGNICO-EAGLE LTD. AND MUST NOT BE REUSED FOR ANY PURPOSE OTHER THAN THAT FOR WHICH IT WAS PREPARED WITHOUT THE WRITTEN PERMISSION OF AGNICO-EAGLE LTD.

DESSINS EN RÉFÉRENCE / REFERENCE DRAWINGS

TITRE / TITLE	# DWG
–	–
–	–
–	–
–	–
–	–
–	–

AGNICO-EAGLE

REV.	DATE	DESCRIPTION	PAR/BY	APP.	CLIENT
0	2010-08-12	FOR CONSTRUCTION	MA.MDS	J.M.C	
B	2010-07-26	FOR APPROVAL	V.Crs.	J.M.C	
A	2010-07-16	FOR APPROVAL	V.Crs.	J.M.C	

REVISIONS

L-2198
2010-08-12

TITRE / TITLE

AGNICO—EAGLE — MEADOWBANK DIVISION
BAKER LAKE AREA 740
TANK #5 AND #6
FUEL DISTRIBUTION PIPING
LAYOUT AND DETAILS

DESSINÉ PAR DRAWN BY	VICKY CRÊTE, TECH.	DATE 2010-07-16
VERIFIÉ PAR CHECKED BY	J-M CHARRON, Ing.	
APPROUVÉ PAR APPROVED BY	J-M CHARRON, Ing.	
ÉCHELLE SCALE	N/A	DATE

NO. DESSIN DRAWING NO. 740-M-0100

NO. PROJET PROJECT NO.	RÉVISION	FEUILLE / SHT
MEAD-I-400	0	1 / 1

AE-GABT-ARCH D

\\groupe\qtoolbar\Projet\300-RM\VD2622\001\Dessins maitres\28-PEF\VD2622-001(MEAD-I-400)00.dwg, 12 Aoû 2010

FILE NO. VD2622-001(MEAD-I-400)00.dwg

NO. DESSIN
DRAWING NO. 740-E-0120

FORMAT ANSI B-11x17

NOTES :
1. ALL CABLES CONNECTION ARE THERMIT WELD.

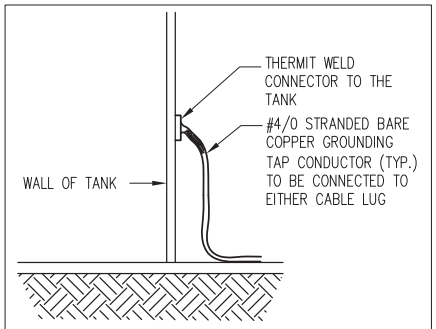

BONDING CONNECTION TO EXTERIOR TANK

DETAIL 1 / –
SCALE : N.T.S.

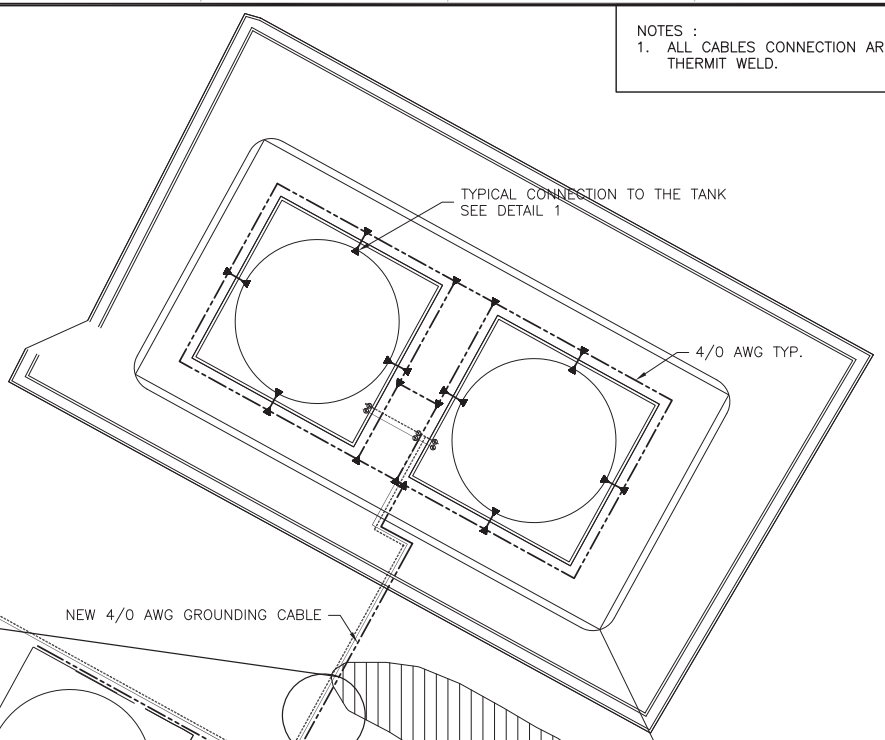

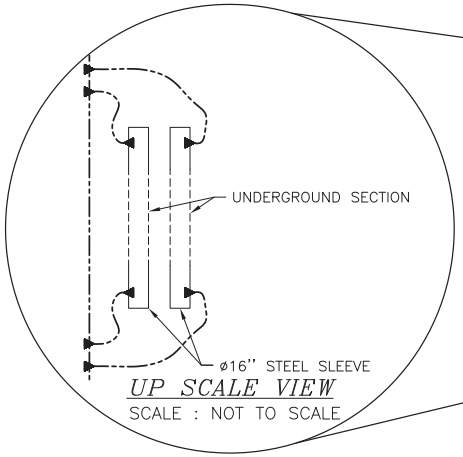

UP SCALE VIEW
SCALE : NOT TO SCALE

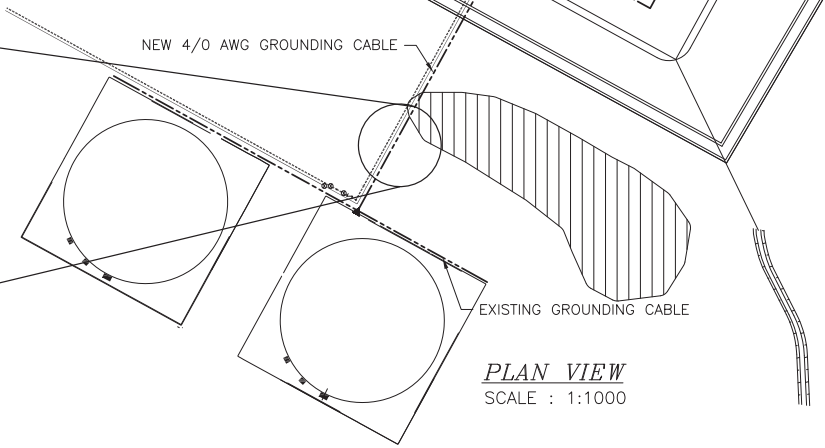

PLAN VIEW
SCALE : 1:1000

TITRE / TITLE	# DWG	REV	DESCRIPTION	DATE	PAR BY
–	–				
–	–				
–	–				
–	–				
–	–	0	AS BUILD	14-01-2011	M.O.

DESSINS EN RÉFÉRENCE / REFERENCE DRAWINGS

REVISIONS

AGNICO-EAGLE

DESSINÉ PAR / DRAWN BY	M.MATTEAU, T.P.	DATE	2011-01-12
VÉRIFIÉ PAR / CHECKED BY	M. OUELLETTE (AEM)		
APPROUVÉ PAR / APPROVED BY			
No. PROJET / PROJECT NO.	VD2622-001		
DATE	2011-01-12		

L'INFORMATION CI-CONTENUE EST LA PROPRIÉTÉ DE AGNICO-EAGLE LTÉE ET DOIT ÊTRE RETOURNÉE SUR DEMANDE, SANS AUTORISATION ÉCRITE PRÉALABLE, TOUTE REPRODUCTION DE COPIE(S) À AUTRE ET TOUTE UTILISATION AUTRE QUE CELLE POUR LAQUELLE L'INFORMATION EST PRÊTÉE SONT INTERDITES.
© AGNICO-EAGLE LTÉE

THE INFORMATION HERE ON IS THE PROPERTY OF AGNICO-EAGLE LTD, AND MUST BE RETURNED UPON REQUEST. WITHOUT WRITTEN PERMISSION, ANY COPYING, TRANSMITTAL TO OTHERS AND ANY USE EXCEPT THAT FOR WHICH IT IS LOANED ARE PROHIBITED.
© AGNICO-EAGLE LTD.

TITRE / TITLE
AGNICO-EAGLE – MEADOWBANK
AREA 740 BAKER LAKE
ELECTRICAL
GROUNDING PLAN

ÉCHELLE/SCALE	FICHIER/FILE	REVISION	FEUILLE/SHT
INDICATED	740-E-0120.DWG	0	1 / 1

No. DESSIN/DRAWING NO. 740-E-0120

AE-CART-ANSI B

P:\VD2622\001\P200\Dessins emis\D_Cons\50-ELE\2011-01-14 - Tel que construit\740-E-0120.dwg, 14 Jan 2011

NO. DESSIN DRAWING NO. VD2622-001(MEAD-I-400)00

FORMAT ARCH D

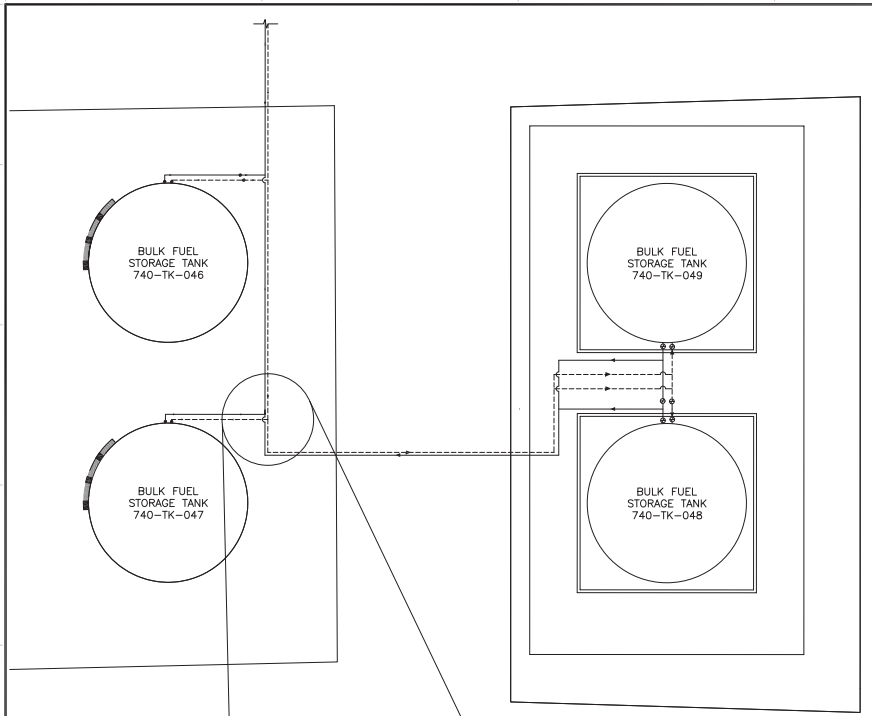

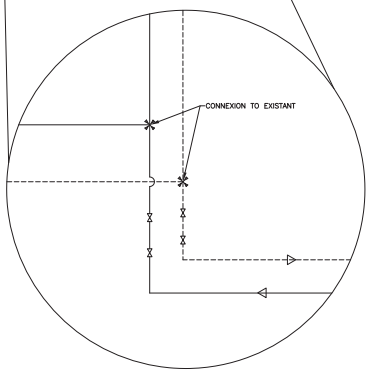

Piping	Symbol	Equipment	Details	Type	Models	Diameter	Quantity
Filling of Tank 740-TK-048 Tank 740-TK-049		Gate Valve	Class 150; flanged, face to face dimension ANSI B16.10, End flange dimension ANSI B16.5, API STD 600; carbon steel body, ASTM A 352-LCC	NA	Beric Class 150	1"	2
		Gate Valve	Class 150; flanged, face to face dimension ANSI B16.10, End flange dimension ANSI B16.5, API STD 600; carbon steel body, ASTM A 352-LCC	NA	Beric Class 150	6"	4
		Flanged Mettalic Flexible tube	- Flanges: Class 150, raised face and ANSI B16.5, carbon steel; - Metallic flexible tube: 18" length in Stainless Steel	NA	CONNECTALL AAB1811U0240	6"	2
		Gasket	Composition: Aramid fibers with a nitril binder Tickness: 1/8"	NA	Garlock Blue guard Style 3000	1" 6"	as required
		Piping	Carbon steel piping sch. 40 ASTM A53 gr.B seamless	NA	NA	1" 6"	as required
Distribution from Tank 740-TK-048 Tank 740-TK-049		Gate Valve	Class 150; flanged, face to face dimension ANSI B16.10, End flange dimension ANSI B16.5, API STD 600; carbon steel body, ASTM A 352-LCC	NA	Beric Class 150	4"	4
		Gate Valve	Class 150; flanged, face to face dimension ANSI B16.10, End flange dimension ANSI B16.5, API STD 600; carbon steel body, ASTM A 352-LCC	NA	Beric Class 150	1"	4
		Flanged Mettalic Flexible tube	- Flanges: Class 150, raised face and ANSI B16.5, carbon steel; - Metallic flexible tube: 18" length in Stainless Steel	NA	CONNECTALL AABJB3WWW0240	4"	2
		Check valve	Class 150; flanged, face to face dimension ANSI B16.10, End flange dimension ANSI B16.5, ANSI B16.34 (CONFORMS TO THE APPLICABLE REQUIREMENTS OF API 600), carbon steel body, ASTM A 352-LCC	NA	Beric Class 150	4"	2
		Motorized Valve	- Ball valve class 150; - Body material: Carbon Steel Body; - Reinforced TFE Seats ; - Flanges: Class 150 raised face and ANSI B16.5; C/W: Actuator Electric Serie XE (XE-264D) ATEX certified for flame Proof face EXIBT4+ Heater	NA	TRIAC Actuator electric XE-264D C/W Ball valve classe 150	4"	1
		Gasket	Composition: Aramid fibers with a nitril binder Tickness: 1/8"	NA	Garlock Blue guard Style 3000	1" 4"	as required
		Piping	Carbon steel piping sch. 40 ASTM A53 gr.B seamless	NA	NA	1" 4"	as required
Overpressure line Filling tank 740-TK-048 Filling tank 740-TK-049		Gate Valve	Class 150; flanged, face to face dimension ANSI B16.10, End flange dimension ANSI B16.5, API STD 600; carbon steel body, ASTM A 352-LCC	NA	Beric Class 150	2"	4
		Gate Valve	Class 150; flanged, face to face dimension ANSI B16.10, End flange dimension ANSI B16.5, API STD 600; carbon steel body, ASTM A 352-LCC	NA	Beric Class 150	1"	2
		Check valve	-Carbon steel; - Set pressure at 25 PSI;	NA	Check All LN-3 (JD)	1"	1
		Pressure safety valve	-Carbon steel; - Set pressure at 80 PSI; - 16 USGPM capacity; - Temperature range: -50 to 750F	NA	FARRIS Serie 2700	1"	1
		Gasket	Composition: Aramid fibers with a nitril binder Tickness: 1/8"	NA	Garlock Blue guard Style 3000	½"	as required
		Piping	Carbon steel piping sch. 40 ASTM A53 gr.B seamless	NA	NA	½"	as required

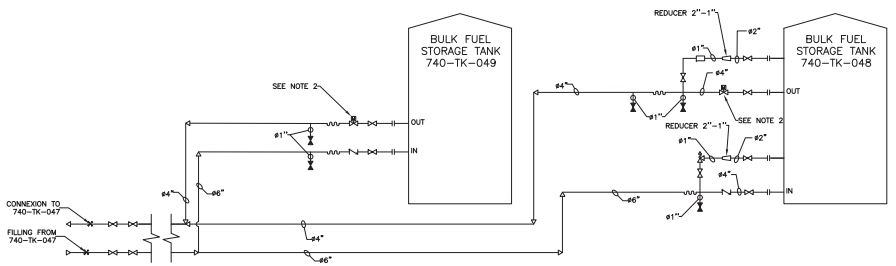

PIPING DETAILS

PLAN CLÉ
KEY PLAN

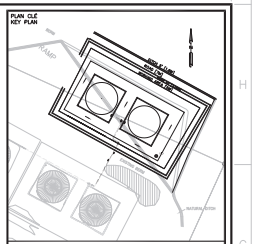

NOTES GÉNÉRAL / GENERAL NOTES

1-ALL THE PIPING CONNECTION MUST BE AT THE BOTTOM OF THE TANK

2-MOTORIZED VALVES ARE INSTALLED BUT NOT RECORDED. THEY ARE IN OPEN POSITION.

CONFIDENTIALITÉ: CE DOCUMENT EST LA PROPRIÉTÉ DE AGNICO-EAGLE LTÉE ET NE PEUT ÊTRE REPRODUIT, EN ENTIER OU EN PARTIE, SOUS QUELQUE FORME QUE CE SOIT, TRANSMIS OU UTILISÉ À AUTRE FIN SANS L'AUTORISATION ÉCRITE DE AGNICO-EAGLE LTÉE.
CONFIDENTIALITY: THIS DOCUMENT IS THE PROPERTY OF AGNICO-EAGLE LTD AND MUST NOT BE REPRODUCED, IN WHOLE OR IN PART, IN ANY FORM WHATSOEVER, NOR TRANSMITTED OR USED FOR ANY PURPOSE OTHER THAN THAT FOR WHICH IT IS LOANED WITHOUT THE PRIOR WRITTEN CONSENT OF AGNICO-EAGLE LTD.

DESSINS EN RÉFÉRENCE / REFERENCE DRAWINGS

TITRE / TITLE	# DWG
--	--
--	--
--	--
--	--
--	--
--	--

AGNICO-EAGLE

REV.	DATE	DESCRIPTION	PAR/BY	APP.	CLIENT
1	31-01-2011	AS FIELD	K.F	J.M.C	
0	2010-08-12	FOR CONSTRUCTION	MA.BED	J.M.C	
B	2010-07-22	FOR APPROVAL	V.Cre.	J.M.C	
A	2010-07-16	FOR APPROVAL	V.Cre.	J.M.C	

REVISIONS

TITRE / TITLE

AGNICO-EAGLE – MEADOWBANK DIVISION
BAKER LAKE AREA 740
TANK #5 AND #6
FUEL DISTRIBUTION PIPING
LAYOUT AND DETAILS

DESSINÉ PAR DRAWN BY	VICKY CRÊTE, TECH.	DATE 2010-07-16
VERIFIÉ PAR CHECKED BY	J-M CHARRON, Ing.	2010-08-20
APPROUVÉ PAR APPROVED BY	J-M CHARRON, Ing.	2010-08-20

ÉCHELLE SCALE N/A DATE

NO. DESSIN DRAWING NO. 740-M-0100

NO. PROJET PROJECT NO.	REVISION	FEUILLE / SHT
MEAD-I-400	1	1 / 1

AE-CART-ARCH D

P:\VD2622\001\Dessins maitrise\75-PET\VD2622-001(MEAD-I-400)01.dwg, 28 Jan 2011

FILE NO. VD2622-001(MEAD-I-400)01.dwg

NO. DESSIN DRAWING NO. VD2622-001(MEAD-I-400)00

FORMAT ARCH D

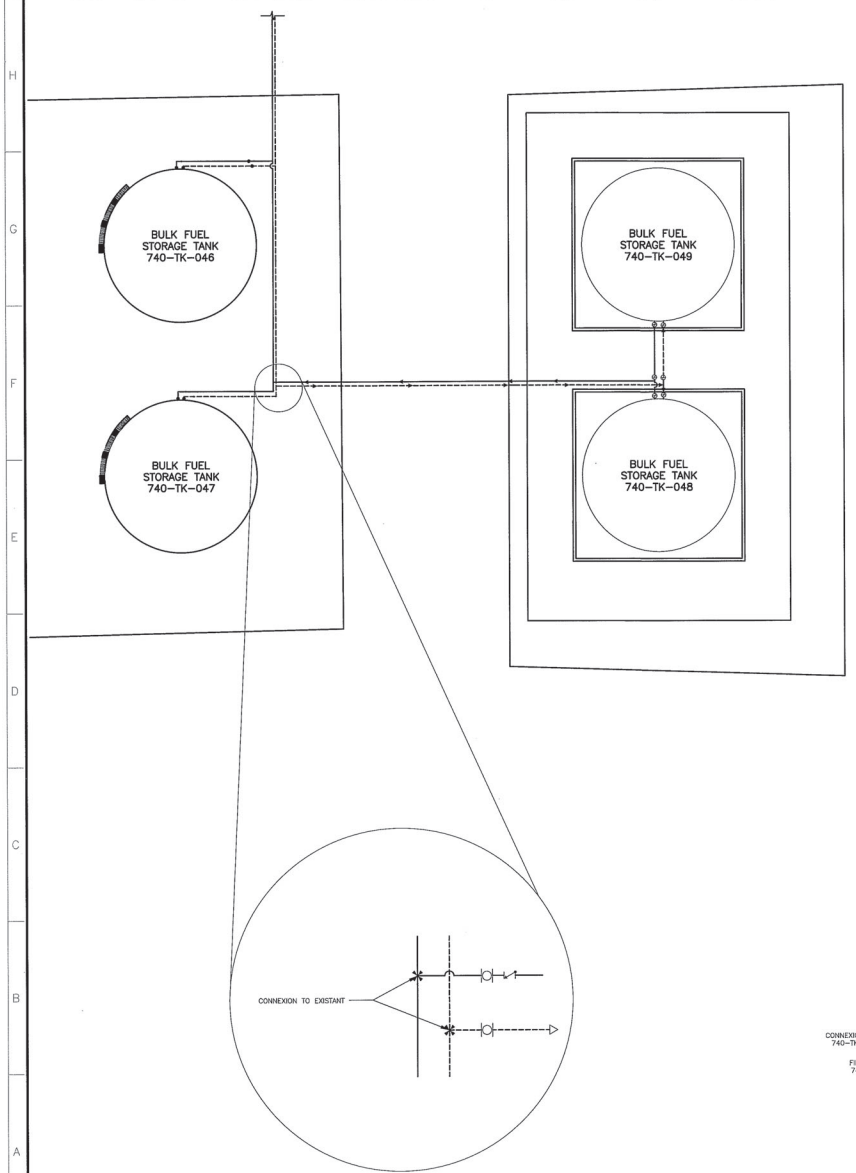

Piping	Symbol	Equipment	Details	Type	Models	Diameter	Quantity
Filling of Tank 740-TK-048 Tank 740-TK-049		Gate Valve	Integrally reinforced extended body gate, female socket weld outboard end; API STD 602; forged carbon steel; ASTM A 105/A 105M; OS&Y; welded bonnet or bolted bonnet with flexible graphite-filled spiral wound gasket; trim #8; flexible graphite packing; metal tagged V903; Class 800	NA	Velan W-DO-2-17-4W-02-TY (1") or equivalent	1"	2
		Gate Valve	Class 150; flanged, raised-face; API STD 600; carbon steel body, ASTM A 105/A 105M or ASTM A 216/A 216M Grade WCB; OS&Y; solid or flexible wedge; bolted bonnet with stainless steel reinforced flexible graphite bonnet gasket; trim #8; flexible graphite packing; metal tagged VGA01; full port.	NA	Velan F-DO-D-06-4C-02-TY (6") or equivalent	6"	7
		Flanged Mettalic flexible tube	- Flanges: Class 150, raised face and ANSI B16.5; - Metallic flexible tube: 18" length in Stainless Steel	NA	CONNECTALL AA1-006-0180 or equivalent	6"	4
		Motorized Valve	- 6" direct mount split body ball valve; - Body materieal: Carbon Steel Body; - SS 316 Trim, Seat Reinforced TFE Seats ; - Flanges: Class 150 raised face and ANSI B16.5; C/W: Actuator Electric Serie XE (XE-6900) ATEX certified for Flame Proof Exexd IIB T4 + Heater	NA	Matheson valves DSC-F1-600-XHES-XX 6.00	6"	2
		Gasket	Composition: Aramid fibers with a nitril binder Tickness: 1/8"	NA	Garlock Blue guard Style 3000	1" 6"	as required
		Piping	Carbon steel piping sch. 40 ASTM A53 gr.B seamless	NA	NA	1" 6"	as required
Distribution from Tank 740-TK-048 Tank 740-TK-049		Gate Valve	Class 150; flanged, raised-face; API STD 600; carbon steel body, ASTM A 105/A 105M or ASTM A 216/A 216M Grade WCB; OS&Y; solid or flexible wedge; bolted bonnet with stainless steel reinforced flexible graphite bonnet gasket; trim #8; flexible graphite packing; metal tagged VGA01; full port.	NA	Velan F-DO-D-06-4C-02-TY (4") or equivalent	4"	7
		Gate Valve	Integrally reinforced extended body gate, female socket weld outboard end; API STD 602; forged carbon steel; ASTM A 105/A 105M; OS&Y; welded bonnet or bolted bonnet with flexible graphite-filled spiral wound gasket; trim #8; flexible graphite packing; metal tagged V903; Class 800	NA	Velan W-DO-2-17-4W-02-TY (1") or equivalent	1"	2
		Flanged Mettalic flexible tube	- Flanges: Class 150, raised face and ANSI B16.5; - Metallic flexible tube: 18" length in Stainless Steel	NA	CONNECTALL AA1-004-0150 or equivalent	4"	4
		Check valve	- Cast steel flanged check valve ; - Body material: Low temperature cast carbon steel to ASTM A352, grade LCB; - Trim material: Disc - Stainless steel, 13% Cr Seat - Stainless steel, 13% Cr; - Valve: Face to face dimensions to ANSI B16.10; - Flanges: Class 150, raised face and ANSI B16.5.	CXF1 [1]	Kitz 150 SCORL or equivalent	4"	3
		Motorized Valve	- 4" direct mount split body ball valve; - Body materieal: Carbon Steel Body; - SS 316 Trim, Seat Reinforced TFE Seats ; - Flanges: Class 150raised face and ANSI B16.5; C/W: Actuator Electric Serie XE (XE-2640) ATEX certified for Flame Proof Exexd IIB T4 + Heater	NA	Matheson valves DSC-F1-400-XEE-1-XX 4.00	4"	2
		Gasket	Composition: Aramid fibers with a nitril binder Tickness: 1/8"	NA	Garlock Blue guard Style 3000	1" 4"	as required
		Piping	Carbon steel piping sch. 40 ASTM A53 gr.B seamless	NA	NA	1" 4"	as required
Overpressure line filling tank 740-TK-048 filling tank 740-TK-049		Gate Valve	Integrally reinforced extended body gate, female socket weld outboard end; API STD 602; forged carbon steel; ASTM A 105/A 105M; OS&Y; welded bonnet or bolted bonnet with flexible graphite-filled spiral wound gasket; trim #8; flexible graphite packing; metal tagged V903; Class 800	NA	Velan W-DO-2-17-4W-02-TY (¾") or equivalent	¾"	8
		Flanged Mettalic flexible tube	- Flanges: Class 150, raised face and ANSI B16.5; - Metallic flexible tube: 18" length in Stainless Steel	NA	CONNECTALL AA-B18B-1H04-0180-0150 or equivalent	½"	4
		Pressure safety valve	- Stainless steel; - Set pressure at 75 PSI	NA	Swagelok SS-RL4M8FB-BU	½"	2
		Gasket	Composition: Aramid fibers with a nitril binder Tickness: 1/8"	NA	Garlock Blue guard Style 3000	½"	as required
		Piping	Carbon steel piping sch. 40 ASTM A53 gr.B seamless	NA	NA	½"	as required

[1] Reference to "PIPE AND VALVE SPECIFICATION" #0 17202-0000-46ES-1001 by SNC Lavalin 15th August 2007

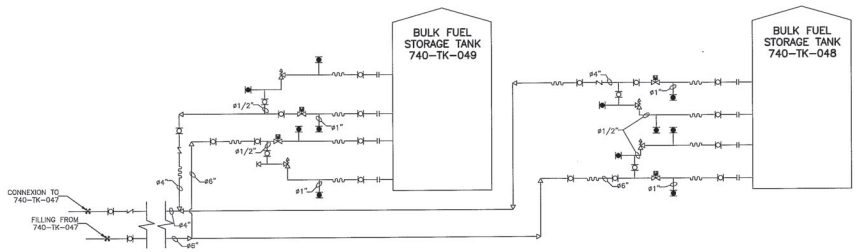

PIPING DETAILS

PLAN CLÉ KEY PLAN

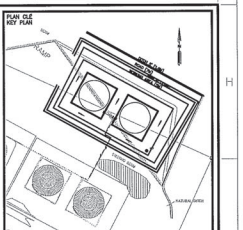

NOTES GENÉRAL / GENERAL NOTES

1—ALL THE PIPING CONNECTION MUST BE AT THE BOTTOM OF THE TANK

POUR CONSTRUCTION FOR CONSTRUCTION
DATE : 12/08/2010

CONFORMÉMENT AU CONTRAT QUI LE PRÉVOIT, LE DESSIN CI-JOINT EST LA PROPRIÉTÉ DE AGNICO-EAGLE LTÉE ET NE PEUT ÊTRE REPRODUIT NI UTILISÉ À D'AUTRES FINS QUE CELLE POUR LAQUELLE IL A ÉTÉ PRÉPARÉ SANS L'AUTORISATION ÉCRITE PRÉALABLE DE AGNICO-EAGLE LTÉE.

IN ACCORDANCE WITH THE CONTRACT, THE ATTACHED DRAWING IS THE PROPERTY OF AGNICO-EAGLE LTD. AND MUST NOT BE REUSED FOR ANY PURPOSE OTHER THAN THAT FOR WHICH IT WAS PREPARED WITHOUT THE WRITTEN PERMISSION OF AGNICO-EAGLE LTD.

DESSINS EN RÉFÉRENCE / REFERENCE DRAWINGS

TITRE / TITLE	# DWG
–	–
–	–
–	–
–	–
–	–
–	–

AGNICO-EAGLE

REV.	DATE	DESCRIPTION	PAR/BY	APP.	CLIENT
0	2010-08-12	FOR CONSTRUCTION	MA.MDS	J.M.C	
B	2010-07-26	FOR APPROVAL	V.Crs.	J.M.C	
A	2010-07-16	FOR APPROVAL	V.Crs.	J.M.C	

REVISIONS

L-2198
2010-08-12

TITRE / TITLE

AGNICO—EAGLE — MEADOWBANK DIVISION
BAKER LAKE AREA 740
TANK #5 AND #6
FUEL DISTRIBUTION PIPING
LAYOUT AND DETAILS

DESSINÉ PAR DRAWN BY	VICKY CRÊTE, TECH.	DATE 2010-07-16
VERIFIÉ PAR CHECKED BY	J-M CHARRON, Ing.	
APPROUVÉ PAR APPROVED BY	J-M CHARRON, Ing.	
ÉCHELLE SCALE	N/A	DATE

NO. DESSIN DRAWING NO. 740-M-0100

NO. PROJET PROJECT NO.	RÉVISION	FEUILLE / SHT
MEAD-I-400	0	1 / 1

AE-GABT-ARCH D

\\groupe\qtoolbar\Projet\300-RM\VD2622\001\Dessins maitres\28-PEF\VD2622-001(MEAD-I-400)00.dwg, 12 Aoû 2010

FILE NO. VD2622-001(MEAD-I-400)00.dwg

APPENDIX 2

SAFE FILL LEVELS FOR ALL FUEL TANKS

TEMPERATUE OF FUEL in the barge at discharge	MAXIMUM FUEL LEVEL To be read on the VAREC float level	
	TANK # 5	TANK #6
0 °C	9,63	9,63
+ 5 °C	9,67	9,67
+ 10 °C	9,72	9,72
+ 15 °C	9,76	9,76

NOTE: EACH TANK HAS A SLIGHTLY DIFFERENT ELEVATION, SO CARE MUST BE TAKEN DURING HYDRAULIC BALANCING OF TANKS, ESPECIALLY WHEN THOSE ARE FULL

Appendix A4

Baker Lake Jet-A Fuel Storage Installations: As-built Report (2013)

AGNICO EAGLE
MEADOWBANK

AGNICO EAGLE MINES LTD

MEADOWBANK DIVISION

BAKER LAKE JET A FUEL STORAGE INSTALLATIONS

2013

AS BUILT CONSTRUCTION REPORT

PREPARED BY:

Yanick Simard

Project General Foreman

AEM.

APPROVED BY:

REGISTERED PROFESSIONAL ENGINEER
R. MARCOUX
LICENSEE
NT/NU

AGNICO EAGLE MINES LTD

MEADOWBANK DIVISION

BAKER LAKE JET A FUEL STORAGE INSTALLATIONS

2013

AS BUILT CONSTRUCTION REPORT

TABLE OF CONTENTS

1. DESCRIPTION OF CONSTRUCTION ACTIVITIES 1
2. DESCRIPTION OF THE FUEL CONTAINEMENT PAD CONSTRUCTION STEPS 2

2.1 Excavation of the existing area 2

2.2 Construction of the pad Phase 1 2

2.3 Installation of the bituminous liner 3

2.4 Construction of the pad Phase 2 3

3. DESCRIPTION OF THE FACILITIES AND MECHANICAL PARTS ASSEMBLING 4

3.1 New tanks placement and installation of the pump house 4

3.2 Piping connection and electrical assembling phase 1 4

3.2 Piping connection and electrical assembling Phase 2 5

APPENDIX 1: DRAWINGS

APPENDIX 2: STAVIBEL'S CONSTRUCTION DAILY REPORTS

APPENDIX 3: SM'S TECHNICAL DATA SHEETS & DRAWINGS DOCUMENT

1- DESCRIPTION OF CONSTRUCTION ACTIVITIES

Agnico Eagle mines has contracted Stavibel Engineering Services to design the Jet A fuel storage facilities located in Baker Lake, Nunavut, complying with specifications required by environmental and governmental regulations, namely Environment Canada's Fuel Tank Storage Regulations and the CCME Environmental Code of Practice for Aboveground and Underground Storage Tank Systems Containing Petroleum and Allied Petroleum Products.

Stavibel provided the design, planning and construction oversight related to the installation of infrastructure of AEM's new Jet A Fuel Storage facility which consists of 20 – 100,000L double walled tanks, associated piping and pumping systems and secondary requirement. AEM prepared a site survey to ensure proper measurements and elevation of the existing area.

The main activities related to the construction were scheduled as follow:

I: AEM sent surveyed data of the existing area to Stavibel

II: Stavibel sent first design plans for comments

III: AEM moved the existing tanks and prepared the field for the construction

IV: Construction of the infrastructure pad

V: Assembling of all the installation of tanks and mechanical infrastructure.

2- DESCRIPTION OF THE FUEL CONTAINEMENT PAD CONSTRUCTION STEPS

2.1 EXCAVATION OF THE EXISTING AREA. July 14th 2013.

Quality control and quality approval: Stavibel

Construction contractor: Quamanittuap-Sana (FGL)

General supervision and foreman: AEM

Starting with test pits, the presence of water was observed in the excavation area. It was then decided to increase the elevation of the pad by +300mm. Presence of contaminated soil was found as well; it was removed, analyzed by environmental department and sent to the soil landfarm at Meadowbank. The total amount was 128m3. All non-contaminated soil and rock that was removed and was placed aside to be used during the backfilling of the pad. (1) 365 CAT excavator, (1) D6 CAT dozer, (1) operator and (1) surveyor were necessary for the initial phase.

2.2 CONSTRUCTION OF THE PAD PHASE 1. July 15th – July 25th 2013.

Quality control and quality approval: Stavibel

Construction contractor: Quamanittuap-Sana (FGL)

Material transportation: BLCS

General supervision and foreman: AEM

During this phase of the project, a (1) 365 CAT excavator, (1) 320 CAT excavator, (1)Komatsu 39PX dozer, (1) Hamm 3625 compactor and (1) 740 CAT haul truck were utilized. In addition, staff included were (1) operator plus (1) surveyor. The first step was to backfill the pad up to the determined level with 0-200mm NPAG rock, and then enlarge the road south of the pad. Excess water (clean) was drained in order to construct the containment berms around the pad as showed in appendix 1 B. Once the rock pad was at the determined elevation, crushed 0-20mm NPAG material was placed on top of the berms. Correctives measures around the pad were undertaken due to some instability in the area where the fuel cabinet would be installed. Crushed 0-20mm NPAG material was placed on the top of the pad, compacted to prepare for the installation of the bituminous liner. Excavation in the surrounding ditches was completed in accordance with design specifications. A total amount of 1217m3 of NPAG 0-200mm and 455m3 of NPAG 0-20mm was used to complete this phase of the construction.

2.3 INSTALATION OF THE BITOUMINOUS LINER. July 25th – July 27th 2013

Quality control and quality approval: Stavibel

Construction contractor: Quamanittuap-Sana (FGL)

Liner crew: Texcel

General supervision and foreman: AEM

Equipment and manpower used included (1) 365 CAT excavator to unroll the liner and we had (1) operator, (1) surveyor, (2) liner installers and (3) laborers from Baker Lake. The liner was installed over a two day period. After installation, any holes that resulted were repaired and conformity tests were undertaken (pressure and tension). In addition, soft geotextile was placed under and over the liner to prevent puncturing that could occur while walking on the liner or during placement of the covering granular material. It was calculated that 2400m2 of bituminous liner and 2625m2 of soft geotextile was placed.

2.4 **CONSTRUCTION OF THE TANK PAD PHASE 2.** July 27th- July 31st 2013

Quality control and quality approval: Stavibel

Construction contractor: Quamanittuap-Sana (FGL)

Material transportation: BLCS

General supervision and foreman: AEM

Phase 2 of construction of the pad was to place crushed 0-20mm NPAG over the bituminous liner (previously covered with geotextile). The following equipment and manpower were used, (1) 365 CAT excavator, (1) 307 Cat excavator, (1) 39 PX Komatsu bulldozer, (1) 740 CAT haul truck, (1) Hamm 3625 compactor, (1) operator and (1) surveyor. During this phase the contractor's (BLCS) was out of service due to mechanical issues so the 0-20mm NPAG layer was screened to maintain quality. Any materials that screened larger than 0-20mm were removed by hand. A total of 728m3 of 0-20mm NPAG granular material were used to build the 300mm thick layer of liner protection. A slopped trench was excavated (1000mm up to ground level) to place an 8 inches steel conduit for electrical cable necessary to operate the pump house.

- FURTHER INFORMATION, PICTURES AND PLANS FOR THOSE STEPS CAN BE FOUND IN THE APPENDIX 1 AND 2

3- DESCRIPTION OF THE FACILITIES AND MECHANICAL PARTS ASSEMBLING.

3.1 NEW TANKS PLACEMENT AND INSTALATION OF THE PUMP HOUSE. Aug 5th –Aug 12th 2013

Installation crew: SM Construction

Field supervisor: Quamanittuap-Sana (FGL)

Crane and operator: J.M Francoeur

General supervision and foreman: AEM

20, double walled, 100,000L fuel storage tanks meeting CCME ULC requirements were placed on the pad described in Sec 2 above. Equipment and manpower used during this phase included (1) 35tns MCR crane, (6) technicians, (1) welder and (1) electrician. The tanks were placed according to the design specifications, ie level. Once the tanks placement was completed, foot bridges were installed as well as the pump house. * See figure at page 523 in SM'S manual, appendix 3

3.2 PIPING CONNECTION AND ELECTRICAL ASSEMBLING PHASE 1. Aug 12th – Aug 19th 2013

Installation crew: SM Construction

Field supervisor: Quamanittuap-Sana (FGL)

General supervision and foreman: AEM

During this phase (6) technicians and (1) welder assembled the 4 inch pipe and connections between the tanks and pump house. Also (1) electrician started the installation of electrical cables and control panels for the facility. All piping, pumps, electrical connections, etc. conformed to all applicable codes, specifications and regulations. * See SM'S manual under the technical data section, Pp. 3 to 512, APPENDIX 3.

3.3 PIPING CONNECTION AND ELECTRICAL ASSEMBLING PHASE 2. Aug 29th – Sept 17th

Installation crew: SM Construction

Field supervisor: Quamanittuap-Sana (FGL)

General supervision and foreman: AEM

For the final phase of the project, (6) technicians and (1) welder completed assembling and installation of the pipe connections between the tanks and inside the pump house. An (1) electrician connected all of the main cables, the panels and computers inside the pump hose. Hi-level alarms were also placed on all tanks and were tested as per specifications. All alarms were noted to be functional. After installation, all tanks were cleaned and washed inside and pressure tested as per specifications. During the pressure test, one tank indicated a loss of pressure. A small crack was found between the inside two layers of the tank. This might have occurred during the placement of this tank. It was decided not to add fuel to this tank this year. Repairs will be undertaken prior to re-fueling. At this point the tanks were ready to use for fuel storage.

- FURTHER INFORMATIONS, PARTS DESCRIPTIONS, PHOTOGRAPH, INSTALLATION AND ELECTRICAL PLANS CAN BE FOUND IN APPENDIX 3.

APPENDIX 1.

DRAWINGS.

A. DESIGN PLAN FOR COMMENTS:

Drawing number: 61-740-230-211_A

B. AS BUILT DRAWINGS:

Drawing number:	BAKER FF 1	PLANIMETRICAL VIEW
	BAKER FF 2	SECTION VIEW

NO. DESSIN
DRAWING 61-740-230-211-A

FORMAT ARCHD

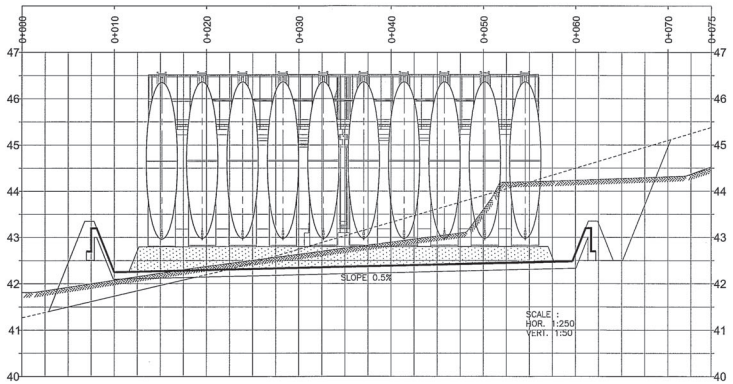

SECTION - A

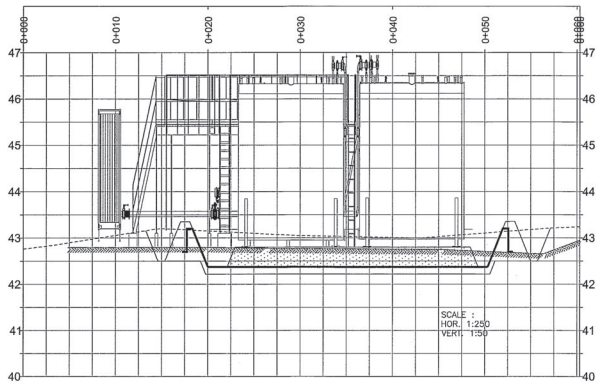

SECTION - B

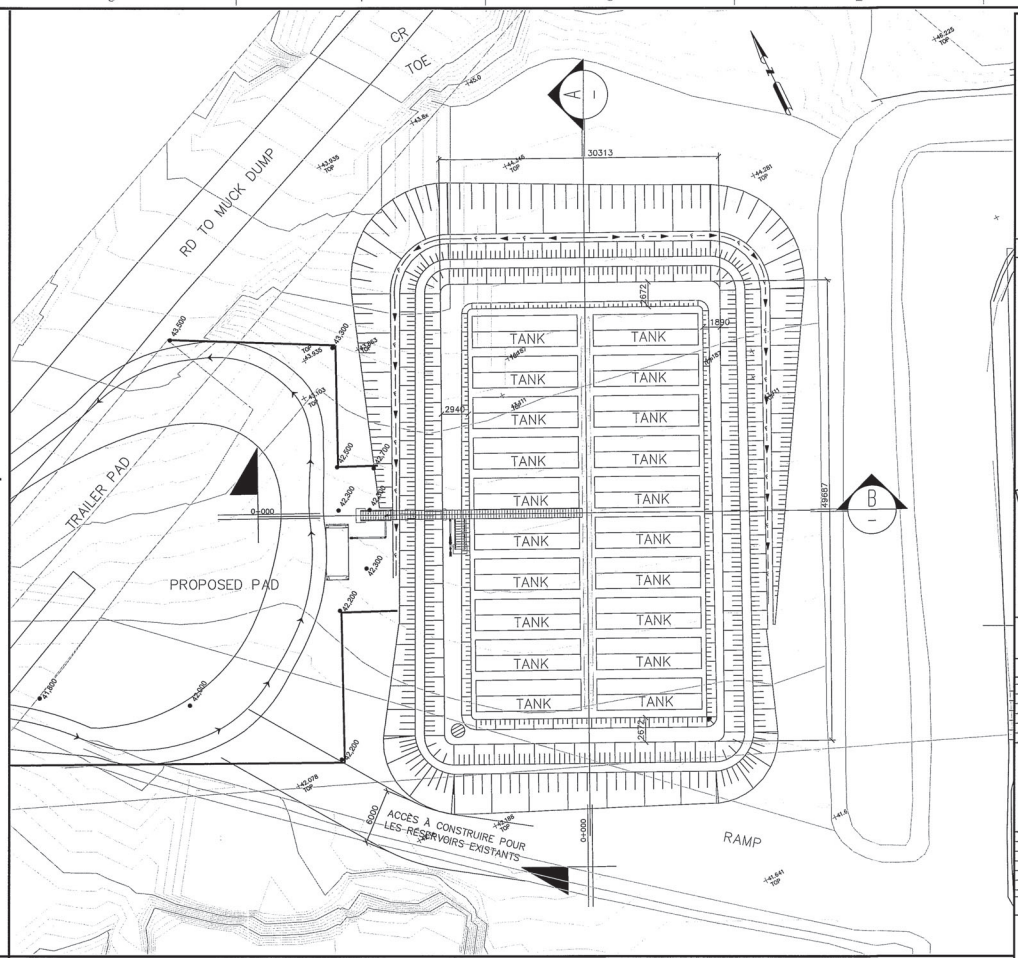

PLAN CLÉ
KEY PLAN

NOTES GÉNÉRAL / GENERAL NOTES

POUR COMMENTAIRES
FOR COMMENTS
AGNICO EAGLE DATE : 2013-06-14

L'INFORMATION CI-CONTENUE EST LA PROPRIÉTÉ DE AGNICO EAGLE LTÉE ET EST FOURNIE SUR CONFIDENCE, SANS AUCUNE OBLIGATION EXPRESSE, TACITE OU CRÉÉE À AUCUN DE CES ÉGARDS À MOINS D'UNE ENTENTE ÉCRITE CONTRAIRE AVEC AGNICO EAGLE LTÉE.
THE INFORMATION HEREIN IS THE PROPERTY OF AGNICO EAGLE LTD. AND IS SUPPLIED UPON REQUEST, WITHOUT WRITTEN CONTRACTUAL OBLIGATION, EXPRESS OR IMPLIED, UNLESS OTHERWISE AGREED TO IN WRITING BY AGNICO EAGLE LTD.

DESSINS EN RÉFÉRENCE / REFERENCE DRAWINGS

TITRE / TITLE	# DWG
-	-
-	-
-	-
-	-
-	-

AGNICO EAGLE

REV.	DATE	DESCRIPTION	PAR/BY	APP.	CLIENT
A	2013-06-14	FOR COMMENTS	R.M.	R.M.	A.H.

REVISIONS

R. MARCOUX LICENSÉE 91760 — MEMBRE DE L'ORDRE DES INGÉNIEURS DU QUÉBEC

TITRE / TITLE
AGNICO-EAGLE – MEADOWBANK
740 FUEL STORAGE LAYDOWN AREA
230 GENERAL CIVIL WORKS
PLAN VIEW AND CROSS SECTION
TANKS

DESSINÉ PAR DRAWN BY	YVES BOISVERT, T.P.	DATE 2013-06-14
VÉRIFIÉ PAR CHECKED BY	RICHARD MARCOUX, Ing.	2013-06-14
APPROUVÉ PAR APPROVED BY	ALAIN HAMEL	2013-06-14
ÉCHELLE SCALE	AS SHOWN	DATE 2013-06-14
NO. DESSIN DRAWING NO.	61-740-230-211_A	
NO. PROJET PROJECT NO.	OP-84541-J	REVISION A / FEUILLE / SHT 1 / 1

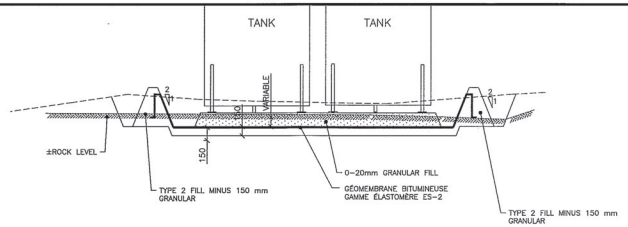

TYPICAL SECTION WITH OPTION COLETANCHE
SCALE : NONE

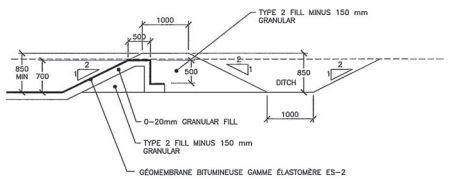

TYPICAL SECTION – DAM
SCALE : NONE

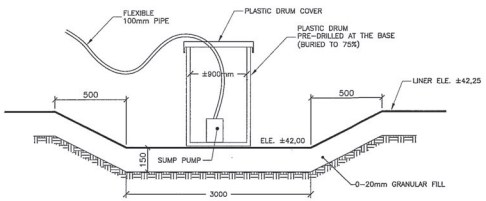

NOTES :
- THE WATER WILL BE REJECTED TO THE INFERIOR BASIN WHERE IT WILL BE TREATED WITH AN OIL SEPARATOR.

ACCESS WELL FOR DRAINING
SCALE : NONE

AC-GMT-ARCH D

P:\200-VO\VO3359\001\Dessins mallres\30-Civ\61-740-230-211_A.dwg-2013-06-14 11:34:14

FILE NO. 61-740-230-211_A

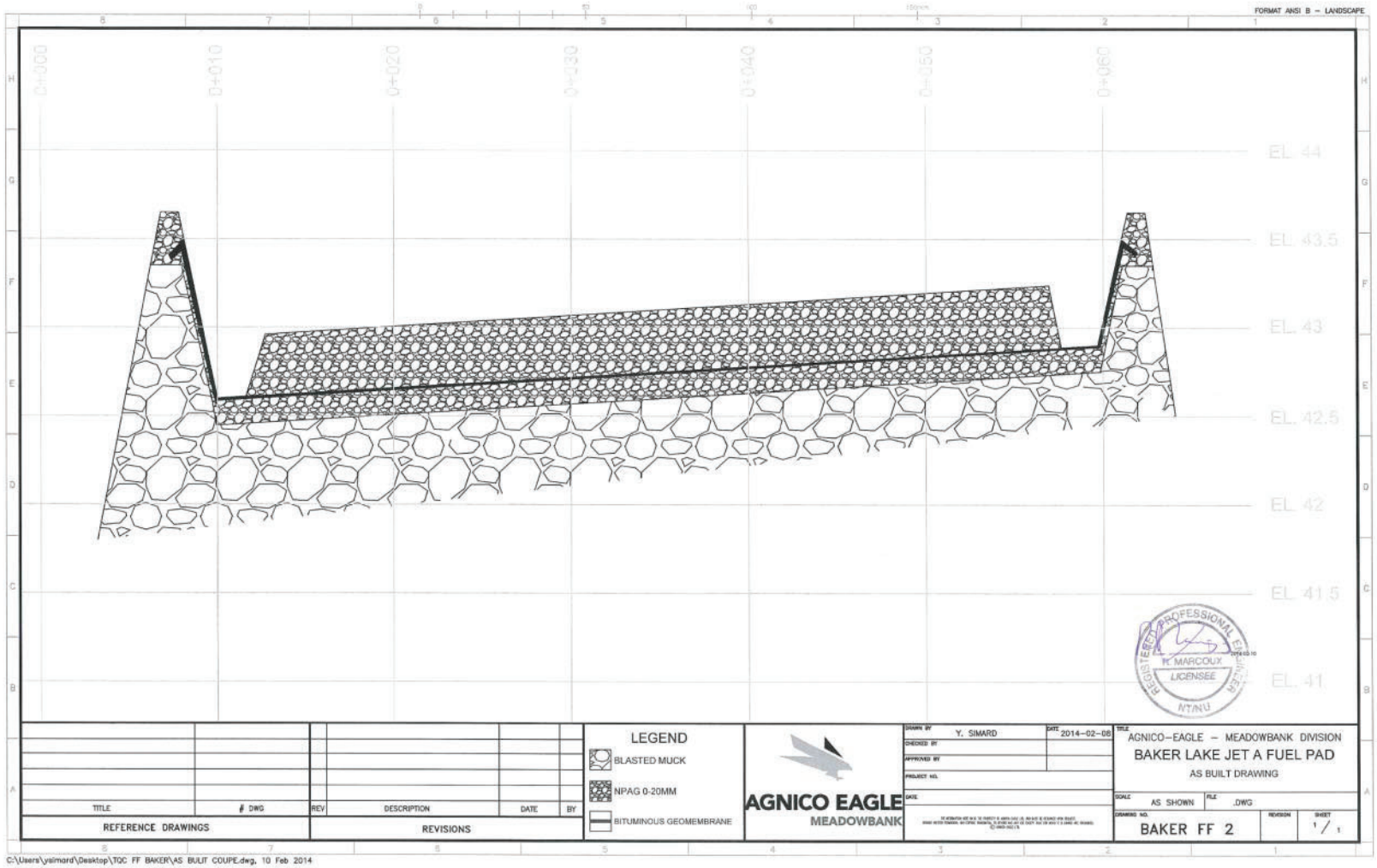
FORMAT ANSI B – LANDSCAPE
0+000
0+010
0+020
0+030
0+040
0+050
0+060
EL. 44
EL. 43.5
EL. 43
EL. 42.5
EL. 42
EL. 41.5
EL. 41
REGISTERED PROFESSIONAL ENGINEER
R. MARCOUX
LICENSEE
NT/NU
LEGEND
BLASTED MUCK
NPAG 0-20MM
BITUMINOUS GEOMEMBRANE
AGNICO EAGLE
MEADOWBANK
TITLE
DWG
REFERENCE DRAWINGS
REV
DESCRIPTION
DATE
BY
REVISIONS
DRAWN BY Y. SIMARD
DATE 2014-02-08
CHECKED BY
APPROVED BY
PROJECT NO.
DATE
AGNICO-EAGLE – MEADOWBANK DIVISION
BAKER LAKE JET A FUEL PAD
AS BUILT DRAWING
SCALE AS SHOWN
FILE .DWG
DRAWING NO. BAKER FF 2
REVISION
SHEET 1 / 1
C:\Users\ysimard\Desktop\TQC FF BAKER\AS BUILT COUPE.dwg, 10 Feb 2014

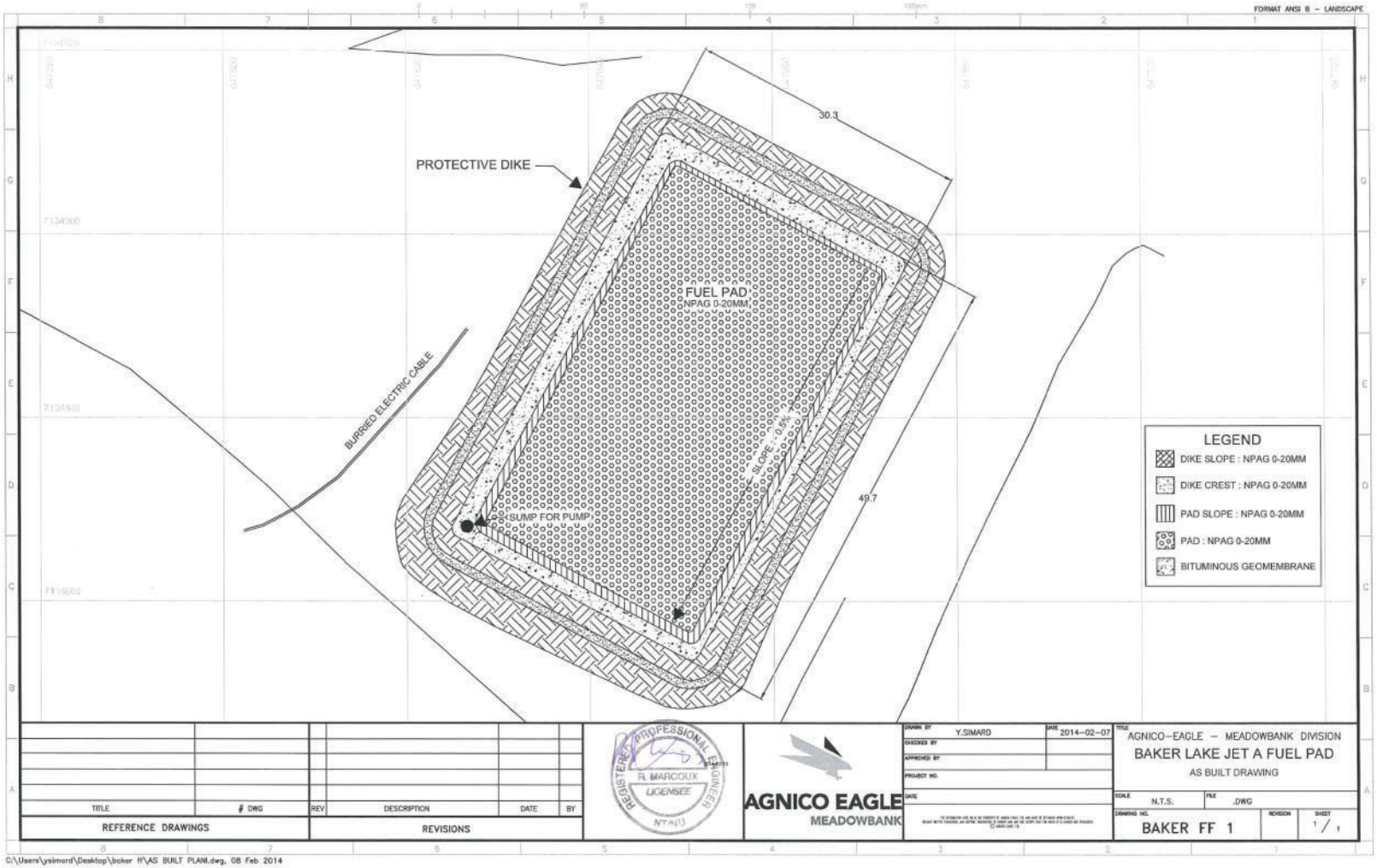
FORMAT ANSI B – LANDSCAPE
PROTECTIVE DIKE
30.3
FUEL PAD
NPAG 0-20MM
BURRIED ELECTRIC CABLE
SUMP FOR PUMP
SLOPE : 0.5%
49.7
LEGEND
DIKE SLOPE : NPAG 0-20MM
DIKE CREST : NPAG 0-20MM
PAD SLOPE : NPAG 0-20MM
PAD : NPAG 0-20MM
BITUMINOUS GEOMEMBRANE
TITLE
DWG
REFERENCE DRAWINGS
REV
DESCRIPTION
DATE
BY
REVISIONS
REGISTERED PROFESSIONAL ENGINEER
R. MARCOUX
LICENSEE
NT/NU
AGNICO EAGLE
MEADOWBANK
DRAWN BY Y.SIMARD
DATE 2014-02-07
CHECKED BY
APPROVED BY
PROJECT NO.
DATE
TITLE
AGNICO–EAGLE – MEADOWBANK DIVISION
BAKER LAKE JET A FUEL PAD
AS BUILT DRAWING
SCALE N.T.S.
FILE .DWG
DRAWING NO.
BAKER FF 1
REVISION
SHEET
1 / 1
C:\Users\ysimard\Desktop\baker ff\AS BUILT PLAN.dwg, 08 Feb 2014

APPENDIX 2.

STAVIBEL'S CONSTRUCTION DAILY REPORT.

DESCRIPTION OF THE FUEL CONTAINEMENT PAD CONSTRUCTION STEPS.

AGNICO EAGLE

RAPPORT DE VISITE DE CHANTIER

STAVIBEL

Title of project :	Baker Lake Jet-A Fuel Farm	Date : 2013-07-14	
Project # :	OP-84541-J /VD3356	Doc #:	VD3356-003-RV-01
Prepared by :	Michaël Racine	Contractor :	Fernand Gilbert Ltée
Verified by :	Richard Marcoux, ing.	Temperature :	10 à 16°C Wind : 5 à 15 km/h

Object : Contractor's schedule (approximative hours)

Labour and machinery	**Company**	**Working hours**
1 Shovel CAT 365C L	FGL	11
Operator	FGL	12
Surveyor	FGL	9
10 tons roller compactor	BLCS	0
Bulldozer CAT D6 (DOZ09)	AEM	1
Field inspector	Stavibel	12

- **7h à 9h** Shovel 365 moves from Baker Lake to the Fuel Farm.
- **9h à 10h** Shovel 365 makes pit test at the North extremity of the projected pond.
- **10h à 12h** Shovel 365 removes the 0-20mm crushed stone in place.
- **13h à 17h30** Shovel 365 stockpiles the contaminated material outside the projected pond.
- **17h30 à 18h30** Bulldozer D6 profiles the infra.

Comments :

- Visit of Jean-François Béland (AEM foreman) and Dany Pageault (FGL superintendant) de 12h à 16h30
- After 3 test pits in the excavation zone, we found the presence of water and frozen material above the proposed elevation of the excavation. We need to increase the elevation of the project of 300mm.
- Presence of contaminated material and organic soil. The materials are stockpile and will be analyse by the environnment. Thereafter, they will indicate how to dispose of it.

- Photo #1 – 3 test pits. Smell of Jet-A fuel and water arrival.



- Photo #2 – Excavation and stockpile of the contaminated material until the final level of the infra.



Par : _____
Michaël Racine, tech.

_____
Richard Marcoux, ing.
No OIQ : 38724
Project manager

AGNICO EAGLE

RAPPORT DE VISITE DE CHANTIER

STAVIBEL

Title of project :	Baker Lake Jet-A Fuel Farm	Date : 2013-07-15	
Project # :	OP-84541-J /VD3356	Doc #:	VD3356-003-RV-02
Prepared by :	Michaël Racine	Contractor :	Fernand Gilbert Ltée
Verified by :	Richard Marcoux, ing.	Temperature :	8 à 17°C Wind : 5 à 30 km/h

Object : Contractor's schedule (approximative hours)

Labour and machinery	Company	Working hours	Volume (m3)
1 Shovel CAT 365C L	FGL	7	
Opérator	FGL	12	
Surveyor	FGL	12	
Roller compactor	BLCS	1.9	
Bulldozer CAT D6T (DOZ09)	AEM	5	
Shovel 330C	BLCS	8.5	
2 articulated trucks CAT 740	BLCS	8.5	576
Field inspector	Stavibel	12	

- **6h30 à 18h30** Shovel 365 and Bulldozer D6T backfill with blasted rock 0-200 mm from quarry #1.
- **9h30 à 18h30** Loader 966 et 2 trucks haul the blasted rock 0-200 mm from quarry #1.
- **6h30 à 18h30** Compactor compacts the blasted rock when required.

Comments :

- Attempt to cover the stockpile of contaminated material with tarps after the request of the environment. Unfortunately the wind make this operation impossible.
- The water accumulations are pumped before backfilling above.

- Photo #1 – Overview of the infra. Some water accumulations caused by the thaw of the material in place. A small ditch will be make to try to drain this water during night.



Par : _____
Michaël Racine, tech.

_____
Richard Marcoux, ing.
No OIQ : 38724
Project manager

AGNICO EAGLE

RAPPORT DE VISITE DE CHANTIER

STAVIBEL

Title of project :	Baker Lake Jet-A Fuel Farm	Date : 2013-07-16	
Project # :	OP-84541-J /VD3356	Doc #:	VD3356-003-RV-03
Prepared by :	Michaël Racine	Contractor :	Fernand Gilbert Ltée
Verified by :	Richard Marcoux, ing.	Temperature :	8 à 17°C Wind : 5 à 30 km/h

Object : Contractor's schedule (approximative hours)

Labour and machinery	Company	Working hours	Volume (m3)
1 Shovel CAT 365C L	FGL	11	
Operator	FGL	12	
Surveyor	FGL	12	
Roller compactor Protec Boxer 114	BLCS	0	
Bulldozer CAT D6T (DOZ09)	AEM	0	
Shovel CAT 330C	BLCS	11	
2 Articulated trucks CAT 740	BLCS	11	816
Field inspector	Stavibel	12	

- **6h30 à 18h30** Loader 966 and 2 trucks haul the blasted rock 0-200 mm from quarry #1.
- **6h30 à 12h00** Shovel 365 widens the road on the south side of the pond Sud with blasted rock 0-200 mm from quarry #1.
- **6h30 à 18h30** Shovel 365 backfills with blasted rock 0-200 mm from quarry #1.

Comments :

- Beginning of haulage of the contaminated material to the mine (4 loads per day).

- Photo #1 – Windening of the road on the south side of the pond



- Photo #2 – Drainage of the water on north side of the pad. The ground is more stable at the end of the day.



Par : _____
Michaël Racine, tech.

_____
Richard Marcoux, ing.
No OIQ : 38724
Project manager

AGNICO EAGLE

RAPPORT DE VISITE DE CHANTIER

STAVIBEL

Title of project :	Baker Lake Jet-A Fuel Farm	Date : 2013-07-17	
Project # :	OP-84541-J /VD3356	Doc #:	VD3356-003-RV-04
Prepared by :	Michaël Racine	Contractor :	Fernand Gilbert Ltée
Verified by :	Richard Marcoux, ing.	Temperature :	8 à 17°C Wind : 30 à 70 km/h

Object : Contractor's schedule (approximative hours)

Labour and machinery	**Company**	**Working hours**	**Volume (m3)**
1 Shovel CAT 365C L	FGL	11	
Operator	FGL	12	
Surveyor	FGL	12	
Loader CAT 966H + operator	AEM	10	
Roller compactor Protec Boxer 114	BLCS	2.54	
Bulldozer CAT D6T (DOZ09)	AEM	0	
Shovel CAT 330C	BLCS	5	
2 articulated trucks CAT 740	BLCS	11	muck : 254.4 0-20mm : 272.5
Fiel inspector	Stavibel	12	

- **6h30 à 18h30** Shovel 365 builds the mini dikes with blasted rock 0-200 mm.
- **6h30 à 11h30** Shovel 330 and 2 trucks (BLCS) haul the blasted rock 0-200 mm from quarry #1.
- **7h30 à 10h15** Loader 966 separates the contaminated and the non-contaminated material.
- **10h15 à 18h30** Loader 966 builds the mini dikes.
- **13h à 18h** 2 trucks 740 (BLCS) haul the 0-20mm.

Comments :

- Haulage of the contaminated material to the mine (4 loads of 10 wheeler per day).
- The non-contaminated material that containt a bit of organic soil is stockpile in order to do the access road for the pump house.

- Photo #1 – Construction of the mini dikes around the pad. Stockpile of the 0-20mm on the pad.



- Photo #2 – Loading of the contaminated material.



Par : _____
Michaël Racine, tech.

_____
Richard Marcoux, ing.
No OIQ : 38724
Project manager

AGNICO EAGLE

RAPPORT DE VISITE DE CHANTIER

STAVIBEL

Title of project :	Baker Lake Jet-A Fuel Farm	Date : 2013-07-18	
Project # :	OP-84541-J /VD3356	Doc #:	VD3356-003-RV-05
Prepared by :	Michaël Racine	Contractor :	Fernand Gilbert Ltée
Verified by :	Richard Marcoux, ing.	Temperature :	5 à 10°C Wind : 30 à 50 km/h

Object : Contractor's schedule (approximative hours)

Labour and machinery	**Company**	**Working hours**
1 Shovel CAT 365C L	FGL	9
Operator	FGL	12
Surveyor	FGL	12
Loader CAT 966H + operator	AEM	8
Roller compactor Protec Boxer 114	BLCS	0
Bulldozer CAT D6T (DOZ09)	AEM	0
Field inspector	Stavibel	12

- **6h30 à 12h00** Shovel 365 builds the mini dikes with blasted rock 0-200 mm.
- **6h30 à 15h30** Loader 966 loads the contaminated material, moves the contaminated stockpile that disturbed the construction of the ditch and moves the sea-cans.
- **13h à 15h** Shovel 365 stands by for mechanical problems.
- **15h à 18h30** Shovel 365 puts the 0-20mm on the mini dike.

Comments :

- Haulage of the contaminated material to the mine (6 loads of 10 wheeler per day).
- The crushed stone 0-20mm is stockpile and survey. The results give 18,17 m3/trucks instead of 24m3 as specified in the spec of the truck. Here are the adjusted volumes for the last days :

	2013-07-15		**2013-07-16**		**2013-07-17**		**Cumulatif**	
	load	volume (m3)	load	volume (m3)	load	volume (m3)	load	volume (m3)
Muck quarry 1	24	436,048	34	617,7347	14	254,3613	72	**1308,144**
0-3/4" BLCS		0		0	15	272,53	15	**272,53**

- Photo #1 – Placing the crushed stone 0-20mm on the mini dike.



- Photo #2 – Moving the contaminated stockpile to make the drainage ditch behind the north dike.



Par : _____
Michaël Racine, tech.

_____
Richard Marcoux, ing.
No OIQ : 38724
Project manager

AGNICO EAGLE

RAPPORT DE VISITE DE CHANTIER

STAVIBEL

Title of project :	Baker Lake Jet-A Fuel Farm	Date : 2013-07-19	
Project # :	OP-84541-J /VD3356	Doc #:	VD3356-003-RV-06
Prepared by :	Michaël Racine	Contractor :	Fernand Gilbert Ltée
Verified by :	Richard Marcoux, ing.	Temperature :	8 à 18°C Wind : 20 à 30 km/h

Object : Contractor's schedule (approximative hours)

Labour and machinery	**Company**	**Working hours**
1 Shovel CAT 365C L	FGL	11
Opérateur	FGL	12
Arpenteur	FGL	12
Rouleau compacteur Protec Boxer 114	BLCS	1.21
Chargeur CAT 966H + opérateur	AEM	3.5
Camion 10 roues + opérateur	AEM	5.5
Bulldozer CAT D6T (DOZ09)	AEM	0
Surveillant de chantier	Stavibel	12

- **6h30 à 12h00** Shovel 365 loads the truck with the non-contaminated material that contain organic soil.
- **6h30 à 12h00** 10 wheels truck hauls the material containing organic soil for the construction of the access road for the pump house.
- **6h30 à 10h00** Loader 966 moves the concrete blocks and other small jobs.
- **13h à 18h30** Shovel 365 builds the mini dike and the infra on the north side of the pad.

Comments :

- Haulage of the contaminated material to the mine (6 loads of 10 wheeler per day).

- Photo #1 – Loading the truck with the non-contaminated material that contain organic soil for the construction of the access road for the pump house.



- Photo #2 – Reparation of an instability on the North-East side of the pad.



Par : _____
Michaël Racine, tech.

_____
Richard Marcoux, ing.
No OIQ : 38724
Project manager

AGNICO EAGLE

RAPPORT DE VISITE DE CHANTIER

STAVIBEL

Title of project :	Baker Lake Jet-A Fuel Farm	Date : 2013-07-20	
Project # :	OP-84541-J /VD3356	Doc #:	VD3356-003-RV-07
Prepared by :	Michaël Racine	Contractor :	Fernand Gilbert Ltée
Verified by :	Richard Marcoux, ing.	Temperature :	8 à 18°C Wind : 5 à 10 km/h

Object : Contractor's schedule (approximative hours)

Labour and machinery	**Company**	**Working hours**
Shovel CAT 365C L	FGL	2
Shovel CAT 320	FGL	5
Bulldozer Komat'su 39px	FGL	4
Operator	FGL	12
Surveyor	FGL	12
Roller compactor Protec Boxer 114	BLCS	0.4
Truck CAT 740	BLCS	114.1 m3
Bulldozer CAT D6T (DOZ09)	AEM	0
Field inspector	Stavibel	12

- **6h30 à 8h30** Shovel 365 builds the mini dike.
- **8h30 à 10h30** Shovel 320 is moving from Baker Lake to the field.
- **10h30 à 14h30** Shovel 320 builds the mini dike and profile the ditch.
- **14h30 à 18h30** Bulldozer 39px places the 0-20mm crushed stone.
- **14h30 à 18h30** Truck CAT 740 places the 0-20mm crushed stone.

Comments :

- Survey of a load of 0-20mm crushed stone to confirm the volume. Recalculation of the volumes with 16.3m^3/load.

	2013-07-15		2013-07-16		2013-07-17		2013-07-20		Cumulative	
	load	volume	load	volume	load	volume	load	volume	load	volume
Muck quarry 1	24	391,2	34	554,2	14	228,2			72	**1173,6**
0-3/4" BLCS		0		0	15	244,5	7	114,1	15	**407,5**

- Photo #1 – There is frost in the north ditch that prevent the excavation to the desired elevation.



- Photo #2 – A bit of water on the pad because of the ditch that is to high. No instability.



- Photo #3 – Placing the 0-20mm crushed stone.



Par : _____
Michaël Racine, tech.

_____
Richard Marcoux, ing.
No OIQ : 38724
Project manager

AGNICO EAGLE

RAPPORT DE VISITE DE CHANTIER

STAVIBEL

Title of project :	Baker Lake Jet-A Fuel Farm	Date : 2013-07-21	
Project # :	OP-84541-J /VD3356	Doc #:	VD3356-003-RV-08
Prepared by :	Michaël Racine	Contractor :	Fernand Gilbert Ltée
Verified by :	Richard Marcoux, ing.	Temperature :	8 à 18°C Wind : 5 à 10 km/h

Object : Contractor's schedule (approximative hours)

Labour and machinery	Company	Working hours
Shovel CAT 365C L	FGL	0
Shovel CAT 320	FGL	9
Bulldozer Komat'su 39px	FGL	2
Operator	FGL	12
Surveyor	FGL	12
Roller compacter Hamm 3625	FGL	2
Truck CAT 740	BLCS	48.9 m3
Bulldozer CAT D6T (DOZ09)	AEM	0
Field inspector	Stavibel	12

- **6h30 à 15h30** Shovel 320 builds the dike, builds the access road and places the concrete blocks for the pump house.
- **15h30 à 17h30** Bulldozer 39px places the 0-20mm crushed stone.
- **17h30 à 18h30** Shovel 320 digs the ditch.
- **15h30 à 17h00** Truck CAT 740 hauls the 0-20mm crushed stone.

Comments :

- Volumes of material hauled by BLCS :

	2013-07-15		2013-07-16		2013-07-17		2013-07-20		2013-07-21		Cumulative	
	load	volume	load	volume	load	volume	load	volume	load	volume	load	volume
Muck quarry 1	24	391,2	34	554,2	14	228,2					72	**1173,6**
0-3/4" BLCS		0		0	15	244,5	7	114,1	3	48,9	15	**407,5**

- Photo #1 – Placing the 0-20mm crushed stone. All the 0-20mm is on the field at the end of the day.



- Photo #2 – Excavation of the north ditch at the good elevation to drain the pad infra.



Par : _____
Michaël Racine, tech.

_____
Richard Marcoux, ing.
No OIQ : 38724
Project manager

AGNICO EAGLE

RAPPORT DE VISITE DE CHANTIER

STAVIBEL

Title of project :	Baker Lake Jet-A Fuel Farm	Date : 2013-07-22	
Project # :	OP-84541-J /VD3356	Doc #:	VD3356-003-RV-09
Prepared by :	Michaël Racine	Contractor :	Fernand Gilbert Ltée
Verified by :	Richard Marcoux, ing.	Temperature :	8 à 15°C Wind : 5 à 10 km/h

Object : Contractor's schedule (approximative hours)

Labour and machinery	Company	Working hours
Shovel CAT 365C L	FGL	0
Shovel CAT 320	FGL	2.5
Bulldozer Komat'su 39px	FGL	0
Operator	FGL	5.5
Surveyor	FGL	5.5
Roller compactor Hamm 3625	FGL	0
Field inspector	Stavibel	12

- **16h à 18h30** Shovel 320 digs the ditch around the pad.

Comments :

- Cross shift. No activity on the field before 16h. I make a roundtrip to Meadowbank to go get the new operator and surveyor.
- Volumes of material hauled by BLCS :

	2013-07-15		2013-07-16		2013-07-17		2013-07-20		2013-07-21		Cumulative	
	load	volume	load	volume	load	volume	load	volume	load	volume	load	volume
Muck quarry 1	24	391,2	34	554,2	14	228,2					72	**1173,6**
0-3/4" BLCS		0		0	15	244,5	7	114,1	3	48,9	15	**407,5**

- Photo #1 – Excavation of the north ditch to the frost. There is a groundwater artery.



Par : _____
Michaël Racine, tech.

_____
Richard Marcoux, ing.
No OIQ : 38724
Project manager

AGNICO EAGLE

RAPPORT DE VISITE DE CHANTIER

STAVIBEL

Title of project :	Baker Lake Jet-A Fuel Farm	Date : 2013-07-23	
Project # :	OP-84541-J /VD3356	Doc #:	VD3356-003-RV-10
Prepared by :	Michaël Racine	Contractor :	Fernand Gilbert Ltée
Verified by :	Richard Marcoux, ing.	Temperature :	8 à 15°C Wind : 5 à 10 km/h

Object : Contractor's schedule (approximative hours)

Labour and machinery	Company	Working hours
Shovel CAT 365C L	FGL	0
Shovel CAT 320	FGL	9
Bulldozer Komat'su 39px	FGL	1
Operator	FGL	12
Surveyor	FGL	12
Roller compactor Hamm 3625	FGL	5
Truck CAT 740	BLCS	32.6 m3
Field inspector	Stavibel	12

- **6h30 à 11h** Shovel 320 places the 0-20mm crushed stone.
- **8h à 9h** Truck CAT 740 hauls the 0-20mm cruched stone.
- **11h à 12h** Bulldozer 39px places the 0-20mm cruched stone.
- **12h à 15h** Shovel 320 finishes the mini dike and builds the key for the membrane.
- **15h à 18h30** Shovel 320 builds the acces road for the pump house.

Comments :

- Volumes of material hauled by BLCS :

	2013-07-15		2013-07-16		2013-07-17		2013-07-20		2013-07-21		2013-07-23		Cumulative	
	load	volume	load	volume	load	volume	load	volume	load	volume	load	volume	load	volume
Muck	24	391,2	34	554,2	14	228,2							72	**1173,6**
0-3/4"					15	244,5	7	114,1	3	48,9	2	32,6	15	**440,1**

- Photo #1 – Overview of the pond ready for the geotextile and the bituminous geomembrane.



- Photo #2 – Small key trench for the membrane.



- Photo #3 – Construction of the access road for the pump house.



- Photo #4 – Arrival of 11 tanks of 100 000L and 2 tanks of 50 000L on the barge.



Par : _____
Michaël Racine, tech.

_____
Richard Marcoux, ing.
No OIQ : 38724
Project manager

AGNICO EAGLE

RAPPORT DE VISITE DE CHANTIER

STAVIBEL

Title of project :	Baker Lake Jet-A Fuel Farm	Date : 2013-07-24	
Project # :	OP-84541-J /VD3356	Doc #:	VD3356-003-RV-11
Prepared by :	Michaël Racine	Contractor :	Fernand Gilbert Ltée
Verified by :	Richard Marcoux, ing.	Temperature :	15 à 23°C Wind : 5 à 20 km/h

Object : Contractor's schedule (approximative hours)

Labour and machinery	Company	Working hours
Shovel CAT 365C L	FGL	0
Shovel CAT 320	FGL	0
Bulldozer Komat'su D39px	FGL	1
Operator	FGL	12
Surveyor	FGL	12
Roller compactor Hamm 3625	FGL	0
3 labours	FGL	4
2 membrane installers	Texcel	3.5
Shovel CAT 307	AEM	4.5
Field inspector	Stavibel	12

- **6h30 à 7h30** Stand by
- **7h30 à 12h** Shovel 307 cleans the membrane in previson of the reparations between the existing diesel tanks #1 and 2.
- **8h à 12h** 3 labours place the crushed stone 0-20 mm crushed stone to make sure the foundation for the bituminous geomembrane is flat.
- **17h à 18h** Bulldozer 39px places the 0-20mm crushed stone on the access road for the pump house.

Comments:

- The membrane installers arrive at 15h.

Par : _____
Michaël Racine, tech.

_____
Richard Marcoux, ing.
No OIQ : 38724
Project manager

AGNICO EAGLE

RAPPORT DE VISITE DE CHANTIER

STAVIBEL

Title of project :	Baker Lake Jet-A Fuel Farm	Date : 2013-07-25	
Project # :	OP-84541-J /VD3356	Doc #:	VD3356-003-RV-12
Prepared by :	Michaël Racine	Contractor :	Fernand Gilbert Ltée
Verified by :	Richard Marcoux, ing.	Temperature :	15 à 24°C Wind : 5 à 20 km/h

Object : Contractor's schedule (approximative hours)

Labour and machinery	**Company**	**Working hours**
Shovel CAT 365C L	FGL	9
Shovel CAT 320	FGL	0
Bulldozer Komat'su 39px	FGL	0
Roller compactor Hamm 3625	FGL	0
Operator	FGL	12
Surveyor	FGL	12
3 Labours	FGL	12
Vibratory plate (small)	BLCS	1 jour
2 membrane installers	Texcel	12
Field inspector	Stavibel	12

- **6h30 à 11h30** Shovel 365 places the geotextile and failed attempt for the installation of the bituminous geomembrane.
- **11h30 à 16h30** Stand by
- **16h30 à 20h** Shovel 365 places the bituminous geomembrane.

Comments :

- Impossible to place the membrane with the membrane rack available. Waiting for the rack with bearings to roll out the membrane from 11h30 to 16h30. The wasted time is catched up after souper.

- Photo #1 – Compaction of the slopes with the vibratory plate to avoid rock punching in the membrane.



- Photo #2 – Placing the geotextile and the bituminous geomembrane.



Par : _____
Michaël Racine, tech.

_____
Richard Marcoux, ing.
No OIQ : 38724
Project manager

AGNICO EAGLE

RAPPORT DE VISITE DE CHANTIER

STAVIBEL

Title of project :	Baker Lake Jet-A Fuel Farm	Date : 2013-07-26	
Project # :	OP-84541-J /VD3356	Doc #:	VD3356-003-RV-13
Prepared by :	Michaël Racine	Contractor :	Fernand Gilbert Ltée
Verified by :	Richard Marcoux, ing.	Temperature :	15 à 26°C Wind: 5 à 20 km/h

Object : Contractor's schedule (approximative hours)

Labour and machinery	**Company**	**Working hours**
Shovel CAT 365C L	FGL	4.5
Shovel CAT 320	FGL	0
Bulldozer Komat'su 39px	FGL	0
Roller compactor Hamm 3625	FGL	0
Operator	FGL	12
Surveyor	FGL	12
3 labours	FGL	12
2 membrane installers	Texel	12
Field inspector	Stavibel	12

- **6h30 à 18h30** 4 labours (FGL) et 2 labours (Texcel) place the bituminous geomembrane.
- **6h30 à 9h** Shovel 365 places the bituminous geomembrane.
- **9h à 12h** Shovel 320 works on another project for the diesel fuel tanks.
- **13h à 15h** Shovel 365 places the bituminous geomembrane.
- **15h à 16h** Shovel 320 works on another project for the diesel fuel tanks.
- **16h à 18h30** Shovel 365 places the bituminous geomembrane.

Comments :

- Photo #1 – Placing the bituminous geomembrane with a geotextile under.



- Photo #2 – Reparation of hole in the bituminous geomembrane.



Par : _____
Michaël Racine, tech.

_____
Richard Marcoux, ing.
No OIQ : 38724
Project manager

AGNICO EAGLE

RAPPORT DE VISITE DE CHANTIER

STAVIBEL

Title of project :	Baker Lake Jet-A Fuel Farm	Date : 2013-07-27	
Project # :	OP-84541-J /VD3356	Doc #:	VD3356-003-RV-14
Prepared by :	Michaël Racine	Contractor :	Fernand Gilbert Ltée
Verified by :	Richard Marcoux, ing.	Temperature :	15 à 23°C Wind : 0 à 10 km/h

Object : Contractor's schedule (approximative hours)

Labour and machinery	**Company**	**Working hours**
Shovel CAT 365C L	FGL	5.5
Shovel CAT 320	FGL	0
Bulldozer Komat'su 39px	FGL	0
Roller compactor Hamm 3625	FGL	0
Operator	FGL	12
Surveyor	FGL	12
3 Labours	FGL	4
Generator 6000 W	BLCS	1 jour
Truck Cat 740	BLCS	55.2 m3
2 membrane installers	Texel	6.5
Field inspector	Stavibel	12

- **6h30 à 12h** Shovel 365 et 2 labours (Texcel) place the bituminous geomembrane.
- **6h30 à 10h30** 3 labours (FGL) place the bituminous geomembrane.
- **13h à 15h** 2 labours (Texcel) test the resistance of the welds in the bituminous geomembrane.
- **13h à 18h30** Operator and surveyor (FGL) stand by.
- **17h à 18h30** Truck CAT 740 hauls the 0-20mm crushed stone.

Comments :

- Inspection of the membrane.
- The 0-20 mm crushed stone produce by BLCS for the pad above the bituminous geomembrane is non- compliant. It contains particules up to 1-1/2". The material is rescreened and the placing of the 0-20 mm crushed stone begins at the end of the day.
- I inspect the membrane before filling above to make sure that no hole and no punching remains. Small rocks are detected under the membrane. Pieces of membrane are added on it.

- Survey of a load of 0-20 mm crushed stone. The result is 18.4 m3/load. Here are the corrected quantities according to this new volume:

	0-3/4"		Muck quarry 1	
	load	volume (m3)	load	volume (m3)
2013-07-15			24	441,6
2013-07-16			34	625,6
2013-07-17	15	276	14	257,6
2013-07-20	7	128,8		
2013-07-21	3	55,2		
2013-07-23	2	36,8		
2013-07-27	3	55,2		
Cumulative	30	**552**	72	**1324,8**

- Photo #1 – Installing the bituminous geomembrane with a geotextile under.

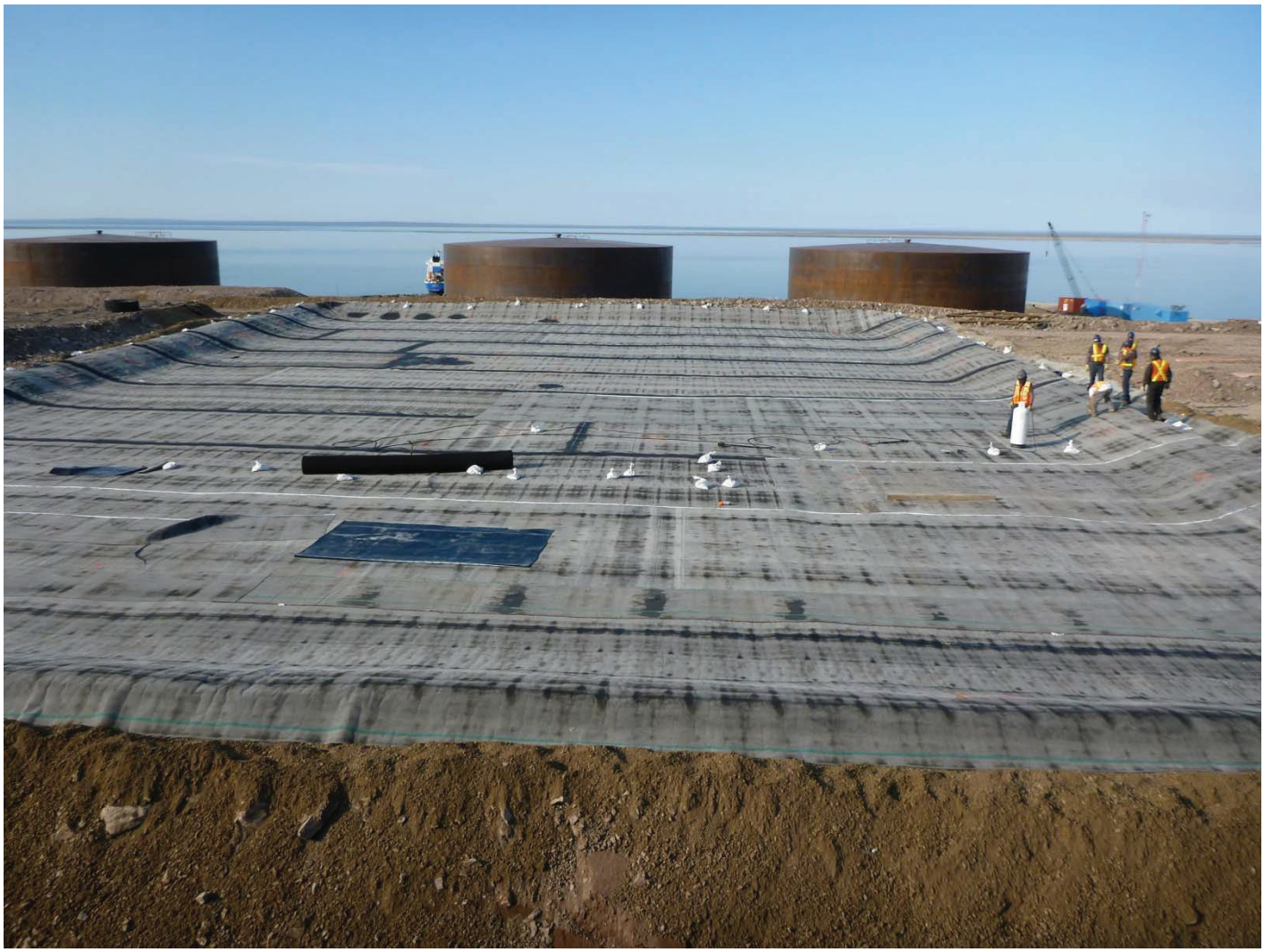

- Photo #2 – Sampling of Colétanche in place to test the welds resistance with the tensometer. The results are compliant according to the Texel membrane installers.

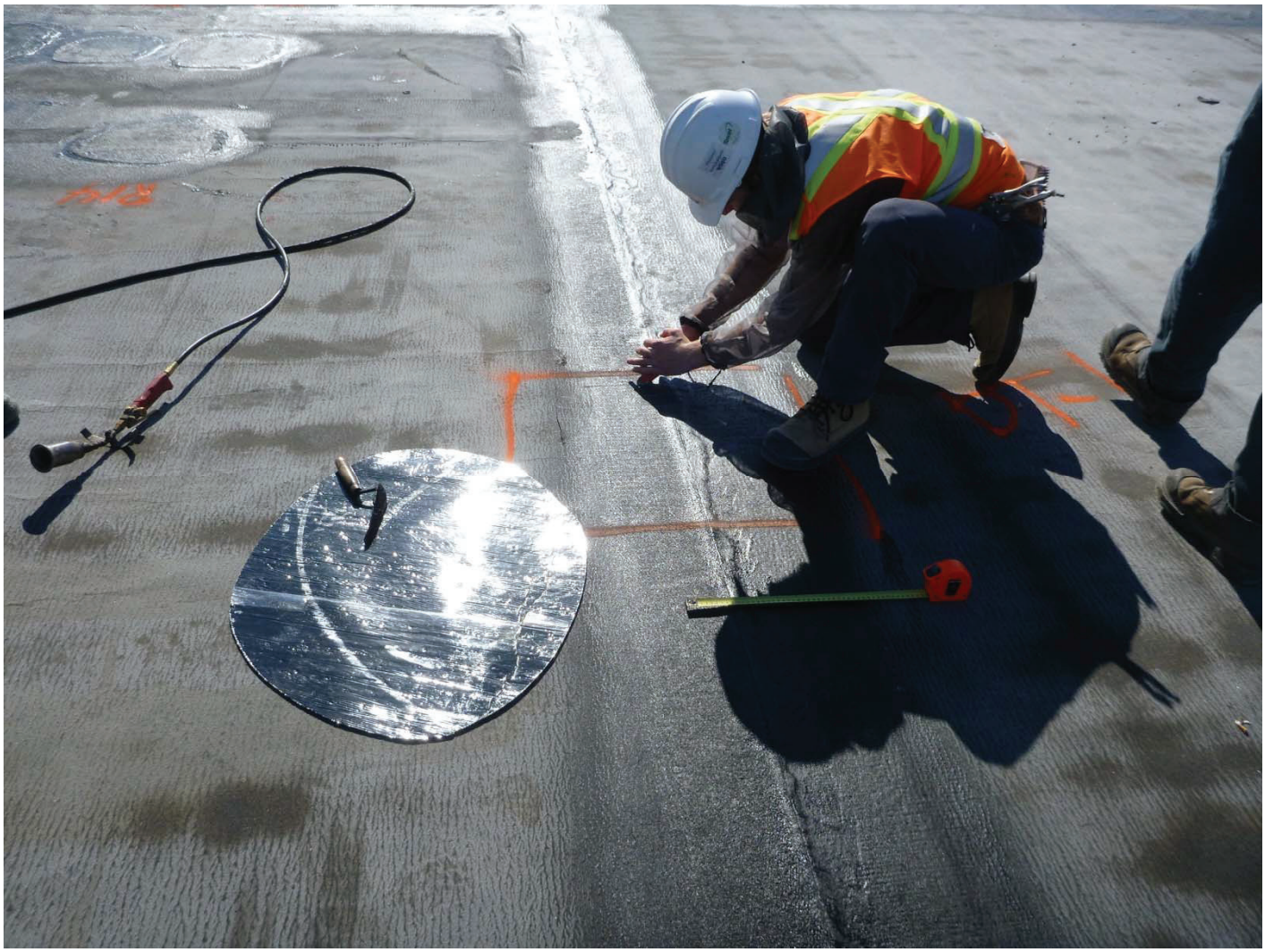

- Photo #3 – Inspection of the membrane. Small proeminent rocks (10mm and less) are detected at some place under the membrane. A second tickness of colétanche is added on these spots to make sure there will not be any punching.



Par : _____
Michaël Racine, tech.

_____
Richard Marcoux, ing.
No OIQ : 38724
Project manager

AGNICO EAGLE

RAPPORT DE VISITE DE CHANTIER

STAVIBEL

Title of project :	Baker Lake Jet-A Fuel Farm	Date : 2013-07-28	
Project # :	OP-84541-J /VD3356	Doc #:	VD3356-003-RV-15
Prepared by :	Michaël Racine	Contractor :	Fernand Gilbert Ltée
Verified by :	Richard Marcoux, ing.	Temperature :	15 à 23°C Wind : 0 à 10 km/h

Object : Contractor's schedule (approximative hours)

Labour and machinery	**Company**	**Working hours**
Shovel CAT 365C L	FGL	8
Shovel CAT 320	FGL	0
Bulldozer Komat'su 39px	FGL	2
Roller compactor Hamm 3625	FGL	0
Operator	FGL	12
Surveyor	FGL	12
Truck Cat 740	BLCS	239.2 m3
Shovel Cat 307	AEM	1
Field inspector	Stavibel	12

- **6h30 à 18h30** Shovel 365, Shovel 320 et Bulldozer 39px (alternating) place the 0-20mm crushed stone on the bituminous geomembrane.
- **8h à 18h30** Truck CAT 740 hauls the 0-20mm crushed stone.

Comments :

- After comparison of the specs of the shovel CAT 307 and the bulldozer Komat'su 39px, we decide to use the bulldozer instead of the shovel 307. The ground pressure is 33.34 kPa (with the bulldozer) instead of 32.3 kPa (with the shovel).
- Big waiting time for the BLCS material. Only 1 truck. Around 2 loads/hour.

- Summary of the volumes hauled by BLCS (18.4 m^3/load) :

	0-3/4"		Muck quarry 1	
	load	volume (m3)	load	volume (m3)
2013-07-15			24	441,6
2013-07-16			34	625,6
2013-07-17	15	276	14	257,6
2013-07-20	7	128,8		
2013-07-21	3	55,2		
2013-07-23	2	36,8		
2013-07-27	3	55,2		
2013-07-28	13	239,2		
Cumulative	43	**791,2**	72	**1324,8**

- Photo #1 – Sreening of the 0-20mm and loading of the trucks at the Nuna Pad (BLCS).



- Photo #2 – Placing the 0-20mm above the bituminous geomembrane. A geotextile is place before.



Par : _____
Michaël Racine, tech.

_____
Richard Marcoux, ing.
No OIQ : 38724
Project manager

AGNICO EAGLE

RAPPORT DE VISITE DE CHANTIER

STAVIBEL

Title of project :	Baker Lake Jet-A Fuel Farm	Date : 2013-07-29	
Project # :	OP-84541-J /VD3356	Doc #:	VD3356-003-RV-16
Prepared by :	Michaël Racine	Contractor :	Fernand Gilbert Ltée
Verified by :	Richard Marcoux, ing.	Temperature :	15 à 17°C Wind : 20 à 30 km/h

Object : Contractor's schedule (approximative hours)

Labour and machinery	**Company**	**Working hours**
Shovel CAT 365C L	FGL	7.5
Shovel CAT 320	FGL	0
Bulldozer Komat'su 39px	FGL	3.5
Rolle compactor Hamm 3625	FGL	0
Operator	FGL	12
Surveyor	FGL	12
Truck Cat 740	BLCS	257.6 m3
Shovel Cat 307	AEM	0
Field inspector	Stavibel	12

- **6h30 à 18h30** Shovel 365 et Bulldozer 39px (alterning) place the 0-20mm on the bituminous geomembrane.
- **7h à 18h30** Camion CAT 740 hauls the 0-20mm.

Comments :

- Big waiting time for the BLCS material. Only 1 truck. About 40 minutes between loads.
- The BLCS crusher is out of use. The 0-20mm will be make entirely by the screener.

- Summary of the volumes hauled by BLCS (18.4 m^3/load) :

	0-3/4"		Muck quarry 1	
	load	volume (m3)	load	volume (m3)
2013-07-15			24	441,6
2013-07-16			34	625,6
2013-07-17	15	276	14	257,6
2013-07-20	7	128,8		
2013-07-21	3	55,2		
2013-07-23	2	36,8		
2013-07-27	3	55,2		
2013-07-28	13	239,2		
2013-07-29	14	257,6		
Cumulative	57	**1048,8**	72	**1324,8**

- Photo #1 – Lot of particules bigger than 20mm in the 0-20mm brought by BLCS. We advise BLCS to check the sreener. Indeed, there was a gap on the side of the sreen because of a missing inner bar. After the reparation of the screener, there is still presence of particules up to 100mm in the material from an unknow source. We remove them by hand on the field, but there is still a lot of rocks around 1 1/2" big.



- Photo #2 – Placing the 0-20mm above the bituminous geomembrane. A geotextile is placed before.



Par : _____
Michaël Racine, tech.

_____
Richard Marcoux, ing.
No OIQ : 38724
Project manager

AGNICO EAGLE

RAPPORT DE VISITE DE CHANTIER

STAVIBEL

Title of project :	Baker Lake Jet-A Fuel Farm	Date : 2013-07-30	
Project # :	OP-84541-J /VD3356	Doc #:	VD3356-003-RV-17
Prepared by :	Michaël Racine	Contractor :	Fernand Gilbert Ltée
Verified by :	Richard Marcoux, ing.	Temperature :	15 à 17°C Wind : 20 à 30 km/h

Object : Contractor's schedule (approximative hours)

Labour and machinery	Company	Working hours
Shovel CAT 365C L	FGL	7
Shovel CAT 320	FGL	0
Bulldozer Komat'su 39px	FGL	4
Roller compactor Hamm 3625	FGL	0
Operator	FGL	12
Surveyor	FGL	12
Truck Cat 740	BLCS	202.4 m3
Shovel Cat 307	AEM	0
Field inspector	Stavibel	12

- **6h30 à 18h30** Shovel 365 and Bulldozer 39px (alterning) place the 0-20mm on the bituminous geomembrane.
- **8h à 18h00** Truck CAT 740 hauls the 0-20mm.

Comments :

- Big waiting time for the BLCS material. Only 1 truck. About 40 minutes between loads.
- The BLCS crusher is out of use. The 0-20mm will be make entirely by the screener.
- Taking of 2 samples of 0-20mm on the field and 1 more sample in the BLSC stockpile at the Nuna Pad.

- Summary of the volumes hauled by BLCS (18.4 m^3/load) :

	0-3/4"		Muck quarry 1	
	load	volume (m3)	load	volume (m3)
2013-07-15			24	441,6
2013-07-16			34	625,6
2013-07-17	15	276	14	257,6
2013-07-20	7	128,8		
2013-07-21	3	55,2		
2013-07-23	2	36,8		
2013-07-27	3	55,2		
2013-07-28	13	239,2		
2013-07-29	14	257,6		
2013-07-30	11	202,4		
Cumulative	68	**1251,2**	72	**1324,8**

- Photo #1 – I mesured the mesh size of the BLCS screener. The opening of 30mm explain the presence of particules higher than 20 mm. BLCS affirmed that they don't have a smaller screen on July 27th when they change the screen. Also, there is still several rocks up to 100 mm in the 0-20 mm. We remove them by hand on the field.





- Photo #2 – Placing the 0-20mm above the bituminous geomembrane. A geotextile is placed before.



- Photo #3 – Compaction test with the roller compacter Hamm 3625 on low vibration directly on the 0-20mm uncompacted and without any covering above. Not any hole nor any deformation are noticed on the bituminous geomembrane. The decision is taken to use the roller compactor for the compaction of the pad above the Colétanche membrane.



Par : _____
Michaël Racine, tech.

_____
Richard Marcoux, ing.
No OIQ : 38724
Project manager

AGNICO EAGLE

RAPPORT DE VISITE DE CHANTIER

STAVIBEL

Title of project :	Baker Lake Jet-A Fuel Farm	Date : 2013-07-31	
Project # :	OP-84541-J /VD3356	Doc #:	VD3356-003-RV-18
Prepared by :	Michaël Racine	Contractor :	Fernand Gilbert Ltée
Verified by :	Richard Marcoux, ing.	Temperature :	15 à 17°C Wind : 20 à 30 km/h

Object : Contractor's schedule (approximative hours)

Labour and machinery	**Company**	**Working hours**
Shovel CAT 365C L	FGL	5
Shovel CAT 320	FGL	4.5
Bulldozer Komat'su 39px	FGL	1.5
Roller compactor Hamm 3625	FGL	2
Operator	FGL	12
Surveyor	FGL	12
Truck Cat 740	BLCS	33.8 m3
Water tanker	Hamlet	2
Shovel Cat 307	AEM	0
Field inspector	Stavibel	12

- **6h30 à 10h** Shovel 365 and Bulldozer 39px (alterning) place the 0-20mm on the bituminous geomembrane.
- **8h30 à 10h30** Water tanker moistens the 0-20mm using a total of 15234 L of water.
- **10h30 à 13h30** Compactor compacts the pad of 0-20mm.
- **10h à 14h** Shovel 365 moves the contaminated stockpile to profile better the ditch.
- **14h à 18h30** Shovel 320 backfills the small key trench for the bituminous geomembrane and installs a steel pipe for the electric wire feeding the pump house..

Comments :

- Departure of the field inspector (myself) on August 1st around 7h.

- Survey of 42 loads of 0-20mm in place uncompacted. Here is the summary of the volumes haules by BLCS (estimate with an average of 16.9 m^3/load) :

	0-3/4"		Muck quarry 1	
	load	volume (m3)	load	volume (m3)
2013-07-15			24	405,6
2013-07-16			34	574,6
2013-07-17	15	253,5	14	236,6
2013-07-20	7	118,3		
2013-07-21	3	50,7		
2013-07-23	2	33,8		
2013-07-27	3	50,7		
2013-07-28	13	219,7		
2013-07-29	14	236,6		
2013-07-30	11	185,9		
2013-07-31	2	33,8		
Cumulative	70	**1183**	72	**1216,8**

- Photo #1 – Moistening and compaction of the 0-20mm. Compaction: 2 static passes, 1 vibratory pass in each direction and 2 last static passes.



- Photo #2 – Installation of a steel pipe with a rope inside in prevision of passing the electric wire to the pump house.



- Photo #3 – Overview of the second containment system ready to take the Jet-A tanks.



Par : _____
Michaël Racine, tech.

_____
Richard Marcoux, ing.
No OIQ : 38724
Project manager

Appendix A5

Construction Summary Report: Baker Lake Fuel Storage Tank 7 and Containment Facilities (2020)

SNC·LAVALIN
Building what matters

CONSTRUCTION SUMMARY REPORT
Baker Lake Fuel Storage Tank 7 and Containment Facilities

Agnico Eagle Mines Ltd

Report

653281-0004-40ER-0005_0

January 17, 2020

Authorized Signatory:



2020-01-16

Israël Gagnon, P.Eng., MBA
Mechanical engineer

EXECUTIVE SUMMARY

SNC Lavalin Stavibel Inc. was retained by Agnico Eagle Mines Limited to prepare a construction summary (as built) report for the fuel storage tank and containment facilities of the Meadowbank Gold Project, Nunavut. SNC Lavalin Stavibel Inc. previously prepared the construction drawings and specifications as well as the design report for the fuel storage tank and containment facilities.

SNC Lavalin Stavibel Inc. wasn't involved in the construction of the fuel storage tank and containment facilities, the information presented in this report was provided in part by Agnico Eagle.

The construction of the fuel storage tank and containment facilities were completed in September 2019. The construction monitoring and quality assurance was managed by Agnico Eagle.

This report summarizes the construction as-built information for the fuel storage tank and containment facilities.

Table of contents

1. Introduction 4

2. Construction Summary 4

2.1 Site location plan 4
2.2 Fuel tank size 5
2.3 Tank Foundations Design 5
2.4 Berms Design 5
2.5 Secondary Containment Capacity 6
2.6 Secondary Containment Imperviousness 7
2.7 Secondary Containment Drainage 7
2.8 Drawings and photographs 7
2.9 Time line 7

3. Field decisions 7

3.1 Equipment and controls 7
3.2 Piping 7

4. Mitigation measure 8

5. Construction monitoring and inspection test plan 8

5.1 Membrane 8
5.2 Tank weld 8

Appendices

Appendix A Final Construction drawings
Appendix B As built drawings
Appendix C Photographs
Appendix D Fuel tank handover package

© 2016 SNC-Lavalin Inc. All rights reserved. Confidential.

1. Introduction

This document presents the fuel storage tank 7 and containment facilities construction summary report required by the Water Licence 2AM-MEA1526 Part D Item 14 and Part G Item 4. As required by Water Licence Schedule D, this report contains the final design and construction drawings, a summary of construction activities including pictures recorded before, during and after construction. The as-built drawings, detailed explanation of field decision to reflect any deviations from the original construction drawings/plans and how such deviations may affect performance of engineered structures, a discussion of the mitigation measures implemented during construction and its effectiveness are also presented.

2. Construction Summary

2.1 Site location plan

Agnico Eagle is developing the Whale Tail Project in the Kivalliq Region of Nunavut (65°24'25" N, 96°41'50" W). The 99,878-hectare Amaruq property is located on Inuit-owned and federal crown land, approximately 55 km north of the Meadowbank mine. The Meadowbank mine is accessible from Baker Lake, located 70 kilometers to the south. The Baker Lake Bulk Fuel Storage Tank Facility is located east of the hamlet of Baker Lake, on the north shore of Baker Lake.



Figure 1 – Baker Lake Fuel Farm Site Overview (tank 7 in construction)

© 2016 SNC-Lavalin Inc. All rights reserved. Confidential.

2.2 Fuel tank size

Baker Lake fuel farm now includes seven (7) fuel storage tank. This report is base on the seventh tank built in spring/summer 2019.

The Table 1 below presents the tank main dimensions.

Table 1 – Description of the fuel farm

Fuel farm Description	Baker Lake fuel tank 7
Product	Diesel
Volume (liter)	10 M
Diameter (m)	33.5
Height (m)	12.2

The detailed design of the Fuel Farm is presented in drawings in Appendix A.

2.3 Tank Foundations Design

The tank foundation pad is built 2 meters lower than the surrounding ground with a minimum total thickness of 800 mm of compacted material which includes the liner system. A 3 m shoulder surround the tank with a slope of 1V:2H away from the tank. The embankments of the foundation pad are no steeper than 1V:2H.

The Table 2 below presents the design parameters for the tank foundations.

Table 2 – Design parameters for the tank foundations

Tank Foundation Pad	
Tank Diameter (m)	33.5
Tank foundation pad top (m)	2x 18.0 x 18.0
Tank foundation pad average thickness, above surrounding ground (m)	1.2
Slope on shoulder	1V:2H
Embankment slope	1V:2H

2.4 Berms Design

The storage tank is enclosed inside berms to contain accidental spillage of fuel product. The berms are made of granular material and are made impervious with a geomembrane.

The design parameters for the berms surrounding the fuel tank are presented in the table below.

© 2016 SNC-Lavalin Inc. All rights reserved. Confidential.

Table 3 - Design parameters for fuel farm Berms

Tank Farm Berms	
Berms length (distance between the outer sides of the Berms) (m)	125
Berms width (distance between the outer sides of the Berms) (m)	71
Berms height (min) (m)	3
Containment height (m)	2
Berms flat top width (m)	1.5
Berms embankment slope	1V:2H
Impervious area (m^2)	10 000

2.5 Secondary Containment Capacity

The required capacity of the fuel farms new section was calculated based on the following codes and regulations:

- National Fire Code of Canada (NFCC);
- National Fire Protection Association (NFPA); and
- Design Rationale for Fuel Storage and Distribution Facility (DRFS).

As per the latest edition of NFCC, art. 4.3.7.3, the required secondary containment capacity for a fuel farm must have a volumetric capacity of not less than the sum of:

- A) The capacity of the largest storage tank located in the contained space, and;
- B) 10% of the greater of:
    i. The capacity specified in Clause (A), or;
    ii. The aggregate capacity of all other storage Tanks located in the contained space.

The volume occupied by the Tank foundation is considered in the total secondary containment capacity. The height of the secondary containment capacity is 300 mm lower than the berms' maximum elevation. Based on the above-mentioned, the secondary containment capacity requirements and the available capacity for fuel farms are summarized in the Table 4.

Table 4 – Fuel farm new section containment capacity

New section	
Volume (liter)	20 M (2X 10M)
Required Containment Capacity (liter)	11 M
Available Containment Capacity (liter)	20M

© 2016 SNC-Lavalin Inc. All rights reserved. Confidential.

2.6 Secondary Containment Imperviousness

As per NFCC art. 4.3.7.2, the base and walls of the fuel farms secondary containment are designed, constructed and maintained to withstand full hydrostatic head and provide a permeability of not more than 10^{-6} cm/s to the flammable liquids or combustible liquids contained in the storage tank. The berm is impervious to avoid any seepage into the environment. A 5.10 mm ES-2 Coletanche geomembrane provide adequate imperviousness.

2.7 Secondary Containment Drainage

The finished grade of the secondary containment is sloped away from the Tank to drain the runoff water. The bottom of the berms surface is built with slopes that will allow accidental spills to be concentrated at a low point. A drainage basin located at the low point allows the recovery by pumping accumulations of rainwater and accidental spills.

2.8 Drawings and photographs

Fuel farm tank and containment final design and construction drawings are available in the Appendix A, construction pictures are available in Appendix C.

2.9 Timeline

The baker lake fuel storage tank number 7 and containment facility where built in 2019. Civil and earth work started on April 2019, followed by tank and piping fabrication in August 2019. Construction work were finalised on September 17th, 2019.

3. Field decisions

3.1 Equipment and controls

Equipment where build in containers and installed without modification on site document 6120-C-260-001-REP-001 Fuel Tank Storage and Containment Facilities Design Report and Drawings, present the rational and decisions that led to its construction. No modifications were performed, and the Fuel storage tank and containment facilities are operational as they were designed.

3.2 Piping

Piping between filling and distributing container and the fuel tank respect the point to point design. The piping isn't exactly as per drawing (can be seen on photos in Appendix C) but respect the P&ID. As built drawings can be consulted in Appendix B.

© 2016 SNC-Lavalin Inc. All rights reserved. Confidential.

4. Mitigation measure

Quarrying activities to build the berm was at Quarry #2 situated at KM 13 on AWAR. No blast were done on the construction site. During the fuel storage tank and containment facilities construction, no sediments were released in water from construction areas and no water was used to manage dust emissions from construction activity.

5. Construction monitoring and inspection test plan

5.1 Membrane

The manufacture and supply of the liner system for the fuel farm comply with ASTM standard. The manufacturer provided a certification stating that the material proposed has physical properties that meet the required values. The rolls of liner were labelled, packaged, shipped, off-loaded, stored and handled by appropriate means to prevent damage to the material.

The subgrade surface was inspected by an engineer to verify suitability prior to installation of the liner system. A minimum thickness of fill covering the liner is maintained for operating equipment over the liner to prevent any damage. The installation of the liner system was performed by a qualified technician. All seaming, patching, welding operations, and testing were performed by a qualified technician. Joints/seams between liners panels were welded using the manufacturer's recommended procedures and equipment. The backfill material was placed in accordance with the drawings and specifications for the maximum lift thickness, compaction requirements and final grade levels.

During membrane installation, visual testing by a qualified worker was carried. Those tests were done on cooled bitumen. Joints were tested with a round-tipped trowel to ensure that the welds were not separating. All defects were clearly marked for repair.

5.2 Tank weld

During the tank construction, a testing protocol was followed by the construction team. To meet API Standard 650, companies building tank are required to monitor their work trough an inspection program. In this program, the contractor registers welder's qualifications, confirm construction material quality and outlines its testing protocol. The results from weld tests are also registered there. All that information is required by API 650 standard. Testing on welds took place during the whole construction process. To attest welds quality, inspector relied on visual inspection, magnetic particulate tests and high penetration oil tests. To review those tests results, the materials quality and weld inspection results can be consulted in Appendix D.

© 2016 SNC-Lavalin Inc. All rights reserved. Confidential.

Appendix A

Final construction drawing

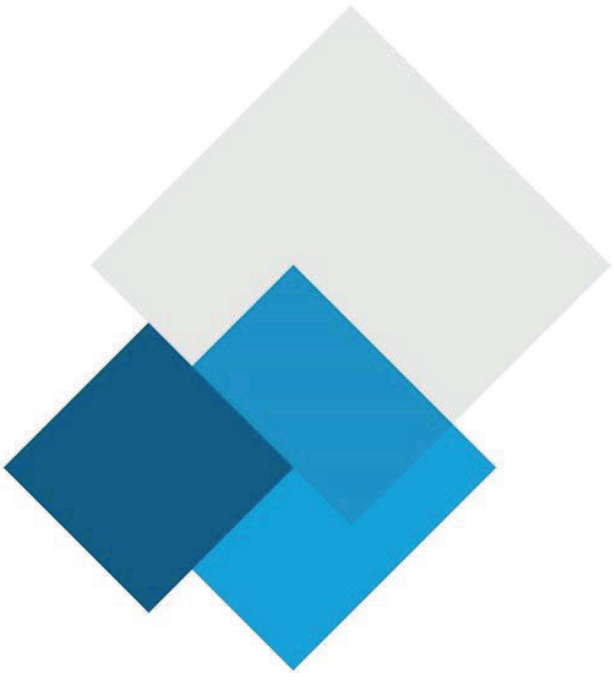

NO. DESSIN DRAWING NO. 61-740-210-201_1RC

FORMAT ARCHD

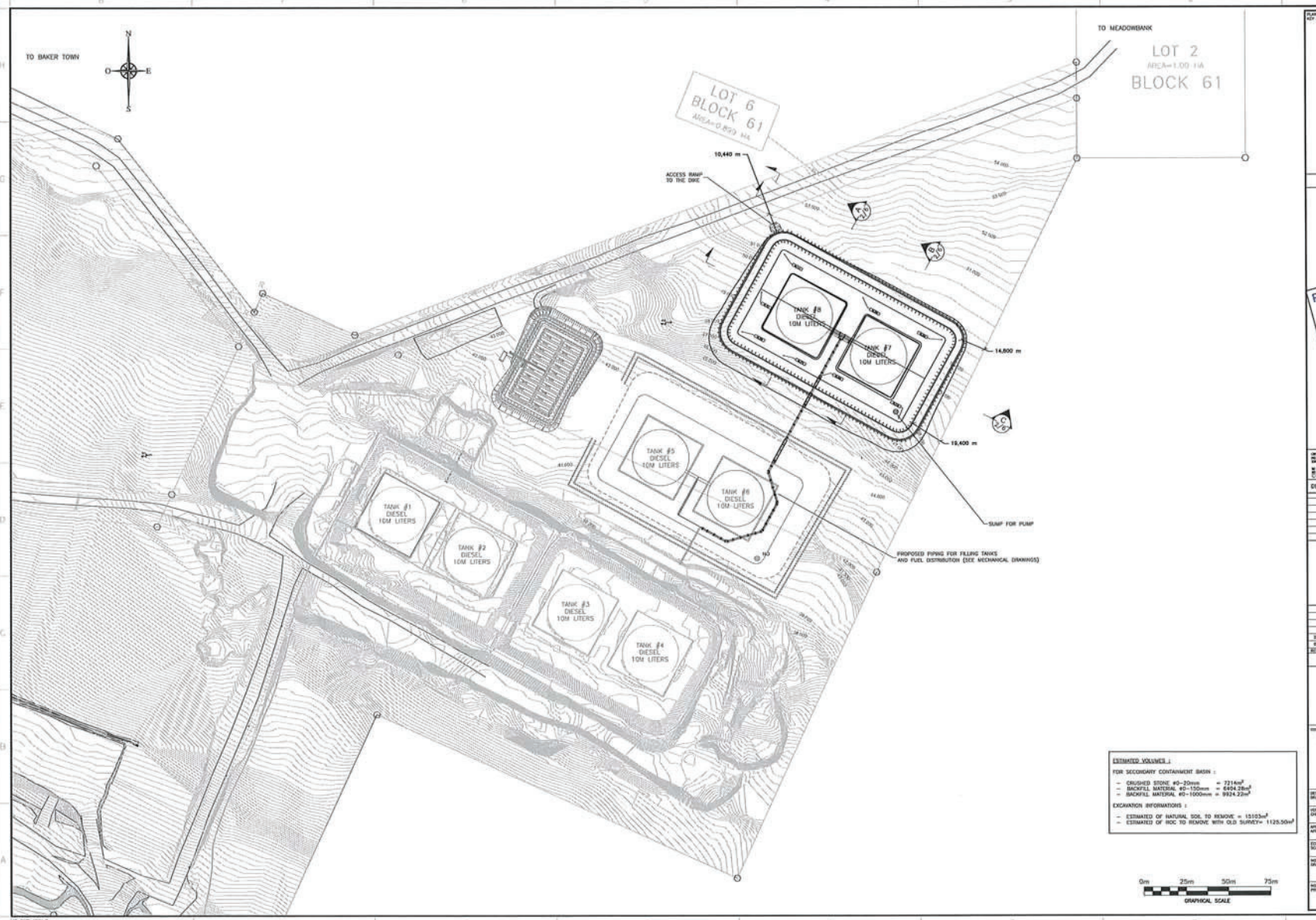

ESTIMATED VOLUMES :

FOR SECONDARY CONTAINMENT BASIN :

- CRUSHED STONE #0-20mm = 7214m³
- BACKFILL MATERIAL #0-150mm = 6404.28m³
- BACKFILL MATERIAL #0-1000mm = 9924.22m³

EXCAVATION INFORMATIONS :

- ESTIMATED OF NATURAL SOIL TO REMOVE = 15103m³
- ESTIMATED OF ROC TO REMOVE WITH OLD SURVEY= 1125.50m³

PLAN CLÉ
KEY PLAN

NOTES GÉNÉRALES / GENERAL NOTES

POUR CONSTRUCTION
FOR CONSTRUCTION
AGNICO EAGLE
DATE : 2019-05-06

DESSINS EN RÉFÉRENCE / REFERENCE DRAWINGS

TITRE / TITLE	# DWG

AGNICO EAGLE

REV	DATE	DESCRIPTION	PAR/BY	APP.	CLIENT
2	2019-05-06	FOR CONSTRUCTION	R.M.	M.H.	–
0	2019-04-04	FOR CONSTRUCTION	R.M.	M.H.	–

REVISIONS

ELECTRONICALLY SIGNED DOCUMENT

2019-05-06

TITRE / TITLE
AGNICO-EAGLE – MEADOWBANK DIVISION
740 BAKER LAKE AREA
GENERAL ARRANGEMENT
PLAN VIEW
10M LITERS TANKS LOCATION
TANKS #7 & #8

DESSINÉ PAR / DRAWN BY	FRANCIS PERRON, TECH.	DATE 2018-12-10
VÉRIFIÉ PAR / CHECKED BY	RICHARD MARCOUX, ING.	2018-12-10
APPROUVÉ PAR / APPROVED BY	MARC HÉNAULT, P. ENG.	2018-12-10
ÉCHELLE / SCALE	1 : 1000	DATE 2018-07-18

NO. DESSIN / DRAWING NO. 61-740-230-200

NO. PROJET / PROJECT NO.	REVISION	FEUILLE / SHT
61	1	1/1

FILE NO. 61-740-230-(200@205)-RD 2019-04-24.dwg

NO. DESSIN DRAWING NO. 61-740-210-201_1RC

FORMAT ARCHD

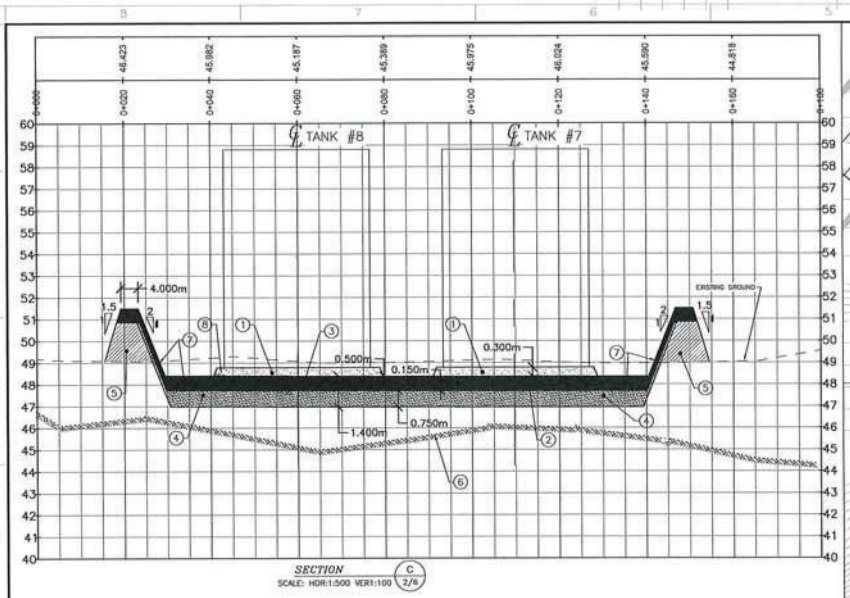

SECTION C 2/6
SCALE: HOR:1:500 VER:1:100

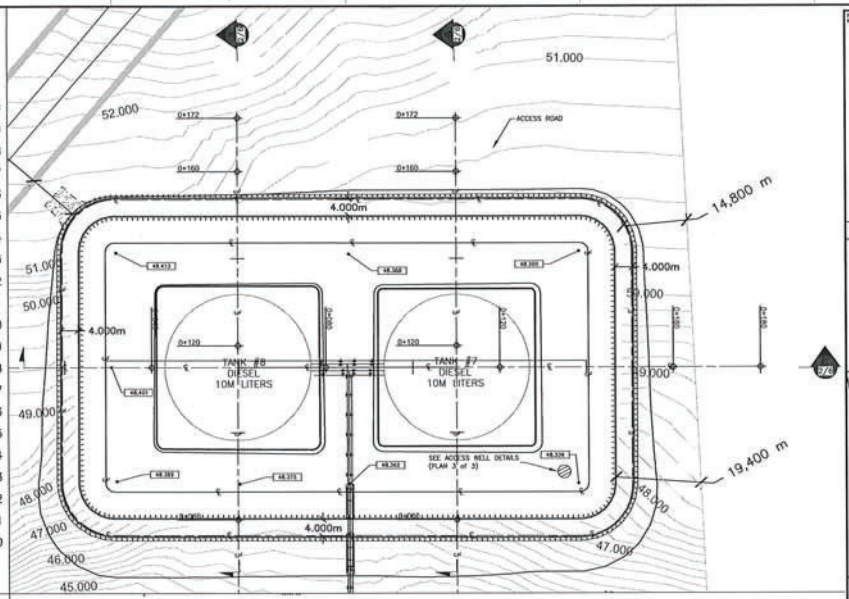

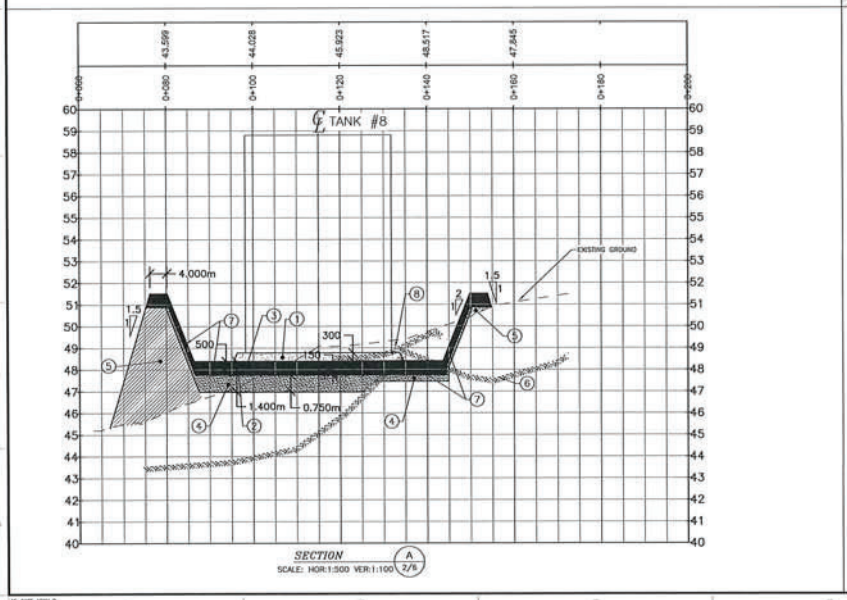

SECTION A 2/6
SCALE: HOR:1:500 VER:1:100

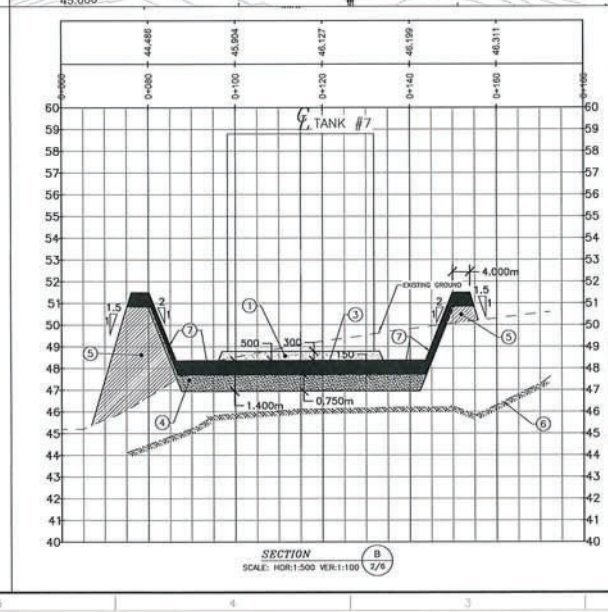

SECTION B 2/6
SCALE: HOR:1:500 VER:1:100

Description	
1 TANKS BEDDING	CRUSHED STONE #0-20mm VARIABLE THICKNESS MINIMUM 300mm COMPACTED TO 95% P.M.
2 MEMBRANE BEDDING	BACKFILL MATERIALS #0-20mm THICKNESS 150mm COMPACTED TO 95% P.M.*
3 MEMBRANE COVER	BACKFILL MATERIALS #0-20mm THICKNESS 500mm COMPACTED TO 95% P.M.*
4 MEMBRANE BEDDING	BACKFILL MATERIALS #0-150mm THICKNESS 750mm MINIMUM ON ROCK AND 1000mm MINIMUM ON NATURAL SOIL, AT THE MAXIMUM LEVEL OF EXCAVATION WHEN THERE IS NO ROCK, COMPACTED TO 95% P.M.*
5 SUBGRADE	BACKFILL MATERIALS #0-1000mm VARIABLE THICKNESS DEPENDING ON THE GROUND LEVEL.
6 BEDROCK	ASSUMED PROFILE OF THE BEDROCK (FROM OLD TOC SURVEY, APPROXIMATIVE TO VALIDATE ON SITE)
7 MEMBRANE SANDWITCH	HDPE TM440 MEMBRANE WITH TWO GEOTEXTILE ONE ABOVE AND THE OTHER BELOW NEEDLEPUNCHED NONWOVEN 3,0mm
8 BEDROCK	BEDROCK PROFILE FROM SURVEY 2019-04-23

* CAUTION : GRANULAR MATERIALS FREE OF PROTRUDING STONES, EVENLY PLACED TO PROVIDE A FLAT SURFACE WITHOUT CAVITIES AND BUMPS, TO ACCOMODATE THE BITUMINOUS MEMBRANE.

ESTIMATED VOLUMES :

FOR SECONDARY CONTAINMENT BASIN :

- CRUSHED STONE #0-20mm = 7214m³
- BACKFILL MATERIAL #0-150mm = 6404.28m³
- BACKFILL MATERIAL #0-1000mm = 9924.22m³

EXCAVATION INFORMATIONS :

- ESTIMATED OF NATURAL SOIL TO REMOVE = 15103m³
- ESTIMATED OF ROC TO REMOVE WITH OLD SURVEY= 1135.50m³

PLAN CLÉ
KEY PLAN

NOTES GÉNÉRALES / GENERAL NOTES

POUR CONSTRUCTION
FOR CONSTRUCTION
AGNICO EAGLE
DATE : 2019-05-06

DESSINS EN RÉFÉRENCE / REFERENCE DRAWINGS

TITRE / TITLE	# DWG

AGNICO EAGLE

REV	DATE	DESCRIPTION	RAD/BY	APP	CLIENT
1	2019-05-06	FOR CONSTRUCTION	R.M.	M.H.	–
0	2019-04-04	FOR CONSTRUCTION	R.M.	M.H.	–

REVISIONS

ELECTRONICALLY SIGNED DOCUMENT
PROFESSIONAL ENGINEER
MARC HÉNAULT
2019-05-06

TITRE / TITLE
AGNICO-EAGLE – MEADOWBANK DIVISION
740 BAKER LAKE AREA
GENERAL ARRANGEMENT
PLAN VIEW AND PROFILE
10M LITERS TANKS LOCATION
TANKS #7 & #8

DESSINÉ PAR DRAWN BY	FRANCIS PERRON, TECH.	DATE 2018-12-10
VÉRIFIÉ PAR CHECKED BY	RICHARD MARCOUX, ING.	2018-12-10
APPROUVÉ PAR APPROVED BY	MARC HÉNAULT, P. ENG.	2018-12-10
ÉCHELLE SCALE	1 : 500	DATE 2018-07-18

NO. DESSIN DRAWING NO. 61-740-230-201

NO. PROJET PROJECT NO.	REVISION	FEUILLE / SHT
61	1	1/1

AE-CART-ARCH D

FILE NO. 61-740-230-(200@202)-RO 2019-04-24.dwg

NO. DESSIN DRAWING NO. 61-740-210-201_1RC

FORMAT ARCH D

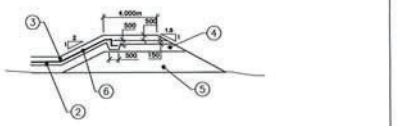

* CAUTION : GRANULAR MATERIALS FREE OF PROTRUDING STONES, EVENLY PLACED TO PROVIDE A FLAT SURFACE WITHOUT CAVITIES AND BUMPS, TO ACCOMODATE THE BITUMINOUS MEMBRANE.

TYPICAL SECTION – DAM

SCALE : NONE

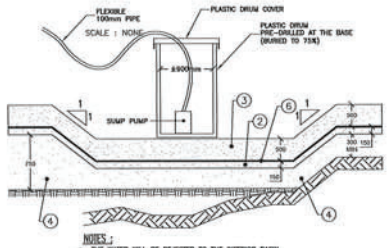

ACCESS WELL FOR DRAINING

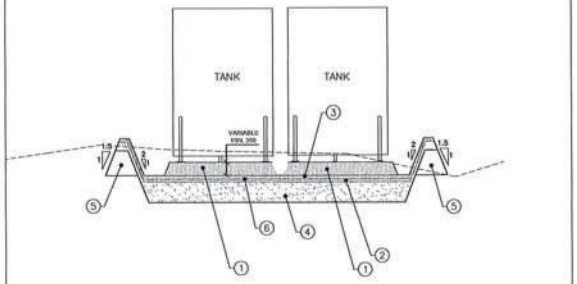

GENERAL CHARACTERISTICS OF A TYPICAL SECTION

SCALE : NONE

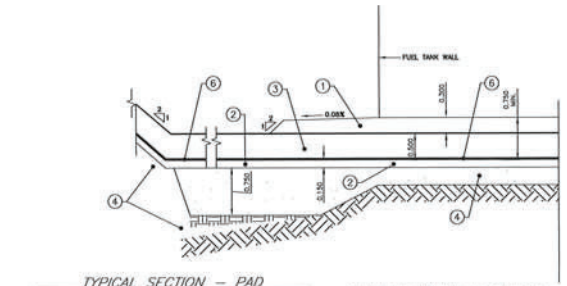

TYPICAL SECTION – PAD

SCALE : NONE

DETAIL 1

* CAUTION : GRANULAR MATERIALS FREE OF PROTRUDING STONES, EVENLY PLACED TO PROVIDE A FLAT SURFACE WITHOUT CAVITIES AND BUMPS, TO ACCOMODATE THE BITUMINOUS MEMBRANE.

Description		
1	TANKS BEDDING	CRUSHED STONE #0-20mm VARIABLE THICKNESS MINIMUM 300mm COMPACTED TO 95% P.M.
2	MEMBRANE BEDDING	BACKFILL MATERIALS #0-20mm THICKNESS 150mm COMPACTED TO 95% P.M.*
3	MEMBRANE COVER	BACKFILL MATERIALS #0-20mm THICKNESS 300mm COMPACTED TO 95% P.M.*
4	MEMBRANE BEDDING	BACKFILL MATERIALS #0-150mm THICKNESS 0mm ON ROCK AND 750mm MINIMUM ON NATURAL SOIL, AT THE MAXIMUM LEVEL OF EXCAVATION WHEN THERE IS NO ROCK, COMPACTED TO 95% P.M.*
5	SUBGRADE	BACKFILL MATERIALS #0-1000mm VARIABLE THICKNESS DEPENDING ON THE GROUND LEVEL
6	MEMBRANE SANDWITCH	TERAMAP HSPE TM449 MEMBRANE WITH TWO GEOTEXTILE ONE ABOVE AND THE OTHER BELOW NEEDLEPUNCHED NONWOVEN 3,0mm

NOTES GÉNÉRALES / GENERAL NOTES

POUR CONSTRUCTION
FOR CONSTRUCTION
AGNICO EAGLE
DATE : 2019-05-06

DESSINS EN RÉFÉRENCE / REFERENCE DRAWINGS

NUMÉRO / NUMBER	TITRE / TITLE	À (DWG)

AGNICO EAGLE

REV.	DATE	DESCRIPTION	PAR/BY	APP.	CLIENT
1	2019-05-06	FOR CONSTRUCTION	R.M.	M.H.	–
0	2019-04-04	FOR CONSTRUCTION	R.M.	M.H.	–

REVISIONS

ELECTRONICALLY SIGNED DOCUMENT

2018-12-10

TITRE / TITLE

AGNICO-EAGLE – MEADOWBANK DIVISION
740 BAKER LAKE AREA
GENERAL ARRANGEMENT
DETAILS
10M LITERS TANKS LOCATION
TANKS #7 & #8

DESSINÉ PAR DRAWN BY	FRANCIS PERRON, TECH.	2018-12-10
VÉRIFIÉ PAR CHECKED BY	RICHARD MARCOUX, ING.	2018-12-10
APPROUVÉ PAR APPROVED BY	MARC HÉNAULT, P. ENG.	2018-12-10
ÉCHELLE SCALE	NONE	DATE 2018-07-18

NO. DESSIN DRAWING NO. 61-740-230-204

NO. PROJET PROJECT NO.	RÉVISION	FEUILLE / SHT
61	1	1/1

AC-CAM-ARCH D

FILE NO. 61-740-230-(2008205)-R0 2018-04-04.dwg

NO. DESSIN / DRAWING NO. 61-740-260-200

FORMAT ARCH D

TANK #7 - 6170TNK42 - DIESEL			
SPECIFICATIONS:		NOMINAL DIAMETER (METERS):	± 33.528m (TO BE CONFIRMED BY MANUFACTURER)
		ORIGINAL NOMINAL HEIGHT (METERS):	± 12.192m (TO BE CONFIRMED BY MANUFACTURER)
		NOMINAL CAPACITY:	10,760,000 LITERS
		WORKING CAPACITY:	10,000,000 LITERS
TAG	QTY.	DIA.	DESCRIPTION / REMARKS
1	4	600	ROOF MANHOLE / TO API 650 STANDARDS
2	4	900	SHELL MANHOLE / TO API 650 STANDARDS
3	1	200	FIXED PIPE - TANK LOADING 11.7m LG. / TO API 650 STANDARDS, SEE DETAIL
4	1	200	FIXED PIPE - TANK UNLOADING 11.7m LG. / TO API 650 STANDARDS, SEE DETAIL
5	2	150	PUMPING LOW LEVEL / TO API 650 STANDARDS, SEE DETAIL
6	6	80	WATER DRAW-OFF / TO API 650 STANDARDS, SEE DETAIL
7	1	150	GAUGE HATCH / TO API 650 STANDARDS, SEE DETAIL
8	1	80	OVERFILL PROTECTION / TO API 650 STANDARDS, SEE DETAIL
9	1	50	TEMPERATURE & WATER DETECTION PROBE / TO API 650 STANDARDS, SEE DETAIL
10	1	150	RADAR - LEVEL DETECTION / TO API 650 STANDARDS, SEE DETAIL
11	2	50	ROOF PRESSURE RELIEF LINE CONNECTION, HALF COUPLING 25mm DIA. (THREADED) / TO API 650 STANDARDS AND NBC, SEE DETAIL
12	2	100	SPARE / TO API 650 STANDARDS, SEE DETAIL
13	-	-	VENT OPENING / TO API 2000 & 650 STANDARDS, DIA. AND QTY. TO BE DETERMINATE BY THE MANUFACTURER, SEE DETAIL
14	1	100	PAINTER SCAFFOLD CABLE SUPPORT / TO API 650 STANDARDS
15	8	-	GROUNDING LUG / TO API 650 STANDARDS, SEE DETAIL
16	1	-	ROOF INSPECTION FRAME / TO API 650 STANDARDS
17	1	-	ROOF GUARDRAIL / TO API 650 STANDARDS AND NBC
18	1	-	SPIRAL STAIRWAY, GUARDRAIL & HANDRAIL / TO API 650 STANDARDS AND NBC

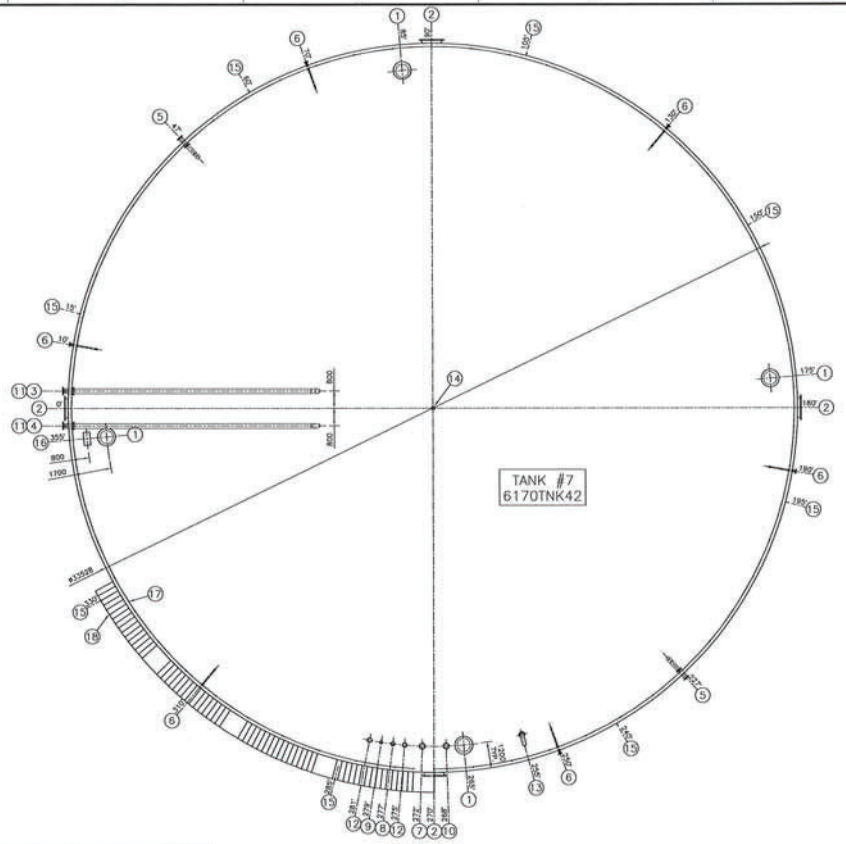

PLAN VIEW
SCALE: 1:100

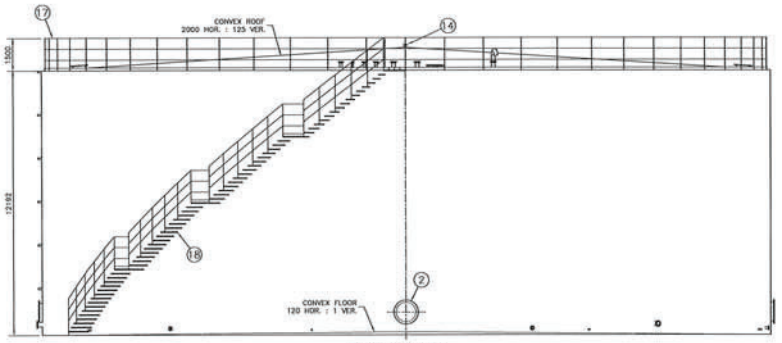

ELEVATION VIEW
SCALE: 1:100

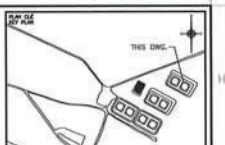

NOTES GÉNÉRALES / GENERAL NOTES

NE PAS UTILISER POUR CONSTRUCTION
NOT FOR CONSTRUCTION
AGNICO EAGLE DATE : 2019-03-12

POUR SOUMISSION
FOR TENDER
AGNICO EAGLE DATE : 2019-03-12

SNC-LAVALIN

SNC-Lavalin Stadacona Inc.
100, boul. Dr-Frederik-Philips
Saint-Laurent (Québec) H4M 2X7
Tél.: 514 734-3100 Fax: 514 737-2410
www.snclavalin.com

Project # : 660534-0000

DESSINS EN RÉFÉRENCE / REFERENCE DRAWINGS

TITRE / TITLE	# DWG
Tank #7 & #8 – LOCATION PLAN	61-740-210-201
Tank #7 & #8 – DETAILS	61-740-260-202
Tank #8 – PLAN & ELEVATION	61-740-260-203

AGNICO EAGLE

REV.	DATE	DESCRIPTION	PAR/BY	APP.	CLIENT
1	2019-03-12	ISSUED FOR TENDER	B.LEM	M.HÉN	PLANN.
0	2018-12-10	ISSUED FOR TENDER	B.LEM	M.HÉN	PLANN.

REVISIONS

2019-03-14

TITRE / TITLE
AGNICO EAGLE – MEADOWBANK DIVISION
740 BAKER LAKE AREA
PLATEWORK
PLAN & ELEVATION
10M LITERS DIESEL TANK
TANK #7 – 6170TNK42

DESSINÉ PAR / DRAWN BY	B.LEMIEUX, Tech.	2018/11/16
VÉRIFIÉ PAR / CHECKED BY	R. LAVOIE, Jr. Eng.	2018/11/16
APPROUVÉ PAR / APPROVED BY	M. HÉNAULT, P. Eng	2018/11/16
ÉCHELLE / SCALE	INDICATED	DATE 2018/11/16

NO. DESSIN / DRAWING NO. 61-740-260-200

NO. PROJET / PROJECT NO.	REVISION	FEUILLE / SHT
6120	1	1 / 1

AC-GMT-ARCH D

FILE NO. 61-740-260-200_R1.dwg

NO. DESSIN
DRAWING NO. 61-740-260-201

FORMAT ARCH D

TANK #8 - 6170TNK43 - DIESEL				
SPECIFICATIONS:			NOMINAL DIAMETER (METERS):	± 33.528m (TO BE CONFIRMED BY MANUFACTURER)
			ORIGINAL NOMINAL HEIGHT (METERS):	± 12.192m (TO BE CONFIRMED BY MANUFACTURER)
			NOMINAL CAPACITY:	10,780,000 LITERS
			WORKING CAPACITY:	10,000,000 LITERS
TAG	QTY.	DIA.	DESCRIPTION	REMARKS
1	4	600	ROOF MANHOLE	TO API 650 STANDARDS
2	4	900	SHELL MANHOLE	TO API 650 STANDARDS
3	1	200	FIRE PIPE - TANK LOADING 11.7m LG.	TO API 650 STANDARDS, SEE DETAIL
4	1	200	FIRE PIPE - TANK UNLOADING 11.7m LG.	TO API 650 STANDARDS, SEE DETAIL
5	2	150	PUMPING LOW LEVEL	TO API 650 STANDARDS, SEE DETAIL
6	6	80	WATER DRAW-OFF	TO API 650 STANDARDS, SEE DETAIL
7	1	150	GAUGE HATCH	TO API 650 STANDARDS, SEE DETAIL
8	1	80	OVERFILL PROTECTION	TO API 650 STANDARDS, SEE DETAIL
9	1	50	TEMPERATURE & WATER DETECTION PROBE	TO API 650 STANDARDS, SEE DETAIL
10	1	150	RADAR - LEVEL DETECTION	TO API 650 STANDARDS, SEE DETAIL
11	2	50	ROOF PRESSURE RELIEF LINE CONNECTION, HALF COUPLING 25mm DIA. (THREADED)	TO API 650 STANDARDS AND NBC, SEE DETAIL
12	2	100	SPARE	TO API 650 STANDARDS, SEE DETAIL
13	-	-	VENT OPENING	TO API 2000 & 650 STANDARDS. DIA. AND QTY. TO BE DETERMINATE BY THE MANUFACTURER, SEE DETAIL
14	1	100	PAINTER SCAFFOLD CABLE SUPPORT	TO API 650 STANDARDS
15	8	-	GROUNDING LUG	TO API 650 STANDARDS, SEE DETAIL
16	1	-	ROOF INSPECTION FRAME	TO API 650 STANDARDS
17	1	-	ROOF GUARDRAIL	TO API 650 STANDARDS AND NBC
18	1	-	SPIRAL STAIRWAY, GUARDRAIL & HANDRAIL	TO API 650 STANDARDS AND NBC

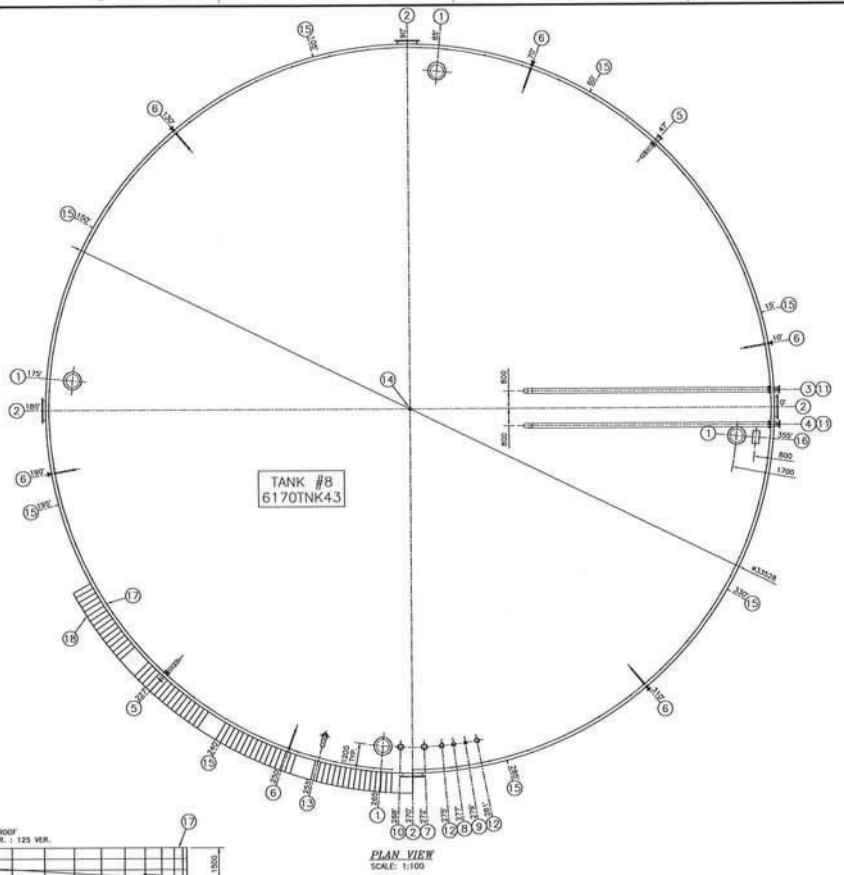

PLAN VIEW
SCALE: 1:100

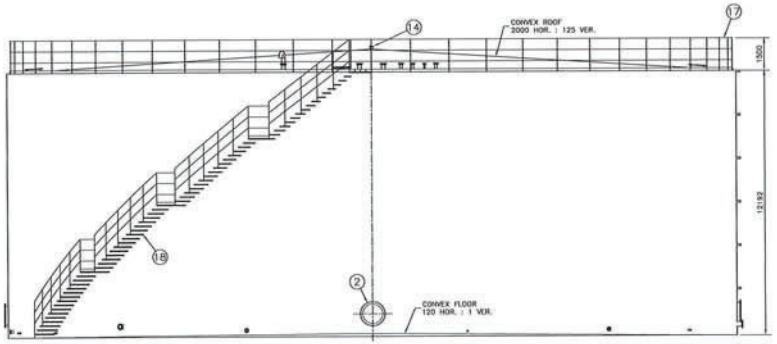

ELEVATION VIEW
SCALE: 1:100

PLAN DE SITUATION
KEY PLAN

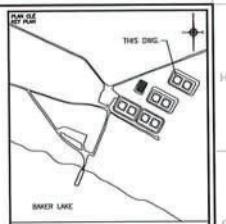

NOTES GÉNÉRALES / GENERAL NOTES

NE PAS UTILISER POUR CONSTRUCTION
NOT FOR CONSTRUCTION
AGNICO EAGLE DATE : 2019-03-12

POUR SOUMISSION
FOR TENDER
AGNICO EAGLE DATE : 2019-03-12

SNC-LAVALIN
SNC-Lavalin Géotechnique Inc.
155 Rue Gamble Ouest
Rouyn-Noranda (Québec) J9X 2R7
Tél. : 819 764-3161 Fax : 819 797-0158
www.snclavalin.com

Project # : 660534-0000

DESSINS EN RÉFÉRENCE / REFERENCE DRAWINGS

DWG / TITLE	# DWG
TANK #7 & #8 – LOCATION PLAN	61-740-010-201
TANK #7 & #8 – DETAILS	61-740-260-202
TANK #7 – PLAN & ELEVATION	61-740-260-200

AGNICO EAGLE

NO.	DATE	DESCRIPTION	PAR/BY	APP.	CLIENT
1	2019-03-12	ISSUED FOR TENDER	ELEM	NAHÉN	KAGOL
0	2018-12-19	ISSUED FOR TENDER	ELEM	NAHÉN	KAGOL

REVISIONS

DWG / TITLE
AGNICO EAGLE – MEADOWBANK DIVISION
740 BAKER LAKE AREA
PLATEWORK
PLAN & ELEVATION
104 LITERS DIESEL TANK
TANK #8 – 6170TNK43

DESSINÉ PAR / DRAWN BY	B.LEMIEUX, Tech.	2018/11/16
VÉRIFIÉ PAR / CHECKED BY	R. LAVOIE, Jr. Eng.	2018/11/16
APPROUVÉ PAR / APPROVED BY	M. HÉNAULT, P. Eng.	2018/11/16
ÉCHELLE / SCALE	INDICATED	DATE 2018/11/16
NO. DESSIN / DRAWING NO.	61-740-260-201	
NO. PROJET / PROJECT NO.	6120	REVISION 1
FEUILLE / SHT	1 / 1	

AC-CAT1-ARCH D

FILE NO. 61-740-260-201_01.dwg

NO. DESSIN DRAWING NO. 61-740-260-202

FORMAT ARCH D

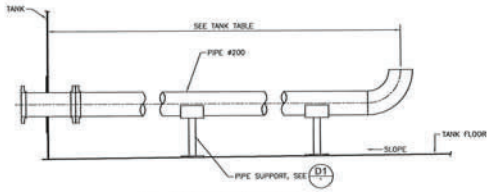

3 TANK LOADING DETAIL
SCALE: 1:20

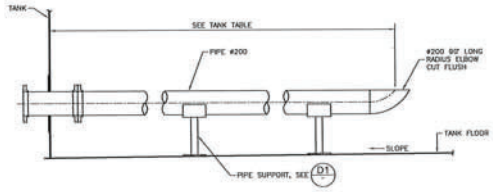

4 TANK UNLOADING DETAIL
SCALE: 1:20

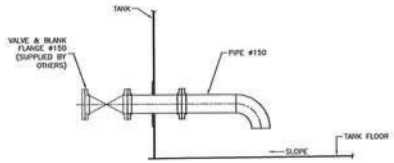

5 PUMPING LOW LEVEL DETAIL
SCALE: 1:20

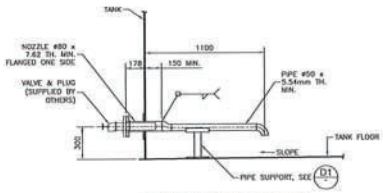

6 WATER DRAW-OFF DETAIL
SCALE: 1:20

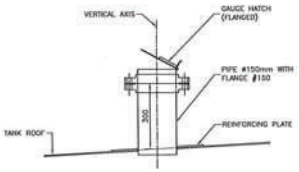

7 GAUGE HATCH DETAIL
SCALE: 1:10

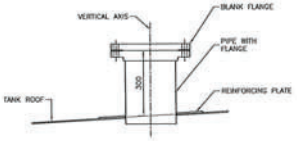

8 9 10 12 NOZZLE DETAIL
SCALE: 1:10

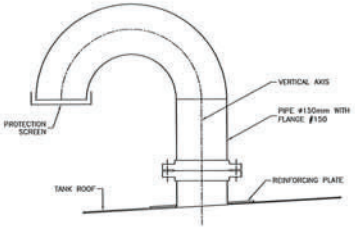

13 VENT DETAIL
SCALE: 1:10

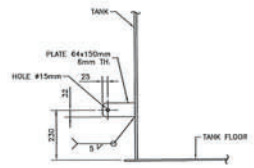

15 GROUNDING LUGS DETAIL
SCALE: 1:10

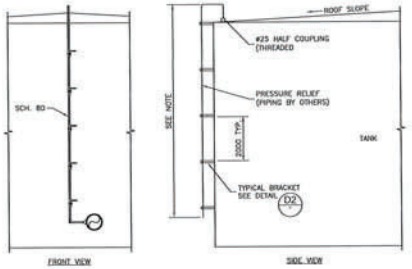

NOTE:
WELDED JOINTS & TESTED ON THIS SECTION (NOT THREADED JOINTS)

11 PRESSURE RELIEF LINE DETAIL
SCALE: N.T.S.

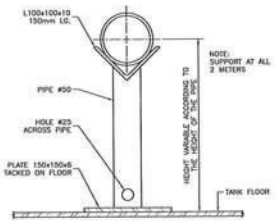

D1 PIPE SUPPORT
SCALE: 1:5

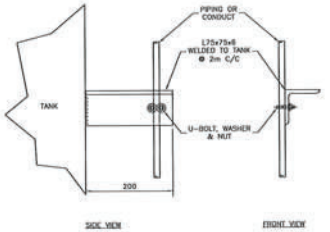

NOTE: FOR ITEMS 8 & 13

D2 BRACKET FOR PIPING OR ELECTRICAL CONDUCT TO THE SHELL TANK
SCALE: 1:5

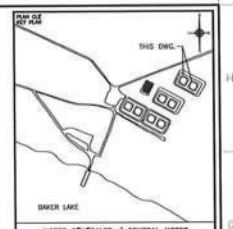

NOTES GÉNÉRALES / GENERAL NOTES

NE PAS UTILISER POUR CONSTRUCTION
NOT FOR CONSTRUCTION
AGNICO EAGLE DATE : 2018-12-10

POUR SOUMISSION
FOR TENDER
AGNICO EAGLE DATE : 2018-12-10

SNC-LAVALIN

Project # : 660534-0000

DESSINS EN RÉFÉRENCE / REFERENCE DRAWINGS

SYMB. / SYM.	# DWG.
	--
	--
	--
TANK #7 & #8 — LOCATION PLAN	61-740-210-201
TANK #8 — PLAN & ELEVATION	61-740-260-201
TANK #7 — PLAN & ELEVATION	61-740-260-200

AGNICO EAGLE

REV	DATE	DESCRIPTION	DESSINÉ PAR DRAWN BY	APP. BY	CLIENT
0	2018-12-10	ISSUED FOR TENDER	BLEM	ALMEN	KAEK

REVISIONS

TITRE / TITLE
AGNICO EAGLE – MEADOWBANK DIVISION
740 BAKER LAKE AREA
PLATEWORK
DÉTAILS
10M LITERS DIESEL TANK
TANK #7 & #8

		DATE
DESSINÉ PAR DRAWN BY	B.LEMIEUX, Tech.	2018/11/16
VÉRIFIÉ PAR CHECKED BY	R. LAVOIE, Jr. Eng.	2018/11/16
APPROUVÉ PAR APPROVED BY	M. HÉNAULT, P. Eng.	2018/11/16
ÉCHELLE SCALE	INDICATED	DATE 2018/11/16

NO. DESSIN DRAWING NO. 61-740-260-202

NO. PROJET PROJECT NO.	REVISION	FEUILLE / SHT
6120	A	1 / 1

FILE NO. 61-740-260-200x202_R0.dwg

NO. DESSIN DRAWING NO. 61-740-270-200

FORMAT ARCHD

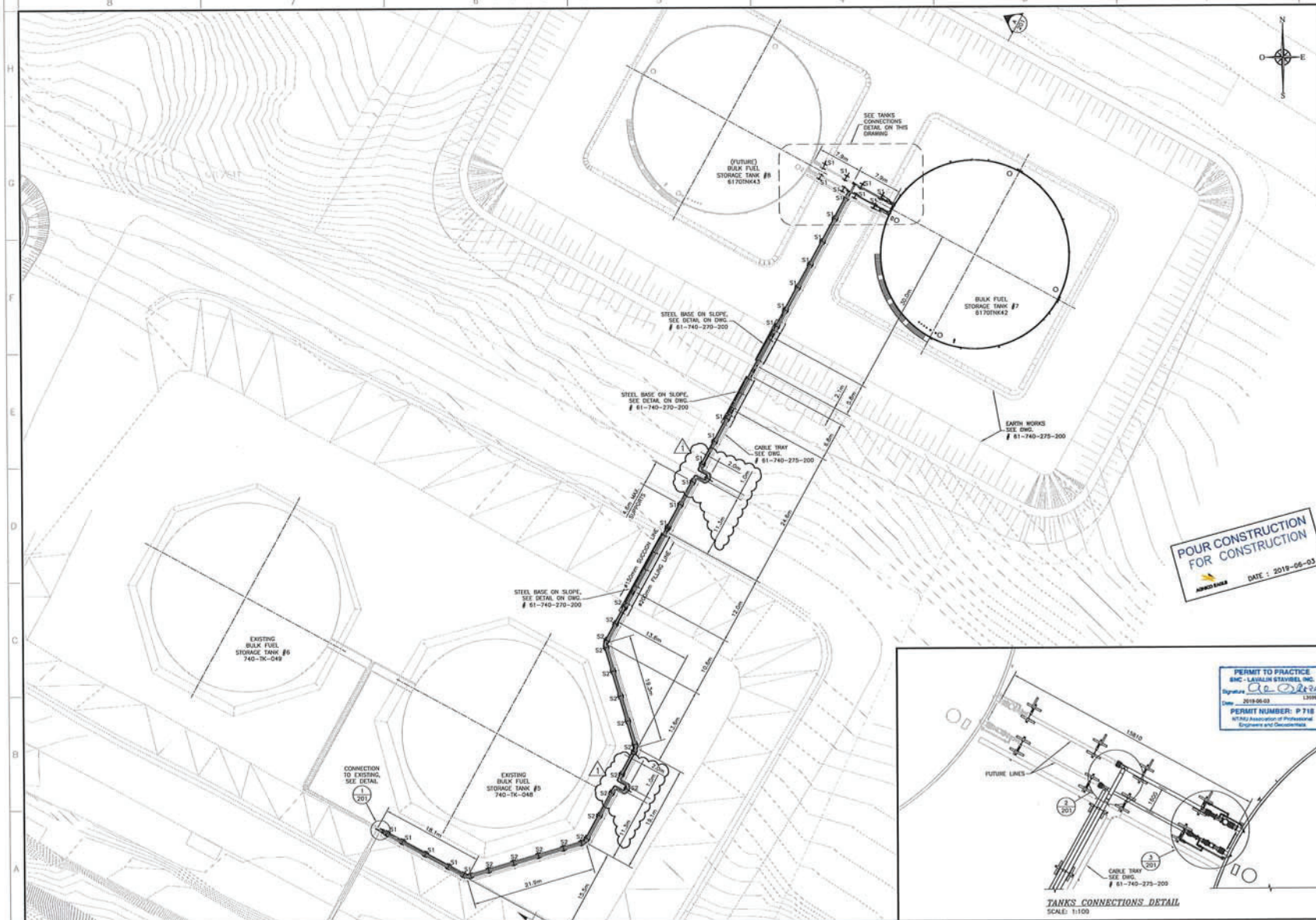

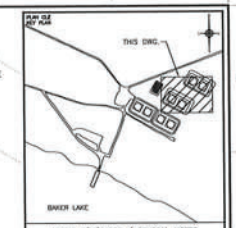

NOTES GÉNÉRALES / GENERAL NOTES

S1: PIPE SUPPORT TYPE 1
S2: PIPE SUPPORT TYPE 2
SEE DWG. # 61-740-270-202

SNC·LAVALIN

Project # : 660534-0000

DESSINS EN RÉFÉRENCE / REFERENCE DRAWINGS

TITRE / TITLE	# DWG
GENERAL EARTH WORKS	61-740-230-200 TO 205
ELECTRICAL	61-740-275-200 TO 201
P&ID	61-740-J-0100_2/2
P&ID	61-740-J-0100_1/2
TANK 7 & 8 PIPE SUPPORTS - DETAILS	61-740-270-202
TANK 7 & 8 PIPING - ELEV. & DETAILS	61-740-270-201

AGNICO EAGLE

REV.	DATE	DESCRIPTION	PAR/BY	APP.	CLIENT
1	2019-06-03	ISSUED FOR CONSTRUCTION	B.L.	A.O.	B.ROY
0	2019-06-03	ISSUED FOR TENDER	B.L.	A.O.	R.MÉN.

REVISIONS

PERMIT TO PRACTICE
SNC - LAVALIN STAVIBEL INC.
Signature
Date 2019-06-03 L3595
PERMIT NUMBER: P 718
NT/NU Association of Professional Engineers and Geoscientists

REGISTERED PROFESSIONAL ENGINEER A. OUELLET LICENSEE L3595 NT/NU
2019-06-03

TITRE / TITLE
AGNICO EAGLE – MEADOWBANK DIVISION
740 BAKER LAKE AREA
PIPING
PLAN VIEW
10M LITERS DIESEL TANK #7 (6170TNK42)
& TANK #8 (6170TNK43) PIPING

DESSINÉ PAR DRAWN BY	B. LEMIEUX, Tech.	DATE 2019/02/15
VÉRIFIÉ PAR CHECKED BY	R. LAVOIE, Jr. Eng.	2019/02/15
APPROUVÉ PAR APPROVED BY	A. OUELLET, P. Eng.	2019/02/15
ÉCHELLE SCALE	1 : 300	DATE 2019/02/15

NO. DESSIN DRAWING NO. 61-740-270-200

NO. PROJET PROJECT NO.	REVISION	FEUILLE / SHT
6120	1	1/1

FILE NO. 61-740-270-200_R1.dwg

NO. DESSIN / DRAWING NO. 61-740-270-201

FORMAT ARCH D

BILL OF MATERIAL

ITEM	DIAMETER	DESCRIPTION	TYPE	CLASS / SCHEDULE	QTY	QTY FUTURE
1	200	PIPE	CARBON STEEL, ASTM A333 GR.6	SCH.STD	190 m	7 m
2	200	45° ELBOW	CARBON STEEL, ASTM A420 GR.WPL6, BW	SCH.STD	7	-
3	200	±30° ELBOW (CUSTOM FROM 45°)	CARBON STEEL, ASTM A420 GR.WPL6, BW	SCH.STD	6	-
4	200	TEE	CARBON STEEL, ASTM A420 GR.WPL6, BW	SCH.STD	1	-
5	200	FLANGE WELDING NECK	FORGED STEEL, ASTM A350 GR.LF2	300 #	17	5
6	200	FLANGE WELDING NECK	FORGED STEEL, ASTM A350 GR.LF2	150 #	2	2
7	200	BLIND FLANGE	FORGED STEEL, ASTM A350 GR.LF2	300 #	1	-
8	200	450mm LG. FLEXIBLE HOSE	FLEXTRONIC SENIOR SA-BSFS SERIES, FLANGED	300 #	6	1
9	200x150	EXCENTRIC REDUCER	CARBON STEEL, ASTM A420 GR.WPL6, BW	SCH.STD	2	1
10	150	PIPE	CARBON STEEL, ASTM A333 GR.6	SCH.STD	190 m	7 m
11	150	45° ELBOW	CARBON STEEL, ASTM A420 GR.WPL6, BW	SCH.STD	4	-
12	150	±30° ELBOW (CUSTOM FROM 45°)	CARBON STEEL, ASTM A420 GR.WPL6, BW	SCH.STD	6	-
13	150	TEE	CARBON STEEL, ASTM A420 GR.WPL6, BW	SCH.STD	2	-
14	150	FLANGE WELDING NECK	FORGED STEEL, ASTM A350 GR.LF2	150 #	17	5
15	150	BLIND FLANGE	FORGED STEEL, ASTM A350 GR.LF2	150 #	1	-
16	150	450mm LG. FLEXIBLE HOSE	FLEXTRONIC SENIOR SA-BSFS SERIES, FLANGED	150 #	6	1
17	150x100	EXCENTRIC REDUCER	CARBON STEEL, ASTM A420 GR.WPL6, BW	SCH.STD	1	-
18	100	PIPE	CARBON STEEL, ASTM A333 GR.6	SCH.STD	1 m	-
19	100	TEE	CARBON STEEL, ASTM A420 GR.WPL6, BW	SCH.STD	1	-
20	50	PIPE	CARBON STEEL, ASTM A333 GR.6	SCH. 80	28 m	28 m
21	50	90° ELBOW	FORGED STEEL, ASTM A350 GR.LF2, SW	CLASS 3000	10	6
22	50x25	CONCENTRIC REDUCER	FORGED STEEL, ASTM A350 GR.LF2, SW	CLASS 3000	4	2
23	25	PIPE	CARBON STEEL, ASTM A333 GR.6	SCH. 80	5 m	3 m
24	25	THREADOLET	FORGED STEEL, ASTM A350 GR.LF2	CLASS 3000	6	4
25	200	GATE VALVE	BERIC, ASTM A-352, FLANGED, API STD 600, LCC BODY	300 #	4	1
26	200	GATE VALVE	BERIC, ASTM A-352, FLANGED, API STD 600, LCC BODY	150 #	1	1
27	150	GATE VALVE	BERIC, ASTM A-352, FLANGED, API STD 600, LCC BODY	150 #	3	-
28	200	CHECK VALVE	BERIC, ASTM A-352, FLANGED, API STD 600, LCC BODY	300 #	2	1
29	150	CHECK VALVE	BERIC, ASTM A-352, FLANGED, API STD 600, LCC BODY	150 #	1	1
30	150	MOTORIZED BALL VALVE (SEE NOTE 1)	ITT CAM-TITE 316SS WITH RCS SURE-150-15 1800 IN/LBS ACTUATOR	150 #	1	1
31	50	BALL VALVE	APOLLO 83L-240-24 SERIES, SW		8	4
32	25	BALL VALVE	APOLLO 83L-240-24 SERIES, SW		8	4
33	25	PRESSURE RELIEF VALVE	FARRIS 2700 SERIES, THREADED, SET PRESSURE 80 PSIG		4	2
34	-	FLEXIBLE ERIAD	INVENT MBJ 35-250-25		44	15
35	200	90° ELBOW	CARBON STEEL, ASTM A420 GR.WPL6, BW	SCH.STD	8	-
36	150	90° ELBOW	CARBON STEEL, ASTM A420 GR.WPL6, BW	SCH.STD	8	-
37	50	TEE	FORGED STEEL, ASTM A350 GR.LF2, SW	CLASS 3000	4	2

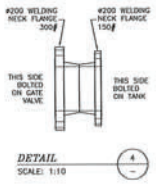

DETAIL 4 — SCALE: 1:10

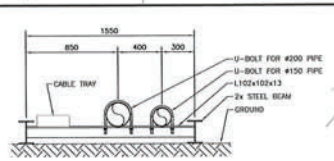

STEEL BASE SECTION
SCALE: 1:20

STEEL BASE ON SLOPE – TYPICAL DETAIL
SCALE: N/A

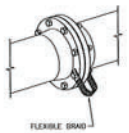

TYPICAL FLANGE DETAIL
SCALE: N/A

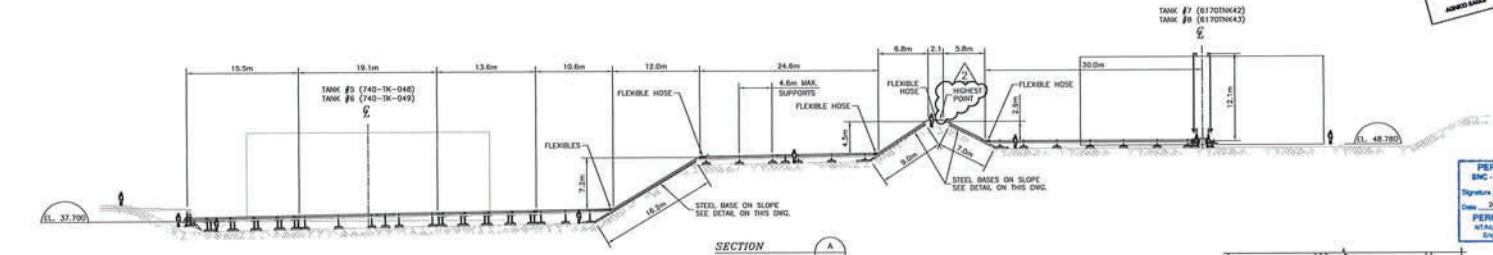

SECTION A — SCALE: 1:300

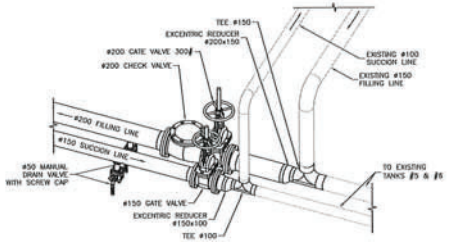

DETAIL 1 — SCALE: N/A

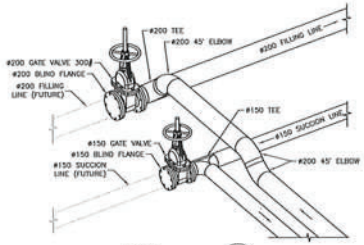

DETAIL 2 — SCALE: N/A

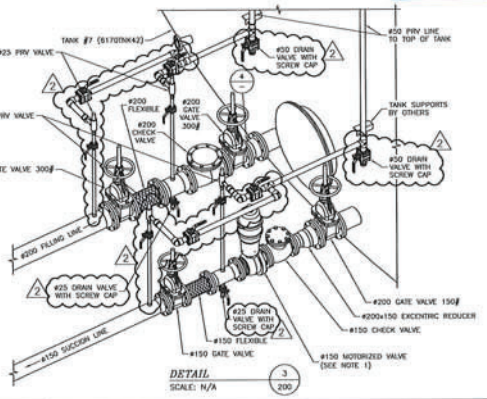

DETAIL 3 — SCALE: N/A

POUR CONSTRUCTION FOR CONSTRUCTION
AGNICO EAGLE
DATE : 2019-06-03

PERMIT TO PRACTICE
SNC-LAVALIN STAVIBEL INC.
Signature
Date 2019-06-03
PERMIT NUMBER: P 715
NT/NU Association of Professional Engineers and Geoscientists

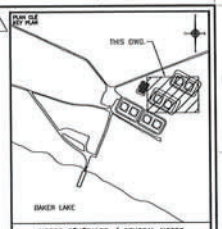

PLAN DE SITE / SITE PLAN

NOTES GÉNÉRALES / GENERAL NOTES

NOTE 1:
SUPPLY OF MOTORIZED VALVE BY AEM AND INSTALLATION BY CONTRACTOR.

NOTE 2:
THE EXACT DEGRE OF ±30° ELBOWS IS TO BE VALIDATED WITH THE FINAL GRADE OF THE DAM. ±30° ELBOWS ARE TO BE MODIFIED ON FIELD, FROM A STD. 45° ELBOW.

SNC-LAVALIN
SNC-Lavalin Stavibel Inc.
555, rue Gamble Ouest
Rouyn-Noranda (Québec) J9X 2R7
Tél. : 819 764-5151 Fax : 819 797-0199
www.snclavalin.com

Project # : 660534-0000

DESSINS EN RÉFÉRENCE / REFERENCE DRAWINGS

TYPE / TITLE	# DWG
GENERAL EARTH WORKS	61-740-230-200 TO 205
ELECTRICAL	61-740-275-200 TO 201
P&ID	61-740-J-0100_2/2
P&ID	61-740-J-0100_1/2
TANK 7 & 8 PIPE SUPPORTS – DETAILS	61-740-270-202
TANK 7 & 8 PIPING – PLAN VIEW	61-740-270-200

AGNICO EAGLE

REV	DATE	REVISION	PM/DE APP.	CLIENT
2	2019-06-03	ISSUED FOR CONSTRUCTION	B.L.	A.G.
1	2019-05-08	ADDENDUM DRAW / AIR VALVE P.O.C.	B.L.	A.G.
0	2019-04-26	ISSUED FOR TENDER	B.L.	A.G.

REVISIONS

PROFESSIONAL ENGINEER A. OUELLET LICENCE L3395 NT/NU
2019-05-03

TITRE / TITLE
AGNICO EAGLE – MEADOWBANK DIVISION
740 BAKER LAKE AREA
PIPING
SECTION & DETAILS
10M LITERS DIESEL TANK #7 (6170TNK42) & TANK #8 (6170TNK43) PIPING

DESSINÉ PAR / DRAWN BY	B. LEMIEUX, Tech.	2019/02/15
VÉRIFIÉ PAR / CHECKED BY	R. LAVOIE, Jr. Eng.	2019/02/15
APPROUVÉ PAR / APPROVED BY	A. OUELLET, P. Eng.	2019/02/15
ÉCHELLE / SCALE	INDICATED	DATE 2019/02/15

NO. DESSIN / DRAWING NO. 61-740-270-201

NO. PROJET / PROJECT NO.	REVISION	FEUILLE / SHT
6120	2	1 / 1

AC-DWT-ARCH D

FILE NO. 61-740-270-201_R2.dwg

NO. DESSIN DRAWING NO. 61-740-270-202

FORMAT ARCH D

NOTES:
- FABRICATE THE BASE AND THE PEDESTAL SEPERATELY.
- WILL BE WELD AT SITE.
- SEND PAINT AT SITE FOR TOUCH-UP.

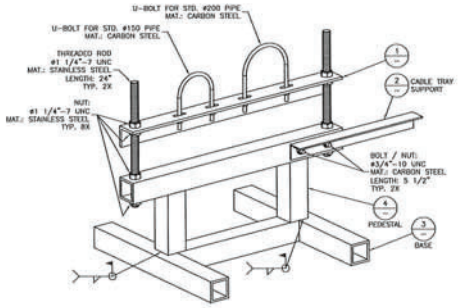

S1 – PIPE SUPPORT TYPE 1
SCALE: N/A

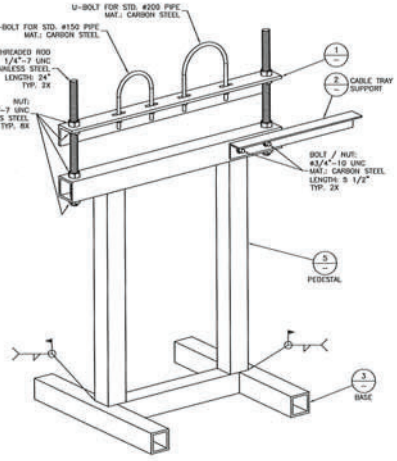

S2 – PIPE SUPPORT TYPE 2
SCALE: N/A

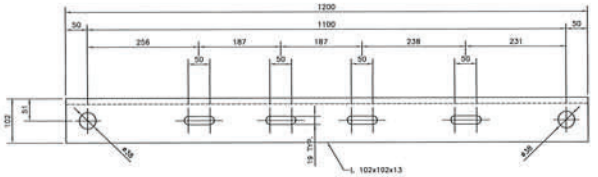

DETAIL 1
SCALE: 1:5
MAT.: CARBON STEEL

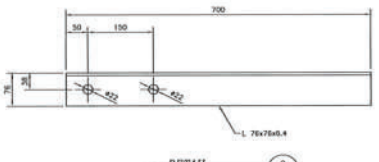

DETAIL 2
SCALE: 1:5
MAT.: CARBON STEEL

POUR CONSTRUCTION
FOR CONSTRUCTION
AGNICO EAGLE DATE : 2019-06-03

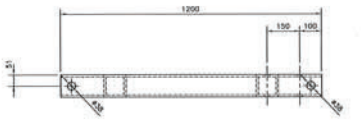

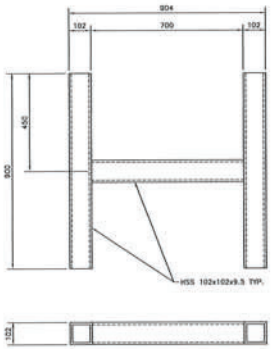

DETAIL 3
SCALE: 1:10
MAT.: CARBON STEEL

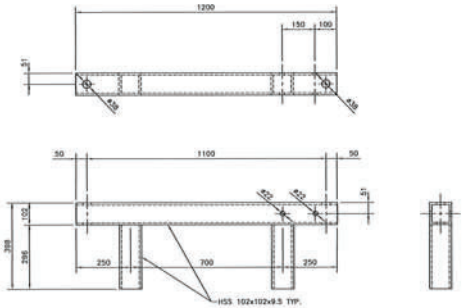

DETAIL 4
SCALE: 1:10
MAT.: CARBON STEEL

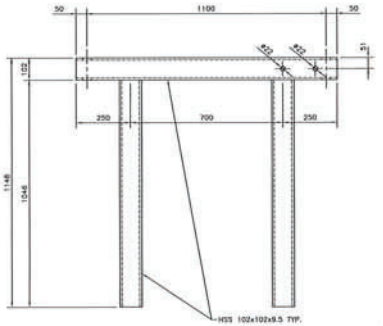

DETAIL 5
SCALE: 1:10
MAT.: CARBON STEEL

PERMIT TO PRACTICE
SNC - LAVALIN STAVIBEL INC.
Signature
Date 2019-06-03
L3395
PERMIT NUMBER: P 718
NT/NU Association of Professional Engineers and Geoscientists

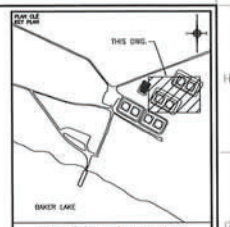

NOTES GÉNÉRALES / GENERAL NOTES

1. ALL STRUCTURAL STEEL SHALL BE NEW AND IN COMPLIANCE WITH THE LATEST EDITION OF THESE STANDARDS:
   - STRUCTURAL STEEL G40.21 300W (44W) OR ASTM A36
   - HSS G40.21 350W (50W) OR ASTM A500
2. ALL WELDING AND WELDING PLANS SHALL BE IN COMPLIANCE WITH C.S.A. STANDARD W59 OR AWS STANDARD D1.1 (LATEST EDITION), AND BE DONE BY A CERTIFIED WELDER AS PER C.S.A. W47.1 OR AWS D1.1 (LATEST EDITION).
3. THE CONTRACTOR SHALL SUPPLY ALL NECESSARY LABOR, MATERIALS AND EQUIPMENT FOR COMPLETION OF THE WORK SHOWED ON PLANS.
4. NO DIMENSIONS SHOULD BE DRAWN TO SCALE ON PLAN. CONTACT THE PROJECT ENGINEER FOR ANY ADDITIONAL INFORMATION.
5. ALL DIMENSIONS ARE IN MILLIMETERS.
6. EXTERIOR PAINTING:
   SP-1 (EXCEPSOP 80) FOLLOWED BY SP-6 SURFACE PREPARATION (PROFILE 1.5 TO 2 MILL. MAXIMUM);
   - APPLY ONE (1) TO TWO (2) LAYERS OF EPOXY BAR-RUST 235 (8 TO 10 MILL. DRY FILM THICKNESS);
   - APPLY ONE (1) LAYER OF DEVTHANE 359 U.V. RAY RESISTANT (2 TO 3 MIL. DRY FILM THICKNESS).

   COLORS:
   - GRAY (STRUCTURE)
   - SECURITY YELLOW (HANDRAILS)
   - BLUE (EQUIPMENTS)

SNC-Lavalin Stavibel Inc.
105, rue Gamble Ouest
Rouyn-Noranda (Québec) J9X 2R7
Tél.: 819 763-5181 Fax: 819 797-6158
www.snclavalin.com

Project # : 660534-0000

DESSINS EN RÉFÉRENCE / REFERENCE DRAWINGS

TITRE / TITLE	# DWG
-	-
-	-
-	-
TANK 7 & 8 PIPING – ELEV. & DETAILS	61-740-270-201
TANK 7 & 8 PIPING – PLAN VIEW	61-740-270-200

AGNICO EAGLE

NO	DATE	DESCRIPTION	PAR/BY	APP.	DATE
1	2019-06-03	ISSUED FOR CONSTRUCTION	B.L.	A.O.	19/07
0	2019-04-25	ISSUED FOR TENDER	B.L.	A.O.	19/05

REVISIONS

A. OUELLET LICENCE L3395 R.T.N.O.
2019-06-03

TYPE / TITLE
AGNICO EAGLE – MEADOWBANK DIVISION
740 BAKER LAKE AREA
PIPING
DETAILS
10M LITERS DIESEL TANK #7 (6170TNK42)
& TANK #8 (6170TNK43) – PIPE SUPPORTS

DESSINÉ PAR / DRAWN BY	B. LEMIEUX, Tech.	DATE 2019/03/19
VÉRIFIÉ PAR / CHECKED BY	R. LAVOIE, Jr. Eng.	2019/03/19
APPROUVÉ PAR / APPROVED BY	A. OUELLET, P. Eng.	2019/03/19
ÉCHELLE / SCALE	INDICATED	DATE 2019/03/19

NO. DESSIN / DRAWING NO. 61-740-270-202

NO. PROJET / PROJECT NO. 6120

REVISION 1 FEUILLE / SHT 1/1

FILE NO. 61-740-270-202_R1.dwg

NO. DESSIN
DRAWING NO. 61-740-275-200

FORMAT ARCH D

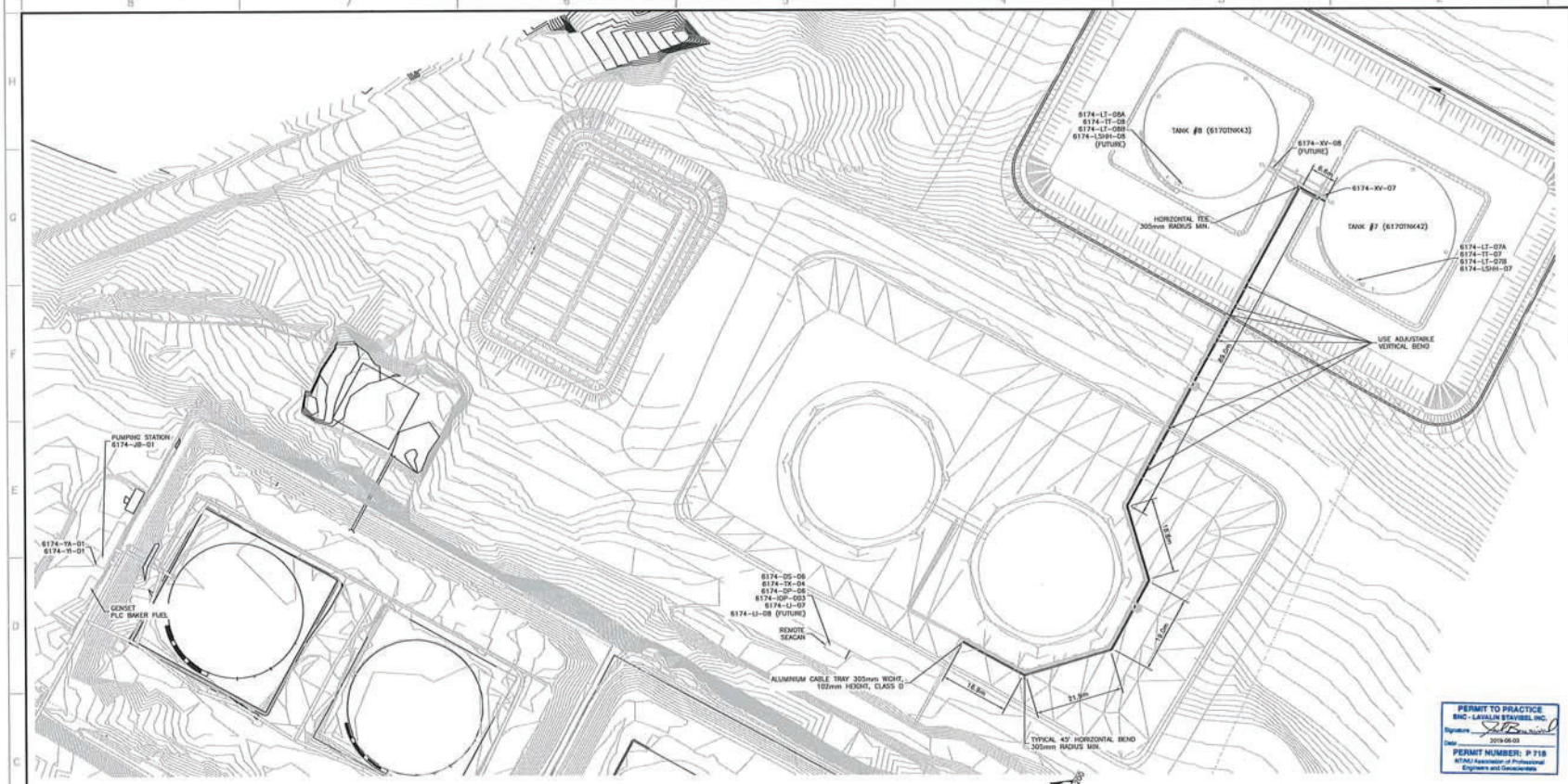

PLAN VIEW
SCALE: 1:500

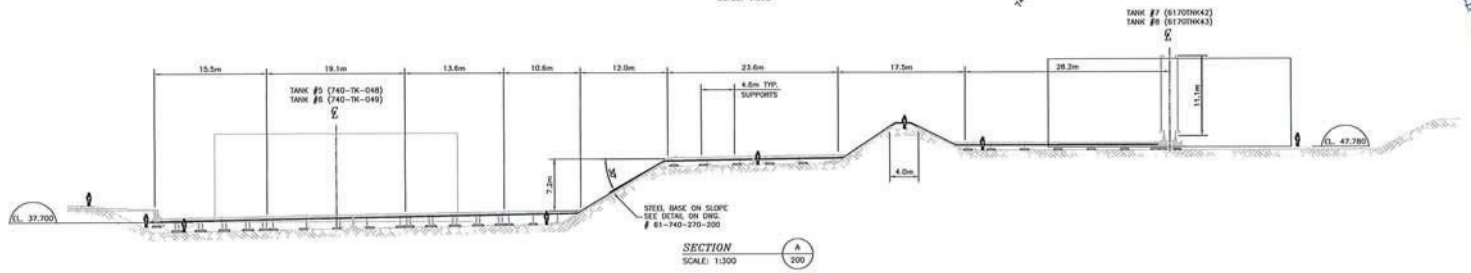

SECTION
SCALE: 1:300
A
200

PERMIT TO PRACTICE
SNC - LAVALIN ENVIRONMENT INC.
Signature
Date 2019-06-03
PERMIT NUMBER: P 718
NT/NU Association of Professional Engineers and Geoscientists

DOCUMENT SIGNÉ ÉLECTRONIQUEMENT
P LEMIRE
LICENCE
L4098
NT/NU
2019-05-03

PLAN DE SITE
SITE PLAN

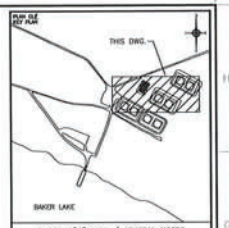

NOTES GÉNÉRALES / GENERAL NOTES

POUR CONSTRUCTION
FOR CONSTRUCTION
AGNICO EAGLE
DATE : 2019-06-03

SNC-LAVALIN
SNC-Lavalin Environment Inc.
155, rue Gamble Ouest
Rouyn-Noranda (Québec) J9X 2R7
Tél. : 819 764-9181 Fax : 819 797-0158
www.snclavalin.com

Project # : 660534-0000

DESSINS EN RÉFÉRENCE / REFERENCE DRAWINGS

TITRE / TITLE	# DWG
–	–
–	–
–	–
–	–
–	–
–	–

AGNICO EAGLE

NO	DATE	DESCRIPTION	PAR/BY	APP.
1	2019-06-03	ISSUED FOR CONSTRUCTION	SAM/L	P.LEM.
0	2019-05-03	ISSUED FOR TENDER	D.PEL	P.LEM.

REVISIONS

TITRE / TITLE
AGNICO EAGLE – MEADOWBANK DIVISION
740 – BAKER LAKE AREA
POWER ELECTRICAL
SECTION & DETAILS
10M LITERS DIESEL TANK #7 (6170TNK42)
& TANK #8 (6170TNK43) CABLE TRAY

DESSINÉ PAR / DRAWN BY	DONALD PELLERIN, Tech.	2019-04-24
VÉRIFIÉ PAR / CHECKED BY	PHILIPPE LEMIRE, P. Eng.	2019-04-25
APPROUVÉ PAR / APPROVED BY	PHILIPPE LEMIRE, P. Eng.	2019-05-03
ÉCHELLE / SCALE	INDICATED	DATE 2019-04-24

NO. DESSIN / DRAWING NO. 61-740-275-200

NO. PROJET / PROJECT NO. 6120

REVISION 1

FEUILLE / SHT 1/1

AC-CAD-4003 B

\\akal\acad\Proje\300-INF\660534\0000\4-Ingenierie\2-Dessins mdbrut\61-02\61-740-275-200_R1.dwg 2019-05-18 14:09:28

FILE NO. 61-740-275-200_R1.dwg

NO. DESSIN DRAWING NO. 61-740-275-201

FORMAT ARCH D

POUR CONSTRUCTION
FOR CONSTRUCTION
AGNICO EAGLE
DATE : 2019-06-03



C-TAPS
SCL: NTS
1
CONDUCTOR TO CONDUCTOR CONNECTOR

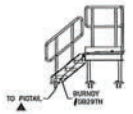

STAIRS
SCL: NTS
2

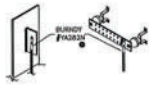

LUG YA-28
SCL: NTS
EQUIPEMENT, CONTAINER, GROUND BAR
3

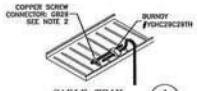

CABLE TRAY
SCL: NTS
4

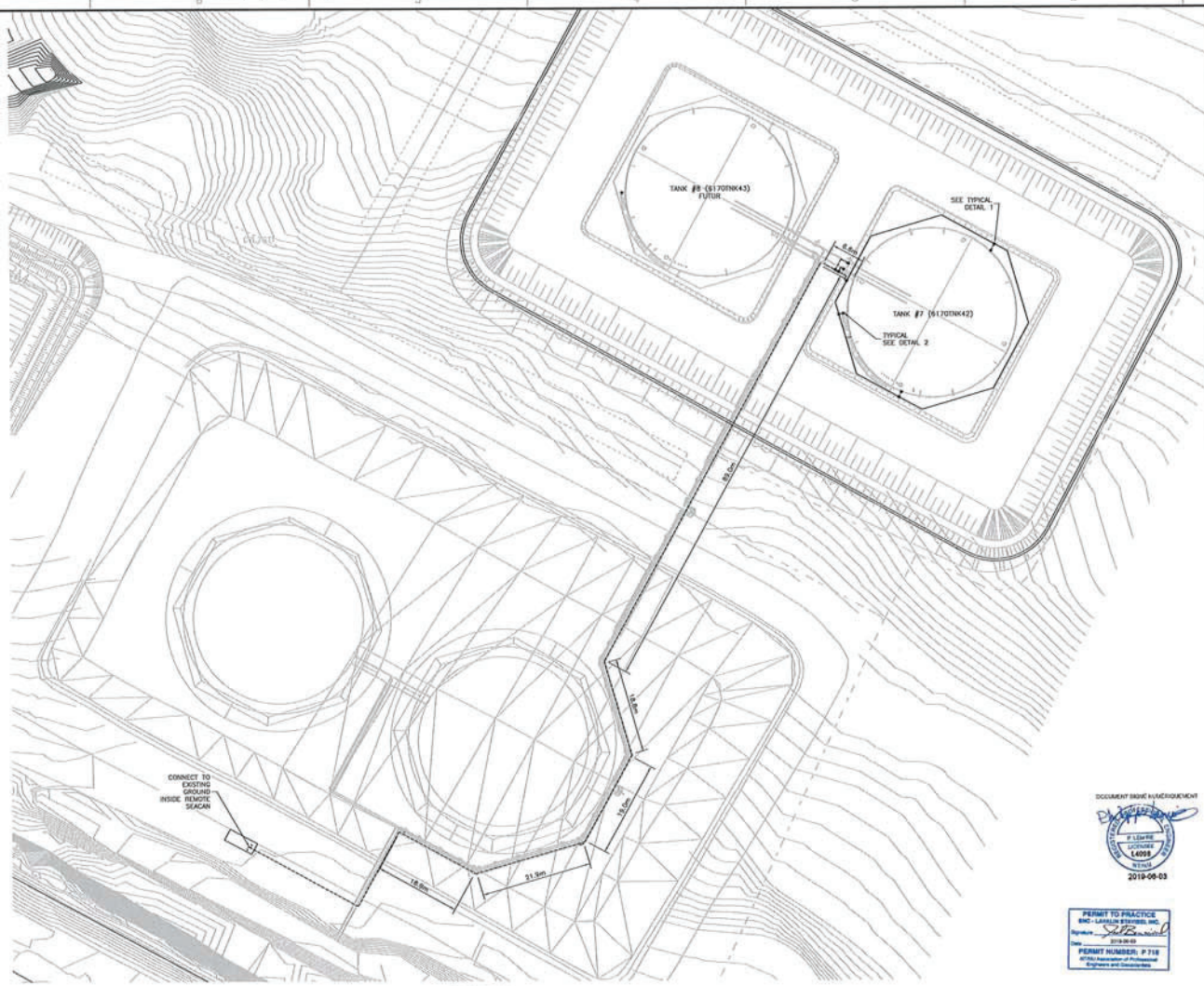

PLAN VIEW
SCALE: 1:400

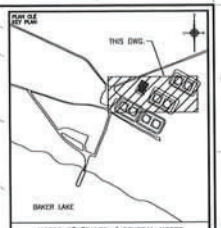

NOTES GÉNÉRALES / GENERAL NOTES

LEGEND

——— BURIED STRANDED TINNED BARE COPPER CONDUCTOR #1/0 AWG

- - - - - - - SURFACE STRANDED TINNED BARE COPPER CONDUCTOR #1/0 AWG IN CABLE TRAY

NOTES

1- THE PERIMETER GROUND CONDUCTOR OF THE TANK MUST BE ABOVE THE GEOMEMBRANE

2- THE GROUND CONDUCTOR MUST BE FIXED TO THE CABLE TRAY TO ALL 15 METER MINIMUM WITH MECHANICAL CONNECTOR. BURNDY MODEL GI029

SNC-LAVALIN

SNC-Lavalin Stantec Inc.
100, rue Gamble Ouest
Rouyn-Noranda (Québec), J9X 2R7
Tél. : 819 759-9191 Fax : 819 797-0124
www.snclavalin.com

Project # : 660534-0000

DESSINS EN RÉFÉRENCE / REFERENCE DRAWINGS

TITRE / TITLE	# DWG
-	-
-	-
-	-
-	-
-	-
-	-

AGNICO EAGLE

REV.	DATE	DESCRIPTION	PAR/BY	APP.	CLIENT
1	2019-06-03	ISSUED FOR CONSTRUCTION	S.SAAD	P.LEM	
0	2019-05-03	ISSUED FOR TENDER	S.SAL	P.LEM	

REVISIONS

DOCUMENT SIGNÉ ÉLECTRONIQUEMENT
P. LEMIRE LICENCE L4098 QUÉBEC
2019-06-03

PERMIT TO PRACTICE
SNC-LAVALIN STANTEC INC.
Signature
Date 2019-06-03
PERMIT NUMBER: P 718
NT/NU Association of Professional Engineers and Geoscientists

TITRE / TITLE
AGNICO EAGLE – MEADOWBANK DIVISION
740 – BAKER LAKE AREA
275 – POWER ELECTRICAL ARRANGEMENT
10M LITERS DIESEL TANK #7 (617OTNK42) & TANK #8 (617OTNK43) GROUNDING

DESSINÉ PAR / DRAWN BY	DONALD PELLERIN, Tech.	2019-04-24
VÉRIFIÉ PAR / CHECKED BY	PHILIPPE LEMIRE, P. Eng.	2019-04-25
APPROUVÉ PAR / APPROVED BY	PHILIPPE LEMIRE, P. Eng.	2019-05-03

ÉCHELLE / SCALE: INDICATED
DATE: 2019-04-24

NO. DESSIN / DRAWING NO. 61-740-275-201

NO. PROJET / PROJECT NO. 6120

REVISION 1

FEUILLE / SHT 1/1

FILE NO. 61-740-275-201_R1.dwg

NO. DESSIN DRAWING NO. 61-740-275-202

FORMAT ANSI B-11x17

POUR CONSTRUCTION
FOR CONSTRUCTION
AGNICO EAGLE
DATE : 2019-06-03

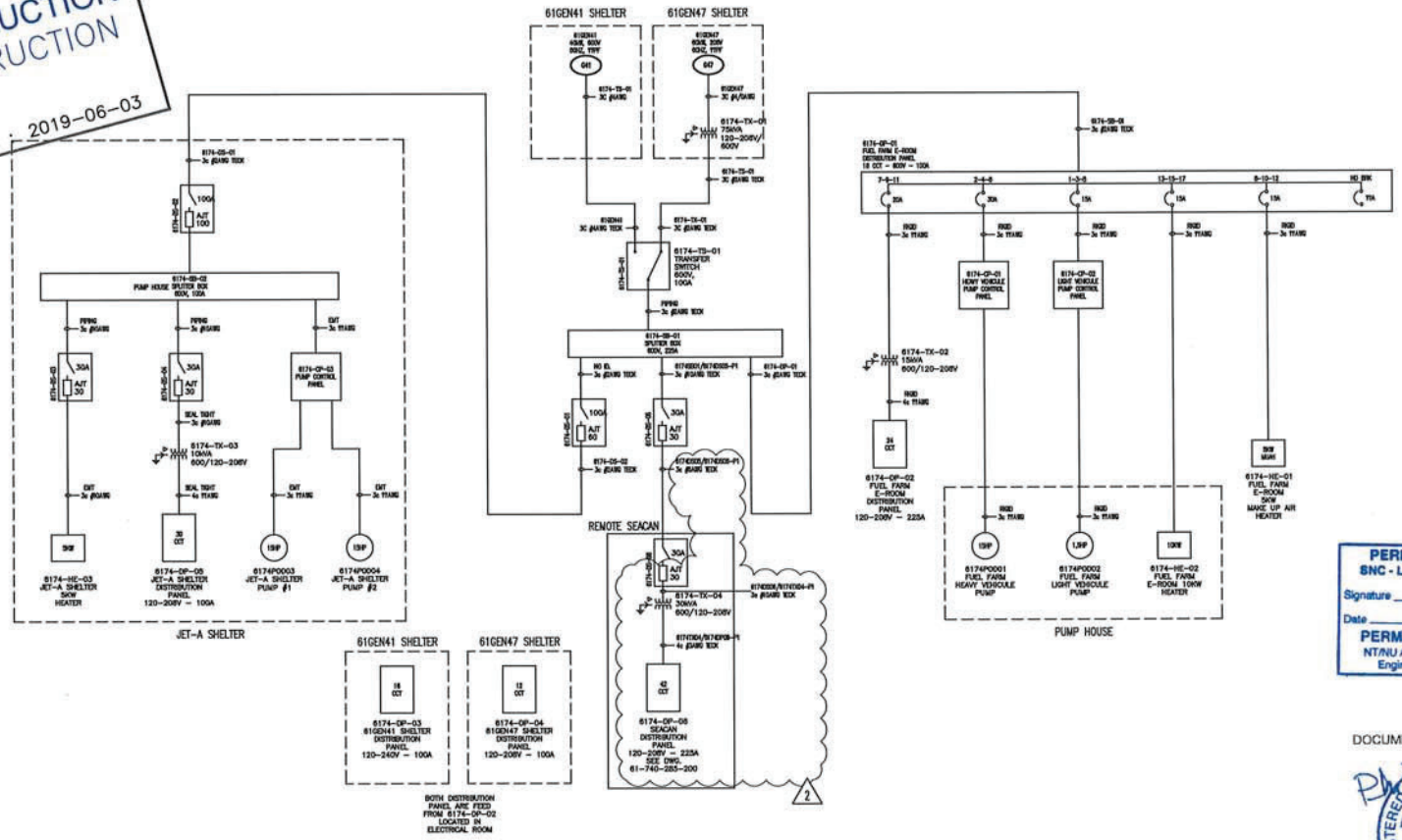

PERMIT TO PRACTICE
SNC - LAVALIN STAVIBEL INC.
Signature
Date 2019-06-03
PERMIT NUMBER: P 718
NT/NU Association of Professional Engineers and Geoscientists

DOCUMENT SIGNÉ NUMÉRIQUEMENT

REGISTERED PROFESSIONAL ENGINEER
P. LEMIRE
LICENSEE
L4098
NT/NU
2019-06-03

TITRE / TITLE	# DWG	REV	DESCRIPTION	DATE	PAR BY
–	–				
–	–				
–	–	2	ISSUED FOR CONSTRUCTION	2019-06-03	P.LEM.
–	–	1	ISSUED FOR TENDER	2019-05-03	P.LEM.
–	–	0	ORIGINAL DRAWING WAS 6174-E-003	JUNE/16	M.B.

DESSINS EN RÉFÉRENCE / REFERENCE DRAWINGS

REVISIONS

AGNICO EAGLE

Project # : 660534-0000
REV:1

SNC·LAVALIN
150, rue Gamble Ouest
Rouyn-Noranda (Québec) J9X 2R7
Tel. : 819 764-5181 Fax : 819 797-0158
www.snclavalin.com

DESSINÉ PAR DRAWN BY	ST	DATE	MAY/16
VÉRIFIÉ PAR CHECKED BY	ST		JUNE/16
APPROUVÉ PAR APPROVED BY			
No. PROJET PROJECT NO.	6120		
DATE	MAY/16		

TITRE / TITLE
AGNICO EAGLE – MEADOWBANK DIVISION
BAKER LAKE AREA 740
275 – POWER ELECTRICAL
SINGLE LINE
ELECTRICAL ROOM BAKER LAKE FUEL FARM DISTRIBUTION

ÉCHELLE/SCALE N/A | FICHIER FILE 61-740-275-202_R2.dwg

No. DESSIN/DRAWING NO. 61-740-275-202 | REVISION 2 | FEUILLE/SHT 1 / 1

AE-CART-ANSI B

\\sli.bz\stavibel\Projet\300-RN\660534\0000\4-Ingenierie\D-Dessins maitres\47-EL\61-740-275-202_R2.dwg-2013-02-19 14:03:29

NO. DESSIN / DRAWING NO. 61-740-280-209

FORMAT ANSI B-11x17

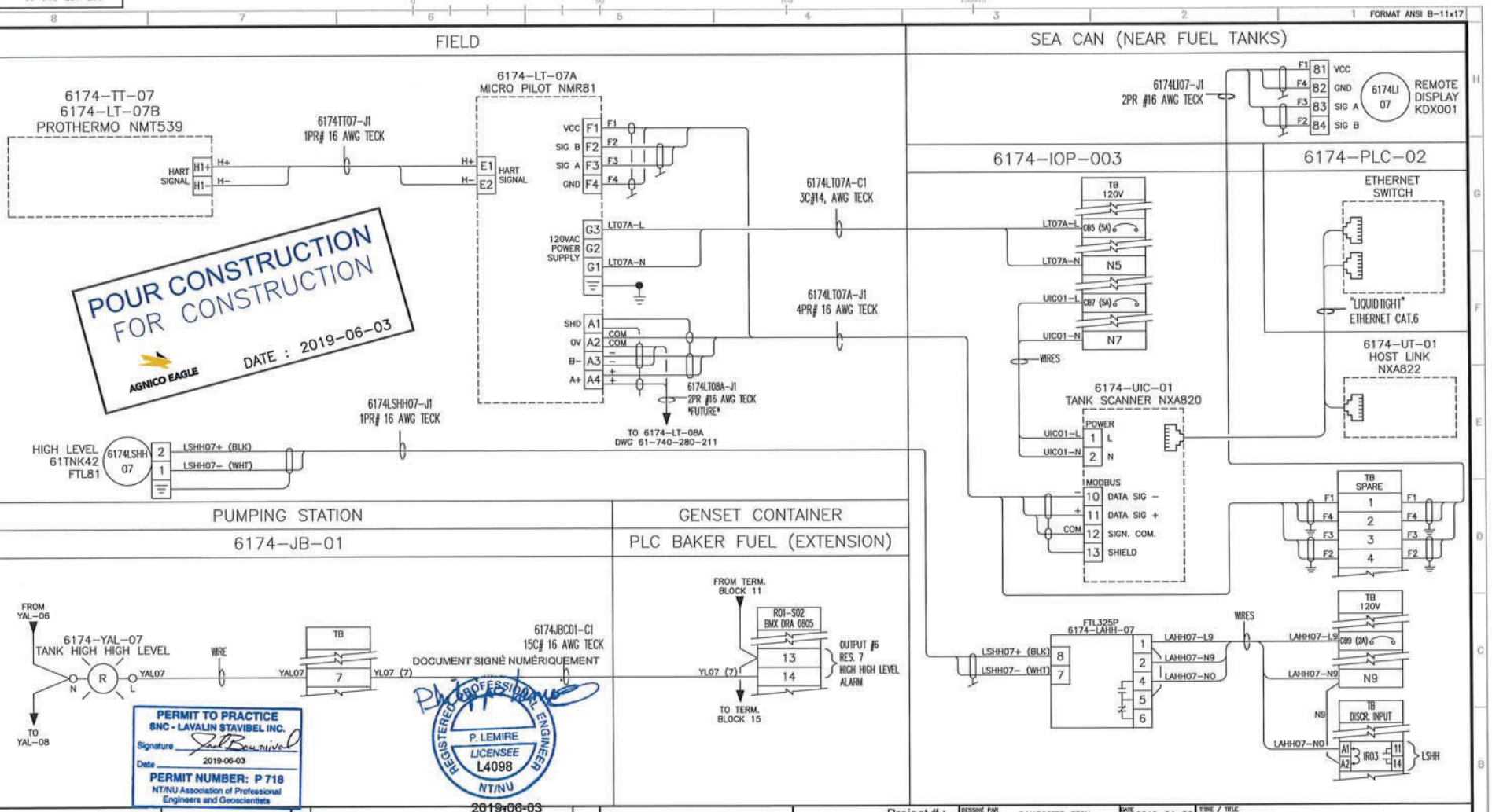

PERMIT TO PRACTICE
SNC-LAVALIN STAVIBEL INC.
Signature
Date 2019-06-03
PERMIT NUMBER: P 718
NT/NU Association of Professional Engineers and Geoscientists

REGISTERED PROFESSIONAL ENGINEER
P. LEMIRE
LICENSEE
L4098
NT/NU
2019-06-03

POUR CONSTRUCTION
FOR CONSTRUCTION
DATE : 2019-06-03
AGNICO EAGLE

DESSINS EN RÉFÉRENCE / REFERENCE DRAWINGS		REVISIONS			
TITRE / TITLE	# DWG	REV	DESCRIPTION	DATE	PAR BY
6174JBC01 – ARRANGEMENT / WIRING	61-740-280-214				
PLC BAKER FUEL (EXT.) – WIRING DIAGRAM	61-740-280-213				
6174IOP003 – WIRING DIAGRAM	61-740-280-207	1	ISSUED FOR CONSTRUCTION	2019-06-03	P.LEM
61TNK43 – LEVEL MONITORING	61-740-280-211	0	ISSUED FOR TENDER	2019-05-03	P.LEM

AGNICO EAGLE

Project # : 660534-0000

SNC·LAVALIN
150, rue Gamble Ouest
Rouyn-Noranda (Québec) J9X 2R7
Tel. : 819 764-5181 Fax : 819 797-0158
www.snclavalin.com

DESSINÉ PAR / DRAWN BY	S.MARCOTTE, TECH.	2019-04-29
VÉRIFIÉ PAR / CHECKED BY	PHILIPPE LEMIRE, P.ENG.	2019-04-29
APPROUVÉ PAR / APPROVED BY	PHILIPPE LEMIRE, P.ENG.	2019-05-03
No. PROJET / PROJECT NO.	6120	
DATE	2019-04-29	

TITRE / TITLE
AGNICO EAGLE – MEADOWBANK DIVISION
BAKER LAKE AREA 740
280 – INSTRUMENTATION & CONTROL
WIRING DIAGRAM
61TNK42 – LEVEL MONITORING

ÉCHELLE / SCALE: NTS
FICHIER / FILE: 61-740-280-209_R1.dwg
No. DESSIN / DRAWING NO.: 61-740-280-209
REVISION: 1
FEUILLE / SHT: 1 / 1

AE-CART-ANSI B

\\sll.bz\stavibel\Projet\300-RN\660534\0000\4-Ingenierie\D-Dessins maitres\48-IC\61-740-280-209_R1.dwg-2013-02-19 14:03:29

NO. DESSIN DRAWING NO. 61-740-280-210

FORMAT ANSI B-11x17

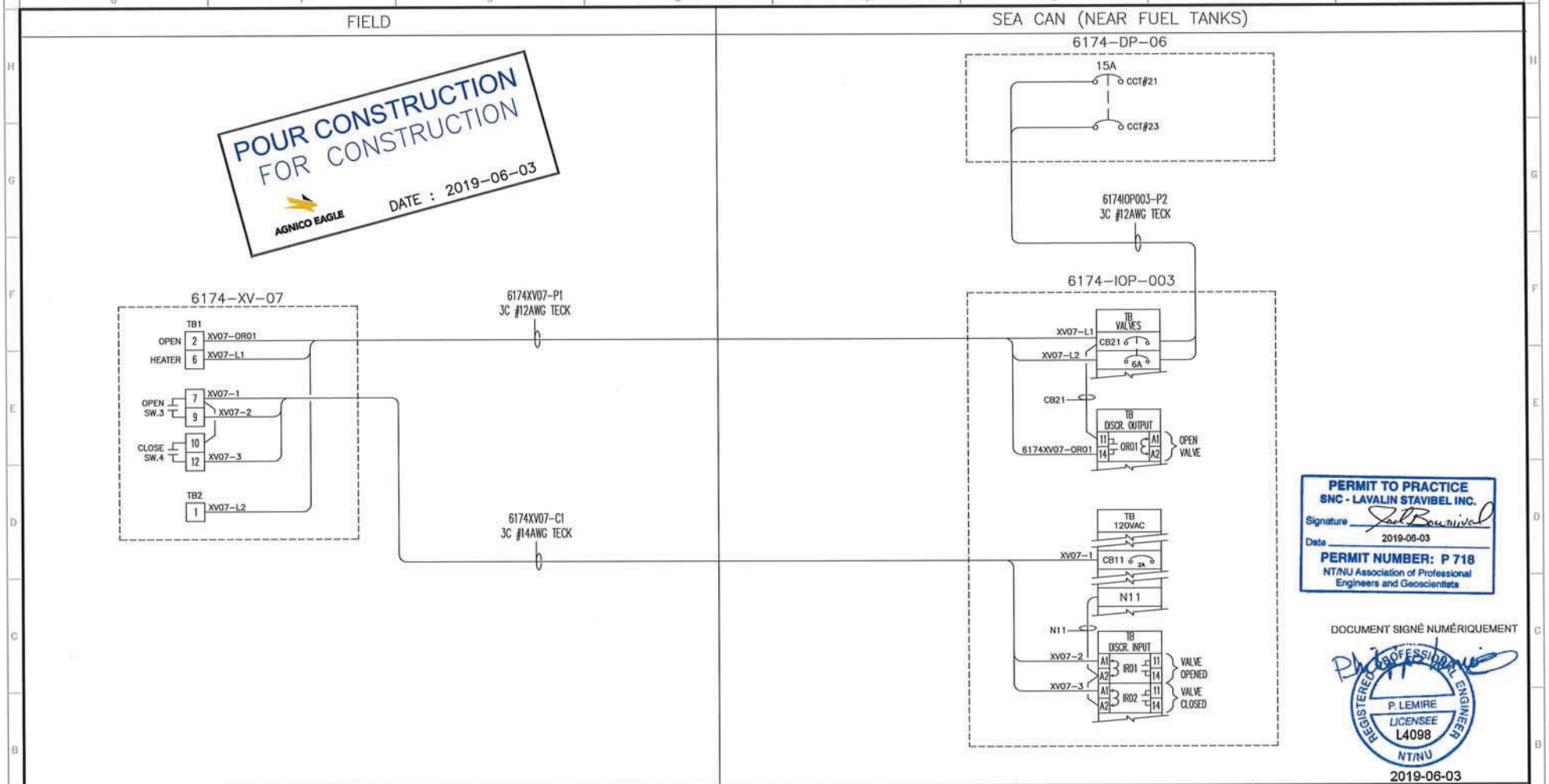

POUR CONSTRUCTION
FOR CONSTRUCTION
AGNICO EAGLE
DATE : 2019-06-03

PERMIT TO PRACTICE
SNC - LAVALIN STAVIBEL INC.
Signature
Date 2019-06-03
PERMIT NUMBER: P 718
NT/NU Association of Professional Engineers and Geoscientists

DOCUMENT SIGNÉ NUMÉRIQUEMENT

REGISTERED PROFESSIONAL ENGINEER
P. LEMIRE
LICENSEE
L4098
NT/NU
2019-06-03

TITRE / TITLE	# DWG	REV	DESCRIPTION	DATE	PAR BY
6174-DP-06 – SCHEDULE	61-740-285-200	1	ISSUED FOR CONSTRUCTION	2019-06-03	P.LEM
6174IOP003– WIRING DIAGRAM	61-740-280-207	0	ISSUED FOR TENDER	2019-05-03	P.LEM

DESSINS EN RÉFÉRENCE / REFERENCE DRAWINGS — REVISIONS

AGNICO EAGLE

Project # : 660534-0000

SNC·LAVALIN
150, rue Gamble Ouest
Rouyn-Noranda (Québec) J9X 2R7
Tel. : 819 764-5181 Fax : 819 797-0158
www.snclavalin.com

DESSINÉ PAR DRAWN BY	S.MARCOTTE, TECH.	DATE 2019-04-29
VÉRIFIÉ PAR CHECKED BY	PHILIPPE LEMIRE, P.ENG.	2019-04-29
APPROUVÉ PAR APPROVED BY	PHILIPPE LEMIRE, P.ENG.	2019-05-03
No. PROJET PROJECT NO.	6120	
DATE	2019-04-29	

TITRE / TITLE
AGNICO EAGLE – MEADOWBANK DIVISION
BAKER LAKE AREA 740
280 – INSTRUMENTATION & CONTROL
WIRING DIAGRAM
6170TNK42 – VALVE 6174-XV-07

ÉCHELLE/SCALE NTS — FICHIER FILE 61-740-280-210_R1.dwg

No. DESSIN/DRAWING NO. 61-740-280-210 — REVISION 1 — FEUILLE/SHT 1 / 1

AE-CART-ANSI B

\\sli.bz\stavibel\Projet\300-RN\660534\0000\4-Ingenierie\D-Dessins maitres\48-IC\61-740-280-210_R1.dwg-2013-02-19 14:03:29

NO. DESSIN / DRAWING NO. 61-740-280-211

FORMAT ANSI B-11x17

FIELD

6174-TT-08 / 6174-LT-08B PROTHERMO NMT539

HART SIGNAL H1+ / H1-

6174TT08B-J1 1PR# 16 AWG TECK

H+ / H- → E1 / E2 HART SIGNAL

6174-LT-08A MICRO PILOT NMR81

VCC F1 (F1)
SIG B F2 (F2)
SIG A F3 (F3)
GND F4 (F4)

6174LI08-C1 2PR#16 AWG TECK

6174LT08A-C1 3C# AWG TECK

120VAC POWER SUPPLY
G3 LT08A-L
G2
G1 LT08A-N

FROM 6174-LT-07A DWG 61-740-280-209

6174LT08A-J1 2PR# 16 AWG TECK

SHD A1
0V A2 COM
B- A3 −
A+ A4 +

POUR CONSTRUCTION
FOR CONSTRUCTION
AGNICO EAGLE
DATE : 2019-06-03

6174LSHH08-J1 1PR# 16 AWG TECK

HIGH LEVEL 61TNK43 FTL81 — 6174LSHH 08
2 LSHH08+ (BLK)
1 LSHH08- (WHT)

SEA CAN (NEAR FUEL TANKS)

6174LI 08 — REMOTE DISPLAY KDX001
F1 81 VCC
F4 82 GND
F3 83 SIG A
F2 84 SIG B

6174-IOP-003

TB 120V
LT08A-L — CB10 (5A)
LT08A-N — N10
WIRES
FTL325P 6174LAHH08
LSHH08+ (BLK) 8
LAHH08- (WHT) 7
1 LAHH08-L12
2 LAHH08-N12
4 LAHH08-NO
5
6
CB12 (2A) LAHH08-L12
LAHH08-N12 — N12
TB DISCR. INPUT
N12
LAHH08-NO — A1 / A2 IR06 11 / 14 LSHH

PUMPING STATION

6174-JB-01

FROM YAL-07
6174-YL-08 TANK HIGH HIGH LEVEL
R — N / L
WIRE
TB
YAL08 8 YAL08 (8)
YAL-N 9 YAL-N22 (9)
TO YAL-01

6174JBC01-C1 15C# 16 AWG TECK

GENSET CONTAINER

PLC BAKER FUEL (EXTENSION)

TB 120VAC
YAL-N22 (9) — N22
FROM TERM. BLOCK 13
R01-S02 BMX DRA 0805
15 OUTPUT #7 RES. 08 HIGH HIGH LEVEL ALARM
16 YL08 (8)

PERMIT TO PRACTICE
SNC - LAVALIN STAVIBEL INC.
Signature
Date 2019-06-03
PERMIT NUMBER: P 718
NT/NU Association of Professional Engineers and Geoscientists

DOCUMENT SIGNÉ NUMÉRIQUEMENT

REGISTERED PROFESSIONAL ENGINEER
P. LEMIRE
LICENSEE
L4098
NT/NU
2019-06-03

TITRE / TITLE	# DWG
6174JBC01 – ARRANGEMENT / WIRING	61-740-280-214
PLC BAKER FUEL (EXT.) – WIRING DIAGRAM	61-740-280-213
6174IOP003 – WIRING DIAGRAM	61-740-280-207
61TNK42 – LEVEL MONITORING	61-740-280-209

DESSINS EN RÉFÉRENCE / REFERENCE DRAWINGS

REV	DESCRIPTION	DATE	PAR BY
1	ISSUED FOR CONSTRUCTION	2019-06-03	P.LEM
0	ISSUED FOR TENDER	2019-05-03	P.LEM

REVISIONS

AGNICO EAGLE

Project # : 660534-0000

SNC·LAVALIN
150, rue Gamble Ouest
Rouyn-Noranda (Québec) J9X 2R7
Tel. : 819 764-5181 Fax : 819 797-0158
www.snclavalin.com

DESSINÉ PAR / DRAWN BY	S.MARCOTTE, TECH.	2019-04-29
VÉRIFIÉ PAR / CHECKED BY	PHILIPPE LEMIRE, P.ENG.	2019-04-29
APPROUVÉ PAR / APPROVED BY	PHILIPPE LEMIRE, P.ENG.	2019-05-03
No. PROJET / PROJECT NO.	6120	
DATE	2019-04-29	

L'INFORMATION CI-CONTENUE EST LA PROPRIÉTÉ DE AGNICO EAGLE LTÉE. NE PEUT ÊTRE REPRODUITE, SOUMISE, DIVULGUÉE OU UTILISÉE, EN TOUT OU EN PARTIE, SANS AUTORISATION ÉCRITE PRÉALABLE. THE INFORMATION CONTAINED HEREIN IS THE PROPERTY OF AGNICO EAGLE LTD. AND MUST NOT BE REPRODUCED, SUBMITTED, DISCLOSED OR USED IN WHOLE OR IN PART WITHOUT PRIOR WRITTEN PERMISSION.
© AGNICO EAGLE LTÉE

TITRE / TITLE
AGNICO EAGLE – MEADOWBANK DIVISION
BAKER LAKE AREA 740
280 – INSTRUMENTATION & CONTROL
WIRING DIAGRAM
61TNK43 – LEVEL MONITORING

ÉCHELLE / SCALE: NTS
FICHIER / FILE: 61-740-280-211_R1.dwg
No. DESSIN / DRAWING NO.: 61-740-280-211
REVISION: 1
FEUILLE / SHT: 1 / 1

AE-CART-ANSI B

\\sli.bz\stavibel\Projet\300-RN\660534\0000\4-Ingenierie\0-Dessins maitres\48-IC\61-740-280-211_R1.dwg-2013-02-19 14:03:29

NO. DESSIN / DRAWING NO. 61-740-280-212

FORMAT ANSI B-11x17

FIELD

POUR CONSTRUCTION
FOR CONSTRUCTION
AGNICO EAGLE
DATE : 2019-06-03

6174-XV-08

TB1
- OPEN — 2 — XV08-OR02
- HEATER — 6 — XV08-L1
- OPEN SW.3 — 7 — XV08-1
- 9 — XV08-2
- CLOSE SW.4 — 10 — XV08-3
- 12 — XV08-3

TB2
- 1 — XV08-L2

6174XV08-P1
3C #12AWG TECK

6174XV08-C1
3C #14AWG TECK

SEA CAN (NEAR FUEL TANKS)

6174-DP-06

15A
- CCT#25
- CCT#27

6174IOP003-P3
3C #12AWG TECK

6174-IOP-003

TB VALVES
- XV08-L1
- XV08-L2
- CB22 — 6A

TB DISCR. OUTPUTS
- CB22
- XV08-OR02 — 11/14 OR02 — A1/A2 — OPEN VALVE

TB 120VAC
- XV08-1 — CB13 — 2A

N13
- N13

TB DISCR. INPUT
- XV08-2 — A1/A2 IR04 — 11/14 — VALVE OPENED
- XV08-3 — A1/A2 IR05 — 11/14 — VALVE CLOSED

PERMIT TO PRACTICE
SNC - LAVALIN STAVIBEL INC.
Signature
Date 2019-06-03
PERMIT NUMBER: P 718
NT/NU Association of Professional Engineers and Geoscientists

DOCUMENT SIGNÉ NUMÉRIQUEMENT

REGISTERED PROFESSIONAL ENGINEER
P. LEMIRE
LICENSEE
L4098
NT/NU
2019-06-03

6174-DP-06 – SCHEDULE	61-740-285-200	1	ISSUED FOR CONSTRUCTION	2019-06-03	P.LEM
6174IOP003 – WIRING DIAGRAM	61-740-280-207	0	ISSUED FOR TENDER	2019-05-03	P.LEM
TITRE / TITLE	# DWG	REV	DESCRIPTION	DATE	PAR BY
DESSINS EN RÉFÉRENCE / REFERENCE DRAWINGS		REVISIONS			

AGNICO EAGLE

SNC·LAVALIN
150, rue Gamble Ouest
Rouyn-Noranda (Québec) J9X 2R7
Tel. : 819 764-5181 Fax : 819 797-0158
www.snclavalin.com

Project # : 660534-0000

DESSINÉ PAR / DRAWN BY	S.MARCOTTE, TECH.	2019-04-30
VÉRIFIÉ PAR / CHECKED BY	PHILIPPE LEMIRE, P.ENG.	2019-04-30
APPROUVÉ PAR / APPROVED BY	PHILIPPE LEMIRE, P.ENG.	2019-05-03
No. PROJET / PROJECT NO.	6120	
DATE	2019-04-30	

TITRE / TITLE
AGNICO EAGLE – MEADOWBANK DIVISION
BAKER LAKE AREA 740
280 – INSTRUMENTATION & CONTROL
WIRING DIAGRAM
6170TNK43 – VALVE 6174-XV-08

ÉCHELLE / SCALE: NTS
FICHIER / FILE: 61-740-280-212_R1.dwg
No. DESSIN / DRAWING NO.: 61-740-280-212
REVISION: 1
FEUILLE / SHT: 1 / 1

AE-CART-ANSI B

\\sfi.bz\stavibel\Projet\300-RN\660534\0000\4-Ingenierie\0-Dessins maitres\48-IC\61-740-280-212_R1.dwg-2013-02-19 14:03:29

NO. DESSIN / DRAWING NO. 61-740-280-213

FORMAT ARCH D

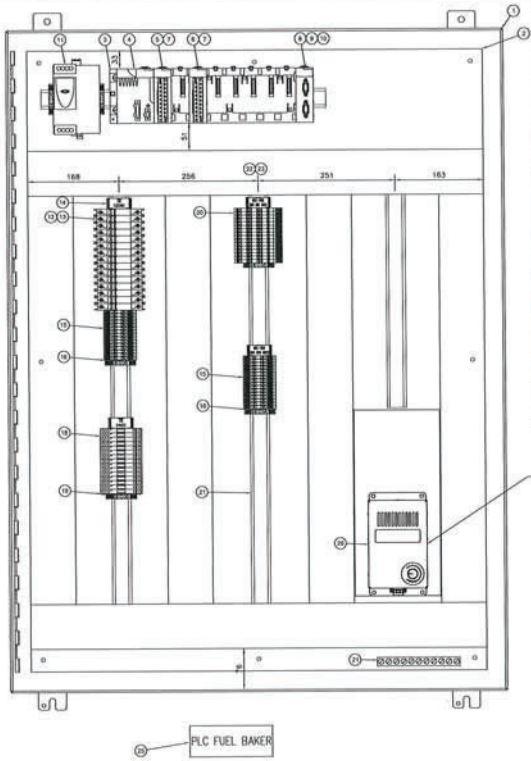

PLC FUEL BAKER (EXTENSION)

THE WIRING OF THE HEATER WILL BE DONE ON SITE

ITEM	QTY	DESCRIPTION	NO. PIÈCE	MANUFACTURER
1	1	PLC CABINET [48"X36"X10"] [1219mmX914mmX254mm], NEMA 12, WALL-MOUNT ENCLOSURE	A48361OLP	HOFFMAN
2	1	BACKPLANE [45"X33"] [1143mmX838mm]	A48P36G	HOFFMAN
3	1	6-SLOT X-BUS BACKPLANE	BMX XBP 0600	SCHNEIDER
4	1	POWER SUPPLY 100/240VAC	BMX CPS 3500	SCHNEIDER
5	1	DISCRETE INPUT, 120VAC, 16 PTS CONNECTED VIA A 20-PIN TERMINAL BLOCK	BMX DAI 1604	SCHNEIDER
6	1	AC/DC RELAY OUTPUT, 8 PTS ISOLATED CONNECTED VIA A 20-PIN TERMINAL BLOCK	BMX DRA 0805	SCHNEIDER
7	2	20-PIN TERMINAL BLOCK FOR M340, SCREW CLAMP, REMOVABLE	BMX FTB 2010	SCHNEIDER
8	2	RACK EXTENSION MODULE	BMX XBE 1000	SCHNEIDER
9	1	RACK EXTENSION MODULE CABLE 1,5M	BMX XBC 015K	SCHNEIDER
10	1	END OF LINE MODULE	TSX TLY EX	SCHNEIDER
11	1	POWER SUPPLY 24VDC, 10A, 240W	ABLBRP524100	SCHNEIDER
12	9	CIRCUIT BREAKER 5A, 1P, 120VAC	GL-1-13-DM-KM-05 - 9926251005	WEIDMULLER
13	7	CIRCUIT BREAKER 2A, 1P, 120VAC	GL-1-13-DM-KM-02 - 9926251002	WEIDMULLER
14	AS REQ.	TERMINAL STRIP MARKER HOLDER	SCHT 5 - 0292450000	WEIDMULLER
15	AS REQ.	TERMINAL BLOCK	WDU 4 - 1020100000	WEIDMULLER
16	AS REQ.	END PLATE	WAP 2.5-10 - 1050000000	WEIDMULLER
17	AS REQ.	END BRACKET	WEW 35/2 - 1061200000	WEIDMULLER
18	AS REQ.	DOUBLE DECK FUSE TERMINAL BLOCK WITH LED INDICATOR FOR 10 TO 36V AC/DC	KDKS 1EN/LC - 9027720001	WEIDMULLER
19	AS REQ.	END PLATE DOUBLE DECK FUSE TERMINAL BLOCK	AP KDKS1 DB - 9532470000	WEIDMULLER
20	16	RELAY, 1 CONTACT, SPRING CONNECTION, 6A	TRZ - 24-230VUC 1CO - 1122970000	WEIDMULLER
21	AS REQ.	DIN RAIL 35mm/15mm, PREPUNCHED, 2M	TS 35X15/6X18 2MA/STU/ZN - 1809560000	WEIDMULLER
22	AS REQ.	WIRING DUCT 3" X 3"	F3OLG6	PANDUIT
23	AS REQ.	COVER FOR WIRING DUCT 3"	C3LG6	PANDUIT
24	1	GROUND BAR WITH SCREWS	D157-10	ILSCO
25	1	LAMICOID NAMEPLATE 1 1/2" X 4" WHITE ON A BLACK BACKGROUND		
26	1	ELECTRIC HEATER, 400W, 240VAC	DAH4002B	HOFFMAN

MATERIAL LIST

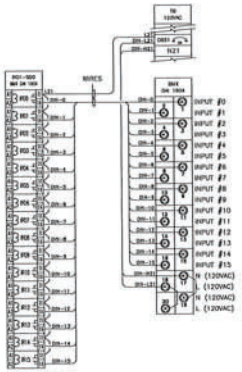

BMX DAI 1604 – SLOT 00
DISCRETE INPUT MODULE

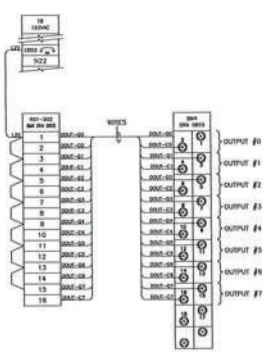

BMX DRA 0805 SLOT 02
DISCRETE OUTPUT MODULE

NOTES GÉNÉRALES / GENERAL NOTES

NOTES:

1. THE PLC CABINET SHALL BE PROPERLY INSULATED FOR INSTALLATION IN AN UNHEATED SEA CONTAINER.

WIRING COLOR:

BLACK : HOT 120VAC (14 AWG)
WHITE : NEUTRAL 120VAC (14 AWG)

RED: POSITIVE 24VDC (16 AWG)
GRAY: NEGATIVE 0VDC (16 AWG)

YELLOW : DIGITAL OUTPUT (16 AWG)
BLUE : DIGITAL INPUT (16 AWG)

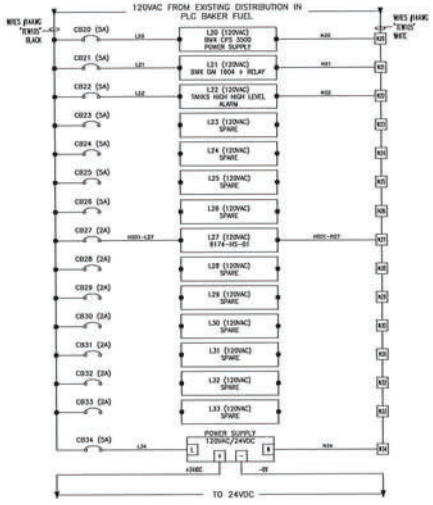

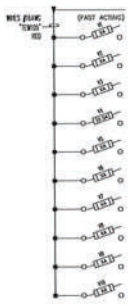

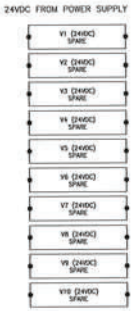

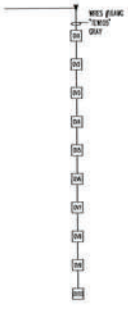

120VAC & 24VDC DISTRIBUTION

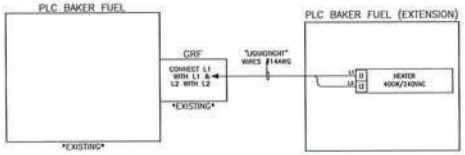

HEATER WIRING

DOCUMENT SIGNÉ PAR/ÉVIDEMMENT

P LEMIRE
LICENSEE
L4058
NT/NU

2019-05-03

PERMIT TO PRACTICE
SNC - LAVALIN STAVIBEL INC.
Signature
Date 2019-05-03
PERMIT NUMBER: P 718
NT/NU Association of Professional Engineers and Geoscientists

POUR CONSTRUCTION
FOR CONSTRUCTION
AGNICO EAGLE
DATE : 2019-06-03

DESSINS EN RÉFÉRENCE / REFERENCE DRAWINGS

NUMÉRO / NUMBER	TITRE / TITLE	# (REV)
—	—	—
—	—	—
—	—	—
—	—	—
—	—	—
—	—	—

SNC-LAVALIN

SNC-Lavalin Stavibel Inc.
155, rue Gamble Ouest
Rouyn-Noranda (Québec) J9X 2R7
Tél.: 819 764-5151 Fax: 819 797-0159
www.snclavalin.com

Project # : 660034-0000

AGNICO EAGLE

NO	DATE	DESCRIPTION	PAR/BY	APP. / CLIENT
1	2019-06-03	ISSUED FOR CONSTRUCTION	S.MAR	P.LEM
0	2019-05-03	ISSUED FOR TENDER	S.PEL	P.LEM

REVISIONS

TITRE / TITLE
AGNICO EAGLE – MEADOWBANK DIVISION
740 – BAKER LAKE AREA
280 – INSTRUMENTATION & CONTROL
ARRANGEMENT
PLC FUEL BAKER
EXTENSION PANEL

DESSINÉ PAR / DRAWN BY	DONALD PELLERIN, TECH.	2019-04-25
VÉRIFIÉ PAR / CHECKED BY	PHILIPPE LEMIRE, P.ENG.	2019-04-25
APPROUVÉ PAR / APPROVED BY	PHILIPPE LEMIRE, P.ENG.	2019-05-03
ÉCHELLE / SCALE	NTS	DATE 2019-04-25

NO. DESSIN / DRAWING NO. 61-750-280-213

NO. PROJET / PROJECT NO. 6120

RÉVISION 1

FEUILLE / SHT 1 / 1

FILE NO. 61-740-280-213_R1.dwg

NO. DESSIN DRAWING NO. 61-740-280-214_R1

FORMAT ARCHD

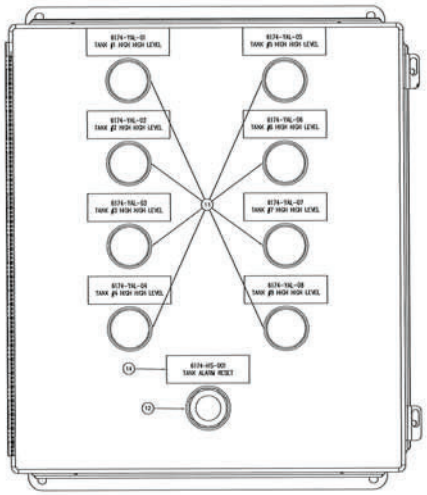

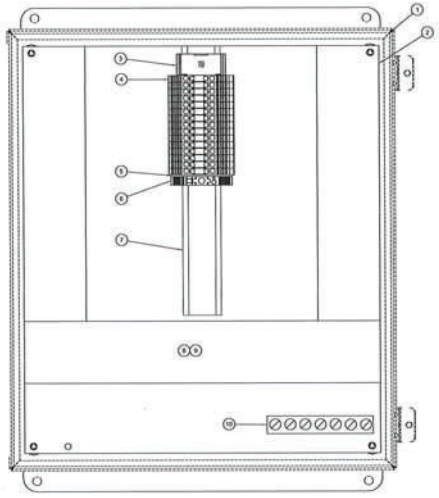

6174-JBC-01

JUNCTION BOX – 6174-JBC-01
SCL: 1:2

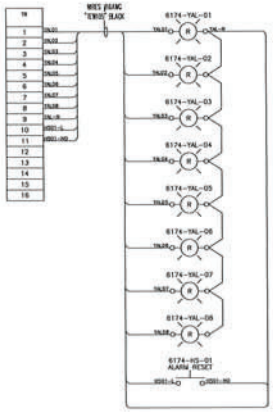

PANEL DOOR WIRING DIAGRAM

POUR CONSTRUCTION
FOR CONSTRUCTION
AGNICO EAGLE
DATE : 2019-06-03

ITEM	QTY	DESCRIPTION	NO. PIÈCE	MANUFACTURER
1	1	PLC CABINET [16"X14"X6"] (406mmX256mmX152mm), NEMA 12, WALL-MOUNT ENCLOSURE	A1614CH	HOFFMAN
2	1	BACKPLANE [15"X13"] (375mmX327mm)	A16P14G	HOFFMAN
3	AS REQ.	TERMINAL STRIP MARKER HOLDER	SCHT 5 - 0292460000	WEIDMULLER
4	AS REQ.	TERMINAL BLOCK	WDU 4 - 1020100000	WEIDMULLER
5	AS REQ.	END PLATE	WAP 2.5-10 - 1050000000	WEIDMULLER
6	AS REQ.	END BRACKET	WEW 35/2 - 1061200000	WEIDMULLER
7	AS REQ.	DIN RAIL 35mm/15mm, PREPUNCHED, 2M	TS 35X15/8X18 3M/ST/ZN - 1805980000	WEIDMULLER
8	AS REQ.	WIRING DUCT 2" X 2"	F2X2LG6	PANDUIT
9	AS REQ.	COVER FOR WIRING DUCT 2"	C2LG6	PANDUIT
10	1	GROUND BAR WITH SCREWS	D167-4	ILSCO
11	1	LAMICOID NAMEPLATE 1 1/2" X 4" WHITE ON A BLACK BACKGROUND		
12	8	PILOT LIGHT, RED, LED 120VAC	800T-QH2R	ALLEN-BRADLEY
13	1	PUSH BUTTON, FLUSH HEAD BLACK, MOMENTARY	800T-A2A	ALLEN-BRADLEY
14	9	LAMICOID NAMEPLATE 1" X 3" WHITE ON A BLACK BACKGROUND		

MATERIAL LIST

DOCUMENT DIGITÉ NUMÉRIQUEMENT

P. LEMIRE
LICENSEE
L4096
NEMO
2019-06-03

PERMIT TO PRACTICE
SNC - LAVALIN STAVEBEL INC.
Signature
Date 2019-06-03
PERMIT NUMBER: P 718
NT/NU Association of Professional Engineers and Geoscientists

PLAN CLÉ
KEY PLAN

NOTES GÉNÉRALES / GENERAL NOTES

SNC·LAVALIN
SNC-Lavalin Stavebel Inc.
155, rue Gamble Ouest
Rouyn-Noranda (Québec) J9X 2R7
Tél.: 819 764-5151 Fax: 819 767-0159
www.snclavalin.com

Project # : 660534-0000

DESSINS EN RÉFÉRENCE / REFERENCE DRAWINGS

TITRE / TITLE	# DWG
-	-
-	-
-	-
-	-
-	-
-	-

AGNICO EAGLE

REV.	DATE	DESCRIPTION	PAR/BY	APP.	CLIENT
1	2019-06-03	ISSUED FOR CONSTRUCTION	S.MAR	P.LEM	
0	2019-05-03	ISSUED FOR TENDER	D.PEL	P.LEM	

REVISIONS

TITRE / TITLE
AGNICO EAGLE – MEADOWBANK DIVISION
740 – BAKER LAKE AREA
280 – INSTRUMENTATION & CONTROL
ARRANGEMENT
JUNCTION BOX
6174-JBC-01

DESSINÉ PAR DRAWN BY	DONALD PELLERIN, TECH.	DATE 2019-05-02
VÉRIFIÉ PAR CHECKED BY	PHILIPPE LEMIRE, P.ENG.	2019-05-03
APPROUVÉ PAR APPROVED BY	PHILIPPE LEMIRE, P.ENG.	2019-05-03
ÉCHELLE SCALE	AS SHOWN	DATE 2019-05-02

NO. DESSIN DRAWING NO. 61-750-280-214

NO. PROJET PROJECT NO.	REVISION	FEUILLE / SHT
6120	1	1/1

AC-CAT-ARCH D

FILE NO. 61-740-280-214_R1.dwg

NO. DESSIN / DRAWING NO. 61-740-280-215

FORMAT ANSI B-11x17

PUMPING STATION

6174-JB-01

6174-HS-01
ALARM RESET

HS01-L — HS01-NO

TB
HS01-L — 10 — HS01-L27 (10)
HS01-NO — 11 — HS01-NO (11)

GENSET CONTAINER

PLC BAKER FUEL (EXTENSION)

PART OF
6174JBC01-C1
15C# 16 AWG TECK

TB
120VAC

HS01-L27 (10) — CB27 — N27

R01-500
BMX DN 1604

HS01-NO (11) — A1 — IR00 — 11 — 14 — INPUT #0 HS-01 ALARM RESET
N27 — A2

OUTSIDE PUMPING STATION

POUR CONSTRUCTION
FOR CONSTRUCTION
DATE : 2019-06-03
AGNICO EAGLE

6174-YA-01

YA01
YI01
YA01-N
YI01-N

6174-YI-01

YI01 — R — YI01-N

PLC BAKER FUEL

DOCUMENT SIGNÉ NUMÉRIQUEMENT

REGISTERED PROFESSIONAL ENGINEER
P. LEMIRE
LICENSEE
L4098
NT/NU
2019-06-03

6174YA01-C1
3C# 14 AWG TECK

TB
120VAC

YA01-L6 — CB6
YA01-N — N

SLOT #2
BMX EHC 0800

YA01-L6 — 5 — OUTPUT #3 HIGH HIGH LEVEL HORN & STROBE
YAO1 — 6

PERMIT TO PRACTICE
SNC - LAVALIN STAVIBEL INC.
Signature
Date 2019-06-03
PERMIT NUMBER: P 718
NT/NU Association of Professional Engineers and Geoscientists

REV	DESCRIPTION	DATE	PAR BY
1	ISSUED FOR CONSTRUCTION	2019-06-03	P.LEM
0	ISSUED FOR TENDER	2019-05-03	YG

PLC FUEL BAKER (EXT) – WIRING DIAGRAM | 61-750-280-213
TITRE / TITLE | # DWG
DESSINS EN RÉFÉRENCE / REFERENCE DRAWINGS
REVISIONS

AGNICO EAGLE

Project # : 660534-0000

SNC·LAVALIN
150, rue Gamble Ouest
Rouyn-Noranda (Québec) J9X 2R7
Tel. : 819 764-5181 Fax : 819 797-0158
www.snclavalin.com

DESSINÉ PAR / DRAWN BY	Y.GAUTHIER. TECH.	DATE 2019-05-02
VÉRIFIÉ PAR / CHECKED BY	PHILIPPE LEMIRE, P.ENG.	2019-05-03
APPROUVÉ PAR / APPROVED BY	PHILIPPE LEMIRE, P.ENG.	2019-05-03
No. PROJET / PROJECT NO.	6120	
DATE	2019-05-03	

TITRE / TITLE
AGNICO EAGLE – MEADOWBANK DIVISION
BAKER LAKE AREA 740
280 – INSTRUMENTATION & CONTROL
WIRING DIAGRAM
HIGH HIGH LEVEL ALARM – TANKS

ÉCHELLE/SCALE NTS
FICHIER/FILE 61-740-280-215_R1.dwg
No. DESSIN/DRAWING NO. 61-740-280-215
REVISION 1
FEUILLE/SHT 1 / 1

AE-CART-ANSI B

\\sli.bz\stavibel\Projet\300-RN\660534\0000\4-Ingenierie\0-Dessins maitres\48-IC\61-740-280-215_R1.dwg-2013-02-19 14:03:29

NO. DESSIN / DRAWING NO. 61-740-285-200

FORMAT ANSI B-11x17

POUR CONSTRUCTION
FOR CONSTRUCTION
AGNICO EAGLE
DATE : 2019-06-03

Panel Ident.: 6174-DP-06

Power source:	120 208 Volts
Feeder :	6174-TX-04
Mount:	Surface
Localisation:	BAKER LAKE SEA CAN
Type:	Schneider QO Series

Encl. Type :	NEMA 1
Main breaker:	N/A
Nb. of circuit:	42
Bars (Amps):	225A
Cap. rupt. (kA)	10

Local and description	TYPE REF	TYPE Qty	WATTS	DISJ. TYPE	DISJ. AMP	CT #		CT #	DISJ. AMP	DISJ. TYPE	WATTS	TYPE Qty	TYPE REF	Local and description
6174-PLC-02 Power	D				15	1	A	2	15				E	Sea Can Lighting
6174-XV-01 - Elect. Actuator valve	M				15	3	B	4	15				P	Sea Can Receptacle
6174-XV-02 - Elect. actuator valve	M				15	5	C	6	15					Spare breaker
6174-XV-03 - Elect. actuator valve	M				15	7	A	8	15					Spare breaker
6174-XV-04 - Elect. actuator valve	M				15	9	B	10	15					Spare breaker
6174-XV-05 - Elect. actuator valve	M				15	11	C	12	15					Spare breaker
6174-XV-06 - Elect. actuator valve	M				15	13	A	14	15					Spare breaker
(2) 6174-IOP-003 power	D				15	15	B	16	15					Spare breaker
Spare breaker					15	17	C	18	30					Spare breaker
Spare breaker					15	19	A	20						
(2) 6174-XV-07 Res. #7 Valve Actuator	M				15	21	B	22	15	GFI			C	6174-HEA-07 Res. #7 Valve Heating (2)
						23	C	24						
(2) 6174-XV-08 Res. #7 Valve Actuator	M				15	25	A	26	15	GFI			C	6174-HEA-08 Res. #7 Valve Heating (2)
						27	B	28						
Space						29	C	30						Space
Space						31	A	32						Space
Space						33	B	34						Space
Space						35	C	36						Space
Space						37	A	38						Space
Space						39	B	40						Space
Space						41	C	42						Space

TYPE (REF)	(W) total	Qty
(E) Lighting	0	0
(P) Parking plug	0	0
(C) Heating	0	0
(M) Motor	0	0
(W) Water heater	0	0
(D)Other	0	0
	0	0

TYPE (REF)	Qty (ref)
(L) Spare	0
(S) Space	0
	0
	0
	0

	Watts	Amp
Phase A	0	0,00
Phase B	0	0,00
Phase C	0	0,00
Total R	0	0,00

PERMIT TO PRACTICE
SNC - LAVALIN STAVIBEL INC.
Signature
Date 2019-06-03
PERMIT NUMBER: P 718
NT/NU Association of Professional Engineers and Geoscientists

DOCUMENT SIGNÉ NUMÉRIQUEMENT

REGISTERED PROFESSIONAL ENGINEER
P. LEMIRE
LICENSEE
L4098
NT/NU
2019-06-03

REV	DESCRIPTION	DATE	PAR BY
2	ISSUED FOR CONSTRUCTION	2019-06-03	P.LEM.
1	ISSUED FOR TENDER	2019-05-03	P.LEM.
0	ORIGINAL DRAWING WAS 6174-E-002	JUNE/16	M.B.

TITRE / TITLE | # DWG | REV | DESCRIPTION | DATE | PAR BY

DESSINS EN RÉFÉRENCE / REFERENCE DRAWINGS

REVISIONS

AGNICO EAGLE

Project # : 660534-0000
REV:1

SNC·LAVALIN
150, rue Gamble Ouest
Rouyn-Noranda (Québec) J9X 2R7
Tel. : 819 764-5181 Fax : 819 797-0158
www.snclavalin.com

DESSINÉ PAR / DRAWN BY	MV	MAY/16
VÉRIFIÉ PAR / CHECKED BY	ST	JUNE/16
APPROUVÉ PAR / APPROVED BY	ST	JUNE/16
No. PROJET / PROJECT NO.	6120	
DATE	JUNE/16	

TITRE / TITLE: AGNICO EAGLE – MEADOWBANK DIVISION
BAKER LAKE AREA 740
285 – SERVICE ELECTRICAL – LIGHT AND DISTRIBUTION
6174-DP-06 PANEL SCHEDULE
BAKER LAKE SEA CAN – DISTRIBUTION PANEL 120/208VAC

ÉCHELLE/SCALE: N/A
FICHIER/FILE: 61-740-285-200_R2.dwg
No. DESSIN/DRAWING NO.: 61-740-285-200
REVISION: 2
FEUILLE/SHT: 1 / 1

AE-CART-ANSI B

\\ell.bz\stavibel\Projet\300-RN\660534\0000\4-Ingenierie\0-Dessins maitres\47-EL\61-740-285-200_R2.dwg-2013-02-19 14:03:29

NO. DESSIN DRAWING NO. 61-740-J-0100-1-R7

FORMAT ARCHD

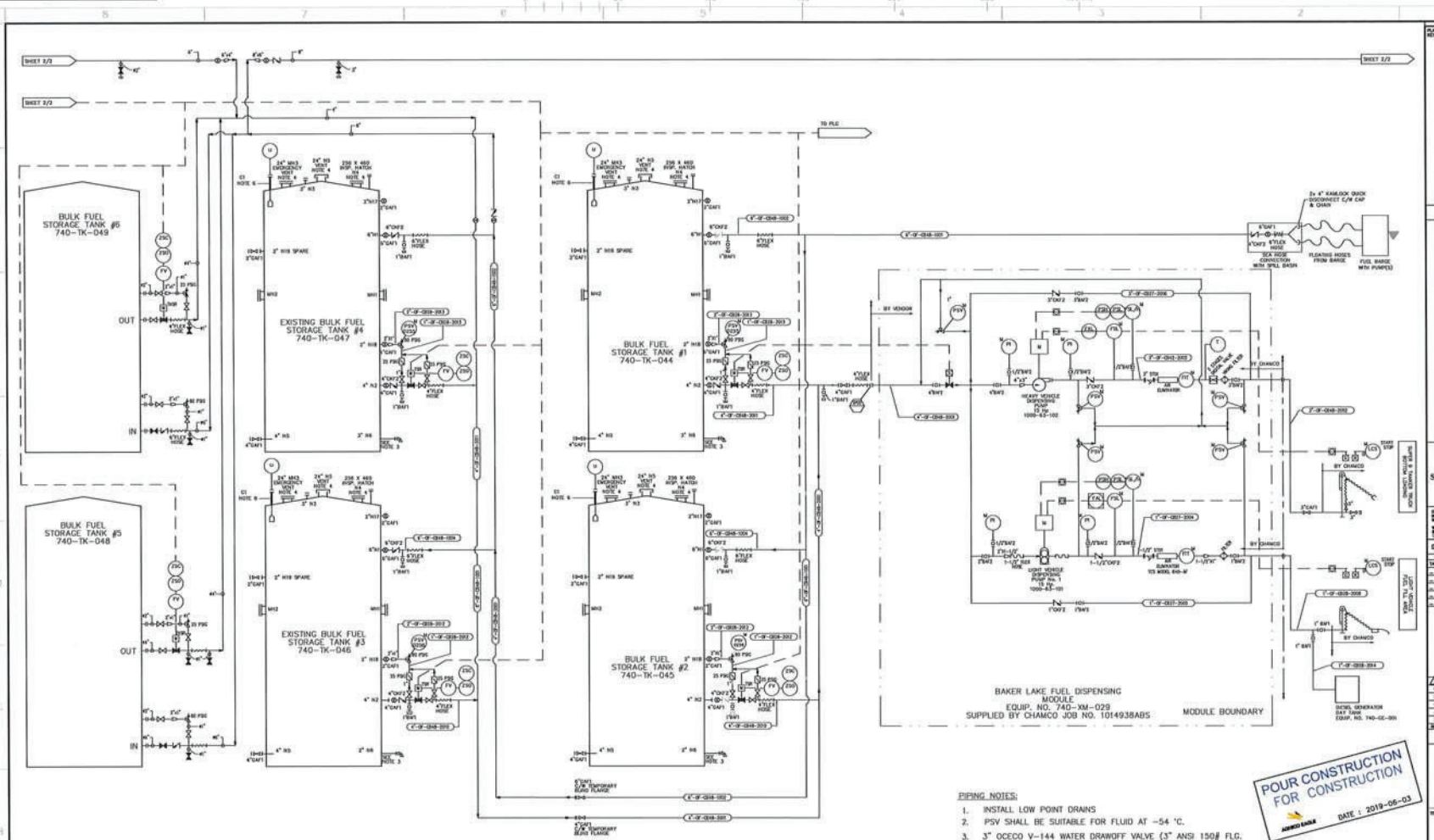

PIPING NOTES:

1. INSTALL LOW POINT DRAINS
2. PSV SHALL BE SUITABLE FOR FLUID AT -54 °C.
3. 3" OCECO V-144 WATER DRAWOFF VALVE (3" ANSI 150# FLG. SUPPLIED BY TANK VENDOR. VALVE TO BE HEAT TRACED AND INSULATED.
4. DESIGN OF THESE TANKS TOP OPENINGS, BY TANK MANUFACTURER
5. FLEXIBLE SS BRAIDED HOSE, 750mm LG. (FLEXONIC SENIOR, OR EQUAL)
6. VAREC 2500 LEVEL INDICATOR BY TANK MANUFACTURER

*SEE PLAN 008 FOR SCHEDULE OF FITTINGS

POUR CONSTRUCTION
FOR CONSTRUCTION
AGNICO EAGLE
DATE : 2019-06-03

PERMIT TO PRACTICE
SNC - LAVALIN STAVIBEL INC.
Signature
Date 2019-06-03 L3595
PERMIT NUMBER: P 718
NT/NU Association of Professional Engineers and Geoscientists

PLAN CLÉ
KEY PLAN

NOTES GÉNÉRALES / GENERAL NOTES

SNC·LAVALIN
SNC-Lavalin Stavibel Inc.
100, rue Gamble Ouest
Rouyn-Noranda (Québec) J9X 2R2
Tél. : 819 764-5101 Fax : 819 797-0109
www.snclavalin.com

Project # : 680534-0000 REV.: 7

DESSINS EN RÉFÉRENCE / REFERENCE DRAWINGS

NOM / TITLE	# DWG
TANKS #5 AND #6 – FUEL DIST. PIPING	61-740-M-0100
–	–
–	–
–	–
–	–
–	–

AGNICO EAGLE

REV.	DATE	DESCRIPTION	PAR/BY	APP.	CLIENT
7	2019-05-03	ISSUED FOR CONSTRUCTION	B.L.	A.G.	R.NOV
6	2019-05-02	ACCEDEMAN AIR / DRAIN VALVE	P.G.C.	A.G.	R.MEN.
5	2019-04-02	ISSUED FOR TENDER	B.L.	A.G.	R.MEN.
4	2019-12-12	FOR COMMENTS	B.L.	M.H.	R.MEN.
3	2019-06-24	FOR CONSTRUCTION	ST.M.	M.R.	–
2	2019-06-17	DRAWING UPDATE	ST.M.	M.R.	–

REVISIONS

REGISTERED PROFESSIONAL ENGINEER
A. QUELLET
LICENSEE
L3595
NT/NU
2019-06-03

TITRE / TITLE
AGNICO-EAGLE – MEADOWBANK DIVISION
BAKER LAKE AREA 740
–
PROCESS AND INSTRUMENTATION DIAGRAM
–
–

DESSINÉ PAR / DRAWN BY	FRANCIS ROSE, TECH	DATE 2009-03-27
VÉRIFIÉ PAR / CHECKED BY	PATRICK GIARD, P.ENG	–
APPROUVÉ PAR / APPROVED BY	PATRICK GIARD, P.ENG	–
ÉCHELLE / SCALE	N.T.S	DATE 2009-03-27

NO. DESSIN / DRAWING NO. 61-740-J-0100

NO. PROJET / PROJECT NO.	REVISION	FEUILLE / SHT
VD2259-2	7	1/2

FILE NO. 61-740-J-0100-1-R7.dwg

NO. DESSIN DRAWING NO. 61-740-J-0100-1-R7

FORMAT ARCHD

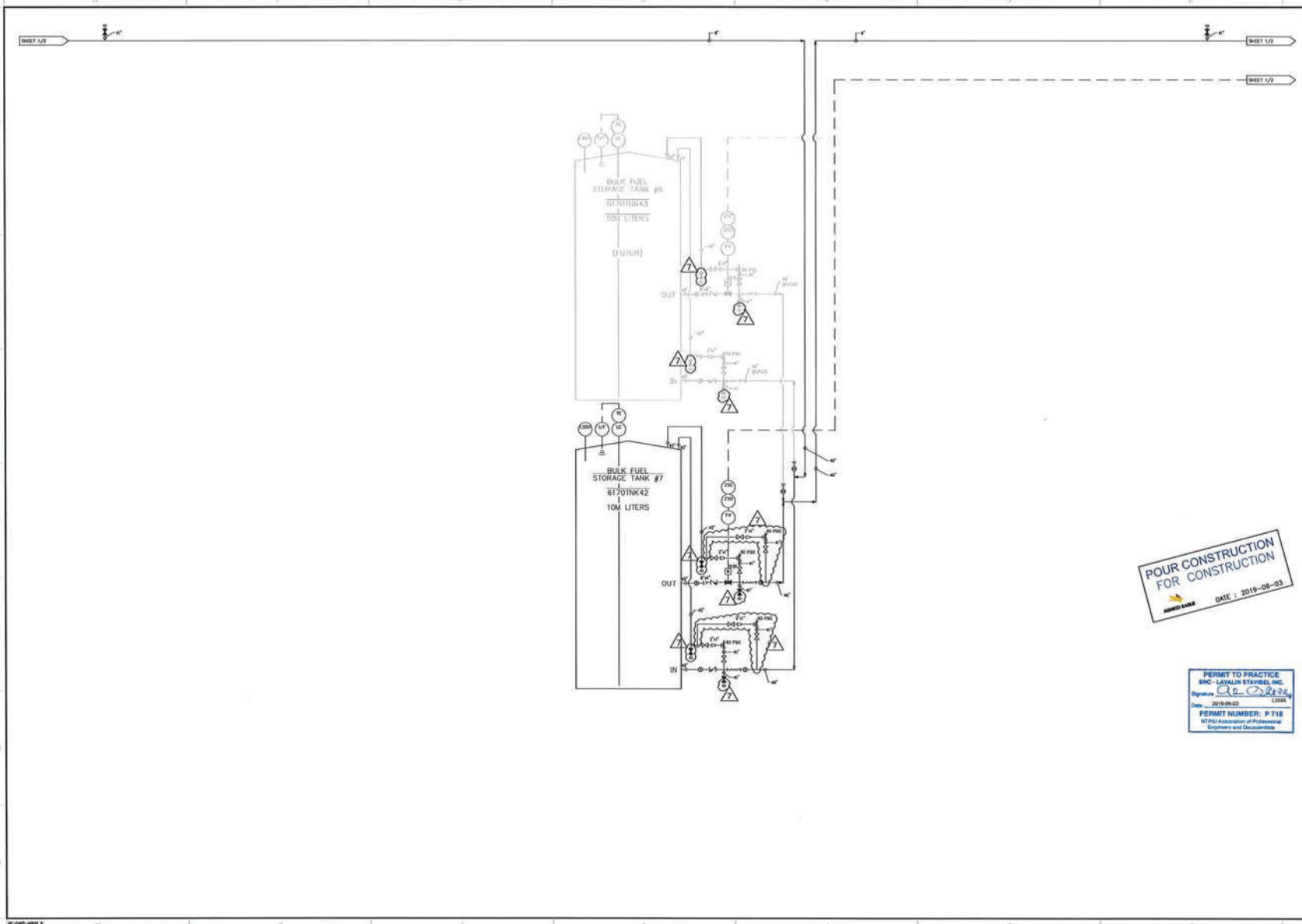

PLAN CLÉ
KEY PLAN

NOTES GÉNÉRALES / GENERAL NOTES

SNC·LAVALIN

SNC-Lavalin Stavibel Inc.
135 rue Gamble Ouest
Rouyn-Noranda (Québec) J9X 2R7
Tél.: 819 768-5101 Fax: 819 797-6158
www.snclavalin.com

Project # : 660534-0000 REV.: 7

DESSINS EN RÉFÉRENCE / REFERENCE DRAWINGS

TITRE / TITLE	# DWG
TANK #8 AND #9 – FUEL DIST. PIPING	61-740-M-0100
–	–
–	–
–	–
–	–
–	–

AGNICO EAGLE

REV.	DATE	DESCRIPTION	PAR/BY	APP.	CLIENT
7	2019-06-03	ISSUED FOR CONSTRUCTION	B.L.	A.G.	B.ROY
6	2019-05-03	ADDENDUM AIR / DRAIN VALVE	P.G.C	A.G.	N.MÉN.
5	2019-04-03	ISSUED FOR TENDER	B.L.	A.G.	N.MÉN.
4	2019-12-12	FOR COMMENTS	B.L.	M.H.	N.MÉN.
3	2019-06-03	FOR CONSTRUCTION	ST.M.	M.K.	–
2	2019-06-17	DRAWING UPDATE	ST.M.	M.K.	–

REVISIONS

PROFESSIONAL ENGINEER
A. OUELLET
LICENSEE
L3595
NT/NU
2019-06-03

TITRE / TITLE
AGNICO-EAGLE – MEADOWBANK DIVISION
BAKER LAKE AREA 740
–
PROCESS AND INSTRUMENTATION DIAGRAM
–
–

DESSINÉ PAR / DRAWN BY	FRANCIS ROSE, TECH	DATE 2009-03-27
VÉRIFIÉ PAR / CHECKED BY	PATRICK GIARD, P.ENG	–
APPROUVÉ PAR / APPROVED BY	PATRICK GIARD, P.ENG	–
ÉCHELLE / SCALE	N.T.S	DATE 2009-03-27

NO. DESSIN / DRAWING NO. 61-740-J-0100

NO. PROJET / PROJECT NO.	REVISION	FEUILLE / SHT
VD2259-2	7	2 / 2

FILE NO. 61-740-J-0100-1-R7.dwg

Appendix B

As built drawing

NO. DESSIN DRAWING NO. 61-740-210-201_1RC

FORMAT ARCH D

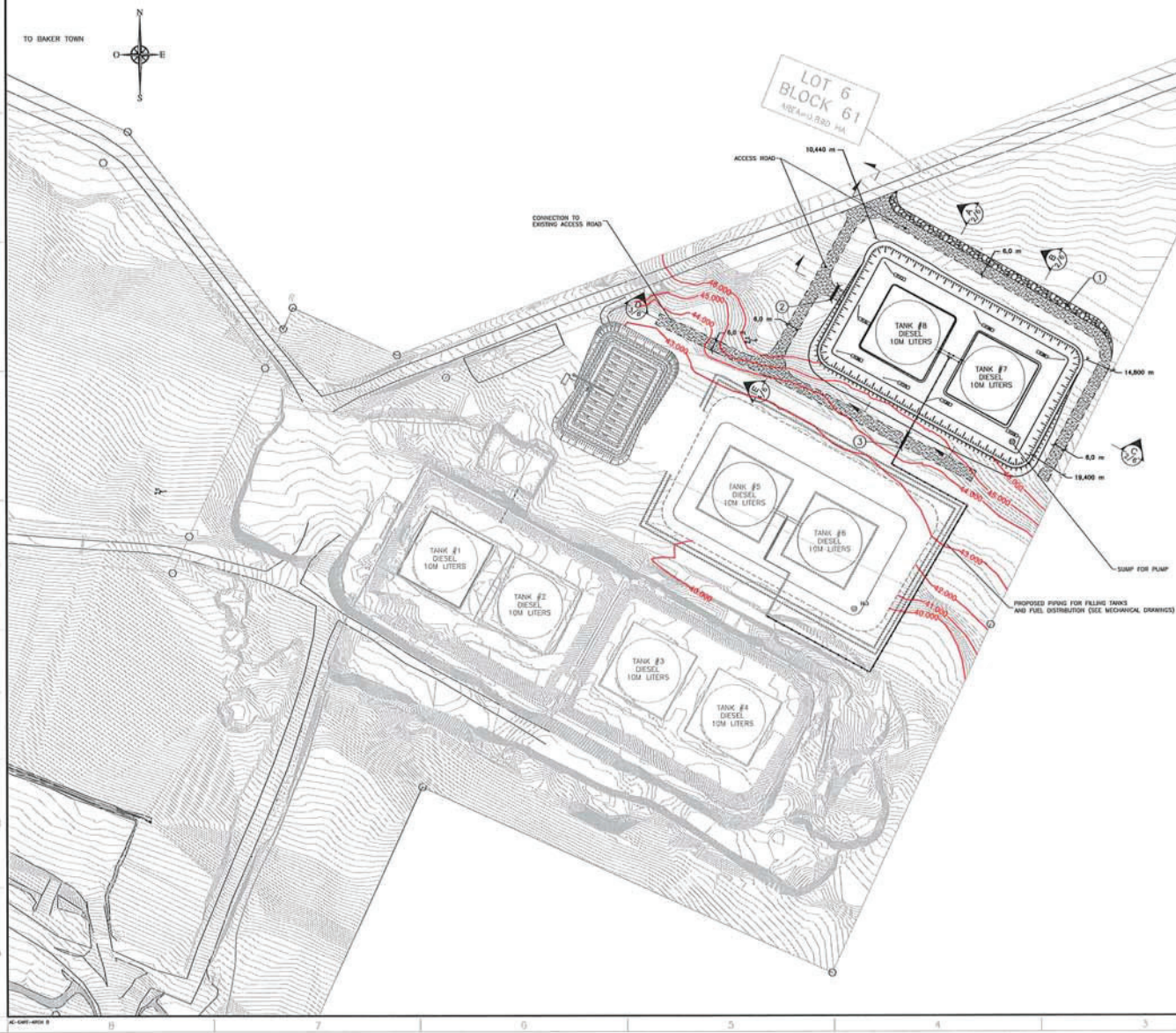

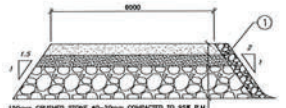

1. PROTECTIVE STONES COVERING #0-150mm THICKNESS 300mm
2. ACSP CULVERT #600mm GAGE 2.8mm &12m LENGTH WITH END PIPE PROTECTION RIP RAP, SEE DETAIL ON DRAWING 61-740-210-201
3. THIS CULVERT IS USED FOR THE PASSAGE OF THE TANK PIPES THROUGH THE DIKE – ACSP CULVERT #600mm GAGE 2.8mm &12m LENGTH WITHOUT END PIPE PROTECTION

TYPICAL SECTION ACCESS ROAD TO SECONDARY CONTAINMENT BASIN

SCALE : NONE

ESTIMATED VOLUMES :

FOR ACCESS ROAD TO SECONDARY CONTAINMENT BASIN :

- CRUSHED STONE #0-20mm = 485m³
- BACKFILL MATERIAL #0-150mm = 770m³
- BACKFILL MATERIAL #0-1000mm = 2825m³

FOR SECONDARY CONTAINMENT BASIN :

- CRUSHED STONE #0-20mm = 893m³
- BACKFILL MATERIAL #0-20mm = 1530m³
- BACKFILL MATERIAL #0-150mm = 10714m³
- BACKFILL MATERIAL #0-1000mm = 4228m³

EXCAVATION INFORMATIONS :

- ESTIMATED OF NATURAL SOIL TO REMOVE = 11110m³
- ESTIMATED OF ROC TO REMOVE = 1070m³

0m 25m 50m 75m

GRAPHICAL SCALE

PLAN CLÉ
KEY PLAN

NOTES GÉNÉRALES / GENERAL NOTES

POUR CONSTRUCTION
FOR CONSTRUCTION
AGNICO EAGLE
DATE 2019-03-11

DESSINS EN RÉFÉRENCE / REFERENCE DRAWINGS

TITRE / TITLE	# (NO.)

AGNICO EAGLE

REV.	DATE	DESCRIPTION	PAR/BY	APP.	QUANT.
1	2019-03-11	FOR CONSTRUCTION	D.L-L.	M.H.	–

REVISIONS

TITRE / TITLE

AGNICO-EAGLE – MEADOWBANK DIVISION
740 BAKER LAKE AREA
GENERAL ARRANGEMENT
PLAN VIEW
10M LITERS TANKS LOCATION
TANKS #7 & #8

DESSINÉ PAR / DRAWN BY	FRANCIS PERRON, TECH.	2018-12-10
VÉRIFIÉ PAR / CHECKED BY	RICHARD MARCOUX, ING.	2018-12-10
APPROUVÉ PAR / APPROVED BY	MARC HÉNAULT, P. ENG.	2018-12-10
ÉCHELLE / SCALE	1 : 1000	DATE 2018-07-18

NO. DESSIN / DRAWING NO. 61-740-230-200

NO. PROJET / PROJECT NO.	REVISION	FEUILLE / SHT
61	1	1/1

AC-GAFC-ARCH D

FILE NO. 61-740-210-201_RC.dwg

NO. DESSIN / DRAWING NO. 61-740-210-201_1RC

FORMAT ARCH D

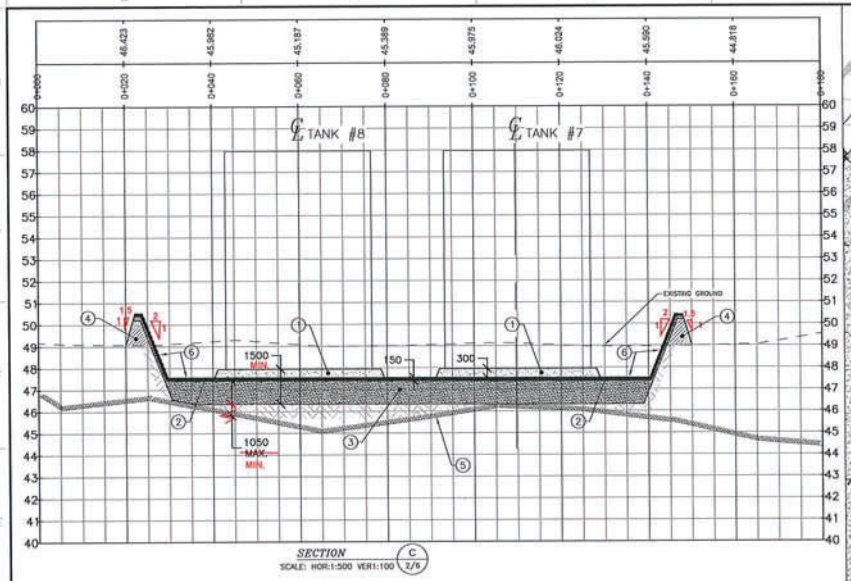

SECTION C
SCALE: HOR:1:500 VER:1:100 2/6

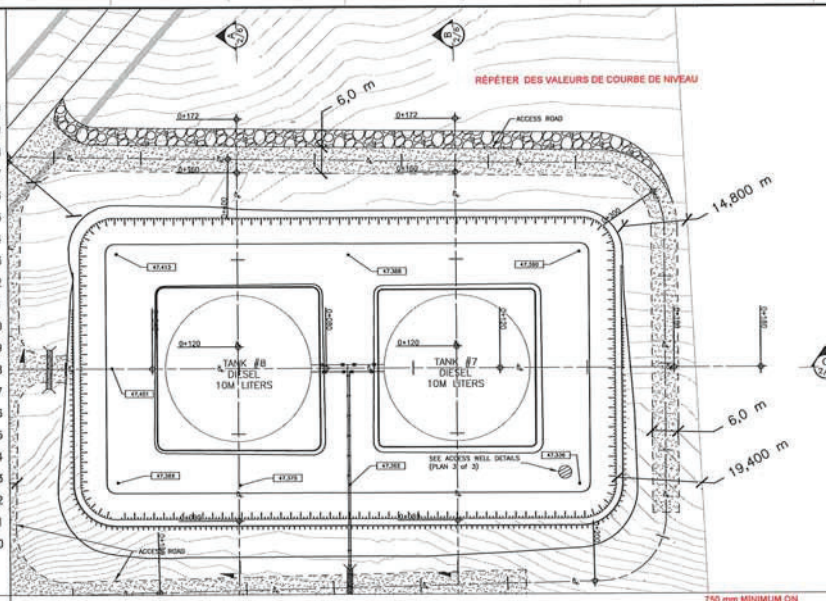

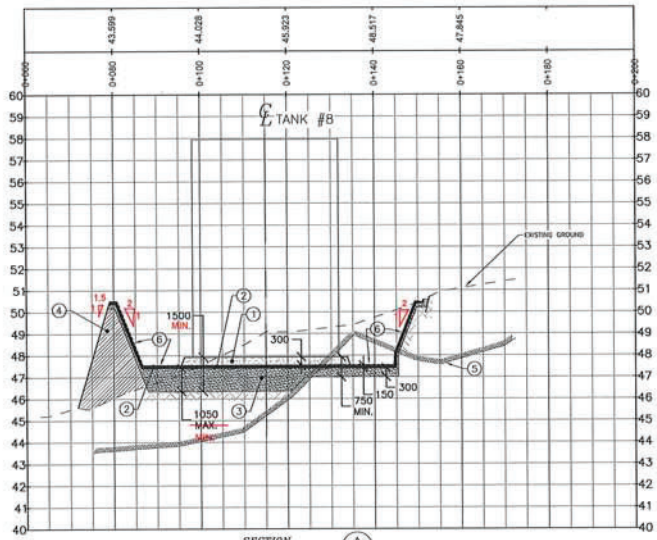

SECTION A
SCALE: HOR:1:500 VER:1:100 3/6

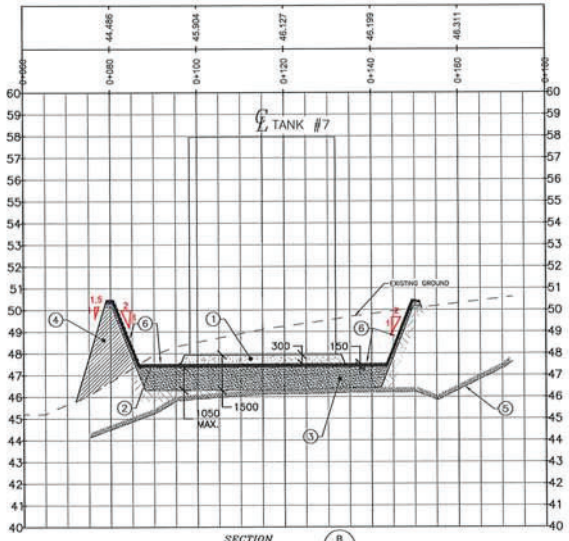

SECTION B
SCALE: HOR:1:500 VER:1:100 2/6

750 mm MINIMUM ON ROCK AND MINIMUM 1050 mm ON NATURAL SOIL, AT THE MAXIMUM LEVEL OF EXCAVATION WHEN NO ROCK

	Description	
1	TANKS BEDDING	CRUSHED STONE #0-20mm VARIABLE THICKNESS MINIMUM 300mm COMPACTED TO 95% P.M.
2	MEMBRANE BEDDING	BACKFILL MATERIALS #2-20mm THICKNESS 150mm COMPACTED TO 95% P.M.*
3	MEMBRANE BEDDING	BACKFILL MATERIALS #5-150mm THICKNESS (GRADED) COMPACTED TO 95% P.M.*
4	SUBGRADE	BACKFILL MATERIALS #5-1000mm VARIABLE THICKNESS DEPENDING ON THE GROUND LEVEL
5	BEDROCK	ASSUMED PROFILE OF THE BEDROCK (APPROXIMATIVE TO VALIDATE ON SITE)
6	BITUMINOUS MEMBRANE	TYPE COLETANCHE GEOMEMBRANE ES-2

* CAUTION : GRANULAR MATERIALS FREE OF PROTRUDING STONES, EVENLY PLACED TO PROVIDE A FLAT SURFACE WITHOUT CAVITIES AND BUMPS, TO ACCOMODATE THE BITUMINOUS MEMBRANE.

ESTIMATED VOLUMES :

FOR ACCESS ROAD TO SECONDARY CONTAINMENT BASIN :
- CRUSHED STONE #0-20mm = 485m³
- BACKFILL MATERIAL #0-150mm = 770m³
- BACKFILL MATERIAL #0-1000mm = 2825m³

FOR SECONDARY CONTAINMENT BASIN :
- CRUSHED STONE #0-20mm = 893m³
- BACKFILL MATERIAL #0-20mm = 1530m³
- BACKFILL MATERIAL #0-150mm = 10714m³
- BACKFILL MATERIAL #0-1000mm = 4220m³

EXCAVATION INFORMATIONS :
- ESTIMATED OF NATURAL SOIL TO REMOVE = 11110m³
- ESTIMATED OF ROC TO REMOVE = 1070m³

PLAN D'ENSEMBLE / KEY PLAN

NOTES GÉNÉRALES / GENERAL NOTES

POUR CONSTRUCTION
FOR CONSTRUCTION
AGNICO EAGLE
DATE : 2019-03-11

DESSINS EN RÉFÉRENCE / REFERENCE DRAWINGS

TITRE / TITLE	# DWG

AGNICO EAGLE

REV.	DATE	DESCRIPTION	DESSINÉ PAR DRAWN BY	APP. CLIENT
1	2019-03-11	FOR CONSTRUCTION	R.N.	M.H.

REVISIONS

TITRE / TITLE
AGNICO-EAGLE – MEADOWBANK DIVISION
740 BAKER LAKE AREA
GENERAL ARRANGEMENT
PLAN VIEW AND PROFILE
10M LITERS TANKS LOCATION
TANKS #7 & #8

DESSINÉ PAR / DRAWN BY	FRANCIS FERRON, TECH.	2018-12-10
VÉRIFIÉ PAR / CHECKED BY	RICHARD MARCOUX, ING.	2018-12-10
APPROUVÉ PAR / APPROVED BY	MARC HÉMAULT, P. ENG.	2018-12-10
ÉCHELLE / SCALE	1 : 500	DATE 2018-07-18

NO. DESSIN / DRAWING NO. 61-740-230-201

NO. PROJET / PROJECT NO.	REVISION	FEUILLE / SHT
61	1	2 / 6

AC-CAVT-AUTOCAD © 2018

FILE NO. 61-740-210-201_1RC.dwg

NO. DESSIN
DRAWING NO. 61-740-210-201_1RC

FORMAT ARCH D

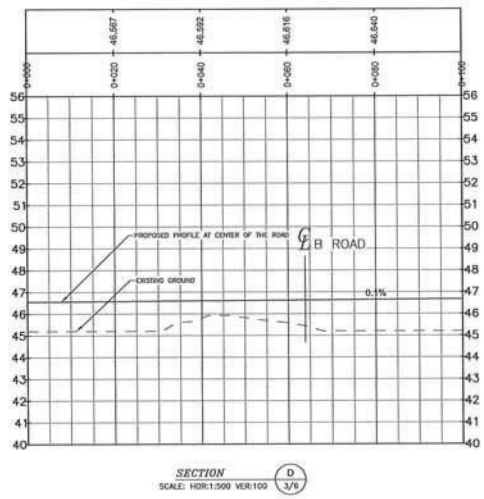

SECTION
SCALE: HOR:1:500 VER:100 (D 3/6)

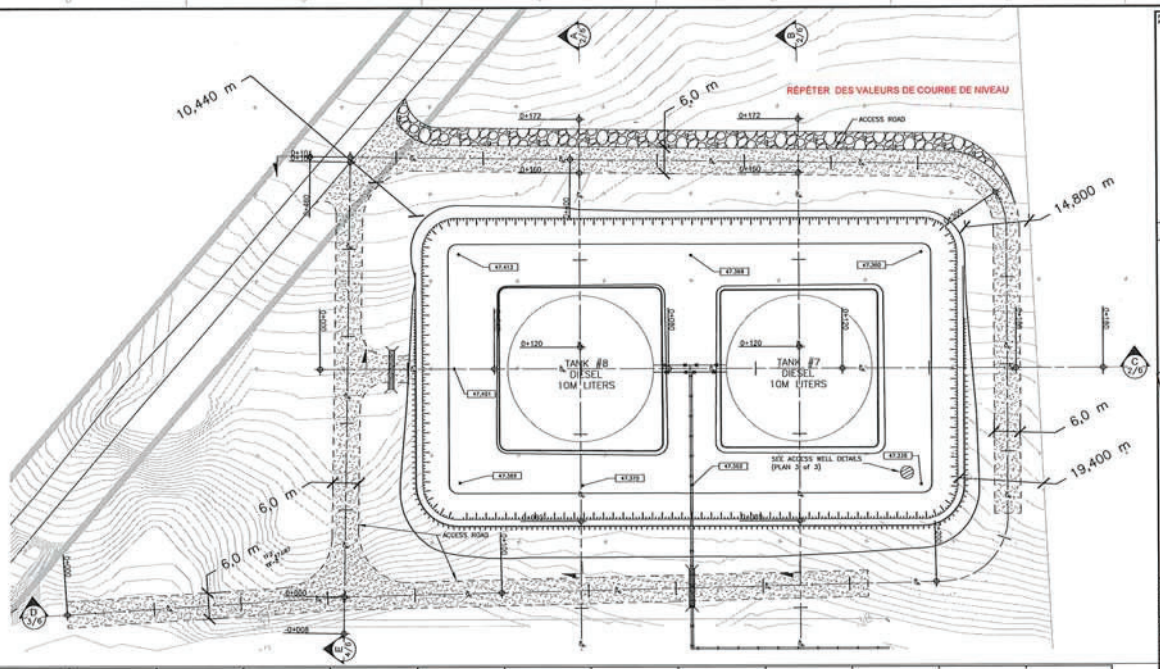

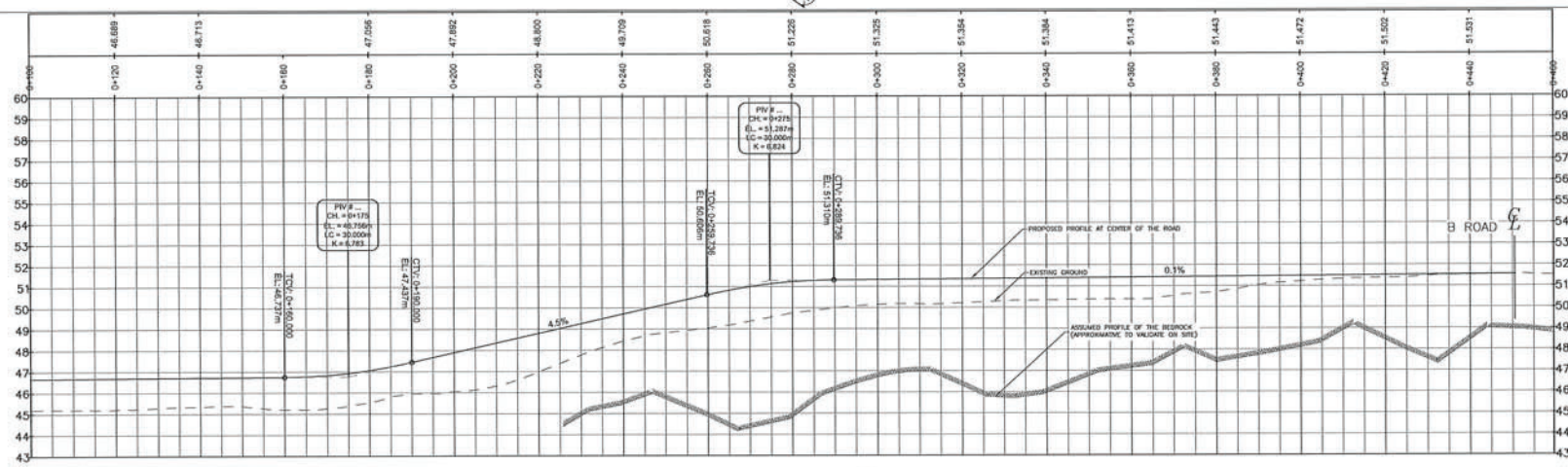

SECTION
SCALE: HOR:1:500 VER:1:100 (D 3/6)

POUR CONSTRUCTION
FOR CONSTRUCTION
AGNICO EAGLE
DATE : 2019-03-11

NOTES GÉNÉRALES / GENERAL NOTES

DESSINS EN RÉFÉRENCE / REFERENCE DRAWINGS

TITRE / TITLE	# DWG

AGNICO EAGLE

NO.	DATE	DESCRIPTION	PAR/BY	APP.	CLIENT
1	2019-03-11	FOR CONSTRUCTION	RM.	NOR.	-

REVISIONS

TITRE / TITLE
AGNICO-EAGLE – MEADOWBANK DIVISION
740 BAKER LAKE AREA
GENERAL ARRANGEMENT
PLAN VIEW AND PROFILE
10M LITERS TANKS LOCATION
TANKS #7 & #8

DESSINÉ PAR / DRAWN BY	FRANCIS PERRON, TECH.	2018-12-10
VÉRIFIÉ PAR / CHECKED BY	RICHARD MARCOUX, ING.	2018-12-10
APPROUVÉ PAR / APPROVED BY	MARC HÉNAULT, P. ENG.	2018-12-10
ÉCHELLE / SCALE	1 : 500	DATE 2018-07-18

NO. DESSIN / DRAWING NO. 61-740-230-202

NO. PROJET / PROJECT NO.	RÉVISION	FEUILLE / SHT
61	1	3 / 6

AC-GMT-MCH 0

FILE NO. 61-740-210-201_RC.dwg

NO. DESSIN DRAWING NO. 61-740-210-201_1RC

FORMAT ARCHD

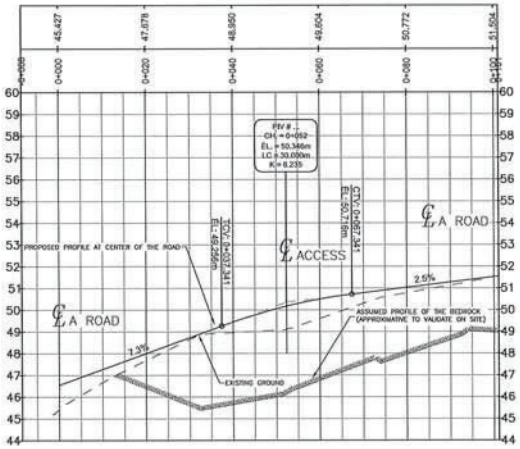

SECTION E
SCALE: N.T.S.

PLAN CLÉ
KEY PLAN

NOTES GÉNÉRALES / GENERAL NOTES

POUR CONSTRUCTION
FOR CONSTRUCTION
AGNICO EAGLE
DATE : 2019-03-11

DESSINS EN RÉFÉRENCE / REFERENCE DRAWINGS

TITRE / TITLE	# DWG

AGNICO EAGLE

REV	DATE	DESCRIPTION	PAR/BY	APP.	CLIENT
1	2019-03-11	FOR CONSTRUCTION	P.M.	M.A.	-

REVISIONS

TITRE / TITLE
AGNICO-EAGLE – MEADOWBANK DIVISION
740 BAKER LAKE AREA
GENERAL ARRANGEMENT
PLAN VIEW AND PROFILE
10M LITERS TANKS LOCATION
TANKS #7 & #8

DESSINÉ PAR / DRAWN BY	FRANCIS PERRON, TECH.	DATE 2018-12-10
VÉRIFIÉ PAR / CHECKED BY	RICHARD MARCOUX, ING.	2018-12-10
APPROUVÉ PAR / APPROVED BY	MARC HÉNAULT, P. ENG.	2018-12-10
ÉCHELLE / SCALE	1 : 1000	DATE 2018-07-18

NO. DESSIN / DRAWING NO. 61-740-230-203

NO. PROJET / PROJECT NO.	REVISION	FEUILLE / SHT
61	1	4 / 8

AE-CART-ARCH B

FILE NO. 61-740-210-201_RC.dwg

NO. DESSIN DRAWING NO. 61-740-210-201_1RC

FORMAT ARCH D

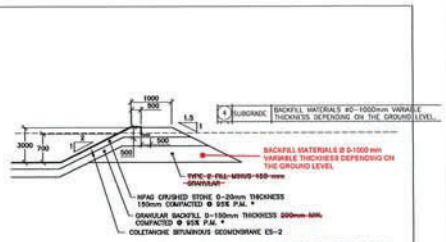

TYPICAL SECTION – DAM

SCALE : NONE

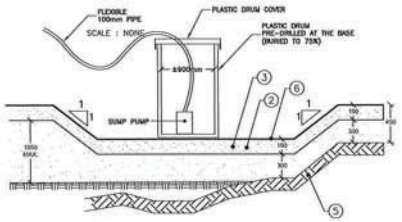

ACCESS WELL FOR DRAINING

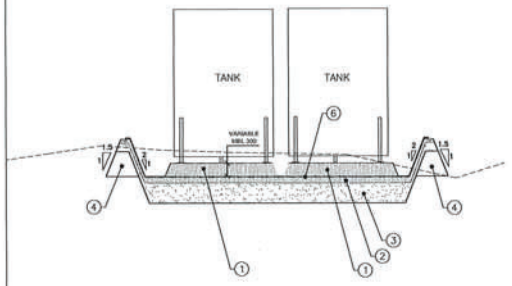

TYPICAL SECTION WITH OPTION COLETANCHE

SCALE : NONE

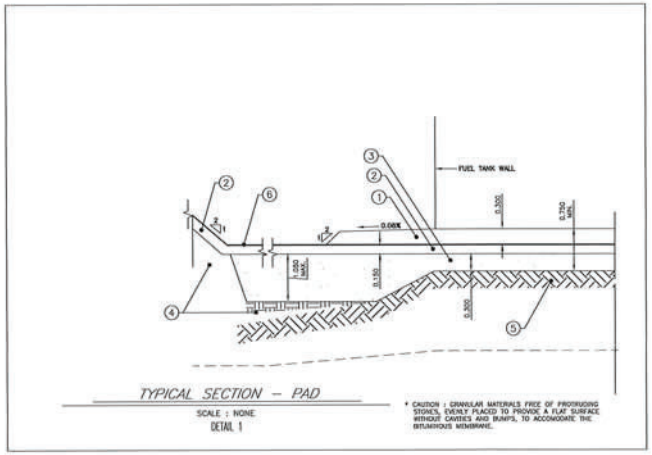

TYPICAL SECTION – PAD

SCALE : NONE

DETAIL 1

* CAUTION : GRANULAR MATERIALS FREE OF PROTRUDING STONES, EVENLY PLACED TO PROVIDE A FLAT SURFACE WITHOUT CAVITIES AND BUMPS, TO ACCOMODATE THE BITUMINOUS MEMBRANE.

	Description	
1	TANKS	CRUSHED STONE #0-20mm VARIABLE THICKNESS
2	BEDDING	MINIMUM 300mm COMPACTED TO 95% P.M.
3	MEMBRANE	BACKFILL MATERIALS #0-20mm THICKNESS
2	BEDDING	150mm COMPACTED TO 95% P.M.*
1	MEMBRANE	BACKFILL MATERIALS #0-150mm THICKNESS
2	BEDDING	100mm COMPACTED TO 95% P.M.*
4	SUBGRADE	BACKFILL MATERIALS #0-1000mm VARIABLE THICKNESS DEPENDING ON THE GROUND LEVEL.
5	BEDROCK	ASSUMED PROFILE OF THE BEDROCK (APPROXIMATIVE TO VALIDATE ON SITE)
6	BITUMINOUS MEMBRANE	TYPE COLETANCHE GEOMEMBRANE ES-2

* CAUTION : GRANULAR MATERIALS FREE OF PROTRUDING STONES, EVENLY PLACED TO PROVIDE A FLAT SURFACE WITHOUT CAVITIES AND BUMPS, TO ACCOMODATE THE BITUMINOUS MEMBRANE.

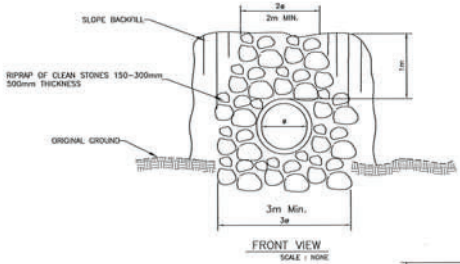

FRONT VIEW

SCALE : NONE

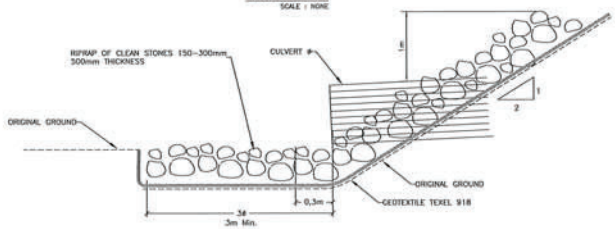

SIDE VIEW

SCALE : NONE

END PIPE PROTECTION WITH RIPRAP
TYPICAL CROSS SECTION

SCALE : NONE

PLAN CLÉ
KEY PLAN

NOTES GÉNÉRALES / GENERAL NOTES

POUR CONSTRUCTION
FOR CONSTRUCTION
AGNICO EAGLE
DATE : 2019-03-11

DESSINS EN RÉFÉRENCE / REFERENCE DRAWINGS

NUMÉRO / NUMBER	TITRE / TITLE

AGNICO EAGLE

REV.	DATE	DESCRIPTION	PAR/BY	APP.	CLIENT
1	2019-03-11	FOR CONSTRUCTION	FLM	M.H.	-

REVISIONS

ZONE / SITE

AGNICO-EAGLE – MEADOWBANK DIVISION
740 BAKER LAKE AREA
GENERAL ARRANGEMENT
DETAILS
10M LITERS TANKS LOCATION
TANKS #7 & #8

DESSINÉ PAR DRAWN BY	FRANCIS PERRON, TECH.	2018-12-10
VÉRIFIÉ PAR CHECKED BY	RICHARD MARCOUX, ING.	2018-12-10
APPROUVÉ PAR APPROVED BY	MARC HÉNAULT, P. ENG.	2018-12-10
ÉCHELLE SCALE	NONE	DATE 2018-07-18

NO. DESSIN DRAWING NO. 61-740-230-204

NO. PROJET PROJECT NO.	RÉVISION	FEUILLE / SHT
61	1	5 / 8

AC-CAM-ARCH D

FILE NO. 61-740-210-201_RC.dwg

NO. DESSIN DRAWING NO. 61-740-210-201_1RC

FORMAT ARCHD

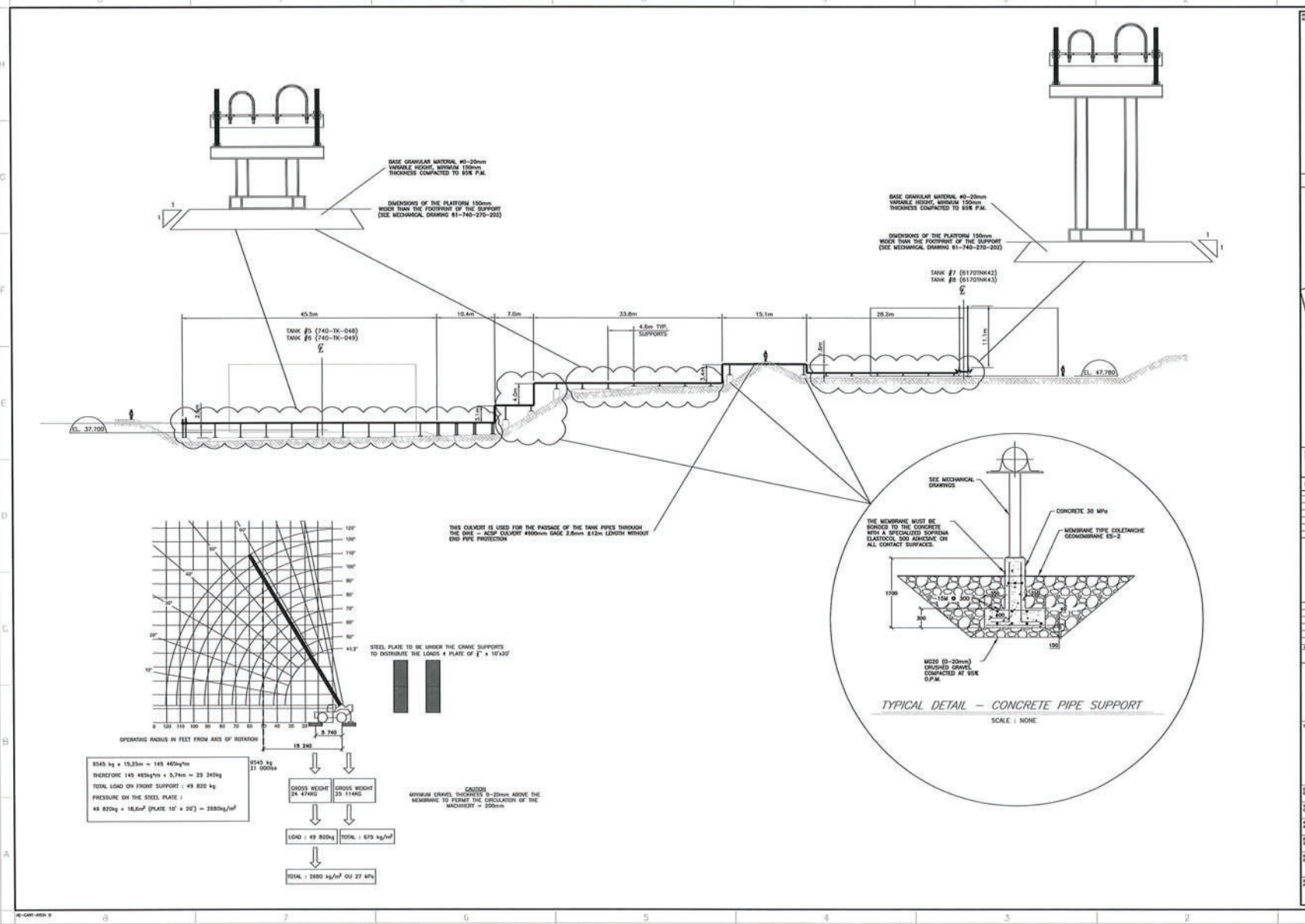

PLAN CLÉ
KEY PLAN

NOTES GÉNÉRALES / GENERAL NOTES

POUR CONSTRUCTION
FOR CONSTRUCTION
AGNICO EAGLE
DATE : 2019-03-11

DESSINS EN RÉFÉRENCE / REFERENCE DRAWINGS

TITRE / TITLE	# DWG

AGNICO EAGLE

REV	DATE	DESCRIPTION	PAR/DIT	APP.	CLIENT
1	2019-03-11	FOR CONSTRUCTION	R.M.	M.H.	–

REVISIONS

TITRE / TITLE
AGNICO-EAGLE – MEADOWBANK DIVISION
740 BAKER LAKE AREA
GENERAL ARRANGEMENT
DETAILS
10M LITERS TANKS LOCATION
TANKS #7 & #8

DESSINÉ PAR DRAWN BY	FRANCIS PERRON, TECH.	DATE 2018-12-10
VÉRIFIÉ PAR CHECKED BY	RICHARD MARCOUX, ING.	2018-12-10
APPROUVÉ PAR APPROVED BY	MARC HÉNAULT, P. ENG.	2018-12-10
ÉCHELLE SCALE	1 : 1000	DATE 2018-07-18

NO. DESSIN DRAWING NO. 61-740-230-205

NO. PROJET PROJECT NO.	REVISION	FEUILLE / SHT
61	1	6 / 6

AE-CART-ARCH ©

FILE NO. 61-740-210-201_RC.dwg

AS-BUILT
BAKER LAKE FUEL FARM CONSTRUCTION
CONTRACT # 11-903

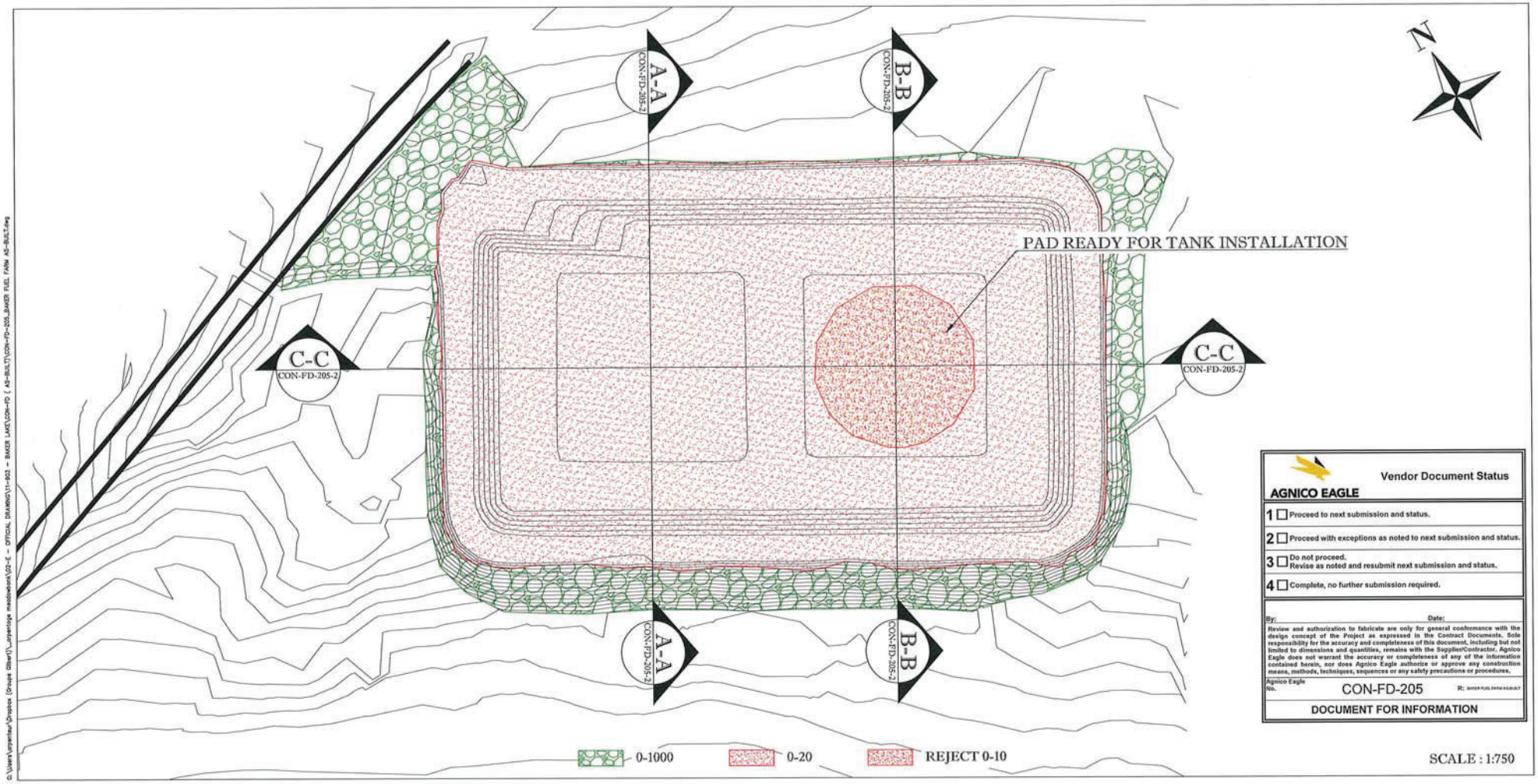

AGNICO EAGLE

Vendor Document Status

1 ☐ Proceed to next submission and status.

2 ☐ Proceed with exceptions as noted to next submission and status.

3 ☐ Do not proceed. Revise as noted and resubmit next submission and status.

4 ☐ Complete, no further submission required.

By: Date:

Review and authorization to fabricate are only for general conformance with the design concept of the Project as expressed in the Contract Documents. Sole responsibility for the accuracy and completeness of this document, including but not limited to dimensions and quantities, remains with the Supplier/Contractor. Agnico Eagle does not warrant the accuracy or completeness of any of the information contained herein, nor does Agnico Eagle authorize or approve any construction means, methods, techniques, sequences or any safety precautions or procedures.

Agnico Eagle No. CON-FD-205 R:

DOCUMENT FOR INFORMATION

KIVALLIQ CONTRACTORS GROUP LTD

Julie Belanger

Digitally signed by Julie Belanger
DN: cn=Julie Belanger
Date: 2019.09.16 08:23:09 -05'00'

PREPARED BY : MIKAËL LÉVESQUE
DATE : 10-07-2019
CON-FD-205-1

AS-BUILT
BAKER LAKE FUEL FARM CONSTRUCTION
CONTRACT # 11-903

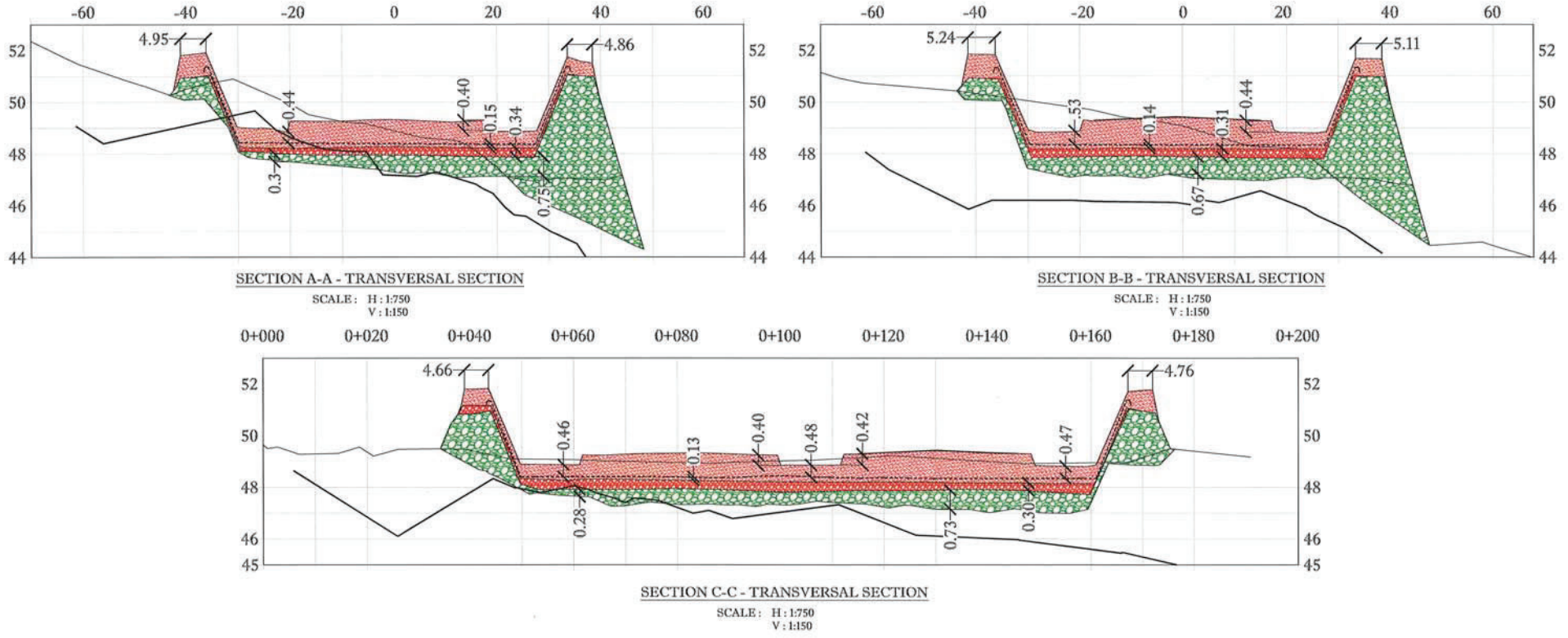

BASIN FUEL CAPACITY : 13 757 m³

BEDROCK — — — BITUMINOUS GEOMEMBRANE 0-1000 0-150 0-20

SCALE : 1:750
VERTICAL EXAGERATION : 5

KIVALLIQ CONTRACTORS GROUP LTD

PREPARED BY : MIKAËL LÉVESQUE
DATE : 10-07-2019
CON-FD-205-2

NO. DESSIN DRAWING NO. 61-740-J-0100-1

FORMAT ARCHD

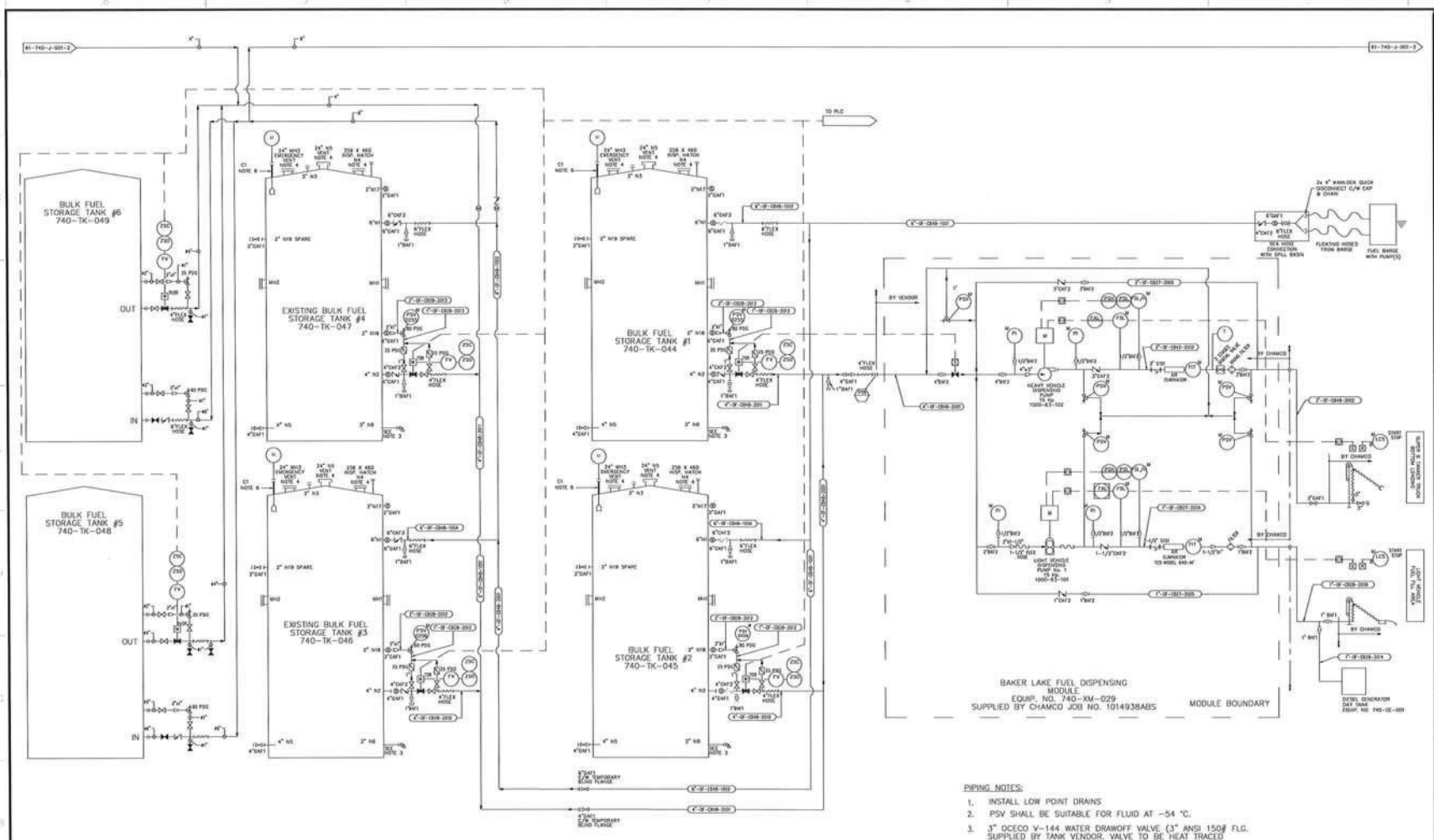

PIPING NOTES:

1. INSTALL LOW POINT DRAINS
2. PSV SHALL BE SUITABLE FOR FLUID AT -54 °C.
3. 3" OCECO V-144 WATER DRAWOFF VALVE (3" ANSI 150# FLG. SUPPLIED BY TANK VENDOR. VALVE TO BE HEAT TRACED AND INSULATED.
4. DESIGN OF THESE TANKS TOP OPENINGS, BY TANK MANUFACTURER
5. FLEXIBLE SS BRAIDED HOSE, 750mm LG. (FLEXONIC SENIOR, OR EQUAL)
6. VAREC 2500 LEVEL INDICATOR BY TANK MANUFACTURER

*SEE PLAN 008 FOR SCHEDULE OF FITTINGS

PLAN CLÉ
KEY PLAN

NOTES GÉNÉRALES / GENERAL NOTES

TEL QUE CONSTRUIT AS BUILT
DATE : 2019-12-16

SNC·LAVALIN

Project # : 660534-0000 REV.: 7

DESSINS EN RÉFÉRENCE / REFERENCE DRAWINGS

TITRE / TITLE	# DWG
DRAWN #5 AND #6 – FUEL DIST. PIPING	61-740-J-0100
–	–
–	–
–	–
–	–
–	–

AGNICO EAGLE

REV.	DATE	DESCRIPTION	PAR/BY	APP.	CLIENT
8	2019-12-16	AS BUILT	S.P.	B.R.	–
7	2019-08-05	ISSUED FOR CONSTRUCTION	B.L.	A.O.	B.ROY
6	2019-05-03	ADDENDUM AIR / DRAIN VALVE	P.D.C	A.O.	N.WEN.
5	2019-04-25	ISSUED FOR TENDER	B.L.	A.O.	N.WEN.
4	2018-12-12	FOR COMMENTS	B.L.	M.H.	N.WEN.
3	2018-08-23	FOR CONSTRUCTION	V.M.	M.K.	–

REVISIONS

TITRE / TITLE
AGNICO-EAGLE – MEADOWBANK DIVISION
BAKER LAKE AREA 740
–
PROCESS AND INSTRUMENTATION DIAGRAM
–
–

DESSINÉ PAR DRAWN BY	FRANCIS ROSE, TECH	DATE	2009-03-27
VÉRIFIÉ PAR CHECKED BY	PATRICK GIARD, P.ENG		–
APPROUVÉ PAR APPROVED BY	PATRICK GIARD, P.ENG		–
ÉCHELLE SCALE	N.T.S	DATE	2009-03-27

NO. DESSIN DRAWING NO. 61-740-J-0100

NO. PROJET PROJECT NO.	REVISION	FEUILLE / SHT
6120	8	1/2

FILE NO. 61-740-J-0100-1.dwg

NO. DESSIN DRAWING NO. 61-740-J-0100-2

FORMAT ARCHD

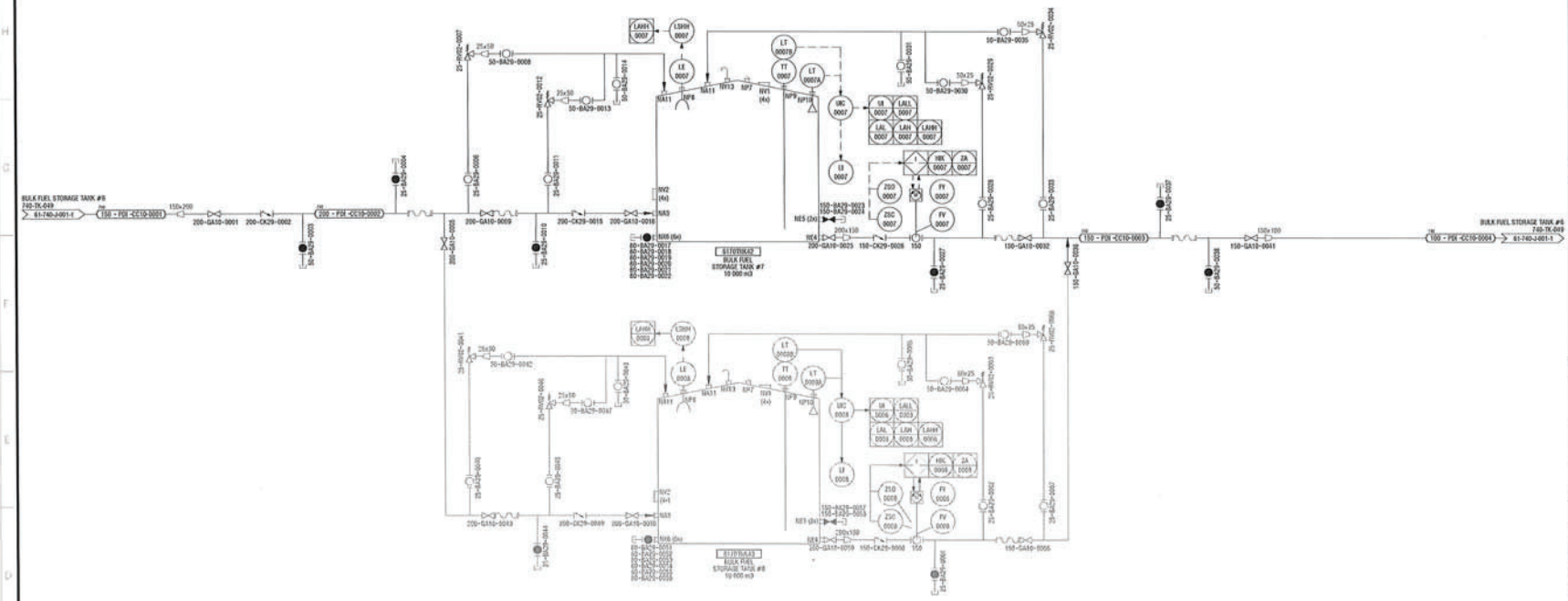

PLAN CLÉ
KEY PLAN

NOTES GÉNÉRALES / GENERAL NOTES

TEL QUE CONSTRUIT
AS BUILT
AGNICO EAGLE
DATE : 2019-12-16

SNC·LAVALIN

SNC-Lavalin Site-Bid inc.
155, rue Gamble Ouest
Rouyn-Noranda (Québec) J9X 2A1
Tél. 819 763-5151 Fax 819 763-0108
www.snclavalin.com

Project # : 660534-0000 REV.: 7

DESSINS EN RÉFÉRENCE / REFERENCE DRAWINGS

TITRE / TITLE	# DWG
TANK #8 AND #9 – FUEL DIST. PIPING	61-740-M-0100
–	–
–	–
–	–
–	–
–	–

AGNICO EAGLE

REV.	DATE	DESCRIPTION	PAR/BY	APP.	CLIENT
8	2019-12-16	AS BUILT	S.P.	B.B.	–
7	2019-08-05	ISSUED FOR CONSTRUCTION	B.L.	A.G.	B.ROY
6	2019-05-03	ADDENDUM A/F / DRAIN VALVE	P.D.E	A.G.	N.WEN.
5	2019-04-25	ISSUED FOR TENDER	B.L.	A.G.	N.WEN.
4	2018-12-17	FOR COMMENTS	B.L.	M.H.	N.WEN.
3	2018-08-22	FOR CONSTRUCTION	D.M.	M.V.	–

REVISIONS

TITRE / TITLE
AGNICO-EAGLE – MEADOWBANK DIVISION
BAKER LAKE AREA 740
–
PROCESS AND INSTRUMENTATION DIAGRAM
–
–

DESSINÉ PAR DRAWN BY	FRANCIS ROSE, TECH	DATE	2009-03-27
VÉRIFIÉ PAR CHECKED BY	PATRICK GIARD, P.ENG	–	
APPROUVÉ PAR APPROVED BY	PATRICK GIARD, P.ENG	–	
ÉCHELLE SCALE	N.T.S	DATE	2009-03-27

NO. DESSIN DRAWING NO. 61-740-J-0100

NO. PROJET PROJECT NO.	REVISION	FEUILLE / SHT
6120	8	2 / 2

FILE NO. 61-740-J-0100-2.dwg

Appendix C

Photographs



General site view before tank and containment construction



Overburden excavation



Pad and Berm construction

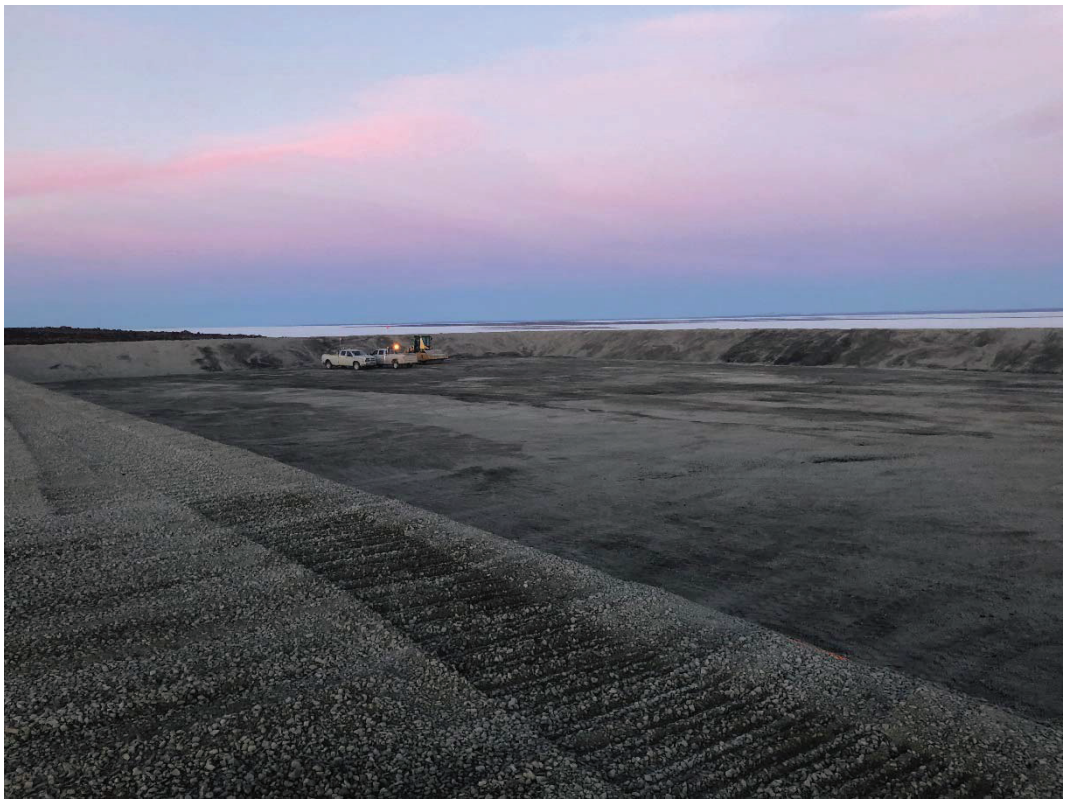

Containment overview



Tank pad construction



Tank floor construction



Tank wall welding



Tank roof structure



Piping to and from fuel tank



Tank general view

Appendix D

Fuel tank handover package

TURNOVER PACKAGE TANK #7

BAKER LAKE , NU

PREPARED FOR

AGNICO EAGLE

AGNICO EAGLE	Vendor Document Status
1 ☐ Proceed to next submission and status.	
2 ☐ Proceed with exceptions as noted to next submission and status.	
3 ☐ Do not proceed. Revise as noted and resubmit next submission and status.	
4 ☑ Complete, no further submission required.	
By:	Date:
Review and authorization to fabricate are only for general conformance with the design concept of the Project as expressed in the Contract Documents. Sole responsibility for the accuracy and completeness of this document, including but not limited to dimensions and quantities, remains with the Supplier/Contractor. Agnico Eagle does not warrant the accuracy or completeness of any of the information contained herein, nor does Agnico Eagle authorize or approve any construction means, methods, techniques, sequences or any safety precautions or procedures.	
Agnico Eagle No.	Turnover #1 Rev. A R:
DOCUMENT FOR INFORMATION	

ENGINEERING DESIGN AND MATERIAL PROVIDED BY

Inukshuk Construction Limited

Industrial Contracting Project Management

ERECTED BY

STS STORAGE TANK SOLUTIONS

Rev. A

SEPTEMBER 12, 2019

INSPECTION & TEST PLAN

Tank:	Tank #7 6170TNK42	Project:	AEM Baker Lake Fuel Tanks	Document:	TK#7 ITP
By:	Inukshuk Construction Ltd	Proj. #:	315	Revision:	2 - Issued for Construction

Item	Component	Activity	ITP Type	Documentation	Acceptance Criteria	Notes
1	Kick-Off Meeting	Kickoff Meeting	N/A	Meeting Minutes	N/A	
2	Signature Log	Verify	N/A	Signature Log	N/A	
3	Welder Qualification	Verify	N/A	Individual Welder Qualifications / Welder Log	API-650 / ASME IX	
4	Inspector Qualification	Verify	N/A	In house Inspector & 3rd Party Qualifications	API-650	
5	Weld Procedures	Verify	N/A	Approved Weld Procedures	API-650 / ASME IX, CWB W47.1	
6	Welding Consumable	Electrode Storage	N/A	N/A	Manufacturer's Instructions	
7	Foundation	Foundation Survey	DC	Foundation Acceptance Report, Compaction Report & Survey from 3rd Party	API-650 Para 7.5.5	
8	Floor	Materials	FI	MTR Confirmation to Dwg	Drawing & API-650 Sect. 4	MTR issued prior to shipping
		Fit up	VE, DC	As Built Drawing	Drawing	per API-650 5.1.5.4 - bottom plates under the shell shall have the outer ends of the joints fitted and lap-welded
		Welding	VE	Weld Map, Visual Report	API-650 Para 7.2 & 8.5 & WPS	
		Vacuum Test	VB	Vacuum Box Test Report	API-650 Para 7.3.3(a) & 8.6	
9	Shell to Floor Seams	Initial Weld Pass	VE	Weld Map, Visual Report	API-650 Para 8.5, 7.2.4.1	
		Final Weld Pass	VE	Weld Map, Visual Report	API-650 Para 8.5, 7.2.4.1	
		LPT	NDT	Diesel Test Report	API-650 Para 7.2.4.1 d	LPT inside of shell to floor seam
10	Shell	Materials	FI	MTR Confirmation to Dwg	Drawing & API-650 Sect. 4	MTR issued prior to shipping
		Fit up 1st Course	VE, DC	As Built Drawing	Drawing	
		Roundness	DC	Dimension Report	API-650 Para 7.5.3	
		Welding	VE	Weld Map, Visual Report	API-650 Para 7.2, 7.5, 8.5 & WPS	
		Diesel Test	NDT	Diesel Test Report	API-650 Para 7.2.4.1 d	Diesel Test inside of shell butt weld joints
		Tolerance Check – Plumbness & Local Deviations	DC	Dimension Report from 3rd party	API-650 Para 7.5	
		Radiography	NDT	X-ray report / Log / Map	API-650 Para 7.2.3 & 8.1	Testing by a qualified independent inspection firm

Item	Component	Activity	ITP Type	Documentation	Acceptance Criteria	Notes
11	Compression Ring	Fit up	VE, DC	As Built Drawing	Drawing	
		Welding	VE	Weld Map, Visual Report	API-650 Para 7.2 & 8.5 & WPS	
12	Roof	Fit up	VE, DC	As Built Drawing	Drawing	
		Welding	VE	Visual Report	API-650 Para 7.2 & 8.5 & WPS	
		Vacuum Test	VB	Vacuum Box Test Report	API-650 Para 7.3.8(b) & 8.6	
13	Roof Structure	Fit up	VE, DC	As Built Drawing	Drawing	
		Column Plumbness	DC	Dimension Report	API-650 Para 7.5.2 b)	
		Welding	VE	Visual Report	API-650 Para 7.2 & 8.5 & WPS	
14	Nozzles	Layout	VE, DC	As Built Drawing	Drawing	
		Fit up	VE, DC	As Built Drawing	Drawing	
		Shop Prep Welding	VE	Weld Map, Visual Report	API-650 Para 7.2 & 8.5 & WPS	
		Welding	VE	Weld Map, Visual Report	API-650 Para 7.2 & 8.5 & WPS	
		Tolerance Check – Plumbness & Local Deviations	DC	Dimension Report	API-650 Para 7.5	
		Shell Nozzle Repad Air test	AT	Leak Test Report	API-650 Para 7.3.5	
		MPI of Shell Nozzles	NDT	MPI Report	API-650 Para 7.2.3.6	All welds of Shell Nozzles
15	Manways	Layout	VE, DC	As Built Drawing	Drawing	
		Fit up	VE, DC	As Built Drawing	Drawing	

		Welding	VE	Weld Map, Visual Report	API–650 Para 7.2 & 8.5 & WPS	
15	Manways	Tolerance Check – Plumbness & Local Deviations	DC	Dimension Report	API-650 Para 7.5	
		Shell Manway Repad Air test	AT	Leak Test Report	API-650 Para 7.3.5	
		MPI	NDT	MPI Report	API-650 Para 7.2.3.6	All welds of Shell Manways
16	Internals	Layout	VE, DC	As Built Drawing	Drawing	
		Fit up	VE, DC	As Built Drawing	Drawing	
		Welding	VE	Visual Report	API–650 Para 7.2 & 8.5 & WPS	
17	Externals	Layout	VE, DC	As Built Drawing	Drawing	
		Fit up	VE, DC	As Built Drawing	Drawing	
		Welding	VE	Visual Report	API–650 Para 7.2 & 8.5 & WPS	
18	Stairs & Platforms	Layout	VE, DC	As Built Drawing	Drawing	
		Fit up	VE, DC	As Built Drawing	Drawing	
		Welding	VE	Visual Report	API–650 Para 7.2 & 8.5 & WPS	
19	Bolts & Nuts	Inspection	VE, DC	As Built Drawing	Drawing	Bolt Torque
Item	**Component**	**Activity**	**ITP Type**	**Documentation**	**Acceptance Criteria**	**Notes**
21	Final	Name Plate Verification	N/A	Scan of Name Plate	Drawings	
		Final Inspection	FI	As Built Drawings, Data Sheet, Manufacturer's Certification (3rd Party), Punch List	Drawings	

DEFINITIONS:

AT - AIR TEST: Specified component and/or installation to be air tested according to specified documentation and specifications.

DC - DIMENSION CHECK: Physical dimensions of component and/or installation to be verified according to specified documentation and specifications.

FI - FINAL INSPECTION: Specified inspection procedures to be executed prior to release of the component and/or installation and verified according to specified documentation and specifications.

NDT - NON DESTRUCTIVE TESTING: Specified component and/or installation to be inspected using a named non destructive testing method according to specified documentation and specifications.

VE - VISUAL Examination: Specified component and/or installation to be examined visually according to specified documentation and specification.

VB - VACUUM-BOX TEST: Specified component and/or installation to be vacuum box tested according to specified documentation and specifications.

Exhibit 27, Rev 1

SIGNATURE LOG

PRINT	SIGNATURE	COMPANY	DATE
Alan Martin		STS	
Matthew MacKenzie		STS	Aug 10/19
Christopher Jaques		STS	
Bruno Roy		AEM	Aug 20/19
Sylvain Chartier		AEM	Aug. 29, 2019
Pierre Gauthier		AEM	Sept 04/2019

ALL CAN INSPECTION SERVICES (2011) INC.

Report # **J1706**

9323-37 Avenue, NW, Edmonton, Alberta T6E 5N4
SHOP: 780-462-1072 **OFFICE:** 780-462-9797 **FAX:** 780-462-6664
EMAIL: shop@allcaninspection.com **www.allcaninspection.com**

Client:	**Storage Tank Solutions**		Client Job #	**Welder Coupons**	
Address:	9 Well Head Street, Devon AB, T9G1Z6		P.O. #	**Sebastien**	
Contact:	Name: Sebastien Ouellet		Date:	**Feb 25/19**	
	Phone: 780-982-3980				
Work Location:	All Can Inspection Shop	Work Description:			

CODES
1. ASME B31.3 N/S
2. ASME B31.3 S/C
3. ASME Sec. VIII Div 1 UW51
4. ASME Sec. VIII Div. 1 UW52
5. CSA Z662
6. CSA Z662 (Sour)
7. API 650
8. Other: QW191.2

NDE No:	Size & thickness Plus Code Max. reinforcement	Material	Code	IQI	Technique Number	Source Side of Object to Film Distance	Source to Object Distance	Number of Exposures	Welder ID	Discontinuity (LF - Lack of Fusion; IP - Incomplete Penetration; IC - Internal Concavity; BT - Burn Through; TI - Tungsten Inclusion; IU: Internal Undercut; EU: External Undercut; EP - Excessive Penetration; P - Porosity; S - Slag; HL - High-Low; C - Crack; AB - Arc Burn; HB - Hollow Bead) **Severity:** 1 = Slight, 2 = Medium, 3 = Severe (Reject)	Severity	Accept	Reject
			1 - 8	See Back	See Back	inches	inches				1 - 3	√	X
2G SMAW	5/8" SPOT	P1	8	2	RT-2	0.750	25.000	1	**KW**				
	0-6"											√	
3G SMAW	5/8" SPOT	P1	8	2	RT-2	0.750	25.000	1	**KW**				
	0-6"											√	
4G SMAW	5/8" SPOT	P1	8	2	RT-2	0.750	25.000	1	**KW**				
	0-6"											√	
2G SMAW	5/8" SPOT	P1	8	2	RT-2	0.750	25.000	1	**MM**				
	0-6"											√	
3G SMAW	5/8" SPOT	P1	8	2	RT-2	0.750	25.000	1	**MM**				
	0-6"											√	
4G SMAW	5/8" SPOT	P1	8	2	RT-2	0.750	25.000	1	**MM**				
	0-6"											√	
2G Subarc	1/2" SPOT	P1	8	2	RT-2	0.625	25.000	1	**MM**				
	0-15"									P @ 0"	1	√	
2G SMAW	5/8" SPOT	P1	8	2	RT-2	0.750	25.000	1	**CJ**				
	0-6"											√	
3G SMAW	5/8" SPOT	P1	8	2	RT-2	0.750	25.000	1	**CJ**				
	0-6"											√	
4G SMAW	5/8" SPOT	P1	8	2	RT-2	0.750	25.000	1	**CJ**				
	0-6"											√	
2G Subarc	1/2" SPOT	P1	8	2	RT-2	0.625	25.000	1	**CJ**				
	0-15"											√	

RT Technician:	Gordon Thomas	CGSB Level:	2	Reg. # :	6	SNT-TC-1A Level:	III	SNT-TC-1A No:	6
RT Assistant # 1	Adele Kezama			CEDO #:	18988	SNT-TC-1A Level:	II	SNT-TC-1A No:	18988
RT Assistant # 2				CEDO #:		SNT-TC-1A Level:		SNT-TC-1A No:	

IMPORTANT: See reverse side of this form for All Can Inspection Services (2011) Inc. LIMITED LIABILITY POLICY

Technician Signature — Date: Feb 25/19

Client Representative Signature — Evaluation Date

The above interpretation is a technical opinion, not a guarantee.
Client signature indicates acceptance of the report and results.

Clock tape marker and start arrow marked on weldment.
It is the customer's responsibility to map welds on drawings.

Film Make / Brand	AGFA	Film Class / Type:	1-D5
Screens Lead	Front 0.010"	Back 0.010"	One (no.) film per screen
Film Density in H & D:	Min. 2.0	Max. 4.0	
Penetrometer (IQI hole type) designation:	N/A	Recommended Max. U.G.:	0.20"
Source Isotope:	IRIDIUM-192 (Gamma)	Wall Viewing:	Single
Effective Focal Spot Size:	0.146 inches	Processing:	Automatic

RADIOGRAPHIC EXAMINATION REPORT

ALL CAN INSPECTION SERVICES (2011) INC.

Report # **J1778**

9323-37 Avenue, NW, Edmonton, Alberta T6E 5N4
SHOP: 780-462-1072 **OFFICE:** 780-462-9797 **FAX:** 780-462-6664
EMAIL: shop@allcaninspection.com **www.allcaninspection.com**

Client:	**Storage Tank Solutions**	Client Job #	**Welder Coupons**
Address:	9 Well Head Street, Devon AB, T9G1Z6	P.O. #	**Sebastien**
Contact: Name:	Sebastien Ouellet	Date:	**Mar 1/19**
Phone:	780-982-3980		
Work Location:	All Can Inspection Shop	Work Description:	

CODES
1. ASME B31.3 N/S
2. ASME B31.3 S/C
3. ASME Sec. VIII Div 1 UW51
4. ASME Sec. VIII Div. 1 UW52
5. CSA Z662
6. CSA Z662 (Sour)
7. API 650
8. Other: QW191.2

NDE No:	Size & thickness Plus Code Max. reinforcement	Material	Code	IQI	Technique Number	Source Side of Object to Film Distance	Source to Object Distance	Number of Exposures	Welder ID	Discontinuity	Severity	Accept	Reject
										LF - Lack of Fusion; IP - Incomplete Penetration; IC - Internal Concavity; BT - Burn Through; TI - Tungsten Inclusion; IU: Internal Undercut; EU: External Undercut; EP - Excessive Penetration; P - Porosity; S - Slag; HL - High-Low; C - Crack; AB - Arc Burn; HB - Hollow Bead. **Severity:** 1 = Slight, 2 = Medium, 3 = Severe (Reject)			
			1 - 8	See Back	See Back	inches	inches				1 - 3	√	X
2G SMAW	5/8" SPOT	P1	8	2	RT-2	0.750	25.000	1	**SO**				
	0-6"											√	
3G SMAW	5/8" SPOT	P1	8	2	RT-2	0.750	25.000	1	**SO**				
	0-6"											√	
4G SMAW	5/8" SPOT	P1	8	2	RT-2	0.750	25.000	1	**SO**				
	0-6"											√	
2G SMAW	5/8" SPOT	P1	8	2	RT-2	0.750	25.000	1	**DZ**				
	0-6"											√	
3G SMAW	5/8" SPOT	P1	8	2	RT-2	0.750	25.000	1	**DZ**				
	0-6"											√	
4G SMAW	5/8" SPOT	P1	8	2	RT-2	0.750	25.000	1	**DZ**				
	0-6"											√	
2G SMAW	5/8" SPOT	P1	8	2	RT-2	0.750	25.000	1	**JN**				
	0-6"											√	
3G SMAW	5/8" SPOT	P1	8	2	RT-2	0.750	25.000	1	**JN**				
	0-6"											√	
4G SMAW	5/8" SPOT	P1	8	2	RT-2	0.750	25.000	1	**JN**				
	0-6"											√	
2G SMAW	5/8" SPOT	P1	8	2	RT-2	0.750	25.000	1	**TM**				
	0-6"											√	
3G SMAW	5/8" SPOT	P1	8	2	RT-2	0.750	25.000	1	**TM**				
	0-6"											√	
4G SMAW	5/8" SPOT	P1	8	2	RT-2	0.750	25.000	1	**TM**				
	0-6"											√	

RT Technician:	Gordon Thomas	CGSB Level:	2	Reg. # :	6	SNT-TC-1A Level:	III
SNT-TC-1A No:	6						
RT Assistant # 1	Adele Kezama	CEDO #:	18988	SNT-TC-1A Level:	II	SNT-TC-1A No:	18988
RT Assistant # 2		CEDO #:		SNT-TC-1A Level:		SNT-TC-1A No:	

IMPORTANT: See reverse side of this form for All Can Inspection Services (2011) Inc. LIMITED LIABILITY POLICY

Technician Signature — Date: Mar 1/19

Client Representative Signature — Evaluation Date

The above interpretation is a technical opinion, not a guarantee.
Client signature indicates acceptance of the report and results.

Clock tape marker and start arrow marked on weldment.
It is the customer's responsibility to map welds on drawings.

Film Make / Brand	AGFA	Film Class / Type:	1-D5
Screens Lead	Front 0.010"	Back 0.010"	One (no.) film per screen
Film Density in H & D:	Min. 2.0	Max. 4.0	
Penetrometer (IQI hole type) designation:	N/A	Recommended Max. U.G.:	0.20"
Source Isotope:	IRIDIUM-192 (Gamma)	Wall Viewing:	Single
Effective Focal Spot Size:	0.146 inches	Processing:	Automatic

RADIOGRAPHIC EXAMINATION REPORT

ALL CAN INSPECTION SERVICES (2011) INC.

Report # **J3424**

9323-37 Avenue, NW, Edmonton, Alberta T6E 5N4
SHOP: 780-462-1072 **OFFICE:** 780-462-9797 **FAX:** 780-462-6664
EMAIL: shop@allcaninspection.com **www.allcaninspection.com**

Client:	**Storage Tank Solutions**	Client Job #	**Welder Coupons**
Address:	9 Well Head Street, Devon AB, T9G1Z6	P.O. #	**Sebastien**
Contact: Name:	Sebastien Ouellet	Date:	**June 18/19**
Phone:	780-982-3980		
Work Location:	All Can Inspection Shop	Work Description:	

CODES
1. ASME B31.3 N/S
2. ASME B31.3 S/C
3. ASME Sec. VIII Div 1 UW51
4. ASME Sec. VIII Div. 1 UW52
5. CSA Z662
6. CSA Z662 (Sour)
7. API 650
8. Other: QW191.2

LF - Lack of Fusion; IP - Incomplete Penetration; IC - Internal Concavity; BT - Burn Through; TI - Tungsten Inclusion; IU: Internal Undercut; EU: External Undercut; EP - Excessive Penetration; P - Porosity; S - Slag; HL - High-Low; C - Crack; AB - Arc Burn; HB - Hollow Bead

Severity: 1 = Slight, 2 = Medium, 3 = Severe (Reject)

NDE No:	Size & thickness Plus Code Max. reinforcement	Material	Code	IQI	Technique Number	Source Side of Object to Film Distance	Source to Object Distance	Number of Exposures	Welder ID	Discontinuity	Severity	Accept	Reject
			1 - 8	See Back	See Back	inches	inches				1 - 3	√	X
2GSMAW	5/8" SPOT	P1	8	2	RT-2	0.750	25.000	1	**AM**				
	0-6"											√	
3G SMAW	5/8" SPOT	P1	8	2	RT-2	0.750	25.000	1	**AM**				
	0-6"									P @ 0", 2 1/2", & 4 1/2"	1	√	
4G SMAW	5/8" SPOT	P1	8	2	RT-2	0.750	25.000	1	**AM**				
	0-6"											√	
Subarc	1/2" SPOT	P1	8	2	RT-2	0.625	25.000	1	**AM**				
	0-12"											√	
2GSMAW	5/8" SPOT	P1	8	2	RT-2	0.750	25.000	1	**JO**				
	0-6"									P @ End	1	√	
3G SMAW	5/8" SPOT	P1	8	2	RT-2	0.750	25.000	1	**JO**				
	0-6"									P @ 0" & End	1	√	
4G SMAW	5/8" SPOT	P1	8	2	RT-2	0.750	25.000	1	**JO**				
	0-6"											√	
Subarc	1/2" SPOT	P1	8	2	RT-2	0.625	25.000	1	**JO**				
	0-12"											√	
2GSMAW	5/8" SPOT	P1	8	2	RT-2	0.750	25.000	1	**DM**				
	0-6"									P @ End	1	√	
3G SMAW	5/8" SPOT	P1	8	2	RT-2	0.750	25.000	1	**DM**				
	0-6"											√	
4G SMAW	5/8" SPOT	P1	8	2	RT-2	0.750	25.000	1	**DM**				
	0-6"									P @ 1"	1	√	

RT Technician:	Gordon Thomas	CGSB Level:	2	Reg. # :	6	SNT-TC-1A Level:	III	SNT-TC-1A No:	6
RT Assistant # 1	Shannon Berg	CEDO #:	17583			SNT-TC-1A Level:	I	SNT-TC-1A No:	17583
RT Assistant # 2		CEDO #:				SNT-TC-1A Level:		SNT-TC-1A No:	

IMPORTANT: See reverse side of this form for All Can Inspection Services (2011) Inc. LIMITED LIABILITY POLICY

Technician Signature — Date: June 18/19

Client Representative Signature — Evaluation Date

The above interpretation is a technical opinion, not a guarantee.
Client signature indicates acceptance of the report and results.

Clock tape marker and start arrow marked on weldment.
It is the customer's responsibility to map welds on drawings.

Film Make / Brand	AGFA	Film Class / Type:	1-D5
Screens Lead	Front 0.010"	Back 0.010"	One (no.) film per screen
Film Density in H & D:	Min. 2.0	Max. 4.0	
Penetrometer (IQI hole type) designation:	N/A	Recommended Max. U.G.:	0.20"
Source Isotope:	IRIDIUM-192 (Gamma)	Wall Viewing:	Single
Effective Focal Spot Size:	0.146 inches	Processing:	Automatic

RADIOGRAPHIC EXAMINATION REPORT

Storage Tank Solutions Inc.	**WELDERS' QUALIFICATION RECORD** **API 650**	**Exhibit 8, Rev A**

WELDER NAME	WELDER SYMBOL	DATE QUALIF.	QUALIFICATION PROCEDURE	LIMITATIONS					REMARKS
				PROCESS	ELECTRODE	POSITION	THICKNESS RANGE	DIAMETER RANGE	
Matthew MacKenzie	MM	25/02/2019	STS-1	SMAW, UP	F3-F4	2G,3G,4G	.116-1.75	ALL	X-RAY REPORT J1706
	MM	25/02/2019	STS-4	SMAW, DOWN	F3-F4	2G,3G,4G	.116-1.75	ALL	X-RAY REPORT J1706
	MM	25/02/2019	STS-2	SAW	F7A6	2G	.116-1.75	ALL	X-RAY REPORT J1706
	MM	25/02/2019	STS-7	SAW	F7A6	2G	.116-1.75	ALL	X-RAY REPORT J1706

QC (PRINT) **SIGN:**	**DATE** (yyyy-MM-dd):
QA (PRINT) **SIGN:**	**DATE** (yyyy-MM-dd):

Storage Tank Solutions Inc.	WELDERS' QUALIFICATION RECORD API 650	Exhibit 8, Rev A

WELDER NAME	WELDER SYMBOL	DATE QUALIF.	QUALIFICATION PROCEDURE	LIMITATIONS					REMARKS
				PROCESS	ELECTRODE	POSITION	THICKNESS RANGE	DIAMETER RANGE	
Christopher Jaques	CJ	25/02/2019	STS-1	SMAW, UP	F3-F4	2G,3G,4G	.116-1.75	ALL	X-RAY REPORT J1706
	CJ	25/02/2019	STS-4	SMAW, DOWN	F3-F4	2G,3G,4G	.116-1.75	ALL	X-RAY REPORT J1706
	CJ	25/02/2019	STS-2	SAW	F7A6	2G	.116-1.75	ALL	X-RAY REPORT J1706
	CJ	25/02/2019	STS-7	SAW	F7A6	2G	.116-1.75	ALL	X-RAY REPORT J1706

QC (PRINT) **SIGN:**	**DATE** (yyyy-MM-dd):
QA (PRINT) **SIGN:**	**DATE** (yyyy-MM-dd):

Storage Tank Solutions Inc.	WELDERS' QUALIFICATION RECORD API 650	Exhibit 8, Rev A

WELDER NAME	WELDER SYMBOL	DATE QUALIF.	QUALIFICATION PROCEDURE	LIMITATIONS					REMARKS
				PROCESS	ELECTRODE	POSITION	THICKNESS RANGE	DIAMETER RANGE	
ALAN MARTIN	AM	18/06/2019	STS-1	SMAW, UP	F3-F4	2G,3G,4G	.116-1.75	ALL	X-RAY REPORT J3424
	AM	18/06/2019	STS-4	SMAW, DOWN	F3-F4	2G,3G,4G	.116-1.75	ALL	X-RAY REPORT J3424
	AM	18/06/2019	STS-2	SAW	F7A6	2G	.116-1.75	ALL	X-RAY REPORT J3424
	AM	18/06/2019	STS-7	SAW	F7A6	2G	.116-1.75	ALL	X-RAY REPORT J3424

QC (PRINT) **SIGN:**	**DATE** (yyyy-MM-dd):
QA (PRINT) **SIGN:**	**DATE** (yyyy-MM-dd):

Storage Tank Solutions Inc.	**WELDERS' QUALIFICATION RECORD** **API 650**	**Exhibit 8, Rev A**

WELDER NAME	WELDER SYMBOL	DATE QUALIF.	QUALIFICATION PROCEDURE	LIMITATIONS					REMARKS
				PROCESS	ELECTRODE	POSITION	THICKNESS RANGE	DIAMETER RANGE	
JOEL OVERGUARD	JO	18/06/2019	STS-1	SMAW, UP	F3-F4	2G,3G,4G	.116-1.75	ALL	X-RAY REPORT J3424
	JO	18/06/2019	STS-4	SMAW, DOWN	F3-F4	2G,3G,4G	.116-1.75	ALL	X-RAY REPORT J3424
	JO	18/06/2019	STS-2	SAW	F7A6	2G	.116-1.75	ALL	X-RAY REPORT J3424
	JO	18/06/2019	STS-7	SAW	F7A6	2G	.116-1.75	ALL	X-RAY REPORT J3424

QC (PRINT) **SIGN:**	**DATE** (yyyy-MM-dd):
QA (PRINT) **SIGN:**	**DATE** (yyyy-MM-dd):

Storage Tank Solutions Inc.	WELDERS' QUALIFICATION RECORD API 650	Exhibit 8, Rev A

WELDER NAME	WELDER SYMBOL	DATE QUALIF.	QUALIFICATION PROCEDURE	LIMITATIONS					REMARKS
				PROCESS	ELECTRODE	POSITION	THICKNESS RANGE	DIAMETER RANGE	
DAVID MORRICE	DM	18/06/2019	STS-1	SMAW, UP	F3-F4	2G,3G,4G	.116-1.75	ALL	X-RAY REPORT J3424
	DM	18/06/2019	STS-4	SMAW, DOWN	F3-F4	2G,3G,4G	.116-1.75	ALL	X-RAY REPORT J3424

QC (PRINT) **SIGN:**	**DATE** (yyyy-MM-dd):
QA (PRINT) **SIGN:**	**DATE** (yyyy-MM-dd):

Storage Tank Solutions Inc.	**WELDERS' QUALIFICATION RECORD** **API 650**	**Exhibit 8, Rev A**

WELDER NAME	WELDER SYMBOL	DATE QUALIF.	QUALIFICATION PROCEDURE	LIMITATIONS					REMARKS
				PROCESS	ELECTRODE	POSITION	THICKNESS RANGE	DIAMETER RANGE	
JOSEPH NEDERHOFF	JN	01/03/2019	STS-1	SMAW, UP	F3-F4	2G,3G,4G	.116-1.75	ALL	X-RAY REPORT J1778
	JN	01/03/2019	STS-4	SMAW, DOWN	F3-F4	2G,3G,4G	.116-1.75	ALL	X-RAY REPORT J1778

QC (PRINT) **SIGN:**	**DATE** (yyyy-MM-dd):
QA (PRINT) **SIGN:**	**DATE** (yyyy-MM-dd):

Storage Tank Solutions Inc.	**WELDERS' QUALIFICATION RECORD** **API 650**	**Exhibit 8, Rev A**

WELDER NAME	WELDER SYMBOL	DATE QUALIF.	QUALIFICATION PROCEDURE	LIMITATIONS					REMARKS
				PROCESS	ELECTRODE	POSITION	THICKNESS RANGE	DIAMETER RANGE	
DUSTIN ZUBACH	DZ	01/03/2019	STS-1	SMAW, UP	F3-F4	2G,3G,4G	.116-1.75	ALL	X-RAY REPORT J1778
	DZ	01/03/2019	STS-4	SMAW, DOWN	F3-F4	2G,3G,4G	.116-1.75	ALL	X-RAY REPORT J1778

QC (PRINT) **SIGN:**	**DATE** (yyyy-MM-dd):
QA (PRINT) **SIGN:**	**DATE** (yyyy-MM-dd):

Storage Tank Solutions Inc.	WELDERS' QUALIFICATION RECORD API 650	Exhibit 8, Rev A

WELDER NAME	WELDER SYMBOL	DATE QUALIF.	QUALIFICATION PROCEDURE	LIMITATIONS					REMARKS
				PROCESS	ELECTRODE	POSITION	THICKNESS RANGE	DIAMETER RANGE	
TYLER MONCRIEFF	TM	01/03/2019	STS-1	SMAW, UP	F3-F4	2G,3G,4G	.116-1.75	ALL	X-RAY REPORT J1778
	TM	01/03/2019	STS-4	SMAW, DOWN	F3-F4	2G,3G,4G	.116-1.75	ALL	X-RAY REPORT J1778

QC (PRINT) **SIGN:**	**DATE** (yyyy-MM-dd):
QA (PRINT) **SIGN:**	**DATE** (yyyy-MM-dd):

Exhibit 28, Rev 1

EXAMINER QUALIFICATIONS

Customer: AGNICO EAGLE TANK 7

Location: BAKER LAKE

Code Requiring Test: API 650 (section 8.5.1) Reason for Test: New Construction

Storage Tank Solutions Inc. certifies that each visual examiner meets the following requirements:

a) Has a vision (with correction, if necessary) to be able to read a Jeager Type 2 standard chart at a distance of not less that 12in. and is capable of passing a color contrast test. Examiners will be checked annually to ensure that they meet the requirement; and
b) Is competent in the technique of the visual examination, including performing the examination and interpreting and evaluating results; however, where the examination method consists of more than one operation, the examiner performing only a portion of the test need only be qualified for the portion that the examiner performs.

Qualified examiner: _____

_____

_____

_____

_____

QUALITY CONTROL MANUAL
FOUNDATION REPORT

TANK TAG NUMBER: TANK 7 **WORK ORDER NUMBER:** 315

CUSTOMER: AEM **PROJECT:** BAKER LAKE

ITP LINE NUMBER: 7 **DATE:** Aug 8/19.

1.0 TANK PAD ACCEPTANCE GUIDELINES

1.1 In acceptance of the Tank Foundation, we acknowledges that the following requirements have been met:

a) The foundation circumference meets the requirements of API 650 Para 7.5.

b) The foundation has been staked to clearly identify the major tank axis (North, South, East, West) and the tank center point

c) There is adequate access to the tank erection area to commence erection activities.

1.2 Our acceptance of the tank foundation is limited only to the above requirements. Acceptance does not constitute certification of the foundation design and/or construction including but not limited to the following:

a) Certification of the foundation design including that of the leak detection and cathodic protection system.

b) Certification that the foundation has the load bearing capacities required.

c) Dimensional accuracy other than that explicitly stated above.

d) That the coordinate axis complies with the clients plot plan.

e) That soil embedded items have been properly placed according to approved drawings. This will be confirmed during the installation of components associated with the embedded items.

f) Certification that the foundation has been properly constructed or is structurally acceptable.

g) Certifications that the leak detection and/or cathodic protection systems have been properly installed.

OBSERVATIONS:

Tank Foundation meets the requirements of API 650.

ACCEPTED BY: _____ **DATE:** Aug 8/19.
(NAME & SIGNATURE)
STS QC REPRESENTATIVE

ACCEPTED BY: _____ **DATE:** Aug 8/19
(NAME & SIGNATURE)
CLIENT INSPECTOR

PARTS LIST

ITEM	QTY	DESCRIPTION	MATERIAL	UNIT WT (KG)	TOT WT (KG)
F1	17	PL 6.35 X 2438 X 12192	G40.21M-350W	1432	25,394
F2	2	PL 6.35 X 2438 X 10769	G40.21M-350W	1337	2,614
F3	4	PL 6.35 X 2438 X 12192	G40.21M-350W	1417	5,669
F4	4	PL 6.35 X 2438 X 10859	G40.21M-350W	1126	4,501
F5	4	PL 6.20 X 2129 X 5279	G40.21M-350W	535	2,140
F6	4	PL 6.35 X 2438 X 2489	G40.21M-350W	76	302
F7	2	PL 6.35 X 2438 X 7315	G40.21M-350W	459	1758
F8	4	PL 6.35 X 2438 X 4837	G40.21M-350W	295	1180
F9	2	PL 6.35 X 1145 X 12040	G40.21M-350W	356	712
F10	4	PL 6.35 X 3379 X 7312	G40.21M-350W	338	1352

TOTAL WT: 45,619

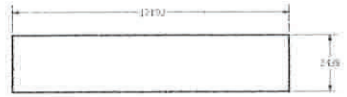

F1
QTY:17
SCALE 1 / 100



F2
QTY:2
SCALE 1 / 100



F3
QTY: 4
SCALE 1 / 100



F4
QTY: 4
SCALE 1 / 100

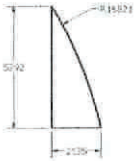

F5
QTY: 4
SCALE 1/100

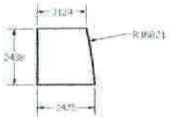

F6
QTY: 4
SCALE 1/100



F7
QTY:2
SCALE 1/100

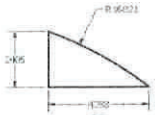

F8
QTY:4
SCALE 1/100



F9
QTY:2
SCALE 1/100



F10
QTY: 4
SCALE 1/100

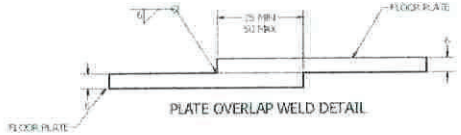

PLATE OVERLAP WELD DETAIL

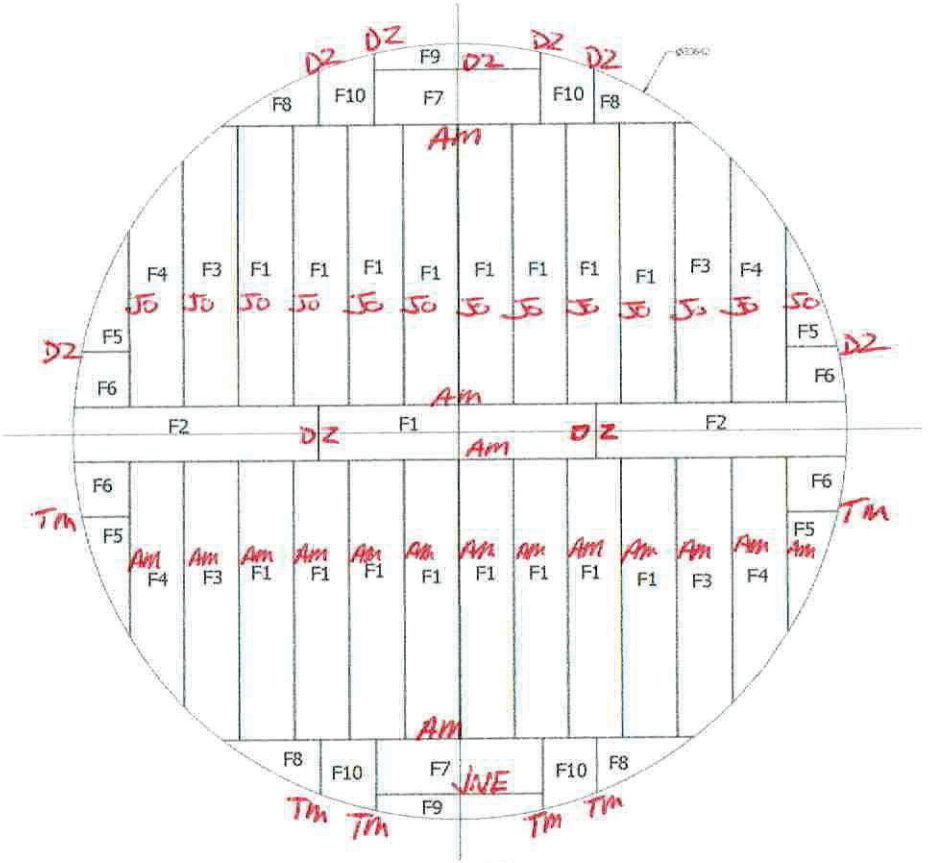

FLOOR LAYOUT
SCALE 1 / 100

16-Feb-2019

REVISION HISTORY		
REV	DESCRIPTION	DATE
1	ISSUED FOR CONSTRUCTION	2/12/2019

DRAWN	MARC LOSIER	2/4/2019
CHECKED		
QA		
APPROVED		

TITLE: FLOOR LAYOUT

BAKER LAKE WHALE TAIL PROJECT FLOOR AND ROOF LAYOUT FOR 10,000CUM TANK

SIZE	DWG NO	REV
A1	315-M1	1

SCALE | SHEET 1 OF 2

QUALITY CONTROL MANUAL

Exhibit 26, Rev 1

VISUAL TEST REPORT

Customer: AGNICO EAGLE

Location: BAKER LAKE

Code Requiring Test: API 650 (section 8.5.2) Reason for Test: New Construction

A weld shall be acceptable by visual examination if the inspection shows the following.

a) There are no crater cracks, other surface cracks or arc strikes in or adjacent to the welded joints.
b) Maximum permissible undercut is 0.4 mm (1/64 in.) in depth for vertical butt joints, vertically oriented permanent attachments, attachment welds for nozzles, manholes, flush-type openings, and the inside shell-to-bottom welds. For horizontal butt joints, horizontally oriented permanent attachments, and annular-ring butt joints, the maximum permissible undercut is 0.8 mm (1/32 in.) in depth.
c) The frequency of surface porosity in the weld does not exceed one cluster (one or more pores) in any 100 mm (4 in.) of length, and the diameter of each cluster does not exceed 2.5 mm (3/32 in.).
d) The reinforcement of the welds on all thicknesses:

Plate Thickness mm (in.)	Maximum Reinforcement Thickness mm (in.)	
	Vertical Joints	Horizontal Joints
≤ 13 (1/2)	2.5 (3/32)	3 (1/8)
> 13 (1/2) to 25 (1)	3 (1/8)	5 (3/16)
> 25 (1)	5 (3/16)	6 (1/4)

Surface Condition (As Welded)

Test Solution: N/A Test Date(s): August 17/19

Tested by: Mat Mackenzie Ambient Conditions: 10°

Items Tested:

Floor welds.

Results:

No defects were found. All welding acceptable

STS Representative Signature: _____ Date: Aug 17/19

Client Representative Signature: _____ Date: Aug 20/19

QUALITY CONTROL MANUAL

Exhibit 14, Rev 1

VACUUM BOX TEST REPORT – FLOOR PLATE WELDS

Customer: AGNICO EAGLE

Location: BAKER LAKE

Equipment Tag No.: TANK 7

Equipment Description:

Code Requiring Test: API 650 Reason for Test: New Construction

(A vacuum box/soap solution test for floor plate weld seams is required for new construction or major alterations, no visible leaks should be observed)

Test Solution: Water / Snoop Ambient Conditions: 10°

Test Date(s): August 17/19 Surface Condition: Clean

Tested by: Matt MacKenzie Surface Test Temperature:

Pressure Gauge:

Items Tested:

Floor plates

Results:

No leak detected

STS Representative Signature: _____ Date: Aug 17/19.

Client Representative Signature: _____ Date: Aug 20/19

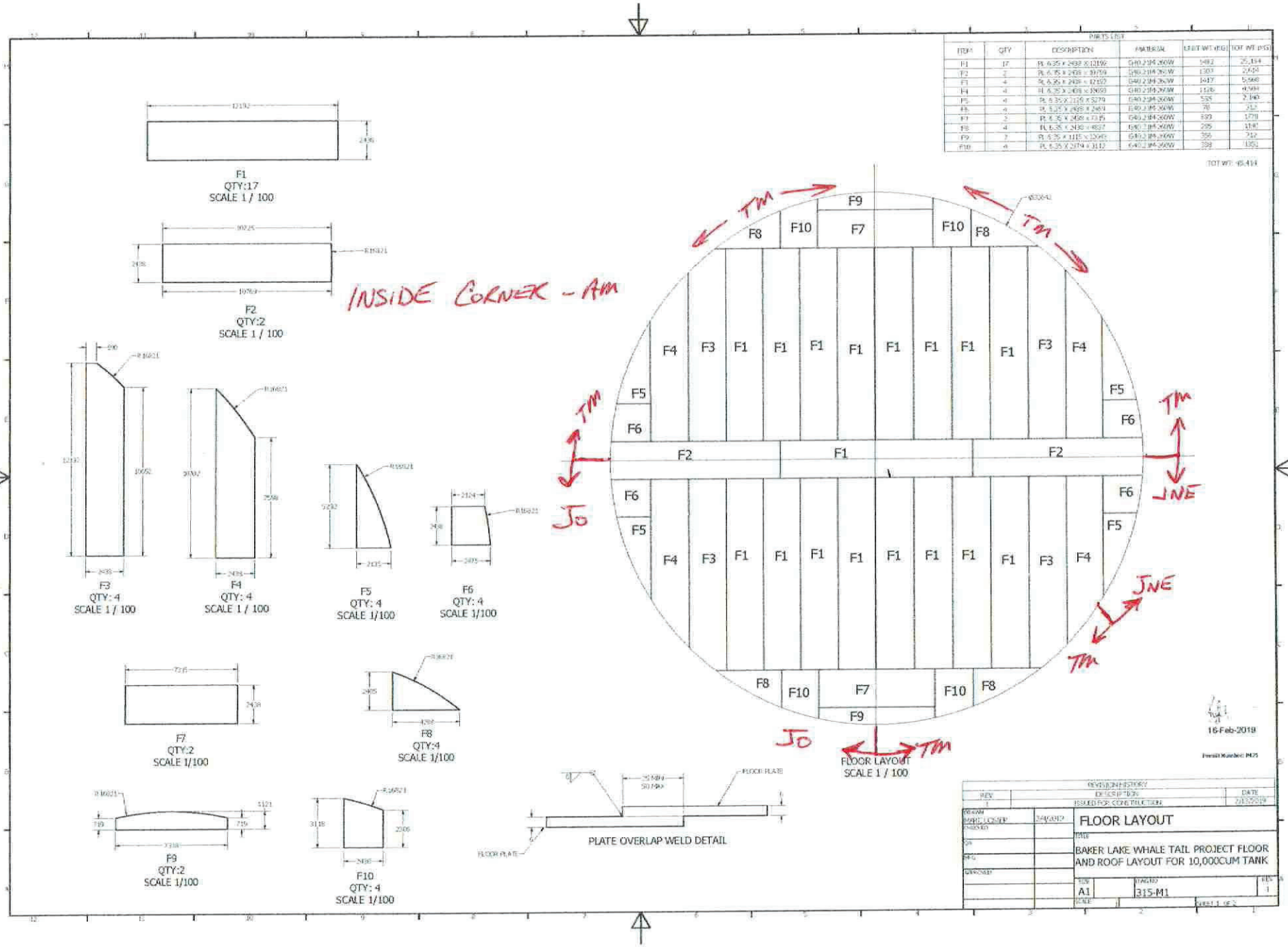

PARTS LIST

ITEM	QTY	DESCRIPTION	MATERIAL	UNIT WT (KG)	TOT WT (KG)
F1	17	PL 6.35 x 2438 x 12192	G40.21M-260W	5482	25,154
F2	2	PL 6.35 x 2438 x 10759	G40.21M-260W	1303	2,614
F3	4	PL 6.35 x 2438 x 12192	G40.21M-260W	1417	5,668
F4	4	PL 6.35 x 2438 x 10693	G40.21M-260W	1126	4,504
F5	4	PL 6.35 x 2129 x 5279	G40.21M-260W	535	2,140
F6	4	PL 6.35 x 2438 x 2469	G40.21M-260W	78	312
F7	2	PL 6.35 x 2438 x 7315	G40.21M-260W	889	1779
F8	4	PL 6.35 x 2438 x 4837	G40.21M-260W	295	1182
F9	2	PL 6.35 x 1115 x 12040	G40.21M-260W	356	712
F10	4	PL 6.35 x 2374 x 3112	G40.21M-260W	338	1351

TOT WT: 45,414

QUALITY CONTROL MANUAL

Exhibit 26, Rev 1

VISUAL TEST REPORT

Customer: AGNICO EAGLE

Location: BAKER LAKE

Code Requiring Test: API 650 (section 8.5.2) Reason for Test: New Construction

A weld shall be acceptable by visual examination if the inspection shows the following.

a) There are no crater cracks, other surface cracks or arc strikes in or adjacent to the welded joints.
b) Maximum permissible undercut is 0.4 mm (1/64 in.) in depth for vertical butt joints, vertically oriented permanent attachments, attachment welds for nozzles, manholes, flush-type openings, and the inside shell-to-bottom welds. For horizontal butt joints, horizontally oriented permanent attachments, and annular-ring butt joints, the maximum permissible undercut is 0.8 mm (1/32 in.) in depth.
c) The frequency of surface porosity in the weld does not exceed one cluster (one or more pores) in any 100 mm (4 in.) of length, and the diameter of each cluster does not exceed 2.5 mm (3/32 in.).
d) The reinforcement of the welds on all thicknesses:

Plate Thickness mm (in.)	Maximum Reinforcement Thickness mm (in.)	
	Vertical Joints	Horizontal Joints
≤ 13 (1/2)	2.5 (3/32)	3 (1/8)
> 13 (1/2) to 25 (1)	3 (1/8)	5 (3/16)
> 25 (1)	5 (3/16)	6 (1/4)

Surface Condition (As Welded)

Test Solution: N/A Test Date(s): August 16/19

Tested by: Matt MacKenzie Ambient Conditions: 10°

Items Tested: Shell to floor weld

Initial weld pass

Results:

No defects were found. All welding acceptable

STS Representative Signature: _____ Date: August 16/19.

Client Representative Signature: _____ Date: August 20/19

QUALITY CONTROL MANUAL

Exhibit 26, Rev 1

VISUAL TEST REPORT

Customer: AGNICO EAGLE

Location: BAKER LAKE

Code Requiring Test: API 650 (section 8.5.2) Reason for Test: New Construction

A weld shall be acceptable by visual examination if the inspection shows the following.

a) There are no crater cracks, other surface cracks or arc strikes in or adjacent to the welded joints.
b) Maximum permissible undercut is 0.4 mm (1/64 in.) in depth for vertical butt joints, vertically oriented permanent attachments, attachment welds for nozzles, manholes, flush-type openings, and the inside shell-to-bottom welds. For horizontal butt joints, horizontally oriented permanent attachments, and annular-ring butt joints, the maximum permissible undercut is 0.8 mm (1/32 in.) in depth.
c) The frequency of surface porosity in the weld does not exceed one cluster (one or more pores) in any 100 mm (4 in.) of length, and the diameter of each cluster does not exceed 2.5 mm (3/32 in.).
d) The reinforcement of the welds on all thicknesses:

Plate Thickness mm (in.)	Maximum Reinforcement Thickness mm (in.)	
	Vertical Joints	Horizontal Joints
≤ 13 (1/2)	2.5 (3/32)	3 (1/8)
> 13 (1/2) to 25 (1)	3 (1/8)	5 (3/16)
> 25 (1)	5 (3/16)	6 (1/4)

Surface Condition (As Welded)

Test Solution: N/A Test Date(s): Aug 29/19

Tested by: MATT MACKENZIE Ambient Conditions: 10°

Items Tested: Shell to floor weld

Final weld pass

Results:

No defects were found. All welding acceptable

STS Representative Signature: _____ Date: Aug 29/19

Client Representative Signature: _____ Date: Sept 3, 2019

QUALITY CONTROL MANUAL

Exhibit 24, Rev 1

DIESEL TEST REPORT (SHELL TO BOTTOM WELD)

Customer: AGNICO EAGLE

Location: BAKER LAKE

Equipment Tag No.: TK 7

Equipment Type: STORAGE TANK

Equipment Description:

Code Requiring Test: API 650 (section 7.2.4) Reason for Test: New Construction

(The initial weld pass inside the shell shall have all slag and non-metals removed from the surface of the weld and then examined for its entire circumference both visually and applying a high Flash-point penetrating oil such as light diesel to the gap between the shell and the bottom, letting stand for at least four hours, and examining the weld for evidence of wicking.)

Surface Condition (As Welded)

Test Solution: Diesel Test Date(s): August 17/19

Tested by: Matt MacKenzie Ambient Conditions: 10°

Items Tested:

Shell to bottom seam weld

Results:

No leaks detected at the time of the examination

STS Representative Signature: _____ Date: August 17/19.

Client Representative Signature: _____ Date: August 20/19

QUALITY CONTROL MANUAL

Exhibit 18, Rev 1

DIMENSIONAL CHECK REPORT – ROUNDNESS

Customer: AGNICO EAGLE

Location: BAKER LAKE

Equipment Tag No.: TK 7

Equipment Type: DIESEL STORAGE TANK

Equipment Description:

Code Requiring Test: API 650 Reason for Test: New Construction

(The tank shell will be checked for roundness at 12" above the tank floor. Roundness will be checked at 45 degree intervals or less, max. 20' spacing)

Test Date(s): August 8/19

Tested by: Matt MacKenzie.

Seam Test Results:

Roundness checks were acceptable

STS Representative Signature: _____ Date: August 8/19.

Client Representative Signature: _____ Date: August 8/19

Tank #7 Baker Lake (AEM)

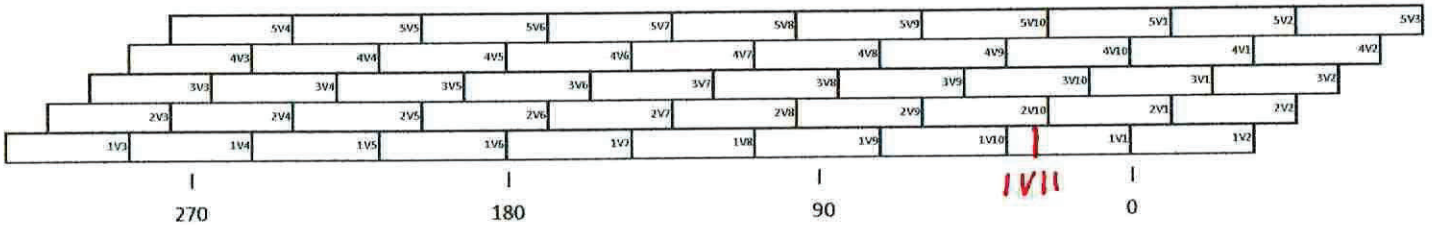

VERTS (Welder ID)

	IN	OUT
1V1	DZ	DZ
1V2	TMO	TMO
1V3	JO	JO
1V4	DZ	JO
1V5	JNE	JNE
1V6	DMO	DMO
1V7	JO	JNE
1V8	TMO	CJ
1V9	DZ	DZ
1V10	DZ	DZ
1V11	JNE	JNE

	IN	OUT
2V1	JNE	JNE
2V2	JNE	JNE
2V3	JNE	JNE
2V4	DZ	DZ
2V5	DMO	DMO
2V6	DMO	TMO
2V7	DMO	DMO
2V8	CJ	CJ
2V9	CJ	CJ
2V10	CJ	CJ

	IN	OUT
3V1	CJ	CJ
3V2	JNE	JNE
3V3	JNE	JNE
3V4	JNE	JNE
3V5	DZ	DZ
3V6	DMO	DMO
3V7	DMO	DMO
3V8	DMO	DMO
3V9	CJ	CJ
3V10	CJ	CJ

	IN	OUT
4V1	CJ	CJ
4V2	JNE	JNE
4V3	JNE	JNE
4V4	JNE	JNE
4V5	DZ	DZ
4V6	DMO	DMO
4V7	DMO	DMO
4V8	DMO	DMO
4V9	CJ	CJ
4V10	CJ	CJ

	IN	OUT
5V1	DZ	DZ
5V2	DZ	DZ
5V3	JO	JNE
5V4	JO	JNE
5V5	JO	JNE
5V6	DZ	DZ
5V7	TMO	TMO
5V8	TMO	TMO
5V9	TMO	CJ
5V10	DZ	CJ

HORIZONTAL (Welder ID)

	IN	OUT
H1	MM	JO

	IN	OUT
H2	MM	JO

	IN	OUT
H3	MM	JO

	IN	OUT
H4	MM	JO

PLATES IDENTIFICATION (heat numbers)

	Heat Number
1V1	
1V2	
1V3	
1V4	
1V5	
1V6	
1V7	
1V8	
1V9	
1V10	

	Heat Number
2V1	
2V2	
2V3	
2V4	
2V5	
2V6	
2V7	
2V8	
2V9	
2V10	

	Heat Number
3V1	
3V2	
3V3	
3V4	
3V5	
3V6	
3V7	
3V8	
3V9	
3V10	

	Heat Number
4V1	
4V2	
4V3	
4V4	
4V5	
4V6	
4V7	
4V8	
4V9	
4V10	

	Heat Number
5V1	
5V2	
5V3	
5V4	
5V5	
5V6	
5V7	
5V8	
5V9	
5V10	

QUALITY CONTROL MANUAL

Exhibit 26, Rev 1

VISUAL TEST REPORT

Customer: AGNICO EAGLE

Location: BAKER LAKE

Code Requiring Test: API 650 (section 8.5.2) Reason for Test: New Construction

A weld shall be acceptable by visual examination if the inspection shows the following.

a) There are no crater cracks, other surface cracks or arc strikes in or adjacent to the welded joints.
b) Maximum permissible undercut is 0.4 mm (1/64 in.) in depth for vertical butt joints, vertically oriented permanent attachments, attachment welds for nozzles, manholes, flush-type openings, and the inside shell-to-bottom welds. For horizontal butt joints, horizontally oriented permanent attachments, and annular-ring butt joints, the maximum permissible undercut is 0.8 mm (1/32 in.) in depth.
c) The frequency of surface porosity in the weld does not exceed one cluster (one or more pores) in any 100 mm (4 in.) of length, and the diameter of each cluster does not exceed 2.5 mm (3/32 in.).
d) The reinforcement of the welds on all thicknesses:

Plate Thickness mm (in.)	Maximum Reinforcement Thickness mm (in.)	
	Vertical Joints	Horizontal Joints
≤ 13 (1/2)	2.5 (3/32)	5 (3/16)
> 13 (1/2) to 25 (1)	3 (1/8)	5 (3/16)
> 25 (1)	5 (3/16)	6 (1/4)

Surface Condition (As Welded)

Test Solution: N/A Test Date(s): Sept 2/19

Tested by: Matt MacKenzie Ambient Conditions: 7°

Items Tested:

SR1 VERTICALS

Results:

No defects were found. All welding acceptable

STS Representative Signature: _____ Date: Sept 2/19

Client Representative Signature: _____ Date: Sept 3/19

QUALITY CONTROL MANUAL

Exhibit 26, Rev 1

VISUAL TEST REPORT

Customer: AGNICO EAGLE

Location: BAKER LAKE

Code Requiring Test: API 650 (section 8.5.2) Reason for Test: New Construction

A weld shall be acceptable by visual examination if the inspection shows the following.

a) There are no crater cracks, other surface cracks or arc strikes in or adjacent to the welded joints.
b) Maximum permissible undercut is 0.4 mm (1/64 in.) in depth for vertical butt joints, vertically oriented permanent attachments, attachment welds for nozzles, manholes, flush-type openings, and the inside shell-to-bottom welds. For horizontal butt joints, horizontally oriented permanent attachments, and annular-ring butt joints, the maximum permissible undercut is 0.8 mm (1/32 in.) in depth.
c) The frequency of surface porosity in the weld does not exceed one cluster (one or more pores) in any 100 mm (4 in.) of length, and the diameter of each cluster does not exceed 2.5 mm (3/32 in.).
d) The reinforcement of the welds on all thicknesses:

Plate Thickness mm (in.)	Maximum Reinforcement Thickness mm (in.)	
	Vertical Joints	Horizontal Joints
≤ 13 (1/2)	2.5 (3/32)	3 (1/8)
> 13 (1/2) to 25 (1)	3 (1/8)	5 (3/16)
> 25 (1)	5 (3/16)	6 (1/4)

Surface Condition (As Welded)

Test Solution: N/A Test Date(s): August 10/19

Tested by: Matt MacKenzie Ambient Conditions: 12°

Items Tested:

SR2 VERTICALS AND FIRST HORIZONTAL

Results:

No defects were found. All welding acceptable

STS Representative Signature: _____ Date: August 10/19

Client Representative Signature: Bruno D Date: August 20/19

QUALITY CONTROL MANUAL

Exhibit 26, Rev 1

VISUAL TEST REPORT

Customer: AGNICO EAGLE

Location: BAKER LAKE

Code Requiring Test: API 650 (section 8.5.2) Reason for Test: New Construction

A weld shall be acceptable by visual examination if the inspection shows the following.

a) There are no crater cracks, other surface cracks or arc strikes in or adjacent to the welded joints.
b) Maximum permissible undercut is 0.4 mm (1/64 in.) in depth for vertical butt joints, vertically oriented permanent attachments, attachment welds for nozzles, manholes, flush-type openings, and the inside shell-to-bottom welds. For horizontal butt joints, horizontally oriented permanent attachments, and annular-ring butt joints, the maximum permissible undercut is 0.8 mm (1/32 in.) in depth.
c) The frequency of surface porosity in the weld does not exceed one cluster (one or more pores) in any 100 mm (4 in.) of length, and the diameter of each cluster does not exceed 2.5 mm (3/32 in.).
d) The reinforcement of the welds on all thicknesses:

Plate Thickness mm (in.)	Maximum Reinforcement Thickness mm (in.)	
	Vertical Joints	Horizontal Joints
≤ 13 (1/2)	2.5 (3/32)	3 (1/8)
> 13 (1/2) to 25 (1)	3 (1/8)	5 (3/16)
> 25 (1)	5 (3/16)	6 (1/4)

Surface Condition (As Welded)

Test Solution: N/A Test Date(s): AUGUST 12/19

Tested by: MATT MACKENZIE Ambient Conditions: 10°

Items Tested:

SR3 VERTICALS AND SECOND HORIZONTAL

Results:

No defects were found. All welding acceptable

STS Representative Signature: _____ Date: August 12/19

Client Representative Signature: _____ Date: August 20/19

QUALITY CONTROL MANUAL

Exhibit 26, Rev 1

VISUAL TEST REPORT

Customer: AGNICO EAGLE

Location: BAKER LAKE

Code Requiring Test: API 650 (section 8.5.2) Reason for Test: New Construction

A weld shall be acceptable by visual examination if the inspection shows the following.

a) There are no crater cracks, other surface cracks or arc strikes in or adjacent to the welded joints.
b) Maximum permissible undercut is 0.4 mm (1/64 in.) in depth for vertical butt joints, vertically oriented permanent attachments, attachment welds for nozzles, manholes, flush-type openings, and the inside shell-to-bottom welds. For horizontal butt joints, horizontally oriented permanent attachments, and annular-ring butt joints, the maximum permissible undercut is 0.8 mm (1/32 in.) in depth.
c) The frequency of surface porosity in the weld does not exceed one cluster (one or more pores) in any 100 mm (4 in.) of length, and the diameter of each cluster does not exceed 2.5 mm (3/32 in.).
d) The reinforcement of the welds on all thicknesses:

Plate Thickness mm (in.)	Maximum Reinforcement Thickness mm (in.)	
	Vertical Joints	Horizontal Joints
≤ 13 (1/2)	2.5 (3/32)	3 (1/8)
> 13 (1/2) to 25 (1)	3 (1/8)	5 (3/16)
> 25 (1)	5 (3/16)	6 (1/4)

Surface Condition (As Welded)

Test Solution: N/A Test Date(s): AUGUST 14/19

Tested by: MATT MACKENZIE Ambient Conditions: 10°

Items Tested:

SR4 VERTICALS AND THIRD HORIZONTAL

Results:

No defects were found. All welding acceptable

STS Representative Signature: _____ Date: August 14/19.

Client Representative Signature: Bruno N Date: August 20/19

QUALITY CONTROL MANUAL

Exhibit 26, Rev 1

VISUAL TEST REPORT

Customer: AGNICO EAGLE

Location: BAKER LAKE

Code Requiring Test: API 650 (section 8.5.2) Reason for Test: New Construction

A weld shall be acceptable by visual examination if the inspection shows the following.

a) There are no crater cracks, other surface cracks or arc strikes in or adjacent to the welded joints.
b) Maximum permissible undercut is 0.4 mm (1/64 in.) in depth for vertical butt joints, vertically oriented permanent attachments, attachment welds for nozzles, manholes, flush-type openings, and the inside shell-to-bottom welds. For horizontal butt joints, horizontally oriented permanent attachments, and annular-ring butt joints, the maximum permissible undercut is 0.8 mm (1/32 in.) in depth.
c) The frequency of surface porosity in the weld does not exceed one cluster (one or more pores) in any 100 mm (4 in.) of length, and the diameter of each cluster does not exceed 2.5 mm (3/32 in.).
d) The reinforcement of the welds on all thicknesses:

Plate Thickness mm (in.)	Maximum Reinforcement Thickness mm (in.)	
	Vertical Joints	Horizontal Joints
≤ 13 (1/2)	2.5 (3/32)	5 (3/16)
> 13 (1/2) to 25 (1)	3 (1/8)	6 (3/16)
> 25 (1)	5 (3/16)	6 (1/4)

Surface Condition (As Welded)

Test Solution: N/A Test Date(s): August 17/19

Tested by: Matt Mackenzie Ambient Conditions: 10°

Items Tested:

SR5 VERTICALS AND FOURTH HORIZONTAL

Results:

No defects were found. All welding acceptable

STS Representative Signature: _____ Date: August 17/19.

Client Representative Signature: Bruno R/ Date: August 20/19

QUALITY CONTROL MANUAL

Exhibit 16, Rev 1

DIMENSIONAL CHECK REPORT – PEAKING

Customer: AGNICO EAGLE

Location: BAKER LAKE

Equipment Tag No.: TK 7

Equipment Type: DIESEL STORAGE TANK

Equipment Description:

Code Requiring Test: API 650 Reason for Test: New Construction

(Each vertical seam will be checked for peaking and max. peak dimension recorded for that seam.)

Test Date(s):

Tested by:

Seam Test Results:

1V1- 0 1V2- 1/16 1V3- 1/16 1V4- 1/4 1V5- 0

1V6- 0 1V7- 1/4 1V8- 1/16 1V9- 0 1V10- 1/16

1V11- 1/16.

STS Representative Signature: _____ Date: Sept 2/19

Client Representative Signature: _____ Date: Sept 3/19

QUALITY CONTROL MANUAL

Exhibit 17, Rev 1

DIMENSIONAL CHECK REPORT – BANDING

Customer: AGNICO EAGLE

Location: BAKER LAKE

Equipment Tag No.: TK 7

Equipment Type: DIESEL STORAGE TANK

Equipment Description:

Code Requiring Test: API 650 Reason for Test: New Construction

(Each circumferential seam will be checked for banding and max. banding dimension recorded for that seam. Circumferential seams will be checked at 45 degree intervals or less, max. 20' spacing)

Test Date(s): August 10/19

Tested by: Matt MacKenzie

Seam Test Results:

MAXIMUN BANDING RECORDED FOR THE FIRST HORIZONTAL - 3/8"

STS Representative Signature: _____ Date: Aug 10/19

Client Representative Signature: Bruno N Date: Aug 20/19

QUALITY CONTROL MANUAL

Exhibit 16, Rev 1

DIMENSIONAL CHECK REPORT – PEAKING

Customer: AGNICO EAGLE

Location: BAKER LAKE

Equipment Tag No.: TK 7

Equipment Type: DIESEL STORAGE TANK

Equipment Description:

Code Requiring Test: API 650 Reason for Test: New Construction

(Each vertical seam will be checked for peaking and max. peak dimension recorded for that seam.)

Test Date(s): AUGUST 12/19

Tested by: MATT MACKENZIE

Seam Test Results:

2V1- 1/16 2V2- 1/16 2V3- 1/8 2V4- 0 2V5- 1/16

2V6- 0 2V7- 0 2V8- 1/16 2V9- 3/16 2V10- 1/4

STS Representative Signature: _____ Date: Aug 12/19.

Client Representative Signature: Bruno R/ Date: Aug 20/19

QUALITY CONTROL MANUAL

Exhibit 17, Rev 1

DIMENSIONAL CHECK REPORT – BANDING

Customer: AGNICO EAGLE

Location: BAKER LAKE

Equipment Tag No.: TK 7

Equipment Type: DIESEL STORAGE TANK

Equipment Description:

Code Requiring Test: API 650 Reason for Test: New Construction

(Each circumferential seam will be checked for banding and max. banding dimension recorded for that seam. Circumferential seams will be checked at 45 degree intervals or less, max. 20' spacing)

Test Date(s): AUGUST 12/19

Tested by: MATT MACKENZIE

Seam Test Results:

MAXIMUN BANDING RECORDED FOR THE SECOND HORIZONTAL - 1/4"

STS Representative Signature: _____ Date: Aug 12/19

Client Representative Signature: Bruno N _____ Date: Aug 20/19

QUALITY CONTROL MANUAL

Exhibit 16, Rev 1

DIMENSIONAL CHECK REPORT – PEAKING

Customer: AGNICO EAGLE

Location: BAKER LAKE

Equipment Tag No.: TK 7

Equipment Type: DIESEL STORAGE TANK

Equipment Description:

Code Requiring Test: API 650 Reason for Test: New Construction

(Each vertical seam will be checked for peaking and max. peak dimension recorded for that seam.)

Test Date(s): AUGUST 13/19

Tested by: MATT MACKENZIE

Seam Test Results:

3V1- 1/8 3V2- 1/16 3V3- 1/8 3V4- 3/16 3V5- 1/16

3V6- 1/8 3V7- 0 3V8- 3/16 3V9- 0 3V10- 0

STS Representative Signature: _____ Date: Aug 13/19

Client Representative Signature: _____ Date: Aug 20/19

QUALITY CONTROL MANUAL

Exhibit 17, Rev 1

DIMENSIONAL CHECK REPORT – BANDING

Customer: AGNICO EAGLE

Location: BAKER LAKE

Equipment Tag No.: TK 7

Equipment Type: DIESEL STORAGE TANK

Equipment Description:

Code Requiring Test: API 650 Reason for Test: New Construction

(Each circumferential seam will be checked for banding and max. banding dimension recorded for that seam. Circumferential seams will be checked at 45 degree intervals or less, max. 20' spacing)

Test Date(s): August 13/19

Tested by: MATT MACKENZIE

Seam Test Results:

MAXIMUN BANDING RECORDED FOR THE THIRD HORIZONTAL - 1/4"

STS Representative Signature: _____ Date: August 13/19

Client Representative Signature: Bruno R/ Date: August 20/19

QUALITY CONTROL MANUAL

Exhibit 16, Rev 1

DIMENSIONAL CHECK REPORT – PEAKING

Customer: AGNICO EAGLE

Location: BAKER LAKE

Equipment Tag No.: TK 7

Equipment Type: DIESEL STORAGE TANK

Equipment Description:

Code Requiring Test: API 650 Reason for Test: New Construction

(Each vertical seam will be checked for peaking and max. peak dimension recorded for that seam.)

Test Date(s): AUGUST 14/19

Tested by: MATT MACKENZIE

Seam Test Results:

4V1- 3/16 4V2- 1/8 4V3- 0 4V4- 1/16 4V5- 1/8

4V6- 1/8 4V7- 0 4V8- 3/16 4V9- 0 4V10- 1/16

STS Representative Signature: _____ Date: AUGUST 14/19

Client Representative Signature: _____ Date: August 20/19

QUALITY CONTROL MANUAL

Exhibit 17, Rev 1

DIMENSIONAL CHECK REPORT – BANDING

Customer: AGNICO EAGLE

Location: BAKER LAKE

Equipment Tag No.: TK 7

Equipment Type: DIESEL STORAGE TANK

Equipment Description:

Code Requiring Test: API 650 Reason for Test: New Construction

(Each circumferential seam will be checked for banding and max. banding dimension recorded for that seam. Circumferential seams will be checked at 45 degree intervals or less, max. 20' spacing)

Test Date(s): August 14/19

Tested by: Matt MacKenzie

Seam Test Results:

MAXIMUN BANDING RECORDED FOR THE FOURTH HORIZONTAL - 1/4"

STS Representative Signature: _____ Date: August 14/19.

Client Representative Signature: Bruno N Date: August 20/19

QUALITY CONTROL MANUAL

Exhibit 16, Rev 1

DIMENSIONAL CHECK REPORT – PEAKING

Customer: AGNICO EAGLE

Location: BAKER LAKE

Equipment Tag No.: TK 7

Equipment Type: DIESEL STORAGE TANK

Equipment Description:

Code Requiring Test: API 650 Reason for Test: New Construction

(Each vertical seam will be checked for peaking and max. peak dimension recorded for that seam.)

Test Date(s): AUGUST 17/19

Tested by: MATT MACKENZIE

Seam Test Results:

5V1- 1/16 5V2- 1/16 5V3- 1/8 5V4- 1/8 5V5- 1/8

5V6- 1/8 5V7- 1/8 5V8- 1/16 5V9- 1/16 5V10- 0

STS Representative Signature: _____ Date: August 17/19

Client Representative Signature: _____ Date: August 20/19

QUALITY CONTROL MANUAL

Exhibit 25, Rev 1

DIESEL TEST REPORT (SHELL)

Customer: AGNICO EAGLE

Location: BAKER LAKE

Equipment Tag No.: TK 7

Equipment Type: STORAGE TANK

Equipment Description

Code Requiring Test: API 650 (section 7.3.5) Reason for Test: New Construction

(The shell shall be tested by painting all of the joints on the inside with a highly penetrating oil and carefully examining the outside of the joints for leakage.)

Surface Condition (As Welded)

Test Solution: Diesel Test Date(s): Sept 2/19

Tested by: Matt MacKenzie Ambient Conditions: 7°

Items Tested:

SR1, SR2, SR3, SR4, SR5 VERTS AND FIRST SECOND THIRD AND FORTH

HORIZONTAL

Results:

NO LEAK DETECTRED

STS Representative Signature: _____ Date: Sept 2/19.

Client Representative Signature: _____ Date: Sept 3/19

QUALITY CONTROL MANUAL

Exhibit 19, Rev 1

DIMENSIONAL CHECK REPORT – PLUMBNESS

Customer: AGNICO EAGLE

Location: BAKER LAKE

Equipment Tag No.: TK 7

Equipment Type: DIESEL STORAGE TANK

Equipment Description:

Code Requiring Test: API 650 Reason for Test: New Construction

(The tank shell will be checked for plumb at 12" below the tank roof. Plumb measurements will be checked at 45 degree intervals or less, max. 20' spacing)

Test Date(s): August 29/19

Tested by: Matt Mackenzie

Seam Test Results:

0° - 90° - 7/16, -1 1/2, -1 15/16, - 3/8, - 3/8

90° - 180° - 3/8, - 1 1/4, - 1 7/8, + 1/8, + 3/16, +2

180° - 270° + 2 1/8, - 7/8, -1 7/8, - 1 1/16, - 1 5/8

270° - 0° - 1 5/8, - 1 7/8, - 1 1/16, - 1 5/8, - 3/4

STS Representative Signature: _____ Date: Aug 29/19

Client Representative Signature: _____ Date: Sept 3, 19

Tank #7 Baker Lake (AEM)

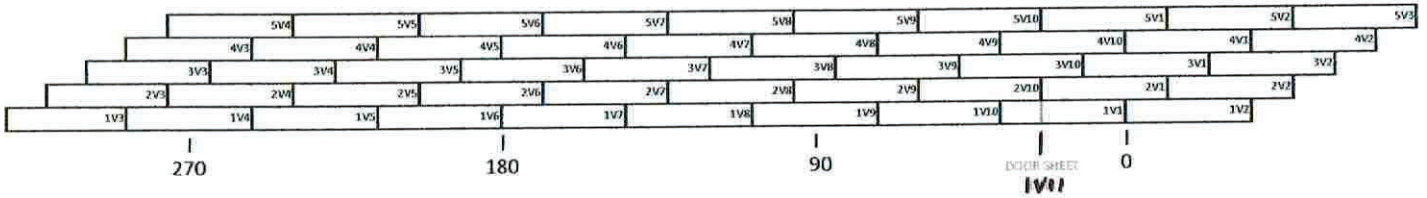

NDT TECHNICIAN WILL INITIAL EACH BOX WHEN WELD IS ACCEPTABLE

B ----> BOTTOM OF THE VERT (0-6") | M ----> MIDDLE OF THE VERT (45"-51") | T ----> TOP OF THE VERT (90"-96")

VERTICAL SEAMS MAPPING UT

	B	M	T	FULL
1V1	UT FULL BECAUSE NOZZLE INTO VERT			
1V2				
1V3				
1V4				
1V5				
1V6	UT FULL BECAUSE NOZZLE INTO VERT			
1V7				
1V8				
1V9				
1V10				
IV11				

	B	T
2V1		
2V2		
2V3		
2V4		
2V5		
2V6		
2V7		
2V8		
2V9		
2V10		

	B	T
3V1		
3V2		
3V3		
3V4		
3V5		
3V6		
3V7		
3V8		
3V9		
3V10		

	B	T
4V1		
4V2		
4V3		
4V4		
4V5		
4V6		
4V7		
4V8		
4V9		
4V10		

	B	T
5V1		N/A
5V2		N/A
5V3		N/A
5V4		N/A
5V5		N/A
5V6		N/A
5V7		N/A
5V8		N/A
5V9		N/A
5V10		N/A

HORIZONTAL SEAMS MAPPING UT

H1V2	30"-36"	
H1V8	42"-48"	
Middle door sheet		

H2V3	24"-30"	
H2V9	36"-42"	

H3V1	60"-66"	
H3V7	42"-48"	

H4V5	24"-30"	
H4V9	36"-42"	

MAG PARTICLE

SHELL MANHOLE 0°	
SHELL MANHOLE 90°	
SHELL MANHOLE 180°	
SHELL MANHOLE 270°	

SHELL MANHOLE NECK (SEAM) 0°	
SHELL MANHOLE NECK (SEAM) 90°	
SHELL MANHOLE NECK (SEAM) 180°	
SHELL MANHOLE NECK (SEAM) 270°	

NOZZLE SN3 (x1)	
NOZZLE SN4 (x1)	
NOZZLE SN5 (x2)	
NOZZLE SN6 (x6)	

STS Representative Signature: _____ Date: Sept 2/19.

Client Representative Signature: _____ Date: Sept 2/19

NDT Representative Signature: _____ Date: 2019-09-02

MICHAEL LAFRENIERE
CGSB 48.9712 MT-PT-UT
LEVEL II INSPECTOR
CERT#: 12977

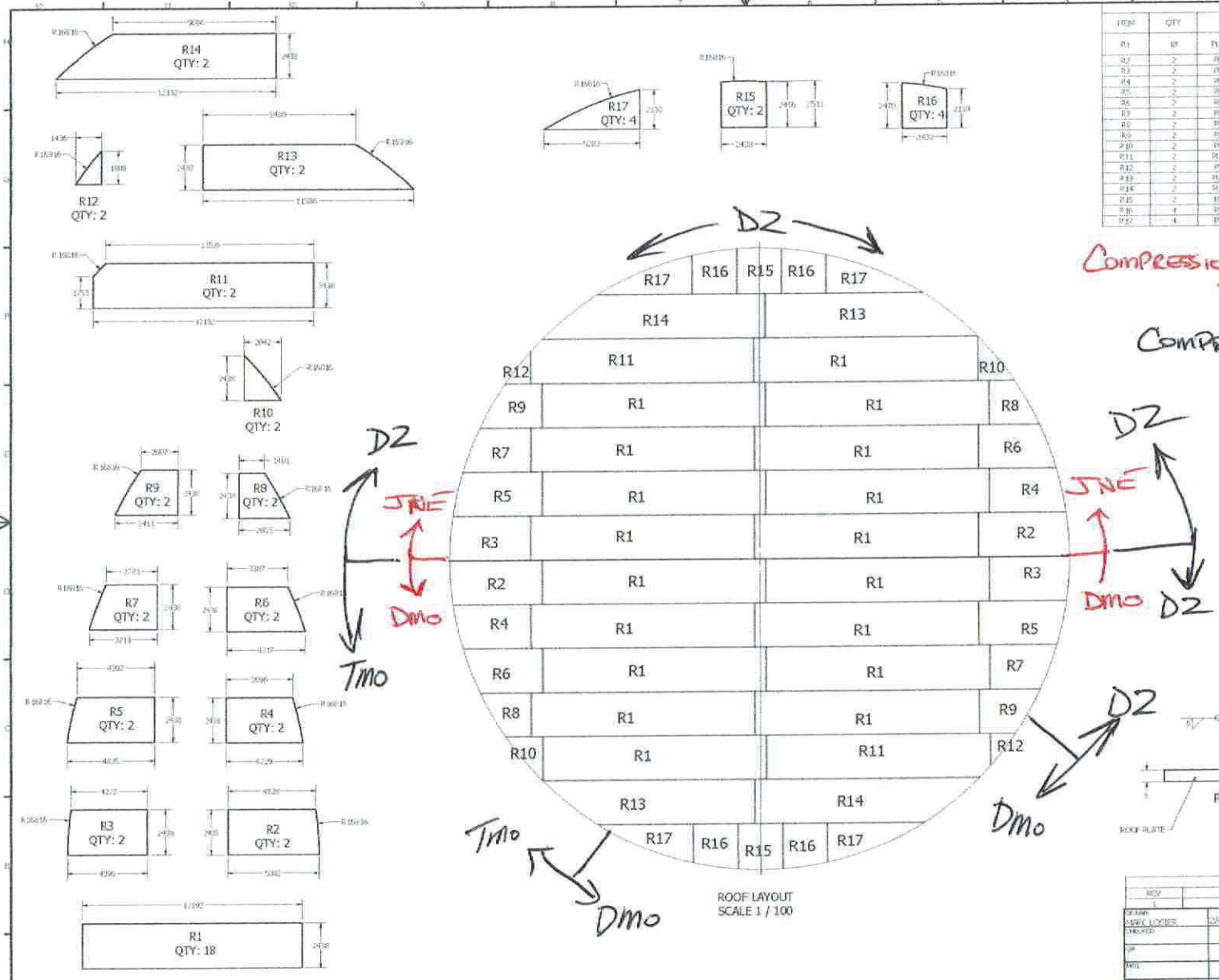

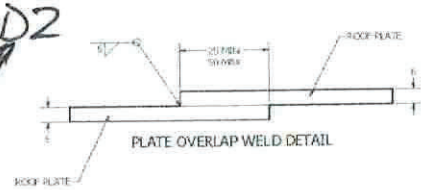

PARTS LIST

ITEM	QTY	DESCRIPTION	MATERIAL	UNIT WT (KG)	TOT WT (KG)
R1	18	PL 6.35 X 2438 X 12192	G40.21M-260W	1481	26658
R2	2	PL 6.35 X 2438 X 5002	G40.21M-260W	601	1202
R3	2	PL 6.35 X 2438 X 4596	G40.21M-260W	527	1054
R4	2	PL 6.35 X 2438 X 4229	G40.21M-260W	485	970
R5	2	PL 6.35 X 2438 X 4825	G40.21M-260W	559	1118
R6	2	PL 6.35 X 2438 X 4317	G40.21M-260W	473	946
R7	2	PL 6.35 X 2438 X 3711	G40.21M-260W	398	796
R8	2	PL 6.35 X 2438 X 2895	G40.21M-260W	261	522
R9	2	PL 6.35 X 2438 X 3411	G40.21M-260W	334	668
R10	2	PL 6.35 X 2438 X 2942	G40.21M-260W	132	264
R11	2	PL 6.35 X 2438 X 12192	G40.21M-260W	1473	2947
R12	2	PL 6.35 X 1836 X 1808	G40.21M-260W	63	126
R13	2	PL 6.35 X 2438 X 11586	G40.21M-260W	1235	2470
R14	2	PL 6.35 X 2438 X 12192	G40.21M-260W	1358	2716
R15	2	PL 6.35 X 2438 X 2511	G40.21M-260W	303	606
R16	4	PL 6.35 X 2438 X 2470	G40.21M-260W	282	1128
R17	4	PL 6.35 X 2130 X 5282	G40.21M-260W	326	1304
					TOT WT: 85,400

COMPRESSION RING TOPSIDE

COMPRESSION RING OVER HEAD.

REVISION HISTORY

REV	DESCRIPTION	DATE
1	ISSUED FOR CONSTRUCTION	2/11/2019

DRAWN: MARC LOSIER 2/4/2019

CHECKED

QA

MFG

APPROVED

ROOF LAYOUT

TITLE: BAKER LAKE WHALE TAIL PROJECT FLOOR AND ROOF LAYOUT FOR 10,000CUM TANK

SIZE: A1 | DWG NO: 315-M1 | REV: 1

SCALE: 1 | SHEET 2 OF 2

QUALITY CONTROL MANUAL

Exhibit 26, Rev 1

VISUAL TEST REPORT

Customer: AGNICO EAGLE

Location: BAKER LAKE

Code Requiring Test: API 650 (section 8.5.2) Reason for Test: New Construction

A weld shall be acceptable by visual examination if the inspection shows the following.

a) There are no crater cracks, other surface cracks or arc strikes in or adjacent to the welded joints.
b) Maximum permissible undercut is 0.4 mm (1/64 in.) in depth for vertical butt joints, vertically oriented permanent attachments, attachment welds for nozzles, manholes, flush-type openings, and the inside shell-to-bottom welds. For horizontal butt joints, horizontally oriented permanent attachments, and annular-ring butt joints, the maximum permissible undercut is 0.8 mm (1/32 in.) in depth.
c) The frequency of surface porosity in the weld does not exceed one cluster (one or more pores) in any 100 mm (4 in.) of length, and the diameter of each cluster does not exceed 2.5 mm (3/32 in.).
d) The reinforcement of the welds on all thicknesses:

Plate Thickness mm (in.)	Maximum Reinforcement Thickness mm (in.)	
	Vertical Joints	Horizontal Joints
≤ 13 (1/2)	2.5 (3/32)	3 (1/8)
> 13 (1/2) to 25 (1)	3 (1/8)	5 (3/16)
> 25 (1)	5 (3/16)	6 (1/4)

Surface Condition (As Welded)

Test Solution: N/A Test Date(s): AUGUST 19/19

Tested by: MATT MACKENZIE Ambient Conditions: 10°

Items Tested:

COMPRESSION RING WELD

Results:

NO DEFECTS WERE FOUND. ALL WELDING ACCEPTABLE

STS Representative Signature: _____ Date: Aug 19/19

Client Representative Signature: _____ Date: August 20/19

QUALITY CONTROL MANUAL

Exhibit 26, Rev 1

VISUAL TEST REPORT

Customer: AGNICO EAGLE

Location: BAKER LAKE

Code Requiring Test: API 650 (section 8.5.2) Reason for Test: New Construction

A weld shall be acceptable by visual examination if the inspection shows the following.

a) There are no crater cracks, other surface cracks or arc strikes in or adjacent to the welded joints.
b) Maximum permissible undercut is 0.4 mm (1/64 in.) in depth for vertical butt joints, vertically oriented permanent attachments, attachment welds for nozzles, manholes, flush-type openings, and the inside shell-to-bottom welds. For horizontal butt joints, horizontally oriented permanent attachments, and annular-ring butt joints, the maximum permissible undercut is 0.8 mm (1/32 in.) in depth.
c) The frequency of surface porosity in the weld does not exceed one cluster (one or more pores) in any 100 mm (4 in.) of length, and the diameter of each cluster does not exceed 2.5 mm (3/32 in.).
d) The reinforcement of the welds on all thicknesses:

Plate Thickness mm (in.)	Maximum Reinforcement Thickness mm (in.)	
	Vertical Joints	Horizontal Joints
≤ 13 (1/2)	2.5 (3/32)	3 (1/8)
> 13 (1/2) to 25 (1)	3 (1/8)	5 (3/16)
> 25 (1)	5 (3/16)	6 (1/4)

Surface Condition (As Welded)

Test Solution: N/A Test Date(s): Aug 25/19

Tested by: MATT MACKENZIE Ambient Conditions: 12°

Items Tested:

ROOF WELDS

Results:

NO DEFECTS WERE FOUND. ALL WELDING ACCEPTABLE

STS Representative Signature: _____ Date: Aug 25/19.

Client Representative Signature: _____ Date: Aug 28/19

Exhibit 15, Rev 1

VACUUM BOX TEST REPORT – ROOF PLATE WELDS

Customer: AGNICO EAGLE

Location: BAKER LAKE

Equipment Tag No.: TANK 7

Equipment Type:

Equipment Description:

Code Requiring Test: API 650 Reason for Test: New Construction

(A vacuum box/soap solution test for roof plate weld seams is required for new construction or major alterations, no visible leaks should be observed)

Test Solution: Water / Snoop Ambient Conditions: 10°

Test Date(s): AUGUST 28/19 Surface Condition: CLEAN.

Tested by: MATT MACKENZIE. Surface Test Temperature:

Pressure Gauge:

Items Tested:

ROOF PLATES WELDS

Results:

NO LEAK DETECTED

STS Representative Signature: Date: Aug 28/19.

Client Representative Signature: Date: Sept 3, 19

QUALITY CONTROL MANUAL

Exhibit 19, Rev 1

DIMENSIONAL CHECK REPORT – PLUMBNESS

Customer: AGNICO EAGLE

Location: BAKER LAKE

Equipment Tag No.: TK 7

Equipment Type: DIESEL STORAGE TANK

Equipment Description:

Code Requiring Test: API 650 Reason for Test: New Construction

(The tank shell will be checked for plumb at 12" below the tank roof. Plumb measurements will be checked at 45 degree intervals or less, max. 20' spacing)

Test Date(s): Aug 26/19

Tested by: Matt Mackenzie

Test Results:

The Maximum out of plumbness of the **columns** does not exceed 1/200 of the total height

STS Representative Signature: _____ Date: Aug 26/19

Client Representative Signature: _____ Date: Aug 26/19

QUALITY CONTROL MANUAL

Exhibit 26, Rev 1

VISUAL TEST REPORT

Customer: AGNICO EAGLE

Location: BAKER LAKE

Code Requiring Test: API 650 (section 8.5.2) Reason for Test: New Construction

A weld shall be acceptable by visual examination if the inspection shows the following.

a) There are no crater cracks, other surface cracks or arc strikes in or adjacent to the welded joints.
b) Maximum permissible undercut is 0.4 mm (1/64 in.) in depth for vertical butt joints, vertically oriented permanent attachments, attachment welds for nozzles, manholes, flush-type openings, and the inside shell-to-bottom welds. For horizontal butt joints, horizontally oriented permanent attachments, and annular-ring butt joints, the maximum permissible undercut is 0.8 mm (1/32 in.) in depth.
c) The frequency of surface porosity in the weld does not exceed one cluster (one or more pores) in any 100 mm (4 in.) of length, and the diameter of each cluster does not exceed 2.5 mm (3/32 in.).
d) The reinforcement of the welds on all thicknesses:

Plate Thickness mm (in.)	Maximum Reinforcement Thickness mm (in.)	
	Vertical Joints	Horizontal Joints
≤ 13 (1/2)	2.5 (3/32)	3 (1/8)
> 13 (1/2) to 25 (1)	3 (1/8)	5 (3/16)
> 25 (1)	5 (3/16)	6 (1/4)

Surface Condition (As Welded)

Test Solution: N/A Test Date(s): Aug 26/19

Tested by: Matt MacKenzie Ambient Conditions: 12°

Items Tested:

ROOF STUCTURE FIELD WELDS.

Results:

NO DEFECTS WERE FOUND. ALL WELDING ACCEPTABLE

STS Representative Signature: _____ Date: Aug 26/19

Client Representative Signature: _____ Date: August 28/19

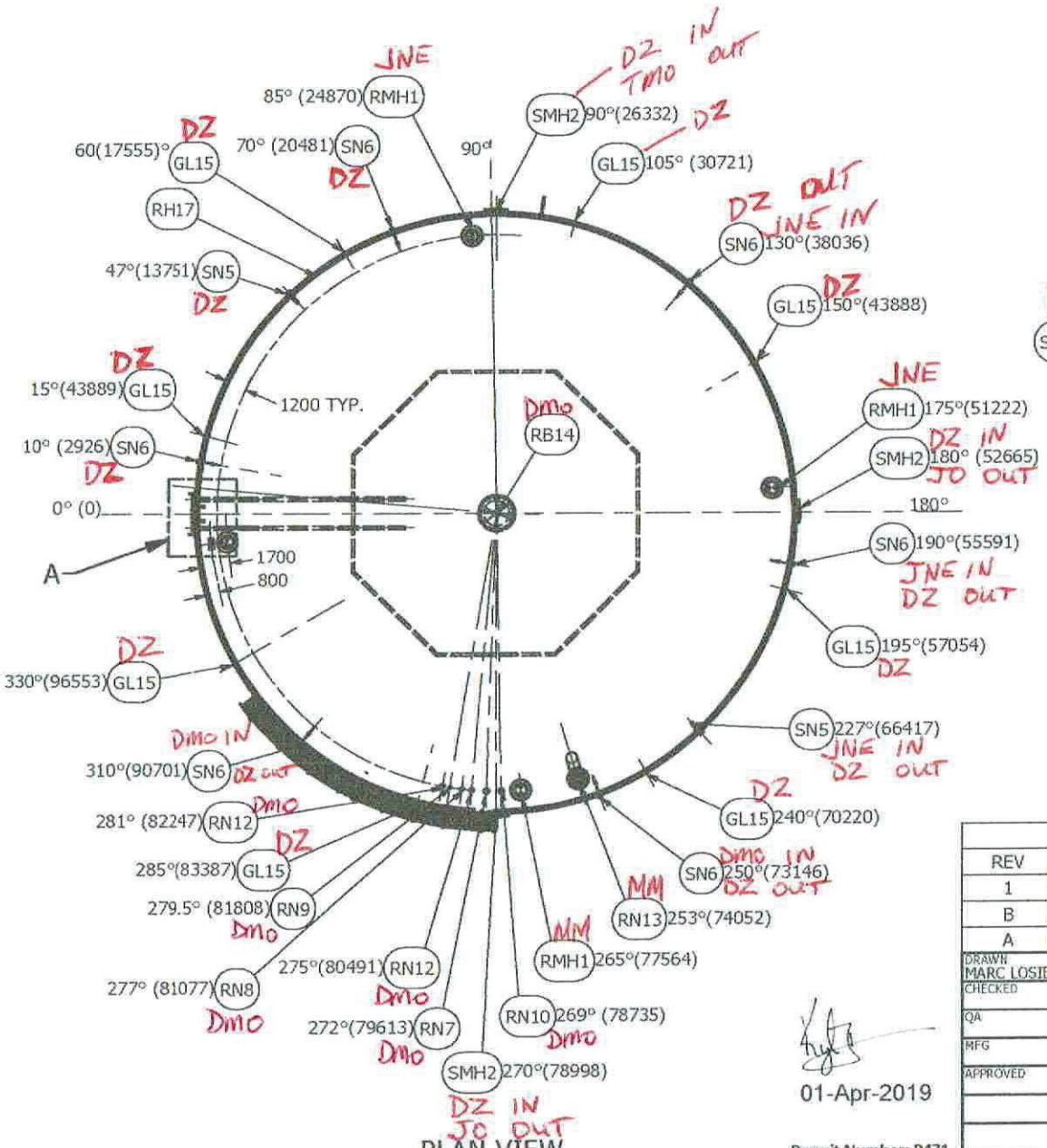

PLAN VIEW

01-Apr-2019

Permit Number: P471

DIMENSION IN () DENOTES
ARC LENGTH ON THE EXTERIOR OF
THE SHELL FROM 0° IN MILLIMETRES
MEASURED ON COURSE ONE (1) FOR SHELL NOZZLES
AND ON COURSE FIVE (5) FOR ROOF NOZZLES

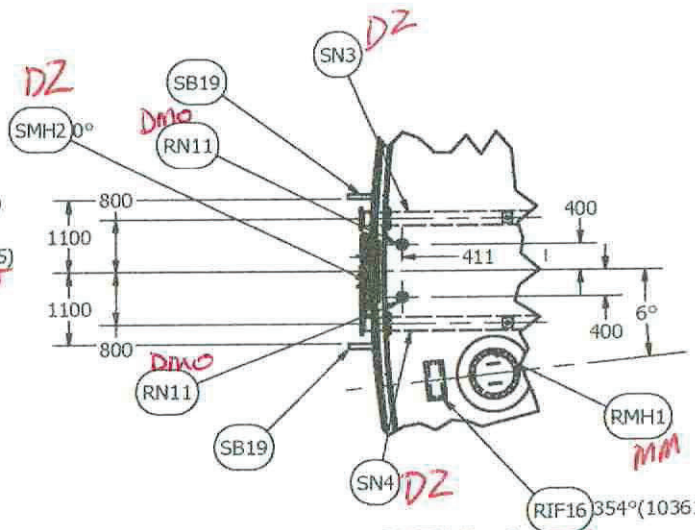

DETAIL A
SCALE 1/75 MM

REVISION HISTORY		
REV	DESCRIPTION	DATE
1	ISSUED FOR CONSTRUCTION	3/27/2019
B	ISSUED FOR REVIEW	3/25/2019
A	ISSUED FOR REVIEW	2/26/2019

DRAWN MARC LOSIER	2/19/2019	GENERAL ARRANGEMENT AND NOZZLE LAYOUT
CHECKED		
QA		TITLE: BAKER LAKE WHALE TAIL PROJECT - 10M LITERS - TANK #7: 6170TNK42
MFG		
APPROVED		SIZE A3 · DWG NO 315-M6 · REV 1
		SCALE 1/250 · SHEET 1 OF 6

QUALITY CONTROL MANUAL

Exhibit 26, Rev 1

VISUAL TEST REPORT

Customer: AGNICO EAGLE

Location: BAKER LAKE

Code Requiring Test: API 650 (section 8.5.2) Reason for Test: New Construction

A weld shall be acceptable by visual examination if the inspection shows the following.

a) There are no crater cracks, other surface cracks or arc strikes in or adjacent to the welded joints.
b) Maximum permissible undercut is 0.4 mm (1/64 in.) in depth for vertical butt joints, vertically oriented permanent attachments, attachment welds for nozzles, manholes, flush-type openings, and the inside shell-to-bottom welds. For horizontal butt joints, horizontally oriented permanent attachments, and annular-ring butt joints, the maximum permissible undercut is 0.8 mm (1/32 in.) in depth.
c) The frequency of surface porosity in the weld does not exceed one cluster (one or more pores) in any 100 mm (4 in.) of length, and the diameter of each cluster does not exceed 2.5 mm (3/32 in.).
d) The reinforcement of the welds on all thicknesses:

Plate Thickness mm (in.)	Maximum Reinforcement Thickness mm (in.)	
	Vertical Joints	Horizontal Joints
≤ 13 (1/2)	2.5 (3/32)	3 (1/8)
> 13 (1/2) to 25 (1)	3 (1/8)	5 (3/16)
> 25 (1)	5 (3/16)	6 (1/4)

Surface Condition (As Welded)

Test Solution: N/A Test Date(s): Aug 28/19

Tested by: MATT MACKENZIE Ambient Conditions: 12°

Items Tested:

NOZZLES WELDS.

Results:

NO DEFECTS WERE FOUND. ALL WELDING ACCEPTABLE

STS Representative Signature: _____ Date: Aug 28/19

Client Representative Signature: _____ Date: August 28/19

QUALITY CONTROL MANUAL

Exhibit 31, Rev 1

DIMENSIONAL CHECK REPORT- NOZZLES

Customer: AGNICO EAGLE

Location: BAKER LAKE

Equipment Tag No.: TK 7

Equipment Type: DIESEL STORAGE TANK

Equipment Description:

Code Requiring Test: API 650 Reason for Test: New Construction

(Nozzles (excluding manholes) shall be installed within the following tolerances:
a) specified projection from outside of tank shell to extreme face of flange: ±5 mm (3/16 in.);
b) elevation of shell nozzle or radial location of a roof nozzle: ±6 mm (1/4 in.);
c) flange tilt in any plane, measured on the flange face:
±1/2 degree for nozzles greater than NPS 12 in. nominal diameter,
±3 mm (1/8 in.) at the outside flange diameter for nozzles NPS 12 and smaller;
d) flange bolt hole orientation: ±3 mm (1/8 in.).)

Test Date(s): Sept 2/19

Tested by: Matt MacKenzie

Test Results:

ALL NOZZLES ARE WITHIN TOLERENCES

STS Representative Signature: _____ Date: Sept 2/19

Client Representative Signature: _____ Date: Sept 3, 19

Exhibit 12, Rev 1

AIR TEST REPORT – NOZZLE REINFORCEMENT PLATE WELDS

Customer: AGNICO EAGLE

Location: BAKER LAKE

Equipment Tag No.: TANK 7

Equipment Type:

Equipment Description:

Code Requiring Test: API 650 Reason for Test: New Construction

(An air pressure/soap solution test for nozzle reinforcement plate weld seams is required for new construction or major alterations, no visible leaks should be observed)

Test Pressure: 100 kPa (15 psi) Surface Condition (As Welded, Painted, Blasted)

Test Solution: Water / Snoop: Test Date(s): Sept 2/19

Tested by: Matt MacKenzie Pressure Gauge: Ambient Conditions: 7°

Items Tested:

SHELL NOZZLES

Results:

NO LEAKS WERE DETECTED AT THE TIME OF THE INSPECTION

STS Representative Signature: Date: Sept 2/19.

Client Representative Signature: Date: Sept 3, 19

QUALITY CONTROL MANUAL

Exhibit 26, Rev 1

VISUAL TEST REPORT

Customer: AGNICO EAGLE

Location: BAKER LAKE

Code Requiring Test: API 650 (section 8.5.2) Reason for Test: New Construction

A weld shall be acceptable by visual examination if the inspection shows the following.

a) There are no crater cracks, other surface cracks or arc strikes in or adjacent to the welded joints.
b) Maximum permissible undercut is 0.4 mm (1/64 in.) in depth for vertical butt joints, vertically oriented permanent attachments, attachment welds for nozzles, manholes, flush-type openings, and the inside shell-to-bottom welds. For horizontal butt joints, horizontally oriented permanent attachments, and annular-ring butt joints, the maximum permissible undercut is 0.8 mm (1/32 in.) in depth.
c) The frequency of surface porosity in the weld does not exceed one cluster (one or more pores) in any 100 mm (4 in.) of length, and the diameter of each cluster does not exceed 2.5 mm (3/32 in.).
d) The reinforcement of the welds on all thicknesses:

Plate Thickness mm (in.)	Maximum Reinforcement Thickness mm (in.)	
	Vertical Joints	Horizontal Joints
≤ 13 (1/2)	2.5 (3/32)	3 (1/8)
> 13 (1/2) to 25 (1)	3 (1/8)	5 (3/16)
> 25 (1)	5 (3/16)	6 (1/4)

Surface Condition (As Welded)

Test Solution: N/A Test Date(s): Aug 28/19

Tested by: Matt MacKenzie Ambient Conditions: 12°

Items Tested:

MANWAY WELDS.

Results:

NO DEFECTS WERE FOUND. ALL WELDING ACCEPTABLE

STS Representative Signature: _____ Date: Aug 28/19.

Client Representative Signature: _____ Date: August 28/19

QUALITY CONTROL MANUAL

Exhibit 32, Rev 1

DIMENSIONAL CHECK REPORT- MANWAYS

Customer: AGNICO EAGLE

Location: BAKER LAKE

Equipment Tag No.: TK 7

Equipment Type: DIESEL STORAGE TANK

Equipment Description:

Code Requiring Test: API 650 Reason for Test: New Construction

(Manholes shall be installed within the following tolerances:
a) specified projection from outside of shell to extreme face of flange, ±13 mm (1/2 in.)
b) elevation and angular location, ±13 mm (1/2 in.)
c) flange tilt in any plane, measured across the flange diameter, ±13 mm (1/2 in.))

Test Date(s): Sept 2/19

Tested by: Matt MacKenzie

Test Results:

ALL MANWAYS ARE WITHIN TOLERENCES

STS Representative Signature: _____ Date: Sept 2/19

Client Representative Signature: _____ Date: Sept 3, 19

QUALITY CONTROL MANUAL

Exhibit 12, Rev 1

AIR TEST REPORT – NOZZLE REINFORCEMENT PLATE WELDS

Customer: AGNICO EAGLE

Location: BAKER LAKE

Equipment Tag No.: TANK 7

Equipment Type:

Equipment Description:

Code Requiring Test: API 650 Reason for Test: New Construction

(An air pressure/soap solution test for nozzle reinforcement plate weld seams is required for new construction or major alterations, no visible leaks should be observed)

Test Pressure: 100 kPa (15 psi) Surface Condition (As Welded, Painted, Blasted)

Test Solution: Water / Snoop: Test Date(s): Sept 2/19

Tested by: Matt MacKenzie Pressure Gauge: Ambient Conditions: 7°

Items Tested:

SHELL MANWAYS

Results:

NO LEAKS WERE DETECTED AT THE TIME OF THE INSPECTION

STS Representative Signature: Date: Sept 2/19.

Client Representative Signature: Date: Sept 3, 19

QUALITY CONTROL MANUAL

Exhibit 26, Rev 1

VISUAL TEST REPORT

Customer: AGNICO EAGLE

Location: BAKER LAKE

Code Requiring Test: API 650 (section 8.5.2) Reason for Test: New Construction

A weld shall be acceptable by visual examination if the inspection shows the following.

a) There are no crater cracks, other surface cracks or arc strikes in or adjacent to the welded joints.
b) Maximum permissible undercut is 0.4 mm (1/64 in.) in depth for vertical butt joints, vertically oriented permanent attachments, attachment welds for nozzles, manholes, flush-type openings, and the inside shell-to-bottom welds. For horizontal butt joints, horizontally oriented permanent attachments, and annular-ring butt joints, the maximum permissible undercut is 0.8 mm (1/32 in.) in depth.
c) The frequency of surface porosity in the weld does not exceed one cluster (one or more pores) in any 100 mm (4 in.) of length, and the diameter of each cluster does not exceed 2.5 mm (3/32 in.).
d) The reinforcement of the welds on all thicknesses:

Plate Thickness mm (in.)	Maximum Reinforcement Thickness mm (in.)	
	Vertical Joints	Horizontal Joints
≤ 13 (1/2)	2.5 (3/32)	3 (1/8)
> 13 (1/2) to 25 (1)	3 (1/8)	5 (3/16)
> 25 (1)	5 (3/16)	6 (1/4)

Surface Condition (As Welded)

Test Solution: N/A Test Date(s): Aug 28/19

Tested by: Matt MacKenzie Ambient Conditions: 12°

Items Tested:

INTERNALS WELDS.

Results:

NO DEFECTS WERE FOUND. ALL WELDING ACCEPTABLE

STS Representative Signature: _____ Date: Aug 28/19

Client Representative Signature: _____ Date: Aug. 28/19

QUALITY CONTROL MANUAL

Exhibit 26, Rev 1

VISUAL TEST REPORT

Customer: AGNICO EAGLE

Location: BAKER LAKE

Code Requiring Test: API 650 (section 8.5.2) Reason for Test: New Construction

A weld shall be acceptable by visual examination if the inspection shows the following.

a) There are no crater cracks, other surface cracks or arc strikes in or adjacent to the welded joints.
b) Maximum permissible undercut is 0.4 mm (1/64 in.) in depth for vertical butt joints, vertically oriented permanent attachments, attachment welds for nozzles, manholes, flush-type openings, and the inside shell-to-bottom welds. For horizontal butt joints, horizontally oriented permanent attachments, and annular-ring butt joints, the maximum permissible undercut is 0.8 mm (1/32 in.) in depth.
c) The frequency of surface porosity in the weld does not exceed one cluster (one or more pores) in any 100 mm (4 in.) of length, and the diameter of each cluster does not exceed 2.5 mm (3/32 in.).
d) The reinforcement of the welds on all thicknesses:

Plate Thickness mm (in.)	Maximum Reinforcement Thickness mm (in.)	
	Vertical Joints	Horizontal Joints
≤ 13 (1/2)	2.5 (3/32)	3 (1/8)
> 13 (1/2) to 25 (1)	3 (1/8)	5 (3/16)
> 25 (1)	5 (3/16)	6 (1/4)

Surface Condition (As Welded)

Test Solution: N/A Test Date(s): Sept 2/19

Tested by: Matt MacKenzie Ambient Conditions: 7°

Items Tested:

EXTERNALS/ ATTACHEMENTS WELDS.

Results:

NO DEFECTS WERE FOUND. ALL WELDING ACCEPTABLE

STS Representative Signature: _____ Date: Sept 2/19.

Client Representative Signature: _____ Date: Sept 3, 19

QUALITY CONTROL MANUAL

Exhibit 26, Rev 1

VISUAL TEST REPORT

Customer: AGNICO EAGLE

Location: BAKER LAKE

Code Requiring Test: API 650 (section 8.5.2) Reason for Test: New Construction

A weld shall be acceptable by visual examination if the inspection shows the following.

a) There are no crater cracks, other surface cracks or arc strikes in or adjacent to the welded joints.
b) Maximum permissible undercut is 0.4 mm (1/64 in.) in depth for vertical butt joints, vertically oriented permanent attachments, attachment welds for nozzles, manholes, flush-type openings, and the inside shell-to-bottom welds. For horizontal butt joints, horizontally oriented permanent attachments, and annular-ring butt joints, the maximum permissible undercut is 0.8 mm (1/32 in.) in depth.
c) The frequency of surface porosity in the weld does not exceed one cluster (one or more pores) in any 100 mm (4 in.) of length, and the diameter of each cluster does not exceed 2.5 mm (3/32 in.).
d) The reinforcement of the welds on all thicknesses:

Plate Thickness mm (in.)	Maximum Reinforcement Thickness mm (in.)	
	Vertical Joints	Horizontal Joints
≤ 13 (1/2)	2.5 (3/32)	3 (1/8)
> 13 (1/2) to 25 (1)	3 (1/8)	5 (3/16)
> 25 (1)	5 (3/16)	6 (1/4)

Surface Condition (As Welded)

Test Solution: N/A Test Date(s): Aug 29/19

Tested by: ~~Matt~~ Mackenzie. Ambient Conditions: 10°

Items Tested:

STAIRS AND PLATFORMS WELDS.

Results:

NO DEFECTS WERE FOUND. ALL WELDING ACCEPTABLE

STS Representative Signature: _____ Date: Aug 29/19

Client Representative Signature: _____ Date: Sept 3, 19

QUALITY CONTROL MANUAL

DEFICIENCY PUNCH LIST RECORD

Exhibit 29, Rev 1

Project: AEM, BAKER LAKE		**Project No.:** Inukshuk Construction -1	**Tank Tag:** Tk-7 **Date:** Sept 4/19	
Item No.	Drawing No.	Deficiency	Date Completed	Sign Off
1		Internal piping Torque.	Sept 4/19.	BRoy
2		Clean up rocks inside tank.	Sept 4/19.	B. R
3				
4				
5				
6				
7				
8				
9				
10				
11				
12				

Matthew MacKenzie STORAGE TANK SOLUTIONS	Signature	Sept 4/19. Date:
BRUNO ROY Agnico Eagle Representative	Signature	Sept 4/19 Date:

Client :	**Inukshuk Construction Ltd.**	**Date d'intervention :** **Intervention date :**	2019-08-30 to 2019-09-03
Adresse/Address :	1869 Upper Water St, Halifax, NS, B3J 1S9	**Date du rapport :** **Report date :**	2019-09-02
Contact :	Marc Losier		
Entrepreneur : **Contractor :**	Storage Tank Solutions	**N° dossier :** **File no :**	**00197**
Endroit du travail : **Job location :**	Baker Lake, Nunavut	**Commande :** **Order :**	

INSP. VISUELLE / VISUAL INSP. ☐ **MAGNÉTOSCOPIE / MAGNETIC PARTICLES** ☒ **RESSUAGE / LIQUID PENETRANT** ☐ **ULTRASONS / ULTRASONIC** ☐

DESCRIPTION :

BAKER LAKE WHALE TAIL PROJECT – 10M LITERS TANK #7 (6170TNK42)

Magnetic particles test on all shell openings (nozzles, manways and reinforcement pads) on the tank, in accordance of API 650.

Reference Drawing No: 315-M6 Rev 1 (6 sheets) & 315-M10 Rev

INSP. VISUELLE / VISUAL INSP.

NORME : **SPECIFICATION :**

N° équip. : **Equip. no :**

MAGNÉTOSCOPIE / MAGNETIC PARTICLES

NORME : **SPECIFICATION :** API 650 & ASME Section V article 7

N° équip. : **Equip. no :** MPTR38

Ampérage : **Amperage :**	Culasse/Yoke	**Continue** **Continuous**	☒	**Résiduelle** **Residual**	☐	**Humide** **Wet**	☐	**Sèche** **Dry**	☒
Longitudinale **Longitudinal**	☒	**Circulaire** **Circular**	☐	**C.A.** **A.C.**	☒	**C.C.** **D.C.**	☐	**Démagnétisée** **Demagnetized**	☐

RESSUAGE / LIQUID PENETRANT

NORME : **SPECIFICATION :**

N° équip. : **Equip. no :**

Pénétrant/Penetrant : **Émulsifiant/Emulsifier :** **Révélateur/Developer :**

Temps/Time : **Temps/Time :** **Temps/Time :**

ULTRASONS / ULTRASONIC

NORME : **SPECIFICATION :**

ÉTALONNAGE/CALIBRATION :

Bloc/Block : **Trou/Hole :** **C.A.D. /D.A.C. :** ☐

APPAREIL/EQUIPMENT :

Instrument : **Couplant :** **Échelle/Sweep length :**

N° équip./Equip. no : **Palpeur/Transducer :**

RÉSULTATS/RESULTS :

After inspection, all the openings components welds were found acceptable as the standard.

See the result details as described in the table below and the photos attached

Note: Visual inspection was performed by client.

Techniciens : **Technicians :**	Michael Lafreniere CSA W178.2 Level II CGSB 48.9712 UT-MT-PT Level II	**Assistants:**	**Approuvé par :** **Approved by :** CSA W178.2

PRÉLIMINAIRE / PRELIMINARY

Ce rapport ne doit pas être reproduit, sinon en entier, sans l'autorisation écrite de SGS CANADA inc.
Le présent rapport est émis par la Société conformément à ses Conditions Générales de Service accessibles sur http://www.sgs.ca/fr-FR/Terms-and-Conditions.aspx
This report is confidential and shall not be reproduced without the written approval of SGS CANADA Inc
This document is issued by the Company under its General Conditions of Service accessible at http://www.sgs.ca/en/Terms-and-Conditions.aspx

Client :	**Inukshuk Construction Ltd.**	**Date d'intervention :** **Intervention date :**	2019-08-30 to 2019-09-03
Adresse/Address :	1869 Upper Water St, Halifax, NS, B3J 1S9	**Date du rapport :** **Report date :**	2019-09-02
Contact :	Marc Losier		
Entrepreneur : **Contractor :**	Storage Tank Solutions	**N° dossier :** **File no :**	**00197**
Endroit du travail : **Job location :**	Baker Lake, Nunavut	**Commande :** **Order :**	

MAGNETIC PARTICULES INSPECTION TANK-- RESULT TABLE

SHELL OPENING PART #	DEGREE LOCATION	INSPECTION WELDS	MT RESULTS	
			INSIDE	OUTSIDE
Manway SMH2	0	Circular / Reinforced pad / Seam	Accepted	Accepted
Nozzle SN3	3 (approx.)	Circular / Reinforced pad	Accepted	Accepted
Nozzle SN6	10	Circular / Reinforced pad	Accepted	Accepted
Nozzle SN5	47	Circular / Reinforced pad	Accepted	Accepted
Nozzle SN6	70	Circular / Reinforced pad	Accepted	Accepted
Manway SMH2	90	Circular / Reinforced pad / Seam	Accepted	Accepted
Nozzle SN6	130	Circular / Reinforced pad	Accepted	Accepted
Manway SMH2	180	Circular / Reinforced pad / Seam	Accepted	Accepted
Nozzle SN6	190	Circular / Reinforced pad	Accepted	Accepted
Nozzle SN5	227	Circular / Reinforced pad	Accepted	Accepted
Nozzle SN6	250	Circular / Reinforced pad	Accepted	Accepted
Manway SMH2	270	Circular / Reinforced pad / Seam	Accepted	Accepted
Nozzle SN6	310	Circular / Reinforced pad	Accepted	Accepted
Nozzle SN4	357(approx.)	Circular / Reinforced pad	Accepted	Accepted*

*Accepted after a grinding of surface indication.

Note: Location degree are taken as the reference drawing No: 315-M6 Rev 1 (sheet 1)

PRÉLIMINAIRE / PRELIMINARY

Techniciens : **Technicians :**	Michael Lafreniere CSA W178.2 Level II CGSB 48.9712 UT-MT-PT Level II	**Assistants:**	**Approuvé par :** **Approved by :** CSA W178.2

Ce rapport ne doit pas être reproduit, sinon en entier, sans l'autorisation écrite de SGS CANADA inc.
Le présent rapport est émis par la Société conformément à ses Conditions Générales de Service accessibles sur http://www.sgs.ca/fr-FR/Terms-and-Conditions.aspx
This report is confidential and shall not be reproduced without the written approval of SGS CANADA Inc
This document is issued by the Company under its General Conditions of Service accessible at http://www.sgs.ca/en/Terms-and-Conditions.aspx

Client :	**Inukshuk Construction Ltd.**	**Date d'intervention :** **Intervention date :**	2019-08-30 to 2019-09-03
Adresse/Address :	1869 Upper Water St, Halifax, NS, B3J 1S9	**Date du rapport :** **Report date :**	2019-09-02
Contact :	Marc Losier		
Entrepreneur : **Contractor :**	Storage Tank Solutions	**N° dossier :** **File no :**	**00197**
Endroit du travail : **Job location :**	Baker Lake, Nunavut	**Commande :** **Order :**	



Photo #1:

Overview

Baker lake whale tail project – 10m liters tank #7

PRÉLIMINAIRE

Techniciens : **Technicians :**	Michael Lafreniere CSA W178.2 Level II CGSB 48.9712 UT-MT-PT Level II	**Assistants:**	**Approuvé par :** **Approved by :** CSA W178.2

Ce rapport ne doit pas être reproduit, sinon en entier, sans l'autorisation écrite de SGS CANADA inc.
Le présent rapport est émis par la Société conformément à ses Conditions Générales de Service accessibles sur http://www.sgs.ca/fr-FR/Terms-and-Conditions.aspx
This report is confidential and shall not be reproduced without the written approval of SGS CANADA Inc
This document is issued by the Company under its General Conditions of Service accessible at http://www.sgs.ca/en/Terms-and-Conditions.aspx

Client :	**Inukshuk Construction Ltd.**	**Date d'intervention :** **Intervention date :**	2019-08-30 to 2019-09-03
Adresse/Address :	1869 Upper Water St, Halifax, NS, B3J 1S9	**Date du rapport :** **Report date :**	2019-09-02
Contact :	Marc Losier		
Entrepreneur : **Contractor :**	Storage Tank Solutions	**N° dossier :** **File no :**	**00197**
Endroit du travail : **Job location :**	Baker Lake, Nunavut	**Commande :** **Order :**	



Photo #2: Manway (0 degree)
Nozzles SN3 (3degree) & SN4 (357 degree)



Photo #3: Nozzle SN6 (10 degree)



Photo #4: Nozzle SN5 (47 degree)



Photo #5: Nozzle SN6 (70 degree)



Photo #6: Manway (90 degree)



Photo #7: Nozzle SN6 (130 degree)

Techniciens : **Technicians :**	Michael Lafreniere CSA W178.2 Level II CGSB 48.9712 UT-MT-PT Level II	**Assistants:**	**Approuvé par :** **Approved by :** CSA W178.2

Ce rapport ne doit pas être reproduit, sinon en entier, sans l'autorisation écrite de SGS CANADA inc.
Le présent rapport est émis par la Société conformément à ses Conditions Générales de Service accessibles sur http://www.sgs.ca/fr-FR/Terms-and-Conditions.aspx
This report is confidential and shall not be reproduced without the written approval of SGS CANADA Inc
This document is issued by the Company under its General Conditions of Service accessible at http://www.sgs.ca/en/Terms-and-Conditions.aspx

Client :	**Inukshuk Construction Ltd.**	**Date d'intervention :** **Intervention date :**	2019-08-30 to 2019-09-03
Adresse/Address :	1869 Upper Water St, Halifax, NS, B3J 1S9	**Date du rapport :** **Report date :**	2019-09-02
Contact :	Marc Losier		
Entrepreneur : **Contractor :**	Storage Tank Solutions	**N° dossier :** **File no :**	**00197**
Endroit du travail : **Job location :**	Baker Lake, Nunavut	**Commande :** **Order :**	



Photo #8: Manway (180 degree)



Photo #9: Nozzle SN6 (190 degree)



Photo #10: Nozzle SN5 (227 degree)



Photo #11: Nozzle SN6 (250 degree)



Photo #12: Manway (270 degree)



Photo #13: Nozzle SN6 (310 degree)

Techniciens : **Technicians :**	Michael Lafreniere CSA W178.2 Level II CGSB 48.9712 UT-MT-PT Level II	**Assistants:**	**Approuvé par :** **Approved by :** CSA W178.2

Ce rapport ne doit pas être reproduit, sinon en entier, sans l'autorisation écrite de SGS CANADA inc.
Le présent rapport est émis par la Société conformément à ses Conditions Générales de Service accessibles sur http://www.sgs.ca/fr-FR/Terms-and-Conditions.aspx
This report is confidential and shall not be reproduced without the written approval of SGS CANADA Inc
This document is issued by the Company under its General Conditions of Service accessible at http://www.sgs.ca/en/Terms-and-Conditions.aspx

Client :	**Inukshuk Construction Ltd.**	**Date d'intervention :** **Intervention date :**	2019-08-30 to 2019-09-03
Adresse/Address :	1869 Upper Water St, Halifax, NS, B3J 1S9	**Date du rapport :** **Report date :**	2019-09-02
Contact :	Marc Losier		
Entrepreneur : **Contractor :**	Storage Tank Solutions	**N° dossier :** **File no :**	**00197**
Endroit du travail : **Job location :**	Baker Lake, Nunavut	**Commande :** **Order :**	

Tank #7 Baker Lake (AEM)

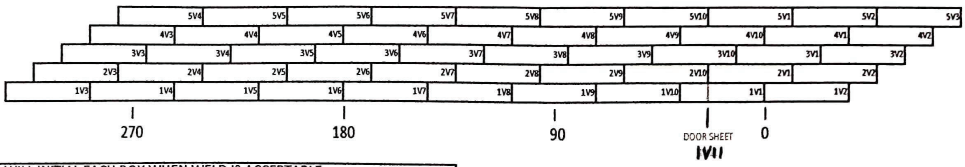

NDT TECHNICIAN WILL INITIAL EACH BOX WHEN WELD IS ACCEPTABLE

B ---> BOTTOM OF THE VERT (0-6") | M ---> MIDDLE OF THE VERT (45"-51") | T ---> TOP OF THE VERT (90"-96")

VERTICAL SEAMS MAPPING UT

	B	M	T	FULL
1V1	UT FULL BECAUSE NOZZLE INTO VERT			
1V2				
1V3				
1V4				
1V5				
1V6	UT FULL BECAUSE NOZZLE INTO VERT			
1V7				
1V8				
1V9				
1V10				
IV11				

	B	T
2V1		
2V2		
2V3		
2V4		
2V5		
2V6		
2V7		
2V8		
2V9		
2V10		

	B	T
3V1		
3V2		
3V3		
3V4		
3V5		
3V6		
3V7		
3V8		
3V9		
3V10		

	B	T
4V1		
4V2		
4V3		
4V4		
4V5		
4V6		
4V7		
4V8		
4V9		
4V10		

	B	T
5V1		N/A
5V2		N/A
5V3		N/A
5V4		N/A
5V5		N/A
5V6		N/A
5V7		N/A
5V8		N/A
5V9		N/A
5V10		N/A

HORIZONTAL SEAMS MAPPING UT

H1V2	30"-36"	
H1V8	42"-48"	
Middle door sheet		

H2V3	24"-30"	
H2V9	36"-42"	

H3V1	60"-66"	
H3V7	42"-48"	

H4V5	24"-30"	
H4V9	36"-42"	

MAG PARTICLE

SHELL MANHOLE 0°	
SHELL MANHOLE 90°	
SHELL MANHOLE 180°	
SHELL MANHOLE 270°	

SHELL MANHOLE NECK (SEAM) 0°	
SHELL MANHOLE NECK (SEAM) 90°	
SHELL MANHOLE NECK (SEAM) 180°	
SHELL MANHOLE NECK (SEAM) 270°	

NOZZLE SN3 (x1)	
NOZZLE SN4 (x1)	
NOZZLE SN5 (x2)	
NOZZLE SN6 (x6)	

STS Representative Signature: _____ Date: Sept 2/19.

Client Representative Signature: _____ Date: Sept 2/19

NDT Representative Signature: _____ Date: 2019-09-02

MICHAEL LAFRENIERE
CGSB 48.9712 MT-PT-UT
LEVEL II INSPECTOR
CERT#: 12977

CLIENT QUALITY INSPECTION PLAN

PRE

Techniciens : **Technicians :**	Michael Lafreniere CSA W178.2 Level II CGSB 48.9712 UT-MT-PT Level II	**Assistants:**	**Approuvé par :** **Approved by :** CSA W178.2

Ce rapport ne doit pas être reproduit, sinon en entier, sans l'autorisation écrite de SGS CANADA inc.
Le présent rapport est émis par la Société conformément à ses Conditions Générales de Service accessibles sur http://www.sgs.ca/fr-FR/Terms-and-Conditions.aspx
This report is confidential and shall not be reproduced without the written approval of SGS CANADA Inc
This document is issued by the Company under its General Conditions of Service accessible at http://www.sgs.ca/en/Terms-and-Conditions.aspx

Client :	**Inukshuk Construction Ltd.**	**Date d'intervention :** **Intervention date :**	2019-08-30 to 2019-09-03
Adresse/Address :	1869 Upper Water St, Halifax, NS, B3J 1S9	**Date du rapport :** **Report date :**	2019-09-02
Contact :	Marc Losier		
Entrepreneur : **Contractor :**	Storage Tank Solutions	**N° dossier :** **File no :**	**00197**
Endroit du travail : **Job location :**	Baker Lake, Nunavut	**Commande :** **Order :**	

INSP. VISUELLE / VISUAL INSP. ☐ **MAGNÉTOSCOPIE / MAGNETIC PARTICLES** ☐ **RESSUAGE / LIQUID PENETRANT** ☐ **ULTRASONS / ULTRASONIC** ☒

DESCRIPTION :

BAKER LAKE WHALE TAIL PROJECT – 10M LITERS TANK #7 (6170TNK42)

Ultrasonic inspection on butt joints tank in accordance of API 650.

Reference Drawing No: 315-M6 Rev 1 (6 sheets) & 315-M10 Rev

INSP. VISUELLE / VISUAL INSP.

NORME : **SPECIFICATION :** **N° équip. :** **Equip. no :**

MAGNÉTOSCOPIE / MAGNETIC PARTICLES

NORME : **SPECIFICATION :** **N° équip. :** **Equip. no :**

Ampérage : **Amperage :**	Culasse/Yoke	**Continue** **Continuous**	☐	**Résiduelle** **Residual**	☐	**Humide** **Wet**	☐	**Sèche** **Dry**	☐
Longitudinale **Longitudinal**	☐	**Circulaire** **Circular**	☐	**C.A.** **A.C.**	☐	**C.C.** **D.C.**	☐	**Démagnétisée** **Demagnetized**	☐

RESSUAGE / LIQUID PENETRANT

NORME : **SPECIFICATION :** **N° équip. :** **Equip. no :**

Pénétrant/Penetrant : **Émulsifiant/Emulsifier :** **Révélateur/Developer :**

Temps/Time : **Temps/Time :** **Temps/Time :**

ULTRASONS / ULTRASONIC

NORME : **SPECIFICATION :** API 650 & ASME Section V article 4

ÉTALONNAGE/CALIBRATION :

Bloc/Block : IIW & ASME 19mm **Trou/Hole :** 3/32 **C.A.D. /D.A.C. :** ☒

APPAREIL/EQUIPMENT :

Instrument : GE USM Go **Couplant :** Echogel **Échelle/Sweep length :** 0-150mm

N° équip./Equip. no : UT-42 **Palpeur/Transducer :** 0 degree, 1/2"Ø, 2.25Mhz & 70 Ø, 0.75 X0.625", 2.25Mhz

RÉSULTATS/RESULTS :

TANK SPECIFICATIONS :

- Circumferential length: **105.332 m**
- Height for each ring level: **2438 mm**
- Plate thickness ring level 1 (bottom): **12.5 mm**
- Plate thickness ring level 2: **9.5 mm**
- Plate thickness ring level 3: **7.9 mm**
- Plate thickness ring level 4: **7.9 mm**
- Plate thickness ring level 5 (top): **6.4 mm**

After ultrasonic inspection, repairs of 3 spots and a re-inspection of these repairs, all the 112 spots were found acceptable as the standard. For more details, see the result as described in the table below and the photos attached

Note: Visual inspection was performed by client. The client takes the responsibility to process the inspections with manual ultrasonic test in lieu of radiographic test as describe in API 650 annex U

Techniciens : **Technicians :** Michael Lafreniere CSA W178.2 Level II CGSB 48.9712 UT-MT-PT Level II	**Assistants:**	**Approuvé par :** **Approved by :** CSA W178.2

PRELIMINAIRE / PRELIMINARY

Ce rapport ne doit pas être reproduit, sinon en entier, sans l'autorisation écrite de SGS CANADA inc.
Le présent rapport est émis par la Société conformément à ses Conditions Générales de Service accessibles sur http://www.sgs.ca/fr-FR/Terms-and-Conditions.aspx
This report is confidential and shall not be reproduced without the written approval of SGS CANADA Inc
This document is issued by the Company under its General Conditions of Service accessible at http://www.sgs.ca/en/Terms-and-Conditions.aspx

Client :	**Inukshuk Construction Ltd.**	**Date d'intervention :** **Intervention date :**	2019-08-30 to 2019-09-03
Adresse/Address :	1869 Upper Water St, Halifax, NS, B3J 1S9	**Date du rapport :** **Report date :**	2019-09-02
Contact :	Marc Losier		
Entrepreneur : **Contractor :**	Storage Tank Solutions	**N° dossier :** **File no :**	**00197**
Endroit du travail : **Job location :**	Baker Lake, Nunavut	**Commande :** **Order :**	

ULTRASONIC INSPECTION TANK-- RESULT TABLE

LOCALISATION	QUANTITY OF SPOTS	ULTRASONIC RESULTS
Intersections (T) weld all rings level (150mm vertical & 100mm horizontal)	**80 T spots** (All intersections between the 5 rings)	**Accepted** After 3 repairs accepted R-1*
Vertical welds ring level 1 (150mm vertical)	**10 spots from bottom (0-150mm)** **10 spots in the middle (1143 to 1296mm)** **2 full welds inspected** The vertical welds 1V1 (position at 0) and 1V6 (position at 180) were 100% inspected due manways crossing	**Accepted**
Horizontal welds all rings level (150mm horizontal)	**8 spots** (2 random spots between each rings level)	**Accepted**
Door plate ring level 1 (1V11) (T intersection 150 x 100mm) Middle 150mm vertical Middle 150mm horizontal)	**1 T spot** **1 spot vertical from bottom (0-150mm)** **1 spot vertical in the middle (1143 to 1296mm)** **1 spot horizontal in the middle (1220 to 1370mm)**	**Accepted**

*The repair spots requirements extensions were accomplished according to API 650 article 8.1.6.

PRÉLIMINAIRE / PRELIMINARY

Techniciens : **Technicians :**	Michael Lafreniere CSA W178.2 Level II CGSB 48.9712 UT-MT-PT Level II	**Assistants:**	**Approuvé par :** **Approved by :** CSA W178.2

Ce rapport ne doit pas être reproduit, sinon en entier, sans l'autorisation écrite de SGS CANADA inc.
Le présent rapport est émis par la Société conformément à ses Conditions Générales de Service accessibles sur http://www.sgs.ca/fr-FR/Terms-and-Conditions.aspx
This report is confidential and shall not be reproduced without the written approval of SGS CANADA Inc
This document is issued by the Company under its General Conditions of Service accessible at http://www.sgs.ca/en/Terms-and-Conditions.aspx

Client :	**Inukshuk Construction Ltd.**	**Date d'intervention :** **Intervention date :**	2019-08-30 to 2019-09-03
Adresse/Address :	1869 Upper Water St, Halifax, NS, B3J 1S9		
Contact :	Marc Losier	**Date du rapport :** **Report date :**	2019-09-02
Entrepreneur : **Contractor :**	Storage Tank Solutions	**N° dossier :** **File no :**	**00197**
Endroit du travail : **Job location :**	Baker Lake, Nunavut	**Commande :** **Order :**	



Photo #1:

Overview

Baker lake whale tail project – 10m liters tank #7

PRÉLIMINARY

Techniciens : **Technicians :**	Michael Lafreniere CSA W178.2 Level II CGSB 48.9712 UT-MT-PT Level II	**Assistants:**	**Approuvé par :** **Approved by :** CSA W178.2

Ce rapport ne doit pas être reproduit, sinon en entier, sans l'autorisation écrite de SGS CANADA inc.
Le présent rapport est émis par la Société conformément à ses Conditions Générales de Service accessibles sur http://www.sgs.ca/fr-FR/Terms-and-Conditions.aspx
This report is confidential and shall not be reproduced without the written approval of SGS CANADA Inc
This document is issued by the Company under its General Conditions of Service accessible at http://www.sgs.ca/en/Terms-and-Conditions.aspx

Client :	**Inukshuk Construction Ltd.**	**Date d'intervention :** **Intervention date :**	2019-08-30 to 2019-09-03
Adresse/Address :	1869 Upper Water St, Halifax, NS, B3J 1S9	**Date du rapport :** **Report date :**	2019-09-02
Contact :	Marc Losier		
Entrepreneur : **Contractor :**	Storage Tank Solutions	**N° dossier :** **File no :**	**00197**
Endroit du travail : **Job location :**	Baker Lake, Nunavut	**Commande :** **Order :**	

TYPICAL SPOT LOCATIONS AND DIMENSIONS



Photo #2:
Typical vertical spot from bottom
(0-150mm)

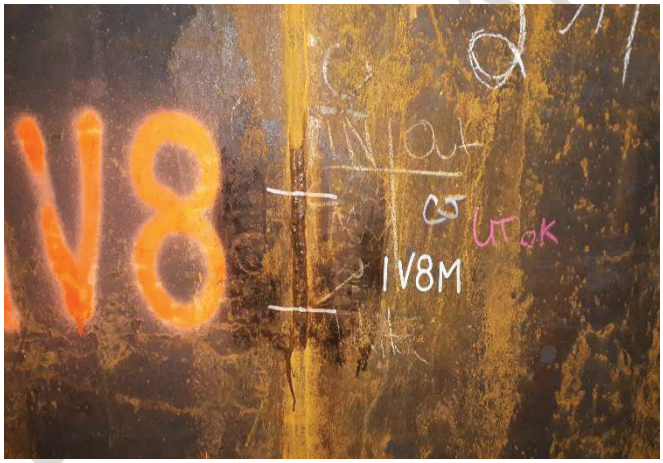

Photo #3:
Typical vertical spot in the middle
(1143 to 1296mm)



Photo #4:
Typical intersection T spot
(150mm vertical & 100mm horizontal)



Photo #5:
Typical horizontal spot
(150mm length)

Techniciens : **Technicians :**	Michael Lafreniere CSA W178.2 Level II CGSB 48.9712 UT-MT-PT Level II	**Assistants:**	**Approuvé par :** **Approved by :** CSA W178.2

Ce rapport ne doit pas être reproduit, sinon en entier, sans l'autorisation écrite de SGS CANADA inc.
Le présent rapport est émis par la Société conformément à ses Conditions Générales de Service accessibles sur http://www.sgs.ca/fr-FR/Terms-and-Conditions.aspx
This report is confidential and shall not be reproduced without the written approval of SGS CANADA Inc
This document is issued by the Company under its General Conditions of Service accessible at http://www.sgs.ca/en/Terms-and-Conditions.aspx

Client :	**Inukshuk Construction Ltd.**	**Date d'intervention :** **Intervention date :**	2019-08-30 to 2019-09-03
Adresse/Address :	1869 Upper Water St, Halifax, NS, B3J 1S9	**Date du rapport :** **Report date :**	2019-09-02
Contact :	Marc Losier		
Entrepreneur : **Contractor :**	Storage Tank Solutions	**N° dossier :** **File no :**	**00197**
Endroit du travail : **Job location :**	Baker Lake, Nunavut	**Commande :** **Order :**	

ULTRASONIC REJECTABLE DEFECTS LOCATION

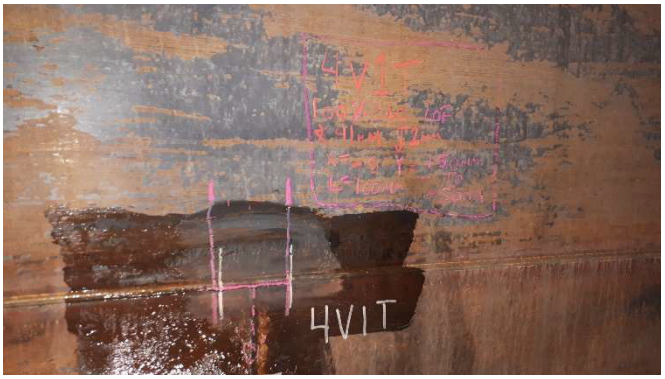

Photo #6:
Lack of fusion found
T intersection ring level 4 - plate 1 - Top horizontal position

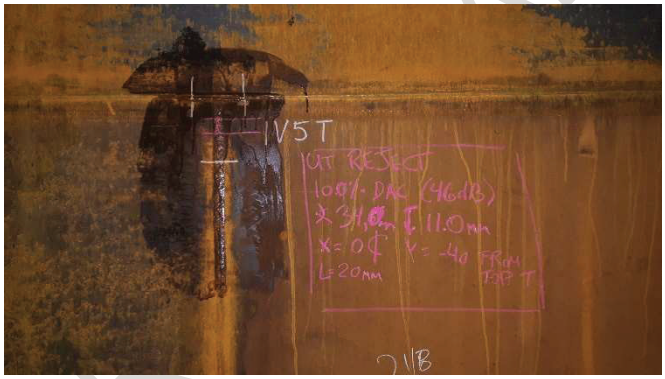

Photo #7:
Lack of fusion found
T intersection ring level 1 - plate 5 - Top vertical position

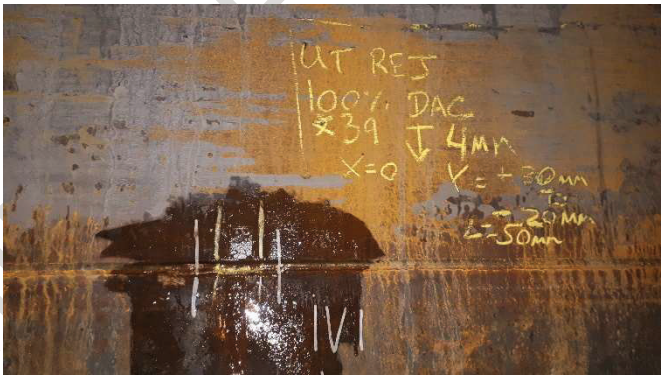

Photo 8:
Lack of fusion found
T intersection ring level 1 - plate 1 - Top horizontal position

PRÉLIMINAIRE / PRELIMINARY

Techniciens : **Technicians :**	Michael Lafreniere CSA W178.2 Level II CGSB 48.9712 UT-MT-PT Level II	**Assistants:**	**Approuvé par :** **Approved by :** CSA W178.2

Ce rapport ne doit pas être reproduit, sinon en entier, sans l'autorisation écrite de SGS CANADA inc.
Le présent rapport est émis par la Société conformément à ses Conditions Générales de Service accessibles sur http://www.sgs.ca/fr-FR/Terms-and-Conditions.aspx
This report is confidential and shall not be reproduced without the written approval of SGS CANADA Inc
This document is issued by the Company under its General Conditions of Service accessible at http://www.sgs.ca/en/Terms-and-Conditions.aspx

Client :	**Inukshuk Construction Ltd.**	**Date d'intervention :** **Intervention date :**	2019-08-30 to 2019-09-03
Adresse/Address :	1869 Upper Water St, Halifax, NS, B3J 1S9	**Date du rapport :** **Report date :**	2019-09-02
Contact :	Marc Losier		
Entrepreneur : **Contractor :**	Storage Tank Solutions	**N° dossier :** **File no :**	**00197**
Endroit du travail : **Job location :**	Baker Lake, Nunavut	**Commande :** **Order :**	

ASME RESULT DETAILS

Line #	Indication #	Plate thickness (mm)	Angle	Face	Half-Skip#	Amplitude level compared to the CAD (%)	Length (mm)	Angular distance (mm)	Depth	Distance		Type	Evaluation	Remark
										From X (mm)	From Y (mm)			
1	1	6.4 to 7.9	70	A (top)	2	**100% CAD**	100	41	2	-8	-50 to +50 from top T	LOF*	**REJ**	Locate at the T intersection Ring level 4 Plate 1 Top horizontal position **ACCEPTED R-1**
2	1	9.5 to 12.5	70	B (Right)	2	**100% CAD**	20	34	11	0	-40 from top T	LOF*	**REJ**	Locate at the T intersection Ring level 1 Plate 5 Top vertical position **ACCEPTED R-1**
3	1	9.5 to 12.5	70	A (top)	2	**100% CAD**	50	39	4	0	-20 to +30 from top T	IRF**	**REJ**	Locate at the T intersection Ring level 1 Plate 1 Top vertical position **ACCEPTED R-1**

*LOF: Lack of fusion
**IRF: Incomplete root fusion

PRÉLIMINAIRE / PRELIMINARY

Techniciens : **Technicians :**	Michael Lafreniere CSA W178.2 Level II CGSB 48.9712 UT-MT-PT Level II	**Assistants:**	**Approuvé par :** **Approved by :** CSA W178.2

Ce rapport ne doit pas être reproduit, sinon en entier, sans l'autorisation écrite de SGS CANADA inc.
Le présent rapport est émis par la Société conformément à ses Conditions Générales de Service accessibles sur http://www.sgs.ca/fr-FR/Terms-and-Conditions.aspx
This report is confidential and shall not be reproduced without the written approval of SGS CANADA Inc
This document is issued by the Company under its General Conditions of Service accessible at http://www.sgs.ca/en/Terms-and-Conditions.aspx

Client :	**Inukshuk Construction Ltd.**	**Date d'intervention :** **Intervention date :**	2019-08-30 to 2019-09-03
Adresse/Address :	1869 Upper Water St, Halifax, NS, B3J 1S9	**Date du rapport :** **Report date :**	2019-09-02
Contact :	Marc Losier		
Entrepreneur : **Contractor :**	Storage Tank Solutions	**N° dossier :** **File no :**	**00197**
Endroit du travail : **Job location :**	Baker Lake, Nunavut	**Commande :** **Order :**	

Tank #7 Baker Lake (AEM)

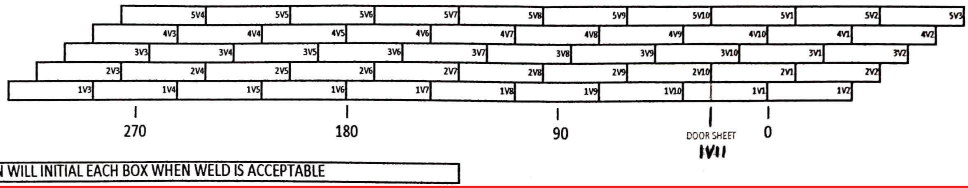

NDT TECHNICIAN WILL INITIAL EACH BOX WHEN WELD IS ACCEPTABLE

B ---> BOTTOM OF THE VERT (0-6") | M ---> MIDDLE OF THE VERT (45"-51") | T ---> TOP OF THE VERT (90"-96")

VERTICAL SEAMS MAPPING UT

	B	M	T	FULL
1V1	UT FULL BECAUSE NOZZLE INTO VERT			
1V2				
1V3				
1V4				
1V5				
1V6	UT FULL BECAUSE NOZZLE INTO VERT			
1V7				
1V8				
1V9				
1V10				
1V11				

	B	T
2V1		
2V2		
2V3		
2V4		
2V5		
2V6		
2V7		
2V8		
2V9		
2V10		

	B	T
3V1		
3V2		
3V3		
3V4		
3V5		
3V6		
3V7		
3V8		
3V9		
3V10		

	B	T
4V1		
4V2		
4V3		
4V4		
4V5		
4V6		
4V7		
4V8		
4V9		
4V10		

	B	T
5V1		N/A
5V2		N/A
5V3		N/A
5V4		N/A
5V5		N/A
5V6		N/A
5V7		N/A
5V8		N/A
5V9		N/A
5V10		N/A

HORIZONTAL SEAMS MAPPING UT

H1V2	30"-36"	
H1V8	42"-48"	
Middle door sheet		

H2V3	24"-30"	
H2V9	36"-42"	

H3V1	60"-66"	
H3V7	42"-48"	

H4V5	24"-30"	
H4V9	36"-42"	

MAG PARTICLE

SHELL MANHOLE 0°	
SHELL MANHOLE 90°	
SHELL MANHOLE 180°	
SHELL MANHOLE 270°	

SHELL MANHOLE NECK (SEAM) 0°	
SHELL MANHOLE NECK (SEAM) 90°	
SHELL MANHOLE NECK (SEAM) 180°	
SHELL MANHOLE NECK (SEAM) 270°	

NOZZLE SN3 (x1)	
NOZZLE SN4 (x1)	
NOZZLE SN5 (x2)	
NOZZLE SN6 (x6)	

STS Representative Signature: _____ Date: Sept 2/19.

Client Representative Signature: _____ Date: Sept 2/19

NDT Representative Signature: _____ Date: 2019-09-02

MICHAEL LAFRENIERE
CGSB 48.9712 MT-PT-UT
LEVEL II INSPECTOR
CERT#: 12977

CLIENT QUALITY INSPECTION PLAN

PRE

Techniciens : **Technicians :**	Michael Lafreniere CSA W178.2 Level II CGSB 48.9712 UT-MT-PT Level II	**Assistants:**	**Approuvé par :** **Approved by :** CSA W178.2

Ce rapport ne doit pas être reproduit, sinon en entier, sans l'autorisation écrite de SGS CANADA inc.
Le présent rapport est émis par la Société conformément à ses Conditions Générales de Service accessibles sur http://www.sgs.ca/fr-FR/Terms-and-Conditions.aspx
This report is confidential and shall not be reproduced without the written approval of SGS CANADA Inc
This document is issued by the Company under its General Conditions of Service accessible at http://www.sgs.ca/en/Terms-and-Conditions.aspx

AGNICO EAGLE BAKER LAKE

Baker Lake, Nunavut, Canada

Tank No. 7

INNAGE TABLE

Calibration@AmSpecGroup.com

CAPACITIES GIVEN IN CUBIC METERS — **GAUGE HEIGHT - 12.555 M**

cm	0 M	cm	1 M	cm	2 M	cm	3 M	cm	4 M	cm	5 M	cm	6 M	cm	7 M	cm	8 M	cm	9M
0.00	CROWN BOTTOM ***15.918***	0.00	886.949	0.00	1,767.881	0.00	2,648.794	0.00	3,529.774	0.00	4,410.887	0.00	5,292.323	0.00	6,173.759	0.00	7,055.489	0.00	7,937.265
0.01	***22.215***	0.01	895.762	0.01	1,776.689	0.01	2,657.603	0.01	3,538.584	0.01	4,419.702	0.01	5,301.138	0.01	6,182.574	0.01	7,064.307	0.01	7,946.083
0.02	***28.512***	0.02	904.575	0.02	1,785.496	0.02	2,666.413	0.02	3,547.393	0.02	4,428.516	0.02	5,309.952	0.02	6,191.388	0.02	7,073.124	0.02	7,954.901
0.03	***35.930***	0.03	913.388	0.03	1,794.303	0.03	2,675.223	0.03	3,556.203	0.03	4,437.330	0.03	5,318.766	0.03	6,200.202	0.03	7,081.942	0.03	7,963.719
0.04	***43.349***	0.04	922.201	0.04	1,803.111	0.04	2,684.033	0.04	3,565.013	0.04	4,446.145	0.04	5,327.581	0.04	6,209.017	0.04	7,090.760	0.04	7,972.536
0.05	***51.419***	0.05	931.014	0.05	1,811.918	0.05	2,692.843	0.05	3,573.823	0.05	4,454.959	0.05	5,336.395	0.05	6,217.831	0.05	7,099.578	0.05	7,981.354
0.06	***59.490***	0.06	939.827	0.06	1,820.726	0.06	2,701.652	0.06	3,582.633	0.06	4,463.773	0.06	5,345.209	0.06	6,226.645	0.06	7,108.395	0.06	7,990.172
0.07	***68.031***	0.07	948.640	0.07	1,829.533	0.07	2,710.462	0.07	3,591.442	0.07	4,472.588	0.07	5,354.024	0.07	6,235.460	0.07	7,117.213	0.07	7,998.990
0.08	***76.573***	0.08	957.454	0.08	1,838.340	0.08	2,719.272	0.08	3,600.252	0.08	4,481.402	0.08	5,362.838	0.08	6,244.274	0.08	7,126.031	0.08	8,007.807
0.09	***85.330***	0.09	966.267	0.09	1,847.148	0.09	2,728.082	0.09	3,609.062	0.09	4,490.217	0.09	5,371.652	0.09	6,253.088	0.09	7,134.849	0.09	8,016.625
0.10	***94.088***	0.10	975.080	0.10	1,855.955	0.10	2,736.892	0.10	3,617.872	0.10	4,499.031	0.10	5,380.467	0.10	6,261.903	0.10	7,143.666	0.10	8,025.443
0.11	***102.893***	0.11	983.893	0.11	1,864.762	0.11	2,745.701	0.11	3,626.682	0.11	4,507.845	0.11	5,389.281	0.11	6,270.717	0.11	7,152.484	0.11	8,034.261
0.12	***111.699***	0.12	992.706	0.12	1,873.570	0.12	2,754.511	0.12	3,635.491	0.12	4,516.660	0.12	5,398.096	0.12	6,279.531	0.12	7,161.302	0.12	8,043.078
0.13	***120.503***	0.13	1,001.519	0.13	1,882.377	0.13	2,763.321	0.13	3,644.301	0.13	4,525.474	0.13	5,406.910	0.13	6,288.346	0.13	7,170.120	0.13	8,051.896
0.14	***129.307***	0.14	1,010.332	0.14	1,891.184	0.14	2,772.131	0.14	3,653.111	0.14	4,534.288	0.14	5,415.724	0.14	6,297.162	0.14	7,178.937	0.14	8,060.714
0.15	***138.109***	0.15	1,019.145	0.15	1,899.992	0.15	2,780.941	0.15	3,661.921	0.15	4,543.103	0.15	5,424.539	0.15	6,305.979	0.15	7,187.755	0.15	8,069.532
0.16	146.911	0.16	1,027.958	0.16	1,908.799	0.16	2,789.750	0.16	3,670.731	0.16	4,551.917	0.16	5,433.353	0.16	6,314.797	0.16	7,196.573	0.16	8,078.349
0.17	155.712	0.17	1,036.771	0.17	1,917.606	0.17	2,798.560	0.17	3,679.540	0.17	4,560.731	0.17	5,442.167	0.17	6,323.614	0.17	7,205.391	0.17	8,087.167
0.18	164.514	0.18	1,045.584	0.18	1,926.414	0.18	2,807.370	0.18	3,688.350	0.18	4,569.546	0.18	5,450.982	0.18	6,332.432	0.18	7,214.209	0.18	8,095.985
0.19	173.316	0.19	1,054.397	0.19	1,935.221	0.19	2,816.180	0.19	3,697.160	0.19	4,578.360	0.19	5,459.796	0.19	6,341.250	0.19	7,223.026	0.19	8,104.803
0.20	182.118	0.20	1,063.210	0.20	1,944.028	0.20	2,824.990	0.20	3,705.970	0.20	4,587.175	0.20	5,468.610	0.20	6,350.068	0.20	7,231.844	0.20	8,113.621
0.21	190.920	0.21	1,072.023	0.21	1,952.836	0.21	2,833.799	0.21	3,714.780	0.21	4,595.989	0.21	5,477.425	0.21	6,358.885	0.21	7,240.662	0.21	8,122.438
0.22	199.721	0.22	1,080.836	0.22	1,961.643	0.22	2,842.609	0.22	3,723.589	0.22	4,604.803	0.22	5,486.239	0.22	6,367.703	0.22	7,249.480	0.22	8,131.256
0.23	208.523	0.23	1,089.649	0.23	1,970.450	0.23	2,851.419	0.23	3,732.399	0.23	4,613.618	0.23	5,495.054	0.23	6,376.521	0.23	7,258.297	0.23	8,140.074
0.24	217.324	0.24	1,098.462	0.24	1,979.258	0.24	2,860.229	0.24	3,741.209	0.24	4,622.432	0.24	5,503.868	0.24	6,385.339	0.24	7,267.115	0.24	8,148.892
0.25	226.125	0.25	1,107.275	0.25	1,988.065	0.25	2,869.039	0.25	3,750.019	0.25	4,631.246	0.25	5,512.682	0.25	6,394.156	0.25	7,275.933	0.25	8,157.709
0.26	234.926	0.26	1,116.088	0.26	1,996.872	0.26	2,877.848	0.26	3,758.829	0.26	4,640.061	0.26	5,521.497	0.26	6,402.974	0.26	7,284.751	0.26	8,166.527
0.27	243.727	0.27	1,124.901	0.27	2,005.680	0.27	2,886.658	0.27	3,767.638	0.27	4,648.875	0.27	5,530.311	0.27	6,411.792	0.27	7,293.568	0.27	8,175.345
0.28	252.529	0.28	1,133.714	0.28	2,014.489	0.28	2,895.468	0.28	3,776.448	0.28	4,657.689	0.28	5,539.125	0.28	6,420.610	0.28	7,302.386	0.28	8,184.163
0.29	261.330	0.29	1,142.527	0.29	2,023.298	0.29	2,904.278	0.29	3,785.258	0.29	4,666.504	0.29	5,547.940	0.29	6,429.428	0.29	7,311.204	0.29	8,192.980
0.30	270.135	0.30	1,151.340	0.30	2,032.107	0.30	2,913.088	0.30	3,794.068	0.30	4,675.318	0.30	5,556.754	0.30	6,438.245	0.30	7,320.022	0.30	8,201.798
0.31	278.940	0.31	1,160.153	0.31	2,040.917	0.31	2,921.897	0.31	3,802.878	0.31	4,684.132	0.31	5,565.568	0.31	6,447.063	0.31	7,328.839	0.31	8,210.616
0.32	287.747	0.32	1,168.966	0.32	2,049.727	0.32	2,930.707	0.32	3,811.687	0.32	4,692.947	0.32	5,574.383	0.32	6,455.881	0.32	7,337.657	0.32	8,219.434
0.33	296.555	0.33	1,177.779	0.33	2,058.537	0.33	2,939.517	0.33	3,820.497	0.33	4,701.761	0.33	5,583.197	0.33	6,464.699	0.33	7,346.475	0.33	8,228.251
0.34	305.362	0.34	1,186.592	0.34	2,067.347	0.34	2,948.327	0.34	3,829.307	0.34	4,710.576	0.34	5,592.011	0.34	6,473.516	0.34	7,355.293	0.34	8,237.069
0.35	314.169	0.35	1,195.402	0.35	2,076.156	0.35	2,957.137	0.35	3,838.117	0.35	4,719.390	0.35	5,600.826	0.35	6,482.334	0.35	7,364.111	0.35	8,245.887
0.36	322.977	0.36	1,204.211	0.36	2,084.966	0.36	2,965.946	0.36	3,846.927	0.36	4,728.204	0.36	5,609.640	0.36	6,491.152	0.36	7,372.928	0.36	8,254.705
0.37	331.784	0.37	1,213.018	0.37	2,093.776	0.37	2,974.756	0.37	3,855.736	0.37	4,737.019	0.37	5,618.455	0.37	6,499.970	0.37	7,381.746	0.37	8,263.523
0.38	340.592	0.38	1,221.826	0.38	2,102.586	0.38	2,983.566	0.38	3,864.546	0.38	4,745.833	0.38	5,627.269	0.38	6,508.787	0.38	7,390.564	0.38	8,272.340
0.39	349.399	0.39	1,230.633	0.39	2,111.396	0.39	2,992.376	0.39	3,873.356	0.39	4,754.647	0.39	5,636.083	0.39	6,517.605	0.39	7,399.382	0.39	8,281.158
0.40	358.206	0.40	1,239.440	0.40	2,120.205	0.40	3,001.186	0.40	3,882.166	0.40	4,763.462	0.40	5,644.898	0.40	6,526.423	0.40	7,408.199	0.40	8,289.976
0.41	367.014	0.41	1,248.248	0.41	2,129.015	0.41	3,009.995	0.41	3,890.976	0.41	4,772.276	0.41	5,653.712	0.41	6,535.241	0.41	7,417.017	0.41	8,298.794
0.42	375.821	0.42	1,257.055	0.42	2,137.825	0.42	3,018.805	0.42	3,899.786	0.42	4,781.090	0.42	5,662.526	0.42	6,544.058	0.42	7,425.835	0.42	8,307.611
0.43	384.628	0.43	1,265.863	0.43	2,146.635	0.43	3,027.615	0.43	3,908.595	0.43	4,789.905	0.43	5,671.341	0.43	6,552.876	0.43	7,434.653	0.43	8,316.429
0.44	393.436	0.44	1,274.670	0.44	2,155.445	0.44	3,036.425	0.44	3,917.405	0.44	4,798.719	0.44	5,680.155	0.44	6,561.694	0.44	7,443.470	0.44	8,325.247
0.45	402.243	0.45	1,283.477	0.45	2,164.254	0.45	3,045.235	0.45	3,926.215	0.45	4,807.534	0.45	5,688.969	0.45	6,570.512	0.45	7,452.288	0.45	8,334.065
0.46	411.050	0.46	1,292.285	0.46	2,173.064	0.46	3,054.044	0.46	3,935.025	0.46	4,816.348	0.46	5,697.784	0.46	6,579.330	0.46	7,461.106	0.46	8,342.882
0.47	419.861	0.47	1,301.092	0.47	2,181.874	0.47	3,062.854	0.47	3,943.835	0.47	4,825.162	0.47	5,706.598	0.47	6,588.147	0.47	7,469.924	0.47	8,351.700
0.48	428.672	0.48	1,309.899	0.48	2,190.684	0.48	3,071.664	0.48	3,952.644	0.48	4,833.977	0.48	5,715.413	0.48	6,596.965	0.48	7,478.741	0.48	8,360.518
0.49	437.485	0.49	1,318.707	0.49	2,199.494	0.49	3,080.474	0.49	3,961.454	0.49	4,842.791	0.49	5,724.227	0.49	6,605.783	0.49	7,487.559	0.49	8,369.336
0.50	446.298	0.50	1,327.514	0.50	2,208.303	0.50	3,089.284	0.50	3,970.264	0.50	4,851.605	0.50	5,733.041	0.50	6,614.601	0.50	7,496.377	0.50	8,378.153
0.51	455.111	0.51	1,336.321	0.51	2,217.113	0.51	3,098.093	0.51	3,979.074	0.51	4,860.420	0.51	5,741.856	0.51	6,623.418	0.51	7,505.195	0.51	8,386.971
0.52	463.924	0.52	1,345.129	0.52	2,225.923	0.52	3,106.903	0.52	3,987.884	0.52	4,869.234	0.52	5,750.670	0.52	6,632.236	0.52	7,514.013	0.52	8,395.789
0.53	472.737	0.53	1,353.936	0.53	2,234.733	0.53	3,115.713	0.53	3,996.693	0.53	4,878.048	0.53	5,759.484	0.53	6,641.054	0.53	7,522.830	0.53	8,404.607
0.54	481.550	0.54	1,362.743	0.54	2,243.543	0.54	3,124.523	0.54	4,005.503	0.54	4,886.863	0.54	5,768.299	0.54	6,649.872	0.54	7,531.648	0.54	8,413.424
0.55	490.363	0.55	1,371.551	0.55	2,252.352	0.55	3,133.333	0.55	4,014.313	0.55	4,895.677	0.55	5,777.113	0.55	6,658.689	0.55	7,540.466	0.55	8,422.242
0.56	499.176	0.56	1,380.358	0.56	2,261.162	0.56	3,142.143	0.56	4,023.123	0.56	4,904.491	0.56	5,785.927	0.56	6,667.507	0.56	7,549.284	0.56	8,431.060
0.57	507.989	0.57	1,389.165	0.57	2,269.972	0.57	3,150.952	0.57	4,031.933	0.57	4,913.306	0.57	5,794.742	0.57	6,676.325	0.57	7,558.101	0.57	8,439.878
0.58	516.802	0.58	1,397.973	0.58	2,278.782	0.58	3,159.762	0.58	4,040.742	0.58	4,922.120	0.58	5,803.556	0.58	6,685.143	0.58	7,566.919	0.58	8,448.696
0.59	525.615	0.59	1,406.780	0.59	2,287.592	0.59	3,168.572	0.59	4,049.552	0.59	4,930.935	0.59	5,812.370	0.59	6,693.960	0.59	7,575.737	0.59	8,457.514
0.60	534.428	0.60	1,415.587	0.60	2,296.401	0.60	3,177.382	0.60	4,058.362	0.60	4,939.749	0.60	5,821.185	0.60	6,702.778	0.60	7,584.555	0.60	8,466.331
0.61	543.241	0.61	1,424.395	0.61	2,305.211	0.61	3,186.192	0.61	4,067.172	0.61	4,948.563	0.61	5,829.999	0.61	6,711.596	0.61	7,593.372	0.61	8,475.149
0.62	552.054	0.62	1,433.202	0.62	2,314.021	0.62	3,195.001	0.62	4,075.982	0.62	4,957.378	0.62	5,838.814	0.62	6,720.414	0.62	7,602.190	0.62	8,483.967
0.63	560.867	0.63	1,442.010	0.63	2,322.831	0.63	3,203.811	0.63	4,084.791	0.63	4,966.192	0.63	5,847.628	0.63	6,729.232	0.63	7,611.008	0.63	8,492.785
0.64	569.680	0.64	1,450.817	0.64	2,331.641	0.64	3,212.621	0.64	4,093.601	0.64	4,975.006	0.64	5,856.442	0.64	6,738.049	0.64	7,619.826	0.64	8,501.603
0.65	578.493	0.65	1,459.624	0.65	2,340.450	0.65	3,221.431	0.65	4,102.411	0.65	4,983.821	0.65	5,865.257	0.65	6,746.867	0.65	7,628.643	0.65	8,510.421
0.66	587.307	0.66	1,468.432	0.66	2,349.260	0.66	3,230.241	0.66	4,111.221	0.66	4,992.635	0.66	5,874.071	0.66	6,755.685	0.66	7,637.461	0.66	8,519.239
0.67	596.120	0.67	1,477.239	0.67	2,358.070	0.67	3,239.050	0.67	4,120.031	0.67	5,001.449	0.67	5,882.885	0.67	6,764.503	0.67	7,646.279	0.67	8,528.056
0.68	604.933	0.68	1,486.046	0.68	2,366.880	0.68	3,247.860	0.68	4,128.840	0.68	5,010.264	0.68	5,891.700	0.68	6,773.320	0.68	7,655.097	0.68	8,536.874
0.69	613.746	0.69	1,494.854	0.69	2,375.690	0.69	3,256.670	0.69	4,137.650	0.69	5,019.078	0.69	5,900.514	0.69	6,782.138	0.69	7,663.915	0.69	8,545.692
0.70	622.559	0.70	1,503.661	0.70	2,384.499	0.70	3,265.480	0.70	4,146.460	0.70	5,027.892	0.70	5,909.328	0.70	6,790.956	0.70	7,672.732	0.70	8,554.510
0.71	631.372	0.71	1,512.468	0.71	2,393.309	0.71	3,274.290	0.71	4,155.273	0.71	5,036.707	0.71	5,918.143	0.71	6,799.774	0.71	7,681.550	0.71	8,563.328
0.72	640.185	0.72	1,521.276	0.72	2,402.119	0.72	3,283.099	0.72	4,164.085	0.72	5,045.521	0.72	5,926.957	0.72	6,808.591	0.72	7,690.368	0.72	8,572.146
0.73	648.998	0.73	1,530.083	0.73	2,410.929	0.73	3,291.909	0.73	4,172.900	0.73	5,054.336	0.73	5,935.771	0.73	6,817.409	0.73	7,699.186	0.73	8,580.964
0.74	657.811	0.74	1,538.890	0.74	2,419.739	0.74	3,300.719	0.74	4,181.714	0.74	5,063.150	0.74	5,944.586	0.74	6,826.227	0.74	7,708.003	0.74	8,589.782
0.75	666.624	0.75	1,547.698	0.75	2,428.549	0.75	3,309.529	0.75	4,190.528	0.75	5,071.964	0.75	5,953.400	0.75	6,835.045	0.75	7,716.821	0.75	8,598.599
0.76	675.437	0.76	1,556.505	0.76	2,437.358	0.76	3,318.339	0.76	4,199.343	0.76	5,080.779	0.76	5,962.215	0.76	6,843.862	0.76	7,725.639	0.76	8,607.417
0.77	684.250	0.77	1,565.312	0.77	2,446.168	0.77	3,327.148	0.77	4,208.157	0.77	5,089.593	0.77	5,971.029	0.77	6,852.680	0.77	7,734.457	0.77	8,616.235
0.78	693.063	0.78	1,574.120	0.78	2,454.978	0.78	3,335.958	0.78	4,216.971	0.78	5,098.407	0.78	5,979.843	0.78	6,861.498	0.78	7,743.274	0.78	8,625.053
0.79	701.876	0.79	1,582.927	0.79	2,463.788	0.79	3,344.768	0.79	4,225.786	0.79	5,107.222	0.79	5,988.658	0.79	6,870.316	0.79	7,752.092	0.79	8,633.871
0.80	710.689	0.80	1,591.734	0.80	2,472.598	0.80	3,353.578	0.80	4,234.600	0.80	5,116.036	0.80	5,997.472	0.80	6,879.134	0.80	7,760.910	0.80	8,642.689
0.81	719.502	0.81	1,600.542	0.81	2,481.407	0.81	3,362.388	0.81	4,243.415	0.81	5,124.850	0.81	6,006.286	0.81	6,887.951	0.81	7,769.728	0.81	8,651.507
0.82	728.315	0.82	1,609.349	0.82	2,490.217	0.82	3,371.197	0.82	4,252.229	0.82	5,133.665	0.82	6,015.101	0.82	6,896.769	0.82	7,778.545	0.82	8,660.324
0.83	737.128	0.83	1,618.156	0.83	2,499.027	0.83	3,380.007	0.83	4,261.043	0.83	5,142.479	0.83	6,023.915	0.83	6,905.587	0.83	7,787.363	0.83	8,669.142
0.84	745.941	0.84	1,626.964	0.84	2,507.837	0.84	3,388.817	0.84	4,269.858	0.84	5,151.294	0.84	6,032.729	0.84	6,914.405	0.84	7,796.181	0.84	8,677.960
0.85	754.754	0.85	1,635.771	0.85	2,516.647	0.85	3,397.627	0.85	4,278.672	0.85	5,160.108	0.85	6,041.544	0.85	6,923.222	0.85	7,804.999	0.85	8,686.778
0.86	763.567	0.86	1,644.579	0.86	2,525.456	0.86	3,406.437	0.86	4,287.486	0.86	5,168.922	0.86	6,050.358	0.86	6,932.040	0.86	7,813.817	0.86	8,695.596
0.87	772.380	0.87	1,653.386	0.87	2,534.266	0.87	3,415.246	0.87	4,296.301	0.87	5,177.737	0.87	6,059.173	0.87	6,940.858	0.87	7,822.634	0.87	8,704.414
0.88	781.193	0.88	1,662.193	0.88	2,543.076	0.88	3,424.056	0.88	4,305.115	0.88	5,186.551	0.88	6,067.987	0.88	6,949.676	0.88	7,831.452	0.88	8,713.232
0.89	790.006	0.89	1,671.001	0.89	2,551.886	0.89	3,432.866	0.89	4,313.929	0.89	5,195.365	0.89	6,076.801	0.89	6,958.493	0.89	7,840.270	0.89	8,722.049
0.90	798.819	0.90	1,679.808	0.90	2,560.696	0.90	3,441.676	0.90	4,322.744	0.90	5,204.180	0.90	6,085.616	0.90	6,967.311	0.90	7,849.088	0.90	8,730.867
0.91	807.632	0.91	1,688.615	0.91	2,569.505	0.91	3,450.486	0.91	4,331.558	0.91	5,212.994	0.91	6,094.430	0.91	6,976.129	0.91	7,857.905	0.91	8,739.685
0.92	816.445	0.92	1,697.423	0.92	2,578.315	0.92	3,459.295	0.92	4,340.372	0.92	5,221.808	0.92	6,103.244	0.92	6,984.947	0.92	7,866.723	0.92	8,748.503
0.93	825.258	0.93	1,706.230	0.93	2,587.125	0.93	3,468.105	0.93	4,349.187	0.93	5,230.623	0.93	6,112.059	0.93	6,993.764	0.93	7,875.541	0.93	8,757.321
0.94	834.071	0.94	1,715.037	0.94	2,595.935	0.94	3,476.915	0.94	4,358.001	0.94	5,239.437	0.94	6,120.873	0.94	7,002.582	0.94	7,884.359	0.94	8,766.139
0.95	842.884	0.95	1,723.845	0.95	2,604.745	0.95	3,485.725	0.95	4,366.816	0.95	5,248.251	0.95	6,129.687	0.95	7,011.400	0.95	7,893.176	0.95	8,774.957
0.96	851.697	0.96	1,732.652	0.96	2,613.554	0.96	3,494.535	0.96	4,375.630	0.96	5,257.066	0.96	6,138.502	0.96	7,020.218	0.96	7,901.994	0.96	8,783.775
0.97	860.510	0.97	1,741.459	0.97	2,622.364	0.97	3,503.344	0.97	4,384.444	0.97	5,265.880	0.97	6,147.316	0.97	7,029.036	0.97	7,910.812	0.97	8,792.592
0.98	869.323	0.98	1,750.267	0.98	2,631.174	0.98	3,512.154	0.98	4,393.259	0.98	5,274.695	0.98	6,156.130	0.98	7,037.853	0.98	7,919.630	0.98	8,801.410
0.99	878.136	0.99	1,759.074	0.99	2,639.984	0.99	3,520.964	0.99	4,402.073	0.99	5,283.509	0.99	6,164.945	0.99	7,046.671	0.99	7,928.447	0.99	8,810.228

NOTE: TANK STRAPPED AND COMPUTED IN ACCORDANCE WITH API STANDARD MPMS CHAPTER 2.2C.
NOTE: CAPACITY TABLE REFLECTS AN OPERATING TEMPERATURE OF 60 DEGREES F.
NOTE: LIQUID HEAD STRESS HAS BEEN APPLIED TO CAPACITY TABLE AT API GRAVITY 35.0.
NOTE: A 20.6 CM CROWN BOTTOM HAS BEEN APPLIED BELOW 15.2 CM
NOTE: GAUGE POINT IS LOCATED 1.14 M IN FROM TANK SHELL.
NOTE: NOMINAL TANK DIAMETER = 33.53 M SHELL HEIGHT = 12.19 M
NOTE: CHART EXTENDS TO THE EXTREME HEIGHT OF THE TANK SHELL

DATE STRAPPED: 09/04/19 BY: SO
DATE COMPUTED: 09/10/19 BY: WLH
DATE ISSUED: 09/10/19

AMSPEC

AGNICO EAGLE BAKER LAKE

Baker Lake, Nunavut, Canada

Tank No. 7

INNAGE TABLE

Calibration@AmSpecGroup.com

CAPACITIES GIVEN IN CUBIC METERS — **GAUGE HEIGHT - 12.555 M**

cm	10 M	cm	11 M	cm	12 M	cm	13 M	cm	14 M	cm	15 M	cm	16 M	cm	17 M	cm	18 M	cm	19 M
0.00	8,819.046	0.00	9,700.832	0.00	10,580.472	0.00		0.00		0.00		0.00		0.00		0.00		0.00	
0.01	8,827.864	0.01	9,709.650	0.01	10,589.290	0.01		0.01		0.01		0.01		0.01		0.01		0.01	
0.02	8,836.682	0.02	9,718.468	0.02	10,598.108	0.02		0.02		0.02		0.02		0.02		0.02		0.02	
0.03	8,845.500	0.03	9,727.286	0.03	10,606.926	0.03		0.03		0.03		0.03		0.03		0.03		0.03	
0.04	8,854.317	0.04	9,736.104	0.04	10,615.744	0.04		0.04		0.04		0.04		0.04		0.04		0.04	
0.05	8,863.135	0.05	9,744.922	0.05	10,624.562	0.05		0.05		0.05		0.05		0.05		0.05		0.05	
0.06	8,871.953	0.06	9,753.740	0.06	10,633.380	0.06		0.06		0.06		0.06		0.06		0.06		0.06	
0.07	8,880.771	0.07	9,762.557	0.07	10,642.198	0.07		0.07		0.07		0.07		0.07		0.07		0.07	
0.08	8,889.589	0.08	9,771.375	0.08	10,651.016	0.08		0.08		0.08		0.08		0.08		0.08		0.08	
0.09	8,898.407	0.09	9,780.193	0.09	10,659.833	0.09		0.09		0.09		0.09		0.09		0.09		0.09	
0.10	8,907.225	0.10	9,789.011	0.10	10,668.651	0.10		0.10		0.10		0.10		0.10		0.10		0.10	
0.11	8,916.042	0.11	9,797.829	0.11	10,677.469	0.11		0.11		0.11		0.11		0.11		0.11		0.11	
0.12	8,924.860	0.12	9,806.647	0.12	10,681.932	0.12		0.12		0.12		0.12		0.12		0.12		0.12	
0.13	8,933.678	0.13	9,815.465	0.13		0.13		0.13		0.13		0.13		0.13		0.13		0.13	
0.14	8,942.496	0.14	9,824.283	0.14		0.14		0.14		0.14		0.14		0.14		0.14		0.14	
0.15	8,951.314	0.15	9,833.100	0.15		0.15		0.15		0.15		0.15		0.15		0.15		0.15	
0.16	8,960.132	0.16	9,841.918	0.16		0.16		0.16		0.16		0.16		0.16		0.16		0.16	
0.17	8,968.950	0.17	9,850.736	0.17		0.17		0.17		0.17		0.17		0.17		0.17		0.17	
0.18	8,977.768	0.18	9,859.554	0.18		0.18		0.180		0.18		0.18		0.18		0.18		0.18	
0.19	8,986.585	0.19	9,868.372	0.19		0.19		0.19		0.19		0.19		0.19		0.19		0.19	
0.20	8,995.403	0.20	9,877.190	0.20		0.20		0.20		0.20		0.20		0.20		0.20		0.20	
0.21	9,004.221	0.21	9,886.008	0.21		0.21		0.21		0.21		0.21		0.21		0.21		0.21	
0.22	9,013.039	0.22	9,894.825	0.22		0.22		0.22		0.22		0.22		0.22		0.22		0.22	
0.23	9,021.857	0.23	9,903.643	0.23		0.23		0.23		0.23		0.23		0.23		0.23		0.23	
0.24	9,030.675	0.24	9,912.461	0.24		0.24		0.24		0.24		0.24		0.24		0.24		0.24	
0.25	9,039.493	0.25	9,921.279	0.25		0.25		0.25		0.25		0.25		0.25		0.25		0.25	
0.26	9,048.310	0.26	9,930.097	0.26		0.26		0.26		0.26		0.26		0.26		0.26		0.26	
0.27	9,057.128	0.27	9,938.915	0.27		0.27		0.27		0.27		0.27		0.27		0.27		0.27	
0.28	9,065.946	0.28	9,947.733	0.28		0.28		0.28		0.28		0.28		0.28		0.28		0.28	
0.29	9,074.764	0.29	9,956.551	0.29		0.29		0.29		0.29		0.29		0.29		0.29		0.29	
0.30	9,083.582	0.30	9,965.368	0.30		0.30		0.30		0.30		0.30		0.30		0.30		0.30	
0.31	9,092.400	0.31	9,974.186	0.31		0.31		0.31		0.31		0.31		0.31		0.31		0.31	
0.32	9,101.218	0.32	9,983.004	0.32		0.32		0.32		0.32		0.32		0.32		0.32		0.32	
0.33	9,110.036	0.33	9,991.822	0.33		0.33		0.33		0.33		0.33		0.33		0.33		0.33	
0.34	9,118.853	0.34	10,000.640	0.34		0.34		0.34		0.34		0.34		0.34		0.34		0.34	
0.35	9,127.671	0.35	10,009.458	0.35		0.35		0.35		0.35		0.35		0.35		0.35		0.35	
0.36	9,136.489	0.36	10,018.276	0.36		0.36		0.36		0.36		0.36		0.36		0.36		0.36	
0.37	9,145.307	0.37	10,027.093	0.37		0.37		0.37		0.37		0.37		0.37		0.37		0.37	
0.38	9,154.125	0.38	10,035.911	0.38		0.38		0.38		0.38		0.38		0.38		0.38		0.38	
0.39	9,162.943	0.39	10,044.729	0.39		0.39		0.39		0.39		0.39		0.39		0.39		0.39	
0.40	9,171.761	0.40	10,053.547	0.40		0.40		0.40		0.40		0.40		0.40		0.40		0.40	
0.41	9,180.578	0.41	10,062.365	0.41		0.41		0.41		0.41		0.41		0.41		0.41		0.41	
0.42	9,189.396	0.42	10,071.183	0.42		0.42		0.42		0.42		0.42		0.42		0.42		0.42	
0.43	9,198.214	0.43	10,080.001	0.43		0.43		0.43		0.43		0.43		0.43		0.43		0.43	
0.44	9,207.032	0.44	10,088.818	0.44		0.44		0.44		0.44		0.44		0.44		0.44		0.44	
0.45	9,215.850	0.45	10,097.636	0.45		0.45		0.45		0.45		0.45		0.45		0.45		0.45	
0.46	9,224.668	0.46	10,106.454	0.46		0.46		0.46		0.46		0.46		0.46		0.46		0.46	
0.47	9,233.486	0.47	10,115.272	0.47		0.47		0.47		0.47		0.47		0.47		0.47		0.47	
0.48	9,242.303	0.48	10,124.090	0.48		0.48		0.48		0.48		0.48		0.48		0.48		0.48	
0.49	9,251.121	0.49	10,132.908	0.49		0.49		0.49		0.49		0.49		0.49		0.49		0.49	
0.50	9,259.939	0.50	10,141.726	0.50		0.50		0.50		0.50		0.50		0.50		0.50		0.50	
0.51	9,268.757	0.51	10,150.544	0.51		0.51		0.51		0.51		0.51		0.51		0.51		0.51	
0.52	9,277.575	0.52	10,159.361	0.52		0.52		0.52		0.52		0.52		0.52		0.52		0.52	
0.53	9,286.393	0.53	10,168.179	0.53		0.53		0.53		0.53		0.53		0.53		0.53		0.53	
0.54	9,295.211	0.54	10,176.997	0.54		0.54		0.54		0.54		0.54		0.54		0.54		0.54	
0.55	9,304.029	0.55	10,185.815	0.55		0.55		0.55		0.55		0.55		0.55		0.55		0.55	
0.56	9,312.846	0.56	10,194.633	0.56		0.56		0.56		0.56		0.56		0.56		0.56		0.56	
0.57	9,321.664	0.57	10,203.451	0.57		0.57		0.57		0.57		0.57		0.57		0.57		0.57	
0.58	9,330.482	0.58	10,212.269	0.58		0.58		0.58		0.58		0.58		0.58		0.58		0.58	
0.59	9,339.300	0.59	10,221.086	0.59		0.59		0.59		0.59		0.59		0.59		0.59		0.59	
0.60	9,348.118	0.60	10,229.904	0.60		0.60		0.60		0.60		0.60		0.60		0.60		0.60	
0.61	9,356.936	0.61	10,238.722	0.61		0.61		0.61		0.61		0.61		0.61		0.61		0.61	
0.62	9,365.754	0.62	10,247.540	0.62		0.62		0.62		0.62		0.62		0.62		0.62		0.62	
0.63	9,374.571	0.63	10,256.358	0.63		0.63		0.63		0.63		0.63		0.63		0.63		0.63	
0.64	9,383.389	0.64	10,265.176	0.64		0.64		0.64		0.64		0.64		0.64		0.64		0.64	
0.65	9,392.207	0.65	10,273.994	0.65		0.65		0.65		0.65		0.65		0.65		0.65		0.65	
0.66	9,401.025	0.66	10,282.811	0.66		0.66		0.66		0.66		0.66		0.66		0.66		0.66	
0.67	9,409.843	0.67	10,291.629	0.67		0.67		0.67		0.67		0.67		0.67		0.67		0.67	
0.68	9,418.661	0.68	10,300.447	0.68		0.68		0.68		0.68		0.68		0.68		0.68		0.68	
0.69	9,427.479	0.69	10,309.265	0.69		0.69		0.69		0.69		0.69		0.69		0.69		0.69	
0.70	9,436.297	0.70	10,318.083	0.70		0.70		0.70		0.70		0.70		0.70		0.70		0.70	
0.71	9,445.114	0.71	10,326.901	0.71		0.71		0.71		0.71		0.71		0.71		0.71		0.71	
0.72	9,453.932	0.72	10,335.719	0.72		0.72		0.72		0.72		0.72		0.72		0.72		0.72	
0.73	9,462.750	0.73	10,344.537	0.73		0.73		0.73		0.73		0.73		0.73		0.73		0.73	
0.74	9,471.568	0.74	10,353.354	0.74		0.74		0.74		0.74		0.74		0.74		0.74		0.74	
0.75	9,480.386	0.75	10,362.172	0.75		0.75		0.75		0.75		0.75		0.75		0.75		0.75	
0.76	9,489.204	0.76	10,370.990	0.76		0.76		0.76		0.76		0.76		0.76		0.76		0.76	
0.77	9,498.022	0.77	10,379.808	0.77		0.77		0.77		0.77		0.77		0.77		0.77		0.77	
0.78	9,506.839	0.78	10,388.626	0.78		0.78		0.78		0.78		0.78		0.78		0.78		0.78	
0.79	9,515.657	0.79	10,397.444	0.79		0.79		0.79		0.79		0.79		0.79		0.79		0.79	
0.80	9,524.475	0.80	10,406.262	0.80		0.80		0.80		0.80		0.80		0.80		0.80		0.80	
0.81	9,533.293	0.81	10,415.079	0.81		0.81		0.81		0.81		0.81		0.81		0.81			
0.82	9,542.111	0.82	10,423.897	0.82		0.82		0.82		0.82		0.82		0.82		0.82			
0.83	9,550.929	0.83	10,432.715	0.83		0.83		0.83		0.83		0.83		0.83		0.83			
0.84	9,559.747	0.84	10,441.533	0.84		0.84		0.84		0.84		0.84		0.84		0.84			
0.85	9,568.564	0.85	10,450.351	0.85		0.85		0.85		0.85		0.85		0.85		0.85			
0.86	9,577.382	0.86	10,459.169	0.86		0.86		0.86		0.86		0.86		0.86		0.86			
0.87	9,586.200	0.87	10,467.987	0.87		0.87		0.87		0.87		0.87		0.87		0.87			
0.88	9,595.018	0.88	10,476.805	0.88		0.88		0.88		0.88		0.88		0.88		0.88			
0.89	9,603.836	0.89	10,485.622	0.89		0.89		0.89		0.89		0.89		0.89		0.89			MM
0.90	9,612.654	0.90	10,494.440	0.90		0.90		0.90		0.90		0.90		0.90		0.90		0.001	0.881
0.91	9,621.472	0.91	10,503.258	0.91		0.91		0.91		0.91		0.91		0.91		0.91		0.002	1.762
0.92	9,630.290	0.92	10,512.076	0.92		0.92		0.92		0.92		0.92		0.92		0.92		0.003	2.643
0.93	9,639.107	0.93	10,520.894	0.93		0.93		0.93		0.93		0.93		0.93		0.93		0.004	3.524
0.94	9,647.925	0.94	10,529.712	0.94		0.94		0.94		0.94		0.94		0.94		0.94		0.005	4.406
0.95	9,656.743	0.95	10,538.530	0.95		0.95		0.95		0.95		0.95		0.95		0.95		0.006	5.287
0.96	9,665.561	0.96	10,547.347	0.96		0.96		0.96		0.96		0.96		0.96		0.96		0.007	6.168
0.97	9,674.379	0.97	10,556.165	0.97		0.97		0.97		0.97		0.97		0.97		0.97		0.008	7.049
0.98	9,683.197	0.98	10,564.983	0.98		0.98		0.98		0.98		0.98		0.98		0.98		0.009	7.930
0.99	9,692.015	0.99	10,573.801	0.99		0.99		0.99		0.99		0.99		0.99		0.99			

DATE STRAPPED: 09/04/19 BY: SO
DATE COMPUTED: 09/10/19 BY: WLH
DATE ISSUED: 09/10/19

AMSPEC

6120-C-265-001 MPEI

QUALITY CONTROL REPORT

AGNICO EAGLE

Vendor Document Status

1 ☐ Proceed to next submission and status.

2 ☐ Proceed with exceptions as noted to next submission and status.

3 ☐ Do not proceed.
Revise as noted and resubmit next submission and status.

4 ☑ Complete, no further submission required.

By: Bruno Roy

Digitally signed by Bruno Roy
Date: 2019.12.13 11:20:39 -05'00'

Date:

Review and authorization to fabricate are only for general conformance with the design concept of the Project as expressed in the Contract Documents. Sole responsibility for the accuracy and completeness of this document, including but not limited to dimensions and quantities, remains with the Supplier/Contractor. Agnico Eagle does not warrant the accuracy or completeness of any of the information contained herein, nor does Agnico Eagle authorize or approve any construction means, methods, techniques, sequences or any safety precautions or procedures.

Agnico Eagle No. 6120-C-265-001 R: ABF.QC.REPORT

DOCUMENT FOR INFORMATION

1. WELDING PROCEDURE SPECIFICATION (WPS)
2. WELDER QUALIFICATION TEST (WQT)
    2.1 Camirand, Sébastien
    2.2 Caouette, Francois
    2.3 St-Hilaire, Joel
3. PNEUMATIC PRESSURE TEST PROCEDURE.
4. PNEUMATIC PRESSURE TEST RESULTS.
5. MILLTEST & HEAT NUMBER DOCUMENTATION.
6. VALVE & EQUIPMENT CERTIFICATION

1

Préparé par:
CONSULTANTS EN SOUDAGE MEQUALTECH Pour :
18C-088

DESCRIPTION DE LA MÉTHODE DE SOUDAGE (DMS)
WELDING PROCEDURE SPECIFICATION (WPS)

(Référence ASME Sections VIII & IX. ed. 2017 & ASME B31.3 ed. 2016)

NOTE: Les titres désignent les hommes et les femmes / Titles refer to men and women

ABF CONSTRUCTION
138, Chemin des Boisés
Val-d'Or,secteur Dubuisson,
Qc, J9P 4N7 Canada

Désignation de la Méthode *Provincial registration*		Enregistrement provincial *Provincial registration*
DMS / *WPS*	**SMAW-P1-P1** Révision: 0	MTL 310.6
RMS / *PQR*	**SMAW-P1-P1-A**	

Procédé(s) de soudage / *Welding process*

	Manuel *Manual*		Semi-automatique *Semi-automatic*	Machine-auto *Auto.machine*
SMAW		X		

Joints / *Joints* (QW-402)

Genre / *Design*	**Carré, chanfreiné, angle** ***Square, groove, fillet***	
Soutien / *Backing*	Oui / *Yes*	X
	Non / *No*	X
Matériau de soutien *Backing material*	Option	**Soudure ou P1** ***Weld or P1***
Support de retenue *Retainer*	**Aucun / *None***	
Autre / *Other*	**Aucun / *None***	

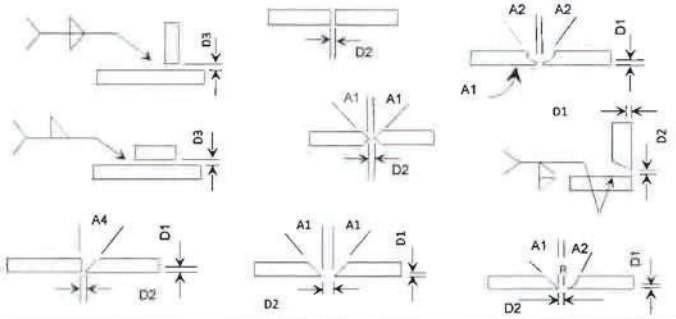

A1=30½°±2½° (VAISSEAU / *VESSEL*)
A1=37½°±2½° (TUYAUTERIE / *PIPING*)
A2=20½°±2½° **A3**=10½°±2½° **A4**=45°±5½°
D1=1/16" ± 1/16"
D2=1/16" ± 1/16"
(SANS BARRE DE SOUTIEN / *WITHOUT BACKING*)
D2=3/16" ± 1/8"
(AVEC BARRE DE SOUTIEN / *WITH BACKING*)
D3= 0" + 5/32"

Métaux de base / *Base metal* (QW-403)

Métaux de base P. No. / *Base metal: P.No.*	**P1** (Gr: 1 ou / or 2) à/*to* **P1** (Gr. 1 ou / or 2)
Gamme d'épaisseurs qualifiées pour le métal de base *Base metal thickness range qualified*	Chanfrein / *Groove* : **0.1685" à/*to* 0.587" maximum** (Voir / See note 4) Angle / *Fillet* : **Aucune limite / *No limit***
Épaisseur maximale de la plus épaisse des passes de soudage *Maximun thickness of any welding pass*	**0.250" maximum**
Autre / *Others*	**Aucun / *None***

Métaux d'apport / *Filler metals* (QW-404)

1 AWS N° / No	**E-6010**	SF A: **5.1**	F-No. **3**	A-No. **1**	**Dia:** 3/32"-1/8"-5/32"
	E-7018-1	SF A: **5.1**	F-No. **4**	A-No. **1**	**Dia:** 3/32"-1/8"-5/32"-3/16"-1/4"
Gamme des épaisseurs qualifiées pour le dépôt de soudage *Weld metal thickness range qualified*	Chanfrein / *Groove* **(F3: 0.250" max.) (F4: 0.424" max.)** Angle / *Fillet* : **Aucune limite / *No limit***				
Pièce insérée consumable / *Consumable insert*	**Aucun / *None***				
Poudre ou fil supplémentaire / *Supplementary powder or wire*	**Aucun / *None***				

Position / *Positions* (QW-405)

Position(s) du chanfrein / *Position of groove*	**Toutes positions / *All positions***
Progression du soudage / *Welding progression*	**Montant, descendant / *Up, down***
Position(s) de l'angle / *Position(s) of fillet*	**Toutes positions / *All positions***

Préchauffage / *Preheat (QW-406)*

Température de préchauffage, maintien du préchauffage (Optionel) *Preheat temperature, preheat temperature (Optional).*	**T ≤ 1½ in.: 50° F Min.**	**2½ in. < T ≤ 4 in.: 250° F Min.**
	1½ in. < T ≤ 2½ in.: 150° F Min.	**T > 4 in.: 300° F Min.**
Température de l'interpasse / *Enterpass temperature*	50° F Min.	
Autre / *Other*	**Aucun / *None***	

Traitement thermique postchauffage / *Posteweld heat treatment* (QW-407)

Gamme de températures / *Temperature range*	**Aucun / *None***
Gamme de durée / *Time range*	**Aucun / *None***
Note / *Note*	**Aucun / *None***

Gaz / *Gas* (QW-408)

Composition du gas de protection / *Shielding gas composition*	**Aucun / *None***
Débit du gaz / *Gas flow rate*	**Aucun / *None***
Composition du gaz de soutien / *Backing gas composition*	**Aucun / *None***
Gaz de protection trainant / *Training sheilding gas composition*	**Aucun / *None***

Caractéristiques électrique et technique / *Electrical, technical characteristics* (QW-409-QW-410)

Métal d'apport / *Filler metal*				Courant / *Current*			
Procédé *Process*	Diamètre *Diameter*	Classification *Classification*	Position de soudage *Weld position*	Type, polarité *Type, polarity*	Gamme d'ampérage *Amperage range*	Gamme de voltage *Voltage range*	Gamme de vitesse *Travel speede range*
SMAW	3/32"	E-6010	Toutes / *All*	CC-*DC* / *EP-RP*	50-85	20-30	Variable / *Variable*
SMAW	1/8"	E-6010	Toutes / *All*	CC-*DC* / *EP-RP*	60-120	22-32	Variable / *Variable*
SMAW	5/32"	E-6010	Toutes / *All*	CC-*DC* / *EP-RP*	80-150	24-34	Variable / *Variable*
SMAW	3/32"	E-7018-1	Toutes / *All*	CC-*DC* / *EP-RP*	75-115	20-28	Variable / *Variable*
SMAW	1/8"	E-7018-1	Toutes / *All*	CC-*DC* / *EP-RP*	90-160	20-28	Variable / *Variable*
SMAW	5/32"	E-7018-1	Toutes / *All*	CC-*DC* / *EP-RP*	130-220	20-28	Variable / *Variable*
SMAW	3/16"	E-7018-1	Toutes / *All*	CC-*DC* / *EP-RP*	160-315	24-32	Variable / *Variable*
SMAW	1/4"	E-7018-1	Toutes / *All*	CC-*DC* / *EP-RP*	280-380	24-32	Variable / *Variable*

Courant pulsé / *Pulse current*	N/A
Grosseur et type d'électrode de tungstène *Tungsten electrode size and type*	N/A
Mode de transfert du métal / *Mode of metal transfer* GMAW / FCAW / MCAW	N/A
Cordon droit ou oscillant String or weave bead	Droit ou oscillant / *String or wave, Largeur / Whidth: 3 x dia. Electrode*
Procédé de gougeage arrière Method of back gouging	Meulage, scie,outil d'allésage / *Grinding, saw, bit tool*
Nettoyage initial et entre les passes / *Initial and interpass cleaning*	Les surfaces à souder doivent être libres de graisse, d'huile, de peinture ou de matière pouvant nuire à la qualité de la soudure; brossage, meulage, ciseau pneumatique / *All surfaces within one (1) inch from the welding joint and all edges shall be free from all traces of lubrifiants, cutting oils and foreign matter; brushimg, grinding, chipping.*
Diamètre de la tuyière à gaz / *Orifice or gas cup size*	N/A
Oscillation / *Oscillation*	Fréquence / *Frequency* : N/A
Distance entre tuyière et pièce / *Contact tube to work distance*	N/A
Passe unique ou multiple (par côté) / *Multiple or single pass (per side)*	Unique ou multiple / *Single or multiple pass*
Électrode unique ou multiple / *Multiple or single electrode*	Unique / *Single*
Gamme de vitesse d'alimentation de l'électrode / Electrode wire feed speed range	N/A
Autre / *Other*	Aucun martelage permis / *Peening is not permitted*

Autres commentaires / *Supplementary Comments*

1) Essais de pliage guidés / *Guided bend tests*	Voir rapport / *See report* 18C-088 1/3
2) Essais de traction / *Tensile tests*	Voir rapport / *See report* 18C-088 2/3
3) Essais de dureté / *Hardness test*	Non requis / *Not required*
4) Essais de résilience / *Impact test*	Lorsque les essais d'impact ne sont pas requis, les matériaux de base de tout groupe peuvent être soudés et la gamme d'épaisseur qualifiée est de 0.1685" à 0.587" selaon ASME B31.3, table 323.3.1. / *When impact test is not required, base material of all group may be welded and thickness range qualified is 0.1685" to 0.587" according to ASME B31.3 table 323.3.1*
5) Analyse chimique / *Chimical analysis*	Non requis / *Not required*
6) Ferriscomètre / *Ferriscometer*	Non requis / *Not required*
7) Macrographie / *Macro-examination*	Non requis / *Not required*
8) Métallographie / *Metallography*	Non requis / *Not required*
9) Traitement thermique / *Heat treatment*	Non requis / *Not required*
10) Énergie de chaleur (J/in) / *Heat inmput (J/in)*	E-6011 : 22390 (J/in) max. / E-7018-1 : 28641 (J/in) max.
11) Critères d'acceptation / *Acceptance criteria*	ASME sect. VIII Div. 1 UG-84 B31.3 Art.323.3

Signature du représentant de l'entreprise / *Company representative signature*

18C-088

Réservé au autorités / *Departement use only*

Vérifié par : I. CRIHAN

Date: 03 AVR. 2018

RÉGIE DU BÂTIMENT
QC MTL 310.6
ENREGISTRÉ
SELON LA LOI SUR LES APPAREILS SOUS PRESSION 2001
VÉRIFIÉ PAR I.C.
DATE 03 AVR. 2018

Préparé par:
CONSULTANTS EN SOUDAGE MEQUALTECH Pour :
18C-088

RÉSULTAT DE LA MÉTHODE DE SOUDAGE (RMS)
PROCEDURE QUALIFICATION RESULT (PQR)

(Référence ASME Sections VIII & IX. ed. 2017 & ASME B31.3 ed. 2016)

NOTE: Les titres désignent les hommes et les femmes / Titles refer to men and women

ABF CONSTRUCTION
138, Chemin des Boisés
Val-d'Or,secteur Dubuisson,
Qc, J9P 4N7 Canada

Désignation de la Méthode *Procedure identification*		Enregistrement provincial *Provincial registration*
RMS PQR	SMAW-P1-P1-A	MTL-310.6
DMS *WPS*	SMAW-P1-P1 Rev.0	

Procédé(s) de soudage / *Welding process*

	Manuel *Manual*		Semi-auto. *Semi-auto.*	Machine-auto *Auto.machine*
SMAW		X		

Métaux de base / *Base metals* (QW-403)

SA-333 Gr. 6 à / *to* SA-350 LF2

Épaisseur / *Thickness*	**0.337"**
Épaisseur de la couche la plus épaisse *Thickness of the thicker pass*	**0.125"**
Autre / *Other*	**Aucun / None**

Joint / *Joint* (QW-402)

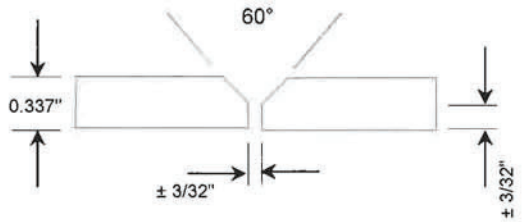

Métaux d'apport / *Filler metals* (QW-404)

Classe / *Class* AWS	SFA. No.	F-No	A-No	Épaisseur du dépot *Weld thickness*
E 6011	**5.1**	**3**	**1**	**0.125"**
E 7018	**5.1**	**4**	**1**	**0.212"**

Positions / *Positions* (QW-405)

Position du chanfrein *Position of groove*	**6 G**
Progression de soudage *Welding progression*	**Verticale montante / *Vertical up***
Autre / *Other*	**Aucun / *None***

Préchauffage / *Preheat* (QW-406)

Température de préchauffage *Preheat temperature*	**50° F**
Température de l'interpasse *Interpass temperature*	**50° F min.**
Autre / *Other*	**Aucun / *None***

Traitement postchauffage/ *Postweld heat treatment* (QW-407)

Gamme de température *Temperature range*	**Aucun / *None***
Gamme de durée / *Time range*	.....
Autre / *Other*	**Aucun / *None***

Gaz / *Gas* (QW-408)

Composition du gaz de protection *Shielding gas composition*	**Aucun / *None***
Débit de gaz / *Gas flow rate*	.....
Composition gaz soutien *Backing gas composition*	**Aucun / *None***
Débit de gaz / *Gas flow rate*	.....
Autre / *Other*	**Aucun / *None***

Technique / *Technique* (QW-410)

Cordon droit ou oscillant *String or weave bead*	**Droit / *String***
Oscillation / Osciillation	**N/A**
Passe unique ou multiple (par côté) *Multiple or single pass (per side)*	**Côté A Multiple / *Multiple***
Électrode unique ou multiple *Multiple or single electrode*	**Unique / *Single***
Autre / *Other*	**Aucun / *None***

Caractéristiques électrique et techniques / *Electrical and technical characteristics* (QW-409-410)

Couche *Layer*	Procédé *Process*	Classification *Classification*	Diamètre *Diameter*	Type *Type*	Polarité *Polarity*	Ampérage *Amperage*	Voltage *Volt range*	Gamme de vitesse *Travel speed range*	Débit de chaleur *Heat input*
1A	SMAW	E-6011	1/8"	CC/*DC*	EP/*RP*	**85**	**27**	**6,15 in/min.**	**22390 (J/in.)**
2A	SMAW	E-7018-1	1/8"	CC/*DC*	EP/*RP*	**110**	**23**	**5,3 in/min.**	**28641 (J/in.)**
3A	SMAW	E-7018-1	1/8"	CC/*DC*	EP/*RP*	**110**	**23**	**5,3 in/min.**	**28641 (J/in.)**
4A	SMAW	E-7018-2	1/8"	CC/*DC*	EP/*RP*	**110**	**22**	**5,4 in/min.**	**26888 (J/in.)**
5A	SMAW	E-7018-1	1/8"	CC/*DC*	EP/*RP*	**110**	**22**	**5,4 in/min.**	**26888 (J/in.)**

Essais à la traction / *Tensile test* (QW-150)

Éprouvette *Specimen*	Largeur *Width*	Épaisseur *Thickness*	Surface *Area*	Charge ultime *Ultimate total load*	Limite de contrainte *Ultimate unit stress*	Nature, endroit de rupture *Character, location of failure*
1	0,756 in.	0,328 in.	0,2480 in^2	19375 lbs	78135 PSI / 539 Mpa	Base material / Ductile
4	0,758 in.	0,335 in.	0,2539 in^2	19475 lbs	76694 PSI / 529 Mpa	Base material / Ductile

Essais de pliage guidé / *Guide bend test* (QW-160)

Éprouvette / *Specimen*	Face / *Face*	Racine / *Root*	Côté / *Side*	Résultat / *Result*
2	x			Accepté / Accepted
3		x		Accepté / Accepted
5	x			Accepté / Accepted
6		x		Accepté / Accepted

Essais de résilience / *Toughness test* (QW-170)

Éprouvette Specimen	Endroit de l'entaille *Notch location*	Forme de l'entaille *Notch type*	Température d'éprouvette *Specimen temperature*	Energie de rupture *Impact value*	Expansion latérale *Lateral expension*		Essai chute libre *Drop weigth*	
					% cisaillement *Shear*	Millième *Mills*	Cassé *Break*	Non cassé *No break*
1	Soudure / Weld	v	- 45°C	95 J	60	81	√	
2	Soudure / Weld	v	- 45°C	36 J	40	32	√	
3	Soudure / Weld	v	- 45°C	89 J	60	71	√	
1	ZAT / HAZ SA-333	v	- 45°C	87 J	70	74	√	
2	ZAT / HAZ SA-333	v	- 45°C	89 J	60	75	√	
3	ZAT / HAZ SA-333	v	- 45°C	49 J	50	43	√	
1	ZAT / HAZ SA-350	v	- 45°C	124 J	85	77	√	
2	ZAT / HAZ SA-350	v	- 45°C	119 J	85	80	√	
3	ZAT / HAZ SA-350	v	- 45°C	153 J	100	84	√	

Analyse chimique / *Chimical analysis*

C	Si	Mn	Ni	Cr	Nb	P	S	Fe	Cu	Mo	Ti	V	AL	B	Co	W	Be	Pb

Non requis / *Not required*

Essais de dureté / *Hardness test*

Non requis / *Not required*

Essais effectués par / GROUPE MEQUALTECH / *Test conducted by*

LABORATOIRE D'ESSAI MEQUALTECH

18C-088

Nous certifions que les renseignements concernant ce résultat sont exactes et que les essais de soudage ont été préparés, soudé et exécutés conformément aux exigences de la section IX du code ASME. *We certify that statements in this record are correct and that the test weld prepared, weld and test in accordance with the requirement of ASME code IX.*

Nom du soudeur, symbole / *Welder's name, stamp no.*

Joel St-Hilaire (J)

Signature du représentant de l'entreprise / *Company representative signature*

2018-03-

Réservé aux autorités / *Departement use only*

Pièce soudée le: *Welded on:* 6 MARS 2018 Inspecteur: *Inspector:* i.c. (Y) for M.M.

Résultats vérifiés: *Verified on:* 03 AVR. 2018 Inspecteur: *Inspector:* i.c. (Y)

QC RÉGIE DU BÂTIMENT MTL 310.6 ENREGISTRÉ SELON LA LOI SUR LES APPAREILS SOUS PRESSION (RLRQ) VÉRIFIÉ PAR i.c. (Y) DATE 03 AVR. 2018

LABORATOIRE D'ESSAI MEQUALTECH
8740 Boul. PIE IX
Montréal, Qc, H1Z 3V1
Tel: (514) 593-5755 Fax: (514) 593-8338

RAPPORT D'ESSAI DE PLIAGE
BEND TEST REPORT

CLIENT: ABF CONSTRUCTION
ADRESSE / ADDRESS: 138, Chemin des Boisés
Val-d'Or (secteur Dubuisson), Qc
J9P 4N7
CONTACT: Rocky Pelletier

BON DE COMMANDE / P.O. #:	# TRAVAIL / JOB #:	PROCEDURE MEQUALTECH:		Rev.	
16651-20155	WPS# SMAW-P1-P1 Rev.0		P4b-PLI-06		0

IDENTIFICATION	ACC.	REJ.	DÉFAUT / DEFECT	SENS DU PLIAGE / BEND DIRECTION		
				RACINE / ROOT	FACE	CÔTÉ / SIDE
PQR# SMAW-P1-P1 A	☐	☐				
Specimen #2	☑	☐			X	
Specimen #3	☑	☐		X		
Specimen #5	☑	☐			X	
Specimen #6	☑	☐		X		
	☐	☐				
	☐	☐				
	☐	☐				
	☐	☐				
	☐	☐				
	☐	☐				

MÉTHODE / METHOD

Rayon de Mandrin / Mandrel rad. (A)	0,67 inch	ANGLE DE PLIAGE / BEND ANGLE	180°

☑

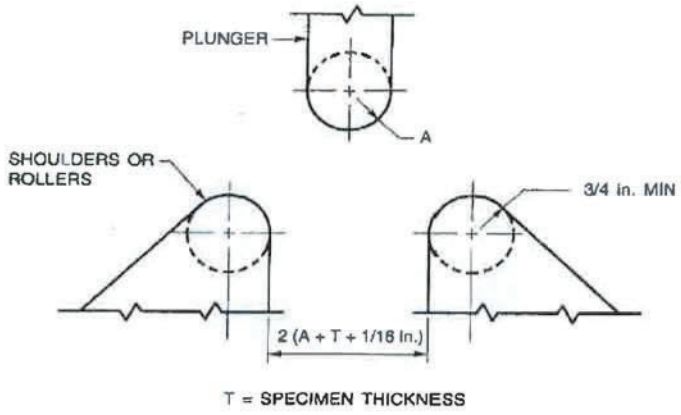

☐

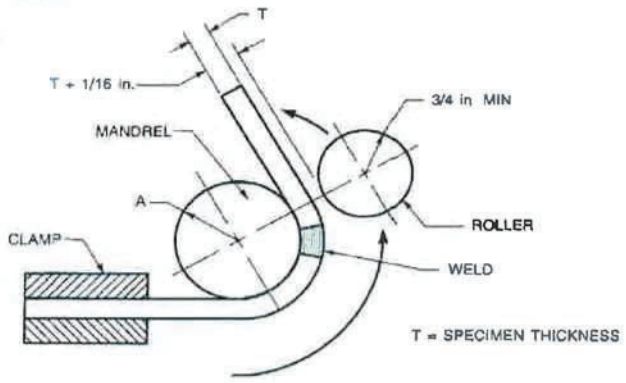

CRITÈRES D'ACCEPTATION / ACCEPTANCE CRITERIA: ASME Section IX Edition 2017 - QW-163

RÉSULTATS / RESULTS : ☑ CONFORME ☐ NON-CONFORME

REMARQUE(S) / REMARK(S):

PQR# SMAW-P1-P1 A.
Pipe 4"X 0,337", SA-333 grade 6 to Flange SA-350 grade LF2.
Position 6G.

The parts being tested are kept for a one month period after the results have been sent. Test results apply only to the parts being tested.
This report can not be reproduced, except completely, without a written autorisation from the laboratory.

ESSAIS EFFECTUÉS PAR / TESTS PERFORMED BY:

Pascal Morin, ing.	Chef de service	2018-03-16
TECHNICIEN / TECHNICIAN OPERATEUR / OPERATOR	QUALIFICATION	DATE

GROUPE MEQUALTECH

LABORATOIRE D'ESSAI MEQUALTECH
8740 Boul. PIE IX
Montréal, Qc, H1Z 3V1
Tel: (514) 593-5755 Fax: (514) 593-8338

RAPPORT D'ESSAI DE TRACTION
TENSILE TEST REPORT

CLIENT: ABF CONSTRUCTION
ADRESSE / ADDRESS: 138, Chemin des Boisés
Val-d'Or (secteur Dubuisson), Qc
J9P 4N7
CONTACT: Rocky Pelletier

BON DE COMMANDE / P.O. #:	# TRAVAIL / JOB #:	STANDARD D'ESSAI / STANDARD:	ASME SECTION IX
16651-20155	WPS# SMAW-P1-P1 Rev.0	Procédure Mequaltech procedure	P4b-TRA-05

INSTRUMENT:	MARQUE / TRADE MARK :	MODÈLE / MODEL# :	SÉRIE / SERIAL# :
	Tinius Olsen	Standard 60,000 Lbs	115,925

IDENTIFICATION ET RÉSULTATS / IDENTIFICATION AND RESULTS	ÉCHANTILLON / SAMPLE			
ÉPROUVETTE / SAMPLE :	#1	#4		
DIAMÈTRE INITIALE / INITIAL DIAMETER (IN):				
LARGEUR INITIALE/ INITIAL WIDTH (IN) :	0,756	0,758		
ÉPAISSEUR INITIALE / INITIAL THICKNESS (IN) :	0,328	0,335		
SURFACE INITIALE / INITIAL SURFACE (square inches):	0,2480	0,2539		
CHARGE ULTIME / MAXIMUM LOAD (lbs):	19375	19475		
LIMITE D'ÉLASTICITÉ À 0,2% / 0,2% YIELD POINT (lbs) :				
LIMITE D'ÉLASTICITÉ À 0,5% / 0,5% YIELD POINT (lbs) :				
DIAMÈTRE FINALE / FINAL DIAMETER (IN):				
LARGEUR FINALE/ FINAL WIDTH (IN) :				
ÉPAISSEUR FINALE / FINAL THICKNESS (IN) :				
SURFACE FINALE / FINAL SURFACE (square inches):				
CONTRAINTE ULTIME / ULTIMATE TENSILE STRENGTH (PSI):	78135	76694		
CONTRAINTE ULTIME / ULTIMATE TENSILE STRENGTH (Mpa) :	539	529		
LIMITE D'ÉLASTICITÉ À 0,2% / 0,2% YIELD STRENGTH (PSI) :				
LIMITE D'ÉLASTICITÉ À 0,2% / 0,2% YIELD STRENGTH (Mpa) :				
LIMITE D'ÉLASTICITÉ À 0,5% / 0,5% YIELD STRENGTH (PSI) :				
LIMITE D'ÉLASTIITÉ À 0,5% / 0,5% YIELD STRENGTH (Mpa):				
:LONGUEUR INITALE / INITIAL LENGTH (IN)				
LONGUEUR FINALE / FINAL LENGTH (IN):				
ALLONGEMENT / ELONGATION (%) :				
STRICTION / REDUCTION OF AREA (%) :				
RUPTURE / BREAK :	BASE MATERIAL	BASE MATERIAL		
FACIES DE RUPTURE/ TYPE OF BREAK:	Ductile	Ductile		

CRITERES D'ACCEPTATION / ACCEPTANCE CRITERIA: ASME Section IX Edition 2017 - QW-153

RÉSULTATS / RESULTS : ☑ CONFORME ☐ NON-CONFORME

REMARQUE(S) / REMARK(S):

PQR# SMAW-P1-P1 A.

Pipe 4"X 0,337", SA-333 grade 6 to Flange SA-350 grade LF2.

Position 6G.

The parts being tested are kept for a one month period after the results have been sent. Test results apply only to the parts being tested.

This report can not be reproduced, except completely, without a written autorisation from the laboratory.

ESSAIS EFFECTUÉS PAR / TESTS PERFORMED BY:

Pascal Morin, ing.	Chef de service	2018-03-16
TECHNICIEN / TECHNICIAN OPÉRATEUR / OPERATOR	QUALIFICATION	DATE

GROUPE MEQUALTECH

LABORATOIRE D'ESSAI MEQUALTECH
8740 Boul. PIE IX
Montréal, Qc, H1Z 3V1
Tel: (514) 593-5755 Fax: (514) 593-8338

RAPPORT D'ESSAI DE RÉSILIENCE
IMPACT TEST REPORT

CLIENT: ABF CONSTRUCTION
ADRESSE / ADDRESS: 138, Chemin des Boisés, Val-d'Or (secteur Dubuisson), Qc, J9P 4N7
CONTACT: Rocky Pelletier

BON DE COMMANDE / P.O. #:	# DE CONTRAT / JOB #:	PROCEDURE MEQUALTECH:		Rev.	
16651-20155	WPS# SMAW-P1-P1 Rev.0		P4b-RES-03		0
INSTRUMENT:	MARQUE / TRADE MARK : Satec	MODÈLE / MODEL# : SI-1C3		# DE SÉRIE / SERIAL# : 1628	

DESCRIPTION DE LA PIÈCE OU PROCÉDÉS DE SOUDAGE / PART DESCRIPTION OR WELDING PROCESS DETAIL :
PQR# SMAW-P1-P1 A - Pipe 4" X 0,337" (SA-333 grade 6) to Flange SA-350 grade LF2.

TEMPÉRATURE : -45°C | RÉSULTATS/ RESULTS (FT.LBS OU/OR JOULES) : ☐ FT./LBS ☑ JOULES | DIMENSIONS: 7 mm X 10 mm

	ÉNERGIE ABSORBÉE / ABSORBED ENERGY	EXPANSION LATÉRALE / LATERAL EXPANSION(Mils)	% DE CISAILLEMENT / SHEAR %	CASSÉ / BREAK
WELD				
	95	81	60	☑
	36	32	40	☑
	89	71	60	☑
				☐
				☐
				☐
HAZ - Pipe SA-333 grade 6 side				
	87	74	70	☑
	89	75	60	☑
	49	43	50	☑
				☐
				☐
				☐
HAZ - Flange SA-350 grade LF2 side				
	124	77	85	☑
	119	80	85	☑
	153	84	100	☑
				☐
				☐
				☐

CRITERES D'ACCEPTATION / ACCEPTANCE CRITERIA: ASME B31.3-2016 Table 323.3.5 = 20 Joules minimum*

RÉSULTATS / RESULTS : ☑ CONFORME ☐ NON-CONFORME

REMARQUE(S) / REMARK(S):
*70% subsize specimens used: Acceptance criteria becomes 14 Joules minimum average.

The parts being tested are kept for a one month period after the results have been sent. Test results apply only to the parts being tested.
This report can not be reproduced, except completely, without a written autorisation from the laboratory.

ESSAIS EFFECTUÉS PAR / TESTS PERFORMED BY:

Pascal Morin, ing.	Chef de service	2018-03-16
TECHNICIEN / TECHNICIAN OPÉRATEUR / OPERATOR	QUALIFICATION	DATE

GROUPE MEQUALTECH

2

Préparé par
CONSULTANTS EN SOUDAGE MEQUALTECH Pour
16C-224

ÉPREUVE DE SOUDEUR OU D'OPÉRATEUR
WELDER OR WELDING OPERATOR QUALIFICATION TEST

Note: Les titres désignent également les hommes et les femmes

A. B. F Construction
1310, Avenue Davy,
Rouyn-Noranda,
Québec Canada J9Y 0A8

Désignation de la DMS / ***Using WPS No.***: SMAW-11-1

Enregistrement provincial / ***Provincial registration***: RN-72.6

Nom du soudeur ou opérateur / ***Welder or operator's name***: CAMIRAND, SÉBASTIEN (SC)

	Variables / *Variables*	**Inscrire valeurs** / *Record actual values*		**Gamme qualifiée** / *Qualification range*	
QW-353 Procédé/*ess*	Shielded metal arc welding	SMAW F3 Manuel / *Manual*	SMAW F4 Manuel / *Manual*	**SMAW F3** Manuel / *Manual*	**SMAW F4** Manuel / *Manual*
QW-403 Métaux de base / *Base metals*	Matériaux / *Material*	P1 à/*to* P1	P1 à/*to* P1	**(P1 à/*to* P15F) (P34) (P41 à/*to* P49)**	**(P1 à/*to* P15F) (P34) (P41 à/*to* P49)**
	Diamètre / *Diameter*	2.375" D E / *O D*	2.375" D E / *O D*	**≥ 1" D.E / *O.D***	**≥ 1" D.E / *O.D***
	Chanf. épaisseur / *Groove thick*	0.343"	0.343"	**Aucune limite / *No limit***	**Aucune limite / *No limit***
	Angle épais. / *Fillet thickness*	Tous / *All*	Tous / *All*	**Aucune limite / *No limit***	**Aucune limite / *No limit***
QW-408 Gas / *Gaz*	Gaz de soutien / *Backing gas*	N/A	N/A	**N/A**	**N/A**
QW-409 Électricité / *Electrecity*	Courant / *Current*	CC / *DC*	CC / *DC*	**Tous / *All***	**Tous / *All***
	Polarité / *Polarity*	EP / *RP*	EP / *RP*	**Tous / *All***	**Tous / *All***
	Mode transfert / *Transfer mode*	N/A	N/A	**N/A**	**N/A**
QW-404 Métaux d'apport / *Filler metals*	No spec. / Spec No (SFA)	5.1	5.1	**5.1 5.4 5.5**	**5.1 5.4 5.5**
	AWS Classe / *Class*	F3 E-6010	F4 E-7018	**F3**	**F1, F2, F4**
	Dépôt soudure / *Weld deposit*	0.125"	0.218"	**0.250" Maximum**	**0.436" Maximum**
	Pièce inserée / *Insert*	Aucune / *None*	Aucune / *None*	**N/A**	**N/A**
QW-402 Joint	Soutien / *Backing*	Sans soutien *Without backing*	Avec soutien *With backing*	**Avec ou sans soutien *With or without backing***	**Avec soutien *With backing***
QW-405 Position	Position / *Progression*	6G Montant / *Up*	6G Montant / *Up*	**Toutes positions-montant *All positions-up***	**Toutes positions-montant *All positions-up***
QW-360 Machine	Automatique / *Automatic*	N/A	N/A	**N/A**	**N/A**

Résultat de pliage ou de radiographie / ***Guided bend or radiographic results***

QW-191 Specimens	Pliage de coté *Side bend*	Pliage transversal *Transverse bend*	Pliage longitudinal *Longitudinal bend*	Radiogrphie *Radiographic*	**ACCEPTÉ** / ***QUALIFIED***	**REFUSÉ** / ***REFUSED***
				√	**ACCEPTÉ**	
QW-194 Visu / el / *al*	Pénétration complète, fusion complète *Complete joint penetration, complete fusion*					

LABORATOIRE D'ESSAI MEQUALTECH
ONGC/ASNT-TC-1A Level II

Nous certifions que les renseignements ci-dessus sont exacts et que les essais de soudage ont été preparés et executés conformement aux exigences de la section IX du Code ASME
We certify that the statements in this record are correct and the test welds were prepared, welded and tested in accordance with the requirements of Section IX of the ASME Code

Entreprise / ***Organization***

A. B. F Construction

Organisme autorisé / ***Accredited organization***

Soudé le: / *Welded on*: OCT 17 2019

Inspecteur: / *Inspetor*:

Accepté: / *Accepted*:

Vérifié le : / *Inspected on*:

Inspecteur / *Inspector*:

Refusé: / *Refused*:

Préparé par
CONSULTANTS EN SOUDAGE MEQUALTECH Pour:
16C-224

ÉPREUVE DE SOUDEUR OU D'OPÉRATEUR
WELDER OR WELDING OPERATOR QUALIFICATION TEST

Note: Les titres désignent également les hommes et les femmes.

A. B. F Construction
127-A, Avenue Marcel-Baril,
Rouyn-Noranda
Québec Canada J9X-7B9

Désignation de la DMS *Using WPS No.*	Enregistrement provincial *Provincial registration*
SMAW-11-1	RN-72.6

Nom du soudeur ou opérateur / *Welder or operator's name*

CAOUETTE FRANÇOIS (F)

	Variables *Variables*	Inscrire valeurs *Record actual values*		Gamme qualifiée *Qualification range*	
QW-353 Proc/éde/ess	Shielded metal arc welding	SMAW F3 Manuel / *Manual*	SMAW F4 Manuel / *Manual*	**SMAW F3** Manuel / *Manual*	**SMAW F4** Manuel / *Manual*
QW-403 Métaux de base *Base metals*	Matériaux / *Material*	P1 à/to P1	P1 à/to P1	**(P1 à/to P15F) (P34) (P41 à/to P49)**	**(P1 à/to P15F) (P34) (P41 à/to P49)**
	Diamètre / *Diameter*	2.375" D.E / *O.D*	2.375" D.E / *O.D*	**≥ 1" D.E / *O.D***	**≥ 1" D.E / *O.D***
	Chanf. épaisseur / *Groove thick.*	0.343"	0.343"	**Aucune limite / *No limit***	**Aucune limite / *No limit***
	Angle épais. / *Fillet thickness*	Tous / *All*	Tous / *All*	**Aucune limite / *No limit***	**Aucune limite / *No limit***
QW-408 Gaz / *Gaz*	Gaz de soutien / *Backing gas*	N/A	N/A	**N/A**	**N/A**
QW-409 Électricité *Electrecity*	Courant / *Current*	CC / *DC*	CC / *DC*	**Tous / *All***	**Tous / *All***
	Polarité / *Polarity*	EP / *RP*	EP / *RP*	**Tous / *All***	**Tous / *All***
	Mode transfert / *Transfer mode*	N/A	N/A	**N/A**	**N/A**
QW-404 Métaux d'apport *Filler metals*	No spec. / Spec No (SFA)	5.1	5.1	**5.1 5.4 5.5**	**5.1 5.4 5.5**
	AWS Classe / *Class*	F3 E-6010	F4 E-7018	**F3**	**F1, F2, F4**
	Dépôt soudure / *Weld deposit*	0.125"	0.218"	**0.250" Maximum**	**0.436" Maximum**
	Pièce inserée / *Insert*	Aucune / *None*	Aucune / *None*	**N/A**	**N/A**
QW-402 Joint	Soutien / *Backing*	Sans soutien *Without backing*	Avec soutien *With backing*	**Avec ou sans soutien *With or without backing***	**Avec soutien *With backing***
QW-405 Position	Position / *Progression*	6G Montant / *Up*	6G Montant / *Up*	**Toutes positions-montant *All positions-up***	**Toutes positions-montant *All positions-up***
QW-360 Machine	Automatique / *Automatic*	N/A	N/A	**N/A**	**N/A**

Résultat de pliage ou de radiographie / *Guided bend or radiographic results*

QW-191 Specimens	Pliage de coté *Side bend*	Pliage transversal *Transverse bend*	Pliage longitudinal *Longitudinal bend*	Radiogrphie *Radiographic*	**ACCEPTÉ / *QUALIFIED***	**REFUSÉ / *REFUSED***
				√	✓	

QW-194 Visu / el / *al*: Pénétration complète, fusion complète
Complete joint penetration, complete fusion

LABORATOIRE D'ESSAI MEQUALTECH

ONG/ASNT-TC-1A Level II

18M4079-1 2018-09-21

Nous certifions que les renseignements ci-dessus sont exacts et que les essais de soudage ont été preparés et executés conformement aux exigences de la section IX du Code ASME.
We certify that the statements in this record are correct and the test welds were prepared, welded and tested in accordance with the requirements of Section IX of the ASME Code.

Entreprise / *Organization*

A. B. F Construction

Organisme autorisé / *Accredited organization*

Soudé le: 14 SEPT 2018
Welded on:

Inspecteur:
Inspetor:

Accepté:
Accepted:

Vérifié le :
Inspected on.

Inspecteur
Inspector:

Refusé:
Refused:

Préparé par:
CONSULTANTS EN SOUDAGE MEQUALTECH Pour:
16C-224

ÉPREUVE DE SOUDEUR OU D'OPÉRATEUR
WELDER OR WELDING OPERATOR QUALIFICATION TEST

Note: Les titres désignent également les hommes et les femmes.

A. B. F Construction
1310, Avenue Davy,
Rouyn-Noranda
Québec Canada J9Y 0A8

Désignation de la DMS *Using WPS No.*	Enregistrement provincial *Provincial registration*
SMAW-11-1	RN-72.6

Nom du soudeur ou opérateur / *Welder or operator's name*: ST-HILAIRE JOEL (J)

	Variables *Variables*	Inscrire valeurs *Record actual values*		Gamme qualifiée *Qualification range*	
QW-353 Proc/édé/ess	Shielded metal arc welding	SMAW F3 Manuel / *Manual*	SMAW F4 Manuel / *Manual*	**SMAW F3** Manuel / *Manual*	**SMAW F4** Manuel / *Manual*
QW-403 Métaux de base *Base metals*	Matériaux / *Material*	P1 à/*to* P1	P1 à/*to* P1	**(P1 à/*to* P15F) (P34) (P41 à/*to* P49)**	**(P1 à/*to* P15F) (P34) (P41 à/*to* P49)**
	Diamètre / *Diameter*	2.375" D.E / *O.D*	2.375" D.E / *O.D*	**≥ 1" D.E / *O.D***	**≥ 1" D.E / *O.D***
	Chanf. épaisseur / *Groove thick.*	0.343"	0.343"	**Aucune limite / *No limit***	**Aucune limite / *No limit***
	Angle épais. / *Fillet thickness*	Tous / *All*	Tous / *All*	**Aucune limite / *No limit***	**Aucune limite / *No limit***
QW-408 Gas / *Gaz*	Gaz de soutien / *Backing gas*	N/A	N/A	**N/A**	**N/A**
QW-409 Électricité *Electrecity*	Courant / *Current*	CC / *DC*	CC / *DC*	**Tous / *All***	**Tous / *All***
	Polarité / *Polarity*	EP / *RP*	EP / *RP*	**Tous / *All***	**Tous / *All***
	Mode transfert / *Transfer mode*	N/A	N/A	**N/A**	**N/A**
QW-404 Métaux d'apport *Filler metals*	No spec. / Spec No (SFA)	5.1	5.1	**5.1 5.4 5.5**	**5.1 5.4 5.5**
	AWS Classe / *Class*	F3 E-6010	F4 E-7018	**F3**	**F1, F2, F4**
	Dépôt soudure / *Weld deposit*	0.125"	0.218"	**0.250" Maximum**	**0.436" Maximum**
	Pièce inserée / *Insert*	Aucune / *None*	Aucune / *None*	**N/A**	**N/A**
QW-402 Joint	Soutien / *Backing*	Sans soutien *Without backing*	Avec soutien *With backing*	**Avec ou sans soutien *With or without backing***	**Avec soutien *With backing***
QW-405 Position	Position / *Progression*	6G Montant / *Up*	6G Montant / *Up*	**Toutes positions-montant *All positions-up***	**Toutes positions-montant *All positions-up***
QW-360 Machine	Automatique / *Automatic*	N/A	N/A	**N/A**	**N/A**

Résultat de pliage ou de radiographie / *Guided bend or radiographic results*

QW-191 Specimens	Pliage de coté *Side bend*	Pliage transversal *Transverse bend*	Pliage longitudinal *Longitudinal bend*	Radiogrphie *Radiographic*	ACCEPTÉ / *QUALIFIED*	REFUSÉ / *REFUSED*
				√	✓	

QW-194 Visu / el / *al*: Pénétration complète, fusion complète
Complete joint penetration, complete fusion

LABORATOIRE D'ESSAI MEQUALTECH

ONGC/ASNT NDT-C-1A Level II 2018-09-21 18M4079-11

Nous certifions que les renseignements ci-dessus sont exacts et que les essais de soudage ont été préparés et exécutés conformement aux exigences de la section IX du Code ASME
We certify that the statements in this record are correct and the test welds were prepared, welded and tested in accordance with the requirements of Section IX of the ASME Code.

Entreprise / *Organization*

A. B. F Construction

Organisme autorisé / *Accredited organization*

Soudé le: 14-SEPT - 2018 *Welded on*
Inspecteur: *Inspetor:*
Accepté: *Accepted:*
Vérifié le : *Inspected on*
Inspecteur *Inspector:*
Refusé: *Refused*

3

PROCEDURE FOR PNEUMATIC TESTING OF PIPING ASSEMBLY

(PROCÉDURE D'ESSAIS SUR TUYAUTERIE PAR ÉPREUVE PNEUMATIQUE)

1.0 GOAL *(But)* :

Defining the procedure for testing of piping assembly. *(Définir la procédure d'essais des assemblages de tuyauterie.)*

2.0 APPLICATION *(Domaine d'application)* :

This Procedure is intended to describe the pneumatic testing methodology for piping assemblies at Agnico-Eagle Div. Meadowbank Project, NU. *(Cette procédure s'applique à définir la méthodologie d'essai d'étanchéité des assemblages de tuyauterie à Agnico-Eagle Div. Meadowbank Project, NU.)*

3.0 RESPONSABILITIES *(Responsabilités)* :

Work is performed by ABF Mines inc., pipefitters performing the test are responsible for the quality and safety of their work. The foreman supervises and witnesses the quality and safety of the testing. AEM representative verifies and approves each test. *(Les travaux sont réalisés par ABF Mines Inc., les tuyauteurs qui réalisent les essais sont responsables de la qualité et de la sécurité de leurs travaux, le CTM supervise les travaux et témoigne de tous les essais. Le représentant d'AEM inc. vérifie et approuve les essais réalisés.)*

4.0 METHODOLOGY (Méthodologie) :

The work consists of testing on piping assemblies according to the present procedures by ABF Mines Inc. *(Les travaux consistent à la réalisation d'essais sur les assemblages de tuyauterie selon la présente procédure par ABF Mines inc.)*

5.0 STEPS *(Étapes)*:

Advise 24hr prior to testing, the AEM supervisor in charge of the piping installation, of the time of test. *(Aviser par courriel 24 heures à l'avance le représentant d'AEM de l'exécution des essais pneumatiques.)*

Every piping assembly, subject to testing is inspected for any restriction. Piping is then coupled with appropriate instrument and pressure gage. *(Chaque ensemble de tuyauterie fabriqué et à inspecter, est inspecté pour toute obstruction de manière appropriée. Ilest ensuite couplé adéquatement des raccords, nourrice, purge et d'instruments indicateurs de pression.)*

The area is cleared and barricaded with red (danger) tape at reasonable and secure distance. *(Le secteur est évacué, des rubans de délimitation rouge (Danger) sont installés à une distance raisonnable et sécuritaire).*

The pressure for testing is determined on 1.2X the service pressure as per system specifications, every instrument below that set pressure is remove for testing. Maximum testing pressure allowed is 690kPa/100Psi. *(Les pressions d'essais sont déterminées à 1.2X la pression de service selon la spécification du système. Si une unité performe en deçà de cette pression d'utilisation, elle est isolé pour la duré du test. La pression maximale autorisée est de 690kPa/100Ps.)*

The pressure is raised in three (3) equal stages. With a 10 min. waiting period between each increase until maximum pressure is obtained. *(La pression maximale est obtenue en trois étapes, d'égale pression, avec 15 min. d'attente entre chaque augmentation de pression.)*

The testing pressure is maintained without pressure drop, nor leak, for a minimum of one hour. *(La pression d'essais est maintenue, sans baisse de pression, ni fuite, pendant une durée minimale d'une heure.)*

In case of pressure drop, potential leaks are spotted using soapy water (Snoop). Any leak is then isolated, purged and repaired. Pressure is then raised back to testing pressure for a full one (1) hour phase. *(En cas de baisse de pression, l'application d'un détecteur de fuite à base d'eau savonneuse (Snoop) est appliqué sur toute la surface des joints suspects. Toute fuite est isolée, la ligne purgée et réparée. La pression est rétablie dans tout le réseau pour une heure complète.)*

The testing is concluded by purging the air, this process is also used to remove all loose fine particles inside the system. Instruments of calibration are reinstalled. *(Après la conclusion de l'épreuve, l'air est purgé et les équipements de calibration réinstallés.)*

All parts of system then tested is identified as so on the quality control's P'nID.
(Les ensembles testés seront identifiés sur le diagramme de procédé réservé à cet effet)

The inspection report is signed by participants and preserved for future reference. *(La fiche d'inspection signée sera classée et conservée dans le cartable à cet effet pour futures références.*

6.0 ÉQUIPEMENTS :

- Appropriate Gauge *(Manomètres)*
- Temporary Piping *(Tuyauterie temporaire)*
- Fittings, Flanges, Blind-Flanges, Spectacle-blind, hoses and valves.
  (Raccords, brides, brides pleines ou plaques d'obturation, boyau et robinet)
- Vents *(Évents)*
- Compressor *(Compresseur)*
- Soapy water *(Eau* Savonneuse)

RÉFÉRENCES

© Typical procedure Xenit Industries inc.

4

ABF ARCTIC

AEM / MPEI fuel tank Baker Lake

Project no. 6120-C-265-001

Piping Pressure testing Report

Date	Hydro (Check)	AIR (Check)	Line # or Piping localisation From	To	Service	Test Pressure (Psi)	Time	Result[1] Ok	Result[1] Drop	Result[2] Ok	Result[2] Drop
2019-09-14		✓	Tank 5/6	Tie in.		50 psi	16:56	✓		✓ (3bf)	
2019-09-15		✓	Tie in Line 6"	to the tank 7		50 psi	13:00.	✓		✓	
2019-09-17		✓	Tie in Line 8"	to the tank 7		50 psi	11:50	✓		✓ (8f)	

(Signature) (date) (Print) Rep. ABF Arctic

(Signature) (date) (Print) Rep. AEM

(Signature) (date) (Print) Rep. Gov. (If required)

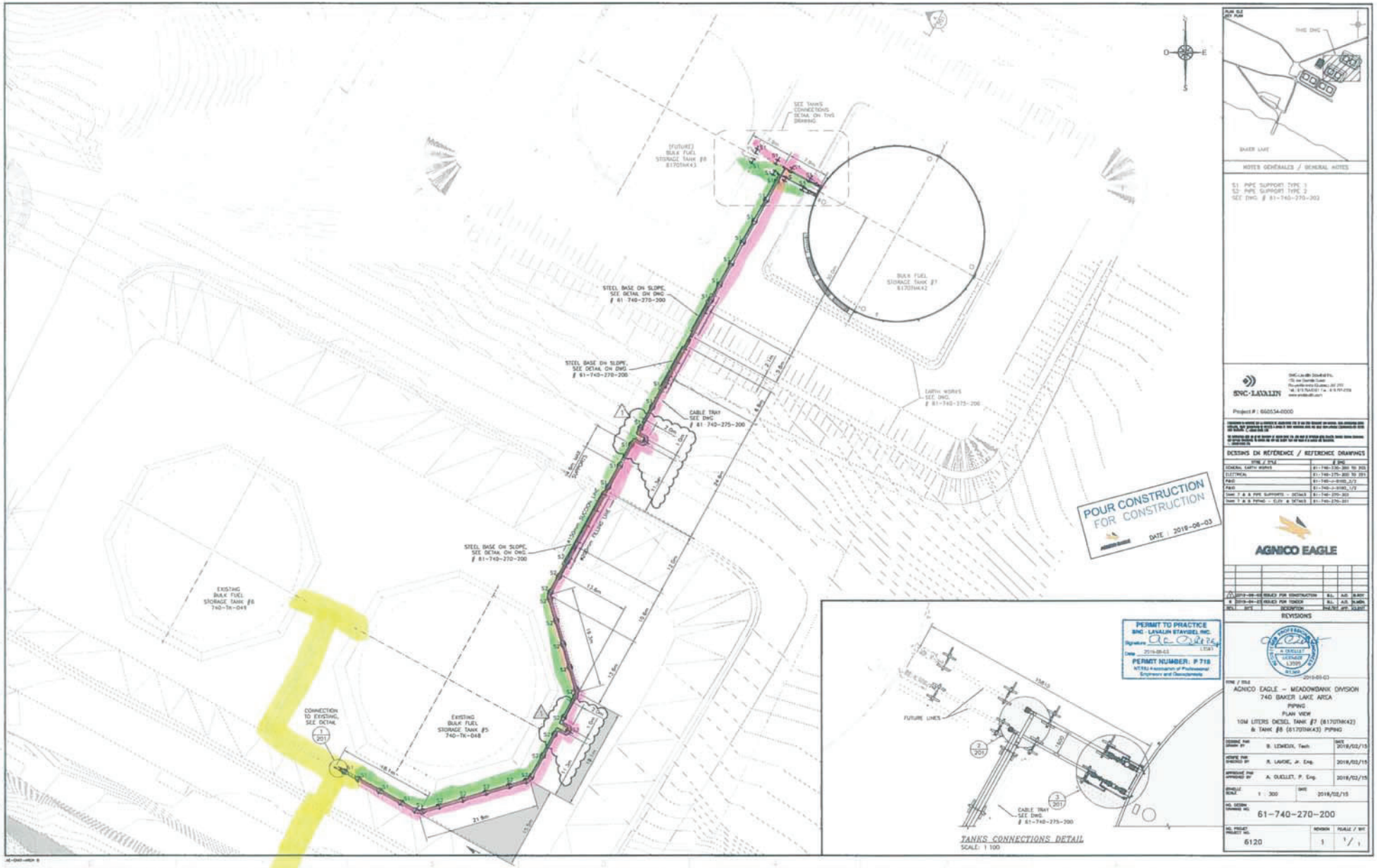
(FUTURE)
BULK FUEL
STORAGE TANK #8
617DTNK43
SEE TANKS
CONNECTIONS
DETAIL ON THIS
DRAWING
BULK FUEL
STORAGE TANK #7
617DTNK42
STEEL BASE ON SLOPE,
SEE DETAIL ON DWG
61-740-270-200
CABLE TRAY
SEE DWG
61-740-275-200
EARTH WORKS
SEE DWG
61-740-275-200
EXISTING
BULK FUEL
STORAGE TANK #6
740-TK-048
EXISTING
BULK FUEL
STORAGE TANK #5
740-TK-048
CONNECTION
TO EXISTING,
SEE DETAIL
FUTURE LINES
CABLE TRAY
SEE DWG
61-740-275-200
TANKS CONNECTIONS DETAIL
SCALE: 1:100
BAKER LAKE
NOTES GÉNÉRALES / GENERAL NOTES
S1 PIPE SUPPORT TYPE 1
S2 PIPE SUPPORT TYPE 2
SEE DWG # 61-740-270-202
SNC-LAVALIN
Project # : 660534-0000
DESSINS EN RÉFÉRENCE / REFERENCE DRAWINGS
TYPE / TITLE
DWG
GENERAL EARTH WORKS
61-740-230-200 TO 203
ELECTRICAL
61-740-275-200 TO 201
P&ID
61-740-P-0100_2/3
P&ID
61-740-P-0100_1/3
Item 7 & 8 PIPE SUPPORTS - DETAILS
61-740-270-202
Item 7 & 8 PIPING - ELEV & DETAILS
61-740-270-201
AGNICO EAGLE
REVISIONS
PERMIT TO PRACTICE
SNC-LAVALIN ENGINEERS INC.
PERMIT NUMBER: P 715
ACADEMIC LEVEL
ACADEMIC LEVEL
ACADEMIC LEVEL


2019-09-14.
17h56.
MPa
bar
psi
NORGREN
IMI


2021-09-15
17h22
NORGREN
IMI
MPa
bar
psi


2019-09-15.
17h22.


2019-09-15
13:02.
NORGREN
IMI
MPa
bar
psi


2019-09-15
14:30
NORGREN
IMI
MPa
bar
psi

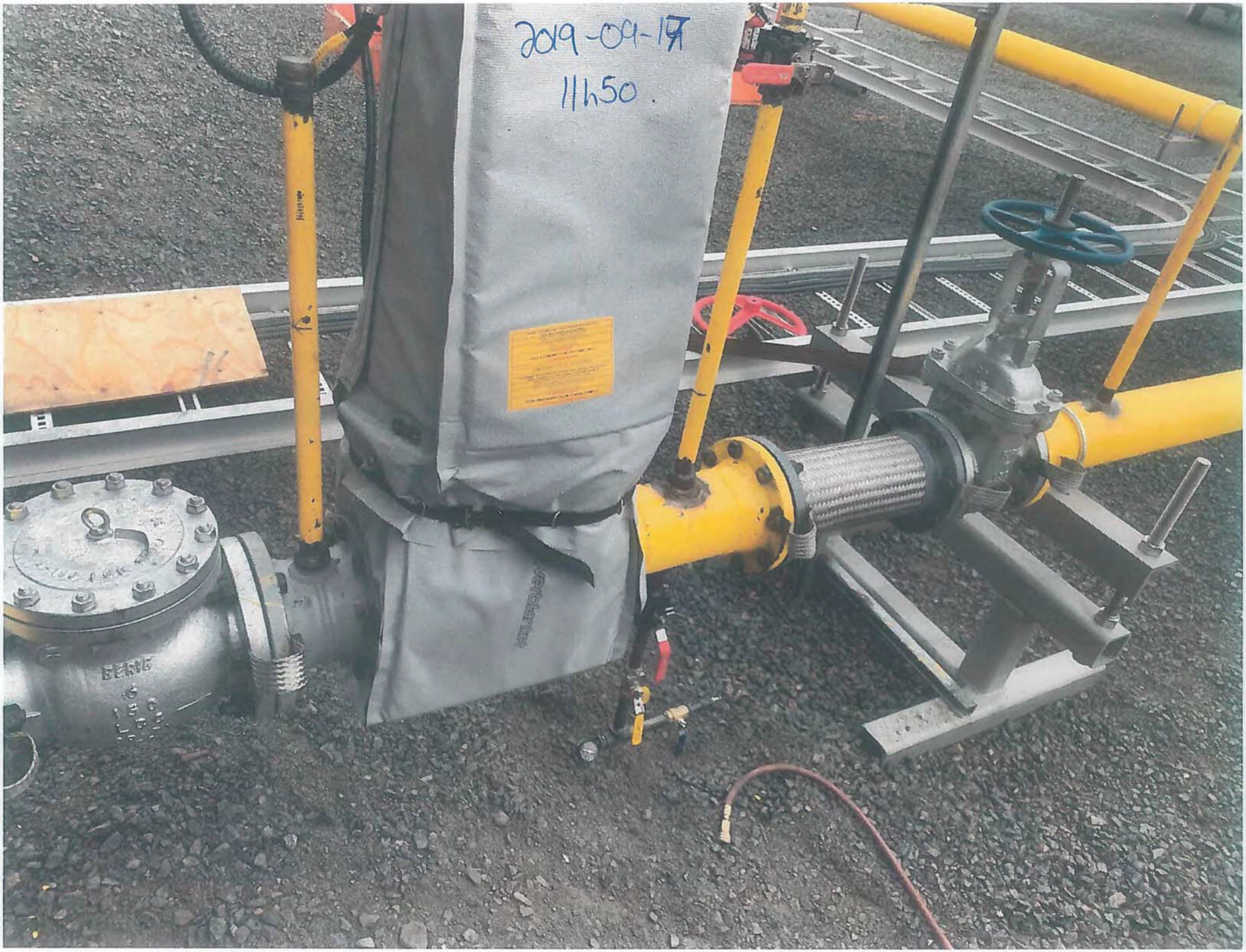
2019-09-17
11h50.


MPa
bar
psi
NORGREN
IMi

5

MLTS_6056-18731
Heat# SEE BELOW

CCTF CORPORATION

4151 North Service Road, Burlington, ON L7L 4X6 (905) 335-5320

Date: 6/5/2019

Mill Test Reports

Invoice: 1596625-00
PO: 4072649

Customer: 49300-001
A.B.F MINES INC (ROUYN NORANDA
LIVRER A EQUIPEMENT KN
8254 RANG DU VIEUX PONT
ROUYN-NORANDA, QC J9Y 0H4

Line	Heat#	Product	Description
2	176433	2530031	1 A333-6 STD BLK SMLS SRL
3	141352	2530074	2 A333-6 STD BLK SMLS SRL
4	610879	2530090	4 A333-6 STD BLK SMLS SRL
5	175147	2530104	6 A333-6 STD BLK SMLS SRL
5	178322	2530104	6 A333-6 STD BLK SMLS SRL
6	175142	2530112	8 A333-6 STD BLK SMLS SRL
6	175146	2530112	8 A333-6 STD BLK SMLS SRL
6	176433	2530112	8 A333-6 STD BLK SMLS SRL
6	177833	2530112	8 A333-6 STD BLK SMLS SRL

Heat codes followed by ** have been corrected, change may not show on the packing slip

vallourec
Vallourec Soluções Tubulares do Brasil S.A.
Barreiro Plant - Av. Olinto Meireles, 65
ZIP 30640-010 - Belo Horizonte, MG

EcoTube

RINA
ISO 9001 - ISO/TS 16949
ISO 14001 - ISO 50001 - OHSAS 18001
Certified management systems

Inspection Certificate
(According to DIN EN 10204.3.1)
N°.: 0030030837 / 00 Sheet: 1 / 4

Customer: VALLOUREC CANADA INC

Country: Canada

Material Number: 276243
Work Order: 531796 / 10
Customer Order: VM-4682 - P.O 4038589-00

Inspection: Vallourec Soluções Tubulares do Brasil S.A.

PRODUCT: SEAMLESS STEEL PIPE, HOT FINISHED , PLAIN ENDS , NORMALIZED
DIMENSIONS: 33,40 mm X 3,38 mm **SCHEDULE:** 040 **GRADE:** GRADE 290 # GR 1 # 6 # B 1 STD 2530031
STANDARD: CSA-Z245.1-14 - CATEGORY II
IN ACCORDANCE ALSO TO THE STANDARDS: ASTM A 333M - 16 ASTM A 999M - 18 # ASTM A 106M - 18 ASTM A 530M - 12 # ASTM A 53M - 12 # ASME SA-333M - 17 ASME SA 999M - 17 # ASME SA-106M - 17 ASME SA 530M - 17
CUSTOMER SPECIFICATION: CCTF GrB,1,6,290 Cat II SS , 20.11.2017
SURFACE PROTECTION: EXTERNAL: LACQUER **PIPE ENDS PROTECTOR:** PLASTIC CAP
TOLERANCES: OUTSIDE DIAMETER (PIPE BODY): -0,40 mm / +0,40 mm **WALL THICKNESS:** -0,42 mm / +0,68 mm
TOLERANCES(PIPE ENDS): OUTSIDE DIAMETER: -0,40 mm / +0,40 mm
LENGTH: RANDOM 5486,00 mm - 6706,00 mm
STANDARD MARKING: PAINT STENCILED IN THE PIPE BODY: 531796/10 MANUFACTURER CSA-Z245.1-14 33,40 X 3,38 290 CAT II SS S HN HEAT NUMBER ASTM A/ASME SA 333, 1/6 HF SCH 040 LT -46C ASTM A/ASME SA 106 B 20700 KPA ASTM A 53 B NPS 1" X SCH 40 VSB LOGO
SHIPPING MARKING: NACE MR 0175/NACE MR 0103 - MADE IN BRAZIL * VM4682 / P.O # 4038589-00/ITEM-1 * TORONTO * CCTF

Heat	Pieces
176433	337
Total	337

THE PRODUCT IS SATISFACTORY IN THE FOLLOWING TESTS / INSPECTIONS: DIMENSIONAL # VISUAL # FLATTENING TEST # BENDING TEST # ENDS INSPECTION : UNTESTED ENDS CROPPED # HYDROSTATIC TEST: 20700,0 KPA 5 S # RESIDUAL MAGNETISM: MAX 30 GAUSS # ELECTROMAGNETIC TEST : CSAZ245.1-N10,LON/TRAN,OUT/INS # ULTRASONIC TEST FOR LAMINAR DEFECTS: ACC. CSA Z245.1-SOUR SERVICE #

vallourec

EcoTube

RINA
ISO 9001 ISO/TS 16949
ISO 14001 ISO 50001 OHSAS 18001
Certified management systems

Inspection Certificate
(According to DIN EN 10204.3.1)
N°.: 0030030837 / 00

Chemical Composition (%)

Process: Basic Oxygen Furnace, heats fully killed

Ceq: CSA-Z245.1-CE11 — Ceq: C+Mn/6+(Cr+Mo+V)/5 +(Ni+Cu)/15 — CE1: Cr + Cu + Mo + Ni + V

		C	Mn	P	S	Si	Ni	Cr	Mo	Al	Cu	V	Nb	B	Ti	N	Ca	Ceq	Ceq	CE1
Heat Analisys	Min		0,400			0,100														
	Max	0,240	1,350	0,025	0,025	0,500	0,400	0,300	0,120		0,400	0,080	0,020	0,0010	0,110			0,400	0,430	1,000
Product Analisys	Min		0,400			0,100														
	Max	0,240	1,350	0,025	0,025	0,500	0,400	0,300	0,120		0,400	0,080	0,020	0,0010	0,110			0,400	0,430	1,000
Heat Control Lot																				
176433 030003101210		0,10	1,27	0,012	0,004	0,28	0,03	0,06	0,01	0,029	0,070	0,004	0,015	0,0004	0,002	0,0099	0,0012	0,265	0,333	0,174
Check 1		0,11	1,29	0,011	0,004	0,29	0,03	0,06	0,01	0,029	0,074	0,005	0,017	0,0003	0,002	0,0098	0,0013	0,277	0,347	0,179
Check 2		0,10	1,29	0,011	0,004	0,29	0,03	0,06	0,01	0,029	0,074	0,005	0,017	0,0003	0,002	0,0088	0,0013	0,267	0,337	0,179

Ceq: Carbon Equivalent; Ceq: Carbon Equivalent; CE: Combined Elements;

Tensile Test

Specimen Direction: Longitudinal — **Temperature:** Room Temperature — **Wall Thickness:** 3,38 mm — **Gage Length:** L0=2"

Method:Elong.Total Under Load 0,50 %

		Type of Specimen	Area (MM2)	YS (MPA)	TS (MPA)	E (%)
Required: Min				290	415	25
Max					625	
Heat Control Lot						
176433 030003101210		FULL SECTION	321,3	349	477	44
		FULL SECTION	330,4	355	490	45

YS-Yield Strength; TS-Tensile Strength; E-Elongation;

Hardness Test Through Wall

Scale: HV

		Individual		MW1	MW2	MW3	Avg
Required: Min							
Max		246,0					
Heat Control Lot							
176433 030003101210			Q1	160,0	159,0	162,0	160,3

MW - Middle Wall;

vallourec

EcoTube

RINA

ISO 9001 - ISO/TS 16949
ISO 14001 - ISO 50001 - OHSAS 18001
Certified Management Systems

Inspection Certificate
(According to DIN EN 10204.3.1)
N°.: 0030030837 / 00 Sheet:3 / 4

Impact Test

Test Specimen: CHARPY 10X55X2.5 V NOTCH **Direction:** Longitudinal **Temperature:** -55°C **Striker radius:** 8 mm

Heat	Control Lot		AE1 (J)	AE2 (J)	AE3 (J)	AE4 (J)	AE5 (J)	AE Avg (J)	SA1 (%)	SA2 (%)	SA3 (%)	SA4 (%)	SA5 (%)	SA Avg (%)	LE1 (Mils)	LE2 (Mils)	LE3 (Mils)	LE Avg (Mils)
		Required: Min	7	7	7			7	50	50	50			60				
		Max																
176433	030003101210		52	56	55			54	100	100	100			100	55	55	55	55

AE - Absorbed Energy; SA - Shear Area; LE - Lateral Expansion;

Remarks:

1. MATERIAL IN ACCORDANCE WITH NACE MR 0175
PAR. 3.2/ISO 15156-2, ANNEX A.2.1.2/NACE MR0103 PAR.2.1. ALL LATEST
EDITIONS

2. SKU 2530031

3 THE WORKS OPERATE A QUALITY MANAGEMENT SYSTEM ACCORDING TO EUROPEAN
DIRECTIVE 2014/68/UE ANNEX I PAR. 4.3 (CERTIFICATE 2016 BH MP 02-03
VALID UNTIL 12.05.2019).
- MATERIAL ACCORDING TO PED 2014/68/UE ANNEX I PAR. 7.5

"STEEL MADE BY BOF PROCESS"

4. - NO WELD REPAIR
- FREE OF MERCURY CONTAMINATION
- NO RADIOACTIVE CONTAMINATION
- FINE GRAIN PRACTICE
- FULLY KILLED STEEL.
- MATERIAL FROM BRAZIL

vallourec

EcoTube

RINA
ISO 9001 - ISO/TS 16949
ISO 14001 - ISO 50001 OHSAS 18001
Certified Management Systems

Inspection Certificate
(According to DIN EN 10204.3.1)
N°.: 0030030837 / 00 Sheet:4 / 4

We hereby certify that this product has been manufactured and examined in accordance with all requirements of the standards and specifications and all the results are found to be satisfactory. This testimonial and certificate respectively is recorded by a computer system and is valid without signature. Alteration or use for others products are regarded as falsification of documents and will be subject to criminal jurisdiction.

QUALITY CONTROL DEPARTMENT
FAX: (55-31) 3328-2773

e-mail:luis.silva@vallourec.com

ENG. LUIZ FERNANDO DA SILVA - CREA/MG 58834-D
TECHNICAL RESPONSIBLE

DATE
11.20.2018

vallourec

Vallourec Soluções Tubulares do Brasil S.A.
Barreiro Plant - Av. Olinto Meireles, 65
ZIP 30640-010 - Belo Horizonte, MG

EcoTube

RINA
ISO 9001 - ISO/TS 16949
ISO 14001 - ISO 50001 - OHSAS 18001
Certified Management System

Inspection Certificate

(According to DIN EN 10204.3.1)

N°.: 0030023868 / 00 Sheet: 1 / 3

Customer: VALLOUREC CANADA INC

Country: Canada

Material Number: 273193
Work Order: 509784 / 10
Customer Order: VM4238/P.O # 4037205-00

Inspection: Vallourec Soluções Tubulares do Brasil S.A

PRODUCT: SEAMLESS STEEL PIPE, HOT FINISHED , BEVELED ENDS 30 DEG. , NORMALIZED
DIMENSIONS: 60.30 mm X 3.90 mm SCHEDULE: 040 GRADE: GRADE 290 # 6 # GR 1 2 STD 2530074
STANDARD: CSA-Z245.1-14 - CATEGORY II
IN ACCORDANCE ALSO TO THE STANDARDS: ASTM A 333M - 16 ASTM A 999M - 16 # ASME SA-333M - 15
SURFACE PROTECTION: EXTERNAL: LACQUER PIPE ENDS PROTECTOR: PLASTIC CAP
TOLERANCES: OUTSIDE DIAMETER (PIPE BODY): -0,60 mm / +0,60 mm WALL THICKNESS: -0,49 mm / +0,78 mm
LENGTH: RANDOM 5486,00 mm - 6706,00 mm
STANDARD MARKING: Paint stenciled in the pipe body: 509784/10 MANUFACTURER CSA-Z245.1-14 60.30 X 3,90 290 CAT II SS S HN LENGTH HEAT NUMBER ASTM A/ASME SA 333, 1/6 HF SCH 040 LT -46C NACE MR 0175/NACE MR 0103 VSB LOGO
SHIPPING MARKING: MADE IN BRAZIL * VM4238 / P.O # 4037205-00 * VANCOUVER
TOLERANCES(PIPE ENDS): OUTSIDE DIAMETER: -0,40 mm / +0,80 mm

Heat	Pieces
141352	122
Total	122

THE PRODUCT IS SATISFACTORY IN THE FOLLOWING TESTS / INSPECTIONS: DIMENSIONAL # VISUAL # FLATTENING TEST # ENDS INSPECTION : UNTESTED ENDS CROPPED # HYDROSTATIC TEST: 20700,0 KPA 5 S # RESIDUAL MAGNETISM: MAX 30 GAUSS # TESTE ELETROMAGNÉTICO : ACCORDING TO CSA Z245.1 # ULTRASONIC TEST FOR LAMINAR DEFECTS: ACC. CSA Z245.1-SOUR SERVICE #

Chemical Composition (%)

Process: Basic Oxygen Furnace, heats fully killed

Ceq: CSA-Z245.1-CE11 CE1: Mn/C

		C	Mn	P	S	Si	Ni	Cr	Mo	Cu	V	Nb	B	Ti	Ceq	CE1
Heat Analisys	Min		0,400			0,100										3,000
	Max	0,240	1,350	0,025	0,025	0,500	0,400	0,300	0,120	0,400	0,080	0,020	0,0010	0,110	0,400	
Product Analisys	Min		0,400			0,100										3,000
	Max	0,240	1,350	0,025	0,025	0,500	0,400	0,300	0,120	0,400	0,080	0,020	0,0010	0,110	0,400	
Heat	Control Lot															
141352	030002889902	0,10	1,32	0,020	0,001	0,31	0,01	0,07	0,03	0,010	0,006	0,015	0,0002	0,002	0,342	13,200
	Check 1	0,10	1,32	0,020	0,001	0,31	0,01	0,07	0,03	0,012	0,006	0,016	0,0002	0,002	0,343	12,941
	Check 2	0,10	1,32	0,020	0,001	0,31	0,01	0,07	0,03	0,012	0,006	0,016	0,0002	0,002	0,343	12,816

Ceq: Carbon Equivalent; CE: Combined Elements;

vallourec

EcoTube

RINA

Inspection Certificate
(According to DIN EN 10204.3.1)
N°.: 0030023868 / 00 Sheet:2 / 3

Tensile Test

Specimen Direction: Longitudinal Temperature: Room Temperature Gage Length: L0=2" Method:Elong.Total Under Load 0.50 %

		Type of Specimen	Area (MM2)	YS (MPA)	TS (MPA)	E (%)
	Required: Min			290	415	26
	Max				625	
Heat	Control Lot					
141352	0300023889902	STRIP WIDTH 19.05 MM	83.6	406	517	37

YS-Yield Strength; TS-Tensile Strength; E-Elongation;

Hardness Test Through Wall

Scale: HV

		Individual	AE2	AE3
	Required: Min			
	Max	246.0		

Heat	Control Lot		MW1	MW2	MW3	Avg
141352	0300023889902	Q1	163.0	166.0	160.0	163.0

MW - Middle Wall;

Impact Test

Test Specimen: CHARPY 10X55X2.5 V NOTCH Direction: Longitudinal Temperature: -57°C Striking up: 8 mm

		AE1 (J)	AE2 (J)	AE3 (J)	AE4 (J)	AE5 (J)	AE Avg (J)
	Required: Min	4	4	4			5
	Max						
Heat	Control Lot						
141352	0300023889902	42	40	46			43

AE - Absorbed Energy;

Remarks:
1. MATERIAL IN ACCORDANCE WITH NACE MR 0175
PAR. 3.2/ISO 15156-2, ANNEX A.2.1.2/NACE MR0103 PAR.2.1. ALL LATEST EDITIONS.

2. SKU 2530074

vallourec

EcoTube

RINA

Inspection Certificate
(According to DIN EN 10204.3.1)
N°.: 0030023868 / 00 Sheet:3 / 3

3. - MATERIAL SOUR SERVICE AS DEFINED IN PARAGRAPH 16 OF CSA Z241.1, BUT WITHOUT HIC TEST

4. MATERIAL:
- NO WELD REPAR
- FREE OF MERCURY
- FINE GRAIN PRACTICE
- FULLY KILLED STEEL
- MATERIAL FROM BRAZIL

We hereby certify that this product has been manufactured and examined in accordance with all requirements of the standards and specifications and all the results are found to be satisfactory. This testimonial and certificate respectively is recorded by a computer system and is valid without signature. Alteration or use for others products are regarded as falsification of documents and will be subject to criminal jurisdiction.

QUALITY CONTROL DEPARTMENT
FAX: (55-31) 3328-2617

e-mail:gustavo.pinheiro@vallourec.com

DR. GUSTAVO ALVES PINHEIRO - CREA/MG-109170/D
TECHNICAL RESPONSIBLE

DATE
08.14.2017

ECO TUBES: The tubes from Vallourec do Brasil S.A. are manufactured with steel which uses charcoal as a source of energy in its production. This coal comes from more than 100.000 ha of forest planted by Vallourec Florestal Ltda.. With the acquisition of 4,6 ton(s) os steel tubes from Vallourec do Brasil S.A., your company contributed to the reduction of the greenhouse effect, avoiding the accumulation of 8,3 ton(s) of Carbon Dioxide CO2 in the atmosphere.

Benteler Steel/Tube GmbH
Postfach 13 40
33043 Paderborn
Deutschland
Tel.: + 49.5254.81-0 Fax: + 49.5254.13666

BENTELER
Steel/Tube

ABNAHMEPRÜFZEUGNIS EN 10204-3.1

INSPECTION CERTIFICATE EN 10204-3.1
CERTIFICAT DE RECEPTION EN 10204-3.1
EN 10204:2005-01

Benteler Steel/Tube GmbH - Postfach 1340 - 33043 Paderborn - Deutschland

CCTF Corporation
Unit 2 4151 North Service Road
BURLINGTON, ON ON L7L 4X6
CANADA

Dokument-Nr.: 65-1069887/001/E
Document No.:
No. du document:

Prüf-Nr.:
Inspection No.:
No. du certificat:

Blatt: 1 / 6
Page:
Page:

Kunden-Bestell-Nr.: 46005849 / CCTF 4038177-00
Purchase Order No.:
No. de commande du client:

Hersteller: Warmrohrwerk Dinslaken
Manufacturer: (DIN EN ISO 9001, ISO/TS-16949 CERTIFIED BY TUEV NORD CERT)
Producteur: (PED 2014/68/EU CERTIFIED BY TUEV NORD SYSTEMS)

Benteler Auftrags-Nr.: 1646606
Benteler Order No.:
No. de commande Benteler:

Herstellerzeichen:
Manufacturer's brand:
Marque du producteur:

Versandanzeigen-Nr.: 6591130
Dispatch Note No.:
No. d'avis d'expédition:

Stempel des Abnahmebeauftragten: WA
Stamp of the inspection representative:
Poinçon du contrôleur:

Produkt: NAHTLOSE STAHLROHRE
Product: SEAMLESS STEEL TUBES
Produit: TUBES D' ACIER SANS SOUDURE

Stahlerschmelzungsverfahren: ELEKTROSTAHL
Steelmaking process: ELECTRIC FURNACE
Procédé d'élaboration de l'acier: FOUR ELECTRIQUE

Lieferbedingungen: **Terms of delivery:** Conditions de livraison:	ASTM-A 106-2015, ASTM-A 333-2016-HF, ASME SA-106, ASME BPVC.II.A-2017, ASME SA-333-HF, ASME BPVC.II.A-2017, CSA Standard Z245.1-14 Category II, Sour Service, ANSI/NACE MR0175/ISO 15156-1: 2015, ANSI/NACE MR0175/ISO 15156-2: 2015
Maße - Toleranzen: **Dimensions-tolerances:** Dimensions-tolérances:	ASME SA-106, ASME BPVC.II.A-2017, ASTM-A 106-2015, ASME SA-999 ASME BPVC.II.A-2017, ASTM-A 999-2016
Stahlsorte: **Steel grade:** Nuance d'acier:	GRADE 1, GRADE 290, GRADE 6, GRADE B
Lieferzustand: **Delivery condition:** État de livraison:	Normalized
Produktkennzeichnung: **Product marking:** Marquage du produit:	FS: BENTELER Z.245.1 - 14 - A / SA-106 / A / SA-333 B/1/6/290 CATEGORIE 2 SS HEAT-NO. LT 50 SMLS HN DIMENSION TEST PRESSURE S6 WA GERMANY PO 4038177-00 / 2530090 DIMENSIONS SCHEDULE PS: HEAT-NO. DIMENSIONS SCHEDULE B/1/6/290 SS

AEZ = Ätztintenbeschriftung, Etching ink marking, Gravure à l'encre . FK = Farbkennzeichnung, color marking, marquage par couleur . FS = Farbschablonierung, paint stenciling, marquage par peinture . FSD = Farbstrahldrucker Color jet printer, imprimante à jet d'encre de couleur . LK = Laserkennzeichnung, Laser marking, Marquage laser . PKE = Etikettenkennzeichnung, tag marking, marquage sur étiquette . PS = Prägestempel, die stamp, marquage par poinçonnage . TS = Tintenstrahlkennzeichnung, Ink jet spray marking, imprimante à jet d'encre

Benteler Steel/Tube GmbH
Postfach 13 40
33043 Paderborn
Deutschland
Tel.: + 49.5254.81-0 Fax: + 49.5254.13666

BENTELER
Steel/Tube

ABNAHMEPRÜFZEUGNIS EN 10204-3.1

INSPECTION CERTIFICATE EN 10204-3.1
CERTIFICAT DE RECEPTION EN 10204-3.1

Dokument-Nr.: / **Document No.:** / No. du document: 65-1069887/001/E

Prüf-Nr.: / **Inspection No.:** / No. du certificat:

Blatt: / **Page:** / Page: 2 / 6

Pos. / **Item** / Poste	Stück / **Number** / Nombre	Maße / **Dimensions** / Dimensions		Gesamtlänge / **Length total** / Longueur totale	Gewicht / **Weight** / Poids	Schmelzen-Nr. / **Heat No.** / No. de coulée	Prüfdruck / **Test pressure** / Pression d'épreuve		Rohr-Nr.-Gruppe / **Tube number group** / Série de no. des tubes	Vielfachlängen / **Multiple lengths** / Longueurs multiples
			feet	feet	lbs		PSI	s		
0002	72	4" NPS * Sched. 40 20 FT - 22 FT	2530090	1570,90	17284	610879	2650	5		

Schmelzenanalyse [%] / **Heat analysis [%]** / Analyse sur coulée [%]

Pos. / **Item** / Poste	Schmelzen-Nr. / **Heat No.** / No. de coulée	C	SI	MN	P	S	CR	MO	NI	CU	V	NB	TI	B
0002	610879	0,130	0,320	1,25	0,008	0,001	0,14	0,06	0,25	0,11	0,062	0,014	0,003	0,0003

1. Formel: CE IIW= C+ (Mn/6)+ ((Cr+ Mo+ V)/5)+ ((Cu+ Ni)/15)< = 0,42 %
2. Formel: CEV= C+ F* ((Mn/6)+ (Si/24)+ (Cu/15)+ (Ni/20)+ ((Cr+ Mo+ V+ Nb)/5) + (5* B)) < = 0,40 %
3. Formel: Mn / C > = 3 / 1
4. Formel: Cr+ Cu+ Mo+ Ni+ V< = 1,00 %

Formelergebnisse / **Formula results** / Résultats des formules

Pos. / **Item** / Poste	Schmelzen-Nr / **Heat No.** / No. de coulée	1. Formel / **1.** / 1.	2. Formel / **2.** / 2.	3. Formel / **3.** / 3.	4. Formel / **4.** / 4.
0002	610879	0,415	0,369	9,615	0,622

Produktanalyse [%] / **Product analysis [%]** / Analyse sur produit [%]

Pos. / **Item** / Poste	Schmelzen-Nr. / **Heat No.** / No. de coulée	C	SI	MN	P	S	CR	MO	NI	CU	V	NB	TI	B
0002	610879	0,130	0,320	1,21	0,004	0,003	0,15	0,06	0,26	0,09	0,067	0,017	0,005	0,0004

1. Formel: CE IIW= C+ (Mn/6)+ ((Cr+ Mo+ V)/5)+ ((Cu+ Ni)/15)< = 0,42 %
2. Formel: CEV= C+ F* ((Mn/6)+ (Si/24)+ (Cu/15)+ (Ni/20)+ ((Cr+ Mo+ V+ Nb)/5) + (5* B)) < = 0,40 %
3. Formel: Mn / C > = 3 / 1
4. Formel: Cr+ Cu+ Mo+ Ni+ V< = 1,00 %

Benteler Steel/Tube GmbH
Postfach 13 40
33043 Paderborn
Deutschland
Tel.: + 49.5254.81-0 Fax: + 49.5254.13666

BENTELER
Steel/Tube

ABNAHMEPRÜFZEUGNIS EN 10204-3.1
INSPECTION CERTIFICATE EN 10204-3.1
CERTIFICAT DE RECEPTION EN 10204-3.1

Dokument-Nr.: 65-1069887/001/E
Document No.:
No. du document:

Prüf-Nr.:
Inspection No.:
No. du certificat:

Formelergebnisse / **Formula results** / Résultats des formules

Pos.	Schmelzen-Nr	1. Formel	2. Formel	3. Formel	4. Formel
Item	**Heat No.**	**1.**	**2.**	**3.**	**4.**
Poste	No. de coulée	1.	2.	3.	4.
0002	610879	0,410	0,366	9,308	0,627

Prüfergebnisse / **Test results** / Résultats des essais

Die Rohre sind auf Dichtheit geprüft durch: **The tubes have been submitted to a leak tightness test by:** Les tubes ont passé un contrôle d'étanchéité par:	Hydrostatic test: acc. to CSA Z245.1, holding time min 5 seconds, Test pressure/Time-record	PASSED
Die Rohre wurden zerstörungsfrei geprüft: **The tubes are non destructive tested:** Les tubes ont passé un essai non destructif:	ET-test: acc. to CSA Z245.1; for imperfections; drilled hole: 3,20 mm	PASSED

Augensichtkontrolle: **Visual inspection:** Examen visuel:	PASSED	Maßkontrolle: **Dimensions examination:** Vérification des dimensions:	PASSED	Ringfaltversuch: **Flattening test:** Essai d'aplatissement:	PASSED

Ergebnisse der mechanischen Prüfung / **Results of mechanical testing** / Résultats des essais mécaniques

Die Probennahme erfolgte an Vielfachlängen.
The sampling was carried out on multiple lengths.
L'echantillonage etait realise aux longueurs multiples.

Zugversuch längs bei RT, Streifenprobe / **Tensile test longitudinal at RT, Strip test specimen** / Essai de traction longitudinale à TA, Bande decoupee sur tube

Pos.	Proben-Nr.	Schmelzen-Nr.	Probenabmessung	Streckgrenze	Zugfestigkeit	Dehnung	
Item	**Specimen No.**	**Heat No.**	**Specimen dimensions**	**Yield strength**	**Tensile strength**	**Elongation**	
Poste	No. de l'éprouv.	No. de coulée	Dimensions de l'éprouv.	Limite élastique	Résistance à la traction	Allongement	
Anforderungen				RT 0,5 %	Rm	A2"	1. Formel
Requirements			mm	PSI	PSI	%	**1. Formula**
Exigences				42206-71794	60046-90504	MIN 32.00	1. Formule
0002	000001	610879	25,40 X 5,80	59175	77740	32,00	
0002	000002	610879	25,40 X 6,10	58305	78320	32,00	
0002	000003	610879	25,40 X 6,20	58885	77305	32,00	
0002	000004	610879	25,40 X 6,20	59466	79336	34,00	

Benteler Steel/Tube GmbH
Postfach 13 40
33043 Paderborn
Deutschland
Tel.: + 49.5254.81-0 Fax: + 49.5254.13666

BENTELER
Steel/Tube

ABNAHMEPRÜFZEUGNIS EN 10204-3.1

INSPECTION CERTIFICATE EN 10204-3.1
CERTIFICAT DE RECEPTION EN 10204-3.1

Dokument-Nr.: 65-1069887/001/E
Document No.:
No. du document:

Prüf-Nr.:
Inspection No.:
No. du certificat:

Härteprüfung / **Hardness test** / Essai de dureté

Pos.	Proben-Nr.	Schmelzen-Nr.	Härte				
Item	**Specimen No.**	**Heat No.**	**Hardness**				
Poste	No. de l'éprouv.	No. de coulée	Dureté				
Anforderungen			HRC	HB	HV	HRB	HBW
Requirements							
Exigences				MAX 200			
0002	000001	610879		159			
0002	000002	610879		158			
0002	000003	610879		160			
0002	000004	610879		156			

Kerbschlagbiegeversuch **Notched bar impact test** / Essai de flexion par choc (résilience) [1 CHARPY_V]

Probenlage: längs (L); Prüftemperatur: -51 °F
Specimen position: longitudinal (L);Test temperature: -51 °F
Position de l'éprouvette: longitudinal (L);Température d'essai: -51 °F

Pos.	Proben-Nr.	Schmelzen-Nr.	Probenabmessung			Kerbschlagarbeit		Kerbschlagzähigkeit		Verf.-Bruchanteil		Laterale Breitung		Sprödbruchanteil	
Item	**Specimen No.**	**Heat No.**	**Specimen dimensions**			**Absorbed energy**		**Impact strength**		**Shear fracture**		**Lateral expansion**		**Brittle Fracture**	
Poste	No. de l'éprouv.	No. de coulée	Dimensions de l'éprouvette			Energie absorbée		Résistance au choc		Rupture ductile		Expansion latérai		Rupture Fragile	
Anforderungen			Länge	Breite	Höhe	einzel	mittel	einzel	mittel	einzel	mittel	einzel	mittel	einzel	mittel
Requirements			**Length**	**Width**	**Height**	**single**	**average**	**single**	**average**	**single**	**average**	**single**	**average**	**single**	**average**
Exigences			Longueur	Largeur	Hauteur	individuelle	moyenne	individuelle	moyenne	individuelle	moyenne	individuelle	moyenne	individuelle	moyenne
			mm	mm	mm	J	J	J/cm²		%	%	mm	mm		
			55	5,00	10,00	MIN 014									
0002	000001	610879	55	5,00	10,00	88				70		2,20			
				5,00	10,00	89				70		2,10			
				5,00	10,00	85	87			70	70	2,00	2,10		

Benteler Steel/Tube GmbH
Postfach 13 40
33043 Paderborn
Deutschland
Tel.: + 49.5254.81-0 Fax: + 49.5254.13666

BENTELER
Steel/Tube

ABNAHMEPRÜFZEUGNIS EN 10204-3.1

INSPECTION CERTIFICATE EN 10204-3.1
CERTIFICAT DE RECEPTION EN 10204-3.1

Dokument-Nr.: **Document No.:** No. du document: 65-1069887/001/E

Prüf-Nr.: **Inspection No.:** No. du certificat:

Blatt: 5 / 6 **Page:** Page:

Kerbschlagbiegeversuch **Notched bar impact test** / Essai de flexion par choc (résilience) [2 CHARPY_V]

Probenlage: quer (Q); Prüftemperatur: -51 °F
Specimen position: transversal (Q);Test temperature: -51 °F
Position de l'éprouvette: transversal (Q);Température d'essai: -51 °F

Pos. Item Poste	Proben-Nr. Specimen No. No. de l'éprouv.	Schmelzen-Nr. Heat No. No. de coulée	Probenabmessung Specimen dimensions Dimensions de l'éprouvette			Kerbschlagarbeit Absorbed energy Energie absorbée		Kerbschlagzähigkeit Impact strength Résistance au choc		Verf.-Bruchanteil Shear fracture Rupture ductile		Laterale Breitung Lateral expansion Expansion latéral		Sprödbruchanteil Brittle Fracture Rupture Fragile	
Anforderungen Requirements Exigences			Länge Length Longueur	Breite Width Largeur	Höhe Height Hauteur	einzel single individuelle	mittel average moyenne	einzel single individuelle	mittel average moyenne	einzel single individuelle	mittel average moyenne	einzel single individuelle	mittel average moyenne	einzel single individuelle	mittel average moyenne
			mm	mm	mm	J	J	J/cm²		%	%	mm	mm		
			55	5,00	10,00	MIN 014	MIN 020			MIN 50	MIN 60				
0002	000001	610879	55	5,00	10,00	35				60		1,20			
				5,00	10,00	32				60		1,10			
				5,00	10,00	33	33			60	60	1,00	1,10		

Wärmebehandlung / **Heat treatment** / Traitement thermique

Normalizing temperature: 920°C, Holding time: 5 min., Cooling: Air

Restmagnetismus / **Demagnetize** / Démagnétiser

demagnetized tubes; 1 measurement per 4 hours on both tube ends Two readings 180°apart around the circumference. Average value max 3.0 Millitesla (24 A/cm), individual value max 3.5 Millitesla (28 A/cm)

Vermerk / **Remark** / Remarque

NACE Standard: Hardness acc. to NACE Standard MR0175 HRC max. 22., The material meets the requirements of NACE MR0103, Region 3, in accordance to Figure 1 and Appendix A.2, ANSI/NACE MR0175/ISO 15156-2:2015; Certificate remarks: fully killed fine grained steel, This is to confirm that the seamless linepipe supplied by BENTELER and verified to CSA Standard Z245.1-14 meets the requirement for micro hardness of max. 248 HV 500 gf., No weld repair has been carried out, Sour Service, The Material is Aluminium deoxydized and inclusion shape controlled with Calcium-Silicon treatment, It is the end user's responsibility to ensure that all environmental requirements as well as the requirements regarding engineering, construction and operation of facilities are fulfilled in the country of use. Fit for purpose of the parts as well as homologation is not the scope of this contract., Steelmaking: BENTELER Steel Mill Lingen

Grain size: acc. to ASTM-E 112; Grain size and finer: 6

Verkäufer(in) / **Sales Personnel** / Personne chargée : Mr Dyka, Tel.: 05254/81-4265-204265, Fax: 204229

Benteler Steel/Tube GmbH
Postfach 13 40
33043 Paderborn
Deutschland
Tel.: + 49.5254.81-0 Fax: + 49.5254.13666

BENTELER
Steel/Tube

ABNAHMEPRÜFZEUGNIS EN 10204-3.1
INSPECTION CERTIFICATE EN 10204-3.1
CERTIFICAT DE RECEPTION EN 10204-3.1

Dokument-Nr.: 65-1069887/001/E
Document No.:
No. du document:

Prüf-Nr.:
Inspection No.:
No. du certificat:

Blatt: 6 / 6
Page:
Page:

Dinslaken, 13.04.2018, TEL.: 02064.623-5360 FAX: 02064.623-5390

Abnahmebeauftragter
Inspection representative
Contrôleur
i. A. Patrick Hanraths / LABACH

Es wird bestätigt, daß die gelieferten Erzeugnisse den techn. Lieferbedingungen des Auftrages entsprechen.Dieses Dokument wurde mittels EDV erstellt und ist ohne Unterschrift rechtsgültig.
We certify that the supplied products comply with the order specifications. This document was prepared by means of electronic data processing and is valid without signature..
Nous attestons que les produits livrés sont conformes aux stipulations de la commande.Ce document a été établi par traitement électronique de l'information et est valide sans signature.

vallourec

Vallourec Soluções Tubulares do Brasil S.A.
Barreiro Plant - Av. Olinto Meireles, 65
ZIP 30640-010 - Belo Horizonte, MG

EcoTube

RINA

Inspection Certificate

(According to DIN EN 10204 3.1)

N°.: 0030032296 / 00 Sheet: 1 / 4

Customer: VALLOUREC CANADA INC

Country: Canada

Material Number: 276430
Work Order: 536721 / 20
Customer Order: VM-4811/P.O.4038915-00

Inspection: Vallourec Soluções Tubulares do Brasil S.A.

PRODUCT: SEAMLESS STEEL PIPE, HOT FINISHED , BEVELED ENDS 30 DEG. , NORMALIZED
DIMENSIONS: 168,30 mm X 7,11 mm **GRADE:** GRADE 290 # GR I # 6 # B 6 STD 2530104
STANDARD: CSA-Z245.1-18 - CATEGORY II
IN ACCORDANCE ALSO TO THE STANDARDS: ASTM A 333M - 18 ASTM A 999M - 18 # ASTM A 106M - 18 ASTM A 530M - 18 # ASTM A 53M - 18 # ASME SA-333M - 17 ASME SA 999M - 17 # ASME SA-106M - 17 ASME SA 530M - 17
CUSTOMER SPECIFICATION: CCTF GrB,1,6,290 Cat II SS , 20.11.2017
SURFACE PROTECTION: EXTERNAL: LACQUER **PIPE ENDS PROTECTOR:** PLASTIC CAP
TOLERANCES: OUTSIDE DIAMETER (PIPE BODY): -0,80 mm / +1,26 mm **WALL THICKNESS:** -0,89 mm / +1,07 mm
TOLERANCES(PIPE ENDS): OUTSIDE DIAMETER: -0,40 mm / +1,60 mm
LENGTH: RANDOM 5486,00 mm - 6706,00 mm
STANDARD MARKING: PAINT STENCILED IN THE PIPE BODY: 536721/20 MANUFACTURER CSA-Z245.1-18 168,30 X 7,11 290 CAT II M46C SS S HN LENGTH HEAT NUMBER ASTM A/ASME SA 333, 1/6 HF SCH 040 LT -46C ASTM A/ASME SA 106 B 18400 KPA WEIGHT ASTM A 53 B VSB LOGO
SHIPPING MARKING: NPS 6" X SCH 40 NACE MR 0175/NACE MR 0103 - MADE IN BRAZIL * VM4811 / P.O # 4038915-00/ITEM-2 * TORONTO * CCTF

Heat	Pieces
175147	11
175724	24
178322	89
Total	**124**

THE PRODUCT IS SATISFACTORY IN THE FOLLOWING TESTS / INSPECTIONS: DIMENSIONAL # VISUAL # FLATTENING TEST # ENDS INSPECTION : UNTESTED ENDS CROPPED # HYDROSTATIC TEST: 18400,0 KPA 5 S # RESIDUAL MAGNETISM: MAX 30 GAUSS # ELECTROMAGNETIC TEST : CSAZ245.1-N10,LON/TRAN,OUT/INS # ULTRASONIC TEST FOR LAMINAR DEFECTS: ACC. CSA Z245.1-SOUR SERVICE #

vallourec

EcoTube

RINA

ISO 9001 ISO/TS 16949
ISO 14001 ISO 50001 OHSAS 18001

Inspection Certificate
(According to DIN EN 10204.3.1)
N°.: 0030032296 / 00

Chemical Composition (%)

Process: Basic Oxygen Furnace, heats fully killed

Ceq: CSA-Z245.1-CE11 — Ceq: C+Mn/6+(Cr+Mo+V)/5+(Ni+Cu)/15 — CE1: Cr + Cu + Mo + Ni + V

		C	Mn	P	S	Si	Ni	Cr	Mo	Al	Cu	V	Nb	B	Ti	N	Ca	Ceq	Ceq	CE1
Heat Analisys	Min		0,400			0,100														
	Max	0,240	1,350	0,025	0,025	0,500	0,400	0,300	0,120		0,400	0,080	0,020	0,0010	0,110			0,400	0,430	1,000
Product Analisys	Min		0,400			0,100														
	Max	0,240	1,350	0,025	0,025	0,500	0,400	0,300	0,120		0,400	0,080	0,020	0,0010	0,110			0,400	0,430	1,000
Heat	Control Lot																			
175147	030003127653	0,12	1,31	0,010	0,007	0,30	0,01	0,04	0,01	0,027	0,025	0,004	0,016	0,0004	0,003	0,0055	0,0013	0,309	0,351	0,084
	Check 1	0,12	1,29	0,010	0,005	0,29	0,01	0,04	0,01	0,028	0,024	0,004	0,017	0,0002	0,003	0,0050	0,0011	0,309	0,348	0,088
	Check 2	0,12	1,29	0,010	0,006	0,28	0,01	0,04	0,01	0,027	0,023	0,004	0,016	0,0002	0,002	0,0050	0,0012	0,308	0,347	0,086
175724	030003127905	0,11	1,30	0,009	0,003	0,30	0,02	0,05	0,01	0,029	0,030	0,004	0,015	0,0004	0,002	0,0045	0,0015	0,284	0,347	0,115
	Check 1	0,11	1,31	0,009	0,002	0,29	0,02	0,05	0,01	0,031	0,029	0,004	0,016	0,0002	0,002	0,0050	0,0013	0,285	0,346	0,116
	Check 2	0,11	1,32	0,009	0,002	0,28	0,02	0,05	0,01	0,030	0,029	0,003	0,016	0,0002	0,002	0,0050	0,0013	0,287	0,346	0,115
178322	030003155671	0,10	1,28	0,012	0,003	0,29	0,04	0,06	0,02	0,028	0,080	0,004	0,016	0,0004	0,002	0,0071	0,0015	0,267	0,348	0,201
	Check 1	0,10	1,29	0,013	0,003	0,29	0,04	0,06	0,02	0,030	0,083	0,002	0,017	0,0002	0,002	0,0071	0,0014	0,269	0,350	0,197
	Check 2	0,10	1,27	0,011	0,004	0,30	0,04	0,06	0,02	0,029	0,082	0,004	0,015	0,0002	0,003	0,0075	0,0013	0,267	0,347	0,203

Ceq: Carbon Equivalent; Ceq: Carbon Equivalent; CE: Combined Elements;

Tensile Test

Specimen Direction: Longitudinal — **Temperature:** Room Temperature — **Wall Thickness:** 7,11 mm — **Gauge Length:** L0=2"

Method:Elong.Total Under Load 0,50 %

		Type of Specimen	Area (MM2)	YS (MPA)	TS (MPA)	E (%)
	Required: Min			290	415	33
	Max				625	
Heat	Control Lot					
175147	030003140032	STRIP WIDTH 25,4 MM	188,5	376	500	40
		STRIP WIDTH 25,4 MM	190,0	382	505	40
175724	030003127905	STRIP WIDTH 25,4 MM	188,8	371	486	39
		STRIP WIDTH 25,4 MM	186,2	369	500	39
	030003140031	STRIP WIDTH 25,4 MM	188,8	370	489	39
		STRIP WIDTH 25,4 MM	189,2	373	492	40
178322	030003155671	STRIP WIDTH 25,4 MM	186,5	355	488	39
		STRIP WIDTH 25,4 MM	185,9	360	492	40

YS-Yield Strength; TS-Tensile Strength; E-Elongation;

vallourec

EcoTube

RINA

Inspection Certificate
(According to DIN EN 10204.3.1)
N°.: 0030032296 / 00 Sheet:3 / 4

Hardness Test

Scale: HV

		Max
	Required: Min	
	Max	246,0
Heat	Control Lot	
175147	030003140032	156,0 156,0
175724	030003127905	163,0 167,0
	030003140031	163,0 167,0
178322	030003155671	143,0 143,0

Impact Test

Test Specimen: CHARPY 10X55X5 V NOTCH — Direction: Longitudinal — Temperature: -53°C — Striker radius: 8 mm

		AE1 (J)	AE2 (J)	AE3 (J)	AE4 (J)	AE5 (J)	AE Avg (J)	SA1 (%)	SA2 (%)	SA3 (%)	SA4 (%)	SA5 (%)	SA Avg (%)	LE1 (Mils)	LE2 (Mils)	LE3 (Mils)	LE Avg (Mils)
	Required: Min	14	14	14			14	50	50	50			60				
	Max																
Heat	Control Lot																
175147	030003140032	122	123	123			123	100	100	100			100	64	64	65	67
175724	030003140031	122	122	122			122	100	100	100			100	64	64	67	67
178322	030003155671	144	142	151			146	100	100	100			100	79	79	66	75

AE - Absorbed Energy; SA - Shear Area; LE - Lateral Expansion;

Impact Test

Test Specimen: CHARPY V 10X55X5 FLATTENED — Direction: Transverse — Temperature: -46°C — Striker radius: 8 mm

		AE1 (J)	AE2 (J)	AE3 (J)	AE4 (J)	AE5 (J)	AE Avg (J)	SA1 (%)	SA2 (%)	SA3 (%)	SA4 (%)	SA5 (%)	SA Avg (%)	LE1 (Mils)	LE2 (Mils)	LE3 (Mils)	LE Avg (Mils)
	Required: Min	14	14	14			14	50	50	50			60				
	Max																
Heat	Control Lot																
175147	030003140032	121	121	122			121	100	100	100			100	53	58	59	64
175724	030003140031	121	122	121			122	100	100	100			100	55	60	55	68
178322	030003155671	106	111	104			106	100	100	100			100	76	80	72	76

AE - Absorbed Energy; SA - Shear Area; LE - Lateral Expansion;

vallourec

EcoTube

RINA

Inspection Certificate
(According to DIN EN 10204 3.1)
N°.: 0030032296 / 00 Sheet:4 / 4

Remarks:
1. MATERIAL IN ACCORDANCE WITH NACE MR 0175 PAR. 3.2/ISO 15156-2, ANNEX A.2.1.2/NACE MR0103 PAR.2.1. ALL LATEST EDITIONS

2. SKU 2530104

3. THE WORKS OPERATE A QUALITY MANAGEMENT SYSTEM ACCORDING TO EUROPEAN DIRECTIVE 2014/68/UE ANNEX I PAR. 4.3 (CERTIFICATE 2016 BH MP 02-03 VALID UNTIL 12.05.2019).

- MATERIAL ACCORDING TO PED 2014/68/UE ANNEX I PAR. 7.5

4. - NO WELD REPAIR
- FREE OF MERCURY CONTAMINATION
- NO RADIOACTIVE CONTAMINATION
- FINE GRAIN PRACTICE
- FULLY KILLED STEEL
- MATERIAL FROM BRAZIL

NORMALIZED
TEMPERATURE 892°C
SOAKING TIME 40 MINUTES
METHOD OF COOLING : AIR

We hereby certify that this product has been manufactured and examined in accordance with all requirements of the standards and specifications and all the results are found to be satisfactory. This testimonial and certificate respectively is recorded by a computer system and is valid without signature. Alteration or use for others products are regarded as falsification of documents and will be subject to criminal jurisdiction.

QUALITY CONTROL DEPARTMENT
FAX: (55-31) 3328-2773

e-mail:luiz.silva@vallourec.com

ENG. LUIZ FERNANDO DA SILVA - CREA/MG 58834-D
TECHNICAL RESPONSIBLE

DATE
02.27.2019

vallourec

Vallourec Soluções Tubulares do Brasil S.A
Barreiro Plant - Av. Olinto Meireles, 65
ZIP 30640-010 - Belo Horizonte, MG

EcoTube

RINA
ISO 9001 ISO/TS 16949
ISO 14001 ISO 50001 OHSAS 18001

Inspection Certificate
(According to DIN EN 10204 3.1)
N°.: 0030032296 / 00 Sheet:1 / 4

Customer: VALLOUREC CANADA INC

Country: Canada

Material Number: 276430
Work Order: 536721 / 20
Customer Order: VM-4811/P.O.4038915-00

Inspection: Vallourec Soluções Tubulares do Brasil S.A.

PRODUCT: SEAMLESS STEEL PIPE, HOT FINISHED , BEVELED ENDS 30 DEG. , NORMALIZED
DIMENSIONS: 168,30 mm X 7,11 mm **GRADE:** GRADE 290 # GR 1 # 6 # B 6 STD 2530104
STANDARD: CSA-Z245.1-18 - CATEGORY II
IN ACCORDANCE ALSO TO THE STANDARDS: ASTM A 333M - 18 ASTM A 999M - 18 # ASTM A 106M - 18 ASTM A 530M - 18 # ASTM A 53M - 18 # ASME SA-333M - 17 ASME SA 999M - 17 # ASME SA-106M - 17 ASME SA 530M - 17
CUSTOMER SPECIFICATION: CCTF GrB,1,6,290 Cat II SS , 20.11.2017
SURFACE PROTECTION: EXTERNAL: LACQUER **PIPE ENDS PROTECTOR:** PLASTIC CAP
TOLERANCES: OUTSIDE DIAMETER (PIPE BODY): -0,80 mm / +1,26 mm **WALL THICKNESS:** -0,89 mm / +1,07 mm
TOLERANCES(PIPE ENDS): OUTSIDE DIAMETER: -0,40 mm / +1,60 mm
LENGTH: RANDOM 5486,00 mm - 6706,00 mm
STANDARD MARKING: PAINT STENCILED IN THE PIPE BODY: 536721/20 MANUFACTURER CSA-Z245.1-18 168,30 X 7,11 290 CAT II M46C SS S HN LENGTH HEAT NUMBER ASTM A/ASME SA 333, 1/6 HF SCH 040 LT -46C ASTM A/ASME SA 106 B 18400 KPA WEIGHT ASTM A 53 B VSB LOGO
SHIPPING MARKING: NPS 6" X SCH 40 NACE MR 0175/NACE MR 0103 - MADE IN BRAZIL * VM4811 / P.O # 4038915-00/ITEM-2 * TORONTO * CCTF

Heat	Pieces
175147	11
175724	24
178322	89
Total	124

THE PRODUCT IS SATISFACTORY IN THE FOLLOWING TESTS / INSPECTIONS: DIMENSIONAL # VISUAL # FLATTENING TEST # ENDS INSPECTION : UNTESTED ENDS CROPPED # HYDROSTATIC TEST: 18400,0 KPA 5 S # RESIDUAL MAGNETISM: MAX 30 GAUSS # ELECTROMAGNETIC TEST : CSAZ245.1-N10,LON/TRAN,OUT/INS # ULTRASONIC TEST FOR LAMINAR DEFECTS: ACC. CSA Z245.1-SOUR SERVICE #

vallourec

EcoTube

RINA

Inspection Certificate
(According to DIN EN 10204.3.1)
N°.: 0030032296 / 00

Chemical Composition (%)

Process: Basic Oxygen Furnace, heats fully killed

Ceq: CSA-Z245.1-CE11 — Ceq: C+Mn/6+(Cr+Mo+V)/5 +(Ni+Cu)/15 — CE1: Cr + Cu + Mo + Ni + V

		C	Mn	P	S	Si	Ni	Cr	Mo	Al	Cu	V	Nb	B	Ti	N	Ca	Ceq	Ceq	CE1
Heat Analisys	Min		0,400			0,100														
	Max	0,240	1,350	0,025	0,025	0,500	0,400	0,300	0,120		0,400	0,080	0,020	0,0010	0,110			0,400	0,430	1,000
Product Analisys	Min		0,400			0,100														
	Max	0,240	1,350	0,025	0,025	0,500	0,400	0,300	0,120		0,400	0,080	0,020	0,0010	0,110			0,400	0,430	1,000
Heat	Control Lot																			
175147	030003127653	0,12	1,31	0,010	0,007	0,30	0,01	0,04	0,01	0,027	0,025	0,004	0,016	0,0004	0,003	0,0055	0,0013	0,309	0,351	0,084
	Check 1	0,12	1,29	0,010	0,005	0,29	0,01	0,04	0,01	0,028	0,024	0,004	0,017	0,0002	0,003	0,0050	0,0011	0,309	0,348	0,088
	Check 2	0,12	1,29	0,010	0,006	0,28	0,01	0,04	0,01	0,027	0,023	0,004	0,016	0,0002	0,002	0,0050	0,0012	0,308	0,347	0,086
175724	030003127905	0,11	1,30	0,009	0,003	0,30	0,02	0,05	0,01	0,029	0,030	0,004	0,015	0,0004	0,002	0,0045	0,0015	0,284	0,347	0,115
	Check 1	0,11	1,31	0,009	0,002	0,29	0,02	0,05	0,01	0,031	0,029	0,004	0,016	0,0002	0,002	0,0050	0,0013	0,285	0,346	0,116
	Check 2	0,11	1,32	0,009	0,002	0,28	0,02	0,05	0,01	0,030	0,029	0,003	0,016	0,0002	0,002	0,0050	0,0013	0,287	0,346	0,115
178322	030003155671	0,10	1,28	0,012	0,003	0,29	0,04	0,06	0,02	0,028	0,080	0,004	0,016	0,0004	0,002	0,0071	0,0015	0,267	0,348	0,201
	Check 1	0,10	1,29	0,013	0,003	0,29	0,04	0,06	0,02	0,030	0,083	0,002	0,017	0,0002	0,002	0,0071	0,0014	0,269	0,350	0,197
	Check 2	0,10	1,27	0,011	0,004	0,30	0,04	0,06	0,02	0,029	0,082	0,004	0,015	0,0002	0,003	0,0075	0,0013	0,267	0,347	0,203

Ceq: Carbon Equivalent; Ceq: Carbon Equivalent; CE: Combined Elements;

Tensile Test

Specimen Direction: Longitudinal — **Temperature:** Room Temperature — **Wall Thickness:** 7,11 mm — **Gauge Length:** L0=2"

Method:Elong.Total Under Load 0,50 %

		Type of Specimen	Area (MM2)	YS (MPA)	TS (MPA)	E (%)
	Required: Min			290	415	33
	Max				625	
Heat	Control Lot					
175147	030003140032	STRIP WIDTH 25,4 MM	188,5	376	500	40
		STRIP WIDTH 25,4 MM	190,0	382	505	40
175724	030003127905	STRIP WIDTH 25,4 MM	188,8	371	486	39
		STRIP WIDTH 25,4 MM	186,2	369	500	39
	030003140031	STRIP WIDTH 25,4 MM	188,8	370	489	39
		STRIP WIDTH 25,4 MM	189,2	373	492	40
178322	030003155671	STRIP WIDTH 25,4 MM	186,5	355	488	39
		STRIP WIDTH 25,4 MM	185,9	360	492	40

YS-Yield Strength; TS-Tensile Strength; E-Elongation;

vallourec

EcoTube

RINA

Inspection Certificate
(According to DIN EN 10204.3.1)
N°.: 0030032296 / 00 Sheet 3 / 4

Hardness Test

Scale: HV

		Min	Max
	Required: Min		
	Max	246,0	
Heat	Control Lot		
175147	030003140032	156,0	156,0
175724	030003127905	163,0	167,0
	030003140031	163,0	167,0
178322	030003155671	143,0	143,0

Impact Test

Test Specimen: CHARPY 10X55X5 V NOTCH — Direction: Longitudinal — Temperature: -53°C — Striker radius: 8 mm

		AE1 (J)	AE2 (J)	AE3 (J)	AE4 (J)	AE5 (J)	AE Avg (J)	SA1 (%)	SA2 (%)	SA3 (%)	SA4 (%)	SA5 (%)	SA Avg (%)	LE1 (Mils)	LE2 (Mils)	LE3 (Mils)	LE Avg (Mils)
	Required: Min	14	14	14			14	50	50	50			60				
	Max																
Heat	Control Lot																
175147	030003140032	122	123	123			123	100	100	100			100	64	64	65	67
175724	030003140031	122	122	122			122	100	100	100			100	64	64	67	67
178322	030003155671	144	142	151			146	100	100	100			100	79	79	66	75

AE - Absorbed Energy; SA - Shear Area; LE - Lateral Expansion;

Impact Test

Test Specimen: CHARPY V 10X55X5 FLATTENED — Direction: Transverse — Temperature: -46°C — Striker radius: 8 mm

		AE1 (J)	AE2 (J)	AE3 (J)	AE4 (J)	AE5 (J)	AE Avg (J)	SA1 (%)	SA2 (%)	SA3 (%)	SA4 (%)	SA5 (%)	SA Avg (%)	LE1 (Mils)	LE2 (Mils)	LE3 (Mils)	LE Avg (Mils)
	Required: Min	14	14	14			14	50	50	50			60				
	Max																
Heat	Control Lot																
175147	030003140032	121	121	122			121	100	100	100			100	53	58	59	64
175724	030003140031	121	122	121			122	100	100	100			100	55	60	55	68
178322	030003155671	106	111	104			106	100	100	100			100	76	80	72	76

AE - Absorbed Energy; SA - Shear Area; LE - Lateral Expansion;

vallourec

EcoTube

RINA

Inspection Certificate
(According to DIN EN 10204.3.1)
N°.: 0030032296 / 00 Sheet 4 / 4

Remarks:
1. MATERIAL IN ACCORDANCE WITH NACE MR 0175 PAR. 3.2/ISO 15156-2, ANNEX A.2.1.2/NACE MR0103 PAR.2.1 ALL LATEST EDITIONS

2. SKU 2530104

3. THE WORKS OPERATE A QUALITY MANAGEMENT SYSTEM ACCORDING TO EUROPEAN DIRECTIVE 2014/68/UE ANNEX I PAR. 4.3 (CERTIFICATE 2016 BH MP 02-03 VALID UNTIL 12.05.2019).

- MATERIAL ACCORDING TO PED 2014/68/UE ANNEX I PAR. 7.5

4. - NO WELD REPAIR
- FREE OF MERCURY CONTAMINATION
- NO RADIOACTIVE CONTAMINATION
- FINE GRAIN PRACTICE
- FULLY KILLED STEEL
- MATERIAL FROM BRAZIL

NORMALIZED
TEMPERATURE 892°C
SOAKING TIME 40 MINUTES
METHOD OF COOLING : AIR

We hereby certify that this product has been manufactured and examined in accordance with all requirements of the standards and specifications and all the results are found to be satisfactory. This testimonial and certificate respectively is recorded by a computer system and is valid without signature. Alteration or use for others products are regarded as falsification of documents and will be subject to criminal jurisdiction.

QUALITY CONTROL DEPARTMENT
FAX: (55-31) 3328-2773

e-mail:luiz.silva@vallourec.com

ENG. LUIZ FERNANDO DA SILVA - CREA/MG 58834-D
TECHNICAL RESPONSIBLE

DATE
02.27.2019

vallourec

Vallourec Soluções Tubulares do Brasil S.A.
Barreiro Plant - Av. Olinto Meireles, 65
ZIP 30640-010 - Belo Horizonte, MG

EcoTube

RINA
ISO 9001 - ISO/TS 16949
ISO 14001 ISO 50001 OHSAS 18001
Certified management system

Inspection Certificate

(According to DIN EN 10204.3.1)

N°.: 0030030841 / 00 Sheet:1 / 4

Customer: VALLOUREC CANADA INC

Country: Canada

Material Number: 274465
Work Order: 531796 / 50
Customer Order: VM-4682 - P O 4038589-00

Inspection: Vallourec Soluções Tubulares do Brasil S.A.

PRODUCT: SEAMLESS STEEL PIPE, HOT FINISHED , BEVELED ENDS 30 DEG. , NORMALIZED
DIMENSIONS: 219,10 mm X 8,18 mm **SCHEDULE:** 040 **GRADE:** GRADE 290 # GR 1 # 6 # B 8 STD 2530112
STANDARD: CSA-Z245.1-14 - CATEGORY II
IN ACCORDANCE ALSO TO THE STANDARDS: ASTM A 333M - 16 ASTM A 999M - 18 # ASTM A 106M - 18 ASTM A 530M - 12 # ASTM A 53M - 12 # ASME SA-333M - 17 ASME SA 999M - 17 # ASME SA-106M - 17 ASME SA 530M - 17
CUSTOMER SPECIFICATION: CCTF GrB,1.6,290 Cat II SS , 20.11.2017
SURFACE PROTECTION: EXTERNAL: LACQUER **PIPE ENDS PROTECTOR:** PLASTIC CAP
TOLERANCES: OUTSIDE DIAMETER (PIPE BODY): -0,80 mm / +1,60 mm **WALL THICKNESS:** -1,02 mm / +1,23 mm
TOLERANCES(PIPE ENDS): OUTSIDE DIAMETER: -0,40 mm / +1,60 mm
LENGTH: RANDOM 5486,00 mm - 6706,00 mm
STANDARD MARKING: PAINT STENCILED IN THE PIPE BODY: 531796/50 MANUFACTURER CSA-Z245.1-14 219,10 X 8,18 290 CAT II SS S IIN LENGTH HEAT NUMBER ASTM A/ASME SA 333, 1/6 HF SCH 040 LT -46C ASTM A/ASME SA 106 B 16300 KPA WEIGHT ASTM A 53 B NPS 8" X SCH 40 VSB LOGO
SHIPPING MARKING: NACE MR 0175/NACE MR 0103 - MADE IN BRAZIL * VM4682 / P.O # 4038589-00/ITEM-5 * TORONTO * CCTF

Heat	Pieces
175141	6
175142	8
176433	28
Total	**42**

THE PRODUCT IS SATISFACTORY IN THE FOLLOWING TESTS / INSPECTIONS: DIMENSIONAL # VISUAL # FLATTENING TEST # ENDS INSPECTION : UNTESTED ENDS CROPPED # HYDROSTATIC TEST: 16300,0 KPA 5 S # RESIDUAL MAGNETISM: MAX 30 GAUSS # ELECTROMAGNETIC TEST : CSAZ245.1-N10,LON/TRAN,OUT/INS # ULTRASONIC TEST FOR LAMINAR DEFECTS: ACC. CSA Z245.1-SOUR SERVICE #

vallourec

EcoTube

RINA

Inspection Certificate
(According to DIN EN 10204.3.1)
N°.: 0030030841 / 00

Chemical Composition (%)

Process: Basic Oxygen Furnace, heats fully killed

Ceq: CSA-Z245.1-CE11 — Ceq: C+Mn/6+(Cr+Mo+V)/5 −(Ni+Cu)/15 — CE1: Cr + Cu + Mo + Ni + V

Heat	Control Lot		C	Mn	P	S	Si	Ni	Cr	Mo	Al	Cu	V	Nb	B	Ti	N	Ca	Ceq	Ceq	CE1
Heat Analisys		Min		0,400			0,100														
		Max	0,240	1,350	0,025	0,025	0,500	0,400	0,300	0,120		0,400	0,080	0,020	0,0010	0,110			0,400	0,430	1,000
Product Analisys		Min		0,400			0,100														
		Max	0,240	1,350	0,025	0,025	0,500	0,400	0,300	0,120		0,400	0,080	0,020	0,0010	0,110			0,400	0,430	1,000
175141	030003103023		0,10	1,28	0,009	0,003	0,27	0,02	0,05	0,01	0,026	0,028	0,001	0,016	0,0005	0,001	0,0070	0,0019	0,262	0,329	0,109
	Check 1		0,10	1,26	0,008	0,003	0,28	0,02	0,04	0,01	0,026	0,030	0,004	0,015	0,0003	0,001	0,0065	0,0016	0,258	0,324	0,104
	Check 2		0,11	1,28	0,008	0,002	0,28	0,02	0,04	0,01	0,026	0,031	0,004	0,016	0,0002	0,001	0,0065	0,0016	0,270	0,338	0,105
175142	030003103024		0,11	1,29	0,010	0,004	0,28	0,02	0,05	0,01	0,030	0,025	0,001	0,015	0,0004	0,002	0,0077	0,0016	0,283	0,340	0,106
	Check 1		0,11	1,28	0,011	0,003	0,28	0,03	0,06	0,01	0,031	0,021	0,005	0,016	0,0003	0,002	0,0072	0,0013	0,283	0,342	0,126
	Check 2		0,11	1,29	0,009	0,003	0,28	0,02	0,04	0,01	0,029	0,025	0,004	0,015	0,0003	0,002	0,0075	0,0014	0,281	0,339	0,099
176433	030003103452		0,10	1,27	0,012	0,004	0,28	0,03	0,06	0,01	0,029	0,070	0,004	0,015	0,0004	0,002	0,0099	0,0012	0,265	0,333	0,174
	Check 1		0,11	1,29	0,013	0,004	0,29	0,03	0,06	0,01	0,028	0,066	0,005	0,016	0,0003	0,002	0,0096	0,0013	0,277	0,346	0,171
	Check 2		0,11	1,26	0,013	0,004	0,28	0,03	0,06	0,01	0,028	0,066	0,005	0,016	0,0002	0,002	0,0096	0,0013	0,273	0,341	0,171

Ceq: Carbon Equivalent; Ceq: Carbon Equivalent; CE: Combined Elements;

Tensile Test

Specimen Direction: Longitudinal — **Temperature:** Room Temperature — **Wall Thickness:** 8,18 mm — **Gage Length:** L0=2"

Method:Elong.Total Under Load 0,50 %

Heat	Control Lot	Type of Specimen	Area (MM2)	YS (MPA)	TS (MPA)	E (%)
	Required: Min			290	415	35
	Max			495	625	
175141	030003103023	STRIP WIDTH 38,1 MM	336,8	360	472	41
		STRIP WIDTH 38,1 MM	348,7	389	455	40
175142	030003103024	STRIP WIDTH 38,1 MM	318,9	395	502	42
		STRIP WIDTH 38,1 MM	330,1	401	490	40
176433	030003103452	STRIP WIDTH 38,1 MM	328,0	396	508	43
		STRIP WIDTH 38,1 MM	341,8	410	495	40

YS-Yield Strength; TS-Tensile Strength; E-Elongation;

vallourec

EcoTube

RINA

Inspection Certificate
(According to DIN EN 10204.3.1)
N°.: 0030030841 / 00

Hardness Test

Scale: HV

		Max	
	Required: Min		
	Max	246,0	
Heat	Control Lot		
175141	030003103023	158,0	160,0
175142	030003103024	162,0	164,0
176433	030003103452	169,0	170,0

Impact Test

Test Specimen: CHARPY 10X55X7.5 V NOTCH — Direction: Longitudinal — Temperature: -46°C — Striker radius: 8 mm

		AE1 (J)	AE2 (J)	AE3 (J)	AE4 (J)	AE5 (J)	AE Avg (J)	SA1 (%)	SA2 (%)	SA3 (%)	SA4 (%)	SA5 (%)	SA Avg (%)	LE1 (Mils)	LE2 (Mils)	LE3 (Mils)	LE Avg (Mils)
	Required: Min	21	21	21			21	50	50	50			60				
	Max																
Heat	Control Lot																
175141	030003103023	267	264	261			264	100	100	100			100	75	75	75	75
175142	030003103024	270	267	255			264	100	100	100			100	80	80	80	80
176433	030003103452	245	235	245			242	100	100	100			100	80	80	80	80

AE - Absorbed Energy; SA - Shear Area; LE - Lateral Expansion;

Impact Test

Test Specimen: CHARPY 10X55X6.67 V NOTCH — Direction: Transverse — Temperature: -46°C — Striker radius: 8 mm

		AE1 (J)	AE2 (J)	AE3 (J)	AE4 (J)	AE5 (J)	AE Avg (J)	SA1 (%)	SA2 (%)	SA3 (%)	SA4 (%)	SA5 (%)	SA Avg (%)	LE1 (Mils)	LE2 (Mils)	LE3 (Mils)	LE Avg (Mils)
	Required: Min	18	18	18			18	50	50	50			60				
	Max																
Heat	Control Lot																
175141	030003103023	196	208	213			206	100	100	100			100	75	78	81	78
175142	030003103024	203	179	187			190	100	100	100			100	82	82	82	82
176433	030003103452	160	187	156			168	100	100	100			100	80	82	78	80

AE - Absorbed Energy; SA - Shear Area; LE - Lateral Expansion;

Remarks:

1. MATERIAL IN ACCORDANCE WITH NACE MR 0175
PAR. 3.2/ISO 15156-2, ANNEX A.2.1.2/NACE MR0103 PAR.2.1. ALL LATEST

vallourec

EcoTube

RINA

Inspection Certificate
(According to DIN EN 10204.3.1)
N°.: 0030030841 / 00 Sheet 4 / 4

EDITIONS

2. SKU 2530112

3. THE WORKS OPERATE A QUALITY MANAGEMENT SYSTEM ACCORDING TO EUROPEAN DIRECTIVE 2014/68/UE ANNEX I PAR. 4.3 (CERTIFICATE 2016 BH MP 02-03 VALID UNTIL 12.05.2019).
- MATERIAL ACCORDING TO PED 2014/68/UE ANNEX I PAR. 7.5

"STEEL MADE BY BOF PROCESS"

4. - NO WELD REPAIR
- FREE OF MERCURY CONTAMINATION
- NO RADIOACTIVE CONTAMINATION
- FINE GRAIN PRACTICE
- FULLY KILLED STEEL.
- MATERIAL FROM BRAZIL

We hereby certify that this product has been manufactured and examined in accordance with all requirements of the standards and specifications and all the results are found to be satisfactory. This testimonial and certificate respectively is recorded by a computer system and is valid without signature. Alteration or use for others products are regarded as falsification of documents and will be subject to criminal jurisdiction.

QUALITY CONTROL DEPARTMENT
FAX: (55-31) 3328-2773

e-mail:luis.silva@vallourec.com

ENG. LUIZ FERNANDO DA SILVA - CREA-MG 58834-D
TECHNICAL RESPONSIBLE

DATE
11.20.2018

vallourec

Vallourec Soluções Tubulares do Brasil S.A.
Barreiro Plant - Av. Olinto Meireles, 65
ZIP 30640-010 - Belo Horizonte, MG

EcoTube

RINA

Inspection Certificate

(According to DIN EN 10204.3.1)

N°.: 0030031810 / 00 Sheet: 1 / 4

Customer: VALLOUREC CANADA INC

Country: Canada

Material Number: 276624
Work Order: 534782 / 80
Customer Order: VM-4748 - P.O 4038825-00

Inspection: Vallourec Soluções Tubulares do Brasil S.A.

PRODUCT: SEAMLESS STEEL PIPE, HOT FINISHED , BEVELED ENDS 30 DEG, , NORMALIZED
DIMENSIONS: 219,10 mm X 8,18 mm **SCHEDULE:** 040 **GRADE:** GRADE 290 # GR 1 # 6 # B 8 STD 2530112
STANDARD: CSA-Z245.1-18 - CATEGORY II
IN ACCORDANCE ALSO TO THE STANDARDS: ASTM A 333M - 16 ASTM A 999M - 18 # ASTM A 106M - 18 ASTM A 530M - 12 # ASTM A 53M - 12 # ASME SA-333M - 17 ASME SA 999M - 17 # ASME SA-106M - 17 ASME SA 530M - 17
CUSTOMER SPECIFICATION: CCTF GrB.1,6.290 Cat II SS , 20.11.2017
SURFACE PROTECTION: EXTERNAL: LACQUER **PIPE ENDS PROTECTOR:** PLASTIC CAP
TOLERANCES: OUTSIDE DIAMETER (PIPE BODY): -0,80 mm / +1,60 mm **WALL THICKNESS:** -1,02 mm / +1,23 mm
TOLERANCES(PIPE ENDS): OUTSIDE DIAMETER: -0,40 mm / +1,60 mm
LENGTH: RANDOM 5486,00 mm - 6706,00 mm
STANDARD MARKING: PAINT STENCILED IN THE PIPE BODY: 534782 80 MANUFACTURER CSA-Z245.1-18 219,10 X 8.18 290 CAT II M46C SS S HN LENGTH HEAT NUMBER ASTM A ASME SA 333, 1 6 HF SCH 040 LT -46C ASTM A/ASME SA 106 B 16300 KPA WEIGHT ASTM A 53 B NPS 8" X SCH 40 VSB LOGO
SHIPPING MARKING: NACE MR 0175/NACE MR 0103 - MADE IN BRAZIL * VM4748 / P.O # 4038825-00#ITEM-8 * TORONTO * CCTF

Heat	Pieces
175146	12
177833	26
Total	38

THE PRODUCT IS SATISFACTORY IN THE FOLLOWING TESTS / INSPECTIONS: DIMENSIONAL # VISUAL # FLATTENING TEST # ENDS INSPECTION ; UNTESTED ENDS CROPPED # HYDROSTATIC TEST 16300,0 KPA 5 S # RESIDUAL MAGNETISM: MAX 30 GAUSS # ELECTROMAGNETIC TEST : CSAZ245.1-N10,LONTRAN,OUTLINS # ULTRASONIC TEST FOR LAMINAR DEFECTS: ACC. CSA Z245.1-SOUR SERVICE #

vallourec

EcoTube

RINA

ISO 9001 ISO/TS 16949
ISO 14001 ISO 50001 OHSAS 18001

Inspection Certificate

(According to DIN EN 10204.3.1)

N°.: 0030031810 / 00

Chemical Composition (%)

Process: Basic Oxygen Furnace, heats fully killed

Ceq: CSA-Z245.1-CE11 — **Ceq:** C+Mn/6+(Cr+Mo+V)/5+(Ni+Cu)/15 — **CE1:** Cr + Cu + Mo + Ni + V

		C	Mn	P	S	Si	Ni	Cr	Mo	Al	Cu	V	Nb	B	Ti	N	Ca	Ceq	Ceq	CE1
Heat Analisys	Min		0,400			0,100														
	Max	0,240	1,350	0,025	0,025	0,500	0,400	0,300	0,120		0,400	0,080	0,020	0,0010	0,110			0,400	0,430	1,000
Product Analisys	Min		0,400			0,100														
	Max	0,240	1,350	0,025	0,025	0,500	0,400	0,300	0,120		0,400	0,080	0,020	0,0010	0,110			0,400	0,430	1,000
Heat	Control Lot																			
175146	030003113164	0,11	1,29	0,010	0,004	0,29	0,01	0,04	0,01	0,027	0,022	0,004	0,015	0,0004	0,002	0,0074	0,0012	0,281	0,338	0,086
	Check 1	0,11	1,29	0,010	0,005	0,30	0,01	0,05	0,01	0,028	0,022	0,005	0,015	0,0005	0,002	0,0077	0,0012	0,284	0,340	0,097
	Check 2	0,11	1,30	0,009	0,005	0,31	0,01	0,04	0,01	0,029	0,020	0,004	0,016	0,0002	0,002	0,0079	0,0014	0,283	0,339	0,084
177833	030003140903	0,11	1,29	0,010	0,004	0,28	0,03	0,07	0,01	0,029	0,090	0,004	0,014	0,0003	0,002	0,0067	0,0018	0,289	0,350	0,204
	Check 1	0,11	1,28	0,011	0,003	0,27	0,03	0,07	0,01	0,030	0,090	0,003	0,015	0,0002	0,002	0,0064	0,0018	0,287	0,348	0,203
	Check 2	0,10	1,28	0,011	0,003	0,27	0,03	0,07	0,01	0,030	0,090	0,003	0,015	0,0002	0,002	0,0067	0,0016	0,272	0,338	0,203

Ceq: Carbon Equivalent; Ceq: Carbon Equivalent; CE: Combined Elements;

Tensile Test

Specimen Direction: Longitudinal — **Temperature:** Room Temperature — **Wall Thickness:** 8,18 mm — **Gauge Length:** 1.0"

Method:Elong.Total Under Load 0,50 %

		Type of Specimen	Area (MM2)	YS (MPA)	TS (MPA)	E (%)
Required: Min				290	415	35
Max				495	625	
Heat	Control Lot					
175146	030003113164	STRIP WIDTH 38 MM	324,3	383	502	41
		STRIP WIDTH 38 MM	329,7	399	515	40
177833	030003140903	STRIP WIDTH 38,1 MM	305,2	420	519	42
		STRIP WIDTH 38,1 MM	300,7	425	525	40

YS-Yield Strength; TS-Tensile Strength; E-Elongation;

vallourec

EcoTube

RINA

Inspection Certificate
(According to DIN EN 10204.3.1)
N°.: 0030031810 / 00 Sheet: 3 4

Hardness Test

Scale: HV

		Min	Max
	Required:		
	Max	246,0	
Heat	Control Lot		
175146	030003113164	148,0	150,0
177833	030003140903	152,0	155,0

Impact Test

Test Specimen: CHARPY 10X55X7.5 V NOTCH — Direction: Longitudinal — Temperature: -46°C — Striker radius: 8 mm

		AE1 (J)	AE2 (J)	AE3 (J)	AE4 (J)	AE5 (J)	AE Avg (J)	SA1 (%)	SA2 (%)	SA3 (%)	SA4 (%)	SA5 (%)	SA Avg (%)	LE1 (Mils)	LE2 (Mils)	LE3 (Mils)	LE Avg (Mils)
	Required: Min	21	21	21			21	50	50	50			60				
	Max																
Heat	Control Lot																
175146	030003113164	270	275	262			269	100	100	100			100	78	81	80	80
177833	030003140903	275	263	270			269	100	100	100			100	71	79	69	73

AE - Absorbed Energy; SA - Shear Area; LE - Lateral Expansion;

Impact Test

Test Specimen: CHARPY 10X55X6.67 V NOTCH — Direction: Transverse — Temperature: -46°C — Striker radius: 8 mm

		AE1 (J)	AE2 (J)	AE3 (J)	AE4 (J)	AE5 (J)	AE Avg (J)	SA1 (%)	SA2 (%)	SA3 (%)	SA4 (%)	SA5 (%)	SA Avg (%)	LE1 (Mils)	LE2 (Mils)	LE3 (Mils)	LE Avg (Mils)
	Required: Min	18	18	18			18	50	50	50			60				
	Max																
Heat	Control Lot																
177833	030003140903	210	186	174			190	100	100	100			100	88	87	88	88

AE - Absorbed Energy; SA - Shear Area; LE - Lateral Expansion;

Remarks:
1. MATERIAL IN ACCORDANCE WITH NACE MR 0175
PAR. 3.2/ISO 15156-2, ANNEX A.2.1.2/NACE MR0103 PAR.2.1, ALL LATEST
EDITIONS

2. SKU 2530112

3. THE WORKS OPERATE A QUALITY MANAGEMENT SYSTEM ACCORDING TO EUROPEAN

vallourec

EcoTube

RINA

Inspection Certificate
(According to DIN EN 10204 3.1)
N°.: 0030031810 / 00 Sheet:4 4

DIRECTIVE 2014/68/UE ANNEX I PAR. 4.3 (CERTIFICATE 2016 BH MP 02-03
VALID UNTIL 12.05.2019).
- MATERIAL ACCORDING TO PED 2014/68/UE ANNEX I PAR. 7.5

4. - NO WELD REPAIR
- FREE OF MERCURY CONTAMINATION
- NO RADIOACTIVE CONTAMINATION
- FINE GRAIN PRACTICE
- FULLY KILLED STEEL
- MATERIAL FROM BRAZIL

We hereby certify that this product has been manufactured and examined in accordance with all requirements of the standards and specifications and all the results are found to be satisfactory. This testimonial and certificate respectively is recorded by a computer system and is valid without signature. Alteration or use for others products are regarded as falsification of documents and will be subject to criminal jurisdiction.

QUALITY CONTROL DEPARTMENT
FAX: (55-31) 3328-2773

e-mail:luiz.silva@vallourec.com

ENG. LUIZ FERNANDO DA SILVA - CREA-MG 58834-D
TECHNICAL RESPONSIBLE

DATE
01.22.2019

vallourec

Vallourec Soluções Tubulares do Brasil S.A.
Barreiro Plant - Av. Olinto Meireles, 65
ZIP 30640-010 - Belo Horizonte, MG

EcoTube

RINA
ISO 9001 / ISO/TS 16949
ISO 14001 ISO 50001 OHSAS 18001
Certified management systems

Inspection Certificate

(According to DIN EN 10204.3.1)

N°.: 0030030841 / 00 Sheet: 1 / 4

Customer: VALLOUREC CANADA INC

Country: Canada

Material Number: 274465
Work Order: 531796 / 50
Customer Order: VM-4682 - P O 4038589-00

Inspection: Vallourec Soluções Tubulares do Brasil S.A.

PRODUCT: SEAMLESS STEEL PIPE, HOT FINISHED , BEVELED ENDS 30 DEG. , NORMALIZED
DIMENSIONS: 219,10 mm X 8,18 mm **SCHEDULE:** 040 **GRADE:** GRADE 290 # GR 1 # 6 # B 8 STD 2530112
STANDARD: CSA-Z245.1-14 - CATEGORY II
IN ACCORDANCE ALSO TO THE STANDARDS: ASTM A 333M - 16 ASTM A 999M - 18 # ASTM A 106M - 18 ASTM A 530M - 12 # ASTM A 53M - 12 # ASME SA-333M - 17 ASME SA 999M - 17 # ASME SA-106M - 17 ASME SA 530M - 17
CUSTOMER SPECIFICATION: CCTF GrB,1,6,290 Cat II SS , 20.11.2017
SURFACE PROTECTION: EXTERNAL: LACQUER **PIPE ENDS PROTECTOR:** PLASTIC CAP
TOLERANCES: OUTSIDE DIAMETER (PIPE BODY): -0,80 mm / +1,60 mm **WALL THICKNESS:** -1,02 mm / +1,23 mm
TOLERANCES(PIPE ENDS): OUTSIDE DIAMETER: -0,40 mm / +1,60 mm
LENGTH: RANDOM 5486,00 mm - 6706,00 mm
STANDARD MARKING: PAINT STENCILED IN THE PIPE BODY: 531796/50 MANUFACTURER CSA-Z245.1-14 219,10 X 8,18 290 CAT II SS S HN LENGTH HEAT NUMBER ASTM A/ASME SA 333, 1/6 HF SCH 040 LT -46C ASTM A/ASME SA 106 B 16300 KPA WEIGHT ASTM A 53 B NPS 8" X SCH 40 VSB LOGO
SHIPPING MARKING: NACE MR 0175/NACE MR 0103 - MADE IN BRAZIL * VM4682 / P.O # 4038589-00/ITEM-5 * TORONTO * CCTF

Heat	Pieces
175141	6
175142	8
176433	28
Total	**42**

THE PRODUCT IS SATISFACTORY IN THE FOLLOWING TESTS / INSPECTIONS: DIMENSIONAL # VISUAL # FLATTENING TEST # ENDS INSPECTION : UNTESTED ENDS CROPPED # HYDROSTATIC TEST: 16300,0 KPA 5 S # RESIDUAL MAGNETISM: MAX 30 GAUSS # ELECTROMAGNETIC TEST : CSAZ245.1-N10,LON/TRAN,OUT/INS # ULTRASONIC TEST FOR LAMINAR DEFECTS: ACC. CSA Z245.1-SOUR SERVICE #

vallourec

EcoTube

RINA

Inspection Certificate
(According to DIN EN 10204.3.1)
N°.: 0030030841 / 00

Chemical Composition (%)

Process: Basic Oxygen Furnace, heats fully killed

Ceq: CSA-Z245.1-CE11 — Ceq: C+Mn/6+(Cr+Mo+V)/5 -(Ni+Cu)/15 — CE1: Cr + Cu + Mo + Ni + V

Heat	Control Lot		C	Mn	P	S	Si	Ni	Cr	Mo	Al	Cu	V	Nb	B	Ti	N	Ca	Ceq	Ceq	CE1
Heat Analisys		Min		0,400			0,100														
		Max	0,240	1,350	0,025	0,025	0,500	0,400	0,300	0,120		0,400	0,080	0,020	0,0010	0,110			0,400	0,430	1,000
Product Analisys		Min		0,400			0,100														
		Max	0,240	1,350	0,025	0,025	0,500	0,400	0,300	0,120		0,400	0,080	0,020	0,0010	0,110			0,400	0,430	1,000
175141	030003103023		0,10	1,28	0,009	0,003	0,27	0,02	0,05	0,01	0,026	0,028	0,001	0,016	0,0005	0,001	0,0070	0,0019	0,262	0,329	0,109
	Check 1		0,10	1,26	0,008	0,003	0,28	0,02	0,04	0,01	0,026	0,030	0,004	0,015	0,0003	0,001	0,0065	0,0016	0,258	0,324	0,104
	Check 2		0,11	1,28	0,008	0,002	0,28	0,02	0,04	0,01	0,026	0,031	0,004	0,016	0,0002	0,001	0,0065	0,0016	0,270	0,338	0,105
175142	030003103024		0,11	1,29	0,010	0,004	0,28	0,02	0,05	0,01	0,030	0,025	0,001	0,015	0,0004	0,002	0,0077	0,0016	0,283	0,340	0,106
	Check 1		0,11	1,28	0,011	0,003	0,28	0,03	0,06	0,01	0,031	0,021	0,005	0,016	0,0003	0,002	0,0072	0,0013	0,283	0,342	0,126
	Check 2		0,11	1,29	0,009	0,003	0,28	0,02	0,04	0,01	0,029	0,025	0,004	0,015	0,0003	0,002	0,0075	0,0014	0,281	0,339	0,099
176433	030003103452		0,10	1,27	0,012	0,004	0,28	0,03	0,06	0,01	0,029	0,070	0,004	0,015	0,0004	0,002	0,0099	0,0012	0,265	0,333	0,174
	Check 1		0,11	1,29	0,013	0,004	0,29	0,03	0,06	0,01	0,028	0,066	0,005	0,016	0,0003	0,002	0,0096	0,0013	0,277	0,346	0,171
	Check 2		0,11	1,26	0,013	0,004	0,28	0,03	0,06	0,01	0,028	0,066	0,005	0,016	0,0002	0,002	0,0096	0,0013	0,273	0,341	0,171

Ceq: Carbon Equivalent; Ceq: Carbon Equivalent; CE: Combined Elements;

Tensile Test

Specimen Direction: Longitudinal — **Temperature:** Room Temperature — **Wall Thickness:** 8,18 mm — **Gage Length:** L0=2"

Method:Elong.Total Under Load 0,50 %

Heat	Control Lot		Type of Specimen	Area (MM2)	YS (MPA)	TS (MPA)	E (%)
		Required: Min			290	415	35
		Max			495	625	
175141	030003103023		STRIP WIDTH 38,1 MM	336,8	360	472	41
			STRIP WIDTH 38,1 MM	348,7	389	455	40
175142	030003103024		STRIP WIDTH 38,1 MM	318,9	395	502	42
			STRIP WIDTH 38,1 MM	330,1	401	490	40
176433	030003103452		STRIP WIDTH 38,1 MM	328,0	396	508	43
			STRIP WIDTH 38,1 MM	341,8	410	495	40

YS-Yield Strength; TS-Tensile Strength; E-Elongation;

vallourec

EcoTube

RINA

Inspection Certificate
(According to DIN EN 10204.3.1)
N°.: 0030030841 / 00 Sheet:3 / 4

Hardness Test

Scale: HV

		Max
Required: Min		
Max	246,0	
Heat	**Control Lot**	
175141	030003103023	158,0 160,0
175142	030003103024	162,0 164,0
176433	030003103452	169,0 170,0

Impact Test

Test Specimen: CHARPY 10X55X7.5 V NOTCH — Direction: Longitudinal — Temperature: -46°C — Striker radius: 8 mm

		AE1 (J)	AE2 (J)	AE3 (J)	AE4 (J)	AE5 (J)	AE Avg (J)	SA1 (%)	SA2 (%)	SA3 (%)	SA4 (%)	SA5 (%)	SA Avg (%)	LE1 (Mils)	LE2 (Mils)	LE3 (Mils)	LE Avg (Mils)
Required: Min		21	21	21			21	50	50	50			60				
Max																	
Heat	**Control Lot**																
175141	030003103023	267	264	261			264	100	100	100			100	75	75	75	75
175142	030003103024	270	267	255			264	100	100	100			100	80	80	80	80
176433	030003103452	245	235	245			242	100	100	100			100	80	80	80	80

AE - Absorbed Energy; SA - Shear Area; LE - Lateral Expansion;

Impact Test

Test Specimen: CHARPY 10X55X6.67 V NOTCH — Direction: Transverse — Temperature: -46°C — Striker radius: 8 mm

		AE1 (J)	AE2 (J)	AE3 (J)	AE4 (J)	AE5 (J)	AE Avg (J)	SA1 (%)	SA2 (%)	SA3 (%)	SA4 (%)	SA5 (%)	SA Avg (%)	LE1 (Mils)	LE2 (Mils)	LE3 (Mils)	LE Avg (Mils)
Required: Min		18	18	18			18	50	50	50			60				
Max																	
Heat	**Control Lot**																
175141	030003103023	196	208	213			206	100	100	100			100	75	78	81	78
175142	030003103024	203	179	187			190	100	100	100			100	82	82	82	82
176433	030003103452	160	187	156			168	100	100	100			100	80	82	78	80

AE - Absorbed Energy; SA - Shear Area; LE - Lateral Expansion;

Remarks:

1. MATERIAL IN ACCORDANCE WITH NACE MR 0175
PAR. 3.2/ISO 15156-2, ANNEX A.2.1.2/NACE MR0103 PAR.2.1. ALL LATEST

vallourec

EcoTube

RINA

Inspection Certificate
(According to DIN EN 10204.3.1)
N°.: 0030030841 / 00 Sheet 4 / 4

EDITIONS

2. SKU 2530112

3. THE WORKS OPERATE A QUALITY MANAGEMENT SYSTEM ACCORDING TO EUROPEAN DIRECTIVE 2014/68/UE ANNEX I PAR. 4.3 (CERTIFICATE 2016 BH MP 02-03 VALID UNTIL 12.05.2019).
- MATERIAL ACCORDING TO PED 2014/68/UE ANNEX I PAR. 7.5

"STEEL MADE BY BOF PROCESS"

4. - NO WELD REPAIR
- FREE OF MERCURY CONTAMINATION
- NO RADIOACTIVE CONTAMINATION
- FINE GRAIN PRACTICE
- FULLY KILLED STEEL
- MATERIAL FROM BRAZIL

We hereby certify that this product has been manufactured and examined in accordance with all requirements of the standards and specifications and all the results are found to be satisfactory. This testimonial and certificate respectively is recorded by a computer system and is valid without signature. Alteration or use for others products are regarded as falsification of documents and will be subject to criminal jurisdiction.

QUALITY CONTROL DEPARTMENT
FAX: (55-31) 3328-2773

e-mail:luis.silva@vallourec.com

ENG. LUIZ FERNANDO DA SILVA - CREA-MG 58834-D
TECHNICAL RESPONSIBLE

DATE
11.20.2018

vallourec
Vallourec Soluções Tubulares do Brasil S.A.
Barreiro Plant - Av. Olinto Meireles, 65
ZIP 306-40-010 - Belo Horizonte, MG

EcoTube

RINA
ISO 9001 - ISO/TS 16949
ISO 14001 - ISO 30000 - OHSAS 18001
Certified Management Systems

Inspection Certificate

(According to DIN EN 10204_3.1)

N°.: 0030031810 / 00 Sheet: 1 / 4

Customer: VALLOUREC CANADA INC

Country: Canada

Material Number: 276624
Work Order: 534782 / 80
Customer Order: VM-4748 - P.O 4038825-00

Inspection: Vallourec Soluções Tubulares do Brasil S.A.

PRODUCT: SEAMLESS STEEL PIPE, HOT FINISHED , BEVELED ENDS 30 DEG. , NORMALIZED
DIMENSIONS: 219,10 mm X 8,18 mm SCHEDULE: 040 GRADE: GRADE 290 # GR 1 # 6 # II 8 STD 2530112
STANDARD: CSA-Z245.1-18 - CATEGORY II
IN ACCORDANCE ALSO TO THE STANDARDS: ASTM A 333M - 16 ASTM A 999M - 18 # ASTM A 106M - 18 ASTM A 530M - 12 # ASTM A 53M - 12 # ASME SA-333M - 17 ASME SA 999M - 17 # ASME SA-106M - 17 ASME SA 530M - 17
CUSTOMER SPECIFICATION: CCTF GrB,1,6,290 Cat II SS , 20.11.2017
SURFACE PROTECTION: EXTERNAL: LACQUER PIPE ENDS PROTECTOR: PLASTIC CAP
TOLERANCES: OUTSIDE DIAMETER (PIPE BODY): -0,80 mm / +1,60 mm WALL THICKNESS: -1,02 mm / +1,23 mm
TOLERANCES(PIPE ENDS): OUTSIDE DIAMETER: -0,40 mm / +1,60 mm
LENGTH: RANDOM 5486,00 mm - 6706,00 mm
STANDARD MARKING: PAINT STENCILED IN THE PIPE BODY: 534782 80 MANUFACTURER CSA-Z245.1-18 219,10 X 8,18 290 CAT II M46C SS S HN LENGTH HEAT NUMBER ASTM A/ASME SA 333, 1 6 HF SCH 040 LT -46C ASTM A/ASME SA 106 B 16300 KPA WEIGHT ASTM A 53 B NPS 8" X SCH 40 VSB LOGO
SHIPPING MARKING: NACE MR 0175/NACE MR 0103 - MADE IN BRAZIL * VM4748 / P.O # 4038825-00/ITEM-8 * TORONTO * CCTF

Heat	Pieces
175146	12
177833	26
Total	38

THE PRODUCT IS SATISFACTORY IN THE FOLLOWING TESTS / INSPECTIONS: DIMENSIONAL # VISUAL # FLATTENING TEST # ENDS INSPECTION : UNTESTED ENDS CROPPED # HYDROSTATIC TEST 16300,0 KPA 5 S # RESIDUAL MAGNETISM: MAX 30 GAUSS # ELECTROMAGNETIC TEST : CSA/Z245.1-N10,LON/TRAN,OUT INS # ULTRASONIC TEST FOR LAMINAR DEFECTS: ACC. CSA Z245.1-SOUR SERVICE #

vallourec

EcoTube

RINA

Inspection Certificate
(According to DIN EN 10204.3.1)
N°.: 0030031810 / 00 Sheet:2 4

Chemical Composition (%)

Process: Basic Oxygen Furnace, heats fully killed

Ceq: CSA-Z245.1-CE11 Ceq: C+Mn/6+(Cr+Mo+V) 5 +(Ni+Cu) 15 CE1: Cr + Cu + Mo + Ni + V

		C	Mn	P	S	Si	Ni	Cr	Mo	Al	Cu	V	Nb	B	Ti	N	Ca	Ceq	Ceq	CE1
Heat Analisys	Min		0,400			0,100														
	Max	0,240	1,350	0,025	0,025	0,500	0,400	0,300	0,120		0,400	0,080	0,020	0,0010	0,110			0,400	0,430	1,000
Product Analisys	Min		0,400			0,100														
	Max	0,240	1,350	0,025	0,025	0,500	0,400	0,300	0,120		0,400	0,080	0,020	0,0010	0,110			0,400	0,430	1,000
Heat Control Lot																				
175146 030003113164		0,11	1,29	0,010	0,004	0,29	0,01	0,04	0,01	0,027	0,022	0,004	0,015	0,0004	0,002	0,0074	0,0012	0,281	0,338	0,086
Check 1		0,11	1,29	0,010	0,005	0,30	0,01	0,05	0,01	0,028	0,022	0,005	0,015	0,0005	0,002	0,0077	0,0012	0,284	0,340	0,097
Check 2		0,11	1,30	0,009	0,005	0,31	0,01	0,04	0,01	0,029	0,020	0,004	0,016	0,0002	0,002	0,0079	0,0014	0,283	0,339	0,084
177833 030003140903		0,11	1,29	0,010	0,004	0,28	0,03	0,07	0,01	0,029	0,090	0,004	0,014	0,0003	0,002	0,0067	0,0018	0,289	0,350	0,204
Check 1		0,11	1,28	0,011	0,003	0,27	0,03	0,07	0,01	0,030	0,090	0,003	0,015	0,0002	0,002	0,0064	0,0018	0,287	0,348	0,203
Check 2		0,10	1,28	0,011	0,003	0,27	0,03	0,07	0,01	0,030	0,090	0,003	0,015	0,0002	0,002	0,0067	0,0016	0,277	0,338	0,203

Ceq: Carbon Equivalent; Ceq: Carbon Equivalent; CE: Combined Elements;

Tensile Test

Specimen Direction: Longitudinal Temperature: Room Temperature Wall Thickness: 8,18 mm Gauge Length: 1.0 2"

Method:Elong.Total Under Load 0,50 "»

		Type of Specimen	Area (MM2)	YS (MPA)	TS (MPA)	E (%)
Required: Min				290	415	35
Max				495	625	
Heat Control Lot						
175146 030003113164		STRIP WIDTH 38 MM	324,3	383	502	41
		STRIP WIDTH 38 MM	329,7	399	515	40
177833 030003140903		STRIP WIDTH 38,1 MM	305,2	420	519	42
		STRIP WIDTH 38,1 MM	300,7	425	525	40

YS-Yield Strength; TS-Tensile Strength; E-Elongation;

vallourec

EcoTube

RINA

ISO 9001 ISO/TS 16949
ISO 14001 ISO 50001 OHSAS 18001

Inspection Certificate
(According to DIN EN 10204.3.1)
N°.: 0030031810 / 00 Sheet:3 4

Hardness Test

Scale: HV

		Max	
	Required: Min		
	Max	246,0	
Heat	Control Lot		
175146	030003113164	148,0	150,0
177833	030003140903	152,0	155,0

Impact Test

Test Specimen: CHARPY 10X55X7.5 V NOTCH Direction: Longitudinal Temperature: -46°C Striker radius: 8 mm

		AE1 (J)	AE2 (J)	AE3 (J)	AE4 (J)	AE5 (J)	AE Avg (J)	SA1 (%)	SA2 (%)	SA3 (%)	SA4 (%)	SA5 (%)	SA Avg (%)	LE1 (Mils)	LE2 (Mils)	LE3 (Mils)	LE Avg (Mils)
	Required: Min	21	21	21			21	50	50	50			60				
	Max																
Heat	Control Lot																
175146	030003113164	270	275	262			269	100	100	100			100	78	81	80	80
177833	030003140903	275	263	270			269	100	100	100			100	71	79	69	73

AE - Absorbed Energy; SA - Shear Area; LE - Lateral Expansion;

Impact Test

Test Specimen: CHARPY 10X55X6.67 V NOTCH Direction: Transverse Temperature: -46°C Striker radius: 8 mm

		AE1 (J)	AE2 (J)	AE3 (J)	AE4 (J)	AE5 (J)	AE Avg (J)	SA1 (%)	SA2 (%)	SA3 (%)	SA4 (%)	SA5 (%)	SA Avg (%)	LE1 (Mils)	LE2 (Mils)	LE3 (Mils)	LE Avg (Mils)
	Required: Min	18	18	18			18	50	50	50			60				
	Max																
Heat	Control Lot																
177833	030003140903	210	186	174			190	100	100	100			100	88	87	88	88

AE - Absorbed Energy; SA - Shear Area; LE - Lateral Expansion;

Remarks:

1. MATERIAL IN ACCORDANCE WITH NACE MR 0175
PAR. 3.2/ISO 15156-2, ANNEX A.2.1.2/NACE MR0103 PAR.2.1. ALL LATEST
EDITIONS

2. SKU 2530112

3. THE WORKS OPERATE A QUALITY MANAGEMENT SYSTEM ACCORDING TO EUROPEAN

vallourec

EcoTube

RINA

Inspection Certificate
(According to DIN EN 10204 3.1)
N°.: 0030031810 / 00 Sheet: 4 4

DIRECTIVE 2014/68/UE ANNEX I PAR. 4.3 (CERTIFICATE 2016 BH MP 02403
VALID UNTIL 12/05/2019).
- MATERIAL ACCORDING TO PED 2014/68/UE ANNEX I PAR. 7.5

4. - NO WELD REPAIR
- FREE OF MERCURY CONTAMINATION
- NO RADIOACTIVE CONTAMINATION
- FINE GRAIN PRACTICE
- FULLY KILLED STEEL
- MATERIAL FROM BRAZIL

We hereby certify that this product has been manufactured and examined in accordance with all requirements of the standards and specifications and all the results are found to be satisfactory. This testimonial and certificate respectively is recorded by a computer system and is valid without signature. Alteration or use for others products are regarded as falsification of documents and will be subject to criminal jurisdiction.

QUALITY CONTROL DEPARTMENT
FAX: (55-31) 3328-2773

e-mail:luiz.silva@vallourec.com

ENG. LUIZ FERNANDO DA SILVA - CREA MG 58834-D
TECHNICAL RESPONSIBLE

DATE
01.22.2019

MLTS_6059-18732
Heat# 61B1013 18.38332

CCTF CORPORATION

4151 North Service Road, Burlington, ON L7L 4X6 (905) 335-5320

Date: 6/11/2019

Mill Test Reports

Invoice: 1596643-01
PO: 2610087

Customer: 27403-261
EQUIPEMENT KN
POUR ABF MINES
8254 RANG DU VIEUX PONT
ROUYN-NORANDA, QC J9Y 0H4

Line	Heat#	Product	Description
3	61b01013 **	7561296	8 STD LR 45 WELD ELL A420WPL6
10	18/38332	7583949	8 300 RF WN FLG STD A350LF2

Heat codes followed by ** have been corrected, change may not show on the packing slip

PO#: 4039378 Seq: 3
WF 8 STD 45 L6 Part Description: Weld Fittings 8" (219.1mm O.D.) STD 45 DEG ELBOW A/SA420-WPL6
Heat#: 61B01013 Mill: BKL - Thai Benkan

Purchaser : _____

INSPECTION CERTIFICATE

TO EN10204 3.1

BENKAN.
Thai Benkan Co., Ltd.
58 Soi Watkrunai, Bangkru, Prapadaeng,
Samutprakarn, 10130 Thailand.

Purchase Order No. Job No.

D M Y Certificate No.
08/06/2018 T - 2018020878

E-No.	Specification for Material Made from Seamless Pipe	Specification for Inspection	Visual Examination	Dimensional Inspection
ME-567	A234-18/SA234-17 Gr.WPB/A420-16/SA420-17 Gr.WPL6 CSA Z245.11-17 GR.241 CAT II MISC 9S	ASME B16.9-2012,B16.25-2017	Good	Good

MFG. No.	Product & Size (T:*1)	Quantity	Hardness Actual Data
61B01013	7561296 45 EL WPB/WPL6 8 STD	50	HBW.123,126,129

	Material Heat No.	Chemical Composition%(Note1)	Boron (%)	
	J6K1189	Ti= 1	0.0001	

Specification	Chemical Composition %													*2 Tension Test transverse			HARDNESS MAX 197 HB : GOOD	
	C	Si	Mn	P	S	Cu	Ni	Cr	Mo	Al	V	Nb	C.E.	YS	TS	E	Impact Test (J) longitudinal 10 X 6.7 X 2V AT -46 °C	
	x 100	x 100	x 100	x 1000	x 1000	x 100	x 100	x 100	x 100	x 1000	x 1000	x 1000	x 100	MPa		%		
Min.		15	50											240	415	30	116	
Max.	23	40	135	35	40	40	40	30	12		80	20	40		585		127	AVE. 111
	12	27	127	13	1	1	3	11	1		0	0	36	295	452	46	90	

NORMALIZING 910 C X 40 MINUTES. COOLED IN STILL AIR

(Note 1) : Specification of Ti Composition (%) : Max 11 (Ti x 100) Material according to ANSI/NACE MR0175/ISO 15156-2-2015 Annex A & MR0103-2015 (SSC Region 3)

Fully killed and fine grain practiced *Steel making process : Basic Oxygen* Tensile test with longitudinal specimen and 50 mm. gauge length.

Rungnapa Kampracom
Quality Assurance Manager
Thai Benkan Co., Ltd.

C.E. = C+Mn/6+(Cr+Mo+V)/5+(Ni+Cu)/15 MAGNETIC PARTICLE EXAMINATION FOR TEE ONLY :

We hereby certify that the product described herein has been manufactured in accordance with the specifications concerned and also with the purchaser's requirements and that the test results shown herein are correct.

* 1 : "T" symbolized wall thickness in mm. * 2 : YS Yield strength TS = Tensile strength E = Elongation

COMPANY WITH MANAGEMENT SYSTEM CERTIFIED BY DNV GL = ISO 9001 = = ISO 14001 =	METALFAR PRODOTTI INDUSTRIALI SPA A01 23861 CESANA BRIANZA (LC) - ITALY VIA G. PARINI, 28 PHONE + 39 031 655441 - FAX +39 031 655149 certificate@metalfaritaly.com	COMPANY WITH MANAGEMENT SYSTEM CERTIFIED BY DNV GL = ISO 9001 = = ISO 14001 =

INSPECTION CERTIFICATE EN 10204:2004 / 3.1 A02 — Nr A03 2018-C_MFF-04299 — Data / Dated 31.10.2018 Z00

SILBO INDUSTRIES A06
50 CHESTNUT RIDGE ROAD SUITE 204
07645 MONTVALE N.J US

Ordine / PO	69051/BG
Item	015
DDT / Delivery note	2018-3E301-0004398
Packing List	2018-3E401-0004238
Fattura / Invoice	2018-3E401-0004238
Ns. rif. / Our ref.	2017-3E201-0003478-0015

A07 A08

Dest. A05
CA

Cod. colata / Heat Code B07	Nr. colata / Heat Nr B07	Quantità / Quantity B06		Descrizione / Description B01 - (B06 - B11)
	18/38332	50,00	7583949 W/N 300 RF 8" STD	LF2CL1

Mat. in acc. a / Mat. in acc. to B02
ASTM A 350M -18 ,ASME SA 350 M - 17 ,ASME CODE SECT. II, PART A, ED. 2017
ASTM A350 LF2 CL1
ASTM A105M - 18 , ASME SA105M-17 ASME CODE SECT. II, PART A, ED. 2017
NACE MR-0175/2015 ISO 15156 Part 2 _ Annex A - SOUR SERVICE
NACE MR-0103/2015 ISO 17495- SOUR SERVICE
CSA Z245.12-17 GRADE 248 CAT.II SOUR SERVICE
CSA Z245.12-17 GRADE 248 CAT.I SOUR SERVICE
Q.A.S.IN ACCORD.WITH PRESS.EQUIPM.DIRECT.2014/68/EU(PED) ANNEX I,PARAGRAPH 4.3
CERT 4687-2014-CE-ITA-DNV GL

Ann. mat. / Mat. remarks B02
FULLY KILLED STEEL AND FINE GRAIN PRACTICED
GRAIN SIZE : 7 OR FINER
NO WELD REPAIR

Elementi / Elements (C71 - C92)	C	Si	Mn	S	P	Cr	Ni	Mo	Ti	Cu	V	Nb	N
LADLE ANALYSIS	0,185	0,220	1,090	0,008	0,009	0,110	0,050	0,010	0,016	0,160	0,002	0,001	0,008
PRODUCT ANALYSIS	0,184	0,228	1,096	0,007	0,012	0,116	0,055	0,013	0,019	0,164	0,004	0,002	0,007
	Al	B	Ca						CE		F1	F2	PREN
LADLE ANALYSIS	0,025	0,0004	0,002						0,407		0,332	0,120	--
PRODUCT ANALYSIS	0,027	0,0000	0,002						0,408		0,352	0,129	--

CE=C+F(Mn/6+Si/24+Cu/15+Ni/20+(Cr+Mo+V+Nb)/5+5B) F1=Cu+Ni+Cr+Mo+V F2=Cr+Mo

Provetta / Test specimen		Forma / Shape C10	°C C23	Snervamento>0,2% / Yield Strength>0,2% C11	Snervamento>1,0% / Yield Strength>1,0% C11	Rottura / Tensile C12	Allungamento / Elongation C13	Contrazione / Reduction of area C15
Sez/Sect mm2	Gauge L.mm	1=O - 2=□		MPa	MPa	MPa	%	%
126,60	50,80	1	20	335,0	--	530,0	37,0	69,0

DUREZZA / HARDNESS C22		RESILIENZA / IMPACT TEST					
HBW	Tipo/Type C40	Provetta / Test Specimen	°C C21	1-Joule C42	2-Joule C42	3-Joule C42	Media/Average C43
162,0 ; 166,0 ; 160,0	KV	10x10 mm	-46	57	60	50	55,7

Tratt. Term. / Heat treatment C70	NORMALIZED AT 930 °C - COOLED IN STILL AIR	GAS FURNACE
Dim in acc. a / Dim. acc. to B14	ASME/ANSI B16.5 -2017 ; ASME/ANSI B36.10M -2015 ; ASME/ANSI B16.25 -2017	
Finitura / Roughness	ASME/ANSI B46.1 -2009 125-250 u/in AARH	

Marcatura in acc. B06 / Marking in acc. to	ANSI/MSS SP-25-2018	Vis. & Dim.	SATISFACTORY	Origine / Origin of Steel	ITALY

Note / Notes
100% MANUFACTURED IN ITALY

Introduction of flanges on the furnace at temperature below 200°C.
Heating of piece of 150°C. every hour till 930°C
Holding time 1 hour/ Inch. - min 2 hours - Cooled in still air
Test specimen orientation : Longitudinal

UFFICIO CONTROLLO QUALITA' / QUALITY CONTROL DEPARTMENT A05	ENTE UFFICIALE DI COLLAUDO / INSPECTION AUTHORITY Z03	MARCHIO PRODUZIONE / MANUFACTURER'S SYMBOL A04
S. Frigeno		MFF

MLTS_6056-18732
Heat# SEE BELOW

CCTF CORPORATION

4151 North Service Road, Burlington, ON L7L 4X6 (905) 335-5320

Date: 6/14/2019

Mill Test Reports

Invoice: 1597082-00
PO: 2610096

Customer: 27403-261
A.B.F MINES/2985080
1310 AVE DAVY
REF 18777-6056
ROUYN NORANDA, QC J9Y 0A8

Line	Heat#	Product	Description
1	956v	7561733	8 STD WELD TEE A420WPL6
2	508105d	7586891	8 150 RF WN FLG STD A350LF2
3	508101C	7585666	8 300 RF BLIND FLG A350LF2
4	886v	7561288	6 STD LR 45 WELD ELL A420WPL6
5	18c1054	7561725	6 STD WELD TEE A420WPL6
6	508105g	7586832	6 150 RF WN FLG STD A350LF2
7	b03459	7585585	6 150 RF BLIND FLG A350LF2

Heat codes followed by ** have been corrected, change may not show on the packing slip

INSPECTION CERTIFICATE

Customer : CCTF CORPORATION
Product : SEAMLESS LOW TEMPERATURE CARBON STEEL BUTT WELD FITTINGS
Spec : ASTM A420-16/ASME SA420-15 WPL6, CSA Z245.11-17 Gr 241 Cat II -45C SS NACE MR0175/ISO 15156-2 Region 3-15 & NACE MR0103-16, ASTM A234-18/ASME SA234-15 WPB

ACCORDANCE WITH EN 10204-3.1
CHUP HSIN ENTERPRISE CO., LTD.
17, TUNG LI ROAD, HSIAO KANG DISTRICT,
KAOHSIUNG CITY, TAIWAN, R.O.C.
TEL:(07)831-9157 FAX:(07)821-7500, 831-2942

Certificate No : O0700020-0401
Order No : 4038285-00
Date : 2018/12/11

Raw Material	Specification for Inspection	Visual Inspection	Dimensional Inspection
ASTM A106 GR.B/GREEN PIPE FOR A333-6	ASME B16.9-2012	PASS	PASS

Item	Description		Quantity	Heat ID	Heat No	Raw Material Certificate No.	NDE MT	Impact Test: Test Temp ℃	Size of specimen mm	Charpy V.-Notch Impact Value J			Ave. J
3	90 E L/R WPL6 STD	3	100	A606	18321606	BAOSTEEL BGSAG1801240000400		-45	10 X 5.0 X 55	62	48	56	55.33
9	90 E L/R WPL6 XS	2	120	C023	18322023	BAOSTEEL BGSAG1804020007200		-45	10 X 5.0 X 55	48	40	52	46.67
10	90 E L/R WPL6 XS	8	5	A304	18323304	BAOSTEEL BGSAG1804250001100		-45	10 X 10 X 55	230	216	212	219.33
16	TEE WPL6 STD	8	5	956V	1535956V	HENGYANG C201538794-1	PASS	-45	10 X 7.5 X 55	46	52	48	48.67

7560109
7560873
7560926
7561733

Specification	Chemical Composition%												Tensile Test			Hardness Test	Heat Treatment	REMARK
	C	Si	Mn	P	S	Cu	Ni	Cr	Mo	V	Nb	C.E	Y.S	T.S	E			
	X100	X100	X100	X1000	X1000	X100	X100	X100	X100	X1000	X1000	X100	P.S.I	P.S.I	%	HB		
Min.		15	50										35000	60000	30			
Max.	30	40	135	35	40	40	40	30	12	80	20	50		95000		197		
3	13	17	78	10	3	4	2	4	1	<1	<1	27	42950	66700	39.0	133-134	NORM. 910℃x0.5HR AC	
9	12	16	80	7	6	2	1	3	1	<1	<1	26	41208	67300	35.0	133-134		
10	13	16	73	11	3	3	2	4	1	<1	20	26	44256	65300	44.0	134-135		
16	12	27	124	13	3	2	1	7	2	5	2	35	46722	67000	42.0	133-134		

C.E. = C+Mn / 6 + (Cr+Mo+V)/5 + (Ni+Cu)/15

We hereby certify that the material herein described has been manufactured, sampled, tested and inspected in accordance with, and was found to meet, the requirements of above specifications and purchaser's order.

K. Y. Tsai
Chief of Quality Assurance Section

CERTIFICATE OF INSPECTION & TEST (EN 10204 3.1)

ST&H CORPORATION
OFFICE - 74, Jwadongsunhwan-ro, Haeundae-gu, Busan, Korea
PLANT - 11, Eogokgongdan 2-gil, Yangsan-si, Kyungnam, Korea
Tel : +82.51.744-4680(5 line) Fax : +82.51.744-4670
E-mail :qm@stnhcorp.com

Certified to ISO9001/ ISO14001:2015,PED2014/68/EC by LRQA

Certificate No. MJH0165-02/07 **Date :** DEC. 20. 2018
Customer CCTF CORPORATION
Contract No. 4038829-00
Spec. For Material ASTM A105N-18,ASME SA105N-17,ASTM A350 LF2 CL1-18,ASME SA350 LF2 CL1-17,NACE MR0175/ISO 15156-2:2015,NACE MR0103/ISO 17495-1:2016
Heat Treatment 930°C NORMALIZED & A.C **Dimensional inspection** ASME B16.5 - 2017

ITEM / SIZE	Q'ty	Heat No./ Batch No.	Size of Test Specimen D mm	Size of Test Specimen GL mm		Tension Test Y.S MPa	Tension Test T.S MPa	Tension Test E.L %	Tension Test R.A %	Hardness Test (HB)		Charpy Impact Test (10X10mm Specimen Size) Indiv. 16J	Ave. 20J	Notch V	Temp. -46°C
					Max		655			187		Test Result (J)			Ave.(J)
			12.5	50.0	Min	250	485	22.0	30.0						
7586502	150LBS TH RF 6"	5	508105C	12.5	50.0	330	522	33	73	150	155	136	154	142	144
7581210	300LBS WN RF XH 6"	20	508105C	12.5	50.0	330	522	33	73	150	155	136	154	142	144
7586891	150LBS WN RF STD 8"	20	508105D	12.5	50.0	330	522	33	73	150	155	136	154	142	144
7586867	300LBS WN RF STD 4"	25	508105D	12.5	50.0	330	522	33	73	150	155	136	154	142	144
7585496	300LBS WN RF STD 6"	35	508105D	12.5	50.0	330	522	33	73	150	155	136	154	142	144
	BLANK		BLANK				BLANK			BLANK					

Heat No./ Batch No.		Chemical Composition (%) C	Si	Mn	P	S	Ni	Cr	Mo	Cu	V	Nb	CE	NDE UT	MT	PT
	Max	0.300	0.300	1.350	0.035	0.040	0.400	0.300	0.120	0.400	0.080	0.020				
	Min		0.150	0.600												
	H	0.159	0.234	1.260	0.011	0.003	0.019	0.077	0.005	0.017	0.001	0.004	0.388			
508105C	P	0.160	0.244	1.250	0.014	0.003	0.017	0.079	0.006	0.018	0.001	0.004	0.387			
	H	0.159	0.234	1.260	0.011	0.003	0.019	0.077	0.005	0.017	0.001	0.004	0.388			
508105D	P	0.160	0.244	1.250	0.014	0.003	0.017	0.079	0.006	0.018	0.001	0.004	0.387			
									BLANK							

REMARK * H : Heat Analysis P : Product Analysis

We hereby certify that the material herein has been made and tested in accordance with the above specification and also with the requirements called for by the above order.

Witnessed by / H. J. LEE

Manager of Q.A Dept. / JAY KIM
ST&H CORPORATION

ST-801-14-02

CERTIFICATE OF INSPECTION & TEST (EN 10204 3.1)

ST&H CORPORATION
OFFICE - 74, Jwadongsunhwan-ro, Haeundae-gu, Busan, Korea
PLANT - 11, Eogokgongdan 2-gil, Yangsan-si, Kyungnam, Korea
Tel : +82.51.744-4680(5 line) Fax : +82.51.744-4670
E-mail :qm@stnhcorp.com

RPS 0160300 / 01

Certified to ISO9001/ ISO14001:2015,PED2014/68/EC by LRQA

Certificate No. MJH0137-07/11 **Date :** DEC. 19. 2018
Customer CCTF CORPORATION
Contract No. 4038743-00
Spec. For Material ASTM A10SN-18,ASME SA10SN-17,ASTM A350 LF2 CL1-18,ASME SA350 LF2 CL1-17,NACE MR0175/ISO 15156-2:2015,NACE MR0103/ISO 17495-1:2016
Heat Treatment 930°C NORMALIZED & A.C **Dimensional inspection**ASME B16.5 - 2017

ITEM / SIZE		Q'ty	Heat No./ Batch No.	Size of Test Specimen D mm	Size of Test Specimen GL mm	Tension Test	Y.S MPa	T.S MPa	E.L %	R.A %	Hardness Test (HB)		Charpy Impact Test (10X10mm Specimen Size) Indiv. 16J	Ave. 20J	Notch V	Temp. -46°C
						Max		655			187		Test Result (J)			Ave.(J)
				12.5	50.0	Min	250	485	22.0	30.0						
7585585	150LBS BL RF 6"	40	508101C	12.5	50.0		339	525	34	78	159	162	188	165	195	183
7585666	300LBS BL RF 8"	25	508101C	12.5	50.0		339	525	34	78	159	162	188	165	195	183
7580185	900/1500LBS SW RF S160 2"	20	508101C	12.5	50.0		339	525	34	78	159	162	188	165	195	183
7580219	150LBS SO RF 10"	20	508101F	12.5	50.0		339	525	34	78	159	162	188	165	195	183
7586507	150LBS SO RF 3"	50	508101F	12.5	50.0		339	525	34	78	159	162	188	165	195	183
7586508	150LBS SO RF 4"	25	508101F	12.5	50.0		339	525	34	78	159	162	188	165	195	183
7586509	150LBS SO RF 6"	70	508101F	12.5	50.0		339	525	34	78	159	162	188	165	195	183
7580218	150LBS SO RF 8"	25	508101F	12.5	50.0		339	525	34	78	159	162	188	165	195	183
	BLANK		BLANK					BLANK			BLANK					

Heat No./ Batch No.		Chemical Composition (%) C	Si	Mn	P	S	Ni	Cr	Mo	Cu	V	Nb						CE	NDE UT	MT	PT
	Max	0.300	0.300	1.350	0.035	0.040	0.400	0.300	0.120	0.400	0.080	0.020									
	Min		0.150	0.600																	
	H	0.160	0.207	1.250	0.009	0.007	0.020	0.091	0.002	0.024	0.001	0.004						0.390			
508101C	P	0.164	0.220	1.250	0.009	0.005	0.013	0.092	0.002	0.022	0.003	0.004						0.394			
	H	0.160	0.207	1.250	0.009	0.007	0.020	0.091	0.002	0.024	0.001	0.004						0.390			
508101F	P	0.164	0.220	1.250	0.009	0.005	0.013	0.092	0.002	0.022	0.003	0.004						0.394			
										BLANK											

REMARK * H : Heat Analysis P : Product Analysis

We hereby certify that the material herein has been made and tested in accordance with the above specification and also with the requirements called for by the above order.

Witnessed by / H. J. LEE

Manager of Q.A Dept. / JAY KIM
ST&H CORPORATION

ST-801-14-02

INSPECTION CERTIFICATE

Customer : CCTF CORPORATION
Product : SEAMLESS LOW TEMPERATURE CARBON STEEL BUTT WELD FITTINGS
Spec : ASTM A420-16/ASME SA420-15 WPL6, CSA Z245.11-17 Gr 241 Cat II -45C SS NACE MR0175/ISO 15156-2 Region 3-15 & NACE MR0103-16, ASTM A234-18/ASME SA234-15 WPB

ACCORDANCE WITH EN 10204-3.1
CHUP HSIN ENTERPRISE CO., LTD.
17, TUNG LI ROAD, HSIAO KANG DISTRICT,
KAOHSIUNG CITY, TAIWAN, R.O.C.
TEL:(07)831-9157 FAX:(07)821-7500, 831-2942

Certificate No : 00700220-0110
Order No : 4039057-00
Date : 2019/03/19

Raw Material	Specification for Inspection	Visual Inspection	Dimensional Inspection
ASTM A106 GR.B/GREEN PIPE FOR A333-6	ASME B16.9-2012	PASS	PASS

Item	Description		Quantity	Heat ID	Heat No	Raw Material Certificate No.	NDE MT	Impact Test: Test Temp ℃	Size of specimen mm	Charpy V-Notch Impact Value J			Ave. J
123	45 E L/R WPL6 STD 1288	6	35	886V	1834886V	HENGYANG C201841289-1		-45	10 X 5.0 X 55	56	62	62	60
131	RED TEE WPL6 STD 2824	4 X 2	10	885V	1834885V	HENGYANG C201841281-1	PASS	-45	10 X 5.0 X 55	54	48	52	51.33
132	RED TEE WPL6 STD 2808	4 X 3	15	885V	1834885V	HENGYANG C201841281-1	PASS	-45	10 X 5.0 X 55	54	48	52	51.33
135	TEE WPL6 XS 1938	6	8	A248	18322248	BAOSTEEL BGSAG1803080005100	PASS	-45	10 X 10 X 55	128	142	150	140
136	TEE WPL6 XS 1946	8	2	E274	34274H	BAOSTEEL BGSQG1804040002900	PASS	-45	10 X 10 X 55	162	184	178	174.67

Specification	Chemical Composition%												Tensile Test			Hardness Test	Heat Treatment	REMARK
	C	Si	Mn	P	S	Cu	Ni	Cr	Mo	V	Nb	C.E	Y.S	T.S	E			
	X100	X100	X100	X1000	X1000	X100	X100	X100	X100	X1000	X1000	X100	P.S.I	P.S.I	%	HB		
Min.		15	50										35000	60000	30			
Max.	30	40	135	35	40	40	40	30	12	80	20	50		95000		197		
123	13	31	98	11	1	5	2	6	1	1	<1	31	49044	68100	42.5	135-138	NORM. 910 C x0.5HR AC	
131	13	31	100	11	2	5	2	6	2	<1	<1	31	47738	67600	37.0	138-139		
132	13	31	100	11	2	5	2	6	2	<1	<1	31	47738	67600	37.0	138-139		
135	13	15	74	6	4	4	2	4	1	<1	<1	27	39322	63600	40.0	138-139		
136	15	18	89	9	4	1	3	4	<1	<1	1	31	38306	68100	35.5	134-135		

C.E. = C+Mn / 6 + (Cr+Mo+V)/5 + (Ni+Cu)/15

We hereby certify that the material herein described has been manufactured, sampled, tested and inspected in accordance with, and was found to meet, the requirements of above specifications and purchaser's order.

K. Y. Tsai

Chief of Quality Assurance Section

INSPECTION CERTIFICATE

RIGID INDUSTRIES CO., LTD.
8. MEI-CHUNG RD. NIAO-SONG,
KAOHSIUNG 83301,TAIWAN
TEL: 886-77310527~8
FAX: 886-77315887

PURCHASER: SEYBOLD INT'L CORP.
STANDARD: ASTM A420 WPL6-16 / ASME SA420 WPL6-04 / CSA Z245.11-17 Gr.290 CAT II Sour Service
MATERIALS: ASTM A333-6
INSP SPEC: ASME B16.9 -12

DATE: 2019-01-07
ORDER NO: 7014596/4038286-00
P.I. NO: 18B05-1
CERTIFI. NO: 181212-1

ACCORDING TO EN10204/DIN50049/3.1

ITEM NO.	PRODUCT & SIZE	QUANTITY PCS	MFG NO.	VISUAL & DIMENTIONAL INSPECTION	HARDNESS MAX. 197 HB	HEAT TREATMENT (NOTE)	MAGNETIC PARTICLE EXAMINATION	IMPACT TEST (J) 10 x 5.0 x 2V AT -45 °C
35	TEE 6"WPL6 STD 7561725	25	18C1054	GOOD	132-143	N	GOOD	112.4 115.3 129.7 119.1

ITEM NO.	MATERIAL CHARGE NO.		CHEMICAL COMPOSITION % C x100	Si x100	Mn x100	P x1000	S x1000	Cu x100	Ni x100	Cr x100	Mo x100	V x100	Nb x1000	Ti x100	B x1000	* PHYSICAL TEST YS KSI	TS KSI	E %	**	*CE x100	*CEQ x100
	STANDARD	MIN.		15	60											42.0	60.0	27.0			
		MAX.	30	50	160	50	60	150	100	25	25	13	100	2	1		95.0			50	50
35	J4LB254		11	26	130	14	3	1	2	12	1	<1	<1	2	<1	44.1	66.9	30.9	L	35	29

(NOTE): A:HOT FORMED WITH FINAL TEMPERATURE BETWEEN 620°C-980°C, AIR COOLING.
N:NORMALIZING AT TEMPERATURE 880°C X0.5HR, AIR COOLING S:STRESS RELIEF AT TEMPERATURE 650°C X0.5HR
NACE MR0175-2015/ISO15156-1 NACE MR0103-2015/ISO17945: SATISFACTORY

WE HEREBY CERTIFY THAT THE PRODUCT DESCRIBED HEREIN HAS BEEN MANUFACTURED IN ACCORDANCE WITH THE SPECIFICATIONS CONCERNED AND ALSO WITH THE PURCHASER' S REQUIREMENTS AND THAT THE TEST RESULTS SHOWN HEREIN ARE CORRECT.

* TYPE OF SPECIMEN: STRIP(WIDTH: 1 in./GAUGE LENGTH: 2 in.) ** SAMPLING DIRECTION: L=LONGITUDINAL, T=TRANSVERSE
*CE=C+Mn/6+(Cr+Mo+V)/5+(Cu+Ni)/15 *CEQ=C+F(Mn/6+Si/24+Cu/15+Ni/20+(Cr+Mo+V+Nb)/5+5B)

Ou C Lan
MANAGER OF Q.A. DEPT.

CERTIFICATE OF INSPECTION & TEST (EN 10204 3.1)

ST&H CORPORATION
OFFICE - 74, Jwadongsunhwan-ro, Haeundae-gu, Busan, Korea
PLANT - 11, Eogokgongdan 2-gil, Yangsan-si, Kyungnam, Korea
Tel : +82.51.744-4680(5 line) Fax : +82.51.744-4670
E-mail :qm@stnhcorp.com

RPS 0150309 / 01

Certified to ISO9001/ ISO14001:2015,PED2014/68/EC by LRQA

Certificate No. MJH0165-03/07 **Date :** DEC. 20. 2018
Customer CCTF CORPORATION
Contract No. 4038829-00
Spec. For Material ASTM A105N-18,ASME SA105N-17,ASTM A350 LF2 CL1-18,ASME SA350 LF2 CL1-17,NACE MR0175/ISO 15156-2:2015,NACE MR0103/ISO 17495-1:2016
Heat Treatment 930℃ NORMALIZED & A.C **Dimensional inspection** ASME B16.5 - 2017

ITEM / SIZE		Q'ty	Heat No./ Batch No.	Size of Test Specimen		Tension Test					Hardness Test (HB)		Charpy Impact Test (10X10mm Specimen Size)			
							Y.S	T.S	E.L	R.A			Indiv.	Ave.	Notch	Temp.
				D mm	GL mm		MPa	MPa	%	%			16J	20J	V	-46℃
				12.5	50.0	Max		655			187		Test Result (J)			Ave.(J)
						Min	250	485	22.0	30.0						
7585860	150LBS BL RF 8"	5	508105E	12.5	50.0		330	522	33	73	150	155	136	154	142	144
7585640	300LBS BL RF 4"	10	508105E	12.5	50.0		330	522	33	73	150	155	136	154	142	144
7585658	300LBS BL RF 6"	10	508105E	12.5	50.0		330	522	33	73	150	155	136	154	142	144
7585666	300LBS BL RF 8"	5	508105E	12.5	50.0		330	522	33	73	150	155	136	154	142	144
7586832	150LBS WN RF STD 6"	50	508105G	12.5	50.0		330	522	33	73	150	155	136	154	142	144
	BLANK		BLANK					BLANK			BLANK					

Heat No./ Batch No.		Chemical Composition (%)																	NDE		
		C	Si	Mn	P	S	Ni	Cr	Mo	Cu	V	Nb						CE			
	Max Min	0.300	0.300 0.150	1.350 0.600	0.035	0.040	0.400	0.300	0.120	0.400	0.080	0.020							UT	MT	PT
	H	0.159	0.234	1.260	0.011	0.003	0.019	0.077	0.005	0.017	0.001	0.004						0.388			
508105E	P	0.160	0.244	1.250	0.014	0.003	0.017	0.079	0.006	0.018	0.001	0.004						0.387			
	H	0.159	0.234	1.260	0.011	0.003	0.019	0.077	0.005	0.017	0.001	0.004						0.388			
508105G	P	0.160	0.244	1.250	0.014	0.003	0.017	0.079	0.006	0.018	0.001	0.004						0.387			
										BLANK											

REMARK * H : Heat Analysis P : Product Analysis

We hereby certify that the material herein has been made and tested in accordance with the above specification and also with the requirements called for by the above order.

Witnessed by / H. J. LEE

Manager of Q.A Dept. / JAY KIM
ST&H CORPORATION

ST-801-14-02

CERTIFICATE OF INSPECTION & TEST (EN 10204 3.1)

ST&H CORPORATION
OFFICE - 74, Jwadongsunhwan-ro, Haeundae-gu, Busan, Korea
PLANT - 11, Eogokgongdan 2-gil, Yangsan-si, Kyungnam, Korea
Tel : +82.51.744-4680(5 line) Fax : +82.51.744-4670
E-mail :qm@stnhcorp.com

Certified to ISO9001/ ISO14001:2015,PED2014/68/EC by LRQA

Certificate No. MJH0290-01/05 **Date :** FEB. 14. 2019
Customer CCTF CORPORATION
Contract No. 4039095-00
Spec. For Material ASTM A105N-18,ASME SA105N-17,ASTM A350 LF2 CL1-18,ASME SA350 LF2 CL1-17,NACE MR0175/ISO 15156-2:2015,NACE MR0103/ISO 17495-1:2016
Heat Treatment 930℃ NORMALIZED & A.C **Dimensional inspection**ASME B16.5 - 2017

ITEM / SIZE		Q'ty	Heat No./ Batch No.	Size of Test Specimen D mm	Size of Test Specimen GL mm	Tension Test	Y.S MPa	T.S MPa	E.L %	R.A %	Hardness Test (HB)		Charpy Impact Test (10X10mm Specimen Size) Indiv. 16J	Ave. 20J	Notch V	Temp. -46℃
						Max		655			187		Test Result (J)			Ave.(J)
				12.5	50.0	Min	250	485	22.0	30.0						
7585585	150LBS BL RF 6"	20	B03459	12.5	50.0		330	520	34	76	150	156	80	75	86	80
7585860	150LBS BL RF 8"	10	B03459	12.5	50.0		330	520	34	76	150	156	80	75	86	80
7580218	150LBS SO RF 8"	20	B03459	12.5	50.0		330	520	34	76	150	156	80	75	86	80
7580202	150LBS SO RF 14"	2	B03459	12.5	50.0		330	520	34	76	150	156	80	75	86	80
7586502	150LBS TH RF 6"	5	B03459	12.5	50.0		330	520	34	76	150	156	80	75	86	80
7586824	150LBS WN RF STD 4"	50	B03459	12.5	50.0		330	520	34	76	150	156	80	75	86	80
7586832	150LBS WN RF STD 6"	30	B03459	12.5	50.0		330	520	34	76	150	156	80	75	86	80
7586891	150LBS WN RF STD 8"	20	B03459	12.5	50.0		330	520	34	76	150	156	80	75	86	80
7583949	300LBS WN RF STD 8"	10	B03459	12.5	50.0		330	520	34	76	150	156	80	75	86	80
7585321	150LBS WN RF STD 10"	20	B03459	12.5	50.0		330	520	34	76	150	156	80	75	86	80

Heat No./ Batch No.		Chemical Composition (%) C	Si	Mn	P	S	Ni	Cr	Mo	Cu	V	Nb						CE	NDE UT	MT	PT
	Max	0.300	0.300	1.350	0.035	0.040	0.400	0.300	0.120	0.400	0.080	0.020									
	Min		0.150	0.600																	
	H	0.163	0.226	1.230	0.012	0.002	0.057	0.138	0.017	0.147	0.001	0.006						0.412			
B03459	P	0.162	0.224	1.240	0.011	0.002	0.054	0.136	0.014	0.138	0.001	0.001						0.411			

BLANK

REMARK * H : Heat Analysis P : Product Analysis

We hereby certify that the material herein has been made and tested in accordance with the above specification and also with the requirements called for by the above order.

Witnessed by / H. J. LEE

Manager of Q.A Dept. / JAY KIM
ST&H CORPORATION

ST-801-14-02

MLTS_6056-18777
Heat# SEE BELOW

CCTF CORPORATION
5407 53rd Avenue, Edmonton, AB T6B 3G2 (780) 463-8700

Date: 6/14/2019

Mill Test Reports

Invoice: 5736215-00
PO: WT

Customer: 498
A.B.F. MINES/2985080 CANADA
1310 AVE DAVY
REF 18777-6056
ROUYN-NORANDA, QC J9Y 0A8

Line	Heat#	Product	Description
1	61k01m028	7561296	8 STD LR 45 WELD ELL A420WPL6
1	61m01m049	7561296	8 STD LR 45 WELD ELL A420WPL6
1	61n01m031-1	7561296	8 STD LR 45 WELD ELL A420WPL6
2	b21a8	7583949	8 300 RF WN FLG STD A350LF2

Heat codes followed by ** have been corrected, change may not show on the packing slip

Purchaser : CCTF CORPORATION

INSPECTION CERTIFICATE

TO EN10204 3.1

BENKAN

Thai Benkan Co., Ltd.
58 Soi Watkrunai, Bangkru, Prapadaeng,
Samutprakarn, 10130 Thailand.

Purchase Order No. 4901180-00 | Job No.

D M Y Certificate No.
09/11/2018 T - 2018031531

E-No.	Specification for Material Made from Seamless Pipe	Specification for Inspection	Visual Examination	Dimensional Inspection
TA-162	ASTM A420-16 / ASME SA420-17 Gr.WPL6 CSA Z245.11-17 Gr.241 CAT II M15C Sour Service	ASME B16.9-2012,B16.25-2017	Good	Good

MFG. No.	Product & Size (T:*1)	Quantity	Hardness Actual Data
61K01M028	45 EL WPL6 8 STD	10	HBW:115-145

	Material Heat No.	Item No.		
	184740	7561296		

Specification	Chemical Composition %													*2 Tension Test transverse			HARDNESS MAX 197 HB : GOOD	
	C	Si	Mn	P	S	Cu	Ni	Cr	Mo	Al	V	Nb	C.E.	YS	TS	E	Impact Test (J) longitudinal 10 X 6.7 X 2V AT -45 °C	
	X 100	X 100	X 100	X 1000	X 1000	X 100	X 100	X 100	X 100	X 1000	X 1000	X 1000	X 100	MPa.		%		
Min.		15	50											241	415	30	120	
Max.	30	35	135	35	40	40	40	30	12		80	20			585		129	AVE. 127
	15	21	105	9	5	6	4	5	2		1	1	35	305	481	41	131	

NORMALIZING 910 C X 40 MINUTES. COOLED IN STILL AIR

The product was manufactured,sampled,tested, and inspected as specified in this Standard and the purchase order, and was found to have met such requirements.

The material meet ANSI/NACE MR0175/ISO15156-2 (Region 3) :2015 & MR0103-2015

C.E. = C+Mn/6+(Cr+Mo+V)/5+(Ni+Cu)/15 MAGNETIC PARTICLE EXAMINATION FOR TEE ONLY :

We hereby certify that the product described herein has been manufactured in accordance with the specifications concerned and also with the purchaser's requirements and that the test results shown herein are correct.

* 1 : "T" symbolized wall thickness in mm. * 2 : YS Yield strength TS = Tensile strength E = Elongation

Form T7-61/1

Rungnapa Kampiranon
Quality Assurance Manager
Thai Benkan Co., Ltd.

Purchaser : CCTF CORPORATION

INSPECTION CERTIFICATE

TO EN10204 3.1

BENKAN.
Thai Benkan Co., Ltd.
58 Soi Watkrunai, Bangkru, Prapadaeng,
Samutprakarn, 10130 Thailand.

Purchase Order No. 4901220-00 | Job No.

D M Y Certificate No.
09/11/2018 T - 2018031547

E-No.	Specification for Material Made from Seamless Pipe	Specification for Inspection	Visual Examination	Dimensional Inspection
TA-169	ASTM A420-16 / ASME SA420-17 Gr.WPL6 CSA Z245.11-17 Gr.241 CAT II M45C Sour Service	ASME B16.9-2012,B16.25-2017	Good	Good

MFG. No.	Product & Size (T:*1)	Quantity	Hardness Actual Data
61M01M049	45 EL WPL6 8 STD	10	HBW:115-146

	Material Heat No.	Item No.		
	J8K4597	7561298		

Specification	Chemical Composition %													*2 Tension Test transverse			HARDNESS MAX 197 HB : GOOD	
	C	Si	Mn	P	S	Cu	Ni	Cr	Mo	Al	V	Nb	C.E.	Y S	T S	E	Impact Test (J) longitudinal	
	x 100	x 100	x 100	x 1000	x 1000	x 100	x 100	x 100	x 100	x 1000	x 1000	x 1000	x 100	MPa.		%	10 X 6.7 X 2V AT -46 °C	
Min.		15	50											241	415	30	161	
Max.	30	35	135	35	40	40	40	30	12		80	20			585		174	AVE. 173
	12	27	128	11	1	2	2	11	1		0	0	36	286	458	46	183	

NORMALIZING 910 C X 40 MINUTES. COOLED IN STILL AIR

The product was manufactured,sampled,tested, and inspected as specified in this Standard and the purchase order, and was found to have met such requirements.

The material meet ANSI/NACE MR0175/ISO15156-2 (Region 3) :2015 & MR0103-2015

C.E. = C+Mn/6+(Cr+Mo+V)/5+(Ni+Cu)/15 MAGNETIC PARTICLE EXAMINATION FOR TEE ONLY :

We hereby certify that the product described herein has been manufactured in accordance with the specifications concerned and also with the purchaser's requirements and that the test results shown herein are correct.

* 1 : "T" symbolized wall thickness in mm. * 2 : YS Yield strength TS = Tensile strength E = Elongation

Form T7-61/1

Rungnapa Kamptraroon
Quality Assurance Manager
Thai Benkan Co., Ltd.

Purchaser : CCTF CORPORATION

INSPECTION CERTIFICATE

TO EN10204 3.1

BENKAN
Thai Benkan Co., Ltd.
58 Soi Watkrunai, Bangkru, Prapadaeng,
Samutprakarn, 10130 Thailand.

Purchase Order No. 4801279-00 Job No.

D M Y 11/12/2018 Certificate No. T - 2018031649

E-No.	Specification for Material Made from Seamless Pipe	Specification for Inspection	Visual Examination	Dimensional Inspection
TA-194	ASTM A420-16 / ASME SA420-17 Gr.WPL6 CSA Z245.11-17 Gr 241 CAT II M45C Sour Service	ASME B16.9-2012,B16.25-2017	Good	Good

MFG. No.	Product & Size (T:*1)	Quantity	Hardness Actual Data
61N01M031-1	45 EL WPL6 8 STD	9/10	HBW:115-145

	Material Heat No.	Item No.		
	185081	7561296		

Specification	Chemical Composition %													*2 Tension Test transverse			HARDNESS MAX 197 HB : GOOD	
	C	Si	Mn	P	S	Cu	Ni	Cr	Mo	Al	V	Nb	C.E.	YS	TS	E	Impact Test (J) longitudinal 10 X 7.5 X 2V AT -46 °C	
	X 100	X 100	X 100	X 1000	X 1000	X 100	X 100	X 100	X 100	X 1000	X 1000	X 1000	X 100	MPa.		%		
Min.		15	50											241	415	30	115	
Max.	30	35	135	35	40	40	40	30	12		80	20			585		118	AVE. 118
	16	25	106	10	4	6	4	5	2		1	1	36	309	480	40	120	

NORMALIZING 910 C X 40 MINUTES. COOLED IN STILL AIR

The material meet ANSI/NACE MR0175/ISO15156-2 (Region 3) :2015 & MR0103-2015

The product was manufactured,sampled,tested, and inspected as specified in this Standard and the purchase order, and was found to have met such requirements.

C.E. = C+Mn/6+(Cr+Mo+V)/5+(Ni+Cu)/15 MAGNETIC PARTICLE EXAMINATION FOR TEE ONLY :

We hereby certify that the product described herein has been manufactured in accordance with the specifications concerned and also with the purchaser's requirements and that the test results shown herein are correct.

* 1 : "T" symbolized wall thickness in mm. * 2 : YS Yield strength TS = Tensile strength E = Elongation

Form TZ-6J/1

Rungnapa Kampiranon
Quality Assurance Manager
Thai Benkan Co., Ltd.

CLIENTE / Customer / Client
CCTF CORPORATION (ONTARIO)
4151 NORTH SERVICE RD.
UNIT 2
BURLINGTON, ONTARIO
L7L4X6 - CANADA
CAN

CERTIFICADO DE INSPECCION

UNE EN 10204:06 / 3.1
Inspection Certificate - Certificat de Réception ISO 10474:15 / 3.1

FECHA: Date: 27/06/2018 | N.º No. 196066 | HOJA: Page: 2

SGI 1922164 SGI 6000236 SGI 6009987

ULMA FORJA, S.COOP.
Management Systems certified by LRQAE
Certified acc. PED 97/23/EC+AD2000-W0
PED 14/68/UE
by TÜV Rheinland
N.º 01 202 E/Q 02 7443
Bº Zubillaga, 3 - Apdo. 14
20560 OÑATI (Gipuzkoa) SPAIN
Tel.: 34 - 943 780552
Fax: 34 - 943 781808
E-mail: ulma@ulmapiping.com

PRODUCTO / Article - Produit: FLANGES

SU PEDIDO N.º / Your Order No. / Votre Cde. N.º: 43038605-00 TORONTO

DE / of. - de: 28/05/2018

NORMAS APLICABLES / Requirements - Normes Applicables: ASME B16.5-17

MARCA DEL FABRICANTE / Mark of factory / Marque du fabricant

Packing 140699

MATERIAL CORRESPONDIENTE / Material Correspondent - Qualité: ASME SA350LF2CL1-2-17, ASTM A350LF2CL1-2-17

MODO DE FUSION (*) / Steel Making - Elaboration de l'acier / E = Elec. Y = Oxigeno básico: NACE MR0175/ISO15156-02/03-15 & NACE MR0103/ISO17495-15 Clause 7.2.1.4, Annex A.2 and SSC Region 3. CSA-Z245.12-17 GR248 CAT II-SS (WN & BLIND FLANGES ONLY)

DEPARTAMENTO / Section / Département: QUALITY ASSURANCE

PARTIDA / Item / Poste	CANTIDAD / Quantity / Quantité	DESCRIPCION / Description / Description	LOTE	OBSERVACIONES / Remarks / Observations (*)	COLADA N.º / Heat No / N.ºCoulée	RESISTENCIA / T.Strength / Resist Rupt N/mm2	LIMITE ELAST / Y.Strength 0,2 % N/mm2	ALARGAM / Elongation Allongement Lo:50mm/4d %	ESTRICCION / Red. Area / Striction %	RESILIENCIA / Impact test / Résilience Joules			CHARPY V 10x10mm MEDIA / Average / Moyenne	°C	DUREZA / Hardness / Durete HBW	
39 7580201	30	WN 1.1/2 150LB XS/80 RF A350LF2	24Y16	NE	A45A6	517	320	26,00	45,00	58	63	65	62	-50	152	156
45 7581005	1	BLIND 14 150LB RF A350LF2	02M18G	NE	25AV8	522	308	30,20	62,80	59	57	64	60	-50	150	154
46 7581006	1	BLIND 16 150LB RF A350LF2	06J803	NE	69AV8	507	304	30,40	58,20	60	58	63	60	-50	147	148
46 7581006	1	BLIND 16 150LB RF A350LF2	19D17	NE	B64A7	499	296	33,30	66,70	45	35	42	40	-50	144	148
48 7583949	1	WN 8 300LB STD/40 RF A350LF2	16Y816	NE	97AV8	517	307	29,80	60,70	75	71	70	72	-50	150	151
48 7583949	7	WN 8 300LB STD/40 RF A350LF2	04J802	NE	B21A8	515	298	32,60	67,30	69	76	67	70	-50	148	150
52 7582780	3	BLIND 8 600LB RF A350LF2	22Y827	NE	73AV8	511	297	36,30	69,80	58	50	62	57	-50	147	148
52 7582780	3	BLIND 8 600LB RF A350LF2	23Y809	NE	73AV8	502	319	38,10	70,10	90	69	62	74	-50	146	149

COMPOSICION QUIMICA - STEEL MAKER'S LADLE ANALYSIS - ANALYSE CHIMIQUE

COLADA Nº / Heat No / N.ºCoulée	C %	Si %	Mn %	P %	S %	Cr %	Ni %	Mo %	Nb %	V %	Cu %	Al %	Ti %	B %	CEq %
25AV8	0,190	0,230	1,050	0,005	0,007	0,068	0,090	0,014	0,002	0,004	0,180	0,025	0,002	0,0003	0,40
69AV8	0,184	0,200	1,115	0,012	0,003	0,055	0,147	0,017	0,001	0,001	0,138	0,033	0,001	0,0001	0,40
73AV8	0,190	0,193	1,073	0,011	0,003	0,062	0,075	0,015	0,001	0,001	0,112	0,037	0,002	0,0001	0,40
97AV8	0,190	0,220	1,110	0,005	0,007	0,045	0,072	0,012	0,003	0,005	0,150	0,027	0,002	0,0003	0,40
A45A6	0,195	0,222	0,994	0,007	0,008	0,053	0,103	0,024	0,000	0,001	0,212	0,028	0,001	0,0005	0,40
B21A8	0,170	0,190	1,060	0,011	0,004	0,110	0,090	0,009	0,004	0,000	0,180	0,029	0,001	0,0004	0,39
B64A7	0,190	0,170	1,030	0,011	0,004	0,100	0,060	0,008	0,007	0,006	0,150	0,041	0,001	0,0002	0,40

- Las dimensiones y la condición superficial se hallaron satisfactorias.
- Dimension and surface condition were found acceptable
- Les dimensions et états de surface sont satisfaisants.

- Los materiales citados cumplen las normas aplicables.
- Manufacturing requirements are satisfied.
- Les normes applicables sont respectées.

EL INSPECTOR
Works Inspector - L'Inspecteur

ULMA FORJA S. COOP.
Dpto. de Garantía de Calidad
Quality Assurance Dept.

(*) OBSERVACIONES. Remarks Observations: N_NORMALIZED AT 900 C AND ALLOWED TO COOL IN STILL AIR.

MLTS_6056-18929
Heat# B03238 A07A9 B011568B B05432B

CCTF CORPORATION

4151 North Service Road, Burlington, ON L7L 4X6 (905) 335-5320

Date: 8/8/2019

Mill Test Reports

Invoice: 1599344-00
PO: 2610155

Customer: 27403-261
A.B.F. MINES/2985080
1310 AVE DAVY
ROUYN-NORANDA, QC J9Y 0A8

Line	Heat#	Product	Description
1	b03238	7586832	6 150 RF WN FLG STD A350LF2
2	a07a9	7586824	4 150 RF WN FLG STD A350LF2
3	b01568b	7586509	6 150 RF SO FLG A350LF2
4	b05432b	7586508	4 150 RF SO FLG A350LF2

Heat codes followed by ** have been corrected, change may not show on the packing slip

CERTIFICATE OF INSPECTION & TEST (EN 10204 3.1)

ST&H CORPORATION
OFFICE - 74, Jwadongsunhwan-ro, Haeundae-gu, Busan, Korea
PLANT - 11, Eogokgongdan 2-gil, Yangsan-si, Kyungnam, Korea
Tel : +82.51.744-4680(5 line) Fax : +82.51.744-4670
E-mail :qm@stnhcorp.com

CE
RPS 0360309 / 01

Certificate No. MJH0103-10/16 Date : AUG. 27. 2018
Customer CCTF CORPORATION
Contract No. 4038603-00
Spec. For Material ASTM A105N-14,ASME SA105N-17,ASTM/ASME A/SA350 LF2 CL1-17,NACE MR0175/ISO 15156-2:2015,NACE MR0103/ISO 17495-1:2016
Heat Treatment 930°C NORMALIZED & A.C

Certified to ISO9001/ ISO14001:2015,PED2014/68/EC by LRQA

Dimensional inspection ASME B16.5 - 2017

ITEM / SIZE		Q'ty	Heat No./ Batch No.	Size of Test Specimen D mm	Size of Test Specimen GL mm	Tension Test Max	Tension Test Y.S MPa	Tension Test T.S MPa	Tension Test E.L %	Tension Test R.A %	Hardness Test (HB)		Charpy Impact Test (10X10mm Specimen Size) Indiv. 16J	Charpy Impact Test Ave. 20J	Charpy Impact Test Notch V	Charpy Impact Test Temp. -46°C
				12.5	50.0	Min	250	655 485	22.0	30.0	187		Test Result (J)			Ave.(J)
7586502	150LBS TH RF 6"	2	B03238	12.5	50.0		375	545	35	67.5	151	153	118	145	68	110
7586824	150LBS WN RF STD 4"	50	B03238	12.5	50.0		375	545	35	67.5	151	153	118	145	68	110
7586832	150LBS WN RF STD 6"	50	B03238	12.5	50.0		375	545	35	67.5	151	153	118	145	68	110
7585267	150LBS WN RF XH 4"	10	B03238	12.5	50.0		375	545	35	67.5	151	153	118	145	68	110
7580014	300LBS SO RF 4"	5	B03238	12.5	50.0		375	545	35	67.5	151	153	118	145	68	110
7587735	300LBS SO RF 6"	2	B03238	12.5	50.0		375	545	35	67.5	151	153	118	145	68	110
7585259	600LBS WN RF STD 3"	10	B03238	12.5	50.0		375	545	35	67.5	151	153	118	145	68	110
7581040	600LBS WN RF XH 3"	25	B03238	12.5	50.0		375	545	35	67.5	151	153	118	145	68	110
7581007	150LBS BL RF 18"	2	B03776	12.5	50.0		375	540	38	74.5	152	154	135	80	118	111
7580205	150LBS SO RF 20"	2	B03776	12.5	50.0		375	540	38	74.5	152	154	135	80	118	111

Heat No./ Batch No.		Chemical Composition (%) C	Si	Mn	P	S	Ni	Cr	Mo	Cu	V	Nb	CE	NDE UT	NDE MT	NDE PT
	Max	0.300	0.300	1.350	0.035	0.040	0.400	0.300	0.120	0.400	0.080	0.020				
	Min		0.150	0.600												
	H	0.176	0.201	1.060	0.015	0.004	0.032	0.077	0.004	0.050	0.001	0.001	0.374			
B03238	P	0.178	0.216	1.060	0.016	0.002	0.036	0.073	0.007	0.050	0.002	0.001	0.376			
	H	0.172	0.220	1.290	0.013	0.007	0.012	0.045	0.006	0.008	0.004	0.019	0.399			
B03776	P	0.174	0.220	1.290	0.011	0.003	0.012	0.044	0.006	0.008	0.001	0.015	0.400			

BLANK

REMARK * H : Heat Analysis P : Product Analysis

We hereby certify that the material herein has been made and tested in accordance with the above specification and also with the requirements called for by the above order.

Witnessed by / H. J. LEE

Manager of Q.A Dept. / JAY KIM

ST&H CORPORATION

ST-801-14-02

CLIENTE / Customer / Client
CCTF CORPORATION (ONTARIO)
4151 NORTH SERVICE RD.
UNIT 2
BURLINGTON, ONTARIO
L7L4X6 - CANADA
CAN

CERTIFICADO DE INSPECCION

UNE EN 10204:06 / 3.1
Inspection Certificate - Certificat de Réception ISO 10474:15 / 3.1

FECHA: Date: 21/05/2019 | N.º No. 203034 | HOJA: Page: 2

SGI 1922164 SGI 6000236 SGI 6009987

ULMA FORJA, S.COOP.
Management Systems certified by LRQAE
Certified acc. PED 97/23/EC+AD2000-W0
PED 14/68/UE
by TÜV Rheinland
N.º 01 202 E/Q 02 7443
Bº Zubillaga, 3 - Apdo. 14
20560 OÑATI (Gipuzkoa) SPAIN
Tel.: 34 - 943 780552
Fax: 34 - 943 781808
E-mail: ulma@ulmapiping.com

PRODUCTO / Article - Produit: FLANGES

SU PEDIDO N.º / Your Order No. / Votre Cde. N.º: 4039198-00

DE / of. - de: 18/02/2019

NORMAS APLICABLES / Requirements - Normes Applicables: ASME B16.5-17

MARCA DEL FABRICANTE / Mark of factory / Marque du fabricant

Packing 148506

MATERIAL CORRESPONDIENTE / Material Correspondent - Qualité: ASME SA350LF2CL1-2-17, ASTM A350LF2CL1-2-18

MODO DE FUSION (*) / Steel Making - Elaboration de l'acier / E = Elec. Y = Oxigeno básico: NACE MR0175/ISO15156-02/03-15 & NACE MR0103/ISO17495-15 Clause 7.2.1.4, Annex A.2 and SSC Region 3. CSA-Z245.12-17 GR248 CAT II-SS (WN & BLIND FLANGES ONLY)

DEPARTAMENTO / Section / Département: QUALITY ASSURANCE

PARTIDA Item Poste	CANTIDAD Quantity Quantité	DESCRIPCION Description Description	LOTE	OBSERVACIONES Remarks Observations (*)	COLADA N.º Heat No N.º Coulée	RESISTENCIA T.Strength Resist Rupt N/mm2	LIMITE ELAST Y.Strength 0.2 % N/mm2	ALARGAM. Elongation Allongement Lo:50mm/4o %	ESTRICCION Red Area Striction %	RESILIENCIA Impact test Résilience Joules			CHARPY V 10x10mm PROBETA ESTANDAR MEDIA Average Moyenne	°C	DUREZA Hardness Dureté HBW
15 7586824	56	WN 4 150LB STD/40 RF A350LF2	18M912	NE	A07A9	502	300	36,44	71,53	102	137	99	113	-50	146 148
22 7585496	24	WN 6 300LB STD/40 RF A350LF2	01F901	NE	B88A8	494	301	36,14	74,27	125	124	55	101	-50	138 138
30 7586646	10	BLIND 2 600LB RF A350LF2	09A901	NE	A63A9	512	314	30,40	72,40	112	106	100	106	-50	140 146

COLADA N.º Heat No Ladle: L Product: P	COMPOSICION QUIMICA - STEEL MAKER'S LADLE ANALYSIS - ANALYSE CHIMIQUE																Origin of Steel
	C %	Si %	Mn %	P %	S %	Cr %	Ni %	Mo %	Nb %	V %	Cu %	Al %	Ti %	B %	CEq %		
A07A9 L	0,192	0,206	1,138	0,008	0,004	0,037	0,050	0,017	0,000	0,002	0,053	0,034	0,001	0,0002	0,40		Germany
B88A8 L	0,182	0,206	1,153	0,010	0,005	0,050	0,057	0,014	0,001	0,002	0,061	0,028	0,001	0,0004	0,40		Germany
A63A9 L	0,189	0,223	1,151	0,011	0,005	0,049	0,055	0,012	0,001	0,002	0,094	0,028	0,002	0,0002	0,40		Germany

- Las dimensiones y la condición superficial se hallaron satisfactorias.
- Dimension and surface condition were found acceptable.
- Les dimensions et états de surface sont satisfaisants.

- Los materiales citados cumplen las normas aplicables.
- Manufacturing requirements are satisfied.
- Les normes applicables sont respectées.

EL INSPECTOR
Works Inspector - L'Inspecteur

ULMA FORJA S. COOP.
Dpto. de Garantía de calidad
Quality Assurance Dept.

(*) OBSERVACIONES: Remarks Observations: N_NORMALIZED AT 900 C AND ALLOWED TO COOL IN STILL AIR.

CERTIFICATE OF INSPECTION & TEST (EN 10204 3.1)

ST&H CORPORATION
OFFICE - 74, Jwadongsunhwan-ro, Haeundae-gu, Busan, Korea
PLANT - 11, Eogokgongdan 2-gil, Yangsan-si, Kyungnam, Korea
Tel : +82.51.744-4680(5 line) Fax : +82.51.744-4670
E-mail :qm@stnhcorp.com

Certified to ISO9001/ ISO14001:2015,PED2014/68/EC by LRQA

Certificate No. MJH0427-06/08 **Date :** JUN. 17. 2019
Customer CCTF CORPORATION
Contract No. 4039342-00
Spec. For Material ASTM A105N-18,ASME SA105N-17,ASTM A350 LF2 CL1-18,ASME SA350 LF2 CL1-17,NACE MR0175/ISO15156-2:2015,NACE MR0103/ISO17945:2015
Heat Treatment 930°C NORMALIZED & A.C **Dimensional inspection**ASME B16.5 - 2017

ITEM / SIZE		Q'ty	Heat No./ Batch No.	Size of Test Specimen		Tension Test					Hardness Test (HB)		Charpy Impact Test (10X10mm Specimen Size)			
				D	GL		Y.S	T.S	E.L	R.A			Indiv.	Ave.	Notch	Temp.
				mm	mm		MPa	MPa	%	%			16J	20J	V	-46°C
				12.5	50.0	Max		655			187		Test Result (J)			Ave.(J)
						Min	250	485	22.0	30.0	137					
7580219	150LBS SO RF 10"	15	B01568B	12.5	50.0		356	515	39	76	147	154	83	78	81	80
7580220	150LBS SO RF 12"	25	B01568B	12.5	50.0		356	515	39	76	147	154	83	78	81	80
7586509	150LBS SO RF 6"	70	B01568B	12.5	50.0		356	515	39	76	147	154	83	78	81	80
7580218	150LBS SO RF 8"	12	B01568B	12.5	50.0		356	515	39	76	147	154	83	78	81	80
7580200	150LBS WN RF STD 1"	15	B01568B	12.5	50.0		356	515	39	76	147	154	83	78	81	80
7586832	150LBS WN RF STD 6"	45	B01568B	12.5	50.0		356	515	39	76	147	154	83	78	81	80
7583949	300LBS WN RF STD 8"	40	B01568B	12.5	50.0		356	515	39	76	147	154	83	78	81	80
7580203	150LBS SO RF 16"	4	B01979E	12.5	50.0		344	541	35	75.5	150	152	60	65	59	61
7580204	150LBS SO RF 18"	5	B01979E	12.5	50.0		344	541	35	75.5	150	152	60	65	59	61
7580205	150LBS SO RF 20"	2	B01979E	12.5	50.0		344	541	35	75.5	150	152	60	65	59	61

Heat No./ Batch No.		Chemical Composition (%)																	NDE		
		C	Si	Mn	P	S	Ni	Cr	Mo	Cu	V	Nb						CE	UT	MT	PT
	Max	0.300	0.300	1.350	0.035	0.040	0.400	0.300	0.120	0.400	0.080	0.020									
	Min		0.150	0.600																	
	H	0.172	0.243	1.290	0.011	0.004	0.026	0.094	0.017	0.020	0.001	0.001						0.412			
B01568B	P	0.177	0.250	1.300	0.012	0.005	0.029	0.101	0.015	0.020	0.002	0.001						0.420			
	H	0.177	0.212	1.270	0.009	0.003	0.010	0.061	0.004	0.009	0.001	0.012						0.403			
B01979E	P	0.180	0.229	1.280	0.009	0.002	0.012	0.038	0.006	0.012	0.001	0.015						0.403			

BLANK

REMARK * H : Heat Analysis P : Product Analysis * C:Mn = 1≤5

We hereby certify that the material herein has been made and tested in accordance with the above specification and also with the requirements called for by the above order.

Witnessed by / H. J. LEE

Manager of Q.A Dept. / JAY KIM
ST&H CORPORATION

ST-801-14-02

CERTIFICATE OF INSPECTION & TEST (EN 10204 3.1)

ST&H CORPORATION
OFFICE - 74, Jwadongsunhwan-ro, Haeundae-gu, Busan, Korea
PLANT - 11, Eogokgongdan 2-gil, Yangsan-si, Kyungnam, Korea
Tel : +82.51.744-4680(5 line) Fax : +82.51.744-4670
E-mail :qm@stnhcorp.com

Certified to ISO9001/ ISO14001:2015,PED2014/68/EC by LRQA

Certificate No. MJH0427-07/08 **Date :** JUN. 17. 2019
Customer CCTF CORPORATION
Contract No. 4039342-00
Spec. For Material ASTM A105N-18,ASME SA105N-17,ASTM A350 LF2 CL1-18,ASME SA350 LF2 CL1-17,NACE MR0175/ISO15156-2:2015,NACE MR0103/ISO17945:2015
Heat Treatment 930℃ NORMALIZED & A.C **Dimensional inspection**ASME B16.5 - 2017

ITEM / SIZE		Q'ty	Heat No./ Batch No.	Size of Test Specimen D mm	Size of Test Specimen GL mm	Tension Test	Y.S MPa	T.S MPa	E.L %	R.A %	Hardness Test (HB)		Charpy Impact Test (10X10mm Specimen Size) Indiv. 16J	Ave. 20J	Notch V	Temp. -46℃ Ave.(J)
						Max		655			187		Test Result (J)			
				12.5	50.0	Min	250	485	22.0	30.0	137					
7589925	300LBS SO RF 12"	2	B01979E	12.5	50.0		344	541	35	75.5	150	152	60	65	59	61
7580216	150LBS SO RF 1"	15	B05432B	12.5	50.0		357	515	41	76	150	154	89	86	99	91
7586504	150LBS SO RF 2"	25	B05432B	12.5	50.0		357	515	41	76	150	154	89	86	99	91
7586507	150LBS SO RF 3"	50	B05432B	12.5	50.0		357	515	41	76	150	154	89	86	99	91
7586508	150LBS SO RF 4"	80	B05432B	12.5	50.0		357	515	41	76	150	154	89	86	99	91
7587602	150LBS SW RF XH 1"	25	B05432B	12.5	50.0		357	515	41	76	150	154	89	86	99	91
7587603	150LBS SW RF XH 1 1/2"	25	B05432B	12.5	50.0		357	515	41	76	150	154	89	86	99	91
7587600	150LBS SW RF XH 1/2"	250	B05432B	12.5	50.0		357	515	41	76	150	154	89	86	99	91
7587604	150LBS SW RF XH 2"	50	B05432B	12.5	50.0		357	515	41	76	150	154	89	86	99	91
7587601	150LBS SW RF XH 3/4"	25	B05432B	12.5	50.0		357	515	41	76	150	154	89	86	99	91

Heat No./ Batch No.		Chemical Composition (%) C	Si	Mn	P	S	Ni	Cr	Mo	Cu	V	Nb						CE	NDE UT	MT	PT
	Max	0.300	0.300	1.350	0.035	0.040	0.400	0.300	0.120	0.400	0.080	0.020									
	Min		0.150	0.600																	
	H	0.177	0.212	1.270	0.009	0.003	0.010	0.061	0.004	0.009	0.001	0.012						0.403			
B01979E	P	0.180	0.229	1.280	0.009	0.002	0.012	0.038	0.006	0.012	0.001	0.015						0.403			
	H	0.175	0.251	1.250	0.014	0.003	0.010	0.010	0.003	0.016	0.001	0.001						0.387			
B05432B	P	0.178	0.249	1.250	0.014	0.003	0.011	0.011	0.004	0.015	0.001	0.001						0.391			

BLANK

REMARK * H : Heat Analysis P : Product Analysis * C:Mn = 1≤5

We hereby certify that the material herein has been made and tested in accordance with the above specification and also with the requirements called for by the above order.

Witnessed by / H. J. LEE

Manager of Q.A Dept. / JAY KIM
ST&H CORPORATION

ST-801-14-02

MLTS_6056-18945-1
Heat# 7690075, 7690149, 7690199

CERTIFIED MILL TEST REPORT

The Best Value - *Price, Quality, Service* All The Time.

LOG NO. F00000000100245 Page 1 of 2

BONNEY FORGE CORPORATION
P.O. BOX 330 • 14496 CROGHAN PIKE • MOUNT UNION, PA 17066-0330
(814) 542-2545 • (800) 345-7546 • FAX (814) 542-4906
www.bonneyforge.com

CUSTOMER: CCTF CORPORATION **DATE** 10/04/2017

CUSTOMER ORDER NO.: 4037926-00 **BONNEY ORDER NO.** B000229128

SHIP TO: CCTF CORPORATION (BURLINGTON)
4151 NORTH SERVICE ROAD
UNIT 2
BURLINGTON ON L7L 4X6
Canada

ITEM	QUANTITY	LOT NO.	GRADE OR SPECIFICATION NO CHEMICAL ANALYSIS, PHYSICAL PROPERTIES, REMARKS:	
3	50	50196	36-3X1 3M LF2 FLEX T	SA/A350 LF2 CL1
7690075			Al 0.032 C 0.200 Co 0.002 Cr 0.040 Cu 0.030 Mn 1.050 Mo 0.003 Nb 0.014	
			Ni 0.020 P 0.005 S 0.019 Si 0.270 V 0.003	
			CE(Long Formula) = 0.39	
			T/S(PSI) 71,610 Y/S(PSI) 47,449 EL(%) 36.85 RA(%) 57.04	
			Brinell 135 BHN 135 BHN	
			Charpy -50 F 77/66/56 (Ft-Lbs)	
			Average 66.30	
5	50	50076	36-1 1/2X3/4 3M LF2 FLEX S	SA/A350 LF2 CL1
7690149			Al 0.027 C 0.200 Co 0.004 Cr 0.050 Cu 0.100 Mn 0.970 Mo 0.016 Nb 0.013	
			Ni 0.060 P 0.011 S 0.019 Si 0.220 V 0.003	
			CE(Long Formula) = 0.39	
			T/S(PSI) 76,500 Y/S(PSI) 53,000 EL(%) 31.00 RA(%) 64.00	
			Brinell 159 BHN 146 BHN	
			Charpy -50 F 42/58/45 (Ft-Lbs)	
			Average 48.30	
6	50	50196	36-3X1 3M LF2 FLEX S	SA/A350 LF2 CL1
7690199			Al 0.032 C 0.200 Co 0.002 Cr 0.040 Cu 0.030 Mn 1.050 Mo 0.003 Nb 0.014	
			Ni 0.020 P 0.005 S 0.019 Si 0.270 V 0.003	
			CE(Long Formula) = 0.39	
			T/S(PSI) 71,610 Y/S(PSI) 47,449 EL(%) 36.85 RA(%) 57.04	
			Brinell 135 BHN 135 BHN	
			Charpy -50 F 77/66/56 (Ft-Lbs)	
			Average 66.30	

We certify that the data on this sheet is a true copy taken from our records of material furnished us by the production mill, or as obtained by additional laboratory checks.

by Kylee Ruiz

Kylee Ruiz
QUALITY PROCESS MANAGER

CMTR: REV2

CERTIFIED MILL TEST REPORT

The Best Value - *Price, Quality, Service* All The Time.

LOG NO. F00000000100245

BONNEY FORGE CORPORATION
P.O. BOX 330 • 14496 CROGHAN PIKE • MOUNT UNION, PA 17066-0330
(814) 542-2545 • (800) 345-7546 • FAX (814) 542-4906
www.bonneyforge.com

CUSTOMER: CCTF CORPORATION

DATE 10/04/2017

CUSTOMER ORDER NO.: 4037926-00

BONNEY ORDER NO. B000229128

SHIP TO: CCTF CORPORATION (BURLINGTON)
4151 NORTH SERVICE ROAD
UNIT 2
BURLINGTON ON L7L 4X6
Canada

ITEM	QUANTITY	LOT NO.	GRADE OR SPECIFICATION NO CHEMICAL ANALYSIS, PHYSICAL PROPERTIES, REMARKS

1. THE FITTINGS SUPPLIED ARE IN ACCORDANCE WITH PURCHASE ORDER SPECIFICATIONS.
2. CERTIFYING TO ASTM A350 LF2 07 REVISION.
3. THE MATERIAL OF THE FITTINGS SUPPLIED IS ASTM A350-LF2 BUT MEETS THE REQUIREMENTS OF ASME SA350-LF2.
4. THE CHARPY V-NOTCH IMPACT TEST WAS PERFORMED AT -50 DEGREES FAHRENHEIT IN ACCORDANCE WITH A350-LF2.
5. THE MATERIAL SUPPLIED AS A350 LF2 CL1 MEETS THE REQUIREMENTS OF BOTH NACE MR0103-2007 AND NACE MR0175/ISO 15156-2.
6. THE MATERIAL SUPPLIED WAS NORMALIZED IN ACCORDANCE WITH ASTM A350 HEAT TREATING REQUIREMENTS.
7. THE PRODUCT SUPPLIED WAS INSPECTED IN ACCORDANCE WITH EN 10204:2004 EDITION TYPE 3.1 INSPECTION DOCUMENT. (EUROPEAN STANDARD)
8. THE UNIT OF MEASURE FOR TENSILE AND YIELD (0.2%) STRENGTH ARE REPORTED IN PSI.
9. ELONGATION TEST RESULTS ARE OBTAINED USING STANDARD ROUND SPECIMEN, 2 INCH OR 50 MM GAGE LENGTH.

We certify that the data on this sheet is a true copy taken from our records of material furnished us by the production mill, or as obtained by additional laboratory checks.

by Kylee Ruiz

Kylee Ruiz
QUALITY PROCESS MANAGER

CMTR: REV2

MLTS_6056-18945
Heat# B01568B B03238 50313

CCTF CORPORATION

4151 North Service Road, Burlington, ON L7L 4X6 (905) 335-5320

Date: 8/13/2019

Mill Test Reports

Invoice: 1599535-00
PO: 2610160-00

Customer: 27403-261
A.B.F. MINES
1310 AVE DAVY
ROUYN-NORANDA, QC J9Y 0A8

Line	Heat#	Product	Description
1	b01568b	7583949	8 300 RF WN FLG STD A350LF2
2	b03238	7586832	6 150 RF WN FLG STD A350LF2
3	50313 **	7690199	1 X 3-36 3000 SOL A350LF2

Heat codes followed by ** have been corrected, change may not show on the packing slip

CERTIFICATE OF INSPECTION & TEST (EN 10204 3.1)

ST&H CORPORATION
OFFICE - 74, Jwadongsunhwan-ro, Haeundae-gu, Busan, Korea
PLANT - 11, Eogokgongdan 2-gil, Yangsan-si, Kyungnam, Korea
Tel : +82.51.744-4680(5 line) Fax : +82.51.744-4670
E-mail :qm@stnhcorp.com

Certified to ISO9001/ ISO14001:2015,PED2014/68/EC by LRQA

Certificate No. MJH0427-06/08 **Date :** JUN. 17. 2019
Customer CCTF CORPORATION
Contract No. 4039342-00
Spec. For Material ASTM A105N-18,ASME SA105N-17,ASTM A350 LF2 CL1-18,ASME SA350 LF2 CL1-17,NACE MR0175/ISO15156-2:2015,NACE MR0103/ISO17945:2015
Heat Treatment 930°C NORMALIZED & A.C **Dimensional inspection**ASME B16.5 - 2017

ITEM / SIZE		Q'ty	Heat No./ Batch No.	Size of Test Specimen D mm	Size of Test Specimen GL mm	Tension Test	Y.S MPa	T.S MPa	E.L %	R.A %	Hardness Test (HB)		Charpy Impact Test (10X10mm Specimen Size) Indiv. 16J	Ave. 20J	Notch V	Temp. -46°C
				12.5	50.0	Max		655			187					
						Min	250	485	22.0	30.0	137		Test Result (J)			Ave.(J)
7580219	150LBS SO RF 10"	15	B01568B	12.5	50.0		356	515	39	76	147	154	83	78	81	80
7580220	150LBS SO RF 12"	25	B01568B	12.5	50.0		356	515	39	76	147	154	83	78	81	80
7586509	150LBS SO RF 6"	70	B01568B	12.5	50.0		356	515	39	76	147	154	83	78	81	80
7580218	150LBS SO RF 8"	12	B01568B	12.5	50.0		356	515	39	76	147	154	83	78	81	80
7580200	150LBS WN RF STD 1"	15	B01568B	12.5	50.0		356	515	39	76	147	154	83	78	81	80
7586832	150LBS WN RF STD 6"	45	B01568B	12.5	50.0		356	515	39	76	147	154	83	78	81	80
7583949	300LBS WN RF STD 8"	40	B01568B	12.5	50.0		356	515	39	76	147	154	83	78	81	80
7580203	150LBS SO RF 16"	4	B01979E	12.5	50.0		344	541	35	75.5	150	152	60	65	59	61
7580204	150LBS SO RF 18"	5	B01979E	12.5	50.0		344	541	35	75.5	150	152	60	65	59	61
7580205	150LBS SO RF 20"	2	B01979E	12.5	50.0		344	541	35	75.5	150	152	60	65	59	61

Heat No./ Batch No.		Chemical Composition (%) C	Si	Mn	P	S	Ni	Cr	Mo	Cu	V	Nb	CE	NDE UT	MT	PT
	Max	0.300	0.300	1.350	0.035	0.040	0.400	0.300	0.120	0.400	0.080	0.020				
	Min		0.150	0.600												
	H	0.172	0.243	1.290	0.011	0.004	0.026	0.094	0.017	0.020	0.001	0.001	0.412			
B01568B	P	0.177	0.250	1.300	0.012	0.005	0.029	0.101	0.015	0.020	0.002	0.001	0.420			
	H	0.177	0.212	1.270	0.009	0.003	0.010	0.061	0.004	0.009	0.001	0.012	0.403			
B01979E	P	0.180	0.229	1.280	0.009	0.002	0.012	0.038	0.006	0.012	0.001	0.015	0.403			

BLANK

REMARK * H : Heat Analysis P : Product Analysis * C:Mn = 1≤5

We hereby certify that the material herein has been made and tested in accordance with the above specification and also with the requirements called for by the above order.

Witnessed by / H. J. LEE

Manager of Q.A Dept. / JAY KIM
ST&H CORPORATION

ST-801-14-02

CERTIFICATE OF INSPECTION & TEST (EN 10204 3.1)

ST&H CORPORATION
OFFICE - 74, Jwadongsunhwan-ro, Haeundae-gu, Busan, Korea
PLANT - 11, Eogokgongdan 2-gil, Yangsan-si, Kyungnam, Korea
Tel : +82.51.744-4680(5 line) Fax : +82.51.744-4670
E-mail :qm@stnhcorp.com

Certified to ISO9001/ ISO14001:2015,PED2014/68/EC by LRQA

Certificate No. MJH0103-10/16 **Date :** AUG. 27. 2018
Customer CCTF CORPORATION
Contract No. 4038603-00
Spec. For Material ASTM A105N-14,ASME SA105N-17,ASTM/ASME A/SA350 LF2 CL1-17,NACE MR0175/ISO 15156-2:2015,NACE MR0103/ISO 17495-1:2016
Heat Treatment 930℃ NORMALIZED & A.C **Dimensional inspection** ASME B16.5 - 2017

ITEM / SIZE		Q'ty	Heat No./ Batch No.	Size of Test Specimen		Tension Test					Hardness Test (HB)		Charpy Impact Test (10X10mm Specimen Size)			
				D	GL		Y.S	T.S	E.L	R.A			Indiv.	Ave.	Notch	Temp.
				mm	mm	Max	MPa	MPa	%	%			16J	20J	V	-46℃
				12.5	50.0	Min	250	485	22.0	30.0		187	Test Result (J)			Ave.(J)
7586502	150LBS TH RF 6"	2	B03238	12.5	50.0		375	545	35	67.5	151	153	118	145	68	110
7586824	150LBS WN RF STD 4"	50	B03238	12.5	50.0		375	545	35	67.5	151	153	118	145	68	110
7586832	150LBS WN RF STD 6"	50	B03238	12.5	50.0		375	545	35	67.5	151	153	118	145	68	110
7585267	150LBS WN RF XH 4"	10	B03238	12.5	50.0		375	545	35	67.5	151	153	118	145	68	110
7580014	300LBS SO RF 4"	5	B03238	12.5	50.0		375	545	35	67.5	151	153	118	145	68	110
7587735	300LBS SO RF 6"	2	B03238	12.5	50.0		375	545	35	67.5	151	153	118	145	68	110
7585259	600LBS WN RF STD 3"	10	B03238	12.5	50.0		375	545	35	67.5	151	153	118	145	68	110
7581040	600LBS WN RF XH 3"	25	B03238	12.5	50.0		375	545	35	67.5	151	153	118	145	68	110
7581007	150LBS BL RF 18"	2	B03776	12.5	50.0		375	540	38	74.5	152	154	135	80	118	111
7580205	150LBS SO RF 20"	2	B03776	12.5	50.0		375	540	38	74.5	152	154	135	80	118	111

Heat No./ Batch No.		Chemical Composition (%)																NDE		
		C	Si	Mn	P	S	Ni	Cr	Mo	Cu	V	Nb					CE	UT	MT	PT
	Max	0.300	0.300	1.350	0.035	0.040	0.400	0.300	0.120	0.400	0.080	0.020								
	Min		0.150	0.600																
	H	0.176	0.201	1.060	0.015	0.004	0.032	0.077	0.004	0.050	0.001	0.001					0.374			
B03238	P	0.178	0.216	1.060	0.016	0.002	0.036	0.073	0.007	0.050	0.002	0.001					0.376			
	H	0.172	0.220	1.290	0.013	0.007	0.012	0.045	0.006	0.008	0.004	0.019					0.399			
B03776	P	0.174	0.220	1.290	0.011	0.003	0.012	0.044	0.006	0.008	0.001	0.015					0.400			

BLANK

REMARK * H : Heat Analysis P : Product Analysis

We hereby certify that the material herein has been made and tested in accordance with the above specification and also with the requirements called for by the above order.

Witnessed by / H. J. LEE

Manager of Q.A Dept. / JAY KIM
ST&H CORPORATION

ST-801-14-02

CERTIFIED MILL TEST REPORT

The Best Value - *Price, Quality, Service* All The Time.

LOG NO. F00000000110349

BONNEY FORGE CORPORATION
P.O. BOX 330 • 14496 CROGHAN PIKE • MOUNT UNION, PA 17066-0330
(814) 542-2545 • (800) 345-7546 • FAX (814) 542-4906
www.bonneyforge.com

CUSTOMER: CCTF CORPORATION

DATE 07/13/2018

CUSTOMER ORDER NO.: 4038733-00

BONNEY ORDER NO. B000243044

SHIP TO: CCTF CORPORATION (BURLINGTON)
4151 NORTH SERVICE ROAD
UNIT 2
BURLINGTON ON L7L 4X6
Canada

ITEM	QUANTITY	LOT NO.	GRADE OR SPECIFICATION NO. CHEMICAL ANALYSIS, PHYSICAL PROPERTIES, REMARKS:
3	50	50200	36-3/4 X 1/2 3M LF2 FLEX T — SA/A350 LF2 CL1
7690072			Al 0.024 C 0.200 Co 0.002 Cr 0.030 Cu 0.050 Mn 1.040 Mo 0.005 Nb 0.012 Ni 0.020 P 0.006 S 0.022 Si 0.230 V 0.003 CE(Long Formula) = 0.39 T/S(PSI) 71,500 Y/S(PSI) 48,100 EL(%) 35.00 RA(%) 69.00 Brinell Hardness 137 BHN 135 BHN Charpy -50 F 78/55/52 (Ft-Lbs) Average 61.70
4	50	50313	36-3X1 3M LF2 FLEX S — SA/A350 LF2 CL1
7690199			Al 0.036 C 0.200 Co 0.002 Cr 0.060 Cu 0.080 Mn 1.000 Mo 0.006 Nb 0.014 Ni 0.030 P 0.006 S 0.023 Si 0.240 V 0.003 CE(Long Formula) = 0.39 T/S(PSI) 73,427 Y/S(PSI) 48,233 EL(%) 35.25 RA(%) 61.22 Brinell Hardness 135 BHN 135 BHN Charpy -50 F 27/28/33 (Ft-Lbs) Average 29.30
5	100	50295	36-11/2X3/4 3M LF2 FLEX S — SA/A350 LF2 CL1
7690149			Al 0.021 C 0.200 Co 0.002 Cr 0.030 Cu 0.080 Mn 1.020 Mo 0.007 Nb 0.011 Ni 0.030 P 0.005 S 0.023 Si 0.260 V 0.003 CE(Long Formula) = 0.39 T/S(PSI) 73,778 Y/S(PSI) 50,401 EL(%) 36.55 RA(%) 65.23 Brinell Hardness 135 BHN 135 BHN Charpy -50 F 43/68/39 (Ft-Lbs) Average 50.00

We certify that the data on this sheet is a true copy taken from our records of material furnished us by the production mill, or as obtained by additional laboratory checks.

by Kylee Ruiz

Kylee Ruiz
QUALITY PROCESS MANAGER

CMTR: REV2

CERTIFIED MILL TEST REPORT

The Best Value - *Price, Quality, Service* All The Time.

BONNEY FORGE CORPORATION
P.O. BOX 330 • 14496 CROGHAN PIKE • MOUNT UNION, PA 17066-0330
(814) 542-2545 • (800) 345-7546 • FAX (814) 542-4906
www.bonneyforge.com

CUSTOMER: CCTF CORPORATION **DATE** 07/13/2018

CUSTOMER ORDER NO.: 4038733-00 **BONNEY ORDER NO.** B000243044

SHIP TO: CCTF CORPORATION (BURLINGTON)
4151 NORTH SERVICE ROAD
UNIT 2
BURLINGTON ON L7L 4X6
Canada

ITEM	QUANTITY	LOT NO.	GRADE OR SPECIFICATION NO. CHEMICAL ANALYSIS, PHYSICAL PROPERTIES, REMARKS:

1. THE FITTINGS SUPPLIED ARE IN ACCORDANCE WITH PURCHASE ORDER SPECIFICATIONS.
2. CERTIFYING TO ASTM A350 LF2 17 REVISION.
3. THE MATERIAL OF THE FITTINGS SUPPLIED IS ASTM A350-LF2 BUT MEETS THE REQUIREMENTS OF ASME SA350-LF2.
4. THE CHARPY V-NOTCH IMPACT TEST WAS PERFORMED AT -50 DEGREES FAHRENHEIT IN ACCORDANCE WITH A350-LF2.
5. THE MATERIAL SUPPLIED AS A350 LF2 CL1 MEETS THE REQUIREMENTS OF BOTH NACE MR0103/ISO 17945 - 2015 & NACE MR0175/ISO 15156-2 - 2015 EDITION.
6. THE MATERIAL SUPPLIED WAS NORMALIZED IN ACCORDANCE WITH ASTM A350 HEAT TREATING REQUIREMENTS.
7. THE PRODUCT SUPPLIED WAS INSPECTED IN ACCORDANCE WITH EN 10204:2004 EDITION TYPE 3.1 INSPECTION DOCUMENT. (EUROPEAN STANDARD)
8. THE UNIT OF MEASURE FOR TENSILE AND YIELD (0.2%) STRENGTH ARE REPORTED IN PSI.
9. ELONGATION TEST RESULTS ARE OBTAINED USING STANDARD ROUND SPECIMEN, 2 INCH OR 50 MM GAGE LENGTH.

We certify that the data on this sheet is a true copy taken from our records of material furnished us by the production mill, or as obtained by additional laboratory checks.

by Kylee Ruiz

Kylee Ruiz
QUALITY PROCESS MANAGER

CMTR: REV2

MLTS_6056-18953
Heat# 35596, X1651

BOTH-WELL STEEL FITTINGS CO., LTD.

NO.303, REN-SIN ROAD, REN-WU DISTRICT, KAOHSIUNG CITY, TAIWAN, R.O.C.(81460)
TEL : (886)7-3711536, 3710497, 3720260 FAX : (886)7-371-3864, 3713882
WEB SITE : http://www.bothwell.com.tw E-Mail : box@bothwell.com.tw

An ISO 9001 : 2015 Registered Manufacturer

MILL TEST & INSPECTION CERTIFICATE

ACCORDING TO EN 10204 3.1

CUSTOMER : SEYBOLD INTERNATIONAL CORP. PAGE : 19
CERT NO. : 180410 INVOICE NO. : 5200011852 DATE : 02/12/2018
ORDER NO. : 7013926 L/C NO. : ORIGIN : TAIWAN

ITEM	RAW HEAT NO. / HEAT NO.	QTY	DESC/ GRADE OR SPECIFICATION NO. / CHEMICAL COMPOSITION(%) MECHANICAL PROPERTIES.
108	355196 / YB0001	100 PCS	UNION NUT(OCT) - BODY(ROD) LF2 CL.1 (N) 1-1/2" 3000# S/W SQ(3)U1.5-BW C:0.18 Si:0.25 Mn:1.05 P:0.014 S:0.005 Cu:0.04 Cr:0.07 Ni:0.03 Mo:0.01 V:0.003 Nb:0.003 N:0.0099 Ti:0.002 CE:0.38 TS(KSI):73.8 YS 0.2%(KSI):55.5 EL(%):32.5 R.A.(%):69.1 HARDNESS 1(HBW):141 HARDNESS 2(HBW):143 IMPACT TEST -46℃ (-50.8°F) 1:48 J 2:87 J 3:67 J AVG:67 J

1½" 3000 FS SW
union A350LF2

REMARK :
THE MATERIAL SUPPLIED IDENTIFIED AS ASTM A350 -15, ASME SA350 -2015ED. LF2 CL.1
THE FITTING SUPPLIED IDENTIFIED AS MSS SP-83 - 2014
THE PRODUCT SUPPLIED WAS INSPECTED IN ACCORDANCE WITH SPECIFICATION(SURFACE & DIM. : GOOD
STANDARD : CHEMICAL COMPOSITION(%) & MECHANICAL PROPERTIES.

	C	Si	Mn	P	S	Cu	Cr	Ni	Mo	V	Cb(Nb)
MIN	-	0.15	0.60	-	-	-	-	-	-	-	-
MAX	0.30	0.30	1.35	0.035	0.040	0.40	0.30	0.40	0.12	0.08	0.02
	N	Al	Ti	Zr	CE	TS(KSI)	YS(KSI)	YS 0.2%(KSI)	EL(%)	R of A(%)	HARDNESS(HBW)
MIN	-				-	70		36	22	30	-
MAX	-				0.47	95		-	-	-	197

HEAT TREATMENT : NORMALIZED 900℃(1652°F) A.C.
CONFORM TO NACE MR0175-15/ISO 15156-15/MR0103-15
FULLY KILLED AND FINE GRAIN PRACTICE
FREE FROM RADIATION CONTAMINATION
REF#90817ABW

WE CERTIFY THE ABOVE MENTIONED FITTINGS HAVE BEEN MANUFACTURED, SAMPLED, TESTED, AND INSPECTED IN ACCORDANCE WITH THE SPECIFICATIONS SHOWN

C.C. Huang — Q.C. MANAGER

C.L. Ko — INSPECTOR

柏龍鐵工股份有限公司
高雄縣仁武鄉烏林村仁心路 303 號
BOTH-WELL STEEL FITTINGS CO., LTD.
NO.303, JEN-HSIN ROAD JEN-WU HSIANG
KAOHSIUNG HSIEN, TAIWAN R.O.C.(81460)
TEL: 886-7-371-0497, 371-1536, 372-0260 FAX: 886-7-371-3864 , 371-3882
web site :http://www.bothwell.com.tw e-mail:bothwell@www.bothwell.com.tw or box@mail.bothwell.com.tw

An ISO 9001:2000 Registered Manufacturer

ISO 9001 BUREAU VERITAS Certification N° TW00091Q

MILL TEST & INSPECTION CERTIFICATE

ACCORDING TO EN10204/DIN50049/3.1.B

ORIGIN: TAIWAN

CUSTOMER: WEIFANG STEEL CANADA LTD. INVOICE NO: BW089706095 DATE: 12/10/08

CERT NO: 83363-2 ORDER NO: AG0031-LF2 L/C NO: PAGE: 4

ITEM	BOTH WELL HT.CD.	RAW MATERIAL HEAT NO.	DESCRIPTION	QUANTITY	SPECIFICATION: ASTM A350 -04a ASME SA350 -E04 LF2-Class1 DIMENSION: ASME B16.11-2005 SURFACE: BY VISUAL...GOOD
014	Y050	X1651	TEE 3/4" 3000# NPT	300 PC	
023	Y050	X1651	FULL CPLG 1-1/2" 3000# NPT	1000 PC	
029	Y050	X1651	HALF CPLG 1-1/2" 3000# NPT	300 PC	
035	Y050	X1651	CAP 1-1/2" 3000# NPT	400 PC	
036	Y050	X1651	CAP 2" 3000# NPT	600 PC	
070	Y047	X1653	90D ELBOW 2" 3000# S/W	110 PC	
070	Y047	X1653	90D ELBOW 2" 3000# S/W	50 PC	

CHEMICAL COMPOSITION (%)

ITEM	BOTH WELL HT.CD	C	Si	Mn	P	S	Cu	Cr	Ni	Mo	V	Cb(Nb)	N
Min		-	0.150	0.600	-	-	-	-	-	-	-	-	-
Max		0.300	0.300	1.350	0.035	0.040	0.400	0.300	0.400	0.120	0.080	0.020	-
014	Y050	0.200	0.190	1.040	0.007	0.001	0.030	0.060	0.030	0.010	0.001	0.000	-
023	Y050	0.200	0.190	1.040	0.007	0.001	0.030	0.060	0.030	0.010	0.001	0.000	-
029	Y050	0.200	0.190	1.040	0.007	0.001	0.030	0.060	0.030	0.010	0.001	0.000	-
035	Y050	0.200	0.190	1.040	0.007	0.001	0.030	0.060	0.030	0.010	0.001	0.000	-
036	Y050	0.200	0.190	1.040	0.007	0.001	0.030	0.060	0.030	0.010	0.001	0.000	-
070	Y047	0.200	0.220	1.050	0.012	0.001	0.040	0.190	0.040	0.020	0.010	0.000	-
070	Y047	0.200	0.220	1.050	0.012	0.001	0.040	0.190	0.040	0.020	0.010	0.000	-

MECHANICAL TEST

ITEM	BOTH WELL HT.CD	Tensile Strength (KSI)	Yield Strength (KSI)	Elon-Gation (%)	R of A (%)	Hardness (AVG.) (HB)
Min		70.0	36.0	22.0	30.0	-
Max		95.0	-	-	-	197
014	Y050	79.7	60.7	34.6	76.2	151
023	Y050	79.7	60.7	34.6	76.2	151
029	Y050	79.7	60.7	34.6	76.2	151
035	Y050	79.7	60.7	34.6	76.2	151
036	Y050	79.7	60.7	34.6	76.2	151
070	Y047	78.1	58.1	36.2	80.3	144
070	Y047	78.1	58.1	36.2	80.3	144

Remark:
CONFORM TO NACE MR0175-2003/MR0103
STEEL MAKING PROCESS : ELECTRIC FURNACE
HEAT TREATED(℃) NORMALIZED:900℃ TEMPERED:620℃
IMPACT VALUE(CHARPY) -50°F(-46.0℃)

HEAT NO.	HT.CD.	JOULE(J)			AVG.(J)
X1653	Y047	285	272	257	271.333
X1651	Y050	242	188	175	201.667

WE CERTIFY THE ABOVE MENTIONED FITTINGS HAVE BEEN MANUFACTURED AND TESTED IN ACCORDANCE WITH THE SPECIFICATIONS SHOWN

C.C. Chin — Q.C. MANAGER CHIN CHENG HSIEH

C.C. Huang — INSPECTOR CHUN CHIEH HUANG

CapProducts, Ltd.
25 Winnipeg St
Vanastra, ON N0M 1L0

Commanding a Higher Standard℠

Phoenix * Capitol * Camco
CapProducts

Certified Material Test Report

Printed: 8/20/2019
Certified: 12/18/2018

Customer
EMCO DISTRIBUTION GROUP
PO BOX 5300 STATION A
LONDON, ON N6A 4N7

P.O. 2610174-00
Tag 3050060

Heat No 174321
Heat Code 87AH
Phoenix Order # 1481945

Material ASTM A333 GR6 2015/ASME SA333 GR6 2015 Edition

Part Number	Description
15111512CSA	1-1/2X6 XHSML BK STL NIPL A333 GR6 CSA

Chemical Properties

C	Mn	P	S	Si	Cu	Ni	Cr
0.1300	1.3200	0.0090	0.0050	0.3100	0.0390	0.0200	0.0600

C Eq. Long
0.3687

Mo	V	Co	Al	Cb	N	Pb	Sn	Ta	Ti
0.0100	0.0040			0.0180					0.0020

Additional Chemical Properties

B				
0.00030				

Cr + Cu + Ni
0.1190

Mechanical Properties

Tensile (PSI)	Yield (PSI)	Elong. % in 2 in. or 4D	R of A	HBW	HBW2
72,374	55,985	37.0%		150	0

Charpy Minimum Impact - ft/lbs

Test 1	Test 2	Test 3	Average	Test Temp.
48	41	49	46.00	-54

* Bend test passed.
We hereby certify that these parts were manufactured, sampled, tested, and inspected in accordance with the product specifications stated and were found to meet the requirements.
We further certify that this material was inspected using independentinspectors conforming to the requirements of EN 10204 3.1. These products meet the requirements of the latest editions of NACE MR0175, NACE MR0103, and ISO 15156. No weld repair has been performed on these products. This material was not exposed to mercury or any other metal alloy that is liquid at ambient temperatures during processing or while in our possession

Comments:

Flattening test passed. Ultrasonic test passed.
Charpy V Impact Tested at -54° C. Specimen size - 10 x 3.33 mm
Hot finished, Normalized

CapProducts, Ltd.
25 Winnipeg St
Vanastra, ON N0M 1L0

Commanding a Higher Standard℠

Phoenix * Capitol * Camco
CapProducts
Certified Material Test Report

Printed: 8/20/2019
Certified: 06/07/2019

Customer
EMCO DISTRIBUTION GROUP
PO BOX 5300 STATION A
LONDON, ON N6A 4N7

P.O. 2610174-00
Tag 3050060

Heat No 608622
Heat Code 87HU
Phoenix Order # 1481945

Material ASTM A333 GR6 2015/ASME SA333 GR6 2015 Edition

189553-60856

Part Number
15111512CSA

Description
1-1/2X6 XHSML BK STL NIPL A333 GR6 CSA

Chemical Properties

C	Mn	P	S	Si	Cu	Ni	Cr
0.1300	0.7200	0.0140	0.0030	0.2000	0.0900	0.0700	0.0900

C Eq. Long
0.2833

Mo	V	Co	Al	Cb	N	Pb	Sn	Ta	Ti
0.0200	0.0030			0.0140					0.0020

Additional Chemical Properties

Boron				
0.00010				

Cr + Cu + Ni
0.2500

Mechanical Properties

Tensile (PSI)	Yield (PSI)	Elong. % in 2 in. or 4D	R of A	HBW	HBW2
64,107	44,672	34.0%		134	0

Charpy Minimum Impact - ft/lbs

Test 1	Test 2	Test 3	Average	Test Temp.
44	44	46	44.67	-55

* Hydro test passed. at 3000 psi.

* Bend test passed.
We hereby certify that these parts were manufactured, sampled, tested, and inspected in accordance with the product specifications stated and were found to meet the requirements.
We further certify that this material was inspected using independentinspectors conforming to the requirements of EN 10204 3.1. These products meet the requirements of the latest editions of NACE MR0175, NACE MR0103, and ISO 15156. No weld repair has been performed on these products. This material was not exposed to mercury or any other metal alloy that is liquid at ambient temperatures during processing or while in our possession

Comments:

Flattening test passed.
Charpy V Impact Tested at -55° C. Specimen size - 10 x 4 mm.
Normalized

CapProducts, Ltd.
25 Winnipeg St
Vanastra, ON N0M 1L0

Commanding a Higher Standard℠

Phoenix * Capitol * Camco
CapProducts
Certified Material Test Report

Printed: 8/20/2019
Certified: 06/07/2019

Customer
EMCO DISTRIBUTION GROUP
PO BOX 5300 STATION A
LONDON, ON N6A 4N7

P.O. 2610174-00
Tag 3050060

Heat No 608622
Heat Code 87HU
Phoenix Order # 1481945

Material ASTM A333 GR6 2015/ASME SA333 GR6 2015 Edition

MLTS_6056-18953-1
Heat# 608622, 174321

Part Number	Description
15111512CSA	1-1/2X6 XHSML BK STL NIPL A333 GR6 CSA

Chemical Properties

C	Mn	P	S	Si	Cu	Ni	Cr
0.1300	0.7200	0.0140	0.0030	0.2000	0.0900	0.0700	0.0900

C Eq. Long
0.2833

Mo	V	Co	Al	Cb	N	Pb	Sn	Ta	Ti
0.0200	0.0030			0.0140					0.0020

Additional Chemical Properties

Boron				
0.00010				

Cr + Cu + Ni
0.2500

Mechanical Properties

Tensile (PSI)	Yield (PSI)	Elong. % in 2 in. or 4D	R of A	HBW	HBW2
64,107	44,672	34.0%		134	0

Charpy Minimum Impact - ft/lbs

Test 1	Test 2	Test 3	Average	Test Temp.
44	44	46	44.67	-55

* Hydro test passed. at 3000 psi.

* Bend test passed.
We hereby certify that these parts were manufactured, sampled, tested, and inspected in accordance with the product specifications stated and were found to meet the requirements.
We further certify that this material was inspected using independentinspectors conforming to the requirements of EN 10204 3.1. These products meet the requirements of the latest editions of NACE MR0175, NACE MR0103, and ISO 15156. No weld repair has been performed on these products. This material was not exposed to mercury or any other metal alloy that is liquid at ambient temperatures during processing or while in our possession

Comments:

Flattening test passed.
Charpy V Impact Tested at -55° C. Specimen size - 10 x 4 mm.
Normalized

CapProducts, Ltd.
25 Winnipeg St
Vanastra, ON N0M 1L0

Commanding a Higher Standard℠

Phoenix * Capitol * Camco
CapProducts

Certified Material Test Report

Printed: 8/20/2019
Certified: 12/18/2018

Customer
EMCO DISTRIBUTION GROUP
PO BOX 5300 STATION A
LONDON, ON N6A 4N7

P.O. 2610174-00
Tag 3050060

Heat No 174321
Heat Code 87AH
Phoenix Order # 1481945

Material ASTM A333 GR6 2015/ASME SA333 GR6 2015 Edition

Part Number
15111512CSA

Description
1-1/2X6 XHSML BK STL NIPL A333 GR6 CSA

Chemical Properties

C	Mn	P	S	Si	Cu	Ni	Cr
0.1300	1.3200	0.0090	0.0050	0.3100	0.0390	0.0200	0.0600

C Eq. Long
0.3687

Mo	V	Co	Al	Cb	N	Pb	Sn	Ta	Ti
0.0100	0.0040			0.0180					0.0020

Additional Chemical Properties

B				
0.00030				

Cr + Cu + Ni
0.1190

Mechanical Properties

Tensile (PSI)	Yield (PSI)	Elong. % in 2 in. or 4D	R of A	HBW	HBW2
72,374	55,985	37.0%		150	0

Charpy Minimum Impact - ft/lbs

Test 1	Test 2	Test 3	Average	Test Temp.
48	41	49	46.00	-54

* Bend test passed.
We hereby certify that these parts were manufactured, sampled, tested, and inspected in accordance with the product specifications stated and were found to meet the requirements.
We further certify that this material was inspected using independentinspectors conforming to the requirements of EN 10204 3.1. These products meet the requirements of the latest editions of NACE MR0175, NACE MR0103, and ISO 15156. No weld repair has been performed on these products. This material was not exposed to mercury or any other metal alloy that is liquid at ambient temperatures during processing or while in our possession

Comments:

Flattening test passed. Ultrasonic test passed.
Charpy V Impact Tested at -54° C. Specimen size - 10 x 3.33 mm
Hot finished, Normalized

MLTS_6056-18971
Heat# B03459

CCTF CORPORATION

4151 North Service Road, Burlington, ON L7L 4X6 (905) 335-5320

Date: 9/9/2019

Mill Test Reports

Invoice: 1600715-00
PO: 2610192

Customer: 27403-261
A.B.F. MINES/2985080 CANA 261
1310 AVE DAVY
.
ROUYN NORANDA, QC J9Y 0A8

Line	Heat#	Product	Description
1	b03459	7585585	6 150 RF BLIND FLG A350LF2

Heat codes followed by ** have been corrected, change may not show on the packing slip

CERTIFICATE OF INSPECTION & TEST (EN 10204 3.1)

ST&H CORPORATION
OFFICE - 74, Jwadongsunhwan-ro, Haeundae-gu, Busan, Korea
PLANT - 11, Eogokgongdan 2-gil, Yangsan-si, Kyungnam, Korea
Tel : +82.51.744-4680(5 line) Fax : +82.51.744-4670
E-mail :qm@stnhcorp.com

CE
RPS 0160308 / 01

Certified to ISO9001/ ISO14001:2015,PED2014/68/EC by LRQA

Certificate No. MJH0290-01/05 **Date :** FEB. 14. 2019
Customer CCTF CORPORATION
Contract No. 4039095-00
Spec. For Material ASTM A105N-18,ASME SA105N-17,ASTM A350 LF2 CL1-18,ASME SA350 LF2 CL1-17,NACE MR0175/ISO 15156-2:2015,NACE MR0103/ISO 17495-1:2016
Heat Treatment 930℃ NORMALIZED & A.C **Dimensional inspection**ASME B16.5 - 2017

ITEM / SIZE		Q'ty	Heat No./ Batch No.	Size of Test Specimen		Tension Test					Hardness Test (HB)		Charpy Impact Test (10X10mm Specimen Size)			
				D	GL		Y.S MPa	T.S MPa	E.L %	R.A %			Indiv. 16J	Ave. 20J	Notch V	Temp. -46℃
				mm	mm	Max		655			187		Test Result (J)			Ave.(J)
				12.5	50.0	Min	250	485	22.0	30.0						
7585585	150LBS BL RF 6"	20	B03459	12.5	50.0		330	520	34	76	150	156	80	75	86	80
7585860	150LBS BL RF 8"	10	B03459	12.5	50.0		330	520	34	76	150	156	80	75	86	80
7580218	150LBS SO RF 8"	20	B03459	12.5	50.0		330	520	34	76	150	156	80	75	86	80
7580202	150LBS SO RF 14"	2	B03459	12.5	50.0		330	520	34	76	150	156	80	75	86	80
7586502	150LBS TH RF 6"	5	B03459	12.5	50.0		330	520	34	76	150	156	80	75	86	80
7586824	150LBS WN RF STD 4"	50	B03459	12.5	50.0		330	520	34	76	150	156	80	75	86	80
7586832	150LBS WN RF STD 6"	30	B03459	12.5	50.0		330	520	34	76	150	156	80	75	86	80
7586891	150LBS WN RF STD 8"	20	B03459	12.5	50.0		330	520	34	76	150	156	80	75	86	80
7583949	300LBS WN RF STD 8"	10	B03459	12.5	50.0		330	520	34	76	150	156	80	75	86	80
7585321	150LBS WN RF STD 10"	20	B03459	12.5	50.0		330	520	34	76	150	156	80	75	86	80

Heat No./ Batch No.		Chemical Composition (%)																NDE		
		C	Si	Mn	P	S	Ni	Cr	Mo	Cu	V	Nb						CE	UT	MT	PT
	Max	0.300	0.300	1.350	0.035	0.040	0.400	0.300	0.120	0.400	0.080	0.020									
	Min		0.150	0.600																	
	H	0.163	0.226	1.230	0.012	0.002	0.057	0.138	0.017	0.147	0.001	0.006						0.412			
B03459	P	0.162	0.224	1.240	0.011	0.002	0.054	0.136	0.014	0.138	0.001	0.001						0.411			

BLANK

REMARK * H : Heat Analysis P : Product Analysis

We hereby certify that the material herein has been made and tested in accordance with the above specification and also with the requirements called for by the above order.

Witnessed by / H. J. LEE

ST&H CORPORATION QUALITY MANAGEMENT

Manager of Q.A Dept. / JAY KIM
ST&H CORPORATION

ST-801-14-02

6

Material Test Report

06/17/19

Cert No: 1087586

CAMERON
NEWCO® | OIC® | DOUGLAS CHERO™

13127 Trinity Dr., Stafford, TX 77477
Tel: 281-302-4900 Fax: 281-302-4801

Cameron Newco is a 9001 certified registered company
CRN: OC7998.5C - EN 10204-3.1

Item No: B3080030F*LCCW27B*****GA
Size/Type: 8" / Swing Check
Quantity: 1
Country of Origin: China
FigNo: 33F--LCC4/2-NC

Inspection
Dimension: Passed
Visual: Passed

Valve Materials meet the requirements for NACE MR0103 and NACE MR0175

Pressure Test Result

Item	Test Pressure (Mpa)	Test Pressure (PSI)	Duration (sec)	Test Result
Shell	7.757	1125	120	Passed
Backseat	-	-	-	
Seat Hydro	5.688	825	120	Passed
Seat Air	-	-	-	

Standard: API 598 / ASME B16.34

Customer: EMCO
Customer Number: 32043
Customer PO: 2610091-00
Cameron SO: QRC SO# 1007020
Project Name:
Valve Serial No:
Description: 300# RF A352-LCC (TRIM 12) BC SWING CHECK NACE
Customer Tag No:

MLTS_6056-18734
Cert# 1087586

Part: Body Type 3.1 — Material Code: A352 LCC — Heat No: N9183W

Heat Treatment: QUENCHING+TEMPERING
Notes:

Chem Comp (%)	C	Cr	Cu	Mn	Mo	Ni	P	S	Si	V
Spec: Min:	0.00	0.00	0.00	0.00	0.00	0.00	0.00	0.00	0.00	0.00
Max:	0.25	0.50	0.30	1.20	0.20	0.50	0.040	0.05	0.60	0.03
Val:	0.180	0.040	0.018	1.040	0.002	0.014	0.021	0.010	0.520	0.004

Physical Props	Tensile KSI	Yield KSI	Elong %	Reduct %	Hard(HB)
	70.0	39.9	22.0	35.0	100.0
	95.0	999.9	100.0	100.0	225.0
	79.0	54.4	32.0	66.0	169.0

Impact Tests @-50 deg F	lb/ft
	# 1: 140
	# 2: 18
	# 3: 20
	Avg: 59

Part: Bonnet/Cap Type 3.1 — Material Code: A350 LF2 — Heat No: LF2-B025

Heat Treatment: QUENCHING+TEMPERING
Notes:

Chem Comp (%)	C	Cr	Cu	Mn	Mo	Nb	Ni	P	S	Si	V
Spec: Min:	0.00	0.00	0.00	0.60	0.00	0.00	0.00	0.001	0.00	0.15	0.00
Max:	0.30	0.30	0.40	1.35	0.12	0.02	0.40	0.035	0.04	0.30	0.08
Val:	0.220	0.200	0.210	0.900	0.070	0.000	0.220	0.010	0.013	0.210	0.010

Physical Props	Tensile KSI	Yield KSI	Elong %	Reduct %	Hard(HB)
	70.0	36.0	22.0	30.0	1.0
	95.0	999.9	100.0	100.0	197.0
	81.2	38.4	35.0	50.0	170.0

Impact Tests @-50 deg F	lb/ft
	# 1: 36
	# 2: 25
	# 3: 47
	Avg: 36

Comments: Cameron declares that the parts above are in accordance with applicable material specification and purchase order requirements.
No Asbestos is contained in this product. Packing: | Gasket: Graphite Spiral Wound (316)
Valves covered in this certificate are in full compliance with purchase order requirements and specifications.

MTR created by: DR

Signature 06/17/19

Material Test Report

06/17/19

Cert No: 1087587

CAMERON
NEWCO® | OIC® | DOUGLAS CHERO™

13127 Trinity Dr., Stafford, TX 77477
Tel: 281-302-4900 Fax: 281-302-4801

Cameron Newco is a 9001 certified registered company
CRN: OC7998.5C - EN 10204-3.1

Item No: B3080030F*LCCW27B*****GA
Size/Type: 8" / Swing Check
Quantity: 1
Country of Origin: China
FigNo: 33F--LCC4/2-NC

Inspection
Dimension: Passed
Visual: Passed

Valve Materials meet the requirements for NACE MR0103 and NACE MR0175

Pressure Test Result

Item	Test Pressure (Mpa)	Test Pressure (PSI)	Duration (sec)	Test Result
Shell	7.757	1125	120	Passed
Backseat	-	-	-	
Seat Hydro	5.688	825	120	Passed
Seat Air	-	-	-	

Standard: API 598 / ASME B16.34

Customer: EMCO
Customer Number: 32043
Customer PO: 2610091-00
Cameron SO: QRC SO# 1007020
Project Name:
Valve Serial No:
Description: 300# RF A352-LCC (TRIM 12) BC SWING CHECK NACE
Customer Tag No:

MLTS_6056-18734
Cert# 1087587

Part: Body Type 3.1 — Material Code: A352 LCC — Heat No: N9158W

Heat Treatment: QUENCHING+TEMPERING
Notes:

Chem Comp (%)	C	Cr	Cu	Mn	Mo	Ni	P	S	Si	V
Spec: Min:	0.00	0.00	0.00	0.00	0.00	0.00	0.00	0.00	0.00	0.00
Max:	0.25	0.50	0.30	1.20	0.20	0.50	0.040	0.05	0.60	0.03
Val:	0.190	0.025	0.015	1.090	0.004	0.014	0.023	0.009	0.550	0.005

Physical Props	Tensile KSI	Yield KSI	Elong %	Reduct %	Hard(HB)
	70.0	39.9	22.0	35.0	100.0
	95.0	999.9	100.0	100.0	225.0
	85.6	59.5	33.0	66.0	180.0

Impact Tests @-50 deg F (lb/ft): # 1: 30, # 2: 20, # 3: 23, Avg: 25

Part: Bonnet/Cap Type 3.1 — Material Code: A350 LF2 — Heat No: LF2-B025

Heat Treatment: QUENCHING+TEMPERING
Notes:

Chem Comp (%)	C	Cr	Cu	Mn	Mo	Nb	Ni	P	S	Si	V
Spec: Min:	0.00	0.00	0.00	0.60	0.00	0.00	0.00	0.001	0.00	0.15	0.00
Max:	0.30	0.30	0.40	1.35	0.12	0.02	0.40	0.035	0.04	0.30	0.08
Val:	0.220	0.200	0.210	0.900	0.070	0.000	0.220	0.010	0.013	0.210	0.010

Physical Props	Tensile KSI	Yield KSI	Elong %	Reduct %	Hard(HB)
	70.0	36.0	22.0	30.0	1.0
	95.0	999.9	100.0	100.0	197.0
	81.2	38.4	35.0	50.0	170.0

Impact Tests @-50 deg F (lb/ft): # 1: 36, # 2: 25, # 3: 47, Avg: 36

Comments: Cameron declares that the parts above are in accordance with applicable material specification and purchase order requirements.
No Asbestos is contained in this product. Packing: | Gasket: Graphite Spiral Wound (316)
Valves covered in this certificate are in full compliance with purchase order requirements and specifications.

MTR created by: DR

Signature 06/17/19

MLTS_6056-18734
Cert# GATE BERIC

M. A. Stewart & Sons Ltd.
VALVES AND FITTINGS

HEAT / SERIAL NUMBER RECORD

(FORM 4.15.4A)

COMPANY; Emco / EQuipment - KN (For ABF mines)

PAGE; 1 OF 1

BRANCH; Rouyn - Noranda, QC

MAS SALES REGISTER; 1436324

ATTN; Richard Knight

DATE June 10/19

PO# 2610090-00

ITEM	QTY	SIZE	VALVE NO.	BODY	BONNET#/CAP#	~~ACTUATOR#~~ ~~SOLENOID#~~ ~~INDICATOR#~~
1	3	8"	Beric	HCNNC	HCNNC	DF-01-105-180206-12
2			103-RF-AH12-H-N	LDRAC	LDRAC	DF-01-306-180901-12
3				LDRAC	LDRAC	DF-01-305-180901-12.
7						
8	1	8"	Beric	LDRAC	LDRAC	DF-01-250-180901-12
9			101-RF-AH12-H-N			
10						
11						
12	2	6"	Beric	GDN71	GDN71	DF-01-216-190116-12
13			101-RF-AH12-H-N	LDRAC	LDRAC	DF-01-247-180901-12
14						
15						
16	1	6"	Beric	GDN71	GDN71	DF-01-228-190116-12
17			301-RF-FH12-X-N			
18						
19						
20						
21						
22						
23						
24						
25						

FAX STAMP

FORM 4.3.2C REV-2-15-08

MATERIAL TEST REPORT

(CHEMICAL, PHYSICAL & HYDROSTATIC)

Beric-Davis Companies International, Ltd.
6059 South Loop East
Houston, TX 77087
Phone: 713 673-2073
Fax: 713 673-4641

DATE : SEP.1.2018
ARTICLE : 8 GATE VALVE RF 300 TRIM 12
FIGURE. NO. : 103-08-RF-AH12-H-N
SERIAL NO. : DF-01-305-180901-12

TAG NO.: 103-08-RF-AH12-H-N

SIZE :	NPS 8	Class Rating:	300	Q'ty : 1 Pcs

PARTS NAME		Body (BD)	Bonnet (BN)	Wedge/Disc (WD/DS)	Body Seat Ring	Stem
MATERIAL	ASTM	A352 LCC	A352 LCC	A352 LCC+316	A350 LF2+HF	A182 F316

DIMENSION INSPECTION (mm)								PRESSURE TEST (ASME B16.34 & API 598)			VISUAL TEST
INSPECTION	Face to Face (End to End)	Flange Diameter	Bolt Circle	Dia. Of Raised Face	Flange Thickness	No. of Bolt Hole	Bolt Hole Diameter	SHELL (PSIG)	SEAT(Air) (PSIG)	BACK SEAT (PSIG)	VISUAL
STANDARD	**419±1.6**	**381**	**330**	**270**	**42**	**12**	**25**	**1125**	**80**	**815**	**MSS-SP-55**
RESULT	※ W.T	W.T	W.T	W.T	W.T	W.T	W.T	GOOD	GOOD	GOOD	GOOD

※ W.T : Within Tolerance

SERIAL NO. BATCH	PARTS	HEAT NUMBER	CHEMICAL COMPOSITION (%) (ASTM STD.)													TENSION TEST(MIN.) (ASTM)				HARDNESS	CHARPY
			C	Si	Mn	P	S	Ni	Cr	Mo	Cu	V				T.S (MPa)	Y.P (MPa)	EL. %	R.A %	(HB)	
STANDARD	A352 LCC	Min.	0.250	0.600	1.200	0.040	0.045	0.500	0.500	0.200	0.300	0.030				485	275	22.0	35.0	237	Min≥16J
		Max.														655					Avg≥20J
DF-01-305-180901-12	BODY	LDRAC	0.210	0.420	0.960	0.006	0.013	0.015	0.060	0.010	0.010	0.001				563	352	29.0	53.0	160	46-38-32
	BONNET	LDRAC	0.210	0.420	0.960	0.006	0.013	0.015	0.060	0.010	0.010	0.001				563	352	29.0	53.0	160	46-38-32
	WEDGE/DISC	LDRAC	0.210	0.420	0.960	0.006	0.013	0.015	0.060	0.010	0.010	0.001				563	352	29.0	53.0	160	46-38-32

BLANK

REMARKS : IN ACCORDANCE WITH EN 10204.3.1
HEAT TREATMENT; LCC QUENCHED; 930℃ X 3HR(W.C)+TEMPERED 700℃ X 3HR(A.C)
TO NACE MR0103

Manager, Q.A Department Jane

Witness Inspector ALEX

Valve design and construction is in accordance with API 600, ASME B16.34
Products supplied are in compliance with the requirements of the purchase order

MATERIAL TEST REPORT

(CHEMICAL, PHYSICAL & HYDROSTATIC)

Beric-Davis Companies International, Ltd.
6059 South Loop East
Houston, TX 77087
Phone: 713 673-2073
Fax: 713 673-4641

DATE : SEP.1.2018
ARTICLE : 8 GATE VALVE RF 300 TRIM 12
FIGURE. NO. : 103-08-RF-AH12-H-N
SERIAL NO. : DF-01-306-180901-12

TAG NO.: 103-08-RF-AH12-H-N

SIZE :	NPS 8	Class Rating:	300	Q'ty : 1 Pcs

PARTS NAME		Body (BD)	Bonnet (BN)	Wedge/Disc (WD/DS)	Body Seat Ring	Stem
MATERIAL	ASTM	A352 LCC	A352 LCC	A352 LCC+316	A350 LF2+HF	A182 F316

DIMENSION INSPECTION (mm)								PRESSURE TEST (ASME B16.34 & API 598)			VISUAL TEST
INSPECTION	Face to Face (End to End)	Flange Diameter	Bolt Circle	Dia. Of Raised Face	Flange Thickness	No. of Bolt Hole	Bolt Hole Diameter	SHELL (PSIG)	SEAT(Air) (PSIG)	BACK SEAT (PSIG)	VISUAL
STANDARD	**419±1.6**	**381**	**330**	**270**	**42**	**12**	**25**	**1125**	**80**	**815**	**MSS-SP-55**
RESULT	※ W.T	W.T	W.T	W.T	W.T	W.T	W.T	GOOD	GOOD	GOOD	GOOD

※ W.T : Within Tolerance

SERIAL NO. BATCH	PARTS	HEAT NUMBER	CHEMICAL COMPOSITION (%) (ASTM STD.)													TENSION TEST(MIN.) (ASTM)				HARDNESS	CHARPY
			C	Si	Mn	P	S	Ni	Cr	Mo	Cu	V				T.S (MPa)	Y.P (MPa)	EL. %	R.A %	(HB)	
STANDARD	A352 LCC	Min.														485	275	22.0	35.0		Min≥16J
		Max.	0.250	0.600	1.200	0.040	0.045	0.500	0.500	0.200	0.300	0.030				655				237	Avg≥20J
DF-01-306-180901-12	BODY	LDRAC	0.210	0.420	0.960	0.006	0.013	0.015	0.060	0.010	0.010	0.001				563	352	29.0	53.0	160	46-38-32
	BONNET	LDRAC	0.210	0.420	0.960	0.006	0.013	0.015	0.060	0.010	0.010	0.001				563	352	29.0	53.0	160	46-38-32
	WEDGE/DISC	LDRAC	0.210	0.420	0.960	0.006	0.013	0.015	0.060	0.010	0.010	0.001				563	352	29.0	53.0	160	46-38-32

BLANK

REMARKS : IN ACCORDANCE WITH EN 10204.3.1
HEAT TREATMENT; LCC QUENCHED; 930℃ X 3HR(W.C)+TEMPERED 700℃ X 3HR(A.C)
TO NACE MR0103

Manager, Q.A Department *Jane*

Witness Inspector *ALEX*

Valve design and construction is in accordance with API 600, ASME B16.34
Products supplied are in compliance with the requirements of the purchase order

MATERIAL TEST REPORT

(CHEMICAL, PHYSICAL & HYDROSTATIC)

Beric-Davis Companies International, Ltd.
6059 South Loop East
Houston, TX 77087
Phone: 713 673-2073
Fax: 713 673-4641

DATE : FEB.6.2018

TAG NO.: 103-08-RF-AH12-H-N

ARTICLE : 8 GATE VALVE RF 300 TRIM 12

SIZE :	NPS 8	Class Rating:	300	Q'ty 1 Pcs

FIGURE. NO. : 103-08-RF-AH12-H-N

PARTS NAME		Body (BD)	Bonnet (BN)	Wedge/Disc (WD/DS)	Body Seat Ring	Stem
MATERIAL	ASTM	A352 LCC	A352 LCC	A352 LCC+316	LF2+HF	F316

DIMENSION INSPECTION (mm)								PRESSURE TEST (ASME B16.34 & API 598)			VISUAL TEST
INSPECTION	Face to Face (End to End)	Flange Diameter	Bolt Circle	Dia. Of Raised Face	Flange Thickness	No. of Bolt Hole	Bolt Hole Diameter	SHELL (PSIG)	SEAT(AIR) (PSIG)	BACK SEAT (PSIG)	VISUAL
STANDARD	**419±1.6**	**381**	**330**	**270**	**42**	**12**	**25**	**1125**	**80**	**825**	**MSS-SP-55**
RESULT	※ W.T	W.T	W.T	W.T	W.T	W.T	W.T	GOOD	GOOD	GOOD	GOOD

※ W.T : Within Tolerance

SERIAL NO. BATCH	PARTS	HEAT NUMBER	CHEMICAL COMPOSITION (%) (ASTM STD.)													TENSION TEST(MIN.) (ASTM)				HARDNESS	CHARPY
			C	Si	Mn	P	S	Ni	Cr	Mo	Cu	V				T.S (MPa)	Y.P (MPa)	EL. %	R.A %	(HB)	
STANDARD	A352 LCC	Min.	0.250	0.600	1.200	0.040	0.045	0.500	0.500	0.200		0.030				485	275	22.0	35.0	237	Min≥16J
		Max.														655					Avg≥20J
DF-01-105-180206-12	BODY	HCNNC	0.181	0.399	0.999	0.021	0.011	0.005	0.047	0.014	0.021	0.007				612	435	31.0	61.0	172	36-40-39
	BONNET	HCNNC	0.181	0.399	0.999	0.021	0.011	0.005	0.047	0.014	0.021	0.007				612	435	31.0	61.0	172	36-40-39
	WEDGE/DISC	HCNNC	0.181	0.399	0.999	0.021	0.011	0.005	0.047	0.014	0.021	0.007				612	435	31.0	61.0	172	36-40-39

BLANK

REMARKS : IN ACCORDANCE WITH EN 10204.3.1
HEAT TREATMENT; LCC QUENCHED; 930℃ X 3HR(W.C)+TEMPERED 700℃ X 3HR(A.C)
TO NACE MR0103

Manager, Q.A Department Jane

Witness Inspector ALEX

Valve design and construction is in accordance with API 600, ASME B16.34
Products supplied are in compliance with the requirements of the purchase order

MATERIAL TEST REPORT

(CHEMICAL, PHYSICAL & HYDROSTATIC)

Beric-Davis Companies International, Ltd.
6059 South Loop East
Houston, TX 77087
Phone: 713 673-2073
Fax: 713 673-4641

DATE : SEP.1.2018
ARTICLE : 6 GATE VALVE RF 150 TRIM 12
FIGURE. NO. : 101-06-RF-AH12-H-N
SERIAL NO. : DF-01-247-180901-12

TAG NO.: 101-06-RF-AH12-H-N

SIZE :	NPS 6	Class Rating:	150	Q'ty : 1 Pcs

PARTS NAME		Body (BD)	Bonnet (BN)	Wedge/Disc (WD/DS)	Body Seat Ring	Stem
MATERIAL	ASTM	A352 LCC	A352 LCC	A352 LCC+316	A350 LF2+HF	A182 F316

DIMENSION INSPECTION (mm)								PRESSURE TEST (ASME B16.34 & API 598)			VISUAL TEST
INSPECTION	Face to Face (End to End)	Flange Diameter	Bolt Circle	Dia. Of Raised Face	Flange Thickness	No. of Bolt Hole	Bolt Hole Diameter	SHELL (PSIG)	SEAT(Air) (PSIG)	BACK SEAT (PSIG)	VISUAL
STANDARD	**267±1.6**	**279**	**241.5**	**216**	**26**	**8**	**22**	**450**	**80**	**315**	**MSS-SP-55**
RESULT	※ W.T	W.T	W.T	W.T	W.T	W.T	W.T	GOOD	GOOD	GOOD	GOOD

※ W.T : Within Tolerance

SERIAL NO. BATCH	PARTS	HEAT NUMBER	CHEMICAL COMPOSITION (%) (ASTM STD.)										TENSION TEST(MIN.) (ASTM)				HARDNESS	CHARPY
			C	Si	Mn	P	S	Ni	Cr	Mo	Cu	V	T.S (MPa)	Y.P (MPa)	EL. %	R.A %	(HB)	
STANDARD	A352 LCC	Min.	0.250	0.600	1.200	0.040	0.045	0.500	0.500	0.200	0.300	0.030	485	275	22.0	35.0	237	Min≥16J Avg≥20J
		Max.											655					
DF-01-247-180901-12	BODY	LDRAC	0.210	0.420	0.960	0.006	0.013	0.015	0.060	0.010	0.010	0.001	563	352	29.0	53.0	160	46-38-32
	BONNET	LDRAC	0.210	0.420	0.960	0.006	0.013	0.015	0.060	0.010	0.010	0.001	563	352	29.0	53.0	160	46-38-32
	WEDGE/DISC	LDRAC	0.210	0.420	0.960	0.006	0.013	0.015	0.060	0.010	0.010	0.001	563	352	29.0	53.0	160	46-38-32

BLANK

REMARKS : IN ACCORDANCE WITH EN 10204.3.1
HEAT TREATMENT; LCC QUENCHED; 930℃ X 3HR(W.C)+TEMPERED 700℃ X 3HR(A.C)
TO NACE MR0103

Manager, Q.A Department Jane

Witness Inspector ALEX

Valve design and construction is in accordance with API 600, ASME B16.34
Products supplied are in compliance with the requirements of the purchase order

MATERIAL TEST REPORT

(CHEMICAL, PHYSICAL & HYDROSTATIC)

Beric-Davis Companies International, Ltd.
6059 South Loop East
Houston, TX 77087
Phone: 713 673-2073
Fax: 713 673-4641

DATE : JAN.16.2019
ARTICLE : 6 GATE VALVE RF 150 TRIM 12
FIGURE. NO. : 101-06-RF-AH12-H-N
SERIAL NO. : DF-01-216-190116-12

TAG NO.: 101-06-RF-AH12-H-N

SIZE :	NPS 6	Class Rating:	150	Q'ty : 1 Pcs

PARTS NAME		Body (BD)	Bonnet (BN)	Wedge/Disc (WD/DS)	Body Seat Ring	Stem
MATERIAL	ASTM	A352 LCC	A352 LCC	A352 LCC+316	A350 LF2+HF	A182 F316

DIMENSION INSPECTION (mm)								PRESSURE TEST (ASME B16.34 & API 598)			VISUAL TEST
INSPECTION	Face to Face (End to End)	Flange Diameter	Bolt Circle	Dia. Of Raised Face	Flange Thickness	No. of Bolt Hole	Bolt Hole Diameter	SHELL (PSIG)	SEAT(Air) (PSIG)	BACK SEAT (PSIG)	VISUAL
STANDARD	**267±1.6**	**279**	**241.5**	**216**	**26**	**8**	**22**	**450**	**80**	**320**	**MSS-SP-55**
RESULT	※ W.T	W.T	W.T	W.T	W.T	W.T	W.T	GOOD	GOOD	GOOD	GOOD

※ W.T : Within Tolerance

SERIAL NO. BATCH	PARTS	HEAT NUMBER	CHEMICAL COMPOSITION (%) (ASTM STD.)													TENSION TEST(MIN.) (ASTM)				HARDNESS	CHARPY
			C	Si	Mn	P	S	Ni	Cr	Mo	Cu	V				T.S (MPa)	Y.P (MPa)	EL. %	R.A %	(HB)	
STANDARD	A352 LCC	Min.	0.250	0.600	1.200	0.040	0.045	0.500	0.500	0.200	0.300	0.030				485	275	22.0	35.0	237	Min≥16J Avg≥20J
		Max.														655					
DF-01-216-190116-12	BODY	GDN71	0.200	0.480	1.140	0.027	0.014	0.015	0.103	0.028	0.028	0.002				534	348	32.0	55.0	151	33-37-40
	BONNET	GDN71	0.200	0.480	1.140	0.027	0.014	0.015	0.103	0.028	0.028	0.002				534	348	32.0	55.0	151	33-37-40
	WEDGE/DISC	GDN71	0.200	0.480	1.140	0.027	0.014	0.015	0.103	0.028	0.028	0.002				534	348	32.0	55.0	151	33-37-40

BLANK

REMARKS : IN ACCORDANCE WITH EN 10204.3.1
HEAT TREATMENT; LCC QUENCHED; 930℃ X 3HR(W.C)+TEMPERED 700℃ X 3HR(A.C)
TO NACE MR0103

Manager, Q.A Department Jane

Witness Inspector ALEX

Valve design and construction is in accordance with API 600, ASME B16.34
Products supplied are in compliance with the requirements of the purchase order

MATERIAL TEST REPORT

(CHEMICAL, PHYSICAL & HYDROSTATIC)

Beric-Davis Companies International, Ltd.
6059 South Loop East
Houston, TX 77087
Phone: 713 673-2073
Fax: 713 673-4641

DATE : SEP.1.2018
ARTICLE : 8 GATE VALVE RF 150 TRIM 12
FIGURE. NO. : 101-08-RF-AH12-H-N
SERIAL NO. : DF-01-250-180901-12

TAG NO.: 101-08-RF-AH12-H-N

SIZE :	NPS 8	Class Rating:	150	Q'ty : 1 Pcs

PARTS NAME		Body (BD)	Bonnet (BN)	Wedge/Disc (WD/DS)	Body Seat Ring	Stem
MATERIAL	ASTM	A352 LCC	A352 LCC	A352 LCC+316	A350 LF2+HF	A182 F316

DIMENSION INSPECTION (mm)								PRESSURE TEST (ASME B16.34 & API 598)			VISUAL TEST
INSPECTION	Face to Face (End to End)	Flange Diameter	Bolt Circle	Dia. Of Raised Face	Flange Thickness	No. of Bolt Hole	Bolt Hole Diameter	SHELL (PSIG)	SEAT(Air) (PSIG)	BACK SEAT (PSIG)	VISUAL
STANDARD	**292±1.6**	**343**	**298.5**	**270**	**29**	**8**	**22**	**450**	**80**	**315**	**MSS-SP-55**
RESULT	※ W.T	W.T	W.T	W.T	W.T	W.T	W.T	GOOD	GOOD	GOOD	GOOD

※ W.T : Within Tolerance

SERIAL NO. BATCH	PARTS	HEAT NUMBER	CHEMICAL COMPOSITION (%) (ASTM STD.)													TENSION TEST(MIN.) (ASTM)				HARDNESS	CHARPY
			C	Si	Mn	P	S	Ni	Cr	Mo	Cu	V				T.S (MPa)	Y.P (MPa)	EL. %	R.A %	(HB)	
STANDARD	A352 LCC	Min.	0.250	0.600	1.200	0.040	0.045	0.500	0.500	0.200	0.300	0.030				485	275	22.0	35.0	237	Min≥16J
		Max.														655					Avg≥20J
DF-01-250-180901-12	BODY	LDRAC	0.210	0.420	0.960	0.006	0.013	0.015	0.060	0.010	0.010	0.001				563	352	29.0	53.0	160	46-38-32
	BONNET	LDRAC	0.210	0.420	0.960	0.006	0.013	0.015	0.060	0.010	0.010	0.001				563	352	29.0	53.0	160	46-38-32
	WEDGE/DISC	LDRAC	0.210	0.420	0.960	0.006	0.013	0.015	0.060	0.010	0.010	0.001				563	352	29.0	53.0	160	46-38-32

BLANK

REMARKS : IN ACCORDANCE WITH EN 10204.3.1
HEAT TREATMENT; LCC QUENCHED; 930℃ X 3HR(W.C)+TEMPERED 700℃ X 3HR(A.C)
TO NACE MR0103

Manager, Q.A Department *Jane*

Witness Inspector *ALEX*

Valve design and construction is in accordance with API 600, ASME B16.34
Products supplied are in compliance with the requirements of the purchase order

MATERIAL TEST REPORT

(CHEMICAL, PHYSICAL & HYDROSTATIC)

Beric-Davis Companies International, Ltd.
6059 South Loop East
Houston, TX 77087
Phone: 713 673-2073
Fax: 713 673-4641

TAG NO.: 301-06-RF-FH12-X-N

SIZE :	NPS 6	Class Rating:	150	Q'ty : 1 Pcs

DATE : JAN.16.2019
ARTICLE : 6 CHECK VALVE RF 150 TRIM 12
FIGURE. NO. : 301-06-RF-FH12-X-N
SERIAL NO. : DF-01-228-190116-12

PARTS NAME		Body (BD)	Bonnet (BN)	Wedge/Disc (WD/DS)	Body Seat Ring	Pin
MATERIAL	ASTM	A352 LCC	A352 LCC	A350 LF2+316	A350 LF2+HF	A182 F316

DIMENSION INSPECTION (mm)								PRESSURE TEST (ASME B16.34 & API 598)			VISUAL TEST
INSPECTION	Face to Face (End to End)	Flange Diameter	Bolt Circle	Dia. Of Raised Face	Flange Thickness	No. of Bolt Hole	Bolt Hole Diameter	SHELL (PSIG)	SEAT(Hydro) (PSIG)	BACK SEAT (PSIG)	VISUAL
STANDARD	**356±1.6**	**279**	**241.5**	**216**	**26**	**8**	**22**	**450**	**320**	**N/A**	**MSS-SP-55**
RESULT	※ W.T	W.T	W.T	W.T	W.T	W.T	W.T	GOOD	GOOD	N/A	GOOD

※ W.T : Within Tolerance

SERIAL NO. BATCH	PARTS	HEAT NUMBER	CHEMICAL COMPOSITION (%) (ASTM STD.)										TENSION TEST(MIN.) (ASTM)				HARDNESS	CHARPY
			C	Si	Mn	P	S	Ni	Cr	Mo	Cu	V	T.S (MPa)	Y.P (MPa)	EL %	R.A %	(HB)	
STANDARD	A352 LCC	Min.	0.250	0.600	1.200	0.040	0.045	0.500	0.500	0.200	0.300	0.030	485	275	22.0	35.0	237	Min≥16J
		Max.											655					Avg≥20J
	LF2	Min.		0.15	0.60								485	250	22.0	30.0		Min≥16J
		Max.	0.300	0.300	1.350	0.035	0.040	0.400	0.300	0.120	0.400	0.080	655					Avg≥20J
DF-01-228-190116-12	BODY	GDN71	0.200	0.480	1.140	0.027	0.014	0.015	0.103	0.028	0.028	0.002	534	348	32.0	55.0	151	33-37-40
	BONNET	GDN71	0.200	0.480	1.140	0.027	0.014	0.015	0.103	0.028	0.028	0.002	534	348	32.0	55.0	151	33-37-40
	WEDGE/DISC	1606106	0.230	0.240	1.210	0.015	0.001	0.010	0.020	0.002	0.010	0.001	535	325	34.0	69.0	165	27-28-29

BLANK

REMARKS : IN ACCORDANCE WITH EN 10204.3.1
HEAT TREATMENT; LCC QUENCHED; 930℃ X 3HR(W.C)+TEMPERED 700℃ X 3HR(A.C)
TO NACE MR0103

Manager, Q.A Department *Jane*

Witness Inspector *ALEX*

Valve design and construction is in accordance with API 594, ASME B16.34
Products supplied are in compliance with the requirements of the purchase order

MLTS_6056-18734
Cert# GATE POWELL

M. A. Stewart & Sons Ltd.
VALVES AND FITTINGS

HEAT / SERIAL NUMBER RECORD

(FORM 4.15.4A)

COMPANY; Emco / EQuipment - KN (For ABF mines)

PAGE; 1 OF 1

BRANCH; Rouyn - Noranda, QC

MAS SALES REGISTER; 1436324

ATTN; Richard Knight

DATE June 10/19

PO# 2610090 - 00

4						
5	1	8"	Powell 3003FK	C5CL54	C5CL54	7F19226
6			8G XXX			
7						
19						
20						
21						
22						
23						
24						
25						

FAX STAMP

FORM 4.3.2C REV-2-15-08

VALVE CERTIFICATION

POWELL VALVES

CERTIFIED MATERIAL TEST REPORT/CERTIFICATE OF CONFORMANCE
CERTIFIED TO ISO 9001 QUALITY STANDARDS

CERTIFICATE NUMBER: **7F19226**
DATE: 7/15/15

2503 Spring Grove Ave.
Cincinnati, OH 45214 U.S.A
Tel: 513-852-2000
info@powellvalves.com

CUSTOMER: M. A. STEWART & SONS LTD.
CUSTOMER PO #: 1001802
POWELL ORDER: 904159
ITEM NUMBER: 8.0 3003FK8GXXX
DESCRIPTION: CLASS 300, BOLTED BONNET, GATE VALVE, FLG END, A352 LCC, API TRIM 8, GRAPHITE PACKING, S.W. GRAPHITE GASKET

PRESSURE TEST

Standard: API-598

SHELL	1125	PASS
SEAT (AIR)	80	PASS
SEAT (HYDRO)	N/A	N/A
BACKSEAT	825	PASS

(Values are PSI minimums)

INSPECTION

Dimensional:	PASS
Operational:	PASS
Visual:	PASS

We certify that the valve meets the requirements of one or more of the following industry standards:

API 598	Valve Inspection and Testing
API 600	Bolted Bonnet Cast Steel Valves
API 602	Forged Valves
API 603	Bolted Bonnet Cast Stainless Steel Valves
API 622/624	Fugitive Emissions
ASME B16.10	End to End Dimensions
ASME B16.34	Valves
MSS SP25	Valve Markings
MSS SP55	Casting Surface Inspection

COMPONENT DATA (Chemical Properties)

BODY — HEAT NO: C5CL54 — MATERIAL: A352LCC — PHYSICAL PROPERTIES

C	SI	MN	P	S	NI	CR	MO	CU	V					Tensile (KSI)	Yield (KSI)	Elong%	Reduct%	HB	
.19	.432	.86	.019	.011	.214	.047	.015	.031	.001					76.4	53.9	30.0	62.0	152	

Normalized 1650°F Min, Liquid Quench, Temper 1100°F Min

BONNET/CAP — HEAT NO: C5CL54 — MATERIAL: A352LCC — PHYSICAL PROPERTIES

C	SI	MN	P	S	NI	CR	MO	CU	V					Tensile (KSI)	Yield (KSI)	Elong%	Reduct%	HB	
.19	.432	.86	.019	.011	.214	.047	.015	.031	.001					76.4	53.9	30.0	62.0	152	

Normalized 1650°F Min, Liquid Quench, Temper 1100°F Min

DISC — HEAT NO: C5C680 — MATERIAL: A352LCC — PHYSICAL PROPERTIES

C	SI	MN	P	S	NI	CR	MO	CU	V					Tensile (KSI)	Yield (KSI)	Elong%	Reduct%	HB	
.197	.446	.915	.022	.009	.274	.058	.007	.026	.006					91.6	66.1	31.0	62.0	159	

Normalized 1650°F Min, Liquid Quench, Temper 1100°F Min

CHARPY IMPACT RESULT

SHELL TEST : 10 MIN MINIMUN DURATION

BODY	BONNET/CAP	DISC	
28.7	28.7	34.6	MIN. OF 1 SPECIMEN (FT-LB)
28.7	28.7	37.6	AVG OF 3 SPEC., MIN. OF 2 SPEC. (FT-LAB)
-50	-50	-50	TEST TEMPERATURE (DEGREES F)

WE CERTIFY THAT THE ABOVE PRODUCT(S) CONFORM TO THE APPLICABLE REQUIREMENTS OF THE PURCHASE ORDER.
THESE RESULTS ARE IN ACCORDANCE WITH EN 10204 TYPE 3.1. http://www.powellvalves.com

CERTIFIED TO ISO 9001 QUALITY STANDARDS

Willard E. Painter Jr.

Quality Manager
THE WM. POWELL COMPANY
Form F.10.6 2/23/11

WE CERTIFY THAT THE ABOVE PRODUCT(S) CONFORM TO THE APPLICABLE REQUIREMENTS OF THE PURCHASE ORDER.
THESE RESULTS ARE IN ACCORDANCE WITH EN 10204 TYPE 3.1. http://www.powellvalves.com

CERTIFIED TO ISO 9001 QUALITY STANDARDS

Apollo Valves

Division of Conbraco Industries

Conway, SC 29526

FAX: 843/347-1773

PHONE: 843/347-4666

ISO 9001:2015 NSAI CERTIFIED

MLTS_6056-18735
Cert# BV APOLLO

MATERIAL TEST REPORT

We certify that the below listed components were manufactured, tested, and inspected in accordance with the requirements of the procurement documents as stated.

Model Number: **83I**
Size: **2"**
Quantity: **8**
Material Specification: **ASTM A352-18 LCC(LCC)**

Customer Name: **Masdom LTD**
Customer Order Number: **19503**
Valve Part Number: **83L-248-24**
User Tag Number: **B36652**

Heat Code	C	Mn	P	S	Si	Cr	Ni	Mo	Cu	V	Cb	TENSILE PSI	YIELD PSI	%ELO 2"	%RA	HARDNESS (RB unless noted)
AX	0.1965	1.3639	0.0109	0.0128	0.2577	0.1313	0.0341	0.0134	0.0443	0.0027		81002	54270	25	74	80
BW	0.1901	1.3903	0.0123	0.0138	0.3772	0.064	0.0364	0.0047	0.0433	0.0025		79634	53506	30	65	77
HU	0.197	1.34	0.014	0.008	0.334	0.061	0.038	0.012	0.115	0.003		83872	54730	31	67	81
KW	0.2085	1.314	0.0139	0.0115	0.2952	0.0273	0.0216	0.0052	0.0327	0.0023	0	77629	52937	27	70	79

Charpy Impact Test: Conducted in accordance with ASTM A370 Sections 19 Through 20. Standard full size test specimen.

Test Temperature: -50F	Heat Code	Average of 3 Test	Test 1	Test 2	Test 3
	AX	36.52	32.95	29.95	46.67
	BW	20.5333	20	20.4	21.2
	HU	21.4667	23.2	20.8	20.4
	KW	22.8667	22.8	23.6	22.2

TESTING PROCEDURE: All Apollo Valves are 100% tested in accordance with their standard of construction. Valves designed to the requirements of ASME B16.34 are tested to meet or exceed the requirements of

API 598, ASME B16.34, MSS SP-61 and MSS SP-72. Valves designed to the requirements of MSS SP-110, are tested to meet or exceed the requirements of MSS SP-110. Specification sheets are available at www.apollovalves.com.

We certify that the above listed components meet the requirements of the procurement documents as stated.
This material certificate complies with EN 10204-2004 Type 3.1 (formerly Type F3.1.B).

Date: **08/01/19**
Signed:



Steve Causey
Quality Assurance Manager

The above listed information is certified to be true and accurate to the best of my knowledge and belief.

Apollo Valves

Division of Conbraco Industries

Conway, SC 29526
FAX: 843/347-1773
PHONE: 843/347-4666

ISO 9001:2015 NSAI CERTIFIED

MATERIAL TEST REPORT

We certify that the below listed components were manufactured, tested, and inspected in accordance with the requirements of the procurement documents as stated.

Model Number: **831**
Size: **1"**
Quantity: **8**
Material Specification: **ASTM A352-18 LCC(LCC)**

Customer Name: **Masdom LTD**
Customer Order Number: **19503**
Valve Part Number: **83L-245-24**
User Tag Number: **B36652**

Heat Code	C	Mn	P	S	Si	Cr	Ni	Mo	Cu	V	Cb	TENSILE PSI	YIELD PSI	%ELO 2"	%RA	HARDNESS (RB unless noted)
AX	0.1965	1.3639	0.0109	0.0128	0.2577	0.1313	0.0341	0.0134	0.0443	0.0027		81002	54270	25	74	80
KW	0.2085	1.314	0.0139	0.0115	0.2952	0.0273	0.0216	0.0052	0.0327	0.0023	0	77629	52937	27	70	79
LW	0.1848	1.3624	0.0111	0.002	0.2961	0.1055	0.0326	0.0114	0.0266	0.0021		77277	50671	27.2	71.7	79

Charpy Impact Test: Conducted in accordance with ASTM A370 Sections 19 Through 20. Standard full size test specimen.

Test Temperature: -50F	Heat Code	Average of 3 Test	Test 1	Test 2	Test 3
	AX	36.52	32.95	29.95	46.67
	KW	22.8667	22.8	23.6	22.2
	LW	25.6	20	21.1	35.7

TESTING PROCEDURE: All Apollo Valves are 100% tested in accordance with their standard of construction. Valves designed to the requirements of ASME B16.34 are tested to meet or exceed the requirements of API 598, ASME B16.34, MSS SP-61 and MSS SP-72. Valves designed to the requirements of MSS SP-110, are tested to meet or exceed the requirements of MSS SP-110. Specification sheets are available at www.apollovalves.com.

We certify that the above listed components meet the requirements of the procurement documents as stated.
This material certificate complies with EN 10204-2004 Type 3.1 (formerly Type F3.1.B).

Date: **08/01/19**
Signed:

The above listed information is certified to be true and accurate to the best of my knowledge and belief.

Steve Causey
Quality Assurance Manager

SO 1SL047059-1 PO No. 00026111

CURTISS-WRIGHT

Certificate of Compliance (QC-02)

FARRIS ENGINEERING
DIV. OF CURTISS-WRIGHT FCC
10195 BRECKSVILLE RD
BRECKSVILLE OH 44141
UNITED STATES

Date: 07/10/2019

MLTS_6056-18735
Cert# PRV FARRIS

Sales Order No.: 1SL047059
Customer:
Customer Order No.: 00026111
CRN No.: CSA-0G11969.5CL

Line	Tag Number	Model Number	Serial Number
1		27EA34-M20	942333-1-KE
1		27EA34-M20	942333-2-KE
1		27EA34-M20	942333-3-KE
1		27EA34-M20	942333-4-KE

We hereby certify that the valve(s) indicated above have been designed, manufactured and tested in accordance with ASME Section VIII, Division 1 by Curtiss-Wright Flow Control Corp.- Farris Engineering in accordance with the company's Quality Control Program. The Brecksville Facility's Quality Control Program is registered to ISO 9001:2015, Certificate Identity No. 10076249. We hereby certify that they were produced in conformance with the contract and Farris Worldwide Quality Manual Revision N, dated 13-Sep-18.

The representative signing the document states that the above information is correct and true.

Anthony Korinek



Certified Individual

Date:07/10/2019

CURTISS-WRIGHT

Material Test Reports (QC-04)

FARRIS ENGINEERING
DIV. OF CURTISS-WRIGHT FCC
10195 BRECKSVILLE RD
BRECKSVILLE OH 44141
UNITED STATES

Sales Order No.: 1SL047059 Line No.: 1 Qty: 4
Customer:
Customer Order No.: 00026111
Model No.: 27EA34-M20
Serial No.: 942333-1-KE, 942333-2-KE, 942333-3-KE, 942333-4-KE
Tag No.:

Serial No.	Component	Item Number	Lot Number	Material Description
942333-1-KE	BODY 1 X 1/2 MNPT 2700	325737X1-010	872-0118	ASME SA-479 316SS
942333-1-KE	DISC 2700	325742-010	900758	ASME SA-479 316SS
942333-1-KE	BONNET 2700	326076X2-023	640G	ASME SA-216 WCB
942333-2-KE	BODY 1 X 1/2 MNPT 2700	325737X1-010	872-0118	ASME SA-479 316SS
942333-2-KE	DISC 2700	325742-010	900758	ASME SA-479 316SS
942333-2-KE	BONNET 2700	326076X2-023	640G	ASME SA-216 WCB
942333-3-KE	BODY 1 X 1/2 MNPT 2700	325737X1-010	872-0118	ASME SA-479 316SS
942333-3-KE	DISC 2700	325742-010	900758	ASME SA-479 316SS
942333-3-KE	BONNET 2700	326076X2-023	640G	ASME SA-216 WCB
942333-4-KE	BODY 1 X 1/2 MNPT 2700	325737X1-010	872-0118	ASME SA-479 316SS
942333-4-KE	DISC 2700	325742-010	900758	ASME SA-479 316SS
942333-4-KE	BONNET 2700	326076X2-023	640G	ASME SA-216 WCB

Note: Traceability of individual parts to their NDE and special process reports is maintained through Lot Codes created by serializing the lot number shown on the material manufacturer's Material Test Report.

产品质量证明书 INSPECTION CERTIFICATE
---EN10204 3.1

TJ8868

江阴市不锈钢材料厂JIANGYINSHI STAINLESS STEEL MATERIAL FACTORY

地址：中国江苏省江阴市周庄镇路口桥
Add: Lukouqiao Zhouzhuang Town JiangYin JiangSu China
TEL:(0510)86236681 FAX:(0510)86905200

收货单位：成飞机械 执行标准：ASME SA479 2015 合同号：7969 编号：20180901

SOLD TO: Curtisswrigh (Tian jin) Flow Control CO.,LTD EXECUTIVE STANDARDS: CONTRACT NO: Serial number:

序号 No	钢号 Grade	规格 Size	冶炼炉号 Heat No.	支数 Bundles	重量 Weight (kg)	化学成分 Chemical Composition (%) C.	Si	Mn	P	S	Cr:	Mo	Ni
						≤0.030	≤1.00	≤2.00	≤0.045	≤0.030	16.00-18.00	2.00-3.00	10.00-14.00
1	316/316L	Φ78	872-0118	9	1120	0.03	0.4	1.76	0.034	0.025	16.52	2.07	10.2
2	316/316L	Φ72	872-0117	18	2176	0.026	0.4	1.74	0.034	0.02	16.64	2.05	10.14
3	316/316L	Φ72	872-0117	9	1075	0.026	0.4	1.74	0.034	0.02	16.64	2.05	10.14
4	316/316L	Φ50.8	872-0118	15	1093	0.03	0.4	1.76	0.034	0.025	16.52	2.07	10.2
5	316/316L	Φ50.8	872-0118	9	984	0.03	0.4	1.76	0.034	0.025	16.52	2.07	10.2

机械性能：Mechanical Properties

序号 No.	热处理炉号 Heat treatment furnace no.	热处理状态Heat treatment condition	抗拉强度 Tensile Strength Rm (Mpa)≥ 515	屈服强度 Yield Strength Rp0.2(Mpa) ≥205	伸长率 Elongation A (%)≥ 30	断面收缩率 Reduction of Area Z (%)≥40	冲击试验Impact charpy Individual Kv2(J)≥ 41 Individual单个功	Average平均功	硬度 HardnessHB≤ 189	交货状态 The delivery status
1	180326-1	固溶处理 Solution treatme	587	310	58	80			161	光亮Bright
2	180326-1		592	311	56	78			163	
3	180315-1		595	314	55	76			164	
4	180407-1		590	312	57	79			162	
5	180407-1		590	312	57	79			162	

APPROVED
2018-11-30
FARRIS ENGINEERING
QUALITY CONTROL
BY QC 04

说明：1.有异议时，来函请标明钢号、炉号、规格、发货日期、原因，并将实物保管好。
Notes: (1) When there is any complain,you are kindly requested to mark the Steel Grade,Heat No.,Size,Delivery Date,Causes and reserve the materials in the condition

备注：Heat treatment:Solution treatment :1900℉,1hours minimum,rapidly cooled to below 90℉.

The material supplied meets the requirements of the current versions of NACE MR0103 and MR0175/ISO 15156，提供的材料符合NACE MR0103 and MR0175/ISO15156标准要求。

热处理：固溶处理：1040℃最少1小时保温，出炉急冷到32℃以下。

签发日期：2018/9/10 Issued Date 制单：卞玉霞 Principal 审核： examime and verify 质量部门盖章有效 Stamp of Department of Quality Assurance

江阴市不锈钢材料厂 质量检验章

TJ9105

福建省明溪县长虹精密铸钢有限公司
Fujian Mingxi Changhong Precision Steel Casting Co.,Ltd.
Address: Pingpu industrial Park Mingxi county, Fujian, China. Tel:0598-2866208, Fax:0598-2867736

材料质量证明书
Material Inspection
EN 10204 3.1
CHHJZ

Customer:Curtiss-wright Flow Control Farris Engneering
Address: No.3 Quanhui Road, Wuqing Development Area, Tianjin China. Tel:86-22-82166100, Fax:86-22-82166160

证书编号Cert. No.: 201901085

No.	产品名称 Product	零件号 Part No.	执行标准 Product Std.	材质 Material	数量 Quantity	炉号 Heat No.	订单号 Order No.
1	Bonnet	326076X2-023	ASME SA216-2015	WCB	12	637G	6PR002478
2	Bonnet	326076X2-023	ASME SA216-2015	WCB	10	638G	6PR002478
3	Bonnet	326076X2-023	ASME SA216-2015	WCB	10	639G	6PR002478
4	Bonnet	326076X2-023	ASME SA216-2015	WCB	25	640G	6PR002478
5	Bonnet	326076X2-023	ASME SA216-2015	WCB	22	641G	6PR002478
6	Bonnet	326076X2-023	ASME SA216-2015	WCB	17	642G	6PR002478/2480
7	Bonnet	326076X2-023	ASME SA216-2015	WCB	20	752G	6PR002480

化学成分 Chemical Compositions

Spec.	C	Si	Mn	P	S	Cr	Ni	Mo	Cu	V	N
标准值	≤0.3 ✓	≤0.6 ✓	≤1.0 ✓	≤0.04 ✓	≤0.045 ✓	≤0.5 ✓	≤0.5 ✓	≤0.2 ✓	≤0.3 ✓	≤0.03 ✓	
637G	0.222	0.197	0.772	0.017	0.007	0.071	0.024	0.004	0.011	0.001	
638G	0.213	0.210	0.703	0.020	0.008	0.071	0.017	0.002	0.010	0.002	
639G	0.215	0.212	0.703	0.020	0.008	0.071	0.017	0.002	0.010	0.001	
640G	0.261	0.204	0.672	0.022	0.008	0.099	0.026	0.003	0.011	0.002	
641G	0.212	0.230	0.675	0.018	0.006	0.096	0.030	0.003	0.011	0.002	
642G	0.212	0.229	0.677	0.019	0.006	0.096	0.029	0.003	0.011	0.002	
752G	0.220	0.218	0.689	0.021	0.006	0.057	0.030	0.004	0.011	0.002	

Spec.	抗拉强度 Tensile Strength (MPa)	屈服强度 Yieid Strength (MPa)	延伸率 Elongation %	断面收缩率 Reduction of Area %	冲击功 Charpy Impact Test (J) Temp. ℃	Average	Individual			硬度 Hardness HB
标准值	485-655 ✓	≥250 ✓	≥22 ✓	≥35 ✓	-29	≥27J	≥19J	≥19	≥19	≤237 ✓
637G	550	360	37	60						159
638G	553	350	36	62						158
639G	555	363	36	60						157
640G	546	357	38	59						156
641G	549	352	37	61						156
642G	549	348	36	60						153
752G	537	361	35	63						158

热处理 Heat Treatment

No. 序号	Heat Lot. 热处理炉号	Heat No. 浇注炉号	Charging time 入炉时间	Charging Temp. 入炉温度℃	Start Time 到温时间	Hold Temp. 到温温度℃	Finished Time 出炉时间	Finish Temp. 出炉温度℃	Soak time (H) 保温时间 H	Cooling 冷却方式
1	181030-1	637G	7:25	413	9:20	905	11:20	907	2:00	Air空气
2	181030-1	638G	7:25	413	9:20	905	11:20	907	2:00	Air空气
3	181030-1	639G	7:25	413	9:20	905	11:20	907	2:00	Air空气
4	181108-1	640G	7:16	520	9:00	902	11:00	906	2:00	Air空气
5	181106-1	641G	8:00	368	10:00	901	12:00	905	2:00	Air空气
6	181106-1	642G	8:00	368	10:00	901	12:00	905	2:00	Air空气
7	180830-1	752G	7:25	425	9:20	908	11:20	910	2:00	Air空气

其他信息 Other Informations

No. 序号	外观尺寸检查 Visual & Dimension		无损探伤 NDT MT/PT	UT	RT	交货状态 Delivery Condition
1	OK.	OK				正火状态 Normalized

1. We hereby certify that the materials described herein have been manufactured, inspected and tested in accordance with the customer's specification(s), and that they satisfy the requirements.
2. All of casting visual inspection according to MSS-SP-55.
3. The material supplied meets the requirments of the current version of NACE MR0103 and MR0175/ISO 15156.

APPROVED

编 制 Prepared By: 谢海荣 2019-1-25

审 批 Approved By: 易娟 2019-1-25

2019-11-30

FARRIS ENGINEERING
QUALITY CONTROL
BY QC 03

sidenor

MILL TEST CERTIFICATE

Basauri Plant

ISO 9001; ISO-TS 16949; ISO 14001 Y OHSAS 18001

AENOR ER Empresa Registrada UNE-EN ISO 9001 — AENOR ER Quality in Automotive Sector ISO/TS 16949 — www.tuv.com TÜVRheinland ID 9105017378

7722

Product Made in Spain

CUSTOMER: MAGELLAN CORPORATION		WORKS REFERENCE: 1910594
REFERENCE: 211222	SALES ORDER: 299090-2	HEAT NUMBER: 900758
PRODUCT NR:	MASTER REFERENCE: 215719	ROLLED: 04.01.2017

REQUIRED PRODUCT

AISI316/316L ROUND BARS TURNED SOLUTION ANNEALED 0.8750" SPECIFICATION´S TOLERANCE 12'-12'2" NORMAL

EXPEDITION — DELIVERY: 0080571873 WEIGHT (KG): 4.614 BUNDLES: 6 UNITS: 400

MADE ACCORDING TO

AISI STAINLESS STEELS - 01.03.1999; ASME SA182-SA182M SECTION II, PART A - . . .2015
ASME SA193-SA193M/SECTION II, PART A - . . .2015; ASME SA320-SA320M/SECTION II, PART A 2013 . . . 2013
ASME SA479-SA479M SECTION II, PART A - . . .2015; ASTM A182-A182M 2015 01.06.2015
ASTM A193-A193M 2015 01.06.2015; ASTM A276/A276M 15 01.01.2015; ASTM A314 2015 15.07.2015
ASTM A320-A320M 2015 01.05.2015; ASTM A370 2014 15.05.2014; ASTM A473 13 01.11.2013
ASTM A479-A479M 2015 15.07.2015; ASTM A484-A484M 15 01.03.2015; ASTM A751 2014 01.03.2014
EN 10204 :2004 OCT. 2004 3.1; MAGELLAN MIC 1751 AMD12.3 21.12.2016
MAGELLAN MIC 1751 SUPP AISI316/AISI316L - 24.06.2015; NACE MR0103-2005 - 2005
NACE MR0175/ISO 15156-1 3ª EDICION 23.11.2015; NACE MR0175/ISO 15156-3 3ª EDICION 23.11.2015
SAE AMS 5648 L . .09.2012; SAE AMS 5653 H .. 11.2012; SAE AMS-QQ-S-763 D 03.2015

CHEMICAL ANALYSIS OF HEAT — U:% HEAT NUMBER: 900758

	C	Mn	Si	P	S	Cr	Ni	Mo	V	W	Co
Min.		1,250			0,020	16,500	10,000	2,000			
Max.	0,030	2,000	0,750	0,040	0,030	18,000	13,000	2,500	0,100	0,100	0,3000
Cer.	0,015	1,490	0,488	0,026	0,025	16,700	10,120	2,030	0,060	0,082	0,2280

	Cu	Al	Ti	Nb	N
Min.					
Max.	0,750	0,100	0,1000	0,1000	0,1000
Cer.	0,337	0,006	0,0050	0,0160	0,0730

INCLUSIONS (MICROINCLUSIONS)

Standard(ASTM E45 2013 . . . 2013); Type/method(A); A(t):2,5; A(h):1; B(t):0,5; B(h):0,5; C(t):1,5
C(h):1; D(t):0,5; D(h):0,5

APPROVED
PARTS ENGINEERING - QUALITY CONTRO
NOV. 14 2018
BY № 1005557
JJA 7722

MECHANICAL PROPERTIES AS SUPPLIED (TEST)

Sample:Supply section (bar prolongation); Specimen Test location:Nucleus
Standard(1)(ASTM A370 2014 15.05.2014); Standard(2)(ASTM E8/E8M 2015A 15.05.2015)
Tensile direction:Longitudinal; Tensile test Temp.(Room temperature):Room temperature
Ts(83.000/120.000PSI):89.605PSI; Ys(0,2% >=30.000PSI):0,2% 44.089PSI; El.(2" >=40%):2" 57,2%
Z(>=50%):74,9%; Standard(ASTM E23 07-AE1 2007)
Notch impact direction:Longitudinal; Notch Impact sample type(CHARPY-V):CHARPY-V
Notch Impact Temp.(68°F):68°F; K(1):203Ft.Lb; K(2):206Ft.Lb; K(3):205Ft.Lb; K (average):204,67
K (single)(>=75Ft.Lb):203Ft.Lb; Hardness Standard(1)(ASTM A370 2014 15.05.2014)
Hardness Standard(2)(ASTM E10 2015 01.05.2015)
Surface hardness(of the bar 140/223HB):of the bar 208HB
Hardness at(at 1/2 radius of the bar 140/223HB):at 1/2 radius of the bar 162HB

ADDITIONAL TESTS

Standard(ASTM A262 - 01.07.2014); Type / Method(Practice E):Practice E
Standard(ASTM E112 2013 01.10.2013); Grain size:Austenitic 6; Standard(ASTM E381 2001 R2006)
macroetching(1):S 1; macroetching(2):R 1; macroetching(3):C 1; Intercrystalline Corrosion:O.K.

TECHNOLOGY & QUALITY CERTIFIES THAT THE PRODUCT FULL FILLS THE ORDER´S SPECIFICATION

APPROVED BY: ALBERTO CUBERO ZABALA SIGN:

DATE: 21.02.2017

REF.: 1002484420000

sidenor BASAURI

Analyst of Quality certificates

Sidenor

MILL TEST CERTIFICATE

Basauri Plant

ISO 9001; ISO-TS 16949; ISO 14001 Y OHSAS 18001

Product Made in Spain

CUSTOMER:MAGELLAN CORPORATION		WORKS REFERENCE:1910594
REFERENCE:211222	SALES ORDER:299090-2	HEAT NUMBER:900758
PRODUCT NR:	MASTER REFERENCE:215719	ROLLED:04.01.2017

NON DESTRUCTIVE TESTS

U.T. standard(1)(ASTM A388-A388M 2015 15.07.2015); U.T. type/method(1)(FBH)
U.T. standard(2)(API SPEC 6A 20°ED.+ER1&2+AD12.3 . .03.2013); U.T. type/method(2)(PSL3)
U.T. standard(3)(ISO 10423 4°ED.2009 15.12.2009); U.T. type/method(3)(PSL3)
ULTRASONIC INSPECTION 100% : O.K. (1) =<1,5 mm.(according to Suplem.1 ASTM A388)
ULTRASONIC INSPECTION 100% : O.K. (2) according to: API 6A/ISO-10423 "PSL3"
ULTRASONIC INSPECTION 100% : O.K. (3); CRACKS CONTROL 100% : O.K.

ADDITIONAL INFORMATION

Reduction ratio:49,7; "Macrostructure: Satisfactory"
Ultrasonic Inspection Results ("ASTM A388: Satisfactory"); DFARS Compliant
HEAT MELTED AT OUTOKUMPU (UK) AND PROCESSED AT SIDENOR (SPAIN); RoHs Compliant
Material Cold Finished, Peeled and Reeled; CONTINUOUS CASTING 150 X 150 mm.
SOLUTION ANNEALED at 1922°F - IN AIR; .; .

Material manufactured through the Electric Arc Furnace and AOD.
Steel not exposed to Mercury, or to any other metal alloy that is liquid, at ambient temperatures during processing or while in Sidenor's possession.
Steel is free from Uranium or any other harmful radioactive contamination.
Steel products were not repaired by welding.
100% anti mix test performed by spectrometry.

APPROVED
FARRIS ENGINEERING – QUALITY CONTROL
NOV 14 2018
BY № 1005557
#W7722

TECHNOLOGY & QUALITY CERTIFIES THAT THE PRODUCT FULL FILLS THE ORDER'S SPECIFICATION

APPROVED BY:ALBERTO CUBERO ZABALA SIGN:

DATE:21.02.2017

REF.:1002484420000

Analyst of Quality certificates

sidenor BASAURI

M.A. Stewart & Sons Ltd.

PICK TICKET

MAS Edmonton Branch
1315473

PICK DATE	PICK TICKET	ORDER NUMBER
8/20/2019	1315473	1452662

SHIP TO NO	CUSTOMER NO	PAGE
103449	103449	1 of 1

PICKED BY:	CHECKED BY:
PJ	

MTR's WHEN APPLICABLE

SOLD TO
EMCO LTD WESTLUND (261) ROUYN-NORANDA
PO BOX 5300 STN A
WESTLUND
LONDON, ON N6A 4N7
CANADA

Ex EDM
MTL

Ordered By: Chantal Gregoire

SHIP TO
ABF MINES CANADA INC. (2985080)
1310 AVE DAVY
ROUYN-NORANDA, QC J9Y 0A8
CANADA

ORDER DATE	CUSTOMER PO / ORDER NUMBER	CARRIER	TAKER
8/20/2019	DO2610173-00	Purolator	ANDREN

Delivery / Quick Notes	QTY	Item	Box ID	Skid ID
Delivery Instructions: EX: EDMONTON / PUROLATOR # 7334590				
18FF	4 EA	014-53208 MAS LSSF3-HDFS-N 1 3000WOG FP LCC IP 3PC FS NACE BALL		
18FF 18SF	1 EA	014-53214 MAS LSSF3-HDFS-N 2 2000WOG FP LCC IP 3PC FS NACE BALL		

Total Lines: 2
Total Pieces: 5
Total Weight: 32.891

Total Skids / Boxes:	Shipment Weight:

* Complete Order *
12.10.807 - 08/03/12

MLTS_6056-18953
Cert# BV MAS

JY VALVE & MFG. CO., LTD.

(Qianguo Village,Huangtang Town)Chengxi Taiwanese Business Base
Huian County,Quanzhou,Fujian,China 362101
TEL : (0595) 2730-1335 FAX : (0595) 2730-1336

MESSRS.: M. A. STEWART & SONS LTD.

DELIVER TO: VANCOUVER SHEET NO.: LSSF3HDFSN-F181206-1

P.O. NO. #1011686 DATE : DEC. 26, 2018

CERTIFICATE OF COMPLIANCE

WE, JY VALVE & MFG. CO., LTD. HEREBY CERTIFY THAT OUR PRODUCTS AS SHOWN ON DRAWINGS OF OUR MODEL LSSF3-HDFS-N ARE MANUFACTURED, INSPECTED AND TESTED FULLY IN ACCORDANCE WITH THE FOLLOWING STANDARDS:

PRESSURE-TEMPERATURE RATING	1/4" TO 1"	3000 PSIG @100°F
	1-1/4" TO 2"	2000 PSIG @100°F
	2-1/2" TO 3"	1000 PSIG @100°F
BODY & CAP	ASTM A352-LCC	
SEAT MATERIAL	R-PTFE	
VALVE TESTING	API 598 ※	
FIRE TEST STANDARD	API 607 5TH EDITION	
END CONNECTION	NPT THREADS TO ANSI B1.20.1	

※ HIGH PRESSURE SHELL TEST AND LOW PRESSURE SEAT TEST ARE PERFORMED 100%.

- NACE MR-0175-2002 AND MR-0103 COMPLIANCE

JY VALVE & MFG. CO., LTD.

CHARLES CHAN, PRESIDENT

JY VALVE & MFG. CO., LTD.

(Qianguo Village,Huangtang Town)Chengxi Taiwanese Business Base Huian County,Quanzhou,Fujian,China 362101
Tel: 86-595-27301335 Fax: 86-595-27301336

INSPECTION CERTIFICATE

MESSRS. : M. A. STEWART & SONS LTD.
T O : VANCOUVER
P.O. NO.: : #1011686

SHEET NO. : LSSF3HDFSN-F181206-2
EXPORT NO. : F181206
DATE : DEC. 26, 2018

Jason Huang

WITNESSED BY: JY VALVE & MFG. CO., LTD.

JASON HUANG, QC MANAGER

VALVE MODEL	DESCRIPTION	SIZE (INCH)	Q'TY (PCS)	PRESSURE TEST (PSIG)			RESULT	MATERIAL	DIMENSION	VISUAL	OPERATION
				SHELL	SEAT						
				HYDRO	HYDRO	AIR					
LSSF3-HDFS-N	3000/2000/1000 WOG CARBON STEEL 3-PIECE TYPE INVESTMENT CAST BALL VALVES (NACE-MR-0175)	1"	18	4500		80	GOOD	GOOD	GOOD	GOOD	GOOD

MATERIAL TEST RESULTS

MESSRS. : M. A. STEWART & SONS LTD.
TO : VANCOUVER
P.O. NO. : #1011686

SHEET NO. : LSSF3HDFSN-F181206-3
EXPORT NO : F181206
DATE : DEC. 26, 2018

VALVE MODEL : LSSF3-HDFS-N
3000/2000/1000 WOG BALL VALVE
REVIEWED BY : QUAN ZHOU JING YING VALVE CO., LTD.

SIZE : 1"
MATERIAL: ASTM-A352 GRADE LCC

Jason Huang

JASON HUANG, QC MANAGER
JY VALVE & MFG. CO., LTD.

CHEMICAL REQUIREMENT (%)													
ELEMENT		C	Si	Mn	P	S	Ni	Cr	Mo	V			
SPEC (MAX.)		0.250	0.600	1.200	0.040	0.045	0.500	0.500	0.200	0.030			
Production No	Parts Name	B For each reduction of 0.01% below the specified maximum carbon content, an increase of 0.04% Mn above the specified maximum will be permitted up to a maximum of 1.28%											
18FF	BODY & CAP	0.2010	0.4400	0.6900	0.0150	0.0048	0.3230	0.4000	0.0740	0.0120			

TENSILE REQUIREMENTS		Tensile Stength (MPa)	Yield Strength (MPa)	Elongation (%)	Reduction of area (%)	Hardness (HB)	Charpy V-Notch Energy value
Production No	Parts Name	485 - 655	Min. 275	Min. 22	Min. 35	Max. 187	Min. 20
18FF	BODY & CAP	524	288	36	45	160	52
Heat treatment	NORMALIZED @890 DEGREE C - 1H AIR COOLING AND TEMPERED						

WE HEREBY CERTIFY THAT THE MATERIAL HEREIN DESCRIED ARE SATSIFACTORY IN ACCORDANCE WITH THE SPECIFICAITON.

MATERIAL TEST RESULTS

MESSRS. : M. A. STEWART & SONS LTD.
TO : VANCOUVER
P.O. NO. : #1011686

SHEET NO. : LSSF3HDFSN-F181206-4
EXPORT NO : F181206
DATE : DEC. 26, 2018

VALVE MODEL : LSSF3-HDFS-N
3000/2000/1000 WOG BALL VALVE

SIZE : 1"
MATERIAL: ASTM-A351 GRADE CF8M

REVIEWED BY : FUZHOU SHI GANG VALVE MANUFACTURE CO.,LTD

Jason Huang

JASON HUANG, QC MANAGER
JY VALVE & MFG. CO., LTD.

CHEMICAL REQUIREMENT (%)											
ELEMENT		C	Mn	Si	S	P	Cr	Ni	Mo		
SPEC (MAX.)		0.080	1.500	1.500	0.040	0.040	18.0-21.0	9.0-12.0	2.0-3.0		
Production No	Parts Name										
B-1118	BALL	0.0510	0.7900	0.5090	0.0083	0.0383	18.0900	9.0400	2.0700		

TENSILE REQUIREMENTS		Tensile Stength (MPa)	Yield Strength (MPa)	Elongation (%)	Hardness (HB)	
Production No	Parts Name	Min.485	Min. 205	Min. 30	Max. 187	
B-1118	BALL	515	225	35	165	
Heat treatment	SOLUTION TREATMENT: @1080 DEGREE C - 1H WATER QUENCHING					

WE HEREBY CERTIFY THAT THE MATERIAL HEREIN DESCRIED ARE SATSIFACTORY IN ACCORDANCE WITH THE SPECIFICAITON.

MATERIAL TEST RESULTS

MESSRS. : M. A. STEWART & SONS LTD.
TO : VANCOUVER
P.O. NO. : #1011686

SHEET NO. : LSSF3HDFSN-F181206-5
EXPORT NO : F181206
DATE : DEC. 26, 2018

VALVE MODEL : LSSF3-HDFS-N
3000/2000/1000 WOG BALL VALVE

SIZE : 1"
MATERIAL: ASTM-A276 TYPE 316

REVIEWED BY : GAOYOU WEI DA STAINLESS STEEL CO., LTD.

Jason Huang

JASON HUANG, QC MANAGER
JY VALVE & MFG. CO., LTD.

CHEMICAL REQUIREMENT (%)											
ELEMENT		C	Mn	P	S	Si	Cr	Ni	Mo		
SPEC (MAX.)		0.080	2.000	0.045	0.030	1.000	16.0-18.0	10.0-14.0	2.00-3.00		
Production No	Parts Name										
S-1118	STEM	0.0780	0.9800	0.0020	0.0210	0.6500	16.6200	10.8000	2.0800		

TENSILE REQUIREMENTS		Tensile Stength (MPa)	Yield Strength (MPa)	Elongation (%)	Reduction of area (%)	Hardness (HB)
Production No	Parts Name	Min. 515	Min. 205	Min. 40	Min. 50	Max. 187
S-1118	STEM	518	218	48	53	166
Heat treatment	HOT-FINISHED					

WE HEREBY CERTIFY THAT THE MATERIAL HEREIN DESCRIED ARE SATSIFACTORY IN ACCORDANCE WITH THE SPECIFICAITON.

JY VALVE & MFG. CO., LTD.

(Qianguo Village,Huangtang Town)Chengxi Taiwanese Business Base
Huian County,Quanzhou,Fujian,China 362101
TEL : (0595) 2730-1335 FAX : (0595) 2730-1336

MESSRS.: M. A. STEWART & SONS LTD.

DELIVER TO: VANCOUVER SHEET NO.: LSSF3HDFSN-F190403-1

P.O. NO. #1011686 DATE : APR. 24, 2019

CERTIFICATE OF COMPLIANCE

WE, JY VALVE & MFG. CO., LTD. HEREBY CERTIFY THAT OUR PRODUCTS AS SHOWN ON DRAWINGS OF OUR MODEL LSSF3-HDFS-N ARE MANUFACTURED, INSPECTED AND TESTED FULLY IN ACCORDANCE WITH THE FOLLOWING STANDARDS:

PRESSURE-TEMPERATURE RATING	1/4" TO 1"	3000 PSIG @100°F
	1-1/4" TO 2"	2000 PSIG @100°F
	2-1/2" TO 3"	1000 PSIG @100°F
BODY & CAP	ASTM A352-LCC	
SEAT MATERIAL	R-PTFE	
VALVE TESTING	API 598 ※	
FIRE TEST STANDARD	API 607 5TH EDITION	
END CONNECTION	NPT THREADS TO ANSI B1.20.1	

※ HIGH PRESSURE SHELL TEST AND LOW PRESSURE SEAT TEST ARE PERFORMED 100%.

- NACE MR-0175-2002 AND MR-0103 COMPLIANCE

JY VALVE & MFG. CO., LTD.

CHARLES CHAN, PRESIDENT

JY VALVE & MFG. CO., LTD.

(Qianguo Village,Huangtang Town)Chengxi Taiwanese Business Base Huian County,Quanzhou,Fujian,China 362101
Tel: 86-595-27301335 Fax: 86-595-27301336

INSPECTION CERTIFICATE

MESSRS. : M. A. STEWART & SONS LTD.
T O : VANCOUVER
P.O. NO.: : #1011686

SHEET NO. : LSSF3HDFSN-F190403-2
EXPORT NO. : F190403
DATE : APR. 24, 2019

Jason Huang

WITNESSED BY: JY VALVE & MFG. CO., LTD.

JASON HUANG, QC MANAGER

VALVE MODEL	DESCRIPTION	SIZE (INCH)	Q'TY (PCS)	PRESSURE TEST (PSIG)				MATERIAL	DIMENSION	VISUAL	OPERATION
				SHELL	SEAT		RESULT				
				HYDRO	HYDRO	AIR					
LSSF3-HDFS-N	3000/2000/1000 WOG CARBON STEEL 3-PIECE TYPE INVESTMENT CAST BALL VALVES (NACE-MR-0175)	2"	50	3000		80	GOOD	GOOD	GOOD	GOOD	GOOD

MATERIAL TEST RESULTS

MESSRS. : M. A. STEWART & SONS LTD.
TO : VANCOUVER
P.O. NO. : #1011686

SHEET NO. : LSSF3HDFSN-F190403-3
EXPORT NO : F190403
DATE : APR. 24, 2019

VALVE MODEL : LSSF3-HDFS-N SIZE : 2"
3000/2000/1000 WOG BALL VALVE MATERIAL: ASTM-A352 GRADE LCC
REVIEWED BY : QUAN ZHOU JING YING VALVE CO., LTD.

Jason Huang

JASON HUANG, QC MANAGER
JY VALVE & MFG. CO., LTD.

CHEMICAL REQUIREMENT (%)													
ELEMENT		C	Si	Mn	P	S	Ni	Cr	Mo	V			
SPEC (MAX.)		0.250	0.600	1.200	0.040	0.045	0.500	0.500	0.200	0.030			
Production No	Parts Name	B For each reduction of 0.01% below the specified maximum carbon content, an increase of 0.04% Mn above the specified maximum will be permitted up to a maximum of 1.28%											
18FF	BODY	0.2010	0.4400	0.6900	0.0150	0.0048	0.3230	0.4000	0.0740	0.0120			
18JF	CAP	0.2010	0.4400	0.6900	0.0150	0.0048	0.3230	0.4000	0.0740	0.0120			

TENSILE REQUIREMENTS		Tensile Stength (MPa)	Yield Strength (MPa)	Elongation (%)	Reduction of area (%)	Hardness (HB)	Charpy V-Notch Energy value
Production No	Parts Name	485 - 655	Min. 275	Min. 22	Min. 35	Max. 187	Min. 20
18FF	BODY	524	288	36	45	160	52
18JF	CAP	524	288	36	45	160	52
Heat treatment	NORMALIZED @890 DEGREE C - 1H AIR COOLING AND TEMPERED						

WE HEREBY CERTIFY THAT THE MATERIAL HEREIN DESCRIED ARE SATSIFACTORY IN ACCORDANCE WITH THE SPECIFICAITON.

MATERIAL TEST RESULTS

MESSRS. : M. A. STEWART & SONS LTD.
TO : VANCOUVER
P.O. NO. : #1011686

SHEET NO. : LSSF3HDFSN-F190403-4
EXPORT NO : F190403
DATE : APR. 24, 2019

VALVE MODEL : LSSF3-HDFS-N
3000/2000/1000 WOG BALL VALVE

SIZE : 2"
MATERIAL: ASTM-A351 GRADE CF8M

REVIEWED BY : FUZHOU SHI GANG VALVE MANUFACTURE CO.,LTD

Jason Huang

JASON HUANG, QC MANAGER
JY VALVE & MFG. CO., LTD.

CHEMICAL REQUIREMENT (%)											
ELEMENT		C	Mn	Si	S	P	Cr	Ni	Mo		
SPEC (MAX.)		0.080	1.500	1.500	0.040	0.040	18.0-21.0	9.0-12.0	2.0-3.0		
Production No	Parts Name										
B-0319	BALL	0.0503	0.6880	0.4740	0.0065	0.0378	18.3200	9.1600	2.0500		

TENSILE REQUIREMENTS		Tensile Stength (MPa)	Yield Strength (MPa)	Elongation (%)	Hardness (HB)	
Production No	Parts Name	Min.485	Min. 205	Min. 30	Max. 187	
B-0319	BALL	545	245	47	140	
Heat treatment	SOLUTION TREATMENT: @1080 DEGREE C - 1H WATER QUENCHING					

WE HEREBY CERTIFY THAT THE MATERIAL HEREIN DESCRIED ARE SATSIFACTORY IN ACCORDANCE WITH THE SPECIFICAITON.

MATERIAL TEST RESULTS

MESSRS. : M. A. STEWART & SONS LTD.
TO : VANCOUVER
P.O. NO. : #1011686

SHEET NO. : LSSF3HDFSN-F190403-5
EXPORT NO : F190403
DATE : APR. 24, 2019

VALVE MODEL : LSSF3-HDFS-N SIZE : 2"
3000/2000/1000 WOG BALL VALVE MATERIAL: ASTM-A276 TYPE 316
REVIEWED BY : GAOYOU WEI DA STAINLESS STEEL CO., LTD.

Jason Huang

JASON HUANG, QC MANAGER
JY VALVE & MFG. CO., LTD.

CHEMICAL REQUIREMENT (%)											
ELEMENT		C	Mn	P	S	Si	Cr	Ni	Mo		
SPEC (MAX.)		0.080	2.000	0.045	0.030	1.000	16.0-18.0	10.0-14.0	2.00-3.00		
Production No	Parts Name										
S-0319	STEM	0.0700	0.9600	0.0020	0.0230	0.7500	16.8200	10.6000	2.2500		

TENSILE REQUIREMENTS		Tensile Stength (MPa)	Yield Strength (MPa)	Elongation (%)	Reduction of area (%)	Hardness (HB)
Production No	Parts Name	Min. 515	Min. 205	Min. 40	Min. 50	Max. 187
S-0319	STEM	518	218	48	53	166
Heat treatment	HOT-FINISHED					

WE HEREBY CERTIFY THAT THE MATERIAL HEREIN DESCRIED ARE SATSIFACTORY IN ACCORDANCE WITH THE SPECIFICAITON.

CAMERON

NEWCO® | OIC® | DOUGLAS CHERO™

13127 Trinity Dr., Stafford, TX 77477
Tel: 281-302-4900 Fax: 281-302-4801

Material Test Report

09/09/19

Cert No: 1101809

Cameron Newco is a 9001 certified registered company
CRN: OC7998.5C - EN 10204-3.1

Item No: B1060015FHLCCW27RF***GZA
Size/Type: 6" / Gate
Quantity: 1
Country of Origin: China
FigNo: 11F-LCC4/2-NC

Inspection
Dimension: Passed
Visual: Passed

Valve Materials meet the requirements for NACE MR0103 and NACE MR0175

Pressure Test Result

Item	Test Pressure (Mpa)	Test Pressure (PSI)	Duration (sec)	Test Result
Shell	3.103	450	60	Passed
Backseat	2.241	325	60	Passed
Seat Hydro	-	-	-	
Seat Air	0.552	80	60	Passed

Standard: API 598 / ASME B16.34

Customer: EMCO
Customer Number: 32043
Customer PO: 2610191-00
Cameron SO: QRC SO# 1010576
Project Name:
Valve Serial No:
Description: 150# RF A352-LCC (TRIM 12) OS&Y BB GATE
NACE
Customer Tag No:

MLTS_6056-18971
Cert# 1101809

Part: Body Type 3.1 — Material Code: A352 LCC — Heat No: N86718

Heat Treatment: QUENCHING+TEMPERING

Notes:

Chem Comp (%)	C	Cr	Cu	Mn	Mo	Ni	P	S	Si	V
Spec: Min:	0.00	0.00	0.00	0.00	0.00	0.00	0.00	0.00	0.00	0.00
Max:	0.25	0.50	0.30	1.20	0.20	0.50	0.040	0.05	0.60	0.03
Val:	0.180	0.063	0.018	1.070	0.007	0.016	0.027	0.008	0.440	0.004

Physical Props	Tensile KSI	Yield KSI	Elong %	Reduct %	Hard(HB)
	70.0	39.9	22.0	35.0	100.0
	95.0	999.9	100.0	100.0	225.0
	80.5	53.7	30.0	65.0	174.0

Impact Tests @-58 deg F (lb/ft)
1: 45
2: 58
3: 33
Avg: 45

Part: Bonnet/Cap Type 3.1 — Material Code: A352 LCC — Heat No: N86718

Heat Treatment: QUENCHING+TEMPERING

Notes:

Chem Comp (%)	C	Cr	Cu	Mn	Mo	Ni	P	S	Si	V
Spec: Min:	0.00	0.00	0.00	0.00	0.00	0.00	0.00	0.00	0.00	0.00
Max:	0.25	0.50	0.30	1.20	0.20	0.50	0.040	0.05	0.60	0.03
Val:	0.180	0.063	0.018	1.070	0.007	0.016	0.027	0.008	0.440	0.004

Physical Props	Tensile KSI	Yield KSI	Elong %	Reduct %	Hard(HB)
	70.0	39.9	22.0	35.0	100.0
	95.0	999.9	100.0	100.0	225.0
	80.5	53.7	30.0	65.0	174.0

Impact Tests @-58 deg F (lb/ft)
1: 45
2: 58
3: 33
Avg: 45

Comments: Cameron declares that the parts above are in accordance with applicable material specification and purchase order requirements.
No Asbestos is contained in this product. Packing: Flexible Graphite | Gasket: Corrugated (316) W/ Grafoil
Valves covered in this certificate are in full compliance with purchase order requirements and specifications.

MTR created by: DR

Signature 09/09/19

CAMERON

NEWCO® | OIC® | DOUGLAS CHERO™

13127 Trinity Dr., Stafford, TX 77477
Tel: 281-302-4900 Fax: 281-302-4801

Material Test Report

09/09/19

Cert No: 1101813

Cameron Newco is a 9001 certified registered company
CRN: OC7998.5C - EN 10204-3.1

Item No: B1060015FHLCCW27RF***GZA
Size/Type: 6" / Gate
Quantity: 1
Country of Origin: China
FigNo: 11F-LCC4/2-NC

Inspection
Dimension: Passed
Visual: Passed

Valve Materials meet the requirements for NACE MR0103 and NACE MR0175

Pressure Test Result

Item	Test Pressure (Mpa)	Test Pressure (PSI)	Duration (sec)	Test Result
Shell	3.103	450	60	Passed
Backseat	2.241	325	60	Passed
Seat Hydro	-	-	-	
Seat Air	0.552	80	60	Passed

Standard: API 598 / ASME B16.34

Customer: EMCO
Customer Number: 32043
Customer PO: 2610191-00
Cameron SO: QRC SO# 1010576
Project Name:
Valve Serial No:
Description: 150# RF A352-LCC (TRIM 12) OS&Y BB GATE
NACE
Customer Tag No:

MLTS_6056-18971
Cert# 1101813

Part: Body Type 3.1 — Material Code: A352 LCC — Heat No: N86708

Heat Treatment: QUENCHING+TEMPERING
Notes:

Chem Comp (%)

Spec:	C	Cr	Cu	Mn	Mo	Ni	P	S	Si	V
Min:	0.00	0.00	0.00	0.00	0.00	0.00	0.00	0.00	0.00	0.00
Max:	0.25	0.50	0.30	1.20	0.20	0.50	0.040	0.05	0.60	0.03
Val:	0.190	0.034	0.017	1.030	0.002	0.017	0.033	0.012	0.520	0.004

Physical Props

	Tensile KSI	Yield KSI	Elong %	Reduct %	Hard(HB)
	70.0	39.9	22.0	35.0	100.0
	95.0	999.9	100.0	100.0	225.0
	80.5	52.9	28.0	55.0	181.0

Impact Tests @-58 deg F — lb/ft

# 1:	22
# 2:	30
# 3:	19
Avg:	24

Part: Bonnet/Cap Type 3.1 — Material Code: A352 LCC — Heat No: N86707

Heat Treatment: QUENCHING+TEMPERING
Notes:

Chem Comp (%)

Spec:	C	Cr	Cu	Mn	Mo	Ni	P	S	Si	V
Min:	0.00	0.00	0.00	0.00	0.00	0.00	0.00	0.00	0.00	0.00
Max:	0.25	0.50	0.30	1.20	0.20	0.50	0.040	0.05	0.60	0.03
Val:	0.190	0.052	0.018	1.120	0.006	0.016	0.029	0.007	0.490	0.004

Physical Props

	Tensile KSI	Yield KSI	Elong %	Reduct %	Hard(HB)
	70.0	39.9	22.0	35.0	100.0
	95.0	999.9	100.0	100.0	225.0
	80.5	56.6	29.0	60.0	172.0

Impact Tests @-58 deg F — lb/ft

# 1:	31
# 2:	46
# 3:	31
Avg:	36

Comments: Cameron declares that the parts above are in accordance with applicable material specification and purchase order requirements.
No Asbestos is contained in this product. Packing: Flexible Graphite | Gasket: Corrugated (316) W/ Grafoil
Valves covered in this certificate are in full compliance with purchase order requirements and specifications.

MTR created by: DR

Signature 09/09/19

Appendix A6

Construction Summary Report: Baker Lake Fuel Storage Tank 8 (2021)

SNC·LAVALIN

Construction Summary Report

Baker Lake Fuel Storage Tank #8

Agnico Eagle Mines Ltd



Engineering, Design and Project Management

07 | 12 | 2021

report
Internal ref. 681783-0000-40ER-0001_R0

SNC·LAVALIN
Building what matters

CONSTRUCTION SUMMARY REPORT
Baker Lake Fuel Storage Tank #8

Agnico Eagle Mines Ltd

Report

6129-740-132-REP-001

December 7, 2021

Authorized Signatory:



L3940

2021-12-07

Israël Gagnon, P.Eng., MBA
Mechanical engineer

EXECUTIVE SUMMARY

SNC Lavalin Inc. was retained by Agnico Eagle Mines Limited to prepare a construction summary (as built) report for the fuel storage tank #8 facilities of the Meadowbank Gold Project, Nunavut. SNC Lavalin Inc. previously prepared the construction drawings and specifications for the fuel storage tank facilities.

SNC Lavalin Inc. wasn't involved in the construction of the fuel storage tank, the information presented in this report was provided in part by Agnico Eagle.

The construction of the fuel storage tank facilities was completed in October 2021. The construction monitoring and quality assurance was managed by Agnico Eagle.

This report summarizes the construction as-built information for the fuel storage tank #8 facilities.

Table of content

1. Introduction 4

2. Construction Summary 4

2.1 Site location plan 4
2.2 Fuel tank size 5
2.3 Tank Foundations Design 5
2.4 Berms Design 5
2.5 Secondary Containment Capacity 6
2.6 Drawings and photographs 6
2.7 Timeline 6

3. Field decisions 7

3.1 Equipment and controls 7
3.2 Piping 7

4. Mitigation measure 7

5. Construction monitoring and inspection test plan 7

5.1 Tank weld 7

Figure

Figure 1 – Baker Lake Fuel Farm Site Overview (tank #7 and #8) 4

Tables

Table 1 – Description of the fuel farm 5
Table 2 – Design parameters for the tank foundations 5
Table 3 – Fuel farm containment capacity 6

Appendices

Appendix A Final Construction drawings
Appendix B As built drawings
Appendix C Photographs
Appendix D Fuel tank handover package

© 2016 SNC-Lavalin Inc. All rights reserved. Confidential.

1. Introduction

This document presents the fuel storage tank 8 facilities construction summary report required by the Water Licence 2AM-MEA1530 Part D Item 14 and Part G Item 4. As required by Water Licence Schedule D, this report contains the final design and construction drawings, a summary of construction activities including pictures recorded before, during and after construction. The as-built drawings, detailed explanation of field decision to reflect any deviations from the original construction drawings/plans and how such deviations may affect performance of engineered structures, a discussion of the mitigation measures implemented during construction and its effectiveness are also presented.

2. Construction Summary

2.1 Site location plan

Agnico Eagle is developing the Whale Tail Project in the Kivalliq Region of Nunavut (65°24'25" N, 96°41'50" W). The 99,878-hectare Amaruq property is located on Inuit-owned and federal crown land, approximately 55 km north of the Meadowbank mine. The Meadowbank mine is accessible from Baker Lake, located 70 kilometers to the south. The Baker Lake Bulk Fuel Storage Tank Facility is located east of the hamlet of Baker Lake, on the north shore of Baker Lake.



Figure 1 – Baker Lake Fuel Farm Site Overview (tank #7 and #8)

© 2016 SNC-Lavalin Inc. All rights reserved. Confidential.

2.2 Fuel tank size

Baker Lake fuel farm now includes eight (8) 10M liter fuel storage tank. This report is based on tank #8 construction, built in summer/fall 2021.

The Table 1 below presents the tank main dimensions.

Table 1 – Description of the fuel farm

Fuel farm Description	Baker Lake fuel tank 8
Product	Diesel
Volume (liter)	10 M
Diameter (m)	33.5
Height (m)	12.2

The detailed design drawings of the tank 8 are presented in Appendix A.

2.3 Tank Foundations Design

The tank foundation pad is built 2 meters lower than the surrounding ground with a minimum total thickness of 800 mm of compacted material which includes the liner system. A 3 m shoulder surround the tank with a slope of 1V:2H away from the tank. The embankments of the foundation pad are no steeper than 1V:2H.

The Table 2 below presents the design parameters for the tank foundations.

Table 2 – Design parameters for the tank foundations

Tank Foundation Pad	
Tank Diameter (m)	33.5
Tank foundation pad top (m)	2x 18.0 x 18.0
Tank foundation pad average thickness, above surrounding ground (m)	1.2
Slope on shoulder	1V:2H
Embankment slope	1V:2H

2.4 Berms Design

The storage tank is enclosed inside berms to contain accidental spillage of fuel product. The berms are made of granular material and are made impervious with a geomembrane. For more detail regarding containment, consult document 653281-0004-40ER-0005_0 Baker Lake Fuel Storage Tank #7 and Containment Facilities construction summary report.

© 2016 SNC-Lavalin Inc. All rights reserved. Confidential.

2.5 Secondary Containment Capacity

The required capacity of the fuel farms section was calculated based on the following codes and regulations:

- National Fire Code of Canada (NFCC);
- National Fire Protection Association (NFPA); and
- Design Rationale for Fuel Storage and Distribution Facility (DRFS).

As per the latest edition of NFCC, art. 4.3.7.3, the required secondary containment capacity for a fuel farm must have a volumetric capacity of not less than the sum of:

- A) The capacity of the largest storage tank located in the contained space, and;
- B) 10% of the greater of:
    i. The capacity specified in Clause (A), or;
    ii. The aggregate capacity of all other storage Tanks located in the contained space.

The volume occupied by the Tank foundation is considered in the total secondary containment capacity. The height of the secondary containment capacity is 300 mm lower than the berms' maximum elevation. Based on the above-mentioned, the secondary containment capacity requirements and the available capacity for fuel farms are summarized in the Table 3.

Table 3 – Fuel farm containment capacity

New section	
Volume (liter)	20 M (2X 10M)
Required Containment Capacity (liter)	12 M
Available Containment Capacity (liter)	20M

2.6 Drawings and photographs

Fuel farm tank final design and construction drawings are available in the Appendix A, construction pictures are available in Appendix C.

2.7 Timeline

The baker lake fuel storage tank # 8 was built in 2021. Earth work started on July 2021, followed by tank and piping fabrication in August and September 2021. Tank #8 construction ended September 8th, 2021, Piping installation work were finalised on October 12th, 2021.

© 2016 SNC-Lavalin Inc. All rights reserved. Confidential.

3. Field decisions

3.1 Equipment and controls

Fuel tank #8 was built as in Document 6120-C-260-001-REP-001 Fuel Tank Storage and Containment Facilities Design Report and Drawings. This document presents the rational and decisions that led to its construction. No modifications were performed, and the Fuel storage tank is operational as it was designed.

3.2 Piping

Piping between filling line and the fuel tank respect the point-to-point design. The piping can be seen on photos in Appendix C and respect the P&ID. Red mark drawings can be consulted in Appendix B. Modifications made to the piping won't affect the construction performance in any ways.

4. Mitigation measure

No Quarrying activities where required to build tank #8. No blast were done on the construction site. During the fuel storage tank construction, no sediments were released in water from construction areas and no water was used to manage dust emissions from construction activity.

5. Construction monitoring and inspection test plan

5.1 Tank weld

During the tank construction, a testing protocol was followed by the construction team. To meet API Standard 650, companies building tank are required to monitor their work trough an inspection program. In this program, the contractor registers welder's qualifications, confirm construction material quality and outlines its testing protocol. The results from weld tests are also registered there. All that information is required by API 650 standard. Testing on welds took place during the whole construction process. To attest welds quality, inspector relied on visual inspection, magnetic particulate tests and high penetration oil tests. To review those tests results, the materials quality and weld inspection results can be consulted in Appendix D.

© 2016 SNC-Lavalin Inc. All rights reserved. Confidential.

Appendix A

Final construction drawing

NO. DESSIN
DRAWING NO. 61-740-260-201

FORMAT ARCH D

TANK #8 - 6170TNK43 - DIESEL				
SPECIFICATIONS:			NOMINAL DIAMETER (METERS):	± 33.528m (TO BE CONFIRMED BY MANUFACTURER)
			ORIGINAL NOMINAL HEIGHT (METERS):	± 12.192m (TO BE CONFIRMED BY MANUFACTURER)
			NOMINAL CAPACITY:	10,790,000 LITERS
			WORKING CAPACITY:	10,000,000 LITERS
TAG	QTY.	DIA.	DESCRIPTION	REMARKS
1	4	600	ROOF MANHOLE	TO API 650 STANDARDS
2	4	900	SHELL MANHOLE	TO API 650 STANDARDS
3	1	200	FIXED PIPE - TANK LOADING 11.7m LG.	TO API 650 STANDARDS, SEE DETAIL
4	1	200	FIXED PIPE - TANK UNLOADING 11.7m LG.	TO API 650 STANDARDS, SEE DETAIL
5	2	150	PUMPING LOW LEVEL	TO API 650 STANDARDS, SEE DETAIL
6	6	80	WATER DRAW-OFF	TO API 650 STANDARDS, SEE DETAIL
7	1	150	GAUGE HATCH	TO API 650 STANDARDS, SEE DETAIL
8	1	80	OVERFILL PROTECTION	TO API 650 STANDARDS, SEE DETAIL
9	1	50	TEMPERATURE & WATER DETECTION PROBE	TO API 650 STANDARDS, SEE DETAIL
10	1	150	RADAR - LEVEL DETECTION	TO API 650 STANDARDS, SEE DETAIL
11	2	50	ROOF PRESSURE RELIEF LINE CONNECTION, HALF COUPLING 25mm DIA.	TO API 650 STANDARDS AND NBC, SEE DETAIL
12	2	100	SPARE	TO API 650 STANDARDS, SEE DETAIL
13	-	600	VENT OPENING	TO API 2000 & 650 STANDARDS. DIA. AND QTY. TO BE DETERMINATE BY THE MANUFACTURER, SEE DETAIL
14	1	100	PAINTER SCAFFOLD CABLE SUPPORT	TO API 650 STANDARDS
15	8	-	GROUNDING LUG	TO API 650 STANDARDS, SEE DETAIL
16	1	-	ROOF INSPECTION FRAME	TO API 650 STANDARDS
17	1	-	ROOF GUARDRAIL	TO API 650 STANDARDS AND NBC
18	1	-	SPIRAL STAIRWAY, GUARDRAIL & HANDRAIL	TO API 650 STANDARDS AND NBC
19	12	-	BRACKET FOR PRV PIPING	TO API 650 STANDARDS AND NBC

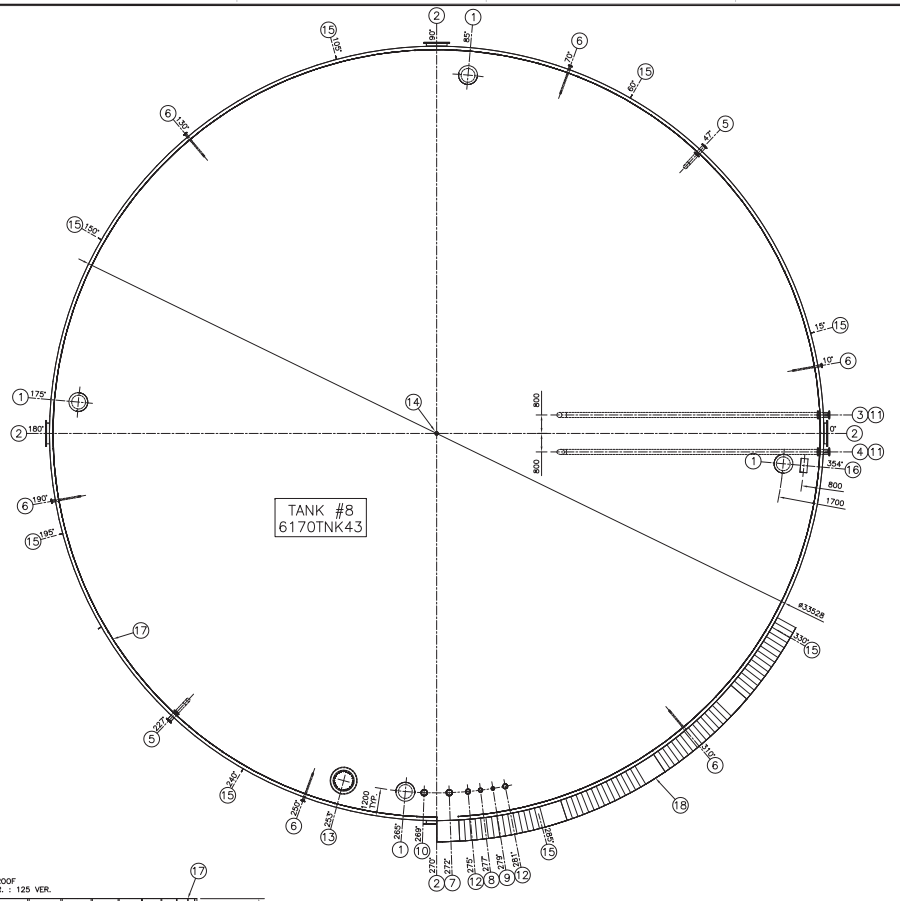

PLAN VIEW
SCALE: 1:100

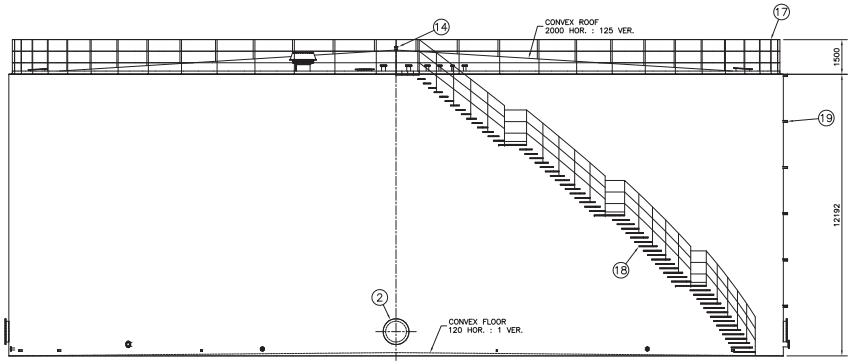

ELEVATION VIEW
SCALE: 1:100

PLAN CLÉ
KEY PLAN

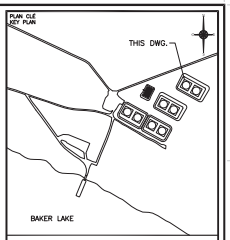

NOTES GÉNÉRALES / GENERAL NOTES

GENERAL ARRANGEMENT ONLY. TANK SHALL BE DESIGNED AS PER API 650 AND FABRICATION DRAWING APPROVED BY PROFESSIONAL ENGINEER OF NUNAVUT (NAPEG). REFER TO DOCUMENT NUMBER: 6120-C-260-001-SOW-001.

POUR CONSTRUCTION
FOR CONSTRUCTION
AGNICO EAGLE
DATE : 2021-02-23

SNC-Lavalin Stantec Inc.
150, rue Gamble Ouest
Rouyn-Noranda (Québec) J9X 2R7
Tél.: 819 764-3181 Fax: 819 797-0158
www.snclavalin.com

Project # : 671087-0000

CONFIDENTIEL ET PROPRIÉTÉ DE AGNICO EAGLE LTÉE ET SNC-LAVALIN INC. CE DESSIN, SES RENSEIGNEMENTS ET SES CONCEPTS NE DOIVENT PAS ÊTRE UTILISÉS, REPRODUITS OU DIVULGUÉS À DES TIERS SANS LE CONSENTEMENT ÉCRIT PRÉALABLE DE AGNICO EAGLE LTÉE ET SNC-LAVALIN INC.

THE INFORMATION HERE ON IS THE PROPERTY OF AGNICO EAGLE LTD. AND MUST BE RETURNED UPON REQUEST. WITHOUT WRITTEN PERMISSION, AND EXPRESS AGREEMENT, ITS CONTENTS AND ITS USE EXCEPT THAT FOR WHICH IT IS LOANED ARE PROHIBITED.

DESSINS EN RÉFÉRENCE / REFERENCE DRAWINGS

TITRE / TITLE	# DWG
–	–
–	–
TANK #8 – PIPING	61-740-270-001
TANK #7 & #8 – LOCATION PLAN	61-740-210-001
TANK #7 & #8 – DETAILS	61-740-260-202
TANK #7 – PLAN & ELEVATION	61-740-260-200

AGNICO EAGLE

REV.	DATE	DESCRIPTION	PAR/BY	APP.	CLIENT
2	2021-02-23	ISSUED FOR CONSTRUCTION	ST.MAR	A.GUE	N.MEN
1	2019-03-12	ISSUED FOR TENDER	B.LEM	M.HEN	N.MEN
0	2018-12-10	ISSUED FOR TENDER	B.LEM	M.HEN	N.MEN

REVISIONS

TITRE / TITLE

AGNICO EAGLE – MEADOWBANK DIVISION
740 BAKER LAKE AREA
PLATEWORK
PLAN & ELEVATION
10M LITERS DIESEL TANK
TANK #8 – 6170TNK43

DESSINÉ PAR / DRAWN BY	B.LEMIEUX, Tech.	DATE 2018/11/16
VERIFIÉ PAR / CHECKED BY	R. LAVOIE, Jr. Eng.	2018/11/16
APPROUVÉ PAR / APPROVED BY	M. HÉNAULT, P. Eng.	2018/11/16
ÉCHELLE / SCALE	INDICATED	DATE 2018/11/16

NO. DESSIN / DRAWING NO. 61-740-260-201

NO. PROJET / PROJECT NO.	REVISION	FEUILLE / SHT
6120	2	1 / 1

AE-CART-ARCH D

C:\Users\marca11\Desktop\temp\00-AE\671087-0000 – Arrow\61-740-260-201_R2.dwg-2013-02-19 14:03:29

FILE NO. 61-740-260-201_R2.dwg

NO. DESSIN
DRAWING NO. 61-740-260-202

FORMAT ARCHD

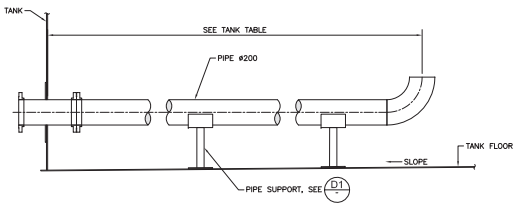

3 *TANK LOADING DETAIL*
SCALE: 1:20

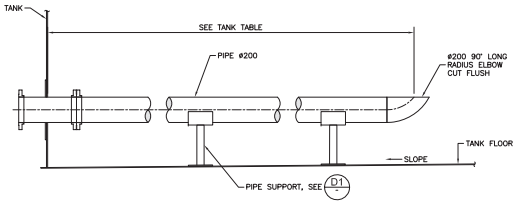

4 *TANK UNLOADING DETAIL*
SCALE: 1:20

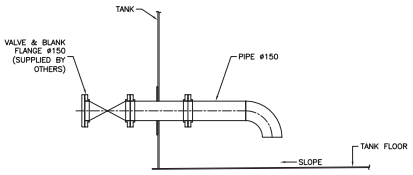

5 *PUMPING LOW LEVEL DETAIL*
SCALE: 1:20

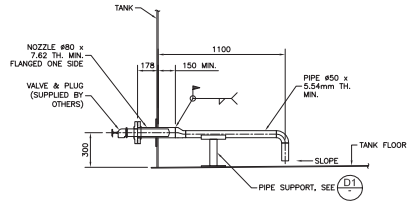

6 *WATER DRAW-OFF DETAIL*
SCALE: 1:20

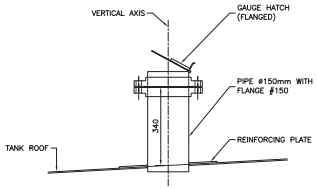

7 *GAUGE HATCH DETAIL*
SCALE: 1:10

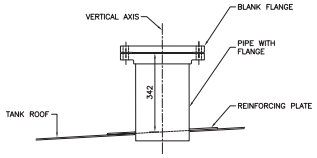

8 9 10 12 *NOZZLE DETAIL*
SCALE: 1:10

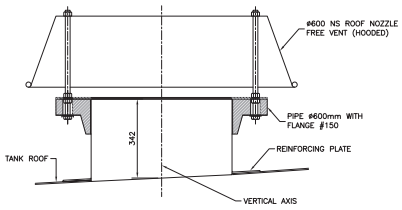

13 *VENT DETAIL*
SCALE: 1:10

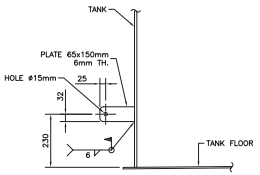

15 *GROUNDING LUGS DETAIL*
SCALE: 1:10

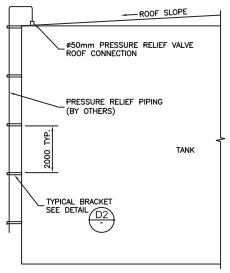

11 19 *PRESSURE RELIEF BRACKET DETAIL*
SCALE: N.T.S.

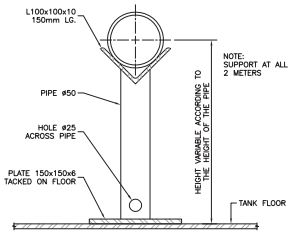

D1 *PIPE SUPPORT*
SCALE: 1:5

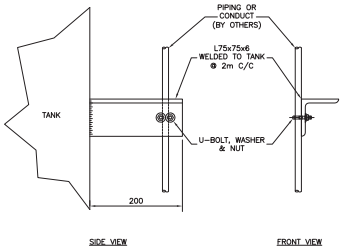

NOTE: FOR ITEMS 8 & 13

D2 *BRACKET FOR PIPING OR ELECTRICAL CONDUCT TO THE SHELL TANK*
SCALE: 1:5

PLAN CLÉ
KEY PLAN

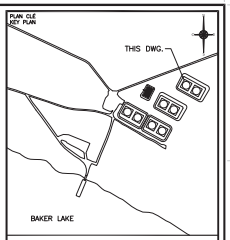

NOTES GÉNÉRALES / GENERAL NOTES

POUR CONSTRUCTION
FOR CONSTRUCTION
AGNICO EAGLE
DATE : 2021-02-23

SNC-Lavalin Stantec inc.
150, rue Gamble Ouest
Rouyn-Noranda (Québec) J9X 2R7
Tél.: 819 764-3181 Fax: 819 797-0158
www.snclavalin.com

Project # : 671087-0000

CONFIDENTIEL-CONSTRUCTION CET EN PROPRIÉTÉ DE AGNICO EAGLE LIÉE ET DOIT ÊTRE RETOURNÉE SUR DEMANDE. SANS AUTORISATION ÉCRITE PRÉALABLE, TOUTE TRANSMISSION OU COPIE(S) À AUTRE QUE TOUTE PERSONNE AUTRE QUE CELLE POUR LAQUELLE L'INFORMATION EST PRÉVUE SONT PROHIBÉES. © AGNICO EAGLE LTÉE

THE INFORMATION HERE ON IS THE PROPERTY OF AGNICO EAGLE LTD. AND MUST BE RETURNED UPON REQUEST. WITHOUT WRITTEN PERMISSION, ANY COPIES TRANSMITTAL TO VISITORS AND ANY USE EXCEPT THAT FOR WHICH IT IS LOANED ARE PROHIBITED. © AGNICO EAGLE LTD.

DESSINS EN RÉFÉRENCE / REFERENCE DRAWINGS

TITRE / TITLE	# DWG
–	–
–	–
–	–
TANK #7 & #8 – LOCATION PLAN	61-740-210-201
TANK #8 – PLAN & ELEVATION	61-740-260-201
TANK #7 – PLAN & ELEVATION	61-740-260-200

AGNICO EAGLE

REV.	DATE	DESCRIPTION	PAR/BY	APP.	CLIENT
1	2021-02-23	ISSUED FOR CONSTRUCTION	ST.MAR	A.OUE	N.MEN
0	2018-12-10	ISSUED FOR TENDER	B.LEM	M.HEN	N.MEN

REVISIONS

TITRE / TITLE

AGNICO EAGLE – MEADOWBANK DIVISION
740 BAKER LAKE AREA
PLATEWORK
DETAILS
10M LITERS DIESEL TANK
TANK #7 & #8

DESSINÉ PAR DRAWN BY	B.LEMIEUX, Tech.	DATE 2018/11/16
VERIFIÉ PAR CHECKED BY	R. LAVOIE, Jr. Eng.	2018/11/16
APPROUVÉ PAR APPROVED BY	M. HÉNAULT, P. Eng.	2018/11/16
ÉCHELLE SCALE	INDICATED	DATE 2018/11/16

NO. DESSIN
DRAWING NO. 61-740-260-202

NO. PROJET PROJECT NO.	REVISION	FEUILLE / SHT
6120	1	1 / 1

AE-CART-ARCH D

C:\Users\marcel1\Desktop\temp\00-AE\671087-0000 – Amorak\61-740-260-202_R1.dwg-2013-02-19 14:03:29

FILE NO. 61-740-260-202_R1.dwg

NO. DESSIN
DRAWING NO. 61-740-270-200

FORMAT ARCHD

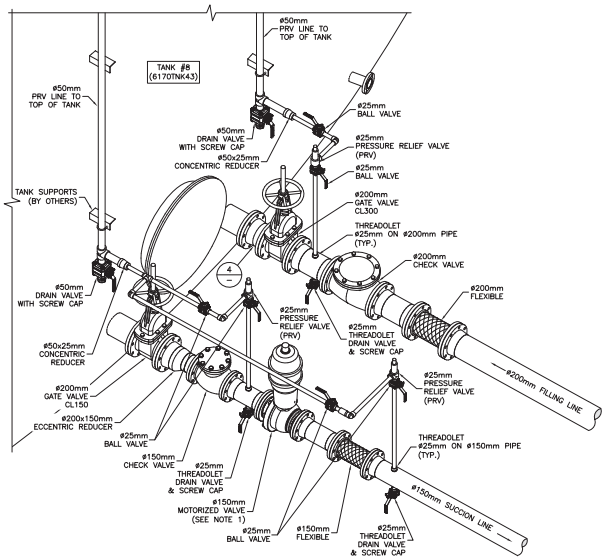

DETAIL 1 / 200
SCALE: N/A

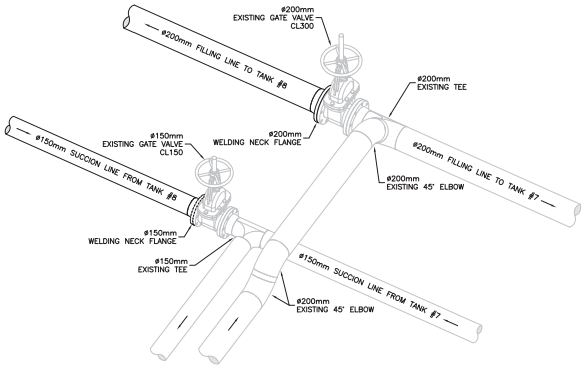

DETAIL 2 / 200
SCALE: N/A

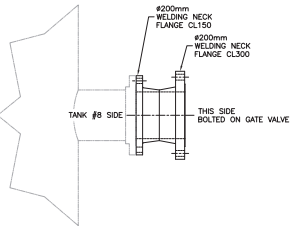

DETAIL 4 / –
SCALE: N.T.S.

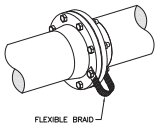

TYPICAL FLANGE DETAIL
SCALE: N/A

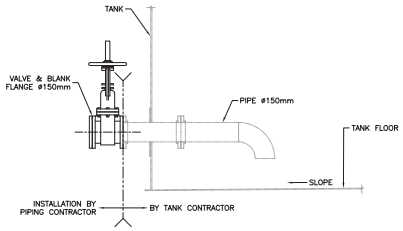

DETAIL 5 / 200
SCALE: 1:20
QTY.: 2

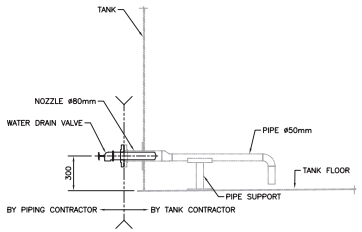

DETAIL 6 / 200
SCALE: 1:20
QTY.: 6

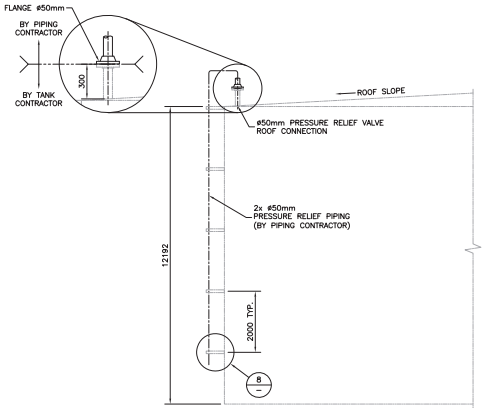

DETAIL 7 / 200
SCALE: N.T.S.

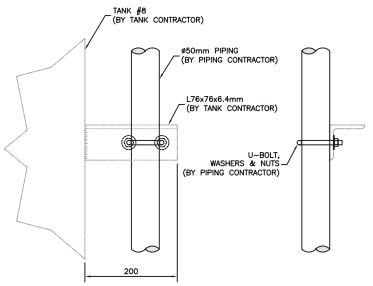

DETAIL 8 / –
SCALE: 1:5

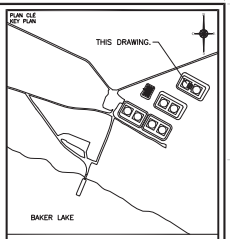

NOTES GÉNÉRALES / GENERAL NOTES

NOTE 1:
SUPPLY OF MOTORIZED VALVE BY AEM AND INSTALLATION BY CONTRACTOR.

NOTE 2:
AEM WILL SUPPLY VALVES, PIPING AND ACCESSORIES. CONTRACTOR ARE RESPONSIBLE OF INSTALLATION.

NOTE 3:
REFER TO DOCUMENT NUMBER 6129-C-265-002-SPT-001 FOR INSTALLATION SPECIFICATIONS.

POUR CONSTRUCTION
FOR CONSTRUCTION
AGNICO EAGLE
DATE : 2021-03-23

SNC-Lavalin Stratford inc.
150, rue Gamble Ouest
Rouyn-Noranda (Québec) J9X 2R7
Tél.: 819 764-3181 Fax: 819 797-0158
www.snclavalin.com

Project # : 671087-0000 REV.: 0

CONFIDENTIAL C-CONTENT IS PROPRIETARY TO AGNICO EAGLE LTD. IT MAY ONLY BE REPRODUCED, USED, DISCLOSED, AND AUTHORIZED USERS, INCLUDING, BUT NOT LIMITED TO, EMPLOYEES, AGENTS OF THOSE PERSONS WHERE SUCH USE, DISCLOSURE OR REPRODUCTION IS REQUIRED IN CONNECTION WITH THE PROJECT. ANY OTHER USE, DISCLOSURE OR REPRODUCTION IS STRICTLY PROHIBITED WITHOUT THE PRIOR WRITTEN CONSENT OF AGNICO EAGLE LTD.

THE INFORMATION AND IDEAS ON THIS DRAWING ARE THE PROPERTY OF AGNICO EAGLE LTD. AND MUST BE RETURNED UPON REQUEST. WITHOUT WRITTEN PERMISSION, ANY COPYING, DUPLICATION, OR DISCLOSURE OF THIS DRAWING IS PROHIBITED. THE INFORMATION IS LOANED FOR CONFIDENTIAL USE ONLY.

DESSINS EN RÉFÉRENCE / REFERENCE DRAWINGS

TITRE / TITLE	# DWG
P&ID	61-740-J-0100_2/2
TANK 7 & 8 PIPE SUPPORTS – DETAILS	61-740-270-202
TANK 7 & 8 PIPING – ELEV. & DETAILS	61-740-270-201
10M L. DIESEL TNK #7 & TNK #8 PIPING	61-740-270-200
–	–
–	–

AGNICO EAGLE

REV.	DATE	DESCRIPTION	DWN/DES	APP.	CLIENT
0	2021-03-23	ISSUED FOR CONSTRUCTION	D.L.L.	A.OUE	N.MEN

REVISIONS

TITRE / TITLE
AGNICO EAGLE – MEADOWBANK DIVISION
740 BAKER LAKE AREA
270 – PIPING
DETAILS
10M LITERS DIESEL TANK #8 (6170TNK43)

DESSINÉ PAR / DRAWN BY	ST. MARCOTTE, Tech.	2021/02/24
VÉRIFIÉ PAR / CHECKED BY	R. LAVOIE, P. Eng.	2021/02/24
APPROUVÉ PAR / APPROVED BY	A. OUELLET, P. Eng.	2021/02/23
ÉCHELLE / SCALE	AS SHOWN	DATE 2021/02/24

NO. DESSIN / DRAWING NO.
61-740-270-001

NO. PROJET / PROJECT NO.	REVISION	FEUILLE / SHT
6129	0	1 / 1

AE-CART-ARCH D

\\ali.ca\stonebel\Projet\300-RNY\671087\0000\0-Docs Emis\02 – Tank No.8 Baker Lake\2021-03-23 – Construction\61-740-270-001_R0.dwg-2013-02-19 14:03:29

FILE NO. 61-740-270-001_R0.dwg

NO. DESSIN
DRAWING NO. 61-740-270-200

FORMAT ARCHD

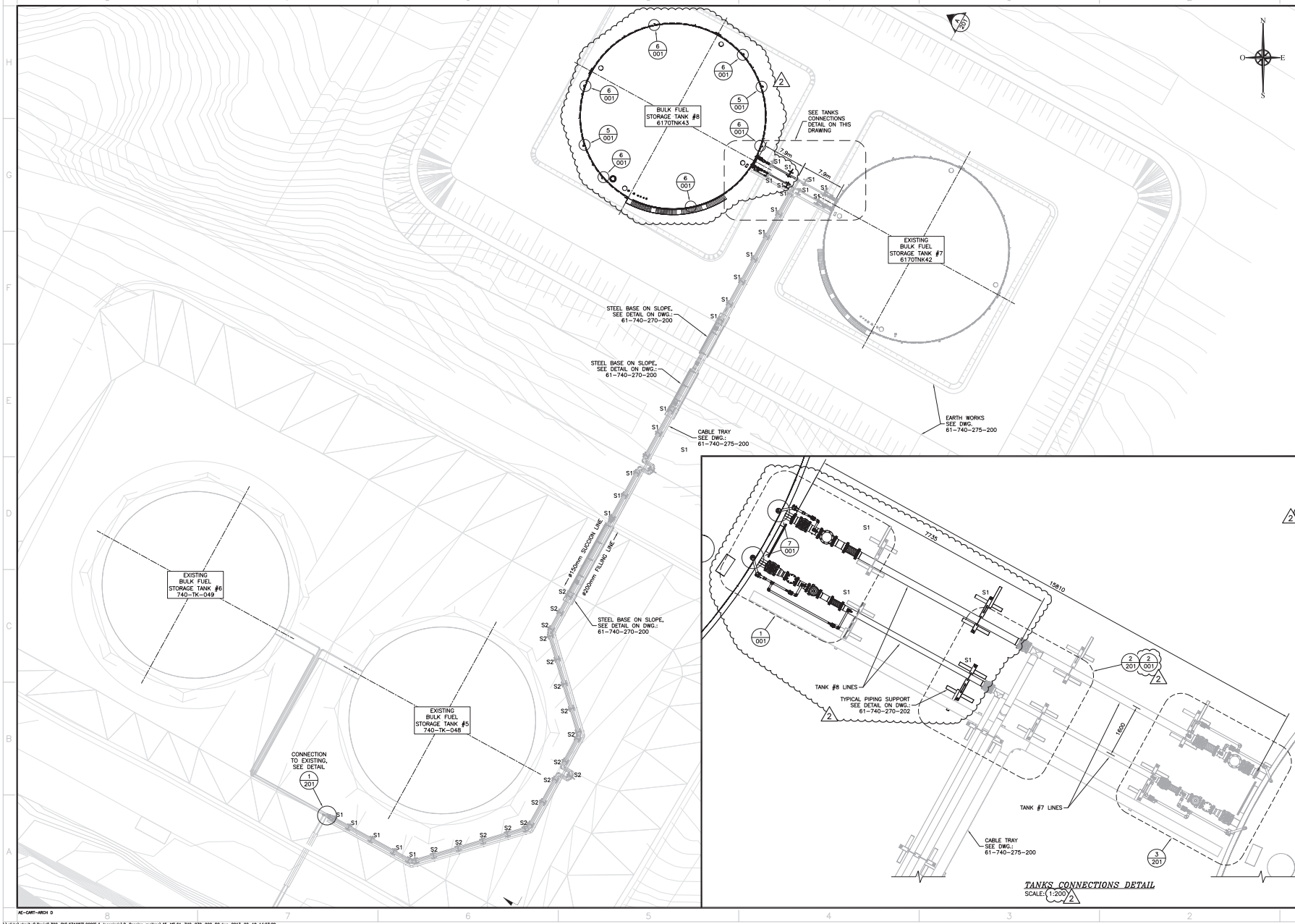

TANKS CONNECTIONS DETAIL
SCALE: 1:200

PLAN CLÉ
KEY PLAN

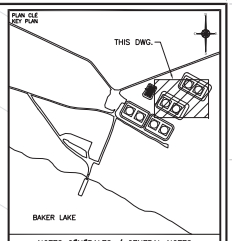

NOTES GÉNÉRALES / GENERAL NOTES

S1: PIPE SUPPORT TYPE 1
S2: PIPE SUPPORT TYPE 2
SEE DWG. # 61-740-270-202

POUR CONSTRUCTION
FOR CONSTRUCTION
AGNICO EAGLE
DATE : 2021-03-23

SNC·LAVALIN
SNC-Lavalin Stantec Inc.
150, rue Gamble Ouest
Rouyn-Noranda (Québec) J9X 2R7
Tel.: 819 764-5181 Fax: 819 764-0158
www.snclavalin.com

Project # : 671087-0000 REV.: 2

CONFIDENTIAL CI-CONTENUE EST LA PROPRIÉTÉ DE AGNICO EAGLE LTÉE ET DOIT ÊTRE RETOURNÉE SUR DEMANDE. SANS AUTORISATION ÉCRITE PRÉALABLE, TOUTE TRANSMISSION DE COPIE(S) À AUTRUI ET TOUTE RÉTENTION AUTRE QUE CELLE POUR LAQUELLE CONFIDENTIEL EST PRÊTÉE SONT INTERDITES. © AGNICO EAGLE LTÉE.

THE INFORMATION HERE ON IS THE PROPERTY OF AGNICO EAGLE LTD. AND MUST BE RETURNED UPON REQUEST. WITHOUT WRITTEN PERMISSION, ANY COPYING TRANSMITTAL TO OTHERS AND ANY USE EXCEPT THAT FOR WHICH IT IS LOANED ARE PROHIBITED. © AGNICO EAGLE LTD.

DESSINS EN RÉFÉRENCE / REFERENCE DRAWINGS

TITRE / TITLE	# DWG
GENERAL EARTH WORKS	61-740-230-200 TO 205
ELECTRICAL	61-740-275-200 TO 201
P&ID	61-740-J-0100_1 & 2
10M LITERS DIESEL TANK #8 (6170TNK43)	61-740-270-001
TANK 7 & 8 PIPE SUPPORTS – DETAILS	61-740-270-202
TANK 7 & 8 PIPING – ELEV. & DETAILS	61-740-270-201

AGNICO EAGLE

REV.	DATE	DESCRIPTION	PAR/BY	APP.	CLIENT
2	2021-03-23	ISSUED FOR CONSTRUCTION	D.L.L.	A.OUE	N.MEN
1	2019-06-03	ISSUED FOR CONSTRUCTION	B.L.	A.O.	B.ROY
0	2019-04-25	ISSUED FOR TENDER	B.L.	A.O.	N.MEN

REVISIONS

TITRE / TITLE
AGNICO EAGLE – MEADOWBANK DIVISION
740 BAKER LAKE AREA
PIPING
PLAN VIEW
10M LITERS DIESEL TANK #7 (6170TNK42)
& TANK #8 (6170TNK43) PIPING

DESSINÉ PAR DRAWN BY	B. LEMIEUX, Tech.	DATE 2019/02/15
VÉRIFIÉ PAR CHECKED BY	R. LAVOIE, Jr. Eng.	2019/02/15
APPROUVÉ PAR APPROVED BY	A. OUELLET, P. Eng.	2019/02/15
ÉCHELLE SCALE	1 : 300	DATE 2019/02/15

NO. DESSIN DRAWING NO. 61-740-270-200

NO. PROJET PROJECT NO.	REVISION	FEUILLE / SHT
6120	2	1 / 1

AE-CART-ARCH D

\\sli.bz\stantec\Projet\300-RN\671087\0000\4-Ingenierie\D-Dessins maitres\45-MI\61-740-270-200_R2.dwg-2013-02-19 14:03:29

FILE NO. 61-740-270-200_R2.dwg

NO. DESSIN
DRAWING NO. 61-740-J-0100-2_R9

FORMAT ARCHD

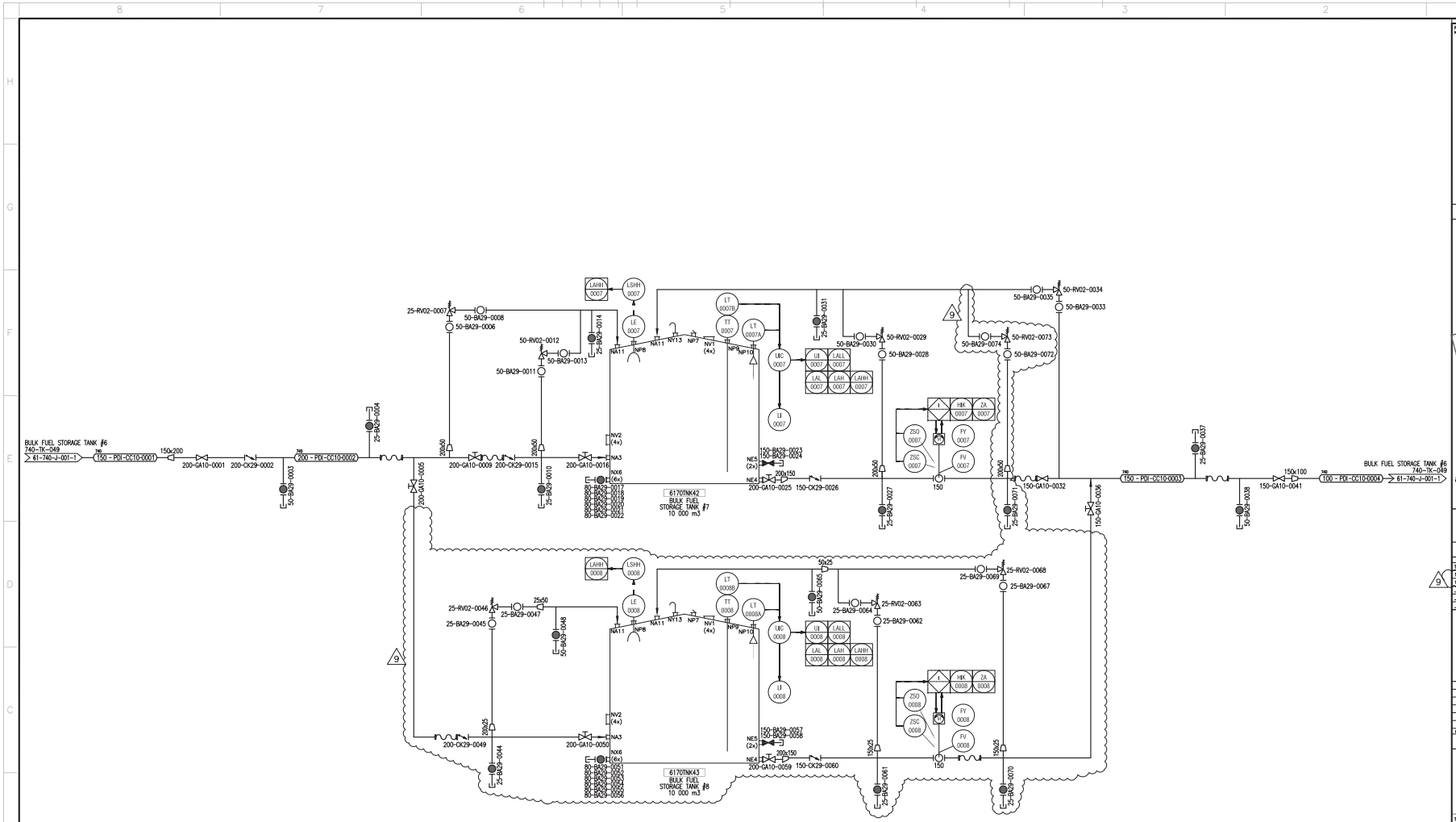

PLAN CLE
KEY PLAN

NOTES GÉNÉRALES / GENERAL NOTES

POUR CONSTRUCTION
FOR CONSTRUCTION
AGNICO EAGLE
DATE : 2021-03-23

SNC-Lavalin Stantec Inc.
532, Te Rue Ouest, Bureau 101
Amos (Québec) J9T 3W7
Tél.: 819 732-4555 Télec.: 819 732-4259
www.snclavalin.com

Projet No. : 671087-0000 REV. : 9

CONFIDENTIEL ET PROPRIÉTAIRE
CONFIDENTIAL AND PROPRIETARY

DESSINS EN RÉFÉRENCE / REFERENCE DRAWINGS

TITRE / TITLE	# DWG
TANK #6 AND #8 – FUEL DIST. PIPING	61-740-M-0100
10M LITERS DIESEL TANK #8 (6170TNK43)	61-740-270-001
10M L. DIESEL TNK #7 & TNK #8 PIPING	61-740-270-200
–	–
–	–
–	–

AGNICO EAGLE

REV.	DATE	DESCRIPTION	PAR/BY	APP.	CLIENT
8	2019-12-16	AS BUILT	S.P.	B.R.	–
7	2019-06-03	ISSUED FOR CONSTRUCTION	B.L.	A.G.	B.ROY
6	2019-05-03	ADDENDUM #8 / DRAIN VALVE	P.O.C.	A.G.	N.MEN.
5	2019-04-25	ISSUED FOR TENDER	B.L.	A.G.	N.MEN.
4	2018-12-12	FOR COMMENTS	B.L.	M.H.	N.MEN.
9	2021-03-23	ISSUED FOR CONSTRUCTION	D.L.L.	A.GUE	N.MEN

REVISIONS

TITRE / TITLE
AGNICO-EAGLE – MEADOWBANK DIVISION
BAKER LAKE AREA 740
–
PROCESS AND INSTRUMENTATION DIAGRAM
–
–

DESSINÉ PAR / DRAWN BY	FRANCIS ROSE, TECH	DATE 2009/03/27
VERIFIÉ PAR / CHECKED BY	PATRICK GIARD, P.ENG	–
APPROUVÉ PAR / APPROVED BY	PATRICK GIARD, P.ENG	–
ÉCHELLE / SCALE	N.T.S.	DATE 2009-03-27

NO. DESSIN / DRAWING NO. 61-740-J-0100

NO. PROJET / PROJECT NO.	REVISION	FEUILLE / SHT
6120	9	2 / 2

AE-CART-ARCH D

\\ali.ad\stanibel\Projet\300-RN\671087\0000\4-Ingenierie\D-Dessins maitres\48-IC\61-740-J-0100-2_R9.dwg-2013-02-19 14:03:29

FILE NO. 61-740-J-0100-2_R9.dwg

Appendix B

As built drawing

NO. DESSIN
DRAWING NO. 61-740-J-0100-2_R9

FORMAT ARCH D

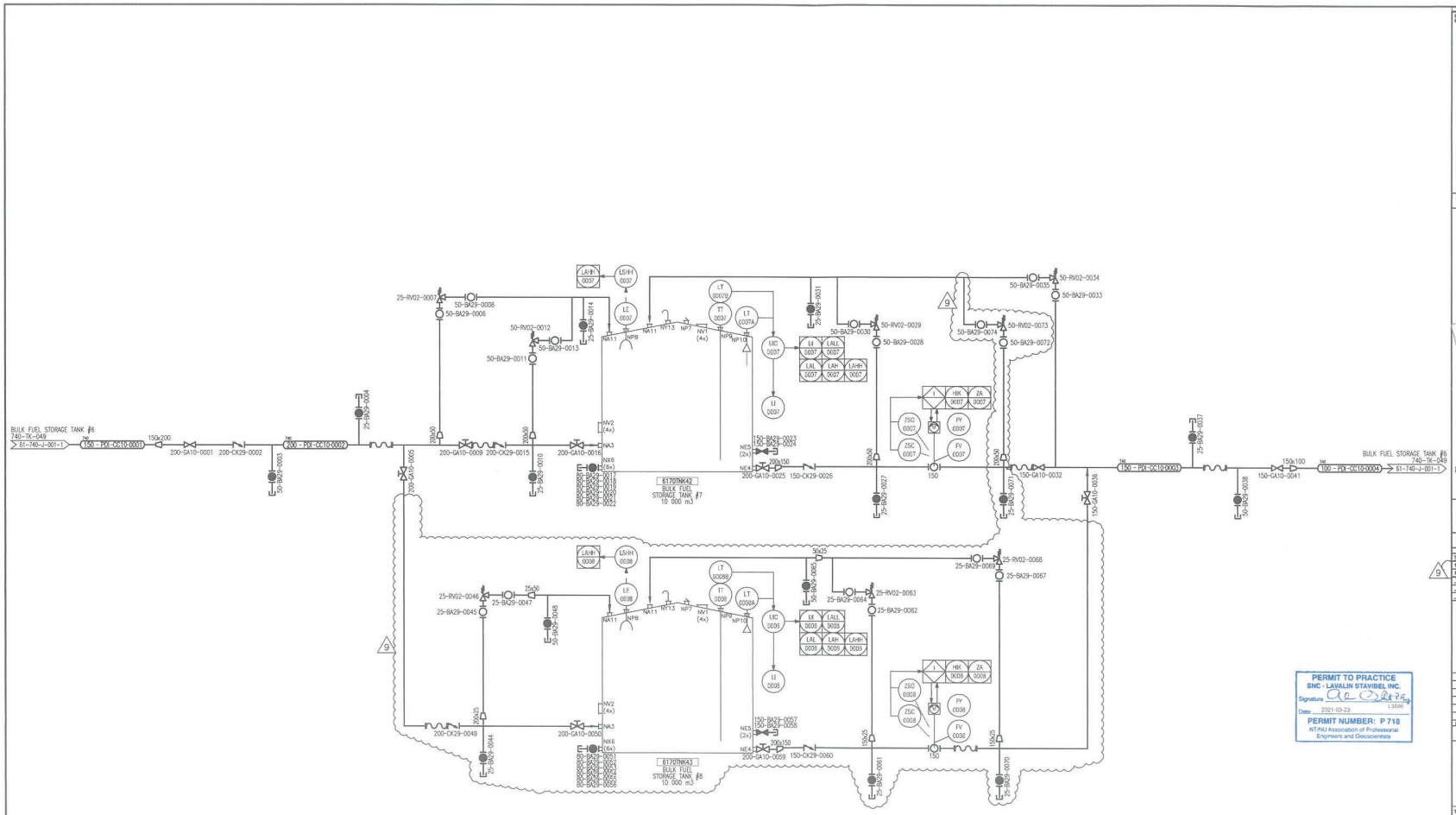

PERMIT TO PRACTICE
SNC - LAVALIN STAVIBEL INC.
Signature
Date 2021-03-23
PERMIT NUMBER: P 718
NTAU Association of Professional Engineers and Geoscientists

PLAN CLÉ
KEY PLAN

NOTES GÉNÉRALES / GENERAL NOTES

POUR CONSTRUCTION
FOR CONSTRUCTION
AGNICO EAGLE
DATE : 2021-03-23

SNC·LAVALIN

SNC-Lavalin Stavibel inc.
532 Du Rue Dunn, Bureau 101
Amos (Québec) J9T 3W7
Tél. (819) 732-0555 Télec. (819) 732-0259
www.snclavalin.com

Projet No. : 671087-0000 REV.: 9

DESSINS EN RÉFÉRENCE / REFERENCE DRAWINGS

	TITRE / TITLE	N° DWG
9	TANK #5 AND #6 – FUEL DIST. PIPING	61-740-M-0100
	10M LITERS DIESEL TANK #6 (617OTNK42)	61-740-270-001
	10M L. DIESEL TNK #7 & TNK #8 PIPING	61-740-270-200
	–	–
	–	–
	–	–

AGNICO EAGLE

REV.	DATE	DESCRIPTION	PAR/BY	APP.	QUI/BY
8	2019-12-16	AS BUILT	S.P.	B.R.	–
7	2019-06-03	ISSUED FOR CONSTRUCTION	B.L.	A.O.	S.ROY
6	2019-05-03	ADDENDUM #2 / DRAIN VALVE P.O.C.	A.O.	N.MOL	
5	2019-04-25	ISSUED FOR TENDER	B.L.	A.O.	N.MOL
4	2018-12-12	FOR COMMENTS	B.L.	M.H.	N.MOL
3	2021-03-23	ISSUED FOR CONSTRUCTION	B.L.L.	A.OUE	N.MOL

REVISIONS

2021-03-23 — 2021-03-23

TYPE / TITLE
AGNICO–EAGLE – MEADOWBANK DIVISION
BAKER LAKE AREA 740
–
PROCESS AND INSTRUMENTATION DIAGRAM
–
–

DESSINÉ PAR / DRAWN BY	FRANCIS ROSE, TECH	DATE 2009/03/27
VÉRIFIÉ PAR / CHECKED BY	PATRICK GIARD, P.ENG	–
APPROUVÉ PAR / APPROVED BY	PATRICK GIARD, P.ENG	–
ÉCHELLE / SCALE	N.T.S.	DATE 2009-03-27

NO. DESSIN / DRAWING NO. 61-740-J-0100

NO. PROJET / PROJECT NO.	REVISION	FEUILLE / SHT
6120	9	2 / 2

AE-OART-ARCH D

\\all.ist\stavibel\Projet\300-R&R\671087\2002T\4-Ingenierie\3-Dessins mollerw\40-47\61-740-J-0100-2_R9.dwg-2013-08-16 14h03m

FILE NO. 61-740-J-0100-2_R9.dwg

NO. DESSIN / DRAWING NO. 61-740-285-200

FORMAT ANSI B-11x17

Panel Ident.: 6174-DP-06

Power source:	120 / 208 Volts
Feeder :	6174-TX-04
Mount:	Surface
Localisation:	BAKER LAKE SEA CAN
Type:	Schneider QO Series

Encl. Type :	NEMA 1
Main breaker:	N/A
Nb. of circuit:	42
Bars (Amps):	225A
Cap. rupt. (kA)	10

Local and description	TYPE REF	TYPE Qty	WATTS	DISJ. TYPE	DISJ. AMP	CT #		CT #	DISJ. AMP	DISJ. TYPE	WATTS	TYPE Qty	TYPE REF	Local and description
6174-PLC-02 Power	D				15	1	A	2	15				E	Sea Can Lighting
6174-XV-01 - Elect. Actuator valve	M				15	3	B	4	15				P	Sea Can Receptacle
6174-XV-02 - Elect. actuator valve	M				15	5	C	6	15					Spare breaker
6174-XV-03 - Elect. actuator valve	M				15	7	A	8	15					Spare breaker
6174-XV-04 - Elect. actuator valve	M				15	9	B	10	15					Spare breaker
6174-XV-05 - Elect. actuator valve	M				15	11	C	12	15					Spare breaker
6174-XV-06 - Elect. actuator valve	M				15	13	A	14	15					Spare breaker
6174-IOP-003 power	D				15	15	B	16	15					Spare breaker
Spare breaker					15	17	C	18	30					Spare breaker
Spare breaker					15	19	A	20						
6174-XV-07 Res. #7 Valve Actuator	M				15	21	B	22	15	GFI			C	6174-HEA-07 Res. #7 Valve Heating
						23	C	24						
6174-XV-08 Res. #8 Valve Actuator	M				15	25	A	26	15	GFI			C	6174-HEA-08 Res. #8 Valve Heating
						27	B	28						
Space						29	C	30						Space
Space						31	A	32						Space
Space						33	B	34						Space
Space						35	C	36						Space
Space						37	A	38						Space
Space						39	B	40						Space
Space						41	C	42						Space

TYPE (REF)	(W) total	Qty
(E) Lighting	0	0
(P) Parking plug	0	0
(C) Heating	0	0
(M) Motor	0	0
(W) Water heater	0	0
(D)Other	0	0
	0	0

TYPE (REF)	Qty (ref)
(L) Spare	0
(S) Space	0
	0
	0
	0

	Watts	Amp
Phase A	0	0,00
Phase B	0	0,00
Phase C	0	0,00
Total R	0	0,00

POUR CONSTRUCTION
FOR CONSTRUCTION
AGNICO EAGLE
DATE : 2021-03-10

PERMIT TO PRACTICE
SNC - LAVALIN STAVIBEL INC.
Signature
Date 2021-03-17
PERMIT NUMBER: P 718
NT/NU Association of Professional Engineers and Geoscientists

J. BOURNIVAL LICENSEE NWT/NU
2021-03-17

		REV	DESCRIPTION	DATE	PAR BY
_	_	4	ISSUED FOR CONSTRUCTION	2021-03-10	J.BOU
_	_	3	AS BUILT	2020-01-24	S.MAR
_	_	2	ISSUED FOR CONSTRUCTION	2019-06-03	P.LEM.
_	_	1	ISSUED FOR TENDER	2019-05-03	P.LEM.
_	_	0	ORIGINAL DRAWING WAS 6174-E-002	JUNE/16	M.B.
TITRE / TITLE	# DWG	REV	DESCRIPTION	DATE	PAR BY

DESSINS EN RÉFÉRENCE / REFERENCE DRAWINGS

REVISIONS

AGNICO EAGLE

SNC·LAVALIN
150, rue Gamble Ouest
Rouyn-Noranda (Québec) J9X 2R7
Tel. : 819 764-5181 Fax : 819 797-0158
www.snclavalin.com

Project # : 660534-0000
REV:1

DESSINÉ PAR / DRAWN BY	MV	MAY/16
VÉRIFIÉ PAR / CHECKED BY	ST	JUNE/16
APPROUVÉ PAR / APPROVED BY	ST	JUNE/16
No. PROJET / PROJECT NO.	6120	
DATE	JUNE/16	

L'UTILISATION CI-CONTRE EST LA PROPRIÉTÉ DE AGNICO EAGLE LTEE ET DOIT ÊTRE RETOURNÉE SUR DEMANDE. SANS AUTORISATION ÉCRITE PRÉALABLE, TOUTE REPRODUCTION DE COPIE(S) À AUTRUI ET TOUTE UTILISATION AUTRE QUE CELLE POUR LAQUELLE L'INFORMATION EST PRÊTÉE, SONT INTERDITES.
© AGNICO EAGLE LTEE
THE INFORMATION HERE ON IS THE PROPERTY OF AGNICO EAGLE LTD, AND MUST BE RETURNED UPON REQUEST. WITHOUT WRITTEN PERMISSION, ANY COPYING, TRANSMITTAL TO OTHERS AND ANY USE, EXCEPT THAT FOR WHICH IT IS LOANED ARE PROHIBITED.
© AGNICO EAGLE LTD.

TITRE / TITLE
AGNICO EAGLE – MEADOWBANK DIVISION
BAKER LAKE AREA 740
285 – SERVICE ELECTRICAL – LIGHT AND DISTRIBUTION
6174-DP-06 PANEL SCHEDULE
BAKER LAKE SEA CAN – DISTRIBUTION PANEL 120/208VAC

ÉCHELLE/ SCALE	N/A	FICHIER / FILE	61-740-285-200_R4.dwg
No. DESSIN/ DRAWING NO.	61-740-285-200	REVISION	4
		FEUILLE/SHT	1 / 1

AE-CART-ANSI B

C:\Users\pelld4\Desktop\Projet\Agnico\671087\61-740-285-200_R4.dwg-2013-02-19 14:03:29

NO. DESSIN / DRAWING NO. 61-740-275-201

FORMAT ARCHD

POUR CONSTRUCTION
FOR CONSTRUCTION
AGNICO EAGLE
DATE : 2021-03-10



C-TAPS (1)
SCL: NTS

CONDUCTOR TO CONDUCTOR CONNECTOR

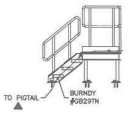

STAIRS (2)
SCL: NTS

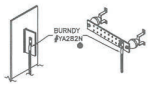

LUG YA-28 (3)
SCL: NTS
EQUIPEMENT,
CONTAINER, GROUND BAR

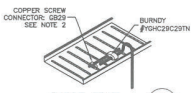

CABLE TRAY (4)
SCL: NTS

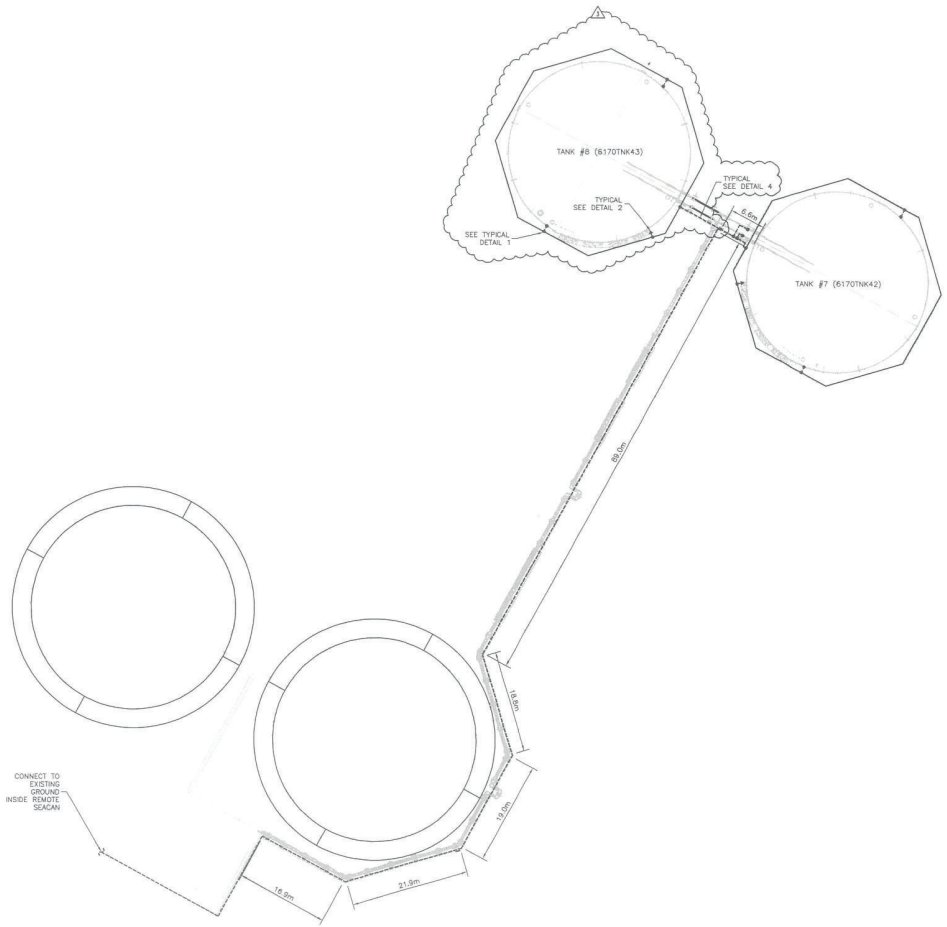

PLAN VIEW
SCALE: 1:400

PERMIT TO PRACTICE
SNC-LAVALIN STAVIBEL INC.
Signature
Date 21-03-11
PERMIT NUMBER: P 718
NT/NU Association of Professional Engineers and Geoscientists

PLAN CLÉ
KEY PLAN

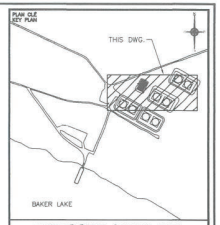

NOTES GÉNÉRALES / GENERAL NOTES

LEGEND

——— BURIED STRANDED TINNED BARE COPPER CONDUCTOR #4/0 AWG

- - - - - - - SURFACE STRANDED TINNED BARE COPPER CONDUCTOR #4/0 AWG IN CABLE TRAY

NOTES

1- THE PERIMETER GROUND CONDUCTOR OF THE TANK MUST BE ABOVE THE GEOMEMBRANE

2- THE GROUND CONDUCTOR MUST BE FIXED TO THE CABLE TRAY TO ALL 15 METER MINIMUM WITH MECHANICAL CONNECTOR. BURNDY MODEL GB29

SNC-LAVALIN
SNC-Lavalin Stavibel Inc.
150, rue Dennis Court
Rouyn-Noranda (Québec) J9X 2P7
Tél.: 819 764-5181 Fax: 819 797-0858
www.snclavalin.com

Project # : 660534-0000

CONFIDENTIEL ET PROPRIÉTÉ DE SNC-LAVALIN. CE DESSIN NE DOIT PAS ÊTRE UTILISÉ, REPRODUIT OU MODIFIÉ SANS AUTORISATION ÉCRITE DE SNC-LAVALIN. CONFIDENTIAL AND PROPERTY OF SNC-LAVALIN. THIS DRAWING SHALL NOT BE USED, REPRODUCED OR MODIFIED WITHOUT WRITTEN PERMISSION FROM SNC-LAVALIN.

THIS DRAWING AND ANY IDEA IN IT ARE THE PROPERTY OF SNC-LAVALIN AND ARE NOT TO BE USED FOR ANY PURPOSE OTHER THAN THAT FOR WHICH IT IS LOANED WITHOUT WRITTEN PERMISSION. ANY COPYING PROHIBITED. THE DESIGNS ARE NOT TO BE SCALED AND ARE SUBJECT TO CHANGE AND VERIFICATION BY SNC-LAVALIN.

DESSINS EN RÉFÉRENCE / REFERENCE DRAWINGS

TITRE / TITLE	# DWG
–	–
–	–
–	–
–	–
–	–
–	–

AGNICO EAGLE

REV.	DATE	DESCRIPTION	PAR/BY	APP.	CLIENT
3	2021-03-10	ISSUED FOR CONSTRUCTION	D.PEL.	J.BOU.	
2	2020-01-24	AS BUILT	S.MAR.		E.LAV
1	2019-06-03	ISSUED FOR CONSTRUCTION	S.MAR.	P.LEM.	
0	2019-05-03	ISSUED FOR TENDER	D.PEL.	P.LEM.	

REVISIONS

2021.03.17

TITRE / TITLE

AGNICO EAGLE – MEADOWBANK DIVISION
740 – BAKER LAKE AREA
275 – POWER ELECTRICAL ARRANGEMENT
10M LITERS DIESEL TANK #7 (6170TNK42) & TANK #8 (6170TNK43) GROUNDING

DESSINÉ PAR / DRAWN BY	DONALD PELLERIN, Tech.	DATE 2019-04-24
VÉRIFIÉ PAR / CHECKED BY	PHILIPPE LEMIRE, P. Eng.	2019-04-25
APPROUVÉ PAR / APPROVED BY	PHILIPPE LEMIRE, P. Eng.	2019-05-03
ÉCHELLE / SCALE	INDICATED	DATE 2019-04-24

NO. DESSIN / DRAWING NO. 61-740-275-201

NO. PROJET / PROJECT NO.	REVISION	FEUILLE / SHT
6120	3	1 / 1

AS-GMT-ARCH 9

P:\200-INP\671087\2000\4-Ingenierie\3-Dessins maitrise\48-27\61-740-275-201_R3.dwg-2013-02-19 14:03:28

FILE NO. 61-740-275-201_R3.dwg

NO. DESSIN / DRAWING NO. 61-740-280-209

FORMAT ANSI B-11x17

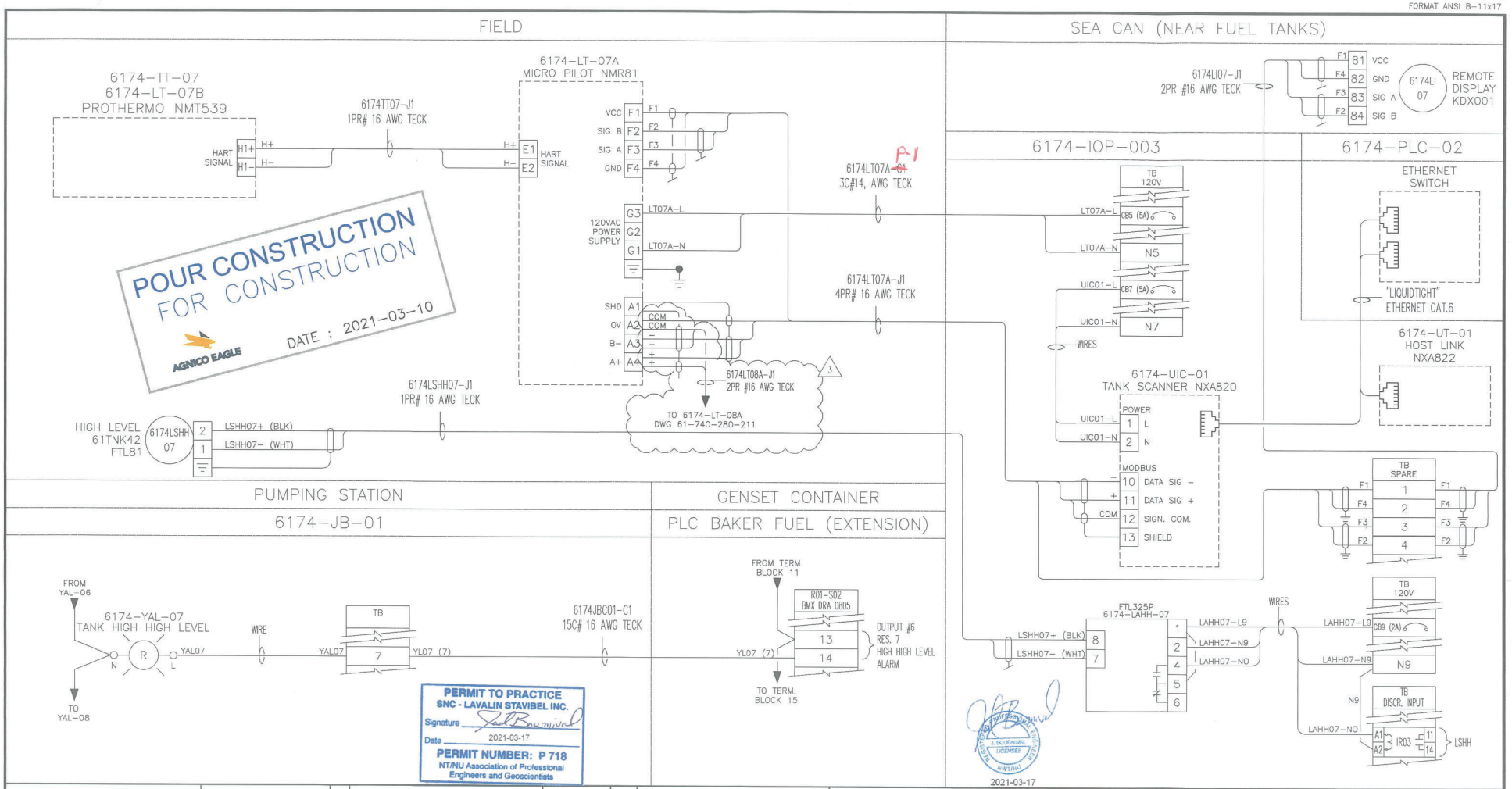

6174JBC01 – ARRANGEMENT / WIRING	61-740-280-214	3	ISSUED FOR CONSTRUCTION	2021-03-10	J.BOU
PLC BAKER FUEL (EXT.) – WIRING DIAGRAM	61-740-280-213	2	AS BUILT	2020-01-24	S.MAR
6174IOP003 – WIRING DIAGRAM	61-740-280-207	1	ISSUED FOR CONSTRUCTION	2019-06-03	P.LEM.
61TNK43 – LEVEL MONITORING	61-740-280-211	0	ISSUED FOR TENDER	2019-05-03	P.LEM
TITRE / TITLE	# DWG	REV	DESCRIPTION	DATE	PAR BY
DESSINS EN RÉFÉRENCE / REFERENCE DRAWINGS		REVISIONS			

AGNICO EAGLE

SNC·LAVALIN
150, rue Gamble Ouest
Rouyn-Noranda (Québec) J9X 2R7
Tel. : 819 764-5181 Fax : 819 797-0158
www.snclavalin.com

Project # : 660534-0000

DESSINÉ PAR / DRAWN BY	S.MARCOTTE, TECH.	DATE 2019-04-29
VÉRIFIÉ PAR / CHECKED BY	PHILIPPE LEMIRE, P.ENG.	2019-04-29
APPROUVÉ PAR / APPROVED BY	PHILIPPE LEMIRE, P.ENG.	2019-05-03
No. PROJET / PROJECT NO.	6120	
DATE	2019-04-29	

L'INFORMATION CI-CONTENUE EST LA PROPRIÉTÉ DE AGNICO EAGLE LTÉE ET NE PEUT ÊTRE DIVULGUÉE, SOUS AUCUNE FORME QUELCONQUE, SANS AUTORISATION ÉCRITE PRÉALABLE. TOUTE TRANSMISSION DE COPIE(S) À AUTRUI ET TOUTE UTILISATION AUTRE QUE CELLE POUR LAQUELLE L'INFORMATION EST PRÉVUE SONT INTERDITES. © AGNICO EAGLE LTÉE

THE INFORMATION HERE ON IS THE PROPERTY OF AGNICO EAGLE LTD. AND MUST BE RETURNED UPON REQUEST. IT MUST NOT BE REPRODUCED, IN WHOLE OR IN PART, WITHOUT WRITTEN PERMISSION. ANY COPYING, TRANSMITTAL TO OTHERS AND ANY USE EXCEPT THAT FOR WHICH IT IS LOANED ARE PROHIBITED. © AGNICO EAGLE LTD.

TITRE / TITLE
AGNICO EAGLE – MEADOWBANK DIVISION
BAKER LAKE AREA 740
280 – INSTRUMENTATION & CONTROL
WIRING DIAGRAM
61TNK42 – LEVEL MONITORING

ÉCHELLE / SCALE	NTS	FICHIER / FILE	61-740-280-209_R3.dwg
No. DESSIN / DRAWING NO.	61-740-280-209	REVISION	3
FEUILLE / SHT	1 / 1		

AE-CART-ANSI B

C:\Users\pelld4\Desktop\Projet\Agnico\671087\61-740-280-209_R3.dwg-2013-02-19 14:03:29

NO. DESSIN / DRAWING NO. 61-740-280-212

FORMAT ANSI B-11x17

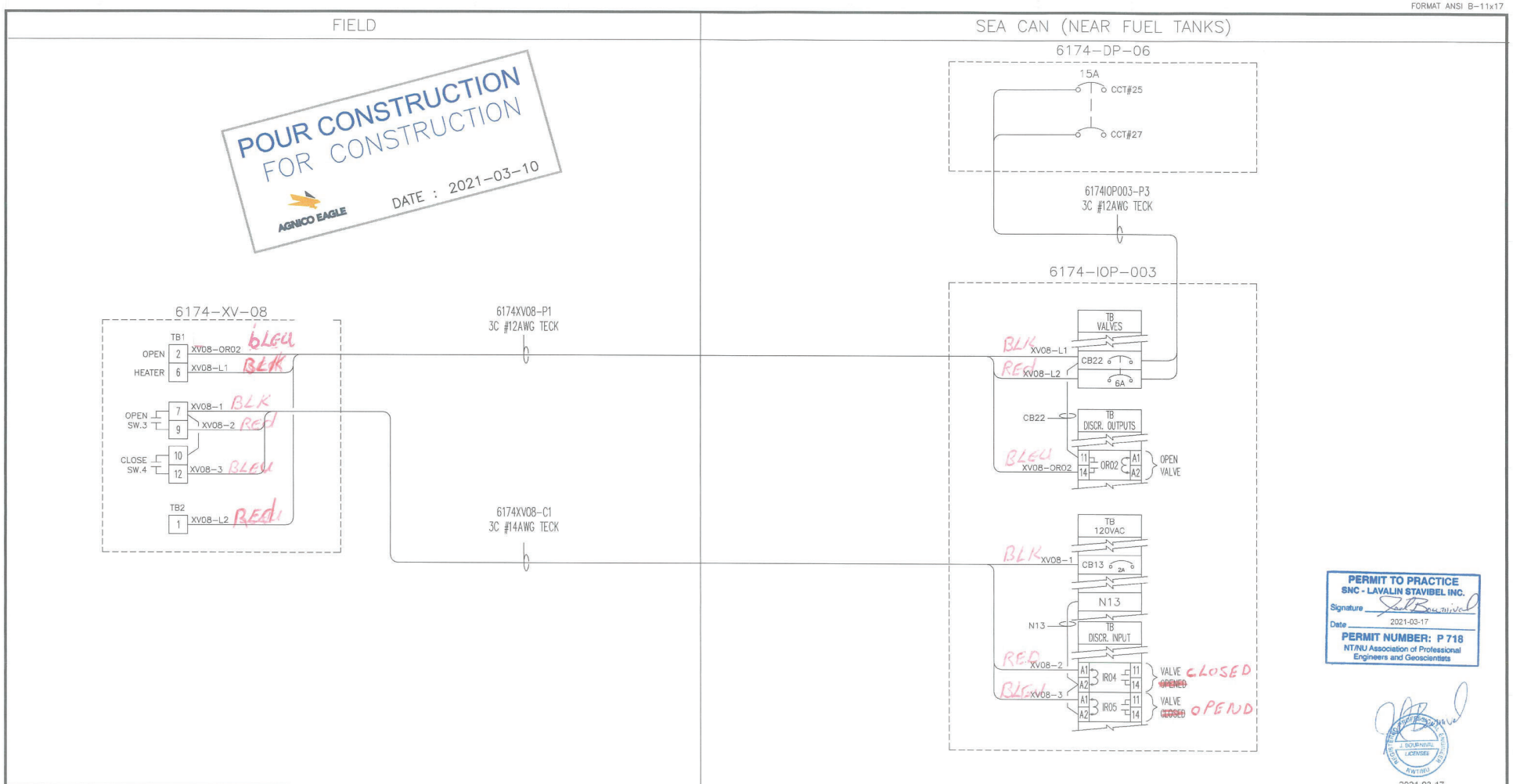

PERMIT TO PRACTICE
SNC - LAVALIN STAVIBEL INC.
Signature
Date 2021-03-17
PERMIT NUMBER: P 718
NT/NU Association of Professional Engineers and Geoscientists

J. BOURNIVAL LICENSEE KWT/NU

2021-03-17

TITRE / TITLE	# DWG	REV	DESCRIPTION	DATE	PAR BY
		3	ISSUED FOR CONSTRUCTION	2021-03-10	J.BOU
		2	AS BUILT	2020-01-24	S.MAR
6174-DP-06 – SCHEDULE	61-740-285-200	1	ISSUED FOR CONSTRUCTION	2019-06-03	P.LEM
6174IOP003 – WIRING DIAGRAM	61-740-280-207	0	ISSUED FOR TENDER	2019-05-03	P.LEM

DESSINS EN RÉFÉRENCE / REFERENCE DRAWINGS — REVISIONS

AGNICO EAGLE

Project # : 660534-0000

SNC·LAVALIN
150, rue Gamble Ouest
Rouyn-Noranda (Québec) J9X 2R7
Tel. : 819 764-5181 Fax : 819 797-0158
www.snclavalin.com

DESSINÉ PAR / DRAWN BY	S.MARCOTTE, TECH.	DATE 2019-04-30
VÉRIFIÉ PAR / CHECKED BY	PHILIPPE LEMIRE, P.ENG.	2019-04-30
APPROUVÉ PAR / APPROVED BY	PHILIPPE LEMIRE, P.ENG.	2019-05-03
No. PROJET / PROJECT NO.	6120	
DATE	2019-04-30	

TITRE / TITLE
AGNICO EAGLE – MEADOWBANK DIVISION
BAKER LAKE AREA 740
280 – INSTRUMENTATION & CONTROL
WIRING DIAGRAM
6170TNK43 – VALVE 6174-XV-08

ÉCHELLE/SCALE NTS — FICHIER FILE 61-740-280-212_R3.dwg

No. DESSIN/DRAWING NO. 61-740-280-212 — REVISION 3 — FEUILLE/SHT 1 / 1

AE-CART-ANSI B

P:\300-RN\671087\000C\4-Ingenierie\D-Dessins maitres\48-IC\61-740-280-212_R3.dwg-2013-02-19 14:03:29

NO. DESSIN / DRAWING NO. 61-740-280-211

FORMAT ANSI B-11x17

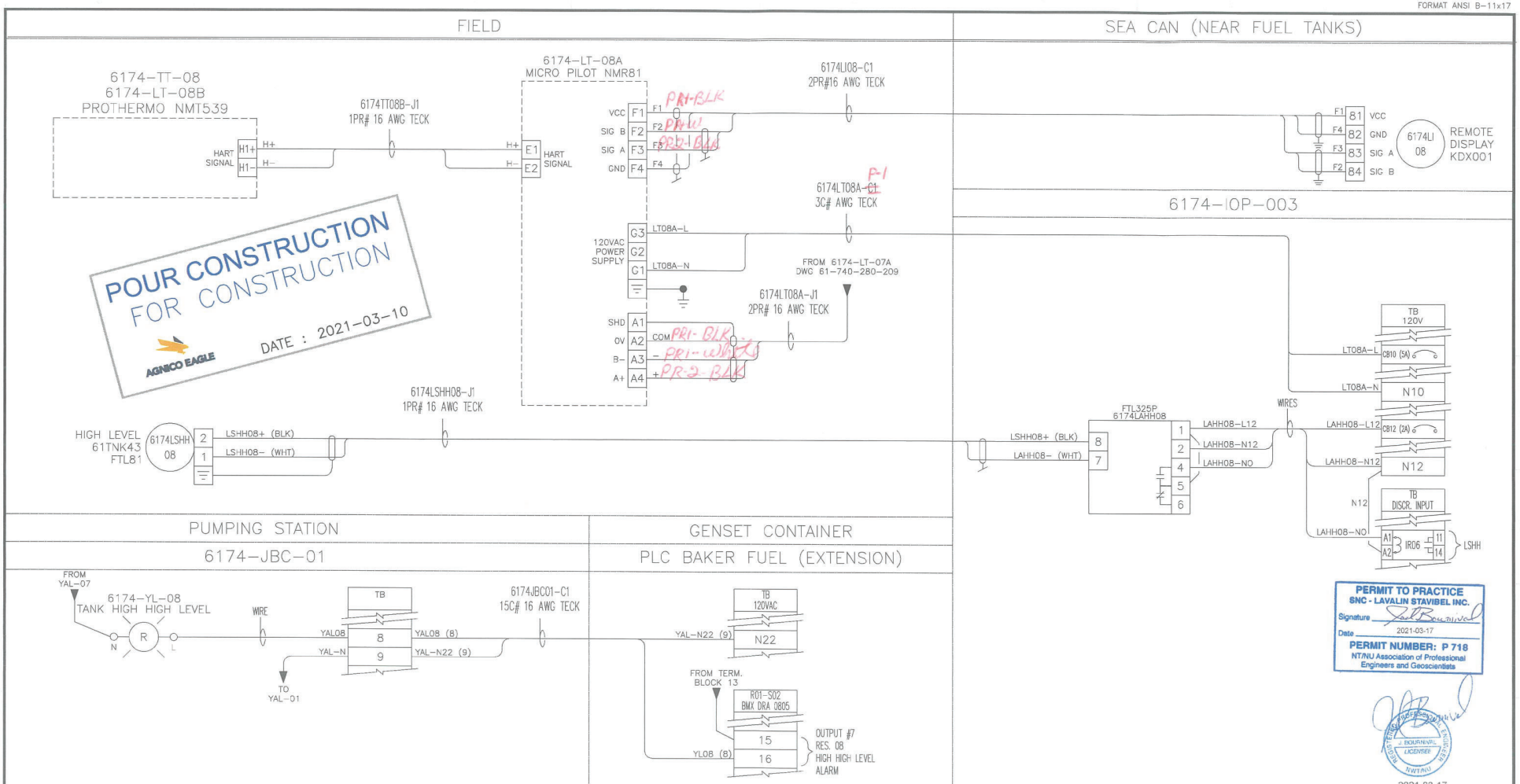

6174JBC01 – ARRANGEMENT / WIRING	61-740-280-214	3	ISSUED FOR CONSTRUCTION	2021-03-10	J.BOU
PLC BAKER FUEL (EXT.) – WIRING DIAGRAM	61-740-280-213	2	AS BUILT	2020-01-24	S.MAR
6174IOP003 – WIRNG DIAGRAM	61-740-280-207	1	ISSUED FOR CONSTRUCTION	2019-06-03	P.LEM
61TNK42 – LEVEL MONITORING	61-740-280-209	0	ISSUED FOR TENDER	2019-05-03	P.LEM
TITRE / TITLE	# DWG	REV	DESCRIPTION	DATE	PAR BY
DESSINS EN RÉFÉRENCE / REFERENCE DRAWINGS		REVISIONS			

AGNICO EAGLE

Project # : 660534-0000

SNC·LAVALIN
150, rue Gamble Ouest
Rouyn-Noranda (Québec) J9X 2R7
Tel. : 819 764-5181 Fax : 819 797-0158
www.snclavalin.com

DESSINÉ PAR / DRAWN BY	S.MARCOTTE, TECH.	2019-04-29
VÉRIFIÉ PAR / CHECKED BY	PHILIPPE LEMIRE, P.ENG.	2019-04-29
APPROUVÉ PAR / APPROVED BY	PHILIPPE LEMIRE, P.ENG.	2019-05-03
No. PROJET / PROJECT NO.	6120	
DATE	2019-04-29	

L'INFORMATION CI-CONTENUE EST LA PROPRIÉTÉ DE AGNICO EAGLE LTÉE ET NE PEUT ÊTRE REPRODUITE SUR QUELQUE SUPPORT QUE CE SOIT, TRANSMISE OU COPIÉE À AUTRUI ET TOUTE UTILISATION AUTRE QUE CELLE POUR LAQUELLE L'AUTORISATION EST PRÉVUE SANS AUTORISATION ÉCRITE PRÉALABLE. © AGNICO EAGLE LTÉE

THE INFORMATION HERE ON IS THE PROPERTY OF AGNICO EAGLE LTD. AND MUST BE RETURNED UPON REQUEST. WITHOUT WRITTEN PERMISSION, ANY COPIES, TRANSMITTAL TO, OTHERS AND ANY USE EXCEPT THAT FOR WHICH IT IS LOANED ARE PROHIBITED. © AGNICO EAGLE LTD.

TITRE / TITLE
AGNICO EAGLE – MEADOWBANK DIVISION
BAKER LAKE AREA 740
280 – INSTRUMENTATION & CONTROL
WIRING DIAGRAM
61TNK43 – LEVEL MONITORING

ÉCHELLE / SCALE	NTS	FICHIER / FILE	61-740-280-211_R3.dwg
No. DESSIN / DRAWING NO.	61-740-280-211	REVISION	2
		FEUILLE / SHT	1 / 1

AE-CART-ANSI B

P:\300-RN\671087\000C\4-Ingenierie\D-Dessins maitres\48-IC\61-740-280-211_R3.dwg-2013-02-19 14:03:29

NO. DESSIN
DRAWING NO. 61-740-280-208

FORMAT ANSI B-11x17

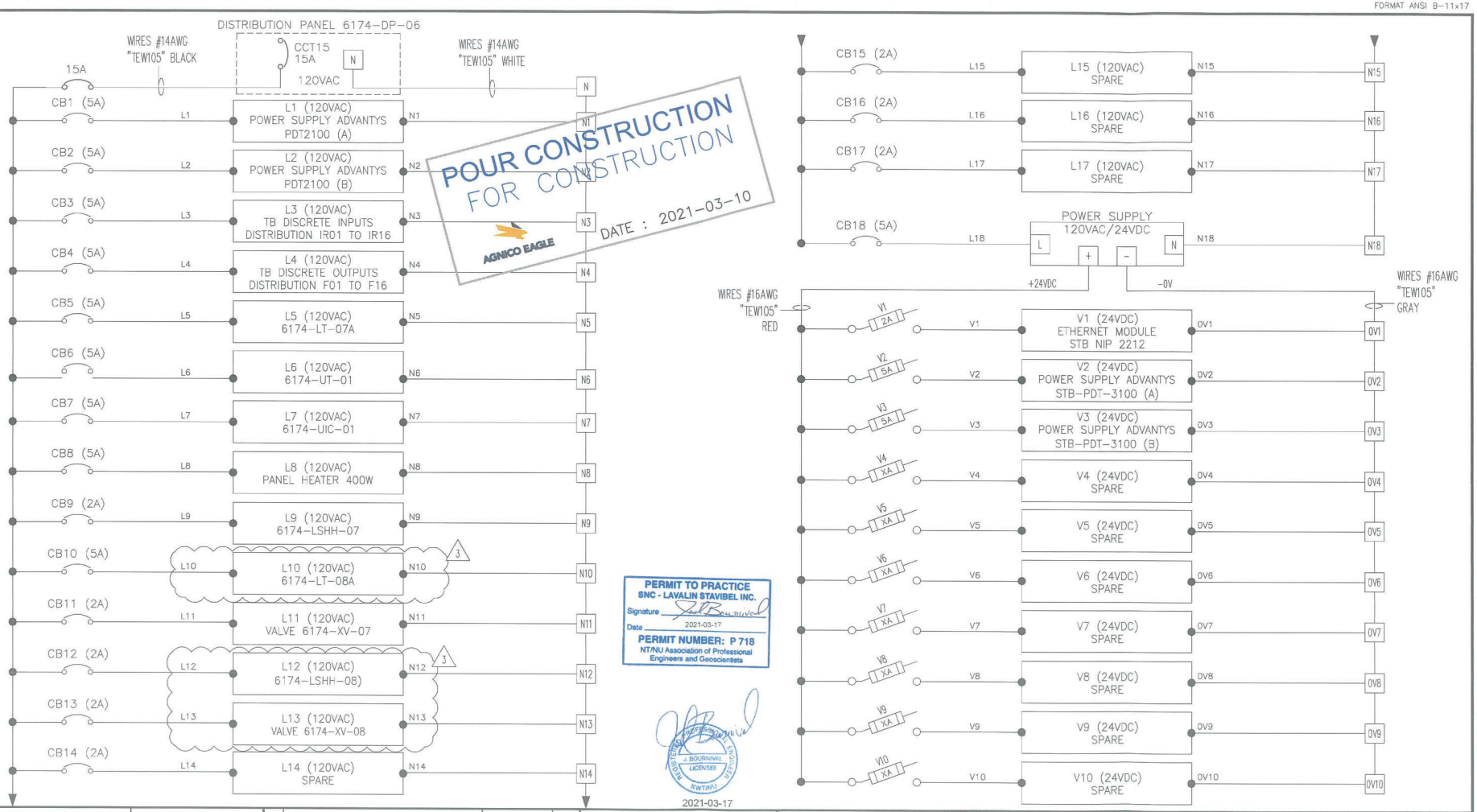

POUR CONSTRUCTION
FOR CONSTRUCTION
DATE : 2021-03-10
AGNICO EAGLE

PERMIT TO PRACTICE
SNC - LAVALIN STAVIBEL INC.
Signature
Date 2021-03-17
PERMIT NUMBER: P 718
NT/NU Association of Professional Engineers and Geoscientists

J. BOURNIVAL LICENSEE
2021-03-17

		REV	DESCRIPTION	DATE	PAR BY
		3	ISSUED FOR CONSTRUCTION	2021-03-10	J.BOU
		2	AS BUILT	2020-01-24	S.MAR
6174IOP003 – WIRING DIAGRAM	61-740-280-207	1	ISSUED FOR CONSTRUCTION	2019-05-15	P.LEM
6174IOP003 – ARRANGEMENT	61-740-280-206	0	ISSUED FOR TENDER	2019-05-03	P.LEM
TITRE / TITLE	# DWG	REV	DESCRIPTION	DATE	PAR BY
DESSINS EN RÉFÉRENCE / REFERENCE DRAWINGS		REVISIONS			

AGNICO EAGLE

Project # : 660534-0000

SNC·LAVALIN
150, rue Gamble Ouest
Rouyn-Noranda (Québec) J9X 2R7
Tel. : 819 764-5181 Fax : 819 797-0158
www.snclavalin.com

DESSINÉ PAR DRAWN BY	S.MARCOTTE, TECH.	DATE 2019-04-25
VERIFIÉ PAR CHECKED BY	PHILIPPE LEMIRE, P.ENG.	2019-04-25
APPROUVÉ PAR APPROVED BY	PHILIPPE LEMIRE, P.ENG.	20190-05-03
No. PROJET PROJECT NO.	6120	
DATE	2019-04-18	

L'INFORMATION CI-CONTENUE EST LA PROPRIÉTÉ DE AGNICO EAGLE LTÉE ET NE PEUT ÊTRE REPRODUITE, SOUS QUELQUE FORME QUE CE SOIT, SANS AUTORISATION ÉCRITE PRÉALABLE. TOUTE TRANSMISSION DE COPIE(S) À AUTRUI ET TOUTE UTILISATION AUTRE QUE CELLE POUR LAQUELLE L'INFORMATION EST PRÉTÉE, SONT INTERDITES.
© AGNICO EAGLE LTÉE

THE INFORMATION HERE ON IS THE PROPERTY OF AGNICO EAGLE LTD, AND MUST NOT BE REVEALED UPON REQUEST. WITHOUT WRITTEN PERMISSION, ANY COPYING TRANSMITTAL TO OTHERS AND ANY USE EXCEPT THAT FOR WHICH IT IS LOANED ARE PROHIBITED.
© AGNICO EAGLE LTD.

TITRE / TITLE
AGNICO EAGLE – MEADOWBANK DIVISION
BAKER LAKE AREA 740
280 – INSTRUMENTATION & CONTROL
WIRING DIAGRAM
120VAC AND 24VDC DISTRIBUTION

ÉCHELLE/ SCALE	NTS	FICHIER FILE	61-740-280-208_R3.dwg
No. DESSIN/ DRAWING NO.	61-740-280-208	REVISION	3
		FEUILLE/SHT	1 / 1

AE-CART-ANSI B
P:\300-RN\671087\000C\4-ingenierie\D-Dessins maitres\48-IC\61-740-280-208_R3.dwg-2013-02-19 14:03:29

SNC·LAVALIN	OWNER	Agnico Eagle Mines	BY:	Nathan Bisson	AGNICO EAGLE
	PROJECT NAME:	Baker Lake Fuel Farm	APPROVED:	Roxanne Lavoie, P.Eng. (OIQ) / I.Gagnon P.Eng.	
	PROJECT NO:	6129-S-265-020	REV:	0 - For Tender	
	DOC NO:	6129-S-265-020-MTO-002	REV DATE:	2021-06-30	
		MTO Piping - Baker Lake Fuel Farm Drawing number: 61-740-270-003	MATERIAL TAKE OFF Description		

Rev. Date	Qty[1]	Unit	Description	ND	STANDARD	SCH./PN	PACKAGE #	MTO #	MATERIAL	MANUFACTURER	MODEL	REMARKS
PIPING AND FITTING TABLE												
2021-06-30	260	m	STEEL PIPING	Ø150mm	ASTM A333 GR.6	SCH. STD			CARBON STEEL			SHOP PAINTED AS PER 60-000-245-GGD-001. YELLOW
2021-06-30	20	UNIT	WIELDING NECK FLANGE	Ø150mm	A350 GR. LF2	CL150			FORGED STEEL			SHOP PAINTED AS PER 60-000-245-GGD-001. YELLOW
2021-06-30	2	UNIT	BLIND FLANGE	Ø150mm	ASTM A420 GR.WPL6	CL150			FORGED STEEL			SHOP PAINTED AS PER 60-000-245-GGD-001. YELLOW
2021-06-30	19	UNIT	45° ELBOW BUTT WELD	Ø150mm	ASTM A420 GR.WPL6, BW	SCH. STD			FORGED STEEL			SHOP PAINTED AS PER 60-000-245-GGD-001. YELLOW
2021-06-30	4	UNIT	90° LONG RADIUS ELBOW BUTT WELD	Ø150mm	ASTM A420 GR.WPL6, BW	SCH. STD			FORGED STEEL			SHOP PAINTED AS PER 60-000-245-GGD-001. YELLOW
2021-06-30	5	UNIT	STRAIGHT TEE BUTT WELD	Ø150mm	ASTM A420 GR.WPL6, BW	SCH. STD			FORGED STEEL			SHOP PAINTED AS PER 60-000-245-GGD-001. YELLOW
2021-06-30	1	UNIT	WELDED 45° LATERAL BUTT WELD	Ø150mm	ASTM A420 GR.WPL6, BW	SCH. STD			FORGED STEEL			SHOP PAINTED AS PER 60-000-245-GGD-001. YELLOW
2021-06-30	2	UNIT	FLEXIBLE HOSE, 350 mm Lg.	Ø150mm	FLANGED	CL150			STAINLESS STEEL	SENIOR FLEXTRONICS	SA-BSFS SERIES	
2021-06-30	1	UNIT	FLEXIBLE HOSE, 450 mm Lg.	Ø150mm	FLANGED	CL150			STAINLESS STEEL	SENIOR FLEXTRONICS	SA-BSFS SERIES	
2021-06-30	6	UNIT	ECCENTRIC REDUCER BUTT WELD	Ø150x100mm	ASTM A420 GR.WPL6, BW	SCH. STD			CARBON STEEL			SHOP PAINTED AS PER 60-000-245-GGD-001. YELLOW
2021-06-30	6	UNIT	BLIND FLANGE	Ø100mm	ASTM A420 GR.WPL6	CL150			FORGED STEEL			SHOP PAINTED AS PER 60-000-245-GGD-001. YELLOW
2021-06-30	10	UNIT	WIELDING NECK FLANGE	Ø100mm	A350 GR. LF2	CL150			FORGED STEEL			SHOP PAINTED AS PER 60-000-245-GGD-001. YELLOW
2021-06-30	3	UNIT	THREADOLET FOR Ø150mm PIPE	Ø25mm	ASTM A350 GR.LF2	CL3000			FORGED STEEL			
2021-06-30	2	m	PIPING	Ø25mm	ASTM A333 GR.6	SCH. 80			CARBON STEEL			SHOP PAINTED AS PER 60-000-245-GGD-001. YELLOW
2021-06-30	3	UNIT	SCREW CAP	Ø25mm	FORGED STEEL	CL3000			FORGED STEEL			
2021-06-30	22	UNIT	FLEXIBLE BRAID	-	-	-				NVENT	MBJ 35-250-25	
PIPING AND SUPPORT TABLE												
2021-06-30	12	UNIT	TYPE 1 PREFAB PIPING SUPPORT ON DRAWING 61-740-270-XXX	-	HSS G40 350 W OR ASTM A500	-			STRUCTURAL STEEL			SHOP PAINTED AS PER 60-000-245-GGD-001. GREY
2021-06-30	43	UNIT	TYPE 2 PREFAB PIPING SUPPORT ON DRAWING 61-740-270-XXX	-	HSS G40 350 W OR ASTM A500	-			STRUCTURAL STEEL			SHOP PAINTED AS PER 60-000-245-GGD-001. GREY
2021-06-30	4	UNIT	TYPE 3 PREFAB PIPING SUPPORT ON DRAWING 61-740-270-XXX	-	HSS G40 350 W OR ASTM A500	-			STRUCTURAL STEEL			SHOP PAINTED AS PER 60-000-245-GGD-001. GREY
2021-06-30	15	UNIT	EXTRA GREY PAINT GALLONS	-	-	-			-			FOR PAINT TOUCH-UP ON SITE
2021-06-30	10	UNIT	EXTRA YELLOW PAINT GALLON	-	-	-			-			FOR PAINT TOUCH-UP ON SITE
VALVE TABLE												
2021-06-30	7	UNIT	GATE VALVE	Ø150mm	ASTM A-352, FLANGED	CL150			LCC	BERIC	API 600, LCC BODY	
2021-06-30	3	UNIT	BALL VALVE API 607	Ø25mm	SOCKET WELD				LCC	APOLLO	83L-240-24 SERIES	

[1] *No contingency was planned on material take off list and no material was planned for field adjustment.*

Roxanne Lavoie

ing. L3940 2021-06-30

NO. DESSIN DRAWING NO. 61-740-270-200

FORMAT ARCH D

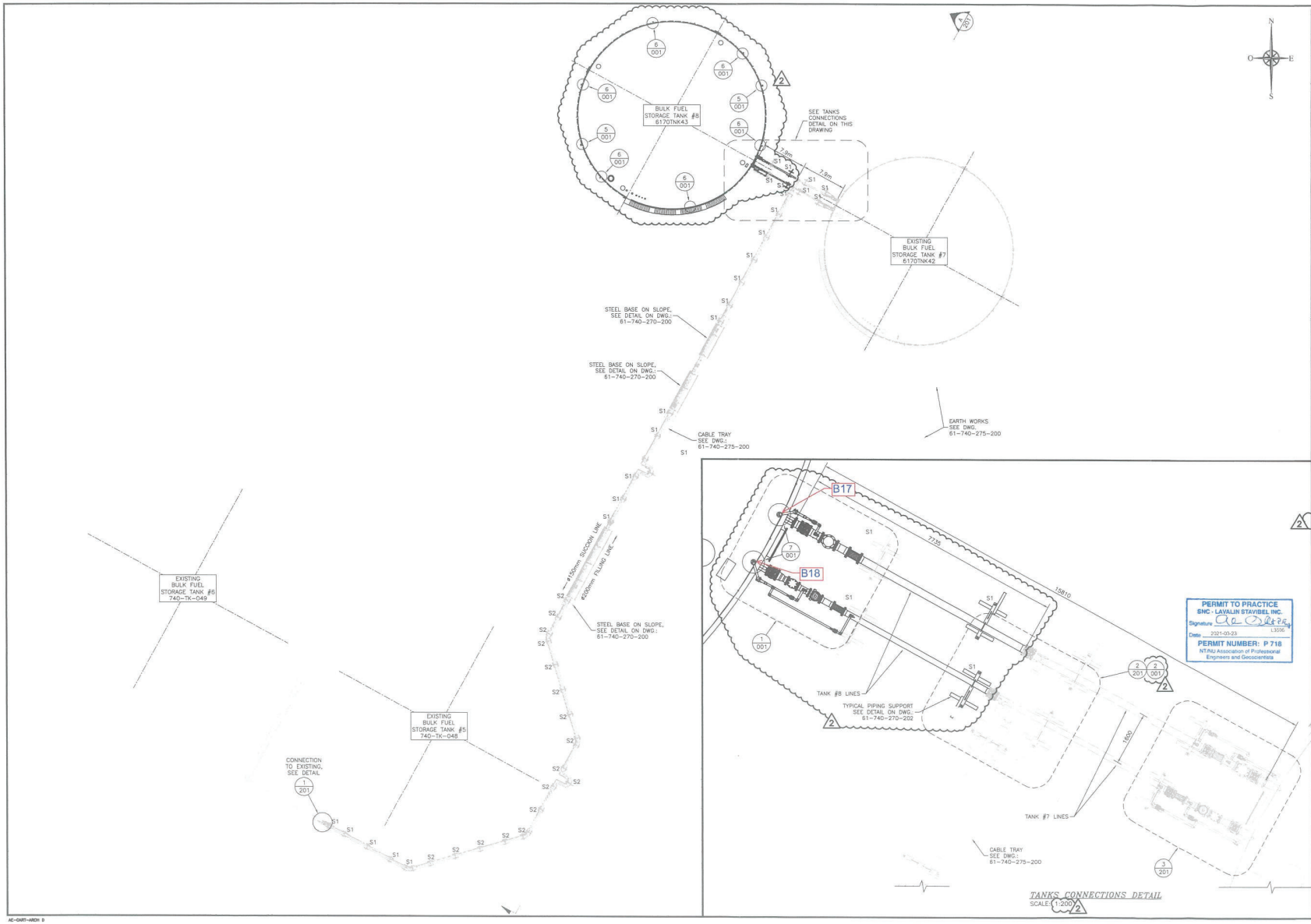

PLAN CLÉ KEY PLAN

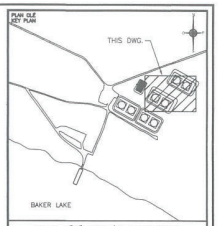

NOTES GÉNÉRALES / GENERAL NOTES

S1: PIPE SUPPORT TYPE 1
S2: PIPE SUPPORT TYPE 2
SEE DWG. # 61-740-270-202

POUR CONSTRUCTION
FOR CONSTRUCTION
AGNICO EAGLE
DATE : 2021-03-23

SNC-LAVALIN
SNC-Lavalin Stavibel inc.
150, rue Gamble Ouest
Rouyn-Noranda (Québec) J9X 2R7
Tel.: 819 764-3191 Fax: 819 762-0164
www.snclavalin.com

Project # : 671087-0000 REV.: 2

CONFIDENTIEL ET PROPRIÉTÉ DE LA PROPRIÉTÉ DE AGNICO EAGLE LTÉE ET NE PEUT ÊTRE REPRODUIT NI DIVULGUÉ SANS AUTORISATION ÉCRITE PRÉALABLE. CE DESSIN/MODÈLE EST FOURNI À AGNICO EAGLE LTÉE SOUS LES CONDITIONS QUE TOUTE UTILISATION NON PRÉVUE, TOUTE REPRODUCTION OU DIVULGATION À DES TIERS SERONT INTERDITES SANS LE CONSENTEMENT ÉCRIT DE AGNICO EAGLE LTÉE.

THE INFORMATION HERE ON IS THE PROPERTY OF AGNICO EAGLE LTD, AND MUST BE RETURNED UPON REQUEST. WITHOUT WRITTEN PERMISSION, NO OTHER REPRODUCTION, OR DISCLOSURE ARE TO BE MADE THAT YOU HOLD IT IN CONFIDENCE AS REQUIRED. © AGNICO EAGLE LTD.

DESSINS EN RÉFÉRENCE / REFERENCE DRAWINGS

TITRE / TITLE	# DWG
GENERAL EARTH WORKS	61-740-230-200 TO 208
ELECTRICAL	61-740-275-200 TO 201
P&ID :	61-740-J-0100_1 & 2
10M LITERS DIESEL TANK #8 (6170TNK43)	61-740-270-001
TANK 7 & 8 PIPE SUPPORTS – DETAILS	61-740-270-202
TANK 7 & 8 PIPING – ELEV. & DETAILS	61-740-270-201

AGNICO EAGLE

REV.	DATE	DESCRIPTION	PAR/BY	APP.	CHÉCHÉ
2	2021-03-23	ISSUED FOR CONSTRUCTION	B.L.	A.OUE	N.MEN
1	2019-04-05	ISSUED FOR CONSTRUCTION	B.L.	A.O.	B.ROY
0	2019-04-25	ISSUED FOR TENDER	B.L.	A.O.	N.MEN

REVISIONS

PERMIT TO PRACTICE
SNC-LAVALIN STAVIBEL INC.
Signature
Date 2021-03-23 L3595
PERMIT NUMBER: P 718
NTNU Association of Professional Engineers and Geoscientists

PROFESSIONAL ENGINEER
A. OUELLET
LICENSE
L3595
NTNU
2021-03-23

TITRE / TITLE
AGNICO EAGLE – MEADOWBANK DIVISION
740 BAKER LAKE AREA
PIPING
PLAN VIEW
10M LITERS DIESEL TANK #7 (6170TNK42)
& TANK #8 (6170TNK43) PIPING

DESSINÉ PAR DRAWN BY	B. LEMIEUX, Tech.	DATE 2019/02/15
VÉRIFIÉ PAR CHECKED BY	R. LAVOIE, Jr. Eng.	2019/02/15
APPROUVÉ PAR APPROVED BY	A. OUELLET, P. Eng.	2019/02/15
ÉCHELLE SCALE	1 : 300	DATE 2019/02/15

NO. DESSIN DRAWING NO. 61-740-270-200

NO. PROJET PROJECT NO.	REVISION	FEUILLE / SHT
6120	2	1 / 1

AE-GAR1-ARCH D

\\s4Jst\utenBat\Projet\300-BV\671087\0000\4-Ingenierie\3-Dessins mattreal\40-bf\61-740-270-200_R2.dwg-2013-02-19 14h03s39

FILE NO. 61-740-270-200_R2.dwg

NO. DESSIN DRAWING NO. 61-740-270-200

FORMAT ARCH D

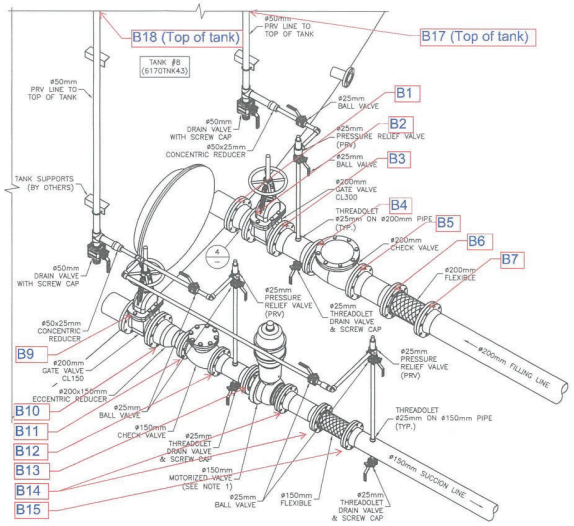

DETAIL 1 / 200
SCALE: N/A

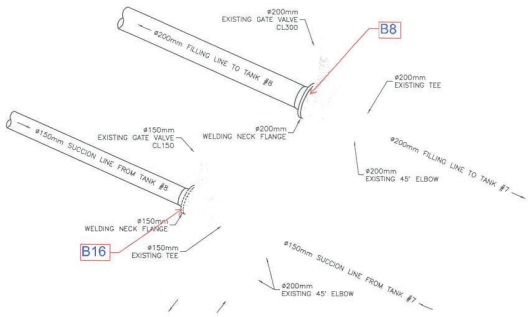

DETAIL 2 / 200
SCALE: N/A

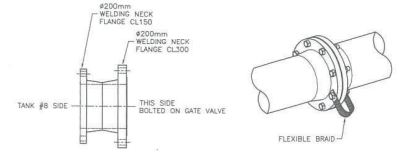

TYPICAL FLANGE DETAIL
SCALE: N/A

DETAIL 4 / –
SCALE: N.T.S.

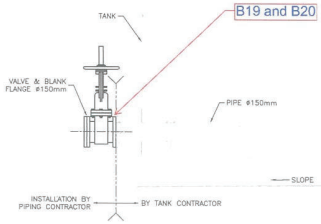

DETAIL 5 / 200
SCALE: 1:20
QTY.: 2

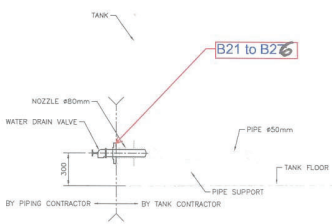

DETAIL 6 / 200
SCALE: 1:20
QTY.: 6

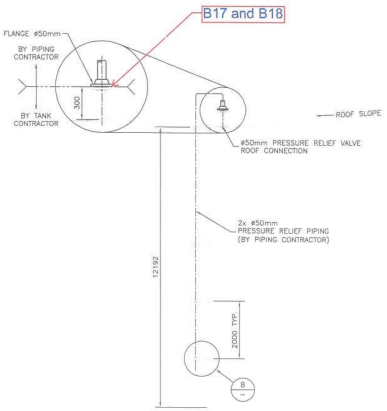

DETAIL 7 / 200
SCALE: N.T.S.

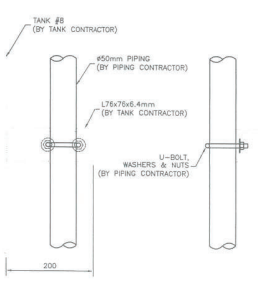

DETAIL 8 / –
SCALE: 1:5

PERMIT TO PRACTICE
SNC - LAVALIN STAYBEL INC.
Signature A. Ouellet
Date 2021-03-23
PERMIT NUMBER: P 718
NT/NU Association of Professional Engineers and Geoscientists

PLAN OLE KEY PLAN

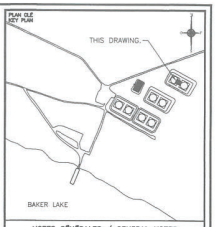

NOTES GÉNÉRALES / GENERAL NOTES

NOTE 1:
SUPPLY OF MOTORIZED VALVE BY AEM AND INSTALLATION BY CONTRACTOR.

NOTE 2:
AEM WILL SUPPLY VALVES, PIPING AND ACCESSORIES. CONTRACTOR ARE RESPONSIBLE OF INSTALLATION.

NOTE 3:
REFER TO DOCUMENT NUMBER 6129-C-265-002-SPT-001 FOR INSTALLATION SPECIFICATIONS.

POUR CONSTRUCTION
FOR CONSTRUCTION
AGNICO EAGLE
DATE : 2021-03-23

SNC·LAVALIN
SNC-Lavalin Stayblid inc.
150, rue Garnotte Ouest
Rouyn-Noranda (Québec) J9X 2R7
Tel.: 819 764-5181 Fax : 819 797-0164
www.snclavalin.com

Project # : 671087-0000 REV.: 0

COPYRIGHT © AGNICO EAGLE MINES LTD. ALL RIGHTS RESERVED. THIS DRAWING IS THE PROPERTY OF AGNICO EAGLE MINES LTD. AND MAY NOT BE REPRODUCED WITHOUT WRITTEN PERMISSION. ANY COPIES MADE OR USED BY ANY PERSON OTHER THAN THE ONES TO WHOM THEY ARE PROVIDED BY AGNICO EAGLE LTD.

THE INFORMATION CONTAINED IN THIS DRAWING IS THE PROPERTY OF AGNICO EAGLE LTD. AND MUST BE RETURNED UPON REQUEST. WITHOUT WRITTEN PERMISSION, NO COPIES SHALL BE MADE OR USED FOR ANY PURPOSE OTHER THAN THAT FOR WHICH IT IS LOANED OR PROVIDED.

DESSINS EN RÉFÉRENCE / REFERENCE DRAWINGS

TITRE / TITLE	# DWG
P&ID	61-740-J-0100_2/3
TANK 7 & 8 PIPE SUPPORTS – DETAILS	61-740-270-202
TANK 7 & 8 PIPING – ELEV. & DETAILS	61-740-270-201
10M L DIESEL TNK #7 & TNK #8 PIPING	61-740-270-200
–	–
–	–

AGNICO EAGLE

REV.	DATE	DESCRIPTION	DES.	APP.	CLIENT
0	2021-03-23	ISSUED FOR CONSTRUCTION	D.L.L.	A.OUE	N.MEN

REVISIONS

PROFESSIONAL ENGINEER A. OUELLET LICENSEE L3595 NT/NU
2021-03-23

TITRE / TITLE
AGNICO EAGLE – MEADOWBANK DIVISION
740 BAKER LAKE AREA
270 – PIPING
DETAILS
10M LITERS DIESEL TANK #8 (6170TNK43)

DESSINÉ PAR DRAWN BY	ST. MARCOTTE, Tech.	2021/02/24
VÉRIFIÉ PAR CHECKED BY	R. LAVOIE, P. Eng.	2021/02/24
APPROUVÉ PAR APPROVED BY	A. OUELLET, P. Eng.	2021/02/23
ÉCHELLE SCALE	AS SHOWN	DATE 2021/02/24

NO. DESSIN DRAWING NO. 61-740-270-001

NO. PROJET PROJECT NO.	REVISION	FEUILLE / SHT
6129	0	1 / 1

AE-CAR1-ARCH D

\\sfs3s1\plotRed\Projet\300-RM\671087\2000\D-Ooss Emb\2E – Tank No.8 Baker Lake\2021-03-23 – Construction\61-740-270-001_R0.dwg-2013-06-19 14:03:29

FILE NO. 61-740-270-001_R0.dwg

NO. DESSIN DRAWING NO. 61-740-270-200

FORMAT ARCH D

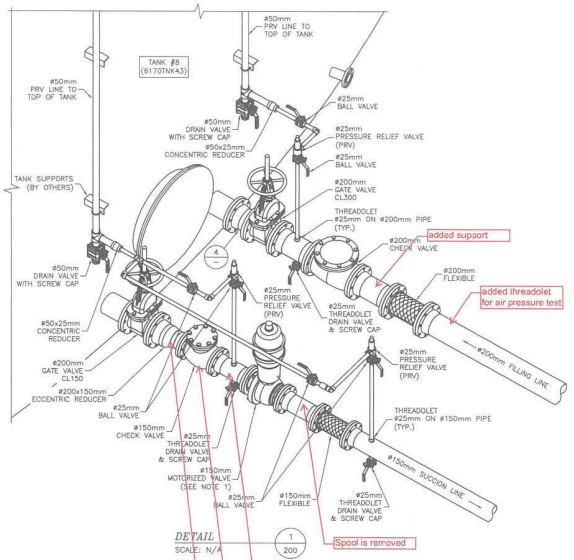

DETAIL 1 / 200
SCALE: N/A

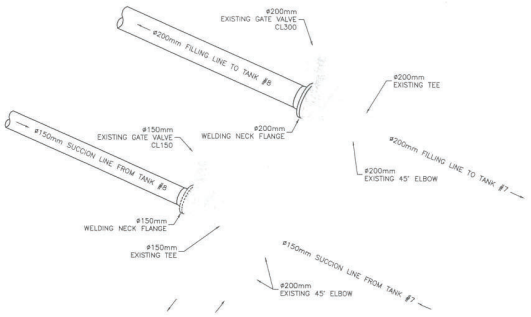

DETAIL 2 / 200
SCALE: N/A

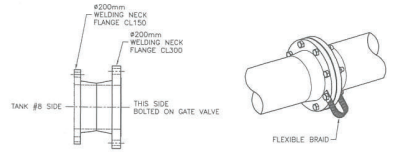

DETAIL 4 / –
SCALE: N.T.S.

TYPICAL FLANGE DETAIL
SCALE: N/A

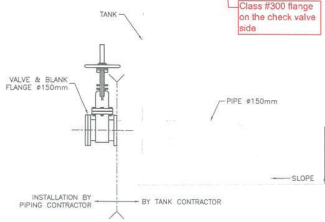

DETAIL 5 / 200
SCALE: 1:20
QTY.: 2

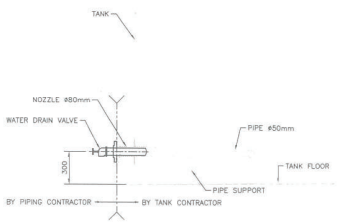

DETAIL 6 / 200
SCALE: 1:20
QTY.: 6

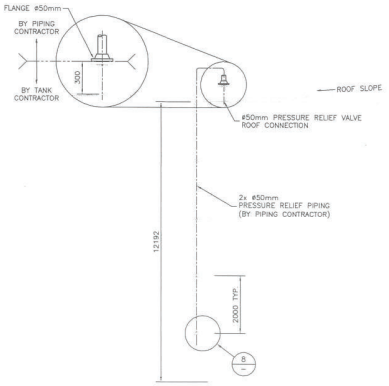

DETAIL 7 / 200
SCALE: N.T.S.

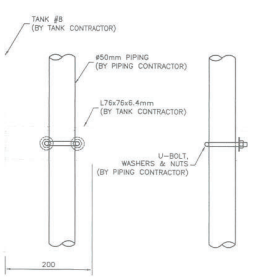

DETAIL 8 / –
SCALE: 1:5

PERMIT TO PRACTICE
SNC-LAVALIN STAVIBEL INC.
Signature
Date 2021-03-23
PERMIT NUMBER: P 718
NTNU Association of Professional Engineers and Geoscientists

PLAN CLÉ
KEY PLAN

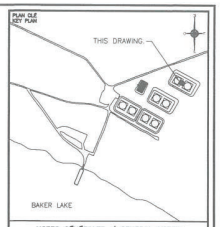

NOTES GÉNÉRALES / GENERAL NOTES

NOTE 1:
SUPPLY OF MOTORIZED VALVE BY AEM AND INSTALLATION BY CONTRACTOR.

NOTE 2:
AEM WILL SUPPLY VALVES, PIPING AND ACCESSORIES. CONTRACTOR ARE RESPONSIBLE OF INSTALLATION.

NOTE 3:
REFER TO DOCUMENT NUMBER 6129-C-265-002-SPT-001 FOR INSTALLATION SPECIFICATIONS.

POUR CONSTRUCTION
FOR CONSTRUCTION
AGNICO EAGLE
DATE : 2021-03-23

SNC-LAVALIN
SNC-Lavalin Stavibel Inc.
150, rue Carrière Ouest
Rouyn-Noranda (Québec) J9X 2R7
Tel.: 819 764-5191 Fax: 819 763-0154
www.snclav.com

Project # : 671087-0000 REV.: 0

CONFIDENTIALITÉ ET DROITS D'AUTEUR / CONFIDENTIALITY AND COPYRIGHT
CE DESSIN EST LA PROPRIÉTÉ DE AGNICO EAGLE LTÉE ET NE PEUT ÊTRE REPRODUIT NI UTILISÉ SANS AUTORISATION ÉCRITE PRÉALABLE. TOUS DROITS RÉSERVÉS © DESSIN À JOINDRE À TOUTE VERSION PAPIER NE SERA PAS LARGEUR D'IMPRESSION PAR FACSIMILÉ. / AGNICO EAGLE LTÉE
THIS DRAWING IS THE PROPERTY OF AGNICO EAGLE LTD. AND MUST NOT BE REPRODUCED WITH RESERVED. WITHOUT WRITTEN PERMISSION. © AGNICO EAGLE LTD. TO ENSURE AND SET THE ENTIRE THAT YOU HAVE IT IS LIMITED ARE PROHIBITED. / AGNICO EAGLE LTD.

DESSINS EN RÉFÉRENCE / REFERENCE DRAWINGS

TITRE / TITLE	# DWG
P&ID	61-740-J-0100_2/2
TANK 7 & 8 PIPE SUPPORTS – DETAILS	61-740-270-202
TANK 7 & 8 PIPING – ELEV. & DETAILS	61-740-270-201
10M L. DIESEL TNK #7 & TNK #8 PIPING	61-740-270-200
–	–
–	–

AGNICO EAGLE

REV.	DATE	DESCRIPTION	DLL'D	A.DUE	A.MEN
			PMR/BIT	APP.	CLIENT
0	2021-03-23	ISSUED FOR CONSTRUCTION	D.L.L.	A.DUE	A.MEN

REVISIONS



2021-03-23

TITRE / TITLE
AGNICO EAGLE – MEADOWBANK DIVISION
740 BAKER LAKE AREA
270 – PIPING
DETAILS
10M LITERS DIESEL TANK #8 (617DTNK43)

DESSINÉ PAR / DRAWN BY	ST. MARCOTTE, Tech.	DATE 2021/02/24
VÉRIFIÉ PAR / CHECKED BY	R. LAVOIE, P. Eng.	2021/02/24
APPROUVÉ PAR / APPROVED BY	A. OUELLET, P. Eng.	2021/02/23
ÉCHELLE / SCALE	AS SHOWN	DATE 2021/02/24

NO. DESSIN / DRAWING NO. 61-740-270-001

NO. PROJET / PROJECT NO.	REVISION	FEUILLE / SHT
6129	0	1 / 1

AC-CMT-ARCH 5

\\pll.lin\sites$\sf\Projet\300-RM\671087\0000\0-Docs Entr\DE - Tank No.8 Baker Lake\2021-03-23 - Construction\61-740-270-001_RD.dwg 2013-08-19 14:03:29

FILE NO. 61-740-270-001_RD.dwg

NO. DESSIN DRAWING NO. 61-740-270-200

FORMAT ARCH D

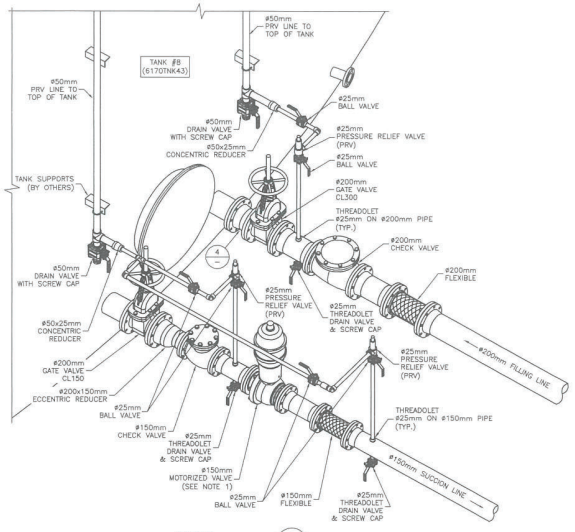

DETAIL 1
SCALE: N/A
200

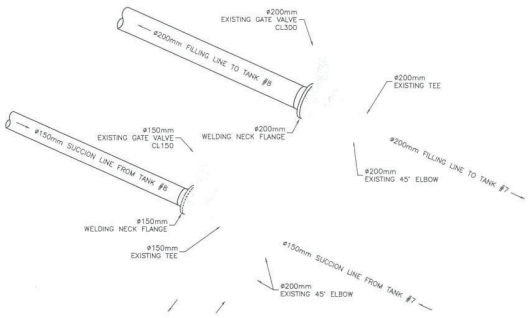

DETAIL 2
SCALE: N/A
200

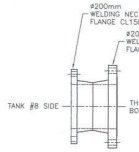

DETAIL 4
SCALE: N.T.S.
–

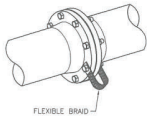

TYPICAL FLANGE DETAIL
SCALE: N/A

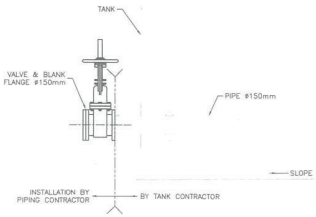

DETAIL 5
SCALE: 1:20
QTY.: 2
200

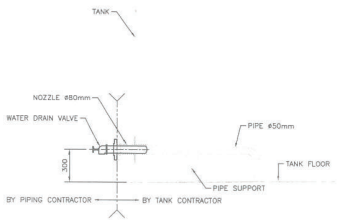

DETAIL 6
SCALE: 1:20
QTY.: 6
200

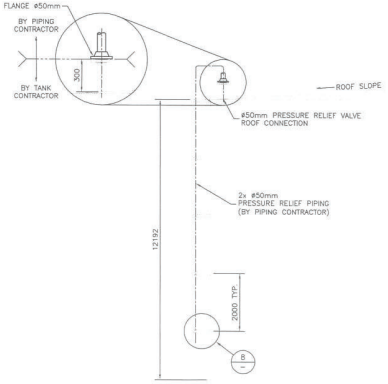

DETAIL 7
SCALE: N.T.S.
200

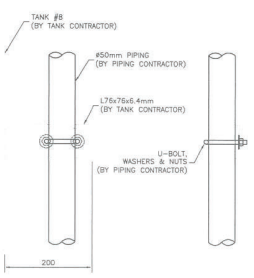

DETAIL 8
SCALE: 1:5
–

PERMIT TO PRACTICE
SNC - LAVALIN STAVIBEL INC.
Signature
Date 2021.03.23
PERMIT NUMBER: P 718
NT/NU Association of Professional Engineers and Geoscientists
L3555

PLAN CLÉ
KEY PLAN

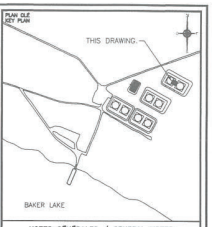

NOTES GÉNÉRALES / GENERAL NOTES

NOTE 1:
SUPPLY OF MOTORIZED VALVE BY AEM AND INSTALLATION BY CONTRACTOR.

NOTE 2:
AEM WILL SUPPLY VALVES, PIPING AND ACCESSORIES. CONTRACTOR ARE RESPONSIBLE OF INSTALLATION.

NOTE 3:
REFER TO DOCUMENT NUMBER 6129-C-265-002-SPT-001 FOR INSTALLATION SPECIFICATIONS.

POUR CONSTRUCTION
FOR CONSTRUCTION
AGNICO EAGLE
DATE : 2021-03-23

SNC·LAVALIN
SNC-Lavalin Stavibel Inc.
150, rue Garnotia Ouest
Rouyn-Noranda (Québec) J2X 2R7
Tel.: (819) 764-0191 Fax: (819) 797-5166
www.snclavalin.com

Project # : 671087-0000 REV.: 0

CONFIDENTIALITÉ ET DROITS DE LA PROPRIÉTÉ DE GENIVAR SENC LIÉE. CE DOCUMENT NE PEUT ÊTRE REPRODUIT OU UTILISÉ, TOUT OU EN PARTIE, SANS AUTORISATION ÉCRITE PRÉALABLE. TOUTE UTILISATION NON AUTORISÉE OU REMISE À DES TIERS SERA PASSIBLE DE POURSUITES JUDICIAIRES.
CONFIDENTIALITY AND PROPRIETARY RIGHTS OF GENIVAR SENC LIMITED PARTNERSHIP. WITHOUT PRIOR WRITTEN PERMISSION, THIS DOCUMENT MAY NOT BE COPIED OR REPRODUCED IN WHOLE OR IN PART, AND ANY UNAUTHORIZED USE OR DISCLOSURE WILL BE STRICTLY ENFORCED.

DESSINS EN RÉFÉRENCE / REFERENCE DRAWINGS

TITRE / TITLE	# DWG
PAID	61-740-J-0100_2/3
TANK 7 & 8 PIPE SUPPORTS – DETAILS	61-740-270-202
TANK 7 & 8 PIPING – ELEV. & DETAILS	61-740-270-201
10M L. DIESEL TNK #7 & TNK #8 PIPING	61-740-270-200
–	–
–	–

AGNICO EAGLE

REV.	DATE	DESCRIPTION	DWN/DES	APP.	CLIENT
0	2021-03-23	ISSUED FOR CONSTRUCTION	D.L.L.	A.OUE	N.MEN

REVISIONS

PROFESSIONAL ENGINEER
A. OUELLET
LICENSEE
L3505
NT/NU
2021-03-23

TITRE / TITLE
AGNICO EAGLE – MEADOWBANK DIVISION
740 BAKER LAKE AREA
270 – PIPING
DETAILS
10M LITERS DIESEL TANK #8 (6170TNK43)

DESSINÉ PAR DRAWN BY	ST. MARCOTTE, Tech.	DATE 2021/02/24
VÉRIFIÉ PAR CHECKED BY	R. LAVOIE, P. Eng.	2021/02/24
APPROUVÉ PAR APPROVED BY	A. OUELLET, P. Eng.	2021/02/23
ÉCHELLE SCALE	AS SHOWN	DATE 2021/02/24

NO. DESSIN DRAWING NO. 61-740-270-001

NO. PROJET PROJECT NO.	REVISION	FEUILLE / SHT
6129	0	1 / 1

AE-GART-ARCH D

\\pl.lan\stavibel\Projet\300-Rbl\671087\2000\0-Desc Emb\DE - Tank No.8 Baker Lake\2021-03-23 - Construction\61-740-270-001_RO.dwg 2013-02-19 14:03:39

FILE NO. 61-740-270-001_RO.dwg

Appendix C

Photographs

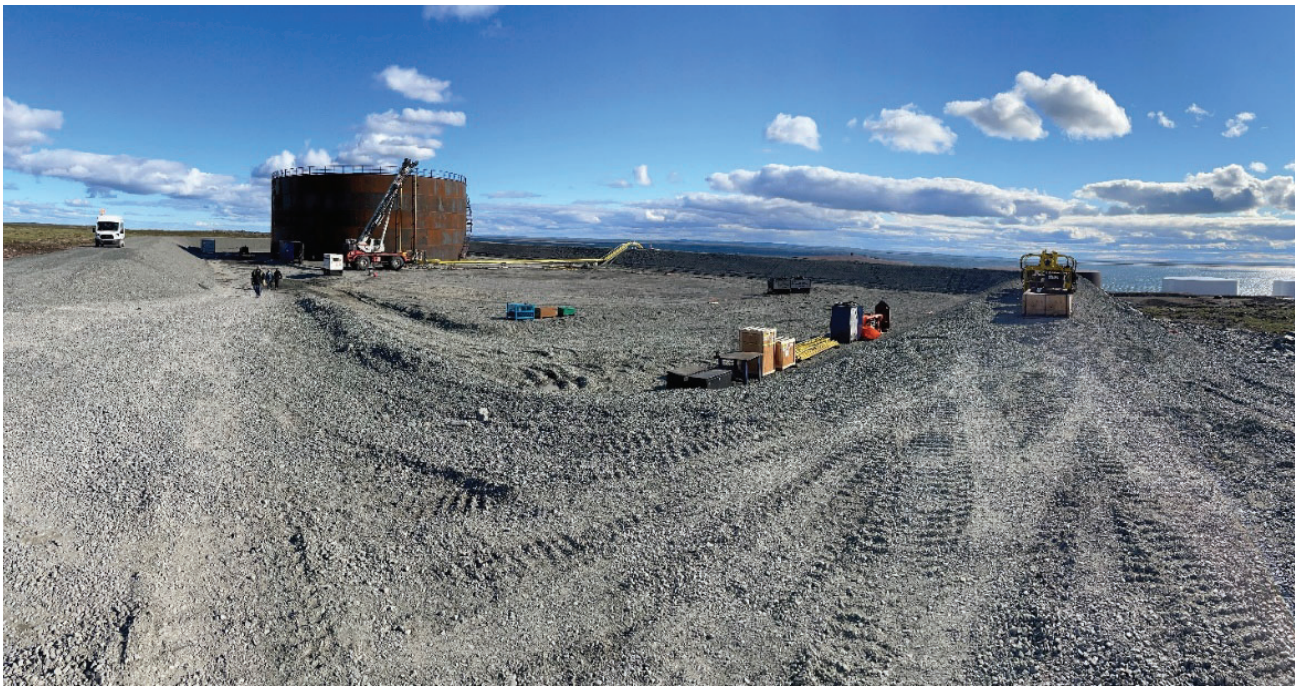

Tank #8 pad before construction



Tank floor construction



Weld testing with vacuum



Tank wall welding



Tank wall third ring installation



Tank general view



Tank roof structure



Tank roof plate welding



Control cable tray and over pressure valve piping



Tank #8 piping installation

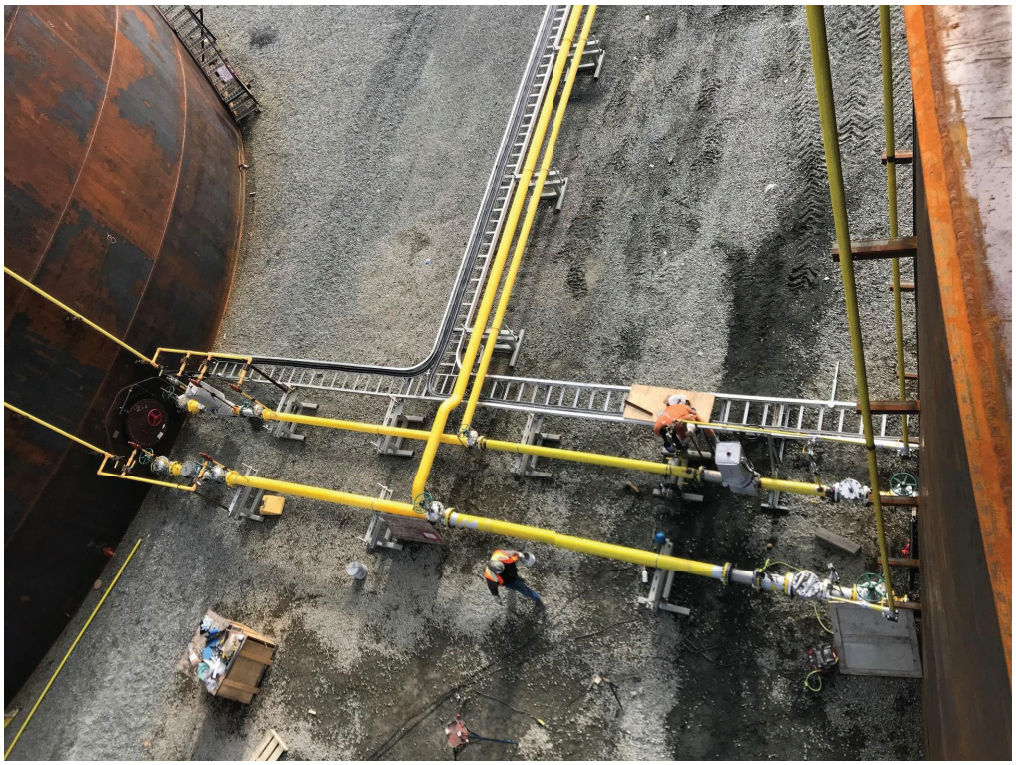

Tank #8 piping overview

Appendix D

Fuel tank and piping handover package

STS STORAGE TANK SOLUTIONS

BAKER LAKE

STS JOB# 21-03

SYSTEM: TANK #8

2021-August

INSPECTION & TEST PLAN

Tank:	Tank #8 6170TNK43	**Project:**	AEM Baker Lake Fuel Tanks	**Document:**	TK#8 ITP
By:	Inukshuk Construction Ltd.	**Proj. #:**	341	**Revision:**	Orig

Item	Component	Activity	ITP Type	Documentation	Acceptance Criteria	Notes
1	Kick-Off Meeting	Kickoff Meeting	N/A	Meeting Minutes	N/A	
2	Signature Log	Verify	N/A	Signature Log	N/A	
3	Welder Qualification	Verify	N/A	Individual Welder Qualifications / Welder Log	API-650 / ASME IX	
4	Inspector Qualification	Verify	N/A	In house Inspector & 3rd Party Qualifications	API-650	
5	Weld Procedures	Verify	N/A	Approved Weld Procedures	API-650 / ASME IX, CWB W47.1	
6	Welding Consumable	Electrode Storage	N/A	N/A	Manufacturer's Instructions	
7	Foundation	Foundation Survey	DC	Foundation Acceptance Report, Compaction Report & Survey from 3rd Party	API-650 Para 7.5.5	
8	Floor	Materials	FI	MTR Confirmation to Dwg	Drawing & API-650 Sect. 4	MTR issued prior to shipping
		Fit up	VE, DC	As Built Drawing	Drawing	per API-650 5.1.5.4 - bottom plates under the shell shall have the outer ends of the joints fitted and lap-welded
		Welding	VE	Weld Map, Visual Report	API–650 Para 7.2 & 8.5 & WPS	
		Vacuum Test	VB	Vacuum Box Test Report	API-650 Para 7.3.3(a) & 8.6	
9	Shell to Floor Seams	Initial Weld Pass	VE	Weld Map, Visual Report	API-650 Para 8.5, 7.2.4.1	
		Final Weld Pass	VE	Weld Map, Visual Report	API-650 Para 8.5, 7.2.4.1	
		LPT	NDT	Diesel Test Report	API-650 Para 7.2.4.1 d	LPT inside of shell to floor seam
10	Shell	Materials	FI	MTR Confirmation to Dwg	Drawing & API-650 Sect. 4	MTR issued prior to shipping
		Fit up 1st Course	VE, DC	As Built Drawing	Drawing	
		Roundness	DC	Dimension Report	API-650 Para 7.5.3	
		Welding	VE	Weld Map, Visual Report	API–650 Para 7.2, 7.5, 8.5 & WPS	
		Diesel Test	NDT	Diesel Test Report	API-650 Para 7.2.4.1 d	Diesel Test inside of shell butt weld joints
		Tolerance Check – Plumbness & Local Deviations	DC	Dimension Report from 3rd party	API-650 Para 7.5	
		Ultrasonic Testing (ut)	NDT	UT report / Log / Map	API-650 Para 7.2.3 & 8.1	Testing by a qualified independent inspection firm
Item	**Component**	**Activity**	**ITP Type**	**Documentation**	**Acceptance Criteria**	**Notes**
11	Compression Ring	Fit up	VE, DC	As Built Drawing	Drawing	
		Welding	VE	Weld Map, Visual Report	API–650 Para 7.2 & 8.5 & WPS	
12	Roof	Fit up	VE, DC	As Built Drawing	Drawing	
		Welding	VE	Visual Report	API–650 Para 7.2 & 8.5 & WPS	
		Vacuum Test	VB	Vacuum Box Test Report	API-650 Para 7.3.8(b) & 8.6	
13	Roof Structure	Fit up	VE, DC	As Built Drawing	Drawing	
		Column Plumbness	DC	Dimension Report	API–650 Para 7.5.2 b)	
		Welding	VE	Visual Report	API–650 Para 7.2 & 8.5 & WPS	
14	Nozzles	Layout	VE, DC	As Built Drawing	Drawing	
		Fit up	VE, DC	As Built Drawing	Drawing	
		Shop Prep Welding	VE	Weld Map, Visual Report	API–650 Para 7.2 & 8.5 & WPS	
		Welding	VE	Weld Map, Visual Report	API–650 Para 7.2 & 8.5 & WPS	
		Tolerance Check – Plumbness & Local Deviations	DC	Dimension Report	API-650 Para 7.5	
		Shell Nozzle Repad Air test	AT	Leak Test Report	API-650 Para 7.3.5	
		MPI of Shell Nozzles	NDT	MPI Report	API-650 Para 7.2.3.6	All welds of Shell Nozzles
15	Manways	Layout	VE, DC	As Built Drawing	Drawing	

		Fit up	VE, DC	As Built Drawing	Drawing	
		Welding	VE	Weld Map, Visual Report	API–650 Para 7.2 & 8.5 & WPS	
15	Manways	Tolerance Check – Plumbness & Local Deviations	DC	Dimension Report	API-650 Para 7.5	
		Shell Manway Repad Air test	AT	Leak Test Report	API-650 Para 7.3.5	
		MPI	NDT	MPI Report	API-650 Para 7.2.3.6	All welds of Shell Manways
16	Internals	Layout	VE, DC	As Built Drawing	Drawing	
		Fit up	VE, DC	As Built Drawing	Drawing	
		Welding	VE	Visual Report	API–650 Para 7.2 & 8.5 & WPS	
17	Externals	Layout	VE, DC	As Built Drawing	Drawing	
		Fit up	VE, DC	As Built Drawing	Drawing	
		Welding	VE	Visual Report	API–650 Para 7.2 & 8.5 & WPS	
18	Stairs & Platforms	Layout	VE, DC	As Built Drawing	Drawing	
		Fit up	VE, DC	As Built Drawing	Drawing	
		Welding	VE	Visual Report	API–650 Para 7.2 & 8.5 & WPS	
19	Bolts & Nuts	Inspection	VE, DC	As Built Drawing	Drawing	Bolt Torque
Item	**Component**	**Activity**	**ITP Type**	**Documentation**	**Acceptance Criteria**	**Notes**
21	Final	Name Plate Verification	N/A	Scan of Name Plate	Drawings	
		Final Inspection	FI	As Built Drawings, Data Sheet, Manufacturer's Certification (3rd Party), Punch List	Drawings	

DEFINITIONS:

AT - AIR TEST: Specified component and/or installation to be air tested according to specified documentation and specifications.

DC - DIMENSION CHECK: Physical dimensions of component and/or installation to be verified according to specified documentation and specifications.

FI - FINAL INSPECTION: Specified inspection procedures to be executed prior to release of the component and/or installation and verified according to specified documentation and specifications.

NDT - NON DESTRUCTIVE TESTING: Specified component and/or installation to be inspected using a named non destructive testing method according to specified documentation and specifications.

E - VISUAL Examination: Specified component and/or installation to be examined visually according to specified documentation and specification.

B - VACUUM-BOX TEST: Specified component and/or installation to be vacuum box tested according to specified documentation and specifications.

SECTION 1.0

Meeting Minutes

This Section is Not Applicable.

SECTION 2.0

Signature Log

STS STORAGE TANK SOLUTIONS	Signature Log	STS-QF-23 Rev. 1

Name	Signature	Initials	Company	Date
Sebastien Ouellet		S.O.	Storage Tank Solutions	August 13, 2021
Lindsay C Bolton		LCB.	Storage Tank Solutions	August 13, 2021
Matthew McGuire		M.M.	Storage Tank Solutions.	August 13 2021
Stephane Dubois		D	AEM	Sept 8th 2021

SECTION 3.0

Welder Qualifications

STORAGE TANK SOLUTIONS

Adam Kelly

AKE

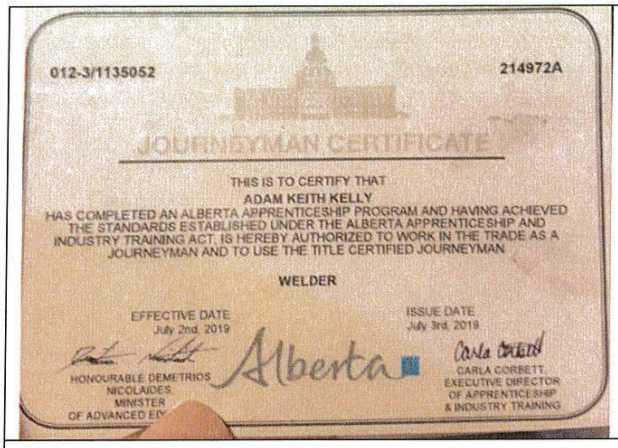

012-3/1135052 214972A

JOURNEYMAN CERTIFICATE

THIS IS TO CERTIFY THAT
ADAM KEITH KELLY
HAS COMPLETED AN ALBERTA APPRENTICESHIP PROGRAM AND HAVING ACHIEVED THE STANDARDS ESTABLISHED UNDER THE ALBERTA APPRENTICESHIP AND INDUSTRY TRAINING ACT, IS HEREBY AUTHORIZED TO WORK IN THE TRADE AS A JOURNEYMAN AND TO USE THE TITLE CERTIFIED JOURNEYMAN

WELDER

EFFECTIVE DATE
July 2nd, 2019

ISSUE DATE
July 3rd, 2019

HONOURABLE DEMETRIOS NICOLAIDES
MINISTER
OF ADVANCED ED

Alberta

CARLA CORBETT
EXECUTIVE DIRECTOR
OF APPRENTICESHIP
& INDUSTRY TRAINING

STS STORAGE TANK SOLUTIONS

Alan Martin

AMA

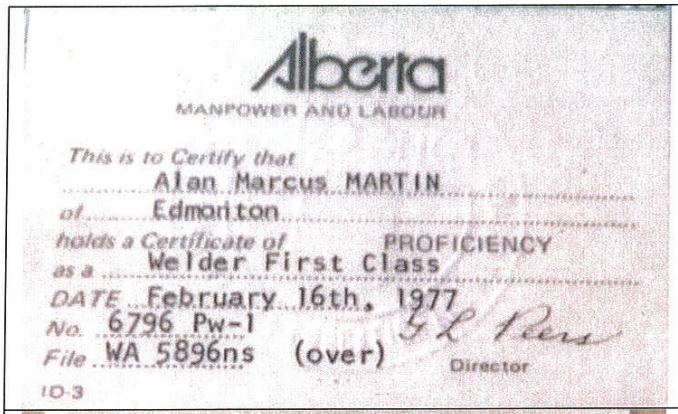

Alberta

MANPOWER AND LABOUR

This is to Certify that
Alan Marcus MARTIN
of Edmonton
holds a Certificate of PROFICIENCY
as a Welder First Class
DATE February 16th, 1977
No. 6796 Pw-1
File WA 5896ns (over) G.L. Peers
Director
ID-3

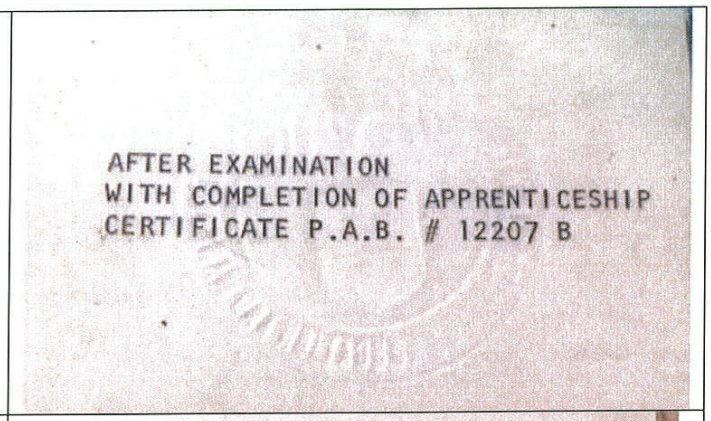

AFTER EXAMINATION
WITH COMPLETION OF APPRENTICESHIP
CERTIFICATE P.A.B. # 12207 B

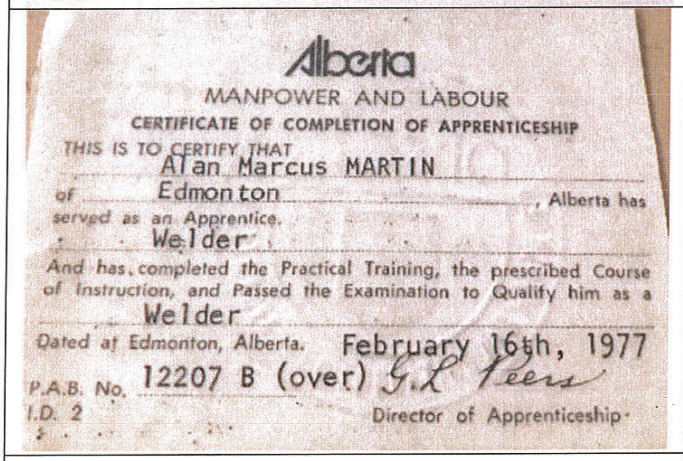

Alberta

MANPOWER AND LABOUR

CERTIFICATE OF COMPLETION OF APPRENTICESHIP

THIS IS TO CERTIFY THAT
Alan Marcus MARTIN
of Edmonton, Alberta has
served as an Apprentice.
Welder
And has completed the Practical Training, the prescribed Course of Instruction, and Passed the Examination to Qualify him as a
Welder
Dated at Edmonton, Alberta. February 16th, 1977
P.A.B. No. 12207 B (over) G.L. Peers
I.D. 2
Director of Apprenticeship

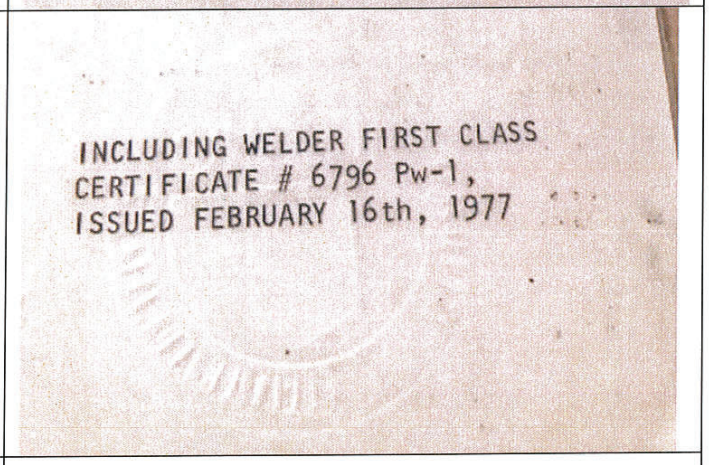

INCLUDING WELDER FIRST CLASS
CERTIFICATE # 6796 Pw-1,
ISSUED FEBRUARY 16th, 1977

STORAGE TANK SOLUTIONS

Christopher Jaques

CJA

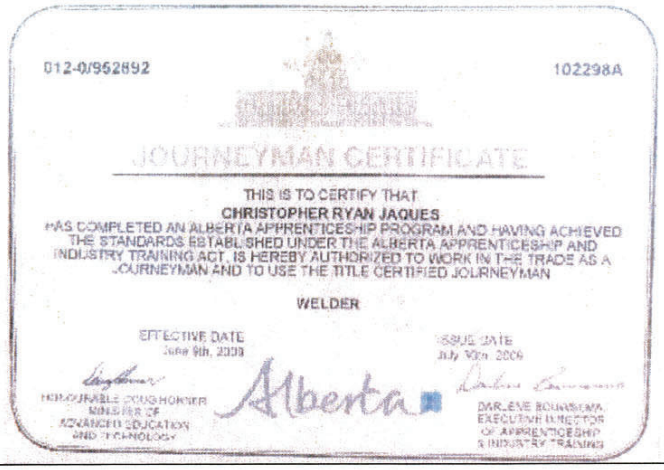

012-0/962892 102298A

JOURNEYMAN CERTIFICATE

THIS IS TO CERTIFY THAT
CHRISTOPHER RYAN JAQUES
HAS COMPLETED AN ALBERTA APPRENTICESHIP PROGRAM AND HAVING ACHIEVED THE STANDARDS ESTABLISHED UNDER THE ALBERTA APPRENTICESHIP AND INDUSTRY TRAINING ACT, IS HEREBY AUTHORIZED TO WORK IN THE TRADE AS A JOURNEYMAN AND TO USE THE TITLE CERTIFIED JOURNEYMAN

WELDER

EFFECTIVE DATE
June 9th, 2009

ISSUE DATE
July 10th, 2009

HONOURABLE DOUG HORNER
MINISTER OF
ADVANCED EDUCATION
AND TECHNOLOGY

Alberta

DARLENE BOUWSEMA
EXECUTIVE DIRECTOR
OF APPRENTICESHIP
& INDUSTRY TRAINING



STORAGE TANK SOLUTIONS

Corey Pomerleau

CPO

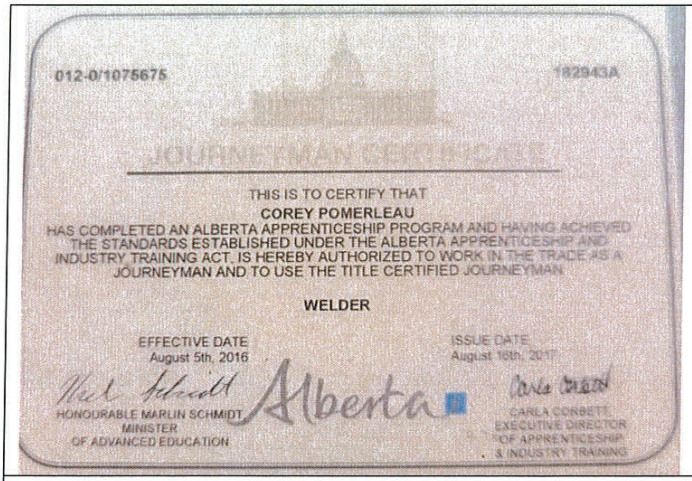

012-0/1075675 182943A

JOURNEYMAN CERTIFICATE

THIS IS TO CERTIFY THAT
COREY POMERLEAU
HAS COMPLETED AN ALBERTA APPRENTICESHIP PROGRAM AND HAVING ACHIEVED THE STANDARDS ESTABLISHED UNDER THE ALBERTA APPRENTICESHIP AND INDUSTRY TRAINING ACT, IS HEREBY AUTHORIZED TO WORK IN THE TRADE AS A JOURNEYMAN AND TO USE THE TITLE CERTIFIED JOURNEYMAN

WELDER

EFFECTIVE DATE
August 5th, 2016

ISSUE DATE
August 16th, 2017

HONOURABLE MARLIN SCHMIDT
MINISTER
OF ADVANCED EDUCATION

Alberta

CARLA CORBETT
EXECUTIVE DIRECTOR
OF APPRENTICESHIP
& INDUSTRY TRAINING

STORAGE TANK SOLUTIONS

Darren Genge

DGE

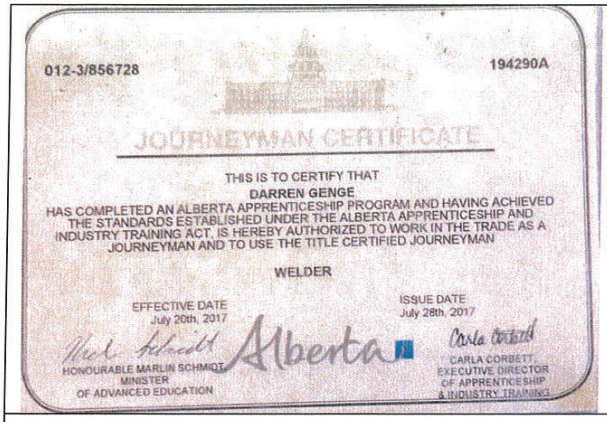

012-3/856728 194290A

JOURNEYMAN CERTIFICATE

THIS IS TO CERTIFY THAT
DARREN GENGE
HAS COMPLETED AN ALBERTA APPRENTICESHIP PROGRAM AND HAVING ACHIEVED THE STANDARDS ESTABLISHED UNDER THE ALBERTA APPRENTICESHIP AND INDUSTRY TRAINING ACT, IS HEREBY AUTHORIZED TO WORK IN THE TRADE AS A JOURNEYMAN AND TO USE THE TITLE CERTIFIED JOURNEYMAN

WELDER

EFFECTIVE DATE
July 20th, 2017

ISSUE DATE
July 28th, 2017

HONOURABLE MARLIN SCHMIDT
MINISTER
OF ADVANCED EDUCATION

Alberta

CARLA CORBETT
EXECUTIVE DIRECTOR
OF APPRENTICESHIP
& INDUSTRY TRAINING

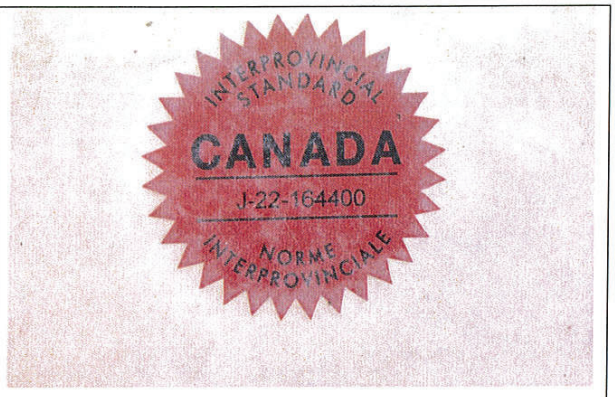

STORAGE TANK SOLUTIONS

Jeremy Ryz

JRY

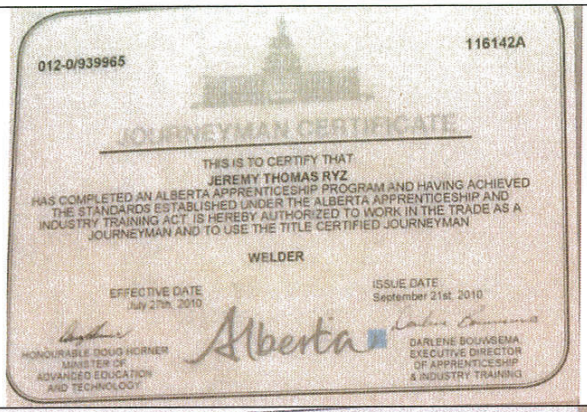

012-0/939965 116142A

JOURNEYMAN CERTIFICATE

THIS IS TO CERTIFY THAT
JEREMY THOMAS RYZ
HAS COMPLETED AN ALBERTA APPRENTICESHIP PROGRAM AND HAVING ACHIEVED THE STANDARDS ESTABLISHED UNDER THE ALBERTA APPRENTICESHIP AND INDUSTRY TRAINING ACT, IS HEREBY AUTHORIZED TO WORK IN THE TRADE AS A JOURNEYMAN AND TO USE THE TITLE CERTIFIED JOURNEYMAN

WELDER

EFFECTIVE DATE July 27th, 2010
ISSUE DATE September 21st, 2010

HONOURABLE DOUG HORNER MINISTER OF ADVANCED EDUCATION AND TECHNOLOGY

Alberta

DARLENE BOUWSEMA EXECUTIVE DIRECTOR OF APPRENTICESHIP & INDUSTRY TRAINING

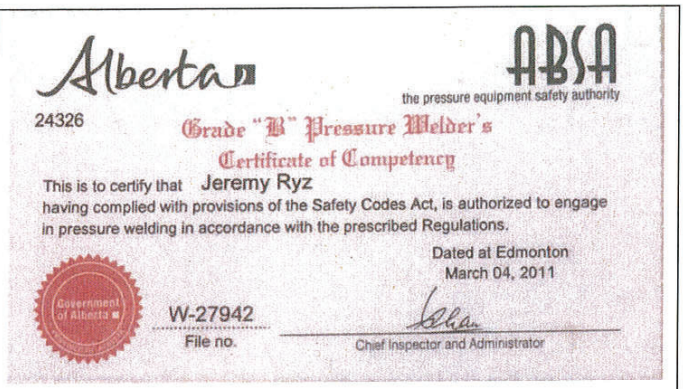

Alberta

ABSA
the pressure equipment safety authority

24326

Grade "B" Pressure Welder's
Certificate of Competency

This is to certify that Jeremy Ryz
having complied with provisions of the Safety Codes Act, is authorized to engage in pressure welding in accordance with the prescribed Regulations.

Dated at Edmonton
March 04, 2011

Government of Alberta

W-27942
File no.

Chief Inspector and Administrator



CWB

Welder Qualification
This card is valid only while employed by a CWB certified company

Test Centre Welder Test Record
Transferable Welder

Exp. Date: Sep 09, 2019

Name: JEREMY T. RYZ
Test Facility: Calgary Welder Test Centre
Thickness Range: 3mm & above

Material: Carbon Steel
Process: SMAW
Standard: CSA W47.1
Classification: S
Electrode: F4

Mode: MANUAL

Class: FLAT/HORIZONTAL/VERTICAL UP/OVERHEAD

See Reverse for Conditions

STORAGE TANK SOLUTIONS

Joseph Nederhoff

JNE

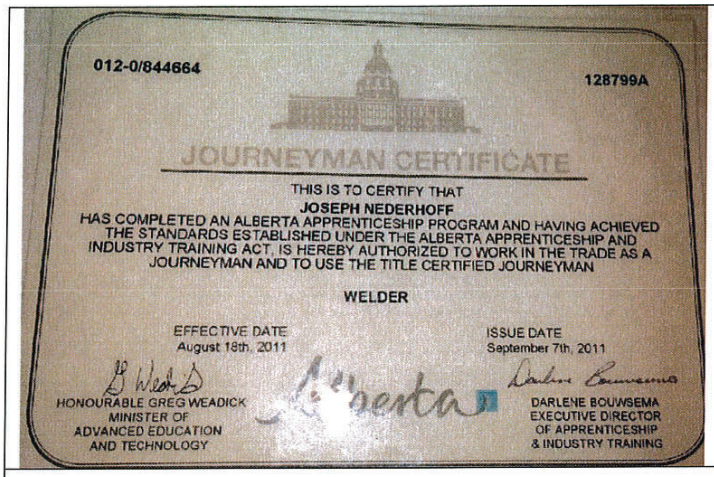

012-0/844664

128799A

JOURNEYMAN CERTIFICATE

THIS IS TO CERTIFY THAT
JOSEPH NEDERHOFF
HAS COMPLETED AN ALBERTA APPRENTICESHIP PROGRAM AND HAVING ACHIEVED THE STANDARDS ESTABLISHED UNDER THE ALBERTA APPRENTICESHIP AND INDUSTRY TRAINING ACT, IS HEREBY AUTHORIZED TO WORK IN THE TRADE AS A JOURNEYMAN AND TO USE THE TITLE CERTIFIED JOURNEYMAN

WELDER

EFFECTIVE DATE
August 18th, 2011

ISSUE DATE
September 7th, 2011

HONOURABLE GREG WEADICK
MINISTER OF
ADVANCED EDUCATION
AND TECHNOLOGY

DARLENE BOUWSEMA
EXECUTIVE DIRECTOR
OF APPRENTICESHIP
& INDUSTRY TRAINING

STORAGE TANK SOLUTIONS

Matt Mackenzie

MMA



012-0/891460 105092A

JOURNEYMAN CERTIFICATE

THIS IS TO CERTIFY THAT
MATT JOHN MACKENZIE
HAS COMPLETED AN ALBERTA APPRENTICESHIP PROGRAM AND HAVING ACHIEVED THE STANDARDS ESTABLISHED UNDER THE ALBERTA APPRENTICESHIP AND INDUSTRY TRAINING ACT, IS HEREBY AUTHORIZED TO WORK IN THE TRADE AS A JOURNEYMAN AND TO USE THE TITLE CERTIFIED JOURNEYMAN

WELDER

EFFECTIVE DATE
September 10th, 2009

ISSUE DATE
October 23rd, 2009

HONOURABLE DOUG HORNER
MINISTER OF ADVANCED EDUCATION AND TECHNOLOGY

Alberta Government

DARLENE BOUWSEMA, EXECUTIVE DIRECTOR OF APPRENTICESHIP & INDUSTRY TRAINING



STORAGE TANK SOLUTIONS

Shane Fossum

SFO

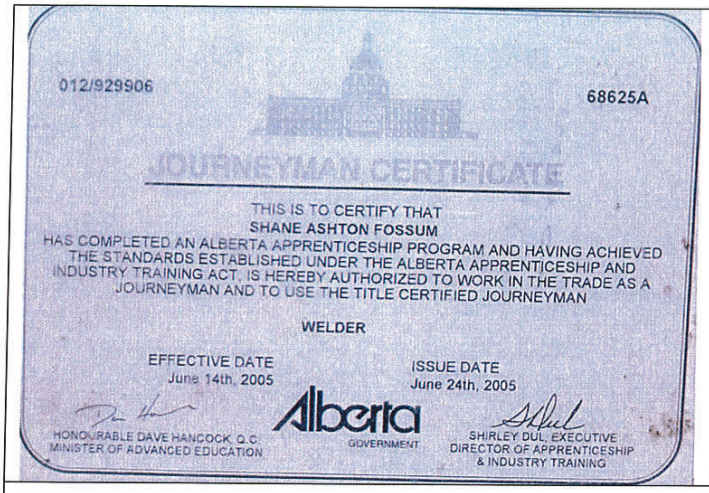

012/929906 68625A

JOURNEYMAN CERTIFICATE

THIS IS TO CERTIFY THAT
SHANE ASHTON FOSSUM
HAS COMPLETED AN ALBERTA APPRENTICESHIP PROGRAM AND HAVING ACHIEVED THE STANDARDS ESTABLISHED UNDER THE ALBERTA APPRENTICESHIP AND INDUSTRY TRAINING ACT, IS HEREBY AUTHORIZED TO WORK IN THE TRADE AS A JOURNEYMAN AND TO USE THE TITLE CERTIFIED JOURNEYMAN

WELDER

EFFECTIVE DATE
June 14th, 2005

ISSUE DATE
June 24th, 2005

HONOURABLE DAVE HANCOCK, Q.C.
MINISTER OF ADVANCED EDUCATION

Alberta GOVERNMENT

SHIRLEY DUL, EXECUTIVE
DIRECTOR OF APPRENTICESHIP
& INDUSTRY TRAINING

STORAGE TANK SOLUTIONS

Tyler Moncrieff

TMO

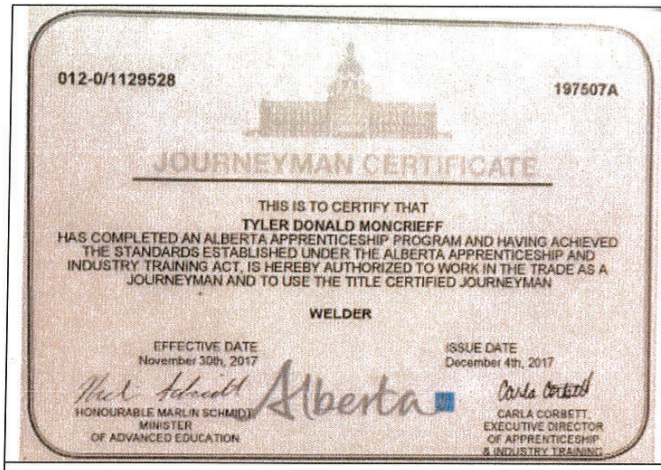

012-0/1129528 197507A

JOURNEYMAN CERTIFICATE

THIS IS TO CERTIFY THAT
TYLER DONALD MONCRIEFF
HAS COMPLETED AN ALBERTA APPRENTICESHIP PROGRAM AND HAVING ACHIEVED THE STANDARDS ESTABLISHED UNDER THE ALBERTA APPRENTICESHIP AND INDUSTRY TRAINING ACT, IS HEREBY AUTHORIZED TO WORK IN THE TRADE AS A JOURNEYMAN AND TO USE THE TITLE CERTIFIED JOURNEYMAN

WELDER

EFFECTIVE DATE
November 30th, 2017

ISSUE DATE
December 4th, 2017

HONOURABLE MARLIN SCHMIDT
MINISTER
OF ADVANCED EDUCATION

Alberta

CARLA CORBETT
EXECUTIVE DIRECTOR
OF APPRENTICESHIP
& INDUSTRY TRAINING

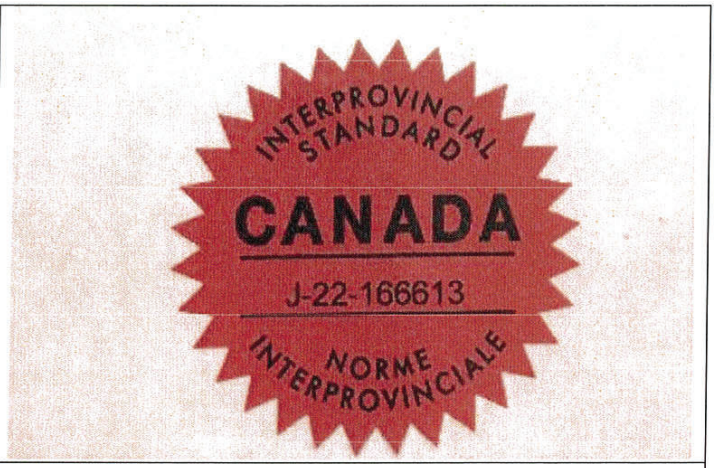

SECTION 4.0

Inspector Qualifications

STORAGE TANK SOLUTIONS

Sebastien Ouellet

SO

American Petroleum Institute
Individual Certification Programs: ICP™

API 653

Certification Number: 83440
Original Certification Date: August 31, 2018
Expiration Date: August 31, 2024

This is to verify that **Sebastien Ouellet**

has successfully met the requirements to be certified under the **API 653 Aboveground Storage Tank Inspector Certification Program**.

Cardholder Signature

Authorized Signature

Lindsay C Bolton



Certified Welding Inspector

LINDSAY CORA BOLTON REG # 9294

is a certified Level 2 welding inspector in accordance with the requirements of CSA W178.2 "Certification of Welding Inspectors".

Valid until August 31, 2023

This certification includes endorsements for the following code(s) and standard(s):

CSA W47.1-09/W59-03, ASME B31.3-2012, CSA Z662-2011, API 650-11th Edition, API 653-5th Edition

Six-year Re-certification Expiry August 31, 2026

NDTCB • OCEND

NRCAN NATIONAL NON-DESTRUCTIVE TESTING CERTIFICATION BODY
ORGANISME DE CERTIFICATION NATIONAL EN ESSAIS NON DESTRUCTIFS DE RNCAN

Name / Nom Lindsay C. Bolton
Reg. Number / No. matricule 15384
Issue Date / Date d'émission 2018/02/05
Corrective lenses for vision required / Verres correctifs pour la vision sont nécessaires Yes / Oui
Colour vision limitation / Limitation de la vision des couleurs No / Non

This certification card does not identify that the stated individual is an employee or representative of Natural Resources Canada, Government of Canada.

Cette carte de certification n'identifie pas l'individu d'être un employé ou un représentant de Ressources naturelles Canada, Gouvernement du Canada.

Canada

NDTCB • OCEND

NRCAN NATIONAL NON-DESTRUCTIVE TESTING CERTIFICATION BODY
ORGANISME DE CERTIFICATION NATIONAL EN ESSAIS NON DESTRUCTIFS DE RNCAN

Name / Nom Lindsay Bolton
Reg. Number / No. matricule 15384
Issue Date / Date d'émission 2018/04/18
Corrective lenses for vision required / Verres correctifs pour la vision sont nécessaires Yes / Oui
Colour vision limitation / Limitation de la vision des couleurs No / Non

This certification card does not identify that the stated individual is an employee or representative of Natural Resources Canada, Government of Canada.

Cette carte de certification n'identifie pas l'individu d'être un employé ou un représentant de Ressources naturelles Canada, Gouvernement du Canada.

Canada

CWB WELD SPECIALIST
WSM100381

This is to certify that
Lindsay Cora Bolton
Full first, middle, Full last
has completed the
OSSA Basic Safety Orientation (BSO)
Date: 17 - 08 - 2015 LP # 008
Day / Month / Year
Instructor signature & Number: I43
04005

Alberta Construction Safety Association
This is to certify that
LINDSAY BOLTON
met the requirements and has successfully completed the
Construction Safety Training System
"0313-09" includes Generic WHMIS
Reg. # 11237572
Issue Date: 10 / 03 / 2012
Month Day Year
Art Riendeau Program Coordinator, ACSA

Lindsay C Bolton



ENERGY SAFETY CANADA

Lindsay Bolton

CONFINED SPACE ENTRY AND MONITOR

COMPLETED: 20 May 2021

EXPIRES: 20 May 2024

INSTRUCTOR:

2114586

NZSV4-Y73SP-8EHFK-TRLFJ

ENERGY SAFETY CANADA

LINDSAY BOLTON

FALL PROTECTION

COMPLETED: 16 MAR 2021

EXPIRES: 16 MAR 2024

INSTRUCTOR:

2788918

L2XSS-86N82-WKNIB-NOPN7

ENFORM

Lindsay C. BOLTON

Student ID No: 2954526

H_2S Alive®

Completed: 12 Dec 2017

Expires: 12 Dec 2020

St. John Ambulance Saint-Jean

St. John Ambulance certifies that

LINDSAY C BOLTON

has completed

Standard First Aid - Level C CPR/AED

Expiry Date: Jan 31, 2021

Reference #: 0016594588

Issued By: Alberta Council

CANADIAN QUALITY TRAINING (CQT)

CERTIFICATE OF TRAINING

AWARDED TO

Lindsay Bolton

HAVING SUCCESSULY COMPLETED A 30 HOUR COURSE IN PRESSURE EQUIPMENT QUALITY CONTROL

ISSUED ON THE 06th DAY OF NOVEMBER 2019

Expires on: Nov. 05, 2022

Credit Hours 30

EXAM Code: EE00146002

Trainer: Gordon Canning

SEE REVERSE FOR TRAINING TOPICS

CARD No. 00511

CANADIAN QUALITY TRAINING (CQT)

CERTIFICATE OF TRAINING

AWARDED TO

Lindsay Bolton

HAVING SUCCESSULY COMPLETED A 30 HOUR COURSE IN PRESSURE EQUIPMENT QUALITY CONTROL

ISSUED ON THE 23rd DAY OF OCTOBER 2019

Expires on: October 22, 2022

Credit Hours 30

EXAM Code: EE00145998

Trainer: Gordon Canning

SEE REVERSE FOR TRAINING TOPICS

CARD No. 00507

Lindsay C Bolton

LCB



GLOBAL HazMat Inc

2529912

WHMIS 2015
Course

Midnight Sun Inspection Services Inc.
Company

Lindsay Bolton
Name

30 May 2019
Date Issued

N/A
Expiration Date

Address: RR2 Site10 Box13
Thorsby
Alberta
T0C 2P0

Employer Signature

1682737

WheelsOn

CERTIFICATE OF TRAINING
TDG Clear Language Training

Lindsay Bolton

Has completed training relating to the handling/offering for transportation/transporting dangerous goods, as per reverse, in accordance with the Transportation of Dangerous Goods Act and Regulations (1992).

Company: Midnight Sun Inspection Services In
Address: RR2 Site10 Box13
City: Thorsby
Province: Alberta

Date of Issue 08 Mar 2018

Employer Signature

CICT

This certifies that:

TP# 2134

Lindsay Bolton

has successfully completed a course in

☑ Practical Completed

Bear Awareness Training

Aug 18 2015
Date Completed

Instructor

NOTE: This certificate expires THREE YEARS from the date of issue.

CERTIFICATE NUMBER
5002967

your body Mechanics in Motion

THIS CERTIFIES THAT
Lindsay Bolton

HAS SATISFACTORILY COMPLETED

Your Body - Mechanics in Motion
TRAINING COURSE

ISSUED BY

16-May-06
COMPLETION DATE

CWB Form 455E/2021-1

cwbgroup

Welding Inspector Visual Acuity Record

SECTION 1: **IDENTIFICATION OF APPLICANT (Please print):**

Applicant's Name: Lindsay Bolton Registration #: 9294

☐ Application for Certification ☒ Renewal of Certification

*Email: LINDSAY_BOLTON@HOTMAIL.COM

*I understand that all official communication moving forward will be sent to me via electronic mail (email) and it is my responsibility to advise the CWB Group of any changes in my email address. L.B. initials

SECTION 2: **VISION REQUIREMENTS:**

Evidence of satisfactory vision, as determined by a medical professional, must be provided by all new applicants and certified inspectors who are renewing their certification. The vision examination must have been performed no more than 12 months from the date of receipt of this form by the CWB.

Near vision acuity shall permit reading a minimum of Jaeger number 1 or Times Roman N 4.5 or equivalent letters (having a height of 1.6 mm) at not less than 30 cm with one or both eyes, either corrected or uncorrected.

Submission of a prescription for corrective lenses in lieu of this form is not acceptable.

SECTION 3: **DECLARATION OF EXAMINER:**

This is to certify that I, Dr. J. Chan Tapoveti (Examiner's Name (please print)) administered a test of visual acuity to Lindsay Bolton (Applicant's Name (please print)) on 07/14/2021 (Examination Date (MM / DD / YYYY))

I also certify that the applicant: (check applicable box)

Meets the vision requirements in Section 2 without correction ☒

Meets the vision requirements in Section 2 with correction ☐

Does not meet the vision requirements in Section 2 ☐

Check one of the following:

☒ Optometrist ☐ Ophthalmologist ☐ Medical Doctor ☐ Registered Nurse

Address: Wal-Mart Vision Centre 3657
5302 Discovery Way
Leduc, AB T9E 8L7
Ph: (780) 980-0670

Signature of Examiner: [signature] Tel. #: 07/14/2021

FOR CWB USE ONLY:

Reviewed by: _____ Date: _____

PLEASE ATTACH COMPLETED RECORD TO YOUR APPLICATION AND SEND TO THE CWB.
RETAIN A COPY FOR YOUR FILE.

CUSTOM PIPE SERVICES INC.

www.cpsinspection.com
info@cpsinspection.com
Ph: 780-986-5066
Fx: 780-986-8520

Adele Kezma – Technical Certification

CGSB/ NRCan – NDTCB (Front)



CGSB/ NRCan – NDTCB (Back)

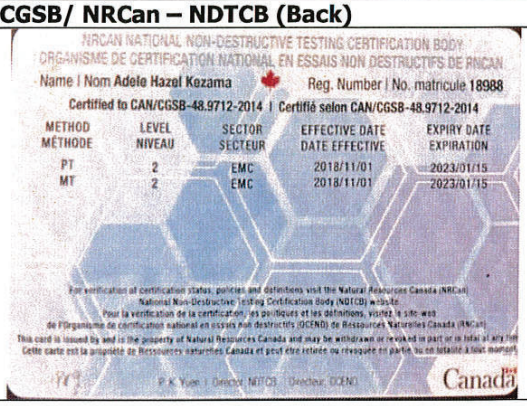

CGSB/ NRCan – NDTCB XRF (Front)



CGSB/ NRCan – NDTCB XRF (Back)

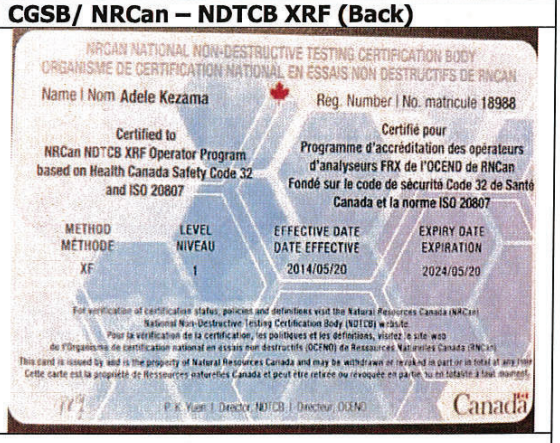

CNSC- CEDO



CUSTOM PIPE SERVICES INC.

www.cpsinspection.com
info@cpsinspection.com
Ph: 780-986-5066
Fx: 780-986-8520

CPS Inspection SNT-TC-1A Front

CUSTOM PIPE SERVICES INC.

Issue Date: July 19, 2021

This card certifies that **Adele Kezma**
is certified in accordance with Custom Pipe Services Inc.
Written Practice WP-SNT Rev 13 and SNT-TC-1A.
Edition 2006 & 2020.

Balwinder Singh.
ASNT NDT Level III# 173719

CPS Inspection SNT-TC-1A -Back

Method	Level	Sector	Expiry Date
MT	II	EMC	15/7/2024
PT	II	EMC	15/7/2024
RT	II	EMC	19/7/2024

This certification card is property of Custom Pipe Services Inc. and the certification is only valid while employed at Custom Pipe Services Inc.

CUSTOM PIPE SERVICES INC.
www.cpsinspection.com
info@cpsinspection.com
Ph: 780-986-5066
Fx: 780-986-8520

Adele Kezma

INITIAL CERTIFICATION DATE: July 15, 2021

This is to certify that Adele Kezma has successfully met the initial certification requirements of Custom Pipe Services Inc. Written Practice, in accordance with SNT-TC-1A of ASNT.

Details of his training and examination records duly endorsed by NDE Level III were reviewed and are attached with this certificate.

The requirements for certification have been met for the following methods:

Method	NDE Level	Grade	Method Hours	NDE Hours	Certified By	Certification Date	Expiry Date
MT	II	*	3500 +	9500 +	Balwinder Singh	July 15, 2021	July 15, 2024
PT	II	*	3500 +	9500 +	Balwinder Singh	July 15, 2021	July 15, 2024
RT	II	*	2000+	9500 +	Balwinder Singh	July 19, 2021	July 19, 2024

* CGSB certification is equivalent to an SNT grade level of 80%
** ASNT certification is equivalent to an SNT grade level of 80%
*** PCN certification is equivalent to an SNT grade level of 80%

CUSTOM PIPE SERVICES INC.

www.cpsinspection.com
info@cpsinspection.com
Ph: 780-986-5066
Fx: 780-986-8520

Name	Adele Kezma			
Employer	Custom Pipe Services Inc.			
NDT Method	Magnetic Particle Testing	**Level II- EMC**		
Qualification	**Academic** High School		**Experience in Method** 3500+ Hours	
Training Imparted (NAIT)	**Theory & Practical** Level 1& 2 MT Completed Jan 30, 2020 (80 Hrs)			
Result of Examination	**General:** ≥ 80%	**Specific:** 80%	**Practical:** 96%	**Average:** 85%
Vision Test	**Near Vision** J1-Normal ,	**Color Contrast Differentiation** Normal		**Limitation** None
Date of Certification	July 15, 2021	**Date of Recertification**		July 15, 2024
Certification By				
Name	**Level/Designation**	**Signature**	**Date**	**Company**
Balwinder Singh	NDT Level III		July 15, 2021	Custom Pipe Services Inc.

Acting as the company Senior NDE Level III for Custom Pipe Services Inc., I affirm that the above information is true and accurate to the best of my knowledge and the technician is certified to work at qualifications and levels indicated above.

Balwinder Singh		July 15, 2021
Verified By	**Signature**	**Date**

CUSTOM PIPE SERVICES INC.

www.cpsinspection.com
info@cpsinspection.com
Ph: 780-986-5066
Fx: 780-986-8520

Name	Adele Kezma			
Employer	Custom Pipe Services Inc.			
NDT Method	Penetrant Testing	**Level II- EMC**		
Qualification	**Academic** High School		**Experience in Method** 3500+ Hours	
Training Imparted (NAIT)	**Theory & Practical** Level 1& 2 PT Completed Jan 30, 2020 (80 Hrs)			
Result of Examination	**General:** 82%	**Specific:** 95%	**Practical:** 96%	**Average:** 91%
Vision Test	**Near Vision** J1-Normal ,	**Color Contrast Differentiation** Normal		**Limitation** None
Date of Certification	July 15, 2021	**Date of Recertification**		July 15, 2024

Certification By				
Name	**Level/Designation**	**Signature**	**Date**	**Company**
Balwinder Singh	NDT Level III		July 15, 2021	Custom Pipe Services Inc.

Acting as the company Senior NDE Level III for Custom Pipe Services Inc., I affirm that the above information is true and accurate to the best of my knowledge and the technician is certified to work at qualifications and levels indicated above.

Balwinder Singh		July 15, 2021
Verified By	**Signature**	**Date**

CUSTOM PIPE SERVICES INC.

www.cpsinspection.com
info@cpsinspection.com
Ph: 780-986-5066
Fx: 780-986-8520

Name	Adele Kezma			
Employer	Custom Pipe Services Inc.			
NDT Method	Radiographic Testing	**Level II- EMC**		
Qualification	**Academic** High School		**Experience in Method** 2000+ Hours	
Training Imparted (CINDE)	**Theory & Practical** November 14-15, 2019 (12 Hrs)			
Result of Examination	**General:** ≥ 80%	**Specific:** 85%	**Practical:** 90%	**Average:** 86%
Vision Test	**Near Vision** J1-Normal ,	**Color Contrast Differentiation** Normal		**Limitation** None
Date of Certification	July 19, 2021	**Date of Recertification**		July 19, 2024
Certification By				
Name	**Level/Designation**	**Signature**	**Date**	**Company**
Balwinder Singh	NDT Level III		July 19, 2021	Custom Pipe Services Inc.

Acting as the company Senior NDE Level III for Custom Pipe Services Inc., I affirm that the above information is true and accurate to the best of my knowledge and the technician is certified to work at qualifications and levels indicated above.

Balwinder Singh		July 19, 2021
Verified By	**Signature**	**Date**

CUSTOM PIPE SERVICES INC.
www.cpsinspection.com
info@cpsinspection.com
Ph: 780-986-5066
Fx: 780-986-8520

Adele Kezma – Annual Vision Examiantion

ANNUAL VISION EXAMINATION

Employee Name: Adele Kezma

Examination Date: July 1, 2021

Expiry Date: July 1, 2022

NEAR VISION ACUITY

Near vision acuity shall ensure natural or corrected near vision acuity in at least one eye such that the employee is capable of reading a minimum of Jaeger Number 1. Times Roman N 4.5, or equivalent type and size of at not less than 30 cm. The ability to perceive an Ortho-Rater minimum of 8 or similar test pattern is also acceptable. This shall be administered annually.

I confirm that the employee:

- [ ] Meets the requirement without correction
- [X] Meets the requirement with correction
- [ ] Does not meet the requirement

COLOUR CONTRAST DIFFERENTIATION

Colour contrast differentiation shall demonstrate the capability of distinguishing and differentiating contrast among colours or shades of gray used in the method as determined by the employer. This shall be administered upon initial certification and at five year intervals thereafter.

I confirm that the employee can distinguish contrast between the colours used in the NDT method(s) concerned:

- [X] Meets the requirement
- [ ] Does not meet the requirement

The above mention annual vision examination is in accordance with ASNT Document: SNT-TC-1A (2006 and 2020 Editions) and CGSB Standard: CAN/CGSB-48.9712-2014/ISO9712:2012.

EXAMINER

Examiner's Name: Balwinder Singh **Examiner's Signature:** BSingh

Appointment/Title: Quality Assurance/ASNT NDT Level III **Examination Date:** July 1, 2021

Form-4.5 Rev.2

CUSTOM PIPE SERVICES INC.
www.cpsinspection.com
info@cpsinspection.com
Ph: 780-986-5066
Fx: 780-986-8520

Adele Kezma – Safety Certifications

CSTS	Elevated Working Platform
Alberta Construction Safety Association This is to certify that ADELE KEZAMA met the requirements and has successfully completed the Construction Safety Training System "CSTS-09" includes Generic WHMIS Reg. # 11748765 Issue Date: 06 / 30 / 2015 (Month / Day / Year) Brent Schneider Program Coordinator, ACSA	
First Aid	**FORK LIFT OPERATOR**
St. John Ambulance Alberta Council INTERIM AWARD Congratulations to Adele Kezama on the successful completion of SFC I-Q0612 (Instructor) AUG - 2 2018 (Date) 8354 (Course No:) * Interim Award valid for two months – Certificate will follow.	

CUSTOM PIPE SERVICES INC.

www.cpsinspection.com
info@cpsinspection.com
Ph: 780-986-5066
Fx: 780-986-8520

Gordon Thomas – Technical Certification

CGSB/ NRCan – NDTCB (Front)

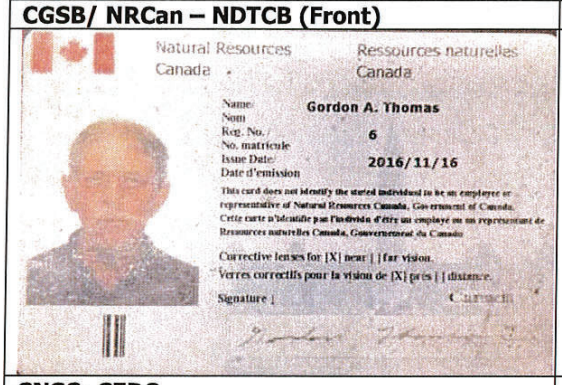

CGSB/ NRCan – NDTCB (Back)

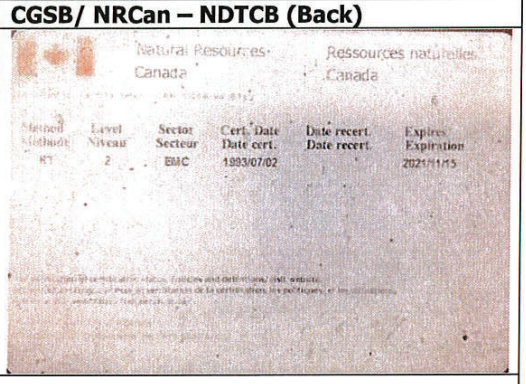

CNSC- CEDO

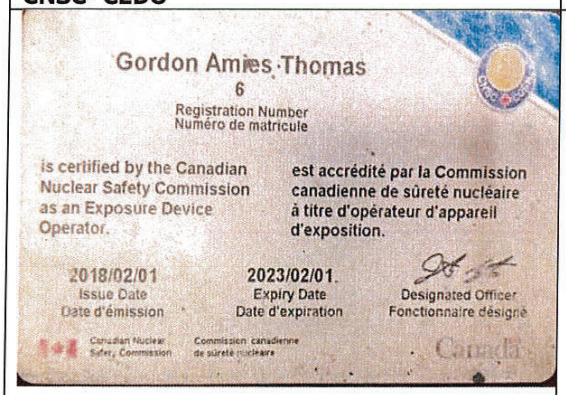

CPS Inspection SNT-TC-1A Front

CUSTOM PIPE SERVICES INC.

Issue Date: July 15, 2021

This card certifies that Gordon Thomas is certified in accordance with Custom Pipe Services Inc. Written Practice WP-SNT Rev 13 and SNT-TC-1A, Edition 2006 & 2020.

Balwinder Singh,
ASNT NDT Level III# 173719

CPS Inspection SNT-TC-1A -Back

Method	Level	Sector	Expiry Date
RT	II	EMC	15/7/2024

This certfication card is property of Custom Pipe Services Inc. and the certification is only valid while employed at Custom Pipe Services Inc.

CUSTOM PIPE SERVICES INC.
www.cpsinspection.com
info@cpsinspection.com
Ph: 780-986-5066
Fx: 780-986-8520

Gordon Thomas

INITIAL CERTIFICATION DATE: July 15, 2021

This is to certify that Gordon Thomas has successfully met the initial certification requirements of Custom Pipe Services Inc. Written Practice, in accordance with SNT-TC-1A of ASNT.

Details of his training and examination records duly endorsed by NDE Level III were reviewed and are attached with this certificate.

The requirements for certification have been met for the following methods:

Method	NDE Level	Grade	Method Hours	NDE Hours	Certified By	Certification Date	Expiry Date
RT	II	*	25000+	40000+	Balwinder Singh	July15, 2021	July 15, 2024

* CGSB certification is equivalent to an SNT grade level of 80%
** ASNT certification is equivalent to an SNT grade level of 80%
*** PCN certification is equivalent to an SNT grade level of 80%

CUSTOM PIPE SERVICES INC.

www.cpsinspection.com
info@cpsinspection.com
Ph: 780-986-5066
Fx: 780-986-8520

Name	Gordon Thomas			
Employer	Custom Pipe Services Inc.			
NDT Method	Radiographic Testing	**Level II- EMC**		
Qualification	**Academic** High School		**Experience in Method** 25000+Hours	
Training Imparted (Rivest Testing)	**Theory & Practical** August 1980 (80 Hrs)			
Result of Examination	**General:** ≥ 80%	**Specific:** 95%	**Practical:** 96%	**Average:** 90%
Vision Test	**Near Vision** J1-Normal ,	**Color Contrast Differentiation** Normal		**Limitation** None
Date of Certification	July 15, 2021	**Date of Recertification**		July 15, 2024

Certification By				
Name	**Level/Designation**	**Signature**	**Date**	**Company**
Balwinder Singh	NDT Level III		July 15, 2021	Custom Pipe Services Inc.

Acting as the company Senior NDE Level III for Custom Pipe Services Inc., I affirm that the above information is true and accurate to the best of my knowledge and the technician is certified to work at qualifications and levels indicated above.

Balwinder Singh		July 15, 2021
Verified By	**Signature**	**Date**

CUSTOM PIPE SERVICES INC.
www.cpsinspection.com
info@cpsinspection.com
Ph: 780-986-5066
Fx: 780-986-8520

Gordon Thomas– Annual Vision Examiantion

ANNUAL VISION EXAMINATION

Employee Name: Gordon Thomas

Examination Date: July 15. 2021

Expiry Date: July 15. 2022

NEAR VISION ACUITY

Near vision acuity shall ensure natural or corrected near vision acuity in at least one eye such that the employee is capable of reading a minimum of Jaeger Number 1, Times Roman N 4.5, or equivalent type and size of at not less than 30 cm. The ability to perceive an Ortho-Rater minimum of 8 or similar test pattern is also acceptable. This shall be administered annually.

I confirm that the employee:

- [ ] Meets the requirement without correction
- [X] Meets the requirement with correction
- [ ] Does not meet the requirement

COLOUR CONTRAST DIFFERENTIATION

Colour contrast differentiation shall demonstrate the capability of distinguishing and differentiating contrast among colours or shades of gray used in the method as determined by the employer. This shall be administered upon initial certification and at five year intervals thereafter.

I confirm that the employee can distinguish contrast between the colours used in the NDT method(s) concerned:

- [X] Meets the requirement
- [ ] Does not meet the requirement

The above mention annual vision examination is in accordance with ASNT Document: SNT-TC-1A (2006 and 2020 Editions) and CGSB Standard: CAN/CGSB-48.9712-2014/ISO9712:2012.

EXAMINER

Examiner's Name: Balwinder Singh **Examiner's Signature:** 

Appointment/Title: Quality Assurance/ASNT NDT Level III **Examination Date:** July 15. 2021

Form-4.5 Rev.2

CUSTOM PIPE SERVICES INC.
www.cpsinspection.com
info@cpsinspection.com
Ph: 780-986-5066
Fx: 780-986-8520

Gordan Thomas – Safety Certifications

CSTS	Elevated Working Platform
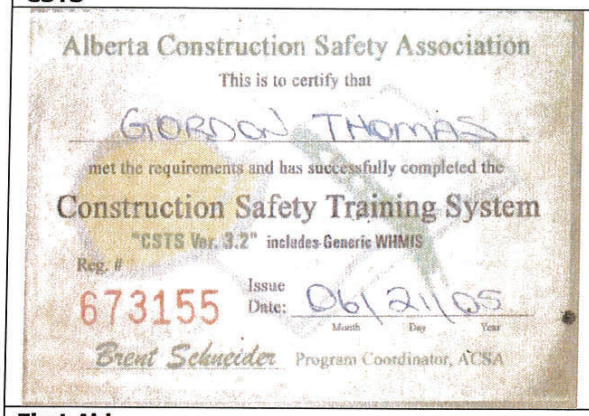 Alberta Construction Safety Association This is to certify that GIORDAN THOMAS met the requirements and has successfully completed the Construction Safety Training System "CSTS Ver. 3.2" includes Generic WHMIS Reg. # 673155 Issue Date: 06/21/05 Month Day Year Brent Schneider Program Coordinator, ACSA	
First Aid	**FORK LIFT OPERATOR**

SECTION 5.0

WPS

WELDING PROCEDURE SPECIFICATION NO.: STS-1 (Rev.0)

WELDING PROCEDURE QUALIFICATION RECORD NO.(S): STS-1-1 (Rev.0), STS-1-2 (Rev.0), STS-1-3 (Rev.0), WFL-1-1

QUALIFIED IN ACCORDANCE WITH ASME SECTION IX FOR

Base Metal (Typical): P1 Groups 1 & 2 to P1 Groups 1 & 2
(SA 333 Gr. 6, SA 350 Gr. LF2, SA 420 Gr. WPL6, SA 516 Gr. 70 etc.)
Process(es): SMAW **Weld Types:** GROOVE & FILLET
Position: ALL POSITIONS **Diameter:** ALL DIAMETERS
Filler Metal: E6010, E7018-1

BASE METAL CONDITIONS & GROOVE THICKNESS RANGE QUALIFIED:

NOTCH TOUGHNESS APPLICATIONS TO -50 °F AS WELDED
BASE METAL THICKNESS RANGE 0.116 to 1.750 in. inclusive

COMBINED DEPOSITED WELD METAL THICKNESS
ASME IX 1.750 in. maximum
API 650, 620, 12D, 12F 1.750 in. maximum

PROVINCIAL REGISTRATION

This WPS was prepared to the requirements of ASME Section IX 2017 and includes some of the additional requirements of the construction codes listed. The application of this WPS is outside the work scope of SGS Canada Inc.

Prepared By: Sara Van Roestel
Signed: Sara Van Roestel
Date: April 8, 2019

Reviewed By: Keelan Wolfe, C.E.T.
Signed: Keelan Wolfe
Date: April 8, 2019

(File E19-00104)

QW-482 WELDING PROCEDURE SPECIFICATION (WPS)

Organization Name: Storage Tank Solutions Inc.
Welding Procedure Specification No.: STS-1 (Rev.0) Date: April 8, 2019
Revision(s): Rev. 0: Essential - Addition of PQR No.'s STS-1-1 (Rev.0), STS-1-2 (Rev.0), and STS-1-3 (Rev.0). Updated to current code requirements. WPS No. formerly WFL-1 (Rev.1).
Supporting PQR No.(s): STS-1-1 (Rev.0), STS-1-2 (Rev.0), STS-1-3 (Rev.0), WFL-1-1
Welding Process(es): Shielded Metal Arc Welding (SMAW)

JOINTS (QW-402)

Joint Design: All ASME groove & fillet, reference construction drawing for joint details. Where joint details are not specified, refer to figures 1 to 15 attached
Root Opening: As per attached typical groove designs, see figures 1 to 15 attached
Backing: With or without Retainers: With or without

BASE METALS (QW-403)

P-Number: P1 Groups 1 & 2 To P-Number: P1 Groups 1 & 2
Thickness Range: Groove: 0.116 to 1.750 in. inclusive
Fillet: 0.116 to 8.00 in. inclusive
Pipe Diameter Ranges: Groove: All diameters
Fillet: All diameters
Deposited Weld Metal (Per Pass): E6010: 0.188 in. maximum
E7018-1: 0.188 in. maximum

FILLER METALS (QW-404)

	SMAW	SMAW
Specification No. (SFA)	SFA 5.1	SFA 5.1
AWS No. (Class)	E6010	E7018-1
F-No.	F3	F4
A-No.	A1	A1
Diameter	3/32 to 3/16 in. inclusive	3/32 to 1/4 in. inclusive
Deposited Weld Metal Thickness Range:		
Groove	0.188 in. max. (1)	1.750 in. max. (1)
Fillet	All fillet sizes (2)	All fillet sizes

(1) Deposited weld metal thickness shall not exceed 1.750 in.
(2) E6010 is restricted to a single pass for fillet weld applications requiring an MDMT less than -20 °F.

POSITION (QW-405)

Position of Groove: All positions Position of Fillet: All positions
Weld Progression: E6010: Vertical up or down E7018-1: Vertical up

PREHEAT (QW-406)

Preheat Temperature (Minimum): See attached preheat sheet prior to welding.
Interpass Temperature (Maximum): 500 °F
Preheat Maintenance: See attached preheat sheet prior to welding. Preheat maintenance is not required if welding is interrupted or after the completion of welding unless required by the code of construction.

POSTWELD HEAT TREATMENT (QW-407)

With or Without: Without
Temperature Range: N/A Time Range: N/A

ELECTRICAL CHARACTERISTICS (QW-409)

Current: Direct Polarity: Reverse, electrode positive
Amps: See Table 1 Volts: See Table 1
Maximum Heat Input

Base Metal Thickness Range	E6010 Electrode	E7018-1 Electrode
0.116 - 0.499 in.	29,211 J/in.	44,000 J/in.
0.500 - 0.624 in.	45,625 J/in.	58,667 J/in.
0.625 and greater	51,022 J/in.	63,360 J/in.

TECHNIQUE (QW-410)

Manual or Automatic: Manual
String or Weave: E6010: String E7018-1: String or weave
Initial & Interpass Cleaning: Brushing, chipping or grinding as required
Method of Back Gouging: Air carbon arc, back-grind as required
Multiple or Single Pass Per Side: Multiple
Peening: Not permitted
Use of Thermal Process: N/A
Travel Speed: See Table 1

TABLE 1 - WELDING PARAMETERS

Process	Filler Metal	Diameter in.	Current Type & Polarity	Amperage Range	Voltage Range	Travel Speed i.p.m.
SMAW	E6010	3/32	DCRP	50 - 100	18 - 32	1.1 - 12
SMAW	E6010	1/8	DCRP	60 - 140	19 - 32	1.4 - 14
SMAW	E6010	5/32	DCRP	115 - 250	21 - 32	2.9 - 16
SMAW	E6010	3/16	DCRP	120 - 300	21 - 32	3.0 - 18
SMAW	E7018-1	3/32	DCRP	60 - 110	18 - 26	1.1 - 12
SMAW	E7018-1	1/8	DCRP	90 - 170	19 - 28	1.7 - 14
SMAW	E7018-1	5/32	DCRP	110 - 220	20 - 30	2.1 - 16
SMAW	E7018-1	3/16	DCRP	160 - 320	20 - 30	3.1 - 20
SMAW	E7018-1	7/32	DCRP	240 - 340	20 - 32	4.6 - 22
SMAW	E7018-1	1/4	DCRP	275 - 360	21 - 32	5.5 - 22

Note: Welding parameters shall be adjusted to ensure that the maximum heat input value specified in QW-409 above is not exceeded.
Heat Input (joules per inch) = (Amperage X Voltage X 60) / Travel Speed (i.p.m.)

TYPICAL JOINT DESIGNS

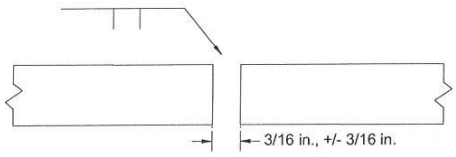

Figure 1
Single Square Butt

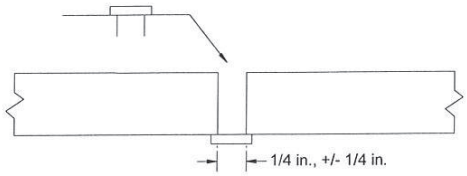

Figure 2
Single Square Butt with Backing Strip

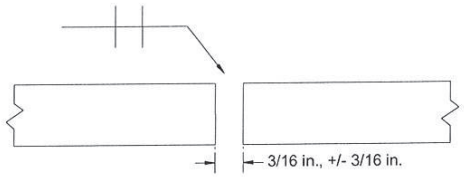

Figure 3
Double Square Butt

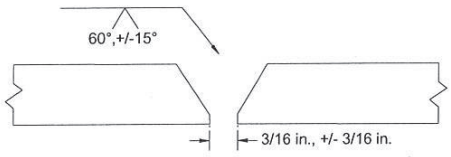

Figure 4
Single Vee Butt

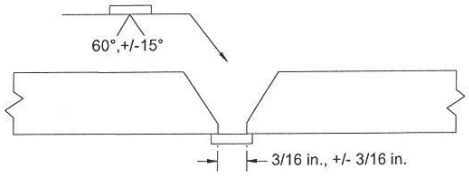

Figure 5
Single Vee Butt with Backing Strip

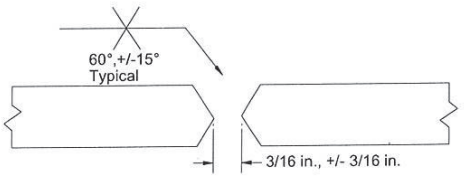

Figure 6
Double Vee Butt

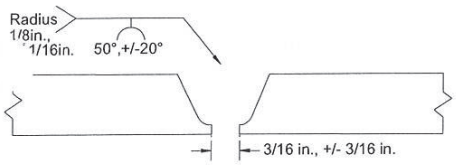

Figure 7
Single U Butt

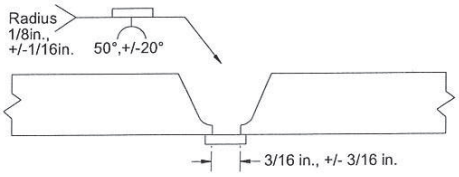

Figure 8
Single U Butt with Backing Strip

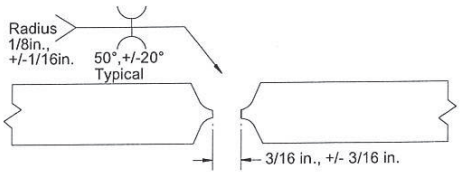

Figure 9
Double U Butt

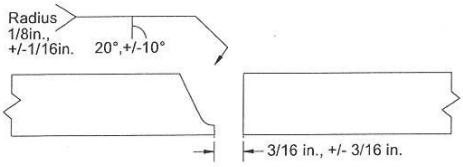

Figure 10
Single J Butt

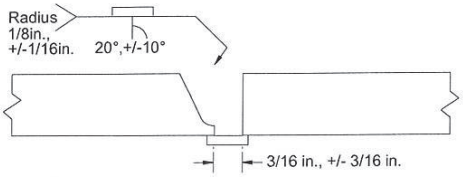

Figure 11
Single J Butt with Backing Strip

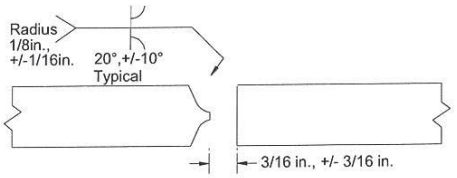

Figure 12
Double J Butt

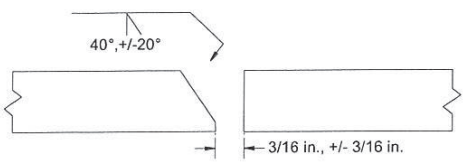

Figure 13
ıgle Bevel Butt

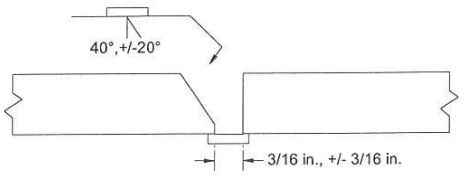

Figure 14
Single Bevel Butt with Backing Strip

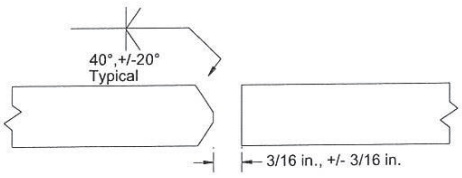

Figure 15
Double Bevel Butt

Additional joint designs and internal misalignment on circumferential welds shall be within the dimensional limits stated on the approved construction drawing and/or the engineering design.

PREHEAT

P-No. 1

LARGE, WELDED, LOW-PRESSURE STORAGE TANKS IN ACCORDANCE WITH API 620 Twelfth Edition

THICKNESS OF THE THICKER PLATE	MINIMUM PREHEAT TEMPERATURE	
	P1 Group 1	P1 Group 2
0 to 1.25 in.	32 °F	50 °F
Greater than 1.25 in to 1.50 in.	200 °F	200 °F
Greater than 1.50 in.	200 °F	200 °F

- No welding of any kind shall be performed when the surfaces to be welded are wet with rain snow or ice; when rain or snow is falling on such surfaces; or during periods of high winds unless the welder and the work are properly shielded.
- Preheat shall be applied when the metal temperature is below the temperature required by Table 6-2 (summarized above). In that case the base metal shall be heated to at least the temperature indicated within 3 in. of the place where welding is to be started and maintained 3 in. ahead of the arc. Material P-Number and Group Number shall be as designated in ASME IX or in API 630 6.7.2 for materials not listed in ASME IX.

WELDED TANKS FOR OIL STORAGE IN ACCORDANCE WITH API 650 Twelfth Edition

THICKNESS OF THE THICKER PLATE	MINIMUM PREHEAT TEMPERATURE	
	Material Group I, II, III, and IIIA	Material Group IV, IVA, V & VI
0 to 1.25 in.	32 °F	50 °F
Greater than 1.25 in to 1.50 in.	200 °F	200 °F
Greater than 1.50 in.	200 °F	200 °F

- No welding of any kind shall be performed when the surfaces to be welded are wet with rain snow or ice; when rain or snow is falling on such surfaces; or during periods of high winds unless the welder and the work are properly shielded.
- Preheat shall be applied when metal temperature is below the temperature required by table 7-1 (summarized above) for the base metals being joined, and metal shall be heated to at least the temperature indicated within 3 in. of the place where welding is to be started and maintained 3 in. ahead of the arc. Material Groups shall be as designated in Table 4.4

WELDED STORAGE TANKS IN ACCORDANCE WITH API 12D Eleventh Edition and API 12F Twelfth Edition

THICKNESS OF THE THICKER PLATE	MINIMUM PREHEAT TEMPERATURE
0 to 1.25 in.	50 °F
Greater than 1.25 in to 1.50 in.	200 °F
Greater than 1.50 in.	200 °F

- No welding of any kind shall be performed when the surfaces to be welded are wet with rain snow or ice; when rain or snow is falling on such surfaces; or during periods of high winds unless the welder and the work are properly shielded.
- Preheat shall be applied when the metal temperature is below the temperature required by the table above. In that case the base metal shall be heated to at least the temperature indicated within 3 in. of the place where welding is to be started and maintained 3 in. ahead of the arc.

QW-483 PROCEDURE QUALIFICATION RECORD (PQR)

Organization Name: Storage Tank Solutions Inc.
Procedure Qualification Record No.: STS-1-1 (Rev.0) Date: February 21, 2019
Welding Process(es): Shielded Metal Arc Welding (SMAW)

JOINTS (QW-402)

Joint Design: Butt joint, single vee groove, see next page
Root Opening: See next page
Backing: Without Retainers: Without

BASE METALS (QW-403)

Material Specification No.: SA 333 to SA 350 Type or Grade: Gr. 6 to Gr. LF2
Heat Treat Condition (1): SA 333 Gr. 6: Quenched/Tempered SA 350 Gr. LF2: Normalized
P-No.: P1 Group 1 To P-No.: P1 Group 2 Thickness: 0.232 in.
Heat Number: 44391 to A50A8 Carbon Equivalent (2): 0.21 to 0.40 (3)
Diameter: 6.625 in. O.D.
Other: Schedule 40 pipe machined to 0.232 in. wall thickness
Deposited Weld Metal (Per Pass): Did not exceed 0.094 in. for E6010, and 0.125 in. for E7018-1

(1) Condition of base metal prior to welding.
(2) Per CSA Z662 Carbon Equivalent formula. See chemical composition of heat / ladle analysis on attached material test reports.

FILLER METALS (QW-404)

	SMAW	SMAW
Specification No. (SFA)	SFA 5.1	SFA 5.1
AWS No. (Class)	E6010 (3)	E7018-1 (4)
F-No.	F3	F4
A-No.	A1	A1
Diameter	See attached sketch	
Deposited Weld Metal Thickness	0.094 in.	0.138 in.

(3) The Lincoln Electric Company: Fleetweld 5P+
(4) ESAB: OK 55.00

POSITION (QW-405)

Position of Groove: 5G Weld Progression: Vertical up

PREHEAT (QW-406)

Preheat Temperature: 50 °F Interpass Temp. (Max.): 400 °F
Preheat Maintenance: Weld was allowed to cool to ambient temperature in still air after welding was completed.

POSTWELD HEAT TREATMENT (QW-407)

With or Without: Without
Temperature: N/A Time: N/A

PQR NO. STS-1-1 (Rev.0)

ELECTRICAL CHARACTERISTICS (QW-409)

Current	Direct	Polarity	Reverse, electrode positive
Amps	See below	Volts	See below
Heat Input	E6010: 29,211 J/in. maximum		E7018-1: 44,000 J/in. maximum

TECHNIQUE (QW-410)

Manual or Automatic	Manual	
String or Weave	E6010: String	E7018-1: Weave
Initial & Interpass Cleaning	Brushing, chipping and grinding as required	
Method of Back Gouging	Not conducted	
Multiple or Single Pass Per Side	E6010: Single	E7018-1: Multiple
Peening	Not conducted	
Use of Thermal Process	N/A	
Travel Speed	See below	

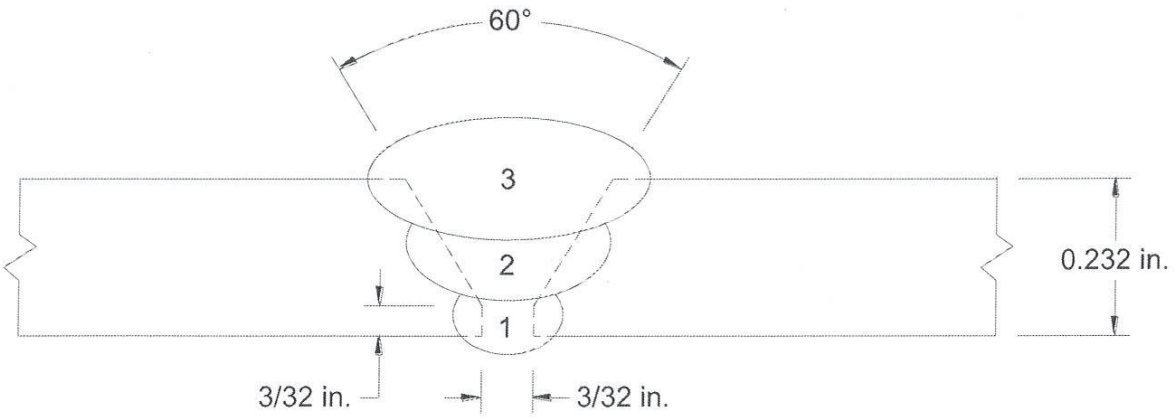

Pass	Process	Filler Metal	Diameter in.	Current Type & Polarity	Amperage Range	Voltage Range	Travel Speed i.p.m.
1	SMAW	E6010	1/8	DCRP	72 - 76	24 - 26	3.8
2	SMAW	E7018-1	3/32	DCRP	74 - 78	23 - 25	2.6
3	SMAW	E7018-1	3/32	DCRP	76 - 84	21 - 23	2.4

PQR NO. STS-1-1 (Rev.0)

CHARPY V-NOTCH IMPACT TEST

Type of Test Charpy V-Notch Orientation Transverse

Governing Specification	Notch Location	Specimen Size in.	Test Temperature ° F	Specimen Number	Impact Values ft•lbf
ASME B31.3 - 2016	Weld metal within 1/16 in. of root	0.394 x 0.157	-67	D2.1	17
				D2.2	30
				D2.3	27
ASME B31.3 - 2016	Gr. 6 - HAZ	0.394 x 0.157	-67	D3.1	75
				D3.2	81
				D3.3	53
ASME B31.3 - 2016	Gr. LF2 - HAZ	0.394 x 0.157	-67	D4.1	10
				D4.2	26
				D4.3	20

OTHER TESTS

Vickers Hardness - see attached Laboratory Test Report No.: E19-104.4

Welder's Name Aaron Smedsrud Certificate File No. W-28887
Tests Conducted By SGS Canada Inc.
Laboratory Test No. E19-104.4

We certify the statements in this record are correct and that the test welds were prepared, welded and tested in accordance with the requirements of Section IX of the ASME Code.

Organization Storage Tank Solutions Inc.

Date January 21, 2021 Print Sebastien Ouellet

Signed

QW-483 PROCEDURE QUALIFICATION RECORD (PQR)

Organization Name: Storage Tank Solutions Inc.
Procedure Qualification Record No.: STS-1-2 (Rev.0) Date: February 22, 2019
Welding Process(es): Shielded Metal Arc Welding (SMAW)

JOINTS (QW-402)

Joint Design: Butt joint, single vee groove, see next page
Root Opening: See next page
Backing: Without Retainers: Without

BASE METALS (QW-403)

Material Specification No.: SA 516 Type or Grade: Gr. 60/70
Heat Treat Condition (1): SA 516 Gr. 60/70: Normalized
P-No.: P1 Groups 1/2 To P-No.: P1 Groups 1/2 Thickness: 0.500 in.
Heat Number: 449291 55060-03 Carbon Equivalent (2): 0.36
Diameter: N/A Other: Plate product form
Deposited Weld Metal (Per Pass): Did not exceed 0.094 in. for E6010, and 0.188 in. for E7018-1

(1) Condition of base metal prior to welding.
(2) Per CSA Z662 Carbon Equivalent formula. See chemical composition of heat analysis on attached material test report

FILLER METALS (QW-404)	SMAW	SMAW
Specification No. (SFA)	SFA 5.1	SFA 5.1
AWS No. (Class)	E6010 (3)	E7018-1 (4)
F-No.	F3	F4
A-No.	A1	A1
Diameter	See attached sketch	
Deposited Weld Metal Thickness	0.094 in.	0.406 in.

(3) The Lincoln Electric Company: Fleetweld 5P+
(4) ESAB: OK 55.00

POSITION (QW-405)

Position of Groove: 3G Weld Progression: Vertical up

PREHEAT (QW-406)

Preheat Temperature: 50 °F Interpass Temp. (Max.): 500 °F
Preheat Maintenance: Weld was allowed to cool to ambient temperature in still air after welding was completed.

POSTWELD HEAT TREATMENT (QW-407)

With or Without: Without
Temperature: N/A Time: N/A

PQR NO. STS-1-2 (Rev.0)

ELECTRICAL CHARACTERISTICS (QW-409)

Current	Direct	Polarity	Reverse, electrode positive
Amps	See below	Volts	See below
Heat Input	E6010: 45,625 J/in. maximum		E7018-1: 58,667 J/in. maximum

TECHNIQUE (QW-410)

Manual or Automatic	Manual	
String or Weave	E6010: String	E7018-1: Weave
Initial & Interpass Cleaning	Brushing, chipping and grinding as required	
Method of Back Gouging	Not conducted	
Multiple or Single Pass Per Side	E6010: Single	E7018-1: Multiple
Peening	Not conducted	
Use of Thermal Process	N/A	
Travel Speed	See below	

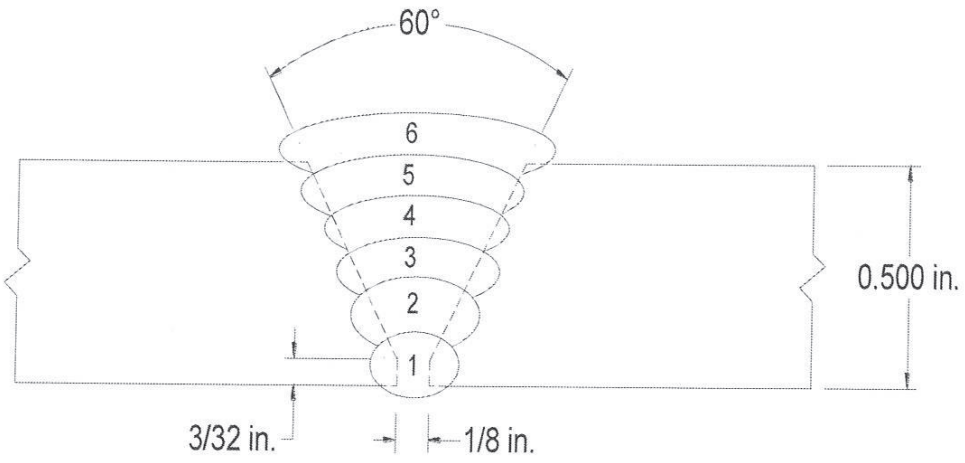

Pass	Process	Filler Metal	Diameter in.	Current Type & Polarity	Amperage Range	Voltage Range	Travel Speed i.p.m.
1	SMAW	E6010	1/8	DCRP	68 - 78	24 - 26	2.4
2	SMAW	E7018-1	3/32	DCRP	76 - 80	22 - 24	4.1
3	SMAW	E7018-1	3/32	DCRP	80 - 84	22 - 24	4.0
4	SMAW	E7018-1	3/32	DCRP	90 - 94	22 - 24	3.2
5	SMAW	E7018-1	1/8	DCRP	118 - 122	21 - 23	3.3
6	SMAW	E7018-1	1/8	DCRP	118 - 122	21 - 23	2.7

PQR NO. STS-1-2 (Rev.0)

CHARPY V-NOTCH IMPACT TEST

Type of Test Charpy V-Notch Orientation Transverse

Governing Specification	Notch Location	Specimen Size in.	Test Temperature ° F	Specimen Number	Impact Values ft•lbf
ASME B31.3 - 2016	Weld metal within 1/16 in. of root	0.394 x 0.394	-50	E2.1	51
				E2.2	42
				E2.3	67
ASME B31.3 - 2016	HAZ	0.394 x 0.394	-50	E3.1	63
				E3.2	32
				E3.3	33

OTHER TESTS

Vickers Hardness - see attached Laboratory Test Report No.: E19-104.5

Welder's Name Christopher Jaques Certificate File No. N/A
Tests Conducted By SGS Canada Inc.
Laboratory Test No. E19-104.5

We certify the statements in this record are correct and that the test welds were prepared, welded and tested in accordance with the requirements of Section IX of the ASME Code.

Organization Storage Tank Solutions Inc.

Date January 21, 2021 Print Sebastien Ouelelt

Signed

QW-483 PROCEDURE QUALIFICATION RECORD (PQR)

Organization Name: Storage Tank Solutions Inc.
Procedure Qualification Record No.: STS-1-3 (Rev.0) Date: February 22, 2019
Welding Process(es): Shielded Metal Arc Welding (SMAW)

JOINTS (QW-402)

Joint Design: Butt joint, single vee groove, see next page
Root Opening: See next page
Backing: Without Retainers: Without

BASE METALS (QW-403)

Material Specification No.: SA 516 Type or Grade: Gr. 60/70
Heat Treat Condition (1): SA 516 Gr. 60/70: Normalized
P-No.: P1 Groups 1/2 To P-No.: P1 Groups 1/2 Thickness: 0.875 in.
Heat Number: 449291 55060-03 Carbon Equivalent (2): 0.37
Diameter: N/A Other: Plate product form
Deposited Weld Metal (Per Pass): Did not exceed 0.094 in. for E6010, and 0.125 in. for E7018-1

(1) Condition of base metal prior to welding.
(2) Per CSA Z662 Carbon Equivalent formula. See chemical composition of heat analysis on attached material test report

FILLER METALS (QW-404)	SMAW	SMAW
Specification No. (SFA)	SFA 5.1	SFA 5.1
AWS No. (Class)	E6010 (3)	E7018-1 (4)
F-No.	F3	F4
A-No.	A1	A1
Diameter	See attached sketch	
Deposited Weld Metal Thickness	0.094 in.	0.781 in.

(3) The Lincoln Electric Company: Fleetweld 5P+
(4) ESAB: OK 55.00

POSITION (QW-405)

Position of Groove: 3G Weld Progression: Vertical up

PREHEAT (QW-406)

Preheat Temperature: 50 °F Interpass Temp. (Max.): 500 °F
Preheat Maintenance: Weld was allowed to cool to ambient temperature in still air after welding was completed.

POSTWELD HEAT TREATMENT (QW-407)

With or Without: Without
Temperature: N/A Time: N/A

ELECTRICAL CHARACTERISTICS (QW-409)

Current	Direct	Polarity	Reverse, electrode positive
Amps	See below	Volts	See below
Heat Input	E6010: 51,022 J/in. maximum		E7018-1: 63,360 J/in. maximum

TECHNIQUE (QW-410)

Manual or Automatic	Manual	
String or Weave	E6010: String	E7018-1: Weave
Initial & Interpass Cleaning	Brushing, chipping and grinding as required	
Method of Back Gouging	Not conducted	
Multiple or Single Pass Per Side	E6010: Single	E7018-1: Multiple
Peening	Not conducted	
Use of Thermal Process	N/A	
Travel Speed	See below	

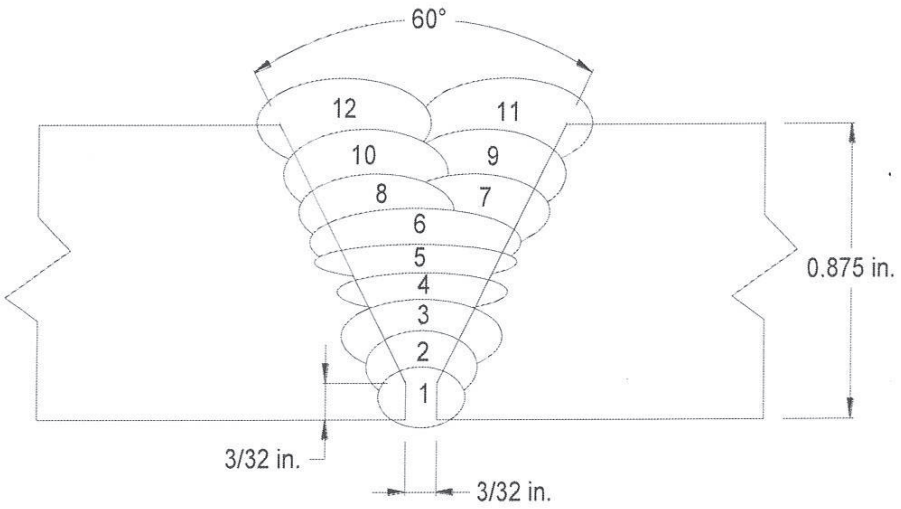

Pass	Process	Filler Metal	Diameter in.	Current Type & Polarity	Amperage Range	Voltage Range	Travel Speed i.p.m.
1	SMAW	E6010	1/8	DCRP	80 - 84	27 - 29	2.7
2	SMAW	E7018-1	3/32	DCRP	78 - 82	20 - 22	3.2
3	SMAW	E7018-1	3/32	DCRP	88 - 92	20 - 22	3.7
4	SMAW	E7018-1	1/8	DCRP	120 - 124	21 - 23	3.3
5	SMAW	E7018-1	1/8	DCRP	120 - 124	21 - 23	2.9
6	SMAW	E7018-1	1/8	DCRP	120 - 124	21 - 23	2.7
7	SMAW	E7018-1	1/8	DCRP	116 - 120	22 - 24	5.1
8	SMAW	E7018-1	1/8	DCRP	118 - 122	21 - 23	5.1
9	SMAW	E7018-1	1/8	DCRP	118 - 122	21 - 23	4.6
10	SMAW	E7018-1	1/8	DCRP	118 - 122	21 - 23	3.6
11	SMAW	E7018-1	1/8	DCRP	118 - 122	21 - 23	3.3
12	SMAW	E7018-1	1/8	DCRP	118 - 122	21 - 23	2.5

PQR NO. STS-1-3 (Rev.0)

TENSILE TEST (QW-150)

Sample No.	Width in.	Thickness in.	Area sq. in.	Ultimate Load lbf	Ultimate Stress psi	Fracture Type & Location
T1	0.748	0.799	0.598	46,500	77,800	Partial Cup & Cone Parent Metal
T2	0.748	0.807	0.604	47,300	78,300	Partial Cup & Cone Parent Metal

GUIDED BEND TEST (QW-160)

Type & Figure No.	Result	Type & Figure No.	Result
QW-462.2, TSB - S1	Pass	QW-462.2, TSB - S3	Pass
QW-462.2, TSB - S2	Pass	QW-462.2, TSB - S4	Pass

CHARPY V-NOTCH IMPACT TEST

Type of Test Charpy V-Notch Orientation Transverse

Governing Specification	Notch Location	Specimen Size in.	Test Temperature ° F	Specimen Number	Impact Values ft•lbf
ASME B31.3 - 2016	Weld metal within 1/16 in. of root	0.394 x 0.394	-50	F2.1	60
				F2.2	79
				F2.3	51
ASME B31.3 - 2016	HAZ	0.394 x 0.394	-50	F3.1	194
				F3.2	154
				F3.3	101

OTHER TESTS

Vickers Hardness - see attached Laboratory Test Report No.: E19-104.6

Welder's Name Christopher Jaques & Matthew MacKenzie Certificate File No. N/A
Tests Conducted By SGS Canada Inc.
Laboratory Test No. E19-104.6

We certify the statements in this record are correct and that the test welds were prepared, welded and tested in accordance with the requirements of Section IX of the ASME Code.

Organization Storage Tank Solutions Inc.

Date January 21, 2021 Print Sebastien Ouellet

Signed 

QW-483 PROCEDURE QUALIFICATION RECORD (PQR)

Woodside Fabricators Ltd.

Procedure Qualification Record No. WFL-1-1 Date February 26, 2007
Welding Procedure Specification No. WFL-1
Welding Process(es) SMAW Type(s) Manual

JOINTS (QW-402)

Type Butt joint, single vee groove, see next page

BASE METALS (QW-403)

Material Spec. SA 516 to SA 516 Type or Grade Gr. 60N to Gr. 70N
P-No. P1 Grp.1 To P-No. P1 Grp.2 Thickness 6.32 mm (0.249 in.)
Diameter N/A - Plate Heat No. 44410-34383
Deposited Weld Metal (Per pass) Did not exceed 12.7 mm (0.500 in.)

FILLER METALS (QW-404)

Specification No. (SFA)	SFA 5.1	SFA 5.1
AWS No. (Class)	E6010	E7018-1
Filler Metal F-No.	F3	F4
Filler Metal A-No.	A1	A1
Size of Electrode	See attached sketch	
Deposited Weld Metal Thickness	2.39 mm (0.094 in.)	3.94 mm (0.155 in.)

POSITION (QW-405)

Position of Groove 3G
Weld Progression Vertical Up

PREHEAT (QW-406)

Preheat Temperature 10°C (50°F) Interpass Temp. (Max.) 232°C (450°F)

POSTWELD HEAT TREATMENT (QW-407)

Temperature None Time N/A

ELECTRICAL CHARACTERISTICS (QW-409)

Current Direct Polarity Reverse, electrode positive
Amps See next page Volts See next page
Heat Input F3: 34,327 J/in. F4: 45,688 J/in.

TECHNIQUE (QW-410)

String or Weave F3: String F4: Weave Travel Speed See next page
Multiple or Single Pass Per Side Multiple
Multiple or Single Electrodes Single

PQR NO. WFL-1-1

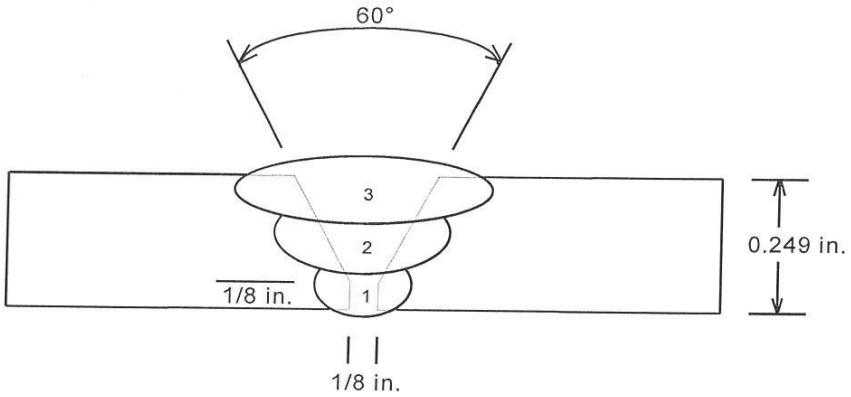

Pass	Process	Filler Metal	Diameter mm (in.)	Current & Polarity	Amperage Range	Voltage Range	Travel Speed mm/min (ipm.)
1	SMAW	E6010	3.2 (1/8)	DCRP	85 - 90	25 - 26	99 (3.9)
2	SMAW	E7018-1	2.4 (3/32)	DCRP	85 - 95	21 - 23	97 (3.8)
3	SMAW	E7018-1	2.4 (3/32)	DCRP	80 - 90	21 - 22	61 (2.4)

PQR NO. WFL-1-1

TENSILE TEST (QW-150)

Specimen No.	Width mm (in.)	Thickness mm (in.)	Area Sq. mm (Sq. in.)	Ultimate Load N (lbs.)	Ultimate Stress Mpa (Psi)	Character & Fracture Location
T1	19.1	5.30	101	54 300	536	Partial cup & cone
	(0.752)	(0.209)	(0.157)	(12,200)	(77,800)	Parent metal (Gr. 70N)
T2	19.0	5.62	107	56 300	527	Partial cup & cone
	(0.748)	(0.221)	(0.116)	(12,700)	(76,500)	Parent metal (Gr. 70N)

GUIDED BEND TEST (QW-160)

Type & Figure No.	Result	Type & Figure No.	Result
QW-462.3a, TFB - F1	Pass	QW-462.3a, TRB - R1	Pass
QW-462.3a, TFB - F2	Pass	QW-462.3a, TRB - R2	Pass

CHARPY IMPACT TOUGHNESS

Type of Test Charpy V-Notch Orientation Transverse
Test Temperature -48°C (-55°F) Specimen Size 10 x 5 mm

Specimen No.	Notch Location	Impact Values J (ft. lbs)
T2.1	Weld Metal	37.3 (27.5)
T2.2	within 1/16"	29.6 (21.8)
T2.3	of root	41.4 (30.5)
T3.1	Gr. 60N - HAZ	17.2 (12.7)
T3.2	Gr. 60N - HAZ	63.7 (47.0)
T3.3	Gr. 60N - HAZ	77.3 (57.0)
U3.1	Gr. 70N - HAZ	19.3 (14.2)
U3.2	Gr. 70N - HAZ	31.0 (22.9)
U3.3	Gr. 70N - HAZ	12.9 (9.5)

OTHER TESTS

Vickers Hardness - see attached laboratory test report # C07-300.1

Welders Name Keith Breedon Certificate File No. W-17343
Tests Conducted By Ludwig & Associates Ltd.
Laboratory Test No. C07-300.1

We certify the statements in this record are correct and that the test welds were prepared, welded and tested in accordance with the requirements of Section IX of the ASME Code.

Manufacturer WOODSIDE FABRICATORS LTD.

Date March 10, 2007 Signed Doug L

CHARPY V-NOTCH IMPACT TEST

Customer: **Storage Tank Solutions Inc.**
9 Well Head Street
Devon, Alberta
T9G 1Z6

Laboratory Test No.: E19-104.4
Date: March 15, 2019

Attention: Sebastien Ouellet

PQR No.:	STS-1-1 (Rev.0)	**Material Heat No.:**	44391 to A50A8
Material:	SA 333 Gr. 6 to SA 350 Gr. LF2		
Material Size:	168.3 mm (6.625 in.) O.D. x 5.89 (0.232 in.) w.t.		
Thermal Condition:	As Welded		

Specimen Size:	*10 x 4 mm (0.394 x 0.157 in.)*	*Machine:*	*Satec SI-1K3, S/N: 1503*
Orientation:	*Transverse*	*Capacity:*	*407 J (300 ft·lbf)*
Test Temperature:	*-55 °C (-67 °F)*	*Verified Range:*	*3.4-325 J (2.5-240 ft·lbf)*
Governing Spec.:	*ASME B31.3-2016*	*Calibration Date:*	*March 19, 2018*

Specimen Number	Notch Location	Impact Values Joules	(ft·lbf)
D2.1	Weld Metal within 1.5mm (1/16") of root	23	(17)
D2.2		41	(30)
D2.3		37	(27)
D3.1	Gr. 6 - HAZ	102	(75)
D3.2		110	(81)
D3.3		72	(53)
D4.1	Gr. LF2 - HAZ	13	(10)
D4.2		35	(26)
D4.3		27	(20)

Note: Metric values calculated by direct conversion.

Test Conducted By: Mohamed Botan (Edmonton)

Certified By: _____
Eric Dacyk, C.E.T.

ANAB ACCREDITED ISO/IEC 17025 TESTING LABORATORY Certification # L2057.01-1

This report (or certificate) is issued by the Company under its General Conditions for Inspection and Testing Services (copy available upon request). The issuance of this report (or certificate) does not exonerate buyers or sellers from exercising all their rights and discharging all their liabilities under the Contract of Sale. Stipulations to the contrary are not binding on the Company. The Company's responsibility under this report (or certificate) is limited to proven negligence and will in no case be more than ten times the amount of the fees or commission. Except by special arrangement, samples, if drawn, will not be retained by the Company for more than 30 days. The information stated in this report (or certificate) is derived from the results of inspection or testing procedures carried out in accordance with the instructions of our Client, and/or our assessment of such results on the basis of any technical standards, trade custom or practice, or other circumstances which should in our professional opinion be taken into account.

SGS Canada Inc. | 4027 - 14 Street S.E. Calgary, AB T2G 3K6 t +1 (403) 262-7072 f +1 (403) 266-3169
7925 Davies Road Edmonton, AB T6E 4N1 t +1 (780) 468-3030 f +1 (780) 468-3032 www.sgs.com

Member of the SGS Group (SGS SA)

HARDNESS TEST

Customer: **Storage Tank Solutions Inc.**
9 Well Head Street
Devon, Alberta
T9G 1Z6

Laboratory Test No.: E19-104.4
Date: March 15, 2019

Attention: Sebastien Ouellet

PQR No.:	STS-1-1 (Rev.0)	**Material Heat No.:**	44391 to A50A8
Material:	SA 333 Gr. 6 to SA 350 Gr. LF2		
Material Size:	168.3 mm (6.625 in.) O.D. x 5.89 (0.232 in.) w.t.		
Thermal Condition:	As Welded		

Type of Test:	*Vickers 10 kg (HV10)*	*Instrument:*	*Buehler 5112*
Governing Spec.:	*ASTM E92 - 17 & ANSI/NACE MR0175/ISO 15156:2015*	*Calibration Date:*	*July 27, 2018*

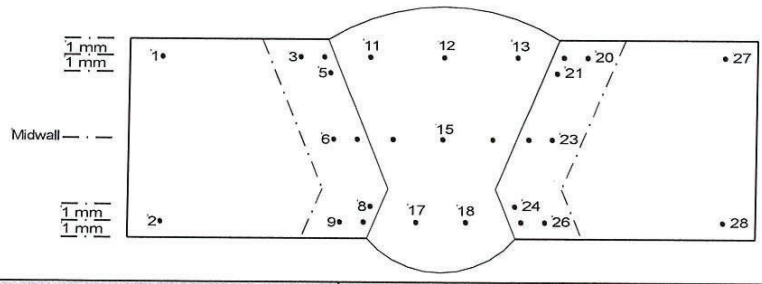

SA 350 Gr. LF2				Weld Metal		SA 333 Gr. 6			
Parent Metal		HAZ				HAZ		Parent Metal	
1	143	*3*	164	*11*	193	*19*	196	*27*	137
2	164	*4*	190	*12*	195	*20*	154	*28*	169
		5	183	*13*	193	*21*	184		
		6	170	*14*	164	*22*	175		
		7	179	*15*	165	*23*	160		
		8	177	*16*	165	*24*	176		
		9	173	*17*	162	*25*	174		
		10	186	*18*	157	*26*	171		

Test Conducted By: Ibrahim Mohamoud (Edmonton)

Certified By: _____
Eric Dacyk, C.E.T.

ANAB ACCREDITED ISO/IEC 17025 TESTING LABORATORY Certification # L2057.01-1

This report (or certificate) is issued by the Company under its General Conditions for Inspection and Testing Services (copy available upon request). The issuance of this report (or certificate) does not exonerate buyers or sellers from exercising all their rights and discharging all their liabilities under the Contract of Sale. Stipulations to the contrary are not binding on the Company. The Company's responsibility under this report (or certificate) is limited to proven negligence and will in no case be more than ten times the amount of the fees or commission. Except by special arrangement, samples, if drawn, will not be retained by the Company for more than 30 days. The information stated in this report (or certificate) is derived from the results of inspection or testing procedures carried out in accordance with the instructions of our Client, and/or our assessment of such results on the basis of any technical standards, trade custom or practice, or other circumstances which should in our professional opinion be taken into account.

SGS Canada Inc. | 4027 - 14 Street S.E. Calgary, AB T2G 3K6 t +1 (403) 262-7072 f +1 (403) 266-3169
7925 Davies Road Edmonton, AB T6E 4N1 t +1 (780) 468-3030 f +1 (780) 468-3032 www.sgs.com

Member of the SGS Group (SGS SA)

CHARPY V-NOTCH IMPACT TEST

Customer: **Storage Tank Solutions Inc.**
9 Well Head Street
Devon, Alberta
T9G 1Z6

Laboratory Test No.: E19-104.5
Date: March 15, 2019

Attention: Sebastien Ouellet

PQR No.:	STS-1-2 (Rev.0)	**Material Heat No.:**	449291 55060-03
Material:	SA 516 Gr. 60/70		
Material Thickness:	12.7 mm (0.500 in.)		
Thermal Condition:	As Welded		

Specimen Size:	*10 x 10 mm (0.394 x 0.394 in.)*	*Machine:*	*Satec SI-1K3, S/N: 1503*
Orientation:	*Transverse*	*Capacity:*	*407 J (300 ft·lbf)*
Test Temperature:	*-46 °C (-50 °F)*	*Verified Range:*	*3.4-325 J (2.5-240 ft·lbf)*
Governing Spec.:	*ASME B31.3-2016*	*Calibration Date:*	*March 19, 2018*

Specimen Number	Notch Location	Impact Values Joules	(ft·lbf)
E2.1	Weld Metal within 1.5mm (1/16") of root	69	(51)
E2.2		57	(42)
E2.3		91	(67)
E3.1	HAZ	85	(63)
E3.2		43	(32)
E3.3		45	(33)

Note: Metric values calculated by direct conversion.

Test Conducted By: Mohamed Botan (Edmonton)

Certified By: _____
Eric Dacyk, C.E.T.

ANAB ACCREDITED ISO/IEC 17025 TESTING LABORATORY Certification # L2057.01-1

This report (or certificate) is issued by the Company under its General Conditions for Inspection and Testing Services (copy available upon request). The issuance of this report (or certificate) does not exonerate buyers or sellers from exercising all their rights and discharging all their liabilities under the Contract of Sale. Stipulations to the contrary are not binding on the Company. The Company's responsibility under this report (or certificate) is limited to proven negligence and will in no case be more than ten times the amount of the fees or commission. Except by special arrangement, samples, if drawn, will not be retained by the Company for more than 30 days. The information stated in this report (or certificate) is derived from the results of inspection or testing procedures carried out in accordance with the instructions of our Client, and/or our assessment of such results on the basis of any technical standards, trade custom or practice, or other circumstances which should in our professional opinion be taken into account.

SGS Canada Inc. | 4027 - 14 Street S.E. Calgary, AB T2G 3K6 t +1 (403) 262-7072 f +1 (403) 266-3169
7925 Davies Road Edmonton, AB T6E 4N1 t +1 (780) 468-3030 f +1 (780) 468-3032 www.sgs.com

Member of the SGS Group (SGS SA)

HARDNESS TEST

Customer: **Storage Tank Solutions Inc.**
9 Well Head Street
Devon, Alberta
T9G 1Z6

Laboratory Test No.: E19-104.5
Date: March 12, 2019

Attention: Sebastien Ouellet

PQR No.:	STS-1-2 (Rev.0)	**Material Heat No.:**	449291 55060-03
Material:	SA 516 Gr. 60/70		
Material Thickness:	12.7 mm (0.500 in.)		
Thermal Condition:	As Welded		

Type of Test: *Vickers 10 kg (HV10)*
Governing Spec.: *ASTM E92 - 17 &*
ANSI/NACE MR0175/ISO 15156:2015

Instrument: *Buehler 5112*
Calibration Date: *July 27, 2018*

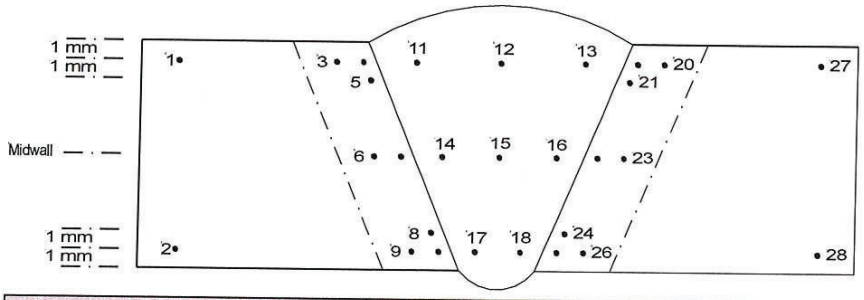

Parent Metal		HAZ		Weld Metal		HAZ		Parent Metal	
1	153	3	152	11	203	19	210	27	166
2	150	4	183	12	205	20	170	28	156
		5	199	13	202	21	211		
		6	157	14	170	22	173		
		7	165	15	168	23	160		
		8	171	16	167	24	166		
		9	164	17	162	25	168		
		10	170	18	162	26	162		

Test Conducted By: Ibrahim Mohamoud (Edmonton)

Certified By: _____
Eric Dacyk, C.E.T.

ANAB ACCREDITED ISO/IEC 17025 TESTING LABORATORY Certification # L2057.01-1

This report (or certificate) is issued by the Company under its General Conditions for Inspection and Testing Services (copy available upon request). The issuance of this report (or certificate) does not exonerate buyers or sellers from exercising all their rights and discharging all their liabilities under the Contract of Sale. Stipulations to the contrary are not binding on the Company. The Company's responsibility under this report (or certificate) is limited to proven negligence and will in no case be more than ten times the amount of the fees or commission. Except by special arrangement, samples, if drawn, will not be retained by the Company for more than 30 days. The information stated in this report (or certificate) is derived from the results of inspection or testing procedures carried out in accordance with the instructions of our Client, and/or our assessment of such results on the basis of any technical standards, trade custom or practice, or other circumstances which should in our professional opinion be taken into account.

SGS Canada Inc. | 4027 - 14 Street S.E. Calgary, AB T2G 3K6 t +1 (403) 262-7072 f +1 (403) 266-3169
7925 Davies Road Edmonton, AB T6E 4N1 t +1 (780) 468-3030 f +1 (780) 468-3032 www.sgs.com

Member of the SGS Group (SGS SA)

TENSILE / BEND TEST

Customer: **Storage Tank Solutions Inc.**
9 Well Head Street
Devon, Alberta
T9G 1Z6

Laboratory Test No.: E19-104.6
Date: March 15, 2019

Attention: Sebastien Ouellet

PQR No.:	STS-1-3 (Rev.0)	**Material Heat No.:**	454840 27789-02
Material:	SA 516 Gr. 60/70		
Material Thickness:	22.2 mm (0.875 in.)		
Thermal Condition:	As Welded		

Governing Spec.: *ASME Section IX - 2017* *Instrument:* *Tinius Olsen S/N: 133660*

SAMPLE NO.(QW-150)	T1		T2	
WIDTH mm (in.)	19.0	(0.748)	19.0	(0.748)
THICKNESS mm (in.)	20.3	(0.799)	20.5	(0.807)
AREA sq. mm (sq. in.)	386	(0.598)	390	(0.604)
ULTIMATE LOAD N (lbf)	206 937	(46,500)	210 305	(47,300)
ULTIMATE STRESS MPa (psi)	537	(77,800)	540	(78,300)
FRACTURE TYPE	Partial Cup & Cone		Partial Cup & Cone	
FRACTURE LOCATION	Parent Metal		Parent Metal	

Note: Imperial values calculated by direct conversion.

SAMPLE TYPE(QW-462.2)	Side Bend	Side Bend	Side Bend	Side Bend
SAMPLE NO.	S1	S2	S3	S4
RESULTS	Pass	Pass	Pass	Pass

Test Conducted By: Mohamed Botan (Edmonton)

Certified By: _____
Eric Dacyk, C.E.T.

ANAB ACCREDITED ISO/IEC 17025 TESTING LABORATORY Certification # L2057.01-1

This report (or certificate) is issued by the Company under its General Conditions for Inspection and Testing Services (copy available upon request). The issuance of this report (or certificate) does not exonerate buyers or sellers from exercising all their rights and discharging all their liabilities under the Contract of Sale. Stipulations to the contrary are not binding on the Company. The Company's responsibility under this report (or certificate) is limited to proven negligence and will in no case be more than ten times the amount of the fees or commission. Except by special arrangement, samples, if drawn, will not be retained by the Company for more than 30 days. The information stated in this report (or certificate) is derived from the results of inspection or testing procedures carried out in accordance with the instructions of our Client, and/or our assessment of such results on the basis of any technical standards, trade custom or practice, or other circumstances which should in our professional opinion be taken into account.

SGS Canada Inc. | 4027 - 14 Street S.E. Calgary, AB T2G 3K6 t +1 (403) 262-7072 f +1 (403) 266-3169
7925 Davies Road Edmonton, AB T6E 4N1 t +1 (780) 468-3030 f +1 (780) 468-3032 www.sgs.com

Member of the SGS Group (SGS SA)

CHARPY V-NOTCH IMPACT TEST

Customer: **Storage Tank Solutions Inc.**
9 Well Head Street
Devon, Alberta
T9G 1Z6

Laboratory Test No.: E19-104.6
Date: March 15, 2019

Attention: Sebastien Ouellet

PQR No.:	STS-1-3 (Rev.0)	**Material Heat No.:**	454840 27789-02
Material:	SA 516 Gr. 60/70		
Material Thickness:	22.2 mm (0.875 in.)		
Thermal Condition:	As Welded		

Specimen Size:	*10 x 10 mm (0.394 x 0.394 in.)*	*Machine:*	*Satec SI-1K3, S/N: 1503*
Orientation:	*Transverse*	*Capacity:*	*407 J (300 ft·lbf)*
Test Temperature:	*-46 °C (-50 °F)*	*Verified Range:*	*3.4-325 J (2.5-240 ft·lbf)*
Governing Spec.:	*ASME B31.3-2016*	*Calibration Date:*	*March 19, 2018*

Specimen Number	Notch Location	Impact Values Joules	(ft·lbf)
F2.1	Weld Metal within 1.5mm (1/16") of root	81	(60)
F2.2		107	(79)
F2.3		69	(51)
F3.1	HAZ	263	(194)
F3.2		209	(154)
F3.3		137	(101)

Note: Metric values calculated by direct conversion.

Test Conducted By: Mohamed Botan (Edmonton)

Certified By: _____
Eric Dacyk, C.E.T.

ANAB ACCREDITED ISO/IEC 17025 TESTING LABORATORY Certification # L2057.01-1

This report (or certificate) is issued by the Company under its General Conditions for Inspection and Testing Services (copy available upon request). The issuance of this report (or certificate) does not exonerate buyers or sellers from exercising all their rights and discharging all their liabilities under the Contract of Sale. Stipulations to the contrary are not binding on the Company. The Company's responsibility under this report (or certificate) is limited to proven negligence and will in no case be more than ten times the amount of the fees or commission. Except by special arrangement, samples, if drawn, will not be retained by the Company for more than 30 days. The information stated in this report (or certificate) is derived from the results of inspection or testing procedures carried out in accordance with the instructions of our Client, and/or our assessment of such results on the basis of any technical standards, trade custom or practice, or other circumstances which should in our professional opinion be taken into account.

SGS Canada Inc. | 4027 - 14 Street S.E. Calgary, AB T2G 3K6 t +1 (403) 262-7072 f +1 (403) 266-3169
7925 Davies Road Edmonton, AB T6E 4N1 t +1 (780) 468-3030 f +1 (780) 468-3032 www.sgs.com

Member of the SGS Group (SGS SA)

HARDNESS TEST

Customer: **Storage Tank Solutions Inc.**
9 Well Head Street
Devon, Alberta
T9G 1Z6

Laboratory Test No.: E19-104.6
Date: March 15, 2019

Attention: Sebastien Ouellet

PQR No.:	STS-1-3 (Rev.0)	**Material Heat No.:**	454840 27789-02
Material:	SA 516 Gr. 60/70		
Material Thickness:	22.2 mm (0.875 in.)		
Thermal Condition:	As Welded		

Type of Test: *Vickers 10 kg (HV10)*
Governing Spec.: *ASTM E92 - 17 &*
ANSI/NACE MR0175/ISO 15156:2015

Instrument: *Buehler 5112*
Calibration Date: *July 27, 2018*

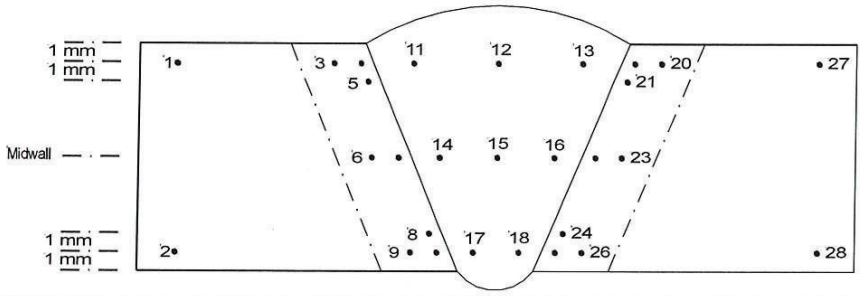

Parent Metal		HAZ		Weld Metal		HAZ		Parent Metal	
1	149	3	178	11	206	19	220	27	149
2	153	4	209	12	196	20	172	28	151
		5	226	13	206	21	199		
		6	188	14	198	22	195		
		7	199	15	191	23	179		
		8	171	16	199	24	169		
		9	175	17	167	25	174		
		10	171	18	169	26	173		

Test Conducted By: Ibrahim Mohamoud (Edmonton)

Certified By: _____
Eric Dacyk, C.E.T.

ANAB ACCREDITED ISO/IEC 17025 TESTING LABORATORY Certification # L2057.01-1

This report (or certificate) is issued by the Company under its General Conditions for Inspection and Testing Services (copy available upon request). The issuance of this report (or certificate) does not exonerate buyers or sellers from exercising all their rights and discharging all their liabilities under the Contract of Sale. Stipulations to the contrary are not binding on the Company. The Company's responsibility under this report (or certificate) is limited to proven negligence and will in no case be more than ten times the amount of the fees or commission. Except by special arrangement, samples, if drawn, will not be retained by the Company for more than 30 days. The information stated in this report (or certificate) is derived from the results of inspection or testing procedures carried out in accordance with the instructions of our Client, and/or our assessment of such results on the basis of any technical standards, trade custom or practice, or other circumstances which should in our professional opinion be taken into account.

SGS Canada Inc. | 4027 - 14 Street S.E. Calgary, AB T2G 3K6 t +1 (403) 262-7072 f +1 (403) 266-3169
7925 Davies Road Edmonton, AB T6E 4N1 t +1 (780) 468-3030 f +1 (780) 468-3032 www.sgs.com

Member of the SGS Group (SGS SA)

LUDWIG & ASSOCIATES LTD.

Materials and Welding Consulting

LABORATORY ACCREDITATION BUREAU
ISO/IEC 17025 ACCREDITED
Certificate Number L2057

LABORATORY TEST REPORT

CUSTOMER: **Woodside Fabrications Ltd.**
6124 - 39th Avenue
Camrose, Alberta
T4V 3B1

Laboratory Test No.: C07-300.1
Date: March 7, 2007

Attention: Douglas French

PQR Number: WFL-1-1 **Process:** SMAW
Material: SA 516 Gr. 60N to SA 516 Gr. 70N (Heat No.: 44410 - 34383)
Thickness: 6.32 mm (0.249 in.)
Thermal Condition: As Welded

TENSILE TEST QW-150

SAMPLE NUMBER	T1 QW-462.1(a)		T2 QW-462.1(a)	
WIDTH mm (in)	19.1	(0.752)	19.0	(0.748)
THICKNESS mm (in)	5.30	(0.209)	5.62	(0.221)
AREA sq mm (sq in)	101	(0.157)	107	(0.116)
ULT. LOAD N (lbs)	54 300	(12,200)	56 300	(12,700)
UTS MPa (psi)	536	(77,800)	527	(76,500)
FRACTURE TYPE	Partial Cup and Cone		Partial Cup and Cone	
FRACTURE LOCATION	Parent Metal (SA 516 Gr. 70N)		Parent Metal (SA 516 Gr. 70N)	

GUIDED-BEND TEST QW-160

SAMPLE WIDTH: 38.1 mm (1.50 in.) SAMPLE THICKNESS: 6.32 mm (0.249 in.)
PLUNGER SIZE: 25.1 mm (0.990 in.) YOKE SIZE: 41.1 mm (1.62 in.)

QW-462.3(a)	Root Bend	Root Bend	Face Bend	Face Bend
SAMPLE NUMBER(S)	R1	R2	F1	F2
RESULTS	Pass	Pass	Pass	Pass

We certify the test results in this report and that the specimen(s) were prepared and tested in accordance with the requirements of ASME Section IX, 2004 *edition and latest addenda. The information regarding material identification (i.e. size, thickness, heat number, etc.) has been provided by the customer whose name appears on this report.* ***Samples associated with this report will be discarded in 45 days.***

Laboratory Test Conducted By: _____
Inderjit Rai / Steve Rieberger, C.E.T.

4027 - 14 Street, S.E., CALGARY, ALBERTA T2G 3K6 PHONE: (403) 262-7072 FAX: (403) 266-3169

LUDWIG & ASSOCIATES LTD.

Materials and Welding Consulting

LABORATORY ACCREDITATION BUREAU
ISO/IEC 17025 ACCREDITED
Certificate Number L2057

LABORATORY TEST REPORT

CUSTOMER: **Woodside Fabrications Ltd.**
6124 - 39th Avenue
Camrose, Alberta
T4V 3B1

Laboratory Test No.: C07-300.1
Date: March 7, 2007

Attention: Douglas French

PQR Number: WFL-1-1 **Process:** SMAW
Material: SA 516 Gr. 60N to SA 516 Gr. 70N (Heat No.: 44410 - 34383)
Thickness: 6.32 mm (0.249 in.)
Thermal Condition: As Welded

NOTCH-TOUGHNESS TEST

TYPE OF TEST: Charpy V-Notch
TEST TEMPERATURE: -48°C (-55°F)
ORIENTATION: Transverse
SPECIMEN SIZE: 10 x 5 mm

Specimen Number	Notch Location	Impact Values Joules	(ft.lbs)
T2.1	Weld Metal	37.3	(27.5)
T2.2	within 1/16 in.	29.6	(21.8)
T2.3	of root	41.4	(30.5)
T3.1	Gr. 60N - HAZ	17.2	(12.7)
T3.2	Gr. 60N - HAZ	63.7	(47.0)
T3.3	Gr. 60N - HAZ	77.3	(57.0)
U3.1	Gr. 70N - HAZ	19.3	(14.2)
U3.2	Gr. 70N - HAZ	31.0	(22.9)
U3.3	Gr. 70N - HAZ	12.9	(9.5)

We certify the test results in this report and that the specimen(s) were prepared and tested in accordance with the requirements of ASME Section VIII, Div. 1, UG-84 – 2004 *edition and latest addenda. The information regarding material identification (i.e. size, thickness, heat number, etc.) has been provided by the customer whose name appears on this report.* ***Samples associated with this report will be discarded in 45 days.***

Laboratory Test Conducted By: _____
Charles Ugarenko / Steve Rieberger, C.E.T.

LUDWIG & ASSOCIATES LTD.

Materials and Welding Consulting

LABORATORY ACCREDITATION BUREAU
ISO/IEC 17025 ACCREDITED
Certificate Number L2057

LABORATORY TEST REPORT

CUSTOMER: **Woodside Fabrications Ltd.**
6124 - 39th Avenue
Camrose, Alberta
T4V 3B1

Laboratory Test No.: C07-300.1
Date: March 5, 2007

Attention: Douglas French

PQR Number: WFL-1-1 **Process:** SMAW
Material: SA 516 Gr. 60N to SA 516 Gr. 70N (Heat No.: 44410 - 34383)
Thickness: 6.32 mm (0.249 in.)
Thermal Condition: As Welded

HARDNESS TEST

TYPE OF TEST: Vickers LOAD: 10 kg
INSTRUMENT TYPE: Mitutoyo AVK-C1

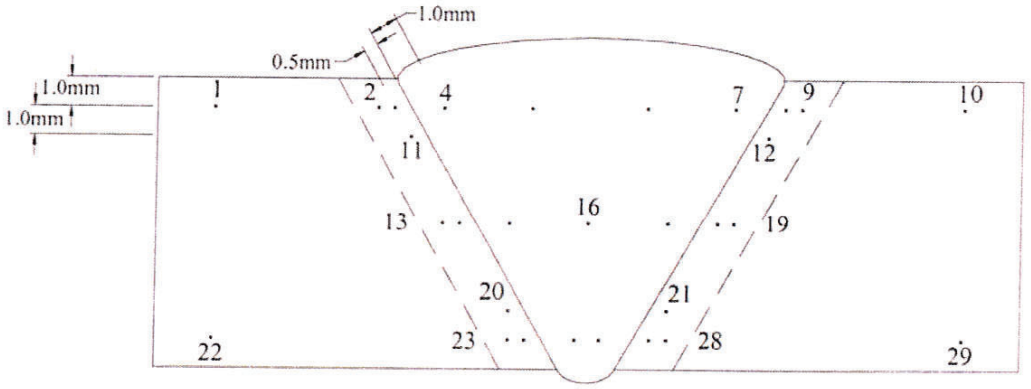

SA 516 Gr. 70N SA 516 Gr. 60N

1)	161 HV	7)	215 HV	13)	187 HV	19)	196 HV	25)	181 HV
2)	195 HV	8)	207 HV	14)	192 HV	20)	187 HV	26)	187 HV
3)	197 HV	9)	196 HV	15)	189 HV	21)	183 HV	27)	184 HV
4)	199 HV	10)	160 HV	16)	189 HV	22)	161 HV	28)	187 HV
5)	191 HV	11)	198 HV	17)	186 HV	23)	184 HV	29)	167 HV
6)	200 HV	12)	202 HV	18)	199 HV	24)	188 HV		

We certify the test results in this report and that the specimen(s) were prepared and tested in accordance with the requirements of ASTM E92 - 82 (Reapproved 2003)$^{\varepsilon 2}$. *The information regarding material identification (i.e. size, thickness, heat number, etc.) has been provided by the customer whose name appears on this report.* ***Samples associated with this report will be discarded in 45 days.***

Laboratory Test Conducted By: _____
Andrew Vessey / Steve Rieberger, C.E.T.

4027 - 14 Street, S.E., CALGARY, ALBERTA T2G 3K6 PHONE: (403) 262-7072 FAX: (403) 266-3169

Tenaris

INSPECTION CERTIFICATE

(BS EN 10204 3.1: 2004 - ISO 10474 3.1: 2013)

Number / Número:	Page / Página:
853076	1 / 8

Date / Día: July 21, 2017

S.Jerez S.A.I.C
Dr Jorge A. Simini 250
(B830MHA) Campana
Buenos Aires, Argentina
(54) 3489 433103 tel
(54) 3489 433403 fax

Customer / Cliente:	Customer's Order Item / Orden Cliente - Item:	Customer's Reference / Ref. del Cliente:	Manufacturer's Works Order N° / Confirmación de Venta:
VAN LEEUWEN PIPE & TUBE (CANADA) INC.	45001803-00008	N/A	51938/08

Manufacturing Process / Proceso de Manufactura:	Product Type / Tipo de Producto:	Surface / Superficie:
SEAMLESS HOT ROLLED	CARBON STEEL FOR LOW TEMPERATURE SERVICE	INT BARE /EXT VARNISHED

Standard or Specification / Normas o Especificaciones:	Steel Grade / Grado de acero:	Ends / Extremos:
ASTM/ASME A/SA333-10+CSA Z245.1-14 CATII-SS+PSP00374+NACE MR0175/103+IPRO LP-006	1/6/359 CAT II SS	BEVELLED AT 30 DEG. ASTM

Dimensions / Dimensiones:	Schedule / Cédula:	Length / Longitud:	Quantity / Cantidad: 83 Pcs/pz	Nominal Weight / Peso Nominal:
6 5/8 X 0.280 INCH 168.30 X 7.11 MM	040	11.0/11.8 m	3157.94 FT 59747 LB 962.54 MTS 27101 KG	18.97 LB/FT 28.26 KG/M

TENSILE TEST / ENSAYO DE TENSION

Heat N° / Colada N°	Sample N° / Muestra N°	Zone / Zona	Lot N° / Lote N°	Pipe N° / Tubo N°	Specimen condition / Condición de la probeta				Specimen dimensions / Dimensiones de la probeta		Test temp / Temp. ensayo	Y.S.	U.T.S.	Y.S./U.T.S	Elongation / Alargamiento		
					Ls	Sc	Type / Tipo	Ori	Size / Tamaño	Area / Sección		Eul 0.50 % Min: 52 Max: --	Req. Min: 66 Max: 91	Eul 0.50 % Req. Max. 0.93	Lo 2"	Min.	Obt.
									in	In2	°F	ksi	ksi		mm	%	%
44391	2836324	E1	71971	20	B	AM	Ss	L	0.999 x 0.278	0.279	RT	57.2	71.1	0.80	50,8	28.0	36.6
44391	2836325	E2	71971	40	B	AM	Ss	L	0.995 x 0.279	0.279	RT	58.1	72.0	0.81	50,8	28.0	36.7
44391	2836326	E1	71971	60	B	AM	Ss	L	0.999 x 0.283	0.284	RT	60.0	73.1	0.82	50,8	28.0	39.1
44391	2836327	E2	71972	80	B	AM	Ss	L	0.999 x 0.279	0.280	RT	62.2	75.9	0.82	50,8	28.0	40.9
44391	2836329	E2	71973	1	B	AM	Ss	L	1. x 0.276	0.278	RT	59.3	73.3	0.81	50,8	28.0	36.1
44391	2836335	E1	71974	20	B	AM	Ss	L	0.994 x 0.277	0.277	RT	56.7	70.5	0.80	50,8	28.0	38.5
44391	2836339	E2	71974	40	B	AM	Ss	L	0.994 x 0.279	0.278	RT	60.3	73.5	0.82	50,8	28.0	38.5
44391	2836343	E1	71974	60	B	AM	Ss	L	0.999 x 0.279	0.280	RT	60.9	73.3	0.83	50,8	28.0	39.0
44391	2836341	E2	71975	80	B	AM	Ss	L	0.999 x 0.283	0.284	RT	59.2	73.4	0.81	50,8	28.0	38.9
44391	2837409	E1	71971	17	B	AM	Ss	L	0.995 x 0.274	0.274	RT	64.2	76.8	0.84	50,8	28.0	31.6
44391	2837410	E1	71975	85	B	AM	Ss	L	0.993 x 0.265	0.264	RT	58.2	73.6	0.79	50,8	28.0	28.8
44391	2842966	E1	71972	93	B	AM	Ss	L	0.994 x 0.278	0.277	RT	58.1	72.2	0.81	50,8	28.0	36.9
44391	2842967	E1	71973	14	B	AM	Ss	L	0.997 x 0.282	0.282	RT	59.2	73.4	0.81	50,8	28.0	38.6

JF September 18, 2017
SA 333 Gr. 6 / CSA Z245.1 Gr 35
Sch 40
6.625 OD x 0.280 w.t.
Heat # 44391 E6-20
PO# 186973

AM: As manufactured / Según proceso de fabricación
B: Body / Cuerpo
E1 / E2: Ends of Sampling / Extremos de Muestra
L: Longitudinal / Longitudinal
Lo: Initial length / Longitud inicial
Ls: Location of sample / Ubicación de la muestra
Max: Maximum / Máximo
Min: Minimum / Mínimo
Obt: Obtained / Obtenido
Ori: Orientation / Orientación
Req. Max: Required maximum / Máximo requerido
Req: Required / Requerido
RT: Room temperature / Temperatura ambiente
Sc: Specimen condition / Condición de la probeta
Ss: Strip specimen / Muestra rectangular
U.T.S.: Ultimate tensile strength / Resistencia
Y.S: Yield strength / Fluencia

This certificate is issued by a computerized system and it is valid with electronic signature. On the original certificate the trade-mark green colored "Tenaris" is stamped. In case the owner of the original certificate would release a copy of it, he must attest its conformity to the original one taking upon himself the responsibility for any unlawful or not allowed use. Any alteration and/or falsification will be subjected to the law.

Este certificado se emite mediante sistema computarizado y es validado con firma electrónica. El certificado original posee impreso el logo Tenaris color verde. En caso de que el poseedor del certificado entregue una copia, deberá garantizar la conformidad con el original haciéndose responsable por cualquier uso ilegal o indebido. Cualquier alteración y/o falsificación estará sujeta a la ley.

Tenaris

INSPECTION CERTIFICATE

(BS EN 10204 3.1: 2004 - ISO 10474 3.1: 2013)

Number / Número: 853076

Date / Día: July 21, 2017

Siderca S.A.I.C.
Dr Jorge A. Simini 250
(B2804MHA) Campana
Buenos Aires, Argentina
(54) 3489 433100 tel
(54) 3489 433405 fax

Customer / Cliente: VAN LEEUWEN PIPE & TUBE (CANADA) INC.

Customer's Order Item / Orden Cliente - Item: 45001803-00008

Customer's Reference / Ref. del Cliente: N/A

Manufacturer's Works Order N° / Confirmación de Venta: 51938/08

Manufacturing Process / Proceso de Manufactura: SEAMLESS HOT ROLLED

Product Type / Tipo de Producto: CARBON STEEL FOR LOW TEMPERATURE SERVICE

Surface / Superficie: INT BARE /EXT VARNISHED

Standard or Specification / Normas o Especificaciones: ASTM/ASME A/SA333-10+CSA Z245.1-14 CATII-SS+PSP00374+NACE MR0175/103+IPRO LP-006

Steel Grade / Grado de acero: 1/6/359 CAT II SS

Ends / Extremos: BEVELLED AT 30 DEG. ASTM

Dimensions / Dimensiones:	Schedule / Cédula:	Length / Longitud:	Quantity / Cantidad: 83 Pcs/pz.	Nominal Weight / Peso Nominal:
6 5/ 8 X 0.280 INCH 168.30 X 7.11 MM	040	11.0/11.8 m	3157.94 FT 59747 LB 962.54 MTS 27101 KG	18.97 LB/FT 28.26 KG/M

CHEMICAL COMPOSITION / COMPOSICION QUIMICA

Composition % / Composición %

Heat N° / Colada N°	Sample N° / Muestra N°	Lot N° / Lote N°	Pipe N° / Tubo N°		C	Mn	Si	Cr	Mo	Al sol	Cu	P	Ni	V	Al	Sn	As	Nb	Ti	Pb	Sb	Co	S	Zr	Bi	Ca	B	N	Mg	W	Ce.1	Ce.2
				H Max	25	135	50	30	12	--	40	25	400	80	--	--	--	20	110	--	--	--	100	--	--	--	10	--	--	--	42	40
				H Min	--	40	10	--	--	--	--	--	--	--	--	--	--	--	--	--	--	--	--	--	--	--	--	--	--	--	--	--
				P Max	25	135	50	30	12	--	40	25	400	80	--	--	--	20	110	--	--	--	100	--	--	--	10	--	--	--	42	40
				P Min	--	40	10	--	--	--	--	--	--	--	--	--	--	--	--	--	--	--	--	--	--	--	--	--	--	--	--	--
44391				H	8	105	23	9	4	2	16	12	70	4	15	11	4	14	3	1	2	7	9	10	20	12	1	43	7	20	30	21
44391	2836335	71971	40	P	9	105	23	9	4	1	17	12	74	3	16	10	4	14	3	1	3	7	10	20	22	16	2	50	4	20	31	23
44391	2836324	71971	20	P	9	105	23	9	4	2	16	13	72	4	18	10	4	16	3	1	3	7	11	20	22	16	2	48	5	20	31	23
44391	2836326	71971	60	P	10	105	23	9	4	1	17	12	73	3	15	10	4	14	2	1	3	7	7	20	22	12	2	45	4	20	32	25
44391	2837409	71971	17	P	9	106	24	9	4	2	16	13	69	5	16	10	4	15	3	1	3	7	10	20	22	11	2	41	4	20	31	23
44391	2836329	71973	1	P	8	105	23	9	4	1	17	12	70	3	15	10	4	14	3	1	3	7	10	20	22	12	2	45	4	20	30	21
44391	2836327	71972	80	P	8	105	22	9	4	1	17	12	73	3	15	10	4	14	3	1	3	7	10	20	22	12	2	44	3	20	30	21
44391	2836343	71974	60	P	8	105	23	9	4	1	17	11	69	4	16	10	3	14	3	1	3	7	10	20	22	12	2	44	3	20	30	21
44391	2836344	71975	80	P	8	105	22	9	4	1	17	12	66	5	16	10	3	14	3	1	3	7	5	20	22	11	2	50	5	20	30	21
44391	2837410	71975	85	P	9	105	23	9	4	1	16	12	70	5	17	10	4	15	3	1	3	7	9	20	22	12	2	44	4	20	30	21
44391	2836339	71974	40	P	10	105	23	9	4	1	17	12	74	4	15	10	4	14	3	1	3	7	10	20	22	12	2	41	5	20	31	23
44391	2836335	71974	20	P	10	105	23	9	4	1	17	12	75	3	15	10	4	16	3	1	3	7	9	20	22	14	2	45	4	20	32	25

Ce.1: C+(MN/6)+(CR+MO+V)/5+(NI+CU)/15

Ce.2: C+F((MN/6)+(SI/24)+(CU/15)+(NI/20)+(CR+MO+V+NB)/5+(5*B))

H: Heat / Colada

Max: Maximum / Máximo

Min: Minimum / Mínimo

P: Product / Producto

This certificate is issued by a computerized system and it is valid with electronic signature. On the original certificate the trade-mark green colored "Tenaris" is stamped. In case the owner of the original certificate would release a copy of it, he must attest its conformity to the original one taking upon himself the responsibility for any unlawful or not allowed use. Any alteration and/or falsification will be subjected to the law.

Este certificado se emite mediante sistema computarizado y es validado con firma electrónica. El certificado original posee impreso el logo Tenaris color verde. En caso de que el poseedor del certificado entregue una copia, deberá garantizar la conformidad con el original haciéndose responsable por cualquier uso ilegal o indebido. Cualquier alteración y/o falsificación estará sujeta a la ley.

CLIENTE / Customer / Client

VAN LEEUWEN PIPE AND TUBE -CAN
2875-64TH AVENUE
EDMONTON - ALBERTA T6P 1R1
CANADA
CAN

CERTIFICADO DE INSPECCION

Inspection Certificate - Certificat de Réception

UNE EN 10204:05 / 3.1
ISO 10474:15 / 3.1

FECHA / Date: 24/05/2018 — N.º / No. 195241 — HOJA / Page: 4

ULMA FORJA, S.COOP.
Management Systems certified by LRQAE
Certified acc. PED 97/23/EC+AD2000-W0
PED 14/68/UE
by TÜV Rheinland
N.º 01 202 EfO 02 7443
Bª Zubillaga, 3 - Apdo. 14
20560 OÑATI (Gipuzkoa) SPAIN
Tel.: 34 - 943 780552
Fax: 34 - 943 781606
E-mail: ulma@ulmapiping.com

Packing 139834

PRODUCTO / Article - Produit: FLANGES

SU PEDIDO N.º / Your Order No. / Votre Cde. N.º: 45001896

DE / of. - de: 10/01/2018

NORMAS APLICABLES / Requirements - Normes Applicables: ASME B16.5-17

MATERIAL CORRESPONDIENTE / Material Correspondent - Qualité: ASME SA350LF2CL1-2-17, ASTM A350LF2CL1-2-17
ASME SA105M-17, ASTM A105M-14

MODO DE FUSION (*) / Steel Making - Elaboration de l'acier: E - Elec. Y - Oxigeno básico

NACE MR0175/ISO15156-02/03-15 & NACE MR0103/ISO17495-15
Clause 7.2.1.4, Annex A.2 and SSC Region 3.
CSA-Z245.12-17 GR248 CAT II-SS (WN & BLIND FLANGES ONLY)

MARCA DEL FABRICANTE / Mark of factory / Marque du fabricant

DEPARTAMENTO / Section / Département: QUALITY ASSURANCE

PARTIDA / Item / Poste	CANTIDAD / Quantity / Quantité	DESCRIPCION / Description / Description	LOTE	OBSERVACIONES / Remarks / Observations (*)
48 24738	20	WN 4 1500LB XXS RTJ A350LF2	18M18E	NE
54 24626	6	WN 4 600LB XXS RF A350LF2	12A18F	NE
54 24626	19	WN 4 600LB XXS RF A350LF2	29O17	NE
56 22171	67	WN 6 150LB STD/40 RF A350LF2	15Y806	NE
56 22171	3	WN 6 150LB STD/40 RF A350LF2	29A804	NE
45 24672	5	BLIND 8 600LB RF A350LF2	17A817	NE

COLADA Nº / Heat No / Nº Coulée	RESISTENCIA / T.Strength / Resist Rupt N/mm2	LIMITE ELAST / Y.Strength 0.2 % N/mm2	ALARGAM / Elongation / Allongement Lo=50mm/4d %	ESTRICCION / Red. Area / Striction %	RESILIENCIA / Impact test / Résilience Joules			PROBETA / MEDIA / Average / Moyenne	°C	DUREZA / Hardness / Durete HBW
A18A8	521	307	32,10	67,40	56	58	61	58	-50	148 151
A41A8	513	305	29,70	57,90	68	68	66	67	-50	148 151
B73A7	524	317	28,10	61,40	46	51	42	46	-50	150 155
A50A8	517	309	29,80	50,60	63	68	73	68	-50	150 151
A50A8	519	311	31,20	59,80	65	54	59	59	-50	149 150
A58A8	507	295	28,20	59,40	54	61	56	58	-50	147 149

COLADA Nº / Heat No / Nº Coulée	COMPOSICION QUIMICA - STEEL MAKER'S LADLE ANALYSIS - ANALYSE CHIMIQUE														
	C %	Si %	Mn %	P %	S %	Cr %	Ni %	Mo %	Nb %	V %	Cu %	Al %	Ti %	B %	CEq %
B73A7	0,190	0,230	0,980	0,009	0,003	0,090	0,080	0,010	0,004	0,006	0,190	0,035	0,002	0,0004	0,39
A50A8	0,190	0,250	1,080	0,006	0,004	0,050	0,070	0,010	0,003	0,004	0,180	0,031	0,001	0,0002	0,40
A18A8	0,190	0,190	1,080	0,007	0,005	0,070	0,070	0,012	0,002	0,006	0,220	0,025	0,002	0,0005	0,41
A41A8	0,180	0,210	1,060	0,011	0,005	0,060	0,060	0,013	0,003	0,010	0,180	0,043	0,001	0,0002	0,39
A58A8	0,190	0,180	1,060	0,009	0,001	0,100	0,090	0,021	0,004	0,003	0,180	0,040	0,001	0,0005	0,41

- Las dimensiones y la condición superficial se hallaron satisfactorias
- Dimension and surface condition were found acceptable
- Les dimensions et état de surface sont satisfaisants.

- Los materiales citados cumplen las normas aplicables.
- Manufacturing requirements are satisfied.
- Les normes applicables sont respectés.

EL INSPECTOR
Works Inspector - L'Inspecteur

ULMA FORJA S. COOP.
Dpto. de Garantía de calidad
Quality Assurance Dept.

(*) OBSERVACIONES / Remarks / Observations: N_NORMALIZED AT 900 C AND ALLOWED TO COOL IN STILL AIR.

SA 350 LF2
6.625" O.D. x 0.280 w.t.
W/N 150 RF 6 STD
HT# A50A8
Internal PO# E20170
External PO# 203177

Recieved By: Jessie Springett
12/09/18

CLIENTE / Custo... Client

VAN LEEUWEN PIPE AND TUBE -CAN
2875-64TH AVENUE
EDMONTON - ALBERTA T6P 1R1
CANADA
CAN

CERTIFICADO DE INSPECCION

Inspection Certificate - Certificat de Réception

UNE EN 10204:06 / 3.1
ISO 10474:15 / 3.1

FECHA: Date: 15/12/2017 05/02/2018

N.º No. 192002 Rev.01

HOJA: Page: 6

SGI 1922164 SGI 6000236 SGI 6009987

ULMA FORJA, S.COOP.
Management Systems certified by LRQAE
Certified acc. PED 97/23/EC+AD2000-W0 PED 14/68/UE by TÜV Rheinland N.º 01 202 E/O 02 7443

Bº Zubillaga, 3 - Apdo. 14
20560 OÑATI (Gipuzkoa) SPAIN
Tel.: 34 - 943 780552
Fax: 34 - 943 781808
E-mail: ulma@ulmapiping.com

Packing 136413

PRODUCTO / Article - Produit: FLANGES

SU PEDIDO N.º / Your Order No. / Votre Cde. N.º: 45001856

DE / of. - de: 03/11/2017

NORMAS APLICABLES / Requirements - Normes Applicables: ASME B16.5-17

MATERIAL CORRESPONDIENTE / Material Correspondent - Qualité: ASME SA350LF2CL1-2-17, ASTM A350LF2CL1-2-17
ASME SA105M-17, ASTM A105M-14
NACE MR0175/ISO15156-02/03-15 & NACE MR0103/ISO17495-15 Clause 7.2.1.4, Annex A.2 and SSC Region 3.
CSA-Z245.12-13 GR248 CAT II-SS (WN & BLIND FLANGES ONLY)

MODO DE FUSION (*) / Steel Making - Elaboration de l'acier: E = Elec. Y = Oxígeno básico

MARCA DEL FABRICANTE / Mark of factory / Marque du fabricant

DEPARTAMENTO / Section / Département: QUALITY ASSURANCE

PARTIDA Item Poste	CANTIDAD Quantity Quantité	DESCRIPCION Description Description	LOTE	OBSERVACIONES Remarks Observations (*)	COLADA N.º Heat No N.ºCoulée	RESISTENCIA T.Strength Resist Rupt N/mm2	LIMITE CLAST. Y.Strength 0.2 % N/mm2	ALARGAM. Elongation Allongement Lo:50mm/4o %	ESTRICCION Red. Area Striction %	RESILIENCIA Impact test Résilience Joules			CHARPY V 10x10mm MEDIA Average Moyenne	°C	DUREZA Hardness Dureté HBW
47 37010	7	WN 3 2500LB XXS RTJ A350LF2	07N17	NE	B73A7	505	298	35,60	72,50	41	48	46	45	-50	144 150
47 37010	3	WN 3 2500LB XXS RTJ A350LF2	27O17	NE	B73A7	526	319	27,30	60,10	54	53	38	48	-50	151 157
51 22170	13	WN 4 150LB XS/80 RF A350LF2	05Y17	NE	43AV7	519	312	25,40	55,60	47	55	51	51	-50	155 159
51 22170	2	WN 4 150LB XS/80 RF A350LF2	27S17	NE	A14A7	495	302	33,40	66,70	59	54	52	55	-50	154 156
56 22202	70	WN 4 600LB XS/80 RF A350LF2	21O17	NE	B47A7	501	301	30,20	62,00	47	51	40	46	-50	140 146
59 22171	2	WN 6 150LB STD/40 RF A350LF2	19N17	NE	A63A7	505	298	31,00	64,10	57	56	49	54	-50	158 163
59 22171	18	WN 6 150LB STD/40 RF A350LF2	17N17	NE	B63A7	506	290	33,60	65,90	40	43	46	43	-50	140 149
60 22172	5	WN 6 150LB XS/80 RF A350LF2	10O17	NE	A48A7	522	315	28,50	59,90	48	55	53	52	-50	153 157
63 24627	2	WN 6 600LB XXS RF A350LF2	27S17	NE	A64A7	505	298	35,00	70,00	49	47	44	47	-50	154 157
66 22174	4	WN 8 150LB XS/80 RF A350LF2	24N17	NE	B55A7	486	289	36,00	70,90	39	45	47	43	-50	138 145

COMPOSICION QUIMICA - STEEL MAKER'S LADLE ANALYSIS - ANALYSE CHIMIQUE

COLADA N.º Heat No N.ºCoulée	C %	Si %	Mn %	P %	S %	Cr %	Ni %	Mo %	Nb %	V %	Cu %	Al %	Ti %	CEq %
43AV7	0,192	0,240	1,020	0,015	0,005	0,096	0,094	0,022	0,001	0,000	0,253	0,035	0,003	0,41
A14A7	0,180	0,190	1,020	0,008	0,004	0,060	0,060	0,009	0,005	0,005	0,120	0,041	0,002	0,38
A48A7	0,190	0,160	1,020	0,009	0,004	0,050	0,070	0,010	0,007	0,007	0,140	0,036	0,001	0,39
A63A7	0,193	0,230	1,030	0,015	0,002	0,100	0,098	0,029	0,001	0,000	0,239	0,041	0,003	0,41
A64A7	0,180	0,240	1,030	0,015	0,005	0,065	0,091	0,024	0,001	0,000	0,205	0,042	0,002	0,39
B47A7	0,200	0,210	1,030	0,012	0,001	0,060	0,050	0,010	0,005	0,006	0,170	0,034	0,002	0,40
B55A7	0,180	0,180	0,990	0,012	0,004	0,060	0,060	0,009	0,003	0,005	0,190	0,030	0,001	0,38
B63A7	0,180	0,230	1,010	0,010	0,003	0,060	0,070	0,010	0,005	0,003	0,180	0,028	0,001	0,38
B73A7	0,190	0,230	0,980	0,009	0,003	0,090	0,080	0,010	0,004	0,006	0,190	0,035	0,002	0,39

(*) OBSERVACIONES: Remarks Observations: N_NORMALIZED AT 900 C AND ALLOWED TO COOL IN STILL AIR.

- Las dimensiones y la condición superficial se hallaron satisfactorias.
- Dimension and surface condition were found acceptable.
- Les dimensions et états de surface sont satisfaisants.

- Los materiales citados cumplen las normas aplicables.
- Manufacturing requirements are satisfied.
- Les normes applicables sont respectées.

EL INSPECTOR
Works Inspector - L'inspecteur

ULMA FORJA S. COOP.
Dpto. de Garantía de calidad
Quality Assurance Dept.

QM-System: Certification as per ISO 9001

Erläuterungen siehe Rückseite/Explications voir au verso/See reverse for explanations (www.dillinger.de/certificate)

DILLINGER

A02 INSPECTION CERTIFICATE 3.1 AS PER EN 10204:2004
INSPECTION CERTIFICATE 3.1 AS PER ISO 10474:2013
MATERIAL TEST REPORT (MTR)

A10 Advice of dispatch No./ Date of dispatch: 611114-07.09.17

A08/ Manufacturer's order/ A03 Certificate No.: 427758-001 Sheet: 1/...

A05 Established Inspecting body: DH

A06 Purchaser: EDMONTON STEEL,EDMON A07.1 No. ED10715-J1010ER

Final receiver: EDMONTON STEEL,EDMON A07.2 No.

B01 Product: HEAVY PLATES.

B02/ Steel design. SA516-70 SA20-S5

B03 Any suppl. requirements: ASME-IIA:2015
DIL-HUE-1:R34-2016-08-19

21070

B01-B99 Description of the product

B14 Item No.	B08 Number of pieces	B09 Thickness	B10 Width	B11 Length	B12 Theoretical mass KG	B04 Product delivery condition	B07.2 Heat No.	B07.1 Rolled plate No./ Test No.	A09 Purchaser article number
			INCH						
01	1	0,5000 x	96,50000 x	480,00000	2979	N	449291	55053-01	ITEM001
01	1	0,5000 x	96,50000 x	480,00000	2979	N	449291	55053-02	ITEM001
01	1	0,5000 x	96,50000 x	480,00000	2979	N	449291	55053-03	ITEM001
01	1	0,5000 x	96,50000 x	480,00000	2979	N	449291	55054-01	ITEM001
01	1	0,5000 x	96,50000 x	480,00000	2979	N	449291	55054-02	ITEM001
01	1	0,5000 x	96,50000 x	480,00000	2979	N	449291	55054-03	ITEM001
01	1	0,5000 x	96,50000 x	480,00000	2979	N	449291	55056-01	ITEM001
01	1	0,5000 x	96,50000 x	480,00000	2979	N	449291	55056-02	ITEM001
01	1	0,5000 x	96,50000 x	480,00000	2979	N	449291	55056-03	ITEM001
01	1	0,5000 x	96,50000 x	480,00000	2979	N	449291	55060-01	ITEM001
01	1	0,5000 x	96,50000 x	480,00000	2979	N	449291	55060-02	ITEM001
**	12				35748		449291	55060-03	ITEM001
***	12				35748				

EPL-243
SA 516 Gr. 60/70
0.50"
HT# 449291 55060 03
PO# 203847
Internal PO# E20207
Recieved: 26/09/2018
Recieved by: Jessie Springett

B04 Product delivery condition

ITEM NO.: 01
N: HT: 1670 GR.F +36 -27 GR.F
SOAKING TIME TO ATTAIN THE TARGET TEMPERATURE OVER THE WHOLE SECTION: 1-1,75 MIN/MM (25-45 MIN/INCH)
COOLING IN STILL AIR

A04 D H Manufacturer's mark

Z01/Z02/Z03 We hereby certify, that the above mentioned materials have been delivered in accordance with the terms of order.

B. BALDAUF
Test House Manager

A H B Inspector's stamp

Date 08.09.17

AG der Dillinger Hüttenwerke
Postfach 1580, D-66748 Dillingen/Saar
Inspection department

A01

PP 1

QM-System: Certification as per ISO 9001

Erläuterungen siehe Rückseite/Explications voir au verso/See reverse for explanations (www.dillinger.de/certificate)

DILLINGER

A02 INSPECTION CERTIFICATE 3.1 AS PER EN 10204:2004
INSPECTION CERTIFICATE 3.1 AS PER ISO 10474:2013
MATERIAL TEST REPORT (MTR)

A10 Advice of dispatch No./ Date of dispatch: 611114-07.09.17

A08/ Manufacturer's order/ A03 Certificate No.: 427758-001 Sheet: 2/...

A05 Established Inspecting body: DH

A06 Purchaser: EDMONTON STEEL, EDMON A07.1 No. ED10715-J1010ER

Final receiver: EDMONTON STEEL, EDMON A07.2 No.

B01 Product: HEAVY PLATES

B02/ Steel design.: SA516-70 SA20-S5

B03 Any suppl. requirements: ASME-IIA:2015
DIL-HUE-1:R34-2016-08-19

B06 Marking of the product

ITEM NO.: 01
STEEL DESIGNATION SA516 70 MTLTV SA516 60 MTLTV
HEAT NO. / TRADEMARK / ROLLED PLATE NO.-TEST NO. / INSPECTOR'S STAMP

B07-B99 Further information about the product

ITEM NO.: 01
THICKNESS REDUCTION RATIO >= 3,0 IS FULFILLED - CF. A/SA20(M) PAR. 5.3

C10-C29 Tensile test

B14 Item No.	B07.2 Heat No.	B07.1 Rol.plate/ Test No.	B05 Reference (heat) treatment	C01	C02/ C01	C03 Temp. GR.F	C10 C11 KSI RP02	C12 RM	C13 A % L0=8IN	C14-C15
01	449291	55053		K1	Q	RT	49,9	73,8	26	
01	449291	55054		K1	Q	RT	50,0	73,8	24	
01	449291	55056		K1	Q	RT	50,2	73,4	27	
01	449291	55060		K1	Q	RT	50,2	74,0	27	

C30-C39 Hardness test

B14 Item. No.	B07.2 Heat No.	B07.1 Rol.plate/ Test No.	B05 Reference (heat) treatment	C01	C02/C01	C03 Temp. GR.F	C30 Method of test	C35	C31 Individual values			C32 Mean value
01	449291	55053		K1	O	RT	HBW 10/3000	HB	139	138	139	139
01	449291	55054		K1	O	RT	HBW 10/3000	HB	139	138	137	138
01	449291	55056		K1	O	RT	HBW 10/3000	HB	139	139	139	139
01	449291	55060		K1	O	RT	HBW 10/3000	HB	139	139	139	139

A04 D H Manufacturer's mark

Z01/Z02/Z03 We hereby certify, that the above mentioned materials have been delivered in accordance with the terms of order.

B. BALDAUF
Test House Manager

A H B Inspector's stamp

A01 AG der Dillinger Hüttenwerke
Postfach 1580, D-66748 Dillingen/Saar
Inspection department

Date 08.09.17 PP 1

QM-System: Certification as per ISO 9001

DILLINGER

Erläuterungen siehe Rückseite/Explications voir au verso/See reverse for explanations (www.dillinger.de/certificate)

A02 INSPECTION CERTIFICATE 3.1 AS PER EN 10204:2004
INSPECTION CERTIFICATE 3.1 AS PER ISO 10474:2013
MATERIAL TEST REPORT (MTR)

A10 Advice of dispatch No./ Date of dispatch: 611114-07.09.17

A08/ Manufacturer's order/ A03 Certificate No.: 427758-001 Sheet: 3/...

A05 Established Inspecting body: DH

A06 Purchaser: EDMONTON STEEL, EDMON A07.1 No.: ED10715-J1010ER

Final receiver: EDMONTON STEEL, EDMON A07.2 No.:

B01 Product: HEAVY PLATES

B02/ Steel design.: SA516-70 SA20-S5

B03 Any suppl. requirements: ASME-IIA:2015
DIL-HUE-1:R34-2016-08-19

C40-C49 Impact test

B14 Item No.	B07.2 Heat No.	B07.1 Rol.plate/ Test No.	B05 Reference (heat) treatment	C01	C02/ C01	C03 Temp. GR.F	C41 Width of test piece	C40 Type of test piece	C44 Testing method	C46 Energy	C45	C42 Individual values AV=FT.LBF			C43 Mean value
01	449291	55053		K1	LV	-51		CHP-V			AV 8	212	193	147	184
01	449291	55054		K1	LV	-51		CHP-V			AV 8	131	189	195	172
01	449291	55056		K1	LV	-51		CHP-V			AV 8	228	134	203	188
01	449291	55060		K1	LV	-51		CHP-V			AV 8	206	198	223	209

C70-C99 Chemical composition % - Heat analysis

B07.2 Heat	C70	C	SI	MN	P	S	N	CU	MO	NI	CR	V	NB	SN	TI
449291	Y	0,161	0,358	1,160	0,010	0,0013	0,0066	0,026	0,005	0,027	0,033	0,000	0,000	0,0009	0,002

B07.2 Heat	C70	B	CA	AL-T
449291	Y	0,0001	0,0021	0,029

C94 Heat analysis Carbon equivalent / Alloying restrictions

B07.2 Heat											
449291	FO-02=	0,37	FO-51=	0,000	FO-55=	0,09	FO-78=	0,04	FO-91=	7,2	

C95 Ladle treatment

ITEM NO.: 01
HEAT OF THE INDICATED ITEM: VACUUM DEGASSED / SULPHIDE SHAPE CONTROL

C95 Further information about ladle treatment

ITEM NO.: 01
CALCIUM TREATED

A04 D H Manufacturer's mark

Z01/Z02/Z03 We hereby certify, that the above mentioned materials have been delivered in accordance with the terms of order.

B. BALDAUF
Test House Manager

A H B Inspector's stamp

A01 AG der Dillinger Hüttenwerke
Postfach 1580, D-66748 Dillingen/Saar
Inspection department

Date 08.09.17 PP 1

QM-System: Certification as per ISO 9001

Erläuterungen siehe Rückseite/Explications voir au verso/See reverse for explanations (www.dillinger.de/certificate)

DILLINGER

A02 INSPECTION CERTIFICATE 3.1 AS PER EN 10204:2004
INSPECTION CERTIFICATE 3.1 AS PER ISO 10474:2013
MATERIAL TEST REPORT (MTR)

A10 Advice of dispatch No./ Date of dispatch: 611114-07.09.17

A08/ Manufacturer's order/ A03 Certificate No.: 427758-001 Sheet: 4

A05 Established Inspecting body: DH

A06 Purchaser: EDMONTON STEEL,EDMON A07.1 No. ED10715-J1010ER

Final receiver: EDMONTON STEEL,EDMON A07.2 No.

B01 Product: HEAVY PLATES

B02/ Steel design.: SA516-70 SA20-S5

B03 Any suppl. requirements: ASME-IIA:2015
DIL-HUE-1:R34-2016-08-19

C70-C99 Chemical composition % - Product analysis

B07.2 Heat	B07.1 Test No.	C01	C	SI	MN	P	S	N	CU	MO	NI	CR	V	NB	SN	TI
449291	55053	K1	0,160	0,354	1,16	0,010	0,0010	0,0057	0,025	0,003	0,027	0,031	0,000	0,000	0,000	0,001

B07.2 Heat	B07.1 Test No.	C01	B	CA	AL-T
449291	55053	K1	0,0000	0,0020	0,029

C94 Product analysis Carbon equivalent / Alloying restrictions

B07.2 Heat	B07.1 Test No.	C01					
449291	55053	K1	FO-02=	0,36	FO-51=	0,000	FO-55= 0,09

C94 Carbon equivalent formula / Alloying restrictions

FO-02 = C+(MN/6)+(CR+MO+V)/5+(NI+CU)/15
FO-51 = V +NB
FO-55 = CU+MO+NI+CR
FO-78 = CR+MO
FO-91 = MN/C

D01 Marking and identification, surface appearance, shape and dimensional properties

ITEM NO.: 01
EXAMINATION OF MARKING, SURFACE, SHAPE AND DIMENSIONS: THE RESULTS MEET THE REQUIREMENTS.
SURFACE AS PER ASME-SA20
THICKNESS AS PER ASME-SA20
LENGTH AND WIDTH AS PER ASME-SA20

MTR APPROVED EXCHANGE EDMONTON

A04 D H Manufacturer's mark

Z01/Z02/Z03 We hereby certify, that the above mentioned materials have been delivered in accordance with the terms of order.

B. BALDAUF
Test House Manager

AHB Inspector's stamp

AG der Dillinger Hüttenwerke
Postfach 1580, D-66748 Dillingen/Saar
Inspection department

A01

Date 08.09.17 PP 1

QM-System: Certification as per ISO 9001

Erläuterungen siehe Rückseite/Explications voir au verso/See reverse for explanations (www.dillinger.de/certificate)

DILLINGER

A02 INSPECTION CERTIFICATE 3.1 AS PER EN 10204:2004
INSPECTION CERTIFICATE 3.1 AS PER ISO 10474:2013
MATERIAL TEST REPORT (MTR)

A10 Advice of dispatch No./ Date of dispatch: 611114-07.09.17

A08/ Manufacturer's order/ A03 Certificate No.: 427758-001 Sheet: 1/...

A05 Established inspecting body: DH

A06 Purchaser: EDMONTON STEEL, EDMON A07.1 No.: ED10715-J1010ER

Final receiver: EDMONTON STEEL, EDMON A07.2 No.:

B01 Product: HEAVY PLATES

B02/ Steel design.: SA516-60

B03 Any suppl. requirements: ASME-IIA:2015 SA20-S5
DIL-HUE-1:R34-2016-08-19

21071

B01-B99 Description of the product

B14 Item No.	B08 Number of pieces	B09 Thickness	B10 Width	B11 Length	B12 Theoretical mass KG	B04 Product delivery condition	B07.2 Heat No.	B07.1 Rolled plate No./ Test No.	A09 Purchaser article number
			INCH						
01	1	0,5000 x	96,50000 x	480,00000	2979	N	449291	55053-01	ITEM001
01	1	0,5000 x	96,50000 x	480,00000	2979	N	449291	55053-02	ITEM001
01	1	0,5000 x	96,50000 x	480,00000	2979	N	449291	55053-03	ITEM001
01	1	0,5000 x	96,50000 x	480,00000	2979	N	449291	55054-01	ITEM001
01	1	0,5000 x	96,50000 x	480,00000	2979	N	449291	55054-02	ITEM001
01	1	0,5000 x	96,50000 x	480,00000	2979	N	449291	55054-03	ITEM001
01	1	0,5000 x	96,50000 x	480,00000	2979	N	449291	55056-01	ITEM001
01	1	0,5000 x	96,50000 x	480,00000	2979	N	449291	55056-02	ITEM001
01	1	0,5000 x	96,50000 x	480,00000	2979	N	449291	55056-03	ITEM001
01	1	0,5000 x	96,50000 x	480,00000	2979	N	449291	55060-01	ITEM001
01	1	0,5000 x	96,50000 x	480,00000	2979	N	449291	55060-02	ITEM001
**	12				35748			55060-03	ITEM001
***	12				35748				

B04 Product delivery condition

ITEM NO.: 01
N: HT: 1670 GR.F +36 -27 GR.F
SOAKING TIME TO ATTAIN THE TARGET TEMPERATURE OVER THE WHOLE SECTION: 1-1,75 MIN/MM (25-45 MIN/INCH)
COOLING IN STILL AIR

A04 D H Manufacturer's mark

Z01/Z02/Z03 We hereby certify, that the above mentioned materials have been delivered in accordance with the terms of order.

B. BALDAUF
Test House Manager

A H B Inspector's stamp

AG der Dillinger Hüttenwerke
Postfach 1580, D-66748 Dillingen/Saar
Inspection department

A01

Date 08.09.17 PP 1

QM-System: Certification as per ISO 9001

DILLINGER

Erläuterungen siehe Rückseite/Explications voir au verso/See reverse for explanations (www.dillinger.de/certificate)

A02 INSPECTION CERTIFICATE 3.1 AS PER EN 10204:2004
INSPECTION CERTIFICATE 3.1 AS PER ISO 10474:2013
MATERIAL TEST REPORT (MTR)

A10 Advice of dispatch No./ Date of dispatch: 611114-07.09.17

A08/ Manufacturer's order/ A03 Certificate No.: 427758-001 Sheet: 2/...

A05 Established Inspecting body: DH

A06 Purchaser: EDMONTON STEEL, EDMON A07.1 No. ED10715-J1010ER

Final receiver: EDMONTON STEEL, EDMON A07.2 No.

B01 Product: HEAVY PLATES

B02/ Steel design. SA516-60 SA20-S5

B03 Any suppl. requirements: ASME-IIA:2015
DIL-HUE-1:R34-2016-08-19

B06 Marking of the product

ITEM NO.: 01
STEEL DESIGNATION **SA516 70 MTLTV SA516 60 MTLTV**
HEAT NO. / TRADEMARK / ROLLED PLATE NO.-TEST NO. / INSPECTOR'S STAMP

B07-B99 Further information about the product

ITEM NO.: 01
THICKNESS REDUCTION RATIO >= 3,0 IS FULFILLED - CF. A/SA20(M) PAR. 5.3

C10-C29 Tensile test

B14 Item No.	B07.2 Heat No.	B07.1 Rol.plate/ Test No.	B05 Reference (heat) treatment	C01	C02/ C01	C03 Temp. GR.F	C10 C11 KSI RP02	C12 RM	C13 A % L0=8IN	C14-C15
01	449291	55053		K1	Q	RT	49,9	73,8	26	
01	449291	55054		K1	Q	RT	50,0	73,8	24	
01	449291	55056		K1	Q	RT	50,2	73,4	27	
01	449291	55060		K1	Q	RT	50,2	74,0	27	

C30-C39 Hardness test

B14 Item. No.	B07.2 Heat No.	B07.1 Rol.plate/ Test No.	B05 Reference (heat) treatment	C01	C02/C01	C03 Temp. GR.F	C30 Method of test	C35	C31 Individual values			C32 Mean value
01	449291	55053		K1	O	RT	HBW 10/3000	HB	139	138	139	139
01	449291	55054		K1	O	RT	HBW 10/3000	HB	139	138	137	138
01	449291	55056		K1	O	RT	HBW 10/3000	HB	139	139	139	139
01	449291	55060		K1	O	RT	HBW 10/3000	HB	139	139	139	139

A04 D H Manufacturer's mark

Z01/Z02/Z03 We hereby certify, that the above mentioned materials have been delivered in accordance with the terms of order.

B. BALDAUF
Test House Manager

A H B Inspector's stamp

A01 AG der Dillinger Hüttenwerke
Postfach 1580, D-66748 Dillingen/Saar
Inspection department

Date 08.09.17

PP 1

QM-System: Certification as per ISO 9001

DILLINGER

Erläuterungen siehe Rückseite/Explications voir au verso/See reverse for explanations (www.dillinger.de/certificate)

A02 INSPECTION CERTIFICATE 3.1 AS PER EN 10204:2004
INSPECTION CERTIFICATE 3.1 AS PER ISO 10474:2013
MATERIAL TEST REPORT (MTR)

A10 Advice of dispatch No./ Date of dispatch: 611114-07.09.17

A08/ Manufacturer's order/ A03 Certificate No.: 427758-001 Sheet: 3/...

A05 Established Inspecting body: DH

A06 Purchaser: EDMONTON STEEL,EDMON A07.1 No. ED10715-J1010ER

Final receiver: EDMONTON STEEL,EDMON A07.2 No.

B01 Product: HEAVY PLATES

B02/ Steel design.: SA516-60 SA20-S5

B03 Any suppl. requirements: ASME-IIA:2015
DIL-HUE-1:R34-2016-08-19

C40-C49 Impact test

B14 Item No.	B07.2 Heat No.	B07.1 Rol.plate/ Test No.	B05 Reference (heat) treatment	C01	C02/ C01	C03 Temp. GR.F	C41 Width of test piece	C40 Type of test piece	C44 Testing method	C46 Energy	C45	C42 Individual values AV=FT.LBF			C43 Mean value
01	449291	55053		K1	LV	-51		CHP-V			AV 8	212	193	147	184
01	449291	55054		K1	LV	-51		CHP-V			AV 8	131	189	195	172
01	449291	55056		K1	LV	-51		CHP-V			AV 8	228	134	203	188
01	449291	55060		K1	LV	-51		CHP-V			AV 8	206	198	223	209

C70-C99 Chemical composition % - Heat analysis

B07.2 Heat	C70	C	SI	MN	P	S	N	CU	MO	NI	CR	V	NB	SN	TI
449291	Y	0,161	0,358	1,160	0,010	0,0013	0,0066	0,026	0,005	0,027	0,033	0,000	0,000	0,0009	0,002

B07.2 Heat	C70	B	CA	AL-T
449291	Y	0,0001	0,0021	0,029

C94 Heat analysis Carbon equivalent / Alloying restrictions

B07.2 Heat											
449291	FO-02=	0,37	FO-51=	0,000	FO-55=	0,09	FO-78=	0,04	FO-91=	7,2	

C95 Ladle treatment

ITEM NO.: 01
HEAT OF THE INDICATED ITEM: VACUUM DEGASSED / SULPHIDE SHAPE CONTROL

C95 Further information about ladle treatment

ITEM NO.: 01
CALCIUM TREATED

A04 D H Manufacturer's mark

Z01/Z02/Z03 We hereby certify, that the above mentioned materials have been delivered in accordance with the terms of order.

B. BALDAUF
Test House Manager

AHB Inspector's stamp

A01 AG der Dillinger Hüttenwerke
Postfach 1580, D-66748 Dillingen/Saar
Inspection department

Date 08.09.17 PP 1

QM-System: Certification as per ISO 9001

Erläuterungen siehe Rückseite/Explications voir au verso/See reverse for explanations (www.dillinger.de/certificate)

DILLINGER

A02 INSPECTION CERTIFICATE 3.1 AS PER EN 10204:2004
INSPECTION CERTIFICATE 3.1 AS PER ISO 10474:2013
MATERIAL TEST REPORT (MTR)

A10 Advice of dispatch No./ Date of dispatch: 611114-07.09.17

A08/ Manufacturer's order/ A03 Certificate No.: 427758-001

Sheet: 4

A05 Established Inspecting body: DH

A06 Purchaser: EDMONTON STEEL, EDMON — A07.1 No.: ED10715-J1010ER

Final receiver: EDMONTON STEEL, EDMON — A07.2 No.:

B01 Product: HEAVY PLATES

B02/ Steel design.: SA516-60 SA20-S5

B03 Any suppl. requirements: ASME-IIA:2015
DIL-HUE-1:R34-2016-08-19

C70-C99 Chemical composition % - Product analysis

B07.2 Heat	B07.1 Test No.	C01	C	SI	MN	P	S	N	CU	MO	NI	CR	V	NB	SN	TI
449291	55053	K1	0,160	0,354	1,16	0,010	0,0010	0,0057	0,025	0,003	0,027	0,031	0,000	0,000	0,000	0,001

B07.2 Heat	B07.1 Test No.	C01	B	CA	AL-T
449291	55053	K1	0,0000	0,0020	0,029

C94 Product analysis Carbon equivalent / Alloying restrictions

B07.2 Heat	B07.1 Test No.	C01				
449291	55053	K1	FO-02=	0,36	FO-51=	0,000	FO-55=	0,09

C94 Carbon equivalent formula / Alloying restrictions

FO-02 = C+(MN/6)+(CR+MO+V)/5+(NI+CU)/15
FO-51 = V +NB
FO-55 = CU+MO+NI+CR
FO-78 = CR+MO
FO-91 = MN/C

D01 Marking and identification, surface appearance, shape and dimensional properties

ITEM NO.: 01
EXAMINATION OF MARKING, SURFACE, SHAPE AND DIMENSIONS: THE RESULTS MEET THE REQUIREMENTS.
SURFACE AS PER ASME-SA20
THICKNESS AS PER ASME-SA20
LENGTH AND WIDTH AS PER ASME-SA20

MTR APPROVED EDMONTON EXCHANGER

A04 D H Manufacturer's mark

Z01/Z02/Z03 We hereby certify, that the above mentioned materials have been delivered in accordance with the terms of order.

B. BALDAUF
Test House Manager

AHB Inspector's stamp

A01 AG der Dillinger Hüttenwerke
Postfach 1580, D-66748 Dillingen/Saar
Inspection department

Date 08.09.17

PP 1

QM-System: Certification as per ISO 9001

DILLINGER

Erläuterungen siehe Rückseite/Explications voir au verso/See reverse for explanations (www.dillinger.de/certificate)

A02 INSPECTION CERTIFICATE 3.1 AS PER EN 10204:2004
INSPECTION CERTIFICATE 3.1 AS PER ISO 10474:2013
MATERIAL TEST REPORT (MTR)

A10 Advice of dispatch No./ Date of dispatch: 626272-10.02.18

A08/ Manufacturer's order/ A03 Certificate No.: 431792-001 Sheet: 12/...

A05 Established Inspecting body: DH

A06 Purchaser: EDMONTON STEEL,EDMON A07.1 No.: ED10722-J1010ER

Final receiver: EDMONTON STEEL,EDMON A07.2 No.:

B01 Product: HEAVY PLATES

B02/ Steel design. SA516-70 SA20-S5

B03 Any suppl. requirements: ASME-IIA:2015
DIL-HUE-1:R34-2016-08-19

C70-C99 Chemical composition % - Product analysis

B07.2 Heat	B07.1 Test No.	C01	C	SI	MN	P	S	N	CU	MO	NI	CR	V	NB	SN	TI
454461	64437	K1	0,167	0,366	1,16	0,011	0,0007	0,0076	0,025	0,006	0,050	0,029	0,001	0,002	0,001	0,002
454836	27699	K1	0,170	0,368	1,16	0,010	0,0007	0,0061	0,033	0,007	0,027	0,038	0,000	0,001	0,001	0,003
454836	27706	K1	0,177	0,369	1,16	0,010	0,0006	0,0059	0,033	0,007	0,027	0,038	0,001	0,001	0,001	0,003
454837	27740	K1	0,166	0,369	1,16	0,009	0,0005	0,0060	0,026	0,005	0,023	0,028	0,001	0,001	0,001	0,002
454837	27783	K1	0,179	0,373	1,17	0,008	0,0005	0,0060	0,024	0,004	0,022	0,024	0,001	0,001	0,001	0,001
454840	27789	K1	0,167	0,369	1,17	0,009	0,0004	0,0060	0,023	0,004	0,022	0,023	0,001	0,001	0,000	0,002
454840	27796	K1	0,164	0,371	1,17	0,009	0,0005	0,0064	0,023	0,004	0,022	0,023	0,001	0,001	0,000	0,002
454840	27809	K1	0,165	0,365	1,15	0,009	0,0005	0,0054	0,023	0,010	0,024	0,038	0,001	0,001	0,000	0,002
454843	27952	K1	0,145	0,358	1,14	0,009	0,0004	0,0053	0,023	0,014	0,025	0,045	0,001	0,000	0,000	0,002

B07.2 Heat	B07.1 Test No.	C01	B	CA	AL-T
454461	64437	K1	0,0001	0,0013	0,034
454836	27699	K1	0,0001	0,0018	0,031
454836	27706	K1	0,0001	0,0019	0,032
454837	27740	K1	0,0000	0,0015	0,030
454837	27783	K1	0,0000	0,0014	0,029
454840	27789	K1	0,0001	0,0011	0,031
454840	27796	K1	0,0000	0,0011	0,031
454840	27809	K1	0,0000	0,0012	0,035
454843	27952	K1	0,0000	0,0011	0,038

A04 D H Manufacturer's mark

Z01/Z02/Z03 We hereby certify, that the above mentioned materials have been delivered in accordance with the terms of order.

B. BALDAUF
Test House Manager

AHB Inspector's stamp

Date 12.02.18

AG der Dillinger Hüttenwerke
Postfach 1580, D-66748 Dillingen/Saar
Inspection department

A01

PP 1

QM-System: Certification as per ISO 9001

Erläuterungen siehe Rückseite/Explications voir au verso/See reverse for explanations (www.dillinger.de/certificate)

DILLINGER

A02 INSPECTION CERTIFICATE 3.1 AS PER EN 10204:2004
INSPECTION CERTIFICATE 3.1 AS PER ISO 10474:2013
MATERIAL TEST REPORT (MTR)

A10 Advice of dispatch No./ Date of dispatch: 626272-10.02.18

A08/ Manufacturer's order/ A03 Certificate No.: 431792-001 Sheet: 12/...

A05 Established inspecting body: DH

A06 Purchaser: EDMONTON STEEL,EDMON A07.1 No. ED10722-J1010ER

Final receiver: EDMONTON STEEL,EDMON A07.2 No.

B01 Product: HEAVY PLATES

B02/ Steel design. SA516-60 SA20-S5

B03 Any suppl. requirements ASME-IIA:2015
DIL-HUE-1:R34-2016-08-19

C70-C99 Chemical composition % - Product analysis

B07.2 Heat	B07.1 Test No.	C01	C	SI	MN	P	S	N	CU	MO	NI	CR	V	NB	SN	TI
454461	64437	K1	0,167	0,366	1,16	0,011	0,0007	0,0076	0,025	0,006	0,050	0,029	0,001	0,002	0,001	0,002
454836	27699	K1	0,170	0,368	1,16	0,010	0,0007	0,0061	0,033	0,007	0,027	0,038	0,000	0,001	0,001	0,003
454836	27706	K1	0,177	0,369	1,16	0,010	0,0006	0,0059	0,033	0,007	0,027	0,038	0,001	0,001	0,001	0,003
454837	27740	K1	0,166	0,369	1,16	0,009	0,0005	0,0060	0,026	0,005	0,023	0,028	0,001	0,001	0,001	0,002
454837	27783	K1	0,179	0,373	1,17	0,008	0,0005	0,0060	0,024	0,004	0,022	0,024	0,001	0,001	0,001	0,001
454840	27789	K1	0,167	0,369	1,17	0,009	0,0004	0,0060	0,023	0,004	0,022	0,023	0,001	0,001	0,000	0,002
454840	27796	K1	0,164	0,371	1,17	0,009	0,0005	0,0064	0,023	0,004	0,022	0,023	0,001	0,001	0,000	0,002
454840	27809	K1	0,165	0,365	1,15	0,009	0,0005	0,0054	0,023	0,010	0,024	0,038	0,001	0,001	0,000	0,002
454843	27952	K1	0,145	0,358	1,14	0,009	0,0004	0,0053	0,023	0,014	0,025	0,045	0,001	0,000	0,000	0,002

B07.2 Heat	B07.1 Test No.	C01	B	CA	AL-T
454461	64437	K1	0,0001	0,0013	0,034
454836	27699	K1	0,0001	0,0018	0,031
454836	27706	K1	0,0001	0,0019	0,032
454837	27740	K1	0,0000	0,0015	0,030
454837	27783	K1	0,0000	0,0014	0,029
454840	27789	K1	0,0001	0,0011	0,031
454840	27796	K1	0,0000	0,0011	0,031
454840	27809	K1	0,0000	0,0012	0,035
454843	27952	K1	0,0000	0,0011	0,038

A04 D H Manufacturer's mark

Z01/Z02/Z03 We hereby certify, that the above mentioned materials have been delivered in accordance with the terms of order.

B. BALDAUF
Test House Manager

A H B Inspector's stamp

Date 12.02.18

A01 AG der Dillinger Hüttenwerke
Postfach 1580, D-66748 Dillingen/Saar
Inspection department

PP 1

WELDING PROCEDURE SPECIFICATION NO.: STS-2 (Rev.0)

WELDING PROCEDURE QUALIFICATION RECORD NO.(S): STS-2-1 (Rev.0), STS-2-3 (Rev.0), STS-2-4 (Rev.0), WFL-2-1 (Rev.1)

QUALIFIED IN ACCORDANCE WITH ASME SECTION IX FOR

Base Metal (Typical): P1 Groups 1 & 2 to P1 Groups 1 & 2
(SA 333 Gr. 6, SA 350 Gr. LF2, SA 420 Gr. WPL6, SA 516 Gr. 70 etc.)
Process(es): SAW **Weld Types:** GROOVE & FILLET
Position: FLAT & HORIZONTAL **Diameter:** ALL DIAMETERS
Filler Metal: F7A6-EM12K

BASE METAL CONDITIONS & GROOVE THICKNESS RANGE QUALIFIED:

NOTCH TOUGHNESS APPLICATIONS TO -50 °F AS WELDED
BASE METAL THICKNESS RANGE 0.125 to 1.750 in. inclusive

COMBINED DEPOSITED WELD METAL THICKNESS
ASME IX 1.750 in. maximum
API 650, 620, 12D, 12F 1.750 in. maximum

PROVINCIAL REGISTRATION

This WPS was prepared to the requirements of ASME Section IX 2017 and includes some of the additional requirements of the construction codes listed. The application of this WPS is outside the work scope of SGS Canada Inc.

Prepared By: Sara Van Roestel
Signed:
Date: July 8, 2019

Reviewed By: Keelan Wolfe, C.E.T.
Signed:
Date: July 8, 2018

(File E19-285)

QW-482 WELDING PROCEDURE SPECIFICATION (WPS)

Organization Name: Storage Tank Solutions Inc.
Welding Procedure Specification No.: STS-2 (Rev.0) Date: July 8, 2019
Supporting PQR No.(s): STS-2-1 (Rev.0), STS-2-3 (Rev.0), STS-2-4 (Rev.0), WFL-2-1 (Rev.1)
Welding Process(es): Submerged Arc Welding (SAW)

JOINTS (QW-402)

Joint Design: All ASME groove & fillet, reference construction drawing for joint details.
Where joint details are not specified, refer to figures 1 to 15 attached
Root Opening: As per attached typical groove designs, see figures 1 to 15 attached
Backing: With Retainers: With or without

BASE METALS (QW-403)

P-Number: P1 Groups 1 & 2 To P-Number: P1 Groups 1 & 2
Thickness Range: Groove: 0.125 to 1.750 in. inclusive (1)
Fillet: 0.125 to 8.00 in. inclusive
Pipe Diameter Ranges: Groove: All diameters
Fillet: All diameters
Deposited Weld Metal (Per Pass): 0.250 in. maximum
(1) Reference thickness limitations for tests on welds in fabrication or assembly in ASME B31.3 Table 323.3.1 - Impact Testing Requirements for metals.

FILLER METALS (QW-404)

	SAW
Specification No. (SFA)	SFA 5.17
Flux / Wire Classification	F7A6-EM12K
F-No.	F6
A-No.	A1
Diameter	5/64 to 3/16 in. inclusive
Supplemental Filler Metal	Without
Flux Type	Neutral
Flux Designation	Lincolnweld 882 (2)
Alloy Elements	Without
Alloy Flux	Without
Recrushed Slag	Without
Deposited Weld Metal Thickness Range:	
Groove	1.750 in. max. (3)
Fillet	All fillet sizes

(2) Other flux trade names may be used provided they meet an F7A6 classification
(3) Deposited weld metal thickness shall not exceed 1.750 in.

POSITION (QW-405)

Position of Groove: Flat & Horizontal Position of Fillet: Flat & Horizontal
Weld Progression: N/A

PREHEAT (QW-406)

Preheat Temperature (Minimum) See attached preheat sheet prior to welding.
Interpass Temperature (Maximum) 500 °F
Preheat Maintenance See attached preheat sheet prior to welding. Preheat maintenance is not required if welding is interrupted or after the completion of welding unless required by the code of construction.

POSTWELD HEAT TREATMENT (QW-407)

With or Without Without
Temperature Range N/A Time Range N/A

ELECTRICAL CHARACTERISTICS (QW-409)

Current Direct Polarity Reverse, electrode positive
Amps See Table 1 Volts See Table 1
Maximum Heat Input

Base Metal Thickness Range	SAW
0.125 to 0.499 in.	28,174 J/in.
0.500 to 0.624 in.	53,438 J/in.
0.625 in. and greater	59,492 J/in.

TECHNIQUE (QW-410)

Manual or Automatic Machine
String or Weave String
Initial & Interpass Cleaning Brushing, chipping or grinding as required
Method of Back Gouging Air carbon arc, back-grind as required
Oscillation N/A
Contact Tube to Work Distance 0.500 in. - 1.75 in.
Multiple or Single Pass Per Side Multiple
Single or Multiple Electrodes Single
Electrode Spacing N/A
Peening Not permitted
Use of Thermal Process N/A
Travel Speed See Table 1

TABLE 1 - WELDING PARAMETERS

Process	Filler Metal	Diameter in.	Current Type& Polarity	Amperage Range	Voltage Range	Travel Speed i.p.m.	Wire Feed Speed i.p.m.
SAW	F7A6-EM12K	5/64	DCRP	200 - 500	25 - 34	5.1 - 30	60 - 245
SAW	F7A6-EM12K	3/32	DCRP	250 - 600	25 - 35	6.4 - 32	60 - 245
SAW	F7A6-EM12K	1/8	DCRP	250 - 700	26 - 35	6.6 - 35	45 - 180
SAW	F7A6-EM12K	5/32	DCRP	370 - 800	26 - 36	9.8 - 40	45 - 180
SAW	F7A6-EM12K	3/16	DCRP	500 - 1000	28 - 38	14.2 - 50	30 - 100

Note: Welding parameters shall be adjusted to ensure that the maximum heat input value specified in QW-409 above is not exceeded.
Heat Input (joules per inch) = (Amperage X Voltage X 60) / Travel Speed (i.p.m.)

TYPICAL JOINT DESIGNS

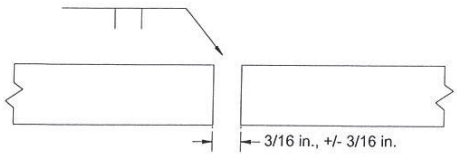

Figure 1
Single Square Butt

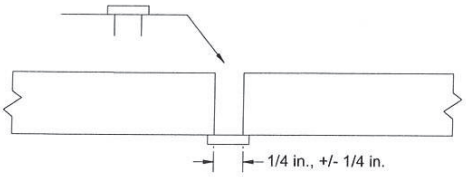

Figure 2
Single Square Butt with Backing Strip

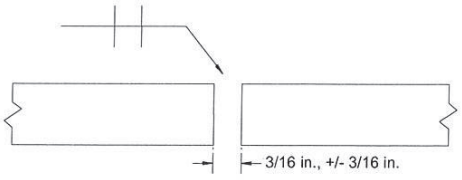

Figure 3
Double Square Butt

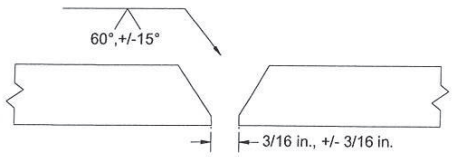

Figure 4
Single Vee Butt

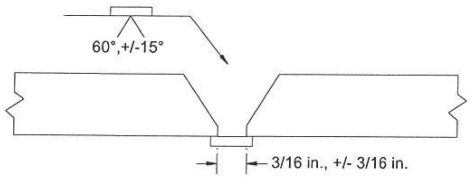

Figure 5
Single Vee Butt with Backing Strip

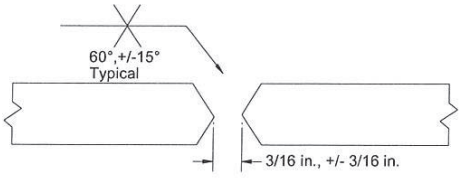

Figure 6
Double Vee Butt

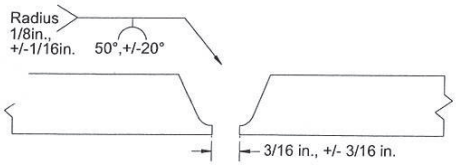

Figure 7
Single U Butt

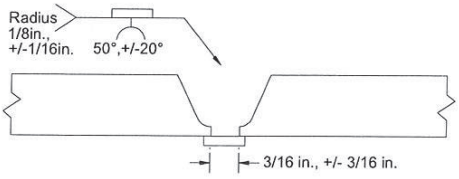

Figure 8
Single U Butt with Backing Strip

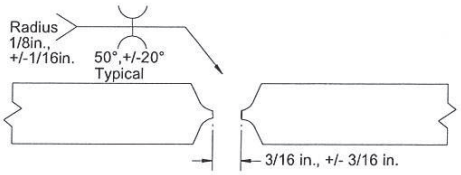

Figure 9
Double U Butt

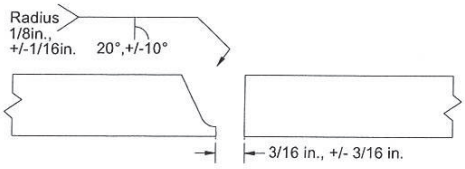

Figure 10
Single J Butt

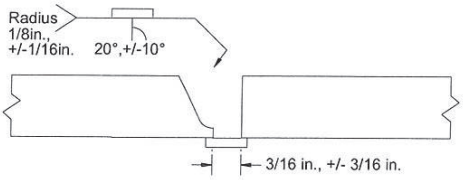

Figure 11
Single J Butt with Backing Strip

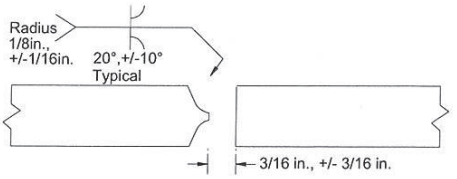

Figure 12
Double J Butt

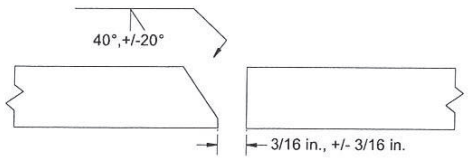

Figure 13
Single Bevel Butt

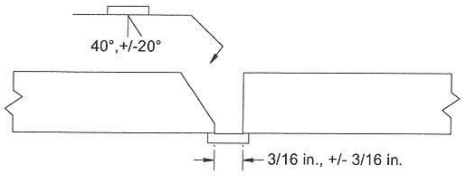

Figure 14
Single Bevel Butt with Backing Strip

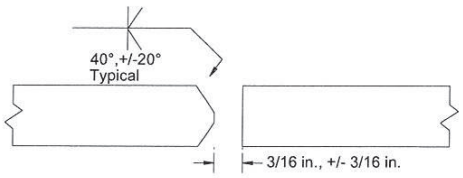

Figure 15
Double Bevel Butt

Additional joint designs and internal misalignment on circumferential welds shall be within the dimensional limits stated on the approved construction drawing and/or the engineering design.

PREHEAT
P-No. 1

LARGE, WELDED, LOW-PRESSURE STORAGE TANKS IN ACCORDANCE WITH API 620 Twelfth Edition, Addendum 1

THICKNESS OF THICKER PLATE	MINIMUM PREHEAT TEMPERATURE	
	P1 Group 1	P1 Group 2
Less than or equal to 1.25 in.	32 °F	50 °F
Greater than 1.25 in to 1.50 in.	50 °F	100 °F
Greater than 1.50 in.	200 °F	200 °F

- No welding of any kind shall be performed when the surfaces to be welded are wet with rain snow or ice; when rain or snow is falling on such surfaces; or during periods of high winds unless the welder and the work are properly shielded.
- Preheat shall be applied when the metal temperature is below the temperature required by Table 6-2 (summarized above). In that case the base metal shall be heated to at least the temperature indicated within 3.0 in. of the place where welding is to be started and maintained 3.0 in. ahead of the arc. Material P-Number and Group Number shall be as designated in ASME IX or in API 630 6.7.2 for materials not listed in ASME IX.

WELDED TANKS FOR OIL STORAGE IN ACCORDANCE WITH API 650 Twelfth Edition, Addendum 2

THICKNESS OF THICKER PLATE	MINIMUM PREHEAT TEMPERATURE	
	Material Group I, II, III, and IIIA	Material Group IV, IVA, V & VI
Less than or equal to 1.25 in.	32 °F	50 °F
Greater than 1.25 in to 1.50 in.	50 °F	100 °F
Greater than 1.50 in.	200 °F	200 °F

- No welding of any kind shall be performed when the surfaces to be welded are wet with rain, snow or ice; when rain or snow is falling on such surfaces; or during periods of high winds unless the welder and the work are properly shielded.
- Preheat shall be applied when metal temperature is below the temperature required by table 7-1 (summarized above) for the base metals being joined, and metal shall be heated to at least the temperature indicated within 3.0 in. of the place where welding is to be started and maintained 3.0 in. ahead of the arc. Material Groups shall be as designated in Table 4.4

QW-483 PROCEDURE QUALIFICATION RECORD (PQR)

Organization Name: Storage Tank Solutions Inc.
Procedure Qualification Record No.: STS-2-1 (Rev.0) Date: February 22, 2019
Welding Process(es): Submerged Arc Welding (SAW)

JOINTS (QW-402)

Joint Design: Butt joint, square groove, see page 2
Root Opening: See page 2
Backing: Without Retainers: Without

BASE METALS (QW-403)

Material Specification No.: SA 516 Type or Grade: Gr. 60/70
Heat Treat Condition (1): SA 516 Gr. 60/70: Normalized
P-No.: P1 Groups 1/2 To P-No.: P1 Groups 1/2 Thickness: 0.250 in.
Heat Number: 429693 29249-03 Carbon Equivalent (2): 0.37
Diameter: N/A Other: Plate product form m/c to 0.250 in.
Deposited Weld Metal (Per Pass): Did not exceed 0.125 in.

(1) Condition of base metal prior to welding.
(2) Per CSA Z662 Carbon Equivalent formula. See chemical composition of heat analysis on attached material test report

FILLER METALS (QW-404)

	SAW
Specification No. (SFA)	SFA 5.17
Flux / Wire Classification	F7A6-EM12K (3)
F-No.	F6
A-No.	A1 (4)
Diameter	See attached sketch
Supplemental Filler Metal	Without
Flux Type	Neutral
Flux Designation	F7A6
Flux Trade Name	Lincolnweld 882
Alloy Elements	Without
Alloy Flux	Without
Recrushed Slag	Without
Deposited Weld Metal Thickness	0.250 in.

(3) The Lincoln Electric Company: Lincolnweld 882M Flux / L-61 Electrode Lot No. 15135168
(4) F7A6-EM12K A-No. established from chemical analysis of SAW weld cap deposit. See attached Laboratory Test Report No.: E19-104.9

POSITION (QW-405)

Position of Groove: 2G Weld Progression: N/A

PREHEAT (QW-406)

Preheat Temperature: 50 °F Interpass Temp. (Max.): 400 °F
Preheat Maintenance: Weld was allowed to cool to ambient temperature in still air after welding was completed.

POSTWELD HEAT TREATMENT (QW-407)

With or Without: Without
Temperature: N/A Time: N/A

ELECTRICAL CHARACTERISTICS (QW-409)

Current: Direct Polarity: Reverse, electrode positive
Amps: See below Volts: See below
Heat Input: 28,174 J/in. maximum

TECHNIQUE (QW-410)

Manual or Automatic: Machine
String or Weave: String
Initial & Interpass Cleaning: Brushing, chipping and grinding as required
Method of Back Gouging: Ground to sound metal with an abrasive grinding disc
Oscillation: N/A
Contact Tube to Work Distance: 0.750 in. - 1.00 in.
Multiple or Single Pass Per Side: Single
Single or Multiple Electrodes: Single
Electrode Spacing: N/A
Peening: Not conducted
Use of Thermal Process: N/A
Travel Speed: See below

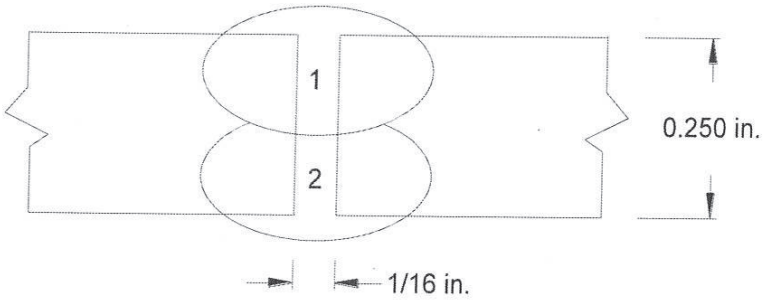

Pass	Process	Filler Metal	Diameter in.	Current Type & Polarity	Amperage Range	Voltage Range	Travel Speed i.p.m.
1	SAW	F7A6-EM12K	3/32	DCRP	350 - 370	29 - 31	23.0
2	SAW	F7A6-EM12K	3/32	DCRP	300 - 320	27 - 29	23.5

PQR NO. STS-2-1 (Rev.0)

CHARPY V-NOTCH IMPACT TEST

Type of Test Charpy V-Notch Orientation Transverse

Governing Specification	Notch Location	Specimen Size in.	Test Temperature ° F	Specimen Number	Impact Values ft•lbf
ASME VIII Div.1 - 2017 & ASME B31.3 - 2016	Weld metal within 1/16 in. of root	0.394 x 0.197	-60	G2.1	11
				G2.2	24
				G2.3	11
ASME VIII Div.1 - 2017 & ASME B31.3 - 2016	HAZ @ Middle 1/2t	0.394 x 0.197	-60	G3.1	32
				G3.2	15
				G3.3	19

OTHER TESTS

Vickers Hardness - see attached Laboratory Test Report No.: E19-104.7
Chemical Analysis (SAW Cap) - see attached Laboratory Test Report No.: E19-104.9

Welder's Name Matthew MacKenzie & Christopher Jaques
Certificate File No. N/A
Tests Conducted By SGS Canada Inc.
Laboratory Test No. E19-104.7

We certify the statements in this record are correct and that the test welds were prepared, welded and tested in accordance with the requirements of Section IX of the ASME Code.

Organization Storage Tank Solutions Inc.

Date January 21, 2021 Print Sebastien Ouellet

Signed 

QW-483 PROCEDURE QUALIFICATION RECORD (PQR)

Organization Name: Storage Tank Solutions Inc.
Procedure Qualification Record No.: STS-2-3 (Rev.0) Date: February 22, 2019
Welding Process(es): Submerged Arc Welding (SAW)

JOINTS (QW-402)

Joint Design: Butt joint, double bevel groove, see page 2
Root Opening: See page 2
Backing: Without Retainers: Without

BASE METALS (QW-403)

Material Specification No.: SA 516 Type or Grade: Gr. 60/70
Heat Treat Condition (1): SA 516 Gr. 60/70: Normalized
P-No.: P1 Groups 1/2 To P-No.: P1 Groups 1/2 Thickness: 0.875 in.
Heat Number: 454840 27789-02 Carbon Equivalent (2): 0.37
Diameter: N/A Other: Plate product form
Deposited Weld Metal (Per Pass): Did not exceed 0.188 in.
(1) Condition of base metal prior to welding.
(2) Per CSA Z662 Carbon Equivalent formula. See chemical composition of heat analysis on attached material test report

FILLER METALS (QW-404)

	SAW
Specification No. (SFA)	SFA 5.17
Flux / Wire Classification	F7A6-EM12K (3)
F-No.	F6
A-No.	A1 (4)
Diameter	See attached sketch
Supplemental Filler Metal	Without
Flux Type	Neutral
Flux Designation	F7A6
Flux Trade Name	Lincolnweld 882
Alloy Elements	Without
Alloy Flux	Without
Recrushed Slag	Without
Deposited Weld Metal Thickness	0.875 in.

(3) The Lincoln Electric Company: Lincolnweld 882M Flux / L-61 Electrode Lot No. 15135168
(4) F7A6-EM12K A-No. established from chemical analysis of SAW weld cap deposit. See attached Laboratory Test Report No.: E19-104.9

POSITION (QW-405)

Position of Groove: 2G Weld Progression: N/A

PREHEAT (QW-406)

Preheat Temperature: 50 °F Interpass Temp. (Max.): 500 °F
Preheat Maintenance: Weld was allowed to cool to ambient temperature in still air after welding was completed.

POSTWELD HEAT TREATMENT (QW-407)

With or Without: Without
Temperature: N/A Time: N/A

ELECTRICAL CHARACTERISTICS (QW-409)

Current: Direct Polarity: Reverse, electrode positive
Amps: See below Volts: See below
Heat Input: 59,492 J/in. maximum

TECHNIQUE (QW-410)

Manual or Automatic: Machine
String or Weave: String
Initial & Interpass Cleaning: Brushing, chipping and grinding as required
Method of Back Gouging: Ground to sound metal with an abrasive grinding disc
Oscillation: N/A
Contact Tube to Work Distance: 0.50 in. - 0.750 in.
Multiple or Single Pass Per Side: Multiple
Single or Multiple Electrodes: Single
Electrode Spacing: N/A
Peening: Not conducted
Use of Thermal Process: N/A
Travel Speed: See below

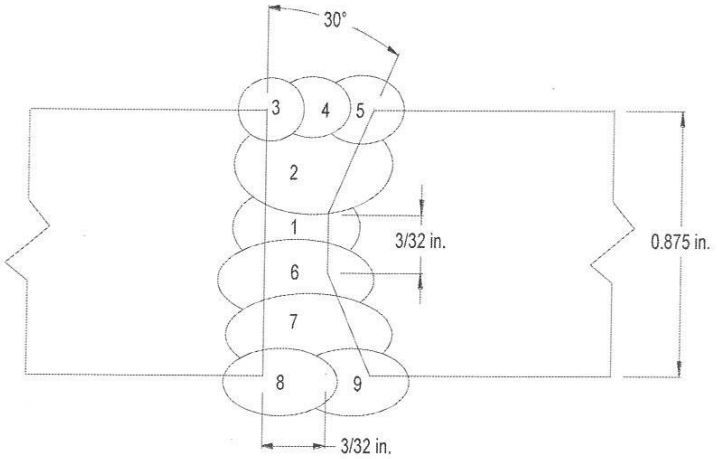

Pass	Process	Filler Metal	Diameter in.	Current Type & Polarity	Amperage Range	Voltage Range	Travel Speed i.p.m.
1	SAW	F7A6-EM12K	3/32	DCRP	340 - 350	30 - 32	12.2
2	SAW	F7A6-EM12K	3/32	DCRP	380 - 390	29 - 31	13.6
3	SAW	F7A6-EM12K	3/32	DCRP	390 - 410	30 - 32	16.7
4	SAW	F7A6-EM12K	3/32	DCRP	380 - 390	30 - 32	17.1
5	SAW	F7A6-EM12K	3/32	DCRP	380 - 390	30 - 32	18.0
6	SAW	F7A6-EM12K	3/32	DCRP	300 - 320	28 - 30	11.8
7	SAW	F7A6-EM12K	3/32	DCRP	390 - 420	29 - 31	12.6
8	SAW	F7A6-EM12K	3/32	DCRP	380 - 400	29 - 31	11.8
9	SAW	F7A6-EM12K	3/32	DCRP	360 - 370	28 - 30	14.1

PQR NO. STS-2-3 (Rev.0)

TENSILE TEST (QW-150)

Sample No.	Width in.	Thickness in.	Area sq. in.	Ultimate Load lbf	Ultimate Stress psi	Fracture Type & Location
T1	0.750	0.833	0.625	47,800	76,500	Partial Cup & Cone Parent Metal
T2	0.749	0.833	0.624	47,900	76,800	Partial Cup & Cone Parent Metal

GUIDED BEND TEST (QW-160)

Type & Figure No.	Result	Type & Figure No.	Result
QW-462.2, TSB - S1	Pass	QW-462.2, TSB - S3	Pass
QW-462.2, TSB - S2	Pass	QW-462.2, TSB - S4	Pass

CHARPY V-NOTCH IMPACT TEST

Type of Test Charpy V-Notch Orientation Transverse

Governing Specification	Notch Location	Specimen Size in.	Test Temperature ° F	Specimen Number	Impact Values ft•lbf
ASME B31.3 - 2016	Weld metal within 1/16 in. of root	0.394 x 0.394	-50	I2.1	117
				I2.2	92
				I2.3	96
ASME B31.3 - 2016	HAZ	0.394 x 0.394	-50	I3.1	156
				I3.2	191
				I3.3	152

OTHER TESTS

Vickers Hardness - see attached Laboratory Test Report No.: E19-104.9
Chemical Analysis (SAW Cap) - see attached Laboratory Test Report No.: E19-104.9

Welder's Name Matthew MacKenzie & Christopher Jaques
Certificate File No. N/A
Tests Conducted By SGS Canada Inc.
Laboratory Test No. E19-104.9

We certify the statements in this record are correct and that the test welds were prepared, welded and tested in accordance with the requirements of Section IX of the ASME Code.

Organization Storage Tank Solutions Inc.

Date January 21, 2021 Print Sebastien Ouellet

Signed

QW-483 PROCEDURE QUALIFICATION RECORD (PQR)

Organization Name: Storage Tank Solutions Inc.
Procedure Qualification Record No.: STS-2-4 (Rev.0) Date: June 11, 2019
Welding Process(es): Submerged Arc Welding (SAW)

JOINTS (QW-402)

Joint Design: Butt joint, single bevel groove, see page 2
Root Opening: See page 2
Backing: Without Retainers: Without

BASE METALS (QW-403)

Material Specification No.: SA 516 Type or Grade: Gr. 60/70
Heat Treat Condition (1): SA 516 Gr. 60/70: Normalized
P-No.: P1 Groups 1/2 To P-No.: P1 Groups 1/2 Thickness: 0.500 in.
Heat Number: 459852 56930-01 Carbon Equivalent (2): 0.38
Diameter: N/A Other: Plate product form
Deposited Weld Metal (Per Pass): Did not exceed 0.188 in.

(1) Condition of base metal prior to welding.
(2) Per CSA Z662 Carbon Equivalent formula. See chemical composition of heat analysis on attached material test report

FILLER METALS (QW-404)

	SAW
Specification No. (SFA)	SFA 5.17
Flux / Wire Classification	F7A6-EM12K (3)
F-No.	F6
A-No.	A1 (4)
Diameter	See attached sketch
Supplemental Filler Metal	Without
Flux Type	Neutral
Flux Designation	F7A6
Flux Trade Name	Lincolnweld 882
Alloy Elements	Without
Alloy Flux	Without
Recrushed Slag	Without
Deposited Weld Metal Thickness	0.500 in.

(3) The Lincoln Electric Company: Lincolnweld 882M Flux / L-61 Electrode Lot No. 15135168
(4) F7A6-EM12K A-No. established from chemical analysis of SAW weld cap deposit. See attached Laboratory Test Report No.: E19-104.9

POSITION (QW-405)

Position of Groove: 2G Weld Progression: N/A

PREHEAT (QW-406)

Preheat Temperature: 50 °F Interpass Temp. (Max.): 500 °F
Preheat Maintenance: Weld was allowed to cool to ambient temperature in still air after welding was completed.

POSTWELD HEAT TREATMENT (QW-407)

With or Without: Without
Temperature: N/A Time: N/A

ELECTRICAL CHARACTERISTICS (QW-409)

Current: Direct Polarity: Reverse, electrode positive
Amps: See below Volts: See below
Heat Input: 53,438 J/in. maximum

TECHNIQUE (QW-410)

Manual or Automatic: Machine
String or Weave: String
Initial & Interpass Cleaning: Brushing, chipping and grinding as required
Method of Back Gouging: Ground to sound metal with an abrasive grinding disc
Oscillation: N/A
Contact Tube to Work Distance: 0.50 to 0.750 in.
Multiple or Single Pass Per Side: Single
Single or Multiple Electrodes: Single
Electrode Spacing: N/A
Peening: Not conducted
Use of Thermal Process: N/A
Travel Speed: See below

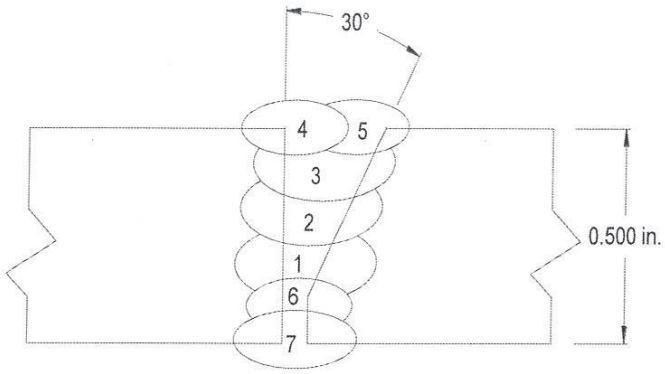

Pass	Process	Filler Metal	Diameter in.	Current Type & Polarity	Amperage Range	Voltage Range	Travel Speed i.p.m.
1	SAW	F7A6-EM12K	3/32	DCRP	360 - 390	27 - 30	12.0
2	SAW	F7A6-EM12K	3/32	DCRP	390 - 410	27 - 30	15.0
3	SAW	F7A6-EM12K	3/32	DCRP	390 - 410	27 - 30	15.0
4	SAW	F7A6-EM12K	3/32	DCRP	370 - 390	27 - 30	15.9
5	SAW	F7A6-EM12K	3/32	DCRP	370 - 390	27 - 30	15.9
6	SAW	F7A6-EM12K	3/32	DCRP	375 - 400	27 - 30	15.9
7	SAW	F7A6-EM12K	3/32	DCRP	380 - 405	27 - 30	15.9

Note: Monitored parameters provided by Storage Tank Solutions Inc.

PQR NO. STS-2-4 (Rev.0)

CHARPY V-NOTCH IMPACT TEST

Type of Test Charpy V-Notch Orientation Transverse

Governing Specification	Notch Location	Specimen Size in.	Test Temperature ° F	Specimen Number	Impact Values ft•lbf
ASME VIII Div.1 - 2017 & ASME B31.3 - 2016	Weld metal within 1/16 in. of root	0.394 x 0.394	-50	C2.1	28
				C2.2	72
				C2.3	69
ASME VIII Div.1 - 2017 & ASME B31.3 - 2016	HAZ @ Middle 1/2t	0.394 x 0.394	-50	C3.1	72
				C3.2	46
				C3.3	88

OTHER TESTS

Vickers Hardness - see attached Laboratory Test Report No.: E19-285.3
Chemical Analysis (SAW Cap) - see attached Laboratory Test Report No.: E19-104.9

Welder's Name Matthew MacKenzie Certificate File No. N/A
Tests Conducted By SGS Canada Inc.
Laboratory Test No. E19-285.3

We certify the statements in this record are correct and that the test welds were prepared, welded and tested in accordance with the requirements of Section IX of the ASME Code.

Organization Storage Tank Solutions Inc.

Date January 21, 2021 Print Sebastien Ouellet

Signed

QW-483 PROCEDURE QUALIFICATION RECORD (PQR)

Company Name: Woodside Fabricators Ltd.
Procedure Qualification Record No.: WFL-2-1 (Rev.1) Date: May 10, 2006
Revision(s): Rev. 1 - Editorial - Addition of alloy elements, alloy flux, flux designation, contact tube to work distance, peening and oscillation. Corporate name change, formerly Woodside Fabricators Ltd. Update to manufacturer's certifying statement. PQR, No. formerly WFL-2-1, revision date July 8, 2019.
Welding Process(es): SAW Type(s): Machine

JOINTS (QW-402)

Type: Butt joint, single vee groove, welded from both side, see next page

BASE METALS (QW-403)

Material Spec.	SA 516 to SA 516	Type or Grade	Gr. 60N to Gr. 70N
P-No.	P1 Grp.1	To P-No. P1 Grp.2	Thickness 6.32 mm (0.249 in.)
Diameter	N/A - Plate	Heat No.	44410-34383
Deposited Weld Metal (Per pass)	Did not exceed 12.7 mm (0.500 in.)		

FILLER METALS (QW-404)

	SAW
Specification No. (SFA)	SFA 5.17
Flux / Wire Classification	F7A6-EM12K (3)
F-No.	F6
A-No.	A1
Diameter	See attached sketch
Supplemental Filler Metal	Without
Flux Type	Neutral
Flux Designation	F7A6
Flux Trade Name	Lincolnweld 882
Alloy Elements	Without
Alloy Flux	Without
Recrushed Slag	Without
Deposited Weld Metal Thickness	0.249 in.

(3) The Lincoln Electric Company: Lincolnweld 882M Flux / L-61 Electrode

POSITION (QW-405)

Position of Groove: 1G
Weld Progression: N/A

PREHEAT (QW-406)

Preheat Temperature: 10°C (50°F) Interpass Temp. (Max.): 232°C (450°F)

POSTWELD HEAT TREATMENT (QW-407)

Temperature: None Time: N/A

ELECTRICAL CHARACTERISTICS (QW-409)

Current: Direct Polarity: Reverse, electrode positive
Amps: See next page Volts: See next page
Maximum Heat Input: 43,400 J/in.

PQR NO. WFL-2-1 (Rev.1)

TECHNIQUE (QW-410)

Manual or Automatic	Machine
String or Weave	String
Initial & Interpass Cleaning	Not recorded
Method of Back Gouging	Not recorded
Oscillation	N/A
Contact Tube to Work Distance	Not recorded
Multiple or Single Pass Per Side	Multiple
Single or Multiple Electrodes	Single
Electrode Spacing	N/A
Peening	Not conducted
Use of Thermal Process	N/A
Travel Speed	See below

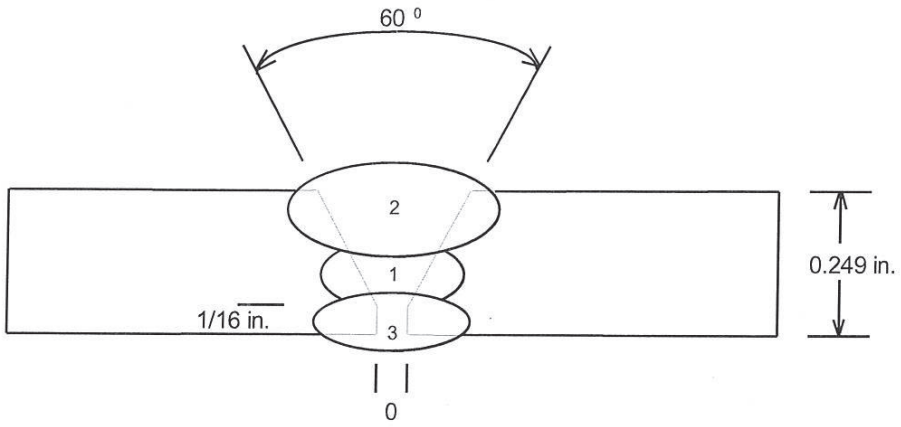

Note: Back gouged to sound metal prior depositing pass No. 3

Pass	Process	Filler Metal	Diameter mm (in.)	Current & Polarity	Amperage Range	Voltage Range	Travel Speed mm/min (ipm.)
1	SAW	F7A6-EM12K	2.4 (3/32)	DCRP	300	30	533 (21)
2	SAW	F7A6-EM12K	2.4 (3/32)	DCRP	350	30 - 32	381 (15)
3	SAW	F7A6-EM12K	2.4 (3/32)	DCRP	300	30	533 (21)

PQR NO. WFL-2-1 (Rev.1)

TENSILE TEST (QW-150)

Specimen No.	Width mm (in.)	Thickness mm (in.)	Area Sq. mm (Sq. in.)	Ultimate Load N (lbs.)	Ultimate Stress MPa (psi)	Character & Fracture Location
T1	19.0	5.62	107	59 200	554	Partial cup & cone
	(0.748)	(0.221)	(0.166)	(13,300)	(80,400)	Parent metal (SA 516 Gr. 70N)
T2	19.2	5.80	114	60 200	540	Partial cup & cone
	(0.756)	(0.228)	(0.173)	(13,500)	(78,400)	Parent metal (SA 516 Gr. 70N)

GUIDED BEND TEST (QW-160)

Type & Figure No.	Result	Type & Figure No.	Result
QW-462.3a, TFB - F1	Pass	QW-462.3a, TRB - R1	Pass
QW-462.3a, TFB - F2	Pass	QW-462.3a, TRB - R2	Pass

CHARPY IMPACT TOUGHNESS

Type of Test Charpy V-Notch Orientation Transverse
Test Temperature -48°C (-55°F) Specimen Size 10 X 5 mm

Specimen No.	Notch Location	Impact Values J (ft. lbs)
V2.1	Weld Metal	30.1 (22.2)
V2.2	within 1/16"	35.1 (25.9)
V2.3	of root	33.9 (25.0)
V3.1	Gr. 60N - HAZ	32.5 (24.0)
V3.2	Gr. 60N - HAZ	30.1 (22.2)
V3.3	Gr. 60N - HAZ	14.2 (10.5)
W3.1	Gr. 70N - HAZ	28.5 (21.0)
W3.2	Gr. 70N - HAZ	9.5 (7.0)
W3.3	Gr. 70N - HAZ	25.8 (19.0)

OTHER TESTS

Vickers Hardness - see attached laboratory test report # C07-300.2

Welders Name Keith Breedon Certificate File No. W-17343
Tests Conducted By Ludwig & Associates Ltd.
Laboratory Test No. C07-300.2

We hereby recertify that the statements in this record have been revised in accordance with Paragraph QW-200.2 and that the test welds were prepared, welded and tested in accordance with the requirements of Section IX of the ASME Code.

Organization Storage Tank Solutions

Date January 21, 2021 Print Sebastien Ouellet

Signed 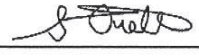

CHARPY V-NOTCH IMPACT TEST

Customer: **Storage Tank Solutions Inc.**
9 Well Head Street
Devon, Alberta
T9G 1Z6

Laboratory Test No.: E19-104.7
Date: March 15, 2019

Attention: Sebastien Ouellet

PQR No.:	STS-2-1 (Rev.0)	**Material Heat No.:**	42963 29249-03
Material:	SA 516 Gr. 60/70	**Weld Type:**	Double Sided
Material Thickness:	6.35 mm (0.250 in.)		
Welding Process:	SAW		
Weld Thickness:	6.35 mm (0.250 in.)		
Thermal Condition:	As Welded		

Specimen Size:	*10 x 5 mm (0.394 x 0.197 in.)*	*Machine:*	*Satec SI-1K3, S/N: 1503*
Orientation:	*Transverse*	*Capacity:*	*407 J (300 ft·lbf)*
Test Temperature:	*-51 °C (-60 °F)*	*Verified Range:*	*3.4-325J (2.5-240 ft·lbf)*
Governing Spec.:	*ASME Section VIII, Div. I, UG-84 – 2017 & ASME B31.3-2016*	*Calibration Date:*	*March 19, 2018*

Specimen Number	Notch Location	Impact Values Joules	(ft·lbf)
G2.1	Weld Metal within 1.5mm (1/16") of root	15	(11)
G2.2		33	(24)
G2.3		15	(11)
G3.1	HAZ @ Middle 1/2t	43	(32)
G3.2		20	(15)
G3.3		26	(19)

Note: Metric values calculated by direct conversion.

Test Conducted By: Tong Zhao (Edmonton)

Certified By: _____
Eric Dacyk, C.E.T.

ANAB ACCREDITED ISO/IEC 17025 TESTING LABORATORY Certification # L2057.01-1

This report (or certificate) is issued by the Company under its General Conditions for Inspection and Testing Services (copy available upon request). The issuance of this report (or certificate) does not exonerate buyers or sellers from exercising all their rights and discharging all their liabilities under the Contract of Sale. Stipulations to the contrary are not binding on the Company. The Company's responsibility under this report (or certificate) is limited to proven negligence and will in no case be more than ten times the amount of the fees or commission. Except by special arrangement, samples, if drawn, will not be retained by the Company for more than 30 days. The information stated in this report (or certificate) is derived from the results of inspection or testing procedures carried out in accordance with the instructions of our Client, and/or our assessment of such results on the basis of any technical standards, trade custom or practice, or other circumstances which should in our professional opinion be taken into account.

SGS Canada Inc. | 4027 - 14 Street S.E. Calgary, AB T2G 3K6 t +1 (403) 262-7072 f +1 (403) 266-3169
7925 Davies Road Edmonton, AB T6E 4N1 t +1 (780) 468-3030 f +1 (780) 468-3032 www.sgs.com

Member of the SGS Group (SGS SA)

HARDNESS TEST

Customer: **Storage Tank Solutions Inc.**
9 Well Head Street
Devon, Alberta
T9G 1Z6

Laboratory Test No.: E19-104.7
Date: March 15, 2019

Attention: Sebastien Ouellet

PQR No.:	STS-2-1 (Rev.0)	**Material Heat No.:**	42963 29249-03
Material:	SA 516 Gr. 60/70	**Weld Type:**	Double Sided
Material Thickness:	6.35 mm (0.250 in.)		
Welding Process:	SAW		
Weld Thickness:	6.35 mm (0.250 in.)		
Thermal Condition:	As Welded		

Type of Test: *Vickers 1 0kg (HV10)*
Governing Spec.: *ASTM E92 - 17 & ANSI/NACE MR0175/ISO 15156:2015*

Instrument: *Buehler 5112*
Calibration Date: *July 27, 2018*

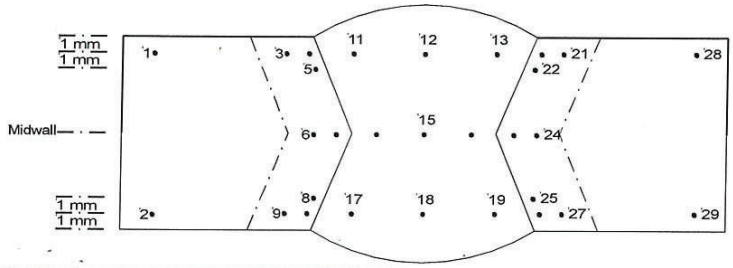

Parent Metal		HAZ		Weld Metal		HAZ		Parent Metal	
1	156	*3*	162	*11*	181	*20*	179	*28*	159
2	151	*4*	178	*12*	173	*21*	159	*29*	149
		5	187	*13*	182	*22*	183		
		6	177	*14*	183	*23*	195		
		7	184	*15*	180	*24*	173		
		8	182	*16*	189	*25*	199		
		9	157	*17*	184	*26*	183		
		10	189	*18*	183	*27*	159		
				19	188				

Test Conducted By: Ibrahim Mohamoud (Edmonton)

Certified By: _____
Eric Dacyk, C.E.T.

ANAB ACCREDITED ISO/IEC 17025 TESTING LABORATORY Certification # L2057.01-1

This report (or certificate) is issued by the Company under its General Conditions for Inspection and Testing Services (copy available upon request). The issuance of this report (or certificate) does not exonerate buyers or sellers from exercising all their rights and discharging all their liabilities under the Contract of Sale. Stipulations to the contrary are not binding on the Company. The Company's responsibility under this report (or certificate) is limited to proven negligence and will in no case be more than ten times the amount of the fees or commission. Except by special arrangement, samples, if drawn, will not be retained by the Company for more than 30 days. The information stated in this report (or certificate) is derived from the results of inspection or testing procedures carried out in accordance with the instructions of our Client, and/or our assessment of such results on the basis of any technical standards, trade custom or practice, or other circumstances which should in our professional opinion be taken into account.

SGS Canada Inc. | 4027 - 14 Street S.E. Calgary, AB T2G 3K6 t +1 (403) 262-7072 f +1 (403) 266-3169
7925 Davies Road Edmonton, AB T6E 4N1 t +1 (780) 468-3030 f +1 (780) 468-3032 www.sgs.com

Member of the SGS Group (SGS SA)

TENSILE / BEND TEST

Customer: **Storage Tank Solutions Inc.**
9 Well Head Street
Devon, Alberta
T9G 1Z6

Laboratory Test No.: E19-104.9
Date: March 15, 2019

Attention: Sebastien Ouellet

PQR No.:	STS-2-3 (Rev.0)	**Material Heat No.:**	454840 27789-02
Material:	SA 516 Gr.60/70		
Material Thickness:	22.2 mm (0.875 in.)		
Welding Process:	SAW		
Weld Thickness:	22.2 mm (0.875 in.)		
Thermal Condition:	As Welded		

Governing Spec.: ASME Section IX - 2017

Instrument: Tinius Olsen S/N: 133660

SAMPLE NO.(QW-150)	T1		T2	
WIDTH mm (in.)	19.0	(0.750)	19.0	(0.749)
THICKNESS mm (in.)	21.2	(0.833)	21.2	(0.833)
AREA sq. mm (sq. in.)	403	(0.625)	402	(0.624)
ULTIMATE LOAD N (lbf)	212 694	(47,800)	213 054	(47,900)
ULTIMATE STRESS MPa (psi)	528	(76,500)	529	(76,800)
FRACTURE TYPE	Partial Cup & Cone		Partial Cup & Cone	
FRACTURE LOCATION	Parent Metal		Parent Metal	

Note: Imperial values calculated by direct conversion.

SAMPLE TYPE(QW-462.2)	Side Bend	Side Bend	Side Bend	Side Bend
SAMPLE NO.	S1	S2	S3	S4
RESULTS	Pass	Pass	Pass	Pass

Test Conducted By: Mohamed Botan (Edmonton)

Certified By: _____
Eric Dacyk, C.E.T.

ANAB ACCREDITED ISO/IEC 17025 TESTING LABORATORY Certification # L2057.01-1

This report (or certificate) is issued by the Company under its General Conditions for Inspection and Testing Services (copy available upon request). The issuance of this report (or certificate) does not exonerate buyers or sellers from exercising all their rights and discharging all their liabilities under the Contract of Sale. Stipulations to the contrary are not binding on the Company. The Company's responsibility under this report (or certificate) is limited to proven negligence and will in no case be more than ten times the amount of the fees or commission. Except by special arrangement, samples, if drawn, will not be retained by the Company for more than 30 days. The information stated in this report (or certificate) is derived from the results of inspection or testing procedures carried out in accordance with the instructions of our Client, and/or our assessment of such results on the basis of any technical standards, trade custom or practice, or other circumstances which should in our professional opinion be taken into account.

SGS Canada Inc. | 4027 - 14 Street S.E. Calgary, AB T2G 3K6 t +1 (403) 262-7072 f +1 (403) 266-3169
7925 Davies Road Edmonton, AB T6E 4N1 t +1 (780) 468-3030 f +1 (780) 468-3032 www.sgs.com

Member of the SGS Group (SGS SA)

CHARPY V-NOTCH IMPACT TEST

Customer: **Storage Tank Solutions Inc.**
9 Well Head Street
Devon, Alberta
T9G 1Z6

Laboratory Test No.: E19-104.9
Date: March 15, 2019

Attention: Sebastien Ouellet

PQR No.:	STS-2-3 (Rev.0)	**Material Heat No.:**	454840 27789-02
Material:	SA 516 Gr.60/70		
Material Thickness:	22.2 mm (0.875 in.)		
Welding Process:	SAW		
Weld Thickness:	22.2 mm (0.875 in.)		
Thermal Condition:	As Welded		

Specimen Size:	*10 x 10 mm (0.394 x 0.394 in.)*	*Machine:*	*Satec SI-1K3, S/N: 1503*
Orientation:	*Transverse*	*Capacity:*	*407 J (300 ft·lbf)*
Test Temperature:	*-46 °C (-50 °F)*	*Verified Range:*	*3.4-325J (2.5-240 ft·lbf)*
Governing Spec.:	*ASME B31.3-2016*	*Calibration Date:*	*March 19, 2018*

Specimen Number	Notch Location	Impact Values Joules	(ft·lbf)
I2.1	Weld Metal within 1.5mm (1/16") of root	159	(117)
I2.2		125	(92)
I2.3		130	(96)
I3.1	HAZ	212	(156)
I3.2		259	(191)
I3.3		206	(152)

Note: Metric values calculated by direct conversion.

Test Conducted By: Tong Zhao (Edmonton)

Certified By: _____
Eric Dacyk, C.E.T.

ANAB ACCREDITED ISO/IEC 17025 TESTING LABORATORY Certification # L2057.01-1

This report (or certificate) is issued by the Company under its General Conditions for Inspection and Testing Services (copy available upon request). The issuance of this report (or certificate) does not exonerate buyers or sellers from exercising all their rights and discharging all their liabilities under the Contract of Sale. Stipulations to the contrary are not binding on the Company. The Company's responsibility under this report (or certificate) is limited to proven negligence and will in no case be more than ten times the amount of the fees or commission. Except by special arrangement, samples, if drawn, will not be retained by the Company for more than 30 days. The information stated in this report (or certificate) is derived from the results of inspection or testing procedures carried out in accordance with the instructions of our Client, and/or our assessment of such results on the basis of any technical standards, trade custom or practice, or other circumstances which should in our professional opinion be taken into account.

SGS Canada Inc. | 4027 - 14 Street S.E. Calgary, AB T2G 3K6 t +1 (403) 262-7072 f +1 (403) 266-3169
7925 Davies Road Edmonton, AB T6E 4N1 t +1 (780) 468-3030 f +1 (780) 468-3032 www.sgs.com

Member of the SGS Group (SGS SA)

HARDNESS TEST

Customer: **Storage Tank Solutions Inc.**
9 Well Head Street
Devon, Alberta
T9G 1Z6

Laboratory Test No.: E19-104.9
Date: March 15, 2019

Attention: Sebastien Ouellet

PQR No.:	STS-2-3 (Rev.0)	**Material Heat No.:**	454840 27789-02
Material:	SA 516 Gr.60/70		
Material Thickness:	22.2 mm (0.875 in.)		
Welding Process:	SAW		
Weld Thickness:	22.2 mm (0.875 in.)		
Thermal Condition:	As Welded		

Type of Test: *Vickers 10 kg (HV10)*
Governing Spec.: *ASTM E92 - 17 &*
ANSI/NACE MR0175/ISO 15156:2015

Instrument: *Leco S/N1594*
Calibration Date: *July 27, 2018*

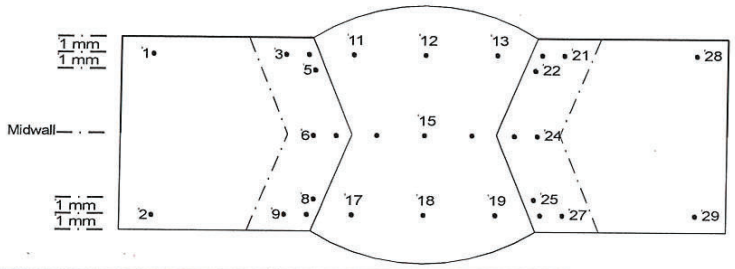

Parent Metal		HAZ		Weld Metal		HAZ		Parent Metal	
1	153	*3*	184	*11*	176	*20*	206	*28*	147
2	156	*4*	221	*12*	153	*21*	178	*29*	150
		5	225	*13*	184	*22*	215		
		6	172	*14*	175	*23*	198		
		7	183	*15*	187	*24*	173		
		8	223	*16*	184	*25*	195		
		9	186	*17*	171	*26*	199		
		10	219	*18*	178	*27*	178		
				19	155				

Test Conducted By: Tong Zhao (Edmonton)

Certified By: _____
Eric Dacyk, C.E.T.

ANAB ACCREDITED ISO/IEC 17025 TESTING LABORATORY Certification # L2057.01-1

This report (or certificate) is issued by the Company under its General Conditions for Inspection and Testing Services (copy available upon request). The issuance of this report (or certificate) does not exonerate buyers or sellers from exercising all their rights and discharging all their liabilities under the Contract of Sale. Stipulations to the contrary are not binding on the Company. The Company's responsibility under this report (or certificate) is limited to proven negligence and will in no case be more than ten times the amount of the fees or commission. Except by special arrangement, samples, if drawn, will not be retained by the Company for more than 30 days. The information stated in this report (or certificate) is derived from the results of inspection or testing procedures carried out in accordance with the instructions of our Client, and/or our assessment of such results on the basis of any technical standards, trade custom or practice, or other circumstances which should in our professional opinion be taken into account.

SGS Canada Inc. | 4027 - 14 Street S.E. Calgary, AB T2G 3K6 t +1 (403) 262-7072 f +1 (403) 266-3169
7925 Davies Road Edmonton, AB T6E 4N1 t +1 (780) 468-3030 f +1 (780) 468-3032 www.sgs.com

Member of the SGS Group (SGS SA)

CHEMICAL ANALYSIS

Customer: **Storage Tank Solutions Inc.**
9 Well Head Street
Devon, Alberta
T9G 1Z6

Laboratory Test No.: E19-104.9
Date: March 15, 2019

Attention: Sebastien Ouellet

PQR No.:	STS-2-3 (Rev.0)	**Material Heat No.:**	454840 27789-02
Material:	SA 516 Gr.60/70		
Material Thickness:	22.2 mm (0.875 in.)		
Welding Process:	SAW		
Weld Thickness:	22.2 mm (0.875 in.)		
Thermal Condition:	As Welded	**Location:**	Weld Cap

Instrument: *Shimadzu PDA-7000 Optical Emission Spectrometer*
Governing Spec.: *ASTM E415-17*

	% by Weight
Carbon	0.08
Manganese	1.12
Sulphur	0.006
Phosphorus	0.009
Silicon	0.40
Chromium	0.04
Nickel	0.02
Molybdenum	0.01
Copper	0.05
Niobium	<0.01
Vanadium	0.01
Aluminum	0.02
Titanium	<0.01
Boron	<0.0004

Test Conducted By: Kamaldeep Brar (Calgary)

Certified By: _____
Eric Dacyk, C.E.T.

ANAB ACCREDITED ISO/IEC 17025 TESTING LABORATORY Certification # L2057-1

This report (or certificate) is issued by the Company under its General Conditions for Inspection and Testing Services (copy available upon request). The issuance of this report (or certificate) does not exonerate buyers or sellers from exercising all their rights and discharging all their liabilities under the Contract of Sale. Stipulations to the contrary are not binding on the Company. The Company's responsibility under this report (or certificate) is limited to proven negligence and will in no case be more than ten times the amount of the fees or commission. Except by special arrangement, samples, if drawn, will not be retained by the Company for more than 30 days. The information stated in this report (or certificate) is derived from the results of inspection or testing procedures carried out in accordance with the instructions of our Client, and/or our assessment of such results on the basis of any technical standards, trade custom or practice, or other circumstances which should in our professional opinion be taken into account.

SGS Canada Inc. | 4027 - 14 Street S.E. Calgary, AB T2G 3K6 t +1 (403) 262-7072 f +1 (403) 266-3169
7925 Davies Road Edmonton, AB T6E 4N1 t +1 (780) 468-3030 f +1 (780) 468-3032 www.sgs.com

Member of the SGS Group (SGS SA)

CHARPY V-NOTCH IMPACT TEST

Customer: **Storage Tank Solutions Inc.**
9 Well Head Street
Devon, Alberta
T9G 1Z6

Laboratory Test No.: E19-00285.3
Date: June 26, 2019

Attention: Sebastien Ouellet

PQR No.:	STS-2-4 (Rev. 0)	**Material Heat No.:**	459852 56930-01
Material:	SA 516 Gr. 60/70	**Weld Type:**	Double Sided
Material Thickness:	12.7 mm (0.500 in.)		
Welding Process:	SAW		
Weld Thickness:	12.7 mm (0.500 in.)		
Thermal Condition:	As Welded		

Specimen Size:	*10 x 10 mm (0.394 x 0.394 in.)*	*Machine:*	*Satec SI-1K3,S/N: 1503*
Orientation:	*Transverse*	*Capacity:*	*407 J (300 ft·lbf)*
Test Temperature:	*-46 °C (-50 °F)*	*Verified Range:*	*3.4-325 J (2.5-240 ft·lbf)*
Governing Spec.:	*ASME B31.3 - 2016 &*	*Calibration Date:*	*March 19, 2019*
	ASME Section VIII, Div. I, UG-84 - 2017		

Specimen Number	Notch Location	Impact Values Joules	(ft·lbf)
C2.1	Weld Metal within 1.5mm (1/16") of root	38	(28)
C2.2		98	(72)
C2.3		94	(69)
C3.1	HAZ @ Middle 1/2t	98	(72)
C3.2		62	(46)
C3.3		119	(88)

Note: Metric values calculated by direct conversion.

Test Conducted By: Mohamed Botan (Edmonton)

Certified By: _____
Eric Dacyk, C.E.T.

ANAB ACCREDITED ISO/IEC 17025 TESTING LABORATORY Certification # L2057.01-1

This report (or certificate) is issued by the Company under its General Conditions for Inspection and Testing Services (copy available upon request). The issuance of this report (or certificate) does not exonerate buyers or sellers from exercising all their rights and discharging all their liabilities under the Contract of Sale. Stipulations to the contrary are not binding on the Company. The Company's responsibility under this report (or certificate) is limited to proven negligence and will in no case be more than ten times the amount of the fees or commission. Except by special arrangement, samples, if drawn, will not be retained by the Company for more than 30 days. The information stated in this report (or certificate) is derived from the results of inspection or testing procedures carried out in accordance with the instructions of our Client, and/or our assessment of such results on the basis of any technical standards, trade custom or practice, or other circumstances which should in our professional opinion be taken into account.

SGS Canada Inc. | 4027 - 14 Street S.E. Calgary, AB T2G 3K6 t +1 (403) 262-7072 f +1 (403) 266-3169
7925 Davies Road Edmonton, AB T6E 4N1 t +1 (780) 468-3030 f +1 (780) 468-3032 www.sgs.com

Member of the SGS Group (SGS SA)

HARDNESS TEST

Customer: **Storage Tank Solutions Inc.**
9 Well Head Street
Devon, Alberta
T9G 1Z6

Laboratory Test No.: E19-00285.3
Date: June 27, 2019

Attention: Sebastien Ouellet

PQR No.:	STS-2-4 (Rev. 0)	**Material Heat No.:**	459852 56930-01
Material:	SA 516 Gr. 60/70	**Weld Type:**	Double Sided
Material Thickness:	12.7 mm (0.500 in.)		
Welding Process:	SAW		
Weld Thickness:	12.7 mm (0.500 in.)		
Thermal Condition:	As Welded		

Type of Test: *Vickers 10 kg (HV10)*
Governing Spec.: *ASTM E92 - 17 & ANSI/NACE MR0175/ISO 15156:2015*

Instrument: *Buehler 5112*
Calibration Date: *July 27, 2018*

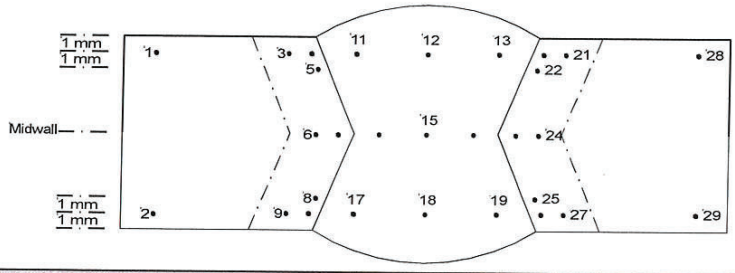

Parent Metal		HAZ		Weld Metal		HAZ		Parent Metal	
1	154	*3*	180	*11*	197	*20*	220	*28*	163
2	161	*4*	217	*12*	187	*21*	177	*29*	163
		5	215	*13*	200	*22*	226		
		6	178	*14*	176	*23*	172		
		7	188	*15*	170	*24*	166		
		8	199	*16*	163	*25*	218		
		9	186	*17*	163	*26*	229		
		10	207	*18*	184	*27*	185		
				19	172				

Test Conducted By: Ibrahim Mohamoud (Edmonton)

Certified By: _____
Eric Dacyk, C.E.T.

ANAB ACCREDITED ISO/IEC 17025 TESTING LABORATORY Certification # L2057.01-1

This report (or certificate) is issued by the Company under its General Conditions for Inspection and Testing Services (copy available upon request). The issuance of this report (or certificate) does not exonerate buyers or sellers from exercising all their rights and discharging all their liabilities under the Contract of Sale. Stipulations to the contrary are not binding on the Company. The Company's responsibility under this report (or certificate) is limited to proven negligence and will in no case be more than ten times the amount of the fees or commission. Except by special arrangement, samples, if drawn, will not be retained by the Company for more than 30 days. The information stated in this report (or certificate) is derived from the results of inspection or testing procedures carried out in accordance with the instructions of our Client, and/or our assessment of such results on the basis of any technical standards, trade custom or practice, or other circumstances which should in our professional opinion be taken into account.

SGS Canada Inc. | 4027 - 14 Street S.E. Calgary, AB T2G 3K6 t +1 (403) 262-7072 f +1 (403) 266-3169
7925 Davies Road Edmonton, AB T6E 4N1 t +1 (780) 468-3030 f +1 (780) 468-3032 www.sgs.com

Member of the SGS Group (SGS SA)

LUDWIG & ASSOCIATES LTD.

Materials and Welding Consulting

LABORATORY ACCREDITATION BUREAU
ISO/IEC 17025 ACCREDITED
Certificate Number L2057

LABORATORY TEST REPORT

CUSTOMER: **Woodside Fabrications Ltd.**
6124 - 39th Avenue
Camrose, Alberta
T4V 3B1

Laboratory Test No.: C07-300.2
Date: March 7, 2007

Attention: Douglas French

PQR Number:	WFL-2-1	**Process:**	SAW
Material:	SA 516 Gr. 60N to SA 516 Gr. 70N (Heat No.: 44410 - 34383)		
Thickness:	6.32 mm (0.249 in.)		
Thermal Condition:	As Welded		

TENSILE TEST QW-150

SAMPLE NUMBER	T1 QW-462.1(a)		T2 QW-462.1(a)	
WIDTH mm (in)	19.0	(0.748)	19.2	(0.756)
THICKNESS mm (in)	5.62	(0.221)	5.80	((0.228)
AREA sq mm (sq in)	107	(0.166)	114	(0.173)
ULT. LOAD N (lbs)	59 200	(13,300)	60 200	(13,500)
UTS MPa (psi)	554	(80,400)	540	(78,400)
FRACTURE TYPE	Partial Cup and Cone		Partial Cup and Cone	
FRACTURE LOCATION	Parent Metal (SA 516 Gr. 70N)		Parent Metal (SA 516 Gr. 70N)	

GUIDED-BEND TEST QW-160

SAMPLE WIDTH:	38.1 mm (1.50 in.)		SAMPLE THICKNESS:	6.32 mm (0.249 in.)
PLUNGER SIZE:	25.1 mm (0.990 in.)		YOKE SIZE:	41.1 mm (1.62 in.)
QW-462.3(a)	Root Bend	Root Bend	Face Bend	Face Bend
SAMPLE NUMBER(S)	R1	R2	F1	F2
RESULTS	Pass	Pass	Pass	Pass

We certify the test results in this report and that the specimen(s) were prepared and tested in accordance with the requirements of ASME Section IX, 2004 *edition and latest addenda. The information regarding material identification (i.e. size, thickness, heat number, etc.) has been provided by the customer whose name appears on this report.* ***Samples associated with this report will be discarded in 45 days.***

Laboratory Test Conducted By: _____

Stephanie Liu / Steve Rieberger, C.E.T.

4027 - 14 Street, S.E., CALGARY, ALBERTA T2G 3K6 PHONE: (403) 262-7072 FAX: (403) 266-3169
7925 Davies Road, EDMONTON, ALBERTA T6E 4N1 PHONE: (780) 468-3030 FAX: (780) 468-3032

LUDWIG & ASSOCIATES LTD.

Materials and Welding Consulting

LABORATORY ACCREDITATION BUREAU
ISO/IEC 17025 ACCREDITED
Certificate Number L2057

LABORATORY TEST REPORT

CUSTOMER: **Woodside Fabrications Ltd.**
6124 - 39th Avenue
Camrose, Alberta
T4V 3B1

Laboratory Test No.: C07-300.2
Date: March 7, 2007

Attention: Douglas French

PQR Number: WFL-2-1 **Process:** SAW
Material: SA 516 Gr. 60N to SA 516 Gr. 70N (Heat No.: 44410 - 34383)
Thickness: 6.32 mm (0.249 in.)
Thermal Condition: As Welded

NOTCH-TOUGHNESS TEST

TYPE OF TEST: Charpy V-Notch
TEST TEMPERATURE: -48°C (-55°F)
ORIENTATION: Transverse
SPECIMEN SIZE: 10 x 5 mm

Specimen Number	Notch Location	Impact Values Joules	(ft.lbs)
V2.1	Weld Metal	30.1	(22.2)
V2.2	within 1/16 in.	35.1	(25.9)
V2.3	of root	33.9	(25.0)
V3.1	Gr. 60N - HAZ	32.5	(24.0)
V3.2	Gr. 60N - HAZ	30.1	(22.2)
V3.3	Gr. 60N - HAZ	14.2	(10.5)
W3.1	Gr. 70N - HAZ	28.5	(21.0)
W3.2	Gr. 70N - HAZ	9.5	(7.0)
W3.3	Gr. 70N - HAZ	25.8	(19.0)

We certify the test results in this report and that the specimen(s) were prepared and tested in accordance with the requirements of ASME Section VIII, Div. 1, UG-84 – 2004 *edition and latest addenda. The information regarding material identification (i.e. size, thickness, heat number, etc.) has been provided by the customer whose name appears on this report.* ***Samples associated with this report will be discarded in 45 days.***

Laboratory Test Conducted By: _____
Charles Ugarenko / Steve Rieberger, C.E.T.

4027 - 14 Street, S.E., CALGARY, ALBERTA T2G 3K6 PHONE: (403) 262-7072 FAX: (403) 266-3169
7925 Davies Road, EDMONTON, ALBERTA T6E 4N1 PHONE: (780) 468-3030 FAX: (780) 468-3032

LUDWIG & ASSOCIATES LTD.

Materials and Welding Consulting

LABORATORY ACCREDITATION BUREAU
ISO/IEC 17025 ACCREDITED
Certificate Number L2057

LABORATORY TEST REPORT

CUSTOMER: **Woodside Fabrications Ltd.**
6124 - 39th Avenue
Camrose, Alberta
T4V 3B1

Laboratory Test No.: C07-300.2
Date: March 5, 2007

Attention: Douglas French

PQR Number:	WFL-2-1 **Process:** SAW
Material:	SA 516 Gr. 60N to SA 516 Gr. 70N (Heat No.: 44410 - 34383)
Thickness:	6.32 mm (0.249 in.)
Thermal Condition:	As Welded

HARDNESS TEST

TYPE OF TEST: Vickers LOAD: 10 kg

INSTRUMENT TYPE: Mitutoyo AVK-C1

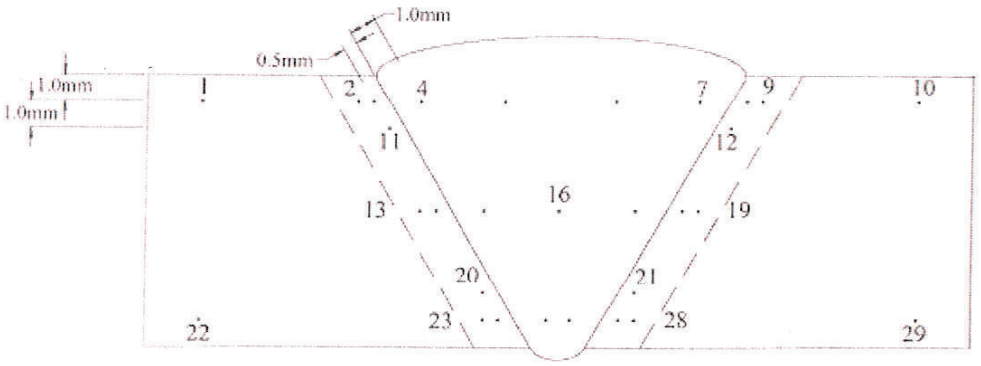

SA 516 Gr. 70N SA 516 Gr. 60N

1)	166 HV	7)	172 HV	13)	214 HV	19)	210 HV	25)	194 HV
2)	192 HV	8)	194 HV	14)	220 HV	20)	222 HV	26)	198 HV
3)	197 HV	9)	178 HV	15)	188 HV	21)	223 HV	27)	212 HV
4)	175 HV	10)	173 HV	16)	192 HV	22)	169 HV	28)	194 HV
5)	162 HV	11)	194 HV	17)	186 HV	23)	188 HV	29)	166 HV
6)	170 HV	12)	203 HV	18)	215 HV	24)	209 HV		

We certify the test results in this report and that the specimen(s) were prepared and tested in accordance with the requirements of ASTM E92 - 82 (Reapproved 2003)$^{\varepsilon 2}$. *The information regarding material identification (i.e. size, thickness, heat number, etc.) has been provided by the customer whose name appears on this report.* ***Samples associated with this report will be discarded in 45 days.***

Laboratory Test Conducted By: _____
Andrew Vessey / Steve Rieberger, C.E.T.

4027 - 14 Street, S.E., CALGARY, ALBERTA T2G 3K6 PHONE: (403) 262-7072 FAX: (403) 266-3169
7925 Davies Road, EDMONTON, ALBERTA T6E 4N1 PHONE: (780) 468-3030 FAX: (780) 468-3032

QM-System: Certification as per ISO 9001

Erläuterungen siehe Rückseite/Explications voir au verso/See reverse for explanations (www.dillinger.de/certificate)

DILLINGER HÜTTE

A02 INSPECTION CERTIFICATE 3.1 AS PER EN 10204:2004
INSPECTION CERTIFICATE 3.1 AS PER ISO 10474:2013
MATERIAL TEST REPORT (MTR)

A10 Advice of dispatch No./ Date of dispatch: 558728-23.02.16

A08/ Manufacturer's order/ A03 Certificate No.: 411465-004 Sheet: 1/...

A05 Established Inspecting body: DH

A06 Purchaser: EDMONTON STEEL, EDMON A07.1 No. ED10682-J1010ER

Final receiver: EDMONTON STEEL, EDMON A07.2 No.

B01 Product: HEAVY PLATES

B02/ Steel design. SA516-60 SA20-S5

B03 Any suppl. requirements ASME-IIA:2013
DIL-HUE-1:R33-2014-04-04

20255

B01-B99 Description of the product

B14 Item No.	B08 Number of pieces	B09 Thickness	B10 Width	B11 Length	B12 Theoretical mass KG	B04 Product delivery condition	B07.2 Heat No.	B07.1 Rolled plate No./ Test No.
			INCH					
01	1	0,3750 x	96,50000 x	480,00000	2234	N	429693	29242-01
01	1	0,3750 x	96,50000 x	480,00000	2234	N	429693	29242-02
01	1	0,3750 x	96,50000 x	480,00000	2234	N	429693	29242-03
01	1	0,3750 x	96,50000 x	480,00000	2234	N	429693	29243-01
01	1	0,3750 x	96,50000 x	480,00000	2234	N	429693	29243-02
01	1	0,3750 x	96,50000 x	480,00000	2234	N	429693	29243-03
01	1	0,3750 x	96,50000 x	480,00000	2234	N	429693	29245-01
01	1	0,3750 x	96,50000 x	480,00000	2234	N	429693	29245-02
01	1	0,3750 x	96,50000 x	480,00000	2234	N	429693	29245-03
01	1	0,3750 x	96,50000 x	480,00000	2234	N	429693	29249-01
01	1	0,3750 x	96,50000 x	480,00000	2234	N	429693	29249-02
**	12				26808		429693	29249-03
02	1	0,3750 x	120,50000 x	480,00000	2790	N	429693	29255-01
02	1	0,3750 x	120,50000 x	480,00000	2790	N	429693	29255-02
02	1	0,3750 x	120,50000 x	480,00000	2790	N	429693	29255-03
02	1	0,3750 x	120,50000 x	480,00000	2790	N	429693	29256-01
02	1	0,3750 x	120,50000 x	480,00000	2790	N	429693	29256-02
02	1	0,3750 x	120,50000 x	480,00000	2790	N	429693	29256-03
02	1	0,3750 x	120,50000 x	480,00000	2790	N	429693	29263-01
02	1	0,3750 x	120,50000 x	480,00000	2790	N	429693	29263-02
02	1	0,3750 x	120,50000 x	480,00000	2790	N	429693	29263-03
02	1	0,3750 x	120,50000 x	480,00000	2790	N	429693	29264-01

A09 Purchaser article number

EPL-248
SA 516 Gr. 60/70
0.375 in. w.t. plate
HT # 429693 29249-03
Internal PO: E20306
External PO: 210377
Date Received: 29-Jan-19
Recieved by: Jessie Springett

A04 D H Manufacturer's mark

Z01/Z02/Z03 We hereby certify, that the above mentioned materials have been delivered in accordance with the terms of order.

B. BALDAUF
Test House Manager

A H B Inspector's stamp

A01 AG der Dillinger Hüttenwerke
Postfach 1580, D-66748 Dillingen/Saar
Inspection department

Date 23.02.16 PP 1

QM-System: Certification as per ISO 9001

DILLINGER HÜTTE

Erläuterungen siehe Rückseite/Explications voir au verso/See reverse for explanations (www.dillinger.de/certificate)

A02 INSPECTION CERTIFICATE 3.1 AS PER EN 10204:2004
INSPECTION CERTIFICATE 3.1 AS PER ISO 10474:2013
MATERIAL TEST REPORT (MTR)

A10 Advice of dispatch No./ Date of dispatch: 558728-23.02.16

A08/ Manufacturer's order/ A03 Certificate No.: 411465-004 Sheet: 11/...

A05 Established Inspecting body: DH

A06 Purchaser: EDMONTON STEEL,EDMON A07.1 No. ED10682-J1010ER

Final receiver: EDMONTON STEEL,EDMON A07.2 No.

B01 Product: HEAVY PLATES

B02/ Steel design. SA516-60 SA20-S5

B03 Any suppl. requirements: ASME-IIA:2013
DIL-HUE-1:R33-2014-04-04

C70-C99 Chemical composition % - Heat analysis

B07.2 Heat	C70	C	SI	MN	P	S	N	CU	MO	NI	CR	V	NB	SN	TI
429474	Y	0,182	0,377	1,17	0,010	0,0009	0,0075	0,028	0,010	0,032	0,033	0,000	0,000	0,001	0,003
429477	Y	0,180	0,375	1,17	0,009	0,0011	0,0070	0,015	0,004	0,025	0,035	0,000	0,000	0,001	0,002
429479	Y	0,173	0,368	1,17	0,010	0,0008	0,0072	0,023	0,012	0,028	0,047	0,001	0,000	0,001	0,003
429480	Y	0,171	0,378	1,19	0,010	0,0006	0,0060	0,019	0,011	0,033	0,041	0,000	0,000	0,001	0,002
429483	Y	0,176	0,381	1,18	0,008	0,0008	0,0082	0,025	0,008	0,026	0,033	0,000	0,000	0,001	0,002
429485	Y	0,183	0,378	1,18	0,009	0,0007	0,0075	0,038	0,006	0,028	0,042	0,000	0,000	0,002	0,003
429601	Y	0,191	0,378	1,19	0,006	0,0008	0,0063	0,014	0,012	0,030	0,029	0,001	0,001	0,001	0,002
429693	Y	0,161	0,384	1,19	0,010	0,0010	0,0068	0,025	0,011	0,024	0,028	0,001	0,001	0,001	0,003
429696	Y	0,154	0,373	1,16	0,009	0,0008	0,0075	0,020	0,006	0,019	0,028	0,001	0,003	0,001	0,002

B07.2 Heat	C70	B	CA	AL-T
429474	Y	0,0003	0,0021	0,032
429477	Y	0,0003	0,0017	0,034
429479	Y	0,0003	0,0013	0,034
429480	Y	0,0002	0,0014	0,033
429483	Y	0,0001	0,0014	0,030
429485	Y	0,0003	0,0013	0,034
429601	Y	0,0002	0,0020	0,038
429693	Y	0,0002	0,0015	0,032
429696	Y	0,0001	0,0016	0,033

A04 D H Manufacturer's mark

Z01/Z02/Z03 We hereby certify, that the above mentioned materials have been delivered in accordance with the terms of order.

B. BALDAUF
Test House Manager

A H B Inspector's stamp

A01 AG der Dillinger Hüttenwerke
Postfach 1580, D-66748 Dillingen/Saar
Inspection department

Date 23.02.16

PP 1

QM-System: Certification as per ISO 9001

DILLINGER HÜTTE

Erläuterungen siehe Rückseite/Explications voir au verso/See reverse for explanations (www.dillinger.de/certificate)

A02 INSPECTION CERTIFICATE 3.1 AS PER EN 10204:2004
INSPECTION CERTIFICATE 3.1 AS PER ISO 10474:2013
MATERIAL TEST REPORT (MTR)

A10 Advice of dispatch No./ Date of dispatch: 558728-23.02.16

A08/ Manufacturer's order/ A03 Certificate No.: 411465-004 Sheet: 1/...

A05 Established Inspecting body: DH

A06 Purchaser: EDMONTON STEEL,EDMON A07.1 No. ED10682-J1010ER

Final receiver: EDMONTON STEEL,EDMON A07.2 No.

B01 Product: HEAVY PLATES

B02/ Steel design. SA516-70 SA20-S5

B03 Any suppl. requirements ASME-IIA:2013
DIL-HUE-1:R33-2014-04-04

20254

B01-B99 Description of the product

B14 Item No.	B08 Number of pieces	B09 Thickness	B10 Width	B11 Length	B12 Theoretical mass KG	B04 Product delivery condition	B07.2 Heat No.	B07.1 Rolled plate No./ Test No.	A09 Purchaser article number
			INCH						
01	1	0,3750 x	96,50000 x	480,00000	2234	N	429693	29242-01	
01	1	0,3750 x	96,50000 x	480,00000	2234	N	429693	29242-02	
01	1	0,3750 x	96,50000 x	480,00000	2234	N	429693	29242-03	
01	1	0,3750 x	96,50000 x	480,00000	2234	N	429693	29243-01	
01	1	0,3750 x	96,50000 x	480,00000	2234	N	429693	29243-02	
01	1	0,3750 x	96,50000 x	480,00000	2234	N	429693	29243-03	
01	1	0,3750 x	96,50000 x	480,00000	2234	N	429693	29245-01	
01	1	0,3750 x	96,50000 x	480,00000	2234	N	429693	29245-02	
01	1	0,3750 x	96,50000 x	480,00000	2234	N	429693	29245-03	
01	1	0,3750 x	96,50000 x	480,00000	2234	N	429693	29249-01	
01	1	0,3750 x	96,50000 x	480,00000	2234	N	429693	29249-02	
01	1	0,3750 x	96,50000 x	480,00000	2234	N	429693	29249-03	
**	12				26808				
02	1	0,3750 x	120,50000 x	480,00000	2790	N	429693	29255-01	
02	1	0,3750 x	120,50000 x	480,00000	2790	N	429693	29255-02	
02	1	0,3750 x	120,50000 x	480,00000	2790	N	429693	29255-03	
02	1	0,3750 x	120,50000 x	480,00000	2790	N	429693	29256-01	
02	1	0,3750 x	120,50000 x	480,00000	2790	N	429693	29256-02	
02	1	0,3750 x	120,50000 x	480,00000	2790	N	429693	29256-03	
02	1	0,3750 x	120,50000 x	480,00000	2790	N	429693	29263-01	
02	1	0,3750 x	120,50000 x	480,00000	2790	N	429693	29263-02	
02	1	0,3750 x	120,50000 x	480,00000	2790	N	429693	29263-03	
02	1	0,3750 x	120,50000 x	480,00000	2790	N	429693	29264-01	

EPL-248
SA 516 Gr. 60/70
0.375 in. w.t. plate
HT # 429693 29249-03
Internal PO: E20306
External PO: 210377
Date Received: 29-Jan-19
Recieved by: Jessie Springett

J Springett

A04 D H Manufacturer's mark

Z01/Z02/Z03 We hereby certify, that the above mentioned materials have been delivered in accordance with the terms of order.

B. BALDAUF
Test House Manager

A H B Inspector's stamp

A01 **AG der Dillinger Hüttenwerke**
Postfach 1580, D-66748 Dillingen/Saar
Inspection department

Date 23.02.16 PP 1

QM-System: Certification as per ISO 9001

DILLINGER HÜTTE

Erläuterungen siehe Rückseite/Explications voir au verso/See reverse for explanations (www.dillinger.de/certificate)

A02 INSPECTION CERTIFICATE 3.1 AS PER EN 10204:2004
INSPECTION CERTIFICATE 3.1 AS PER ISO 10474:2013
MATERIAL TEST REPORT (MTR)

A10 Advice of dispatch No./ Date of dispatch: 558728-23.02.16

A08/ Manufacturer's order/ A03 Certificate No.: 411465-004 Sheet: 11/...

A05 Established Inspecting body: DH

A06 Purchaser: EDMONTON STEEL,EDMON A07.1 No. ED10682-J1010ER

Final receiver: EDMONTON STEEL,EDMON A07.2 No.

B01 Product: HEAVY PLATES

B02/ Steel design. SA516-70 SA20-S5

B03 Any suppl. requirements: ASME-IIA:2013
DIL-HUE-1:R33-2014-04-04

C70-C99 Chemical composition % - Heat analysis

B07.2 Heat	C70	C	SI	MN	P	S	N	CU	MO	NI	CR	V	NB	SN	TI
429474	Y	0,182	0,377	1,17	0,010	0,0009	0,0075	0,028	0,010	0,032	0,033	0,000	0,000	0,001	0,003
429477	Y	0,180	0,375	1,17	0,009	0,0011	0,0070	0,015	0,004	0,025	0,035	0,000	0,000	0,001	0,002
429479	Y	0,173	0,368	1,17	0,010	0,0008	0,0072	0,023	0,012	0,028	0,047	0,001	0,000	0,001	0,003
429480	Y	0,171	0,378	1,19	0,010	0,0006	0,0060	0,019	0,011	0,033	0,041	0,000	0,000	0,001	0,002
429483	Y	0,176	0,381	1,18	0,008	0,0008	0,0082	0,025	0,008	0,026	0,033	0,000	0,000	0,001	0,002
429485	Y	0,183	0,378	1,18	0,009	0,0007	0,0075	0,038	0,006	0,028	0,042	0,000	0,000	0,002	0,003
429601	Y	0,191	0,378	1,19	0,006	0,0008	0,0063	0,014	0,012	0,030	0,029	0,001	0,001	0,001	0,002
429693	Y	0,161	0,384	1,19	0,010	0,0010	0,0068	0,025	0,011	0,024	0,028	0,001	0,001	0,001	0,003
429696	Y	0,154	0,373	1,16	0,009	0,0008	0,0075	0,020	0,006	0,019	0,028	0,001	0,003	0,001	0,002

B07.2 Heat	C70	B	CA	AL-T
429474	Y	0,0003	0,0021	0,032
429477	Y	0,0003	0,0017	0,034
429479	Y	0,0003	0,0013	0,034
429480	Y	0,0002	0,0014	0,033
429483	Y	0,0001	0,0014	0,030
429485	Y	0,0003	0,0013	0,034
429601	Y	0,0002	0,0020	0,038
429693	Y	0,0002	0,0015	0,032
429696	Y	0,0001	0,0016	0,033

A04 D H Manufacturer's mark

Z01/Z02/Z03 We hereby certify, that the above mentioned materials have been delivered in accordance with the terms of order.

B. BALDAUF
Test House Manager

A H B Inspector's stamp

A01
AG der Dillinger Hüttenwerke
Postfach 1580, D-66748 Dillingen/Saar
Inspection department

Date 23.02.16 PP 1

QM-System: Certification as per ISO 9001

DILLINGER

Erläuterungen siehe Rückseite/Explications voir au verso/See reverse for explanations (www.dillinger.de/certificate)

A02 INSPECTION CERTIFICATE 3.1 AS PER EN 10204:2004
INSPECTION CERTIFICATE 3.1 AS PER ISO 10474:2013
MATERIAL TEST REPORT (MTR)

A10 Advice of dispatch No./ Date of dispatch: 626272-10.02.18

A08/ Manufacturer's order/ A03 Certificate No.: 431792-001

Sheet: 12/...

A05 Established Inspecting body: DH

A06 Purchaser: EDMONTON STEEL,EDMON — A07.1 No.: ED10722-J1010ER

Final receiver: EDMONTON STEEL,EDMON — A07.2 No.:

B01 Product: HEAVY PLATES

B02/ Steel design.: SA516-70 SA20-S5

B03 Any suppl. requirements: ASME-IIA:2015
DIL-HUE-1:R34-2016-08-19

C70-C99 Chemical composition % - Product analysis

B07.2 Heat	B07.1 Test No.	C01	C	SI	MN	P	S	N	CU	MO	NI	CR	V	NB	SN	TI
454461	64437	K1	0,167	0,366	1,16	0,011	0,0007	0,0076	0,025	0,006	0,050	0,029	0,001	0,002	0,001	0,002
454836	27699	K1	0,170	0,368	1,16	0,010	0,0007	0,0061	0,033	0,007	0,027	0,038	0,000	0,001	0,001	0,003
454836	27706	K1	0,177	0,369	1,16	0,010	0,0006	0,0059	0,033	0,007	0,027	0,038	0,001	0,001	0,001	0,003
454837	27740	K1	0,166	0,369	1,16	0,009	0,0005	0,0060	0,026	0,005	0,023	0,028	0,001	0,001	0,001	0,002
454837	27783	K1	0,179	0,373	1,17	0,008	0,0005	0,0060	0,024	0,004	0,022	0,024	0,001	0,001	0,001	0,001
454840	27789	K1	0,167	0,369	1,17	0,009	0,0004	0,0060	0,023	0,004	0,022	0,023	0,001	0,001	0,000	0,002
454840	27796	K1	0,164	0,371	1,17	0,009	0,0005	0,0064	0,023	0,004	0,022	0,023	0,001	0,001	0,000	0,002
454840	27809	K1	0,165	0,365	1,15	0,009	0,0005	0,0054	0,023	0,010	0,024	0,038	0,001	0,001	0,000	0,002
454843	27952	K1	0,145	0,358	1,14	0,009	0,0004	0,0053	0,023	0,014	0,025	0,045	0,001	0,000	0,000	0,002

B07.2 Heat	B07.1 Test No.	C01	B	CA	AL-T
454461	64437	K1	0,0001	0,0013	0,034
454836	27699	K1	0,0001	0,0018	0,031
454836	27706	K1	0,0001	0,0019	0,032
454837	27740	K1	0,0000	0,0015	0,030
454837	27783	K1	0,0000	0,0014	0,029
454840	27789	K1	0,0001	0,0011	0,031
454840	27796	K1	0,0000	0,0011	0,031
454840	27809	K1	0,0000	0,0012	0,035
454843	27952	K1	0,0000	0,0011	0,038

A04 D H Manufacturer's mark

Z01/Z02/Z03 We hereby certify, that the above mentioned materials have been delivered in accordance with the terms of order.

B. BALDAUF
Test House Manager

A H B Inspector's stamp

Date 12.02.18

A01
AG der Dillinger Hüttenwerke
Postfach 1580, D-66748 Dillingen/Saar
Inspection department

QM-System: Certification as per ISO 9001

Erläuterungen siehe Rückseite/Explications voir au verso/See reverse for explanations (www.dillinger.de/certificate)

DILLINGER

A02 INSPECTION CERTIFICATE 3.1 AS PER EN 10204:2004
INSPECTION CERTIFICATE 3.1 AS PER ISO 10474:2013
MATERIAL TEST REPORT (MTR)

A10 Advice of dispatch No./ Date of dispatch: 626272-10.02.18

A08/ Manufacturer's order/ A03 Certificate No.: 431792-001

Sheet: 12/...

A05 Established Inspecting body: DH

A06 Purchaser: EDMONTON STEEL,EDMON — A07.1 No.: ED10722-J1010ER

Final receiver: EDMONTON STEEL,EDMON — A07.2 No.:

B01 Product: HEAVY PLATES

B02/ Steel design.: SA516-60 SA20-S5

B03 Any suppl. requirements: ASME-IIA:2015
DIL-HUE-1:R34-2016-08-19

C70-C99 Chemical composition % - Product analysis

B07.2 Heat	B07.1 Test No.	C01	C	SI	MN	P	S	N	CU	MO	NI	CR	V	NB	SN	TI
454461	64437	K1	0,167	0,366	1,16	0,011	0,0007	0,0076	0,025	0,006	0,050	0,029	0,001	0,002	0,001	0,002
454836	27699	K1	0,170	0,368	1,16	0,010	0,0007	0,0061	0,033	0,007	0,027	0,038	0,000	0,001	0,001	0,003
454836	27706	K1	0,177	0,369	1,16	0,010	0,0006	0,0059	0,033	0,007	0,027	0,038	0,001	0,001	0,001	0,003
454837	27740	K1	0,166	0,369	1,16	0,009	0,0005	0,0060	0,026	0,005	0,023	0,028	0,001	0,001	0,001	0,002
454837	27783	K1	0,179	0,373	1,17	0,008	0,0005	0,0060	0,024	0,004	0,022	0,024	0,001	0,001	0,001	0,001
454840	27789	K1	0,167	0,369	1,17	0,009	0,0004	0,0060	0,023	0,004	0,022	0,023	0,001	0,001	0,000	0,002
454840	27796	K1	0,164	0,371	1,17	0,009	0,0005	0,0064	0,023	0,004	0,022	0,023	0,001	0,001	0,000	0,002
454840	27809	K1	0,165	0,365	1,15	0,009	0,0005	0,0054	0,023	0,010	0,024	0,038	0,001	0,001	0,000	0,002
454843	27952	K1	0,145	0,358	1,14	0,009	0,0004	0,0053	0,023	0,014	0,025	0,045	0,001	0,000	0,000	0,002

B07.2 Heat	B07.1 Test No.	C01	B	CA	AL-T
454461	64437	K1	0,0001	0,0013	0,034
454836	27699	K1	0,0001	0,0018	0,031
454836	27706	K1	0,0001	0,0019	0,032
454837	27740	K1	0,0000	0,0015	0,030
454837	27783	K1	0,0000	0,0014	0,029
454840	27789	K1	0,0001	0,0011	0,031
454840	27796	K1	0,0000	0,0011	0,031
454840	27809	K1	0,0000	0,0012	0,035
454843	27952	K1	0,0000	0,0011	0,038

A04 D H Manufacturer's mark

Z01/Z02/Z03 We hereby certify, that the above mentioned materials have been delivered in accordance with the terms of order.

B. BALDAUF
Test House Manager

A H B Inspector's stamp

Date 12.02.18

A01 **AG der Dillinger Hüttenwerke**
Postfach 1580, D-66748 Dillingen/Saar
Inspection department

PP 1

QM-System: Certification as per ISO 9001

DILLINGER

Erläuterungen siehe Rückseite/Explications voir au verso/See reverse for explanations (www.dillinger.de/certificate)

A02 INSPECTION CERTIFICATE 3.1 AS PER EN 10204:2004
INSPECTION CERTIFICATE 3.1 AS PER ISO 10474:2013
MATERIAL TEST REPORT (MTR)

A10 Advice of dispatch No./ Date of dispatch: 645948-05.08.18

A08/ Manufacturer's order/ A03 Certificate No.: 436752-003

Sheet: 4/...

A05 Established inspecting body: DH

A06 Purchaser: EDMONTON STEEL,EDMON — A07.1 No.: ED10734-J1010ER

Final receiver: EDMONTON STEEL,EDMON — A07.2 No.:

B01 Product: HEAVY PLATES

B02/ Steel design.: SA516-60 SA20-S5

B03 Any suppl. requirements: ASME-IIA:2017
DIL-HUE-1:R35-2018-02-12

C94 Heat analysis Carbon equivalent / Alloying restrictions

B07.2 Heat										
459852	FO-02=	0,37	FO-51=	0,000	FO-55=	0,08	FO-78=	0,03	FO-91=	7,1
460565	FO-02=	0,39	FO-51=	0,000	FO-55=	0,22	FO-78=	0,06	FO-91=	6,9
460566	FO-02=	0,38	FO-51=	0,001	FO-55=	0,13	FO-78=	0,04	FO-91=	6,8
460567	FO-02=	0,40	FO-51=	0,001	FO-55=	0,21	FO-78=	0,09	FO-91=	6,8

C95 Ladle treatment

ITEM NO.: 01-05
HEAT OF THE INDICATED ITEM: VACUUM DEGASSED / SULPHIDE SHAPE CONTROL

C95 Further information about ladle treatment

ITEM NO.: 01-05
CALCIUM TREATED

C70-C99 Chemical composition % - Product analysis

B07.2 Heat	B07.1 Test No.	C01	C	SI	MN	P	S	N	CU	MO	NI	CR	V	NB	SN	TI
459852	56930	K1	0,172	0,365	1,19	0,008	0,0008	0,0059	0,018	0,005	0,026	0,025	0,000	0,000	0,000	0,001
460565	34603	K1	0,169	0,366	1,15	0,004	0,0003	0,0058	0,019	0,040	0,153	0,019	0,000	0,000	0,000	0,001
460565	34606	K1	0,171	0,366	1,16	0,004	0,0004	0,0061	0,018	0,040	0,155	0,018	0,000	0,000	0,000	0,001
460565	34835	K1	0,173	0,365	1,16	0,003	0,0004	0,0061	0,018	0,041	0,159	0,018	0,000	0,000	0,000	0,001
460566	34468	K1	0,177	0,385	1,19	0,009	0,0002	0,0072	0,034	0,010	0,050	0,031	0,001	0,000	0,001	0,004
460567	35011	K1	0,173	0,381	1,18	0,008	0,0002	0,0063	0,054	0,022	0,049	0,066	0,001	0,000	0,003	0,002

A04 D H Manufacturer's mark

Z01/Z02/Z03 We hereby certify, that the above mentioned materials have been delivered in accordance with the terms of order.

B. BALDAUF
Test House Manager

AHB Inspector's stamp

Date 06.08.18

A01 AG der Dillinger Hüttenwerke
Postfach 1580, D-66748 Dillingen/Saar
Inspection department

PP 1

QM-System: Certification as per ISO 9001

DILLINGER

Erläuterungen siehe Rückseite/Explications voir au verso/See reverse for explanations (www.dillinger.de/certificate)

A02 INSPECTION CERTIFICATE 3.1 AS PER EN 10204:2004
INSPECTION CERTIFICATE 3.1 AS PER ISO 10474:2013
MATERIAL TEST REPORT (MTR)

A10 Advice of dispatch No./ Date of dispatch: 645948-05.08.18

A08/ Manufacturer's order/ A03 Certificate No.: 436752-003 Sheel: 5/...

A05 Established Inspecting body: DH

A06 Purchaser: EDMONTON STEEL,EDMON A07.1 No. ED10734-J1010ER

Final receiver: EDMONTON STEEL,EDMON A07.2 No.

B01 Product: HEAVY PLATES

B02/ Steel design. SA516-60 SA20-S5

B03 Any suppl. requirements: ASME-IIA:2017
DIL-HUE-1:R35-2018-02-12

C70-C99 Chemical composition % - Product analysis

B07.2 Heat	B07.1 Test No.	C01	B	CA	AL-T
459852	56930	K1	0,0001	0,0011	0,030
460565	34603	K1	0,0000	0,0010	0,036
460565	34606	K1	0,0000	0,0011	0,035
460565	34835	K1	0,0000	0,0011	0,034
460566	34468	K1	0,0002	0,0012	0,058
460567	35011	K1	0,0000	0,0016	0,041

C94 Product analysis Carbon equivalent / Alloying restrictions

B07.2 Heat	B07.1 Test No.	C01						
459852	56930	K1	FO-02=	0,38	FO-51=	0,000	FO-55=	0,07
460565	34603	K1	FO-02=	0,38	FO-51=	0,000	FO-55=	0,23
460565	34606	K1	FO-02=	0,39	FO-51=	0,000	FO-55=	0,23
460565	34835	K1	FO-02=	0,39	FO-51=	0,000	FO-55=	0,24
460566	34468	K1	FO-02=	0,39	FO-51=	0,001	FO-55=	0,13
460567	35011	K1	FO-02=	0,39	FO-51=	0,001	FO-55=	0,19

C94 Carbon equivalent formula / Alloying restrictions

FO-02 = C+(MN/6)+(CR+MO+V)/5+(NI+CU)/15
FO-51 = V +NB
FO-55 = CU+MO+NI+CR
FO-78 = CR+MO
FO-91 = MN/C

A04 D H Manufacturer's mark

Z01/Z02/Z03 We hereby certify, that the above mentioned materials have been delivered in accordance with the terms of order.

B. BALDAUF
Test House Manager

A H B Inspector's stamp

A01 AG der Dillinger Hüttenwerke
Postfach 1580, D-66748 Dillingen/Saar
Inspection department

Date 06.08.18 PP 1

QM-System: Certification as per ISO 9001

DILLINGER

Erläuterungen siehe Rückseite/Explications voir au verso/See reverse for explanations (www.dillinger.de/certificate)

A02 INSPECTION CERTIFICATE 3.1 AS PER EN 10204:2004
INSPECTION CERTIFICATE 3.1 AS PER ISO 10474:2013
MATERIAL TEST REPORT (MTR)

A10 Advice of dispatch No./ Date of dispatch: 645948-05.08.18

A08/ Manufacturer's order/ A03 Certificate No.: 436752-003 Sheet: 4/...

A05 Established Inspecting body: DH

A06 Purchaser: EDMONTON STEEL,EDMON A07.1 No. ED10734-J1010ER

Final receiver: EDMONTON STEEL,EDMON A07.2 No.

B01 Product: HEAVY PLATES

B02/ Steel design. SA516-70 SA20-S5

B03 Any suppl. requirements ASME-IIA:2017
DIL-HUE-1:R35-2018-02-12

C94 Heat analysis Carbon equivalent / Alloying restrictions

B07.2 Heat									
459852	FO-02=	0,37	FO-51=	0,000	FO-55=	0,08	FO-78=	0,03	FO-91= 7,1
460565	FO-02=	0,39	FO-51=	0,000	FO-55=	0,22	FO-78=	0,06	FO-91= 6,9
460566	FO-02=	0,38	FO-51=	0,001	FO-55=	0,13	FO-78=	0,04	FO-91= 6,8
460567	FO-02=	0,40	FO-51=	0,001	FO-55=	0,21	FO-78=	0,09	FO-91= 6,8

C95 Ladle treatment

ITEM NO.: 01-05
HEAT OF THE INDICATED ITEM: VACUUM DEGASSED / SULPHIDE SHAPE CONTROL

C95 Further information about ladle treatment

ITEM NO.: 01-05
CALCIUM TREATED

C70-C99 Chemical composition % - Product analysis

B07.2 Heat	B07.1 Test No.	C01	C	SI	MN	P	S	N	CU	MO	NI	CR	V	NB	SN	TI
459852	56930	K1	0,172	0,365	1,19	0,008	0,0008	0,0059	0,018	0,005	0,026	0,025	0,000	0,000	0,000	0,001
460565	34603	K1	0,169	0,366	1,15	0,004	0,0003	0,0058	0,019	0,040	0,153	0,019	0,000	0,000	0,000	0,001
460565	34606	K1	0,171	0,366	1,16	0,004	0,0004	0,0061	0,018	0,040	0,155	0,018	0,000	0,000	0,000	0,001
460565	34835	K1	0,173	0,365	1,16	0,003	0,0004	0,0061	0,018	0,041	0,159	0,018	0,000	0,000	0,000	0,001
460566	34468	K1	0,177	0,385	1,19	0,009	0,0002	0,0072	0,034	0,010	0,050	0,031	0,001	0,000	0,001	0,004
460567	35011	K1	0,173	0,381	1,18	0,008	0,0002	0,0063	0,054	0,022	0,049	0,066	0,001	0,000	0,003	0,002

A04 D H Manufacturer's mark

Z01/Z02/Z03 We hereby certify, that the above mentioned materials have been delivered in accordance with the terms of order.

B. BALDAUF
Test House Manager

A H B Inspector's stamp

A01 AG der Dillinger Hüttenwerke
Postfach 1580, D-66748 Dillingen/Saar
Inspection department

Date 06.08.18

PP 1

QM-System: Certification as per ISO 9001

Erläuterungen siehe Rückseite/Explications voir au verso/See reverse for explanations (www.dillinger.de/certificate)

DILLINGER

A02 INSPECTION CERTIFICATE 3.1 AS PER EN 10204:2004
INSPECTION CERTIFICATE 3.1 AS PER ISO 10474:2013
MATERIAL TEST REPORT (MTR)

A10 Advice of dispatch No./ Date of dispatch: 645948-05.08.18

A08/ Manufacturer's order/ A03 Certificate No.: 436752-003 Sheet: 5/...

A05 Established Inspecting body: DH

A06 Purchaser: EDMONTON STEEL,EDMON A07.1 No.: ED10734-J1010ER

Final receiver: EDMONTON STEEL,EDMON A07.2 No.:

B01 Product: HEAVY PLATES

B02/ Steel design. SA516-70 SA20-S5

B03 Any suppl. requirements: ASME-IIA:2017
DIL-HUE-1:R35-2018-02-12

C70-C99 Chemical composition % - Product analysis

B07.2 Heat	B07.1 Test No.	C01	B	CA	AL-T
459852	56930	K1	0,0001	0,0011	0,030
460565	34603	K1	0,0000	0,0010	0,036
460565	34606	K1	0,0000	0,0011	0,035
460565	34835	K1	0,0000	0,0011	0,034
460566	34468	K1	0,0002	0,0012	0,058
460567	35011	K1	0,0000	0,0016	0,041

C94 Product analysis Carbon equivalent / Alloying restrictions

B07.2 Heat	B07.1 Test No.	C01						
459852	56930	K1	FO-02=	0,38	FO-51=	0,000	FO-55=	0,07
460565	34603	K1	FO-02=	0,38	FO-51=	0,000	FO-55=	0,23
460565	34606	K1	FO-02=	0,39	FO-51=	0,000	FO-55=	0,23
460565	34835	K1	FO-02=	0,39	FO-51=	0,000	FO-55=	0,24
460566	34468	K1	FO-02=	0,39	FO-51=	0,001	FO-55=	0,13
460567	35011	K1	FO-02=	0,39	FO-51=	0,001	FO-55=	0,19

C94 Carbon equivalent formula / Alloying restrictions

FO-02 = C+(MN/6)+(CR+MO+V)/5+(NI+CU)/15
FO-51 = V +NB
FO-55 = CU+MO+NI+CR
FO-78 = CR+MO
FO-91 = MN/C

A04 D H Manufacturer's mark

Z01/Z02/Z03 We hereby certify, that the above mentioned materials have been delivered in accordance with the terms of order.

B. BALDAUF
Test House Manager

A H B Inspector's stamp

A01 AG der Dillinger Hüttenwerke
Postfach 1580, D-66748 Dillingen/Saar
Inspection department

Date 06.08.18

PP 1

WELDING PROCEDURE SPECIFICATION NO.: STS-4 (Rev. 0)

WELDING PROCEDURE QUALIFICATION RECORD NO.(S): STS-4-1 (Rev. 0), STS-4-2 (Rev. 0), WFL-4-1 (Rev.1)

QUALIFIED IN ACCORDANCE WITH ASME SECTION IX FOR

Base Metal (Typical): P1 Groups 1 & 2 to P1 Groups 1 & 2 (SA 333 Gr. 6, SA 350 Gr. LF2, SA 420 Gr. WPL6, SA 516 Gr. 70 etc.)
Process(es): SMAW **Weld Types:** GROOVE & FILLET
Position: ALL POSITIONS **Diameter:** ALL DIAMETERS
Filler Metal: E6010, E7018-1

BASE METAL CONDITIONS & GROOVE THICKNESS RANGE QUALIFIED:

NOTCH TOUGHNESS APPLICATIONS TO -50 °F AS WELDED
BASE METAL THICKNESS RANGE 0.116 to 1.750 in. inclusive

COMBINED DEPOSITED WELD METAL THICKNESS
ASME IX 1.750 in. maximum
API 650, 620, 12D, 12F 1.750 in. maximum

PROVINCIAL REGISTRATION

This WPS was prepared to the requirements of ASME Section IX 2017 and includes some of the additional requirements of the construction codes listed. The application of this WPS is outside the work scope of SGS Canada Inc.

Prepared By: Sara Van Roestel
Signed: Sara Van Roestel
Date: April 8, 2019

Reviewed By: Keelan Wolfe, C.E.T.
Signed: Keelan Wolfe
Date: April 8, 2019

(File E19-00104)

QW-482 WELDING PROCEDURE SPECIFICATION (WPS)

Organization Name: Storage Tank Solutions Inc.
Welding Procedure Specification No.: STS-4 (Rev. 0) Date: April 8, 2019
Revision(s): Rev. 0: Essential - Addition of PQR No.'s STS-4-1 (Rev.0) and STS-4-2 (Rev.0). Updated to current code requirements. WPS No. formerly WFL-4 (Rev.1).
Supporting PQR No.(s): STS-4-1 (Rev. 0), STS-4-2 (Rev. 0), WFL-4-1 (Rev.1)
Welding Process(es): Shielded Metal Arc Welding (SMAW)

JOINTS (QW-402)

Joint Design: All ASME groove & fillet, reference construction drawing for joint details. Where joint details are not specified, refer to figures 1 to 15 attached
Root Opening: As per attached typical groove designs, see figures 1 to 15 attached
Backing: With or without Retainers: With or without

BASE METALS (QW-403)

P-Number: P1 Groups 1 & 2 To P-Number: P1 Groups 1 & 2
Thickness Range: Groove: 0.116 to 1.750 in. inclusive
Fillet: 0.116 to 8.00 in. inclusive
Pipe Diameter Ranges: Groove: All diameters
Fillet: All diameters
Deposited Weld Metal (Per Pass): E6010: 0.188 in. maximum
E7018-1: 0.188 in. maximum

FILLER METALS (QW-404)	SMAW	SMAW
Specification No. (SFA)	SFA 5.1	SFA 5.1
AWS No. (Class)	E6010	E7018-1
F-No.	F3	F4
A-No.	A1	A1
Diameter	3/32 to 3/16 in. inclusive	3/32 to 1/4 in. inclusive
Deposited Weld Metal Thickness Range:		
Groove	0.188 in. max. (1)	1.750 in. max. (1)
Fillet	All fillet sizes (2)	All fillet sizes

(1) Combined deposited weld metal thickness shall not exceed 1.750 in.
(2) E6010 is restricted to a single pass for fillet weld applications requiring an MDMT less than -20 °F.

POSITION (QW-405)

Position of Groove: All positions Position of Fillet: All positions
Weld Progression: E6010: Vertical down E7018-1: Vertical down

PREHEAT (QW-406)

Preheat Temperature (Minimum): See attached preheat sheet prior to welding.
Interpass Temperature (Maximum): 500 °F
Preheat Maintenance: See attached preheat sheet prior to welding. Preheat maintenance is not required if welding is interrupted or after the completion of welding unless required by the code of construction.

WPS NO. STS-4 (Rev. 0)

POSTWELD HEAT TREATMENT (QW-407)

With or Without: Without

Temperature Range: N/A Time Range: N/A

ELECTRICAL CHARACTERISTICS (QW-409)

Current: Direct Polarity: Reverse, electrode positive

Amps: See Table 1 Volts: See Table 1

Maximum Heat Input

Base Metal Thickness Range	E6010 Electrode	E7018-1 Electrode
0.125 - 0.624 in.	29,302 J/in.	36,800 J/in.
0.625 in. and greater	30,191 J/in.	36,800 J/in.

TECHNIQUE (QW-410)

Manual or Automatic: Manual

String or Weave: E6010: String E7018-1: String or weave

Initial & Interpass Cleaning: Brushing, chipping or grinding as required

Method of Back Gouging: Air carbon arc, back-grind as required

Multiple or Single Pass Per Side: Multiple

Peening: Not permitted

Use of Thermal Process: N/A

Travel Speed: See Table 1

TABLE 1 - WELDING PARAMETERS

Process	Filler Metal	Diameter in.	Current Type & Polarity	Amperage Range	Voltage Range	Travel Speed i.p.m.
SMAW	E6010	3/32	DCRP	50 - 100	18 - 32	1.8 - 18
SMAW	E6010	1/8	DCRP	60 - 140	19 - 32	2.3 - 20
SMAW	E6010	5/32	DCRP	115 - 250	21 - 32	4.8 - 20
SMAW	E6010	3/16	DCRP	120 - 300	21 - 32	5.1 - 20
SMAW	E7018-1	3/32	DCRP	60 - 110	18 - 26	1.8 - 20
SMAW	E7018-1	1/8	DCRP	90 - 170	19 - 28	2.8 - 20
SMAW	E7018-1	5/32	DCRP	110 - 220	20 - 30	3.6 - 22
SMAW	E7018-1	3/16	DCRP	160 - 320	20 - 30	5.3 - 25
SMAW	E7018-1	7/32	DCRP	240 - 340	20 - 32	7.9 - 25
SMAW	E7018-1	1/4	DCRP	275 - 360	21 - 32	9.5 - 25

Note: Welding parameters shall be adjusted to ensure that the maximum heat input value specified in QW-409 above is not exceeded.
Heat Input (joules per inch) = (Amperage X Voltage X 60) / Travel Speed (i.p.m.)

TYPICAL JOINT DESIGNS

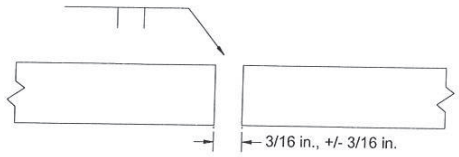

Figure 1
Single Square Butt

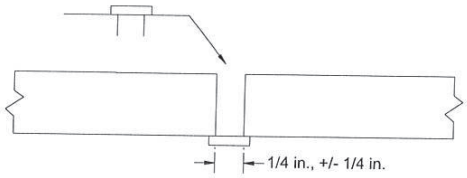

Figure 2
Single Square Butt with Backing Strip

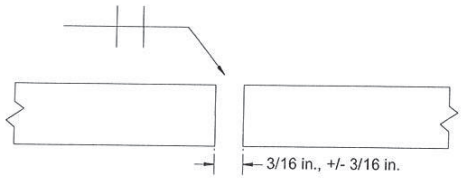

Figure 3
Double Square Butt

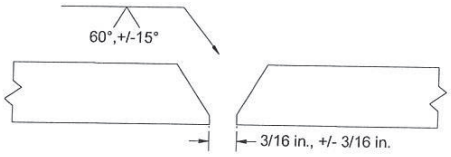

Figure 4
Single Vee Butt

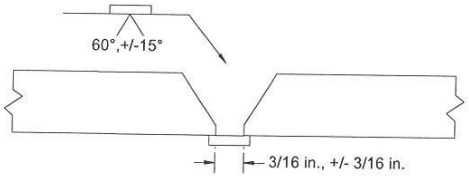

Figure 5
Single Vee Butt with Backing Strip

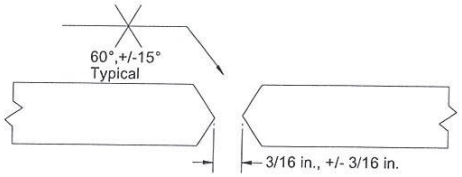

Figure 6
Double Vee Butt

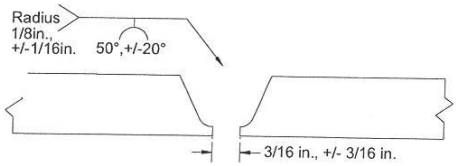

Figure 7
Single U Butt

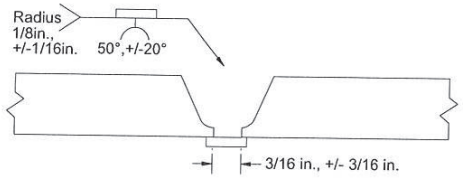

Figure 8
Single U Butt with Backing Strip

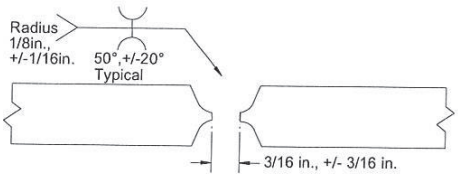

Figure 9
Double U Butt

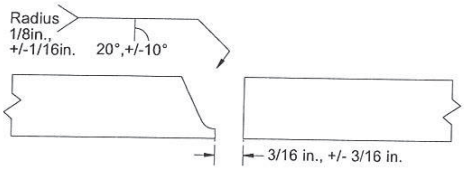

Figure 10
Single J Butt

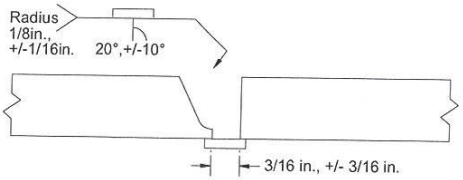

Figure 11
Single J Butt with Backing Strip

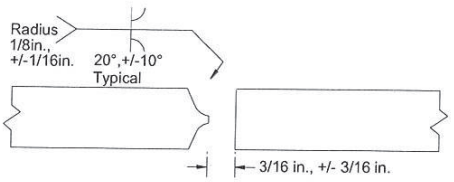

Figure 12
Double J Butt

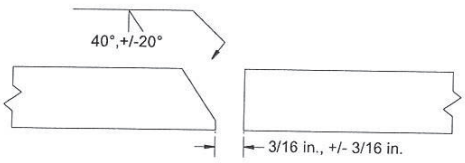

Figure 13
Single Bevel Butt

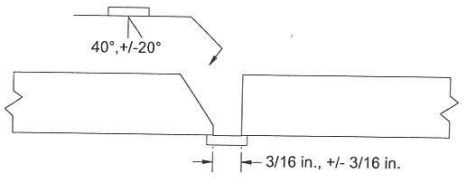

Figure 14
Single Bevel Butt with Backing Strip

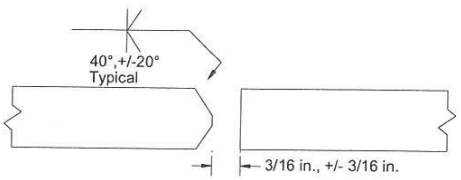

Figure 15
Double Bevel Butt

Additional joint designs and internal misalignment on circumferential welds shall be within the dimensional limits stated on the approved construction drawing and/or the engineering design.

WPS NO. STS-4 (Rev. 0)

PREHEAT

P-No. 1

LARGE, WELDED, LOW-PRESSURE STORAGE TANKS IN ACCORDANCE WITH API 620 Twelfth Edition

THICKNESS OF THE THICKER PLATE	MINIMUM PREHEAT TEMPERATURE	
	P1 Group 1	P1 Group 2
0 to 1.25 in.	32 °F	50 °F
Greater than 1.25 in to 1.50 in.	200 °F	200 °F
Greater than 1.50 in.	200 °F	200 °F

- No welding of any kind shall be performed when the surfaces to be welded are wet with rain snow or ice; when rain or snow is falling on such surfaces; or during periods of high winds unless the welder and the work are properly shielded.
- Preheat shall be applied when the metal temperature is below the temperature required by Table 6-2 (summarized above). In that case the base metal shall be heated to at least the temperature indicated within 3 in. of the place where welding is to be started and maintained 3 in. ahead of the arc. Material P-Number and Group Number shall be as designated in ASME IX or in API 630 6.7.2 for materials not listed in ASME IX.

WELDED TANKS FOR OIL STORAGE IN ACCORDANCE WITH API 650 Twelfth Edition

THICKNESS OF THE THICKER PLATE	MINIMUM PREHEAT TEMPERATURE	
	Material Group I, II, III, and IIIA	Material Group IV, IVA, V & VI
0 to 1.25 in.	32 °F	50 °F
Greater than 1.25 in to 1.50 in.	200 °F	200 °F
Greater than 1.50 in.	200 °F	200 °F

- No welding of any kind shall be performed when the surfaces to be welded are wet with rain snow or ice; when rain or snow is falling on such surfaces; or during periods of high winds unless the welder and the work are properly shielded.
- Preheat shall be applied when metal temperature is below the temperature required by table 7-1 (summarized above) for the base metals being joined, and metal shall be heated to at least the temperature indicated within 3 in. of the place where welding is to be started and maintained 3 in. ahead of the arc. Material Groups shall be as designated in Table 4.4

WELDED STORAGE TANKS IN ACCORDANCE WITH API 12D Eleventh Edition and API 12F Twelfth Edition

THICKNESS OF THE THICKER PLATE	MINIMUM PREHEAT TEMPERATURE
0 to 1.25 in.	50 °F
Greater than 1.25 in to 1.50 in.	200 °F
Greater than 1.50 in.	200 °F

- No welding of any kind shall be performed when the surfaces to be welded are wet with rain snow or ice; when rain or snow is falling on such surfaces; or during periods of high winds unless the welder and the work are properly shielded.
- Preheat shall be applied when the metal temperature is below the temperature required by the table above. In that case the base metal shall be heated to at least the temperature indicated within 3 in. of the place where welding is to be started and maintained 3 in. ahead of the arc.

QW-483 PROCEDURE QUALIFICATION RECORD (PQR)

Organization Name: Storage Tank Solutions Inc.
Procedure Qualification Record No.: STS-4-1 (Rev. 0) Date: February 21, 2019
Welding Process(es): Shielded Metal Arc Welding (SMAW)

JOINTS (QW-402)

Joint Design: Butt joint, single vee groove, see next page
Root Opening: See next page
Backing: Without Retainers: Without

BASE METALS (QW-403)

Material Specification No.: SA 333 to SA 350 Type or Grade: Gr. 6 to Gr. LF2
Heat Treat Condition (1): SA 333 Gr. 6: Quenched/Tempered SA 350 Gr. LF2: Normalized
P-No.: P1 Group 1 To P-No.: P1 Group 2 Thickness: 0.232 in.
Heat Number: 44391 to A50A8 Carbon Equivalent (2): 0.21 to 0.40
Diameter: 6.625 in. O.D.
Other: Schedule 40 pipe machined to 0.232 in. wall thickness
Deposited Weld Metal (Per Pass): Did not exceed 0.094 in. for E6010, and 0.125 in. for E7018-1

(1) Condition of base metal prior to welding.
(2) Per CSA Z662 Carbon Equivalent formula. See chemical composition of heat / ladle analysis on attached material test reports.

FILLER METALS (QW-404)

	SMAW	SMAW
Specification No. (SFA)	SFA 5.1	SFA 5.1
AWS No. (Class)	E6010 (3)	E7018-1 (4)
F-No.	F3	F4
A-No.	A1	A1
Diameter	See attached sketch	
Deposited Weld Metal Thickness	0.094 in.	0.138 in.

(3) The Lincoln Electric Company: Fleetweld 5P+
(4) ESAB: OK 55.00

POSITION (QW-405)

Position of Groove: 5G
Weld Progression: E6010: Vertical down E7018-1: Vertical down

PREHEAT (QW-406)

Preheat Temperature: 50 °F Interpass Temp. (Max.): 400 °F
Preheat Maintenance: Weld was allowed to cool to ambient temperature in still air after welding was completed.

POSTWELD HEAT TREATMENT (QW-407)

With or Without: Without
Temperature: N/A Time: N/A

PQR NO. STS-4-1 (Rev. 0)

ELECTRICAL CHARACTERISTICS (QW-409)

Current	Direct	Polarity	Reverse, electrode positive
Amps	See below	Volts	See below
Heat Input	E6010: 29,302 J/in. maximum		E7018-1: 36,800 J/in. maximum

TECHNIQUE (QW-410)

Manual or Automatic	Manual	
String or Weave	E6010: String	E7018-1: Weave
Initial & Interpass Cleaning	Brushing, chipping and grinding as required	
Method of Back Gouging	Not conducted	
Multiple or Single Pass Per Side	E6010: Single	E7018-1: Multiple
Peening	Not conducted	
Use of Thermal Process	N/A	
Travel Speed	See below	

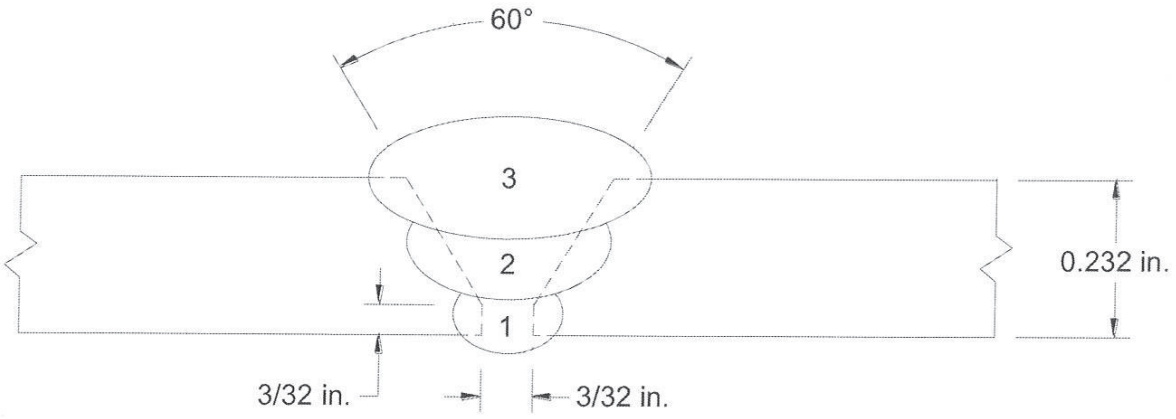

Pass	Process	Filler Metal	Diameter in.	Current Type & Polarity	Amperage Range	Voltage Range	Travel Speed i.p.m.
1	SMAW	E6010	1/8	DCEP	74 - 94	24 - 26	4.3
2	SMAW	E7018-1	3/32	DCEP	88 - 92	23 - 25	5.7
3	SMAW	E7018-1	3/32	DCEP	90 - 94	23 - 25	3.6

PQR NO. STS-4-1 (Rev. 0)

CHARPY V-NOTCH IMPACT TEST

Type of Test Charpy V-Notch Orientation Transverse

Governing Specification	Notch Location	Specimen Size in.	Test Temperature ° F	Specimen Number	Impact Values ft•lbf
ASME B31.3 - 2016	Weld metal within 1/16 in. of root	0.394 x 0.197	-50	J2.1	28
				J2.2	19
				J2.3	35
ASME B31.3 - 2016	Gr. 6 - HAZ	0.394 x 0.197	-50	J3.1	50
				J3.2	9
				J3.3	39
ASME B31.3 - 2016	Gr. LF2 - HAZ	0.394 x 0.197	-50	J4.1	21
				J4.2	85
				J4.3	98

OTHER TESTS

Vickers Hardness - see attached Laboratory Test Report No.: E19-104.10

Welder's Name Aaron Smedsrud Certificate File No. W-28887
Welder's Name Christopher Jaques Certificate File No. N/A
Tests Conducted By SGS Canada Inc.
Laboratory Test No. E19-104.10

We certify the statements in this record are correct and that the test welds were prepared, welded and tested in accordance with the requirements of Section IX of the ASME Code.

Organization Storage Tank Solutions Inc.

Date January 21, 2021 Print Sebastien Ouellet

Signed

QW-483 PROCEDURE QUALIFICATION RECORD (PQR)

Organization Name: Storage Tank Solutions Inc.
Procedure Qualification Record No.: STS-4-2 (Rev.0) Date: February 21, 2019
Welding Process(es): Shielded Metal Arc Welding (SMAW)

JOINTS (QW-402)

Joint Design: Butt joint, single vee groove, see next page
Root Opening: See next page
Backing: Without Retainers: Without

BASE METALS (QW-403)

Material Specification No.: SA 516 Type or Grade: Gr. 60/70
Heat Treat Condition (1): SA 516 Gr. 60/70: Normalized
P-No.: P1 Groups 1/2 To P-No.: P1 Groups 1/2 Thickness: 0.875 in.
Heat Number: 449291 55060-03 Carbon Equivalent (2): 0.37
Diameter: N/A Other: Plate product form
Deposited Weld Metal (Per Pass): Did not exceed 0.094 in. for E6010, and 0.125 in. for E7018-1

(1) Condition of base metal prior to welding.
(2) Per CSA Z662 Carbon Equivalent formula. See chemical composition of heat analysis on attached material test report

FILLER METALS (QW-404)

	SMAW	SMAW
Specification No. (SFA)	SFA 5.1	SFA 5.1
AWS No. (Class)	E6010 (3)	E7018-1 (4)
F-No.	F3	F4
A-No.	A1	A1
Diameter	See attached sketch	
Deposited Weld Metal Thickness	0.094 in.	0.781 in.

(3) The Lincoln Electric Company: Fleetweld 5P+
(4) ESAB: OK 55.00

POSITION (QW-405)

Position of Groove: 3G
Weld Progression: E6010: Vertical down E7018-1: Vertical down

PREHEAT (QW-406)

Preheat Temperature: 50 °F Interpass Temp. (Max.): 500 °F
Preheat Maintenance: Weld was allowed to cool to ambient temperature in still air after welding was completed.

POSTWELD HEAT TREATMENT (QW-407)

With or Without: Without
Temperature: N/A Time: N/A

ELECTRICAL CHARACTERISTICS (QW-409)

Current	Direct	Polarity	Reverse, electrode positive
Amps	See next page	Volts	See next page
Heat Input	E6010: 30,191 J/in. maximum		E7018-1: 31,543 J/in. maximum

TECHNIQUE (QW-410)

Manual or Automatic	Manual	
String or Weave	E6010: String	E7018-1: Weave
Initial & Interpass Cleaning	Brushing, chipping and grinding as required	
Method of Back Gouging	Not conducted	
Multiple or Single Pass Per Side	E6010: Single	E7018-1: Multiple
Peening	Not conducted	
Use of Thermal Process	N/A	
Travel Speed	See next page	

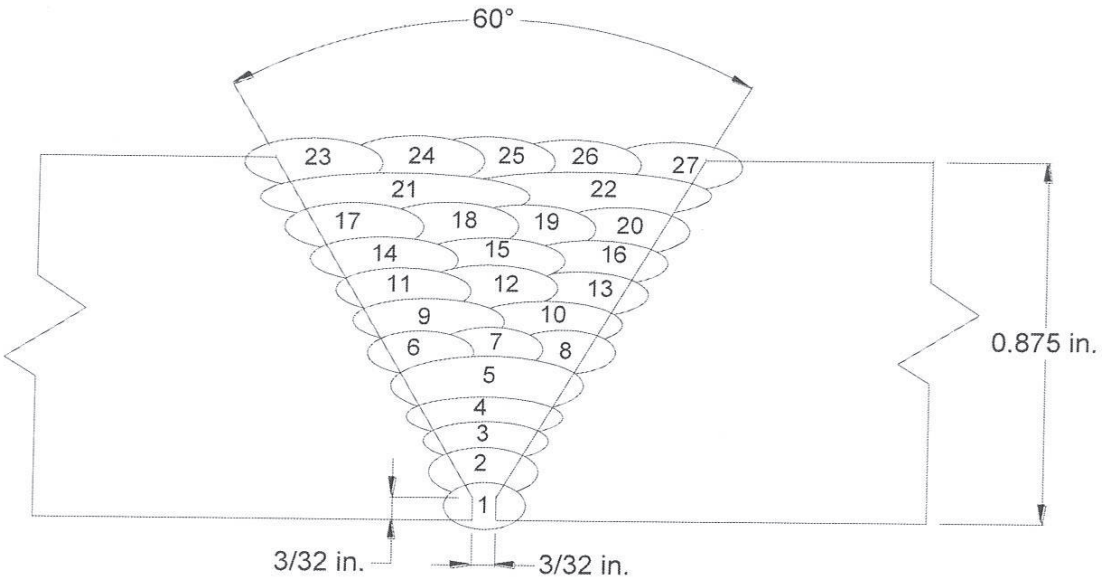

Pass	Process	Filler Metal	Diameter in.	Current Type & Polarity	Amperage Range	Voltage Range	Travel Speed i.p.m.
1	SMAW	E6010	1/8	DCEP	80 - 84	26 - 28	4.4
2	SMAW	E7018-1	3/32	DCEP	82 - 86	21 - 23	6.7
3	SMAW	E7018-1	3/32	DCEP	84 - 88	21 - 23	6.4
4	SMAW	E7018-1	1/8	DCEP	158 - 162	22 - 24	7.3
5	SMAW	E7018-1	1/8	DCEP	158 - 162	22 - 24	7.0
6	SMAW	E7018-1	1/8	DCEP	158 - 162	22 - 24	9.5
7	SMAW	E7018-1	1/8	DCEP	158 - 162	22 - 24	8.8
8	SMAW	E7018-1	1/8	DCEP	158 - 168	22 - 24	13.3
9	SMAW	E7018-1	1/8	DCEP	158 - 168	22 - 24	16.0
10	SMAW	E7018-1	1/8	DCEP	158 - 168	22 - 24	15.7
11	SMAW	E7018-1	1/8	DCEP	158 - 162	21 - 23	13.3
12	SMAW	E7018-1	1/8	DCEP	158 - 162	21 - 23	14.1
13	SMAW	E7018-1	1/8	DCEP	158 - 162	21 - 23	13.3
14	SMAW	E7018-1	1/8	DCEP	158 - 162	21 - 23	9.2
15	SMAW	E7018-1	1/8	DCEP	158 - 162	21 - 23	12.6
16	SMAW	E7018-1	1/8	DCEP	158 - 162	21 - 23	14.4
17	SMAW	E7018-1	1/8	DCEP	158 - 162	21 - 23	12.6
18	SMAW	E7018-1	1/8	DCEP	158 - 162	21 - 23	11.8
19	SMAW	E7018-1	1/8	DCEP	158 - 162	21 - 23	11.1
20	SMAW	E7018-1	1/8	DCEP	158 - 162	21 - 23	13.6
21	SMAW	E7018-1	1/8	DCEP	158 - 162	21 - 23	12.9
22	SMAW	E7018-1	1/8	DCEP	158 - 162	21 - 23	10.0
23	SMAW	E7018-1	1/8	DCEP	158 - 162	21 - 23	13.1
24	SMAW	E7018-1	1/8	DCEP	158 - 162	21 - 23	12.9
25	SMAW	E7018-1	1/8	DCEP	158 - 162	21 - 23	11.3
26	SMAW	E7018-1	1/8	DCEP	158 - 162	21 - 23	12.6
27	SMAW	E7018-1	1/8	DCEP	158 - 162	21 - 23	14.1

PQR NO. STS-4-2 (Rev.0)

TENSILE TEST (QW-150)

Sample No.	Width in.	Thickness in.	Area sq. in.	Ultimate Load lbf	Ultimate Stress psi	Fracture Type & Location
T1	0.752	0.850	0.639	50,600	79,200	Partial Cup & Cone Parent Metal
T2	0.752	0.870	0.654	51,780	79,200	Partial Cup & Cone Parent Metal

GUIDED BEND TEST (QW-160)

Type & Figure No.	Result	Type & Figure No.	Result
QW-462.2, TSB - S1	Pass	QW-462.2, TSB - S3	Pass
QW-462.2, TSB - S2	Pass	QW-462.2, TSB - S4	Pass

CHARPY V-NOTCH IMPACT TEST

Type of Test Charpy V-Notch Orientation Transverse

Governing Specification	Notch Location	Specimen Size in.	Test Temperature ° F	Specimen Number	Impact Values ft•lbf
ASME B31.3 - 2016	Weld metal within 1/16 in. of root	0.394 x 0.394	-50	K2.1	56
				K2.2	55
				K2.3	18
ASME B31.3 - 2016	HAZ	0.394 x 0.394	-50	K3.1	149
				K3.2	81
				K3.3	61

OTHER TESTS

Vickers Hardness - see attached Laboratory Test Report No.: E19-104.10

Welder's Name Aaron Smedsrud Certificate File No. W-28887
Welder's Name Christopher Jaques Certificate File No. N/A
Tests Conducted By SGS Canada Inc.
Laboratory Test No. E19-104.10

We certify the statements in this record are correct and that the test welds were prepared, welded and tested in accordance with the requirements of Section IX of the ASME Code.

Organization Storage Tank Solutions Inc.

Date January 21, 2021 Print Sebastien Ouellet

Signed 

QW-483 PROCEDURE QUALIFICATION RECORD (PQR)

Company Name: Storage Tank Solutions Inc.
Procedure Qualification Record No.: WFL-4-1 (Rev.1) Date: May 2, 2007
Revision(s): Rev.1 - Essential. Addition of deposited weld metal per pass, update to manufacturer's certifying statement, and corporate name change, formerly Woodside Fabricators Ltd. September 7, 2018.
Welding Process(es): SMAW Type(s): Manual

JOINTS (QW-402)

Type: Butt joint, single vee groove, see next page

BASE METALS (QW-403)

Material Spec.: SA 516 to SA 516 Type or Grade: Gr. 60 to Gr.70
P-No.: P1 Grp.1 To P-No.: P1 Grp.2 Thickness: 6.32 mm (0.249 in.)
Diameter: N/A Other: Plate Product Form m/c to 0.249 in.
Deposited Weld Metal (Per Pass): Did not exceed 0.50 in.

FILLER METALS (QW-404)

Specification No. (SFA)	SFA 5.1	SFA 5.1
AWS No. (Class)	E6010	E7018-1
Filler Metal F-No.	F3	F4
Filler Metal A-No.	A1	A1
Size of Electrode	See attached sketch	
Deposited Weld Metal Thickness	2.39 mm (0.094 in.)	3.94 mm (0.155 in.)

POSITION (QW-405)

Position of Groove: 3G
Weld Progression: Vertical down

PREHEAT (QW-406)

Preheat Temperature: 10°C (50°F) Interpass Temp. (Max.): 232°C (450°F)

POSTWELD HEAT TREATMENT (QW-407)

Temperature: N/A Time: N/A

ELECTRICAL CHARACTERISTICS (QW-409)

Current: Direct Polarity: Reverse, electrode positive
Amps: See next page Volts: See next page
Heat Input: F3: 20,330 J/in. maximum F4: 20,070 J/in. maximum

TECHNIQUE (QW-410)

String or Weave: Root: String Remainder: Weave
Travel Speed: See next page
Multiple or Single Pass Per Side: F3: Single F4: Multiple

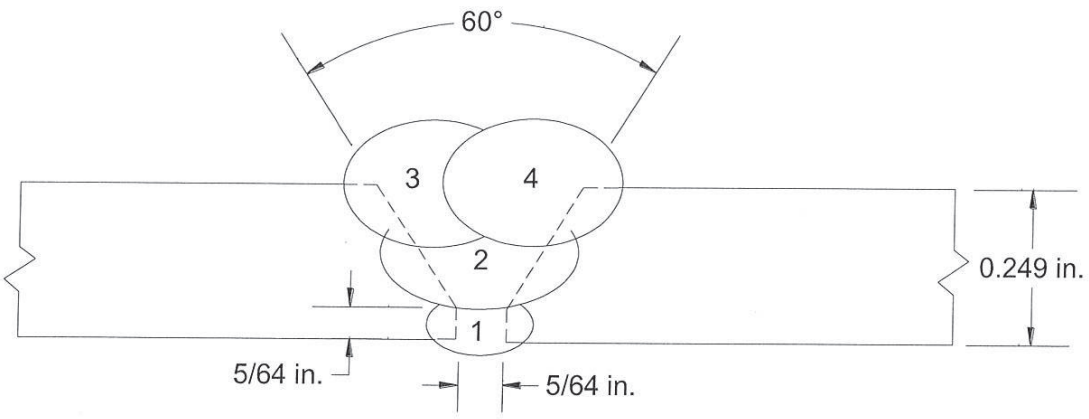

Pass	Process	Filler Metal	Diameter mm (in.)	Current & Polarity	Amperage Range	Voltage Range	Travel Speed mm/min (i.p.m.)
1	SMAW	E6010	3.2 (1/8)	DCRP	85 - 87	24 - 25	158 (6.2)
2	SMAW	E7018-1	3.2 (1/8)	DCRP	140 - 145	21 - 22	233 (9.2)
3	SMAW	E7018-1	3.2 (1/8)	DCRP	140 - 145	21 - 22	282 (11.1)
4	SMAW	E7018-1	3.2 (1/8)	DCRP	140 - 145	21 - 22	275 (10.8)

PQR NO. WFL-4-1 (Rev.1)

TENSILE TEST (QW-150)

Specimen No.	Width mm (in.)	Thickness mm (in.)	Area Sq. mm (Sq. in.)	Ultimate Load N (lbs.)	Ultimate Stress MPa (psi)	Character & Fracture Location
T1	19.0	4.74	49.5	46 874	524	Partial Cup & Cone
	(0.748)	(0.185)	(0.139)	(10,500)	(76,000)	Parent Metal (SA 516 Gr.70)
T2	19.0	4.88	92.7	47 904	517	Partial Cup & Cone
	(0.748)	(0.192)	(0.144)	(10,800)	(74,900)	Weld Metal

GUIDED BEND TEST (QW-160)

Type & Figure No.	Result	Type & Figure No.	Result
QW-462.3a, TRB - R1	Pass	QW-462.3a, TFB - F1	Pass
QW-462.3a, TRB - R2	Pass	QW-462.3a, TFB - F2	Pass

CHARPY IMPACT TOUGHNESS

Type of Test Charpy V Notch Orientation Transverse
Test Temperature -48° C (-55° F) Specimen Size 10 X 5 mm

Specimen No.	Notch Location	Impact Values J (ft. lbs)
W2.1	Weld Metal	10.8 (8.0)
W2.2	Weld Metal	25.2 (18.6)
W2.3	Weld Metal	30.1 (22.2)
W3.1	P1 Grp.1 - HAZ	15.7 (11.6)
W3.2	P1 Grp.1 - HAZ	77.6 (57.2)
W3.3	P1 Grp.1 - HAZ	93.8 (69.2)
W4.1	P1 Grp.2 - HAZ	55.6 (41.0)
W4.2	P1 Grp.2 - HAZ	64.0 (47.2)
W4.3	P1 Grp.2 - HAZ	38.0 (28.0)

OTHER TESTS

Vickers Hardness - see attached laboratory test report

Welders Name Kyle Maser Certificate File No. N/A
Tests Conducted By Ludwig & Associates Ltd.
Laboratory Test No. E07-393.12

We hereby recertify that the statements in this record have been revised in accordance with Paragraph QW-200.2 and that the test welds were prepared, welded and tested in accordance with the requirements of Section IX of the ASME Code.

Manufacturer Storage Tank Solutions Inc.

Date January 21, 2021 Signed 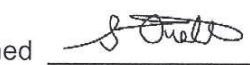

CHARPY V-NOTCH IMPACT TEST

Customer: **Storage Tank Solutions Inc.**
9 Well Head Street
Devon, Alberta
T9G 1Z6

Laboratory Test No.: E19-104.10
Date: March 15, 2019

Attention: Sebastien Ouellet

PQR No.:	STS-4-1 (Rev.0)	**Material Heat No.:**	44391 to A50A8
Material:	SA 333 Gr. 6 to SA 350 Gr. LF2		
Material Size:	168 mm (6.625 in.) O.D. x 5.89 mm (0.232 in.) w.t.		
Thermal Condition:	As Welded		

Specimen Size:	*10 x 5 mm (0.394 x 0.197 in.)*	*Machine:*	*Satec SI-1K3, S/N: 1503*
Orientation:	*Transverse*	*Capacity:*	*407 J (300 ft·lbf)*
Test Temperature:	*-46 °C (-50 °F)*	*Verified Range:*	*3.4-325J (2.5-240 ft·lbf)*
Governing Spec.:	*ASME B31.3-2016*	*Calibration Date:*	*March 19, 2018*

Specimen Number	Notch Location	Impact Values Joules	(ft·lbf)
J2.1	Weld Metal within 1.5mm (1/16") of root	38	(28)
J2.2		26	(19)
J2.3		47	(35)
J3.1	SA 333 Gr. 6 - HAZ	68	(50)
J3.2		12	(9)
J3.3		53	(39)
J4.1	SA 350 Gr. LF2 - HAZ	28	(21)
J4.2		115	(85)
J4.3		133	(98)

Note: Metric values calculated by direct conversion.

Test Conducted By: Tong Zhao (Edmonton)

Certified By: _____
Eric Dacyk, C.E.T.

ANAB ACCREDITED ISO/IEC 17025 TESTING LABORATORY Certification # L2057.01-1

This report (or certificate) is issued by the Company under its General Conditions for Inspection and Testing Services (copy available upon request). The issuance of this report (or certificate) does not exonerate buyers or sellers from exercising all their rights and discharging all their liabilities under the Contract of Sale. Stipulations to the contrary are not binding on the Company. The Company's responsibility under this report (or certificate) is limited to proven negligence and will in no case be more than ten times the amount of the fees or commission. Except by special arrangement, samples, if drawn, will not be retained by the Company for more than 30 days. The information stated in this report (or certificate) is derived from the results of inspection or testing procedures carried out in accordance with the instructions of our Client, and/or our assessment of such results on the basis of any technical standards, trade custom or practice, or other circumstances which should in our professional opinion be taken into account.

SGS Canada Inc. | 4027 - 14 Street S.E. Calgary, AB T2G 3K6 t +1 (403) 262-7072 f +1 (403) 266-3169
7925 Davies Road Edmonton, AB T6E 4N1 t +1 (780) 468-3030 f +1 (780) 468-3032 www.sgs.com

Member of the SGS Group (SGS SA)

HARDNESS TEST

Customer: **Storage Tank Solutions Inc.**
9 Well Head Street
Devon, Alberta
T9G 1Z6

Laboratory Test No.: E19-104.10
Date: March 15, 2019

Attention: Sebastien Ouellet

PQR No.:	STS-4-1 (Rev.0)	**Material Heat No.:**	44391 to A50A8
Material:	SA 333 Gr. 6 to SA 350 Gr. LF2		
Material Size:	168 mm (6.625 in.) O.D. x 5.89 mm (0.232 in.) w.t.		
Thermal Condition:	As Welded		

Type of Test: *Vickers 10 kg (HV10)*
Governing Spec.: *ASTM E92 - 17 &*
ANSI/NACE MR0175/ISO 15156:2015

Instrument: *LECO S/N: 1594*
Calibration Date: *July 27, 2018*

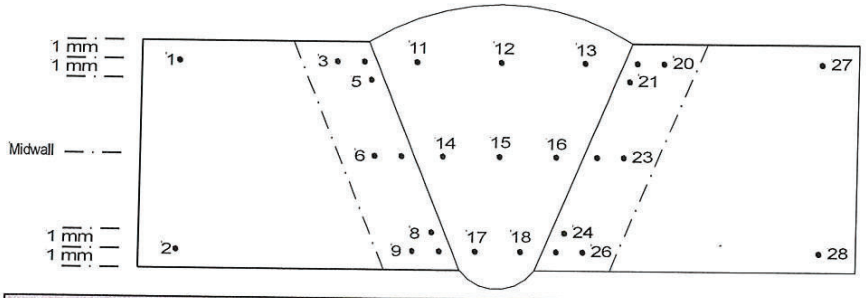

SA 350 Gr. LF2				Weld Metal		SA 333 Gr. 6			
Parent Metal		HAZ				HAZ		Parent Metal	
1	148	*3*	185	*11*	194	*19*	189	*27*	175
2	156	*4*	196	*12*	193	*20*	157	*28*	170
		5	190	*13*	186	*21*	194		
		6	169	*14*	182	*22*	194		
		7	180	*15*	186	*23*	185		
		8	182	*16*	185	*24*	161		
		9	171	*17*	163	*25*	160		
		10	181	*18*	162	*26*	170		

Test Conducted By: Tong Zhao (Edmonton)

Certified By: _____
Eric Dacyk, C.E.T.

ANAB ACCREDITED ISO/IEC 17025 TESTING LABORATORY Certification # L2057.01-1

This report (or certificate) is issued by the Company under its General Conditions for Inspection and Testing Services (copy available upon request). The issuance of this report (or certificate) does not exonerate buyers or sellers from exercising all their rights and discharging all their liabilities under the Contract of Sale. Stipulations to the contrary are not binding on the Company. The Company's responsibility under this report (or certificate) is limited to proven negligence and will in no case be more than ten times the amount of the fees or commission. Except by special arrangement, samples, if drawn, will not be retained by the Company for more than 30 days. The information stated in this report (or certificate) is derived from the results of inspection or testing procedures carried out in accordance with the instructions of our Client, and/or our assessment of such results on the basis of any technical standards, trade custom or practice, or other circumstances which should in our professional opinion be taken into account.

SGS Canada Inc. | 4027 - 14 Street S.E. Calgary, AB T2G 3K6 t +1 (403) 262-7072 f +1 (403) 266-3169
7925 Davies Road Edmonton, AB T6E 4N1 t +1 (780) 468-3030 f +1 (780) 468-3032 www.sgs.com

Member of the SGS Group (SGS SA)

TENSILE / BEND TEST

Customer: **Storage Tank Solutions Inc.**
9 Well Head Street
Devon, Alberta
T9G 1Z6

Laboratory Test No.: E19-104.11
Date: March 18, 2019

Attention: Sebastien Ouellet

PQR No.:	STS-4-2 (Rev.0)	**Material Heat No.:**	454840 27789-02
Material:	SA 516 Gr. 60/70		
Material Thickness:	22.2 mm (0.875 in.)		
Thermal Condition:	As Welded		

Governing Spec.: *ASME Section IX - 2017* *Instrument:* *Tinius Olsen S/N: 133660*

SAMPLE NO.(QW-150)	T1		T2	
WIDTH mm (in.)	19.1	(0.752)	19.1	(0.752)
THICKNESS mm (in.)	21.6	(0.850)	22.1	(0.870)
AREA sq. mm (sq. in.)	413	(0.639)	422	(0.654)
ULTIMATE LOAD N (lbf)	225 179	(50,600)	230 525	(51,800)
ULTIMATE STRESS MPa (psi)	546	(79,200)	546	(79,200)
FRACTURE TYPE	Partial Cup & Cone		Partial Cup & Cone	
FRACTURE LOCATION	Parent Metal		Parent Metal	

Note: Imperial values calculated by direct conversion.

SAMPLE TYPE(QW-462.2)	Side Bend	Side Bend	Side Bend	Side Bend
SAMPLE NO.	S1	S2	S3	S4
RESULTS	Pass	Pass	Pass	Pass

Test Conducted By: Ibrahim Mohamoud (Edmonton)

Certified By: _____
Eric Dacyk, C.E.T.

ANAB ACCREDITED ISO/IEC 17025 TESTING LABORATORY Certification # L2057.01-1

This report (or certificate) is issued by the Company under its General Conditions for Inspection and Testing Services (copy available upon request). The issuance of this report (or certificate) does not exonerate buyers or sellers from exercising all their rights and discharging all their liabilities under the Contract of Sale. Stipulations to the contrary are not binding on the Company. The Company's responsibility under this report (or certificate) is limited to proven negligence and will in no case be more than ten times the amount of the fees or commission. Except by special arrangement, samples, if drawn, will not be retained by the Company for more than 30 days. The information stated in this report (or certificate) is derived from the results of inspection or testing procedures carried out in accordance with the instructions of our Client, and/or our assessment of such results on the basis of any technical standards, trade custom or practice, or other circumstances which should in our professional opinion be taken into account.

SGS Canada Inc. | 4027 - 14 Street S.E. Calgary, AB T2G 3K6 t +1 (403) 262-7072 f +1 (403) 266-3169
7925 Davies Road Edmonton, AB T6E 4N1 t +1 (780) 468-3030 f +1 (780) 468-3032 www.sgs.com

Member of the SGS Group (SGS SA)

CHARPY V-NOTCH IMPACT TEST

Customer: **Storage Tank Solutions Inc.**
9 Well Head Street
Devon, Alberta
T9G 1Z6

Laboratory Test No.: E19-104.11
Date: March 21, 2019

Attention: Sebastien Ouellet

PQR No.:	STS-4-2 (Rev.0)	**Material Heat No.:**	454840 27789-02
Material:	SA 516 Gr. 60/70		
Material Thickness:	22.2 mm (0.875 in.)		
Thermal Condition:	As Welded		

Specimen Size:	*10 x 10 mm (0.394 x 0.394 in.)*	*Machine:*	*Satec SI-1K3, S/N: 1503*
Orientation:	*Transverse*	*Capacity:*	*407 J (300 ft·lbf)*
Test Temperature:	*-46 °C (-50 °F)*	*Verified Range:*	*3.4-325J (2.5-240 ft·lbf)*
Governing Spec.:	*ASME B31.3-2016*	*Calibration Date:*	*March 19, 2018*

Specimen Number	Notch Location	Impact Values Joules	(ft·lbf)
K2.1	Weld Metal within 1.5mm (1/16") of root	76	(56)
K2.2		75	(55)
K2.3		24	(18)
K3.1	HAZ within 1/4 to 1/2t of weld surface	202	(149)
K3.2		110	(81)
K3.3		83	(61)

Note: Metric values calculated by direct conversion.

Test Conducted By: Tong Zhao (Edmonton)

Certified By: _____
Eric Dacyk, C.E.T.

ANAB ACCREDITED ISO/IEC 17025 TESTING LABORATORY Certification # L2057.01-1

This report (or certificate) is issued by the Company under its General Conditions for Inspection and Testing Services (copy available upon request). The issuance of this report (or certificate) does not exonerate buyers or sellers from exercising all their rights and discharging all their liabilities under the Contract of Sale. Stipulations to the contrary are not binding on the Company. The Company's responsibility under this report (or certificate) is limited to proven negligence and will in no case be more than ten times the amount of the fees or commission. Except by special arrangement, samples, if drawn, will not be retained by the Company for more than 30 days. The information stated in this report (or certificate) is derived from the results of inspection or testing procedures carried out in accordance with the instructions of our Client, and/or our assessment of such results on the basis of any technical standards, trade custom or practice, or other circumstances which should in our professional opinion be taken into account.

SGS Canada Inc. | 4027 - 14 Street S.E. Calgary, AB T2G 3K6 t +1 (403) 262-7072 f +1 (403) 266-3169
7925 Davies Road Edmonton, AB T6E 4N1 t +1 (780) 468-3030 f +1 (780) 468-3032 www.sgs.com

Member of the SGS Group (SGS SA)

HARDNESS TEST

Customer: **Storage Tank Solutions Inc.**
9 Well Head Street
Devon, Alberta
T9G 1Z6

Laboratory Test No.: E19-104.11
Date: March 12, 2019

Attention: Sebastien Ouellet

PQR No.:	STS-4-2 (Rev.0)	**Material Heat No.:**	454840 27789-02
Material:	SA 516 Gr. 60/70		
Material Thickness:	22.2 mm (0.875 in.)		
Thermal Condition:	As Welded		

Type of Test: *Vickers 10 kg (HV10)*
Governing Spec.: *ASTM E92 - 17*

Instrument: *LECO S/N: 1594*
Calibration Date: *July 27, 2018*

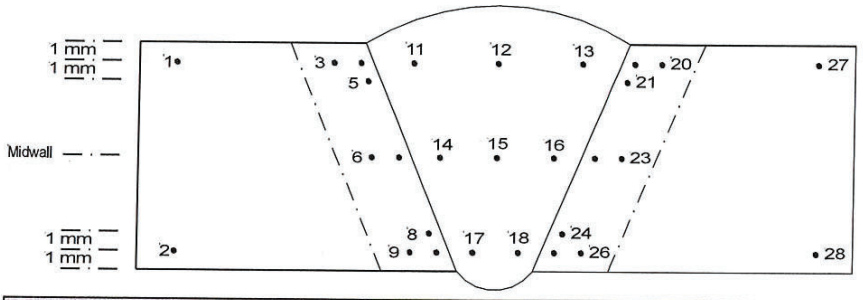

Parent Metal		HAZ		Weld Metal		HAZ		Parent Metal	
1	152	*3*	308	*11*	206	*19*	277	*27*	152
2	148	*4*	317	*12*	181	*20*	255	*28*	143
		5	263	*13*	203	*21*	245		
		6	182	*14*	192	*22*	208		
		7	198	*15*	186	*23*	194		
		8	185	*16*	193	*24*	192		
		9	190	*17*	173	*25*	180		
		10	191	*18*	173	*26*	194		

Test Conducted By: Ibrahim Mohamoud (Edmonton)

Certified By: _____
Eric Dacyk, C.E.T.

ANAB ACCREDITED ISO/IEC 17025 TESTING LABORATORY Certification # L2057.01-1

This report (or certificate) is issued by the Company under its General Conditions for Inspection and Testing Services (copy available upon request). The issuance of this report (or certificate) does not exonerate buyers or sellers from exercising all their rights and discharging all their liabilities under the Contract of Sale. Stipulations to the contrary are not binding on the Company. The Company's responsibility under this report (or certificate) is limited to proven negligence and will in no case be more than ten times the amount of the fees or commission. Except by special arrangement, samples, if drawn, will not be retained by the Company for more than 30 days. The information stated in this report (or certificate) is derived from the results of inspection or testing procedures carried out in accordance with the instructions of our Client, and/or our assessment of such results on the basis of any technical standards, trade custom or practice, or other circumstances which should in our professional opinion be taken into account.

SGS Canada Inc. | 4027 - 14 Street S.E. Calgary, AB T2G 3K6 t +1 (403) 262-7072 f +1 (403) 266-3169
7925 Davies Road Edmonton, AB T6E 4N1 t +1 (780) 468-3030 f +1 (780) 468-3032 www.sgs.com

Member of the SGS Group (SGS SA)

LUDWIG & ASSOCIATES LTD.

Materials and Welding Consulting

LABORATORY TEST REPORT

CUSTOMER: **Woodside Fabricators Ltd.**
6124 - 39th Ave
Camrose, Alberta
T4V 3B1

Laboratory Test No.: E07-393.12
Date: May 7, 2007

Attention: Doug French

PQR No.:	WFL-4-1
Material:	SA 516 Gr. 60 to SA 516 Gr. 70
Thickness:	6.32 mm (0.249 in.)
Thermal Condition:	As Welded

TENSILE TEST QW-150

SAMPLE NUMBER	T1	QW-462.1(a)	T2	QW-462.1(a)
WIDTH mm (in.)	19.0	(0.748)	19.0	(0.748)
THICKNESS mm (in.)	4.71	(0.185)	4.88	(0.192)
AREA sq. mm (sq. in.)	49.5	(0.139)	92.7	(0.144)
ULTIMATE LOAD N (lbs)	46 874	(10,500)	47 904	(10,800)
UTS MPa (psi)	524	(76,000)	517	(74,900)
FRACTURE TYPE	Partial Cup & Cone		Partial Cup & Cone	
FRACTURE LOCATION	Parent Metal (SA 516 Gr. 70)		Weld Metal	

GUIDED-BEND TEST QW-160

SAMPLE WIDTH:	38.1 mm (1.50 in.)		SAMPLE THICKNESS:	6.32 mm (0.249 in.)
PLUNGER SIZE:	22.2 mm (0.875 in.)		YOKE SIZE:	41.1 mm (1.62 in.)
QW-462.3(a)	Face Bend	Face Bend	Root Bend	Root Bend
SAMPLE NUMBER(S)	F1	F2	R1	R2
RESULTS	Pass	Pass	Pass	Pass

We certify the test results in this report and that the specimen(s) were prepared and tested in accordance with the requirements of ASME Section IX, 2004 edition and latest addenda. *Material information has been provided by the Customer whose name appears on this report.*

Samples associated with this report will be discarded in 30 days.

Laboratory Test Conducted By: _____ for

Natashua Collier, C.E.T.

4027 - 14 Street, S.E., CALGARY, ALBERTA T2G 3K6 PHONE: (403) 262-7072 FAX: (403) 266-3169
7925 Davies Road, EDMONTON, ALBERTA T6E 4N1 PHONE: (780) 468-3030 FAX: (780) 468-3032

LUDWIG & ASSOCIATES LTD.

Materials and Welding Consulting

LABORATORY TEST REPORT

CUSTOMER: **Woodside Fabricators Ltd.**
6124 - 39th Ave
Camrose, Alberta
T4V 3B1

Laboratory Test No.: E07-393.12
Date: May 7, 2007

Attention: Doug French

PQR No.:	WFL-4-1
Material:	SA 516 Gr. 60 to SA 516 Gr. 70
Thickness:	6.32 mm (0.249 in.)
Thermal Condition:	As Welded

NOTCH-TOUGHNESS TEST

TYPE OF TEST: Charpy V-Notch
TEST TEMPERATURE: -48°C (-55°F)
ORIENTATION: Transverse
SPECIMEN SIZE: 10 x 5 mm

Specimen Number	Notch Location	Impact Values Joules	(ft.lbs)
W2.1	Weld Metal within 1/16" of root	10.8	(8.0)
W2.2	Weld Metal within 1/16" of root	25.2	(18.6)
W2.3	Weld Metal within 1/16" of root	30.1	(22.2)
W3.1	Gr. 60 - HAZ	15.7	(11.6)
W3.2	Gr. 60 - HAZ	77.6	(57.2)
W3.3	Gr. 60 - HAZ	93.8	(69.2)
W4.1	Gr. 70 - HAZ	55.6	(41.0)
W4.2	Gr. 70 - HAZ	64.0	(47.2)
W4.3	Gr. 70 - HAZ	38.0	(28.0)

We certify the test results in this report and that the specimen(s) were prepared and tested in accordance with the requirements of ASME Section VIII, Div. I, UG-84 - 2004 *edition and latest addenda. Material information has been provided by the Customer whose name appears on this report.*

Samples associated with this report will be discarded in 30 days.

Laboratory Test Conducted By: _____ FOR

Natashua Collier, C.E.T.

4027 - 14 Street, S.E., CALGARY, ALBERTA T2G 3K6 PHONE: (403) 262-7072 FAX: (403) 266-3169
7925 Davies Road, EDMONTON, ALBERTA T6E 4N1 PHONE: (780) 468-3030 FAX: (780) 468-3032

LUDWIG & ASSOCIATES LTD.

Materials and Welding Consulting

LABORATORY TEST REPORT

CUSTOMER: **Woodside Fabricators Ltd.**
6124 - 39th Ave
Camrose, Alberta
T4V 3B1

Laboratory Test No.: E07-393.12
Date: May 7, 2007

Attention: Doug French

PQR No.:	WFL-4-1
Material:	SA 516 Gr. 60 to SA 516 Gr. 70
Thickness:	6.32 mm (0.249 in.)
Thermal Condition:	As Welded

HARDNESS TEST

TYPE OF TEST: Vickers LOAD: 10 kg

INSTRUMENT TYPE: Leco V-100-C1

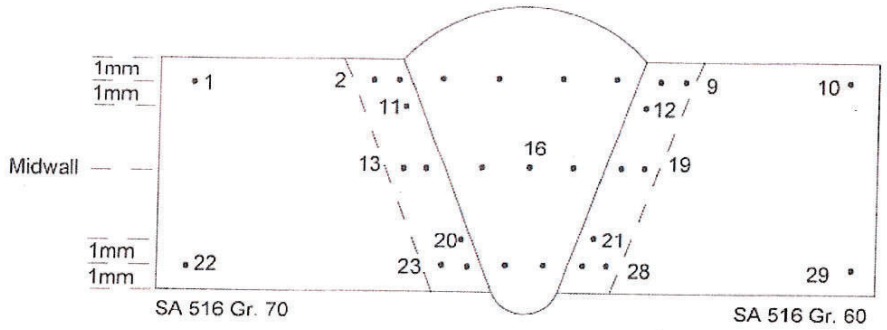

1)	153 HV	7)	181 HV	13)	173 HV	19)	162 HV	25)	171 HV
2)	193 HV	8)	206 HV	14)	188 HV	20)	192 HV	26)	178 HV
3)	210 HV	9)	207 HV	15)	167 HV	21)	185 HV	27)	186 HV
4)	174 HV	10)	161 HV	16)	166 HV	22)	158 HV	28)	167 HV
5)	169 HV	11)	187 HV	17)	168 HV	23)	173 HV	29)	157 HV
6)	164 HV	12)	190 HV	18)	172 HV	24)	185 HV		

We certify the test results in this report and that the specimen(s) were prepared and tested in accordance with the requirements of ASTM E92-82 (Reapproved 2003). *Material information has been provided by the Customer whose name appears on this report.*

Samples associated with this report will be discarded in 30 days

Laboratory Test Conducted By: _____

Natashua Collier, C.E.T.

4027 - 14 Street, S.E., CALGARY, ALBERTA T2G 3K6 PHONE: (403) 262-7072 FAX: (403) 266-3169

7925 Davies Road, EDMONTON, ALBERTA T6E 4N1 PHONE: (780) 468-3030 FAX: (780) 468-3032

Tenaris

INSPECTION CERTIFICATE

(BS EN 10204 3.1: 2004 - ISO 10474 3.1: 2013)

Number / Número:	Page / Página:
853076	1 / 8

Date / Día: July 21, 2017

Siderca S.A.I.C.
Dr Jorge A. Simini 250
(B2804MHA) Campana
Buenos Aires, Argentina
(54) 3489 433100 tel
(54) 3489 433465 fax

Customer / Cliente: VAN LEEUWEN PIPE & TUBE (CANADA) INC.

Customer's Order Item / Orden Cliente - Item: 4500180 3-00008

Customer's Reference / Ref. del Cliente: N/A

Manufacturer's Works Order N° / Confirmación de Venta: 51938/08

Manufacturing Process / Proceso de Manufactura: SEAMLESS HOT ROLLED

Product Type / Tipo de Producto: CARBON STEEL FOR LOW TEMPERATURE SERVICE

Surface / Superficie: INT BARE /EXT VARNISHED

Standard or Specification / Normas o Especificaciones: ASTM/ASME A/SA333-10+CSA Z245.1-14 CATII-SS+PSP00374+NACE MR0175/103+IPRO LP-006

Steel Grade / Grado de acero: 1/6/359 CAT II SS

Ends / Extremos: BEVELLED AT 30 DEG. ASTM

Dimensions / Dimensiones: 6 5/8 X 0.280 INCH; 168.30 X 7.11 MM

Schedule / Cédula: 040

Length / Longitud: 11.0/11.8 m

Quantity / Cantidad: 83 Pcs/pz; 3157.94 FT; 962.54 MTS; 59747 LB; 27101 KG

Nominal Weight / Peso Nominal: 18.97 LB/FT; 28.26 KG/M

TENSILE TEST / ENSAYO DE TENSIÓN

Heat N° / Colada N°	Sample N° / Muestra N°	Zone / Zona	Lot N° / Lote N°	Pipe N° / Tubo N°	Specimen condition / Condición de la probeta: Ls	Sc	Type / Tipo	Ori	Specimen dimensions / Dimensiones de la probeta: Size / Tamaño	Area / Sección	Test temp / Temp. ensayo	Y.S. Bul 0.50 % Min: 52 Max: —	U.T.S. Req. Min: 66 Max: 91	Y.S./U.T.S Bul 0.50 % Req. Max. 0.93	Elongation / Alargamiento: Lo	Min.	Obt.
									In	In2	°F	ksi	ksi		mm	%	%
44391	2836324	E1	71971	20	B	AM	Ss	L	0.999 x 0.278	0.279	RT	57.7	71.1	0.80	50,8	28.0	36.6
44391	2836325	E2	71971	40	B	AM	Ss	L	0.995 x 0.279	0.279	RT	58.1	72.0	0.81	50,8	28.0	36.7
44391	2836326	E1	71971	60	B	AM	Ss	L	0.999 x 0.283	0.281	RT	60.0	73.1	0.82	50,8	28.0	39.1
44391	2836327	E2	71972	80	B	AM	Ss	L	0.999 x 0.279	0.280	RT	62.2	75.9	0.82	50,8	28.0	40.9
44391	2836329	E2	71973	1	B	AM	Ss	L	1. x 0.276	0.276	RT	59.3	73.3	0.81	50,8	28.0	36.1
44391	2836335	E1	71974	20	B	AM	Ss	L	0.994 x 0.277	0.277	RT	56.7	70.5	0.80	50,8	28.0	36.1
44391	2836339	E2	71974	40	B	AM	Ss	L	0.994 x 0.279	0.278	RT	60.3	73.5	0.82	50,8	28.0	38.5
44391	2836343	E1	71974	60	B	AM	Ss	L	0.999 x 0.279	0.280	RT	60.9	73.3	0.83	50,8	28.0	38.5
44391	2836341	E2	71975	80	B	AM	Ss	L	0.999 x 0.283	0.284	RT	59.2	73.4	0.81	50,8	28.0	39.0
44391	2837409	E1	71971	17	B	AM	Ss	L	0.995 x 0.274	0.274	RT	64.2	76.8	0.84	50,8	28.0	38.9
44391	2837410	E1	71975	85	B	AM	Ss	L	0.993 x 0.265	0.264	RT	58.2	73.6	0.79	50,8	28.0	31.6
44391	2842966	E1	71972	92	B	AM	Ss	L	0.994 x 0.278	0.277	RT	58.1	72.2	0.81	50,8	28.0	28.8
44391	2842967	E1	71973	14	B	AM	Ss	L	0.997 x 0.282	0.282	RT	59.2	73.4	0.81	50,8	28.0	36.9
																	38.6

JF September 18, 2017
SA 333 Gr. 6 / CSA Z245.1 Gr 3
Sch 40
6.625 00 x 0.280 w.t.
Heat # 44391 E6-20
PO# 186973

AM: As manufactured / Según proceso de fabricación
B: Body / Cuerpo
E1 / E2: Ends of Sampling / Extremos de Muestra
L: Longitudinal / Longitudinal
Lo: Initial length / Longitud inicial
Ls: Location of sample / Ubicación de la muestra
Max: Maximum / Máximo
Min: Minimum / Mínimo
Obt: Obtained / Obtenido
Ori: Orientation / Orientación
Req. Max: Required maximum / Máximo requerido
Req: Required / Requerido
RT: Room temperature / Temperatura ambiente
Sc: Specimen condition / Condición de la probeta
Ss: Strip specimen / Muestra rectangular
U.T.S: Ultimate tensile strength / Resistencia
Y.S: Yield strength / Fluencia

This certificate is issued by a computerized system and it is valid with electronic signature. On the original certificate the trade-mark green colored "Tenaris" is stamped. In case the owner of the original certificate would release a copy of it, he must attest its conformity to the original one taking upon himself the responsibility for any unlawful or not allowed use. Any alteration and/or falsification will be subjected to the law.

Este certificado se emite mediante sistema computarizado y es validado con firma electrónica. El certificado original posee impreso el logo Tenaris color verde. En caso de que el poseedor del certificado entregue una copia, deberá garantizar la conformidad con el original haciéndose responsable por cualquier uso ilegal o indebido. Cualquier alteración y/o falsificación estará sujeta a la ley.

Tenaris

INSPECTION CERTIFICATE

(BS EN 10204 3.1: 2004 - ISO 10474 3.1: 2013)

Number / Número:	Page / Página:
853076	2 / 8
Date / Día: July 21, 2017	

Siderca S.A.I.C
Dr Jorge A. Simini 250
(B2804MHA) Campana
Buenos Aires, Argentina
(54) 3489 433100 tel
(54) 3489 433405 fax

Customer / Cliente: VAN LEEUWEN PIPE & TUBE (CANADA) INC.	Customer's Order Item / Orden Cliente - Item: 45001803-00008	Customer's Reference / Ref. del Cliente: N/A	Manufacturer's Works Order N° / Confirmación de Venta: 5193B/08
Manufacturing Process / Proceso de Manufactura: SEAMLESS HOT ROLLED	Product Type / Tipo de Producto: CARBON STEEL FOR LOW TEMPERATURE SERVICE		Surface / Superficie: INT BARE /EXT VARNISHED
Standard or Specification / Normas o Especificaciones: ASTM/ASME A/SA333-10+CSA Z245.1-14 CATII-SS+PSP00374+NACE MR0175/103+IPRO LP-006		Steel Grade / Grado de acero: 1/6/359 CAT II SS	Ends / Extremos: BEVELLED AT 30 DEG. ASTM
Dimensions / Dimensiones: 6 5/8 X 0.280 INCH 168.30 X 7.11 MM	Schedule / Cédula: 040	Length / Longitud: 11.0/11.8 m	Quantity / Cantidad: 83 Pcs/pz 3157.94 FT 59747 LB 962.54 MTS 27101 KG	Nominal Weight / Peso Nominal: 18.97 LB/FT 28.26 KG/M

CHEMICAL COMPOSITION / COMPOSICIÓN QUÍMICA

Composition % / Composición %

Heat N° / Colada N°	Sample N° / Muestra N°	Lot N° / Lote N°	Pipe N° / Tubo N°		C	Mn	Si	Cr	Mo	Al sol	Cu	P	Ni	V	Al	Sn	As	Nb	Ti	Pb	Sb	Co	S	Zr	Bi	Ca	B	N	Mg	W	Ce.1	Ce.2
					X 100							X 1000											X 10000								X 100	
				H Max	25	135	50	30	12	--	40	25	400	80	--	--	--	20	110	--	--	--	100	--	--	--	10	--	--	--	42	40
				Min	--	40	10	--	--	--	--	--	--	--	--	--	--	--	--	--	--	--	--	--	--	--	--	--	--	--	--	--
				P Max	25	135	50	30	12	--	40	25	400	80	--	--	--	20	110	--	--	--	100	--	--	--	10	--	--	--	42	40
				Min	--	40	10	--	--	--	--	--	--	--	--	--	--	--	--	--	--	--	--	--	--	--	--	--	--	--	--	--
44391				H	8	105	23	9	4	2	16	12	70	4	15	11	4	14	3	1	2	7	9	10	20	12	1	43	7	20	30	21
44391	2836335	71971	40	P	9	105	23	9	4	1	17	12	74	3	16	10	4	14	3	1	3	7	10	20	22	16	2	50	4	20	31	23
44391	2836324	71971	20	P	9	105	23	9	4	2	16	13	72	4	18	10	4	16	3	1	3	7	11	20	22	16	2	48	5	20	31	23
44391	2836326	71971	60	P	10	105	23	9	4	1	17	12	73	4	15	10	4	14	2	1	3	7	7	20	22	12	2	45	4	20	32	25
44391	2837409	71971	17	P	9	106	24	9	4	2	16	13	69	5	16	10	4	15	3	1	3	7	10	20	22	11	2	41	4	20	31	24
44391	2836329	71973	1	P	8	105	23	9	4	1	17	12	70	3	15	10	4	14	3	1	3	7	10	20	22	12	2	45	4	20	30	21
44391	2836327	71972	80	P	8	105	22	9	4	1	17	12	73	4	15	10	3	14	2	1	3	7	10	20	22	12	2	44	3	20	30	21
44391	2836343	71974	60	P	8	105	23	9	4	1	17	11	69	4	16	10	3	14	3	1	3	7	8	20	22	11	2	50	5	20	30	21
44391	2836344	71975	80	P	8	105	22	9	4	2	17	12	66	5	16	10	3	14	3	1	2	7	9	20	22	12	2	44	4	20	30	21
44391	2837410	71975	85	P	9	105	23	9	4	1	16	12	70	5	17	10	4	15	3	1	3	7	9	20	22	12	2	44	4	20	30	21
44391	2836339	71974	40	P	10	105	23	9	4	1	17	12	74	4	15	10	4	14	3	1	3	7	10	20	22	12	2	41	3	20	31	23
44391	2836335	71974	20	P	10	105	23	9	4	1	17	12	75	5	15	10	4	16	3	1	3	7	9	20	22	14	2	45	4	20	32	25

Ce.1: C+(MN/6)+(CR+MO+V)/5+(NI+CU)/15

Ce.2: C+F(MN/6)+(SI/24)+(CU/15)+(NI/20)+(CR+MO+V+NB)/5+(5*B))

H: Heat / Colada

Max: Maximum / Máximo

Min: Minimum / Mínimo

P: Product / Producto

This certificate is issued by a computerized system and it is valid with electronic signature. On the original certificate the trademark green colored "Tenaris" is stamped. In case the owner of the original certificate would release a copy of it, he must attest its conformity to the original one taking upon himself the responsibility for any unlawful or not allowed use. Any alteration and/or falsification will be subjected to the law.

Este certificado se emite mediante sistema computarizado y es validado con firma electrónica. El certificado original posee impreso el logo Tenaris color verde. En caso de que el poseedor del certificado entregue una copia, deberá garantizar la conformidad con el original haciéndose responsable por cualquier uso ilegal o indebido. Cualquier alteración y/o falsificación estará sujeta a la ley.

CLIENTE / Customer / Client

VAN LEEUWEN PIPE AND TUBE -CAN
2875-64TH AVENUE
EDMONTON - ALBERTA T6P 1R1
CANADA
CAN

CERTIFICADO DE INSPECCION

UNE EN 10204:05 / 3.1

Inspection Certificate - Certificat de Réception

ISO 10474:15 / 3.1

FECHA: Date: 24/05/2018 | N.º No. 195241 | HOJA: Page 4

SGI 1922184 SGI 6000236 SGI 6009987

ULMA FORJA, S.COOP.
Management Systems certified by LRQAE
Certified acc. PED 97/23/EC+AD2000-WO
PED 14/68/UE
by TÜV Rheinland
N.º 01 202 E/O 02 7443
Bº Zubillaga, 3 - Apdo. 14
20560 OÑATI (Gipuzkoa) SPAIN
Tel.: 34 - 943 780552
Fax: 34 - 943 781806
E-mail: ulma@ulmapiping.com

PRODUCTO / Article - Produit: FLANGES

SU PEDIDO N.º / Your Order No. / Votre Cde. N.º: 45001896

DE / cf. - de: 10/01/2018

NORMAS APLICABLES / Requirements - Normes Applicables: ASME B16.5-17

MARCA DEL FABRICANTE / Mark of factory / Marque du fabricant

Packing 139834

MATERIAL CORRESPONDIENTE / Material Correspondent - Qualité: ASME SA350LF2CL1-2-17, ASTM A350LF2CL1-2-17
ASME SA105M-17, ASTM A105M-14

MODO DE FUSION (*) / Steel Making - Elaboration de l'acier: NACE MR0175/ISO15156-02/03-15 & NACE MR0103/ISO17495-15
Clause 7.2.1.4, Annex A.2 and SSC Region 3,
CSA-Z245.12-17 GR248 CAT II-SS (WN & BLIND FLANGES ONLY)
E - Elec. Y - Oxígeno básico

DEPARTAMENTO / Section / Département: QUALITY ASSURANCE

PARTIDA Item Poste	CANTIDAD Quantity Quantité	DESCRIPCION Description Descripción	LOTE	OBSERVACIONES Remarks Observations (*)
48 24738	20	WN 4 1500LB XXS RTJ A350LF2	18M18E	NE
54 24626	6	WN 4 600LB XXS RF A350LF2	12A18F	NE
54 24626	19	WN 4 600LB XXS RF A350LF2	29O17	NE
56 22171	67	WN 6 150LB STD/40 RF A350LF2	15Y806	NE
56 22171	3	WN 6 150LB STD/40 RF A350LF2	29A804	NE
45 24672	5	BLIND 8 600LB RF A350LF2	17A817	NE

COLADA Nº Heat No. Nº Coulée	RESISTENCIA T.Strength Resist Rupt N/mm2	LIMITE ELAST. Y.Strength 0.2 % N/mm2	ALARGAM. Elongation Allongement Lo:50mm/4d %	ESTRICCION Red. Area Striction %	RESILIENCIA Impact test Resilience Joules			CHARPY V 10x10mm MEDIA Average Moyenne	°C	DUREZA Hardness Durete HBW
A18A8	521	307	32.10	67.40	56	58	61	58	-50	148 151
A41A8	513	305	29.70	57.90	68	68	66	67	-50	148 151
B73A7	524	317	28.10	61.40	46	51	42	46	-50	150 156
A50A8	517	309	29.80	50.60	63	68	73	68	-50	150 151
A50A8	519	311	31.20	59.80	65	54	59	59	-50	149 150
A58A8	507	295	28.20	59.40	54	61	56	58	-50	147 149

COLADA Nº Heat No. Nº Coulée	COMPOSICION QUIMICA - STEEL MAKER'S LADLE ANALYSIS - ANALYSE CHIMIQUE														
	C %	Si %	Mn %	P %	S %	Cr %	Ni %	Mo %	Nb %	V %	Cu %	Al %	Ti %	B %	CEq %
B73A7	0,190	0,230	0,980	0,009	0,003	0,090	0,080	0,010	0,004	0,006	0,190	0,035	0,002	0,0004	0,39
A50A8	0,190	0,250	1,060	0,006	0,004	0,050	0,070	0,010	0,003	0,004	0,180	0,031	0,001	0,0002	0,40
A18A8	0,190	0,190	1,080	0,007	0,005	0,070	0,070	0,012	0,002	0,000	0,220	0,025	0,002	0,0005	0,41
A41A8	0,180	0,210	1,060	0,011	0,005	0,060	0,060	0,013	0,003	0,010	0,180	0,043	0,001	0,0002	0,39
A58A8	0,190	0,180	1,060	0,009	0,001	0,100	0,090	0,021	0,004	0,003	0,180	0,040	0,001	0,0005	0,41

- Las dimensiones y la condición superficial se hallaron satisfactorias
- Dimension and surface condition were found acceptable
- Les dimensions et état de surface sont satisfaisants.

- Los materiales citados cumplen las normas aplicables.
- Manufacturing requirements are satisfied.
- Les normes applicables sont respectées.

EL INSPECTOR
Works Inspector - L'Inspecteur

ULMA FORJA S. COOP.
Dpto. de Garantía de calidad
Quality Assurance Dept.

(*) OBSERVACIONES / Remarks / Observations: N_NORMALIZED AT 900 C AND ALLOWED TO COOL IN STILL AIR.

SA 350 LF2
6.625" O.D. x 0.280 w.t.
W/N 150 RF 6 STD
HT# A50A8
Internal PO# E20170
External PO# 203177

Recieved By: Jessie Springett
12/09/18

CLIENTE / Customer - Client

VAN LEEUWEN PIPE AND TUBE -CAN
2875-64TH AVENUE
EDMONTON - ALBERTA T6P 1R1
CANADA
CAN

CERTIFICADO DE INSPECCION

Inspection Certificate - Certificat de Réception

UNE EN 10204:06 / 3.1
ISO 10474:15 / 3.1

FECHA / Date: 15/12/2017 05/02/2018

N.º / No. 192002 Rev.01

HOJA / Page: 6

SGI 1922164 SGI 6000236 SGI 6009987

ULMA FORJA, S.COOP.
Management Systems certified by LRQAE
Certified acc. PED 97/23/EC+AD2000-W0
PED 14/68/UE
by TÜV Rheinland
N.º 01 202 E/O 02 7443

Bº Zubillaga, 3 - Apdo. 14
20560 OÑATI (Gipuzkoa) SPAIN
Tel.: 34 - 943 780562
Fax: 34 - 943 781808
E-mail: ulma@ulmapiping.com

PRODUCTO / Article - Produit: FLANGES

SU PEDIDO N.º / Your Order No. / Votre Cde. N.º: 45001856

DE / of. - de: 03/11/2017

NORMAS APLICABLES / Requirements - Normes Applicables: ASME B16.5-17

MATERIAL CORRESPONDIENTE / Material Correspondent - Qualité: ASME SA350LF2CL1-2-17, ASTM A350LF2CL1-2-17
ASME SA105M-17, ASTM A105M-14
NACE MR0175/ISO15156-02/03-15 & NACE MR0103/ISO17495-15
Clause 7.2.1.4, Annex A.2 and SSC Region 3.
CSA-Z245.12-13 GR248 CAT II-SS (WN & BLIND FLANGES ONLY)

MODO DE FUSION (*) / Steel Making - Elaboration de l'acier: E = Elec. Y = Oxígeno básico

MARCA DEL FABRICANTE / Mark of factory / Marque du fabricant

DEPARTAMENTO / Section / Département: QUALITY ASSURANCE

Packing 136413

PARTIDA / Item / Poste	CANTIDAD / Quantity / Quantité	DESCRIPCION / Description / Description	LOTE	OBSERVACIONES / Remarks / Observations (*)	COLADA N.º / Heat No / N.ºCoulée	RESISTENCIA / T.Strength / Resist Rupt N/mm2	LIMITE ELAST. / Y.Strength 0.2 % N/mm2	ALARGAM. / Elongation / Allongement Lo=50mm/4d %	ESTRICCION / Red. Area / Striction %	RESILIENCIA / Impact test / Résilience Joules			CHARPY V 10x10mm MEDIA / Average / Moyenne	°C	DUREZA / Hardness / Dureté HBW
47 37010	7	WN 3 2500LB XXS RTJ A350LF2	07N17	NE	B73A7	505	298	35,60	72,50	41	48	46	45	-50	144 150
47 37010	3	WN 3 2500LB XXS RTJ A350LF2	27O17	NE	B73A7	526	319	27,30	60,10	54	53	38	48	-50	151 157
51 22170	13	WN 4 150LB XS/80 RF A350LF2	05Y17	NE	43AV7	519	312	25,40	55,60	47	55	51	51	-50	155 159
51 22170	2	WN 4 150LB XS/80 RF A350LF2	27S17	NE	A14A7	495	302	33,40	66,70	59	54	52	55	-50	154 156
56 22202	70	WN 4 600LB XS/80 RF A350LF2	21O17	NE	B47A7	501	301	30,20	62,00	47	51	40	46	-50	140 146
59 22171	2	WN 6 150LB STD/40 RF A350LF2	19N17	NE	A63A7	505	298	31,00	64,10	57	56	49	54	-50	158 163
59 22171	18	WN 6 150LB STD/40 RF A350LF2	17N17	NE	B63A7	506	290	33,60	65,90	40	43	46	43	-50	140 149
60 22172	5	WN 6 150LB XS/80 RF A350LF2	10O17	NE	A48A7	522	315	28,50	59,90	46	55	53	52	-50	153 157
63 24627	2	WN 6 600LB XXS RF A350LF2	27S17	NE	A64A7	505	298	35,00	70,00	49	47	44	47	-50	154 157
66 22174	4	WN 8 150LB XS/80 RF A350LF2	24N17	NE	B55A7	486	289	36,00	70,90	39	45	47	43	-50	138 145

COMPOSICION QUIMICA - STEEL MAKER'S LADLE ANALYSIS - ANALYSE CHIMIQUE

COLADA N.º / Heat No / N.ºCoulée	C %	Si %	Mn %	P %	S %	Cr %	Ni %	Mo %	Nb %	V %	Cu %	Al %	Ti %	CEq %
43AV7	0,192	0,240	1,020	0,015	0,005	0,096	0,094	0,022	0,001	0,000	0,253	0,035	0,003	0,41
A14A7	0,180	0,190	1,020	0,008	0,004	0,060	0,060	0,009	0,005	0,005	0,120	0,041	0,002	0,38
A48A7	0,190	0,160	1,020	0,009	0,004	0,050	0,070	0,010	0,007	0,007	0,140	0,036	0,001	0,39
A63A7	0,193	0,230	1,030	0,015	0,002	0,100	0,098	0,029	0,001	0,000	0,239	0,041	0,003	0,41
A64A7	0,180	0,240	1,030	0,015	0,006	0,085	0,091	0,024	0,001	0,000	0,205	0,042	0,002	0,39
B47A7	0,200	0,210	1,030	0,012	0,001	0,060	0,050	0,010	0,005	0,006	0,170	0,034	0,002	0,40
B55A7	0,180	0,180	0,990	0,012	0,004	0,060	0,060	0,009	0,003	0,005	0,190	0,030	0,001	0,38
B63A7	0,180	0,230	1,010	0,010	0,003	0,060	0,070	0,010	0,005	0,003	0,180	0,028	0,001	0,38
B73A7	0,190	0,230	0,980	0,009	0,003	0,090	0,080	0,010	0,004	0,006	0,190	0,035	0,002	0,39

(*) OBSERVACIONES / Remarks / Observations: N_NORMALIZED AT 900 C AND ALLOWED TO COOL IN STILL AIR.

- Las dimensiones y la condición superficial se hallaron satisfactorias.
- Dimension and surface condition were found acceptable.
- Les dimensions et états de surface sont satisfaisants.

- Los materiales citados cumplen las normas aplicables.
- Manufacturing requirements are satisfied.
- Les normes applicables sont respectées.

EL INSPECTOR
Works Inspector - L'inspecteur

ULMA FORJA S. COOP.
Dpto. de Garantía de calidad
Quality Assurance Dept.

QM-System: Certification as per ISO 9001

Erläuterungen siehe Rückseite/Explications voir au verso/See reverse for explanations (www.dillinger.de/certificate)

DILLINGER

A02 INSPECTION CERTIFICATE 3.1 AS PER EN 10204:2004
INSPECTION CERTIFICATE 3.1 AS PER ISO 10474:2013
MATERIAL TEST REPORT (MTR)

A10 Advice of dispatch No./ Date of dispatch: 611114-07.09.17

A08/ Manufacturer's order/ A03 Certificate No.: 427758-001 Sheet: 1/...

A05 Established Inspecting body: DH

A06 Purchaser: EDMONTON STEEL,EDMON A07.1 No. ED10715-J1010ER

Final receiver: EDMONTON STEEL,EDMON A07.2 No.

B01 Product: HEAVY PLATES.

B02/ Steel design.: SA516-70 SA20-S5

B03 Any suppl. requirements: ASME-IIA:2015
DIL-HUE-1;R34-2016-08-19

21070

B01-B99 Description of the product

B14 Item No.	B08 Number of pieces	B09 Thickness	B10 Width	B11 Length	B12 Theoretical mass KG	B04 Product delivery condition	B07.2 Heat No.	B07.1 Rolled plate No./ Test No.	A09 Purchaser article number
			INCH						
01	1	0,5000 x	96,50000 x	480,00000	2979	N	449291	55053-01	ITEM001
01	1	0,5000 x	96,50000 x	480,00000	2979	N	449291	55053-02	ITEM001
01	1	0,5000 x	96,50000 x	480,00000	2979	N	449291	55053-03	ITEM001
01	1	0,5000 x	96,50000 x	480,00000	2979	N	449291	55054-01	ITEM001
01	1	0,5000 x	96,50000 x	480,00000	2979	N	449291	55054-02	ITEM001
01	1	0,5000 x	96,50000 x	480,00000	2979	N	449291	55054-03	ITEM001
01	1	0,5000 x	96,50000 x	480,00000	2979	N	449291	55056-01	ITEM001
01	1	0,5000 x	96,50000 x	480,00000	2979	N	449291	55056-02	ITEM001
01	1	0,5000 x	96,50000 x	480,00000	2979	N	449291	55056-03	ITEM001
01	1	0,5000 x	96,50000 x	480,00000	2979	N	449291	55060-01	ITEM001
01	1	0,5000 x	96,50000 x	480,00000	2979	N	449291	55060-02	ITEM001
**	12				35748			55060-03	ITEM001
***	12				35748				

EPL-243
SA 516 Gr. 60/70
0.50"
HT# 449291 55060 03
PO# 203847
Internal PO# E20207
Recieved: 26/09/2018
Recieved by: Jessie Springett

B04 Product delivery condition

ITEM NO.: 01
N: HT: 1670 GR.F +36 -27 GR.F
SOAKING TIME TO ATTAIN THE TARGET TEMPERATURE OVER THE WHOLE SECTION: 1-1,75 MIN/MM (25-45 MIN/INCH)
COOLING IN STILL AIR

A04 D H Manufacturer's mark

Z01/Z02/Z03 We hereby certify, that the above mentioned materials have been delivered in accordance with the terms of order.

B. BALDAUF
Test House Manager

AHB Inspector's stamp

AG der Dillinger Hüttenwerke
Postfach 1580, D-66748 Dillingen/Saar
Inspection department

A01

Date 08.09.17 PP 1

QM-System: Certification as per ISO 9001

Erläuterungen siehe Rückseite/Explications voir au verso/See reverse for explanations (www.dillinger.de/certificate)

DILLINGER

A02 INSPECTION CERTIFICATE 3.1 AS PER EN 10204:2004
INSPECTION CERTIFICATE 3.1 AS PER ISO 10474:2013
MATERIAL TEST REPORT (MTR)

A10 Advice of dispatch No./ Date of dispatch: 611114-07.09.17

A08/ Manufacturer's order/ A03 Certificate No.: 427758-001

Sheet: 2/...

A05 Established Inspecting body: DH

A06 Purchaser: EDMONTON STEEL, EDMON — A07.1 No.: ED10715-J1010ER

Final receiver: EDMONTON STEEL, EDMON — A07.2 No.:

B01 Product: HEAVY PLATES

B02/ Steel design.: SA516-70 SA20-S5

B03 Any suppl. requirements: ASME-IIA:2015
DIL-HUE-1:R34-2016-08-19

B06 Marking of the product

ITEM NO.: 01
STEEL DESIGNATION SA516 70 MTLTV SA516 60 MTLTV
HEAT NO. / TRADEMARK / ROLLED PLATE NO.-TEST NO. / INSPECTOR'S STAMP

B07-B99 Further information about the product

ITEM NO.: 01
THICKNESS REDUCTION RATIO >= 3,0 IS FULFILLED - CF. A/SA20(M) PAR. 5.3

C10-C29 Tensile test

B14 Item No.	B07.2 Heat No.	B07.1 Rol.plate/ Test No.	B05 Reference (heat) treatment	C01	C02/ C01	C03 Temp. GR.F	C10 C11 KSI RP02	C12 RM	C13 A % L0=8IN	C14-C15
01	449291	55053		K1	Q	RT	49,9	73,8	26	
01	449291	55054		K1	Q	RT	50,0	73,8	24	
01	449291	55056		K1	Q	RT	50,2	73,4	27	
01	449291	55060		K1	Q	RT	50,2	74,0	27	

C30-C39 Hardness test

B14 Item. No.	B07.2 Heat No.	B07.1 Rol.plate/ Test No.	B05 Reference (heat) treatment	C01	C02/C01	C03 Temp. GR.F	C30 Method of test	C35 C31 Individual values			C32 Mean value
01	449291	55053		K1	O	RT	HBW 10/3000	HB 139	138	139	139
01	449291	55054		K1	O	RT	HBW 10/3000	HB 139	138	137	138
01	449291	55056		K1	O	RT	HBW 10/3000	HB 139	139	139	139
01	449291	55060		K1	O	RT	HBW 10/3000	HB 139	139	139	139

A04 D H Manufacturer's mark

Z01/Z02/Z03 We hereby certify, that the above mentioned materials have been delivered in accordance with the terms of order.

B. BALDAUF
Test House Manager

A H B Inspector's stamp

Date 08.09.17

A01
AG der Dillinger Hüttenwerke
Postfach 1580, D-66748 Dillingen/Saar
Inspection department

PP 1

QM-System: Certification as per ISO 9001

Erläuterungen siehe Rückseite/Explications voir au verso/See reverse for explanations (www.dillinger.de/certificate)

DILLINGER

A02 INSPECTION CERTIFICATE 3.1 AS PER EN 10204:2004
INSPECTION CERTIFICATE 3.1 AS PER ISO 10474:2013
MATERIAL TEST REPORT (MTR)

A10 Advice of dispatch No./ Date of dispatch: 611114-07.09.17

A08/ Manufacturer's order/ A03 Certificate No.: 427758-001

Sheet: 3/...

A05 Established Inspecting body: DH

A06 Purchaser: EDMONTON STEEL, EDMON — A07.1 No.: ED10715-J1010ER

Final receiver: EDMONTON STEEL, EDMON — A07.2 No.:

B01 Product: HEAVY PLATES

B02/ Steel design.: SA516-70 SA20-S5

B03 Any suppl. requirements: ASME-IIA:2015 DIL-HUE-1:R34-2016-08-19

C40-C49 Impact test

B14 Item No.	B07.2 Heat No.	B07.1 Rol.plate/ Test No.	B05 Reference (heat) treatment	C01	C02/ C01	C03 Temp. GR.F	C41 Width of test piece	C40 Type of test piece	C44 Testing method	C46 Energy	C45	C42 Individual values AV=FT.LBF			C43 Mean value
01	449291	55053		K1	LV	-51		CHP-V			AV 8	212	193	147	184
01	449291	55054		K1	LV	-51		CHP-V			AV 8	131	189	195	172
01	449291	55056		K1	LV	-51		CHP-V			AV 8	228	134	203	188
01	449291	55060		K1	LV	-51		CHP-V			AV 8	206	198	223	209

C70-C99 Chemical composition % - Heat analysis

B07.2 Heat	C70	C	SI	MN	P	S	N	CU	MO	NI	CR	V	NB	SN	TI
449291	Y	0,161	0,358	1,160	0,010	0,0013	0,0066	0,026	0,005	0,027	0,033	0,000	0,000	0,0009	0,002

B07.2 Heat	C70	B	CA	AL-T
449291	Y	0,0001	0,0021	0,029

C94 Heat analysis Carbon equivalent / Alloying restrictions

B07.2 Heat											
449291	FO-02=	0,37	FO-51=	0,000	FO-55=	0,09	FO-78=	0,04	FO-91=	7,2	

C95 Ladle treatment

ITEM NO.: 01
HEAT OF THE INDICATED ITEM: VACUUM DEGASSED / SULPHIDE SHAPE CONTROL

C95 Further information about ladle treatment

ITEM NO.: 01
CALCIUM TREATED

A04 D H Manufacturer's mark

Z01/Z02/Z03 We hereby certify, that the above mentioned materials have been delivered in accordance with the terms of order.

B. BALDAUF
Test House Manager

A H B Inspector's stamp

A01 AG der Dillinger Hüttenwerke
Postfach 1580, D-66748 Dillingen/Saar
Inspection department

Date 08.09.17

PP 1

QM-System: Certification as per ISO 9001

DILLINGER

Erläuterungen siehe Rückseite/Explications voir au verso/See reverse for explanations (www.dillinger.de/certificate)

A02 INSPECTION CERTIFICATE 3.1 AS PER EN 10204:2004
INSPECTION CERTIFICATE 3.1 AS PER ISO 10474:2013
MATERIAL TEST REPORT (MTR)

A10 Advice of dispatch No./ Date of dispatch: 611114-07.09.17

A08/ Manufacturer's order/ A03 Certificate No.: 427758-001 Sheet: 4

A05 Established Inspecting body: DH

A06 Purchaser: EDMONTON STEEL,EDMON A07.1 No. ED10715-J1010ER

Final receiver: EDMONTON STEEL,EDMON A07.2 No.

B01 Product: HEAVY PLATES

B02/ Steel design. SA516-70 SA20-S5

B03 Any suppl. requirements: ASME-IIA:2015
DIL-HUE-1:R34-2016-08-19

C70-C99 Chemical composition % - Product analysis

B07.2 Heat	B07.1 Test No.	C01	C	SI	MN	P	S	N	CU	MO	NI	CR	V	NB	SN	TI
449291	55053	K1	0,160	0,354	1,16	0,010	0,0010	0,0057	0,025	0,003	0,027	0,031	0,000	0,000	0,000	0,001

B07.2 Heat	B07.1 Test No.	C01	B	CA	AL-T
449291	55053	K1	0,0000	0,0020	0,029

C94 Product analysis Carbon equivalent / Alloying restrictions

B07.2 Heat	B07.1 Test No.	C01						
449291	55053	K1	FO-02=	0,36	FO-51=	0,000	FO-55=	0,09

C94 Carbon equivalent formula / Alloying restrictions

FO-02 = C+(MN/6)+(CR+MO+V)/5+(NI+CU)/15
FO-51 = V +NB
FO-55 = CU+MO+NI+CR
FO-78 = CR+MO
FO-91 = MN/C

D01 Marking and identification, surface appearance, shape and dimensional properties

ITEM NO.: 01
EXAMINATION OF MARKING, SURFACE, SHAPE AND DIMENSIONS: THE RESULTS MEET THE REQUIREMENTS.
SURFACE AS PER ASME-SA20
THICKNESS AS PER ASME-SA20
LENGTH AND WIDTH AS PER ASME-SA20

MTR APPROVED EDMONTON EXCHANGE

A04 DH Manufacturer's mark

Z01/Z02/Z03 We hereby certify, that the above mentioned materials have been delivered in accordance with the terms of order.

B. BALDAUF
Test House Manager

AHB Inspector's stamp

AG der Dillinger Hüttenwerke
Postfach 1580, D-66748 Dillingen/Saar
Inspection department

A01

Date 08.09.17 PP 1

QM-System: Certification as per ISO 9001

Erläuterungen siehe Rückseite/Explications voir au verso/See reverse for explanations (www.dillinger.de/certificate)

DILLINGER

A02 INSPECTION CERTIFICATE 3.1 AS PER EN 10204:2004
INSPECTION CERTIFICATE 3.1 AS PER ISO 10474:2013
MATERIAL TEST REPORT (MTR)

A10 Advice of dispatch No./ Date of dispatch: 611114-07.09.17

A08/ Manufacturer's order/ A03 Certificate No.: 427758-001

Sheet: 1/...

A05 Established inspecting body: DH

A06 Purchaser: EDMONTON STEEL, EDMON — A07.1 No.: ED10715-J1010ER

Final receiver: EDMONTON STEEL, EDMON — A07.2 No.:

B01 Product: HEAVY PLATES

B02/ Steel design.: SA516-60 SA20-S5

B03 Any suppl. requirements: ASME-IIA:2015
DIL-HUE-1:R34-2016-08-19

21071

B01-B99 Description of the product

B14 Item No.	B08 Number of pieces	B09 Thickness		B10 Width		B11 Length	B12 Theoretical mass KG	B04 Product delivery condition	B07.2 Heat No.	B07.1 Rolled plate No./ Test No.	A09 Purchaser article number
				INCH							
01	1	0,5000	x	96,50000	x	480,00000	2979	N	449291	55053-01	ITEM001
01	1	0,5000	x	96,50000	x	480,00000	2979	N	449291	55053-02	ITEM001
01	1	0,5000	x	96,50000	x	480,00000	2979	N	449291	55053-03	ITEM001
01	1	0,5000	x	96,50000	x	480,00000	2979	N	449291	55054-01	ITEM001
01	1	0,5000	x	96,50000	x	480,00000	2979	N	449291	55054-02	ITEM001
01	1	0,5000	x	96,50000	x	480,00000	2979	N	449291	55054-03	ITEM001
01	1	0,5000	x	96,50000	x	480,00000	2979	N	449291	55056-01	ITEM001
01	1	0,5000	x	96,50000	x	480,00000	2979	N	449291	55056-02	ITEM001
01	1	0,5000	x	96,50000	x	480,00000	2979	N	449291	55056-03	ITEM001
01	1	0,5000	x	96,50000	x	480,00000	2979	N	449291	55060-01	ITEM001
01	1	0,5000	x	96,50000	x	480,00000	2979	N	449291	55060-02	ITEM001
**	12						35748		449291	55060-03	ITEM001
***	12						35748				

B04 Product delivery condition

ITEM NO.: 01
N: HT: 1670 GR.F +36 -27 GR.F
SOAKING TIME TO ATTAIN THE TARGET TEMPERATURE OVER THE WHOLE SECTION: 1-1,75 MIN/MM (25-45 MIN/INCH)
COOLING IN STILL AIR

A04 D H Manufacturer's mark

Z01/Z02/Z03 We hereby certify, that the above mentioned materials have been delivered in accordance with the terms of order.

B. BALDAUF
Test House Manager

A H B Inspector's stamp

A01 AG der Dillinger Hüttenwerke
Postfach 1580, D-66748 Dillingen/Saar
Inspection department

Date 08.09.17

PP 1

QM-System: Certification as per ISO 9001

Erläuterungen siehe Rückseite/Explications voir au verso/See reverse for explanations (www.dillinger.de/certificate)

DILLINGER

A02 INSPECTION CERTIFICATE 3.1 AS PER EN 10204:2004
INSPECTION CERTIFICATE 3.1 AS PER ISO 10474:2013
MATERIAL TEST REPORT (MTR)

A10 Advice of dispatch No./ Date of dispatch: 611114-07.09.17

A08/ Manufacturer's order/ A03 Certificate No.: 427758-001

Sheet: 2/...

A05 Established Inspecting body: DH

A06 Purchaser: EDMONTON STEEL, EDMON — A07.1 No. ED10715-J1010ER

Final receiver: EDMONTON STEEL, EDMON — A07.2 No.

B01 Product: HEAVY PLATES

B02/ Steel design. SA516-60 SA20-S5

B03 Any suppl. requirements: ASME-IIA:2015
DIL-HUE-1:R34-2016-08-19

B06 Marking of the product

ITEM NO.: 01
STEEL DESIGNATION **SA516 70 MTLTV SA516 60 MTLTV**
HEAT NO. / TRADEMARK / ROLLED PLATE NO.-TEST NO. / INSPECTOR'S STAMP

B07-B99 Further information about the product

ITEM NO.: 01
THICKNESS REDUCTION RATIO >= 3,0 IS FULFILLED - CF. A/SA20(M) PAR. 5.3

C10-C29 Tensile test

B14 Item No.	B07.2 Heat No.	B07.1 Rol.plate/ Test No.	B05 Reference (heat) treatment	C01	C02/ C01	C03 Temp. GR.F	C10 KSI RP02	C11 RM	C12	C13 A % L0=8IN	C14-C15
01	449291	55053		K1	Q	RT	49,9	73,8		26	
01	449291	55054		K1	Q	RT	50,0	73,8		24	
01	449291	55056		K1	Q	RT	50,2	73,4		27	
01	449291	55060		K1	Q	RT	50,2	74,0		27	

C30-C39 Hardness test

B14 Item. No.	B07.2 Heat No.	B07.1 Rol.plate/ Test No.	B05 Reference (heat) treatment	C01	C02/C01	C03 Temp. GR.F	C30 Method of test	C35 C31 Individual values			C32 Mean value
01	449291	55053		K1	O	RT	HBW 10/3000	HB 139	138	139	139
01	449291	55054		K1	O	RT	HBW 10/3000	HB 139	138	137	138
01	449291	55056		K1	O	RT	HBW 10/3000	HB 139	139	139	139
01	449291	55060		K1	O	RT	HBW 10/3000	HB 139	139	139	139

A04 D H Manufacturer's mark

Z01/Z02/Z03 We hereby certify, that the above mentioned materials have been delivered in accordance with the terms of order.

B. BALDAUF
Test House Manager

AHB Inspector's stamp

A01 **AG der Dillinger Hüttenwerke**
Postfach 1580, D-66748 Dillingen/Saar
Inspection department

Date 08.09.17

PP 1

QM-System: Certification as per ISO 9001

DILLINGER

Erläuterungen siehe Rückseite/Explications voir au verso/See reverse for explanations (www.dillinger.de/certificate)

A02 INSPECTION CERTIFICATE 3.1 AS PER EN 10204:2004
INSPECTION CERTIFICATE 3.1 AS PER ISO 10474:2013
MATERIAL TEST REPORT (MTR)

A10 Advice of dispatch No./ Date of dispatch: 611114-07.09.17

A08/ Manufacturer's order/ A03 Certificate No.: 427758-001 Sheet: 3/...

A05 Established Inspecting body: DH

A06 Purchaser: EDMONTON STEEL,EDMON A07.1 No. ED10715-J1010ER

Final receiver: EDMONTON STEEL,EDMON A07.2 No.

B01 Product: HEAVY PLATES

B02/ Steel design. SA516-60 SA20-S5

B03 Any suppl. requirements: ASME-IIA:2015
DIL-HUE-1:R34-2016-08-19

C40-C49 Impact test

B14 Item No.	B07.2 Heat No.	B07.1 Rol.plate/ Test No.	B05 Reference (heat) treatment	C01	C02/ C01	C03 Temp. GR.F	C41 Width of test piece	C40 Type of test piece	C44 Testing method	C46 Energy	C45	C42 Individual values AV=FT.LBF			C43 Mean value
01	449291	55053		K1	LV	-51		CHP-V			AV 8	212	193	147	184
01	449291	55054		K1	LV	-51		CHP-V			AV 8	131	189	195	172
01	449291	55056		K1	LV	-51		CHP-V			AV 8	228	134	203	188
01	449291	55060		K1	LV	-51		CHP-V			AV 8	206	198	223	209

C70-C99 Chemical composition % - Heat analysis

B07.2 Heat	C70	C	SI	MN	P	S	N	CU	MO	NI	CR	V	NB	SN	TI
449291	Y	0,161	0,358	1,160	0,010	0,0013	0,0066	0,026	0,005	0,027	0,033	0,000	0,000	0,0009	0,002

B07.2 Heat	C70	B	CA	AL-T
449291	Y	0,0001	0,0021	0,029

C94 Heat analysis Carbon equivalent / Alloying restrictions

B07.2 Heat											
449291	FO-02=	0,37	FO-51=	0,000	FO-55=	0,09	FO-78=	0,04	FO-91=	7,2	

C95 Ladle treatment

ITEM NO.: 01
HEAT OF THE INDICATED ITEM: VACUUM DEGASSED / SULPHIDE SHAPE CONTROL

C95 Further information about ladle treatment

ITEM NO.: 01
CALCIUM TREATED

A04 D H Manufacturer's mark

Z01/Z02/Z03 We hereby certify, that the above mentioned materials have been delivered in accordance with the terms of order.

B. BALDAUF
Test House Manager

AHB Inspector's stamp

A01 AG der Dillinger Hüttenwerke
Postfach 1580, D-66748 Dillingen/Saar
Inspection department

Date 08.09.17 PP 1

QM-System: Certification as per ISO 9001

Erläuterungen siehe Rückseite/Explications voir au verso/See reverse for explanations (www.dillinger.de/certificate)

DILLINGER

A02 INSPECTION CERTIFICATE 3.1 AS PER EN 10204:2004
INSPECTION CERTIFICATE 3.1 AS PER ISO 10474:2013
MATERIAL TEST REPORT (MTR)

A10 Advice of dispatch No./ Date of dispatch: 611114-07.09.17

A08/ Manufacturer's order/ A03 Certificate No.: 427758-001 Sheet: 4

A05 Established Inspecting body: DH

A06 Purchaser: EDMONTON STEEL, EDMON A07.1 No. ED10715-J1010ER

Final receiver: EDMONTON STEEL, EDMON A07.2 No.

B01 Product: HEAVY PLATES

B02/ Steel design.: SA516-60 SA20-S5

B03 Any suppl. requirements: ASME-IIA:2015
DIL-HUE-1:R34-2016-08-19

C70-C99 Chemical composition % - Product analysis

B07.2 Heat	B07.1 Test No.	C01	C	SI	MN	P	S	N	CU	MO	NI	CR	V	NB	SN	TI
449291	55053	K1	0,160	0,354	1,16	0,010	0,0010	0,0057	0,025	0,003	0,027	0,031	0,000	0,000	0,000	0,001

B07.2 Heat	B07.1 Test No.	C01	B	CA	AL-T
449291	55053	K1	0,0000	0,0020	0,029

C94 Product analysis Carbon equivalent / Alloying restrictions

B07.2 Heat	B07.1 Test No.	C01					
449291	55053	K1	FO-02=	0,36	FO-51=	0,000	FO-55= 0,09

C94 Carbon equivalent formula / Alloying restrictions

FO-02 = C+(MN/6)+(CR+MO+V)/5+(NI+CU)/15
FO-51 = V +NB
FO-55 = CU+MO+NI+CR
FO-78 = CR+MO
FO-91 = MN/C

D01 Marking and identification, surface appearance, shape and dimensional properties

ITEM NO.: 01
EXAMINATION OF MARKING, SURFACE, SHAPE AND DIMENSIONS: THE RESULTS MEET THE REQUIREMENTS.
SURFACE AS PER ASME-SA20
THICKNESS AS PER ASME-SA20
LENGTH AND WIDTH AS PER ASME-SA20

MTR APPROVED EXCHANGER EDMONTON

A04 D H Manufacturer's mark

Z01/Z02/Z03 We hereby certify, that the above mentioned materials have been delivered in accordance with the terms of order.

B. BALDAUF
Test House Manager

AHB Inspector's stamp

A01 AG der Dillinger Hüttenwerke
Postfach 1580, D-66748 Dillingen/Saar
Inspection department

Date 08.09.17 PP 1

QM-System: Certification as per ISO 9001

Erläuterungen siehe Rückseite/Explications voir au verso/See reverse for explanations (www.dillinger.de/certificate)

DILLINGER

A02 INSPECTION CERTIFICATE 3.1 AS PER EN 10204:2004
INSPECTION CERTIFICATE 3.1 AS PER ISO 10474:2013
MATERIAL TEST REPORT (MTR)

A10 Advice of dispatch No./ Date of dispatch: 626272-10.02.18

A08/ Manufacturer's order/ A03 Certificate No.: 431792-001

Sheet: 12/...

A05 Established Inspecting body: DH

A06 Purchaser: EDMONTON STEEL, EDMON — A07.1 No.: ED10722-J1010ER

Final receiver: EDMONTON STEEL, EDMON — A07.2 No.:

B01 Product: HEAVY PLATES

B02/ Steel design.: SA516-70 SA20-S5

B03 Any suppl. requirements: ASME-IIA:2015
DIL-HUE-1:R34-2016-08-19

C70-C99 Chemical composition % - Product analysis

B07.2 Heat	B07.1 Test No.	C01	C	SI	MN	P	S	N	CU	MO	NI	CR	V	NB	SN	TI
454461	64437	K1	0,167	0,366	1,16	0,011	0,0007	0,0076	0,025	0,006	0,050	0,029	0,001	0,002	0,001	0,002
454836	27699	K1	0,170	0,368	1,16	0,010	0,0007	0,0061	0,033	0,007	0,027	0,038	0,000	0,001	0,001	0,003
454836	27706	K1	0,177	0,369	1,16	0,010	0,0006	0,0059	0,033	0,007	0,027	0,038	0,001	0,001	0,001	0,003
454837	27740	K1	0,166	0,369	1,16	0,009	0,0005	0,0060	0,026	0,005	0,023	0,028	0,001	0,001	0,001	0,002
454837	27783	K1	0,179	0,373	1,17	0,008	0,0005	0,0060	0,024	0,004	0,022	0,024	0,001	0,001	0,001	0,001
454840	27789	K1	0,167	0,369	1,17	0,009	0,0004	0,0060	0,023	0,004	0,022	0,023	0,001	0,001	0,000	0,002
454840	27796	K1	0,164	0,371	1,17	0,009	0,0005	0,0064	0,023	0,004	0,022	0,023	0,001	0,001	0,000	0,002
454840	27809	K1	0,165	0,365	1,15	0,009	0,0005	0,0054	0,023	0,010	0,024	0,038	0,001	0,001	0,000	0,002
454843	27952	K1	0,145	0,358	1,14	0,009	0,0004	0,0053	0,023	0,014	0,025	0,045	0,001	0,000	0,000	0,002

B07.2 Heat	B07.1 Test No.	C01	B	CA	AL-T
454461	64437	K1	0,0001	0,0013	0,034
454836	27699	K1	0,0001	0,0018	0,031
454836	27706	K1	0,0001	0,0019	0,032
454837	27740	K1	0,0000	0,0015	0,030
454837	27783	K1	0,0000	0,0014	0,029
454840	27789	K1	0,0001	0,0011	0,031
454840	27796	K1	0,0000	0,0011	0,031
454840	27809	K1	0,0000	0,0012	0,035
454843	27952	K1	0,0000	0,0011	0,038

A04 D H Manufacturer's mark

Z01/Z02/Z03 We hereby certify, that the above mentioned materials have been delivered in accordance with the terms of order.

B. BALDAUF
Test House Manager

AHB Inspector's stamp

Date 12.02.18

A01 AG der Dillinger Hüttenwerke
Postfach 1580, D-66748 Dillingen/Saar
Inspection department

PP 1

QM-System: Certification as per ISO 9001

DILLINGER

Erläuterungen siehe Rückseite/Explications voir au verso/See reverse for explanations (www.dillinger.de/certificate)

A02 INSPECTION CERTIFICATE 3.1 AS PER EN 10204:2004
INSPECTION CERTIFICATE 3.1 AS PER ISO 10474:2013
MATERIAL TEST REPORT (MTR)

A10 Advice of dispatch No./ Date of dispatch: 626272-10.02.18

A08/ Manufacturer's order/ A03 Certificate No.: 431792-001

Sheet: 12/...

A05 Established inspecting body: DH

A06 Purchaser: EDMONTON STEEL,EDMON — A07.1 No.: ED10722-J1010ER

Final receiver: EDMONTON STEEL,EDMON — A07.2 No.:

B01 Product: HEAVY PLATES

B02/ Steel design.: SA516-60 SA20-S5

B03 Any suppl. requirements: ASME-IIA:2015
DIL-HUE-1:R34-2016-08-19

C70-C99 Chemical composition % - Product analysis

B07.2 Heat	B07.1 Test No.	C01	C	SI	MN	P	S	N	CU	MO	NI	CR	V	NB	SN	TI
454461	64437	K1	0,167	0,366	1,16	0,011	0,0007	0,0076	0,025	0,006	0,050	0,029	0,001	0,002	0,001	0,002
454836	27699	K1	0,170	0,368	1,16	0,010	0,0007	0,0061	0,033	0,007	0,027	0,038	0,000	0,001	0,001	0,003
454836	27706	K1	0,177	0,369	1,16	0,010	0,0006	0,0059	0,033	0,007	0,027	0,038	0,001	0,001	0,001	0,003
454837	27740	K1	0,166	0,369	1,16	0,009	0,0005	0,0060	0,026	0,005	0,023	0,028	0,001	0,001	0,001	0,002
454837	27783	K1	0,179	0,373	1,17	0,008	0,0005	0,0060	0,024	0,004	0,022	0,024	0,001	0,001	0,001	0,001
454840	27789	K1	0,167	0,369	1,17	0,009	0,0004	0,0060	0,023	0,004	0,022	0,023	0,001	0,001	0,000	0,002
454840	27796	K1	0,164	0,371	1,17	0,009	0,0005	0,0064	0,023	0,004	0,022	0,023	0,001	0,001	0,000	0,002
454840	27809	K1	0,165	0,365	1,15	0,009	0,0005	0,0054	0,023	0,010	0,024	0,038	0,001	0,001	0,000	0,002
454843	27952	K1	0,145	0,358	1,14	0,009	0,0004	0,0053	0,023	0,014	0,025	0,045	0,001	0,000	0,000	0,002

B07.2 Heat	B07.1 Test No.	C01	B	CA	AL-T
454461	64437	K1	0,0001	0,0013	0,034
454836	27699	K1	0,0001	0,0018	0,031
454836	27706	K1	0,0001	0,0019	0,032
454837	27740	K1	0,0000	0,0015	0,030
454837	27783	K1	0,0000	0,0014	0,029
454840	27789	K1	0,0001	0,0011	0,031
454840	27796	K1	0,0000	0,0011	0,031
454840	27809	K1	0,0000	0,0012	0,035
454843	27952	K1	0,0000	0,0011	0,038

A04 Manufacturer's mark: D H

Z01/Z02/Z03 We hereby certify, that the above mentioned materials have been delivered in accordance with the terms of order.

B. BALDAUF
Test House Manager

A H B
Inspector's stamp

A01
AG der Dillinger Hüttenwerke
Postfach 1580, D-66748 Dillingen/Saar
Inspection department

Date 12.02.18

PP 1

WELDING PROCEDURE SPECIFICATION NO.: STS-7 (Rev.0)

WELDING PROCEDURE QUALIFICATION RECORD NO.(S): STS-7-1 (Rev.0), STS-7-3 (Rev.0), STS-7-4 (Rev.0), STS-7-5 (Rev.0)

QUALIFIED IN ACCORDANCE WITH ASME SECTION IX FOR

Restricted Applications: SAW WELDING SIMULTANEOUSLY WITH TWO WELDING HEADS, ONE ON EACH SIDE OF THE JOINT

Base Metal (Typical): P1 Groups 1 & 2 to P1 Groups 1 & 2 (SA 333 Gr. 6, SA 350 Gr. LF2, SA 420 Gr. WPL6, SA 516 Gr. 70 etc.)

Process(es): SAW **Weld Types:** GROOVE & FILLET

Position: FLAT & HORIZONTAL **Diameter:** ALL DIAMETERS

Filler Metal: F7A6-EM12K

BASE METAL CONDITIONS & GROOVE THICKNESS RANGE QUALIFIED:

NOTCH TOUGHNESS APPLICATIONS TO -50 °F AS WELDED

BASE METAL THICKNESS RANGE 0.125 to 1.750 in. inclusive

COMBINED DEPOSITED WELD METAL THICKNESS

ASME IX 1.750 in. maximum

API 650, 620, 12D, 12F 1.750 in. maximum

PROVINCIAL REGISTRATION

This WPS was prepared to the requirements of ASME Section IX 2017 and includes some of the additional requirements of the construction codes listed. The application of this WPS is outside the work scope of SGS Canada Inc.

Prepared By: Sara Van Roestel

Signed: Sara Van Roestel

Date: July 8, 2019

Reviewed By: Keelan Wolfe, C.E.T.

Signed: Keelan Wolfe

Date: July 8, 2019

(File E19-285)

QW-482 WELDING PROCEDURE SPECIFICATION (WPS)

Organization Name: Storage Tank Solutions Inc.
Welding Procedure Specification No.: STS-7 (Rev.0) Date: July 8, 2019
Supporting PQR No.(s): STS-7-1 (Rev.0), STS-7-3 (Rev.0), STS-7-4 (Rev.0), STS-7-5 (Rev.0)
Welding Process(es): Submerged Arc Welding (SAW)

JOINTS (QW-402)

Joint Design: All ASME groove & fillet, reference construction drawing for joint details. Where joint details are not specified, refer to figures 1 to 15 attached
Root Opening: As per attached typical groove designs, see figures 1 to 15 attached
Backing: With Retainers: With or without

BASE METALS (QW-403)

P-Number: P1 Groups 1 & 2 To P-Number: P1 Groups 1 & 2
Thickness Range: Groove: 0.125 to 1.750 in. inclusive (1)
Fillet: 0.125 to 8.00 in. inclusive
Pipe Diameter Ranges: Groove: All diameters
Fillet: All diameters
Deposited Weld Metal (Per Pass): 0.250 in. maximum
(1) Reference thickness limitations for tests on welds in fabrication or assembly in ASME B31.3 Table 323.3.1 - Impact Testing Requirements for metals.

FILLER METALS (QW-404)

	SAW
Specification No. (SFA)	SFA 5.17
Flux / Wire Classification	F7A6-EM12K
F-No.	F6
A-No.	A1
Diameter	5/64 to 3/16 in. inclusive
Supplemental Filler Metal	Without
Flux Type	Neutral
Flux Designation	Lincolnweld 882 (2)
Alloy Elements	Without
Alloy Flux	Without
Recrushed Slag	Without
Deposited Weld Metal Thickness Range:	
Groove	1.750 in. max. (3)
Fillet	All fillet sizes

(2) Other flux trade names may be used provided they meet an F7A6 classification
(3) Deposited weld metal thickness shall not exceed 1.750 in.

POSITION (QW-405)

Position of Groove: Flat & Horizontal Position of Fillet: Flat & Horizontal
Weld Progression: N/A

PREHEAT (QW-406)

Preheat Temperature (Minimum) See attached preheat sheet prior to welding.
Interpass Temperature (Maximum) 500 °F
Preheat Maintenance See attached preheat sheet prior to welding. Preheat maintenance is not required if welding is interrupted or after the completion of welding unless required by the code of construction.

POSTWELD HEAT TREATMENT (QW-407)

With or Without Without
Temperature Range N/A Time Range N/A

ELECTRICAL CHARACTERISTICS (QW-409)

Current Direct Polarity Reverse, electrode positive
Amps See Table 1 Volts See Table 1
Maximum Heat Input

Base Metal Thickness Range	SAW Leading head	SAW Trailing Head
0.125 to 0.499 in.	45,300 J/in.	33,887 J/in.
0.500 to 0.624 in.	53,530 J/in.	50,557 J/in.
0.625 in. and greater	65,032 J/in.	46,742 J/in.

TECHNIQUE (QW-410)

Manual or Automatic Machine
Single or Multiple Electrodes Leading and Trailing Heads - Single
Electrode Spacing N/A
String or Weave String
Initial & Interpass Cleaning Brushing, chipping or grinding as required
Method of Back Gouging Air carbon arc, back-grind as required
Oscillation N/A
Contact Tube to Work Distance 0.500 in. - 1.75 in.
Multiple or Single Pass Per Side Multiple
Electrode Spacing N/A
Peening Not permitted
Use of Thermal Process N/A
Travel Speed See Table 1

TABLE 1 - WELDING PARAMETERS

LEADING HEAD							
Process	Filler Metal	Diameter in.	Current Type& Polarity	Amperage Range	Voltage Range	Travel Speed i.p.m.	Wire Feed Speed i.p.m.
SAW	F7A6-EM12K	5/64	DCRP	200 - 500	25 - 32	4.7 - 30	60 - 245
SAW	F7A6-EM12K	3/32	DCRP	250 - 600	25 - 33	5.8 - 32	60 - 245
SAW	F7A6-EM12K	1/8	DCRP	250 - 700	26 - 33	6.0 - 35	45 - 180
SAW	F7A6-EM12K	5/32	DCRP	370 - 800	26 - 34	8.9 - 40	45 - 180
SAW	F7A6-EM12K	3/16	DCRP	500 - 1000	28 - 36	13.0 - 50	30 – 100
TRAILING HEAD							
Process	Filler Metal	Diameter in.	Current Type& Polarity	Amperage Range	Voltage Range	Travel Speed i.p.m.	Wire Feed Speed i.p.m.
SAW	F7A6-EM12K	5/64	DCRP	200 - 500	25 - 32	6.5 - 30	60 - 245
SAW	F7A6-EM12K	3/32	DCRP	250 - 600	25 - 33	8.1 - 32	60 - 245
SAW	F7A6-EM12K	1/8	DCRP	250 - 700	26 - 33	8.4 - 35	45 - 180
SAW	F7A6-EM12K	5/32	DCRP	370 - 800	26 - 34	12.4 - 40	45 - 180
SAW	F7A6-EM12K	3/16	DCRP	500 - 1000	28 - 36	18.0 - 50	30 – 100

Note: Welding parameters shall be adjusted to insure that the maximum heat input value specified in QW-409 above is not exceeded.

Heat Input (joules per inch) = (Amperage X Voltage X 60) / Travel Speed (i.p.m.)

TYPICAL JOINT DESIGNS

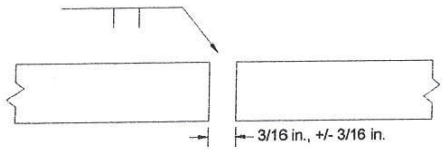

Figure 1
Single Square Butt

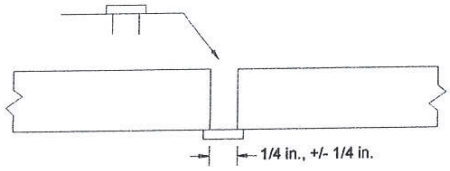

Figure 2
Single Square Butt with Backing Strip

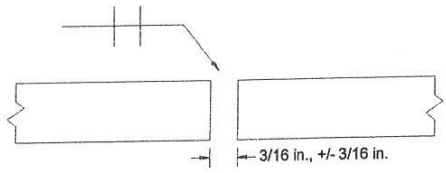

Figure 3
Double Square Butt

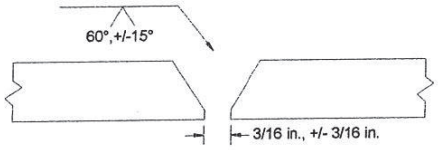

Figure 4
Single Vee Butt

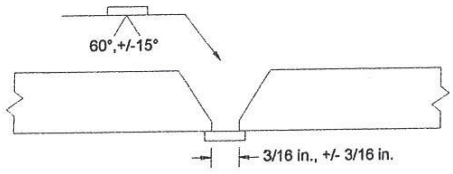

Figure 5
Single Vee Butt with Backing Strip

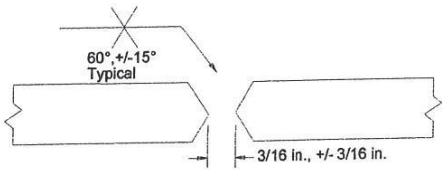

Figure 6
Double Vee Butt

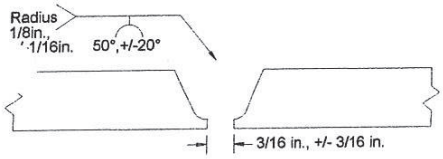

Figure 7
Single U Butt

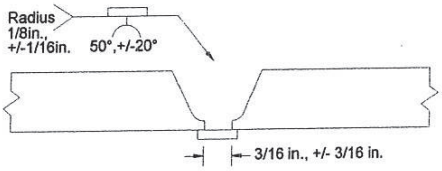

Figure 8
Single U Butt with Backing Strip

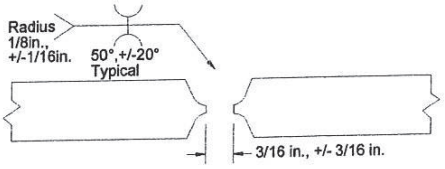

Figure 9
Double U Butt

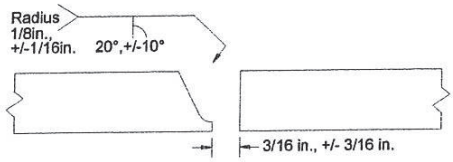

Figure 10
Single J Butt

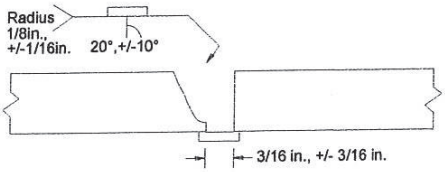

Figure 11
Single J Butt with Backing Strip

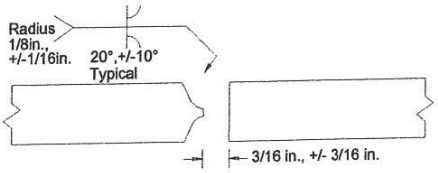

Figure 12
Double J Butt

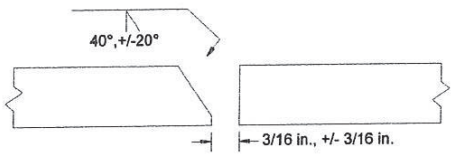

Figure 13
Single Bevel Butt

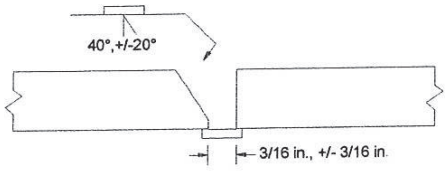

Figure 14
Single Bevel Butt with Backing Strip

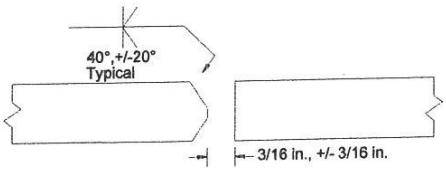

Figure 15
Double Bevel Butt

Additional joint designs and internal misalignment on circumferential welds shall be within the dimensional limits stated on the approved construction drawing and/or the engineering design.

PREHEAT
P-No. 1

LARGE, WELDED, LOW-PRESSURE STORAGE TANKS IN ACCORDANCE WITH API 620 Twelfth Edition, Addendum 1

THICKNESS OF THICKER PLATE	MINIMUM PREHEAT TEMPERATURE	
	P1 Group 1	P1 Group 2
Less than or equal to 1.25 in.	32 °F	50 °F
Greater than 1.25 in to 1.50 in.	50 °F	100 °F
Greater than 1.50 in.	200 °F	200 °F

- No welding of any kind shall be performed when the surfaces to be welded are wet with rain snow or ice; when rain or snow is falling on such surfaces; or during periods of high winds unless the welder and the work are properly shielded.
- Preheat shall be applied when the metal temperature is below the temperature required by Table 6-2 (summarized above). In that case the base metal shall be heated to at least the temperature indicated within 3.0 in. of the place where welding is to be started and maintained 3.0 in. ahead of the arc. Material P-Number and Group Number shall be as designated in ASME IX or in API 630 6.7.2 for materials not listed in ASME IX.

WELDED TANKS FOR OIL STORAGE IN ACCORDANCE WITH API 650 Twelfth Edition, Addendum 2

THICKNESS OF THICKER PLATE	MINIMUM PREHEAT TEMPERATURE	
	Material Group I, II, III, and IIIA	Material Group IV, IVA, V & VI
Less than or equal to 1.25 in.	32 °F	50 °F
Greater than 1.25 in to 1.50 in.	50 °F	100 °F
Greater than 1.50 in.	200 °F	200 °F

- No welding of any kind shall be performed when the surfaces to be welded are wet with rain, snow or ice; when rain or snow is falling on such surfaces; or during periods of high winds unless the welder and the work are properly shielded.
- Preheat shall be applied when metal temperature is below the temperature required by table 7-1 (summarized above) for the base metals being joined, and metal shall be heated to at least the temperature indicated within 3.0 in. of the place where welding is to be started and maintained 3.0 in. ahead of the arc. Material Groups shall be as designated in Table 4.4

QW-483 PROCEDURE QUALIFICATION RECORD (PQR)

Organization Name: Storage Tank Solutions Inc.
Procedure Qualification Record No.: STS-7-1 (Rev.0) Date: February 22, 2019
Welding Process(es): Submerged Arc Welding (SAW)

JOINTS (QW-402)

Joint Design: Butt joint, square groove, see page 2
Root Opening: See page 2
Backing: Without Retainers: Without

BASE METALS (QW-403)

Material Specification No.: SA 516 Type or Grade: Gr. 60/70
Heat Treat Condition (1): SA 516 Gr. 60/70: Normalized
P-No.: P1 Groups 1/2 To P-No.: P1 Groups 1/2 Thickness: 0.250 in.
Heat Number: 429693 29267-03 Carbon Equivalent (2): 0.37
Diameter: N/A Other: Plate product form m/c to 0.250 in.
Deposited Weld Metal (Per Pass): Did not exceed 0.125 in.

(1) Condition of base metal prior to welding.
(2) Per CSA Z662 Carbon Equivalent formula. See chemical composition of heat analysis on attached material test report

FILLER METALS (QW-404)

	SAW
Specification No. (SFA)	SFA 5.17
Flux / Wire Classification	F7A6-EM12K (3)
F-No.	F6
A-No.	A1 (4)
Diameter	See attached sketch
Supplemental Filler Metal	Without
Flux Type	Neutral
Flux Designation	F7A6
Flux Trade Name	Lincolnweld 882
Alloy Elements	Without
Alloy Flux	Without
Recrushed Slag	Without
Deposited Weld Metal Thickness	0.250 in.

(3) The Lincoln Electric Company: Lincolnweld 882M Flux / L-61 Electrode Lot No. 15135168
(4) F7A6-EM12K A-No. established from chemical analysis of SAW weld cap deposit. See attached Laboratory Test Report No.: E19-104.3

POSITION (QW-405)

Position of Groove: 2G Weld Progression: N/A

PREHEAT (QW-406)

Preheat Temperature: 50 °F Interpass Temp. (Max.): N/A
Preheat Maintenance: Weld was allowed to cool to ambient temperature in still air after welding was completed.

POSTWELD HEAT TREATMENT (QW-407)

With or Without: Without
Temperature: N/A Time: N/A

ELECTRICAL CHARACTERISTICS (QW-409)

Current: Direct Polarity: Reverse, electrode positive
Amps: See below Volts: See below

TECHNIQUE (QW-410)

Manual or Automatic	Machine
Single or Multiple Electrodes	Single - Leading and Trailing Head
Electrode Spacing	2.0 in.
Multiple or Single Heads	Multiple – One on each side of the joint
Multiple or Single Pass Per Side	Multiple
String or Weave	String
Contact Tube to Work Distance	0.750 in. - 1.00 in.
Travel Speed	See below
Initial & Interpass Cleaning	Brushing, chipping and grinding as required
Method of Back Gouging	Not conducted
Peening	Not conducted
Oscillation	N/A
Use of Thermal Process	N/A

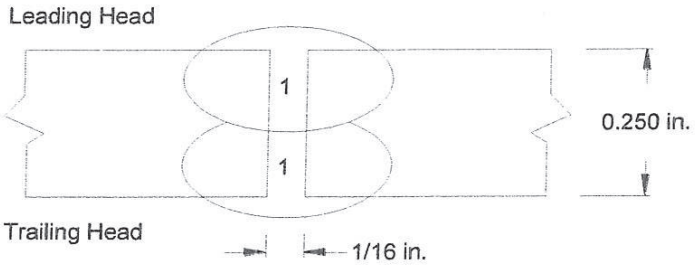

Pass	Process	Filler Metal	Diameter in.	Current Type & Polarity	Amperage Range	Voltage Range	Travel Speed i.p.m.
Leading Head							
1	SAW	F7A6-EM12K	3/32	DCRP	370 - 390	29 - 31	24.0
Trailing Head							
1	SAW	F7A6-EM12K	3/32	DCRP	300 - 310	27 - 29	21.4

PQR NO. STS-7-1 (Rev.0)

TENSILE TEST (QW-150)

Sample No.	Width in.	Thickness in.	Area sq. in.	Ultimate Load lbf	Ultimate Stress psi	Fracture Type & Location
T1	0.752	0.226	0.170	12,900	76,200	Partial Cup & Cone Parent Metal
T2	0.748	0.223	0.167	12,700	75,900	Partial Cup & Cone Parent Metal

GUIDED BEND TEST (QW-160)

Type & Figure No.	Result	Type & Figure No.	Result
QW-462.3a, TRB - R1	Pass	QW-462.3a, TFB - F1	Pass
QW-462.3a, TRB - R2	Pass	QW-462.3a, TFB - F2	Pass

OTHER TESTS

Vickers Hardness - see attached Laboratory Test Report No.: E19-104.1
Chemical Analysis (SAW Cap) - see attached Laboratory Test Report No.: E19-104.3

Welder's Name Matthew MacKenzie & Christopher Jaques
Certificate File No. N/A
Tests Conducted By SGS Canada Inc.
Laboratory Test No. E19-104.1

We certify the statements in this record are correct and that the test welds were prepared, welded and tested in accordance with the requirements of Section IX of the ASME Code.

Organization Storage Tank Solutions Inc.

Date _____ Print _____

Signed _____

QW-483 PROCEDURE QUALIFICATION RECORD (PQR)

Organization Name: Storage Tank Solutions Inc.
Procedure Qualification Record No.: STS-7-3 (Rev.0) Date: February 22, 2019
Welding Process(es): Submerged Arc Welding (SAW)

JOINTS (QW-402)

Joint Design: Butt joint, double bevel groove, see page 2
Root Opening: See page 2
Backing: Without Retainers: Without

BASE METALS (QW-403)

Material Specification No.: SA 516 Type or Grade: Gr. 60/70
Heat Treat Condition (1): SA 516 Gr. 60/70: Normalized
P-No.: P1 Groups 1/2 To P-No.: P1 Groups 1/2 Thickness: 0.875 in.
Heat Number: 454840 27789-02 Carbon Equivalent (2): 0.37
Diameter: N/A Other: Plate product form
Deposited Weld Metal (Per Pass): Did not exceed 0.188 in.

(1) Condition of base metal prior to welding.
(2) Per CSA Z662 Carbon Equivalent formula. See chemical composition of heat analysis on attached material test report

FILLER METALS (QW-404)

	SAW
Specification No. (SFA)	SFA 5.17
Flux / Wire Classification	F7A6-EM12K (3)
F-No.	F6
A-No.	A1 (4)
Diameter	See attached sketch
Supplemental Filler Metal	Without
Flux Type	Neutral
Flux Designation	F7A6
Flux Trade Name	Lincolnweld 882
Alloy Elements	Without
Alloy Flux	Without
Recrushed Slag	Without
Deposited Weld Metal Thickness	0.875 in.

(3) The Lincoln Electric Company: Lincolnweld 882M Flux / L-61 Electrode Lot No. 15135168
(4) F7A6-EM12K A-No. established from chemical analysis of SAW weld cap deposit. See attached Laboratory Test Report No.: E19-104.3

POSITION (QW-405)

Position of Groove: 2G Weld Progression: N/A

PREHEAT (QW-406)

Preheat Temperature: 50 °F Interpass Temp. (Max.): 500 °F
Preheat Maintenance: Weld was allowed to cool to ambient temperature in still air after welding was completed.

POSTWELD HEAT TREATMENT (QW-407)

With or Without: Without

Temperature: N/A Time: N/A

ELECTRICAL CHARACTERISTICS (QW-409)

Current: Direct Polarity: Reverse, electrode positive

Amps: See next page Volts: See next page

Heat Input: Leading head: 65,032 J/in. maximum Trailing Head: 46,742 J/in. maximum

TECHNIQUE (QW-410)

Manual or Automatic	Machine
Single or Multiple Electrodes	Single - Leading and Trailing Head
Electrode Spacing	2.0 in.
Multiple or Single Heads	Multiple – One on each side of the joint
Multiple or Single Pass Per Side	Multiple
String or Weave	String
Contact Tube to Work Distance	0.750 in. - 1.00 in.
Travel Speed	See below
Initial & Interpass Cleaning	Brushing, chipping and grinding as required
Method of Back Gouging	Not conducted
Peening	Not conducted
Oscillation	N/A
Use of Thermal Process	N/A

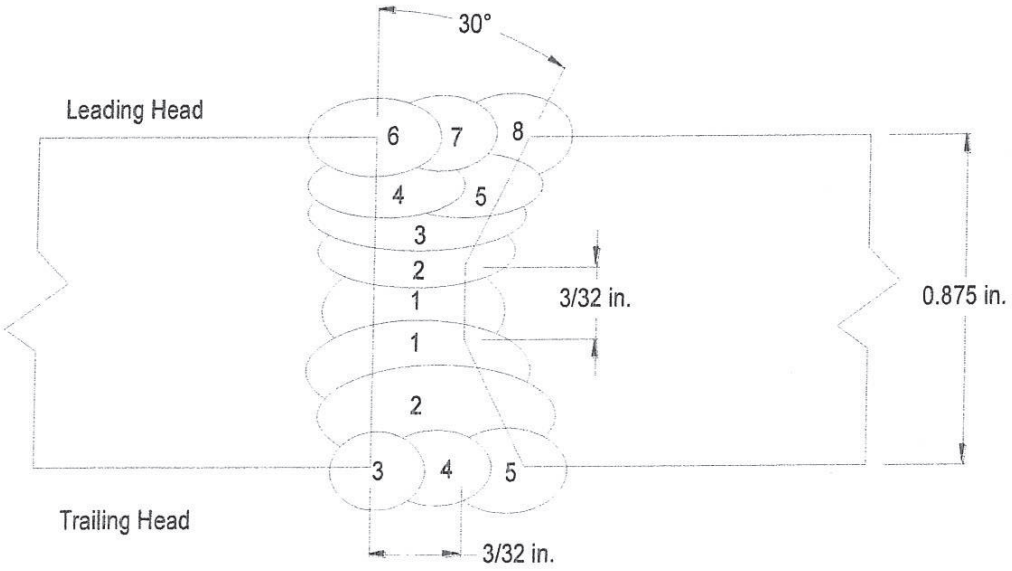

Pass	Process	Filler Metal	Diameter in.	Current Type & Polarity	Amperage Range	Voltage Range	Travel Speed i.p.m.
Leading Head							
1	SAW	F7A6-EM12K	3/32	DCRP	370 - 390	30 - 32	17.6
2	SAW	F7A6-EM12K	3/32	DCRP	380 - 400	30 - 32	14.7
3	SAW	F7A6-EM12K	3/32	DCRP	410 - 430	31 - 33	14.1
4	SAW	F7A6-EM12K	3/32	DCRP	405 - 415	30 - 32	14.1
5	SAW	F7A6-EM12K	3/32	DCRP	440 - 450	31 - 33	14.1
6	SAW	F7A6-EM12K	3/32	DCRP	410 - 430	31 - 33	12.4
7	SAW	F7A6-EM12K	3/32	DCRP	400 - 420	31 - 33	15.3
8	SAW	F7A6-EM12K	3/32	DCRP	410 - 430	31 - 33	14.1
Trailing Head							
1	SAW	F7A6-EM12K	3/32	DCRP	350 - 370	27 - 29	17.6
2	SAW	F7A6-EM12K	3/32	DCRP	330 - 340	27 - 29	14.7
3	SAW	F7A6-EM12K	3/32	DCRP	340 - 350	27 - 29	12.4
4	SAW	F7A6-EM12K	3/32	DCRP	310 - 330	27 - 29	15.3
5	SAW	F7A6-EM12K	3/32	DCRP	270 - 280	27 - 29	14.7

PQR NO. STS-7-3 (Rev.0)

TENSILE TEST (QW-150)

Sample No.	Width in.	Thickness in.	Area sq. in.	Ultimate Load lbf	Ultimate Stress psi	Fracture Type & Location
T1	0.748	0.819	0.613	46,600	76,200	Partial Cup & Cone Weld Metal
T2	0.748	0.819	0.613	47,000	76,700	Partial Cup & Cone Weld Metal

GUIDED BEND TEST (QW-160)

Type & Figure No.	Result	Type & Figure No.	Result
QW-462.2, TSB - S1	Pass	QW-462.2, TSB - S3	Pass
QW-462.2, TSB - S2	Pass	QW-462.2, TSB - S4	Pass

CHARPY V-NOTCH IMPACT TEST

Type of Test Charpy V-Notch Orientation Transverse

Governing Specification	Notch Location	Specimen Size in.	Test Temperature ° F	Specimen Number	Impact Values ft•lbf
ASME VIII Div.1 - 2017 & ASME B31.3 - 2016	Weld metal within 1/16 in. from wed surface	0.394 x 0.394	-50	C2.1	102
				C2.2	17
				C2.3	75
ASME VIII Div.1 - 2017 & ASME B31.3 - 2016	HAZ within 1/4 to 1/2T of cap side	0.394 x 0.394	-50	C3.1	192
				C3.2	231
				C3.3	61
ASME VIII Div.1 - 2017 & ASME B31.3 - 2016	HAZ within 1/4 to 1/2T of opposite cap side	0.394 x 0.394	-50	C4.1	75
				C4.2	135
				C4.3	170

OTHER TESTS

Vickers Hardness - see attached Laboratory Test Report No.: E19-104.3
Chemical Analysis (SAW Cap) - see attached Laboratory Test Report No.: E19-104.3

Welder's Name Matthew MacKenzie & Christopher Jaques
Certificate File No. N/A
Tests Conducted By SGS Canada Inc.
Laboratory Test No. E19-104.3

We certify the statements in this record are correct and that the test welds were prepared, welded and tested in accordance with the requirements of Section IX of the ASME Code.

Organization Storage Tank Solutions Inc.

Date _____ Print _____

Signed _____

QW-483 PROCEDURE QUALIFICATION RECORD (PQR)

Organization Name: Storage Tank Solutions Inc.
Procedure Qualification Record No.: STS-7-4 (Rev.0) Date: June 11, 2019
Welding Process(es): Submerged Arc Welding (SAW)

JOINTS (QW-402)

Joint Design: Butt joint, square groove, see page 2
Root Opening: See page 2
Backing: Without Retainers: Without

BASE METALS (QW-403)

Material Specification No.: SA 516 Type or Grade: Gr. 60/70
Heat Treat Condition (1): SA 516 Gr. 60/70: Normalized
P-No.: P1 Groups 1/2 To P-No.: P1 Groups 1/2 Thickness: 0.250 in.
Heat Number: 429693 29267-03 Carbon Equivalent (2): 0.37
Diameter: N/A Other: Plate product form m/c to 0.250 in.
Deposited Weld Metal (Per Pass): Did not exceed 0.188 in.

(1) Condition of base metal prior to welding.
(2) Per CSA Z662 Carbon Equivalent formula. See chemical composition of heat analysis on attached material test report

FILLER METALS (QW-404)

	SAW
Specification No. (SFA)	SFA 5.17
Flux / Wire Classification	F7A6-EM12K (3)
F-No.	F6
A-No.	A1 (4)
Diameter	See attached sketch
Supplemental Filler Metal	Without
Flux Type	Neutral
Flux Designation	F7A6
Flux Trade Name	Lincolnweld 882
Alloy Elements	Without
Alloy Flux	Without
Recrushed Slag	Without
Deposited Weld Metal Thickness	0.250 in.

(3) The Lincoln Electric Company: Lincolnweld 882M Flux / L-61 Electrode Lot No. 15135168
(4) F7A6-EM12K A-No. established from chemical analysis of SAW weld cap deposit. See attached Laboratory Test Report No.: E19-104.3

POSITION (QW-405)

Position of Groove: 2G Weld Progression: N/A

PREHEAT (QW-406)

Preheat Temperature: 50 °F Interpass Temp. (Max.): 400 °F
Preheat Maintenance: Weld was allowed to cool to ambient temperature in still air after welding was completed.

POSTWELD HEAT TREATMENT (QW-407)

With or Without: Without
Temperature: N/A Time: N/A

ELECTRICAL CHARACTERISTICS (QW-409)

Current: Direct Polarity: Reverse, electrode positive
Amps: See below Volts: See below
Heat Input: Leading head: 45,300 J/in. maximum Trailing Head: 33,887 J/in. maximum

TECHNIQUE (QW-410)

Manual or Automatic	Machine
Single or Multiple Electrodes	Single - Leading and Trailing Head
Electrode Spacing	3.50 in.
Multiple or Single Heads	Multiple – One on each side of the joint
Multiple or Single Pass Per Side	Multiple
String or Weave	String
Contact Tube to Work Distance	0.750 in. - 1.00 in.
Travel Speed	See below
Initial & Interpass Cleaning	Brushing, chipping and grinding as required
Method of Back Gouging	Not conducted
Peening	Not conducted
Oscillation	N/A
Use of Thermal Process	N/A

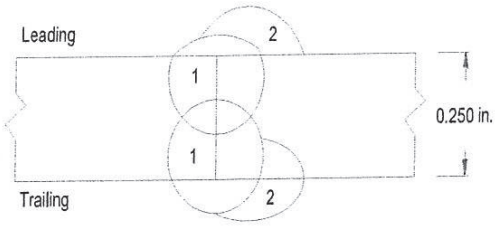

Pass	Process	Filler Metal	Diameter in.	Current Type & Polarity	Amperage Range	Voltage Range	Travel Speed i.p.m.
Leading Head							
1	SAW	F7A6-EM12K	3/32	DCRP	365 - 390	29 - 31	15.0
2	SAW	F7A6-EM12K	3/32	DCRP	370 - 400	27 - 30	16.4
Trailing Head							
1	SAW	F7A6-EM12K	3/32	DCRP	295 - 310	27 - 29	15.0
2	SAW	F7A6-EM12K	3/32	DCRP	310 - 340	27 - 30	16.4

Note: Monitored parameters provided by Storage Tank Solutions Inc.

CHARPY V-NOTCH IMPACT TEST

Type of Test Charpy V-Notch Orientation Transverse

Governing Specification	Notch Location	Specimen Size in.	Test Temperature ° F	Specimen Number	Impact Values ft•lbf
ASME VIII Div.1 - 2017 & ASME B31.3 - 2016	Weld metal within 1/16 in. of root	0.394 x 0.197	-60	A2.1	35
				A2.2	25
				A2.3	20
ASME VIII Div.1 - 2017 & ASME B31.3 - 2016	HAZ @ Middle 1/2t	0.394 x 0.197	-60	A3.1	8
				A3.2	56
				A3.3	7

OTHER TESTS

Vickers Hardness - see attached Laboratory Test Report No.: E19-285.2
Chemical Analysis (SAW Cap) - see attached Laboratory Test Report No.: E19-104.3

Welder's Name Matthew MacKenzie & Christopher Jaques
Certificate File No. N/A
Tests Conducted By SGS Canada Inc.
Laboratory Test No. E19-285.2

We certify the statements in this record are correct and that the test welds were prepared, welded and tested in accordance with the requirements of Section IX of the ASME Code.

Organization Storage Tank Solutions Inc.

Date _____ Print _____

Signed _____

QW-483 PROCEDURE QUALIFICATION RECORD (PQR)

Organization Name: Storage Tank Solutions Inc.
Procedure Qualification Record No.: STS-7-5 (Rev.0) Date: June 11, 2019
Welding Process(es): Submerged Arc Welding (SAW)

JOINTS (QW-402)

Joint Design: Butt joint, single bevel groove, see page 2
Root Opening: See page 2
Backing: Without Retainers: Without

BASE METALS (QW-403)

Material Specification No.: SA 516 Type or Grade: Gr. 60/70
Heat Treat Condition (1): SA 516 Gr. 60/70: Normalized
P-No.: P1 Groups 1/2 To P-No.: P1 Groups 1/2 Thickness: 0.500 in.
Heat Number: 459852 56930-01 Carbon Equivalent (2): 0.38
Diameter: N/A Other: Plate product form
Deposited Weld Metal (Per Pass): Did not exceed 0.188 in.

(1) Condition of base metal prior to welding.
(2) Per CSA Z662 Carbon Equivalent formula. See chemical composition of heat analysis on attached material test report

FILLER METALS (QW-404)

	SAW
Specification No. (SFA)	SFA 5.17
Flux / Wire Classification	F7A6-EM12K (3)
F-No.	F6
A-No.	A1 (4)
Diameter	See attached sketch
Supplemental Filler Metal	Without
Flux Type	Neutral
Flux Designation	F7A6
Flux Trade Name	Lincolnweld 882
Alloy Elements	Without
Alloy Flux	Without
Recrushed Slag	Without
Deposited Weld Metal Thickness	0.500 in.

(3) The Lincoln Electric Company: Lincolnweld 882M Flux / L-61 Electrode Lot No. 15135168
(4) F7A6-EM12K A-No. established from chemical analysis of SAW weld cap deposit. See attached Laboratory Test Report No.: E19-104.3

POSITION (QW-405)

Position of Groove: 2G Weld Progression: N/A

PREHEAT (QW-406)

Preheat Temperature: 50 °F Interpass Temp. (Max.): 500 °F
Preheat Maintenance: Weld was allowed to cool to ambient temperature in still air after welding was completed.

POSTWELD HEAT TREATMENT (QW-407)

With or Without: Without

Temperature: N/A Time: N/A

ELECTRICAL CHARACTERISTICS (QW-409)

Current: Direct Polarity: Reverse, electrode positive

Amps: See below Volts: See below

Heat Input: Leading head: 53,530 J/in. maximum Trailing Head: 50,557 J/in. maximum

TECHNIQUE (QW-410)

Manual or Automatic	Machine
Single or Multiple Electrodes	Single - Leading and Trailing Head
Electrode Spacing	2.50 in.
Multiple or Single Heads	Multiple – One on each side of the joint
Multiple or Single Pass Per Side	Multiple
String or Weave	String
Contact Tube to Work Distance	0.750 in. - 1.00 in.
Travel Speed	See below
Initial & Interpass Cleaning	Brushing, chipping and grinding as required
Method of Back Gouging	Not conducted
Peening	Not conducted
Oscillation	N/A
Use of Thermal Process	N/A

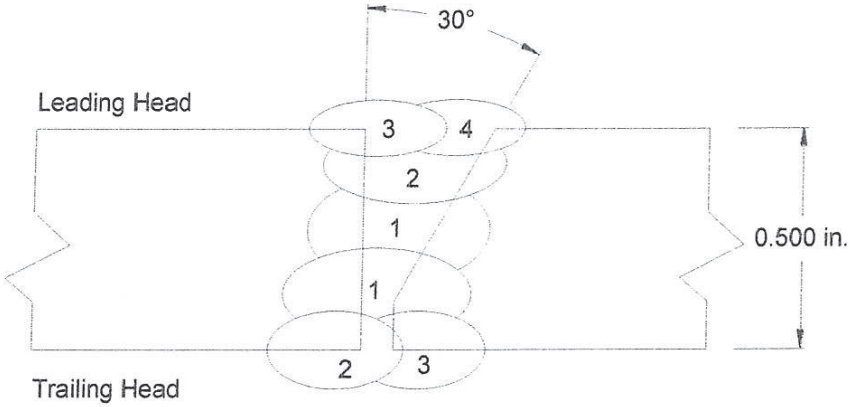

Pass	Process	Filler Metal	Diameter in.	Current Type & Polarity	Amperage Range	Voltage Range	Travel Speed i.p.m.
Leading Head							
1	SAW	F7A6-EM12K	3/32	DCRP	350 - 370	27 - 30	11.5
2	SAW	F7A6-EM12K	3/32	DCRP	360 - 380	27 - 30	12.0
3	SAW	F7A6-EM12K	3/32	DCRP	380 - 400	27 - 30	14.2
4	SAW	F7A6-EM12K	3/32	DCRP	390 - 410	27 - 30	14.2
Trailing Head							
1	SAW	F7A6-EM12K	3/32	DCRP	330 - 350	27 - 30	11.5
2	SAW	F7A6-EM12K	3/32	DCRP	340 - 360	27 - 30	12.0
3	SAW	F7A6-EM12K	3/32	DCRP	350 - 370	27 - 30	14.2

Note: Monitored parameters provided by Storage Tank Solutions Inc.

CHARPY V-NOTCH IMPACT TEST

Type of Test Charpy V-Notch Orientation Transverse

Governing Specification	Notch Location	Specimen Size in.	Test Temperature ° F	Specimen Number	Impact Values ft•lbf
ASME VIII Div.1 - 2017 & ASME B31.3 - 2016	Weld metal within 1/16 in. of root	0.394 x 0.394	-50	B2.1	84
				B2.2	51
				B2.3	74
ASME VIII Div.1 - 2017 & ASME B31.3 - 2016	HAZ @ Middle 1/2t	0.394 x 0.394	-50	B3.1	136
				B3.2	131
				B3.3	119

OTHER TESTS

Vickers Hardness - see attached Laboratory Test Report No.: E19-285.2
Chemical Analysis (SAW Cap) - see attached Laboratory Test Report No.: E19-104.3

Welder's Name Matthew MacKenzie & Christopher Jaques
Certificate File No. N/A
Tests Conducted By SGS Canada Inc.
Laboratory Test No. E19-285.2

We certify the statements in this record are correct and that the test welds were prepared, welded and tested in accordance with the requirements of Section IX of the ASME Code.

Organization Storage Tank Solutions Inc.

Date _____ Print _____

Signed _____

SGS

TENSILE / BEND TEST

Customer: **Storage Tank Solutions Inc.**
9 Well Head Street
Devon, Alberta
T9G 1Z6

Laboratory Test No.: E19-104.1
Date: March 8, 2019

Attention: Sebastien Ouellet

PQR No.:	STS-7-1 (Rev. 0)	**Material Heat No.:**	429693 29249-03
Material:	SA 516 Gr. 60/70	**Weld Type:**	Double Sided
Material Thickness:	6.35 mm (0.250 in.)		
Welding Process:	SAW		
Weld Thickness:	6.35 mm (0.250 in.)		
Thermal Condition:	As Welded		

Governing Spec.: *ASME Section IX - 2017*

Instrument: *Satec S/N: 1308*

SAMPLE NO.(QW-150)	T1		T2	
WIDTH mm (in.)	19.1	(0.752)	19.0	(0.748)
THICKNESS mm (in.)	5.73	(0.226)	5.66	(0.223)
AREA sq. mm (sq. in.)	109	(0.170)	108	(0.167)
ULTIMATE LOAD N (lbf)	57 518	(12,900)	56 272	(12,700)
ULTIMATE STRESS MPa (psi)	526	(76,200)	523	(75,900)
FRACTURE TYPE	Partial Cup & Cone		Partial Cup & Cone	
FRACTURE LOCATION	Parent Metal		Parent Metal	

Note: Imperial values calculated by direct conversion.

SAMPLE TYPE(QW-462.3a)	Face Bend	Face Bend	Root Bend	Root Bend
SAMPLE NO.	F1	F2	R1	R2
RESULTS	Pass	Pass	Pass	Pass

Test Conducted By: Ibrahim Mohamoud (Edmonton)

Certified By: _____
Eric Dacyk, C.E.T.

ANAB ACCREDITED
TESTING LABORATORY
Certification # L2057.01-1

This report (or certificate) is issued by the Company under its General Conditions for Inspection and Testing Services (copy available upon request). The issuance of this report (or certificate) does not exonerate buyers or sellers from exercising all their rights and discharging all their liabilities under the Contract of Sale. Stipulations to the contrary are not binding on the Company. The Company's responsibility under this report (or certificate) is limited to proven negligence and will in no case be more than ten times the amount of the fees or commission. Except by special arrangement, samples, if drawn, will not be retained by the Company for more than 30 days. The information stated in this report (or certificate) is derived from the results of inspection or testing procedures carried out in accordance with the instructions of our Client, and/or our assessment of such results on the basis of any technical standards, trade custom or practice, or other circumstances which should in our professional opinion be taken into account.

SGS Canada Inc. | 4027 - 14 Street S.E. Calgary, AB T2G 3K6 t +1 (403) 262-7072 f +1 (403) 266-3169
7925 Davies Road Edmonton, AB T6E 4N1 t +1 (780) 468-3030 f +1 (780) 468-3032 www.sgs.com

Member of the SGS Group (SGS SA)

HARDNESS TEST

Customer: **Storage Tank Solutions Inc.**
9 Well Head Street
Devon, Alberta
T9G 1Z6

Laboratory Test No.: E19-104.1
Date: March 8, 2019

Attention: Sebastien Ouellet

PQR No.:	STS-7-1 (Rev. 0)	**Material Heat No.:**	429693 29249-03
Material:	SA 516 Gr. 60/70	**Weld Type:**	Double Sided
Material Thickness:	6.35 mm (0.250 in.)		
Welding Process:	SAW		
Weld Thickness:	6.35 mm (0.250 in.)		
Thermal Condition:	As Welded		

Type of Test: *Vickers 10 kg (HV10)*
Governing Spec.: *ASTM E92 - 17 &*
ANSI/NACE MR0175/ISO 15156:2015

Instrument: *Buehler 5112*
Calibration Date: *July 27, 2018*

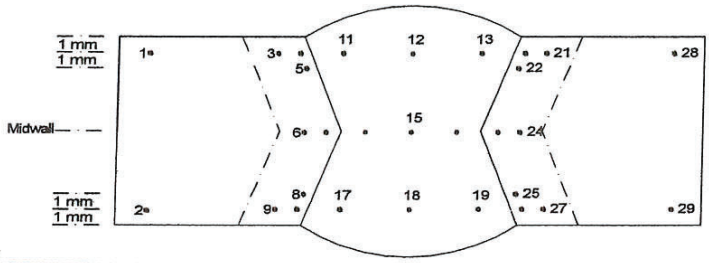

Parent Metal		HAZ		Weld Metal		HAZ		Parent Metal	
1	154	*3*	170	*11*	175	*20*	167	*28*	158
2	160	*4*	197	*12*	180	*21*	166	*29*	160
		5	199	*13*	173	*22*	186		
		6	186	*14*	175	*23*	214		
		7	195	*15*	192	*24*	207		
		8	188	*16*	193	*25*	191		
		9	167	*17*	175	*26*	179		
		10	182	*18*	176	*27*	168		
				19	185				

Test Conducted By: Tong Zhao (Edmonton)

Certified By: _____
Eric Dacyk, C.E.T.

ANAB ACCREDITED ISO/IEC 17025 TESTING LABORATORY Certification # L2057.01-1

This report (or certificate) is issued by the Company under its General Conditions for Inspection and Testing Services (copy available upon request). The issuance of this report (or certificate) does not exonerate buyers or sellers from exercising all their rights and discharging all their liabilities under the Contract of Sale. Stipulations to the contrary are not binding on the Company. The Company's responsibility under this report (or certificate) is limited to proven negligence and will in no case be more than ten times the amount of the fees or commission. Except by special arrangement, samples, if drawn, will not be retained by the Company for more than 30 days. The information stated in this report (or certificate) is derived from the results of inspection or testing procedures carried out in accordance with the instructions of our Client, and/or our assessment of such results on the basis of any technical standards, trade custom or practice, or other circumstances which should in our professional opinion be taken into account.

SGS Canada Inc. | 4027 - 14 Street S.E. Calgary, AB T2G 3K6 t +1 (403) 262-7072 f +1 (403) 266-3169
7925 Davies Road Edmonton, AB T6E 4N1 t +1 (780) 468-3030 f +1 (780) 468-3032 www.sgs.com

Member of the SGS Group (SGS SA)

SGS

TENSILE / BEND TEST

Customer: **Storage Tank Solutions Inc.**
9 Well Head Street
Devon, Alberta
T9G 1Z6

Laboratory Test No.: E19-104.3
Date: March 15, 2019

Attention: Sebastien Ouellet

PQR No.:	STS-7-3 (Rev. 0)	**Material Heat No.:**	454840 27789-02
Material:	SA 516 Gr. 60/70	**Weld Type:**	Double Sided
Material Thickness:	22.2 mm (0.875 in.)		
Weld Process:	SAW		
Weld Thickness:	22.2 mm (0.875 in.)		
Thermal Condition:	As Welded		

Governing Spec.: ASME Section IX - 2017 *Instrument: Tinius Olsen S/N: 133660*

SAMPLE NO.(QW-150)	T1		T2	
WIDTH mm (in.)	19.0	(0.748)	19.0	(0.748)
THICKNESS mm (in.)	20.8	(0.819)	20.8	(0.819)
AREA sq. mm (sq. in.)	395	(0.613)	395	(0.613)
ULTIMATE LOAD N (lbf)	207 501	(46,600)	209 027	(47,000)
ULTIMATE STRESS MPa (psi)	525	(76,200)	529	(76,700)
FRACTURE TYPE	Partial Cup & Cone		Partial Cup & Cone	
FRACTURE LOCATION	Weld Metal		Weld Metal	

Note: Imperial values calculated by direct conversion.

SAMPLE TYPE(QW-462.2)	Side Bend	Side Bend	Side Bend	Side Bend
SAMPLE NO.	S1	S2	S3	S4
RESULTS	Pass	Pass	Pass	Pass

Test Conducted By: Mohamed Botan (Edmonton)

Certified By: _____
Eric Dacyk, C.E.T.

ANAB ACCREDITED
TEST NG LABORATORY
Certification # L2057.01-1

This report (or certificate) is issued by the Company under its General Conditions for Inspection and Testing Services (copy available upon request). The issuance of this report (or certificate) does not exonerate buyers or sellers from exercising all their rights and discharging all their liabilities under the Contract of Sale. Stipulations to the contrary are not binding on the Company. The Company's responsibility under this report (or certificate) is limited to proven negligence and will in no case be more than ten times the amount of the fees or commission. Except by special arrangement, samples, if drawn, will not be retained by the Company for more than 30 days. The information stated in this report (or certificate) is derived from the results of inspection or testing procedures carried out in accordance with the instructions of our Client, and/or our assessment of such results on the basis of any technical standards, trade custom or practice, or other circumstances which should in our professional opinion be taken into account.

SGS Canada Inc | 4027 - 14 Street S.E. Calgary, AB T2G 3K6 t +1 (403) 262-7072 f +1 (403) 266-3169
7925 Davies Road Edmonton, AB T6E 4N1 t +1 (780) 468-3030 f +1 (780) 468-3032 www.sgs.com
Member of the SGS Group (SGS SA)

SGS

CHARPY V-NOTCH IMPACT TEST

Customer: **Storage Tank Solutions Inc.**
9 Well Head Street
Devon, Alberta
T9G 1Z6

Laboratory Test No.: E19-104.3
Date: March 15, 2019

Attention: Sebastien Ouellet

PQR No.:	STS-7-3 (Rev. 0)	**Material Heat No.:**	454840 27789-02
Material:	SA 516 Gr. 60/70	**Weld Type:**	Double Sided
Material Thickness:	22.2 mm (0.875 in.)		
Weld Process:	SAW		
Weld Thickness:	22.2 mm (0.875 in.)		
Thermal Condition:	As Welded		

Specimen Size:	*10 x 10 mm (0.394 x 0.394 in.)*	*Machine:*	*Satec SI-1K3, S/N: 1503*
Orientation:	*Transverse*	*Capacity:*	*407 J (300 ft·lbf)*
Test Temperature:	*-46 °C (-50 °F)*	*Verified Range:*	*3.4-325 J (2.5-240 ft·lbf)*
Governing Spec.:	*ASME Section VIII, Div. I, UG-84 - 2017 & ASME B31.3-2016*	*Calibration Date:*	*March 19, 2018*

Specimen Number	Notch Location	Impact Values Joules	(ft·lbf)
C2.1	Weld Metal within 1.5mm (1/16") from weld surface	138	(102)
C2.2		23	(17)
C2.3		102	(75)
C3.1	HAZ within 1/4 to 1/2T of cap side	260	(192)
C3.2		313	(231)
C3.3		83	(61)
C4.1	HAZ within 1/4 to 1/2T of opposite cap side	102	(75)
C4.2		183	(135)
C4.3		230	(170)

Note: Metric values calculated by direct conversion.

Test Conducted By: Tong Zhao (Edmonton)

Certified By: _____
Eric Dacyk, C.E.T.

ANAB ACCREDITED
TESTING LABORATORY
Certification # L2057.01-1

This report (or certificate) is issued by the Company under its General Conditions for Inspection and Testing Services (copy available upon request). The issuance of this report (or certificate) does not exonerate buyers or sellers from exercising all their rights and discharging all their liabilities under the Contract of Sale. Stipulations to the contrary are not binding on the Company. The Company's responsibility under this report (or certificate) is limited to proven negligence and will in no case be more than ten times the amount of the fees or commission. Except by special arrangement, samples, if drawn, will not be retained by the Company for more than 30 days. The information stated in this report (or certificate) is derived from the results of inspection or testing procedures carried out in accordance with the instructions of our Client, and/or our assessment of such results on the basis of any technical standards, trade custom or practice, or other circumstances which should in our professional opinion be taken into account.

SGS Canada Inc. | 4027 - 14 Street S.E. Calgary, AB T2G 3K6 t +1 (403) 262-7072 f +1 (403) 266-3169
7925 Davies Road Edmonton, AB T6E 4N1 t +1 (780) 468-3030 f +1 (780) 468-3032 www.sgs.com

Member of the SGS Group (SGS SA)

SGS

HARDNESS TEST

Customer: **Storage Tank Solutions Inc.**
9 Well Head Street
Devon, Alberta
T9G 1Z6

Laboratory Test No.: E19-104.3
Date: March 15, 2019

Attention: Sebastien Ouellet

PQR No.:	STS-7-3 (Rev. 0)	**Material Heat No.:**	454840 27789-02
Material:	SA 516 Gr. 60/70	**Weld Type:**	Double Sided
Material Thickness:	22.2 mm (0.875 in.)		
Weld Process:	SAW		
Weld Thickness:	22.2 mm (0.875 in.)		
Thermal Condition:	As Welded		

Type of Test: *Vickers 10 kg (HV10)*
Governing Spec.: *ASTM E92 - 17 & ANSI/NACE MR0175/ISO 15156:2015*

Instrument: *Buehler 5112*
Calibration Date: *July 27, 2018*

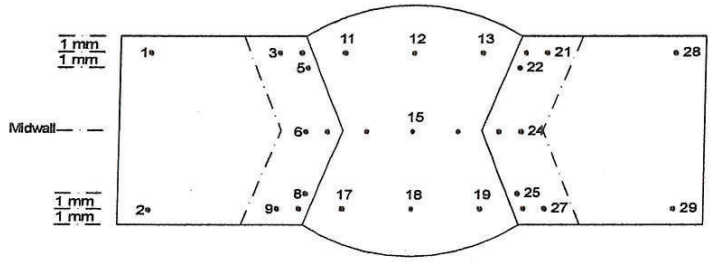

Parent Metal		HAZ		Weld Metal		HAZ		Parent Metal	
1	166	*3*	162	*11*	156	*20*	186	*28*	157
2	157	*4*	181	*12*	152	*21*	156	*29*	160
		5	188	*13*	169	*22*	205		
		6	155	*14*	161	*23*	178		
		7	159	*15*	163	*24*	158		
		8	185	*16*	156	*25*	208		
		9	174	*17*	165	*26*	201		
		10	184	*18*	147	*27*	155		
				19	164				

Test Conducted By: Ibrahim Mohamoud (Edmonton)

Certified By: _____
Eric Dacyk, C.E.T.

ANAB ACCREDITED ISO/IEC 17025 TESTING LABORATORY Certification # L2057.01-1

This report (or certificate) is issued by the Company under its General Conditions for Inspection and Testing Services (copy available upon request). The issuance of this report (or certificate) does not exonerate buyers or sellers from exercising all their rights and discharging all their liabilities under the Contract of Sale. Stipulations to the contrary are not binding on the Company. The Company's responsibility under this report (or certificate) is limited to proven negligence and will in no case be more than ten times the amount of the fees or commission. Except by special arrangement, samples, if drawn, will not be retained by the Company for more than 30 days. The information stated in this report (or certificate) is derived from the results of inspection or testing procedures carried out in accordance with the instructions of our Client, and/or our assessment of such results on the basis of any technical standards, trade custom or practice, or other circumstances which should in our professional opinion be taken into account.

SGS Canada Inc | 4027 - 14 Street S.E. Calgary, AB T2G 3K6 t +1 (403) 262-7072 f +1 (403) 266-3169
7925 Davies Road Edmonton, AB T6E 4N1 t +1 (780) 468-3030 f +1 (780) 468-3032 www.sgs.com

Member of the SGS Group (SGS SA)

CHEMICAL ANALYSIS

Customer: **Storage Tank Solutions Inc.**
9 Well Head Street
Devon, Alberta
T9G 1Z6

Laboratory Test No.: E19-104.3
Date: March 13, 2019

Attention: Sebastien Ouellet

PQR No.:	STS-7-3 (Rev. 0)	**Material Heat No.:**	454840 27789-02
Material:	SA 516 Gr. 60/70	**Weld Type:**	Double Sided
Material Thickness:	22.2 mm (0.875 in.)		
Weld Process:	SAW		
Weld Thickness:	22.2 mm (0.875 in.)		
Thermal Condition:	As Welded		

Instrument: *Shimadzu PDA-7000 Optical Emission Spectrometer*
Calibration Date: *September 26, 2018*
Governing Spec.: *ASTM E415-17*

	% by Weight
Carbon	0.07
Manganese	1.19
Sulphur	0.007
Phosphorus	0.011
Silicon	0.44
Chromium	0.03
Nickel	0.02
Molybdenum	0.01
Copper	0.10
Niobium	<0.01
Vanadium	0.01
Aluminum	0.02
Titanium	<0.01
Boron	<0.0004

Test Conducted By: Kamaldeep Brar (Calgary)

Certified By: _____
Eric Dacyk, C.E.T.

ANAB ACCREDITED ISO/IEC 17025 TESTING LABORATORY Certification # L2057-1

This report (or certificate) is issued by the Company under its General Conditions for Inspection and Testing Services (copy available upon request). The issuance of this report (or certificate) does not exonerate buyers or sellers from exercising all their rights and discharging all their liabilities under the Contract of Sale. Stipulations to the contrary are not binding on the Company. The Company's responsibility under this report (or certificate) is limited to proven negligence and will in no case be more than ten times the amount of the fees or commission. Except by special arrangement, samples, if drawn, will not be retained by the Company for more than 30 days. The information stated in this report (or certificate) is derived from the results of inspection or testing procedures carried out in accordance with the instructions of our Client, and/or our assessment of such results on the basis of any technical standards, trade custom or practice, or other circumstances which should in our professional opinion be taken into account.

SGS Canada Inc. | 4027 - 14 Street S.E. Calgary, AB T2G 3K6 t +1 (403) 262-7072 f +1 (403) 266-3169
7925 Davies Road Edmonton, AB T6E 4N1 t +1 (780) 468-3030 f +1 (780) 468-3032 www.sgs.com

Member of the SGS Group (SGS SA)

SGS

CHARPY V-NOTCH IMPACT TEST

Customer: **Storage Tank Solutions Inc.**
9 Well Head Street
Devon, Alberta
T9G 1Z6

Laboratory Test No.: E19-00285.1
Date: June 26, 2019

Attention: Sebastien Ouellet

PQR No.:	STS-7-4 (Rev. 0)	**Material Heat No.:**	429693 29267-03
Material:	SA 516 Gr. 60/70	**Weld Type:**	Double Sided
Material Thickness:	6.35 mm (0.250 in.)		
Welding Process:	SAW		
Weld Thickness:	6.35 mm (0.250 in.)		
Thermal Condition:	As Welded		

Specimen Size:	*10 x 5 mm (0.394 x 0.197 in.)*	*Machine:*	*Satec SI-1K3, S/N: 1503*
Orientation:	*Transverse*	*Capacity:*	*407 J (300 ft·lbf)*
Test Temperature:	*-51 °C (-60 °F)*	*Verified Range:*	*3.4-325 J (2.5-240 ft·lbf)*
Governing Spec.:	*ASME B31.3 – 2016 & ASME VIII, Div.1, UG-84 - 2017*	*Calibration Date:*	*March 19, 2019*

Specimen Number	Notch Location	Impact Values Joules	(ft·lbf)
A2.1	Weld Metal within 1.5mm (1/16") of root	47	(35)
A2.2		34	(25)
A2.3		27	(20)
A3.1	HAZ @ Middle 1/2t	11	(8)
A3.2		76	(56)
A3.3		9	(7)

Note: Metric values calculated by direct conversion.

Test Conducted By: Mohamed Botan (Edmonton)

Certified By: _____
Eric Dacyk, C.E.T.

ANAB ACCREDITED ISO/IEC 17025 TESTING LABORATORY Certification # L2057.01-1

This report (or certificate) is issued by the Company under its General Conditions for Inspection and Testing Services (copy available upon request). The issuance of this report (or certificate) does not exonerate buyers or sellers from exercising all their rights and discharging all their liabilities under the Contract of Sale. Stipulations to the contrary are not binding on the Company. The Company's responsibility under this report (or certificate) is limited to proven negligence and will in no case be more than ten times the amount of the fees or commission. Except by special arrangement, samples, if drawn, will not be retained by the Company for more than 30 days. The information stated in this report (or certificate) is derived from the results of inspection or testing procedures carried out in accordance with the instructions of our Client, and/or our assessment of such results on the basis of any technical standards, trade custom or practice, or other circumstances which should in our professional opinion be taken into account.

SGS Canada Inc. | 4027 - 14 Street S.E. Calgary, AB T2G 3K6 t +1 (403) 262-7072 f +1 (403) 266-3169
7925 Davies Road Edmonton, AB T6E 4N1 t +1 (780) 468-3030 f +1 (780) 468-3032 www.sgs.com

Member of the SGS Group (SGS SA)

SGS

HARDNESS TEST

Customer: **Storage Tank Solutions Inc.**
9 Well Head Street
Devon, Alberta
T9G 1Z6

Laboratory Test No.: E19-00285.1
Date: June 27, 2019

Attention: Sebastien Ouellet

PQR No.:	STS-7-4 (Rev. 0)	**Material Heat No.:**	429693 29267-03
Material:	SA 516 Gr. 60/70	**Weld Type:**	Double Sided
Material Thickness:	6.35 mm (0.250 in.)		
Welding Process:	SAW		
Weld Thickness:	6.35 mm (0.250 in.)		
Thermal Condition:	As Welded		

Type of Test: *Vickers 10 kg (HV10)*
Governing Spec.: *ASTM E92 - 17 & ANSI/NACE MR0175/ISO 15156:2015*

Instrument: *Buehler 5112*
Calibration Date: *July 27, 2018*

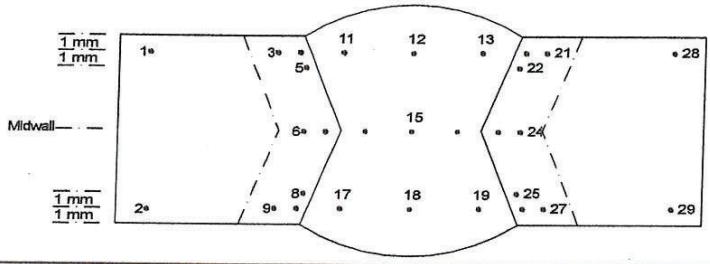

Parent Metal		HAZ		Weld Metal		HAZ		Parent Metal	
1	160	3	167	11	173	20	176	28	154
2	163	4	182	12	163	21	160	29	154
		5	185	13	167	22	170		
		6	167	14	174	23	179		
		7	176	15	163	24	170		
		8	178	16	166	25	202		
		9	169	17	180	26	196		
		10	188	18	175	27	161		
				19	180				

Test Conducted By: Ibrahim Mohamoud (Edmonton)

Certified By: _____
Eric Dacyk, C.E.T.

ANAB ACCREDITED ISO/IEC 17025 TESTING LABORATORY Certification # L2057.01-1

This report (or certificate) is issued by the Company under its General Conditions for Inspection and Testing Services (copy available upon request). The issuance of this report (or certificate) does not exonerate buyers or sellers from exercising all their rights and discharging all their liabilities under the Contract of Sale. Stipulations to the contrary are not binding on the Company. The Company's responsibility under this report (or certificate) is limited to proven negligence and will in no case be more than ten times the amount of the fees or commission. Except by special arrangement, samples, if drawn, will not be retained by the Company for more than 30 days. The information stated in this report (or certificate) is derived from the results of inspection or testing procedures carried out in accordance with the instructions of our Client, and/or our assessment of such results on the basis of any technical standards, trade custom or practice, or other circumstances which should in our professional opinion be taken into account.

SGS Canada Inc. | 4027 - 14 Street S.E. Calgary, AB T2G 3K6 t +1 (403) 262-7072 f +1 (403) 266-3169
7925 Davies Road Edmonton, AB T6E 4N1 t +1 (780) 468-3030 f +1 (780) 468-3032 www.sgs.com

Member of the SGS Group (SGS SA)

SGS

CHARPY V-NOTCH IMPACT TEST

Customer: **Storage Tank Solutions Inc.**
9 Well Head Street
Devon, Alberta
T9G 1Z6

Laboratory Test No.: E19-00285.2
Date: June 26, 2019

Attention: Sebastien Ouellet

PQR No.:	STS-7-5 (Rev. 0)	**Material Heat No.:**	459852 56930-01
Material:	SA 516 Gr. 60/70	**Weld Type:**	Double Sided
Material Thickness:	12.7 mm (0.500 in.)		
Welding Process:	SAW		
Weld Thickness:	12.7 mm (0.500 in.)		
Thermal Condition:	As Welded		

Specimen Size:	*10 x 10 mm (0.394 x 0.394 in.)*	*Machine:*	*Satec SI-1K3, S/N: 1503*
Orientation:	*Transverse*	*Capacity:*	*407 J (300 ft·lbf)*
Test Temperature:	*-46 °C (-50 °F)*	*Verified Range:*	*3.4-325 J (2.5-240 ft·lbf)*
Governing Spec.:	*ASME B31.3 – 2016 &*	*Calibration Date:*	*March 19, 2019*
	ASME Section VIII, Div. I, UG-84 - 2017		

Specimen Number	Notch Location	Impact Values Joules	(ft·lbf)
B2.1	Weld Metal within 1.5mm (1/16") of root	114	(84)
B2.2		69	(51)
B2.3		100	(74)
B3.1	HAZ @ Middle 1/2t	184	(136)
B3.2		178	(131)
B3.3		161	(119)

Note: Metric values calculated by direct conversion.

Test Conducted By: Mohamed Botan (Edmonton)

Certified By: _____
Eric Dacyk, C.E.T.

ANAB ACCREDITED TESTING LABORATORY Certification # L2057.01-1

This report (or certificate) is issued by the Company under its General Conditions for Inspection and Testing Services (copy available upon request). The issuance of this report (or certificate) does not exonerate buyers or sellers from exercising all their rights and discharging all their liabilities under the Contract of Sale. Stipulations to the contrary are not binding on the Company. The Company's responsibility under this report (or certificate) is limited to proven negligence and will in no case be more than ten times the amount of the fees or commission. Except by special arrangement, samples, if drawn, will not be retained by the Company for more than 30 days. The information stated in this report (or certificate) is derived from the results of inspection or testing procedures carried out in accordance with the instructions of our Client, and/or our assessment of such results on the basis of any technical standards, trade custom or practice, or other circumstances which should in our professional opinion be taken into account.

SGS Canada Inc. | 4027 - 14 Street S.E. Calgary, AB T2G 3K6 t +1 (403) 262-7072 f +1 (403) 266-3169
7925 Davies Road Edmonton, AB T6E 4N1 t +1 (780) 468-3030 f +1 (780) 468-3032 www.sgs.com

Member of the SGS Group (SGS SA)

SGS

HARDNESS TEST

Customer: **Storage Tank Solutions Inc.**
9 Well Head Street
Devon, Alberta
T9G 1Z6

Laboratory Test No.: E19-00285.2
Date: June 27, 2019

Attention: Sebastien Ouellet

PQR No.:	STS-7-5 (Rev. 0)	**Material Heat No.:**	459852 56930-01
Material:	SA 516 Gr. 60/70	**Weld Type:**	Double Sided
Material Thickness:	12.7 mm (0.500 in.)		
Welding Process:	SAW		
Weld Thickness:	12.7 mm (0.500 in.)		
Thermal Condition:	As Welded		

Type of Test: *Vickers 10 kg (HV10)* — *Instrument:* *Buehler 5112*
Governing Spec.: *ASTM E92 - 17 & ANSI/NACE MR0175/ISO 15156:2015* — *Calibration Date:* *July 27, 2018*

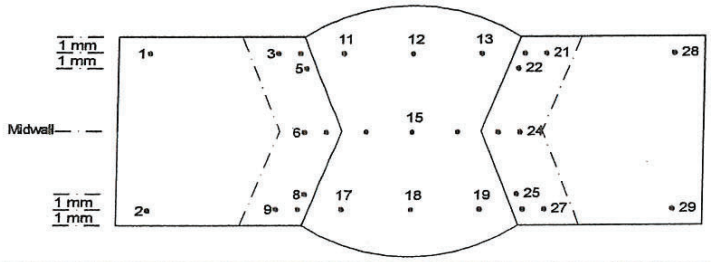

Parent Metal		HAZ		Weld Metal		HAZ		Parent Metal	
1	162	3	179	11	198	20	213	28	153
2	159	4	209	12	176	21	182	29	152
		5	224	13	196	22	218		
		6	170	14	189	23	173		
		7	171	15	188	24	178		
		8	224	16	179	25	234		
		9	173	17	188	26	237		
		10	208	18	190	27	192		
				19	179				

Test Conducted By: Ibrahim Mohamoud (Edmonton)

Certified By: _____
Eric Dacyk, C.E.T.

ANAB ACCREDITED
TESTING LABORATORY
Certification # L2057.01-1

This report (or certificate) is issued by the Company under its General Conditions for Inspection and Testing Services (copy available upon request). The issuance of this report (or certificate) does not exonerate buyers or sellers from exercising all their rights and discharging all their liabilities under the Contract of Sale. Stipulations to the contrary are not binding on the Company. The Company's responsibility under this report (or certificate) is limited to proven negligence and will in no case be more than ten times the amount of the fees or commission. Except by special arrangement, samples, if drawn, will not be retained by the Company for more than 30 days. The information stated in this report (or certificate) is derived from the results of inspection or testing procedures carried out in accordance with the instructions of our Client, and/or our assessment of such results on the basis of any technical standards, trade custom or practice, or other circumstances which should in our professional opinion be taken into account.

SGS Canada Inc. | 4027 - 14 Street S.E. Calgary, AB T2G 3K6 t +1 (403) 262-7072 f +1 (403) 266-3169
7925 Davies Road Edmonton, AB T6E 4N1 t +1 (780) 468-3030 f +1 (780) 468-3032 www.sgs.com

Member of the SGS Group (SGS SA)

SECTION 6.0

Weld Consumables

22801 St. Clair Avenue
Cleveland, Ohio 44117-1199 U.S.A.
(216) 481-8100

LINCOLN ELECTRIC

THE LINCOLN ELECTRIC COMPANY

PRODUCT CERTIFICATE

LINCOLNWELD 882 FLUX

The product named above and supplied on the referenced order number is of the same manufacturing process, and material requirements as the material which was used for the tests and calculations, the results of which are shown below. This certificate complies to the requirements of EN 10204, Type 2.2.

- Basicity Index

  B.I.* = 1.6

  *Calculated using Boniszewski formula shown below

  $$B.I. = \frac{0.5\,(FeO + MnO) + CaO + MgO + Na_2O + K_2O + CaF_2}{SiO_2 + 0.5\,(TiO_2 + ZrO_2 + Al_2O_3)}$$

- Flux Sizing Distribution*

+20 MESH	34%	Maximum
-20 +100 MESH	64%	Minimum
-100 MESH	2%	Maximum

  *U.S. sieve number per ASTM E11-04

- Flux Composition (Based on Elemental Values Determined by X-Ray Fluorescence)

Na_2O	2%	SiO_2	16%	MnO	1%
MgO	22%	CaO	1%	FeO	1%
Al_2O_3	24%	ZrO_2	7%	CaF_2	24%

- Density (g/cm^3): 1.2

- Flux Classification: EN 760 – S A AS 1

Phillip J. Woodring, Certification Supervisor, February 19, 2008
Date

Cert No. F882

The Lincoln Electric Company
22801 St. Clair Avenue
Cleveland, Ohio 44117-1199

CERTIFICATE OF CONFORMANCE

LINCOLN ELECTRIC
THE WELDING EXPERTS®

Product:	**Lincolnweld® L-61®**
Classification:	**EM12K**
	EM12K
Specification:	**AWS A5.17:2019, ASME SFA-5.17**
	AWS A5.23:2011, ASME SFA-5.23
Date	**October 28, 2020**

This is to certify that the product named above is of the same classification(s) and design as the material used for the tests reported herein. The material was tested according to the specification(s) indicated and met all requirements. It was manufactured and supplied according to a Quality System Program that meets the requirements of ISO9001 among others as documented on The Lincoln Electric web page (*http://www.lincolnelectric.com/en-us/company/Pages/certifications.aspx*).

Electrode composition (weight %)	EM12K Requirements	Electrode Results
C	0.05 - 0.15	0.12
Mn	0.80 - 1.25	0.97
Si	0.10 - 0.35	0.23
S	0.030 max.	0.007
P	0.030 max.	0.005
Cu (Total)	0.35 max.	0.09

1. This document meets the requirements of AWS A5.01M/A5.01 Schedule F. When a specific lot number is referenced it also meets the requirements of EN10204, type 2.2. It does not meet the requirements of type 3.1.
2. The size(s) of electrode tested is determined by the requirements for this classification. All other sizes manufactured will also meet these requirements.

October 28, 2020

Daniel Gaul, Certification Supervisor — Date

October 28, 2020

Jon Ogborn, Manager, Consumable Compliance — Date

Cert. No. 40061

The Lincoln Electric Company
22801 St. Clair Avenue
Cleveland, Ohio 44117-1199

CERTIFICATE OF CONFORMANCE

(APPLIES ONLY TO U.S. PRODUCTS)

LINCOLN ELECTRIC
THE WELDING EXPERTS®

Product:	**Lincolnweld® L-61®**
Classification:	**EM12K**
	EM12K
Specification:	**AWS A5.17:1997, ASME SFA-5.17**
	AWS A5.23:2011, ASME SFA-5.23
Date	**December 18, 2015**

Q1 Lot Number: 16025054

This is to certify that the product named above and supplied on the referenced order number is of the same classification, manufacturing process, and material requirements as the material which was used for the test that was concluded on the date shown, the results of which are shown below. All tests required by the specifications shown for classification were performed at that time and the material tested met all requirements. It was manufactured and supplied according to the Quality System Program of the Lincoln Electric Company, Cleveland, Ohio, U.S.A., which meets the requirements of ISO9001, NCA3800, AWS A5.01, and other specification and Military requirements, as applicable. The Quality System Program has been approved by ASME, ABS, and VdTUV.

Electrode composition (weight %)	EM12K Requirements	Electrode Results
C	0.05 - 0.15	0.11
Mn	0.80 - 1.25	0.98
Si	0.10 - 0.35	0.19
S	0.030 max.	0.011
P	0.030 max.	0.005
Total Cu	0.35 max.	0.09

1. This certificate complies with the requirements of EN 10204, Type 2.2.
2. The electrode size required to be tested for this classification is 5/32 inch. All other sizes manufactured will also meet these requirements.
3. Results below the detection limits of the instrument or lower than the precision required by the specification are reported as zero.

Toronto Cunningham — December 18, 2015

Toronto Cunningham, Certification Supervisor — Date

/s/ Marie Quintana — December 31, 2015

Marie Quintana, Director, Consumable Compliance — Date

The Lincoln Electric Company
22801 St. Clair Avenue
Cleveland, Ohio 44117-1199

CERTIFICATE OF CONFORMANCE

Q1 Lot Number:
15989595

THE WELDING EXPERTS®

Product: **Fleetweld® 5P+™**
Classification: **E6010**
Specification: **AWS A5.1:2012, ASME SFA-5.1**
Date **October 01, 2018**

This is to certify that the product named above is of the same classification(s) and design as the material used for the tests reported herein. The material was tested according to the specification(s) indicated and met all requirements. It was manufactured and supplied according to a Quality System Program that meets the requirements of ISO9001 among others as documented on The Lincoln Electric web page (*http://www.lincolnelectric.com/en-us/company/Pages/certifications.aspx*).

Operating Settings	**E6010 Requirements**	**RESULTS**	
Required Size for Classification	Not Specified	5/32" (4.0 mm)	3/16" (4.8 mm)
Current Type/Polarity	DC+	DC+	DC+
Nominal Voltage, V		27	27
Nominal Current, A		140	170
Average Heat Input, kJ/mm (kJ/in)		2.1 (53)	2.5 (63)
Travel Speed, cm/min (in/min)		11 (4.37)	11 (4.41)
Pass/Layers		16/8	16/8
Preheat Temperature, °C (°F)	(225 min.)	105 (225)	105 (225)
Interpass Temperature, °C (°F)	(225 - 350)	150 (300)	150 (300)
Postweld Heat Treatment	As-welded	As-welded	As-welded
Mechanical Properties of Weld Metal			
Tensile Strength, MPa (ksi)	(60 min.)	550 (80)	540 (79)
Yield Strength, 0.2% Offset, MPa (ksi)	(48 min.)	440 (63)	440 (63)
Elongation %	22 min.	23	23
Average Impact Energy	(20 min.)	91 (67)	75 (56)
Joules @ -29 °C (ft-lbs @ -20 °F)		87,90,97 (64,66,72)	73,74,79 (54,55,58)
Average Hardness, HRB	Info. Only	86	85
Chemical Composition of Weld Metal (weight %)			
C	0.20 max.	0.15	0.14
Mn	1.20 max.	0.60	0.60
Si	1.00 max.	0.22	0.19
S	Not Specified	0.008	0.007
P	Not Specified	0.010	0.012
Cr	0.20 max.	0.03	0.03
Ni	0.30 max.	0.02	0.03
Mo	0.30 max.	0.01	0.01
V	0.08 max.	0.00	0.01
Mn+Ni+Cr+Mo+V	Not Specified	0.67	0.67

1. This document meets the requirements of AWS A5.01M/A5.01 Schedule G. When a specific lot number is referenced it also meets the requirements of EN10204, type 2.2. It does not meet the requirements of type 3.1.
2. The electrode sizes required to be tested for this classification are 5/32 inch and 3/16 inch. All other sizes manufactured will also meet these requirements.
3. Fillet Weld Test (positions as required): Met requirements.
4. Radiographic Inspection: Grade 2 - Met requirements.
5. The strength and elongation properties reported here were obtained from tensile specimens artificially aged at 105°C (220°F) for 48 hours.
6. Strength values in SI units are reported to the nearest 10 MPa converted from actual data. Preheat and interpass temperature values in SI units are reported to the nearest 5 degrees.

Toronto Cunningham — October 01, 2018

Toronto Cunningham, Certification Supervisor — Date

Jonathan S. Ogborn — October 01, 2018

Jon Ogborn, Manager, Consumable Compliance — Date

Cert. No. 30055

The Lincoln Electric Company
22801 St. Clair Avenue
Cleveland, Ohio 44117-1199

CERTIFICATE OF CONFORMANCE

Q1 Lot Number: 15192360

LINCOLN ELECTRIC
THE WELDING EXPERTS®

Product: **Fleetweld® 5P+**
Classification: **E6010**
Specification: **AWS A5.1:2012, ASME SFA-5.1**
Date **June 30, 2016**

This is to certify that the product named above is of the same classification(s) and design as the material used for the tests reported herein. The material was tested according to the specification(s) indicated and met all requirements. It was manufactured and supplied according to a Quality System Program that meets the requirements of ISO9001 among others as documented on The Lincoln Electric web page (*http://www.lincolnelectric.com/en-us/company/Pages/certifications.aspx*).

Operating Settings	**E6010 Requirements**	**RESULTS**	
Electrode Size		5/32 inch	3/16 inch
Current Type/Polarity	DC+	DC+	DC+
Nominal Voltage, V		25	26
Nominal Current, A		140	170
Average Heat Input, kJ/mm (kJ/in)		2.1 (53)	2.5 (63)
Pass/Layers		18/9	16/8
Preheat Temperature, °C (°F)	(225 min.)	105 (225)	105 (225)
Interpass Temperature, °C (°F)	(225 - 350)	150 (300)	150 (300)
Postweld Heat Treatment	As-welded	As-welded	As-welded
Mechanical properties of weld deposits			
Tensile Strength, MPa (ksi)	(60 min.)	550 (79)	490 (71)
Yield Strength, 0.2% Offset, MPa (ksi)	(48 min.)	440 (64)	390 (57)
Elongation %	22 min.	28	29
Average Impact Energy Joules @ -29 °C (ft-lbs @ -20 °F)	(20 min.)	89 (66) 84,91,93 (62,67,68)	93 (69) 84,96,100 (62,71,73)
Average Hardness, HRB	Info. Only	88	82
Chemical composition of weld deposits (weight %)			
C	0.20 max.	0.13	0.13
Mn	1.20 max.	0.66	0.52
Si	1.00 max.	0.25	0.15
S	Not Specified	0.007	0.005
P	Not Specified	0.009	0.009
Cr	0.20 max.	0.03	0.03
Ni	0.30 max.	0.04	0.04
Mo	0.30 max.	0.01	0.01
V	0.08 max.	0.01	0.00
Mn+Ni+Cr+Mo+V	Not Specified	0.74	0.60

1. This document meets the requirements of EN10204, type 2.2, when a specific lot or order number is referenced. It does not meet the requirements of type 3.1.
2. The electrode sizes required to be tested for this classification are 5/32 inch and 3/16 inch. All other sizes manufactured will also meet these requirements.
3. Fillet Weld Test (positions as required): Met requirements.
4. Radiographic Inspection: Grade 2 - Met requirements.
5. The strength and elongation properties reported here were obtained from tensile specimens artificially aged at 105°C (220°F) for 48 hours.
6. Strength values in SI units are reported to the nearest 10 MPa converted from actual data. Preheat and interpass temperature values in SI units are reported to the nearest 5 degrees.

Toronto Cunningham — June 30, 2016

Toronto Cunningham, Certification Supervisor — Date

Marie Quintana — June 30, 2016

Marie Quintana, Director, Consumable Compliance — Date

Cert. No. 30055

SECTION 7.0

Foudation

Exhibit 30, Rev 1

FOUNDATION REPORT

TANK TAG NUMBER: TANK 8 **WORK ORDER NUMBER:** _____

CUSTOMER: AEM **PROJECT:** BAKER LAKE

ITP LINE NUMBER: Tank 8 **DATE:** 2021-08-06

1.0 TANK PAD ACCEPTANCE GUIDELINES

1.1 In acceptance of the Tank Foundation, we acknowledges that the following requirements have been met:

a) The foundation circumference meets the requirements of API 650 Para 7.5.

b) The foundation has been staked to clearly identify the major tank axis (North, South, East, West) and the tank center point

c) There is adequate access to the tank erection area to commence erection activities.

1.2 Our acceptance of the tank foundation is limited only to the above requirements. Acceptance does not constitute certification of the foundation design and/or construction including but not limited to the following:

a) Certification of the foundation design including that of the leak detection and cathodic protection system.

b) Certification that the foundation has the load bearing capacities required.

c) Dimensional accuracy other than that explicitly stated above.

d) That the coordinate axis complies with the clients plot plan.

e) That soil embedded items have been properly placed according to approved drawings. This will be confirmed during the installation of components associated with the embedded items.

f) Certification that the foundation has been properly constructed or is structurally acceptable.

g) Certifications that the leak detection and/or cathodic protection systems have been properly installed.

OBSERVATIONS:

Acceptable at time of Inspection.

ACCEPTED BY: Matthew MacKenzie **DATE:** 2021-08-6
(NAME & SIGNATURE)
STS QC REPRESENTATIVE

ACCEPTED BY: _____ **DATE:** Sept 4th 21
(NAME & SIGNATURE)
CLIENT INSPECTOR

SECTION 8.0

Floor

STS STORAGE TANK SOLUTIONS **AS BUILT STAMP**

☐ CHANGE ☒ NO CHANGE

NAME: Lindsay C Bolton

SIGNATURE:

DATE: August 31, 2021

PARTS LIST

ITEM	QTY	DESCRIPTION	MATERIAL	UNIT WT (KG)	TOT WT (KG)
F1	17	PL 7.94 X 2438 X 12192	ASME SA 516 GRADE 70 KILLED FINE GRAIN, NORMALIZED	1,853	31,493
F2	2	PL 7.94 X 2438 x 10769	ASME SA 516 GRADE 70 KILLED FINE GRAIN, NORMALIZED	1,634	3,268
F3	4	PL 7.94 X 2438 x 12192	ASME SA 516 GRADE 70 KILLED FINE GRAIN, NORMALIZED	1,771	7,085
F4	4	PL 7.94 X 2438 x 10693	ASME SA 516 GRADE 70 KILLED FINE GRAIN, NORMALIZED	1,408	5,630
F5	4	PL 7.94 X 2129 X 5279	ASME SA 516 GRADE 70 KILLED FINE GRAIN, NORMALIZED	669	2,675
F6	4	PL 7.94 X 2438 X 2469	ASME SA 516 GRADE 70 KILLED FINE GRAIN, NORMALIZED	354	1,416
F7	2	PL 7.94 X 2438 x 7315	ASME SA 516 GRADE 70 KILLED FINE GRAIN, NORMALIZED	1,111	2,223
F8	4	PL 7.94 X 2438 x 4837	ASME SA 516 GRADE 70 KILLED FINE GRAIN, NORMALIZED	356	1,425
F9	2	PL 7.94 X 1115 x 12043	ASME SA 516 GRADE 70 KILLED FINE GRAIN, NORMALIZED	445	890
F10	4	PL 7.94 X 2379 X 3112	ASME SA 516 GRADE 70 KILLED FINE GRAIN, NORMALIZED	423	1,690

TOT WT: 57,794

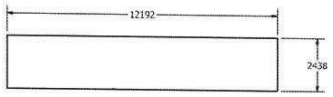

F1
QTY:17
SCALE 1 / 100

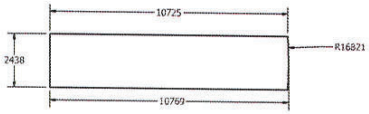

F2
QTY:2
SCALE 1 / 100

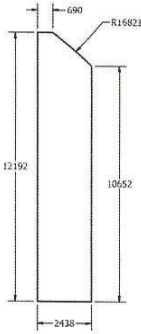

F3
QTY: 4
SCALE 1 / 100

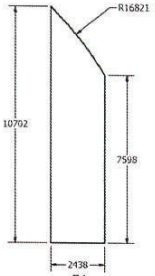

F4
QTY: 4
SCALE 1 / 100

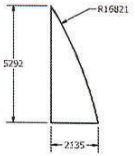

F5
QTY: 4
SCALE 1/100

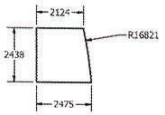

F6
QTY: 4
SCALE 1/100

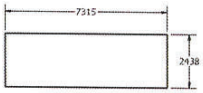

F7
QTY:2
SCALE 1/100

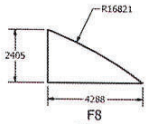

F8
QTY:4
SCALE 1/100

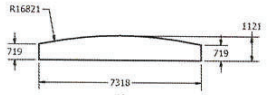

F9
QTY:2
SCALE 1/100

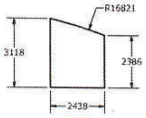

F10
QTY: 4
SCALE 1/100

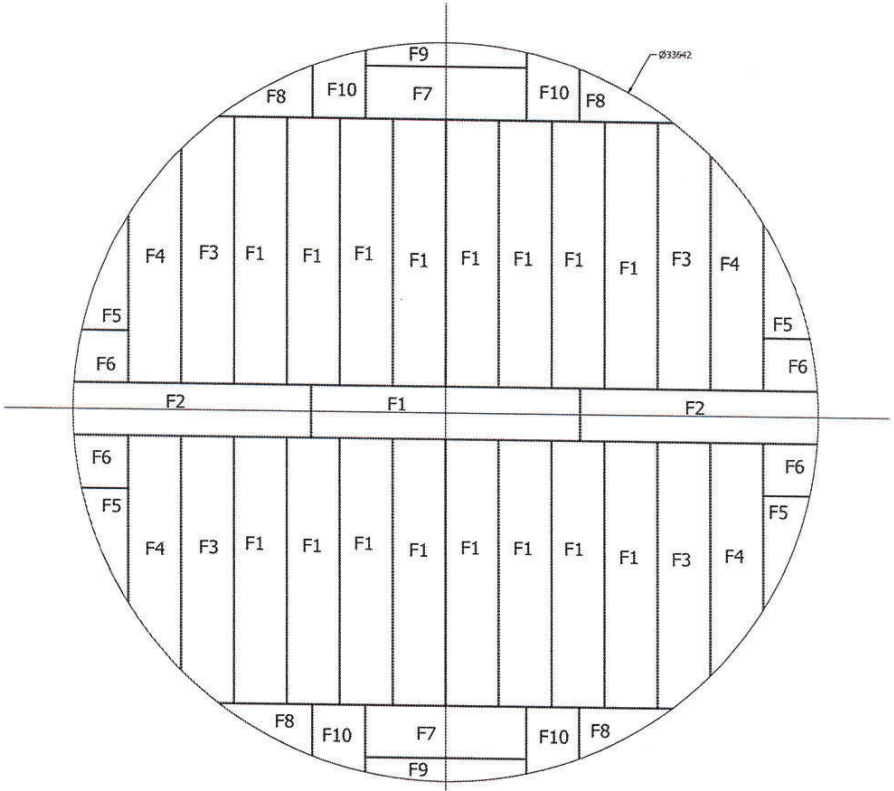

FLOOR LAYOUT
SCALE 1 / 100

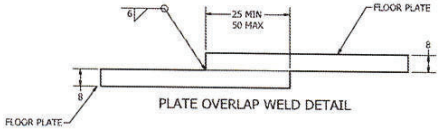

PLATE OVERLAP WELD DETAIL

15-Jun-2021

Permit Number: P471

REVISION HISTORY		
REV	DESCRIPTION	DATE
A	ISSUED FOR REVIEW	2/18/2019
1	ISSUED FOR CONSTRUCTION	6/8/2021

DRAWN: MARC LOSIER 2/18/2021
CHECKED:
QA:
MFG:
APPROVED:

TITLE: FLOOR LAYOUT

BAKER LAKE WHALE TAIL PROJECT FLOOR AND ROOF LAYOUT FOR 10,000CUM TANK #8 6170TNK43

SIZE: A1 | DWG NO: 341-M1 | REV: 1

SCALE: 1 | SHEET 1 OF 2

PARTS LIST

ITEM	QTY	DESCRIPTION	MATERIAL	UNIT WT (KG)	TOT WT (KG)
F1	17	PL 7.94 X 2438 X 12192	ASME SA 516 GRADE 70 KILLED FINE GRAIN, NORMALIZED	1,853	31,493
F2	2	PL 7.94 X 2438 x 10769	ASME SA 516 GRADE 70 KILLED FINE GRAIN, NORMALIZED	1,634	3,268
F3	4	PL 7.94 X 2438 x 12192	ASME SA 516 GRADE 70 KILLED FINE GRAIN, NORMALIZED	1,771	7,085
F4	4	PL 7.94 X 2438 x 10693	ASME SA 516 GRADE 70 KILLED FINE GRAIN, NORMALIZED	1,408	5,630
F5	4	PL 7.94 X 2139 X 5279	ASME SA 516 GRADE 70 KILLED FINE GRAIN, NORMALIZED	669	2,675
F6	4	PL 7.94 X 2438 X 2469	ASME SA 516 GRADE 70 KILLED FINE GRAIN, NORMALIZED	354	1,416
F7	2	PL 7.94 X 2438 x 7315	ASME SA 516 GRADE 70 KILLED FINE GRAIN, NORMALIZED	1,111	2,223
F8	4	PL 7.94 X 2438 x 4837	ASME SA 516 GRADE 70 KILLED FINE GRAIN, NORMALIZED	356	1,425
F9	2	PL 7.94 X 1115 x 12043	ASME SA 516 GRADE 70 KILLED FINE GRAIN, NORMALIZED	445	890
F10	4	PL 7.94 X 2379 X 3112	ASME SA 516 GRADE 70 KILLED FINE GRAIN, NORMALIZED	423	1,690

TOT WT: 57,794

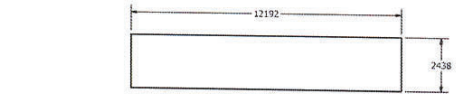

F1
QTY:17
SCALE 1 / 100

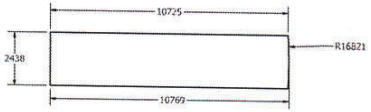

F2
QTY:2
SCALE 1 / 100

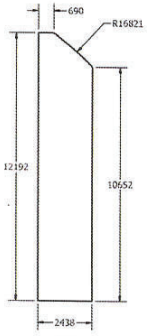

F3
QTY: 4
SCALE 1 / 100

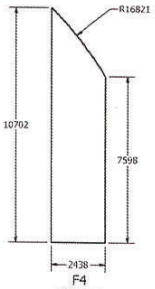

F4
QTY: 4
SCALE 1 / 100

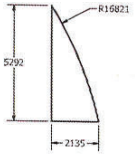

F5
QTY: 4
SCALE 1/100

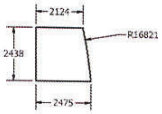

F6
QTY: 4
SCALE 1/100

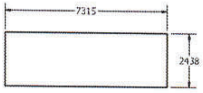

F7
QTY:2
SCALE 1/100

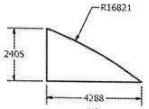

F8
QTY:4
SCALE 1/100



F9
QTY:2
SCALE 1/100

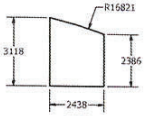

F10
QTY: 4
SCALE 1/100

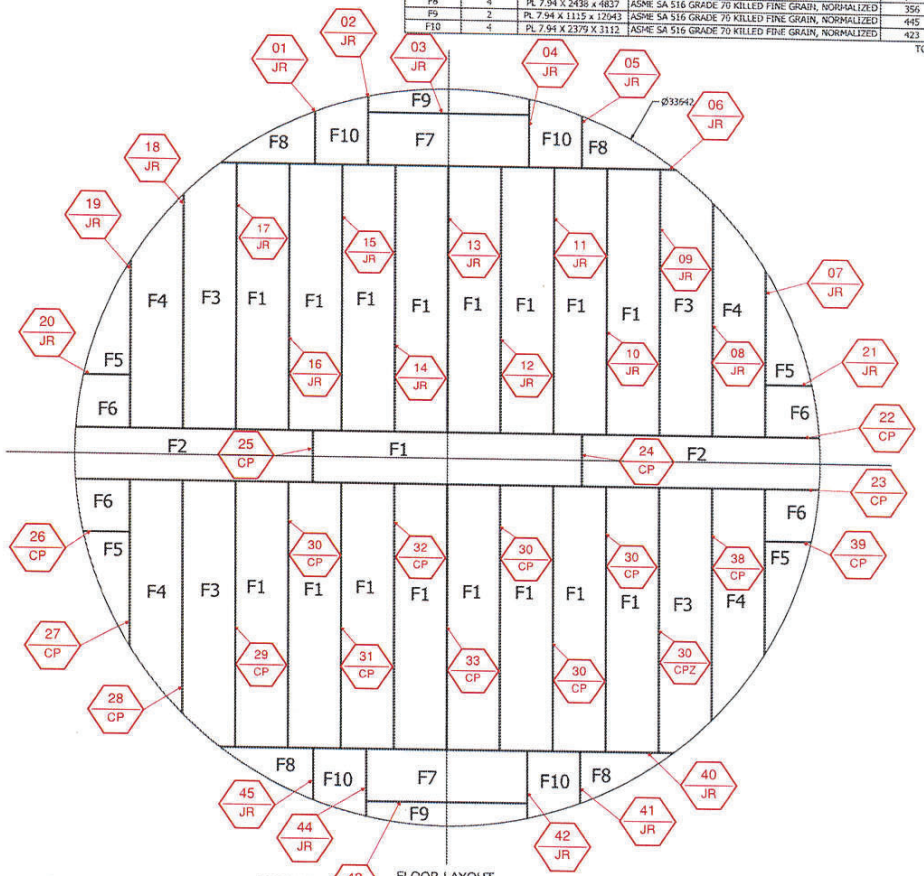

FLOOR LAYOUT
SCALE 1 / 100

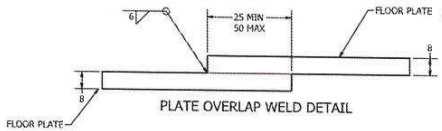

PLATE OVERLAP WELD DETAIL

15-Jun-2021
Permit Number: P471

REVISION HISTORY		
REV	DESCRIPTION	DATE
A	ISSUED FOR REVIEW	2/18/2019
1	ISSUED FOR CONSTRUCTION	6/8/2021

DRAWN	MARC LOSIER	2/18/2021
CHECKED		
QA		
MFG		
APPROVED		

TITLE: FLOOR LAYOUT

BAKER LAKE WHALE TAIL PROJECT FLOOR AND ROOF LAYOUT FOR 10,000CUM TANK #8 6170TNK43

SIZE	DWG NO	REV
A1	341-M1	1

SCALE: 1 | SHEET 1 OF 2

PARTS LIST				
ITEM	QTY	DESCRIPTION	MATERIAL	MASS
341M2101	10	RIM ANGLE 76X76X10 [3"X3"X3/8"] SEE DRG 315-M2	G40.21-300W	125 kg
341M5102	1	CENTRE COLUMN, SEE SHT 5		2741 kg
341M5103	32	INNER RAFTER W250X33 [W10"X22] SEE SHT 2	G40.21-350W	248 kg
341M5104	64	SHELL CLIP, PLATE 6 THK 152 X 189, SEE DETAIL	G40.21-300W	1 kg
341M5105	64	OUTER RAFTER W250X33 [W10"X22] SEE SHT 2	G40.21-350W	295 kg
341M5106	8	INTERMEDIATE GIRDER ASSEMBLY SEE SHT 4		570 kg
341M5107	8	INTERMEDIATE COLUMN ASSEMBLY SEE SHT 6		1285 kg
341M5108	8	GIRDER CONNECTION PLATE 13 [1/2"] THK 279 X 688 SEE DETAIL	G40.21-300W	10 kg
341M5116	128	BOLT, HEAVY HEX, 5/8" X 2.5" LG	A325	0 kg
341M5117	512	NUT, HEAVY HEX, 5/8" UNC	A325	0 kg
341M5118	1024	WASHER, PLAIN, TYPE A, 5/8"	A325	0 kg
341M5119	320	BOLT, HEAVY HEX, 5/8" X 2." LG	A325	0 kg
341M5120	64	BOLT, HEAVY HEX, 5/8" X 3" LG	A325	0 kg

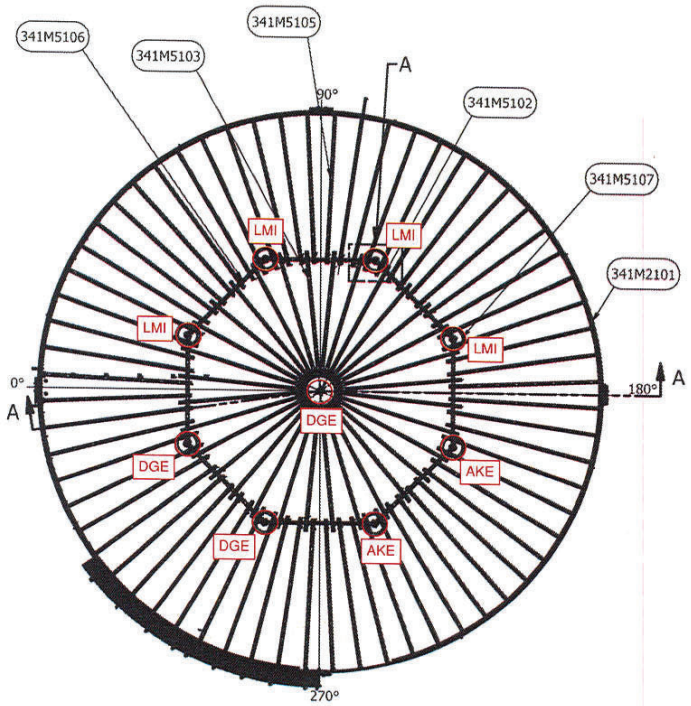

PLAN
SCALE 1/200

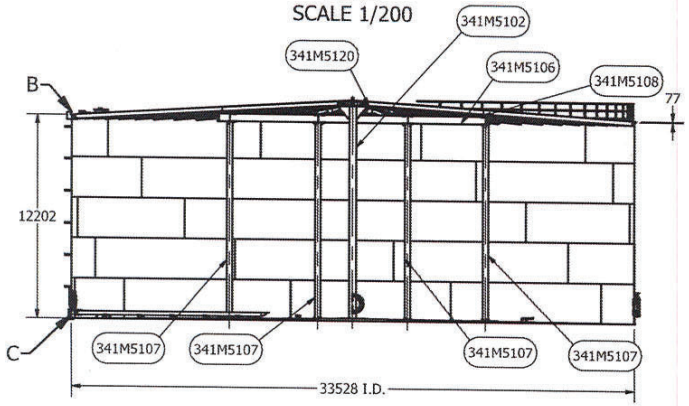

SECTION A-A
SCALE 1/200

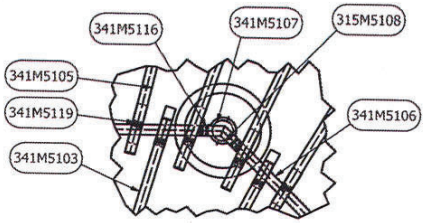

DETAIL A
SCALE 1/50

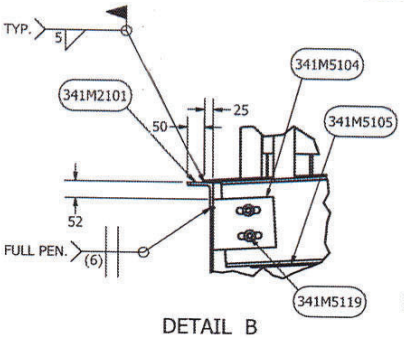

DETAIL B
SCALE 1/10

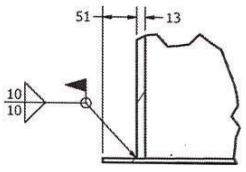

DETAIL C
SCALE 1/5

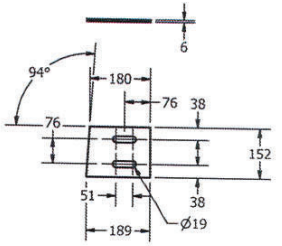

341M5104
SHELL CLIP
QTY: 64
SCALE 1/10

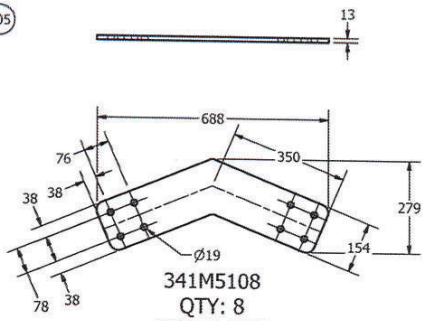

341M5108
QTY: 8
SCALE 1/10

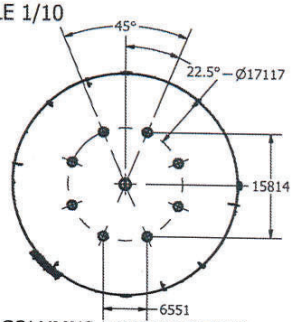

COLUMNS LAYOUT DETAIL
SCALE 1/500

REVISION HISTORY		
REV	DESCRIPTION	DATE
A	ISSUED FOR REVIEW	3/9/2021
1	ISSUED FOR CONSTRUCTION	6/8/2021

DRAWN: MARC LOSIER	3/8/2021	ROOF STRUCTURE LAYOUT
CHECKED: KYLE BROWN	3/7/2019	
QA		TITLE: BAKER LAKE WHALE TAIL PROJECT - 10M LITERS - TANK #8: 6170TNK43 - ROOF STRUCTURE
MFG		
APPROVED		

PROFESSIONAL ENGINEER — KYLE BROWN — LICENSEE — NTA/U
15-Jun-2021
Permit Number: P471

SIZE: A2 | DWG NO: 341-M5 | REV: 1
SCALE: 1/200 | SHEET 1 OF 6

VISUAL TEST REPORT

Customer: AGNICO EAGLE

Location: BAKER LAKE

Code Requiring Test: API 650 (section 8.5.2) Reason for Test: New Construction

A weld shall be acceptable by visual examination if the inspection shows the following.

a) There are no crater cracks, other surface cracks or arc strikes in or adjacent to the welded joints.
b) Maximum permissible undercut is 0.4 mm (1/64 in.) in depth for vertical butt joints, vertically oriented permanent attachments, attachment welds for nozzles, manholes, flush-type openings, and the inside shell-to-bottom welds. For horizontal butt joints, horizontally oriented permanent attachments, and annular-ring butt joints, the maximum permissible undercut is 0.8 mm (1/32 in.) in depth.
c) The frequency of surface porosity in the weld does not exceed one cluster (one or more pores) in any 100 mm (4 in.) of length, and the diameter of each cluster does not exceed 2.5 mm (3/32 in.).
d) The reinforcement of the welds on all thicknesses:

Plate Thickness mm (in.)	Maximum Reinforcement Thickness mm (in.)	
	Vertical Joints	Horizontal Joints
≤ 13 (1/2)	2.5 (3/32)	3 (1/8)
> 13 (1/2) to 25 (1)	3 (1/8)	5 (3/16)
> 25 (1)	5 (3/16)	6 (1/4)

Surface Condition (As Welded)

Test Solution: N/A Test Date(s): 2021-08-18

Tested by: Matthew MacKenzie Ambient Conditions: 10 Degrees Celcius

Items Tested:

FLOOR WELDS.

Results:

ALL WELDING ACCEPTABLE AT TIME OF INSPECTION.

STS Representative Signature: Matthew MacKenzie Date: 2021-08-18

Client Representative Signature: [signature] Date: 4th 10 Sept 21

Exhibit 14, Rev 1

VACUUM BOX TEST REPORT – FLOOR PLATE WELDS

Customer: AGNICO EAGLE

Location: BAKER LAKE

Equipment Tag No.: TANK 8

Equipment Description:

Code Requiring Test: API 650 Reason for Test: New Construction

(A vacuum box/soap solution test for floor plate weld seams is required for new construction or major alterations, no visible leaks should be observed)

Test Solution: Water / Snoop Ambient Conditions: 10 Degrees Celcius

Test Date(s): 2021-08-30 Surface Condition: Clean

Tested by: Matthew MacKenzie Surface Test Temperature: 10 Degrees Celcius

Pressure Gauge:

Items Tested:

Floor plates

Results:

No leak detected

Acceptable at time of Inspection.

STS Representative Signature: Matthew MacKenzie Date: 2021-08-30

Client Representative Signature: Date: 4 Sept 21

SECTION 9.0

Shell to Floor Seams

Inside Floor Corner Joint - Floor to Shell Weld

PARTS LIST					
ITEM	QTY	DESCRIPTION	MATERIAL	UNIT WT (KG)	TOT WT (KG)
F1	17	PL 7.94 X 2438 X 12192	ASME SA 516 GRADE 70 KILLED FINE GRAIN, NORMALIZED	1,853	31,493
F2	2	PL 7.94 X 2438 x 10769	ASME SA 516 GRADE 70 KILLED FINE GRAIN, NORMALIZED	1,634	3,268
F3	4	PL 7.94 X 2438 x 12192	ASME SA 516 GRADE 70 KILLED FINE GRAIN, NORMALIZED	1,771	7,085
F4	4	PL 7.94 X 2438 x 10693	ASME SA 516 GRADE 70 KILLED FINE GRAIN, NORMALIZED	1,408	5,630
F5	4	PL 7.94 X 2129 X 5279	ASME SA 516 GRADE 70 KILLED FINE GRAIN, NORMALIZED	669	2,675
F6	4	PL 7.94 X 2438 X 2469	ASME SA 516 GRADE 70 KILLED FINE GRAIN, NORMALIZED	354	1,416
F7	2	PL 7.94 X 2438 x 7315	ASME SA 516 GRADE 70 KILLED FINE GRAIN, NORMALIZED	1,111	2,223
F8	4	PL 7.94 X 2438 x 4837	ASME SA 516 GRADE 70 KILLED FINE GRAIN, NORMALIZED	356	1,425
	2	PL 7.94 X 1115 x 12043	ASME SA 516 GRADE 70 KILLED FINE GRAIN, NORMALIZED	445	890
	4	2379 X 3112	ASME SA 516 GRADE 70 KILLED FINE GRAIN, NORMALIZED	423	1,693
				TOT WT:	57,794

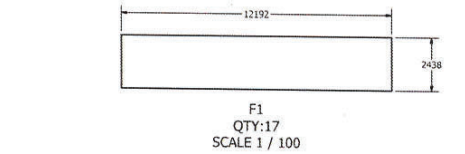

F1
QTY:17
SCALE 1 / 100

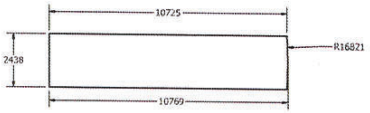

F2
QTY:2
SCALE 1 / 100

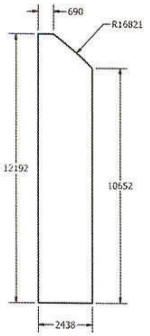

F3
QTY: 4
SCALE 1 / 100

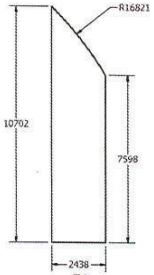

F4
QTY: 4
SCALE 1 / 100

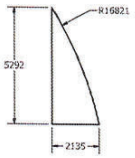

F5
QTY: 4
SCALE 1/100

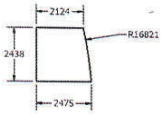

F6
QTY: 4
SCALE 1/100

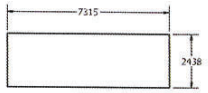

F7
QTY:2
SCALE 1/100

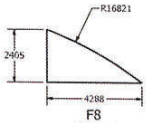

F8
QTY:4
SCALE 1/100

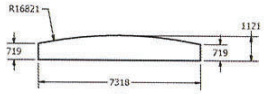

F9
QTY:2
SCALE 1/100

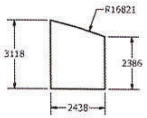

F10
QTY: 4
SCALE 1/100

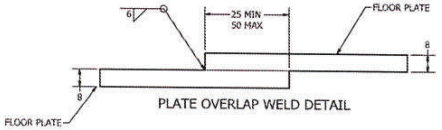

PLATE OVERLAP WELD DETAIL

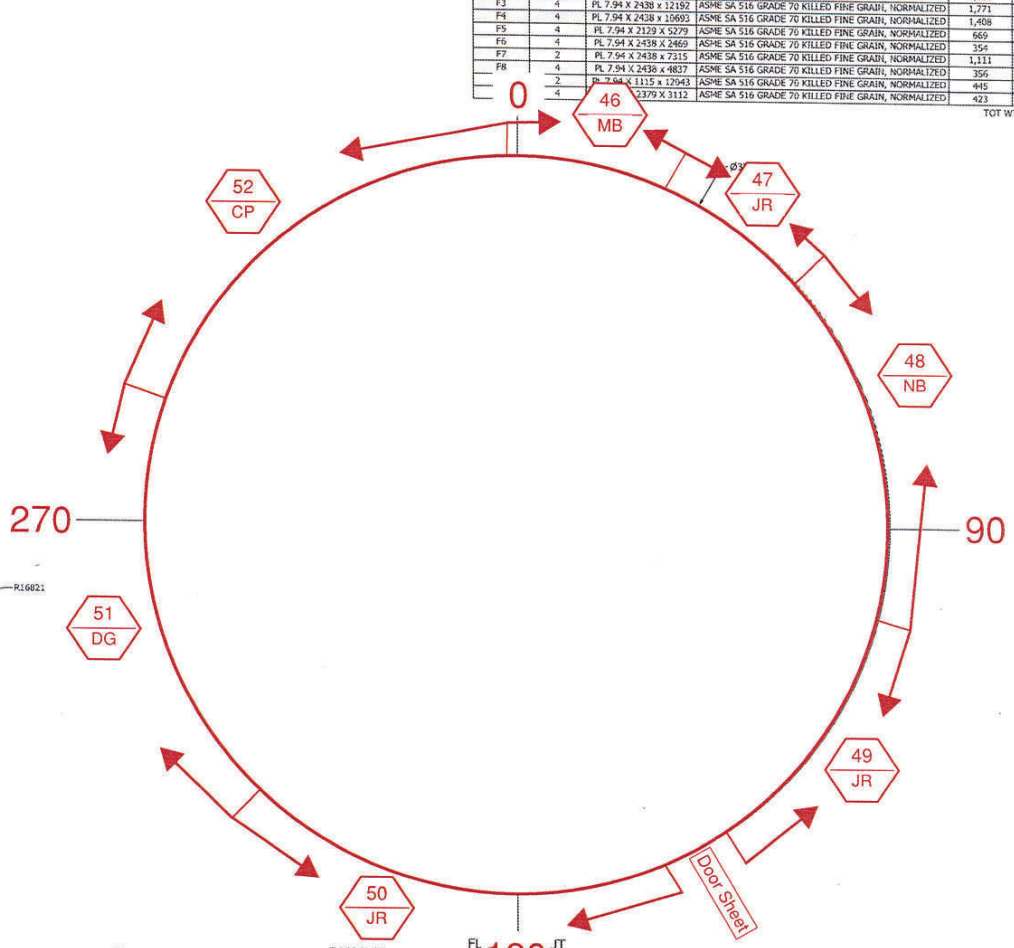

REVISION HISTORY		
REV	DESCRIPTION	DATE
A	ISSUED FOR REVIEW	2/18/2019
1	ISSUED FOR CONSTRUCTION	6/8/2021

DRAWN: MARC LOSIER 2/18/2021
CHECKED
QA
MFG
APPROVED

15-Jun-2021
Permit Number: P471

FLOOR LAYOUT

TITLE: BAKER LAKE WHALE TAIL PROJECT FLOOR AND ROOF LAYOUT FOR 10,000CUM TANK #8 6170TNK43

SIZE: A1 | DWG NO: 341-M1 | REV: 1
SCALE: 1 | SHEET 1 OF 2

QUALITY CONTROL MANUAL

VISUAL TEST REPORT

Customer: AGNICO EAGLE

Location: BAKER LAKE

Code Requiring Test: API 650 (section 8.5.2) Reason for Test: New Construction

A weld shall be acceptable by visual examination if the inspection shows the following.

a) There are no crater cracks, other surface cracks or arc strikes in or adjacent to the welded joints.
b) Maximum permissible undercut is 0.4 mm (1/64 in.) in depth for vertical butt joints, vertically oriented permanent attachments, attachment welds for nozzles, manholes, flush-type openings, and the inside shell-to-bottom welds. For horizontal butt joints, horizontally oriented permanent attachments, and annular-ring butt joints, the maximum permissible undercut is 0.8 mm (1/32 in.) in depth.
c) The frequency of surface porosity in the weld does not exceed one cluster (one or more pores) in any 100 mm (4 in.) of length, and the diameter of each cluster does not exceed 2.5 mm (3/32 in.).
d) The reinforcement of the welds on all thicknesses:

Plate Thickness mm (in.)	Maximum Reinforcement Thickness mm (in.)	
	Vertical Joints	Horizontal Joints
≤ 13 (1/2)	2.5 (3/32)	3 (1/8)
> 13 (1/2) to 25 (1)	3 (1/8)	5 (3/16)
> 25 (1)	5 (3/16)	6 (1/4)

Surface Condition (As Welded)

Test Solution: N/A Test Date(s): 2021-08-23

Tested by: Matthew MacKenzie Ambient Conditions: 10 Degrees Celcius

Items Tested:

Shell to bottom seam weld.

Results:

No leaks detected at the time of inspection; acceptable to code.

VISUAL INSPECTION ACCEPTABLE AT TIME OF INSPECTION

STS Representative Signature: _____ Date: 2021-08-23

Client Representative Signature: Mario Marcil Date: 08-29-21

QUALITY CONTROL MANUAL

VISUAL TEST REPORT

Customer: AGNICO EAGLE

Location: BAKER LAKE

Code Requiring Test: API 650 (section 8.5.2) Reason for Test: New Construction

A weld shall be acceptable by visual examination if the inspection shows the following.

a) There are no crater cracks, other surface cracks or arc strikes in or adjacent to the welded joints.
b) Maximum permissible undercut is 0.4 mm (1/64 in.) in depth for vertical butt joints, vertically oriented permanent attachments, attachment welds for nozzles, manholes, flush-type openings, and the inside shell-to-bottom welds. For horizontal butt joints, horizontally oriented permanent attachments, and annular-ring butt joints, the maximum permissible undercut is 0.8 mm (1/32 in.) in depth.
c) The frequency of surface porosity in the weld does not exceed one cluster (one or more pores) in any 100 mm (4 in.) of length, and the diameter of each cluster does not exceed 2.5 mm (3/32 in.).
d) The reinforcement of the welds on all thicknesses:

Plate Thickness mm (in.)	Maximum Reinforcement Thickness mm (in.)	
	Vertical Joints	Horizontal Joints
≤ 13 (1/2)	2.5 (3/32)	3 (1/8)
> 13 (1/2) to 25 (1)	3 (1/8)	5 (3/16)
> 25 (1)	5 (3/16)	6 (1/4)

Surface Condition (As Welded)

Test Solution: N/A Test Date(s): 2021-08-31

Tested by: Matthew MacKenzie Ambient Conditions: 10 Degrees Celcius

Items Tested:

SHELL TO FLOOR FINAL PASS.

Results:

ALL WELDING ACCEPTABLE AT TIME OF INSPECTION.

STS Representative Signature: Matthew MacKenzie Date: 2021-08-31

Client Representative Signature: [signature] Date: Sept 8TH 2021

Exhibit 24, Rev 1

DIESEL TEST REPORT (SHELL TO BOTTOM WELD)

Customer: AGNICO EAGLE

Location: BAKER LAKE

Equipment Tag No.: TK 8

Equipment Type: Above Ground Storage Tank

Equipment Description: Diesel Storage Tank

Code Requiring Test: API 650 (section 7.2.4) Reason for Test: New Construction

(The initial weld pass inside the shell shall have all slag and non-metals removed from the surface of the weld and then examined for its entire circumference both visually and applying a high Flash-point penetrating oil such as light diesel to the gap between the shell and the bottom, letting stand for at least four hours, and examining the weld for evidence of wicking.)

Surface Condition (As Welded)

Test Solution: Diesel Test Date(s): 2021-08-23

Tested by: Matthew MacKenzie Ambient Conditions: 10 Degrees Celcius

Items Tested:

Shell to bottom seam weld, excluding door sheet area.

Results:

No leaks detected at the time of inspection; acceptable to code.

STS Representative Signature: _____ Date: 2021-08-23

Client Representative Signature: Mario Marcil Date: 08-29-21

Exhibit 25, Rev 1

DIESEL TEST REPORT (SHELL)

Customer: AGNICO EAGLE

Location: BAKER LAKE

Equipment Tag No.: TK 8

Equipment Type: Above Ground Storage Tank

Equipment Description: Diesel Storage Tank

Code Requiring Test: API 650 (section 7.3.5) Reason for Test: New Construction

(The shell shall be tested by painting all of the joints on the inside with a highly penetrating oil and carefully examining the outside of the joints for leakage.)

Surface Condition (As Welded)

Test Solution: Diesel Test Date(s): 2021-09-05

Tested by: Matthew MacKenzie Ambient Conditions: 10 Degrees Celcius

Items Tested:

Shell to bottom seam weld at door sheet area.

Results:

No leaks detected at the time of inspection; acceptable to code.

STS Representative Signature: Matthew MacKenzie Date: 2021-09-05

Client Representative Signature: Date: Sept 8TH 2021

Exhibit 26, Rev 1

SECTION 10.0

Shell

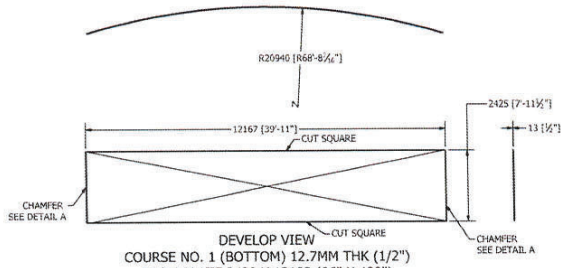

DEVELOP VIEW
COURSE NO. 1 (BOTTOM) 12.7MM THK (1/2")
FROM PLATE 2438 X 12192 (96" X 480")
QTY: 8
MARK C1

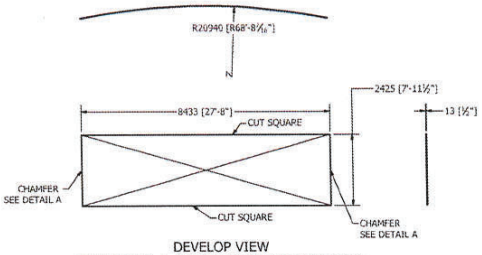

DEVELOP VIEW
COURSE NO. 1 (BOTTOM) 12.7MM THK (1/2")
FROM PLATE 2438 X 12192 (96" X 480")
QTY: 1
MARK C1S

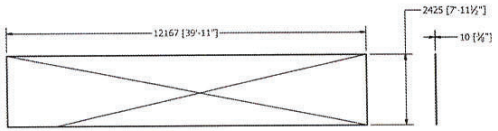

DEVELOP VIEW
COURSE NO. 2 - 9.5MM THK (3/8")
FROM PLATE 2438 X 12192 (96" X 480")
DO NOT ROLL
QTY: 8
MARK C2

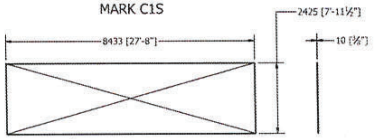

DEVELOP VIEW
COURSE NO. 2 - 9.5MM THK (3/8")
FROM PLATE 2438 X 12192 (96" X 480")
DO NOT ROLL
QTY: 1
MARK C2S

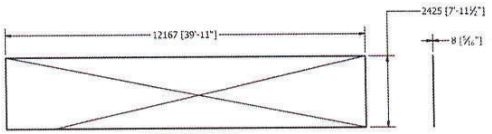

DEVELOP VIEW
COURSE NO. 3 & 4 - 7.9MM THK (5/16")
FROM PLATE 2438 X 12192 (96" X 480")
DO NOT ROLL
QTY: 16
MARK C3 & C4

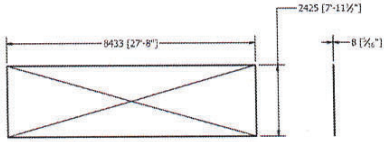

DEVELOP VIEW
COURSE NO. 3 & 4 - 7.9MM THK (5/16")
FROM PLATE 2438 X 12192 (96" X 480")
DO NOT ROLL
QTY: 2
MARK C3S & C4S

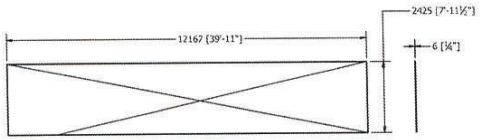

DEVELOP VIEW
COURSE NO. 5 - 6.4MM THK (1/4")
FROM PLATE 2438 X 12192 (96" X 480")
DO NOT ROLL
QTY: 8
MARK C5

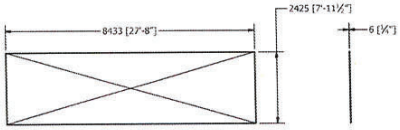

DEVELOP VIEW
COURSE NO. 5 - 6.4MM THK (1/4")
FROM PLATE 2438 X 12192 (96" X 480")
DO NOT ROLL
QTY: 1
MARK C5S

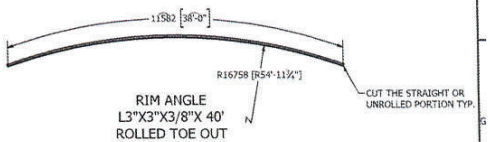

RIM ANGLE
L3"X3"X3/8"X 40'
ROLLED TOE OUT
QTY: 10
MARK 315M2101

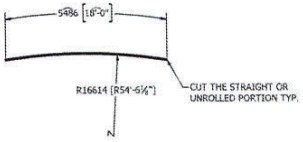

ROOF TOP ANGLE
L2"X2"X1/4"X 20'
ROLLED TOE OUT
QTY: 20
315M2102

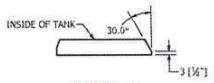

DETAIL A
COURSE NO. 1 VERT. PREP.
TYP. BOTH ENDS
SCALE 1 / 2

STS STORAGE TANK SOLUTIONS **AS BUILT STAMP**

☐ CHANGE ☒ NO CHANGE

NAME: Lindsay C Bolton
SIGNATURE: LCB
DATE: September 6, 2021

NOTES:
ONLY COURSE NO. 1 SHELL PLATES REQUIRE SHOP ROLLING
SHELL PLATES TO BE CHECKED CORNER TO CORNER FOR SQUARENESS
STEEL PLATES:ASME SA 516 GRADE 70 KILLED FINE GRAIN, NORMALIZED SUPPLIED BY ICL
STEEL SHAPES: CSA G40.21M 300W SUPPLIED BY TECHFORM

REVISION HISTORY		
REV	DESCRIPTION	DATE
A	ISSUED FOR REVIEW	2/5/2019
1	ISSUED FOR CONSTRUCTION	6/8/2021

DRAWN	Marc Losier	2/18/2021
CHECKED		
QA		
MFG		
APPROVED		

SHELL PLATES AND RIM ANGLE CUTTING AND ROLLING DETAILS

TITLE: BAKER LAKE WHALE TAIL PROJECT - 10M LITERS - TANK #8: 6170TNK43

SIZE: A1 | DWG NO: 341-M2 | REV: 1 | SCALE | SHEET 1 OF 2

15-Jun-2021
Permit Number: P471

Tank #8 Baker Lake (AEM)

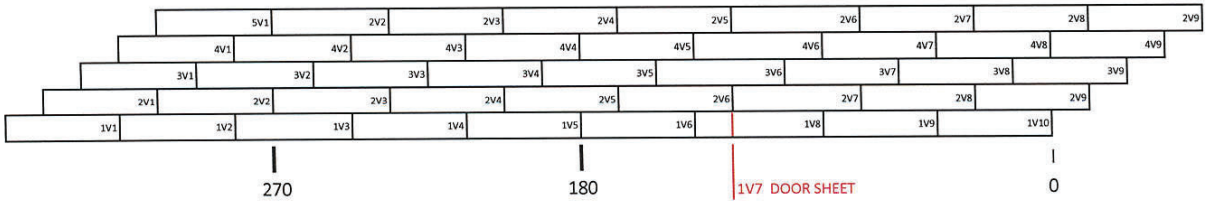

VERTS (Welder ID)

	IN	OUT
1V1	CPO	CPO
1V2	LMI	LMI
1V3	AKE	AKE
1V4	JNE	JNE
1V5	DGE	DGE
1V6	JNE	JNE
1V7	SFO	SFO
1V8	JNE	JNE
1V9	DGE	DGE
1V10	DGE	DGE

	IN	OUT
2V1	CJA	DGE
2V2	CJA	DGE
2V3	DGE	CPO
2V4	CPO	CPO
2V5	JNE	JNE
2V6	JNE	JNE
2V7	JNE	JNE
2V8	DGE	DGE
2V9	CPO	DGE

	IN	OUT
3V1	DGE	JNE
3V2	DGE	DGE
3V3	JNE	JNE
3V4	JRY	JRY
3V5	JRY	JRY
3V6	CPO	JRY
3V7	DGE	JRY
3V8	DGE	JRY
3V9	JNE	DGE

	IN	OUT
4V1	JNE	JNE
4V2	SFO	SFO
4V3	CPO	CPO
4V4	CPO	CPO
4V5	CPO	CPO
4V6	DGE	JRY
4V7	DGE	JRY
4V8	DGE	JNE
4V9	JNE	JNE

	IN	OUT
5V1	JNE	JNE
5V2	MBO	MBO
5V3	JRY	MBO
5V4	JRY	JRY
5V5	JRY	JRY
5V6	JRY	JRY
5V7	SFO	SFO
5V8	SFO	SFO
5V9	SFO	SFO

HORIZONTAL (Welder ID)

	IN	OUT
H1	JRY	CJA
DOOR SHEET	JNE/SFO	JNE/SFO

	IN	OUT
H2	JRY	CJA

	IN	OUT
H3	CPO	LMI

	IN	OUT
H4	JRY	LMI

PLATE IDENTIFICATION

	Heat Number
1V1	813P63640
1V2	813P63640
1V3	813P63640
1V4	813P63640
1V5	813P63640
1V6	0605092-03
1V7	0605092-03
1V8	0605092-03
1V9	823P63640
1V10	823P63640

	Heat Number
2V1	813S61760
2V2	0605092-05
2V3	813S61760
2V4	812P33310
2V5	812P33310
2V6	812P33310
2V7	812P33310
2V8	813S61760
2V9	812P33310

	Heat Number
3V1	1600012-01
3V2	1600012-01
3V3	1600012-01
3V4	1600012-02
3V5	1600012-02
3V6	1600012-02
3V7	0604883-06
3V8	1600012-01
3V9	1600012-01

	Heat Number
4V1	811S00740
4V2	811S00740
4V3	811S00740
4V4	811S00740
4V5	811S00740
4V6	1600012-01
4V7	811S00740
4V8	811S00740
4V9	811S00740

	Heat Number
5V1	20002201
5V2	20002201
5V3	20002201
5V4	20002201
5V5	20002201
5V6	20002201
5V7	20002201
5V8	20002201
5V9	20002201

Tank #8 Baker Lake (AEM)

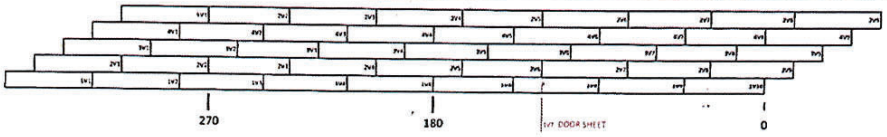

NDT TECHNICIAN WILL INITIAL EACH BOX WHEN WELD IS ACCEPTABLE

B ---> BOTTOM OF THE VERT (0-6") | M ---> MIDDLE OF THE VERT (45"-51") | T ---> TOP OF THE VERT (90"-96")

VERTICAL SEAMS MAPPING UT

	B	M	T	FULL
1V1				
1V2				
1V3				
1V4				
1V5				
1V6				
1V7				
1V8				
1V9				
1V10				

	B	T
2V1		
2V2		
2V3		
2V4		
2V5		
2V6		
2V7		
2V8		
2V9		

	B	T
3V1		
3V2		
3V3		
3V4		
3V5		
3V6		
3V7		
3V8		
3V9		

	B	T
4V1		
4V2		
4V3		
4V4		
4V5		
4V6		
4V7		
4V8		
4V9		

	B	T
5V1		
5V2		
5V3		
5V4		
5V5		
5V6		
5V7		
5V8		
5V9		

HORIZONTAL SEAMS MAPPING UT

H1V2	30"-36"	6"
H1V8	42"-48"	6"
Middle door sheet		6"

H2V3	24"-30"	6"
H2V9	36"-42"	6"

H3V1	60"-66"	6"
H3V7	42"-48"	6"

H4V5	24"-30"	6"
H4V9	36"-42"	6"

STS Representative Signature: _____ Date: Sept 7/21

Client Representative Signature: _____ Date: Sept 8TH 2021

NDT Representative Signature: _____ Date: Sept 06 /2021

NDT Representative CGSB No.: 17073

QUALITY CONTROL MANUAL

VISUAL TEST REPORT

Customer: AGNICO EAGLE

Location: BAKER LAKE

Code Requiring Test: API 650 (section 8.5.2) Reason for Test: New Construction

A weld shall be acceptable by visual examination if the inspection shows the following.

a) There are no crater cracks, other surface cracks or arc strikes in or adjacent to the welded joints.
b) Maximum permissible undercut is 0.4 mm (1/64 in.) in depth for vertical butt joints, vertically oriented permanent attachments, attachment welds for nozzles, manholes, flush-type openings, and the inside shell-to-bottom welds. For horizontal butt joints, horizontally oriented permanent attachments, and annular-ring butt joints, the maximum permissible undercut is 0.8 mm (1/32 in.) in depth.
c) The frequency of surface porosity in the weld does not exceed one cluster (one or more pores) in any 100 mm (4 in.) of length, and the diameter of each cluster does not exceed 2.5 mm (3/32 in.).
d) The reinforcement of the welds on all thicknesses:

Plate Thickness mm (in.)	Maximum Reinforcement Thickness mm (in.)	
	Vertical Joints	Horizontal Joints
≤ 13 (1/2)	2.5 (3/32)	3 (1/8)
> 13 (1/2) to 25 (1)	3 (1/8)	5 (3/16)
> 25 (1)	5 (3/16)	6 (1/4)

Surface Condition (As Welded)

Test Solution: N/A Test Date(s): 2021-08-25

Tested by: Matthew MacKenzie Ambient Conditions: 10 Degrees Celcius

Items Tested:

Vertical and Horizontal Seams

Results:

Acceptable at time of Inspection.

STS Representative Signature: _____ Date: 2021-08-25

Client Representative Signature: Mario Marcil Date: 29-08-21

QUALITY CONTROL MANUAL

VISUAL TEST REPORT

Customer: AGNICO EAGLE

Location: BAKER LAKE

Code Requiring Test: API 650 (section 8.5.2) Reason for Test: New Construction

A weld shall be acceptable by visual examination if the inspection shows the following.

a) There are no crater cracks, other surface cracks or arc strikes in or adjacent to the welded joints.
b) Maximum permissible undercut is 0.4 mm (1/64 in.) in depth for vertical butt joints, vertically oriented permanent attachments, attachment welds for nozzles, manholes, flush-type openings, and the inside shell-to-bottom welds. For horizontal butt joints, horizontally oriented permanent attachments, and annular-ring butt joints, the maximum permissible undercut is 0.8 mm (1/32 in.) in depth.
c) The frequency of surface porosity in the weld does not exceed one cluster (one or more pores) in any 100 mm (4 in.) of length, and the diameter of each cluster does not exceed 2.5 mm (3/32 in.).
d) The reinforcement of the welds on all thicknesses:

Plate Thickness mm (in.)	Maximum Reinforcement Thickness mm (in.)	
	Vertical Joints	Horizontal Joints
≤ 13 (1/2)	2.5 (3/32)	3 (1/8)
> 13 (1/2) to 25 (1)	3 (1/8)	5 (3/16)
> 25 (1)	5 (3/16)	6 (1/4)

Surface Condition (As Welded)

Test Solution: N/A Test Date(s): 2021-08-25

Tested by: Matthew MacKenzie Ambient Conditions: 10 Degrees Celcius

Items Tested:

Vertical and Horizontal Seams at DOOR SHEET AREA.

Results:

Acceptable at time of Inspection.

STS Representative Signature: _____ Date: 2021-08-25

Client Representative Signature: _____ Date: SEPT 8TH 2021

Exhibit 25, Rev 1

DIESEL TEST REPORT (SHELL)

Customer: AGNICO EAGLE

Location: BAKER LAKE

Equipment Tag No.: TK 8

Equipment Type: Above Ground Storage Tank

Equipment Description: Diesel Storage Tank

Code Requiring Test: API 650 (section 7.3.5) Reason for Test: New Construction

(The shell shall be tested by painting all of the joints on the inside with a highly penetrating oil and carefully examining the outside of the joints for leakage.)

Surface Condition (As Welded)

Test Solution: Diesel Test Date(s): 2021-08-25

Tested by: Matthew MacKenzie Ambient Conditions: 10 Degrees Celcius

Items Tested:

Shell to bottom seam weld; excluding door sheet area.

SHELL WELDS, EXCLUDING DOOR SHEET AREA.

Results:

No leaks detected at the time of inspection; acceptable to code.

STS Representative Signature: _____ Date: 2021-08-25

Client Representative Signature: Mario Marcil Date: 08-29-21

Exhibit 26, Rev 1

Exhibit 25, Rev 1

DIESEL TEST REPORT (SHELL)

Customer: AGNICO EAGLE

Location: BAKER LAKE

Equipment Tag No.: TK 8

Equipment Type: Above Ground Storage Tank

Equipment Description: Diesel Storage Tank

Code Requiring Test: API 650 (section 7.3.5) Reason for Test: New Construction

(The shell shall be tested by painting all of the joints on the inside with a highly penetrating oil and carefully examining the outside of the joints for leakage.)

Surface Condition (As Welded)

Test Solution: Diesel Test Date(s): 2021-09-05

Tested by: Matthew MacKenzie Ambient Conditions: 10 Degrees Celcius

Items Tested:

Shell to bottom seam weld at door sheet area.

VERTICAL & HORIZONTAL WELDS ON DOOR SHEET.

Results:

No leaks detected at the time of inspection; acceptable to code.

STS Representative Signature: Matthew MacKenzie Date: 2021-09-05

Client Representative Signature: [signature] Date: Sept 8th 2021

Exhibit 16, Rev 1

DIMENSIONAL CHECK REPORT – PEAKING

Customer: AGNICO EAGLE

Location: BAKER LAKE

Equipment Tag No.: TK 8

Equipment Type: DIESEL STORAGE TANK

Equipment Description:

Code Requiring Test: API 650 Reason for Test: New Construction

(Each vertical seam will be checked for peaking and max. peak dimension recorded for that seam.)

Test Date(s): 2021-08-25

Tested by: Matthew MacKenzie

Seam Test Results:

First Course Shell:	☑ Pass	☐ Fail
Second Course Shell:	☑ Pass	☐ Fail
Third Course Shell:	☑ Pass	☐ Fail
Forth Course Shell:	☑ Pass	☐ Fail
Fifth Course Shell:	☑ Pass	☐ Fail
Door Sheet:	☑ Pass	☐ Fail

STS Representative Signature: Matthew MacKenzie Date: 2021-08-25

Client Representative Signature: [signature] Date: 08-29-21

DIMENSIONAL CHECK REPORT – BANDING

Customer: AGNICO EAGLE

Location: BAKER LAKE

Equipment Tag No.: TK 8

Equipment Type: DIESEL STORAGE TANK

Equipment Description:

Code Requiring Test: API 650 Reason for Test: New Construction

(Each circumferential seam will be checked for banding and max. banding dimension recorded for that seam. Circumferential seams will be checked at 45 degree intervals or less, max. 20' spacing)

Test Date(s): 2021-08-25

Tested by: Matthew MacKenzie

Seam Test Results:

First Vertical Seam:	☑ Pass	☐ Fail
Second Vertical Seam:	☑ Pass	☐ Fail
Third Vertical Seam:	☑ Pass	☐ Fail
Fourth Vertical Seam:	☑ Pass	☐ Fail
Door Seams:	☑ Pass	☐ Fail

STS Representative Signature: Matthew MacKenzie Date: 2021-08-25

Client Representative Signature: [signature] Date: 08-29-21

Exhibit 18, Rev 1

DIMENSIONAL CHECK REPORT – ROUNDNESS

Customer: AGNICO EAGLE

Location: BAKER LAKE

Equipment Tag No.: TK 8

Equipment Type: Above Ground Storage Tank

Equipment Description: Diesel Storage Tank

Code Requiring Test: API 650 Reason for Test: New Construction

(The tank shell will be checked for roundness at 12" above the tank floor. Roundness will be checked at 45 degree intervals or less, max. 20' spacing)

Test Date(s): 2021-08-18

Tested by: Matthew MacKenzie

Seam Test Results:

Acceptable at time of Inspection.

STS Representative Signature: Matthew MacKenzie Date: 2021-08-18

Client Representative Signature: [signature] Date: 4 Sept 21

Exhibit 19, Rev 1

DIMENSIONAL CHECK REPORT – PLUMBNESS

Customer: AGNICO EAGLE

Location: BAKER LAKE

Equipment Tag No.: TK 8

Equipment Type: Above Ground Storage Tank

Equipment Description: Diesel Storage Tank

Code Requiring Test: API 650 Reason for Test: New Construction

(The tank shell will be checked for plumb at 12" below the tank roof. Plumb measurements will be checked at 45 degree intervals or less, max. 20' spacing)

Test Date(s): August 21/21

Tested by: Matt Mackenzie

Test Results:

All measurements are acceptable at time of inspection.

STS Representative Signature: _____ Date: August 21/21

Client Representative Signature: _____ Date: 4th Sept 21

SECTION 11.0

Compression Ring

Roof to Compression Ring Weld Mapping

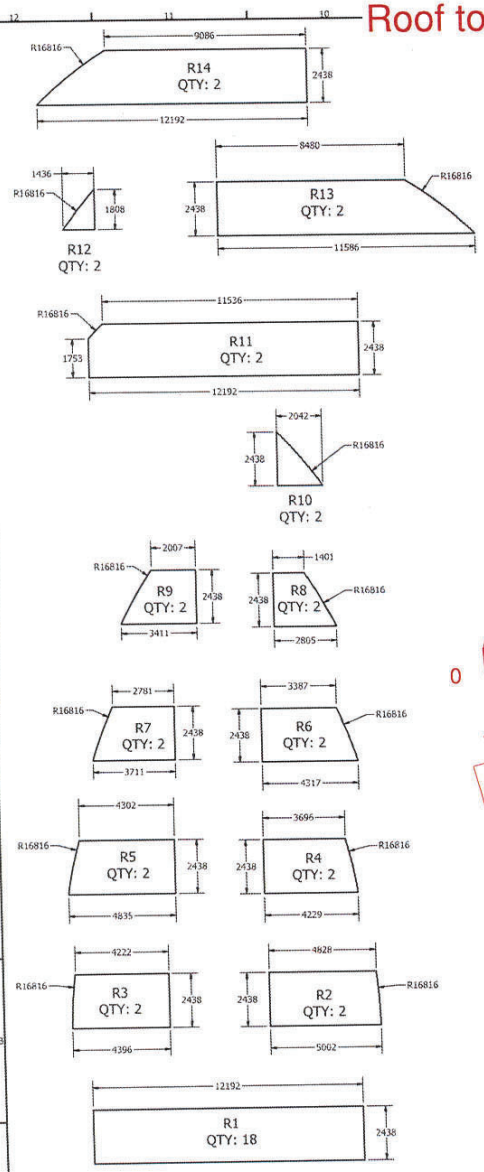

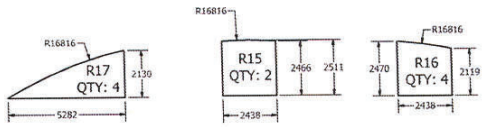

PARTS LIST

ITEM	QTY	DESCRIPTION	MATERIAL	UNIT WT (KG)	TOT WT (KG)
R1	18	PL 6.35 X 2438 X 12192	ASME SA 516 GRADE 70 KILLED FINE GRAIN, AS ROLLED	1481	26658
R2	2	PL 6.35 X 2438 X 5002	ASME SA 516 GRADE 70 KILLED FINE GRAIN, AS ROLLED	601	1202
R3	2	PL 6.35 X 2438 X 4596	ASME SA 516 GRADE 70 KILLED FINE GRAIN, AS ROLLED	527	1054
R4	2	PL 6.35 X 2438 X 4229	ASME SA 516 GRADE 70 KILLED FINE GRAIN, AS ROLLED	485	970
R5	2	PL 6.35 X 2438 X 4825	ASME SA 516 GRADE 70 KILLED FINE GRAIN, AS ROLLED	559	1118
R6	2	PL 6.35 X 2438 X 4317	ASME SA 516 GRADE 70 KILLED FINE GRAIN, AS ROLLED	473	946
R7	2	PL 6.35 X 2438 X 3711	ASME SA 516 GRADE 70 KILLED FINE GRAIN, AS ROLLED	398	796
R8	2	PL 6.35 X 2438 X 2805	ASME SA 516 GRADE 70 KILLED FINE GRAIN, AS ROLLED	261	522
R9	2	PL 6.35 X 2438 X 3411	ASME SA 516 GRADE 70 KILLED FINE GRAIN, AS ROLLED	334	668
R10	2	PL 6.35 X 2438 X 2042	ASME SA 516 GRADE 70 KILLED FINE GRAIN, AS ROLLED	132	264
R11	2	PL 6.35 X 2438 X 12192	ASME SA 516 GRADE 70 KILLED FINE GRAIN, AS ROLLED	1471	2942
R12	2	PL 6.35 X 1436 X 1808	ASME SA 516 GRADE 70 KILLED FINE GRAIN, AS ROLLED	68	136
R13	2	PL 6.35 X 2438 X 11586	ASME SA 516 GRADE 70 KILLED FINE GRAIN, AS ROLLED	1235	2470
R14	2	PL 6.35 X 2438 X 12192	ASME SA 516 GRADE 70 KILLED FINE GRAIN, AS ROLLED	1308	2616
R15	2	PL 6.35 X 2438 X 2511	ASME SA 516 GRADE 70 KILLED FINE GRAIN, AS ROLLED	303	606
R16	4	PL 6.35 X 2438 X 2470	ASME SA 516 GRADE 70 KILLED FINE GRAIN, AS ROLLED	282	1128
R17	4	PL 6.35 X 2130 X 5282	ASME SA 516 GRADE 70 KILLED FINE GRAIN, AS ROLLED	326	1304

TOT WT: 45,400

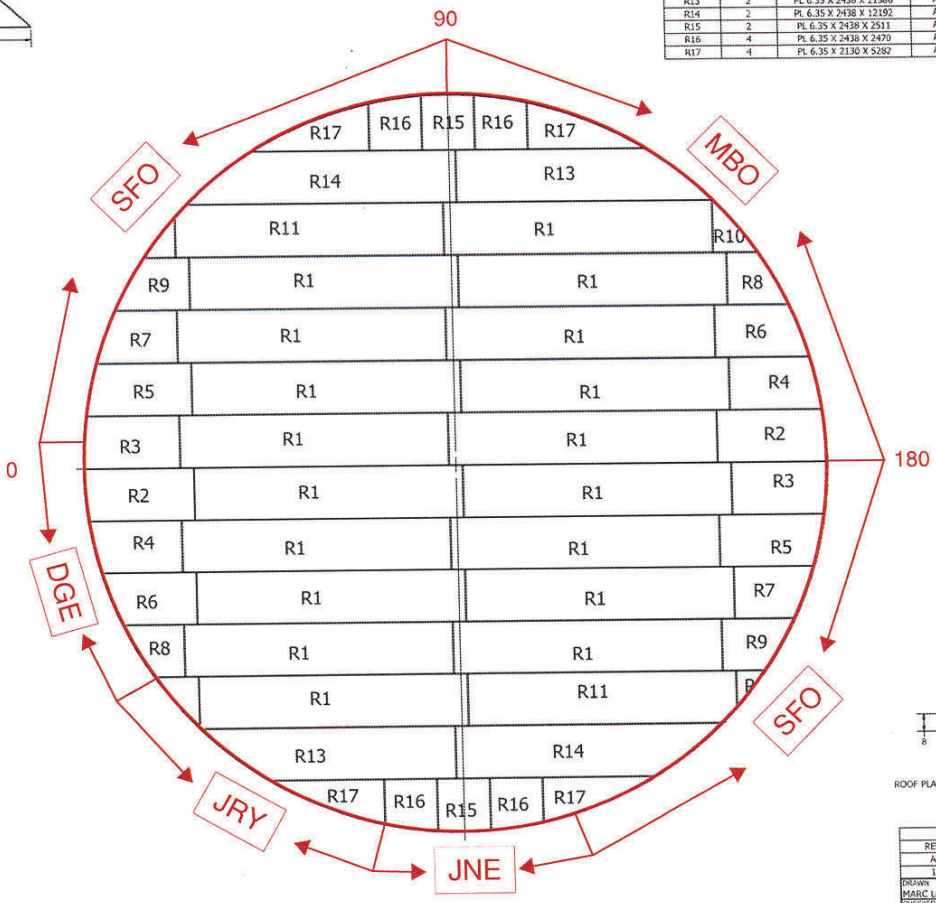

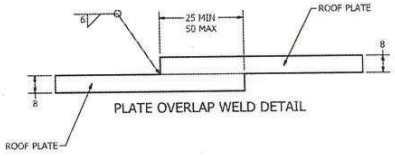

REVISION HISTORY		
REV	DESCRIPTION	DATE
A	ISSUED FOR REVIEW	2/18/2019
1	ISSUED FOR CONSTRUCTION	6/8/2021

DRAWN	MARC LOSIER	2/18/2021
CHECKED		
QA		
MFG		
APPROVED		

ROOF LAYOUT

TITLE: BAKER LAKE WHALE TAIL PROJECT FLOOR AND ROOF LAYOUT FOR 10,000CUM TANK #8 6170TNK43

SIZE A1 | DWG NO 341-M1 | REV 1 | SCALE 1 | SHEET 2 OF 2

15-Jun-2021

Permit Number: P471

Outside Compression Ring Weld Mapping

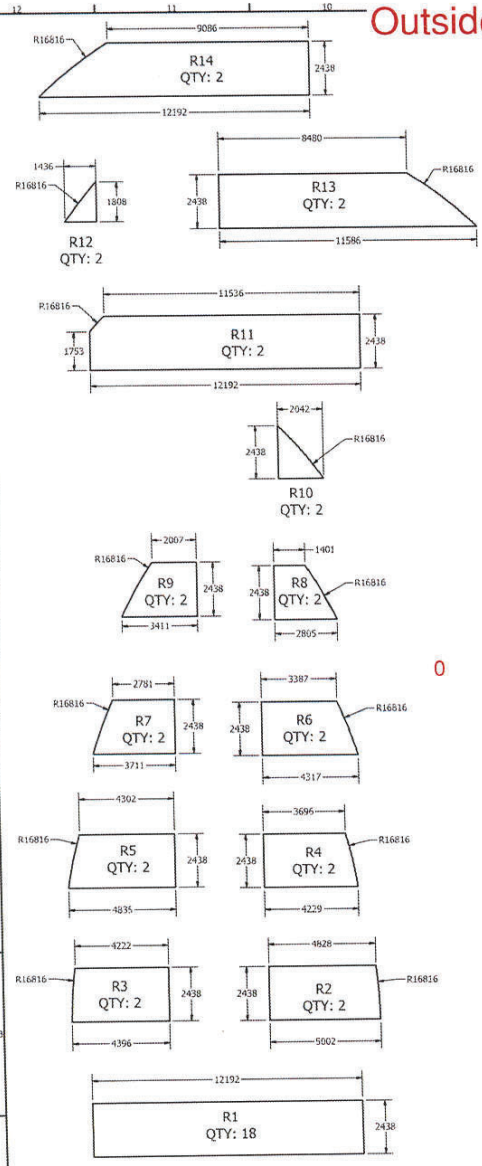

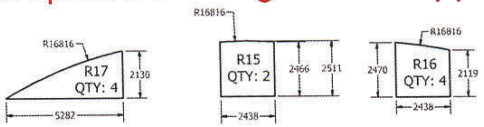

PARTS LIST

ITEM	QTY	DESCRIPTION	MATERIAL	UNIT WT (KG)	TOT WT (KG)
R1	18	PL 6.35 X 2438 X 12192	ASME SA 516 GRADE 70 KILLED FINE GRAIN, AS ROLLED	1481	26658
R2	2	PL 6.35 X 2438 X 5002	ASME SA 516 GRADE 70 KILLED FINE GRAIN, AS ROLLED	601	1202
R3	2	PL 6.35 X 2438 X 4596	ASME SA 516 GRADE 70 KILLED FINE GRAIN, AS ROLLED	527	1054
R4	2	PL 6.35 X 2438 X 4229	ASME SA 516 GRADE 70 KILLED FINE GRAIN, AS ROLLED	485	970
R5	2	PL 6.35 X 2438 X 4825	ASME SA 516 GRADE 70 KILLED FINE GRAIN, AS ROLLED	559	1118
R6	2	PL 6.35 X 2438 X 4317	ASME SA 516 GRADE 70 KILLED FINE GRAIN, AS ROLLED	473	946
R7	2	PL 6.35 X 2438 X 3711	ASME SA 516 GRADE 70 KILLED FINE GRAIN, AS ROLLED	398	796
R8	2	PL 6.35 X 2438 X 2805	ASME SA 516 GRADE 70 KILLED FINE GRAIN, AS ROLLED	261	522
R9	2	PL 6.35 X 2438 X 3411	ASME SA 516 GRADE 70 KILLED FINE GRAIN, AS ROLLED	334	668
R10	2	PL 6.35 X 2438 X 2042	ASME SA 516 GRADE 70 KILLED FINE GRAIN, AS ROLLED	132	264
R11	2	PL 6.35 X 2438 X 12192	ASME SA 516 GRADE 70 KILLED FINE GRAIN, AS ROLLED	1471	2942
R12	2	PL 6.35 X 1436 X 1808	ASME SA 516 GRADE 70 KILLED FINE GRAIN, AS ROLLED	68	136
R13	2	PL 6.35 X 2438 X 11586	ASME SA 516 GRADE 70 KILLED FINE GRAIN, AS ROLLED	1235	2470
R14	2	PL 6.35 X 2438 X 12192	ASME SA 516 GRADE 70 KILLED FINE GRAIN, AS ROLLED	1308	2616
R15	2	PL 6.35 X 2438 X 2511	ASME SA 516 GRADE 70 KILLED FINE GRAIN, AS ROLLED	303	606
R16	4	PL 6.35 X 2438 X 2470	ASME SA 516 GRADE 70 KILLED FINE GRAIN, AS ROLLED	282	1128
R17	4	PL 6.35 X 2130 X 5282	ASME SA 516 GRADE 70 KILLED FINE GRAIN, AS ROLLED	326	1304

TOT WT: 45,400

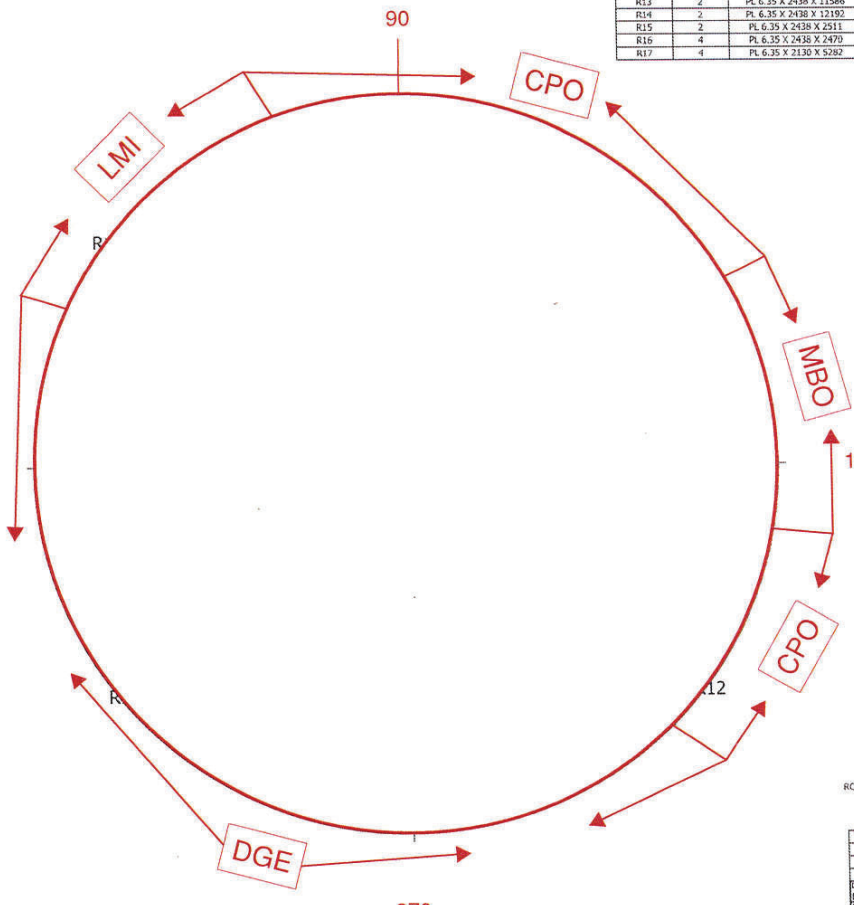

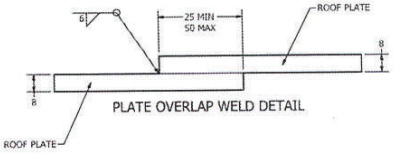

REVISION HISTORY		
REV	DESCRIPTION	DATE
A	ISSUED FOR REVIEW	2/18/2019
1	ISSUED FOR CONSTRUCTION	6/8/2021

DRAWN	MARC LOSIER	2/18/2021
CHECKED		
QA		
APPD		
APPROVED		

ROOF LAYOUT

TITLE: BAKER LAKE WHALE TAIL PROJECT FLOOR AND ROOF LAYOUT FOR 10,000CUM TANK #8 6170TNK43

SIZE	DWG NO	REV
A1	341-M1	1

SCALE 1 | SHEET 2 OF 2

15-Jun-2021

Permit Number: P471

Inside Compression Ring Weld Mapping

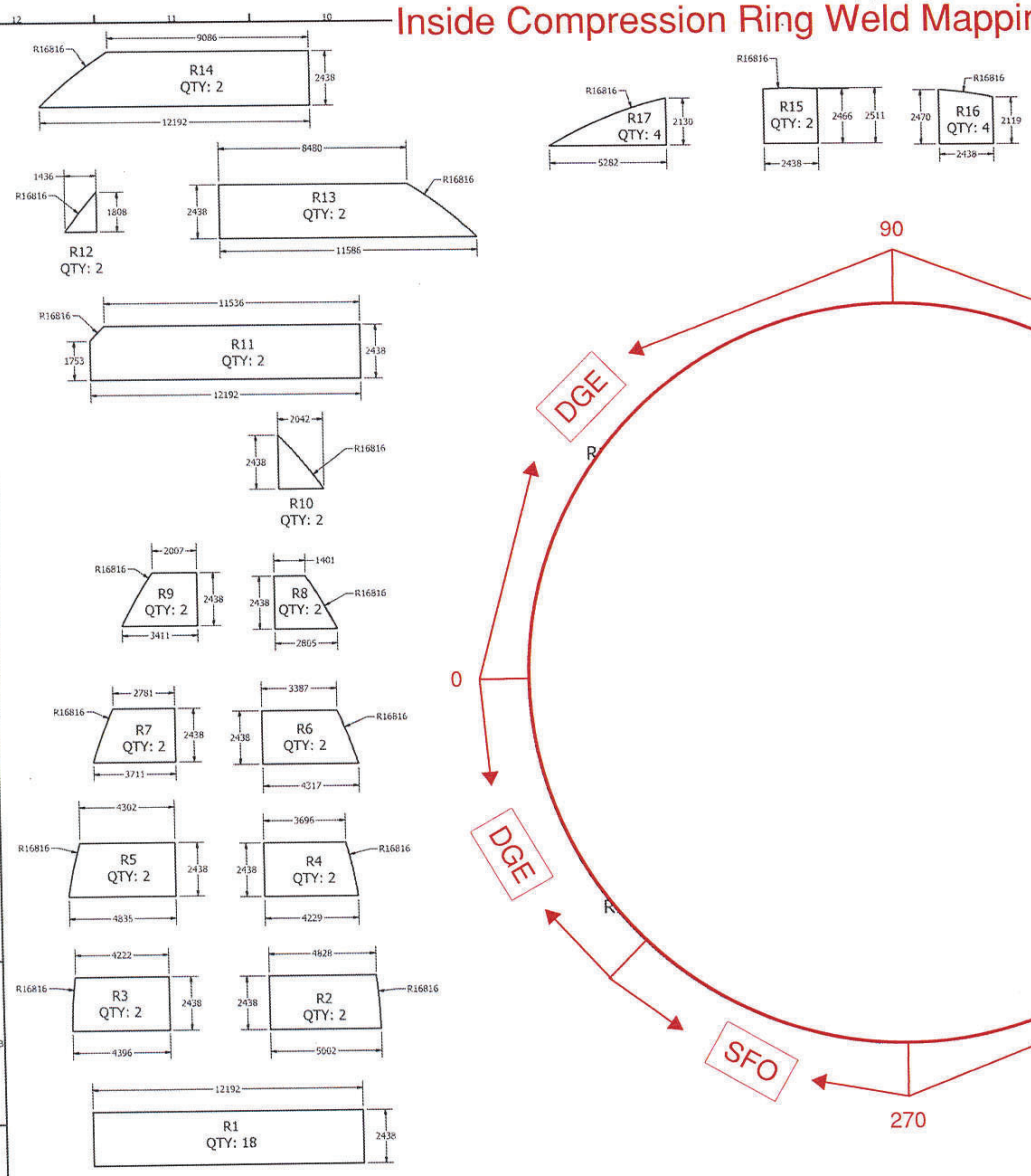

PARTS LIST

ITEM	QTY	DESCRIPTION	MATERIAL	UNIT WT (KG)	TOT WT (KG)
R1	18	PL 6.35 X 2438 X 12192	ASME SA 516 GRADE 70 KILLED FINE GRAIN, AS ROLLED	1481	26658
R2	2	PL 6.35 X 2438 X 5002	ASME SA 516 GRADE 70 KILLED FINE GRAIN, AS ROLLED	601	1202
R3	2	PL 6.35 X 2438 X 4596	ASME SA 516 GRADE 70 KILLED FINE GRAIN, AS ROLLED	527	1054
R4	2	PL 6.35 X 2438 X 4229	ASME SA 516 GRADE 70 KILLED FINE GRAIN, AS ROLLED	485	970
R5	2	PL 6.35 X 2438 X 4825	ASME SA 516 GRADE 70 KILLED FINE GRAIN, AS ROLLED	559	1118
R6	2	PL 6.35 X 2438 X 4317	ASME SA 516 GRADE 70 KILLED FINE GRAIN, AS ROLLED	473	946
R7	2	PL 6.35 X 2438 X 3711	ASME SA 516 GRADE 70 KILLED FINE GRAIN, AS ROLLED	398	796
R8	2	PL 6.35 X 2438 X 2805	ASME SA 516 GRADE 70 KILLED FINE GRAIN, AS ROLLED	261	522
R9	2	PL 6.35 X 2438 X 3411	ASME SA 516 GRADE 70 KILLED FINE GRAIN, AS ROLLED	334	668
R10	2	PL 6.35 X 2438 X 2042	ASME SA 516 GRADE 70 KILLED FINE GRAIN, AS ROLLED	132	264
R11	2	PL 6.35 X 2438 X 12192	ASME SA 516 GRADE 70 KILLED FINE GRAIN, AS ROLLED	1471	2942
R12	2	PL 6.35 X 1436 X 1808	ASME SA 516 GRADE 70 KILLED FINE GRAIN, AS ROLLED	68	136
R13	2	PL 6.35 X 2438 X 11586	ASME SA 516 GRADE 70 KILLED FINE GRAIN, AS ROLLED	1235	2470
R14	2	PL 6.35 X 2438 X 12192	ASME SA 516 GRADE 70 KILLED FINE GRAIN, AS ROLLED	1308	2616
R15	2	PL 6.35 X 2438 X 2511	ASME SA 516 GRADE 70 KILLED FINE GRAIN, AS ROLLED	303	606
R16	4	PL 6.35 X 2438 X 2470	ASME SA 516 GRADE 70 KILLED FINE GRAIN, AS ROLLED	282	1128
R17	4	PL 6.35 X 2130 X 5282	ASME SA 516 GRADE 70 KILLED FINE GRAIN, AS ROLLED	326	1304

TOT WT: 45,400

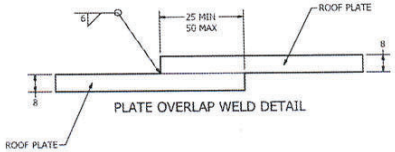

REVISION HISTORY		
REV	DESCRIPTION	DATE
A	ISSUED FOR REVIEW	2/18/2019
1	ISSUED FOR CONSTRUCTION	6/8/2021

DRAWN: MARC LOSIER 2/18/2021
CHECKED
QA
MFG
APPROVED

TITLE: ROOF LAYOUT

BAKER LAKE WHALE TAIL PROJECT FLOOR AND ROOF LAYOUT FOR 10,000CUM TANK #8 6170TNK43

SIZE: A1 | DWG NO: 341-M1 | REV: 1
SCALE: 1 | SHEET 2 OF 2

15-Jun-2021
Permit Number: P471

QUALITY CONTROL MANUAL

VISUAL TEST REPORT

Customer: AGNICO EAGLE

Location: BAKER LAKE

Code Requiring Test: API 650 (section 8.5.2) Reason for Test: New Construction

A weld shall be acceptable by visual examination if the inspection shows the following.

a) There are no crater cracks, other surface cracks or arc strikes in or adjacent to the welded joints.
b) Maximum permissible undercut is 0.4 mm (1/64 in.) in depth for vertical butt joints, vertically oriented permanent attachments, attachment welds for nozzles, manholes, flush-type openings, and the inside shell-to-bottom welds. For horizontal butt joints, horizontally oriented permanent attachments, and annular-ring butt joints, the maximum permissible undercut is 0.8 mm (1/32 in.) in depth.
c) The frequency of surface porosity in the weld does not exceed one cluster (one or more pores) in any 100 mm (4 in.) of length, and the diameter of each cluster does not exceed 2.5 mm (3/32 in.).
d) The reinforcement of the welds on all thicknesses:

Plate Thickness mm (in.)	Maximum Reinforcement Thickness mm (in.)	
	Vertical Joints	Horizontal Joints
≤ 13 (1/2)	2.5 (3/32)	3 (1/8)
> 13 (1/2) to 25 (1)	3 (1/8)	5 (3/16)
> 25 (1)	5 (3/16)	6 (1/4)

Surface Condition (As Welded)

Test Solution: N/A Test Date(s): 2021-08- 21

Tested by: Matthew MacKenzie Ambient Conditions: 10 Degrees Celcius

Items Tested:

Compression Ring Welds.

Results:

Acceptable at the time of Inspection.

STS Representative Signature: _____ Date: 2021-08- 21

Client Representative Signature: _____ Date: 4TH Sept 21

SECTION 12.0

Roof

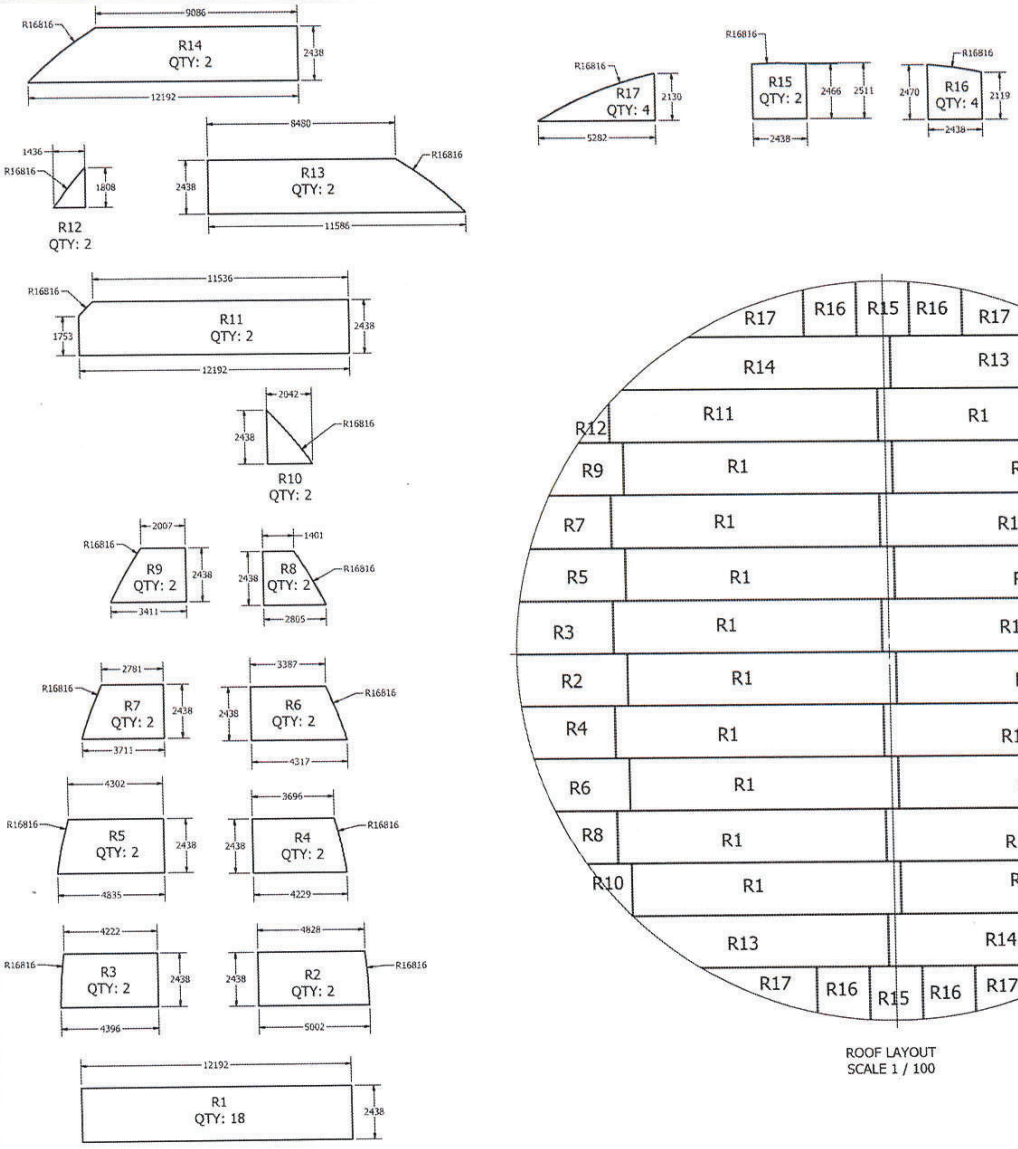

PARTS LIST

ITEM	QTY	DESCRIPTION	MATERIAL	UNIT WT (KG)	TOT WT (KG)
R1	18	PL 6.35 X 2438 X 12192	ASME SA 516 GRADE 70 KILLED FINE GRAIN, AS ROLLED	1481	26658
R2	2	PL 6.35 X 2438 X 5002	ASME SA 516 GRADE 70 KILLED FINE GRAIN, AS ROLLED	601	1202
R3	2	PL 6.35 X 2438 X 4596	ASME SA 516 GRADE 70 KILLED FINE GRAIN, AS ROLLED	527	1054
R4	2	PL 6.35 X 2438 X 4229	ASME SA 516 GRADE 70 KILLED FINE GRAIN, AS ROLLED	485	970
R5	2	PL 6.35 X 2438 X 4825	ASME SA 516 GRADE 70 KILLED FINE GRAIN, AS ROLLED	559	1118
R6	2	PL 6.35 X 2438 X 4317	ASME SA 516 GRADE 70 KILLED FINE GRAIN, AS ROLLED	473	946
R7	2	PL 6.35 X 2438 X 3711	ASME SA 516 GRADE 70 KILLED FINE GRAIN, AS ROLLED	398	796
R8	2	PL 6.35 X 2438 X 2805	ASME SA 516 GRADE 70 KILLED FINE GRAIN, AS ROLLED	261	522
R9	2	PL 6.35 X 2438 X 3411	ASME SA 516 GRADE 70 KILLED FINE GRAIN, AS ROLLED	334	668
R10	2	PL 6.35 X 2438 X 2042	ASME SA 516 GRADE 70 KILLED FINE GRAIN, AS ROLLED	132	264
R11	2	PL 6.35 X 2438 X 12192	ASME SA 516 GRADE 70 KILLED FINE GRAIN, AS ROLLED	1471	2942
R12	2	PL 6.35 X 1436 X 1808	ASME SA 516 GRADE 70 KILLED FINE GRAIN, AS ROLLED	68	136
R13	2	PL 6.35 X 2438 X 11586	ASME SA 516 GRADE 70 KILLED FINE GRAIN, AS ROLLED	1235	2470
R14	2	PL 6.35 X 2438 X 12192	ASME SA 516 GRADE 70 KILLED FINE GRAIN, AS ROLLED	1308	2616
R15	2	PL 6.35 X 2438 X 2511	ASME SA 516 GRADE 70 KILLED FINE GRAIN, AS ROLLED	303	606
R16	4	PL 6.35 X 2438 X 2470	ASME SA 516 GRADE 70 KILLED FINE GRAIN, AS ROLLED	282	1128
R17	4	PL 6.35 X 2130 X 5282	ASME SA 516 GRADE 70 KILLED FINE GRAIN, AS ROLLED	326	1304

TOT WT: 45,400

ROOF LAYOUT
SCALE 1 / 100

STS STORAGE TANK SOLUTIONS **AS BUILT STAMP**

☐ CHANGE ☒ NO CHANGE

NAME: Lindsay C Bolton
SIGNATURE:
DATE: September 6, 2021

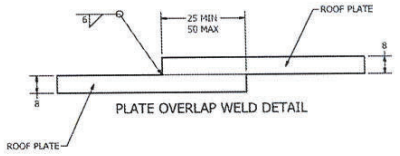

PLATE OVERLAP WELD DETAIL

15-Jun-2021
Permit Number: P471

REVISION HISTORY

REV	DESCRIPTION	DATE
A	ISSUED FOR REVIEW	2/18/2019
1	ISSUED FOR CONSTRUCTION	6/8/2021

DRAWN: MARC LOSIER 2/18/2021
CHECKED
QA
MFG
APPROVED

TITLE: ROOF LAYOUT

BAKER LAKE WHALE TAIL PROJECT FLOOR AND ROOF LAYOUT FOR 10,000CUM TANK #8 6170TNK43

SIZE: A1 | DWG NO: 341-M1 | REV: 1 | SCALE: 1 | SHEET 2 OF 2

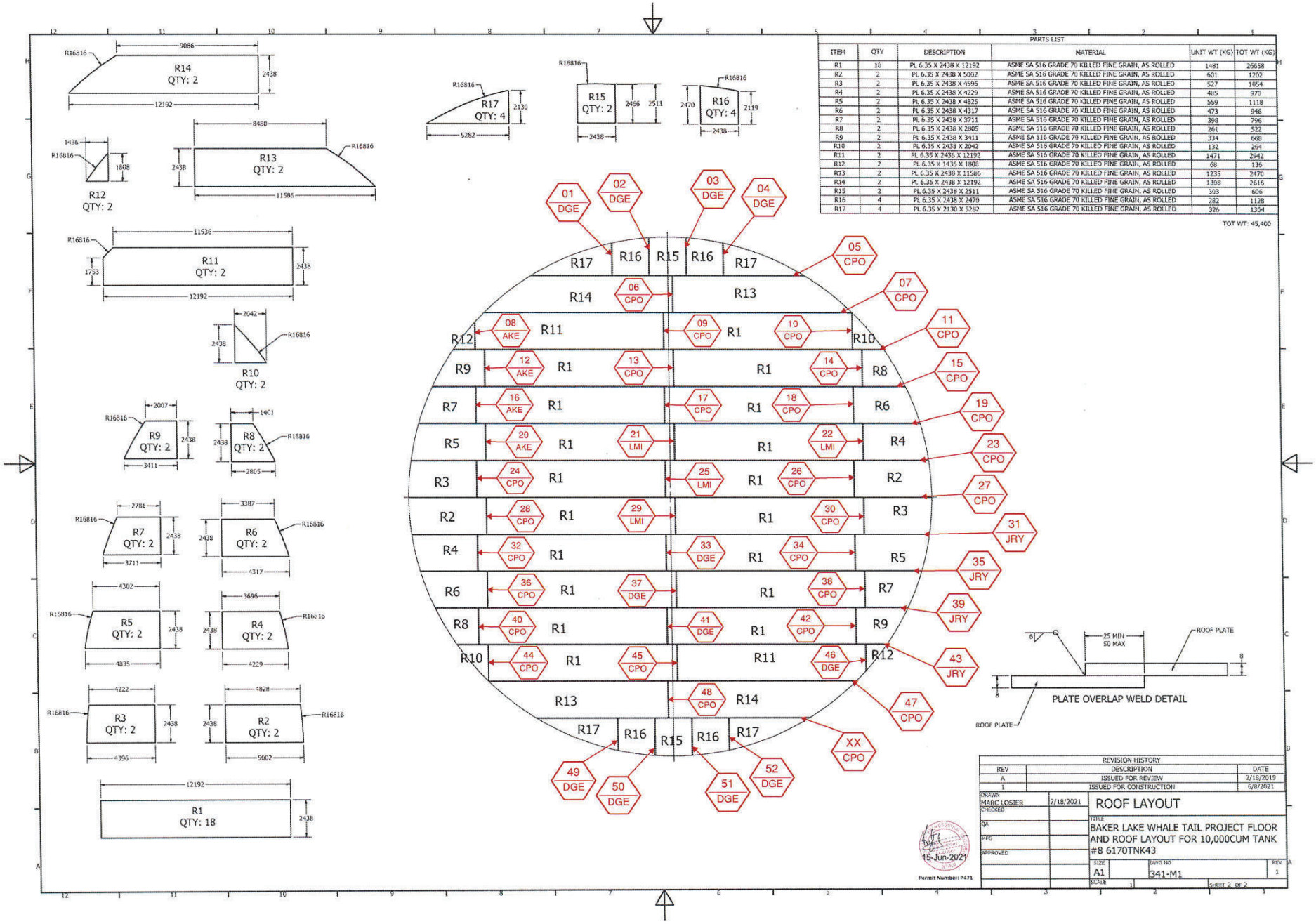

PARTS LIST

ITEM	QTY	DESCRIPTION	MATERIAL	UNIT WT (KG)	TOT WT (KG)
R1	18	PL 6.35 X 2438 X 12192	ASME SA 516 GRADE 70 KILLED FINE GRAIN, AS ROLLED	1481	26658
R2	2	PL 6.35 X 2438 X 5002	ASME SA 516 GRADE 70 KILLED FINE GRAIN, AS ROLLED	601	1202
R3	2	PL 6.35 X 2438 X 4596	ASME SA 516 GRADE 70 KILLED FINE GRAIN, AS ROLLED	527	1054
R4	2	PL 6.35 X 2438 X 4229	ASME SA 516 GRADE 70 KILLED FINE GRAIN, AS ROLLED	485	970
R5	2	PL 6.35 X 2438 X 4825	ASME SA 516 GRADE 70 KILLED FINE GRAIN, AS ROLLED	559	1118
R6	2	PL 6.35 X 2438 X 4317	ASME SA 516 GRADE 70 KILLED FINE GRAIN, AS ROLLED	473	946
R7	2	PL 6.35 X 2438 X 3711	ASME SA 516 GRADE 70 KILLED FINE GRAIN, AS ROLLED	398	796
R8	2	PL 6.35 X 2438 X 2805	ASME SA 516 GRADE 70 KILLED FINE GRAIN, AS ROLLED	261	522
R9	2	PL 6.35 X 2438 X 3411	ASME SA 516 GRADE 70 KILLED FINE GRAIN, AS ROLLED	334	668
R10	2	PL 6.35 X 2438 X 2042	ASME SA 516 GRADE 70 KILLED FINE GRAIN, AS ROLLED	132	264
R11	2	PL 6.35 X 2438 X 12192	ASME SA 516 GRADE 70 KILLED FINE GRAIN, AS ROLLED	1471	2942
R12	2	PL 6.35 X 1436 X 1808	ASME SA 516 GRADE 70 KILLED FINE GRAIN, AS ROLLED	68	136
R13	2	PL 6.35 X 2438 X 11586	ASME SA 516 GRADE 70 KILLED FINE GRAIN, AS ROLLED	1235	2470
R14	2	PL 6.35 X 2438 X 12192	ASME SA 516 GRADE 70 KILLED FINE GRAIN, AS ROLLED	1308	2616
R15	2	PL 6.35 X 2438 X 2511	ASME SA 516 GRADE 70 KILLED FINE GRAIN, AS ROLLED	303	606
R16	4	PL 6.35 X 2438 X 2470	ASME SA 516 GRADE 70 KILLED FINE GRAIN, AS ROLLED	282	1128
R17	4	PL 6.35 X 2130 X 5282	ASME SA 516 GRADE 70 KILLED FINE GRAIN, AS ROLLED	326	1304

TOT WT: 45,400

REVISION HISTORY

REV	DESCRIPTION	DATE
A	ISSUED FOR REVIEW	2/18/2019
1	ISSUED FOR CONSTRUCTION	6/8/2021

DRAWN: MARC LOSIER 2/18/2021
CHECKED
QA
MFG
APPROVED

ROOF LAYOUT

TITLE: BAKER LAKE WHALE TAIL PROJECT FLOOR AND ROOF LAYOUT FOR 10,000CUM TANK #8 6170TNK43

SIZE: A1 | DWG NO: 341-M1 | REV: 1 | SCALE: 1 | SHEET 2 OF 2

15-Jun-2021
Permit Number: P471

QUALITY CONTROL MANUAL

VISUAL TEST REPORT

Customer: AGNICO EAGLE

Location: BAKER LAKE

Code Requiring Test: API 650 (section 8.5.2) Reason for Test: New Construction

A weld shall be acceptable by visual examination if the inspection shows the following.

a) There are no crater cracks, other surface cracks or arc strikes in or adjacent to the welded joints.
b) Maximum permissible undercut is 0.4 mm (1/64 in.) in depth for vertical butt joints, vertically oriented permanent attachments, attachment welds for nozzles, manholes, flush-type openings, and the inside shell-to-bottom welds. For horizontal butt joints, horizontally oriented permanent attachments, and annular-ring butt joints, the maximum permissible undercut is 0.8 mm (1/32 in.) in depth.
c) The frequency of surface porosity in the weld does not exceed one cluster (one or more pores) in any 100 mm (4 in.) of length, and the diameter of each cluster does not exceed 2.5 mm (3/32 in.).
d) The reinforcement of the welds on all thicknesses:

Plate Thickness mm (in.)	Maximum Reinforcement Thickness mm (in.)	
	Vertical Joints	Horizontal Joints
≤ 13 (1/2)	2.5 (3/32)	3 (1/8)
> 13 (1/2) to 25 (1)	3 (1/8)	5 (3/16)
> 25 (1)	5 (3/16)	6 (1/4)

Surface Condition (As Welded)

Test Solution: N/A Test Date(s): 2021-09-01

Tested by: Matthew MacKenzie Ambient Conditions: 10 Degrees Celsius

Items Tested:

Roof Welds.

Results:

Acceptable at the time of Inspection.

STS Representative Signature: [signature] Date: 2021-09-01

Client Representative Signature: [signature] Date: 4th Sept 21

Exhibit 15, Rev 1

VACUUM BOX TEST REPORT – ROOF PLATE WELDS

Customer: AGNICO EAGLE

Location: BAKER LAKE

Equipment Tag No.: TANK 8

Equipment Type:

Equipment Description:

Code Requiring Test: API 650 Reason for Test: New Construction

(A vacuum box/soap solution test for roof plate weld seams is required for new construction or major alterations, no visible leaks should be observed)

Test Solution: Water / Snoop

Ambient Conditions: 10 Degrees Celsius

Test Date(s): 2021-09-01

Surface Condition: Clean

Tested by: NICK/BODE

Surface Test Temperature: 10 Degrees Celsius

Pressure Gauge:

Items Tested:

ROOF PLATES WELDS

Results:

NO LEAK DETECTED

Acceptable at time of Inspection.

STS Representative Signature: Date: 2021-09-01

Client Representative Signature: Date: 4TH Sept 21

SECTION 13.0

Roof Structure

STS STORAGE TANK SOLUTIONS **AS BUILT STAMP**

☐ CHANGE ☒ NO CHANGE

NAME: Lindsay C Bolton
SIGNATURE: LCB
DATE: September 6, 2021

PARTS LIST				
ITEM	QTY	DESCRIPTION	MATERIAL	MASS
341M2101	10	RIM ANGLE 76X76X10 [3"X3"X3/8"] SEE DRG 315-M2	G40.21-300W	125 kg
341M5102	1	CENTRE COLUMN, SEE SHT 5		2741 kg
341M5103	32	INNER RAFTER W250X33 [W10"X22] SEE SHT 2	G40.21-350W	248 kg
341M5104	64	SHELL CLIP, PLATE 6 THK 152 X 189, SEE DETAIL	G40.21-300W	1 kg
341M5105	64	OUTER RAFTER W250X33 [W10"X22] SEE SHT 2	G40.21-350W	295 kg
341M5106	8	INTERMEDIATE GIRDER ASSEMBLY SEE SHT 4		570 kg
341M5107	8	INTERMEDIATE COLUMN ASSEMBLY SEE SHT 6		1285 kg
341M5108	8	GIRDER CONNECTION PLATE 13 [1/2"] THK 279 X 688 SEE DETAIL	G40.21-300W	10 kg
341M5116	128	BOLT, HEAVY HEX, 5/8" X 2.5" LG	A325	0 kg
341M5117	512	NUT, HEAVY HEX, 5/8" UNC	A325	0 kg
341M5118	1024	WASHER, PLAIN, TYPE A, 5/8"	A325	0 kg
341M5119	320	BOLT, HEAVY HEX, 5/8" X 2." LG	A325	0 kg
341M5120	64	BOLT, HEAVY HEX, 5/8" X 3" LG	A325	0 kg

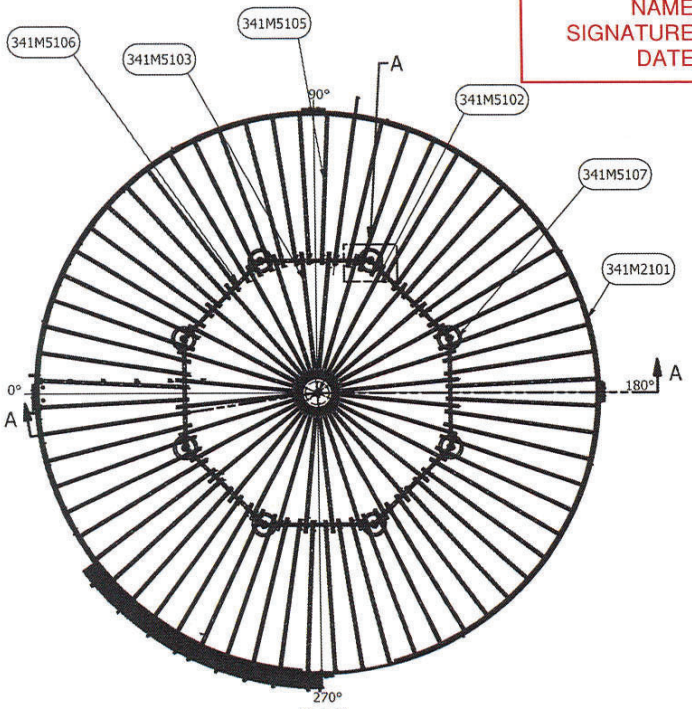

PLAN
SCALE 1/200

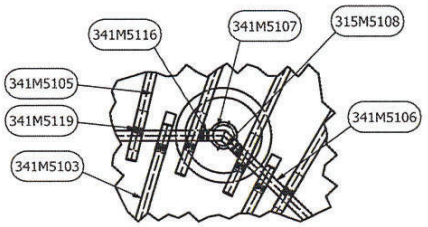

DETAIL A
SCALE 1/50

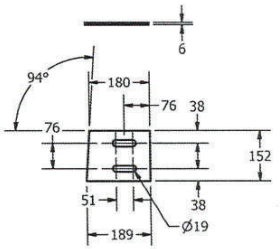

341M5104
SHELL CLIP
QTY: 64
SCALE 1/10

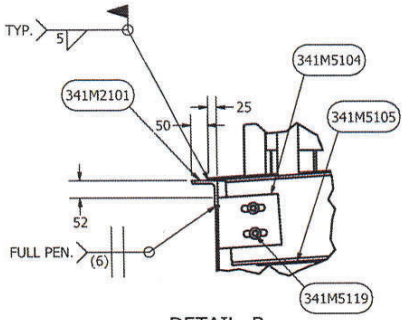

DETAIL B
SCALE 1/10

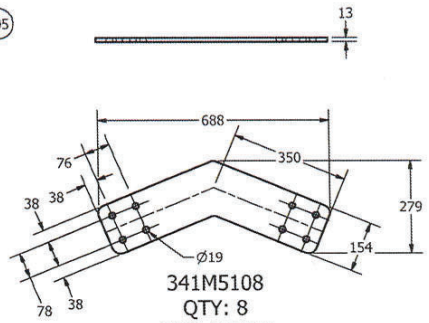

341M5108
QTY: 8
SCALE 1/10

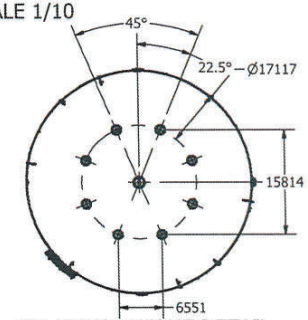

COLUMNS LAYOUT DETAIL
SCALE 1/500

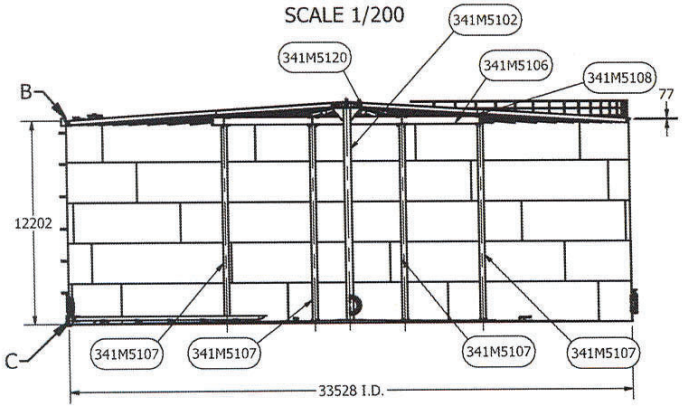

SECTION A-A
SCALE 1/200

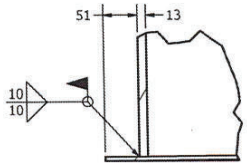

DETAIL C
SCALE 1/5

REVISION HISTORY		
REV	DESCRIPTION	DATE
A	ISSUED FOR REVIEW	3/9/2021
1	ISSUED FOR CONSTRUCTION	6/8/2021

DRAWN MARC LOSIER	3/8/2021	ROOF STRUCTURE LAYOUT
CHECKED KYLE BROWN	3/7/2019	
QA		TITLE
MFG		BAKER LAKE WHALE TAIL PROJECT - 10M LITERS - TANK #8: 6170TNK43 - ROOF STRUCTURE
APPROVED		

SIZE A2 | DWG NO 341-M5 | REV 1
SCALE 1/200 | SHEET 1 OF 6

15-Jun-2021
Permit Number: P471

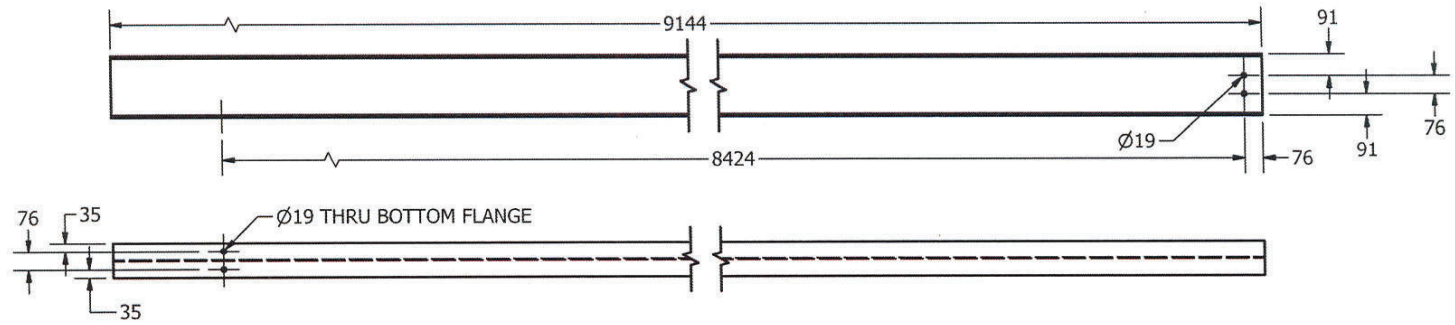

OUTER RAFTER
QTY: 64
SCALE 1/20

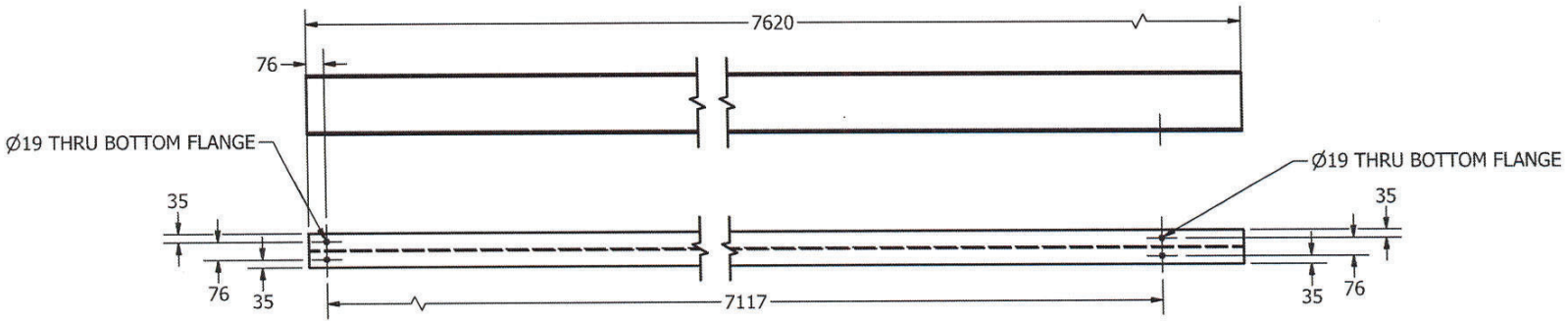

INNER RAFTER
QTY: 32
SCALE 1/20

STS STORAGE TANK SOLUTIONS **AS BUILT STAMP**

☐ CHANGE ☒ NO CHANGE

NAME: Lindsay C Bolton
SIGNATURE:
DATE: September 6, 2021

PROFESSIONAL ENGINEER — LICENSEE — NT/NU — 15-Jun-2021

Permit Number: P471

REVISION HISTORY		
REV	DESCRIPTION	DATE
A	ISSUED FOR REVIEW	3/9/2021
1	ISSUED FOR CONSTRUCTION	6/8/2021

DRAWN MARC LOSIER	3/8/2021	RAFTER DETAILS
CHECKED KYLE BROWN	3/7/2019	
QA		TITLE: BAKER LAKE WHALE TAIL PROJECT - 10M LITERS - TANK #8: 6170TNK43 - ROOF STRUCTURE
MFG		
APPROVED		

SIZE	DWG NO	REV
A3	341-M5	1

SCALE 1/20 — SHEET 2 OF 6

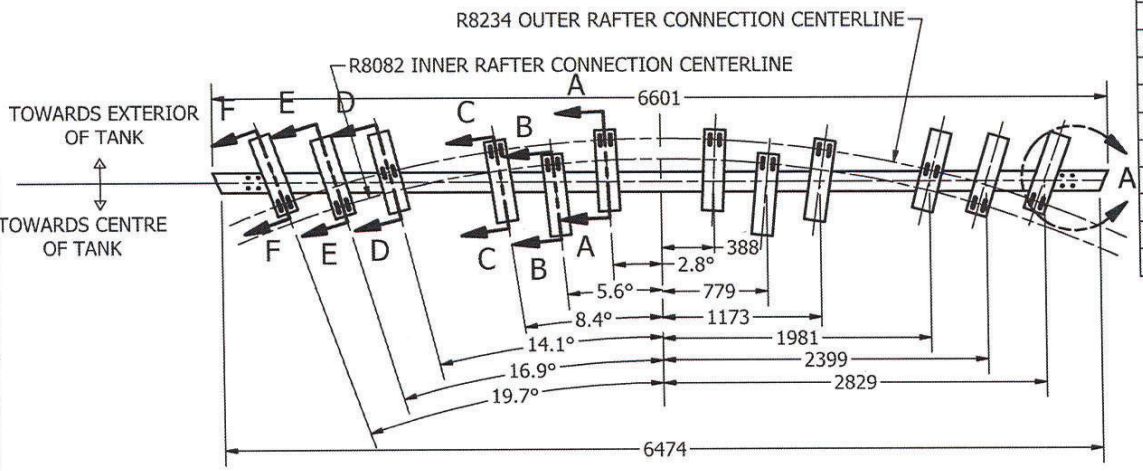

PARTS LIST				
ITEM	QTY	DESCRIPTION	MATERIAL	MASS
341M5301	1	W460X68 [W18x46]	A572 50/50W	443 kg
341M5302	2	10X108X125 SEE DET SHT 4	G40.21-300W	1 kg
341M5303	10	10X154X610 SEE DET SHT 4	G40.21-300W	7 kg
341M5304	2	10X106X125 SEE DET SHT 4	G40.21-300W	1 kg
341M5306	2	10X103X125 SEE DET SHT 4	G40.21-300W	1 kg
341M5308	2	10X94X125 SEE DET SHT 4	G40.21-300W	1 kg
341M5309	2	10X154x610 SEE DET SHT 4	G40.21-300W	7 kg
341M5310	2	10X87X125 SEE DET SHT 4	G40.21-300W	1 kg
341M5311	2	10X78X125 SEE DET SHT 4	G40.21-300W	1 kg

MATERIAL FOR ONE (1) SHOWN, EIGHT (8) REQUIRED PER TANK
WEIGHT PER ASSEMBLY:535 KG

STS STORAGE TANK SOLUTIONS **AS BUILT STAMP**

☐ CHANGE ☒ NO CHANGE

NAME: Lindsay C Bolton
SIGNATURE:
DATE: September 6, 2021

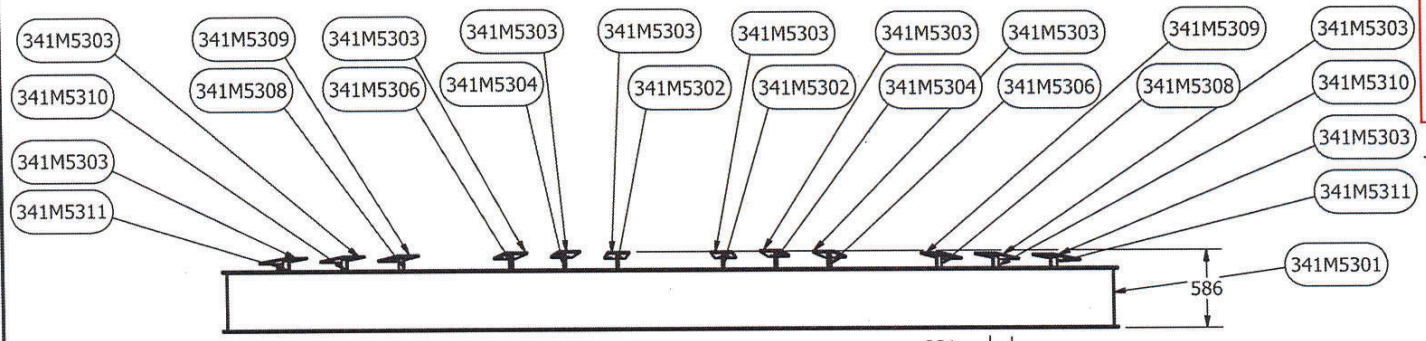

TOWARDS CENTRE OF TANK

TOWARDS EXTERIOR OF TANK





Permit Number: P471

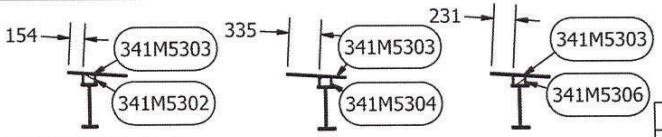

SECTION A-A
SCALE 1/50

SECTION B-B
SCALE 1/50

SECTION C-C
SCALE 1/50

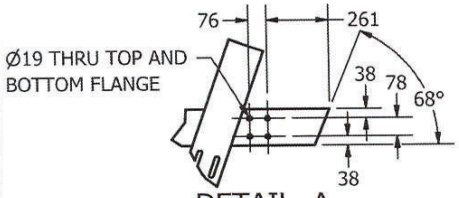

DETAIL A
SCALE 1/20

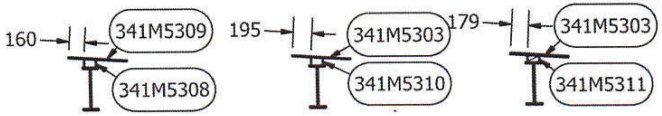

SECTION D-D
SCALE 1/50

SECTION E-E
SCALE 1/50

SECTION F-F
SCALE 1/50

REVISION HISTORY		
REV	DESCRIPTION	DATE
A	ISSUED FOR REVIEW	3/9/2021
1	ISSUED FOR CONSTRUCTION	6/8/2021

DRAWN	MARC LOSIER	3/8/2021
CHECKED	KYLE BROWN	3/7/2019
QA		
MFG		
APPROVED		

INTERMEDIATE GIRDER DETAIL

TITLE
BAKER LAKE WHALE TAIL PROJECT - 10M LITERS - TANK #8: 6170TNK43 - ROOF STRUCTURE

SIZE	DWG NO	REV
A3	341-M5	1

SCALE 1/35 SHEET 3 OF 6

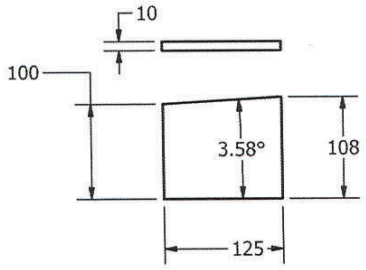

ITEM 341M5302
QTY: 2
SCALE 1/5

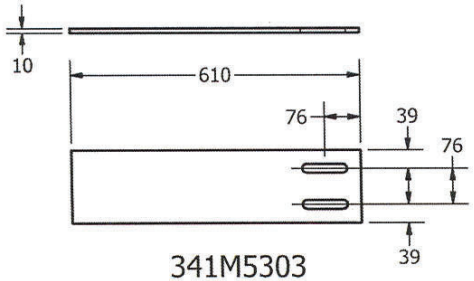

341M5303
QTY: 10
SCALE 1/10

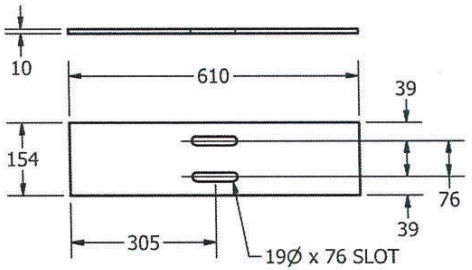

341M5309
QTY: 2
SCALE 1/10

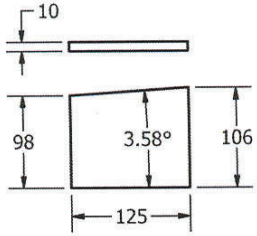

341M5304
QTY: 2
SCALE 1/5

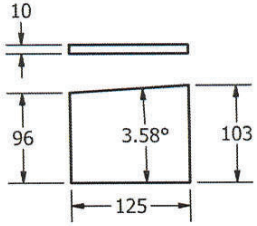

341M5306
QTY: 2
SCALE 1/5

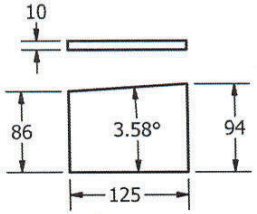

341M5308
QTY: 2
SCALE 1/5

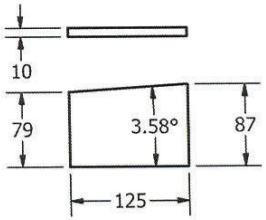

341M5310
QTY: 2
SCALE 1/5

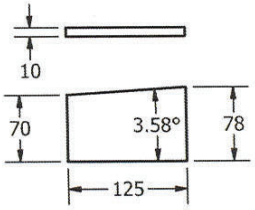

341M5311
QTY: 2
SCALE 1/5

STS STORAGE TANK SOLUTIONS **AS BUILT STAMP**

☐ CHANGE ☒ NO CHANGE

NAME: Lindsay C Bolton
SIGNATURE: LCB
DATE: September 6, 2021



Permit Number: P471

REVISION HISTORY		
REV	DESCRIPTION	DATE
A	ISSUED FOR REVIEW	3/9/2021
1	ISSUED FOR CONSTRUCTION	6/8/2021

DRAWN MARC LOSIER	3/8/2021	INTERMEDIATE GIRDER DETAIL
CHECKED KYLE BROWN	3/7/2019	
QA		TITLE: BAKER LAKE WHALE TAIL PROJECT - 10M LITERS - TANK #8: 6170TNK43 - ROOF STRUCTURE
MFG		
APPROVED		

SIZE	DWG NO	REV
A3	341-M5	1

SCALE 1/5 SHEET 4 OF 6

STS STORAGE TANK SOLUTIONS **AS BUILT STAMP**

☐ CHANGE ☒ NO CHANGE

NAME: Lindsay C Bolton
SIGNATURE:
DATE: September 6, 2021

REGISTERED PROFESSIONAL ENGINEER — K.J. BROWN — LICENSEE — NT/NU
15-Jun-2021

Permit Number: P471

PARTS LIST				
MARK	QTY	DESCRIPTION	MATERIAL	MASS
341M5501	1	PLATE 25 [1"] THK X 2083 OD	G40.21-300W	657 kg
341M5502	1	PLATE 19 [3/4"] X 1422 OD	G40.21-300W	238 kg
341M5503	1	PLATE 25 [1"] THK X 1778 OD	G40.21-300W	495 kg
341M5504	6	PLATE 10 [3/8"] THK X 762 X 762	G40.21-300W	27 kg
341M5505	3	ANGLE 76X76X6 [3"X3"X1/4"] x 102 lg	G40.21-300W	1 kg
341M5506	1	PIPE 406 [16"] OD X 10 [0.375"] WALL X 12700 LG	A-500	1185 kg
341M5507	1	PLATE 13 [1/2"] THK X 127 X 254	G40.21-300W	2 kg

TOTAL WEIGHT PER ASSEMBLY: 2325KG

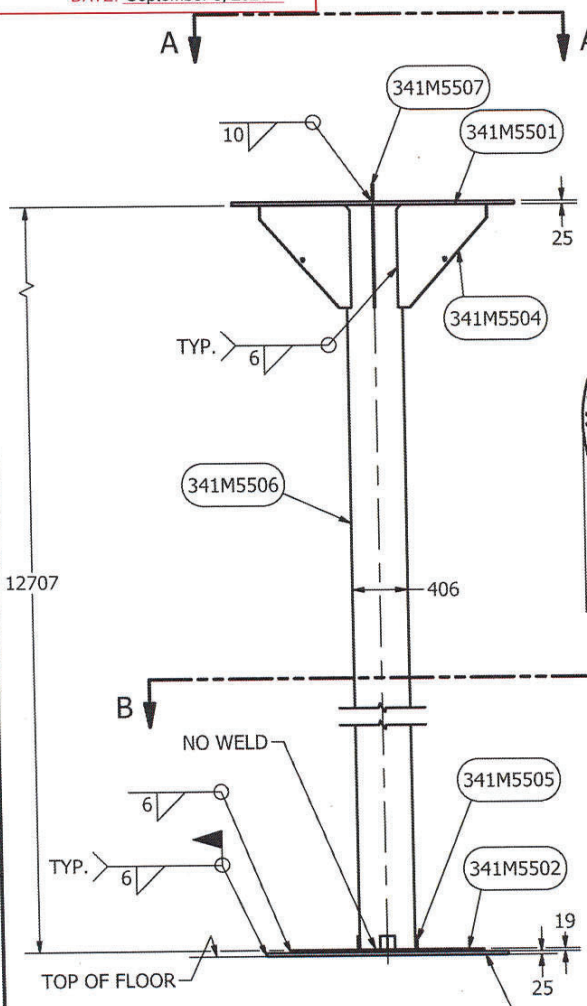

ELEVATION VIEW
CENTRE COLUMN
SCALE 1/35

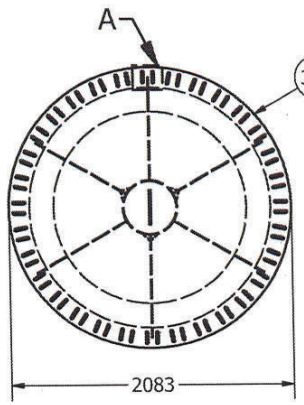

VIEW A-A

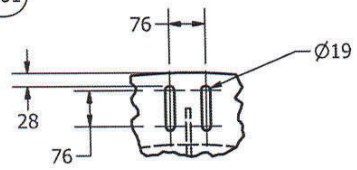

DETAIL A
TYPICAL (32) LOCATIONS EQUALLY SPACED

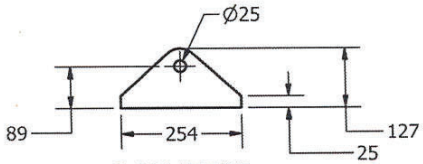

341M5507
SCALE 1/10

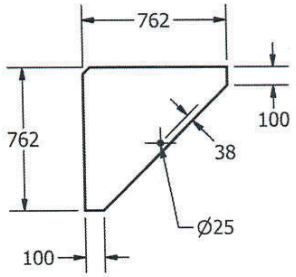

341M5504
QTY: 6
SCALE 1/25

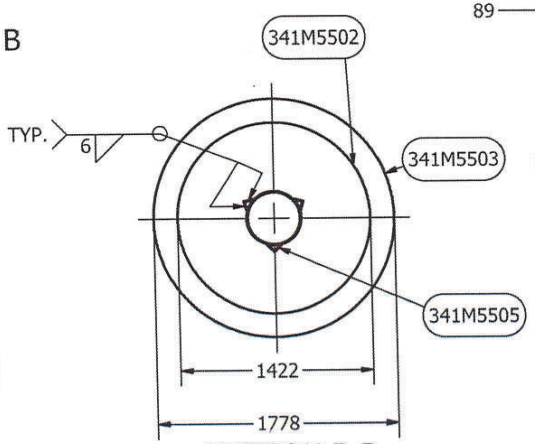

SECTION B-B

REVISION HISTORY		
REV	DESCRIPTION	DATE
A	ISSUED FOR REVIEW	6/7/2021
1	ISSUED FOR CONSTRUCTION	6/8/2021

DRAWN MARC LOSIER	3/8/2021	CENTRE COLUMN
CHECKED KYLE BROWN	3/7/2019	
QA		TITLE
MFG		BAKER LAKE WHALE TAIL PROJECT - 10M LITERS - TANK #8: 6170TNK43 - ROOF STRUCTURE
APPROVED		

SIZE	DWG NO	REV
A3	341-M5	1

SCALE 1/35 SHEET 5 OF 6

PARTS LIST				
ITEM	QTY	DESCRIPTION	MATERIAL	MASS
341M5601	1	PLATE 25 [1"] X 1422 DIA	G40.21-300W	317 kg
341M5602	1	PLATE 10 [3/8"] X 1138 DIA	G40.21-300W	76 kg
341M5603	1	PLATE 13 [1/2"] THK X 395 X 687	G40.21-300W	17 kg
341M5604	2	PLATE 6 [1/4"] THK X 164 X 164	G40.21-300W	1 kg
341M5605	1	PIPE 324 [12.75"] OD X 10 [.375"] WALL X 11804	A-500	872 kg
341M5606	4	PLATE 6 [1/4"] THK X 76 X 102	G40.21-300W	0 kg

MATERIAL FOR ONE (1) SHOWN, EIGHT (8) REQUIRED PER TANK
WT PER ASSEMBLY: 1057KG

REGISTERED PROFESSIONAL ENGINEER
K. BROWN
LICENSEE
15-Jun-2021
NT/NU

Permit Number: P471

STS STORAGE TANK SOLUTIONS **AS BUILT STAMP**

☐ CHANGE ☒ NO CHANGE

NAME: Lindsay C Bolton
SIGNATURE:
DATE: September 6, 2021

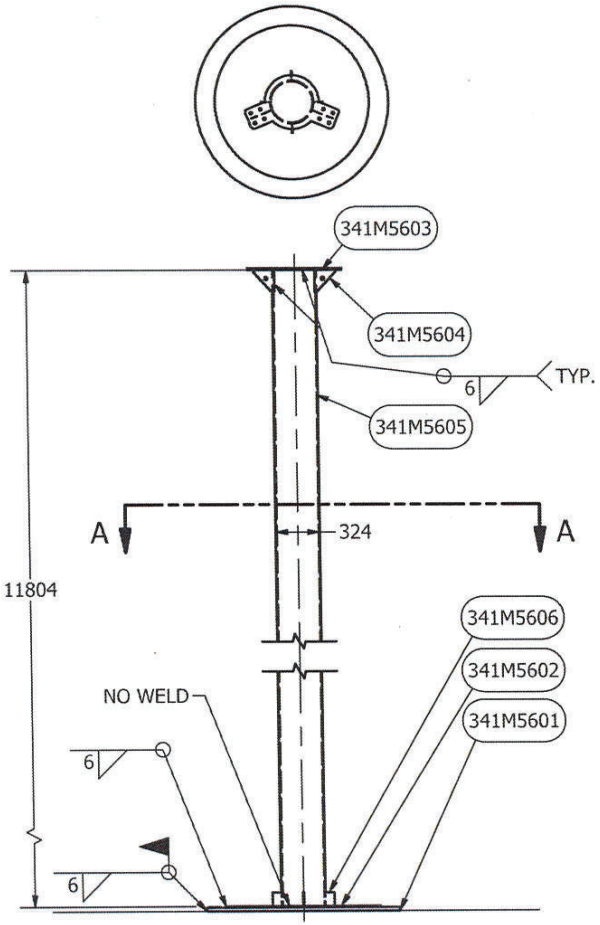

ELEVATION VIEW
INTERMEDIATE COLUMN
QTY: 8
SCALE 1/35

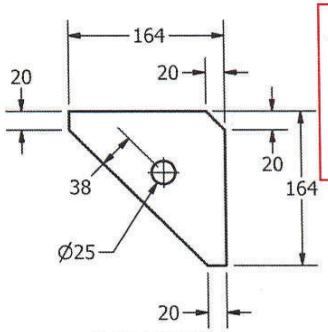

341M5604
SCALE 1/5

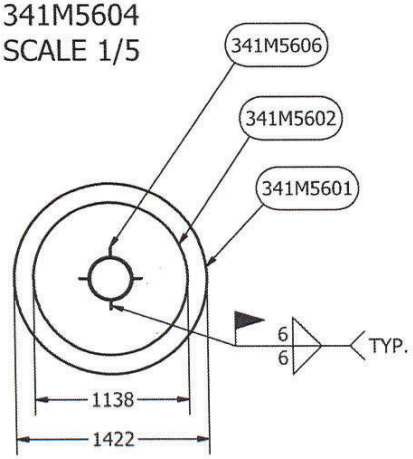

SECTION A-A
SCALE 1/35

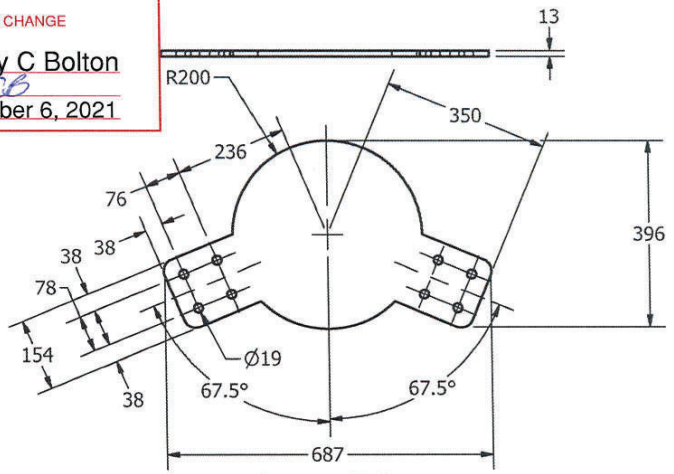

341M5603
SCALE 1/10

REVISION HISTORY		
REV	DESCRIPTION	DATE
A	Issued for Review	6/7/2021
1	ISSUED FOR CONSTRUCTION	6/8/2021

DRAWN MARC LOSIER	3/8/2021	INTERMEDIATE COLUMN
CHECKED KYLE BROWN	3/7/2019	
QA		TITLE: BAKER LAKE WHALE TAIL PROJECT - 10M LITERS - TANK #8: 6170TNK43 - ROOF STRUCTURE
MFG		
APPROVED		

SIZE A3 | DWG NO 341-M5 | REV 1
SCALE 1/35 | SHEET 6 OF 6

Roof Handrail Weld Mapping

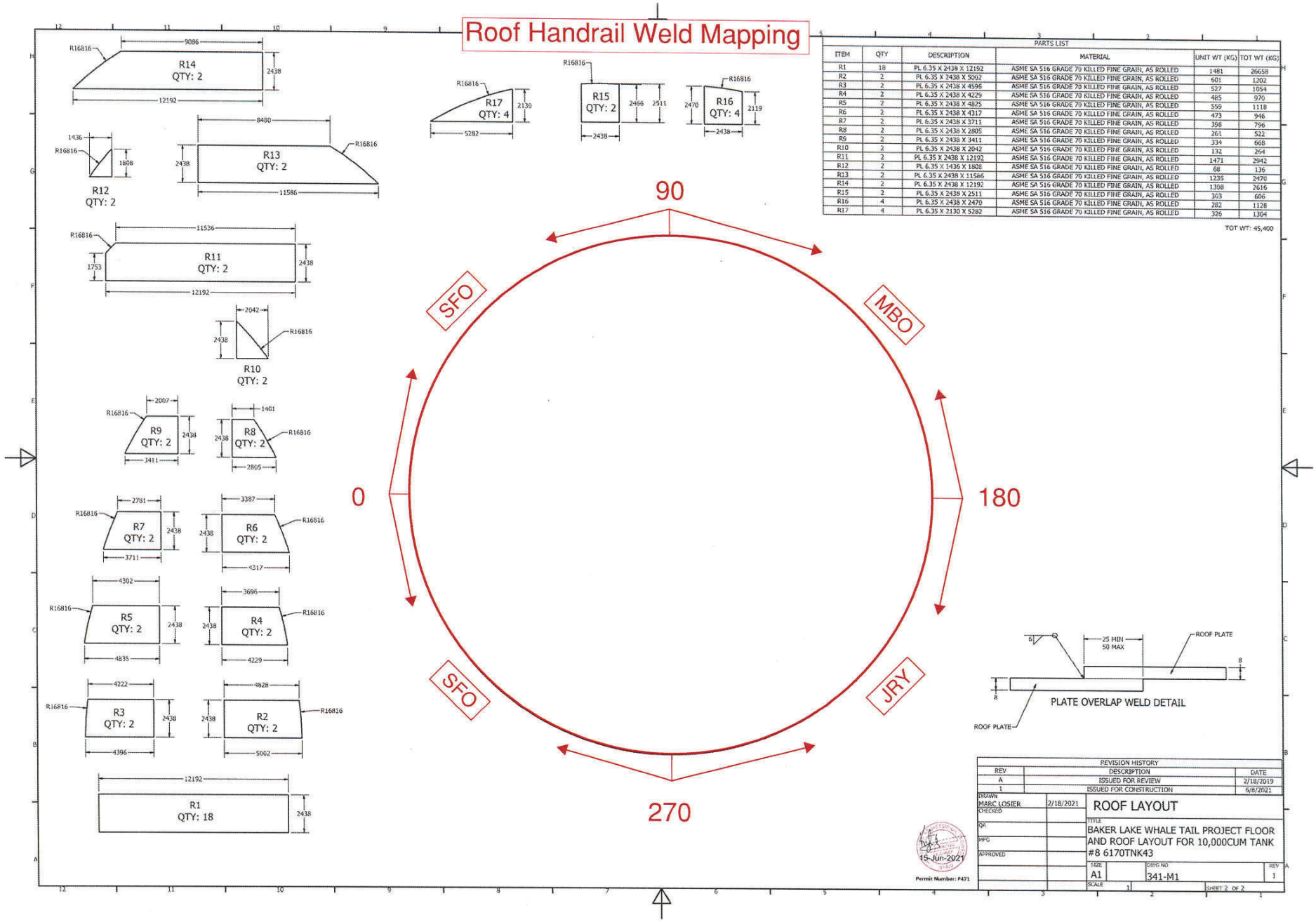

PARTS LIST

ITEM	QTY	DESCRIPTION	MATERIAL	UNIT WT (KG)	TOT WT (KG)
R1	18	PL 6.35 X 2438 X 12192	ASME SA 516 GRADE 70 KILLED FINE GRAIN, AS ROLLED	1481	26658
R2	2	PL 6.35 X 2438 X 5002	ASME SA 516 GRADE 70 KILLED FINE GRAIN, AS ROLLED	601	1202
R3	2	PL 6.35 X 2438 X 4596	ASME SA 516 GRADE 70 KILLED FINE GRAIN, AS ROLLED	527	1054
R4	2	PL 6.35 X 2438 X 4229	ASME SA 516 GRADE 70 KILLED FINE GRAIN, AS ROLLED	485	970
R5	2	PL 6.35 X 2438 X 4825	ASME SA 516 GRADE 70 KILLED FINE GRAIN, AS ROLLED	559	1118
R6	2	PL 6.35 X 2438 X 4317	ASME SA 516 GRADE 70 KILLED FINE GRAIN, AS ROLLED	473	946
R7	2	PL 6.35 X 2438 X 3711	ASME SA 516 GRADE 70 KILLED FINE GRAIN, AS ROLLED	398	796
R8	2	PL 6.35 X 2438 X 2805	ASME SA 516 GRADE 70 KILLED FINE GRAIN, AS ROLLED	261	522
R9	2	PL 6.35 X 2438 X 3411	ASME SA 516 GRADE 70 KILLED FINE GRAIN, AS ROLLED	334	668
R10	2	PL 6.35 X 2438 X 2042	ASME SA 516 GRADE 70 KILLED FINE GRAIN, AS ROLLED	132	264
R11	2	PL 6.35 X 2438 X 12192	ASME SA 516 GRADE 70 KILLED FINE GRAIN, AS ROLLED	1471	2942
R12	2	PL 6.35 X 1436 X 1808	ASME SA 516 GRADE 70 KILLED FINE GRAIN, AS ROLLED	68	136
R13	2	PL 6.35 X 2438 X 11586	ASME SA 516 GRADE 70 KILLED FINE GRAIN, AS ROLLED	1235	2470
R14	2	PL 6.35 X 2438 X 12192	ASME SA 516 GRADE 70 KILLED FINE GRAIN, AS ROLLED	1308	2616
R15	2	PL 6.35 X 2438 X 2511	ASME SA 516 GRADE 70 KILLED FINE GRAIN, AS ROLLED	303	606
R16	4	PL 6.35 X 2438 X 2470	ASME SA 516 GRADE 70 KILLED FINE GRAIN, AS ROLLED	282	1128
R17	4	PL 6.35 X 2130 X 5282	ASME SA 516 GRADE 70 KILLED FINE GRAIN, AS ROLLED	326	1304

TOT WT: 45,400

PLATE OVERLAP WELD DETAIL

REVISION HISTORY		
REV	DESCRIPTION	DATE
A	ISSUED FOR REVIEW	2/18/2019
1	ISSUED FOR CONSTRUCTION	6/8/2021

DRAWN	MARC LOSIER	2/18/2021
CHECKED		
QA		
MFG		
APPROVED		

ROOF LAYOUT

TITLE: BAKER LAKE WHALE TAIL PROJECT FLOOR AND ROOF LAYOUT FOR 10,000CUM TANK #8 6170TNK43

SIZE: A1 | DWG NO: 341-M1 | REV: 1

SCALE: 1 | SHEET 2 OF 2

15-Jun-2021

Permit Number: P471

STS STORAGE TANK SOLUTIONS

QUALITY CONTROL MANUAL

VISUAL TEST REPORT

Customer: AGNICO EAGLE

Location: BAKER LAKE

Code Requiring Test: API 650 (section 8.5.2) Reason for Test: New Construction

A weld shall be acceptable by visual examination if the inspection shows the following.

a) There are no crater cracks, other surface cracks or arc strikes in or adjacent to the welded joints.
b) Maximum permissible undercut is 0.4 mm (1/64 in.) in depth for vertical butt joints, vertically oriented permanent attachments, attachment welds for nozzles, manholes, flush-type openings, and the inside shell-to-bottom welds. For horizontal butt joints, horizontally oriented permanent attachments, and annular-ring butt joints, the maximum permissible undercut is 0.8 mm (1/32 in.) in depth.
c) The frequency of surface porosity in the weld does not exceed one cluster (one or more pores) in any 100 mm (4 in.) of length, and the diameter of each cluster does not exceed 2.5 mm (3/32 in.).
d) The reinforcement of the welds on all thicknesses:

Plate Thickness mm (in.)	Maximum Reinforcement Thickness mm (in.)	
	Vertical Joints	Horizontal Joints
≤ 13 (1/2)	2.5 (3/32)	3 (1/8)
> 13 (1/2) to 25 (1)	3 (1/8)	5 (3/16)
> 25 (1)	5 (3/16)	6 (1/4)

Surface Condition (As Welded)

Test Solution: N/A Test Date(s): 2021-08-31

Tested by: Matthew MacKenzie Ambient Conditions: 10 Degrees Celcius

Items Tested:

RAFTER CLIPS / COLUMN BRACES / COLUMN STOPPERS.

Results:

ALL WELDING ACCEPTABLE AT TIME OF INSPECTION.

STS Representative Signature: Matthew MacKenzie Date: 2021-08-31

Client Representative Signature: [signature] Date: 4TH SEPT 21

Exhibit 19, Rev 1

DIMENSIONAL CHECK REPORT – PLUMBNESS

Customer: AGNICO EAGLE

Location: BAKER LAKE

Equipment Tag No.: TK 8

Equipment Type: Above Ground Storage Tank

Equipment Description: Diesel Storage Tank

Code Requiring Test: API 650 Reason for Test: New Construction

(The tank shell will be checked for plumb at 12" below the tank roof. Plumb measurements will be checked at 45 degree intervals or less, max. 20' spacing)

Test Date(s): 2021-08-31

Tested by: Matthew MacKenzie

Test Results:

The Maximum out of plumbness of the **columns** does not exceed 1/200 of the total height

Acceptable at time of Inspection.

STS Representative Signature: Matthew MacKenzie Date: 2021-08-31

Client Representative Signature: [signature] Date: 4 Sept 21

SECTION 14.0

Nozzles

STS STORAGE TANK SOLUTIONS **AS BUILT STAMP**

☐ CHANGE ☒ NO CHANGE

NAME: Lindsay C Bolton
SIGNATURE:
DATE: September 6, 2021

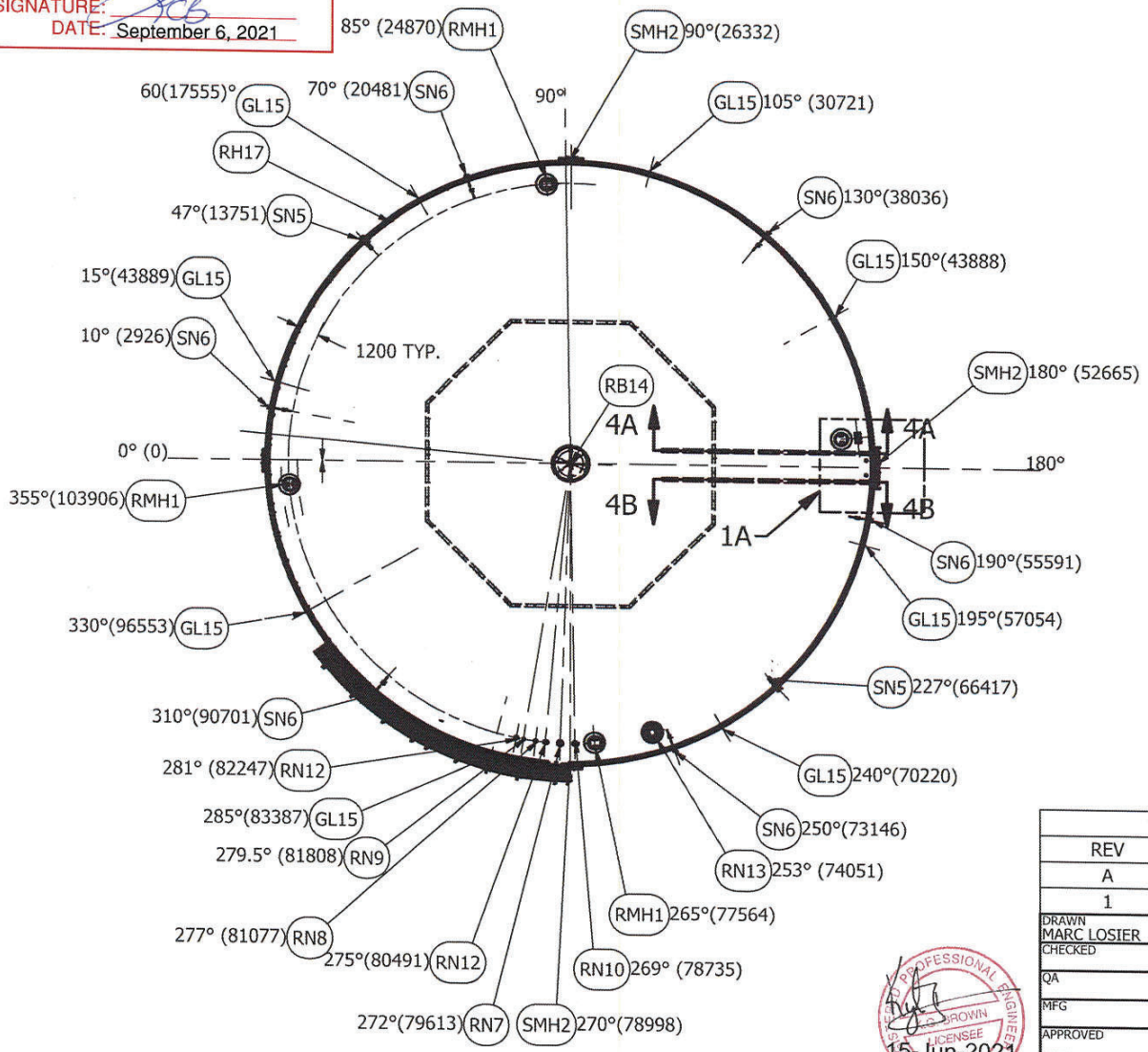

PLAN VIEW

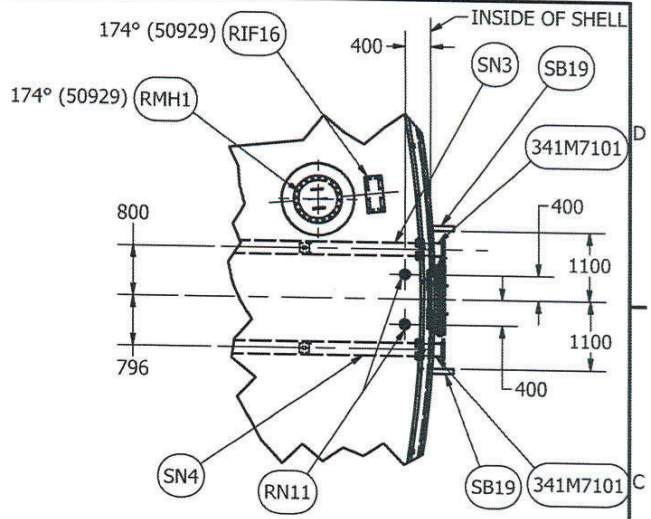

DETAIL 1A
SCALE 1/75

DIMENSION IN () DENOTES
ARC LENGTH ON THE EXTERIOR OF
THE SHELL FROM 0° IN MILLIMETRES
MEASURED ON COURSE ONE (1) FOR SHELL NOZZLES
AND ON COURSE FIVE (5) FOR ROOF NOZZLES

REGISTERED PROFESSIONAL ENGINEER
R. S. BROWN
LICENSEE
NT/NU
15-Jun-2021

Permit Number: P471

REVISION HISTORY		
REV	DESCRIPTION	DATE
A	ISSUE FOR REVIEW	6/1/2021
1	ISSUED FOR CONSTRUCTION	6/8/2021

DRAWN MARC LOSIER	5/31/2021	GENERAL ARRANGEMENT AND NOZZLE LAYOUT
CHECKED		
QA		TITLE
MFG		BAKER LAKE WHALE TAIL PROJECT - 10M LITERS - TANK #8: 6170TNK43 33.516M I.D.
APPROVED		

SIZE	DWG NO	REV
A3	341-M6	1

SCALE 1/250 SHEET 1 OF 6

PARTS LIST

ITEM	QTY	DIA	DESCRIPTION
RN7	1	200	GAUGE HATCH SHAND & JURS MODEL 95021-030201 -SEE DRG 341-M7 SHT 8 & DETAIL 6C FOR NOZZLE DETAIL
RN8	1	75	OVERFILL PROTECTION - SEE DRG 341-M7 SHT 9 FOR NOZZLE DETAIL
RN9	1	50	TEMPERATURE & WATER DETECTION PROBE - SEE DRG 341-M7 SHT 10 FOR NOZZLE DETAIL
SN3	1	200	FIXED PIPE - TANK LOADING 11.5M LG -SEE DRG 341-M7 SHT 3 & PART SECTION 4A-4A FOR NOZZLE DETAIL
SN4	1	200	FIXED PIPE - TANK UNLOADING 11.5M LG -SEE DRG 341-M7 SHT 4 & PART SECTION 4B-4B FOR NOZZLE DETAIL
SN5	2	150	PUMPING LOW SUCTION -SEE DRG 341-M7 SHT 6 & DETAIL 4A FOR NOZZLE DETAIL
SN6	6	75	WATER DRAW-OFF -SEE DRG 341-M7 SHT 7 & DETAIL 4B FOR NOZZLE DETAIL
GL15	8	-	GROUNDING LUG - FB6 X 65 X 152LG 316SS - SEE DETAIL 2A
RB14	1	100	PAINTER SCAFFOLD CABLE SUPPORT -SEE DRG 341-M7 SHT 5 FOR NOZZLE DETAIL
RH17	1	-	ROOF GUARDRAIL & HANDRAIL - SEE DRG 341-M8
RMH1	4	600	ROOF MANHOLE - SEE DRG 341-M4 SHT 2
RN10	1	150	RADAR - LEVEL DETECTION - SEE DRG 341-M7 SHT 11 & DETAIL 6B
RN11	2	50	ROOF PRESSURE RELIEF LINE CONNECTION SEE DRG 315-M7 FOR NOZZLE DETAIL
RN12	2	100	SPARE -SEE DRG 341-M7 SHT 12 & DETAIL 6B FOR NOZZLE DETAIL
RN13	1	600	FREE VENT, ALUMINUM HOOD, 125# F.F. FLANGE SHAND & JURS MODEL 94241-14-00 - SEE DRG 341-M7 SHT 13 FOR NOZZLE DETAIL
SB19	12		L75X75X6 X 400LG BRACKET FOR PRV PIPING
SMH2	4	900	SHELL MANHOLE - SEE DRG 341-M4 SHT 1
RIF16	1	-	ROOF INSPECTION FRAME SEE DETAIL 6D
341M301	1	900/200	SHELL REPAD AT 180 DEG - SEE DRG 341-M3
341M302	3	900	REPAD FOR SHELL MANHOLES AT 0DEG, 90DEG, 270DEG - SEE DRG 341-M3
341M303	2	150	REPAD FOR LOWPUMPING SUCTION SEE DRG. 341-M3
RMH1	4	600	REPAD FOR ROOF MANHOLE - SEE DRG 341-M3
341M306	6	80	REPAD FOR N6 WATER DRAWOFFF VALVE SEE DRG 341-M3
341M1100	4	900	SHELL MANHOLE DAVIT SEE DRG 341-M11
341M6401	16		PIPE SUPPORT - SEE SHEET 5
341M7102	2	150	PUMPING LOW LEVEL -SEE DRG 341-M7 FOR NOZZLE DETAIL
341M7101	2	200	DOUBLE FLANGE NOZZLES - SEE DRG 341-M7 FOR NOZZLE DETAIL

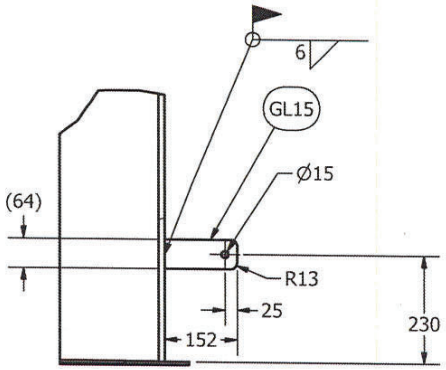

DETAIL 2A
GROUNDING LUG
SCALE 1/10

STS STORAGE TANK SOLUTIONS **AS BUILT STAMP**

☐ CHANGE ☒ NO CHANGE

NAME: Lindsay C Bolton
SIGNATURE: LCB
DATE: September 6, 2021

REVISION HISTORY

REV	DESCRIPTION	DATE
A	ISSUED FOR REVIEW	6/1/2021
1	ISSUED FOR CONSTRUCTION	6/8/2021

DRAWN	MARC LOSIER	5/31/2021
CHECKED		
QA		
MFG		
APPROVED		

GENERAL ARRANGEMENT AND NOZZLE LAYOUT

TITLE
BAKER LAKE WHALE TAIL PROJECT - 10M LITERS - TANK #8: 6170TNK43 33.516M I.D.

SIZE	DWG NO	REV
A3	341-M6	1

SCALE 1/500 SHEET 2 OF 6

PROFESSIONAL ENGINEER
BROWN
LICENSEE
NT/NU
15-Jun-2021

Permit Number: P471

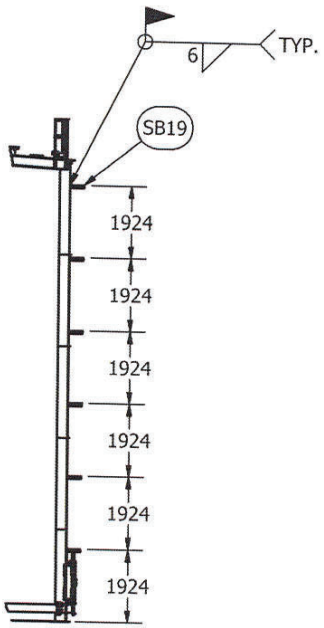

DETAIL 3A
SCALE 1/125

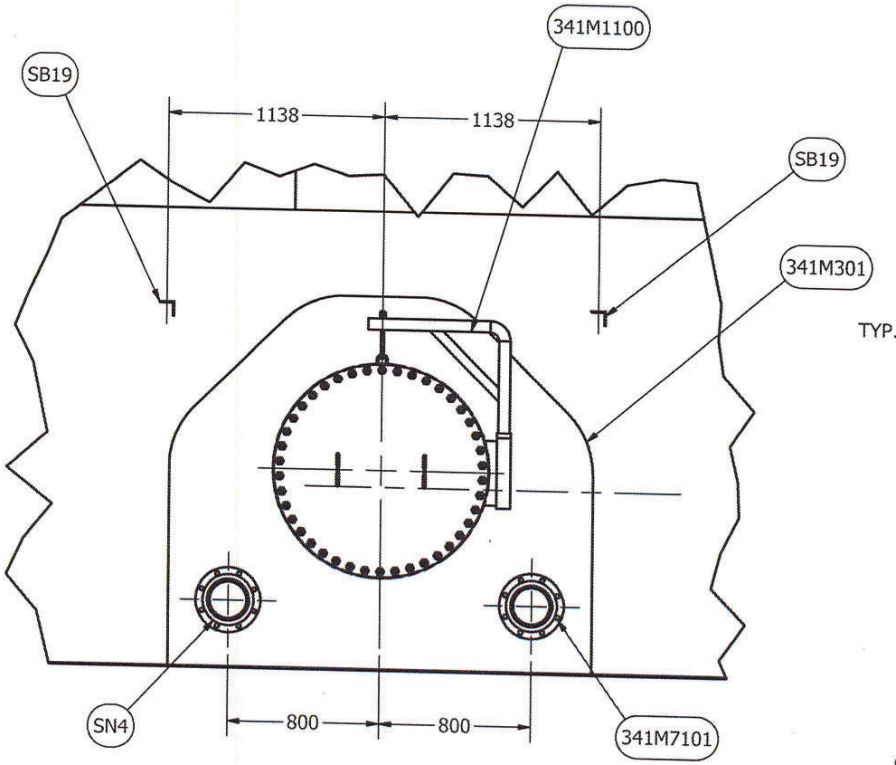

DETAIL 3B
VIEW AT SMH2 AT 180°
SCALE 1/25

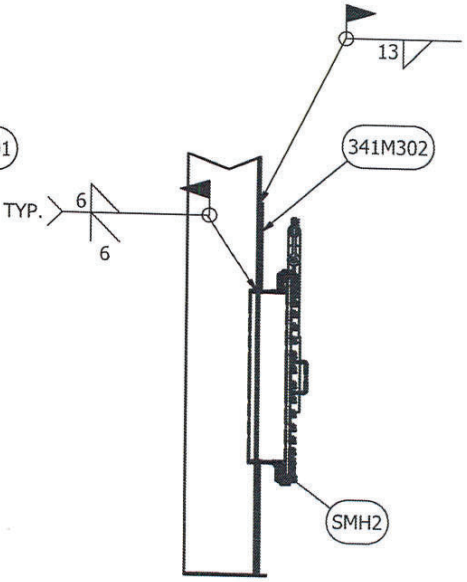

DETAIL 3C
SECTION THROUGH MANHOLE
TYP. AT 0°, 90°, 270°
SCALE 1/25

STS STORAGE TANK SOLUTIONS **AS BUILT STAMP**

☐ CHANGE ☒ NO CHANGE

NAME: Lindsay C Bolton
SIGNATURE: LCB
DATE: September 6, 2021

LICENSED PROFESSIONAL ENGINEER
L.C. BROWN
LICENSEE
15-Jun-2021
NT/NU

Permit Number: P471

REVISION HISTORY		
REV	DESCRIPTION	DATE
A	ISSUED FOR REVIEW	2/26/2019
1	ISSUED FOR CONSTRUCTION	6/8/2021

DRAWN MARC LOSIER	5/31/2021	GENERAL ARRANGEMENT AND NOZZLE LAYOUT
CHECKED		
QA		
MFG		TITLE: BAKER LAKE WHALE TAIL PROJECT - 10M LITERS - TANK #8: 6170TNK43 33.516M I.D.
APPROVED		

SIZE	DWG NO	REV
A3	341-M6	1

SCALE 1/500 SHEET 3 OF 6

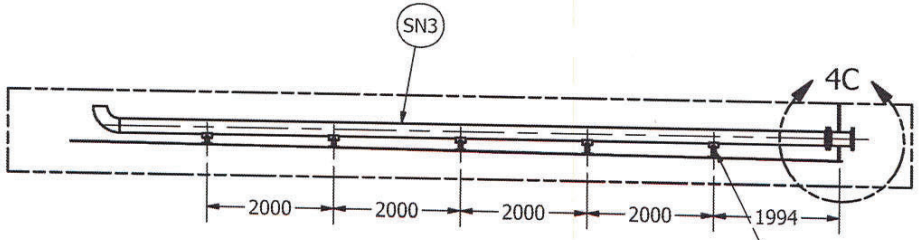

PART SECTION 4A-4A
SCALE 1/75

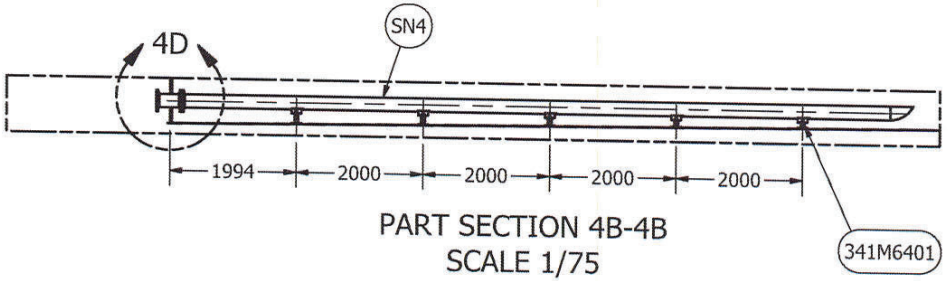

PART SECTION 4B-4B
SCALE 1/75

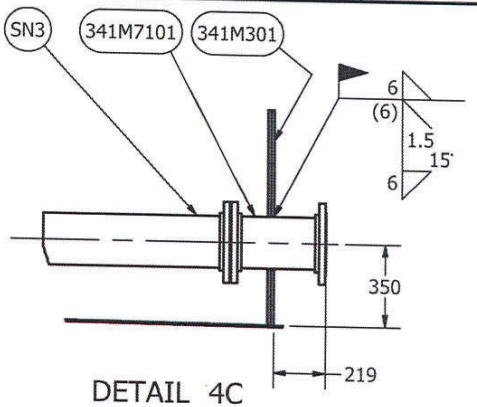

DETAIL 4C
SCALE 1/20

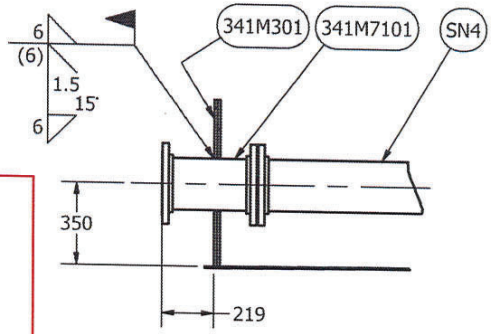

DETAIL 4D
SCALE 1/20

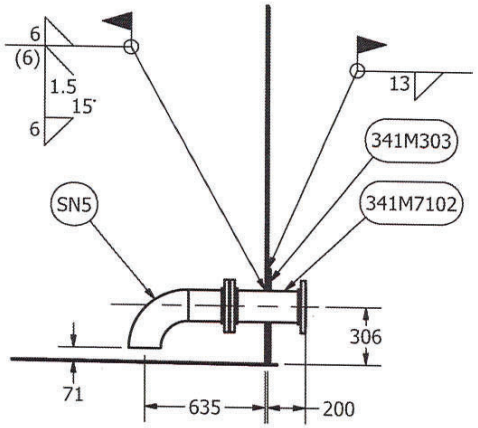

DETAIL 4A
N5 PUMPING LOW SUCTION
SCALE 1/25

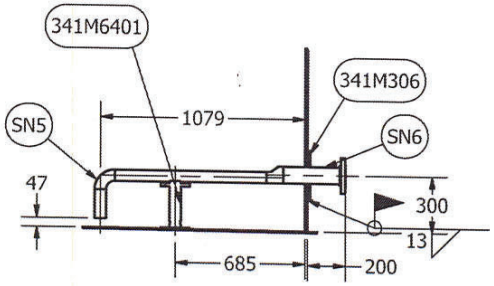

DETAIL 4B
N6 WATER DRAWOFF VALVE
SCALE 1/25

STS STORAGE TANK SOLUTIONS **AS BUILT STAMP**

☐ CHANGE ☒ NO CHANGE

NAME: Lindsay C Bolton
SIGNATURE: LCB
DATE: September 6, 2021

PROFESSIONAL ENGINEER
LICENSEE
NT/NU
15-Jun-2021

Permit Number: P471

REVISION HISTORY		
REV	DESCRIPTION	DATE
A	ISSUED FOR REVIEW	6/1/2021
1	ISSUED FOR CONSTRUCTION	6/8/2021

DRAWN MARC LOSIER	5/31/2021	GENERAL ARRANGEMENT AND NOZZLE LAYOUT
CHECKED		
QA		TITLE
MFG		BAKER LAKE WHALE TAIL PROJECT - 10M LITERS - TANK #8: 6170TNK43 33.516M I.D.
APPROVED		

SIZE	DWG NO	REV
A3	341-M6	1
SCALE 1/500	SHEET 4 OF 6	

STS STORAGE TANK SOLUTIONS **AS BUILT STAMP**

☐ CHANGE ☒ NO CHANGE

NAME: Lindsay C Bolton
SIGNATURE:
DATE: September 6, 2021

PARTS LIST FOR ONE (1) SHOWN				
ITEM	ITEM QTY	CUT (MM)	DESCRIPTION	MATERIAL
1	1	152	L100X100X10 [4"X4"X3/8"]	G40.21M 350W
2	1	152	FB150X6 [6"X1/4"]	G40.21M 300W
3	1	305	50NS [2"] PIPE SCH. 40	A53 ERW

PIPE SUPPORT TYPE 1
MARK: 315M6401
QTY: 16

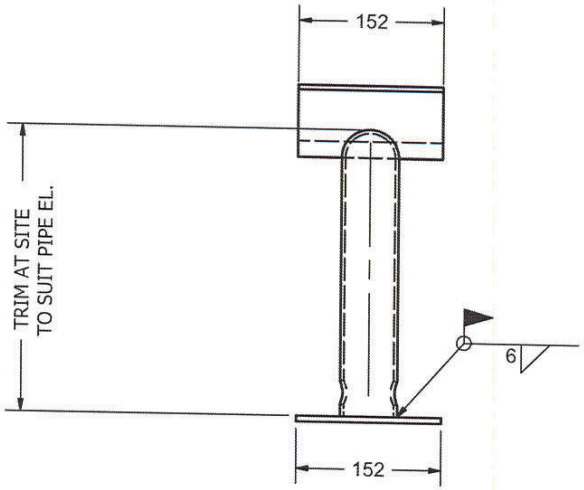

PIPE SUPPORT
SCALE 1/5

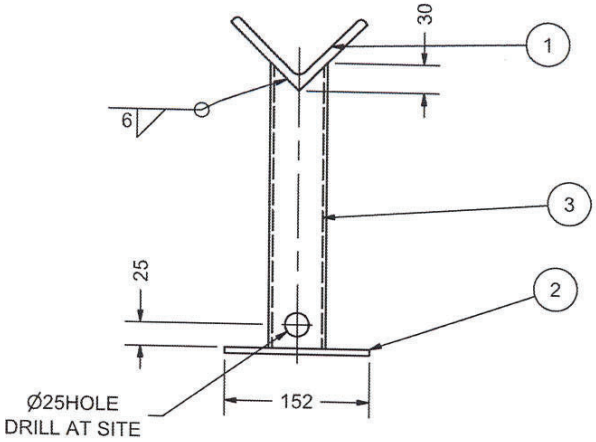

NOTE:
ALL DIMENSIONS ARE IN MM UNLESS OTHERWISE NOTED

PROFESSIONAL ENGINEER
BROWN
LICENSEE
NT/NU
15-Jun-2021

Permit Number: P471

REVISION HISTORY		
REV	DESCRIPTION	DATE
A	ISSUED FOR REVIEW	6/1/2021
1	ISSUED FOR CONSTRUCTION	6/8/2021

DRAWN MARC LOSIER	5/31/2021	GENERAL ARRANGEMENT AND NOZZLE LAYOUT
CHECKED		
QA		TITLE
MFG		BAKER LAKE WHALE TAIL PROJECT - 10M LITERS - TANK #8: 6170TNK43 33.516M I.D.
APPROVED		
		SIZE A3 / DWG NO 341-M6 / REV 1
		SCALE 1/5 / SHEET 5 OF 6

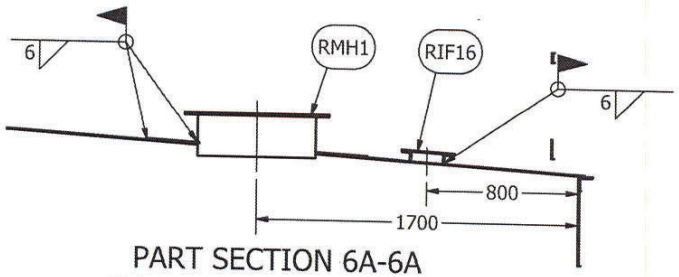

PART SECTION 6A-6A
ROOF MANHOLE (RMH1)
AND ROOF INSPECTION FRAME (RIF16)
SCALE 1/25

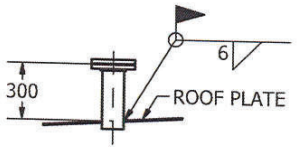

TYPICAL DETAIL 6B
RN8, RN9, RN10, RN11, RN12
SCALE 1 / 25

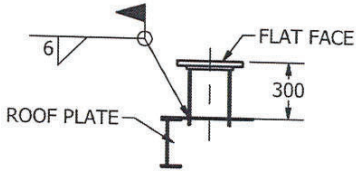

DETAIL 6C
RN7 - GAUGE HATCH
SCALE 1/25

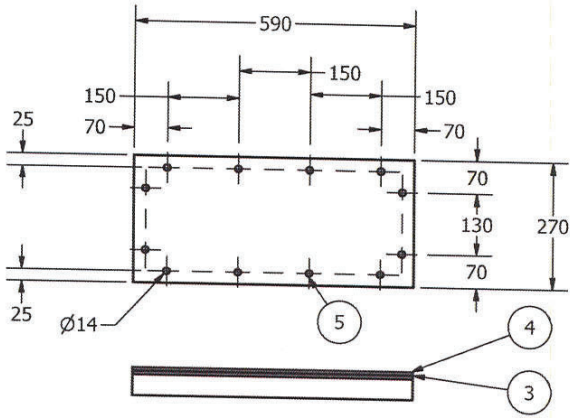

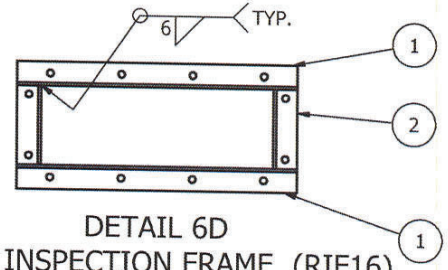

DETAIL 6D
ROOF INSPECTION FRAME (RIF16)
SCALE 1/10

PARTS LIST

ITEM	ITEM QTY	CUT (MM)	DESCRIPTION	MATERIAL	MASS
1	2	1180	L50X50X6	300W	2.827 kg
2	2	337	L50X50X6	300W	0.807 kg
3	1		GASKET, 1.5THK X 270 X5 90	Rubber	0.237 kg
4	1		COVER, 6THK X 270 X 590	Steel, Mild	7.951 kg
5	12	1	BOLTS, NUTS, WASHER, 1/2" UNC X 1 1/4" LG,	GR.5	

STS STORAGE TANK SOLUTIONS **AS BUILT STAMP**

☐ CHANGE ☒ NO CHANGE

NAME: Lindsay C Bolton
SIGNATURE:
DATE: September 6, 2021

REVISION HISTORY

REV	DESCRIPTION	DATE
A	ISSUED FOR REVIEW	6/1/2021
1	ISSUED FOR CONSTRUCTION	6/8/2021

DRAWN MARC LOSIER	5/31/2021	GENERAL ARRANGEMENT AND NOZZLE LAYOUT
CHECKED		
QA		
MFG		TITLE: BAKER LAKE WHALE TAIL PROJECT - 10M LITERS - TANK #8: 6170TNK43 33.516M I.D.
APPROVED		

SIZE	DWG NO	REV
A3	341-M6	1

SCALE 1/500 SHEET 6 OF 6

APEGGN PROFESSIONAL ENGINEER S. BROWN LICENSEE NT/NU
15-Jun-2021

Permit Number: P471

Parts List					
ITEM	ITEM QTY	CUT (MM)	DESCRIPTION	MATERIAL	MASS
1	2		FLANGE, SLIP ON, 150#, 200NS	A350 LF2	12 kg
2	1	375	PIPE, S80, 200NS	A333 GR. 6	24 kg

Ø200 NS DOUBLE FLANGE
USE WITH SN3 & SN4
MARK: 341M7101
QTY: 2

WEIGHT/SPOOL: 48.2KG

NOTES:
1. ALL DIMENSIONS ARE IN MM UNLESS OTHERWISE NOTED
2. FINISH: BARE

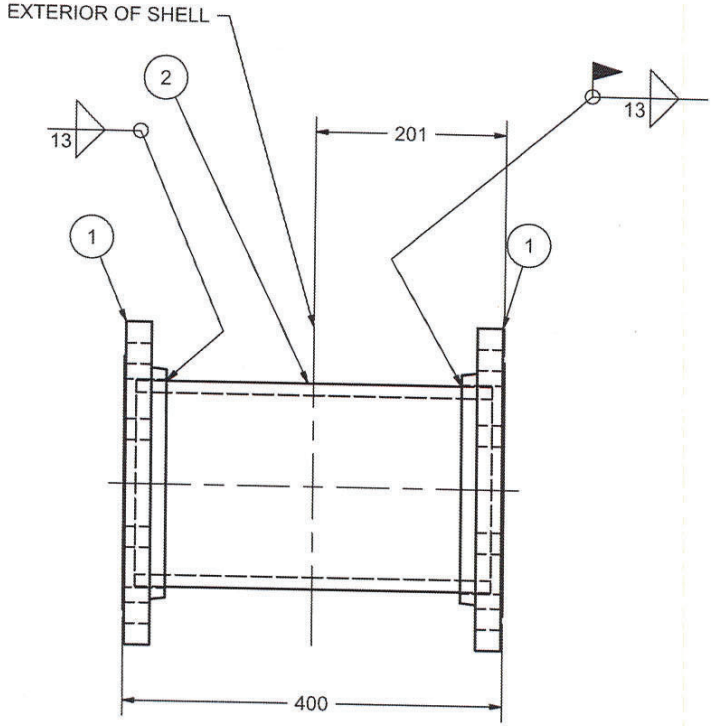

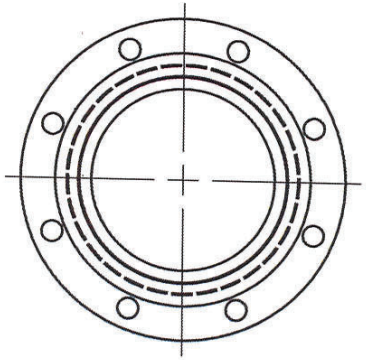

STS STORAGE TANK SOLUTIONS **AS BUILT STAMP**

☐ CHANGE ☒ NO CHANGE

NAME: Lindsay C Bolton
SIGNATURE:
DATE: September 6, 2021



Permit Number: P471

REVISION HISTORY		
REV	DESCRIPTION	DATE
A	ISSUE FOR REVIEW	3/9/2021
1	ISSUED FOR CONSTRUCTION	6/8/2021

DRAWN MARC LOSIER	3/9/2021	NOZZLE DETAILS
CHECKED		
QA		
MFG		TITLE: BAKER LAKE WHALE TAIL PROJECT - 10M LITERS - TANK #8: 6170TNK43
APPROVED		
		SIZE A3 / DWG NO 341-M7 / REV 1
		SCALE / SHEET 1 OF 13

Parts List					
ITEM	ITEM QTY	CUT (MM)	DESCRIPTION	MATERIAL	MASS
1	2		FLANGE, SLIP ON, 150#, 150NS	A350 LF2	7 kg
2	1	375	PIPE, S80, 150NS	A333 GR. 6	16 kg

Ø150 NS DOUBLE FLANGE
USE WITH SN5 LOW PUMPING SUCTION
MARK: 341M7102
QTY: 2

WEIGHT/SPOOL: 30.8KG

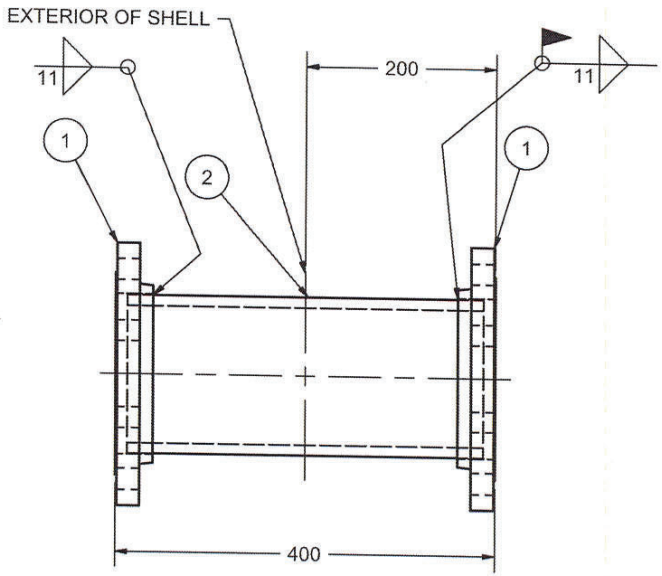

NOTES:
1. ALL DIMENSIONS ARE IN MM UNLESS OTHERWISE NOTED
2. FINISH: BARE

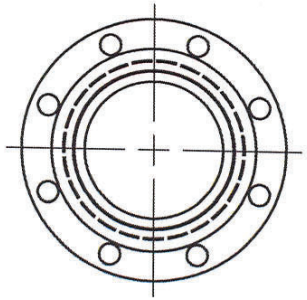

STS STORAGE TANK SOLUTIONS **AS BUILT STAMP**

☐ CHANGE ☒ NO CHANGE

NAME: Lindsay C Bolton
SIGNATURE: [signature]
DATE: September 6, 2021

REGISTERED PROFESSIONAL ENGINEER
L.C. BROWN
LICENSEE
NT/NU
15-Jun-2021

Permit Number: P471

REVISION HISTORY		
REV	DESCRIPTION	DATE
A	ISSUE FOR REVIEW	3/9/2021
1	ISSUED FOR CONSTRUCTION	6/8/2021

DRAWN MARC LOSIER	3/9/2021	NOZZLE DETAILS
CHECKED		
QA		TITLE
MFG		BAKER LAKE WHALE TAIL PROJECT - 10M LITERS - TANK #8: 6170TNK43
APPROVED		
		SIZE A3 / DWG NO 341-M7 / REV 1
		SCALE / SHEET 2 OF 13

Parts List

ITEM	ITEM QTY	CUT (MM)	DESCRIPTION	MATERIAL	MASS
1	1		FLANGE, SLIP ON, 150#, 200NS	A350 LF2	12 kg
2	1	11185	PIPE, S40, 200NS	A333 GR. 6	476 kg
3	1		ELBOW, S40, LR, 90DEG, 200NS	A420	20 kg

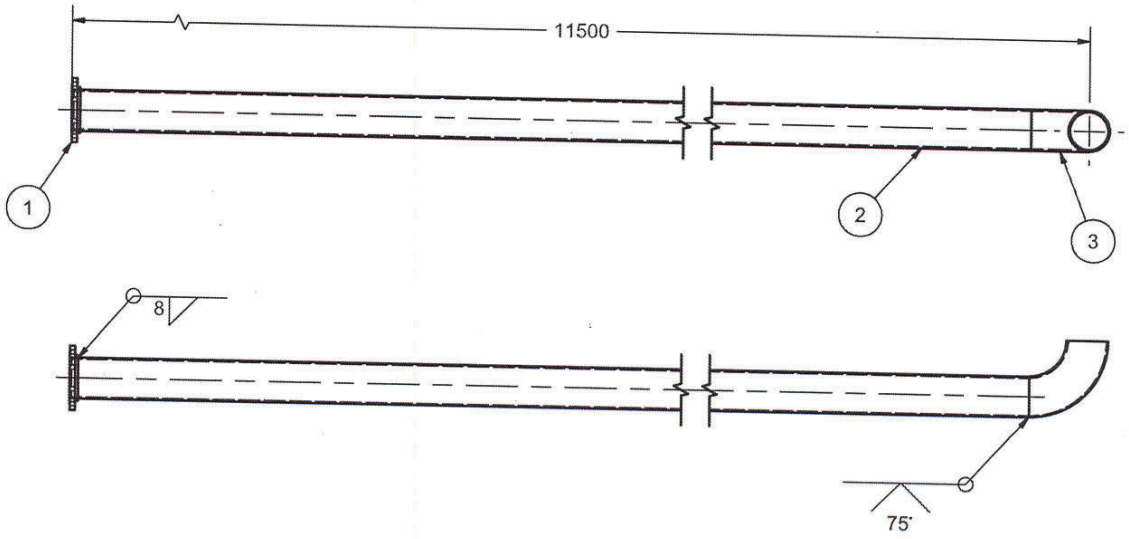

15-Jun-2021

Permit Number: P471

NOTES:
1. ALL DIMENSIONS ARE IN MM UNLESS OTHERWISE NOTED
2. FINISH: BARE

Ø200 NS FIXED PIPE LOADING
MARK: SN3
QTY: 1
WEIGHT/SPOOL: 508KG

STS STORAGE TANK SOLUTIONS **AS BUILT STAMP**

☐ CHANGE ☒ NO CHANGE

NAME: Lindsay C Bolton
SIGNATURE: LCB
DATE: September 6, 2021

REVISION HISTORY

REV	DESCRIPTION	DATE
A	ISSUE FOR REVIEW	3/9/2021
1	ISSUED FOR CONSTRUCTION	6/8/2021

DRAWN MARC LOSIER	3/9/2021	NOZZLE DETAILS
CHECKED		
QA		TITLE
MFG		BAKER LAKE WHALE TAIL PROJECT - 10M LITERS - TANK #8: 6170TNK43
APPROVED		
		SIZE A3 / DWG NO 341-M7 / REV 1
		SCALE / SHEET 3 OF 13

Parts List					
ITEM	ITEM QTY	CUT (MM)	DESCRIPTION	MATERIAL	MASS
1	1		FLANGE, SLIP ON, 150#, 200NS	A350 LF2	12 kg
2	1	11185	PIPE, S40, 200NS	A333 GR.6	476 kg
3	1		ELBOW, S40, LR, 90DEG, 200NS	A4200	20 kg

Ø200 NS FIXED PIPE UNLOADING
MARK: SN4
QTY: 1
WEIGHT/SPOOL: 499KG

NOTES:
1. ALL DIMENSIONS ARE IN MM UNLESS OTHERWISE NOTED
2. FINISH: BARE

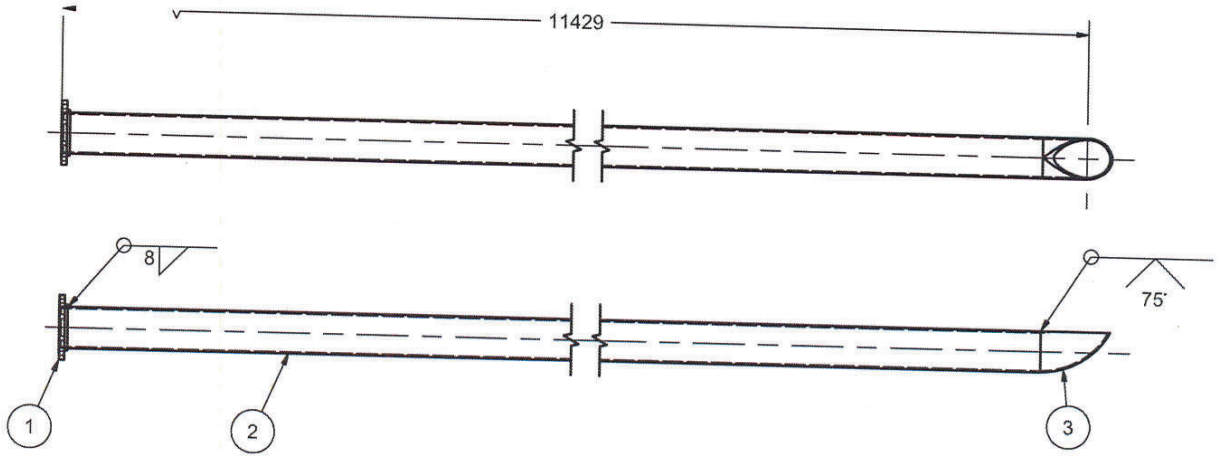

STS STORAGE TANK SOLUTIONS **AS BUILT STAMP**

☐ CHANGE ☒ NO CHANGE

NAME: Lindsay C Bolton
SIGNATURE:
DATE: September 6, 2021

PROFESSIONAL ENGINEER — BROWN — LICENSEE — NT/NU — 15-Jun-2021

Permit Number: P471

REVISION HISTORY		
REV	DESCRIPTION	DATE
A	ISSUE FOR REVIEW	3/9/2021
1	ISSUED FOR CONSTRUCTION	6/8/2021

DRAWN	MARC LOSIER	3/9/2021
CHECKED		
QA		
MFG		
APPROVED		

NOZZLE DETAILS

TITLE: BAKER LAKE WHALE TAIL PROJECT - 10M LITERS - TANK #8: 6170TNK43

SIZE: A3 | DWG NO: 341-M7 | REV: 1

SCALE | SHEET 4 OF 13

Parts List					
ITEM	ITEM QTY	CUT (MM)	DESCRIPTION	MATERIAL	MASS
1	1		PLATE, 6 THK X 150DIA	G40.21M 300W	1 kg
2	1	152	PIPE, S40, 100NS	A53	2 kg
3	1		PLATE, 10THK X 133 I.D. X 229 O.D.	G40.21M 300W	1 kg

Ø100 NS PAINTERS SCAFFOLD CABLE SUPPORT
MARK: RB14
QTY: 1
WEIGHT/SPOOL: 5KG

NOTES:
1. ALL DIMENSIONS ARE IN MM UNLESS OTHERWISE NOTED
2. FINISH: BARE

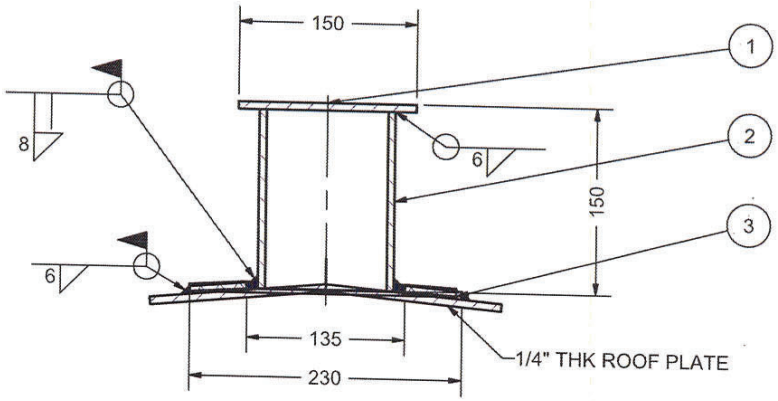

STS STORAGE TANK SOLUTIONS **AS BUILT STAMP**

☐ CHANGE ☒ NO CHANGE

NAME: Lindsay C Bolton
SIGNATURE:
DATE: September 6, 2021

REVISION HISTORY		
REV	DESCRIPTION	DATE
A	ISSUE FOR REVIEW	3/9/2021
1	ISSUED FOR CONSTRUCTION	6/8/2021

DRAWN MARC LOSIER	3/9/2021	NOZZLE DETAILS
CHECKED		
QA		TITLE
MFG		BAKER LAKE WHALE TAIL PROJECT - 10M LITERS - TANK #8: 6170TNK43
APPROVED		
		SIZE A3 / DWG NO 341-M7 / REV 1
		SCALE / SHEET 5 OF 13

REGISTERED PROFESSIONAL ENGINEER
L.G. BROWN
LICENSEE
NT/NU
15-Jun-2021

Permit Number: P471

Parts List for one (1), two (2) reqruired					
ITEM	ITEM QTY	CUT (MM)	MATERIAL	DESCRIPTION	MASS
1	1		A350 LF2	FLANGE, SLIP ON, 150#, 150NS	7 kg
2	1	203	A333 GR.6	PIPE, S40, 150NS	6 kg
3	1		A420	ELBOW, LR, S40, 90DEG, 150NS	10 kg

Ø150 NS PIPING LOW LEVEL
MARK: SN5
QTY: 2

WEIGHT/SPOOL: 23.3KG

NOTES:
1. ALL DIMENSIONS ARE IN MM UNLESS OTHERWISE NOTED
2. FINISH: BARE

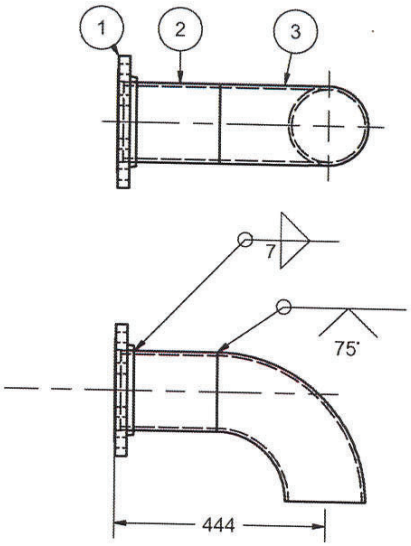

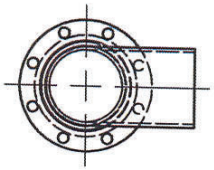

STS STORAGE TANK SOLUTIONS **AS BUILT STAMP**

☐ CHANGE ☒ NO CHANGE

NAME: Lindsay C Bolton
SIGNATURE:
DATE: September 6, 2021

REVISION HISTORY		
REV	DESCRIPTION	DATE
A	ISSUE FOR REVIEW	3/9/2021
1	ISSUED FOR CONSTRUCTION	6/8/2021

DRAWN MARC LOSIER	3/9/2021	NOZZLE DETAILS
CHECKED		
QA		TITLE
MFG		BAKER LAKE WHALE TAIL PROJECT - 10M LITERS - TANK #8: 6170TNK43
APPROVED		
		SIZE A3 / DWG NO 341-M7 / REV 1
		SCALE / SHEET 6 OF 13

REGISTERED PROFESSIONAL ENGINEER
G. BROWN
LICENSEE
NT/NU
15-Jun-2021

Permit Number: P471

Ø75 NS WATER DRAW OFF
MARK: SN6
QTY: 6

WEIGHT/SPOOL: 16.6KG

Parts List for one (1), six (6) required

ITEM	ITEM QTY	CUT (MM)	DESCRIPTION	MATERIAL	MASS
1	1		FLANGE, SLIP ON, 150#, 75NS	A350 LF2	4 kg
2	1	316	PIPE, S80, 75NS	A333 GR. 6	5 kg
3	1		ELBOW, S80, 90DEG, LR, 50NS	A420	1 kg
4	1		ECCENTRIC REDUCER, BW, S80, 75NS X 50NS	A420	1 kg
5	1	799	PIPE, S80, 50NS	A333 GR. 6	6 kg
6	1	152	PIPE, S80, 50NS	A333 GR. 6	1 kg

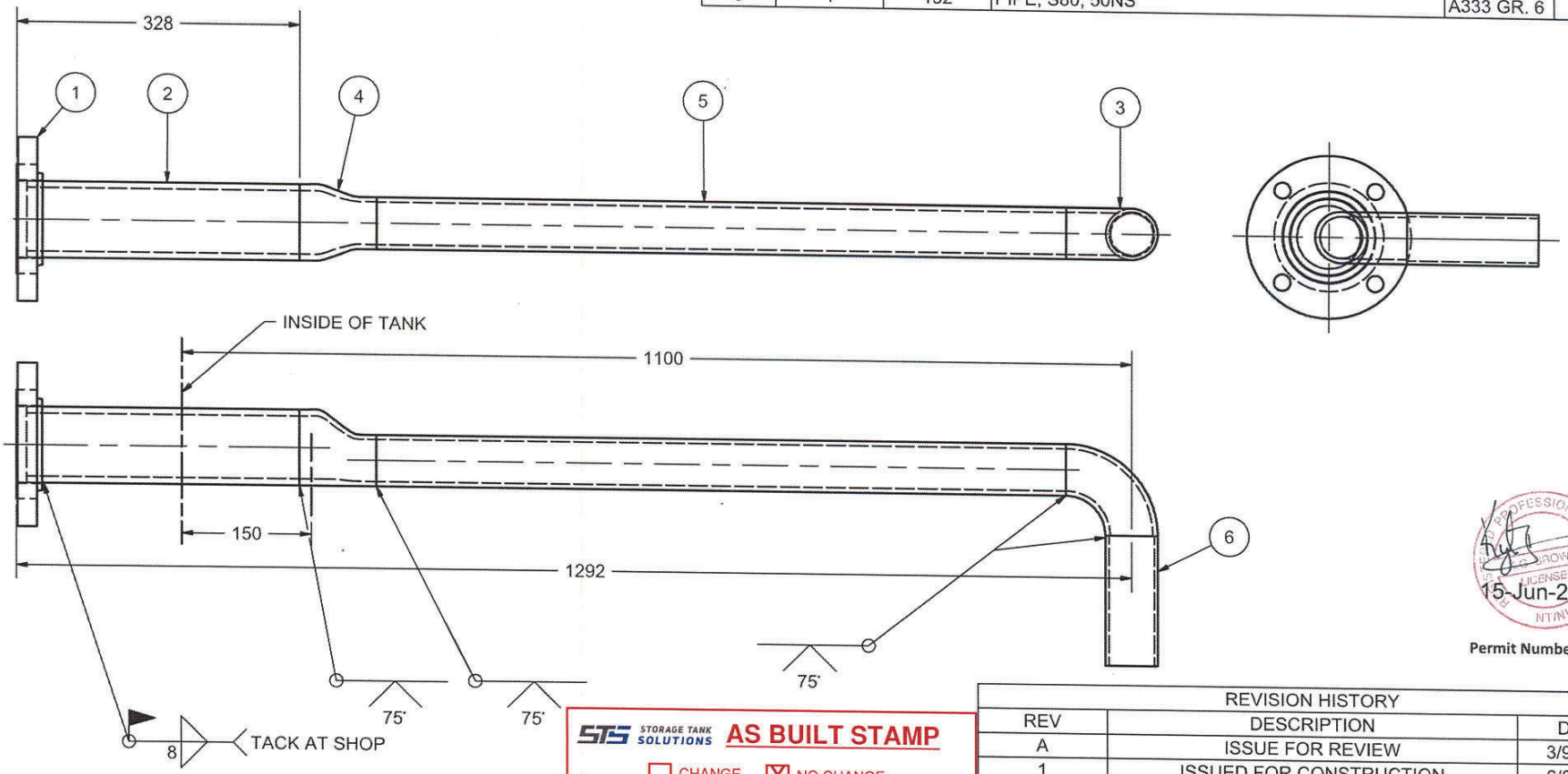

15-Jun-2021

Permit Number: P471

STS STORAGE TANK SOLUTIONS **AS BUILT STAMP**

☐ CHANGE ☒ NO CHANGE

NAME: Lindsay C Bolton
SIGNATURE:
DATE: September 6, 2021

NOTES:
1. ALL DIMENSIONS ARE IN MM UNLESS OTHERWISE NOTED
2. FINISH: BARE

REVISION HISTORY

REV	DESCRIPTION	DATE
A	ISSUE FOR REVIEW	3/9/2021
1	ISSUED FOR CONSTRUCTION	6/8/2021

DRAWN	MARC LOSIER	3/9/2021
CHECKED		
QA		
MFG		
APPROVED		

NOZZLE DETAILS

TITLE: BAKER LAKE WHALE TAIL PROJECT - 10M LITERS - TANK #8: 6170TNK43

SIZE: A3 | DWG NO: 341-M7 | REV: 1

SCALE:

SHEET 7 OF 13

Parts List					
ITEM	ITEM QTY	CUT (MM)	DESCRIPTION	MATERIAL	MASS
1	1		FLANGE, SLIP ON, FLAT FACE, 150#, 2000NS	A350 LF2	11 kg
2	1	330	Pipe	Steel	14 kg

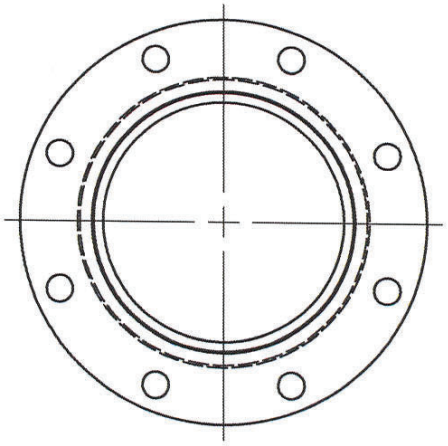

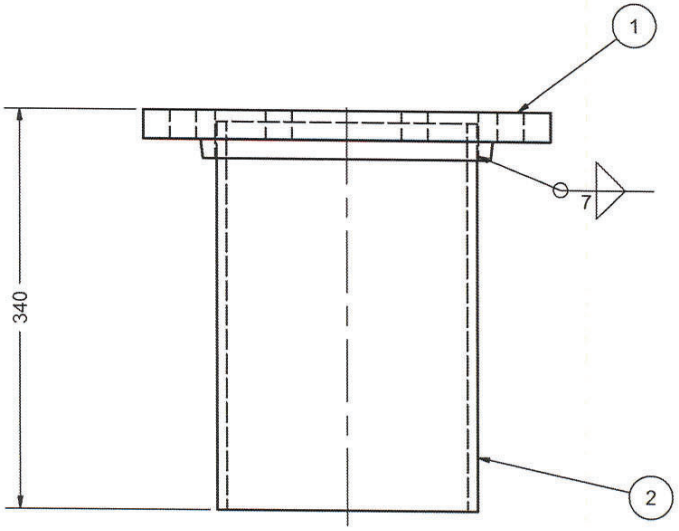

Ø200 NS ROOF NOZZLE FOR GAUGE HATCH
MARK: RN7
QTY: 1

WEIGHT/SPOOL: 16KG

NOTES:
1. ALL DIMENSIONS ARE IN MM UNLESS OTHERWISE NOTED
2. FINISH: BARE

STS STORAGE TANK SOLUTIONS **AS BUILT STAMP**

☐ CHANGE ☒ NO CHANGE

NAME: Lindsay C Bolton
SIGNATURE:
DATE: September 6, 2021

REVISION HISTORY		
REV	DESCRIPTION	DATE
A	ISSUE FOR REVIEW	3/9/2021
1	ISSUED FOR CONSTRUCTION	6/8/2021

PROFESSIONAL ENGINEER — S. BROWN — LICENSEE — NT/NU
15-Jun-2021

Permit Number: P471

DRAWN MARC LOSIER	3/9/2021	NOZZLE DETAILS
CHECKED		
QA		TITLE
MFG		BAKER LAKE WHALE TAIL PROJECT - 10M LITERS - TANK #8: 6170TNK43
APPROVED		
SIZE A3	DWG NO 341-M7	REV 1
SCALE	SHEET 8 OF 13	

Parts List					
ITEM	ITEM QTY	CUT (MM)	DESCRIPTION	MATERIAL	MASS
1	1		FLANGE, SLIP ON, 150#, 75NS	A350 LF2	4 kg
2	1	330	PIPE, S40, 75NS	A53	4 kg
3.1	1		GASKET, RING, 150#, 1/16"THK X 75NS	DURLON 8500	0 kg
3.2	4		STUD, L7, 5/8" X 3.5" LG	L7	0 kg
3.3	8		HEAVY HEX NUT, GR4, 5/8" NC	GR4	0 kg
4	1	25	BLIND FLANGE, 150#, 75NS	A350 LF2	5 kg

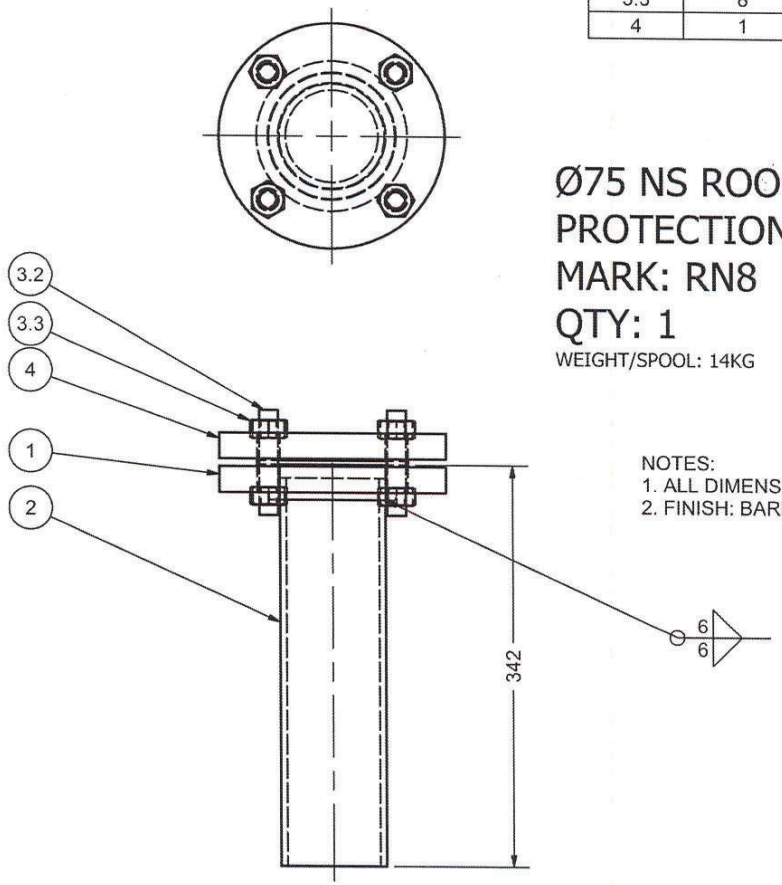

Ø75 NS ROOF NOZZLE FOR OVERFILL PROTECTION

MARK: RN8

QTY: 1

WEIGHT/SPOOL: 14KG

NOTES:
1. ALL DIMENSIONS ARE IN MM UNLESS OTHERWISE NOTED
2. FINISH: BARE

STS STORAGE TANK SOLUTIONS **AS BUILT STAMP**

☐ CHANGE ☒ NO CHANGE

NAME: Lindsay C Bolton
SIGNATURE:
DATE: September 6, 2021

REVISION HISTORY		
REV	DESCRIPTION	DATE
A	ISSUE FOR REVIEW	3/9/2021
1	ISSUED FOR CONSTRUCTION	6/8/2021

DRAWN MARC LOSIER	3/9/2021	NOZZLE DETAILS
CHECKED		
QA		
MFG		TITLE: BAKER LAKE WHALE TAIL PROJECT - 10M LITERS - TANK #8: 6170TNK43
APPROVED		
		SIZE A3 / DWG NO 341-M7 / REV 1
		SCALE / SHEET 9 OF 13

APEGGA PROFESSIONAL ENGINEER BROWN LICENSEE 15-Jun-2021 NT/NU

Permit Number: P471

Parts List for One, Three (3) Required					
ITEM	ITEM QTY	CUT (MM)	DESCRIPTION	MATERIAL	MASS
1	1		FLANGE, SLIP ON, RF, 150#, 50NS	A350 LF2	2 kg
2.1	4		STUD, 5/8" X 3.5" LG	L7	0 kg
2.2	8		NUT, 5/8" UNC	GR4	0 kg
2.3	1		GASKET, RING, 150#, 1/16" THK X 50NS	DURLON 8500	0 kg
3	1		BLIND FLANGE, RF, 150#, 50NS	A350 LF2	2 kg
4	1	330	PIPE, S40, 50NS	A53	2 kg

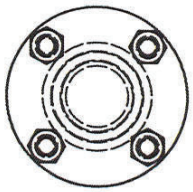

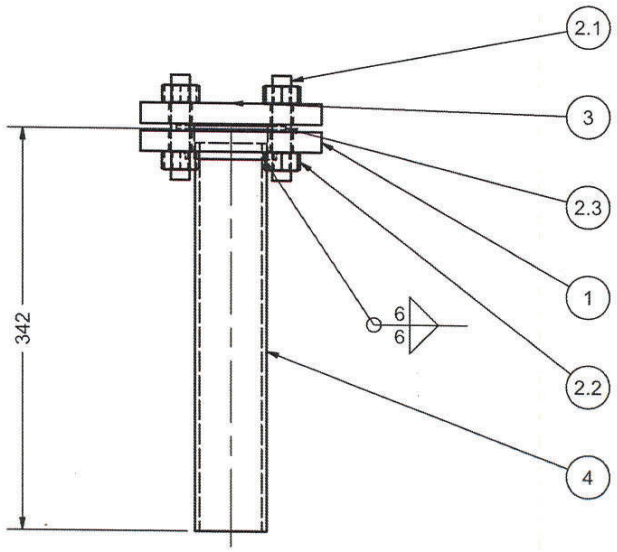

Ø50 NS ROOF NOZZLE FOR TEMPERATURE & WATER DETECTION PROBE
MARK: RN9 (1X), RN11 (2X)
QTY: 3

WEIGHT/SPOOL: 7KG

NOTES:
1. ALL DIMENSIONS ARE IN MM UNLESS OTHERWISE NOTED
2. FINISH: BARE

STS STORAGE TANK SOLUTIONS **AS BUILT STAMP**

☐ CHANGE ☒ NO CHANGE

NAME: Lindsay C Bolton
SIGNATURE:
DATE: September 6, 2021

Permit Number: P471

REVISION HISTORY		
REV	DESCRIPTION	DATE
A	ISSUE FOR REVIEW	3/9/2021
1	ISSUED FOR CONSTRUCTION	6/8/2021

DRAWN	MARC LOSIER	3/9/2021	NOZZLE DETAILS
CHECKED			
QA			TITLE: BAKER LAKE WHALE TAIL PROJECT - 10M LITERS - TANK #8: 6170TNK43
MFG			
APPROVED			
SIZE: A3	DWG NO: 341-M7	REV: 1	
SCALE		SHEET 10 OF 13	

Parts List					
ITEM	ITEM QTY	CUT (MM)	DESCRIPTION	MATERIAL	MASS
1	1		FLANGE, SLIP ON, RF, 150#, 150NS	A350 LF2	7 kg
2	1	330	PIPE, S40, 150NS	A53	9 kg
3.1	1		GASKET, 1/16"THK, RING, 150 NS	DURLON 8500	0 kg
3.2	8		STUD, 3/4" X 4" LG	L7	0 kg
3.3	16		HEAVY HEX NUT, 3/4"	GR.4	0 kg
4	1		BLIND FLANGE, 150#, 150NS	A350 LF2	11 kg

Ø150 NS ROOF NOZZLE RADAR - LEVEL DETECTION

MARK: RN10

QTY: 1

WEIGHT/SPOOL: 32 KG

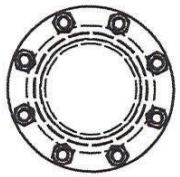

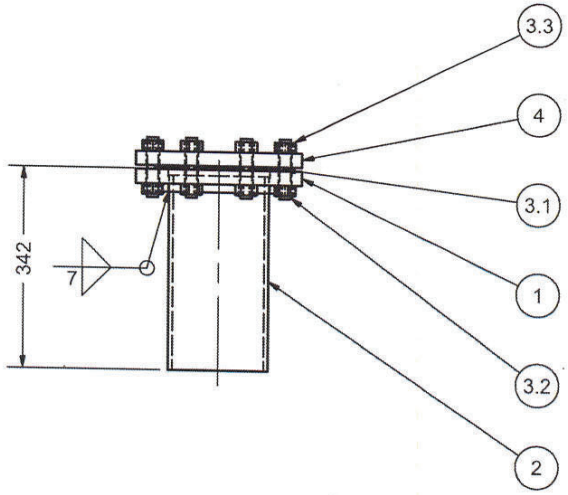

NOTES:
1. ALL DIMENSIONS ARE IN MM UNLESS OTHERWISE NOTED
2. FINISH: BARE

STS STORAGE TANK SOLUTIONS **AS BUILT STAMP**

☐ CHANGE ☒ NO CHANGE

NAME: Lindsay C Bolton
SIGNATURE:
DATE: September 6, 2021

REVISION HISTORY		
REV	DESCRIPTION	DATE
A	ISSUE FOR REVIEW	3/9/2021
1	ISSUED FOR CONSTRUCTION	6/8/2021

PROFESSIONAL ENGINEER
J.C. BROWN
LICENSEE
NT/NU
15-Jun-2021

Permit Number: P471

DRAWN	MARC LOSIER	3/9/2021
CHECKED		
QA		
MFG		
APPROVED		

NOZZLE DETAILS

TITLE: BAKER LAKE WHALE TAIL PROJECT - 10M LITERS - TANK #8: 6170TNK43

SIZE: A3 | DWG NO: 341-M7 | REV: 1

SCALE:

SHEET 11 OF 13

Parts List

ITEM	ITEM QTY	CUT (MM)	DESCRIPTION	MATERIAL	MASS
1	1		FLANGE, SLIP ON, RF, 150#, 100NS	A350 LF2	5 kg
2	1	330	PIPE, S40, 100NS	A53	5 kg
3.1	1		GASKET, RING, 150#, 1/16"THK, 100NS	DURLON 8500	0 kg
3.2	8		STUD, 5/8" X 3.5" LG	L7	0 kg
3.3	16		HEAVY HEX NUT, 5/8" UNC	GR.4	0 kg
4	1		BLIND FLANGE, 150#, 100NS	A350 LF2	7 kg

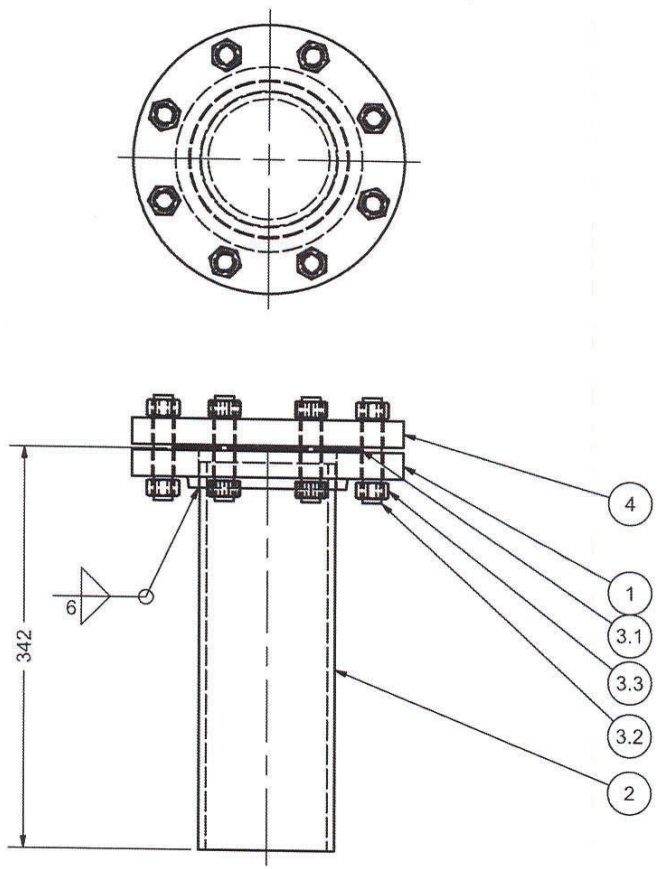

Ø100 NS ROOF NOZZLE SPARE
MARK: RN12
QTY: 2

WEIGHT/SPOOL: 19 KG

NOTES:
1. ALL DIMENSIONS ARE IN MM UNLESS OTHERWISE NOTED
2. FINISH: BARE

STS STORAGE TANK SOLUTIONS **AS BUILT STAMP**

☐ CHANGE ☒ NO CHANGE

NAME: Lindsay C Bolton
SIGNATURE: [signature]
DATE: September 6, 2021

REVISION HISTORY

REV	DESCRIPTION	DATE
A	ISSUE FOR REVIEW	3/9/2021
1	ISSUED FOR CONSTRUCTION	6/8/2021

DRAWN MARC LOSIER	3/9/2021	NOZZLE DETAILS
CHECKED		
QA		TITLE
MFG		BAKER LAKE WHALE TAIL PROJECT - 10M LITERS - TANK #8: 6170TNK43
APPROVED		

SIZE	DWG NO	REV
A3	341-M7	1

SCALE

SHEET 12 OF 13

REGISTERED PROFESSIONAL ENGINEER L.G. BROWN LICENSEE NT/NU
15-Jun-2021

Permit Number: P471

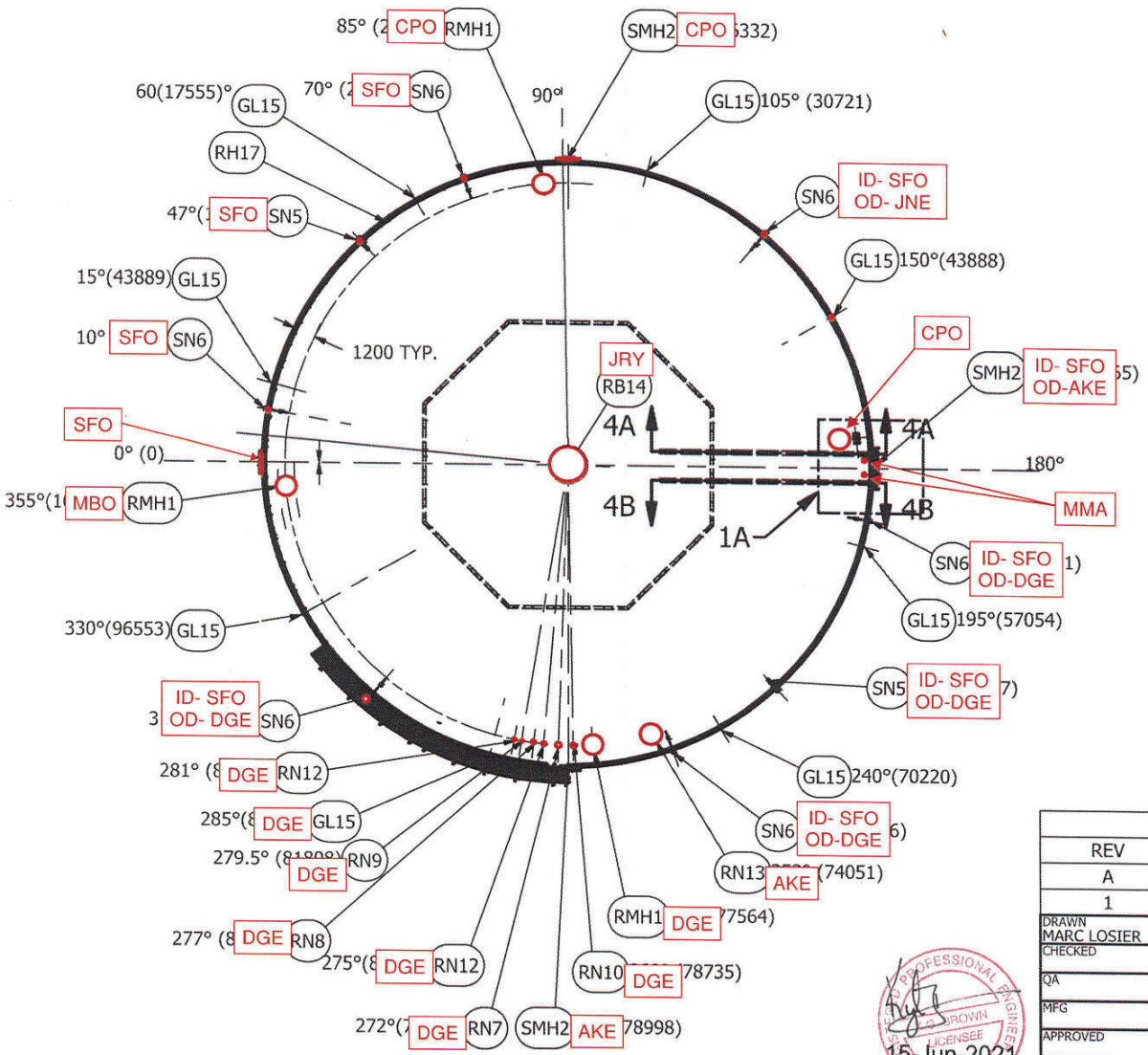

PLAN VIEW

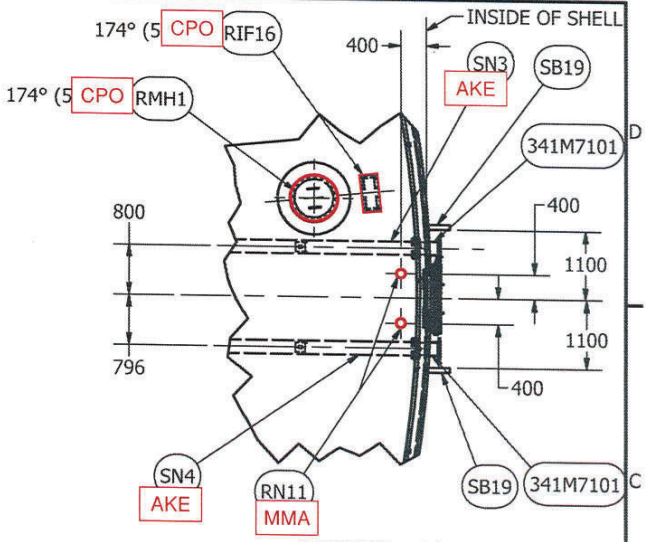

DETAIL 1A
SCALE 1/75

DIMENSION IN () DENOTES
ARC LENGTH ON THE EXTERIOR OF
THE SHELL FROM 0° IN MILLIMETRES
MEASURED ON COURSE ONE (1) FOR SHELL NOZZLES
AND ON COURSE FIVE (5) FOR ROOF NOZZLES

REVISION HISTORY

REV	DESCRIPTION	DATE
A	ISSUE FOR REVIEW	6/1/2021
1	ISSUED FOR CONSTRUCTION	6/8/2021

DRAWN MARC LOSIER	5/31/2021	GENERAL ARRANGEMENT AND NOZZLE LAYOUT
CHECKED		
QA		TITLE
MFG		BAKER LAKE WHALE TAIL PROJECT - 10M LITERS - TANK #8: 6170TNK43 33.516M I.D.
APPROVED		
		SIZE A3 · DWG NO 341-M6 · REV 1
		SCALE 1/250 · SHEET 1 OF 6

REGISTERED PROFESSIONAL ENGINEER
R. BROWN
LICENSEE
NT/NU
15-Jun-2021

Permit Number: P471

QUALITY CONTROL MANUAL

VISUAL TEST REPORT

Customer: AGNICO EAGLE

Location: BAKER LAKE

Code Requiring Test: API 650 (section 8.5.2) Reason for Test: New Construction

A weld shall be acceptable by visual examination if the inspection shows the following.

a) There are no crater cracks, other surface cracks or arc strikes in or adjacent to the welded joints.
b) Maximum permissible undercut is 0.4 mm (1/64 in.) in depth for vertical butt joints, vertically oriented permanent attachments, attachment welds for nozzles, manholes, flush-type openings, and the inside shell-to-bottom welds. For horizontal butt joints, horizontally oriented permanent attachments, and annular-ring butt joints, the maximum permissible undercut is 0.8 mm (1/32 in.) in depth.
c) The frequency of surface porosity in the weld does not exceed one cluster (one or more pores) in any 100 mm (4 in.) of length, and the diameter of each cluster does not exceed 2.5 mm (3/32 in.).
d) The reinforcement of the welds on all thicknesses:

Plate Thickness mm (in.)	Maximum Reinforcement Thickness mm (in.)	
	Vertical Joints	Horizontal Joints
≤ 13 (1/2)	2.5 (3/32)	3 (1/8)
> 13 (1/2) to 25 (1)	3 (1/8)	5 (3/16)
> 25 (1)	5 (3/16)	6 (1/4)

Surface Condition (As Welded)

Test Solution: N/A Test Date(s): 2021-09-01

Tested by: Matthew MacKenzie Ambient Conditions: 10 Degrees Celsius

Items Tested:

All nozzle welds.

Results:

Acceptable to code at the time of Inspection.

STS Representative Signature: _____ Date: 2021-09-01

Client Representative Signature: _____ Date: 21st Sept 21

Exhibit 31, Rev 1

DIMENSIONAL CHECK REPORT- NOZZLES

Customer: AGNICO EAGLE

Location: BAKER LAKE

Equipment Tag No.: TK 8

Equipment Type: Above Ground Storage Tank

Equipment Description: Diesel Storage Tank

Code Requiring Test: API 650 Reason for Test: New Construction

(Nozzles (excluding manholes) shall be installed within the following tolerances:
a) specified projection from outside of tank shell to extreme face of flange: ±5 mm (3/16 in.);
b) elevation of shell nozzle or radial location of a roof nozzle: ±6 mm (1/4 in.);
c) flange tilt in any plane, measured on the flange face:
±1/2 degree for nozzles greater than NPS 12 in. nominal diameter,
±3 mm (1/8 in.) at the outside flange diameter for nozzles NPS 12 and smaller;
d) flange bolt hole orientation: ±3 mm (1/8 in.).)

Test Date(s): 2021-09-01

Tested by: Matthew MacKenzie

Test Results:

All nozzles within tolerance at the time of inspection; acceptable to code.

STS Representative Signature: _____ Date: 2021-09-01

Client Representative Signature: _____ Date: 21st Sept 21

Exhibit 12, Rev 1

AIR TEST REPORT – NOZZLE REINFORCEMENT PLATE WELDS

Customer: AGNICO EAGLE

Location: BAKER LAKE

Equipment Tag No.: TANK 8

Equipment Type: Above Ground Storage Tank

Equipment Description: Diesel Storage Tank

Code Requiring Test: API 650 Reason for Test: New Construction

(An air pressure/soap solution test for nozzle reinforcement plate weld seams is required for new construction or major alterations, no visible leaks should be observed)

Test Pressure: 100 kPa (15 psi) Surface Condition (As Welded, Painted, Blasted)

Test Solution: Water / Snoop: Test Date(s): 2021-09-

Tested by: Matthew MacKenzie Pressure Gauge: Ambient Conditions: 10 Degrees Celsius

Items Tested:

All Shell Nozzles.

Results:

No leaks detected at the time of inspection; acceptable to code.

STS Representative Signature: _____ Date: 2021-09-04

Client Representative Signature: _____ Date: 4th Sept 21

SECTION 15.0

Manways

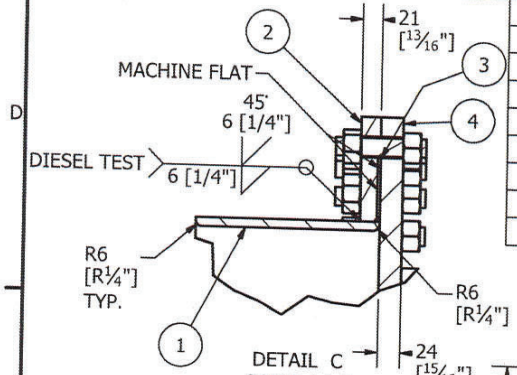

PARTS LIST					
ITEM	ITEM QTY	PART NUMBER	DESCRIPTION	MATERIAL	MASS
1	1	T1-2-4 SHELL NECK	10 [3/8"] THK X 194 [7 5/8"] WD. X 2842 [9'-3 7/8"] LONG	G40.21M - 350WT CAT. 4	40.783 kg
2	1	T1-2-4 SHELL BOLTING FLANGE	22 [7/8"] THK X 1137 [3'-8 3/4"] O.D. X 914 [3'-0"] I.D.	G40.21M - 350WT CAT. 4	54.904 kg
3	1	T1-2-4 SHELL GASKET	3 [1/8"] THK X 1051 [3'-5 3/8"] O.D. X 914 [3'-0"] I.D.	DURLON 8500	0.622 kg
4	1	T1-2-4 SHELL COVER PLATE	25 [1"] THK X 1137 [3'-8 3/4"] O.D.	G40.21M - 350WT CAT. 4	186.633 kg
5	2	T1-2-4 SHELL HANDLE ROD	10 [3/8"] THK X 314 [12 3/8"] LONG	MILD STEEL	0.175 kg
6	42	STUDS	STUD, 3/4" X 95 [3 3/4"] LG. NC	A320 L7	0.213 kg
7	84	NUTS	NUT, HEX HEAVY, 3/4" NC	A194A GR4	0.096 kg

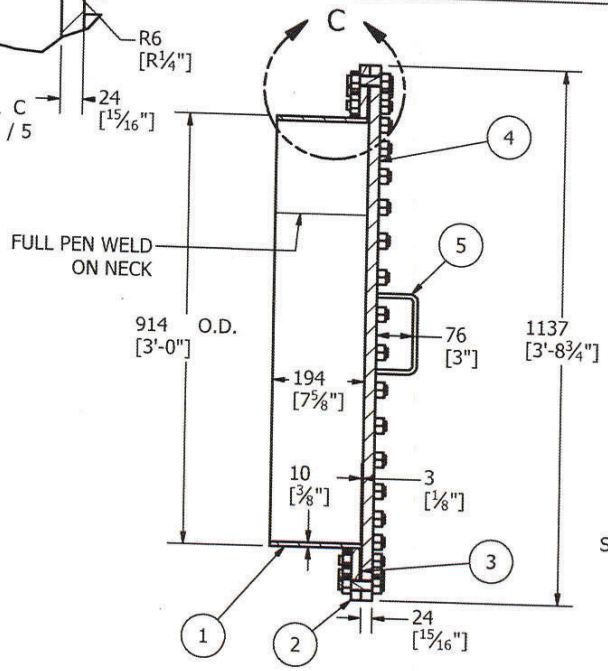

SECTION I-I
SCALE 1/10

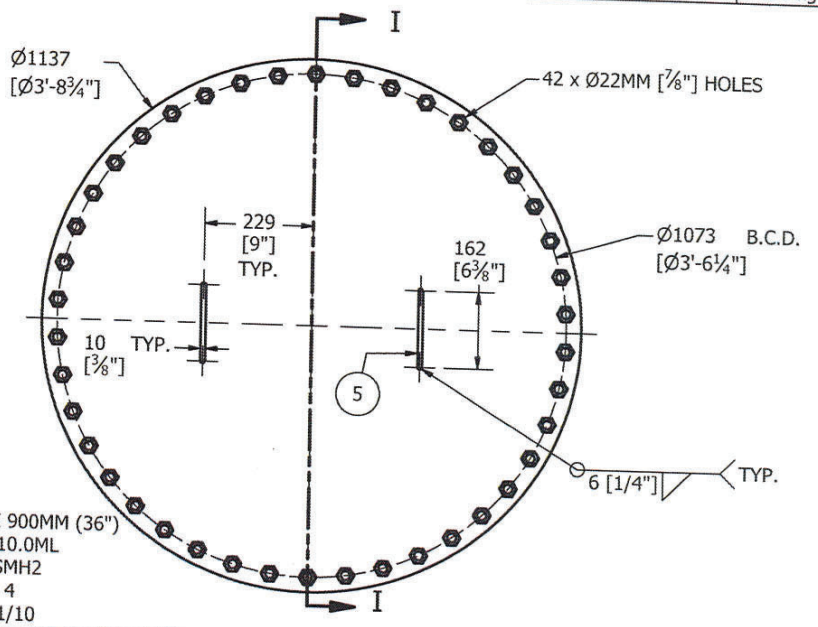

SHELL MANHOLE 900MM (36")
TANK 7 - 10.0ML
MARK: SMH2
QTY: 4
SCALE 1/10

REVISION HISTORY		
REV	DESCRIPTION	DATE
A	ISSUED FOR REVIEW	2/18/2021
1	ISSUED FOR CONSTRUCTION	6/8/2021

STS STORAGE TANK SOLUTIONS **AS BUILT STAMP**

☐ CHANGE ☒ NO CHANGE

NAME: Lindsay C Bolton
SIGNATURE: LCB
DATE: September 6, 2021

PROFESSIONAL ENGINEER — K.G. BROWN — LICENSEE — NT/NU
15-Jun-2021

Permit Number: P471

DRAWN	MARC LOSIER	2/18/2021
CHECKED		
QA		
MFG		
APPROVED		

SHELL MANHOLE

TITLE

BAKER LAKE WHALE TAIL PROJECT - 10M LITERS - TANK #8: 6170TNK43

SIZE	DWG NO	REV
A3	341-M4	1

SCALE

SHEET 1 OF 2

PARTS LIST

ITEM	ITEM QTY	PART NUMBER	DESCRIPTION	MATERIAL	MASS
1	1	ROOF NECK	6 [1/4""] THK X 216 [8 1/2"] WD X 1935 [6' - 4 3/16"] LG	G40.21M 300W	20.825 kg
2	1	ROOF BOLTING FLANGE	6 [1/4"] THK X 762 [2'-6"] O.D. X 622 [2'-1/2"] I.D.	G40.21M 300W	7.287 kg
4	1	ROOF COVER PLATE	6 [1/4"] THK X 762 [2'-6"] DIA	G40.21M 300W	22.448 kg
5	2	ROOF HANDLE ROD	16 [5/8"] DIA X 314 [12 3/8"] LG.	Steel, MILD	0.506 kg
6	20	STUDS	STUD, 5/8" X 57 [2 1/4"] LG. NC	A320 L7	0.089 kg
7	40	NUTS	NUT, HEX HEAVY, 5/8"	A194A GR4	0.059 kg
8	1	295-P1 Gasket 24in (600mm)		Rubber	0.216 kg

SECTION J-J
SCALE 1/10

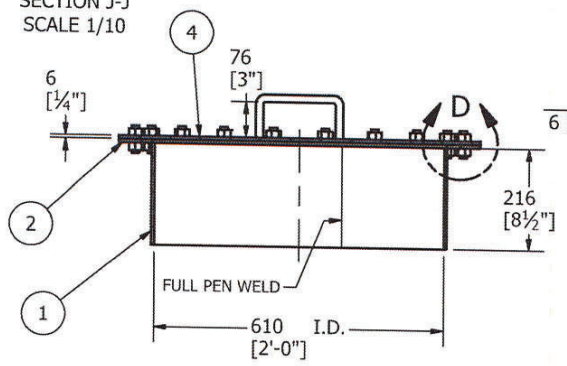

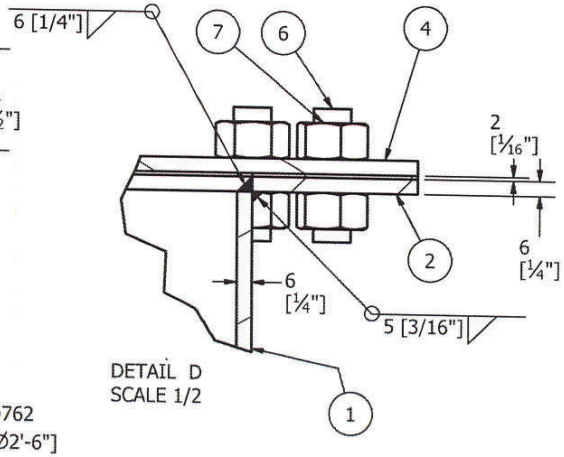

DETAIL D
SCALE 1/2

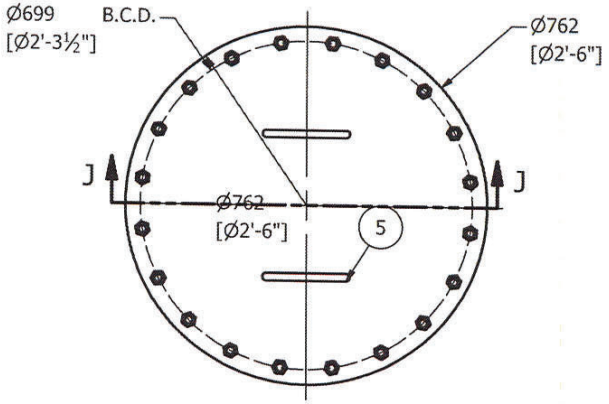

ROOF MANHOLE 600MM (24")
TANK 7 - 10.0ML
MARK: RMH1
QTY: 4
SCALE 1/10



Permit Number: P471

STS STORAGE TANK SOLUTIONS **AS BUILT STAMP**

☐ CHANGE ☒ NO CHANGE

NAME: Lindsay C Bolton
SIGNATURE: LCB
DATE: September 6, 2021

ALTERNATE MATERIAL: ALL 350W STEEL MAY BE SUBSTITUTED WITH 260W IF EASIER TO SOURCE

REVISION HISTORY

REV	DESCRIPTION	DATE
A	ISSUED FOR REVIEW	2/18/2021
1	ISSUED FOR CONSTRUCTION	6/8/2021

DRAWN	MARC LOSIER	2/18/2021
CHECKED		
QA		
MFG		
APPROVED		

ROOF MANHOLE

TITLE
BAKER LAKE WHALE TAIL PROJECT - 10M LITERS - TANK #8: 6170TNK43

SIZE	DWG NO	REV
A3	341-M4	1

SCALE

SHEET 2 OF 2

TABLE					
MARK	QTY	DESCRIPTION	MATERIAL	MTR	WT #'S
341M301	1	1/2"THK SEE DETAIL	ASME SA 516 GRADE 70 KILLED FINE GRAIN, NORMALIZED	YES	684
341M302	3	1/2"THK SEE DETAIL	ASME SA 516 GRADE 70 KILLED FINE GRAIN, NORMALIZED	YES	700
341M303	2	1/2"THK SEE DETAIL	ASME SA 516 GRADE 70 KILLED FINE GRAIN, NORMALIZED	YES	35
341M304	4	1/4"THK SEE DETAIL	ASME SA 516 GRADE 70 KILLED FINE GRAIN, NORMALIZED	NO	80
341M305	1	1/4"THK SEE DETAIL	ASME SA 516 GRADE 70 KILLED FINE GRAIN, NORMALIZED	NO	81
341M306	6	1/2"THK SEE DETAIL	ASME SA 516 GRADE 70 KILLED FINE GRAIN, NORMALIZED	YES	11

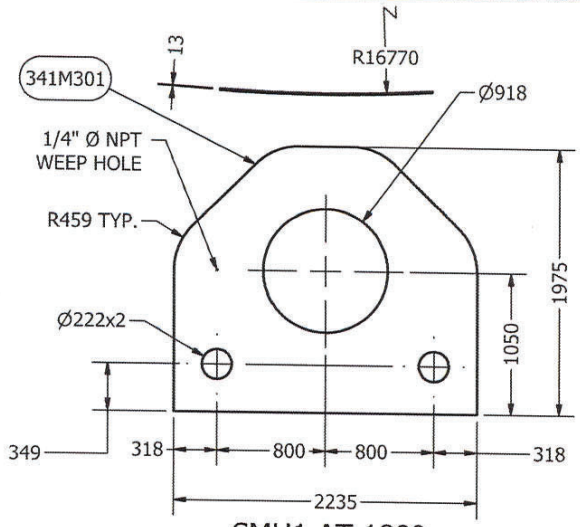

SMH1 AT 180°
900NS SHELL MANHOLE
200NS LOADING AND UNLOADING
QTY: 1
SCALE 1/35

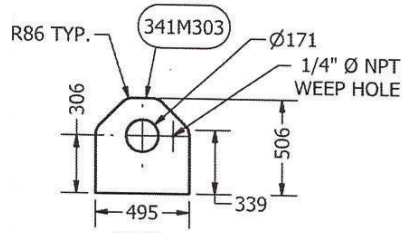

SN5
150NS PUMPING LOW LEVEL
QTY:2
SCALE 1/25

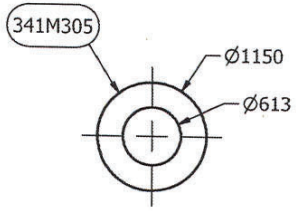

REPAD RN13
600NS VENT
QTY: 1
SCALE 1/50

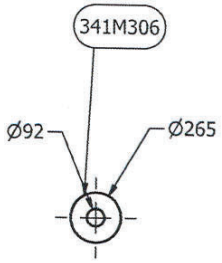

REPAD SN6
80NS WATER DRAWOFF
QTY: 6
SCALE 1/25

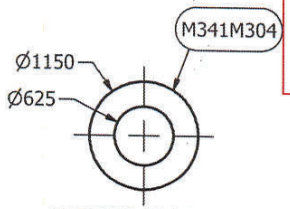

REPAD RMH1
600NS ROOF MANHOLE
QTY: 4
SCALE 1/50

STS STORAGE TANK SOLUTIONS AS BUILT STAMP
☐ CHANGE ☒ NO CHANGE
NAME: Lindsay C Bolton
SIGNATURE:
DATE: September 6, 2021

USE THE DROP FROM SHELL COURSE C5S TO CUT REPADS FOR RMH1 AND RN13.
CUT REPADS FOR SMH1, SN5, AND SN6 FROM ONE 1/2" X 96" X 480" PLATE.

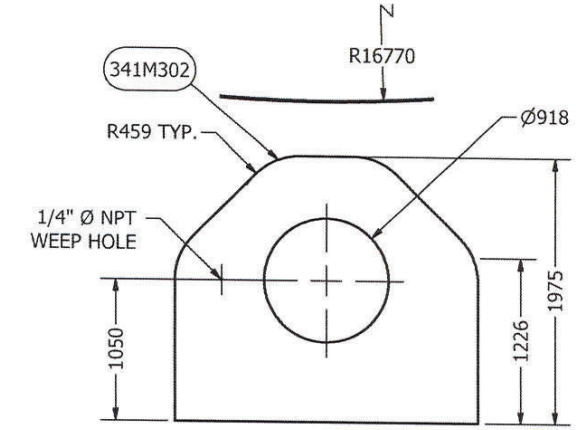

SMH2 AT 0°, 90°, 270°
900NS SHELL MANHOLE
QTY: 3
SCALE 1/35

REVISION HISTORY

REV	DESCRIPTION	DATE
A	ISSUED FOR REVIEW	2/18/2021
1	ISSUED FOR CONSTRUCTION	6/8/2021

REGISTERED PROFESSIONAL ENGINEER
L.G. BROWN
LICENSEE
NT/NU
15-Jun-2021

Permit Number: P471

DRAWN	MARC LOSIER	2/18/2021
CHECKED		
QA		
MFG		
APPROVED		

NOZZLE REPAD DETAILS

TITLE
BAKER LAKE WHALE TAIL PROJECT - 10M LITERS - TANK #8: 6170TNK43

SIZE	DWG NO	REV
A3	341-M3	1

SCALE

SHEET 1 OF 1

PARTS LIST FOR ONE (1) ASSY, FOUR (4) PER TANK				
ITEM	ITEM QTY	CUT (MM)	DESCRIPTION	MATERIAL
341M1101	1	341	5/8"THK X 66 WIDE PLATE, SEE DETAIL	G40.21M 300W
341M1102	1	373	2 1/2" STD PIPE	A53
341M1103	1		DAVIT ARM, SEE DETAIL	
341M1104	1	198	16 [5/8"] DIA LG SEE DETAIL	Steel
341M1105	1		EYE-BOLT 5/8"DIA X 12" LG CROSBY G291	FORGED STEEL
341M1106	2		5/8"-11UNC Hex Nuts (Inch Series) Heavy Hex Nut	A194 GR4

PARTS LIST FOR ONE (1) DAVIT ARM, FOUR (4) PER TANK				
ITEM	ITEM QTY	CUT (MM)	DESCRIPTION	MATERIAL
341M1108	1	645	2"NS XH PIPE	A53
341M1109	1	25	2 1/2"NS STD PIPE	A53
341M11010	1		2"NS HX ELBOW BW 90DEG L.R.	A234
341M11011	1	890	2"NS XH PIPE	A53
341M11012	1	520	FB10X50 [3/8"X2"]	G40.21M 300W

STS STORAGE TANK SOLUTIONS **AS BUILT STAMP**

☐ CHANGE ☒ NO CHANGE

NAME: Lindsay C Bolton

SIGNATURE:

DATE: September 6, 2021

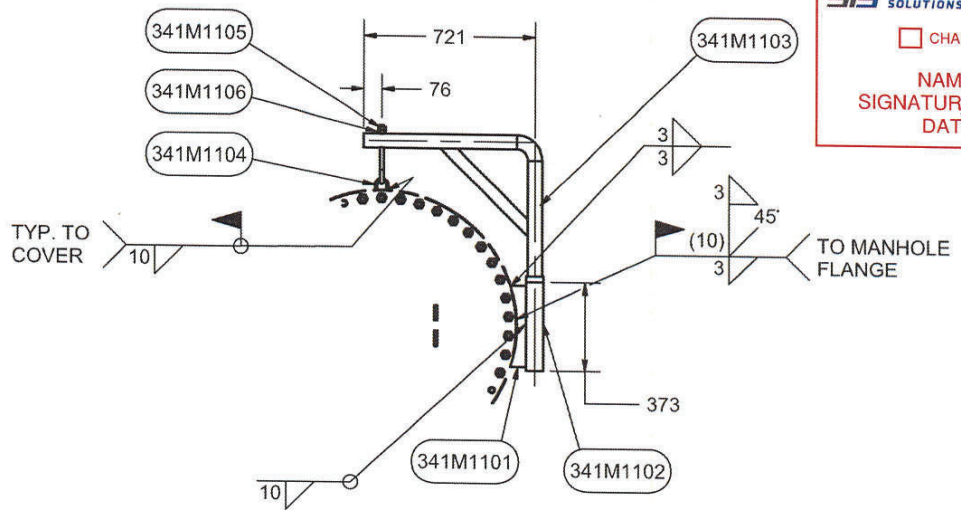

DAVIT ASSEMBLY
QTY: 4
MARK: 341M1100
SCALE 1/20

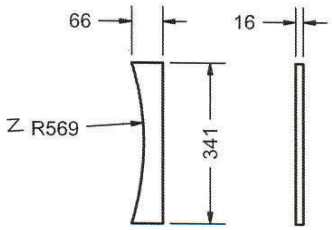

Pc M1101 DETAIL
SCALE 1/10

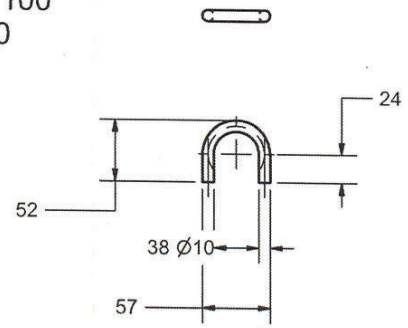

Pc M1104 DETAIL
SCALE 1/4

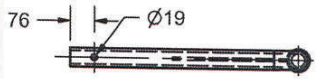

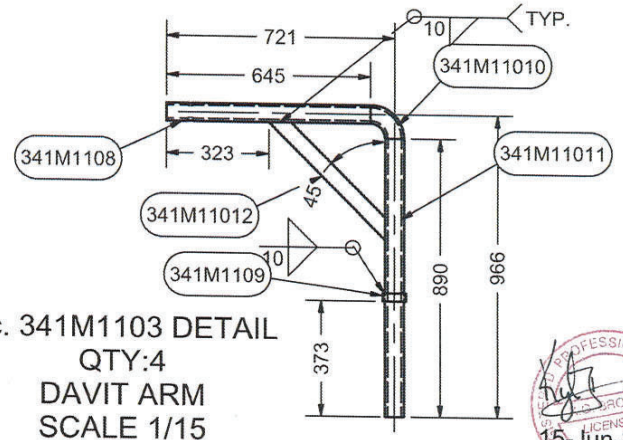

Pc. 341M1103 DETAIL
QTY:4
DAVIT ARM
SCALE 1/15

REGISTERED PROFESSIONAL ENGINEER
BROWN
LICENSEE
NT/NU
15-Jun-2021

Permit Number: P471

REVISION HISTORY		
REV	DESCRIPTION	DATE
A	ISSUED FOR REVIEW	3/10/2021
1	ISSUED FOR CONSTRUCTION	6/8/2021

DRAWN MARC LOSIER	3/10/2021	FOR 900MM [36"] NS SHELL MANHOLE
CHECKED		
QA		
MFG		TITLE: MANHOLE COVER DAVIT
APPROVED		
SIZE A3	DWG NO 341-M11	REV 1
SCALE	SHEET 1 OF 1	

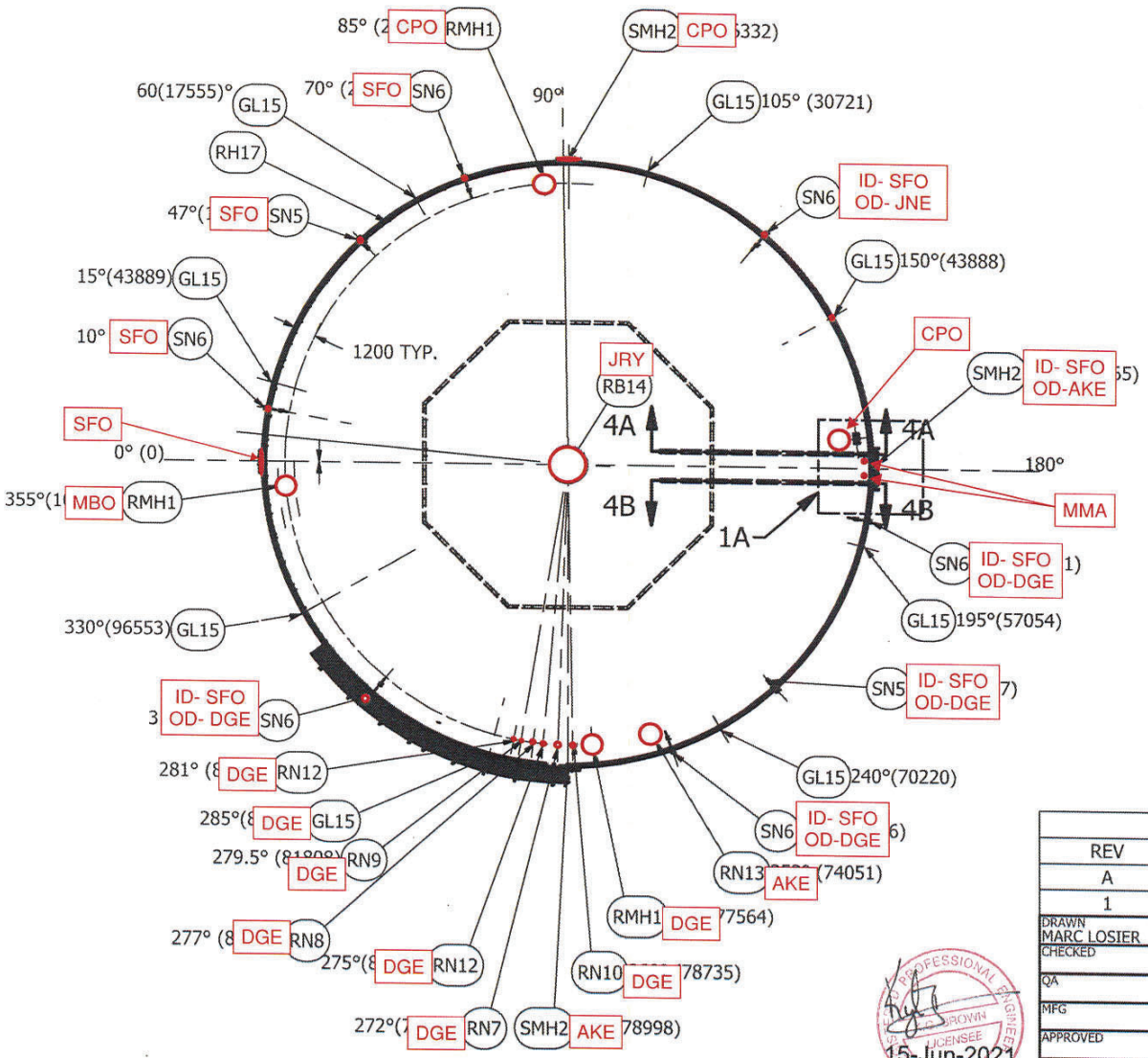

PLAN VIEW

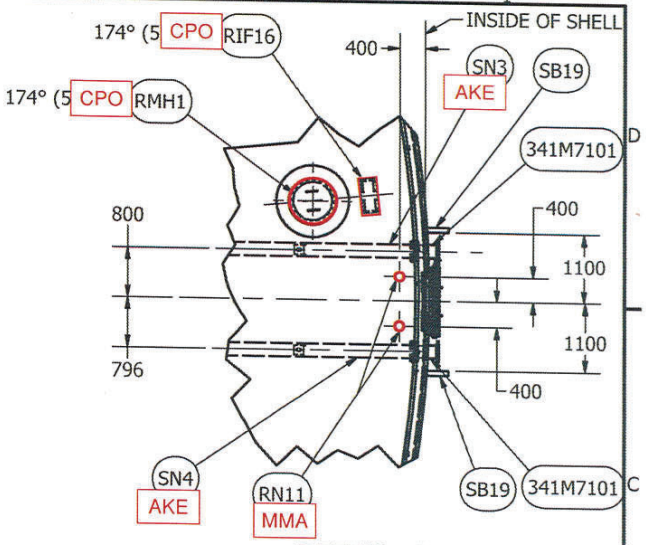

DETAIL 1A
SCALE 1/75

DIMENSION IN () DENOTES
ARC LENGTH ON THE EXTERIOR OF
THE SHELL FROM 0° IN MILLIMETRES
MEASURED ON COURSE ONE (1) FOR SHELL NOZZLES
AND ON COURSE FIVE (5) FOR ROOF NOZZLES

REVISION HISTORY		
REV	DESCRIPTION	DATE
A	ISSUE FOR REVIEW	6/1/2021
1	ISSUED FOR CONSTRUCTION	6/8/2021

DRAWN MARC LOSIER	5/31/2021	GENERAL ARRANGEMENT AND NOZZLE LAYOUT
CHECKED		
QA		TITLE
MFG		BAKER LAKE WHALE TAIL PROJECT - 10M LITERS - TANK #8: 6170TNK43 33.516M I.D.
APPROVED		

SIZE	DWG NO	REV
A3	341-M6	1

SCALE 1/250 SHEET 1 OF 6

APEGGN PROFESSIONAL ENGINEERS BROWN LICENSEE NT/NU 15-Jun-2021

Permit Number: P471

QUALITY CONTROL MANUAL

VISUAL TEST REPORT

Customer: AGNICO EAGLE

Location: BAKER LAKE

Code Requiring Test: API 650 (section 8.5.2) Reason for Test: New Construction

A weld shall be acceptable by visual examination if the inspection shows the following.

a) There are no crater cracks, other surface cracks or arc strikes in or adjacent to the welded joints.
b) Maximum permissible undercut is 0.4 mm (1/64 in.) in depth for vertical butt joints, vertically oriented permanent attachments, attachment welds for nozzles, manholes, flush-type openings, and the inside shell-to-bottom welds. For horizontal butt joints, horizontally oriented permanent attachments, and annular-ring butt joints, the maximum permissible undercut is 0.8 mm (1/32 in.) in depth.
c) The frequency of surface porosity in the weld does not exceed one cluster (one or more pores) in any 100 mm (4 in.) of length, and the diameter of each cluster does not exceed 2.5 mm (3/32 in.).
d) The reinforcement of the welds on all thicknesses:

Plate Thickness mm (in.)	Maximum Reinforcement Thickness mm (in.)	
	Vertical Joints	Horizontal Joints
≤ 13 (1/2)	2.5 (3/32)	3 (1/8)
> 13 (1/2) to 25 (1)	3 (1/8)	5 (3/16)
> 25 (1)	5 (3/16)	6 (1/4)

Surface Condition (As Welded)

Test Solution: N/A Test Date(s): 2021-09-01

Tested by: Matthew MacKenzie Ambient Conditions: 10 Degrees Celsius

Items Tested:

All Shell Manways.

Results:

Acceptable at time of Inspection.

STS Representative Signature: _____ Date: 2021-09-01

Client Representative Signature _____ Date: 4th Sept 21

Exhibit 32, Rev 1

DIMENSIONAL CHECK REPORT- MANWAYS

Customer: AGNICO EAGLE

Location: BAKER LAKE

Equipment Tag No.: TK 8

Equipment Type: DIESEL STORAGE TANK

Equipment Description:

Code Requiring Test: API 650 Reason for Test: New Construction

(Manholes shall be installed within the following tolerances:
a) specified projection from outside of shell to extreme face of flange, ±13 mm (1/2 in.)
b) elevation and angular location, ±13 mm (1/2 in.)
c) flange tilt in any plane, measured across the flange diameter, ±13 mm (1/2 in.))

Test Date(s): 2021-09-01

Tested by: Matthew MacKenzie

Test Results:

All manways are within tolerance at the time of inspection; acceptable to code.

STS Representative Signature: _____ Date: 2021-09-01

Client Representative Signature: _____ Date: 4th SEPT 21

Exhibit 12, Rev 1

AIR TEST REPORT – NOZZLE REINFORCEMENT PLATE WELDS

Customer: AGNICO EAGLE

Location: BAKER LAKE

Equipment Tag No.: TANK 8

Equipment Type: Above Ground Storage Tank

Equipment Description: Diesel Storage Tank

Code Requiring Test: API 650 Reason for Test: New Construction

(An air pressure/soap solution test for nozzle reinforcement plate weld seams is required for new construction or major alterations, no visible leaks should be observed)

Test Pressure: 100 kPa (15 psi) Surface Condition (As Welded, Painted, Blasted)

Test Solution: Water / Snoop: Test Date(s): 2021-09-

Tested by: Matthew MacKenzie Pressure Gauge: Ambient Conditions: 10 Degrees Celsius

Items Tested:

All Shell Manways.

Results:

No leaks detected at the time of inspection; acceptable to code.

STS Representative Signature: _____ Date: 2021-09-04

Client Representative Signature: _____ Date: 4th Sept 21

SECTION 16.0

Internals

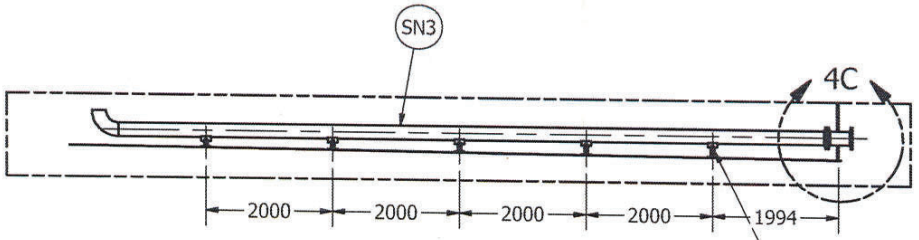

PART SECTION 4A-4A
SCALE 1/75

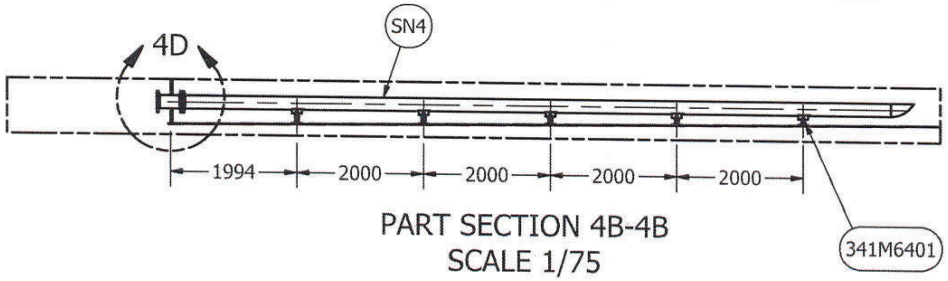

PART SECTION 4B-4B
SCALE 1/75

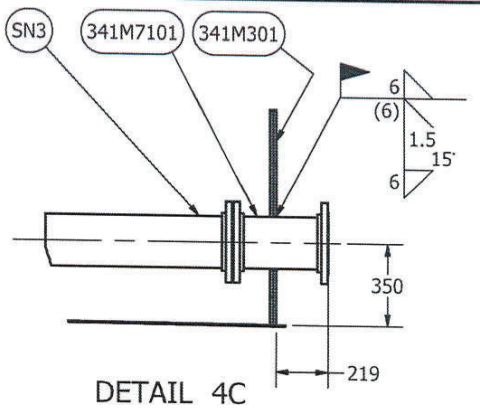

DETAIL 4C
SCALE 1/20

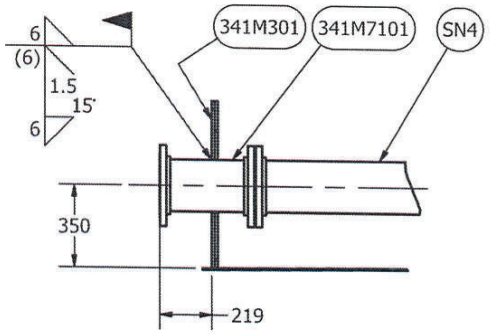

DETAIL 4D
SCALE 1/20

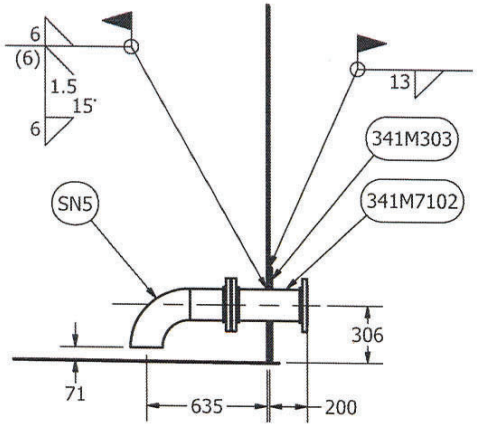

DETAIL 4A
N5 PUMPING LOW SUCTION
SCALE 1/25

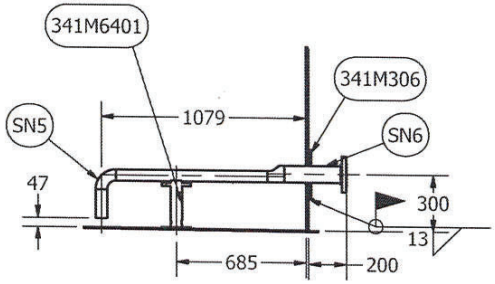

DETAIL 4B
N6 WATER DRAWOFF VALVE
SCALE 1/25

STS STORAGE TANK SOLUTIONS **AS BUILT STAMP**

☐ CHANGE ☒ NO CHANGE

NAME: Lindsay C Bolton
SIGNATURE:
DATE: September 6, 2021

PROFESSIONAL ENGINEERS — BROWN — LICENSEE — NT/NU — 15-Jun-2021

Permit Number: P471

REVISION HISTORY		
REV	DESCRIPTION	DATE
A	ISSUED FOR REVIEW	6/1/2021
1	ISSUED FOR CONSTRUCTION	6/8/2021

DRAWN MARC LOSIER	5/31/2021	GENERAL ARRANGEMENT AND NOZZLE LAYOUT
CHECKED		
QA		TITLE
MFG		BAKER LAKE WHALE TAIL PROJECT - 10M LITERS - TANK #8: 6170TNK43 33.516M I.D.
APPROVED		
		SIZE A3 / DWG NO 341-M6 / REV 1
		SCALE 1/500 / SHEET 4 OF 6

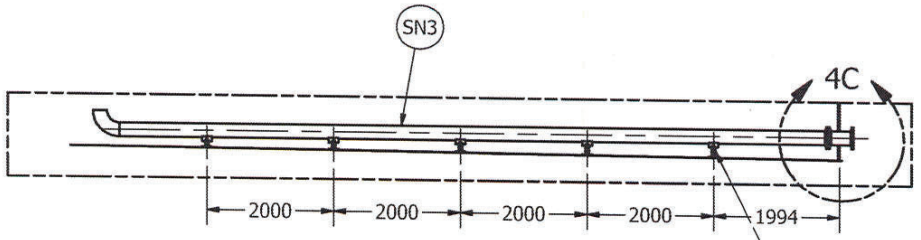

PART SECTION 4A-4A
SCALE 1/75

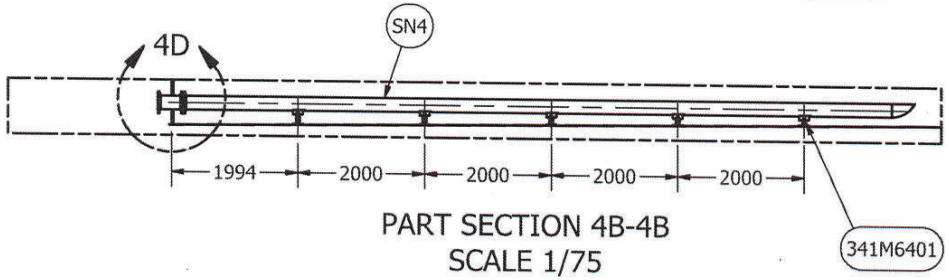

PART SECTION 4B-4B
SCALE 1/75

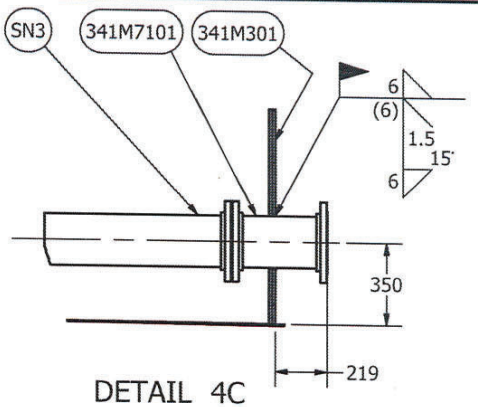

DETAIL 4C
SCALE 1/20

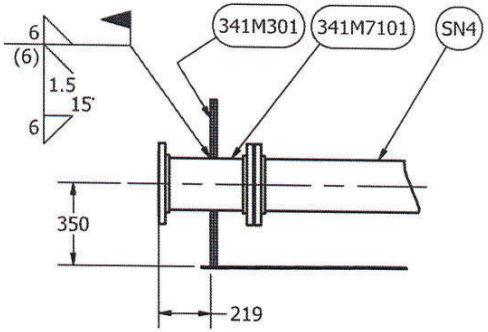

DETAIL 4D
SCALE 1/20

Internal Pipe Supports all welded by: SFO

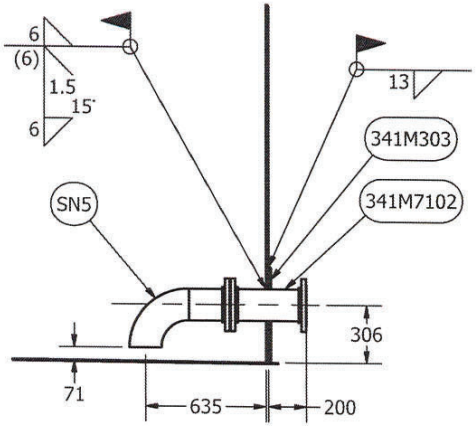

DETAIL 4A
N5 PUMPING LOW SUCTION
SCALE 1/25

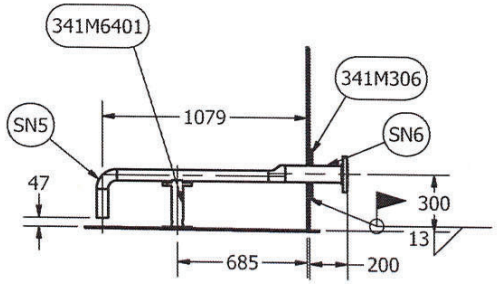

DETAIL 4B
N6 WATER DRAWOFF VALVE
SCALE 1/25



Permit Number: P471

REVISION HISTORY		
REV	DESCRIPTION	DATE
A	ISSUED FOR REVIEW	6/1/2021
1	ISSUED FOR CONSTRUCTION	6/8/2021

DRAWN MARC LOSIER	5/31/2021	GENERAL ARRANGEMENT AND NOZZLE LAYOUT
CHECKED		
QA		TITLE
MFG		BAKER LAKE WHALE TAIL PROJECT - 10M LITERS - TANK #8: 6170TNK43 33.516M I.D.
APPROVED		

SIZE	DWG NO	REV
A3	341-M6	1

SCALE 1/500 SHEET 4 OF 6

QUALITY CONTROL MANUAL

VISUAL TEST REPORT

Customer: AGNICO EAGLE

Location: BAKER LAKE

Code Requiring Test: API 650 (section 8.5.2) Reason for Test: New Construction

A weld shall be acceptable by visual examination if the inspection shows the following.

a) There are no crater cracks, other surface cracks or arc strikes in or adjacent to the welded joints.
b) Maximum permissible undercut is 0.4 mm (1/64 in.) in depth for vertical butt joints, vertically oriented permanent attachments, attachment welds for nozzles, manholes, flush-type openings, and the inside shell-to-bottom welds. For horizontal butt joints, horizontally oriented permanent attachments, and annular-ring butt joints, the maximum permissible undercut is 0.8 mm (1/32 in.) in depth.
c) The frequency of surface porosity in the weld does not exceed one cluster (one or more pores) in any 100 mm (4 in.) of length, and the diameter of each cluster does not exceed 2.5 mm (3/32 in.).
d) The reinforcement of the welds on all thicknesses:

Plate Thickness mm (in.)	Maximum Reinforcement Thickness mm (in.)	
	Vertical Joints	Horizontal Joints
≤ 13 (1/2)	2.5 (3/32)	3 (1/8)
> 13 (1/2) to 25 (1)	3 (1/8)	5 (3/16)
> 25 (1)	5 (3/16)	6 (1/4)

Surface Condition (As Welded)

Test Solution: N/A Test Date(s): 2021-08- 31

Tested by: Matthew MacKenzie Ambient Conditions: 10 Degrees Celcius

Items Tested:

INTERNAL PIPE SUPPORTS / BASE PLATES.

Results:

ALL WELDING ACCEPTABLE AT TIME OF INSPECTION.

STS Representative Signature: Matthew MacKenzie Date: 2021-08- 31

Client Representative Signature: [signature] Date: 4th Sept 21

SECTION 17.0

Externals

PARTS LIST FOR ONE (1) ASSY, TWENTY (20) REQUIRED					
ITEM	ITEM QTY	CUT (MM)	DESCRIPTION	MATERIAL	MASS
1	4	1051	L65X65X6	G40.21 300W	6 kg
2	1	5486	L50X50X6	G40.21 300W	26 kg
3	1	5486	FB50X6	G40.21 300W	14 kg
4	1	5486	FB100X5	G40.21 300W	21 kg

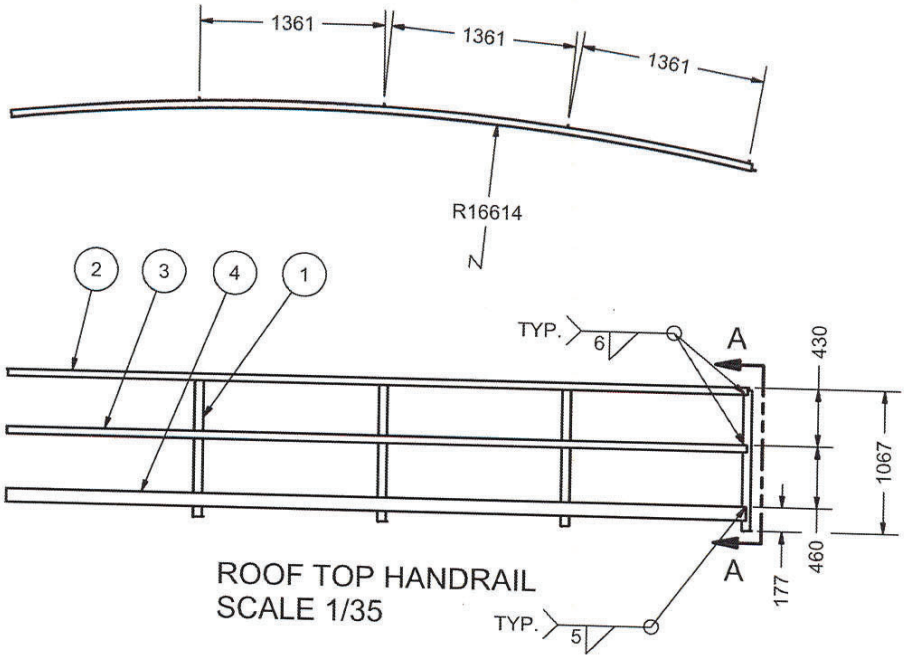

ROOF TOP HANDRAIL
SCALE 1/35

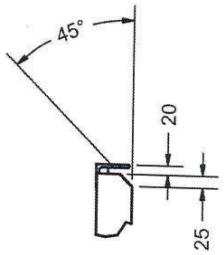

DETAIL A
SCALE 1/10

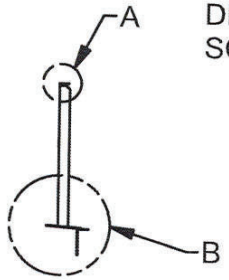

VIEW A-A
SCALE 1/35

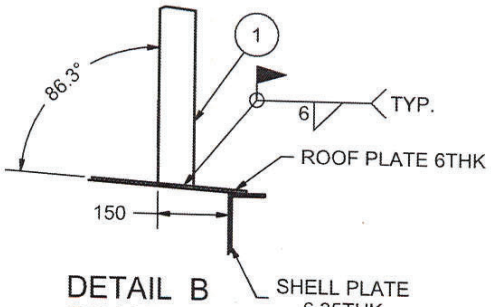

DETAIL B
SCALE 1/10

Professional Engineer
Ryan Brown
Licensee
NT/NU
15-Jun-2021

Permit Number: P471

REVISION HISTORY		
REV	DESCRIPTION	DATE
A	ISSUED FOR REVIEW	3/12/2021
1	ISSUED FOR CONSTRUCTION	6/8/2021

DRAWN	MARC LOSIER	3/12/2021
CHECKED		
QA		
MFG		
APPROVED		

ROOF TOP HANDRAIL

TITLE: BAKER LAKE WHALE TAIL PROJECT - 10M LITERS - #8: A6170TNK43

SIZE	DWG NO	REV
A3	341-M8	1

SCALE

SHEET 1 OF 1

STS STORAGE TANK SOLUTIONS **AS BUILT STAMP**

☐ CHANGE ☒ NO CHANGE

NAME: Lindsay C Bolton
SIGNATURE: LCB
DATE: September 6, 2021

QUALITY CONTROL MANUAL

VISUAL TEST REPORT

Customer: AGNICO EAGLE

Location: BAKER LAKE

Code Requiring Test: API 650 (section 8.5.2) Reason for Test: New Construction

A weld shall be acceptable by visual examination if the inspection shows the following.

a) There are no crater cracks, other surface cracks or arc strikes in or adjacent to the welded joints.
b) Maximum permissible undercut is 0.4 mm (1/64 in.) in depth for vertical butt joints, vertically oriented permanent attachments, attachment welds for nozzles, manholes, flush-type openings, and the inside shell-to-bottom welds. For horizontal butt joints, horizontally oriented permanent attachments, and annular-ring butt joints, the maximum permissible undercut is 0.8 mm (1/32 in.) in depth.
c) The frequency of surface porosity in the weld does not exceed one cluster (one or more pores) in any 100 mm (4 in.) of length, and the diameter of each cluster does not exceed 2.5 mm (3/32 in.).
d) The reinforcement of the welds on all thicknesses:

Plate Thickness mm (in.)	Maximum Reinforcement Thickness mm (in.)	
	Vertical Joints	Horizontal Joints
≤ 13 (1/2)	2.5 (3/32)	3 (1/8)
> 13 (1/2) to 25 (1)	3 (1/8)	5 (3/16)
> 25 (1)	5 (3/16)	6 (1/4)

Surface Condition (As Welded)

Test Solution: N/A Test Date(s): 2021-08-31

Tested by: Matthew MacKenzie Ambient Conditions: 10 Degrees Celcius

Items Tested:

EXTERNAL BRACKETS + SUPPORTS.

Results:

ALL WELDING ACCEPTABLE AT TIME OF INSPECTION.

STS Representative Signature: Matthew MacKenzie Date: 2021-08-31

Client Representative Signature: [signature] Date: 4th Sept 21

SECTION 18.0

Stairs and Platforms

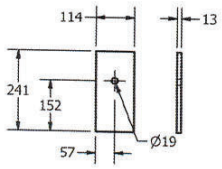

341M91071
QTY: 4
SCALE 1/10

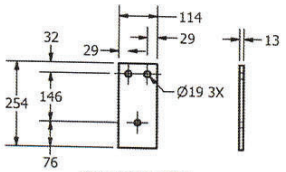

341M91074
QTY: 2
SCALE 1/10

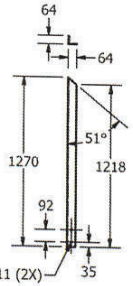

341M91100
QTY: 9
SCALE 1/25

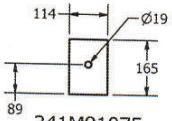

341M91075
QTY:14
SCALE 1/10

STS STORAGE TANK SOLUTIONS **AS BUILT STAMP**

☐ CHANGE ☒ NO CHANGE

NAME: Lindsay C Bolton
SIGNATURE:
DATE: September 6, 2021

ITEM	QTY	CUT (MM)	DESCRIPTION	MATERIAL	MASS (KG)
341M91011	1	782	L50X50X6	G40.21 300W	3
341M91070	9		SUPPORT BRACKET SEE SHT 3		26
341M91071	4	241	FB114X13 SEE DETAIL	G40.21 300W	3
341M91074	2	254	FB114X13 SEE DETAIL	G40.21 300W	3
341M91075	14	165	FB114X13 SEE DETAIL	G40.21 300W	2
341M91080	1		BOTTOM STAIRWAY BRACKET SEE SHT 3		35
341M91081	2	1254	L65X65X6	G40.21 300W	8
341M91084	1	972	L50X50X6	G40.21 300W	5
341M91085	1	981	FB50X6	G40.21 300W	2
341M91097	2		STAIRWAY ASSEMBLY SEE SHT 4		453
341M91098	2		PLATFORM SEE SHEET 2		102
341M91100	9	1270	L65X65X6 SEE DETAIL	G40.21 300W	8
341M91112	1	701	FB50X6	G40.21 300W	2
341M91115	1	981	FB100X5	G40.21 300W	4
341M91116	1	1005	FB100X5	G40.21 300W	4
341M91117	1	1225	FB100X5	G40.21 300W	5
341M91119	1	9412	L50X50X6 - TOP RAIL	G40.21 300W	29
341M91120	1	1079	L50X50X6	G40.21 300W	5
341M91121	1	1077	FB50X6	G40.21 300W	3
341M91125	1	9412	FB50X6 - MID RAIL	G40.21 300W	8
341M91201	32		5/8" x 2" LG HEX HD BOLT C/W (1) NUT & LOCK WASHER AND (2) FLAT WASHER	A325	
341M91202	20		3/8" X 1 1/2" LG HEX HD BOLT C/W (1) NUT & LOCK WASHER AND (2) FLAT WASHER	A325	
126	1	1		Steel	1923
127	1	1		Steel	1443
128	2	1		Steel	1202
129	1	1		Steel	962

PARTS LIST

* CHECK CUT LENGTH AT SITE

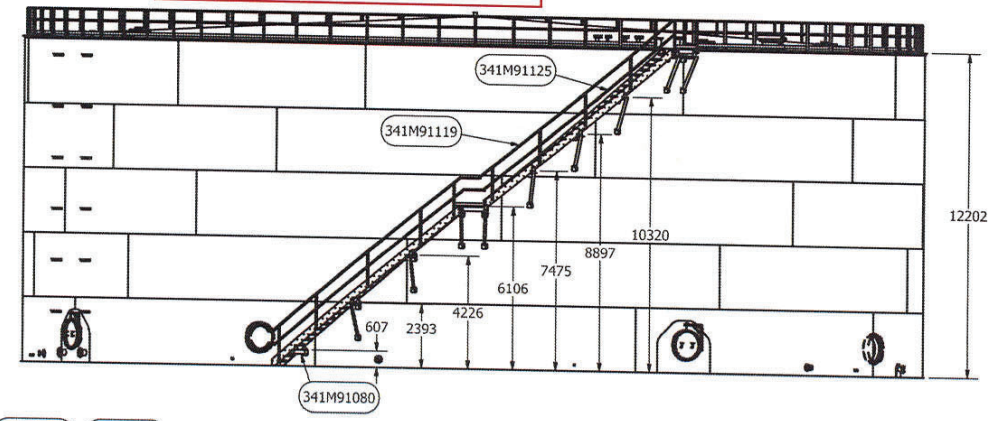

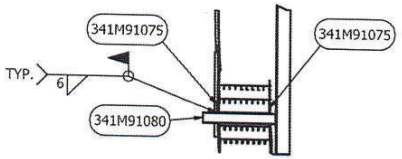

DETAIL D
BOTTOM STAIRWAY BRACKET
SCALE 1/50

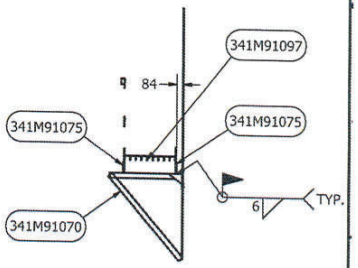

DETAIL E
TYPICAL STAIRWAY BRACKET
SCALE 1 / 50

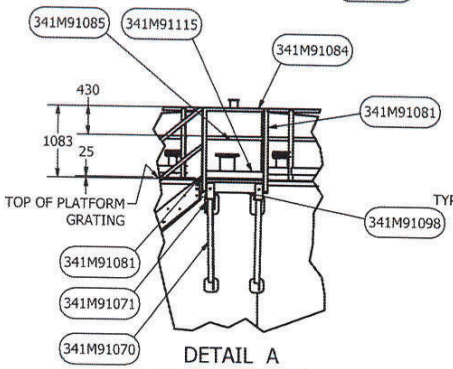

DETAIL A
TOP PLATFORM
FRONT VIEW
SCALE 1 / 50

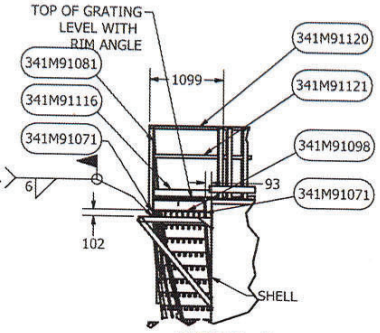

DETAIL B
TOP PLATFORM
SIDE VIEW
SCALE 1 / 50

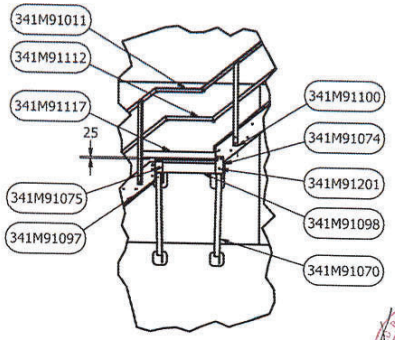

DETAIL C
MID PLATFORM
SCALE 1 / 50

PROFESSIONAL ENGINEERS
BROWN
JOSEF
NT/NU
15-Jun-2021
Permit Number: P471

REVISION HISTORY		
REV	DESCRIPTION	DATE
A	ISSUED FOR REVIEW	4/05/2021
1	ISSUED FOR CONSTRUCTION	6/8/2021

DRAWN: MARC LOSIER	4/5/2021	STAIRWAY AND PLATFORMS
CHECKED		
QA		
MFG		TITLE: BAKER LAKE WHALE TAIL PROJECT - 10M LITERS - TANK #8: 6170TNK43 STAIRWAY AND PLATFORM
APPROVED		SIZE: A2 · DWG NO: 341-M9 · REV: 1
		SCALE: 1 / 100 · SHEET 1 OF 4

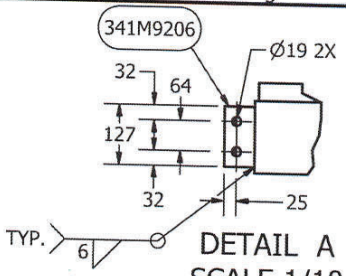

DETAIL A
SCALE 1/10

PARTS LIST FOR ONE TANK TWO (2) REQUIRED					
ITEM	ITEM QTY	CUT (MM)	DESCRIPTION	MATERIAL	MASS
341M9201	1	1016	C150X16	G40.21 350W	15 kg
341M9202	1	972	C150X16	G40.21 350W	15 kg
341M9203	1	995	L76X76X10	G40.21 300W	11 kg
341M9204	2	760	C150X16	G40.21 350W	11 kg
341M9205	1		Welded steel grating type 30-102, 25mm x 4.8mm serrated bearing bars @ 32mm c/c, cross rods @ 102mm c/c, galvanized	Steel, Galvanized	35 kg
341M9206	2	127	L65X65X14	G40.21 300W	1 kg

STS STORAGE TANK SOLUTIONS **AS BUILT STAMP**

☐ CHANGE ☒ NO CHANGE

NAME: Lindsay C Bolton
SIGNATURE:
DATE: September 6, 2021

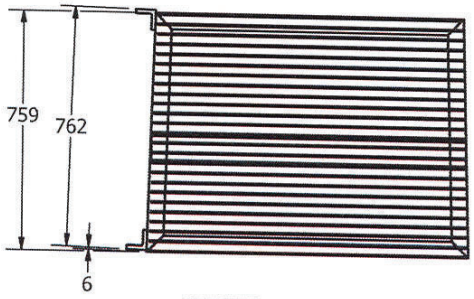

MARK: 341M91098
QTY: 2

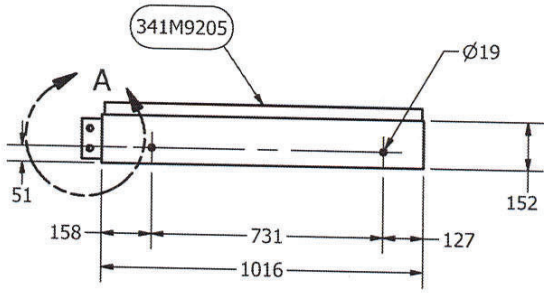

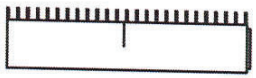

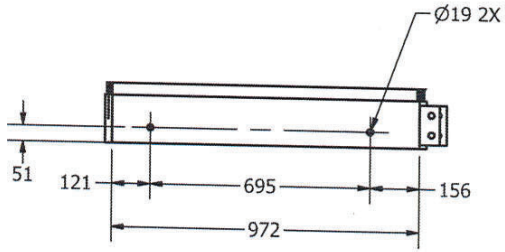

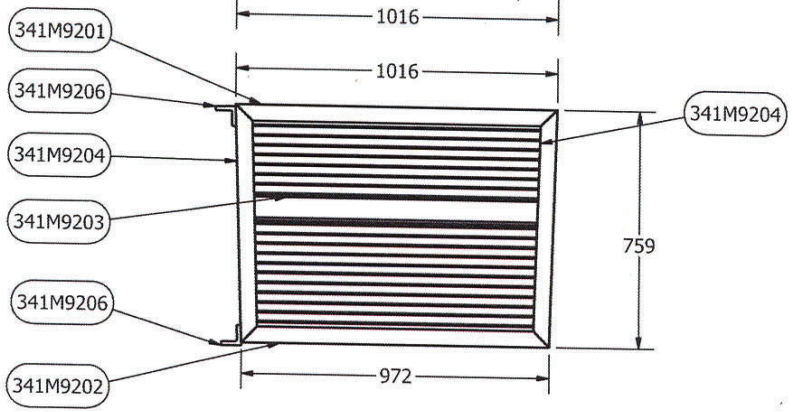



Permit Number: P471

REVISION HISTORY		
REV	DESCRIPTION	DATE
A	ISSUED FOR REVIEW	4/05/2021
1	ISSUED FOR CONSTRUCTION	6/8/2021

DRAWN MARC LOSIER	4/5/2021	TOP PLATFORM
CHECKED		
QA		
MFG		TITLE: BAKER LAKE WHALE TAIL PROJECT - 10M LITERS - TANK #8: 6170TNK43 STAIRWAY AND PLATFORM
APPROVED		

SIZE	DWG NO	REV
A3	341-M9	1

SCALE 1/15 SHEET 2 OF 4

PARTS LIST FOR ONE TANK 9 REQUIRED

ITEM	ITEM QTY	CUT (MM)	DESCRIPTION	MATERIAL	MASS (KG)
341M9301	1	1080	L76X76X6	G40.21 300W	8
341M9302	1	1707	L76X76X6	G40.21 300W	12
341M9303	1	203	FB203X6	G40.21 300W	2
341M9304	1	305	FB203X6	G40.21 300W	3
341M9305	1	152	FB102X6	G40.21 300W	1

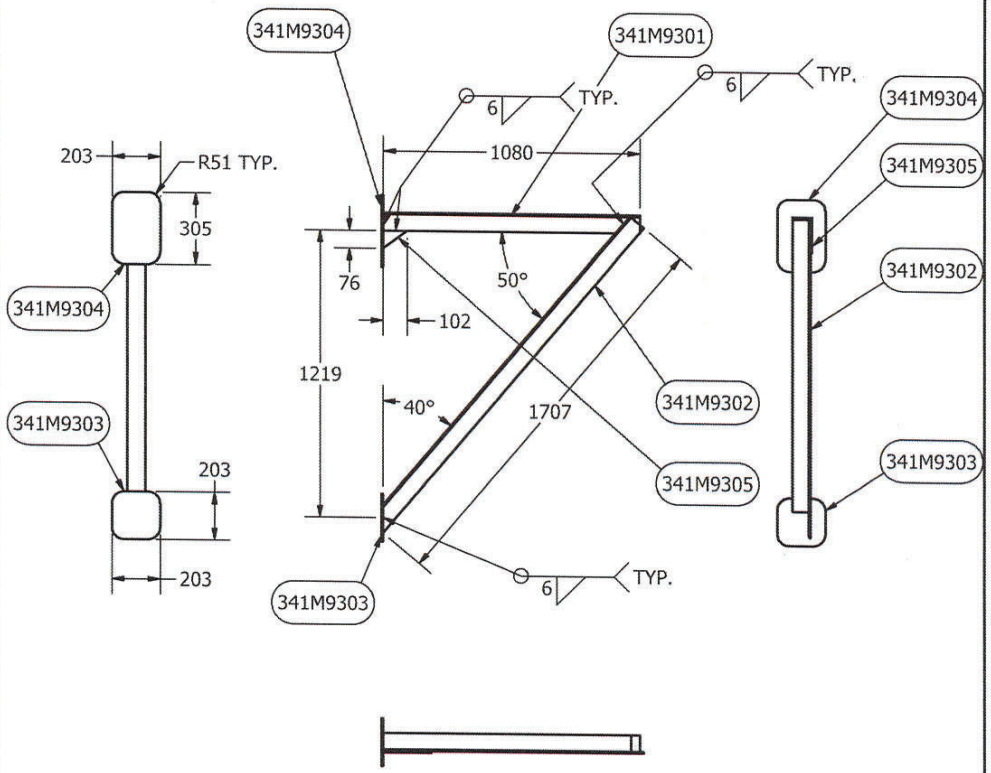

MARK: 341M91070
QTY: 9

PARTS LIST FOR ONE TANK ONE REQUIRED

ITEM	QTY	CUT (MM)	DESCRIPTION	MATERIAL	MASS (KG)
341M9306	1		PL254X254X6	G40.21 300W	3
341M9307	1	1080	W150X30	G40.21 350W	32

STS STORAGE TANK SOLUTIONS **AS BUILT STAMP**

☐ CHANGE ☒ NO CHANGE

NAME: Lindsay C Bolton
SIGNATURE: LCB
DATE: September 6, 2021

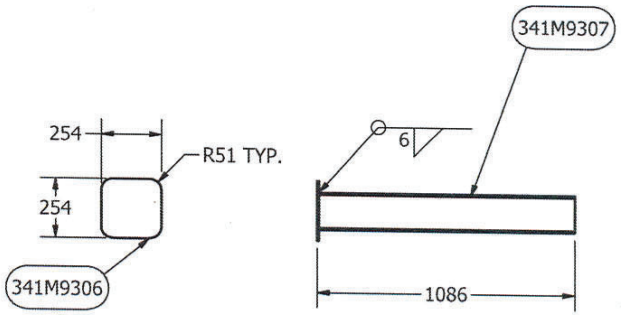

MARK: 341M91080
QTY: 1



Permit Number: P471

REVISION HISTORY

REV	DESCRIPTION	DATE
A	ISSUED FOR REVIEW	4/05/2021
1	ISSUED FOR CONSTRUCTION	6/8/2021

DRAWN MARC LOSIER	4/5/2021	SUPPORT BRACKETS
CHECKED		
QA		TITLE
MFG		BAKER LAKE WHALE TAIL PROJECT - 10M LITERS - TANK #8: 6170TNK43 STAIRWAY AND PLATFORM
APPROVED		

SIZE	DWG NO	REV
A3	341-M9	1

SCALE 1/20 SHEET 3 OF 4

PARTS LIST FOR ONE TANK, TWO (2) REQ'D

ITEM	QTY	DESCRIPTION	MATERIAL	MASS (KG)
341M9401	29	WELDED STEEL TREADS TYPE 19-4 1-1/2" X 3/16" SERRATED, STANDARD END PLATES, CH. PL. NOSING, 9-3/4" X 30"	Steel, Galvanized	8
341M9402	1	OUTER STRINGER 6THK X 254 X 9412	G40.21 300W	117
341M9403	1	INSIDE STRINGERTHK X 254 X 9182	G40.21 300W	114
341M9404	116	3/8" X 1 1/2" LG HEX HD BOLT C/W (1) NUT & LOCK WASHER AND (2) FLAT WASHER	A325 GALV	

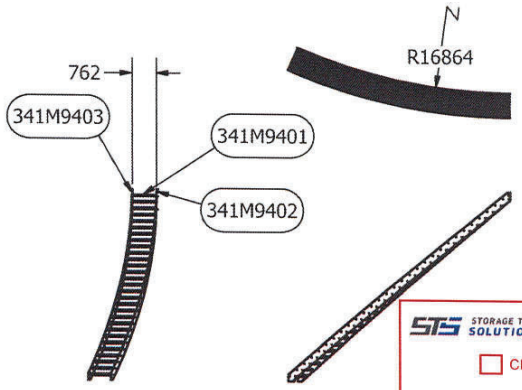

MARK 315M9106
STAIRWAY ASSY
SCALE 1/150

STS STORAGE TANK SOLUTIONS **AS BUILT STAMP**
☐ CHANGE ☒ NO CHANGE
NAME: Lindsay C Bolton
SIGNATURE:
DATE: September 6, 2021

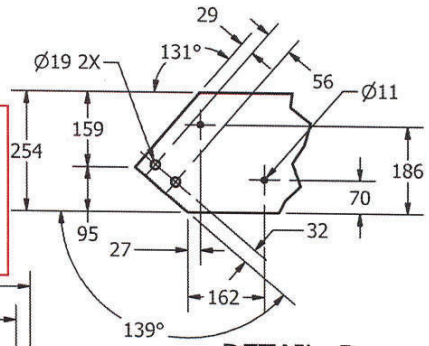

DETAIL B
SCALE 1 / 10

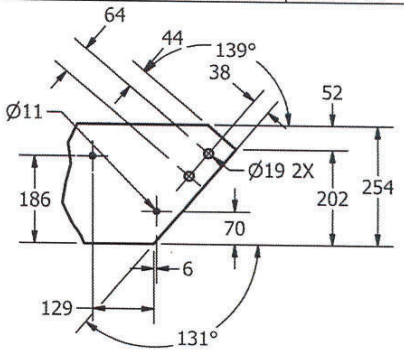

DETAIL A
SCALE 1 / 10

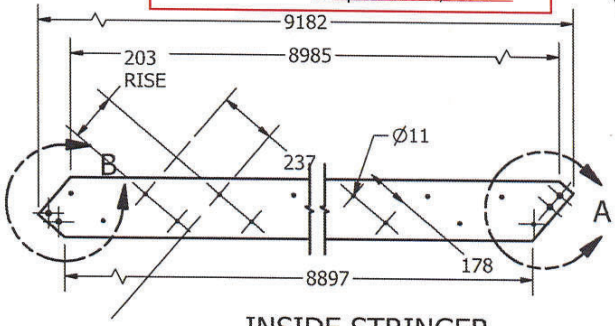

INSIDE STRINGER
MARK: 315M9403
SCALE 1/20

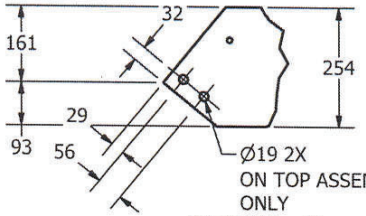

ON TOP ASSEMBLY ONLY

DETAIL D
SCALE 1 / 10

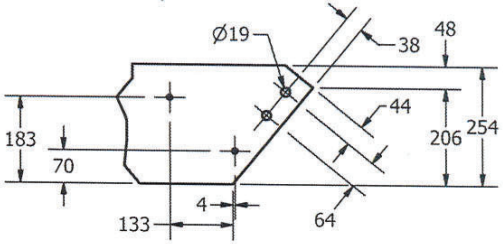

DETAIL C
SCALE 1 / 10

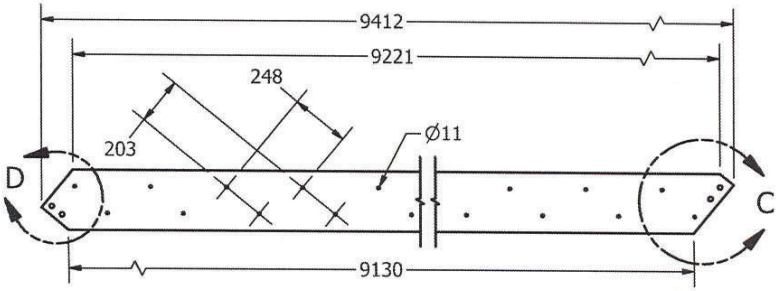

OUTER STRINGER
315-M9402
SCALE 1/20



Permit Number: P471

REVISION HISTORY

REV	DESCRIPTION	DATE
A	ISSUED FOR REVIEW	4/05/2021
1	ISSUED FOR CONSTRUCTION	6/8/2021

DRAWN MARC LOSIER	4/5/2021	STAIRWAY STEPS AND STRINGER ASSEMBLY
CHECKED		
QA		TITLE
MFG		BAKER LAKE WHALE TAIL PROJECT - 10M LITERS - TANK #8: 6170TNK43 STAIRWAY AND PLATFORM
APPROVED		

SIZE A3 | DWG NO 341-M9 | REV 1
SCALE 1/150 | SHEET 4 OF 4

Stair Bracket Weld Mapping

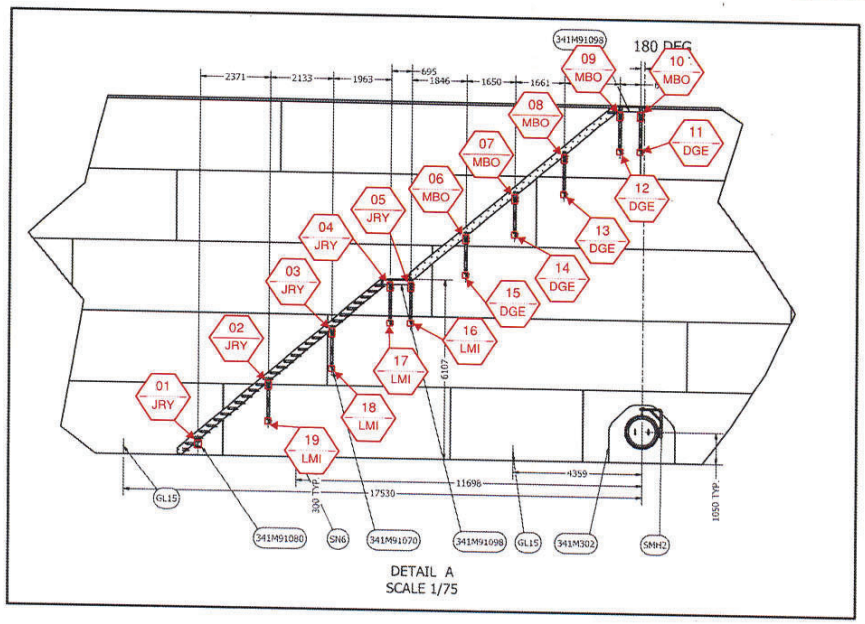

DETAIL A
SCALE 1/75

PARTS LIST			
ITEM	QTY	PART NUMBER	DESCRIPTION
SN3	1	200NS - FITTED PIPE TANK LOADING	SEE DRG 341-M7 - SHT 1 & 3
SN4	1	200NS - FITTED PIPE TANK UNLOADING	SEE DRG 341-M7 - SHT 1 & 4
SN5	2	150NS - PUMPING LOW SUCTION	SEE DRG 341-M7 - SHT 6
SN6	6	75 NS WATER DRAW OFF	SEE DRG 341-M7 - SHT 7
GL15	8	GROUNDING LUG	SEE DRG 341-M6 - SHT 2
SB19	12	ANGLE - L 3 x 3 x 1/4 - 15.75" - BRACKET FOR PRV PIPING	SEE DRG 341-M6 - SHT 3
341M301	1	900NS SHELL MANWAY REPAD 200NS LOADING AND UNLOADING AT 180 DEG	SEE DRG 341-M3
341M302	3	900 NS SHELL MANWAY REPAD AT 0, 90 & 270 DEG	SEE DRG 341-M3
C1	8	C1 - SHELL PLATE COURSE 1	SEE DRG 341-M2 - 12167 X 2425 X 12.7
C2	8	C2 - SHELL PLATE COURSE 2	SEE DRG 341-M2 - 12167 X 2425 X 9.5
C3 & C4	16	C3 & C4 - SHELL PLATE COURSE 3 & 4	SEE DRG 341-M2 -12167 X 2425 X 7.9
C5	8	C5 - SHELL PLATE COURSE 5	SEE DRG 341-M2 - 12167 X 2425 X 6.5
341M9401	58	STAIR THREAD	SEE DRG 341-M9 SHT 4
341M91070	9	STAIRWAY SUPPORT BRACKET	SEE DRG 341-M9 - SHT 3
341M91080	1	BOTTOM STAIRWAY BRACKET	SEE DRG 341-M9 SHT 3
341M91098	2	PLATFORM	SEE DRG 341-M9 R1 - SHT 2
C1S	1	SHELL PLATE COURSE 1 CLOSURE (TRIM AT SITE)	SEE DRG 341-M2 - 8433 X 2425 X 12.7
C2S	1	SHELL PLATE COURSE 2 CLOSURE (TRIM AT SITE)	SEE DRG 341-M2 - 8433 X 2425 X 9.5
C3S	1	SHELL PLATE COURSE 3 CLOSURE (TRIM AT SITE)	SEE DRG 341-M2 - 8433 X 2425 X 7.9
C4S	1	SHELL PLATE COURSE 4 CLOSURE (TRIM AT SITE)	SEE DRG 341-M2 - 8433 X 2425 X 7.9
C5S	1	SHELL PLATE COURSE 5 CLOSURE (TRIM AT SITE)	SEE DRG 341-M2 - 8433 X 2425 X 6.4

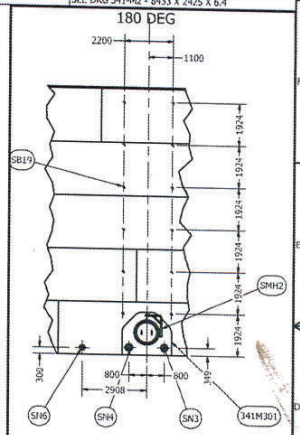

DETAIL B
SCALE 1 / 100

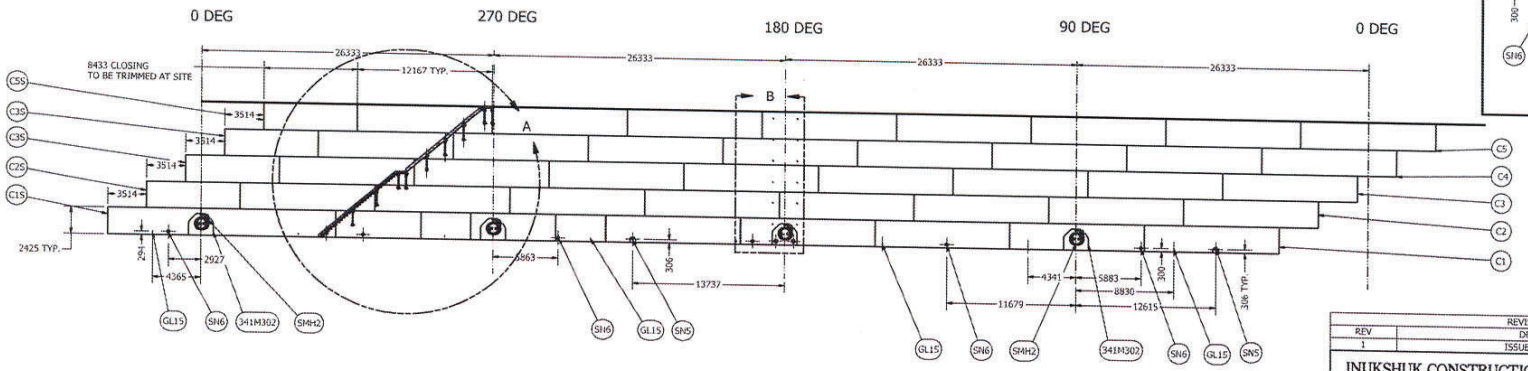

TANK DEVELOPPED VIEW
SCALE 1 / 200

NOTE:
- GUARDRAILS NOT SHOWN FOR INCLUDED FOR CLARITY.

REVISION HISTORY		
REV	DESCRIPTION	DATE
1	ISSUED FOR CONSTRUCTION	6/7/2021

INUKSHUK CONSTRUCTION LIMITED
-GRAVEL CRUSHING
-EARTHWORK
-PROCESS PIPE WELDING
-INDUSTRIAL CONTRACTING
PO BOX 654
RANKIN INLET, NU
X0C1G0
PH: (867) 645-4030
FAX: (902) 429-7762

DRAWN	MARC LOSIER	6/7/2021
CHECKED		
QA		
MFG		
APPROVED		

TANK DEVELOPED VIEW

TITLE: BAKER LAKE WHALE TAIL PROJECT FLOOR AND ROOF LAYOUT FOR 10,000CUM TANK

SIZE	DWG NO	REV
A1	341-M10	A

SCALE 1 / 200 — SHEET 1 OF 1

15-Jun-2021
Permit Number: P471

ALL DIMENSIONS IN MM

QUALITY CONTROL MANUAL

VISUAL TEST REPORT

Customer: AGNICO EAGLE

Location: BAKER LAKE

Code Requiring Test: API 650 (section 8.5.2) Reason for Test: New Construction

A weld shall be acceptable by visual examination if the inspection shows the following.

a) There are no crater cracks, other surface cracks or arc strikes in or adjacent to the welded joints.
b) Maximum permissible undercut is 0.4 mm (1/64 in.) in depth for vertical butt joints, vertically oriented permanent attachments, attachment welds for nozzles, manholes, flush-type openings, and the inside shell-to-bottom welds. For horizontal butt joints, horizontally oriented permanent attachments, and annular-ring butt joints, the maximum permissible undercut is 0.8 mm (1/32 in.) in depth.
c) The frequency of surface porosity in the weld does not exceed one cluster (one or more pores) in any 100 mm (4 in.) of length, and the diameter of each cluster does not exceed 2.5 mm (3/32 in.).
d) The reinforcement of the welds on all thicknesses:

Plate Thickness mm (in.)	Maximum Reinforcement Thickness mm (in.)	
	Vertical Joints	Horizontal Joints
≤ 13 (1/2)	2.5 (3/32)	3 (1/8)
> 13 (1/2) to 25 (1)	3 (1/8)	5 (3/16)
> 25 (1)	5 (3/16)	6 (1/4)

Surface Condition (As Welded)

Test Solution: N/A Test Date(s): 2021-08-31

Tested by: Matthew MacKenzie Ambient Conditions: 10 Degrees Celcius

Items Tested:

STAIRS & PLATFORMS.

Results:

ALL WELDING ACCEPTABLE AT TIME OF INSPECTION.

STS Representative Signature: Matthew MacKenzie Date: 2021-08-31

Client Representative Signature: [signature] Date: 1st Sept 21

SECTION 19.0

Bolts and Nuts

Garlock
SEALING TECHNOLOGIES

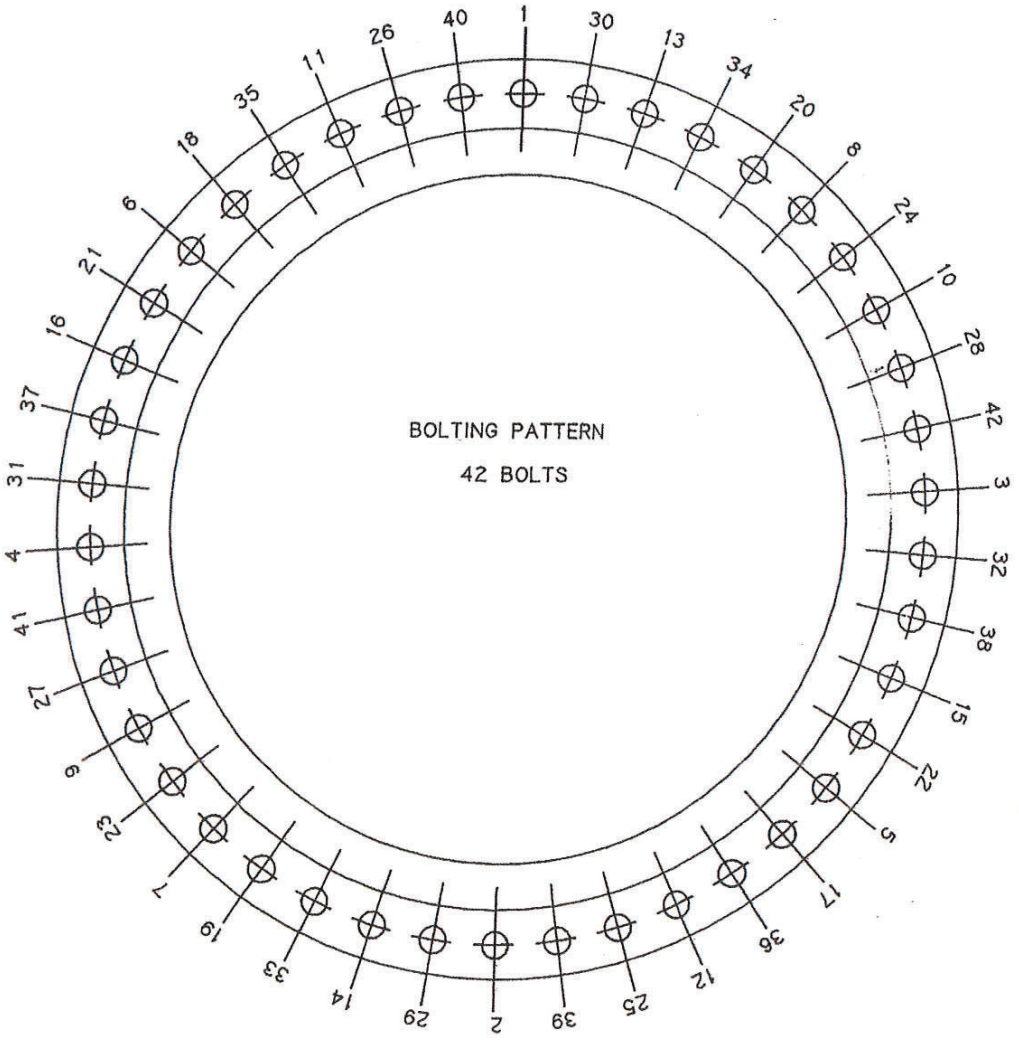

Garlock Sealing Technologies
Garlock Inc
1666 Division Street
Palmyra, New York 14522-9350
800-448-6688
315-597-4811
Fax: 800-543-0598
http://www.garlock.net

Factors Affecting Gasket Performance

A gasket has one basic function: to create a positive seal between two relatively stationary parts. The gasket must do a number of different jobs well to function properly - first, create an initial seal; second, maintain the seal over a desired length of time; third, be easily removed and replaced. Varying degrees of success are dependent on how well the gasket does the following:

1. Seals system fluid.
2. Chemically resists the system fluid to prevent serious impairment of its physical properties.
3. Deforms enough to flow into the imperfections on the gasket seating surfaces to provide intimate contact between the gasket and the sealing surfaces.
4. Withstands system temperatures without serious impairments of its performance properties.
5. Is resilient and creep resistant enough to maintain an adequate portion of the applied load.
6. Has sufficient strength to resist crushing under the applied load, and maintain its integrity when being handled and installed.
7. Does not contaminate the system fluid.
8. Does not promote corrosion of the gasket seating surfaces.
9. Is easily and cleanly removable at the time of replacement.

During the gasket product selection process that follows, we recommend that these nine (9) factors be used as a checklist from the viewpoint of the user's degree of need for each factor and the manufacturer's degree of compliance.

Garlock Sealing Technologies
Garlock Inc
1666 Division Street
Palmyra, New York 14522-9350
800-448-6688
315-597-4811
Fax: 800-543-0598
http://www.garlock.net

Installation

A few simple precautionary measures must be observed during installation to ensure the most satisfactory joint.

- Center the gasket on the flange. This is extremely vital where raised faces are involved.
- Be sure surface finish and flatness are satisfactory.
- Tighten the bolts to compress the gasket uniformly. This means going from side to side around the joint. See Figure 1.
- Use a torque wrench, well-lubricated fasteners, and hardened flat washers to ensure correct initial loading.
- All bolts should be tightened in one-third increments, according to proper bolting patterns.
- Make a final check pass at the target torque value moving consecutively from bolt to bolt.
- Retorque 12 to 24 hours after initial installation, whenever possible. All applicable safety standards including lockout/tagout procedures should be observed.
- Never use liquid or metallic based anti-stick or lubricating compounds on the gaskets. Premature failure could occur as a result.

Correct Bolting Patterns

Figure 1

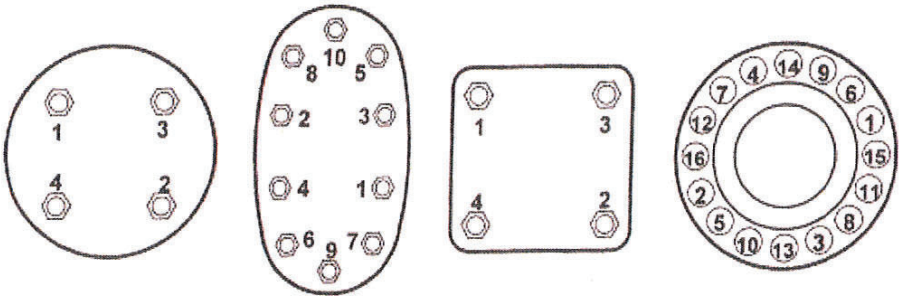

Garlock Sealing Technologies
Garlock Inc
1666 Division Street
Palmyra, New York 14522-9350
800-448-6688
315-597-4811
Fax: 800-543-0598
http://www.garlock.net

Bolt Torque Values for ASME B16.5 Class 150# Raised Face Flanges with A193 Grade B7 Bolts

for *GYLON®* and *Compressed Sheet* gaskets

Nom. Pipe Size (Inches)	No. of Bolts	Size of Bolts (Inches)	Internal Pressure (psig)	Minimum Torque (ft.lbs.)	Preferred Torque (ft.lbs.)
1/2	4	1/2	300	9	28
3/4	4	1/2	300	13	40
1	4	1/2	300	17	53
1-1/4	4	1/2	300	26	60
1-1/2	4	1/2	300	35	60
2	4	5/8	300	69	120
2-1/2	4	5/8	300	81	120
3	4	5/8	300	119	120
3-1/2	8	5/8	300	66	120
4	8	5/8	300	84	120
5	8	3/4	300	117	200
6	8	3/4	300	148	200
8	8	3/4	300	200	200
10	12	7/8	300	188	320
12	12	7/8	300	250	320
14	12	1	300	317	490
16	16	1	300	301	490
18	16	1-1/8	300	448	710
20	20	1-1/8	300	395	710
24	20	1-1/4	300	563	1000

Garlock Sealing Technologies
Garlock Inc
1666 Division Street
Palmyra, New York 14522-9350
800-448-6688
315-597-4811
Fax: 800-543-0598
http://www.garlock.net

Bolt Torque Values for ASME B16.5 Class 300# Raised Face Flanges with A193 Grade B7 Bolts

for *GYLON®* and *Compressed Sheet* gaskets

Nom. Pipe Size (Inches)	No. of Bolts	Size of Bolts (Inches)	Internal Pressure (psig)	Minimum Torque (ft.lbs.)	Preferred Torque (ft.lbs.)
1/2	4	1/2	800	12	28
3/4	4	5/8	800	21	51
1	4	5/8	800	28	67
1-1/4	4	5/8	800	43	102
1-1/2	4	3/4	800	64	151
2	8	5/8	800	46	108
2-1/2	8	3/4	800	60	141
3	8	3/4	800	88	200
3-1/2	8	3/4	800	99	200
4	8	3/4	800	125	200
5	8	3/4	800	156	200
6	12	3/4	800	131	200
8	12	7/8	800	205	320
10	16	1	800	219	490
12	16	1-1/8	800	319	710
14	20	1-1/8	800	287	652
16	16	1-1/4	800	401	912
18	24	1-1/4	800	439	1000
20	24	1-1/4	800	484	1000
24	24	1-1/2	800	662	1552

Garlock Sealing Technologies
Garlock Inc
1666 Division Street
Palmyra, New York 14522-9350
800-448-6688
315-597-4811
Fax: 800-543-0598
http://www.garlock.net

Bolt Torque Values for ASME B16.5 Class 150# Raised Face Flanges with A193 Grade B7 Bolts

for *GRAPH-LOCK®* gaskets

Nom. Pipe Size (Inches)	No. of Bolts	Size of Bolts (Inches)	Internal Pressure (psig)	Minimum Torque (ft.lbs.)	Preferred Torque (ft.lbs.)
1/2	4	1/2	300	9	20
3/4	4	1/2	300	13	27
1	4	1/2	300	17	35
1-1/4	4	1/2	300	26	54
1-1/2	4	1/2	300	35	60
2	4	5/8	300	69	120
2-1/2	4	5/8	300	81	120
3	4	5/8	300	119	120
3-1/2	8	5/8	300	66	120
4	8	5/8	300	84	120
5	8	3/4	300	117	200
6	8	3/4	300	148	200
8	8	3/4	300	200	200
10	12	7/8	300	188	320
12	12	7/8	300	250	320
14	12	1	300	317	490
16	16	1	300	301	490
18	16	1-1/8	300	448	710
20	20	1-1/8	300	395	710
24	20	1-1/4	300	563	1000

Garlock Sealing Technologies
Garlock Inc
1666 Division Street
Palmyra, New York 14522-9350
800-448-6688
315-597-4811
Fax: 800-543-0598
http://www.garlock.net

Bolt Torque Values for ASME B16.5 Class 300# Raised Face Flanges with A193 Grade B7 Bolts

for *GRAPH-LOCK®* gaskets

Nom. Pipe Size (Inches)	No. of Bolts	Size of Bolts (Inches)	Internal Pressure (psig)	Minimum Torque (ft.lbs.)	Preferred Torque (ft.lbs.)
1/2	4	1/2	800	12	20
3/4	4	5/8	800	21	34
1	4	5/8	800	28	45
1-1/4	4	5/8	800	43	68
1-1/2	4	3/4	800	64	101
2	8	5/8	800	46	72
2-1/2	8	3/4	800	60	94
3	8	3/4	800	88	138
3-1/2	8	3/4	800	99	154
4	8	3/4	800	125	196
5	8	3/4	800	156	200
6	12	3/4	800	131	200
8	12	7/8	800	205	320
10	16	1	800	219	341
12	16	1-1/8	800	319	498
14	20	1-1/8	800	287	435
16	20	1-1/4	800	401	608
18	24	1-1/4	800	439	1000
20	24	1-1/4	800	484	1000
24	24	1-1/2	800	662	1035

SECTION 20.0

Punch List

QUALITY CONTROL MANUAL

DEFICIENCY PUNCH LIST RECORD

Exhibit 29, Rev 1

Project: AEM, BAKER LAKE		**Project No.:** Inukshuk Construction -1	**Tank Tag:** TK-8 **Date:** 2021-09-09	
Item No.	Drawing No.	Deficiency	Date Completed	Sign Off
1	N/A	Copy of Welder Tickets for Mitchell Barro		
2				
3				
4				
5				
6				
7				
8				
9				
10				
11				
12				

STORAGE TANK SOLUTIONS	Signature	Date:
Agnico Eagle Representative	Signature	Date:

SECTION 21.0

MTR's and Final Documentation

Englobe Corp.
1200, boul. Saint-Martin Ouest, bureau 400
Laval (Québec) Canada H7S 2E4
Téléphone : (514) 281-5151
Télécopieur : (450) 668-5532
Courriel : info@englobecorp.com
Site Web : www.englobecorp.com

VISUEL/ VISUAL ☐

MAGNÉTOSCOPIE/ MAGNETIC PARTICLE ☒

ULTRASONS/ ULTRASOUNDS ☒

Client/ Customer	**Inukshuk Construction Limited** c/o Mr. Marc Losier *(marc@mosher.ca)*		
Projet/ Project	**Baker Lake 10M Liter Tank#8**	**N° Dossier/ File #**	**32-02102078-000-MC-0001-00**
Endroit du travail/ Job location	**Baker Lake, Nunavut**	**N° Commande/ P.O. #**	**341-1009**
Entrepreneur/ Contractor		**N° Contrat/ Contract #**	

RÉFÉRENCE/ REFERENCE

Description	Baker Lake 10M Liter Tank#8 DWG No **341-M6 Rev.A**						
Matériau/ Material	Steel	**État des pièces/ Condition of parts**	As welded	**Fabrication :**	**En cours de/ In process** ☐	**Final/ Final** ☒	
NORMES/ SPECIFICATION	ASME Div.1 sec. VIII Appendix 6 and 12	**Instruction qualité/ Quality Instruction**	IQ_09_QF_05, IQ_09_QF_07	**Date d'examen/ Examination Date**	**AN/YR** 2021	**MOIS/MO** 09	**JR/DAY** 03-05

ÉQUIPEMENT UTILISÉ_MAGNÉTOSCOPIE/ EQUIPMENT USED_MAGNETIC PARTICLE

Appareil/ Equipment	**Fabricant/ Manufacturer** MagnaFlux	**Modèle/ Model** Y-2	**N° série/ Serial #** N1265	**N° Englobe/ Englobe #** 211207	**Date d'étalonnage/ Calibration date** **Fait/ Done** 2021-02-11	**Dû/ Due** 2022-02-11
C.A./ A.C. ☒ **C.C./ D.C.** ☐	**Circulaire/ Circular** ☐ **Longitudinal/ Longitudinal** ☒	**Continuel/ Continous** ☒ **Résiduel/ Residual** ☐	**Démagnétisé/ Demagnetized** N/A	**Particules/ Particles**	**Type**	Dry
					Couleur/ Color	Yellow

ÉQUIPEMENT UTILISÉ_ULTRASONS/ EQUIPMENT USED_ULTRASOUNDS

Appareil/ Equipment		**Fabricant/ Manufacturer** Olympus	**Modèle/ Model** Epoch 600	**N° série/ Serial #** (140787710)	**N° Englobe/ Englobe #** 210737	**Date d'étalonnage/ Calibration date** **Fait/ Done** 2021-02-15	**Dû/ Due** 2022-02-15
		Fabricant/ Manufacturer	**Modèle/ Model**	**N° série/ Serial #**	**Angle d'incidence/ Angle beam**	**Fréquence/ Frequency MHz**	**Dimension**
Palpeurs/ Transducers	**1**	TechniSonic	CF-0503-GP	27100	0°	5	0.375″ Ø
	2	Olympus	A543S-S1	1332003	70°	5	0.25″ Ø
	3						
	4						
Bloc d'étalonnage/ Calibration block		**Type** IIW ASME Cal Block	**N° série/ Serial #** 19-4240 /	**Couplant** Echogel		**Sensibilité/ Sensibility** DAC + 39.3 dB	

RÉSULTATS/RESULTS

OBJECT

We performed a magnetic particle and ultrasonic inspection on Baker Lake 10M Liter Tank#8.



Photo 1
Baker Lake 10M Liter Tank#8

MAGNETIC PARTICLE

Magnetic particle inspection was performed on 100% of welds of the sub mention assembly's:

TABLE 1 – INSPECTION RESULTS

Item	Dessin/ Drawing	Quantité/ Quantity	Type de joint/ Joint type	Inspection (VT-MT)	Fréquence/ Frequency (%)	Résultats/ Résults (C / NC)	Commentaires/ Comments
Nozzle SN6 & 341M306	341-M6 Rev.A	6	T -joint weld	MT	N/A	C	
Nozzle SN5 & 341M303	341-M6 Rev.A	2	T -joint weld	MT	N/A	C	
Nozzle SN4	341-M6 Rev.A	1	T -joint weld	MT	N/A	C	
Nozzle SN3	341-M6 Rev.A	1	T -joint weld	MT	N/A	C	
Manhole & 341M302	341-M6 Rev.A	3	T -joint weld	MT	N/A	C	
Manhole & 341M301	341-M6 Rev.A	1	T -joint weld	MT	N/A	C	





Photos 2 & 3
Nozzle SN6 & 341M306 outside / inside





Photos 4 & 5
Nozzle SN5 & 341M303 outside / inside




Photos 6 & 7
Manhole & 341M302 outside / inside




Photos 8 & 9
Manhole & 341M301 outside / inside
Nozzle SN3, SN4 outside / inside

ULTRASOUNDS

Ultrasonic inspection was performed on welds spots full penetration weld of the sub mention assemblies. Each location spots specified by client.

TABLE 2 – INSPECTION RESULTS

Item	Drawing	Quantity	Joint type	Thickness (mm)	Frequency (%)	Scanning Distance (mm)	Results (C /NC) and comments
C5/C5 with C4	341-M6 Rev.A	9	Butt -joint weld	6.5 mm 7.9 mm	N/A	Variable	C. Vertical spot 6" Horizontal spot 4"
C4/C4 with C5	341-M6 Rev.A	9	Butt -joint weld	6.5 mm 7.9 mm	N/A	Variable	C. Vertical spot 6" Horizontal spot 4"
Horizontal weld C5 with C4	341-M6 Rev.A	2	Butt -joint weld	6.5 mm 7.9 mm	N/A	Variable	C. Spot 6"
C4/C4 with C3	341-M6 Rev.A	9	Butt -joint weld	7.9 mm	N/A	Variable	C. Vertical spot 6" Horizontal spot 4"
C3/C3 with C4	341-M6 Rev.A	9	Butt -joint weld	7.9 mm	N/A	Variable	C. Vertical spot 6" Horizontal spot 4"
Horizontal weld C4 with C3	341-M6 Rev.A	2	Butt -joint weld	7.9 mm	N/A	Variable	C. Spot 6"
C3/C3 with C2	341-M6 Rev.A	9	Butt -joint weld	7.9 mm 9.5 mm	N/A	Variable	C. Vertical spot 6" Horizontal spot 4"
C2/C2 with C3	341-M6 Rev.A	9	Butt -joint weld	9.5 mm 7.9 mm	N/A	Variable	C. Vertical spot 6" Horizontal spot 4"
Horizontal weld C3 with C2	341-M6 Rev.A	2	Butt -joint weld	7.9 mm 9.5 mm	N/A	Variable	C. Spot 6"

Item	Drawing	Quantity	Joint type	Thickness (mm)	Frequency (%)	Scanning Distance (mm)	Results (C /NC) and comments
C2/C2 with C1	341-M6 Rev.A	9	Butt -joint weld	9.5 mm 12.7 mm	N/A	Variable	C. Vertical spot 6" Horizontal spot 4"
C1/C1 with C2	341-M6 Rev.A	8	Butt -joint weld	9.5 mm 12.7 mm	N/A	Variable	C. Vertical spot 6" Horizontal spot 4"
Horizontal weld C1 with C2	341-M6 Rev.A	2	Butt -joint weld	9.5 mm 12.7 mm	N/A	Variable	C. Spot 6"
Vertical weld Middle C1/C1	341-M6 Rev.A	8	Butt -joint weld	12.7 mm	N/A	Variable	C. Spot 6"
Vertical weld Bottom C1/C1	341-M6 Rev.A	8	Butt -joint weld	12.7 mm	N/A	Variable	C. Spot 6"
Door C1/C1 with C2	341-M6 Rev.A	2	Butt -joint weld	9.5 mm 12.7 mm	N/A	Variable	C. See note. Vertical spot 6" Horizontal spot 4"
Door horizontal weld C1 with C2	341-M6 Rev.A	1	Butt -joint weld	9.5 mm 12.7 mm	N/A	Variable	C. Spot 6"
Door vertical middle weld C1 with C2	341-M6 Rev.A	2	Butt -joint weld	12.7 mm	N/A	Variable	C. Spot 6"
Door vertical bottom weld C1 with C2	341-M6 Rev.A	2	Butt -joint weld	12.7 mm	N/A	Variable	C. Spot 6"
Note: On left horizontal spot 4" in outside door discovered porosity. Depth -7.25 mm, size 1mm at the level of 60% DAC.							





Photos 10 & 11
Inspection area specified by client. Vertical spot 6" Horizontal spot 4"





Photos 12 & 13
Inspection area specified by client. Horizontal weld spot 6". Middle and bottom Vertical weld C1/C1 spot 6".



Photo 14
Door welds. Horizontal weld spot 6". Welds C1/C1 with C2. Vertical bottom and middle welds spot 6".

CONCLUSION

All welds inspected are following ASME Div.1 sec. VIII Appendix 6 and 12

/ab

The present report shall not be reproduced, unless as a whole, without written authorization of its author and Englobe Corp.
Unless otherwise indicated, results shown apply only to analyzed sample.

If tests have been carried out, the results of these tests are valid only for the sample described in the present report.
Subcontractors of Englobe Corp. who would have performed field or laboratory work are duly qualified according to the procurement procedure of our quality manual. For further or additional information, please contact the undersigned.

Préparé par/ Prepared by	Iuri Tocarciuc CSA W178.2 level 1 #8625 CGSB PT-MT-UT level 2 #17073	**Date :** 2021-09-06
Approuvé par/ Approved by	David Trudel Supervisor CSA W178.2 level 3 #4687 CGSB PT-MT-UT level 2 #12133	**Date :** 2021-09-08

c.c. :

Y:\Shared\CA\Laval\Data\Projets\123\02102078_Mosher\1_Livrables\32-02102078.000_MC_0001_00\32-02102078_000_MC_00001_00_it.doc

Certificate of Calibration

Kingsway Instruments Inc.
4319 Roper Road Edmonton, AB. T6B 3S5
PHONE: (780) 463-5264

UNIT UNDER TEST:	Westward TWA34	TEST RESULT:	PASS
UNIT DESCRIPTION:	600 ft/lb torque wrench	CAL DATE:	12 May 2021
SERIAL NUMBER:	G2013 01132	**CAL DUE:**	**12-May-2022**
ASSET NUMBER:	A-79501	DATA TYPE:	FOUND-LEFT
UNIT NUMBER:	35654	TEMPERATURE:	23.00 °C
CALIBRATED BY:	Tyler Harris	HUMIDITY:	40 %
PROCEDURE REV.:	1.2	WORK ORDER:	H-3110
PROCEDURE NAME:	Westward TWA34:(1 Yr) CAL VER/43228/50773		

CUSTOMER: Storage Tank Solutions
9 Well Head Street
Devon, AB T9E 1Z6

Kingsway Instruments Inc. certifies that the above listed instrument meets or exceeds all specifications as stated in the referenced procedure (unless otherwise noted). It has been calibrated using measurement standards traceable to the National Institute of Standards and Technology (NIST), or to NIST accepted intrinsic standards of measurement, or derived by the ratio type of self-calibration techniques.

This report may not be reproduced, except in full, unless permission for the publication of an approved abstract is obtained in writing from the calibration organization issuing this report.

Note: Any Test Uncertainty Ratio (TUR) that is less than four to one will appear under the "TUR" heading on the data record. If the TUR meets or exceeds four to one, the field is left blank.

REMARKS: Found-Left data. Calibration within manufacturer's specification.

Standards Used For Calibration

Serial #	Description	Cal Date	Due Date
63986	Norbar 43228 Torque Tool Tester	Jun/09/2020	Jun/09/2021
99189	Norbar 50773.LOG 1000 lbf.ft Torque Transducer	Jun/09/2020	Jun/09/2021

Test Results

Test Description	True Value	Test Result	Lower limit	Upper limit	Units	TUR
Torque Test - Foot lbs						
550.00 ft/lbs		546.50	528.00	572.00	ft/lbs Pass	
350.00 ft/lbs		350.30	336.00	364.00	ft/lbs Pass	
150.00 ft/lbs		153.06	144.00	156.00	ft/lbs Pass	

***** End of Certificate *****

Technician

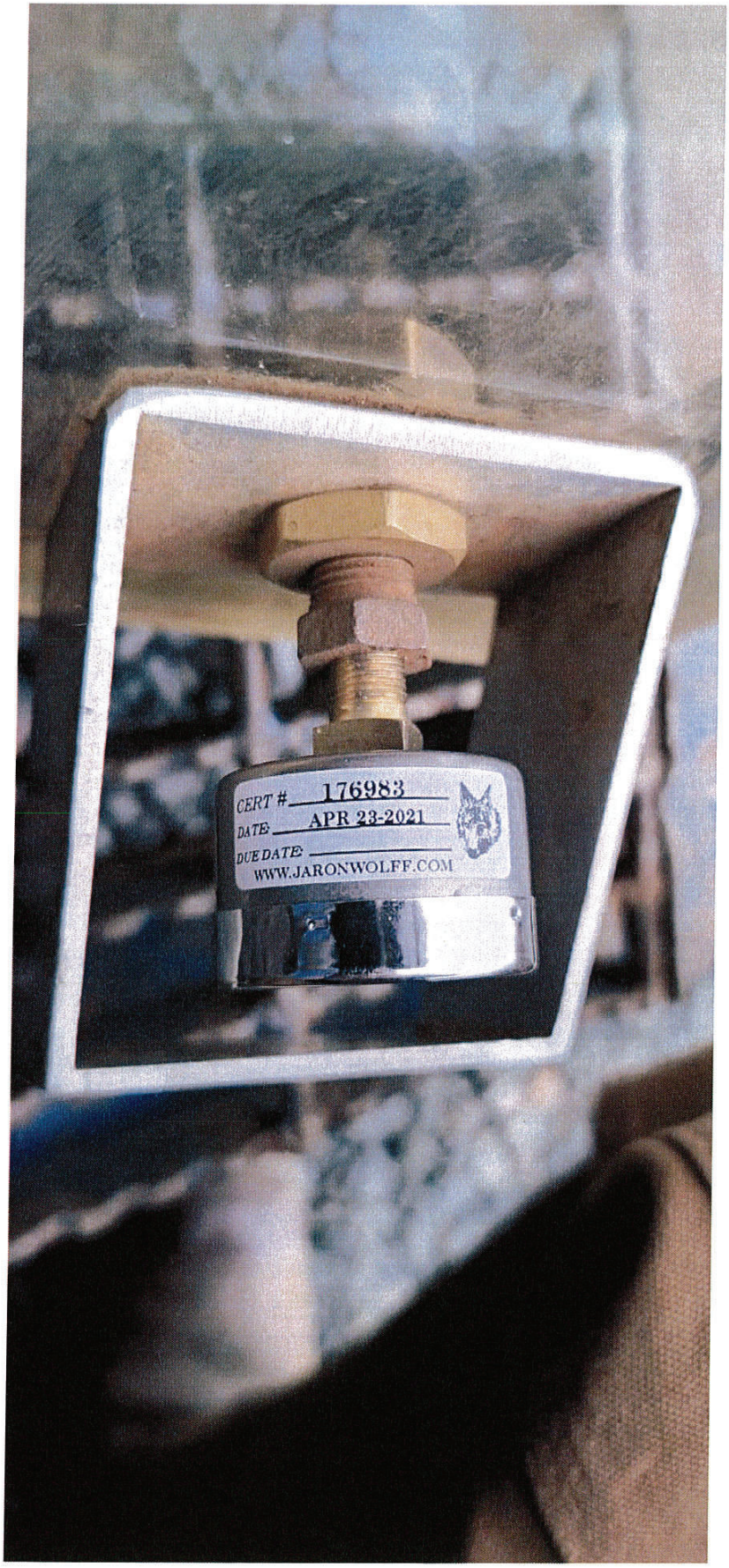
CERT # 176983
DATE APR 23-2021
DUE DATE
WWW.JARONWOLFF.COM

JARON WOLFF
CERTIFICATE OF CALIBRATION

CERTIFICATE # 176983

CUSTOMER: STORAGE TANK SOLUTIONS INC
8835 – 94 STREET
EDMONTON, ALBERTA T6C 3V2

Unit Under Test	R7SL
UUT Description	PRESSURE GAUGE

PO Number	Asset Number	Serial Number	Calibration Date	Due Date
VERBAL	WA8287	JW210423-4	23-Apr-2021	

WO Number	Temperature	Relative Humidity	As Found Condition	As Left Condition
16042	22.1 °C	11.1%	Pass	Pass

Calibration Procedure:	75-(B)-1
Remarks:	

Work performed by: Sheldon

Sheldon Cunningham
Calibration Technician

Approved by:

Bo Svoboda
Quality Manager

Standards Used For Calibration:

JW ID	Mfg/Model	Serial No	Description	Certificate No	Cal Date	Due Date
T-010	MERIAM M200-CI0100	1523000045	MANOMETER	A-44461:154883084	30-01-2019	30-01-2022

The calibration results of the above instrument are traceable to the International System of Units (SI), through the National Institute of Standards Technology or other National Metrological Institutes. All uncertainties have been estimated using a coverage factor of k=2, which results in a confidence level of approximately 95%. All test uncertainty ratios (TUR) are 4:1 or greater. Information of this certificate is only applicable to the instrument identified within and may not be reproduced, except in full, without the prior written approval of Jaron Wolff Process Controls Ltd. Any due date given is based on a customer provided calibration interval. There is no implied warranty that the instrument will maintain specific tolerances for a specific time period due to environmental, operator and other factors beyond our control.

JARON WOLFF
CERTIFICATE OF CALIBRATION

Calibration Results

Certificate Number	176983
Asset Number	WA8287
Serial Number	JW210423-4

Test Description	Nominal Value (UUT)	Test Results (Reference)		Tolerance (+/-)	Uncertainty (+/-)
		As Found	As Left		
	0	0	0	N/A	N/A
UNITS	- 7.50	- 8.04	- 8.04	0.90	N/A
IN/HG	- 15	- 15.02	- 15.02	0.60	N/A
	- 22.50	- 21.79	- 21.79	0.90	N/A
UPSCALE PRESSURE					

JARON WOLFF
CERTIFICATE OF CALIBRATION

Calibration Results

Certificate Number	176983
Asset Number	WA8287
Serial Number	JW210423-4

Test Description	Nominal Value (UUT)	Test Results (Reference)		Tolerance (+/-)	Uncertainty (+/-)
		As Found	As Left		
	0	0	0	N/A	N/A
UNITS	- 7.50	- 8.04	- 8.04	0.90	N/A
IN/HG	- 15	- 15.02	- 15.02	0.60	N/A
	- 22.50	- 21.79	- 21.79	0.90	N/A
UPSCALE PRESSURE					

JARON WOLFF
CERTIFICATE OF COMPLIANCE

CUSTOMER: STORAGE TANK SOLUTIONS INC
8835 – 94 STREET
EDMONTON, ALBERTA T6C 3V2

Manufacturer:	MCDANIEL CONTROLS
Item:	PRESSURE GAUGE
Part Number:	R7SL (RANGE: - 30 IN/HG - 0)
Material:	BRASS INTERNALS
Accuracy:	3-2-3% OF FULL SCALE
Custom Dial:	N/A
Serial Number:	JW210423-4
Certificate Number:	176983
Asset Number:	WA8287
O2 Certificate:	N/A
Customer PO:	VERBAL
Date:	APRIL 23-2021
Work Order:	16042

We hereby certify that the above item(s) supplied by us are in compliance with the terms, conditions and specifications of the above purchase order. In addition, that these item(s) were fabricated, inspected and tested in accordance with the referenced standards, codes, specifications and meet the relevent acceptance criteria and requirements.

Referenced Standards: DIN-ISO 9001:2015 (#S89405/S800048)
CRN (#0F16878.2)

Approved by:

Bo Svoboda
Quality Manager

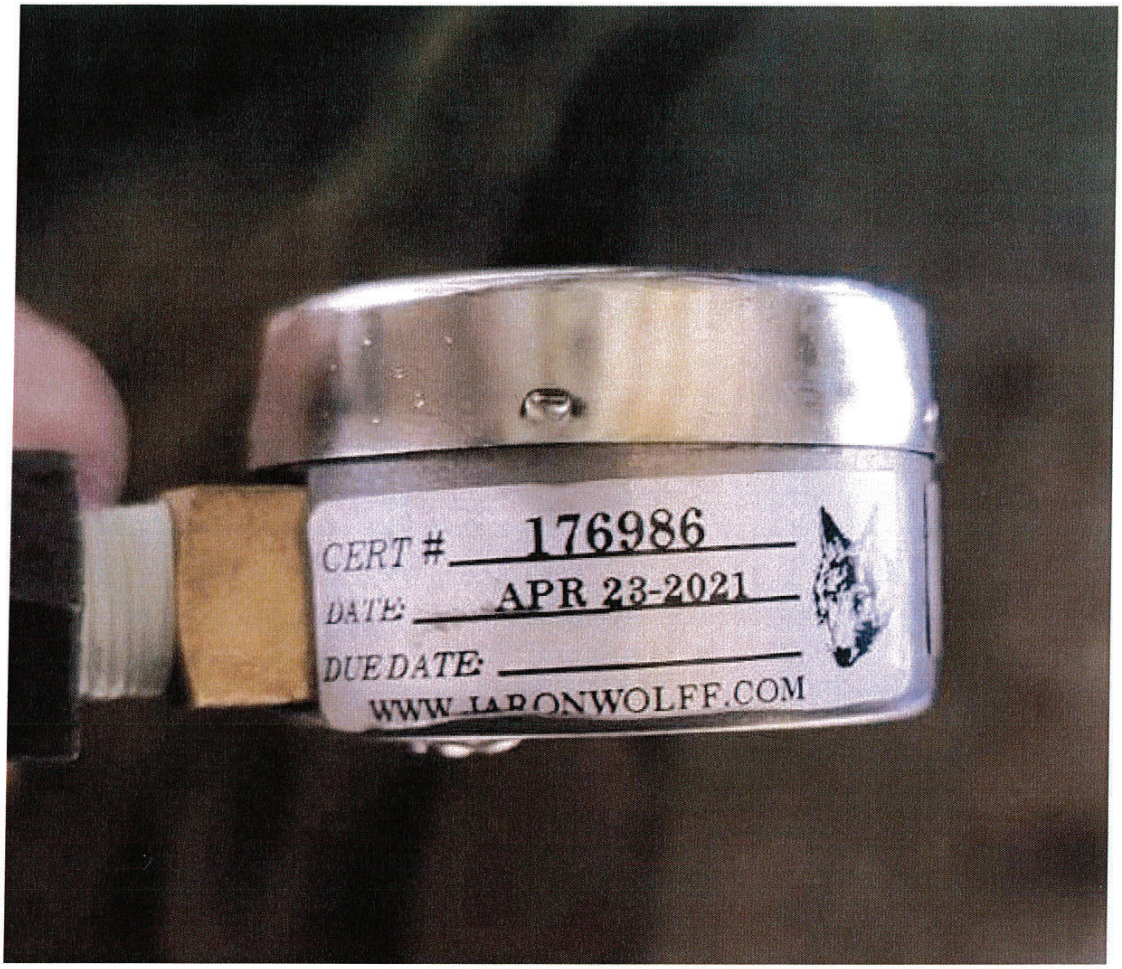
CERT # 176986
DATE: APR 23-2021
DUE DATE:
WWW.JABONWOLFF.COM

JARON WOLFF
CERTIFICATE OF CALIBRATION

CERTIFICATE # 176986

CUSTOMER: STORAGE TANK SOLUTIONS INC
8835 – 94 STREET
EDMONTON, ALBERTA T6C 3V2

Unit Under Test	R7B
UUT Description	PRESSURE GAUGE

PO Number	Asset Number	Serial Number	Calibration Date	Due Date
VERBAL	WA8290	JW210423-7	23-Apr-2021	

WO Number	Temperature	Relative Humidity	As Found Condition	As Left Condition
16042	22.1 °C	11.1%	Pass	Pass

Calibration Procedure:	75-(B)-1
Remarks:	

Work performed by: Sheldon

Sheldon Cunningham
Calibration Technician

Approved by:

Bo Svoboda
Quality Manager

Standards Used For Calibration:

JW ID	Mfg/Model	Serial No	Description	Certificate No	Cal Date	Due Date
T-010	MERIAM M200-CI0100	1523000045	MANOMETER	A-44461:154883084	30-01-2019	30-01-2022

The calibration results of the above instrument are traceable to the International System of Units (SI), through the National Institute of Standards Technology or other National Metrological Institutes. All uncertainties have been estimated using a coverage factor of k=2, which results in a confidence level of approximately 95%. All test uncertainty ratios (TUR) are 4:1 or greater. Information of this certificate is only applicable to the instrument identified within and may not be reproduced, except in full, without the prior written approval of Jaron Wolff Process Controls Ltd. Any due date given is based on a customer provided calibration interval. There is no implied warranty that the instrument will maintain specific tolerances for a specific time period due to environmental, operator and other factors beyond our control.

JARON WOLFF
CERTIFICATE OF CALIBRATION

Calibration Results

Certificate Number	176986
Asset Number	WA8290
Serial Number	JW210423-7

Test Description	Nominal Value (UUT)	Test Results (Reference)		Tolerance (+/-)	Uncertainty (+/-)
		As Found	As Left		
	0	0	0	N/A	N/A
UNITS	7.50	7.78	7.78	0.90	N/A
PSI	15	15.31	15.31	0.60	N/A
	22.50	22.90	22.90	0.90	N/A
UPSCALE PRESSURE					

JARON WOLFF
CERTIFICATE OF CALIBRATION

Calibration Results

Certificate Number	176986
Asset Number	WA8290
Serial Number	JW210423-7

Test Description	Nominal Value (UUT)	Test Results (Reference)		Tolerance (+/-)	Uncertainty (+/-)
		As Found	As Left		
	0	0	0	N/A	N/A
UNITS	7.50	7.78	7.78	0.90	N/A
PSI	15	15.31	15.31	0.60	N/A
	22.50	22.90	22.90	0.90	N/A
UPSCALE PRESSURE					

JARON WOLFF
CERTIFICATE OF COMPLIANCE

CUSTOMER: STORAGE TANK SOLUTIONS INC
8835 – 94 STREET
EDMONTON, ALBERTA T6C 3V2

Manufacturer:	MCDANIEL CONTROLS
Item:	PRESSURE GAUGE
Part Number:	R7B (RANGE: 0 - 30 PSI)
Material:	BRASS INTERNALS
Accuracy:	3-2-3% OF FULL SCALE
Custom Dial:	N/A
Serial Number:	JW210423-7
Certificate Number:	176986
Asset Number:	WA8290
O2 Certificate:	N/A
Customer PO:	VERBAL
Date:	APRIL 23-2021
Work Order:	16042

We hereby certify that the above item(s) supplied by us are in compliance with the terms, conditions and specifications of the above purchase order. In addition, that these item(s) were fabricated, inspected and tested in accordance with the referenced standards, codes, specifications and meet the relevent acceptance criteria and requirements.

Referenced Standards: DIN-ISO 9001:2015 (#S89405/S800048)
CRN (#0F16878.2)

Approved by:

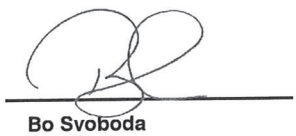

Bo Svoboda
Quality Manager

Canada Customs and Revenue Agency | Agence des douanes et du revenu du Canada

CANADA CUSTOMS INVOICE
FACTURE DES DOUANES CANADIENNES

MRR #001

1. Vendor (name and address) - Vendeur (nom et adresse)
American Alloy Steel
650 Harbor Way
Rome, NY 13440
Tel: (800) 231-3502 Fax: (315) 371-9089

2. Date of direct shipment to Canada - Date d'expédition directe vers le Canada
3/256/21

3. Other references (include purchaser's order no.)
Autres références (inclure le n° de commande de l'acheteur SO#677328, PO#341-1001-NY

4. Consignee (name and address) - Destinataire (nom et adresse)
Techform-Montal
3119 Boul Des Entreprises
Terrebonne, QC J6X 4J9
Canada

CUSTOMS Seamont Brokerage
Phone 514-931-0306
Fax 514-363-5564

5. Purchaser's name and address (if other than consignee)
Nom et adresse de l'acheteur (s'il diffère du destinataire)
American Alloy Steel
650 Harbor Way
Rome, NY 13440

6. Country of transhipment - Pays de transbordement
USA

7. Country of origin of goods
Pays d'origine des marchandises
USA

IF SHIPMENT INCLUDES GOODS OF DIFFERENT ORIGINS AGAINST ITEMS IN 12. SI L'EXPEDITION COMPREND DES MARCHANDISES D'ORIGINES DIFFERENTES, PRECISEZ LEUR PROVENANCE EN 12

8. Transportation: Give mode and place of direct shipment to Canada
Transport: Precisez model et point d'expedition directe vers le Canada

9. Conditions of sale and terms of payment
(i.e. Sale, consignment shipment, leased goods, etc.)
Conditions de vente et modalitiés de palement
(p. ex. vente, expédition en consignation, location de marchandises, etc.)
SALE

10. Currency of settlement - Devises du palement
US FUNDS

11. Number of packages Nombre de colis	12. Specification of commodities (kind of packages, marks and numbers, general description and characteristics, i.e., grad,e quality) Désignation des articles (nature des colis, marques et numéros, description générale et caractéristiques, p. ex, classe, qualité)	13. Quantity (state unit) Quantité (précisez l'unité)	Selling price - Prix de vente	
			14. Unit Price Prix unitaire	15. Total
3	STEEL PLATE CARBON	EACH	4901.00	14,703.00
5			3676.00	18,380.00

If any of fields 1 to 17 are included on an attached commercial invoice, check this box
Si tout renseignement relativement aux zones 1 à 17 figure sur une ou des factures commerciales ci-attachees, cochez cette case ☐
Commercial Invoice No. / N° de la facture commerciale _____

16. Total Weight - Poids Total
Net 44,107
Gross - Brut 44,107

17. Invoice total
Total de la fac 33,083.00

19. Exporter's name and address (if other than vendor)
Nom et adresse de l'exportateur (s'il differe du vendeur)

20. Originator (name and address) - Expéditeur d'origine (nom et adresse)
American Alloy Steel
650 Harbor Way
Rome, NY 13440

21. CCRA ruling (if applicable) - Décision de l'Agence (s'il y a lieu)

22. If fields 23 to 25 are not applicable, check this box
Si les zones 23 à 25 sont sans objet, cochez cette case ☒

23. If included in field 17 indicate amount:
Si compris dans le total à la zone 17, précisez:

(i) Transportation charges, expenses and insurance from the place of direct shipment to Canada
Les frais de transport, dépenses et assurances à partir du point d'expédition directe vers le Canada

(ii) Costs for construction, erection and assembly incurred after importation into Canada
Les coûts de construction ,d'érection et d'assemblage après importation au Canada

(iii) Export packing
Le coût de l'emballage d'exportation

24. If not included in field 17 indicate amount:
Si non compris dans le total à la zone 17, précisez:

(i) Transportation charges, expenses, and insurance from the place of direct shipment to Canada
Les frais de transport, dépenses et assurances jusqu'au point d'expédition directe vers le Canada

(ii) Amounts for commissions other than buying commissions
Les commissions autres que celles versées pour l'achat

(iii) Export packing
Le coût de l'emballage d'exportation

25. Check (if applicable):
Cochez (s'il y a lieu):

(i) Royalty payments or subsequent proceeds are paid or payable by the purchaser
Des redevances ou produits ont été ou seront versés par l'acheteur ☐

(ii) The purchaser has supplied goods or services for use in the production of these goods
L'acheteur a fourni des marchandises ou des services pour la production de ces marchandises ☐

UNITED STATES–MEXICO–CANADA AGREEMENT (USMCA)

CERTIFICATE OF ORIGIN

(Please print or type.)

.. CERTIFIER NAME AND ADDRESS:	2. EXPORTER NAME AND ADDRESS:
PATTI KEYES 650 HARBOR WAY ROME, NY 13440 DIRECT TEL: 315–371–9058 EMAIL: PATTI@AASTEEL.COM	AMERICAN ALLOY STEEL, INC. 650 HARBOR WAY ROME, NY 13440 TEL: 800–325–2479 TAX IDENTIFICATION NUMBER: 1–74–1688398–5
3. PRODUCER NAME AND ADDRESS: Mittel, Coatesville, PA TEL: N/A EMAIL:N/A TAX IDENTIFICATION NUMBER: N/A	4. IMPORTER NAME AND ADDRESS: INUKSHUK Construction Limited 1869 Upper Water Street Suite AH202 Halifax, NS B3J 1S9 Canada TEL: N/A EMAIL: N/A TAX IDENTIFICATION NUMBER: N/A

5. DESCRIPTION OF GOOD(S): STEEL PLATE S/O# 677328 PO# 341–1001–NY	6. H.S. TARIFF CLASSIFICATION NUMBER	7. PREFERENCE CRITERION	10. COUNTRY OF ORIGIN
Item 1, Qty 3, ½ X 96 X 480 Item 2, Qty 5, 3/8 X 96 X 480	7225.40/0000	B	USA

I CERTIFY THAT:

–THE GOODS DESCRIBED IN THIS DOUCMENT QUALIFY AS ORIGINATING AND THE INFORMATION CONTAINED IN THIS DOCUMENT IS TRUE AND ACCURATE. I ASSUME RESPONSIBILITY FOR PROVING SUCH REPRESENTATIONS AND AGREE TO MAINTAIN AND PRRESENT UPON REQUEST OR TO MAKE AVAILABLE DURING A VERIFICATION VISIT, DOCUMENTATION NECESSARY TO SUPPORT THIS CERTIFICATION.

–THIS CERTIFICATE CONSISTS OF ___ PAGES, INCLUDING ALL ATTACHMENTS.

.1. AUTHORIZED SIGNATURE: Patti Keyes	COMPANY: AMERICAN ALLOY STEEL, INC.
NAME (PRINT OR TYPE): PATTI KEYES	TITLE: Ass't Traffic Manager
DATE: 3/26/21 TELEPHONE: 315 371–9058	FAX: 315–371–9089

AMERICAN ALLOY STEEL, INC.
6230 N. HOUSTON ROSSLYN ROAD
HOUSTON, TEXAS 77091
Phone: 713-462-8081 Fax: 713-462-8209

M.T.R. COVER SHEET
03/26/2021

LOAD 2

Customer Name : INUKSHUK CONSTRUCTION LIMITED
Address :
City, State Zip : HALIFAX, NS B3J 1S9
Attention : M.LOSIER
Phone Number : 1-902-429-0272
Reference Number : 677328
Notes 1 : P.O. NO. 341-1001-NY

Control Number: 1090228
Queued By : Alex Garza
Page Number : 1
Total Pages :
Fax Number : 1-902-429-7762

THE INFORMATION YOU REQUESTED IS ATTACHED.
THANK YOU FOR YOUR BUSINESS !

AASI PLATE NUMBER	HEAT # / SLAB #	MILL
5233529	813P63640 S031720	ARCELORMITTAL
5233530	813P63640 S031719	ARCELORMITTAL
5233531	813P63640 S031720	ARCELORMITTAL
5233523	812P33310 S031717	ARCELORMITTAL
5233524	812P33310 S031718	ARCELORMITTAL
5233526	812P33310 S031718	ARCELORMITTAL
5233527	812P33310 S031718	ARCELORMITTAL
5233528	812P33310 S031717	ARCELORMITTAL

AMERICAN ALLOY STEEL, INC.
650 Harbor Way
ROME, NY 13440
PHONE (315) 371-9055 FAX (315) 336-3529

P A C K I N G L I S T

PACKING LIST NO 710944 S/O NO 677328 DATE: 03/29/2021

SOLD TO: 308500 PHONE: 1-902-429-0272
INUKSHUK CONSTRUCTION LIMITED
1869 UPPER WATER STREET SUITE AH202
HALIFAX, NS B3J 1S9

SHIP TO: 3
TECHFORM-MONTAL
3139 BOUL DES ENTREPRISES
TERREBONNE, QC
J6X 4J9

CUSTOMER BUYER NAME:M.LOSIER PHONE NO: 1-902-429-0272

CUST PO NUMBER	FOB POINT	--- SHIP VIA --	SHIPPING REF	TERMS	DATE REQ
341-1001-NY	DELIVERED	ITM		PPD	04/06/2021

1 SET OF MTRs IS REQUIRED WITH SHIPMENT

LN#	ITM	QTY	THKNSS	MATERIAL/ITEM DESCRIPTION	UNT WGT	EXT WGT
				ASME SA 516 GRADE 70, KILLED FINE GRAIN, NORMALIZED		
1	1	3	1/2"	96" X 480"	6534	19602
2	2	5	3/8"	96" X 480"	4901	24505

Total Pieces on this Packing List 8

Total Weight on this Packing List 44107

03/26/2021 From: AMERICAN ALLOY STEEL, INC. To: INUKSHUK CONSTRUCTION LIMITED
P.O.#: 341-1001-NY S.O.#: 677328 AA PL#: 5233529
Item: 1 (1 PC) 1/2" X 96" X 480"

ArcelorMittal Burns Harbor Plate

QUALITY ASSURANCE
REPORT OF TEST AND ANAYLSES

US HWY 12 Burns Harbor, Indiana

SHIPMENT NO. 803-66404 | DATE SHIPPED 11-13-20 | CAR OR VEHICLE NO. CSS-CHGO-CSXT-UTICALMIC 007085

SOLD TO
AMERICAN ALLOY STEEL INC
PO BOX 40469
HOUSTON TX 77240-0469

SHIP TO
AMERICAN ALLOY STEEL INC
THEIR SIDING
650 HARBOR WAY
ROME NY 13440

NOTE	SERIAL NUMBER	PAT NO.	HEAT NUMBER	NO. PCS.	SIZE AND QUANTITY: THICKNESS	WIDTH OR DIA.	LENGTH	WEIGHT	YIELD POINT	TENSILE STRENGTH	AF FRAC. ELONG.	RED.
					INCHES	INCHES	INCHES	POUNDS	PSI	PSI	IN	% %

QUALITY STEEL MELTED & MANUFACTURED IN THE U. S. A.
PLATES - ASTM A516-17 GR 70 PVQ KLD FINE GRAIN PRAC, ASTM A516-17 GR 65 PVQ, ASTM A516-17 GR 60 PVQ, ASME SA516 GR 70 PVQ 2019 EDITION, ASME SA516 GR 65 PVQ 2019 EDITION, ASME SA516 GR 60 PVQ 2019 EDITION, CH-V SA20S5 PLT L 15/12 FTLBS AT -50F, VACUUM DEGASSED --- PLT NORMALIZED & COOLED IN STILL AIR --- IN ACCORDANCE WITH EN 10204:2004 TYPE 3.1 10204:2004 TYPE 3.1
NO WELD REPAIR WAS PERFORMED ON BELOW PLATE(S)
CO# 125377-NY GH 377-1468A
PLATES HEAT TREATED - TEST SPECIMENS ATTACHED & YIELD STRENGTH @ .5% EUL
MERCURY IN ANY FORM HAS NOT BEEN USED IN THE PRODUCTION OF THIS ORDER

S031719	813P63640	1	1/2	96	480	6534	52400	.74200	8	30.		
			N	1650 DEG F -	24 MIN							

(M55)MFST REF#:2

S031720	813P63640	2	1/2	96	480	13068	53800	74400	8	27		
			N	1650 DEG F -	24 MIN							

(M55)MFST REF#:2

Q-QUENCH TEMPERATURE T-TEMPER TEMPERATURE N-NORMALIZE TEMPERATURE

SERIAL NUMBER	PAT NO.	HEAT NUMBER	HARD BHN	BEND	THICKNESS INCHES	TYPE	SIZE	DIR	TEST TEMP °F	CHARPY IMPACT ENERGY FT LBS 1	2	3	SHEAR(%) 1	2	3	LAT. EXP MILS 1	2	3
S031719		813P63640			.500	V	FULL	L	-50	186	126	203						
S031720		813P63640			.500	V	FULL	L	-50	195	156	132						

Certified a true copy of the original, retained in our file.
AMERICAN ALLOY STEEL
J.F 12/17/2020

HEAT NUMBER	CHEMICAL ANALYSIS C	Mn	P	S	Si	Cu	Ni	Cr	Mo	V	Ti	Al	B	Cb	N	Sn	MQUAD GRAIN SIZE
813P63640	.16	1.01	.013	.004	.31	8.21	8.17	.03	.003	.001	.002	.042	.0002	.002	.004	.003	

I certify that the above results are a true and correct copy of actual results contained in records maintained by ArcelorMittal Burns Harbor and are in full compliance with the requirements of the specification cited above. This test report cannot be altered and must be transmitted intact with any subsequent third party test reports, if required.

FARID HASSANI PER MWT
SUPV. QUALITY ASSURANCE

BHPLTRPT.TIF

AMERICAN ALLOY
PLATE # 5233529

03/26/2021 From: AMERICAN ALLOY STEEL, INC. To: INUKSHUK CONSTRUCTION LIMITED
P.O.#: 341-1001-NY S.O.#: 677328 AA PL#: 5233530
Item: 1 (1 PC) 1/2" X 96" X 480"

ArcelorMittal Burns Harbor Plate

QUALITY ASSURANCE
REPORT OF TEST AND ANAYLSES

US HWY 12 Burns Harbor, Indiana

SHIPMENT NO. 803-66404 | DATE SHIPPED 11-13-20 | CAR OR VEHICLE NO. CSS-CHGO-CSXT-UTICALMIC 007085

SOLD TO: AMERICAN ALLOY STEEL INC
PO BOX 40469
HOUSTON TX 77240-0469

SHIP TO: AMERICAN ALLOY STEEL INC
THEIR SIDING
650 HARBOR WAY
ROME NY 13440

NOTE	SERIAL NUMBER	PAT NO.	HEAT NUMBER	NO. PCS.	SIZE AND QUANTITY: THICKNESS	WIDTH OR DIA.	LENGTH	WEIGHT	YIELD POINT	TENSILE STRENGTH	AF FRAC. ELONG.	RED.
					INCHES	INCHES	INCHES	POUNDS	PSI	PSI	IN	% %

QUALITY STEEL MELTED & MANUFACTURED IN THE U. S. A.
PLATES - ASTM A516-17 GR 70 PVQ KLD FINE GRAIN PRAC, ASTM A516-17 GR 65 PVQ, ASTM A516-17 GR 60 PVQ, ASME SA516 GR 70 PVQ 2019 EDITION, ASME SA516 GR 65 PVQ 2019 EDITION, ASME SA516 GR 60 PVQ 2019 EDITION, CH-V SA20S5 PLT L 15/12 FTLBS AT -50F, VACUUM DEGASSED --- PLT NORMALIZED & COOLED IN STILL AIR --- IN ACCORDANCE WITH EN 10204:2004 TYPE 3.1 10204:2004 TYPE 3.1
NO WELD REPAIR WAS PERFORMED ON BELOW PLATE(S)
CO# 125377-NY GH 377-1468A
PLATES HEAT TREATED - TEST SPECIMENS ATTACHED - YIELD STRENGTH @ .5% EUL
MERCURY IN ANY FORM HAS NOT BEEN USED IN THE PRODUCTION OF THIS ORDER

S031719	813P63640	1	1/2	96	480	6534	52400	74200	8	30		
			N	1650 DEG F -	24 MIN							
(M55)MFST REF#:2												
S031720	813P63640	2	1/2	96	480	13068	53800	74400	8	27		
			N	1650 DEG F -	24 MIN							
(M55)MFST REF#:2												

Q-QUENCH TEMPERATURE T-TEMPER TEMPERATURE N-NORMALIZE TEMPERATURE

SERIAL NUMBER	PAT NO.	HEAT NUMBER	HARD BHN	BEND	THICKNESS INCHES	TYPE	SIZE	DIR	TEST TEMP F	CHARPY IMPACT ENERGY FT LBS 1	2	3	SHEAR(%) 1	2	3	LAT. EXP MILS 1	2	3
S031719		813P63640			.500	V	FULL	L	-50	188	126	209						
S031720		813P63640			.500	V	FULL	L	-50	195	156	132						

Certified a true copy of the original, retained in our file.
AMERICAN ALLOY STEEL
J.F 12/17/2020

HEAT NUMBER	CHEMICAL ANALYSIS C	Mn	P	S	Si	Cu	Ni	Cr	Mo	V	Ti	Al	B	Cb	N	Sn	MOLARD GRAIN SIZE
813P63640	.16	1.01	.013	.004	.31	8.21	8	.17	.03	.003	.001	.002	.042	.0002	.002	.004	.003

I certify that the above results are a true and correct copy of actual results contained in records maintained by ArcelorMittal Burns Harbor and are in full compliance with the requirements of the specification cited above. This test report cannot be altered and must be transmitted intact with any subsequent third party test reports, if required.

BHPLTRPT.TIF

FARID HASSANI PER MWT.
SUPV. QUALITY ASSURANCE

AMERICAN ALLOY
PLATE # 5233530

03/26/2021 From: AMERICAN ALLOY STEEL, INC. To: INUKSHUK CONSTRUCTION LIMITED
P.O.#: 341-1001-NY S.O.#: 677328 AA PL#: 5233531
Item: 1 (1 PC) 1/2" X 96" X 480"

ArcelorMittal Burns Harbor Plate

QUALITY ASSURANCE
REPORT OF TEST AND ANAYLSES

US HWY 12 Burns Harbor, Indiana

SHIPMENT NO. 803-66404 | DATE SHIPPED 11-13-20 | CAR OR VEHICLE NO. CSS-CHGO-CSXT-UTICALMIC 007085

SOLD TO:
AMERICAN ALLOY STEEL INC
PO BOX 40469
HOUSTON TX 77240-0469

SHIP TO:
AMERICAN ALLOY STEEL INC
THEIR SIDING
650 HARBOR WAY
ROME NY 13440

NOTE	SERIAL NUMBER	PAT NO.	HEAT NUMBER	NO. PCS.	SIZE AND QUANTITY: THICKNESS	WIDTH OR DIA.	LENGTH	WEIGHT	YIELD POINT	TENSILE STRENGTH	AF FRAC. ELONG.	RED.
					INCHES	INCHES	INCHES	POUNDS	PSI	PSI	IN	% %

QUALITY STEEL MELTED & MANUFACTURED IN THE U. S. A.
PLATES - ASTM A516-17 GR 70 PVQ KLD FINE GRAIN PRAC, ASTM A516-17 GR 65 PVQ, ASTM A516-17 GR 60 PVQ, ASME SA516 GR 70 PVQ 2019 EDITION, ASME SA516 GR 65 PVQ 2019 EDITION, ASME SA516 GR 60 PVQ 2019 EDITION, CH-V SA20S5 PLT L 15/12 FTLBS AT -50F, VACUUM DEGASSED --- PLT NORMALIZED & COOLED IN STILL AIR --- IN ACCORDANCE WITH EN 10204:2004 TYPE 3.1 10204:2004 TYPE 3.1
NO WELD REPAIR WAS PERFORMED ON BELOW PLATE(S)
CO# 125377-NY GH 377-1468A
PLATES HEAT TREATED - TEST SPECIMENS ATTACHED & YIELD STRENGTH @ .5% EUL
MERCURY IN ANY FORM HAS NOT BEEN USED IN THE PRODUCTION OF THIS ORDER

S031719	813P63640	1	1/2	96	480	6534	52400	74200	8	30		
			N	1650 DEG F -	24 MIN							
(M55)MFST REF#:2												
S031720	813P63640	2	1/2	96	480	13068	53800	74400	8	27		
			N	1650 DEG F -	24 MIN							
(M55)MFST REF#:2												

Q-QUENCH TEMPERATURE T-TEMPER TEMPERATURE N-NORMALIZE TEMPERATURE

SERIAL NUMBER	PAT NO.	HEAT NUMBER	HARD BHN	BEND	THICKNESS INCHES	TYPE	SIZE	DIR	TEST TEMP °F	CHARPY IMPACT ENERGY FT LBS 1	2	3	SHEAR(%) 1	2	3	LAT. EXP MILS 1	2	3
S031719		813P63640			.500	V	FULL	L	-50	188	126	209						
S031720		813P63640			.500	V	FULL	L	-50	195	156	132						

Certified a true copy of the original, retained in our file.
AMERICAN ALLOY STEEL
J.F 12/17/2020

HEAT NUMBER	CHEMICAL ANALYSIS C	Mn	P	S	Si	Cu	Ni	Cr	Mo	V	Ti	Al	B	Cb	N	Sn	MOLLARD GRAIN SIZE
813P63640	.16	1.01	.013	.004	.31	8.21	8 .17	.03	.003	.001	.002	.042	.0002	.002	.004	.003	

I certify that the above results are a true and correct copy of actual results contained in records maintained by ArcelorMittal Burns Harbor and are in full compliance with the requirements of the specification cited above. This test report cannot be altered and must be transmitted intact with any subsequent third party test reports, if required.

BHPLTRPT.TIF

FARID HASSANI PER MWT
SUPV. QUALITY ASSURANCE

AMERICAN ALLOY
PLATE # 5233531

03/26/2021 From: AMERICAN ALLOY STEEL, INC. To: INUKSHUK CONSTRUCTION LIMITED
P.O.#: 341-1001-NY S.O.#: 677328 AA PL#: 5233523
Item: 2 (1 PC) 3/8" X 96" X 480"

ArcelorMittal Burns Harbor Plate

QUALITY ASSURANCE
REPORT OF TEST AND ANAYLSES

US HWY 12 Burns Harbor, Indiana

SHIPMENT NO. 803-66404 | DATE SHIPPED 11-13-20 | CAR OR VEHICLE NO. CSS-CHGO-CSXT-UTICALMIC 007085

SOLD TO: AMERICAN ALLOY STEEL INC
PO BOX 40469
HOUSTON TX 77240-0469

SHIP TO: AMERICAN ALLOY STEEL INC
THEIR SIDING
650 HARBOR WAY
ROME NY 13440

NOTE	SERIAL NUMBER	PAT NO.	HEAT NUMBER	NO. PCS.	SIZE AND QUANTITY: THICKNESS	WIDTH OR DIA.	LENGTH	WEIGHT	YIELD POINT	TENSILE STRENGTH	% FRAC. ELONG.	% RED.
					INCHES	INCHES	INCHES	POUNDS	PSI	PSI	IN	%

QUALITY STEEL MELTED & MANUFACTURED IN THE U. S. A.
PLATES - ASTM A516-17 GR 70 PVQ KLD FINE GRAIN PRAC, ASTM A516-17 GR 65 PVQ, ASTM A516-17 GR 60 PVQ, ASME SA516 GR 70 PVQ 2019 EDITION, ASME SA516 GR 65 PVQ 2019 EDITION, ASME SA516 GR 60 PVQ 2019 EDITION, CH-V SA2085 PLT L 15/12 FTLBS AT -50F, VACUUM DEGASSED --- PLT NORMALIZED & COOLED IN STILL AIR --- IN ACCORDANCE WITH EN 10204:2004 TYPE 3.1 10204:2004 TYPE 3.1
NO WELD REPAIR WAS PERFORMED ON BELOW PLATE(S)
CO# 125377-NY GH 377-1468
PLATES HEAT TREATED - TEST SPECIMENS ATTACHED & YIELD STRENGTH @ .5% EUL
MERCURY IN ANY FORM HAS NOT BEEN USED IN THE PRODUCTION OF THIS ORDER

S031717	812P33310	3	3/8	96	480	14703	55100	76800	8	25		
			N	1650 DEG F -	18 MIN							
(M55)MFST REF#:1												
S031718	812P33310	3	3/8	96	480	14703	53700	75500	8	29		
			N	1650 DEG F -	18 MIN							
(M55)MFST REF#:1												

Q-QUENCH TEMPERATURE T-TEMPER TEMPERATURE N-NORMALIZE TEMPERATURE

SERIAL NUMBER	PAT NO.	HEAT NUMBER	HARD BHN	BEND	THICKNESS INCHES	TYPE	SIZE	DIR	TEST TEMP °F	CHARPY IMPACT: ENERGY FT LBS 1	2	3	SHEAR(%) 1	2	3	LAT. EXP MILS 1	2	3
S031717		812P33310			.375	V	3/4	L	-50	103	103	130						
S031718		812P33310			.375	V	3/4	L	-50	99	96	132						

Certified a true copy of the original, retained in our file.
AMERICAN ALLOY STEEL
J.F 12/17/2020

HEAT NUMBER	CHEMICAL ANALYSIS: C	Mn	P	S	Si	Cu	Ni	Cr	Mo	V	Ti	Al	B	Cb	N	Sn	MCUARD GRAIN SIZE
812P33310	.16	1.05	.012	.004	.34	8.214	.17	.03	.003	.001	.002	.040	.0002		.002	.004	.002

I certify that the above results are a true and correct copy of actual results contained in records maintained by ArcelorMittal Burns Harbor and are in full compliance with the requirements of the specification cited above. This test report cannot be altered and must be transmitted intact with any subsequent third party test reports, if required.

BHPLTRPT.TIF

FARID HASSANI PER MMT
SUPV. QUALITY ASSURANCE

AMERICAN ALLOY STEEL
PLATE # 5233523

03/26/2021 From: AMERICAN ALLOY STEEL, INC. To: INUKSHUK CONSTRUCTION LIMITED
P.O.#: 341-1001-NY S.O.#: 677328 AA PL#: 5233524
Item: 2 (1 PC) 3/8" X 96" X 480"

ArcelorMittal Burns Harbor Plate

QUALITY ASSURANCE
REPORT OF TEST AND ANALYSES

US HWY 12 Burns Harbor, Indiana

SHIPMENT NO. 803-66404 | DATE SHIPPED 11-13-20 | CAR OR VEHICLE NO. CSS-CHGO-CSXT-UTICALMIC 007085

SOLD TO:
AMERICAN ALLOY STEEL INC
PO BOX 40469
HOUSTON TX 77240-0469

SHIP TO:
AMERICAN ALLOY STEEL INC
THEIR SIDING
650 HARBOR WAY
ROME NY 13440

NOTE	SERIAL NUMBER	PAT NO.	HEAT NUMBER	NO. PCS.	SIZE AND QUANTITY: THICKNESS	WIDTH OR DIA.	LENGTH	WEIGHT	YIELD POINT	TENSILE STRENGTH	% AF FRAC. ELONG.	% RED.
					INCHES	INCHES	INCHES	POUNDS	PSI	PSI	IN	% %
	QUALITY STEEL MELTED & MANUFACTURED IN THE U. S. A.											
	PLATES - ASTM A516-17 GR 70 PVQ KLD FINE GRAIN PRAC, ASTM A516-17 GR 65 PVQ, ASTM A516-17 GR 60 PVQ, ASME SA516 GR 70 PVQ 2019 EDITION, ASME SA516 GR 65 PVQ 2019 EDITION, ASME SA516 GR 60 PVQ 2019 EDITION, CH-V SA20S5 PLT L 15/12 FTLBS AT -50F, VACUUM DEGASSED --- PLT NORMALIZED & COOLED IN STILL AIR --- IN ACCORDANCE WITH EN 10204:2004 TYPE 3.1 10204:2004 TYPE 3.1											
	NO WELD REPAIR WAS PERFORMED ON BELOW PLATE(S)											
	CO# 125377-NY GH 377-1468											
	PLATES HEAT TREATED - TEST SPECIMENS ATTACHED & YIELD STRENGTH @ .5% EUL											
	MERCURY IN ANY FORM HAS NOT BEEN USED IN THE PRODUCTION OF THIS ORDER.											
	S031717	812P33310	3	3/8	96	480		14703	55100	76800	8	25
				N 1650 DEG F - 18 MIN								
	(M55)MFST REF#:1											
→	S031718	812P33310	3	3/8	96	480		14703	53700	75500	8	29
				N 1650 DEG F - 18 MIN								
	(M55)MFST REF#:1											

Q-QUENCH TEMPERATURE T-TEMPER TEMPERATURE N-NORMALIZE TEMPERATURE

SERIAL NUMBER	PAT NO.	HEAT NUMBER	HARD BHN	BEND	THICKNESS INCHES	TYPE	SIZE	DIR	TEST TEMP °F	CHARPY IMPACT ENERGY FT LBS 1	2	3	SHEAR(%) 1	2	3	LAT. EXP MILS 1	2	3
S031717		812P33310			.375	V	3/4	L	-50	103	105	130						
S031718		812P33310			.375	V	3/4	L	-50	99	96	132						

Certified a true copy of the original, retained in our file.
AMERICAN ALLOY STEEL
J.F 12/17/2020

HEAT NUMBER	CHEMICAL ANALYSIS C	Mn	P	S	Si	Cu	Ni	Cr	Mo	V	Ti	Al	B	Cb	N	Sn	MOLAID GRAIN SIZE
812P33310	.16	1.05	.012	.004	.348	.214	.17	.03	.003	.001	.002	.040	.0002		.002	.004	.002

I certify that the above results are a true and correct copy of actual results contained in records maintained by ArcelorMittal Burns Harbor and are in full compliance with the requirements of the specification cited above. This test report cannot be altered and must be transmitted intact with any subsequent third party test reports, if required.

BHPLTRPT.TIF

FARID HASSANI PER MWT
SUPV. QUALITY ASSURANCE

AMERICAN ALLOY PLATE # 5233524

03/26/2021 From: AMERICAN ALLOY STEEL, INC. To: INUKSHUK CONSTRUCTION LIMITED
P.O.#: 341-1001-NY S.O.#: 677328 AA PL#: 5233526
Item: 2 (1 PC) 3/8" X 96" X 480"

ArcelorMittal Burns Harbor Plate

QUALITY ASSURANCE
REPORT OF TEST AND ANAYLSES

US HWY 12 Burns Harbor, Indiana

SHIPMENT NO. 803-66404 | DATE SHIPPED 11-13-20 | CAR OR VEHICLE NO. CSS-CHGO-CSXT-UTICALMIC 007085

SOLD TO: AMERICAN ALLOY STEEL INC
PO BOX 40469
HOUSTON TX 77240-0469

SHIP TO: AMERICAN ALLOY STEEL INC
THEIR SIDING
650 HARBOR WAY
ROME NY 13440

NOTE	SERIAL NUMBER	PAT NO.	HEAT NUMBER	NO. PCS.	SIZE AND QUANTITY: THICKNESS	WIDTH OR DIA.	LENGTH	WEIGHT	YIELD POINT	TENSILE STRENGTH	AF FRAC. ELONG.	RED.
					INCHES	INCHES	INCHES	POUNDS	PSI	PSI	IN	% %

QUALITY STEEL MELTED & MANUFACTURED IN THE U. S. A.
PLATES - ASTM A516-17 GR 70 PVQ KLD FINE GRAIN PRAC, ASTM A516-17 GR 65 PVQ, ASTM A516-17 GR 60 PVQ, ASME SA516 GR 70 PVQ 2019 EDITION, ASME SA516 GR 65 PVQ 2019 EDITION, ASME SA516 GR 60 PVQ 2019 EDITION, CH-V SA20S5 PLT L 15/12 FTLBS AT -50F, VACUUM DEGASSED --- PLT NORMALIZED & COOLED IN STILL AIR --- IN ACCORDANCE WITH EN 10204:2004 TYPE 3.1 10204:2004 TYPE 3.1
NO WELD REPAIR WAS PERFORMED ON BELOW PLATE(S)
CO# 125377-NY GH 377-1468
PLATES HEAT TREATED -- TEST SPECIMENS ATTACHED & YIELD STRENGTH @ .5% EUL
MERCURY IN ANY FORM HAS NOT BEEN USED IN THE PRODUCTION OF THIS ORDER

S031717	812P33310	3	3/8	96	480	14703	55100	76800	8	25			
			N	1650 DEG F -	18 MIN								
(M55)MFST REF#:1													
S031718	812P33310	3	3/8	96	480	14703	53700	75500	8	29			
			N	1650 DEG F -	18 MIN								
(M55)MFST REF#:1													

Q-QUENCH TEMPERATURE T-TEMPER TEMPERATURE N-NORMALIZE TEMPERATURE

SERIAL NUMBER	PAT NO.	HEAT NUMBER	HARD BHN	BEND	THICKNESS INCHES	TYPE	SIZE	DIR	TEST TEMP F	CHARPY IMPACT ENERGY FT LBS 1	2	3	SHEAR(%) 1	2	3	LAT. EXP MILS 1	2	3
S031717		812P33310			.375	V	3/4	L	-50	103	103	130						
S031718		812P33310			.375	V	3/4	L	-50	99	96	132						

Certified a true copy of the original, retained in our file.
AMERICAN ALLOY STEEL
J.F 12/17/2020

HEAT NUMBER	CHEMICAL ANALYSIS C	Mn	P	S	Si	Cu	Ni	Cr	Mo	V	Ti	Al	B	Cb	N	Sn	MO/AIM GRAIN SIZE
812P33310	.16	1.05	.012	.004	.34	8.214	.17	.03	.003	.001	.002	.040	.0002		.002	.004	.002

I certify that the above results are a true and correct copy of actual results contained in records maintained by ArcelorMittal Burns Harbor and are in full compliance with the requirements of the specification cited above. This test report cannot be altered and must be transmitted intact with any subsequent third party test reports, if required.

BHPLTRPT.TIF

FARID HASSANI PER MWT
SUPV. QUALITY ASSURANCE

AMERICAN ALLOY PLATE # 5233526

03/26/2021 From: AMERICAN ALLOY STEEL, INC. To: INUKSHUK CONSTRUCTION LIMITED
P.O.#: 341-1001-NY S.O.#: 677328 AA PL#: 5233527
Item: 2 (1 PC) 3/8" X 96" X 480"

ArcelorMittal Burns Harbor Plate

QUALITY ASSURANCE
REPORT OF TEST AND ANAYLSES

US HWY 12 Burns Harbor, Indiana

SHIPMENT NO. 803-66404 | DATE SHIPPED 11-13-20 | CAR OR VEHICLE NO. CSS-CHGO-CSXT-UTICALMIC 007085

SOLD TO: AMERICAN ALLOY STEEL INC
PO BOX 40469
HOUSTON TX 77240-0469

SHIP TO: AMERICAN ALLOY STEEL INC
THEIR SIDING
650 HARBOR WAY
ROME NY 13440

NOTE	SERIAL NUMBER	PAT NO.	HEAT NUMBER	NO. PCS.	SIZE AND QUANTITY: THICKNESS	WIDTH OR DIA.	LENGTH	WEIGHT	YIELD POINT	TENSILE STRENGTH	AF FRAC. ELONG.	RED.
					INCHES	INCHES	INCHES	POUNDS	PSI	PSI	IN	% %

QUALITY STEEL MELTED & MANUFACTURED IN THE U. S. A.
PLATES - ASTM A516-17 GR 70 PVQ KLD FINE GRAIN PRAC, ASTM A516-17 GR 65 PVQ, ASTM A516-17 GR 60 PVQ, ASME SA516 GR 70 PVQ 2019 EDITION, ASME SA516 GR 65 PVQ 2019 EDITION, ASME SA516 GR 60 PVQ 2019 EDITION, CH-V SA20S5 PLT L 15/12 FTLBS AT -50F, VACUUM DEGASSED --- PLT NORMALIZED & COOLED IN STILL AIR --- IN ACCORDANCE WITH EN 10204:2004 TYPE 3.1 10204:2004 TYPE 3.1
NO WELD REPAIR WAS PERFORMED ON BELOW PLATE(S)
CO# 125377-NY GH 377-1468
PLATES HEAT TREATED - TEST SPECIMENS ATTACHED & YIELD STRENGTH @ .5% EUL
MERCURY IN ANY FORM HAS NOT BEEN USED IN THE PRODUCTION OF THIS ORDER.

S031717	812P33310	3	3/8	96	480	14703	55100	76800	8	25		
			N 1650 DEG F - 18 MIN									
(M55)MFST REF#:1												
S031718	812P33310	3	3/8	96	480	14703	53700	75500	8	29		
			N 1650 DEG F - 18 MIN									
(M55)MFST REF#:1												

Q-QUENCH TEMPERATURE T-TEMPER TEMPERATURE N-NORMALIZE TEMPERATURE

SERIAL NUMBER	PAT NO.	HEAT NUMBER	HARD BHN	BEND	THICKNESS INCHES	TYPE	SIZE	DIR	TEST TEMP °F	CHARPY IMPACT ENERGY FT LBS 1	2	3	SHEAR(%) 1	2	3	LAT. EXP MILS 1	2	3
S031717		812P33310			.375	V	3/4	L	-50	103	103	130						
S031718		812P33310			.375	V	3/4	L	-50	99	96	132						

Certified a true copy of the original, retained in our file.
AMERICAN ALLOY STEEL
J.F 12/17/2020

HEAT NUMBER	CHEMICAL ANALYSIS C	Mn	P	S	Si	Cu	Ni	Cr	Mo	V	Ti	Al	B	Cb	N	Sn	MQUAD GRAIN SIZE
812P33310	.16	1.05	.012	.004	.348	.214	.17	.03	.003	.001	.002	.040	.0002	.002	.004	.002	

I certify that the above results are a true and correct copy of actual results contained in records maintained by ArcelorMittal Burns Harbor and are in full compliance with the requirements of the specification cited above. This test report cannot be altered and must be transmitted intact with any subsequent third party test reports, if required.

BHPLTRPT.TIF

FARID HASSANI PER MWT
SUPV. QUALITY ASSURANCE

PLATE # 5233527 MAY 2021

03/26/2021 From: AMERICAN ALLOY STEEL, INC. To: INUKSHUK CONSTRUCTION LIMITED
P.O.#: 341-1001-NY S.O.#: 677328 AA PL#: 5233528
Item: 2 (1 PC) 3/8" X 96" X 480"

ArcelorMittal Burns Harbor Plate

QUALITY ASSURANCE
REPORT OF TEST AND ANAYLSES

US HWY 12 Burns Harbor, Indiana

SHIPMENT NO.	DATE SHIPPED	CAR OR VEHICLE NO.
803-66404	11-13-20	CSS-CHGO-CSXT-UTICALMIC 007085

SOLD TO
AMERICAN ALLOY STEEL INC
PO BOX 40469
HOUSTON TX 77240-0469

SHIP TO
AMERICAN ALLOY STEEL INC
THEIR SIDING
650 HARBOR WAY
ROME NY 13440

NOTE	SERIAL NUMBER	PAT NO.	HEAT NUMBER	NO. PCS.	SIZE AND QUANTITY: THICKNESS	WIDTH OR DIA.	LENGTH	WEIGHT	YIELD POINT	TENSILE STRENGTH	AF FRAC. ELONG.	RED.
					INCHES	INCHES	INCHES	POUNDS	PSI	PSI	IN	% %

QUALITY STEEL MELTED & MANUFACTURED IN THE U. S. A.
PLATES - ASTM A516-17 GR 70 PVQ KLD FINE GRAIN PRAC, ASTM A516-17 GR 65 PVQ, ASTM A516-17 GR 60 PVQ, ASME SA516 GR 70 PVQ 2019 EDITION, ASME SA516 GR 65 PVQ 2019 EDITION, ASME SA516 GR 60 PVQ 2019 EDITION, CH-V SA20S5 PLT L 15/12 FTLBS AT -50F, VACUUM DEGASSED --- PLT NORMALIZED & COOLED IN STILL AIR --- IN ACCORDANCE WITH EN 10204:2004 TYPE 3.1 10204:2004 TYPE 3.1
NO WELD REPAIR WAS PERFORMED ON BELOW PLATE(S)
CO# 125377-NY GH 377-1468
PLATES HEAT TREATED - TEST SPECIMENS ATTACHED & YIELD STRENGTH @ .5% EUL
MERCURY IN ANY FORM HAS NOT BEEN USED IN THE PRODUCTION OF THIS ORDER

S031717	812P33310	3	3/8	96	480	14703	55100	76800	8	25		
			N	1650 DEG F -	18 MIN							
(M55)MFST REF#:1												
S031718	812P33310	3	3/8	96	480	14703	53700	75500	8	29		
			N	1650 DEG F -	18 MIN							
(M55)MFST REF#:1												

Q-QUENCH TEMPERATURE T-TEMPER TEMPERATURE N-NORMALIZE TEMPERATURE

SERIAL NUMBER	PAT NO.	HEAT NUMBER	HARD BHN	BEND	THICKNESS INCHES	TYPE	SIZE	DIR	TEST TEMP F	CHARPY IMPACT ENERGY FT LBS 1	2	3	SHEAR(%) 1	2	3	LAT. EXP MILS 1	2	3
S031717		812P33310			.375	V	3/4	L	-50	103	103	130						
S031718		812P33310			.375	V	3/4	L	-50	99	96	132						

Certified a true copy of the original, retained in our file.
AMERICAN ALLOY STEEL
J.F 12/17/2020

HEAT NUMBER	CHEMICAL ANALYSIS C	Mn	P	S	Si	Cu	Ni	Cr	Mo	V	Ti	Al	B	Cb	N	Sn	MOLVD GRAIN SIZE
812P33310	.16	1.05	.012	.004	.34	8.21	4.17	.03	.003	.001	.002	.040	.0002	.002	.004	.002	

AMERICAN ALLOY
PLATE # 5233528

I certify that the above results are a true and correct copy of actual results contained in records maintained by ArcelorMittal Burns Harbor and are in full compliance with the requirements of the specification cited above. This test report cannot be altered and must be transmitted intact with any subsequent third party test reports, if required.

FARID HASSANI PER MWT
SUPV. QUALITY ASSURANCE

BHPLTRPT.TIF

Canada Customs and Revenue Agency | Agence des douanes et du revenu Canada

Load #6

MRR #002

CANADA CUSTOMS INVOICE
FACTURE DES DOUANES CANADIENNES

Page 1 of 1 de

1. Vendor (name and address) - Vendeur (nom et adresse)

American Alloy Steel
650 Harbor Way
Rome, NY 13440
Tel: (800) 231-3502 Fax: (315) 371-9089

2. Date of direct shipment to Canada - Date d'expédition directe vers le Canada
5/7/21

3. Other references (include purchaser's order no.)
Autres références (inclure le n° de commande de l'acheteur SO#677328, PO#341-1001-NY

4. Consignee (name and address) - Destinataire (nom et adresse)

Techform-Montal
3139 Boul Des Entreprises
Terrebonne, QC J6X 4J9
Canada

CUSTOMS Seamont Brokerage
Phone 514-931-0306
Fax 514-363-5564

5. Purchaser's name and address (if other than consignee)
Nom et adresse de l'acheteur (s'il diffère du destinataire)
American Alloy Steel
650 Harbor Way
Rome, NY 13440

6. Country of transhipment - Pays de transbordement
USA

7. Country of origin of goods
Pays d'origine des marchandises
USA

IF SHIPMENT INCLUDES GOODS OF DIFFERENT ORIGINS AGAINST ITEMS IN 12. SI L'EXPEDITION COMPREND DES MARCHANDISES D'ORIGINES DIFFERENTES, PRECISEZ LEUR PROVENANCE EN 12

8. Transportation: Give mode and place of direct shipment to Canada
Transport: Precisez model et point d'expedition directe vers le Canada

9. Conditions of sale and terms of payment
(i.e. Sale, consignment shipment, leased goods, etc.)
Conditions de vente et modalitiés de palement
(p. ex. vente, expédition en consignation, location de marchandises, etc.)
SALE

10. Currency of settlement - Devises du palement
US FUNDS

11. Number of packages Nombre de colis	12. Specification of commodities (kind of packages, marks and numbers, general description and characteristics, i.e., grad,e quality) Désignation des articles (nature des colis, marques et numéros, description générale et caractéristiques, p. ex, classe, qualité)	13. Quantity (state unit) Quantité (précisez l'unité)	Selling price - Prix de vente	
			14. Unit Price Prix unitaire	15. Total
14	STEEL PLATE CARBON	EACH	2255.00	31,570.00

If any of fields 1 to 17 are included on an attached commercial invoice, check this box
Si tout renseignement relativement aux zones 1 à 17 figure sur une ou des factures commerciales ci-attachees, cochez cette case ☐
Commercial Invoice No. / N° de la facture commerciale _____

16. Total Weight - Poids Total
Ne 45,738 Gross - Brut 45,738

17. Invoice total
Total de la fac 31,570.00

19. Exporter's name and address (if other than vendor)
Nom et adresse de l'exportateur (s'il differe du vendeur)

20. Originator (name and address) - Expéditeur d'origine (nom et adresse)
American Alloy Steel
650 Harbor Way
Rome, NY 13440

21. CCRA ruling (if applicable) - Décision de l'Agence (s'il y a lieu)

22. If fields 23 to 25 are not applicable, check this box
Si les zones 23 à 25 sont sans objet, cochez cette case ☒

23. If included in field 17 indicate amount:
Si compris dans le total à la zone 17, précisez:

(i) Transportation charges, expenses and insurance from the place of direct shipment to Canada
Les frais de transport, dépenses et assurances à partir du point d'expédition directe vers le Canada

(ii) Costs for construction, erection and assembly incurred after importation into Canada
Les coûts de construction ,d'érection et d'assemblage après importation au Canada

(iii) Export packing
Le coût de l'emballage d'exportation

24. If not included in field 17 indicate amount:
Si non compris dans le total à la zone 17, précisez:

(i) Transportation charges, expenses, and insurance from the place of direct shipment to Canada
Les frais de transport, dépenses et assurances jusqu'au point d'expédition directe vers le Canada

(ii) Amounts for commissions other than buying commissions
Les commissions autres que celles versées pour l'achat

(iii) Export packing
Le coût de l'emballage d'exportation

25. Check (if applicable):
Cochez (s'il y a lieu):

(i) Royalty payments or subsequent proceeds are paid or payable by the purchaser
Des redevances ou produits ont été ou seront versés par l'acheteur ☐

(ii) The purchaser has supplied goods or services for use in the production of these goods
L'acheteur a fourni des marchandises ou des services pour la production de ces marchandises ☐

Load #6

UNITED STATES-MEXICO-CANADA AGREEMENT (USMCA)

CERTIFICATE OF ORIGIN

(Please print or type.)

1. CERTIFIER NAME AND ADDRESS:	2. EXPORTER NAME AND ADDRESS:
PATTI KEYES 650 HARBOR WAY ROME, NY 13440 DIRECT TEL: 315-371-9058 EMAIL: PATTI@AASTEEL.COM	AMERICAN ALLOY STEEL, INC. 650 HARBOR WAY ROME, NY 13440 TEL: 800-325-2479 TAX IDENTIFICATION NUMBER: 1-74-1688398-5
3. PRODUCER NAME AND ADDRESS: Mittel, Coatesville, PA TEL: N/A EMAIL:N/A TAX IDENTIFICATION NUMBER: N/A	4. IMPORTER NAME AND ADDRESS: Indukshuk Construction Limited 1869 Upper Water Street Suite AH202 Halifax, NS B3J 1S9 Canada TEL: N/A EMAIL: N/A TAX IDENTIFICATION NUMBER: N/A

5. DESCRIPTION OF GOOD(S): STEEL PLATE	6. H.S. TARIFF CLASSIFICATION NUMBER	7. PREFERENCE CRITERION	10. COUNTRY OF ORIGIN
S/O# 677328 PO# 341-1001-NY Item 5, Qty 14, ¼ X 96 X 480	7225.40/0000	B	USA

I CERTIFY THAT:

-THE GOODS DESCRIBED IN THIS DOCUMENT QUALIFY AS ORIGINATING AND THE INFORMATION CONTAINED IN THIS DOCUMENT IS TRUE AND ACCURATE. I ASSUME RESPONSIBILITY FOR PROVING SUCH REPRESENTATIONS AND AGREE TO MAINTAIN AND PRRESENT UPON REQUEST OR TO MAKE AVAILABLE DURING A VERIFICATION VISIT, DOCUMENTATION NECESSARY TO SUPPORT THIS CERTIFICATION.

-THIS CERTIFICATE CONSISTS OF ___ PAGES, INCLUDING ALL ATTACHMENTS.

1. AUTHORIZED SIGNATURE: Patti Keyes	COMPANY: AMERICAN ALLOY STEEL, INC.
NAME (PRINT OR TYPE): PATTI KEYES	TITLE: Ass't Traffic Manager
DATE: 5/7/21 TELEPHONE: 315 371-9058	FAX: 315-371-9089

AMERICAN ALLOY STEEL, INC.

6230 N. HOUSTON ROSSLYN ROAD
HOUSTON, TEXAS 77091
Phone: 713-462-8081 Fax: 713-462-8209

M.T.R. COVER SHEET
05/10/2021

Customer Name : INUKSHUK CONSTRUCTION LIMITED
Address :
City, State Zip : HALIFAX, NS B3J 1S9
Attention : M.LOSIER
Phone Number : 1-902-429-0272
Reference Number : 677328
Notes 1 : P.O. NO. 341-1001-NY

Control Number: 1093974
Queued By : Alex Garza
Page Number : 1
Total Pages : 15
Fax Number : 1-902-429-7762

THE INFORMATION YOU REQUESTED IS ATTACHED.
THANK YOU FOR YOUR BUSINESS !

AASI PLATE NUMBER	HEAT # / SLAB #	MILL
5234102	812P32400 S650601	ARCELORMITTAL
5234105	812P34690 S650613	ARCELORMITTAL
5238543	811S10670 T650947	CLIFFS
5238544	811S10670 T650947	CLIFFS
5238545	821S10640 T650946	CLIFFS
5238546	821S10640 T650946	CLIFFS
5238547	821S10640 T650942	CLIFFS
5238548	821S10640 T650942	CLIFFS
5238549	811S10640 T650941	CLIFFS
5238550	811S10640 T650940	CLIFFS
5238551	821S10630 T650933	CLEVELAND-CLIFFS
5238552	821S10630 T650933	CLEVELAND-CLIFFS
5238553	821S10630 T651262	CLIFFS
5238554	821S10630 T651262	CLIFFS

05/10/2021 From: AMERICAN ALLOY STEEL, INC. To: INUKSHUK CONSTRUCTION LIMITED
P.O.#: 341-1001-NY S.O.#: 677328 AA PL#: 5234102
Item: 5 (1 PC) 1/4" X 96" X 480"
TAG: ROOF

ArcelorMittal Burns Harbor Plate

QUALITY ASSURANCE
REPORT OF TEST AND ANAYLSES

US HWY 12 Burns Harbor, Indiana

SHIPMENT NO. 803-66729 | DATE SHIPPED 11-26-20 | CAR OR VEHICLE NO. CSS-CHGO-CSXT-UTICALMIC 007012

SOLD TO:
AMERICAN ALLOY STEEL INC
PO BOX 40469
HOUSTON TX 77240-0469

SHIP TO:
AMERICAN ALLOY STEEL INC
THEIR SIDING
650 HARBOR WAY
ROME NY 13440

NOTE	SERIAL NUMBER	PAT NO.	HEAT NUMBER	NO. PCS.	SIZE AND QUANTITY: THICKNESS INCHES	WIDTH OR DIA. INCHES	LENGTH INCHES	WEIGHT POUNDS	YIELD POINT PSI	TENSILE STRENGTH PSI	AF FRAC. ELONG. IN	RED. % %
	QUALITY STEEL MELTED & MANUFACTURED IN THE U. S. A.											
	PLATES - ASTM A516-17 GR 70 PVQ MOD C.20 MAX KLD FINE GRAIN PRAC, ASTM A516-17 GR 65 PVQ, ASME SA516 GR 70 PVQ 2019 EDITION, ASME SA516 GR 65 PVQ 2019 EDITION, FIRST TST AS ROLLED-ADD'L TENSION PER TST PC HEAT TREATMENT --- MILL TEST PCS NORM 1650+/-25F FOR 30MIN/IN (30 MINUTES MIN), AIRCOOL --- IN ACCORDANCE WITH EN 10204:2004 TYPE 3.1 10204:2004 TYPE 3.1										
	NO WELD REPAIR WAS PERFORMED ON BELOW PLATE(S)											
	CO# 125461-NY GH 377-1478											
	MERCURY IN ANY FORM HAS NOT BEEN USED IN THE PRODUCTION OF THIS ORDER											
→	S650601	812P32400	2 1/4	96	480		6534	66600	82100	8	23	
	(M55)MFST REF#:1							52900	72600	8	27	
	S650602	812P32400	2 1/4	96	480		6534	62700	78200	8	25	
	(M55)MFST REF#:1							54300	74700	8	29	
	S650603	812P32400	2 1/4	96	480		6534	58700	74600	8	24	
	(M55)MFST REF#:1							53200	72100	8	25	

Q-QUENCH TEMPERATURE
T-TEMPER TEMPERATURE
N-NORMALIZE TEMPERATURE

SERIAL NUMBER	PAT NO.	HEAT NUMBER	HARD BHN	BEND	THICKNESS INCHES	TYPE	SIZE	DIR	TEST TEMP °F	CHARPY IMPACT: ENERGY FT LBS 1	2	3	SHEAR(%) 1	2	3	LAT. EXP MILS 1	2	3

Certified a true copy of the original, retained in our file.
AMERICAN ALLOY STEEL, INC.
Reviewed By:
J.K 2/11/2021

HEAT NUMBER	CHEMICAL ANALYSIS: C	Mn	P	S	Si	Cu	Ni	Cr	Mo	V	Ti	Al	B	Cb	N	Bn	ACICULAR GRAIN SIZE
812P32400	.17	1.04	.007	.004	.34	5.207	.18	.02	.005	.002	.002	.040	.0002		.002	.003	.002

I certify that the above results are a true and correct copy of actual results contained in records maintained by ArcelorMittal Burns Harbor and are in full compliance with the requirements of the specification cited above. This test report cannot be altered and must be transmitted intact with any subsequent third party test reports, if required.

BHPLTRPT.RF

FARID HASSANI PER
SUPV. QUALITY ASSURANCE

MWT

AMERICAN ALLOY
PLATE # 5234102

05/10/2021 From: AMERICAN ALLOY STEEL, INC. To: INUKSHUK CONSTRUCTION LIMITED
P.O.#: 341-1001-NY S.O.#: 677328 AA PL#: 5234105
Item: 5 (1 PC) 1/4" X 96" X 480"
TAG: ROOF

ArcelorMittal Burns Harbor Plate

QUALITY ASSURANCE
REPORT OF TEST AND ANAYLSES

US HWY 12 Burns Harbor, Indiana

SHIPMENT NO. 803-66729 | DATE SHIPPED 11-26-20 | CAR OR VEHICLE NO. CSS-CHGO-CSXT-UTICALMIC 007012

SOLD TO:
AMERICAN ALLOY STEEL INC
PO BOX 40469
HOUSTON TX 77240-0469

SHIP TO:
AMERICAN ALLOY STEEL INC
THEIR SIDING
650 HARBOR WAY
ROME NY 13440

NOTE	SERIAL NUMBER	PAT NO.	HEAT NUMBER	NO. PCS.	SIZE AND QUANTITY: THICKNESS	WIDTH OR DIA.	LENGTH	WEIGHT	YIELD POINT	TENSILE STRENGTH	AF FRAC. ELONG.	RED.
					INCHES	INCHES	INCHES	POUNDS	PSI	PSI	IN	% %

QUALITY STEEL MELTED & MANUFACTURED IN THE U. S. A.
PLATES - ASTM A516-17 GR 70 PVQ MOD C.20 MAX KLD FINE GRAIN PRAC, ASTM A516-17 GR 65 PVQ, ASME SA516 GR 70 PVQ 2019 EDITION, ASME SA516 GR 65 PVQ 2019 EDITION, FIRST TST AS ROLLED-ADD'L TENSION PER TST PC HEAT TREATMENT --- MILL TEST PCS NORM 1650+/-25F FOR 30MIN/IN (30 MINUTES MIN), AIRCOOL --- IN ACCORDANCE WITH EN 10204:2004 TYPE 3.1
10204:2004 TYPE 3.1
NO WELD REPAIR WAS PERFORMED ON BELOW PLATE(S)
CO# 125461-NY GH 377-1478
MERCURY IN ANY FORM HAS NOT BEEN USED IN THE PRODUCTION OF THIS ORDER

S650611	812P34690	2	1/4	96	480		6534	66400	82100	8	24
								53300	73600	8	26
(M55)MFST REF#:1												
S650612	812P34690	2	1/4	96	480		6534	65300	81500	8	20
								52300	73500	8	26
(M55)MFST REF#:1												
S650613	812P34690	2	1/4	96	480		6534	67300	81500	8	21
								53400	73400	8	27
(M55)MFST REF#:1												

Q-QUENCH TEMPERATURE T-TEMPER TEMPERATURE N-NORMALIZE TEMPERATURE

SERIAL NUMBER	PAT NO.	HEAT NUMBER	HARD BHN	BEND	THICKNESS INCHES	TYPE	SIZE	DIR	TEST TEMP F	CHARPY IMPACT: ENERGY FT LBS 1	2	3	SHEAR(%) 1	2	3	LAT. EXP MILS 1	2	3

Certified a true copy of the original, retained in our file.
AMERICAN ALLOY STEEL, INC.
Reviewed By:
J.K. 2/11/2021

HEAT NUMBER	CHEMICAL ANALYSIS: C	Mn	P	S	Si	Cu	Ni	Cr	Mo	V	Ti	Al	B	Cb	N	Sn	MOD.ASTM GRAIN SIZE
812P34690	.17	1.04	.011	.004	.33	1.215	.17	.02	.004	.002	.002	.035	.0002	.002	.004	.001	

I certify that the above results are a true and correct copy of actual results contained in records maintained by ArcelorMittal Burns Harbor and are in full compliance with the requirements of the specification cited above. This test report cannot be altered and must be transmitted intact with any subsequent third party test reports, if required.

BHPLTRPT.TIF

FARID HASSANI PER MWT
SUPV. QUALITY ASSURANCE

AMERICAN ALLOY STEEL PLATE # 5234105

05/10/2021 From: AMERICAN ALLOY STEEL, INC. To: INUKSHUK CONSTRUCTION LIMITED
P.O.#: 341-1001-NY S.O.#: 677328 AA PL#: 5238543
Item: 5 (1 PC) 1/4" X 96" X 480"
TAG: ROOF

Cleveland-Cliffs Burns Harbor LLC

QUALITY ASSURANCE REPORT OF TEST AND ANALYSIS

US HWY 12 Burns Harbor, Indiana

SHIPMENT NO. 804-27223 | DATE SHIPPED 04-03-21 | CAR OR VEHICLE NO. CSS-CHGO-CSXT-UTICAIHB 017024

SOLD TO: AMERICAN ALLOY STEEL INC
PO BOX 40469
HOUSTON TX 77240-0469

SHIP TO: AMERICAN ALLOY STEEL INC
THEIR SIDING
650 HARBOR WAY
ROME NY 13440

NOTE	SERIAL NUMBER	PAT NO.	HEAT NUMBER	NO. PCS.	SIZE AND QUANTITY: THICKNESS	WIDTH OR DIA.	LENGTH	WEIGHT	YIELD POINT	TENSILE STRENGTH	AF FRAC ELONG.	RED.
					INCHES	INCHES	INCHES	POUNDS	PSI	PSI	IN	% %

QUALITY STEEL MELTED & MANUFACTURED IN THE U. S. A.
PLATES - ASTM A516-17 GR 70 PVQ MOD C.20 MAX KLD FINE GRAIN PRAC, ASTM A516-17 GR 65 PVQ, ASME SA516 GR 70 PVQ 2019 EDITION, ASME SA516 GR 65 PVQ 2019 EDITION, FIRST TST AS ROLLED-ADD'L TENSION PER TST PC
HEAT TREATMENT --- MILL TEST PCS NORM 1650+/-25F FOR 30MIN/IN (30 MINUTES MIN), AIRCOOL --- IN ACCORDANCE WITH EN 10204:2004 TYPE 3.1
10204:2004 TYPE 3.1
NO WELD REPAIR WAS PERFORMED ON BELOW PLATE(S)
CO# 126304-NY GH 377-1665
MERCURY IN ANY FORM HAS NOT BEEN USED IN THE PRODUCTION OF THIS ORDER

T650941	811S10640	1	1/4	96	480	3267	56900	77200	8	25
							53900	74600	8	26
(M55)MFST REF#:1										
T650947 →	811S10670	2	1/4	96	480	6534	58000	78700	8	25
							52700	73600	8	25
(M55)MFST REF#:1										
T650942	821S10640	2	1/4	96	480	6534	56200	77600	8	25
							54100	74300	8	25
(M55)MFST REF#:1										

Q-QUENCH TEMPERATURE T-TEMPER TEMPERATURE N-NORMALIZE TEMPERATURE

SERIAL NUMBER	PAT NO.	HEAT NUMBER	HARD BHN	BEND	THICKNESS	TYPE	SIZE	DIR	TEST TEMP	CHARPY IMPACT ENERGY FT LBS			SHEAR(%)			LAT. EXP MILS		
					INCHES				F	1	2	3	1	2	3	1	2	3

Certified a true copy of the original, retained in our file.
AMERICAN ALLOY STEEL
VB 5/10/21

HEAT NUMBER	CHEMICAL ANALYSIS C	Mn	P	S	Si	Cu	Ni	Cr	Mo	V	Ti	Al	B	Cb	N	Sn	MOUAID GRAIN SIZE
811S10640	.17	1.01	.009	.005	.342	.216	.17	.02	.003	.001	.002	.025	.0002		.002	.004	.006
811S10670	.17	1.02	.011	.003	.328	.216	.17	.03	.006	.002	.002	.032	.0002		.002	.004	.013
821S10640	.17	1.01	.009	.005	.342	.216	.17	.02	.003	.001	.002	.025	.0002		.002	.004	.006

I certify that the above results are a true and correct copy of actual results contained in records maintained by Cleveland-Cliffs Burns Harbor LLC and are in full compliance with the requirements of the specification cited above. This test report cannot be altered and must be transmitted intact with any subsequent third party test reports, if required.

SUPV. QUALITY ASSURANCE
Form BHPLTRPT.TIF

FARID HASSANI PER MWT

AMERICAN ALLOY STEEL
PLATE # 5238543

05/10/2021 From: AMERICAN ALLOY STEEL, INC. To: INUKSHUK CONSTRUCTION LIMITED
P.O.#: 341-1001-NY S.O.#: 677328 AA PL#: 5238544
Item: 5 (1 PC) 1/4" X 96" X 480"
TAG: ROOF

Cleveland-Cliffs Burns Harbor LLC

QUALITY ASSURANCE REPORT OF TEST AND ANALYSIS

US HWY 12 Burns Harbor, Indiana

SHIPMENT NO. 804-27223 | DATE SHIPPED 04-03-21 | CAR OR VEHICLE NO. CSS-CHGO-CSXT-UTICAIHB 017024

SOLD TO: AMERICAN ALLOY STEEL INC
PO BOX 40469
HOUSTON TX 77240-0469

SHIP TO: AMERICAN ALLOY STEEL INC
THEIR SIDING
650 HARBOR WAY
ROME NY 13440

NOTE	SERIAL NUMBER	PAT NO.	HEAT NUMBER	NO. PCS.	SIZE AND QUANTITY THICKNESS	WIDTH OR DIA.	LENGTH	WEIGHT	YIELD POINT	TENSILE STRENGTH	AF FRAC ELONG.	RED.
					INCHES	INCHES	INCHES	POUNDS	PSI	PSI	IN	% %

QUALITY STEEL MELTED & MANUFACTURED IN THE U. S. A.
PLATES - ASTM A516-17 GR 70 PVQ MOD C.20 MAX KLD FINE GRAIN PRAC, ASTM A516-17 GR 65 PVQ, ASME SA516 GR 70 PVQ 2019 EDITION, ASME SA516 GR 65 PVQ 2019 EDITION, FIRST TST AS ROLLED-ADD'L TENSION PER TST PC
HEAT TREATMENT --- MILL TEST PCS NORM 1650+/-25F FOR 30MIN/IN (30 MINUTES MIN), AIRCOOL --- IN ACCORDANCE WITH EN 10204:2004 TYPE 3.1
10204:2004 TYPE 3.1
NO WELD REPAIR WAS PERFORMED ON BELOW PLATE(S)
CO# 126304-NY GH 377-1665
MERCURY IN ANY FORM HAS NOT BEEN USED IN THE PRODUCTION OF THIS ORDER

T650941	811S10640	1	1/4	96	480	3267	56900	77200	8	25
(M55)MFST REF#:1							53900	74600	8	26
T650947 →	811S10670	2	1/4	96	480	6534	58000	78700	8	25
(M55)MFST REF#:1							52700	73600	8	25
T650942	821S10640	2	1/4	96	480	6534	56200	77600	8	25
(M55)MFST REF#:1							54100	74300	8	25

Q-QUENCH TEMPERATURE T-TEMPER TEMPERATURE N-NORMALIZE TEMPERATURE

SERIAL NUMBER	PAT NO.	HEAT NUMBER	HARD BHN	BEND	THICKNESS INCHES	TYPE	SIZE	D I R	TEST TEMP F	CHARPY IMPACT ENERGY FT LBS 1	2	3	SHEAR(%) 1	2	3	LAT. EXP MILS 1	2	3

Certified a true copy of the original, retained in our file.
AMERICAN ALLOY STEEL.
VB 5/10/21

HEAT NUMBER	CHEMICAL ANALYSIS C	Mn	P	S	Si	Cu	Ni	Cr	Mo	V	Ti	Al	B	Cb	N	Sn	MOD AIM GRAIN SIZE
811S10640	.17	1.01	.009	.005	.34	2.21	6	.17	.02	.003	.001	.002	.025	.0002		.002	.004.006
811S10670	.17	1.02	.011	.003	.32	8.21	6	.17	.03	.006	.002	.002	.032	.0002		.002	.004.013
821S10640	.17	1.01	.009	.005	.34	2.21	6	.17	.02	.003	.001	.002	.025	.0002		.002	.004.006

I certify that the above results are a true and correct copy of actual results contained in records maintained by Cleveland-Cliffs Burns Harbor LLC and are in full compliance with the requirements of the specification cited above. This test report cannot be altered and must be transmitted intact with any subsequent third party test reports, if required.

SUPV. QUALITY ASSURANCE
Form BHPLTRPT.TIF

FARID HASSANI PER MWT

AMERICAN ALLOY
PLATE # 5238544

05/10/2021 From: AMERICAN ALLOY STEEL, INC. To: INUKSHUK CONSTRUCTION LIMITED
P.O.#: 341-1001-NY S.O.#: 677328 AA PL#: 5238545
Item: 5 (1 PC) 1/4" X 96" X 480"
TAG: ROOF

Cleveland-Cliffs Burns Harbor LLC

QUALITY ASSURANCE REPORT OF TEST AND ANALYSIS

US HWY 12 Burns Harbor, Indiana

SHIPMENT NO. 804-27223 | DATE SHIPPED 04-03-21 | CAR OR VEHICLE NO. CSS-CHGO-CSXT-UTICAIHB 017024

SOLD TO: AMERICAN ALLOY STEEL INC
PO BOX 40469
HOUSTON TX 77240-0469

SHIP TO: AMERICAN ALLOY STEEL INC
THEIR SIDING
650 HARBOR WAY
ROME NY 13440

NOTE	SERIAL NUMBER	PAT NO.	HEAT NUMBER	NO. PCS.	SIZE AND QUANTITY: THICKNESS	WIDTH OR DIA.	LENGTH	WEIGHT	YIELD POINT	TENSILE STRENGTH	AF FRAC. ELONG.	RED.
					INCHES	INCHES	INCHES	POUNDS	PSI	PSI	IN	% %

QUALITY STEEL MELTED & MANUFACTURED IN THE U. S. A.
PLATES - ASTM A516-17 GR 70 PVQ MOD C.20 MAX KLD FINE GRAIN PRAC, ASTM A516-17 GR 65 PVQ, ASME SA516 GR 70 PVQ 2019 EDITION, ASME SA516 GR 65 PVQ 2019 EDITION, FIRST TST AS ROLLED-ADD'L TENSION PER TST PC HEAT TREATMENT --- MILL TEST PCS NORM 1650+/-25F FOR 30MIN/IN (30 MINUTES MIN), AIRCOOL --- IN ACCORDANCE WITH EN 10204:2004 TYPE 3.1
10204:2004 TYPE 3.1
NO WELD REPAIR WAS PERFORMED ON BELOW PLATE(S)
CO# 126304-NY GH 377-1665
MERCURY IN ANY FORM HAS NOT BEEN USED IN THE PRODUCTION OF THIS ORDER

T650946	821810640	2	1/4	96	480	6534	56100	76400	8	26		
							55200	74500	8	27		

(M55)MFST REF#:1

Q-QUENCH TEMPERATURE T-TEMPER TEMPERATURE N-NORMALIZE TEMPERATURE

SERIAL NUMBER	PAT NO.	HEAT NUMBER	HARD BHN	BEND	THICKNESS	TYPE	SIZE	DIR	TEST TEMP	CHARPY IMPACT ENERGY FT LBS			SHEAR(%)			LAT. EXP MILS		
					INCHES				F	1	2	3	1	2	3	1	2	3

Certified a true copy of the original, retained in our file.
AMERICAN ALLOY STEEL
VB 5/10/21

HEAT NUMBER	CHEMICAL ANALYSIS C	Mn	P	S	Si	Cu	Ni	Cr	Mo	V	Ti	Al	B	Cb	N	Sn	MOLIAID GRAIN SIZE
821810640	.17	1.01	.009	.005	.34	2.16	.17	.02	.003	.001	.002	.025	.0002		.002	.004	.006

I certify that the above results are a true and correct copy of actual results contained in records maintained by Cleveland-Cliffs Burns Harbor LLC and are in full compliance with the requirements of the specification cited above. This test report cannot be altered and must be transmitted intact with any subsequent third party test reports, if required.

SUPV. QUALITY ASSURANCE
Form BHPLTRPT.TIF

FARID HASSANI PER MWT

AMERICAN ALLOY PLATE # 5238545

05/10/2021 From: AMERICAN ALLOY STEEL, INC. To: INUKSHUK CONSTRUCTION LIMITED
P.O.#: 341-1001-NY S.O.#: 677328 AA PL#: 5238546
Item: 5 (1 PC) 1/4" X 96" X 480"
TAG: ROOF

Cleveland-Cliffs Burns Harbor LLC

QUALITY ASSURANCE REPORT OF TEST AND ANALYSIS — US HWY 12 Burns Harbor, Indiana

SHIPMENT NO. 804-27223 | DATE SHIPPED 04-03-21 | CAR OR VEHICLE NO. CSS-CHGO-CSXT-UTICAIHB 017024

SOLD TO / NOTE:
AMERICAN ALLOY STEEL INC
PO BOX 40469
HOUSTON TX 77240-0469

SHIP TO:
AMERICAN ALLOY STEEL INC
THEIR SIDING
650 HARBOR WAY
ROME NY 13440

SERIAL NUMBER	PAT NO.	HEAT NUMBER	NO. PCS.	SIZE AND QUANTITY: THICKNESS	WIDTH OR DIA.	LENGTH	WEIGHT	YIELD POINT	TENSILE STRENGTH	AF FRAC. ELONG.	RED.
				INCHES	INCHES	INCHES	POUNDS	PSI	PSI	IN	% %

QUALITY STEEL MELTED & MANUFACTURED IN THE U. S. A.
PLATES - ASTM A516-17 GR 70 PVQ MOD C.20 MAX KLD FINE GRAIN PRAC, ASTM A516-17 GR 65 PVQ, ASME SA516 GR 70 PVQ 2019 EDITION, ASME SA516 GR 65 PVQ 2019 EDITION, FIRST TST AS ROLLED-ADD'L TENSION PER TST PC HEAT TREATMENT --- MILL TEST PCS NORM 1650+/-25F FOR 30MIN/IN (30 MINUTES MIN), AIRCOOL --- IN ACCORDANCE WITH EN 10204:2004 TYPE 3.1 10204:2004 TYPE 3.1
NO WELD REPAIR WAS PERFORMED ON BELOW PLATE(S)
CO# 126304-NY GH 377-1665
MERCURY IN ANY FORM HAS NOT BEEN USED IN THE PRODUCTION OF THIS ORDER

T650946	821810640	2	1/4	96	480	6534	56100	76400	8	26
							55200	74500	8	27

(N55)MFST REF#:1

Q-QUENCH TEMPERATURE T-TEMPER TEMPERATURE N-NORMALIZE TEMPERATURE

SERIAL NUMBER	PAT NO.	HEAT NUMBER	HARD BHN	BEND	THICKNESS	TYPE	SIZE	D I R	TEST TEMP	CHARPY IMPACT: ENERGY FT LBS			SHEAR(%)			LAT. EXP MILS		
					INCHES				F	1	2	3	1	2	3	1	2	3

Certified a true copy of the original, retained in our file.
AMERICAN ALLOY STEEL
VB 5/10/21

HEAT NUMBER	CHEMICAL ANALYSIS: C	Mn	P	S	Si	Cu	Ni	Cr	Mo	V	Ti	Al	B	Cb	N	Sn	MO/AID GRAIN SIZE
821810640	.17	1.01	.009	.005	.34	2.21	6	.17	.02	.003	.001	.002	.025	.0002		.002	.004.006

I certify that the above results are a true and correct copy of actual results contained in records maintained by Cleveland-Cliffs Burns Harbor LLC and are in full compliance with the requirements of the specification cited above. This test report cannot be altered and must be transmitted intact with any subsequent third party test reports, if required.

SUPV. QUALITY ASSURANCE
Form BHPLTRPT.TIF

FARID HASSANI PER MNT

AMERICAN ALLOY PLATE #: 5238546

05/10/2021 From: AMERICAN ALLOY STEEL, INC. To: INUKSHUK CONSTRUCTION LIMITED
P.O.#: 341-1001-NY S.O.#: 677328 AA PL#: 5238547
Item: 5 (1 PC) 1/4" X 96" X 480"
TAG: ROOF

Cleveland-Cliffs Burns Harbor LLC

QUALITY ASSURANCE REPORT OF TEST AND ANALYSIS — US HWY 12 Burns Harbor, Indiana

SHIPMENT NO. 804-27223 | DATE SHIPPED 04-03-21 | CAR OR VEHICLE NO. CSS-CHGO-CSXT-UTICAIHB 017024

SOLD TO: AMERICAN ALLOY STEEL INC
PO BOX 40469
HOUSTON TX 77240-0469

SHIP TO: AMERICAN ALLOY STEEL INC
THEIR SIDING
650 HARBOR WAY
ROME NY 13440

NOTE	SERIAL NUMBER	PAT NO.	HEAT NUMBER	NO. PCS.	SIZE AND QUANTITY THICKNESS	WIDTH OR DIA.	LENGTH	WEIGHT	YIELD POINT	TENSILE STRENGTH	AF FRAC ELONG.	RED.
					INCHES	INCHES	INCHES	POUNDS	PSI	PSI	IN	% %

QUALITY STEEL MELTED & MANUFACTURED IN THE U. S. A.
PLATES - ASTM A516-17 GR 70 PVQ MOD C.20 MAX KLD FINE GRAIN PRAC, ASTM A516-17 GR 65 PVQ, ASME SA516 GR 70 PVQ 2019 EDITION, ASME SA516 GR 65 PVQ 2019 EDITION, FIRST TST AS ROLLED-ADD'L TENSION PER TST PC HEAT TREATMENT --- MILL TEST PCS NORM 1650+/-25F FOR 30MIN/IN (30 MINUTES MIN), AIRCOOL --- IN ACCORDANCE WITH EN 10204:2004 TYPE 3.1
10204:2004 TYPE 3.1
NO WELD REPAIR WAS PERFORMED ON BELOW PLATE(S)
CO# 126304-NY GH 377-1665
MERCURY IN ANY FORM HAS NOT BEEN USED IN THE PRODUCTION OF THIS ORDER

T650941	811S10640	1	1/4	96	480	3267	56900	77200	8	25
(M55)MFST REF#:1							53900	74600	8	26
T650947	811S10670	2	1/4	96	480	6534	58000	78700	8	25
(M55)MFST REF#:1							52700	73600	8	25
T650942 →	821S10640	2	1/4	96	480	6534	56200	77600	8	25
(M55)MFST REF#:1							54100	74300	8	25

Q-QUENCH TEMPERATURE T-TEMPER TEMPERATURE N-NORMALIZE TEMPERATURE

SERIAL NUMBER	PAT NO.	HEAT NUMBER	HARD BHN	BEND	THICKNESS INCHES	TYPE	SIZE	DIR	TEST TEMP F	CHARPY IMPACT ENERGY FT LBS 1	2	3	SHEAR(S) 1	2	3	LAT. EXP MILS 1	2	3

Certified a true copy of the original, retained in our file.
AMERICAN ALLOY STEEL
VB 5/10/21

HEAT NUMBER	CHEMICAL ANALYSIS C	Mn	P	S	Si	Cu	Ni	Cr	Mo	V	Ti	Al	B	Cb	N	Sn	MO/AIM GRAIN SIZE
811S10640	.17	1.01	.009	.005	.342	.216	.17	.02	.003	.001	.002	.025	.0002		.002	.004	.006
811S10670	.17	1.02	.011	.003	.328	.216	.17	.03	.006	.002	.002	.032	.0002		.002	.004	.013
821S10640	.17	1.01	.009	.005	.342	.216	.17	.02	.003	.001	.002	.025	.0002		.002	.004	.006

I certify that the above results are a true and correct copy of actual results contained in records maintained by Cleveland-Cliffs Burns Harbor LLC and are in full compliance with the requirements of the specification cited above. This test report cannot be altered and must be transmitted intact with any subsequent third party test reports, if required.

SUPV. QUALITY ASSURANCE
Form BHPLTRPT.TIF

FARID HASSANI PER MWT

AMERICAN ALLOY
PLATE # 5238547

05/10/2021 From: AMERICAN ALLOY STEEL, INC. To: INUKSHUK CONSTRUCTION LIMITED
P.O.#: 341-1001-NY S.O.#: 677328 AA PL#: 5238548
Item: 5 (1 PC) 1/4" X 96" X 480"
TAG: ROOF

Cleveland-Cliffs Burns Harbor LLC

QUALITY ASSURANCE REPORT OF TEST AND ANALYSIS

US HWY 12 Burns Harbor, Indiana

SHIPMENT NO. 804-27223 | DATE SHIPPED 04-03-21 | CAR OR VEHICLE NO. CSS-CHGO-CSXT-UTICAIHB 017024

SOLD TO: AMERICAN ALLOY STEEL INC
PO BOX 40469
HOUSTON TX 77240-0469

SHIP TO: AMERICAN ALLOY STEEL INC
THEIR SIDING
650 HARBOR WAY
ROME NY 13440

NOTE	SERIAL NUMBER	PAT NO.	HEAT NUMBER	NO. PCS.	SIZE AND QUANTITY THICKNESS	WIDTH OR DIA.	LENGTH	WEIGHT	YIELD POINT	TENSILE STRENGTH	AF FRAC ELONG.	RED.
					INCHES	INCHES	INCHES	POUNDS	PSI	PSI	IN	% %

QUALITY STEEL, MELTED & MANUFACTURED IN THE U. S. A.
PLATES - ASTM A516-17 GR 70 PVQ MOD C.20 MAX KLD FINE GRAIN PRAC, ASTM A516-17 GR 65 PVQ, ASME SA516 GR 70 PVQ 2019 EDITION, ASME SA516 GR 65 PVQ 2019 EDITION, FIRST TST AS ROLLED-ADD'L TENSION PER TST PC HEAT TREATMENT --- MILL TEST PCS NORM 1650+/-25F FOR 30MIN/IN (30 MINUTES MIN), AIRCOOL --- IN ACCORDANCE WITH EN 10204:2004 TYPE 3.1 10204:2004 TYPE 3.1
NO WELD REPAIR WAS PERFORMED ON BELOW PLATE(S)
CO# 126304-NY GH 377-1665
MERCURY IN ANY FORM HAS NOT BEEN USED IN THE PRODUCTION OF THIS ORDER

T650941	811S10640	1	1/4	96	480	3267	56900	77200	8	25
							53900	74600	8	26
(M55)MFST REF#:1										
T650947	811S10670	2	1/4	96	480	6534	58000	78700	8	25
							52700	73600	8	25
(M55)MFST REF#:1										
T650942 →	821S10640	2	1/4	96	480	6534	56200	77600	8	25
							54100	74300	8	25
(M55)MFST REF#:1										

Q-QUENCH TEMPERATURE T-TEMPER TEMPERATURE N-NORMALIZE TEMPERATURE

SERIAL NUMBER	PAT NO.	HEAT NUMBER	HARD BHN	BEND	THICKNESS INCHES	TYPE	SIZE	DIR	TEST TEMP F	CHARPY IMPACT ENERGY FT LBS 1	2	3	SHEAR(%) 1	2	3	LAT. EXP MILS 1	2	3

Certified a true copy of the original, retained in our file.
AMERICAN ALLOY STEEL.
VB 5/10/21

HEAT NUMBER	CHEMICAL ANALYSIS C	Mn	P	S	Si	Cu	Ni	Cr	Mo	V	Ti	Al	B	Cb	N	Sn	MQUAID GRAIN SIZE
811S10640	.17	1.01	.009	.005	.342	.216	.17	.02	.003	.001	.002	.025	.0002		.002	.004	.006
811S10670	.17	1.02	.011	.003	.328	.216	.17	.03	.006	.002	.002	.032	.0002		.002	.004	.013
821S10640	.17	1.01	.009	.005	.342	.216	.17	.02	.003	.001	.002	.025	.0002		.002	.004	.006

I certify that the above results are a true and correct copy of actual results contained in records maintained by Cleveland-Cliffs Burns Harbor LLC and are in full compliance with the requirements of the specification cited above. This test report cannot be altered and must be transmitted intact with any subsequent third party test reports, if required.

SUPV. QUALITY ASSURANCE
Form BHPLTRPT.TIF

FARID HASSANI PER MWT

AMERICAN ALLOY PLATE # 523854

05/10/2021 From: AMERICAN ALLOY STEEL, INC. To: INUKSHUK CONSTRUCTION LIMITED
P.O.#: 341-1001-NY S.O.#: 677328 AA PL#: 5238549
Item: 5 (1 PC) 1/4" X 96" X 480"
TAG: ROOF

Cleveland-Cliffs Burns Harbor LLC

QUALITY ASSURANCE REPORT OF TEST AND ANALYSIS

US HWY 12 Burns Harbor, Indiana

SHIPMENT NO. 804-27223 | DATE SHIPPED 04-03-21 | CAR OR VEHICLE NO. CSS-CHGO-CSXT-UTICAIHB 017024

SOLD TO: AMERICAN ALLOY STEEL INC
PO BOX 40469
HOUSTON TX 77240-0469

SHIP TO: AMERICAN ALLOY STEEL INC
THEIR SIDING
650 HARBOR WAY
ROME NY 13440

NOTE	SERIAL NUMBER	PAT NO.	HEAT NUMBER	NO. PCS.	SIZE AND QUANTITY: THICKNESS	WIDTH OR DIA.	LENGTH	WEIGHT	YIELD POINT	TENSILE STRENGTH	AF FRAC. ELONG.	RED.
					INCHES	INCHES	INCHES	POUNDS	PSI	PSI	IN	% %

QUALITY STEEL MELTED & MANUFACTURED IN THE U. S. A.
PLATES - ASTM A516-17 GR 70 PVQ MOD C.20 MAX KLD FINE GRAIN PRAC, ASTM A516-17 GR 65 PVQ, ASME SA516 GR 70 PVQ 2019 EDITION, ASME SA516 GR 65 PVQ 2019 EDITION, FIRST TST AS ROLLED-ADD'L TENSION PER TST PC
HEAT TREATMENT --- MILL TEST PCS NORM 1650+/-25F FOR 30MIN/IN (30 MINUTES MIN), AIRCOOL --- IN ACCORDANCE WITH EN 10204:2004 TYPE 3.1
10204:2004 TYPE 3.1
NO WELD REPAIR WAS PERFORMED ON BELOW PLATE(S)
CO# 126304-NY GH 377-1665
MERCURY IN ANY FORM HAS NOT BEEN USED IN THE PRODUCTION OF THIS ORDER

T650941 →	811S10640	1	1/4	96	480	3267	56900	77200	8	25		
							53900	74600	8	26		
(M55)MFST REF#:1												
T650947	811S10670	2	1/4	96	480	6534	58000	78700	8	25		
							52700	73600	8	25		
(M55)MFST REF#:1												
T650942	821S10640	2	1/4	96	480	6534	56200	77600	8	25		
							54100	74300	8	25		
(M55)MFST REF#:1												

Q-QUENCH TEMPERATURE T-TEMPER TEMPERATURE N-NORMALIZE TEMPERATURE

SERIAL NUMBER	PAT NO.	HEAT NUMBER	HARD BHN	BEND	THICKNESS	TYPE	SIZE	D I R	TEST TEMP	CHARPY IMPACT: ENERGY FT LBS			SHEAR(%)			LAT. EXP MILS		
					INCHES				F	1	2	3	1	2	3	1	2	3

Certified a true copy of the original, retained in our file.
AMERICAN ALLOY STEEL
VB 5/10/21

HEAT NUMBER	CHEMICAL ANALYSIS: C	Mn	P	S	Si	Cu	Ni	Cr	Mo	V	Ti	Al	B	Cb	N	Sn	MQUAID GRAIN SIZE
811S10640	.17	1.01	.009	.005	.342	.216	.17	.02	.003	.001	.002	.025	.0002		.002	.004	.006
811S10670	.17	1.02	.011	.003	.328	.216	.17	.03	.006	.002	.002	.032	.0002		.002	.004	.006
821S10640	.17	1.01	.009	.005	.342	.216	.17	.02	.003	.001	.002	.025	.0002		.002	.004	.013

I certify that the above results are a true and correct copy of actual results contained in records maintained by Cleveland-Cliffs Burns Harbor LLC and are in full compliance with the requirements of the specification cited above. This test report cannot be altered and must be transmitted intact with any subsequent third party test reports, if required.

SUPV. QUALITY ASSURANCE
Form BHPLTRPT.TIF

FARID HASSANI PER MNT

AMERICAN ALLOY PLATE # 5238549

05/10/2021 From: AMERICAN ALLOY STEEL, INC. To: INUKSHUK CONSTRUCTION LIMITED
P.O.#: 341-1001-NY S.O.#: 677328 AA PL#: 5238550
Item: 5 (1 PC) 1/4" X 96" X 480"
TAG: ROOF

Cleveland-Cliffs Burns Harbor LLC

QUALITY ASSURANCE REPORT OF TEST AND ANALYSIS

US HWY 12 Burns Harbor, Indiana

SHIPMENT NO. 804-27223 | DATE SHIPPED 04-03-21 | CAR OR VEHICLE NO. CSS-CHGO-CSXT-UTICAIHB 017024

SOLD TO: AMERICAN ALLOY STEEL INC
PO BOX 40469
HOUSTON TX 77240-0469

SHIP TO: AMERICAN ALLOY STEEL INC
THEIR SIDING
650 HARBOR WAY
ROME NY 13440

NOTE	SERIAL NUMBER	PAT NO.	HEAT NUMBER	NO. PCS.	SIZE AND QUANTITY: THICKNESS	WIDTH OR DIA.	LENGTH	WEIGHT	YIELD POINT	TENSILE STRENGTH	AF FRAC. ELONG.	RED.
					INCHES	INCHES	INCHES	POUNDS	PSI	PSI	IN	% %

QUALITY STEEL MELTED & MANUFACTURED IN THE U. S. A.
PLATES - ASTM A516-17 GR 70 PVQ MOD C.20 MAX KLD FINE GRAIN PRAC, ASTM A516-17 GR 65 PVQ, ASME SA516 GR 70 PVQ 2019 EDITION, ASME SA516 GR 65 PVQ 2019 EDITION, FIRST TST AS ROLLED-ADD'L TENSION PER TST PC
HEAT TREATMENT --- MILL TEST PCS NORM 1650+/-25F FOR 30MIN/IN (30 MINUTES MIN), AIRCOOL --- IN ACCORDANCE WITH EN 10204:2004 TYPE 3.1
10204:2004 TYPE 3.1
NO WELD REPAIR WAS PERFORMED ON BELOW PLATE(S)
CO# 126304-NY GH 377-1665
MERCURY IN ANY FORM HAS NOT BEEN USED IN THE PRODUCTION OF THIS ORDER

T650938	811S10640	2	1/4	96	480	6534	56200	77400	8	24		
							54100	75500	8	26		
(M55)MFST REF#:1												
T650939	811S10640	2	1/4	96	480	6534	56600	77900	8	24		
							53600	74600	8	24		
(M55)MFST REF#:1												
T650940 →	811S10640	2	1/4	96	480	6534	56400	77000	8	24		
							54200	74900	8	25		
(M55)MFST REF#:1												

Q-QUENCH TEMPERATURE T-TEMPER TEMPERATURE N-NORMALIZE TEMPERATURE

SERIAL NUMBER	PAT NO.	HEAT NUMBER	HARD BHN	BEND	THICKNESS	TYPE	SIZE	DIR	TEST TEMP	CHARPY IMPACT: ENERGY FT LBS 1	2	3	SHEAR(%) 1	2	3	LAT. EXP MILS 1	2	3
					INCHES				F									

Certified a true copy of the original, retained in our file.
AMERICAN ALLOY STEEL.
VB 5/10/21

HEAT NUMBER	CHEMICAL ANALYSIS C	Mn	P	S	Si	Cu	Ni	Cr	Mo	V	Ti	Al	B	Cb	N	Sn	MOLYAID GRAIN SIZE
811S10640	.17	1.01	.009	.005	.34	2.21	6	.17	.02	.003	.001	.002	.025	.0002	.002	.004	.006

I certify that the above results are a true and correct copy of actual results contained in records maintained by Cleveland-Cliffs Burns Harbor LLC and are in full compliance with the requirements of the specification cited above. This test report cannot be altered and must be transmitted intact with any subsequent third party test reports, if required.

SUPV. QUALITY ASSURANCE
Form SHPLTRPT.TIF

FARID HASSANI PER MWT

AMERICAN ALLOY
PLATE # 5238550

05/10/2021 From: AMERICAN ALLOY STEEL, INC. To: INUKSHUK CONSTRUCTION LIMITED
P.O.#: 341-1001-NY S.O.#: 677328 AA PL#: 5238551
Item: 5 (1 PC) 1/4" X 96" X 480"
TAG: ROOF

Cleveland-Cliffs Burns Harbor LLC

QUALITY ASSURANCE REPORT OF TEST AND ANALYSIS

US HWY 12 Burns Harbor, Indiana

SHIPMENT NO. 803-71906 | DATE SHIPPED 04-08-21 | CAR OR VEHICLE NO. CSS-CHGO-CSXT-UTICALMIC 007081

SOLD TO: AMERICAN ALLOY STEEL INC
PO BOX 40469
HOUSTON TX 77240-0469

SHIP TO: AMERICAN ALLOY STEEL INC
THEIR SIDING
650 HARBOR WAY
ROME NY 13440

NOTE	SERIAL NUMBER	PAT NO.	HEAT NUMBER	NO. PCS.	SIZE AND QUANTITY: THICKNESS	WIDTH OR DIA.	LENGTH	WEIGHT	YIELD POINT	TENSILE STRENGTH	AF FRAC. ELONG.	RED.
					INCHES	INCHES	INCHES	POUNDS	PSI	PSI	IN	% %

QUALITY STEEL MELTED & MANUFACTURED IN THE U. S. A.
PLATES - ASTM A516-17 GR 70 PVQ MOD C.20 MAX KLD FINE GRAIN PRAC, ASTM A516-17 GR 65 PVQ, ASME SA516 GR 70 PVQ 2019 EDITION, ASME SA516 GR 65 PVQ 2019 EDITION, FIRST TST AS ROLLED-ADD'L TENSION PER TST PC HEAT TREATMENT --- NILL TEST PCS NORM 1650+/-25F FOR 30MIN/IN (30 MINUTES MIN), AIRCOOL --- IN ACCORDANCE WITH EN 10204:2004 TYPE 3.1 10204:2004 TYPE 3.1
NO WELD REPAIR WAS PERFORMED ON BELOW PLATE(S)
CO# 126304-NY GE 377-1665
MERCURY IN ANY FORM HAS NOT BEEN USED IN THE PRODUCTION OF THIS ORDER

T650933	821S10630	2	1/4	96	480	6534	56600	77300	8	24		
							53600	74800	8	26		

(M55)MFST REF#:1

Q-QUENCH TEMPERATURE T-TEMPER TEMPERATURE N-NORMALIZE TEMPERATURE

SERIAL NUMBER	PAT NO.	HEAT NUMBER	HARD BHN	BEND	THICKNESS	TYPE	SIZE	D I R	TEST TEMP	CHARPY IMPACT ENERGY FT LBS			SHEAR(%)			LAT. EXP MILS		
					INCHES				F	1	2	3	1	2	3	1	2	3

Certified a true copy of the original, retained in our file.
AMERICAN ALLOY STEEL
5/3/2021

HEAT NUMBER	CHEMICAL ANALYSIS C	Mn	P	S	Si	Cu	Ni	Cr	Mo	V	Ti	Al	B	Cb	N	Sn	MOLAID GRAIN SIZE
821S10630	.17	1.04	.012	.006	.34	4.218	.18	.03	.003	.004	.002	.038	.0002	.002	.004	.009	

I certify that the above results are a true and correct copy of actual results contained in records maintained by Cleveland-Cliffs Burns Harbor LLC and are in full compliance with the requirements of the specification cited above. This test report cannot be altered and must be transmitted intact with any subsequent third party test reports, if required.

SUPV. QUALITY ASSURANCE
Form BHPLTRPT.TIF

FARID HASSANI PER MWT

AMERICAN ALLOY PLATE # 5238551

05/10/2021 From: AMERICAN ALLOY STEEL, INC. To: INUKSHUK CONSTRUCTION LIMITED
P.O.#: 341-1001-NY S.O.#: 677328 AA PL#: 5238552
Item: 5 (1 PC) 1/4" X 96" X 480"
TAG: ROOF

Cleveland-Cliffs Burns Harbor LLC

QUALITY ASSURANCE REPORT OF TEST AND ANALYSIS

US HWY 12 Burns Harbor, Indiana

SHIPMENT NO. 803-71906 | DATE SHIPPED 04-08-21 | CAR OR VEHICLE NO. CSS-CHGO-CSXT-UTICALMIC 007081

SOLD TO: AMERICAN ALLOY STEEL INC
PO BOX 40469
HOUSTON TX 77240-0469

SHIP TO: AMERICAN ALLOY STEEL INC
THEIR SIDING
650 HARBOR WAY
ROME NY 13440

NOTE	SERIAL NUMBER	PAT NO.	HEAT NUMBER	NO. PCS.	SIZE AND QUANTITY: THICKNESS	WIDTH OR DIA.	LENGTH	WEIGHT	YIELD POINT	TENSILE STRENGTH	AF FRAC. ELONG.	RED.
					INCHES	INCHES	INCHES	POUNDS	PSI	PSI	IN	% %

QUALITY STEEL MELTED & MANUFACTURED IN THE U. S. A.
PLATES - ASTM A516-17 GR 70 PVQ MOD C.20 MAX KLD FINE GRAIN PRAC, ASTM A516-17 GR 65 PVQ, ASME SA516 GR 70 PVQ 2019 EDITION, ASME SA516 GR 65 PVQ 2019 EDITION, FIRST TST AS ROLLED-ADD'L TENSION PER TST PC
HEAT TREATMENT --- MILL TEST PCS NORM 1650+/-25F FOR 30MIN/IN (30 MINUTES MIN), AIRCOOL --- IN ACCORDANCE WITH EN 10204:2004 TYPE 3.1
10204:2004 TYPE 3.1
NO WELD REPAIR WAS PERFORMED ON BELOW PLATE(S)
CO# 126304-NY GH 377-1665
MERCURY IN ANY FORM HAS NOT BEEN USED IN THE PRODUCTION OF THIS ORDER

T650933	821S10630	2	1/4	96	480	6534	56600	77300	8	24
							53600	74800	8	26

(M55)MFST REF#:1

Q-QUENCH TEMPERATURE T-TEMPER TEMPERATURE N-NORMALIZE TEMPERATURE

SERIAL NUMBER	PAT NO.	HEAT NUMBER	HARD BHN	BEND	THICKNESS	TYPE	SIZE	DIR	TEST TEMP	CHARPY IMPACT ENERGY FT LBS			SHEAR(%)			LAT. EXP MILS		
					INCHES				F	1	2	3	1	2	3	1	2	3

Certified a true copy of the original, retained in our file.
AMERICAN ALLOY STEEL
TV Sikora

HEAT NUMBER	CHEMICAL ANALYSIS C	Mn	P	S	Si	Cu	Ni	Cr	Mo	V	Ti	Al	B	Cb	N	Sn	MAQUAID GRAIN SIZE
821S10630	.17	1.04	.012	.006	.34	4.218	.18	.03	.003	.004	.002	.038	.0002	.002	.004	.009	

I certify that the above results are a true and correct copy of actual results contained in records maintained by Cleveland-Cliffs Burns Harbor LLC and are in full compliance with the requirements of the specification cited above. This test report cannot be altered and must be transmitted intact with any subsequent third party test reports, if required.

SUPV. QUALITY ASSURANCE
Form BHPLTRPT.TIF

FARID HASSANI PER MWT

AMERICAN ALLOY
PLATE # 5238552

05/10/2021 From: AMERICAN ALLOY STEEL, INC. To: INUKSHUK CONSTRUCTION LIMITED
P.O.#: 341-1001-NY S.O.#: 677328 AA PL#: 5238553
Item: 5 (1 PC) 1/4" X 96" X 480"
TAG: ROOF

Cleveland-Cliffs Burns Harbor LLC

QUALITY ASSURANCE REPORT OF TEST AND ANALYSIS

US HWY 12 Burns Harbor, Indiana

SHIPMENT NO. 803-72321 | DATE SHIPPED 04-25-21 | CAR OR VEHICLE NO. CSS-CHGO-CSXT-UTICALMIC 200532

SOLD TO: AMERICAN ALLOY STEEL INC
PO BOX 40469
HOUSTON TX 77240-0469

SHIP TO: AMERICAN ALLOY STEEL INC
THEIR SIDING
650 HARBOR WAY
ROME NY 13440

NOTE	SERIAL NUMBER	PAT NO.	HEAT NUMBER	NO. PCS.	SIZE AND QUANTITY: THICKNESS	WIDTH OR DIA.	LENGTH	WEIGHT	YIELD POINT	TENSILE STRENGTH	AF FRAC. ELONG.	RED.
					INCHES	INCHES	INCHES	POUNDS	PSI	PSI	IN	% %

QUALITY STEEL MELTED & MANUFACTURED IN THE U. S. A.
PLATES - ASTM A516-17 GR 70 PVQ MOD C.20 MAX KLD FINE GRAIN PRAC, ASTM A516-17 GR 65 PVQ, ASME SA516 GR 70 PVQ 2019 EDITION, ASME SA516 GR 65 PVQ 2019 EDITION, FIRST TST AS ROLLED-ADD'L TENSION PER TST PC
HEAT TREATMENT --- MILL TEST PCS NORM 1650+/-25F FOR 30MIN/IN (30 MINUTES MIN), AIRCOOL --- IN ACCORDANCE WITH EN 10204:2004 TYPE 3.1
10204:2004 TYPE 3.1
NO WELD REPAIR WAS PERFORMED ON BELOW PLATE(S)
CO# 126304-NY GH 377-1665
MERCURY IN ANY FORM HAS NOT BEEN USED IN THE PRODUCTION OF THIS ORDER

T651261	821810630	2	1/4	96	480	6534	57900	78700	8	24
(M55)MFST REF#:1							56500	75800	8	25
T651262 →	821810630	2	1/4	96	480	6534	58900	79400	8	24
(M55)MFST REF#:1							55300	75900	8	27
T651044	821810660	2	1/4	96	480	6534	53800	75600	8	25
(M55)MFST REF#:1							51200	72700	8	32

Q-QUENCH TEMPERATURE T-TEMPER TEMPERATURE N-NORMALIZE TEMPERATURE

Certified a true copy of the original, retained in our file.
AMERICAN ALLOY STEEL, INC.
Reviewed By: VB 5/10/21

SERIAL NUMBER	PAT NO.	HEAT NUMBER	HARD BHN	BEND	THICKNESS	TYPE	SIZE	DIR	TEST TEMP	CHARPY IMPACT ENERGY FT LBS			SHEAR(%)			LAT. EXP MILS		
					INCHES				F	1	2	3	1	2	3	1	2	3

HEAT NUMBER	CHEMICAL ANALYSIS C	Mn	P	S	Si	Cu	Ni	Cr	Mo	V	Ti	Al	B	Cb	N	Sn	MIXUAID GRAIN SIZE
821810630	.17	1.04	.012	.006	.34	4.21	8	.18	.03	.003	.004	.002	.038	.0002	.002	.004	.009
821810660	.17	1.07	.012	.006	.34	1.23	5	.17	.04	.006	.002	.002	.037	.0002	.003	.003	.004

I certify that the above results are a true and correct copy of actual results contained in records maintained by Cleveland-Cliffs Burns Harbor LLC and are in full compliance with the requirements of the specification cited above. This test report cannot be altered and must be transmitted intact with any subsequent third party test reports, if required.

SUPV. QUALITY ASSURANCE
Form BHPLTRPT.TIF

FARID HASSANI PER MWT

AMERICAN ALLOY PLATE # 5238553

05/10/2021 From: AMERICAN ALLOY STEEL, INC. To: INUKSHUK CONSTRUCTION LIMITED
P.O.#: 341-1001-NY S.O.#: 677328 AA PL#: 5238554
Item: 5 (1 PC) 1/4" X 96" X 480"
TAG: ROOF

Cleveland-Cliffs Burns Harbor LLC

QUALITY ASSURANCE REPORT OF TEST AND ANALYSIS

US HWY 12 Burns Harbor, Indiana

SHIPMENT NO. 803-72321 | DATE SHIPPED 04-25-21 | CAR OR VEHICLE NO. CSS-CHGO-CSXT-UTICALMIC 200532

SOLD TO: AMERICAN ALLOY STEEL INC
PO BOX 40469
HOUSTON TX 77240-0469

SHIP TO: AMERICAN ALLOY STEEL INC
THEIR SIDING
650 HARBOR WAY
ROME NY 13440

NOTE	SERIAL NUMBER	PAT NO.	HEAT NUMBER	NO. PCS.	SIZE AND QUANTITY: THICKNESS	WIDTH OR DIA.	LENGTH	WEIGHT	YIELD POINT	TENSILE STRENGTH	AF FRAC ELONG.	RED.
					INCHES	INCHES	INCHES	POUNDS	PSI	PSI	IN	% %

QUALITY STEEL MELTED & MANUFACTURED IN THE U. S. A.
PLATES - ASTM A516-17 GR 70 PVQ MOD C.20 MAX KLD FINE GRAIN PRAC, ASTM A516-17 GR 65 PVQ, ASME SA516 GR 70 PVQ 2019 EDITION, ASME SA516 GR 65 PVQ 2019 EDITION, FIRST TST AS ROLLED-ADD'L TENSION PER TST PC HEAT TREATMENT --- MILL TEST PCS NORM 1650+/-25F FOR 30MIN/IN (30 MINUTES MIN), AIRCOOL --- IN ACCORDANCE WITH EN 10204:2004 TYPE 3.1
NO WELD REPAIR WAS PERFORMED ON BELOW PLATE(S)
CO# 126304-NY GH 377-1665
MERCURY IN ANY FORM HAS NOT BEEN USED IN THE PRODUCTION OF THIS ORDER

T651261		821810630	2	1/4	96	480	6534	57900	78700	8	24
								56500	75800	8	25
(M55)MFST REF#:1												
T651262 →		821810630	2	1/4	96	480	6534	58900	79400	8	24
								55300	75900	8	27
(M55)MFST REF#:1												
T651044		821810660	2	1/4	96	480	6534	53800	75600	8	25
								51200	72700	8	32
(M55)MFST REF#:1												

Q-QUENCH TEMPERATURE T-TEMPER TEMPERATURE N-NORMALIZE TEMPERATURE

Certified a true copy of the original, retained in our file.
AMERICAN ALLOY STEEL, INC.
Reviewed By: VB 5/10/21

SERIAL NUMBER	PAT NO.	HEAT NUMBER	HARD BHN	BEND	THICKNESS INCHES	TYPE	SIZE	DIR	TEST TEMP F	CHARPY IMPACT ENERGY FT LBS 1	2	3	SHEAR(%) 1	2	3.	LAT. EXP MILS 1	2	3

HEAT NUMBER	CHEMICAL ANALYSIS C	Mn	P	S	Si	Cu	Ni	Cr	Mo	V	Ti	Al	B	Cb	N	Sn	MOD/ASTM GRAIN SIZE
821810630	.17	1.04	.012	.006	.344	.218	.18	.03	.003	.004	.002	.038	.0002	.002	.004	.009	
821810660	.17	1.07	.012	.006	.341	.235	.17	.04	.006	.002	.002	.037	.0002	.003	.003	.004	

I certify that the above results are a true and correct copy of actual results contained in records maintained by Cleveland-Cliffs Burns Harbor LLC and are in full compliance with the requirements of the specification cited above. This test report cannot be altered and must be transmitted intact with any subsequent third party test reports, if required.

SUPV. QUALITY ASSURANCE
Form BHPLTRPT.TIF

FARID HASSANI PER MWT

AMERICAN ALLOY PLATE # 5238554

AMERICAN ALLOY STEEL, INC.
650 Harbor Way
ROME, NY 13440
PHONE (315) 371-9055 FAX (315) 336-3529

PACKING LIST

PACKING LIST NO 714388 S/O NO 677328 DATE: 05/07/2021

SOLD TO: 308500 PHONE: 1-902-429-0272
INUKSHUK CONSTRUCTION LIMITED
1869 UPPER WATER STREET SUITE AH202
HALIFAX, NS B3J 1S9

SHIP TO: 3
TECHFORM-MONTAL
3139 BOUL DES ENTREPRISES
TERREBONNE, QC
J6X 4J9

CUSTOMER BUYER NAME:M.LOSIER PHONE NO: 1-902-429-0272

CUST PO NUMBER	FOB POINT	--- SHIP VIA --	SHIPPING REF	TERMS	DATE REQ
341-1001-NY	DELIVERED	ITM		PPD	05/07/2021

1 SET OF MTRs IS REQUIRED WITH SHIPMENT

LN#	ITM	QTY	THKNSS	MATERIAL/ITEM DESCRIPTION	UNT WGT	EXT WGT
				ASME SA 516 GRADE 70, KILLED, FINE GRAIN, AS ROLLED		
1	5	14	1/4"	96" X 480" TAG: ROOF	3267	45738

Total Pieces on this Packing List 14

Total Weight on this Packing List 45738

Canada Customs and Revenue Agency | Agence des douanes et du revenu du Canada

Load #5

CANADA CUSTOMS INVOICE
FACTURE DES DOUANES CANADIENNES

MRR #003

Page 1 of 1 de

1. Vendor (name and address) - Vendeur (nom et adresse)

American Alloy Steel
650 Harbor Way
Rome, NY 13440
Tel: (800) 231-3502 Fax: (315) 371-9089

2. Date of direct shipment to Canada - Date d'expédition directe vers le Canada
5/3/21

3. Other references (include purchaser's order no.)
Autres références (inclure le n° de commande de l'acheteur SO#677328, PO#341-1001-NY

4. Consignee (name and address) - Destinataire (nom et adresse)

Techform-Montal
3139 Boul Des Entreprises
Terrebonne, QC J6X 4J9
Canada

CUSTOMS Seamont Brokerage
Phone 514-931-0306
Fax 514-363-5564

5. Purchaser's name and address (if other than consignee)
Nom et adresse de l'acheteur (s'il diffère du destinataire)
American Alloy Steel
650 Harbor Way
Rome, NY 13440

6. Country of transhipment - Pays de transbordement
USA

7. Country of origin of goods
Pays d'origine des marchandises
USA

IF SHIPMENT INCLUDES GOODS OF DIFFERENT ORIGINS AGAINST ITEMS IN 12. SI L'EXPEDITION COMPREND DES MARCHANDISES D'ORIGINES DIFFERENTES, PRECISEZ LEUR PROVENANCE EN 12

8. Transportation: Give mode and place of direct shipment to Canada
Transport: Precisez model et point d'expedition directe vers le Canada

9. Conditions of sale and terms of payment
(i.e. Sale, consignment shipment, leased goods, etc.)
Conditions de vente et modalitiés de palement
(p. ex. vente, expédition en consignation, location de marchandises, etc.)
SALE

10. Currency of settlement - Devises du palement
US FUNDS

11. Number of packages Nombre de colis	12. Specification of commodities (kind of packages, marks and numbers, general description and characteristics, i.e., grad,e quality) Désignation des articles (nature des colis, marques et numéros, description générale et caractéristiques, p. ex, classe, qualité)	13. Quantity (state unit) Quantité (précisez l'unité)	Selling price - Prix de vente	
			14. Unit Price Prix unitaire	15. Total
14	STEEL PLATE CARBON	EACH	2255.00	31570.00

If any of fields 1 to 17 are included on an attached commercial invoice, check this box
Si tout renseignement relativement aux zones 1 à 17 figure sur une ou des factures commerciales ci-attachees, cochez cette case ☐
Commercial Invoice No. / N° de la facture commerciale _____

16. Total Weight - Poids Total
Net 45,738
Gross - Brut 45,738

17. Invoice total
Total de la fac 31570.00

19. Exporter's name and address (if other than vendor)
Nom et adresse de l'exportateur (s'il differe du vendeur)

20. Originator (name and address) - Expéditeur d'origine (nom et adresse)
American Alloy Steel
650 Harbor Way
Rome, NY 13440

21. CCRA ruling (if applicable) - Décision de l'Agence (s'il y a lieu)

22. If fields 23 to 25 are not applicable, check this box
Si les zones 23 à 25 sont sans objet, cochez cette case ☒

23. If included in field 17 indicate amount:
Si compris dans le total à la zone 17, précisez:

(i) Transportation charges, expenses and insurance from the place of direct shipment to Canada
Les frais de transport, dépenses et assurances à partir du point d'expédition directe vers le Canada
_____

(ii) Costs for construction, erection and assembly incurred after importation into Canada
Les coûts de construction ,d'érection et d'assemblage après importation au Canada
_____

(iii) Export packing
Le coût de l'emballage d'exportation
_____

24. If not included in field 17 indicate amount:
Si non compris dans le total à la zone 17, précisez:

(i) Transportation charges, expenses, and insurance from the place of direct shipment to Canada
Les frais de transport, dépenses et assurances jusqu'au point d'expédition directe vers le Canada
_____

(ii) Amounts for commissions other than buying commissions
Les commissions autres que celles versées pour l'achat
_____

(iii) Export packing
Le coût de l'emballage d'exportation
_____

25. Check (if applicable):
Cochez (s'il y a lieu):

(i) Royalty payments or subsequent proceeds are paid or payable by the purchaser
Des redevances ou produits ont été ou seront versés par l'acheteur ☐

(ii) The purchaser has supplied goods or services for use in the production of these goods
L'acheteur a fourni des marchandises ou des services pour la production de ces marchandises ☐

UNITED STATES–MEXICO–CANADA AGREEMENT (USMCA)

CERTIFICATE OF ORIGIN

(Please print or type.)

1. CERTIFIER NAME AND ADDRESS:	2. EXPORTER NAME AND ADDRESS:
PATTI KEYES 650 HARBOR WAY ROME, NY 13440 DIRECT TEL: 315-371-9058 EMAIL: PATTI@AASTEEL.COM	AMERICAN ALLOY STEEL, INC. 650 HARBOR WAY ROME, NY 13440 TEL: 800-325-2479 TAX IDENTIFICATION NUMBER: 1-74-1688398-5
3. PRODUCER NAME AND ADDRESS: Mittell, Coatesville, PA TEL: N/A EMAIL: N/A TAX IDENTIFICATION NUMBER: N/A	4. IMPORTER NAME AND ADDRESS: Indukshuk Construction Limited 1869 Upper Water Street Suite AH202 Halifax, NS B3J 1S9 Canada TEL: N/A EMAIL: N/A TAX IDENTIFICATION NUMBER: N/A

5. DESCRIPTION OF GOOD(S): STEEL PLATE	6. H.S. TARIFF CLASSIFICATION NUMBER	7. PREFERENCE CRITERION	10. COUNTRY OF ORIGIN
S/O# 677328 PO# 341-1101-NY Item 5. Qty 14, ¼ X 96 X 480	7225.40/0000	B	USA

I CERTIFY THAT:

-THE GOODS DESCRIBED IN THIS DOCUMENT QUALIFY AS ORIGINATING AND THE INFORMATION CONTAINED IN THIS DOCUMENT IS TRUE AND ACCURATE. I ASSUME RESPONSIBILITY FOR PROVING SUCH REPRESENTATIONS AND AGREE TO MAINTAIN AND PRRESENT UPON REQUEST OR TO MAKE AVAILABLE DURING A VERIFICATION VISIT, DOCUMENTATION NECESSARY TO SUPPORT THIS CERTIFICATION.

-THIS CERTIFICATE CONSISTS OF ____ PAGES, INCLUDING ALL ATTACHMENTS.

11. AUTHORIZED SIGNATURE: Patti Keyes	COMPANY: AMERICAN ALLOY STEEL, INC.
NAME (PRINT OR TYPE): PATTI KEYES	TITLE: Ass't Traffic Manager
DATE: 5/3/21 TELEPHONE: 315 371-9058	FAX: 315-371-9089

AMERICAN ALLOY STEEL, INC.
6230 N. HOUSTON ROSSLYN ROAD
HOUSTON, TEXAS 77091
Phone: 713-462-8081 Fax: 713-462-8209

M.T.R. COVER SHEET
05/03/2021

Customer Name : INUKSHUK CONSTRUCTION LIMITED
Address :
City, State Zip : HALIFAX, NS B3J 1S9
Attention : M.LOSIER
Phone Number : 1-902-429-0272
Reference Number : 677328
Notes 1 : P.O. NO. 341-1001-NY

Control Number: 1093343
Queued By : Alex Garza
Page Number : 1
Total Pages : 15
Fax Number : 1-902-429-7762

THE INFORMATION YOU REQUESTED IS ATTACHED.
THANK YOU FOR YOUR BUSINESS !

AASI PLATE NUMBER	HEAT # / SLAB #	MILL
5238529	811S10640 T650940	CLEVELAND-CLIFFS
5238530	811S10640 T650939	CLEVELAND-CLIFFS
5238531	811S10640 T650939	CLEVELAND-CLIFFS
5238532	811S10640 T650938	CLEVELAND-CLIFFS
5238533	811S10640 T650938	CLEVELAND-CLIFFS
5238534	811S10640 T650937	CLEVELAND-CLIFFS
5238535	811S10640 T650936	CLEVELAND-CLIFFS
5238536	811S10640 T650935	CLEVELAND-CLIFFS
5238537	811S10640 T650935	CLEVELAND-CLIFFS
5238538	821S10640 T650945	CLEVELAND-CLIFFS
5238539	821S10640 T650945	CLEVELAND-CLIFFS
5238540	821S10640 T650944	CLEVELAND-CLIFFS
5238541	821S10640 T650943	CLEVELAND-CLIFFS
5238542	821S10640 T650943	CLEVELAND-CLIFFS

05/03/2021 From: AMERICAN ALLOY STEEL, INC. To: INUKSHUK CONSTRUCTION LIMITED
P.O.#: 341-1001-NY S.O.#: 677328 AA PL#: 5238529
Item: 5 (1 PC) 1/4" X 96" X 480"
TAG: ROOF

Cleveland-Cliffs Burns Harbor LLC

QUALITY ASSURANCE REPORT OF TEST AND ANALYSIS

US HWY 12 Burns Harbor, Indiana

SHIPMENT NO. 804-27223 | DATE SHIPPED 04-03-21 | CAR OR VEHICLE NO. CSS-CHGO-CSXT-UTICAIHB 017024

SOLD TO NOTE:
AMERICAN ALLOY STEEL INC
PO BOX 40469
HOUSTON TX 77240-0469

SHIP TO:
AMERICAN ALLOY STEEL INC
THEIR SIDING
650 HARBOR WAY
ROME NY 13440

SERIAL NUMBER	PAT NO.	HEAT NUMBER	NO. PCS.	SIZE AND QUANTITY THICKNESS	WIDTH OR DIA.	LENGTH	WEIGHT	YIELD POINT	TENSILE STRENGTH	AF FRAC ELONG.	RED.
				INCHES	INCHES	INCHES	POUNDS	PSI	PSI	IN	% %

QUALITY STEEL MELTED & MANUFACTURED IN THE U. S. A.
PLATES - ASTM A516-17 GR 70 PVQ MOD C.20 MAX KLD FINE GRAIN PRAC, ASTM A516-17 GR 65 PVQ, ASME SA516 GR 70 PVQ 2019 EDITION, ASME SA516 GR 65 PVQ 2019 EDITION, FIRST TST AS ROLLED-ADD'L TENSION PER TST PC
HEAT TREATMENT --- MILL TEST PCS NORM 1650+/-25F FOR 30MIN/IN (30 MINUTES MIN), AIRCOOL --- IN ACCORDANCE WITH EN 10204:2004 TYPE 3.1
10204:2004 TYPE 3.1
NO WELD REPAIR WAS PERFORMED ON BELOW PLATE(S)
CO# 126304-NY GH 377-1665
MERCURY IN ANY FORM HAS NOT BEEN USED IN THE PRODUCTION OF THIS ORDER

T650938	811S10640	2	1/4	96	480	6534	56200	77400	8	24		
(M55)MFST REF#:1							54100	75500	8	26		
T650939	811S10640	2	1/4	96	480	6534	56600	77900	8	24		
(M55)MFST REF#:1							53600	74600	8	24		
→ T650940	811S10640	2	1/4	96	480	6534	56400	77000	8	24		
(M55)MFST REF#:1							54200	74900	8	25		

Q-QUENCH TEMPERATURE T-TEMPER TEMPERATURE N-NORMALIZE TEMPERATURE

SERIAL NUMBER	PAT NO.	HEAT NUMBER	HARD BHN	BEND	THICKNESS INCHES	TYPE	SIZE	D I R	TEST TEMP F	CHARPY IMPACT ENERGY FT LBS 1	2	3	SHEAR(%) 1	2	3	LAT. EXP MILS 1	2	3

Certified a true copy of the original, retained in our file.
AMERICAN ALLOY STEEL
J.V 5/3/2021

HEAT NUMBER	CHEMICAL ANALYSIS C	Mn	P	S	Si	Cu	Ni	Cr	Mo	V	Ti	Al	B	Cb	N	Sn	MOLDAID GRAIN SIZE
811S10640	.17	1.01	.009	.005	.342	.216	.17	.02	.003	.001	.002	.025	.0002		.002	.004	.006

I certify that the above results are a true and correct copy of actual results contained in records maintained by Cleveland-Cliffs Burns Harbor LLC and are in full compliance with the requirements of the specification cited above. This test report cannot be altered and must be transmitted intact with any subsequent third party test reports, if required.

SUPV. QUALITY ASSURANCE
Form BNPLTRPT.TIF

FARID HASSANI PER MWT

AMERICAN ALLOY PLATE # 5238529

05/03/2021 From: AMERICAN ALLOY STEEL, INC. To: INUKSHUK CONSTRUCTION LIMITED
P.O.#: 341-1001-NY S.O.#: 677328 AA PL#: 5238530
Item: 5 (1 PC) 1/4" X 96" X 480"
TAG: ROOF

Cleveland-Cliffs Burns Harbor LLC

QUALITY ASSURANCE REPORT OF TEST AND ANALYSIS

US HWY 12 Burns Harbor, Indiana

SHIPMENT NO. 804-27223 | DATE SHIPPED 04-03-21 | CAR OR VEHICLE NO. CSS-CHGO-CSXT-UTICAIHB 017024

SOLD TO: AMERICAN ALLOY STEEL INC
PO BOX 40469
HOUSTON TX 77240-0469

SHIP TO: AMERICAN ALLOY STEEL INC
THEIR SIDING
650 HARBOR WAY
ROME NY 13440

NOTE	SERIAL NUMBER	PAT NO.	HEAT NUMBER	NO. PCS.	SIZE AND QUANTITY: THICKNESS	WIDTH OR DIA.	LENGTH	WEIGHT	YIELD POINT	TENSILE STRENGTH	AF FRAC ELONG.	RED.
					INCHES	INCHES	INCHES	POUNDS	PSI	PSI	IN	% %

QUALITY STEEL MELTED & MANUFACTURED IN THE U. S. A.
PLATES - ASTM A516-17 GR 70 PVQ MOD C.20 MAX KLD FINE GRAIN PRAC, ASTM A516-17 GR 65 PVQ, ASME SA516 GR 70 PVQ 2019 EDITION, ASME SA516 GR 65 PVQ 2019 EDITION, FIRST TST AS ROLLED-ADD'L TENSION PER TST PC
HEAT TREATMENT --- MILL TEST PCS NORM 1650+/-25F FOR 30MIN/IN (30 MINUTES MIN), AIRCOOL --- IN ACCORDANCE WITH EN 10204:2004 TYPE 3.1
10204:2004 TYPE 3.1
NO WELD REPAIR WAS PERFORMED ON BELOW PLATE(S)
CO# 126304-NY GH 377-1665
MERCURY IN ANY FORM HAS NOT BEEN USED IN THE PRODUCTION OF THIS ORDER

T650938	811S10640	2	1/4	96	480	6534	56200	77400	8	24
							54100	75500	8	26
(M55)MFST REF#:1										
T650939	811S10640	2	1/4	96	480	6534	56600	77900	8	24
							53600	74600	8	24
(M55)MFST REF#:1										
T650940	811S10640	2	1/4	96	480	6534	56400	77000	8	24
							54200	74900	8	25
(M55)MFST REF#:1										

Q-QUENCH TEMPERATURE T-TEMPER TEMPERATURE N-NORMALIZE TEMPERATURE

SERIAL NUMBER	PAT NO.	HEAT NUMBER	HARD BHN	BEND	THICKNESS INCHES	TYPE	SIZE	DIR	TEST TEMP F	CHARPY IMPACT ENERGY FT LBS 1	2	3	SHEAR(%) 1	2	3	LAT. EXP MILS 1	2	3

Certified a true copy of the original, retained in our file.
AMERICAN ALLOY STEEL
5/3/2021

HEAT NUMBER	CHEMICAL ANALYSIS C	Mn	P	S	Si	Cu	Ni	Cr	Mo	V	Ti	Al	B	Cb	N	Sn	MOLYATD GRAIN SIZE
811S10640	.17	1.01	.009	.005	.34	2.21	6	.17	.02	.003	.001	.002	.025	.0002		.002	.004.006

I certify that the above results are a true and correct copy of actual results contained in records maintained by Cleveland-Cliffs Burns Harbor LLC and are in full compliance with the requirements of the specification cited above. This test report cannot be altered and must be transmitted intact with any subsequent third party test reports, if required.

SUPV. QUALITY ASSURANCE
Form BHPLTRPT.TIF

FARID HASSANI PER MWT

AMERICAN ALLOY
PLATE # 5238530

05/03/2021 From: AMERICAN ALLOY STEEL, INC. To: INUKSHUK CONSTRUCTION LIMITED
P.O.#: 341-1001-NY S.O.#: 677328 AA PL#: 5238531
Item: 5 (1 PC) 1/4" X 96" X 480"
TAG: ROOF

Cleveland-Cliffs Burns Harbor LLC

QUALITY ASSURANCE REPORT OF TEST AND ANALYSIS

US HWY 12 Burns Harbor, Indiana

SHIPMENT NO.	DATE SHIPPED	CAR OR VEHICLE NO.
804-27223	04-03-21	CSS-CHGO-CSXT-UTICAIHB 017024

SOLD TO:
AMERICAN ALLOY STEEL INC
PO BOX 40469
HOUSTON TX 77240-0469

SHIP TO:
AMERICAN ALLOY STEEL INC
THEIR SIDING
650 HARBOR WAY
ROME NY 13440

NOTE	SERIAL NUMBER	PAT NO.	HEAT NUMBER	NO. PCS.	SIZE AND QUANTITY THICKNESS	WIDTH OR DIA.	LENGTH	WEIGHT	YIELD POINT	TENSILE STRENGTH	AF FRAC. ELONG.	RED.
					INCHES	INCHES	INCHES	POUNDS	PSI	PSI	IN	% %

QUALITY STEEL MELTED & MANUFACTURED IN THE U. S. A.
PLATES - ASTM A516-17 GR 70 PVQ MOD C.20 MAX KLD FINE GRAIN PRAC, ASTM A516-17 GR 65 PVQ, ASME SA516 GR 70 PVQ 2019 EDITION, ASME SA516 GR 65 PVQ 2019 EDITION, FIRST TST AS ROLLED-ADD'L TENSION PER TST PC HEAT TREATMENT --- MILL TEST PCS NORM 1650+/-25F FOR 30MIN/IN (30 MINUTES MIN), AIRCOOL --- IN ACCORDANCE WITH EN 10204:2004 TYPE 3.1 10204:2004 TYPE 3.1
NO WELD REPAIR WAS PERFORMED ON BELOW PLATE(S)
CO# 126304-NY GH 377-1665
MERCURY IN ANY FORM HAS NOT BEEN USED IN THE PRODUCTION OF THIS ORDER

T650938	811S10640	2	1/4	96	480	6534	56200	77400	8	24
(M55)MFST REF#:1							54100	75500	8	26
T650939	811S10640	2	1/4	96	480	6534	56600	77900	8	24
(M55)MFST REF#:1							53600	74600	8	24
T650940	811S10640	2	1/4	96	480	6534	56400	77000	8	24
(M55)MFST REF#:1							54200	74900	8	25

Q-QUENCH TEMPERATURE T-TEMPER TEMPERATURE N-NORMALIZE TEMPERATURE

SERIAL NUMBER	PAT NO.	HEAT NUMBER	HARD BHN	BEND	THICKNESS	TYPE	SIZE	DIR	TEST TEMP	CHARPY IMPACT ENERGY FT LBS 1	2	3	SHEAR(%) 1	2	3	LAT. EXP MILS 1	2	3
					INCHES				F									

Certified a true copy of the original, retained in our file.
AMERICAN ALLOY STEEL
J.K 5/3/2021

HEAT NUMBER	CHEMICAL ANALYSIS C	Mn	P	S	Si	Cu	Ni	Cr	Mo	V	Ti	Al	B	Cb	N	Sn	MQUAID GRAIN SIZE
811S10640	.17	1.01	.009	.005	.342	.216	.17	.02	.003	.001	.002	.025	.0002	.002	.004	.006	

I certify that the above results are a true and correct copy of actual results contained in records maintained by Cleveland-Cliffs Burns Harbor LLC and are in full compliance with the requirements of the specification cited above. This test report cannot be altered and must be transmitted intact with any subsequent third party test reports, if required.

SUPV. QUALITY ASSURANCE
Form BHPLTRPT.TIF

FARID HASSANI PER MWT

AMERICAN ALLOY
PLATE #5238531

05/03/2021 From: AMERICAN ALLOY STEEL, INC. To: INUKSHUK CONSTRUCTION LIMITED
P.O.#: 341-1001-NY S.O.#: 677328 AA PL#: 5238532
Item: 5 (1 PC) 1/4" X 96" X 480"
TAG: ROOF

Cleveland-Cliffs Burns Harbor LLC

QUALITY ASSURANCE REPORT OF TEST AND ANALYSIS

US HWY 12 Burns Harbor, Indiana

SHIPMENT NO. 804-27223 | DATE SHIPPED 04-03-21 | CAR OR VEHICLE NO. CSS-CHGO-CSXT-UTICAIHB 017024

SOLD TO: AMERICAN ALLOY STEEL INC
PO BOX 40469
HOUSTON TX 77240-0469

SHIP TO: AMERICAN ALLOY STEEL INC
THEIR SIDING
650 HARBOR WAY
ROME NY 13440

SERIAL NUMBER	PAT NO.	HEAT NUMBER	NO. PCS.	SIZE AND QUANTITY: THICKNESS	WIDTH OR DIA.	LENGTH	WEIGHT	YIELD POINT	TENSILE STRENGTH	AF FRAC. ELONG.	RED.
				INCHES	INCHES	INCHES	POUNDS	PSI	PSI	IN	% %

QUALITY STEEL MELTED & MANUFACTURED IN THE U. S. A.
PLATES - ASTM A516-17 GR 70 PVQ MOD C.20 MAX KLD FINE GRAIN PRAC, ASTM A516-17 GR 65 PVQ, ASME SA516 GR 70 PVQ 2019 EDITION, ASME SA516 GR 65 PVQ 2019 EDITION, FIRST TST AS ROLLED-ADD'L TENSION PER TST PC
HEAT TREATMENT --- MILL TEST PCS NORM 1650+/-25F FOR 30MIN/IN (30 MINUTES MIN), AIRCOOL --- IN ACCORDANCE WITH EN 10204:2004 TYPE 3.1
10204:2004 TYPE 3.1
NO WELD REPAIR WAS PERFORMED ON BELOW PLATE(S)
CO# 126304-NY GH 377-1665
MERCURY IN ANY FORM HAS NOT BEEN USED IN THE PRODUCTION OF THIS ORDER

T650938	811S10640	2	1/4	96	480	6534	56200	77400	8	24
(M55)MFST REF#:1							54100	75500	8	26
T650939	811S10640	2	1/4	96	480	6534	56600	77900	8	24
(M55)MFST REF#:1							53600	74600	8	24
T650940	811S10640	2	1/4	96	480	6534	56400	77000	8	24
(M55)MFST REF#:1							54200	74900	8	25

Q-QUENCH TEMPERATURE T-TEMPER TEMPERATURE N-NORMALIZE TEMPERATURE

SERIAL NUMBER	PAT NO.	HEAT NUMBER	HARD BHN	BEND	THICKNESS INCHES	TYPE	SIZE	DIR	TEST TEMP F	CHARPY IMPACT ENERGY FT LBS 1	2	3	SHEAR(%) 1	2	3	LAT. EXP MILS 1	2	3

Certified a true copy of the original, retained in our file.
AMERICAN ALLOY STEEL
JV 5/3/2021

HEAT NUMBER	CHEMICAL ANALYSIS C	Mn	P	S	Si	Cu	Ni	Cr	Mo	V	Ti	Al	B	Cb	N	Sn	MOLARD GRAIN SIZE
811S10640	.17	1.01	.009	.005	.34	2.21	6	.17	.02	.003	.001	.002	.025	.0002		.002	.004.006

I certify that the above results are a true and correct copy of actual results contained in records maintained by Cleveland-Cliffs Burns Harbor LLC and are in full compliance with the requirements of the specification cited above. This test report cannot be altered and must be transmitted intact with any subsequent third party test reports, if required.

SUPV. QUALITY ASSURANCE
Form BHPLTRPT.TIF

FARID HASSANI PER MWT

AMERICAN ALLOY
PLATE #5238532

05/03/2021 From: AMERICAN ALLOY STEEL, INC. To: INUKSHUK CONSTRUCTION LIMITED
P.O.#: 341-1001-NY S.O.#: 677328 AA PL#: 5238533
Item: 5 (1 PC) 1/4" X 96" X 480"
TAG: ROOF

Cleveland-Cliffs Burns Harbor LLC

QUALITY ASSURANCE REPORT OF TEST AND ANALYSIS — US HWY 12 Burns Harbor, Indiana

SHIPMENT NO. 804-27223 | DATE SHIPPED 04-03-21 | CAR OR VEHICLE NO. CSS-CHGO-CSXT-UTICAIHB 017024

SOLD TO NOTE:
AMERICAN ALLOY STEEL INC
PO BOX 40469
HOUSTON TX 77240-0469

SHIP TO:
AMERICAN ALLOY STEEL INC
THEIR SIDING
650 HARBOR WAY
ROME NY 13440

SERIAL NUMBER	PAT NO.	HEAT NUMBER	NO. PCS.	SIZE AND QUANTITY: THICKNESS	WIDTH OR DIA.	LENGTH	WEIGHT	YIELD POINT	TENSILE STRENGTH	AF FRAC ELONG.	RED.
				INCHES	INCHES	INCHES	POUNDS	PSI	PSI	IN	% %

QUALITY STEEL MELTED & MANUFACTURED IN THE U. S. A.
PLATES - ASTM A516-17 GR 70 PVQ MOD C.20 MAX KLD FINE GRAIN PRAC, ASTM A516-17 GR 65 PVQ, ASME SA516 GR 70 PVQ 2019 EDITION, ASME SA516 GR 65 PVQ 2019 EDITION, FIRST TST AS ROLLED-ADD'L TENSION PER TST PC
HEAT TREATMENT --- MILL TEST PCS NORM 1650+/-25F FOR 30MIN/IN (30 MINUTES MIN), AIRCOOL --- IN ACCORDANCE WITH EN 10204:2004 TYPE 3.1
10204:2004 TYPE 3.1
NO WELD REPAIR WAS PERFORMED ON BELOW PLATE(S)
CO# 126304-NY GR 377-1665
MERCURY IN ANY FORM HAS NOT BEEN USED IN THE PRODUCTION OF THIS ORDER

T650938	811S10640	2	1/4	96	480	6534	56200	77400	8	24
							54100	75500	8	26
(M55)MFST REF#:1										
T650939	811S10640	2	1/4	96	480	6534	56600	77900	8	24
							53600	74600	8	24
(M55)MFST REF#:1										
T650940	811S10640	2	1/4	96	480	6534	56400	77000	8	24
							54200	74900	8	25
(M55)MFST REF#:1										

Q-QUENCH TEMPERATURE T-TEMPER TEMPERATURE N-NORMALIZE TEMPERATURE

SERIAL NUMBER	PAT NO.	HEAT NUMBER	HARD BHN	BEND	THICKNESS INCHES	TYPE	SIZE	DIR	TEST TEMP F	CHARPY IMPACT ENERGY FT LBS 1	2	3	SHEAR(%) 1	2	3	LAT. EXP MILS 1	2	3

Certified a true copy of the original, retained in our file.
AMERICAN ALLOY STEEL
JV 5/3/2021

HEAT NUMBER	CHEMICAL ANALYSIS C	Mn	P	S	Si	Cu	Ni	Cr	Mo	V	Ti	Al	B	Cb	N	Sn	MOUAID GRAIN SIZE
811S10640	.17	1.01	.009	.005	.34	2.21	6	.17	.02	.003	.001	.002	.025	.0002		.002	.004.006

I certify that the above results are a true and correct copy of actual results contained in records maintained by Cleveland-Cliffs Burns Harbor LLC and are in full compliance with the requirements of the specification cited above. This test report cannot be altered and must be transmitted intact with any subsequent third party test reports, if required.

SUPV. QUALITY ASSURANCE
Form BHPLTRPT.TIF

FARID HASSANI PER MWT

AMERICAN ALLOY
PLATE # 5238533

05/03/2021 From: AMERICAN ALLOY STEEL, INC. To: INUKSHUK CONSTRUCTION LIMITED
P.O.#: 341-1001-NY S.O.#: 677328 AA PL#: 5238534
Item: 5 (1 PC) 1/4" X 96" X 480"
TAG: ROOF

Cleveland-Cliffs Burns Harbor LLC

QUALITY ASSURANCE REPORT OF TEST AND ANALYSIS

US HWY 12 Burns Harbor, Indiana

SHIPMENT NO. 804-27223 | DATE SHIPPED 04-03-21 | CAR OR VEHICLE NO. CSS-CHGO-CSXT-UTICAIHB 017024

SOLD TO: AMERICAN ALLOY STEEL INC
PO BOX 40469
HOUSTON TX 77240-0469

SHIP TO: AMERICAN ALLOY STEEL INC
THEIR SIDING
650 HARBOR WAY
ROME NY 13440

NOTE	SERIAL NUMBER	PAT NO.	HEAT NUMBER	NO. PCS.	SIZE AND QUANTITY: THICKNESS	WIDTH OR DIA.	LENGTH	WEIGHT	YIELD POINT	TENSILE STRENGTH	AF FRAC. ELONG.	RED.
					INCHES	INCHES	INCHES	POUNDS	PSI	PSI	IN	% %

QUALITY STEEL MELTED & MANUFACTURED IN THE U. S. A.
PLATES - ASTM A516-17 GR 70 PVQ MOD C.20 MAX KLD FINE GRAIN PRAC, ASTM A516-17 GR 65 PVQ, ASME SA516 GR 70 PVQ 2019 EDITION, ASME SA516 GR 65 PVQ 2019 EDITION, FIRST TST AS ROLLED-ADD'L TENSION PER TST PC
HEAT TREATMENT --- MILL TEST PCS NORM 1650+/-25F FOR 30MIN/IN (30 MINUTES MIN), AIRCOOL --- IN ACCORDANCE WITH EN 10204:2004 TYPE 3.1
10204:2004 TYPE 3.1
NO WELD REPAIR WAS PERFORMED ON BELOW PLATE(S)
CO# 126304-NY GR 377-1665
MERCURY IN ANY FORM HAS NOT BEEN USED IN THE PRODUCTION OF THIS ORDER

T650935	811810640	2	1/4	96	480	6534	58500	79800	8	25
(M55)MFST REF#:1							54100	75200	8	27
T650936	811810640	1	1/4	96	480	3267	55200	76700	8	25
(M55)MFST REF#:1							55100	75900	8	26
T650937	811810640	1	1/4	96	480	3267	53800	76200	8	24
(M55)MFST REF#:1							54400	74300	8	26

Q-QUENCH TEMPERATURE T-TEMPER TEMPERATURE N-NORMALIZE TEMPERATURE

SERIAL NUMBER	PAT NO.	HEAT NUMBER	HARD BHN	BEND	THICKNESS INCHES	TYPE	SIZE	DIR	TEST TEMP F	CHARPY IMPACT ENERGY FT LBS 1	2	3	SHEAR(%) 1	2	3	LAT. EXP MILS 1	2	3

Certified a true copy of the original, retained in our file.
AMERICAN ALLOY STEEL
5/3/2021

HEAT NUMBER	CHEMICAL ANALYSIS C	Mn	P	S	Si	Cu	Ni	Cr	Mo	V	Ti	Al	B	Cb	N	Sn	MOLDATO GRAIN SIZE
811810640	.17	1.01	.009	.005	.34	2.21	.17	.02	.003	.001	.002	.025	.0002	.002	.004	.006	

I certify that the above results are a true and correct copy of actual results contained in records maintained by Cleveland-Cliffs Burns Harbor LLC and are in full compliance with the requirements of the specification cited above. This test report cannot be altered and must be transmitted intact with any subsequent third party test reports, if required.

SUPV. QUALITY ASSURANCE
Form BHPLTRPT.TIF

FARID HASSANI PER MWT

AMERICAN ALLOY STEEL
LATE # 5238534

05/03/2021 From: AMERICAN ALLOY STEEL, INC. To: INUKSHUK CONSTRUCTION LIMITED
P.O.#: 341-1001-NY S.O.#: 677328 AA PL#: 5238535
Item: 5 (1 PC) 1/4" X 96" X 480"
TAG: ROOF

Cleveland-Cliffs Burns Harbor LLC

QUALITY ASSURANCE REPORT OF TEST AND ANALYSIS

US HWY 12 Burns Harbor, Indiana

SHIPMENT NO. 804-27223 | DATE SHIPPED 04-03-21 | CAR OR VEHICLE NO. CSS-CHGO-CSXT-UTICAIHB 017024

SOLD TO: AMERICAN ALLOY STEEL INC
PO BOX 40469
HOUSTON TX 77240-0469

SHIP TO: AMERICAN ALLOY STEEL INC
THEIR SIDING
650 HARBOR WAY
ROME NY 13440

NOTE	SERIAL NUMBER	PAT NO.	HEAT NUMBER	NO. PCS.	SIZE AND QUANTITY: THICKNESS	WIDTH OR DIA.	LENGTH	WEIGHT	YIELD POINT	TENSILE STRENGTH	AF FRAC ELONG.	RED.
					INCHES	INCHES	INCHES	POUNDS	PSI	PSI	IN	% %

QUALITY STEEL MELTED & MANUFACTURED IN THE U. S. A.
PLATES - ASTM A516-17 GR 70 PVQ MOD C.20 MAX KLD FINE GRAIN PRAC, ASTM A516-17 GR 65 PVQ, ASME SA516 GR 70 PVQ 2019 EDITION, ASME SA516 GR 65 PVQ 2019 EDITION, FIRST TST AS ROLLED-ADD'L TENSION PER TST PC HEAT TREATMENT --- MILL TEST PCS NORM 1650+/-25F FOR 30MIN/IN (30 MINUTES MIN), AIRCOOL --- IN ACCORDANCE WITH EN 10204:2004 TYPE 3.1
10204:2004 TYPE 3.1
NO WELD REPAIR WAS PERFORMED ON BELOW PLATE(S)
CO# 126304-NY GH 377-1665
MERCURY IN ANY FORM HAS NOT BEEN USED IN THE PRODUCTION OF THIS ORDER

T650935	811S10640	2	1/4	96	480	6534	58500	79800	8	25
							54100	75200	8	27
(M55)MFST REF#:1										
T650936	811S10640	1	1/4	96	480	3267	55200	76700	8	25
							55100	75900	8	26
(M55)MFST REF#:1										
T650937	811S10640	1	1/4	96	480	3267	53800	76200	8	24
							54400	74300	8	26
(M55)MFST REF#:1										

Q-QUENCH TEMPERATURE T-TEMPER TEMPERATURE N-NORMALIZE TEMPERATURE

SERIAL NUMBER	PAT NO.	HEAT NUMBER	HARD BHN	BEND	THICKNESS	TYPE	SIZE	DIR	TEST TEMP	CHARPY IMPACT: ENERGY FT LBS			SHEAR(S)			LAT. EXP MILS		
					INCHES				F	1	2	3	1	2	3	1	2	3

Certified a true copy of the original, retained in our file.
AMERICAN ALLOY STEEL
JK 5/3/2021

HEAT NUMBER	CHEMICAL ANALYSIS: C	Mn	P	S	Si	Cu	Ni	Cr	Mo	V	Ti	Al	B	Cb	N	Sn	MOLAID GRAIN SIZE
811S10640	.17	1.01	.009	.005	.34	2.21	6	.17	.02	.003	.001	.002	.025	.0002		.002	.004.006

I certify that the above results are a true and correct copy of actual results contained in records maintained by Cleveland-Cliffs Burns Harbor LLC and are in full compliance with the requirements of the specification cited above. This test report cannot be altered and must be transmitted intact with any subsequent third party test reports, if required.

SUPV. QUALITY ASSURANCE
Form BHPLTRPT.TIF

FARID HASSANI PER MWT

AMERICAN ALLOY STEEL LATB #5238535

05/03/2021 From: AMERICAN ALLOY STEEL, INC. To: INUKSHUK CONSTRUCTION LIMITED
P.O.#: 341-1001-NY S.O.#: 677328 AA PL#: 5238536
Item: 5 (1 PC) 1/4" X 96" X 480"
TAG: ROOF

Cleveland-Cliffs Burns Harbor LLC

QUALITY ASSURANCE REPORT OF TEST AND ANALYSIS

US HWY 12 Burns Harbor, Indiana

SHIPMENT NO. 804-27223 | DATE SHIPPED 04-03-21 | CAR OR VEHICLE NO. CSS-CHGO-CSXT-UTICAIHB 017024

SOLD TO: AMERICAN ALLOY STEEL INC
PO BOX 40469
HOUSTON TX 77240-0469

SHIP TO: AMERICAN ALLOY STEEL INC
THEIR SIDING
650 HARBOR WAY
ROME NY 13440

NOTE	SERIAL NUMBER	PAT NO.	HEAT NUMBER	NO. PCS.	SIZE AND QUANTITY: THICKNESS	WIDTH OR DIA.	LENGTH	WEIGHT	YIELD POINT	TENSILE STRENGTH	AF FRAC ELONG.	RED.
					INCHES	INCHES	INCHES	POUNDS	PSI	PSI	IN	% %

QUALITY STEEL MELTED & MANUFACTURED IN THE U. S. A.
PLATES - ASTM A516-17 GR 70 PVQ MOD C.20 MAX KLD FINE GRAIN PRAC, ASTM A516-17 GR 65 PVQ, ASME SA516 GR 70 PVQ 2019 EDITION, ASME SA516 GR 65 PVQ 2019 EDITION, FIRST TST AS ROLLED-ADD'L TENSION PER TST PC HEAT TREATMENT --- MILL TEST PCS NORM 1650+/-25F FOR 30MIN/IN (30 MINUTES MIN), AIRCOOL --- IN ACCORDANCE WITH EN 10204:2004 TYPE 3.1
10204:2004 TYPE 3.1
NO WELD REPAIR WAS PERFORMED ON BELOW PLATE(S)
CO# 126304-NY GH 377-1665
MERCURY IN ANY FORM HAS NOT BEEN USED IN THE PRODUCTION OF THIS ORDER

T650935	811S10640	2	1/4	96	480	6534	58500	79800	8	25
(M55)MFST REF#:1							54100	75200	8	27
T650936	811S10640	1	1/4	96	480	3267	55200	76700	8	25
(M55)MFST REF#:1							55100	75900	8	26
T650937	811S10640	1	1/4	96	480	3267	53800	76200	8	24
(M55)MFST REF#:1							54400	74300	8	26

Q-QUENCH TEMPERATURE T-TEMPER TEMPERATURE N-NORMALIZE TEMPERATURE

SERIAL NUMBER	PAT NO.	HEAT NUMBER	HARD BHN	BEND	THICKNESS	TYPE	SIZE	D I R	TEST TEMP	CHARPY IMPACT ENERGY FT LBS			SHEAR(%)			LAT. EXP MILS		
					INCHES				F	1	2	3	1	2	3	1	2	3

Certified a true copy of the original, retained in our file.
AMERICAN ALLOY STEEL.
5/3/2021

HEAT NUMBER	CHEMICAL ANALYSIS C	Mn	P	S	Si	Cu	Ni	Cr	Mo	V	Ti	Al	B	Cb	N	Sn	MQUAID GRAIN SIZE
811S10640	.17	1.01	.009	.005	.34	2.21	6	.17	.02	.003	.001	.002	.025	.0002	.002	.004	.006

I certify that the above results are a true and correct copy of actual results contained in records maintained by Cleveland-Cliffs Burns Harbor LLC and are in full compliance with the requirements of the specification cited above. This test report cannot be altered and must be transmitted intact with any subsequent third party test reports, if required.

SUPV. QUALITY ASSURANCE
Form BHPLTRPT.TIF

FARID HASSANI PER MWT

AMERICAN ALLOY STEEL
PLATE # 5238536

05/03/2021 From: AMERICAN ALLOY STEEL, INC. To: INUKSHUK CONSTRUCTION LIMITED
P.O.#: 341-1001-NY S.O.#: 677328 AA PL#: 5238537
Item: 5 (1 PC) 1/4" X 96" X 480"
TAG: ROOF

Cleveland-Cliffs Burns Harbor LLC

QUALITY ASSURANCE REPORT OF TEST AND ANALYSIS

US HWY 12 Burns Harbor, Indiana

SHIPMENT NO. 804-27223 | DATE SHIPPED 04-03-21 | CAR OR VEHICLE NO. CSS-CHGO-CSXT-UTICAIHB 017024

SOLD TO: AMERICAN ALLOY STEEL INC
PO BOX 40469
HOUSTON TX 77240-0469

SHIP TO: AMERICAN ALLOY STEEL INC
THEIR SIDING
650 HARBOR WAY
ROME NY 13440

NOTE

SERIAL NUMBER	PAT NO.	HEAT NUMBER	NO. PCS.	SIZE AND QUANTITY: THICKNESS	WIDTH OR DIA.	LENGTH	WEIGHT	YIELD POINT	TENSILE STRENGTH	AF FRAC. ELONG.	RED.
				INCHES	INCHES	INCHES	POUNDS	PSI	PSI	IN	% %

QUALITY STEEL MELTED & MANUFACTURED IN THE U. S. A.
PLATES - ASTM A516-17 GR 70 PVQ MOD C.20 MAX KLD FINE GRAIN PRAC, ASTM A516-17 GR 65 PVQ, ASME SA516 GR 70 PVQ 2019 EDITION, ASME SA516 GR 65 PVQ 2019 EDITION, FIRST TST AS ROLLED-ADD'L TENSION PER TST PC
HEAT TREATMENT --- MILL TEST PCS NORM 1650+/-25F FOR 30MIN/IN (30 MINUTES MIN), AIRCOOL --- IN ACCORDANCE WITH EN 10204:2004 TYPE 3.1
10204:2004 TYPE 3.1
NO WELD REPAIR WAS PERFORMED ON BELOW PLATE(S)
CO# 126304-NY GH 377-1665
MERCURY IN ANY FORM HAS NOT BEEN USED IN THE PRODUCTION OF THIS ORDER

T650935	811S10640	2	1/4	96	480	6534	58500	79800	8	25
							54100	75200	8	27
(M55)MFST REF#:1										
T650936	811S10640	1	1/4	96	480	3267	55200	76700	8	25
							55100	75900	8	26
(M55)MFST REF#:1										
T650937	811S10640	1	1/4	96	480	3267	53800	76200	8	24
							54400	74300	8	26
(M55)MFST REF#:1										

Q-QUENCH TEMPERATURE T-TEMPER TEMPERATURE N-NORMALIZE TEMPERATURE

SERIAL NUMBER	PAT NO.	HEAT NUMBER	HARD BHN	BEND	THICKNESS INCHES	TYPE	SIZE	D/R	TEST TEMP F	CHARPY IMPACT ENERGY FT LBS 1	2	3	SHEAR(%) 1	2	3	LAT. EXP MILS 1	2	3

Certified a true copy of the original, retained in our file.
AMERICAN ALLOY STEEL
JV Gibson

HEAT NUMBER	CHEMICAL ANALYSIS C	Mn	P	S	Si	Cu	Ni	Cr	Mo	V	Ti	Al	B	Cb	N	Sn	MOLIAID GRAIN SIZE
811S10640	.17	1.01	.009	.005	.34	2.21	6	.17	.02	.003	.001	.002	.025	.0002	.002	.004	.006

I certify that the above results are a true and correct copy of actual results contained in records maintained by Cleveland-Cliffs Burns Harbor LLC and are in full compliance with the requirements of the specification cited above. This test report cannot be altered and must be transmitted intact with any subsequent third party test reports, if required.

SUPV. QUALITY ASSURANCE
Form BHPLTRPT.TIF

FARID HASSANI PER MWT

AMERICAN ALLOY
LATE # 5238537

05/03/2021 From: AMERICAN ALLOY STEEL, INC. To: INUKSHUK CONSTRUCTION LIMITED
P.O.#: 341-1001-NY S.O.#: 677328 AA PL#: 5238538
Item: 5 (1 PC) 1/4" X 96" X 480"
TAG: ROOF

Cleveland-Cliffs Burns Harbor LLC

QUALITY ASSURANCE REPORT OF TEST AND ANALYSIS

US HWY 12 Burns Harbor, Indiana

SHIPMENT NO. 804-27223 | DATE SHIPPED 04-03-21 | CAR OR VEHICLE NO. CSS-CHGO-CSXT-UTICAIHB 017024

SOLD TO: AMERICAN ALLOY STEEL INC
PO BOX 40469
HOUSTON TX 77240-0469

SHIP TO: AMERICAN ALLOY STEEL INC
THEIR SIDING
650 HARBOR WAY
ROME NY 13440

NOTE	SERIAL NUMBER	PAT NO.	HEAT NUMBER	NO. PCS.	SIZE AND QUANTITY: THICKNESS	WIDTH OR DIA.	LENGTH	WEIGHT	YIELD POINT	TENSILE STRENGTH	AF FRAC. ELONG.	RED.
					INCHES	INCHES	INCHES	POUNDS	PSI	PSI	IN	% %

QUALITY STEEL MELTED & MANUFACTURED IN THE U. S. A.
PLATES - ASTM A516-17 GR 70 PVQ MOD C.20 MAX KLD FINE GRAIN PRAC, ASTM A516-17 GR 65 PVQ, ASME SA516 GR 70 PVQ 2019 EDITION, ASME SA516 GR 65 PVQ 2019 EDITION, FIRST TST AS ROLLED-ADD'L TENSION PER TST PC
HEAT TREATMENT --- MILL TEST PCS NORM 1650+/-25F FOR 30MIN/IN (30 MINUTES MIN), AIRCOOL --- IN ACCORDANCE WITH EN 10204:2004 TYPE 3.1
10204:2004 TYPE 3.1
NO WELD REPAIR WAS PERFORMED ON BELOW PLATE(S)
CO# 126304-NY GH 377-1665
MERCURY IN ANY FORM HAS NOT BEEN USED IN THE PRODUCTION OF THIS ORDER

T650943	821S10640	2	1/4	96	480	6534	55200	76500	8	23
							53800	74000	8	25
(M55)MFST REF#:1										
T650944	821S10640	1	1/4	96	480	3267	54100	76500	8	27
							55400	75400	8	26
(M55)MFST REF#:1										
T650945	821S10640	2	1/4	96	480	6534	56600	77200	8	25
							54000	73800	8	26
(M55)MFST REF#:1										

Q-QUENCH TEMPERATURE T-TEMPER TEMPERATURE N-NORMALIZE TEMPERATURE

SERIAL NUMBER	PAT NO.	HEAT NUMBER	HARD BHN	BEND	THICKNESS	TYPE	SIZE	DIR	TEST TEMP	CHARPY IMPACT: ENERGY FT LBS			SHEAR(%)			LAT. EXP MILS		
					INCHES				F	1	2	3	1	2	3	1	2	3

Certified a true copy of the original, retained in our file.
AMERICAN ALLOY STEEL
JW Gibson

HEAT NUMBER	CHEMICAL ANALYSIS: C	Mn	P	S	Si	Cu	Ni	Cr	Mo	V	Ti	Al	B	Cb	N	Sn	MOLAID GRAIN SIZE
821S10640	.17	1.01	.009	.005	.34	2.21	6	.17	.02	.003	.001	.002	.0250002		.002	.004	.006

I certify that the above results are a true and correct copy of actual results contained in records maintained by Cleveland-Cliffs Burns Harbor LLC and are in full compliance with the requirements of the specification cited above. This test report cannot be altered and must be transmitted intact with any subsequent third party test reports, if required.

SUPV. QUALITY ASSURANCE
Form BHPLTRPT.TIF

FARID HASSANI PER MWT

AMERICAN ALLOY
PLATE #5238538

05/03/2021 From: AMERICAN ALLOY STEEL, INC. To: INUKSHUK CONSTRUCTION LIMITED
P.O.#: 341-1001-NY S.O.#: 677328 AA PL#: 5238539
Item: 5 (1 PC) 1/4" X 96" X 480"
TAG: ROOF

Cleveland-Cliffs Burns Harbor LLC

QUALITY ASSURANCE REPORT OF TEST AND ANALYSIS

US HWY 12 Burns Harbor, Indiana

SHIPMENT NO.	DATE SHIPPED	CAR OR VEHICLE NO.
804-27223	04-03-21	CSS-CHGO-CSXT-UTICAIHB 017024

SOLD TO:
AMERICAN ALLOY STEEL INC
PO BOX 40469
HOUSTON TX 77240-0469

SHIP TO:
AMERICAN ALLOY STEEL INC
THEIR SIDING
650 HARBOR WAY
ROME NY 13440

NOTE	SERIAL NUMBER	PAT NO.	HEAT NUMBER	NO. PCS.	SIZE AND QUANTITY THICKNESS	WIDTH OR DIA.	LENGTH	WEIGHT	YIELD POINT	TENSILE STRENGTH	AF FRAC. ELONG.	RED.
					INCHES	INCHES	INCHES	POUNDS	PSI	PSI	IN	% %

QUALITY STEEL MELTED & MANUFACTURED IN THE U. S. A.
PLATES - ASTM A516-17 GR 70 PVQ MOD C.20 MAX KLD FINE GRAIN PRAC, ASTM A516-17 GR 65 PVQ, ASME SA516 GR 70 PVQ 2019 EDITION, ASME SA516 GR 65 PVQ 2019 EDITION, FIRST TST AS ROLLED-ADD'L TENSION PER TST PC HEAT TREATMENT --- MILL TEST PCS NORM 1650+/-25F FOR 30MIN/IN (30 MINUTES MIN), AIRCOOL --- IN ACCORDANCE WITH EN 10204:2004 TYPE 3.1 10204:2004 TYPE 3.1
NO WELD REPAIR WAS PERFORMED ON BELOW PLATE(S)
CO# 126304-NY GH 377-1665
MERCURY IN ANY FORM HAS NOT BEEN USED IN THE PRODUCTION OF THIS ORDER

T650943	821S10640	2	1/4	96	480	6534	55200	76500	8	23
							53800	74000	8	25
(M55)MFST REF#:1										
T650944	821S10640	1	1/4	96	480	3267	54100	76500	8	27
							55400	75400	8	26
(M55)MFST REF#:1										
T650945	821S10640	2	1/4	96	480	6534	56600	77200	8	25
							54000	73800	8	26
(M55)MFST REF#:1										

Q-QUENCH TEMPERATURE T-TEMPER TEMPERATURE N-NORMALIZE TEMPERATURE

SERIAL NUMBER	PAT NO.	HEAT NUMBER	HARD BHN	BEND	THICKNESS	TYPE	SIZE	DIR	TEST TEMP	CHARPY IMPACT ENERGY FT LBS 1	2	3	SHEAR(%) 1	2	3	LAT. EXP MILS 1	2	3
					INCHES				F									

Certified a true copy of the original, retained in our file.
AMERICAN ALLOY STEEL
JK 5/3/2021

HEAT NUMBER	CHEMICAL ANALYSIS C	Mn	P	S	Si	Cu	Ni	Cr	Mo	V	Ti	Al	B	Cb	N	Sn	MQUAID GRAIN SIZE
821S10640	.17	1.01	.009	.005	.342	.216	.17	.02	.003	.001	.002	.025	.0002	.002	.004	.006	

AMERICAN ALLOY
PLATE # 5238539

I certify that the above results are a true and correct copy of actual results contained in records maintained by Cleveland-Cliffs Burns Harbor LLC and are in full compliance with the requirements of the specification cited above. This test report cannot be altered and must be transmitted intact with any subsequent third party test reports, if required.

SUPV. QUALITY ASSURANCE
Form BHPLTRPT.TIF

FARID HASSANI PER MWT

05/03/2021 From: AMERICAN ALLOY STEEL, INC. To: INUKSHUK CONSTRUCTION LIMITED
P.O.#: 341-1001-NY S.O.#: 677328 AA PL#: 5238540
Item: 5 (1 PC) 1/4" X 96" X 480"
TAG: ROOF

Cleveland-Cliffs Burns Harbor LLC

QUALITY ASSURANCE REPORT OF TEST AND ANALYSIS

US HWY 12 Burns Harbor, Indiana

SHIPMENT NO. 804-27223 | DATE SHIPPED 04-03-21 | CAR OR VEHICLE NO. CBS-CHGO-CSXT-UTICAIRB 017024

SOLD TO: AMERICAN ALLOY STEEL INC
PO BOX 40469
HOUSTON TX 77240-0469

SHIP TO: AMERICAN ALLOY STEEL INC
THEIR SIDING
650 HARBOR WAY
ROME NY 13440

NOTE	SERIAL NUMBER	PAT NO.	HEAT NUMBER	NO. PCS.	SIZE AND QUANTITY: THICKNESS	WIDTH OR DIA.	LENGTH	WEIGHT	YIELD POINT	TENSILE STRENGTH	AF FRAC ELONG.	RED.
					INCHES	INCHES	INCHES	POUNDS	PSI	PSI	IN	% %

QUALITY STEEL MELTED & MANUFACTURED IN THE U. S. A.
PLATES - ASTM A516-17 GR 70 PVQ MOD C.20 MAX KLD FINE GRAIN PRAC, ASTM A516-17 GR 65 PVQ, ASME SA516 GR 70 PVQ 2019 EDITION, ASME SA516 GR 65 PVQ 2019 EDITION, FIRST TST AS ROLLED-ADD'L TENSION PER TST PC
HEAT TREATMENT --- MILL TEST PCS NORM 1650+/-25F FOR 30MIN/IN (30 MINUTES MIN), AIRCOOL --- IN ACCORDANCE WITH EN 10204:2004 TYPE 3.1
10204:2004 TYPE 3.1
NO WELD REPAIR WAS PERFORMED ON BELOW PLATE(S)
CO# 126304-NY GH 377-1665
MERCURY IN ANY FORM HAS NOT BEEN USED IN THE PRODUCTION OF THIS ORDER

T650943	821S10640	2	1/4	96	480	6534	55200	76500	8	23
(M55)MFST REF#:1							53800	74000	8	25
T650944	821S10640	1	1/4	96	480	3267	54100	76500	8	27
(M55)MFST REF#:1							55400	75400	8	26
T650945	821S10640	2	1/4	96	480	6534	56600	77200	8	25
(M55)MFST REF#:1							54000	73800	8	26

Q-QUENCH TEMPERATURE T-TEMPER TEMPERATURE N-NORMALIZE TEMPERATURE

SERIAL NUMBER	PAT NO.	HEAT NUMBER	HARD BHN	BEND	THICKNESS INCHES	TYPE	SIZE	DIR	TEST TEMP F	CHARPY IMPACT ENERGY FT LBS 1	2	3	SHEAR(%) 1	2	3	LAT. EXP MILS 1	2	3

Certified a true copy of the original, retained in our file.
AMERICAN ALLOY STEEL
5/3/2021

HEAT NUMBER	CHEMICAL ANALYSIS C	Mn	P	S	Si	Cu	Ni	Cr	Mo	V	Ti	Al	B	Cb	N	Sn	MOLAID GRAIN SIZE
821S10640	.17	1.01	.009	.005	.34	2.21	6	.17	.02	.003	.001	.002	.025	.0002		.002	.004.006

I certify that the above results are a true and correct copy of actual results contained in records maintained by Cleveland-Cliffs Burns Harbor LLC and are in full compliance with the requirements of the specification cited above. This test report cannot be altered and must be transmitted intact with any subsequent third party test reports, if required.

SUPV. QUALITY ASSURANCE
Form BHPLTRPT.TIF

FARID HASSANI PER MWT

AMERICAN ALLOY PLATE # 5238540

05/03/2021 From: AMERICAN ALLOY STEEL, INC. To: INUKSHUK CONSTRUCTION LIMITED
P.O.#: 341-1001-NY S.O.#: 677328 AA PL#: 5238541
Item: 5 (1 PC) 1/4" X 96" X 480"
TAG: ROOF

Cleveland-Cliffs Burns Harbor LLC

QUALITY ASSURANCE REPORT OF TEST AND ANALYSIS

US HWY 12 Burns Harbor, Indiana

SHIPMENT NO. 804-27223 | DATE SHIPPED 04-03-21 | CAR OR VEHICLE NO. CSS-CHGO-CSXT-UTICAIHB 017024

SOLD TO: AMERICAN ALLOY STEEL INC
PO BOX 40469
HOUSTON TX 77240-0469

SHIP TO: AMERICAN ALLOY STEEL INC
THEIR SIDING
650 HARBOR WAY
ROME NY 13440

NOTE	SERIAL NUMBER	PAT NO.	HEAT NUMBER	NO. PCS.	SIZE AND QUANTITY THICKNESS	WIDTH OR DIA.	LENGTH	WEIGHT	YIELD POINT	TENSILE STRENGTH	AF FRAC. ELONG.	RED.
					INCHES	INCHES	INCHES	POUNDS	PSI	PSI	IN	% %

QUALITY STEEL MELTED & MANUFACTURED IN THE U. S. A.
PLATES - ASTM A516-17 GR 70 PVQ MOD C.20 MAX KLD FINE GRAIN PRAC, ASTM A516-17 GR 65 PVQ, ASME SA516 GR 70 PVQ 2019 EDITION, ASME SA516 GR 65 PVQ 2019 EDITION, FIRST TST AS ROLLED-ADD'L TENSION PER TST PC HEAT TREATMENT --- MILL TEST PCS NORM 1650+/-25F FOR 30MIN/IN (30 MINUTES MIN), AIRCOOL --- IN ACCORDANCE WITH EN 10204:2004 TYPE 3.1
10204:2004 TYPE 3.1
NO WELD REPAIR WAS PERFORMED ON BELOW PLATE(S)
CO# 126304-NY GH 377-1665
MERCURY IN ANY FORM HAS NOT BEEN USED IN THE PRODUCTION OF THIS ORDER

T650943	821S10640	2	1/4	96	480	6534	55200	76500	8	23
(M55)MFST REF#:1							53800	74000	8	25
T650944	821S10640	1	1/4	96	480	3267	54100	76500	8	27
(M55)MFST REF#:1							55400	75400	8	26
T650945	821S10640	2	1/4	96	480	6534	56600	77200	8	25
(M55)MFST REF#:1							54000	73800	8	26

Q-QUENCH TEMPERATURE T-TEMPER TEMPERATURE N-NORMALIZE TEMPERATURE

SERIAL NUMBER	PAT NO.	HEAT NUMBER	HARD BHN	BEND	THICKNESS	TYPE	SIZE	DIR	TEST TEMP	CHARPY IMPACT ENERGY FT LBS			SHEAR(%)			LAT. EXP MILS		
					INCHES				F	1	2	3	1	2	3	1	2	3

Certified a true copy of the original, retained in our file.
AMERICAN ALLOY STEEL
J-K 5/3/2021

HEAT NUMBER	CHEMICAL ANALYSIS C	Mn	P	S	Si	Cu	Ni	Cr	Mo	V	Ti	Al	B	Cb	N	Sn	MOLAID GRAIN SIZE
821S10640	.17	1.01	.009	.005	.34	2.21	6	.17	.02	.003	.001	.002	.025	.0002		.002	.004	.006

I certify that the above results are a true and correct copy of actual results contained in records maintained by Cleveland-Cliffs Burns Harbor LLC and are in full compliance with the requirements of the specification cited above. This test report cannot be altered and must be transmitted intact with any subsequent third party test reports, if required

SUPV. QUALITY ASSURANCE
Form BHPLTRPT.TIF

FARID HASSANI PER MWT

AMERICAN ALLOY PLATE # 523541

05/03/2021 From: AMERICAN ALLOY STEEL, INC. To: INUKSHUK CONSTRUCTION LIMITED
P.O.#: 341-1001-NY S.O.#: 677328 AA PL#: 5238542
Item: 5 (1 PC) 1/4" X 96" X 480"
TAG: ROOF

Cleveland-Cliffs Burns Harbor LLC

QUALITY ASSURANCE REPORT OF TEST AND ANALYSIS

US HWY 12 Burns Harbor, Indiana

SHIPMENT NO. 804-27223 | DATE SHIPPED 04-03-21 | CAR OR VEHICLE NO. CSS-CHGO-CSXT-UTICAIHB 017024

SOLD TO: AMERICAN ALLOY STEEL INC
PO BOX 40469
HOUSTON TX 77240-0469

SHIP TO: AMERICAN ALLOY STEEL INC
THEIR SIDING
650 HARBOR WAY
ROME NY 13440

NOTE	SERIAL NUMBER	PAT NO.	HEAT NUMBER	NO. PCS.	SIZE AND QUANTITY: THICKNESS	WIDTH OR DIA.	LENGTH	WEIGHT	YIELD POINT	TENSILE STRENGTH	AF FRAC. ELONG.	RED.
					INCHES	INCHES	INCHES	POUNDS	PSI	PSI	IN	% %

QUALITY STEEL MELTED & MANUFACTURED IN THE U. S. A.
PLATES - ASTM A516-17 GR 70 PVQ MOD C.20 MAX KLD FINE GRAIN PRAC, ASTM A516-17 GR 65 PVQ, ASME SA516 GR 70 PVQ 2019 EDITION, ASME SA516 GR 65 PVQ 2019 EDITION, FIRST TST AS ROLLED-ADD'L TENSION PER TST PC
HEAT TREATMENT --- MILL TEST PCS NORM 1650+/-25F FOR 30MIN/IN (30 MINUTES MIN), AIRCOOL --- IN ACCORDANCE WITH EN 10204:2004 TYPE 3.1
10204:2004 TYPE 3.1
NO WELD REPAIR WAS PERFORMED ON BELOW PLATE(S)
CO# 126304-NY GH 377-1665
MERCURY IN ANY FORM HAS NOT BEEN USED IN THE PRODUCTION OF THIS ORDER

T650943	821S10640	2	1/4	96	480	6534	55200	76500	8	23
							53800	74000	8	25
(M55)MFST REF#:1										
T650944	821S10640	1	1/4	96	480	3267	54100	76500	8	27
							55400	75400	8	26
(M55)MFST REF#:1										
T650945	821S10640	2	1/4	96	480	6534	56600	77200	8	25
							54000	73800	8	26
(M55)MFST REF#:1										

Q-QUENCH TEMPERATURE T-TEMPER TEMPERATURE N-NORMALIZE TEMPERATURE

SERIAL NUMBER	PAT NO.	HEAT NUMBER	HARD BHN	BEND	THICKNESS	TYPE	SIZE	D I R	TEST TEMP	CHARPY IMPACT: ENERGY FT LBS 1	2	3	SHEAR(%) 1	2	3	LAT. EXP MILS 1	2	3
					INCHES				F									

Certified a true copy of the original, retained in our file.
AMERICAN ALLOY STEEL
J.P 5/3/2021

HEAT NUMBER	CHEMICAL ANALYSIS: C	Mn	P	S	Si	Cu	Ni	Cr	Mo	V	Ti	Al	B	Cb	N	Sn	MOD AIM GRAIN SIZE
821S10640	.17	1.01	.009	.005	.34	2.16	.17	.02	.003	.001	.002	.025	.0002		.002	.004	.006

I certify that the above results are a true and correct copy of actual results contained in records maintained by Cleveland-Cliffs Burns Harbor LLC and are in full compliance with the requirements of the specification cited above. This test report cannot be altered and must be transmitted intact with any subsequent third party test reports, if required

SUPV. QUALITY ASSURANCE
Form BHPLTRPT.TIF

FARID HASSANI PER MMT

AMERICAN ALLOY PLATE # 5238542

AMERICAN ALLOY STEEL, INC.
650 Harbor Way
ROME, NY 13440
PHONE (315) 371-9055 FAX (315) 336-3529

PACKING LIST

PACKING LIST NO 713909 S/O NO 677328 DATE: 05/03/2021

SOLD TO: 308500 PHONE: 1-902-429-0272
INUKSHUK CONSTRUCTION LIMITED
1869 UPPER WATER STREET SUITE AH202
HALIFAX, NS B3J 1S9

SHIP TO: 3
TECHFORM-MONTAL
3139 BOUL DES ENTREPRISES
TERREBONNE, QC
J6X 4J9

CUSTOMER BUYER NAME:M.LOSIER PHONE NO: 1-902-429-0272

CUST PO NUMBER	FOB POINT	--- SHIP VIA --	SHIPPING REF	TERMS	DATE REQ
341-1001-NY	DELIVERED	ITM		PPD	04/06/2021

1 SET OF MTRs IS REQUIRED WITH SHIPMENT

LN#	ITM	QTY	THKNSS	MATERIAL/ITEM DESCRIPTION	UNT WGT	EXT WGT
				ASME SA 516 GRADE 70, KILLED, FINE GRAIN, AS ROLLED		
1	5	14	1/4"	96" X 480" TAG: ROOF	3267	45738

Total Pieces on this Packing List 14

Total Weight on this Packing List 45738

MRR #004

STRAIGHT BILL OF LADING - SHORT FORM - ORIGINAL - NOT NEGOTIABLE

AMERICAN ALLOY STEEL, INC.

CARRIER: ITM

FROM: AMERICAN ALLOY STEEL, INC.
6230 N HOUSTON-ROSSLYN
HOUSTON, TX. 77091
1-713-462-8081

DATE: 03/08/2021

BILL OF LADING: 678573

CONSIGNED TO: TECHFORM-MONTAL
DESTINATION : 3139 BOUL DES ENTREPRISES
TERREBONNE, QC
J6X 4J9
CANADA

CUSTOMS: SEAMONT BROKERAGE
PH:514-931-0306/FAX:514-363-5564

SUBJECT TO SECTION 7 OF CONDITIONS OF APPLICABLE BILL OF LADING, IF THIS SHIPMENT IS TO BE DELIVERED TO THE CONSIGNEE WITHOUT RECOURSE ON THE CONSIGNOR, THE CONSIGNOR SHALL SIGN THE FOLLOWING STATEMENT: THE CARRIER SHALL NOT MAKE DELIVERY OF THIS SHIPMENT WITHOUT PAYMENT OF FREIGHT AND ALL OTHER LAWFUL CHARGES.

PER (X) INVOICE EXPORT :

*** FREIGHT CHARGES: PREPAID

THE PROPERTY DESCRIBED BELOW, IN APPARENT GOOD ORDER, EXCEPT AS NOTED (CONTENTS AND CONDITION OF CONTENTS OF PACKAGES UNKNOWN), MARKED, CONSIGNED, AND DESTINED AS INDICATED BELOW, WHICH SAID CARRIER (THE WORD CARRIER BEING UNDERSTOOD THROUGHOUT THIS CONTRACT AS MEANING ANY PERSON OR CORPORATION IN POSSESSION OF THE PROPERTY UNDER THE CONTRACT) AGREES TO CARRY TO ITS USUAL PLACE OF DELIVERY AT SAID DESTINATION, IF ON ITS ROUTE TO SAID DESTINATION. IT IS MUTUALLY AGREED, AS TO EACH CARRIER OF ALL OR ANY OF SAID PROPERTY OVER ALL OR ANY PORTION OF SAID ROUTE TO DESTINATION, AND AS TO EACH PARTY AT ANY TIME INTERESTED IN ALL OR ANY SAID PROPERTY, THAT EVERY SERVICE TO BE PERFORMED HEREUNDER SHALL BE SUBJECT TO ALL THE TERMS AND CONDITIONS OF THE UNIFORM DOMESTIC STRAIGHT BILL OF LADING SET FORTH (1) IN THE UNIFORM FREIGHT CLASSIFICATION IN EFFECT ON THE DATE HEREOF, IF THIS IS A RAIL OR A RAIL-WATER SHIPMENT, OR (2) IN THE APPLICABLE MOTOR CARRIER CLASSIFICATION OR TARIFF IF THIS IS A MOTOR CARRIER SHIPMENT.

SHIPPER HEREBY CERTIFIES THAT HE IS FAMILIAR WITH ALL THE TERMS AND CONDITIONS OF THE SAID BILL OF LADING, INCLUDING THOSE ON THE BACK THEREOF, SET FORTH IN THE CLASSIFICATION OR TARIFF WHICH GOVERNS THE TRANSPORTATION OF THIS SHIPMENT, AND THE SAID TERMS AND CONDITIONS ARE HEREBY AGREED TO BY THE SHIPPER AND ACCEPTED FOR HIMSELF AND HIS ASSIGNS.

Permanent post-office address of shipper:
AMERICAN ALLOY STEEL, INC.
P.O.BOX 40469
HOUSTON, TX 77240

Load must be secured before leaving premises.

Driver Signature/Date

ITM

QTY	DESCRIPTION OF ARTICLES	WGT (LBS)	PL NO	SO NO	PO NO
	--- C L A S S - 50 S T E E L ----				
11	5/16" X 96" X 480"	44924	708614	677336	341-1001-TX
11	T O T A L S	44924			

11 LOOSE STEEL PLATES
1 ENVELOPE
ENVELOPE MUST DELIVER WITH FREIGHT

LOADED BY_____ DATE_____ PER ATTACHED PACKING LIST(S)

RECEIVED BY_____ DATE_____

Time In: _____ Signature: _____ Time Out: _____ Signature: _____

AMERICAN ALLOY STEEL, INC.
6230 N. Houston-Rosslyn
HOUSTON, TX 77091
PHONE (713) 462-8081 FAX (713) 462-0527

P A C K I N G L I S T

PACKING LIST NO 708614 S/O NO 677336 DATE: 03/02/2021

SOLD TO: 308500 PHONE: 1-902-429-0272
INUKSHUK CONSTRUCTION LIMITED
1869 UPPER WATER STREET SUITE AH202
HALIFAX, NS B3J 1S9

SHIP TO: 3
TECHFORM-MONTAL
3139 BOUL DES ENTREPRISES
TERREBONNE, QC
J6X 4J9

CUSTOMER BUYER NAME:M.LOSIER PHONE NO: 1-902-429-0272

CUST PO NUMBER	FOB POINT	--- SHIP VIA --	SHIPPING REF	TERMS	DATE REQ
341-1001-TX	DELIVERED	ITM		PPD	04/05/2021

1 SET OF MTRs IS REQUIRED WITH SHIPMENT

LN#	ITM	QTY	THKNSS	MATERIAL/ITEM DESCRIPTION	UNT WGT	EXT WGT
				ASME SA 516 GRADE 70, KILLED, FINE GRAIN, NORMALIZED		
1	1	11	5/16"	96" X 480"	4084	44924

Total Pieces on this Packing List 11

Total Weight on this Packing List 44924

Canada Customs and Revenue Agency | Agence des douanes et du revenu du Canada

CANADA CUSTOMS INVOICE
FACTURE DES DOUANES CANADIENNES

Page 1 of 1 de

1. Vendor (name and address) - Vendeur (nom et adresse)

American Alloy Steel
230 N. Houston Rosslyn Rd
Houston, TX 77091
Tel: (713) 462-8081 Fax: (713) 462-1638

2. Date of direct shipment to Canada - Date d'expédition directe vers le Canada

03/05/2021

3. Other references (include purchaser's order no.)
Autres références (inclure le n° de commande de l'acheteur)

PO# 341-1001-TX S/O: 677336

4. Consignee (name and address) - Destinataire (nom et adresse)

TECHFORM-MONTAL
3139 BOUL DES ENTREPRISES
TERREBONNE, QC J6X 4J9
CANADA

5. Purchaser's name and address (if other than consignee)
Nom et adresse de l'acheteur (s'il diffère du destinataire)

AMERICAN ALLOY STEEL
6230 N. HOUSTON ROSSLYN RD.
HOUSTON, TX 77091
USA

6. Country of transhipment - Pays de transbordement

USA

7. Country of origin of goods
Pays d'origine des marchandises

USA

IF SHIPMENT INCLUDES GOODS OF DIFFERENT ORIGINS AGAINST ITEMS IN 12. SI L'EXPEDITION COMPREND DES MARCHANDISES D'ORIGINES DIFFERENTES, PRECISEZ LEUR PROVENANCE EN 12

8. Transportation: Give mode and place of direct shipment to Canada
Transport: Precisez model et point d'expedition directe vers le Canada

ITM
CUSTOMS: SEAMONT BROKERAGE
PH#514-931-0306

9. Conditions of sale and terms of payment
(i.e. Sale, consignment shipment, leased goods, etc.)
Conditions de vente et modalitiés de palement
(p. ex. vente, expédition en consignation, location de marchandises, etc.)

SALE

10. Currency of settlement - Devises du palement

US FUNDS

11. Number of packages Nombre de colis	12. Specification of commodities (kind of packages, marks and numbers, general description and characteristics, i.e., grad,e quality) Désignation des articles (nature des colis, marques et numéros, description générale et caractéristiques, p. ex, classe, qualité)	13. Quantity (state unit) Quantité (précisez l'unité)	Selling price - Prix de vente	
			14. Unit Price Prix unitaire	15. Total
	STEEL PLATE 5/16" x 96" x 480" - USA	11	$3349.00	$36839.00

18. If any of fields 1 to 17 are included on an attached commercial invoice, check this box
Si tout renseignement relativement aux zones 1 à 17 figure sur une ou des factures commerciales ci-attachees, cochez cette case ☑
Commercial Invoice No. / N° de la facture commerciale 3051001-1

16. Total Weight - Poids Total		17. Invoice total Total de la facture
Net	Gross - Brut	
44924 LBS	44924 LBS	$36839.00

19. Exporter's name and address (if other than vendor)
Nom et adresse de l'exportateur (s'il differe du vendeur)

20. Originator (name and address) - Expéditeur d'origine (nom et adresse)

21. CCRA ruling (if applicable) - Décision de l'Agence (s'il y a lieu)

22. If fields 23 to 25 are not applicable, check this box ☐
Si les zones 23 à 25 sont sans objet, cochez cette case

23. If included in field 17 indicate amount:
Si compris dans le total à la zone 17, précisez:

(i) Transportation charges, expenses and insurance from the place of direct shipment to Canada
Les frais de transport, dépenses et assurances à partir du point d'expédition directe vers le Canada

(ii) Costs for construction, erection and assembly incurred after importation into Canada
Les coûts de construction ,d'érection et d'assemblage après importation au Canada

(iii) Export packing
Le coût de l'emballage d'exportation

24. If not included in field 17 indicate amount:
Si non compris dans le total à la zone 17, précisez:

(i) Transportation charges, expenses, and insurance from the place of direct shipment to Canada
Les frais de transport, dépenses et assurances jusqu'au point d'expédition directe vers le Canada

(ii) Amounts for commissions other than buying commissions
Les commissions autres que celles versées pour l'achat

(iii) Export packing
Le coût de l'emballage d'exportation

25. Check (if applicable):
Cochez (s'il y a lieu):

(i) Royalty payments or subsequent proceeds are paid or payable by the purchaser
Des redevances ou produits ont été ou seront versés par l'acheteur ☐

(ii) The purchaser has supplied goods or services for use in the production of these goods
L'acheteur a fourni des marchandises ou des services pour la production de ces marchandises ☐

AMERICAN ALLOY STEEL, INC.
6230 N Houston-Rosslyn
P.O. Box 40469
HOUSTON, TX 77240-0469
PHONE (713) 462-8081 FAX (713) 462-0527

PINVOICE NO. 3051001-1

DATE: 03/05/2021

SHOP ORDER: 677336 ORDER LOC: TX ORDER DATE: 02/12/2021

SOLD TO: 308500 PHONE: 1-902-429-0272
INUKSHUK CONSTRUCTION LIMITED
1869 UPPER WATER STREET SUITE AH202
HALIFAX, NS B3J 1S9
CANADA
FAX: 1-902-429-7762

SHIP TO: 3
TECHFORM-MONTAL
3139 BOUL DES ENTREPRISES
TERREBONNE, QC
J6X 4J9
CANADA

CUST PO NO	BUYER NAME	---SALESMEN----
341-1001-TX	M.LOSIER	FCL/SEL/ /CAN

FOB POINT	SHIP VIA	TERMS	FED ID
DELIVERED	ITM	PPD	74-1688398

SHIPPING REF	MTRs REQD W/INV	W/SHP	SHIP WGT	PARTIAL OK	REQD SHIP
	0	1	44924	N	04/05/2021

ITEM	QTY	THKNSS	MATERIAL/ITEM DESCRIPTION	PRC EACH	PRC EXTD
			ASME SA 516 GRADE 70, KILLED, FINE GRAIN, NORMALIZED		
1	11	5/16"	96" X 480"	3349.00	36839.00

TOTAL AMOUNT (excl applicable taxes) 36839.00 USD

Please examine the above carefully and notify your American Alloy Steel salesman of any changes, otherwise the order will be shipped as shown.

UNITED STATES–MEXICO–CANADA AGREEMENT (USMCA)

CERTIFICATE OF ORIGIN

1. CERTIFIER NAME AND ADDRESS: DANIEL VENEGAS 6230 NORTH HOUSTON ROSSLYN ROAD HOUSTON, TX 77040 TEL:713-462-8081 EMAIL:DANIEL@AASTEEL.COM TAX ID NUMBER: 1-74-1688398-5	2. EXPORTER NAME AND ADDRESS: AMERICAN ALLOY STEEL, INC. 6230 NORTH HOUSTON ROSSLYN ROAD HOUSTON, TX 77040 TEL:713-462-8081 FAX:713-462-1638 TAX ID NUMBER: 1-74-1688398-5
3. PRODUCER NAME AND ADDRESS: NUCOR PLATE MILL P.O. BOX 279 WINTON, NC 27986 USA TEL: N/A EMAIL: N/A TAX ID NUMBER: N/A	4. IMPORTER NAME AND ADDRESS: AMERICAN ALLOY STEEL 6230 N. HOUSTON ROSSLYN RD. HOUSTON, TX 77091 USA TEL: N/A EMAIL: N/A TAX ID NUMBER: N/A

5. DESCRIPTION OF GOOD(S): STEEL PLATE SO# 677336 PO# 341-1001-TX	6. H.S. TARIFF CLASSIFICATION NUMBER	7. ORIGIN CRITERION	8. COUNTRY OF ORIGIN
ITEM# 1 – 9 PCS 5/16" x 96" x 480"	7208.51.0030	B	USA

I CERTIFY THAT:

-THE GOODS DESCRIBED IN THIS DOUCUMENT QUALIFY AS ORIGINATING AND THE INFORMATION CONTAINED IN THIS DOCUMENT IS TRUE AND ACCURATE. I ASSUME RESPONSIBILITY FOR PROVING SUCH REPRESENTATIONS AND AGREE TO MAINTAIN AND PRRESENT UPON REQUEST OR TO MAKE AVAILABLE DURING A VERIFICATION VISIT, DOCUMENTATION NECESSARY TO SUPPORT THIS CERTIFICATION.

-THIS CERTIFICATE CONSISTS OF ___ PAGES, INCLUDING ALL ATTACHMENTS.

9. CERTIFIER'S SIGNATURE: Daniel Venegas	COMPANY NAME: AMERICAN ALLOY STEEL, INC.
CERTIFIER'S NAME: DANIEL VENEGAS	CERTIFIER'S TITLE: Traffic Coordinator
DATE: 03/05/2021	CERTIFIER TYPE (IMPORT, EXPORTER, PRODUCER): EXPORTER

UNITED STATES–MEXICO–CANADA AGREEMENT (USMCA)

CERTIFICATE OF ORIGIN

1. CERTIFIER NAME AND ADDRESS:	2. EXPORTER NAME AND ADDRESS:
DANIEL VENEGAS 6230 NORTH HOUSTON ROSSLYN ROAD HOUSTON, TX 77040 TEL:713-462-8081 EMAIL:DANIEL@AASTEEL.COM TAX ID NUMBER: 1-74-1688398-5	AMERICAN ALLOY STEEL, INC. 6230 NORTH HOUSTON ROSSLYN ROAD HOUSTON, TX 77040 TEL:713-462-8081 FAX:713-462-1638 TAX ID NUMBER: 1-74-1688398-5
3. PRODUCER NAME AND ADDRESS:	4. IMPORTER NAME AND ADDRESS:
ARCELORMITTAL BURNS HARBOR PLATE US HWY 12 BURNS HARBOR, IN USA TEL: N/A EMAIL: N/A TAX ID NUMBER: N/A	AMERICAN ALLOY STEEL 6230 N. HOUSTON ROSSLYN RD. HOUSTON, TX 77091 USA TEL: N/A EMAIL: N/A TAX ID NUMBER: N/A

5. DESCRIPTION OF GOOD(S): STEEL PLATE SO# 677336 PO# 341-1001-TX	6. H.S. TARIFF CLASSIFICATION NUMBER	7. ORIGIN CRITERION	8. COUNTRY OF ORIGIN
ITEM# 1 – 2 PCS 5/16" x 96" x 480"	7208.51.0030	B	USA

I CERTIFY THAT:

-THE GOODS DESCRIBED IN THIS DOUCUMENT QUALIFY AS ORIGINATING AND THE INFORMATION CONTAINED IN THIS DOCUMENT IS TRUE AND ACCURATE. I ASSUME RESPONSIBILITY FOR PROVING SUCH REPRESENTATIONS AND AGREE TO MAINTAIN AND PRRESENT UPON REQUEST OR TO MAKE AVAILABLE DURING A VERIFICATION VISIT, DOCUMENTATION NECESSARY TO SUPPORT THIS CERTIFICATION.

-THIS CERTIFICATE CONSISTS OF ___ PAGES, INCLUDING ALL ATTACHMENTS.

9. CERTIFIER'S SIGNATURE: Daniel Venegas	COMPANY NAME: AMERICAN ALLOY STEEL, INC.
CERTIFIER'S NAME: DANIEL VENEGAS	CERTIFIER'S TITLE: Traffic Coordinator
DATE: 03/05/2021	CERTIFIER TYPE (IMPORT, EXPORTER, PRODUCER): EXPORTER

AMERICAN ALLOY STEEL, INC.
6230 N. HOUSTON ROSSLYN ROAD
HOUSTON, TEXAS 77091
Phone: 713-462-8081 Fax: 713-462-8209

M.T.R. COVER SHEET
03/05/2021

Customer Name : INUKSHUK CONSTRUCTION LIMITED
Address :
City, State Zip : HALIFAX, NS B3J 1S9
Attention : M.LOSIER
Phone Number : 1-902-429-0272
Reference Number : 677336
Notes 1 : P.O. NO. 341-1001-TX

Control Number: 1088263
Queued By : Alex Garza
Page Number : 1
Total Pages : 26
Fax Number : 1-902-429-7762

THE INFORMATION YOU REQUESTED IS ATTACHED.
THANK YOU FOR YOUR BUSINESS !

AASI PLATE NUMBER	HEAT # / SLAB #	MILL
5236104	813S60780 T030117	MITTAL
5236105	813S60780 T030115	MITTAL
5237388	0604883 06	NUCOR PLATE
5237389	0602533 08	NUCOR PLATE
5237390	1600012 02	NUCOR PLATE
5237391	1600011 08	NUCOR PLATE
5237392	1600011 08	NUCOR PLATE
5237393	0602533 08	NUCOR MILL
5237394	1600012 03	NUCOR MILL
5237395	1600012 03	NUCOR MILL
5237396	0602533 08	NUCOR MILL

03/05/2021 From: AMERICAN ALLOY STEEL, INC. To: INUKSHUK CONSTRUCTION LIMITED
P.O.#: 341-1001-TX S.O.#: 677336 AA PL#: 5236104
Item: 1 (1 PC) 5/16" X 96" X 480"

ArcelorMittal Burns Harbor Plate

QUALITY ASSURANCE
REPORT OF TEST AND ANAYLSES

US HWY 12 Burns Harbor, Indiana

SHIPMENT NO.	DATE SHIPPED	CAR OR VEHICLE NO.
803-69103	01-28-21	IHB-MCCOO-BNSF LMIC 007204

SOLD TO:
AMERICAN ALLOY STEEL INC
PO BOX 40469
HOUSTON TX 77240-0469

SHIP TO:
AMERICAN ALLOY STEEL INC
BNSF TR# 7226 MILE 66.4 LN SEG 492
6230 N HOUSTON ROSSLYN RD
HOUSTON TX 77091-3410

NOTE	SERIAL NUMBER	PAT NO.	HEAT NUMBER	NO. PCS.	SIZE AND QUANTITY THICKNESS	WIDTH OR DIA.	LENGTH	WEIGHT	YIELD POINT	TENSILE STRENGTH	AF FRAC. ELONG.	RED.
					INCHES	INCHES	INCHES	POUNDS	PSI	PSI	IN	% %

QUALITY STEEL MELTED & MANUFACTURED IN THE U. S. A.
PLATES - ASTM A516-17 GR 70 PVQ KLD FINE GRAIN PRAC, ASTM A516-17 GR 65 PVQ, ASTM A516-17 GR 60 PVQ, ASME SA516 GR 70 PVQ 2019 EDITION, ASME SA516 GR 65 PVQ 2019 EDITION, ASME SA516 GR 60 PVQ 2019 EDITION, CH-V SA20S5 PLT L 15/12 FTLBS AT -50F, VACUUM DEGASSED --- PLT NORMALIZED & COOLED IN STILL AIR --- IN ACCORDANCE WITH EN 10204:2004 TYPE 3.1 10204:2004 TYPE 3.1
NO WELD REPAIR WAS PERFORMED ON BELOW PLATE(S)
CO# 125823 GH 377-1561A
PLATES HEAT TREATED - TEST SPECIMENS ATTACHED & YIELD STRENGTH @ .5% EUL
MERCURY IN ANY FORM HAS NOT BEEN USED IN THE PRODUCTION OF THIS ORDER

T030115	813S60780	2	5/16	96	480	8168	55800	76800	8	25
			N 1650 DEG F - 15 MIN							
(M55)MFST REF#:2										
T030116	813S60780	1	5/16	96	480	4084	53400	75300	8	26
			N 1650 DEG F - 15 MIN							
(M55)MFST REF#:2										
T030117 →	813S60780	2	5/16	96	480	8168	56400	77100	8	25
			N 1650 DEG F - 15 MIN							
(M55)MFST REF#:2										

Q-QUENCH TEMPERATURE T-TEMPER TEMPERATURE N-NORMALIZE TEMPERATURE

SERIAL NUMBER	PAT NO.	HEAT NUMBER	HARD BHN	BEND	THICKNESS INCHES	TYPE	SIZE	DIR	TEST TEMP F	CHARPY IMPACT ENERGY FT LBS 1	2	3	SHEAR(%) 1	2	3	LAT. EXP MILS 1	2	3
T030115		813S60780			.312	V	2/3	L	-50	73	87	65						
T030116		813S60780			.312	V	2/3	L	-50	119	77	81						
T030117		813S60780			.312	V	2/3	L	-50	122	74	39						

Certified a true copy of the original, retained in our file.
AMERICAN ALLOY STEEL, INC.
Reviewed By:
DO 3/5/21

HEAT NUMBER	CHEMICAL ANALYSIS C	Mn	P	S	Si	Cu	Ni	Cr	Mo	V	Ti	Al	B	Cb	N	Sn	MQUAID GRAIN SIZE
813S60780	.17	1.08	.013	.004	.34	3.212	.17	.03	.006	.002	.002	.039	.0002	.002	.003	.003	

AMERICAN ALLOY
PLATE # 5236104

I certify that the above results are a true and correct copy of actual results contained to records maintained by ArcelorMittal Burns Harbor and are in full compliance with the requirements of the specification cited above. This test report cannot be altered and must be transmitted intact with any subsequent third party test reports, if required.

BHPLTRPT.TIF

SUPV. QUALITY ASSURANCE

FARID HASSANI PER MWT

03/05/2021 From: AMERICAN ALLOY STEEL, INC. To: INUKSHUK CONSTRUCTION LIMITED
P.O.#: 341-1001-TX S.O.#: 677336 AA PL#: 5236105
Item: 1 (1 PC) 5/16" X 96" X 480"

ArcelorMittal Burns Harbor Plate

QUALITY ASSURANCE
REPORT OF TEST AND ANAYLSES

US HWY 12 Burns Harbor, Indiana

SHIPMENT NO.	DATE SHIPPED	CAR OR VEHICLE NO.
803-69103	01-28-21	THB-MCCOO-BNSF LMIC 007204

SOLD TO:
AMERICAN ALLOY STEEL INC
PO BOX 40469
HOUSTON TX 77240-0469

SHIP TO:
AMERICAN ALLOY STEEL INC
BNSF TR# 7226 MILE 66.4 LN SEG 492
6230 N HOUSTON ROSSLYN RD
HOUSTON TX 77091-3410

NOTE	SERIAL NUMBER	PAT NO.	HEAT NUMBER	NO. PCS.	SIZE AND QUANTITY: THICKNESS	WIDTH OR DIA.	LENGTH	WEIGHT	YIELD POINT	TENSILE STRENGTH	AF FRAC. ELONG.	RED.
					INCHES	INCHES	INCHES	POUNDS	PSI	PSI	IN	% %

QUALITY STEEL MELTED & MANUFACTURED IN THE U. S. A.
PLATES - ASTM A516-17 GR 70 PVQ KLD FINE GRAIN PRAC, ASTM A516-17 GR 65 PVQ, ASTM A516-17 GR 60 PVQ, ASME SA516 GR 70 PVQ 2019 EDITION, ASME SA516 GR 65 PVQ 2019 EDITION, ASME SA516 GR 60 PVQ 2019 EDITION, CH-V SA20S5 PLT L 15/12 FTLBS AT -50F, VACUUM DEGASSED --- PLT NORMALIZED & COOLED IN STILL AIR --- IN ACCORDANCE WITH EN 10204:2004 TYPE 3.1 10204:2004 TYPE 3.1
NO WELD REPAIR WAS PERFORMED ON BELOW PLATE(S)
CO# 125823 GH 377-1561A
PLATES HEAT TREATED - TEST SPECIMENS ATTACHED & YIELD STRENGTH @ .5% EUL
MERCURY IN ANY FORM HAS NOT BEEN USED IN THE PRODUCTION OF THIS ORDER

T030115 →	813860780	2	5/16	96	480		8168	55800	76800	8	25	
			N 1650 DEG F - 15 MIN									
(M55)MFST REF#:2												
T030116	813860780	1	5/16	96	480		4084	53400	75300	8	26	
			N 1650 DEG F - 15 MIN									
(M55)MFST REF#:2												
T030117	813860780	2	5/16	96	480		8168	56400	77100	8	25	
			N 1650 DEG F - 15 MIN									
(M55)MFST REF#:2												

Q-QUENCH TEMPERATURE T-TEMPER TEMPERATURE N-NORMALIZE TEMPERATURE

SERIAL NUMBER	PAT NO.	HEAT NUMBER	HARD BHN	BEND	THICKNESS INCHES	TYPE	SIZE	DIR	TEST TEMP F	CHARPY IMPACT ENERGY FT LBS 1	2	3	BHEAR(%) 1	2	3	LAT. EXP MILS 1	2	3
T030115		813860780			.312	V	2/3	L	-50	73	87	69						
T030116		813860780			.312	V	2/3	L	-50	119	77	81						
T030117		813860780			.312	V	2/3	L	-50	122	74	39						

Certified a true copy of the original, retained in our file.
AMERICAN ALLOY STEEL, INC.
Reviewed By:
D03/16/21

HEAT NUMBER	CHEMICAL ANALYSIS C	Mn	P	S	Si	Cu	Ni	Cr	Mo	V	Ti	Al	B	Cb	N	Sn	MQUAID GRAIN SIZE
813860780	.17	1.08	.013	.004	.34	3.212	.17	.03	.006	.002	.002	.039	.0002	.002	.003	.003	

AMERICAN ALLOY PLATE # 5236105

I certify that the above results are a true and correct copy of actual results contained in records maintained by ArcelorMittal Burns Harbor and are in full compliance with the requirements of the specification cited above. This test report cannot be altered and must be transmitted intact with any subsequent third party test reports, if required.

BHPLTRPT.TIF

FARID HASSANI PER MVT
SUPV. QUALITY ASSURANCE

03/05/2021 From: AMERICAN ALLOY STEEL, INC. To: INUKSHUK CONSTRUCTION LIMITED
P.O.#: 341-1001-TX S.O.#: 677336 AA PL#: 5237388
Item: 1 (1 PC) 5/16" X 96" X 480"

NUCOR PLATE MILL
P.O.Box 279
Winton, NC 27986
(252) 356-3700

Mill Test Report

AMERICAN ALLOY PLATE #223728

1505 River Rd
Cofield, NC 27922
(252) 356-3700

NUCOR It's Our Nature

Issuing Date: 01/02/2021 B/L No. : 578134
Vehicle No: TTPX 804057
Load No. : 591370 Our Order No. : 184010/1
Specification: 0.3125" x 96.000" x 480.000"
ASTM A516 70/65/60-17/ASMESA516-70/65/60 PVQ 2019/2017
Normalized Plate NACEMR0175 Annex 2.1.2 (2015), MR0103 (2010)
Section 2.1.2 Compliant (2015) 13.1.1, 13.1.2) Vacuum Degassed
Marking: 125988

Sold To: AMERICAN ALLOY STEEL INC
6230 N HOUSTON ROSSLYN RD
PO BOX 40489
NORTH HOUSTON,TX 77091

Cust. Order No. : 125988

Ship To: AMERICAN ALLOY STEEL
6230 N HOUSTON ROSSLYN RD
BNSF TR # 7226
MILE664 LN SEG 492
NORTH HOUSTON,TX 77091

Heat No	C	Mn	P	S	Si	Cu	Ni	Cr	Mo	Al(tot)	V	Nb	Ti	N	Ca	B	Sn	Ceq	Pcm
0602533	0.19	1.06	0.012	0.001	0.22	0.13	0.09	0.07	0.01	0.024	0.005	0.002	0.002	0.0049	0.0014	0.0001	0.009	0.40	0.27
0604883	0.18	1.06	0.008	0.002	0.20	0.18	0.09	0.09	0.02	0.036	0.006	0.001	0.003	0.0060	0.0023	0.0001	0.006	0.40	0.28

Tensile Test

Plate Serial No	Pieces	Tons	Dir.	Yield (psi)	Tensile (psi)	Elong. % in 2"	Elong. % in 8"
0602533-08	1	2.04	H-T	52,800	76,700	38.5	
0604883-06	2	4.08	H-T	51,500	74,000	38.6	

Heat Treat

Norm (°F)	Time (min)	Temper (°F)	Time (min)
1650	16		
1650	16		

Charpy Impacts

Plate Serial No	Pieces	Tons	Dir.	Absorbed Energy (Ft-lbs) (ft-lbs) 1	(ft-lbs) 2	(ft-lbs) 3	(ft-lbs) Ave	Min	Lateral Expansion (in.) (in.) 1	(in.) 2	(in.) 3	(in.) Ave	(in.) Min	Shear (%) (%) 1	(%) 2	(%) 3	(%) Ave	Min	Temp (°F)	Size
0602533-08	1	2.04	H-L	91.7	102.0	111.0	101.6	15											-50	10mm
0604883-06	2	4.08	H-L	33.2	43.0	44.1	40.1	15											-50	6.67mm

Certified a true copy of the original, retained in our file.
AMERICAN ALLOY STEEL
JK 1/25/2021

HOT ROLLED CARBON STEEL PLATE
TEST COUPONS TAKEN FROM HEAT TREATED PLATE
Piece frequency charpy;

Manufactured to fully killed fine grain practice by Electric Arc Furnace. Welding or weld repair was not performed on this material. Mercury has not been used in the direct manufacturing of this material. Produced as continuous cast discrete plate, unless otherwise noted in Specification. For Mexico shipments: nhc-SalesMX@nucor.com
Yield by 0.5EUL method unless otherwise specified. Ceq = C+(Mn/6)+((Cr+Mo+V)/5)+((Cu+Ni)/15)
Pcm = C+(Si/30)+(Mn/20)+(Cu/20)+(Ni/60)+(Cr/20)+(Mo/15)+(V/10)+5B
Melted and Manufactured in the USA. ISO 9001:2015 certified. PED 97/23/EC 7/2 Annex 1, Para. 4.3 Compliant.
DIN 50049 3.1.B/EN 10204 3.1B(2004), DIN EN 10204 3.1(2006) compliant. For ABS grades only, Quality Assurance certificate QA-3824366

We hereby certify that the contents of this report are accurate and correct. All test results and operations performed by the material manufacturer are in compliance with the applicable specifications, including customer specifications.

T. A. Depretis

T. A. Depretis, Metallurgist

1/2/2021 3:02:49 PM

03/05/2021 From:AMERICAN ALLOY STEEL, INC. TO: INUKSHUK CONSTRUCTION LIMITED
P.O.#: 341-1001-TX S.O.#: 677336 AA PL#: 5237389
Item: 1 (1 PC) 5/16" X 96" X 480"

NUCOR
PLATE MILL

P.O.Box 279
Winton, NC 27986
(252) 356-3700

Mill Test Report

1505 River Rd
Cofield, NC 27922
(252) 356-3700

AMERICAN ALLOY
PLATE #2237389

NUCOR
It's Our Nature.

Issuing Date: 01/02/2021 B/L No. : 578134
Vehicle No: TTPX 804057
Specification: 0.3125" x 96.000" x 480.000"
ASTM A516 70/65/60-17/ASMESA516-70/65/60 PVQ 2018/2017
Normalized Plate NACEMR0175 Annex 2.1.2 (2015), MR0103 (2010)
Section 2.1.2 Compliant (2015) 13.1.1, 13.1.2) Vacuum Degassed
Marking: 125998

Load No. : 591370 Our Order No. : 184016/1

Sold To: AMERICAN ALLOY STEEL INC
6230 N HOUSTON ROSSLYN RD
PO BOX 40469
NORTH HOUSTON,TX 77091

Cust. Order No. : 125998

Ship To: AMERICAN ALLOY STEEL
6230 N HOUSTON ROSSLYN RD
BNSF TR # 7226
MILE664 LN SEG 492
NORTH HOUSTON,TX 77091

Heat No	C	Mn	P	S	Si	Cu	Ni	Cr	Mo	Al(tot)	V	Nb	Ti	N	Ca	B	Sn	Ceq	Pcm
0602533	0.19	1.06	0.012	0.001	0.22	0.13	0.09	0.07	0.01	0.024	0.005	0.002	0.002	0.0049	0.0014	0.0001	0.009	0.40	0.27
0604883	0.18	1.06	0.008	0.002	0.20	0.18	0.09	0.09	0.02	0.036	0.006	0.001	0.003	0.0080	0.0023	0.0001	0.008	0.40	0.28

Tensile Test

Plate Serial No	Pieces	Tons	Dir.	Yield (psi)	Tensile (psi)	Elong. % in 2"	Elong. % in 8"
0602533-08	1	2.04	H-T	62,800	76,700	38.5	
0604883-08	2	4.08	H-T	51,500	74,000	38.6	

Heat Treat

Norm (°F)	Time (min)	Temper (°F)	Time (min)
1650	16		
1650	16		

Charpy Impacts

Plate Serial No	Pieces	Tons	Dir.	Absorbed Energy (Ft-lbs) 1	(ft-lbs) 2	(ft-lbs) 3	(ft-lbs) Ave	Min	Lateral Expansion (in.) 1	(in.) 2	(in.) 3	(in.) Ave	(in.) Min	Shear (%) 1	(%) 2	(%) 3	(%) Ave	Min	Temp (°F)	Size
0602533-08	1	2.04	H-L	91.7	102.0	111.0	101.6	15											-50	10mm
0604883-08	2	4.08	H-L	33.2	43.0	44.1	40.1	15											-50	6.67mm

HOT ROLLED CARBON STEEL PLATE
TEST COUPONS TAKEN FROM HEAT TREATED PLATE
Place frequency charpy;

Manufactured to fully killed fine grain practice by Electric Arc Furnace. Welding or weld repair was not performed on this material.
Mercury has not been used in the direct manufacturing of this material. Produced as continuous cast discrete plate, unless otherwise noted in Specification. For Mexico shipments:nhc-SalesMX@nucor.com
Yield by 0.5EUL method unless otherwise specified. Ceq = C+(Mn/6)+((Cr+Mo+V)/5)+((Cu+Ni)/15)
Pcm = C+(Si/30)+(Mn/20)+(Cu/20)+(Ni/60)+(Cr/20)+(Mo/15)+(V/10)+5B
Melted and Manufactured in the USA. ISO 9001:2015 certified. PED 97/23/EC 7/2 Annex 1, Para. 4.3 Compliant.
DIN 50049 3.1.B/EN 10204 3.1B(2004). DIN EN 10204 3.1(2005) compliant. For ABS grades only, Quality Assurance certificate QA-3624366

We hereby certify that the contents of this report are accurate and correct. All test results and operations performed by the material manufacturer are in compliance with the applicable specifications, including customer specifications.

T. A. Depretis

T. A. Depretis, Metallurgist

1/2/2021 3:02:49 PM

Certified a true copy of the original, retained in our file.
AMERICAN ALLOY STEEL
JK 1/25/2021

03/05/2021 From: AMERICAN ALLOY STEEL, INC. To: INUKSHUK CONSTRUCTION LIMITED
P.O.#: 341-1001-TX S.O.#: 677336 AA PL#: 5237390
Item: 1 (1 PC) 5/16" X 96" X 480"

AMERICAN ALLOY
PLATE #5237390

NUCOR
PLATE MILL

P.O.Box 279
Winton, NC 27986
(252) 356-3700

Mill Test Report

1505 River Rd
Cofield, NC 27922
(252) 356-3700

NUCOR
It's Our Nature

Issuing Date: 01/17/2021 BL No.: 579490 Load No.: 592195 Our Order No.: 184010/1 Cust. Order No.: 125996

Vehicle No: ALY 91698

Specification: 0.3125" x 96.000" x 480.000"
ASTM A516 70/65/60-17/ASMESA516-70/65/60 PVQ 2019/2017
Normalized Plate NACEMR0175 Annex 2.1.2 (2015), MR0103 (2010)
Section 2.1.2 Compliant (2015) 13.1.1, 13.1.2) Vacuum Degassed

Marking: 125996

Sold To: AMERICAN ALLOY STEEL INC
6230 N HOUSTON ROSSLYN RD
PO BOX 40469
NORTH HOUSTON,TX 77091

Ship To: AMERICAN ALLOY STEEL
6230 N HOUSTON ROSSLYN RD
BNSF TR # 7226
MILE 684 LN SEG 492
NORTH HOUSTON,TX 77091

Heat No	C	Mn	P	S	Si	Cu	Ni	Cr	Mo	Al(tot)	V	Nb	Ti	N	Ca	B	Sn	Ceq	Pcm
1600011	0.19	1.04	0.011	0.001	0.19	0.23	0.09	0.12	0.02	0.027	0.004	0.003	0.002	0.0048	0.0015	0.0003	0.009	0.42	0.27
1600012	0.18	1.04	0.008	0.001	0.17	0.22	0.10	0.09	0.02	0.033	0.004	0.003	0.002	0.0089	0.0021	0.0003	0.009	0.40	0.26

			Tensile Test				Heat Treat			
Plate Serial No	Pieces	Tons	Dir.	Yield (psi)	Tensile (psi)	Elong. % in 2"	Elong. % in 8"	Norm (°F)	Time (min)	Temper (°F)	Time (min)
1600011-08	2	4.08	H-T	53,900	78,200	37.6		1650	16		
1600012-02	1	2.04	H-T	54,800	79,900	37.2		1650	16		

			Charpy Impacts															
			Absorbed Energy (Ft-lbs)					Lateral Expansion (in.)					Shear (%)					
Plate Serial No	Pieces	Tons	Dir.	(ft-lbs) 1	(ft-lbs) 2	(ft-lbs) 3	(ft-lbs) Ave	Min	(in.) 1	(in.) 2	(in.) 3	(in.) Ave	(in.) Min	(%) 1	(%) 2	(%) 3	(%) Ave	Min	Temp (°F)	Size
1600011-08	2	4.08	H-L	31.0	29.7	30.7	30.5	15											-50	5mm
1600012-02	1	2.04	H-L	31.2	33.6	30.4	31.7	15											-50	10mm

Certified a true copy of the original, retained in our file.
AMERICAN ALLOY STEEL
J.k 2/12/2021

HOT ROLLED CARBON STEEL PLATE
TEST COUPONS TAKEN FROM HEAT TREATED PLATE
Piece frequency charpy:

Manufactured to fully killed fine grain practice by Electric Arc Furnace. Welding or weld repair was not performed on this material. Mercury has not been used in the direct manufacturing of this material. Produced as continuous cast discrete plate, unless otherwise noted in Specification. For Mexico shipments: nhc-SalesMX@nucor.com
Yield by 0.5EUL method unless otherwise specified. Ceq = C+(Mn/6)+((Cr+Mo+V)/5)+((Cu+Ni)/15)
Pcm = C+(Si/30)+(Mn/20)+(Cu/20)+(Ni/60)+(Cr/20)+(Mo/15)+(V/10)+5B
Melted and Manufactured in the USA. ISO 9001:2015 certified. PED 97/23/EC 7/2 Annex 1, Para. 4.3 Compliant.
DIN 50049 3.1.B/EN 10204 3.1B(2004), DIN EN 10204 3.1(2005) compliant. For ABS grades only, Quality Assurance certificate QA-3624365

We hereby certify that the contents of this report are accurate and correct. All test results and operations performed by the material manufacturer are in compliance with the applicable specifications, including customer specifications.

T. A. Depratis, Metallurgist

1/17/2021 10:03:28 AM

03/05/2021 From:AMERICAN ALLOY STEEL, INC. To: INUKSHUK CONSTRUCTION LIMITED
P.O.#: 341-1001-TX S.O.#: 677336 AA PL#: 5237391
Item: 1 (1 PC) 5/16" X 96" X 480"

AMERICAN ALLOY
PLATE #5237391

NUCOR
PLATE MILL

P.O.Box 279
Winton, NC 27986
(252) 358-3700

Mill Test Report

1505 River Rd
Cofield, NC 27922
(252) 358-3700

NUCOR
It's Our Nature

Issuing Date: 01/17/2021 B/L No.: 579480 Load No.: 582195 Our Order No.: 184010/1 Cust. Order No.: 125998

Vehicle No: ALY91698

Specification: 0.3125" x 96.000" x 480.000"
ASTM A516 70/65/60-17/ASME SA516-70/65/60 PVQ 2019/2017
Normalized Plate NACE MR0175 Annex 2.1.2 (2015), MR0103 (2010)
Section 2.1.2 Compliant (2015) 13.1.1, 13.1.2) Vacuum Degassed

Marking: 125998

Sold To: AMERICAN ALLOY STEEL INC
6230 N HOUSTON ROSSLYN RD
PO BOX 40469
NORTH HOUSTON,TX 77091

Ship To: AMERICAN ALLOY STEEL
6230 N HOUSTON ROSSLYN RD
BNSF TR # 7226
MILE 664 LN SEG 492
NORTH HOUSTON,TX 77091

Heat No	C	Mn	P	S	Si	Cu	Ni	Cr	Mo	Al(tot)	V	Nb	Ti	N	Ca	B	Sn	Ceq	Pcm
1600011	0.19	1.04	0.011	0.001	0.19	0.23	0.09	0.12	0.02	0.027	0.004	0.003	0.002	0.0048	0.0015	0.0003	0.009	0.42	0.27
1600012	0.18	1.04	0.008	0.001	0.17	0.22	0.10	0.09	0.02	0.033	0.004	0.003	0.002	0.0069	0.0021	0.0003	0.009	0.40	0.26

Plate Serial No	Pieces	Tons	Tensile Test Dir.	Yield (psi)	Tensile (psi)	Elong. % in 2"	Elong. % in 8"	Heat Treat Norm (°F)	Time (min)	Temper (°F)	Time (min)
1600011-08	2	4.08	H-T	53,900	78,200	37.6		1650	16		
1600012-02	1	2.04	H-T	54,800	79,900	37.2		1650	16		

Plate Serial No	Pieces	Tons	Charpy Impacts Dir.	Absorbed Energy (Ft-lbs) (ft-lbs) 1	(ft-lbs) 2	(ft-lbs) 3	(ft-lbs) Ave	Min	Lateral Expansion (in.) (in.) 1	(in.) 2	(in.) 3	(in.) Ave	(in.) Min	Shear (%) (%) 1	(%) 2	(%) 3	(%) Ave	Min	Temp (°F)	Size
1600011-08	2	4.08	H-L	31.0	29.7	30.7	30.5	15											-50	5mm
1600012-02	1	2.04	H-L	31.2	33.6	30.4	31.7	15											-50	10mm

Certified a true copy of the original, retained in our file.
AMERICAN ALLOY STEEL
J.k 2/12/2021

HOT ROLLED CARBON STEEL PLATE
TEST COUPONS TAKEN FROM HEAT TREATED PLATE
Piece frequency charpy;

Manufactured to fully killed fine grain practice by Electric Arc Furnace. Welding or weld repair was not performed on this material. Mercury has not been used in the direct manufacturing of this material. Produced as continuous cast discrete plate, unless otherwise noted in Specification. For Mexico shipments:nhc-SalesMX@nucor.com
Yield by 0.5EUL method unless otherwise specified. Ceq = C+(Mn/6)+((Cr+Mo+V)/5)+((Cu+Ni)/15)
Pcm = C+(Si/30)+(Mn/20)+(Cu/20)+(Ni/60)+(Cr/20)+(Mo/15)+(V/10)+5B
Melted and Manufactured in the USA. ISO 9001:2015 certified. PED 97/23/EC 7/2 Annex 1, Para. 4.3 Compliant:
DIN 50049 3.1.B/EN 10204 3.1B(2004), DIN EN 10204 3.1(2005) compliant. For ABS grades only, Quality Assurance certificate QA-3824306

We hereby certify that the contents of this report are accurate and correct. All test results and operations performed by the material manufacturer are in compliance with the applicable specifications, including customer specifications.

T. A. Deprete

T. A. Deprete, Metallurgist

1/17/2021 10:03:29 AM

03/05/2021 From: AMERICAN ALLOY STEEL, INC. "To: INUKSHUK CONSTRUCTION LIMITED
P.O.#: 341-1001-TX S.O.#: 677336 AA PL#: 5237392
Item: 1 (1 PC) 5/16" X 96" X 480"

AMERICAN ALLOY
PLATE #5237392

NUCOR
PLATE MILL

P.O.Box 278
Winton, NC 27986
(252) 356-3700

Mill Test Report

1505 River Rd
Cofield, NC 27922
(252) 356-3700

NUCOR
It's Our Nature

Issuing Date: 01/17/2021 Bill. No. : 579490 Load No. : 592195 Our Order No. : 184010/1 Cust. Order No. : 125998

Vehicle No: ALY 91698

Specification: 0.3125" x 96.000" x 480.000"
ASTM A516 70/65/60-17/ASME SA516-70/65/60 PVQ 2019/2017
Normalized Plate NACE MR0175 Annex 2.1.2 (2015), MR0103 (2010)
Section 2.1.2 Compliant (2015) 13.1.1, 13.1.2) Vacuum Degassed

Marking: 125998

Sold To: AMERICAN ALLOY STEEL INC
6230 N HOUSTON ROSSLYN RD
PO BOX 40469
NORTH HOUSTON,TX 77091

Ship To: AMERICAN ALLOY STEEL
6230 N HOUSTON ROSSLYN RD
BNSF TR # 7226
MILE 664 LN SEG 402
NORTH HOUSTON,TX 77091

Heat No	C	Mn	P	S	Si	Cu	Ni	Cr	Mo	Al(tot)	V	Nb	Ti	N	Ca	B	Sn	Ceq	Pcm
1600011	0.19	1.04	0.011	0.001	0.19	0.23	0.09	0.12	0.02	0.027	0.004	0.003	0.002	0.0048	0.0016	0.0003	0.009	0.42	0.27
1600012	0.19	1.04	0.008	0.001	0.17	0.22	0.10	0.09	0.02	0.033	0.004	0.003	0.002	0.0089	0.0021	0.0003	0.009	0.40	0.28

Plate Serial No	Pieces	Tons	Tensile Test Dir.	Yield (psi)	Tensile (psi)	Elong. % in 2"	Elong. % in 8"	Heat Treat Norm (°F)	Time (min)	Temper (°F)	Time (min)
1600011-06	2	4.08	H-T	53,900	78,200	37.6		1650	16		
1600012-02	1	2.04	H-T	54,800	79,900	37.2		1650	16		

Plate Serial No	Pieces	Tons	Charpy Impacts Dir.	Absorbed Energy (Ft-lbs) 1	2	3	Ave	Min	Lateral Expansion (in.) 1	2	3	Ave	Min	Shear (%) 1	2	3	Ave	Min	Temp (°F)	Size
1600011-06	2	4.08	H-L	31.0	29.7	30.7	30.5	15											-50	5mm
1600012-02	1	2.04	H-L	31.2	33.6	30.4	31.7	15											-50	10mm

Certified a true copy of the original, retained in our file.
AMERICAN ALLOY STEEL
JK 2/12/2021

HOT ROLLED CARBON STEEL PLATE
TEST COUPONS TAKEN FROM HEAT TREATED PLATE
Place frequency charpy;

Manufactured to fully killed fine grain practice by Electric Arc Furnace. Welding or weld repair was not performed on this material. Mercury has not been used in the direct manufacturing of this material. Produced as continuous cast discrete plate, unless otherwise noted in Specification. For Mexico shipments: nhc-SalesMX@nucor.com
Yield by 0.6EUL method unless otherwise specified. Ceq = C+(Mn/6)+((Cr+Mo+V)/5)+((Cu+Ni)/15)
Pcm = C+(Si/30)+(Mn/20)+(Cu/20)+(Ni/60)+(Cr/20)+(Mo/15)+(V/10)+5B
Melted and Manufactured in the USA. ISO 9001:2015 certified. PED 97/23/EC 7/2 Annex 1, Para. 4.3 Compliant.
DIN 50049 3.1.B/EN 10204 3.1B(2004), DIN EN 10204 3.1(2005) compliant. For ABS grades only, Quality Assurance certificate QA-3624366

We hereby certify that the contents of this report are accurate and correct. All test results and operations performed by the material manufacturer are in compliance with the applicable specifications, including customer specifications.

T. A. Depretis

T. A. Depretis, Metallurgist

1/17/2021 10:03:29 AM

03/05/2021 From: AMERICAN ALLOY STEEL, INC. To: INUKSHUK CONSTRUCTION LIMITED
P.O.#: 341-1001-TX S.O.#: 677336 AA PL#: 5237393
Item: 1 (1 PC) 5/16" X 96" X 480"

AMERICAN ALLOY
PLATE # 5237393

NUCOR
PLATE MILL

P.O.Box 279
Winton, NC 27986
(252) 356-3700

Mill Test Report

1505 River Rd
Cofield, NC 27922
(252) 356-3700

NUCOR
It's Our Nature.

Issuing Date: 01/24/2021 B/L No. : 580221 Load No. : 593433 Our Order No. : 184010/1 Cust. Order No. : 125998

Vehicle No: TTPX 81308

Specification: 0.3125" x 96.000" x 480.000"
ASTM A516 70/65/60-17/ASME SA516-70/65/60 PV Q 2019/2017
Normalized Plate NACE MR0175 Annex 2.1.2 (2015), MR0103 (2010)
Section 2.1.2 Compliant (2015) 13.1.1, 13.1.2) Vacuum Degassed

Marking: 125998

Sold To: AMERICAN ALLOY STEEL INC
6230 N HOUSTON ROSSLYN RD
PO BOX 40469
NORTH HOUSTON,TX 77091

Ship To: AMERICAN ALLOY STEEL
6230 N HOUSTON ROSSLYN RD
BNSF TR # 7226
MILE 604 LN SEG 492
NORTH HOUSTON,TX 77091

Heat No	C	Mn	P	S	Si	Cu	Ni	Cr	Mo	Al(tot)	V	Nb	Ti	N	Ca	B	Sn	Ceq	Pcm
0802533	0.19	1.06	0.012	0.001	0.22	0.13	0.09	0.07	0.01	0.024	0.005	0.002	0.002	0.0049	0.0014	0.0001	0.009	0.40	0.27
1600012	0.16	1.04	0.008	0.001	0.17	0.22	0.10	0.09	0.02	0.033	0.004	0.003	0.002	0.0069	0.0021	0.0003	0.009	0.40	0.28

Plate Serial No	Pieces	Tons	Tensile Test Dir.	Yield (psi)	Tensile (psi)	Elong. % in 2"	Elong. % in 8"	Heat Treat Norm (°F)	Norm Time (min)	Temper (°F)	Temper Time (min)
0802533-08	2	4.08	H-T	52,800	76,700	38.5		1650	16		
1600012-03	2	4.08	H-T	53,200	78,300	33.9		1650	16		

Plate Serial No	Pieces	Tons	Charpy Impacts Dir.	Absorbed Energy (Ft-lbs) (ft-lbs) 1	(ft-lbs) 2	(ft-lbs) 3	(ft-lbs) Ave	Min	Lateral Expansion (in.) (in.) 1	(in.) 2	(in.) 3	(in.) Ave	(in.) Min	Shear (%) (%) 1	(%) 2	(%) 3	(%) Ave	Min	Temp (°F)	Size
0802533-08	2	4.08	H-L	91.7	102.0	111.0	101.6	15											-50	10mm
1600012-03	2	4.08	H-L	54.7	40.8	52.6	49.4	15											-50	5mm

Certified a true copy of the original, retained in our file.
AMERICAN ALLOY STEEL.
JH 3/4/2021

HOT ROLLED CARBON STEEL PLATE
TEST COUPONS TAKEN FROM HEAT TREATED PLATE
Piece frequency charpy;

Manufactured to fully killed fine grain practice by Electric Arc Furnace. Welding or weld repair was not performed on this material. Mercury has not been used in the direct manufacturing of this material. Produced as continuous cast discrete plate, unless otherwise noted in Specification. For Mexico shipments:nho-SalesMX@nucor.com
Yield by 0.5EUL method unless otherwise specified. Ceq = C+(Mn/6)+((Cr+Mo+V)/5)+((Cu+Ni)/15)
Pcm = C+(Si/30)+(Mn/20)+(Cu/20)+(Ni/60)+(Cr/20)+(Mo/15)+(V/10)+5B
Melted and Manufactured in the USA. ISO 9001:2015 certified. PED 97/23/EC 7/2 Annex 1, Para. 4.3 Compliant.
DIN 50049 3.1.B/EN 10204 3.1B(2004), DIN EN 10204 3.1(2005) compliant. For ABS grades only, Quality Assurance certificate QA-3624388

We hereby certify that the contents of this report are accurate and correct. All test results and operations performed by the material manufacturer are in compliance with the applicable specifications, including customer specifications.

T. A. Depretis

T. A. Depretis, Metallurgist

1/24/2021 4:10:30 PM

03/05/2021 From:AMERICAN ALLOY STEEL, INC. To: INUKSHUK CONSTRUCTION LIMITED
P.O.#: 341-1001-TX S.O.#: 677336 AA PL#: 5237394
Item: 1 (1 PC) 5/16" X 96" X 480"

AMERICAN ALLOY
PLATE #5237394

NUCOR
PLATE MILL

P.O.Box 279
Winton, NC 27986
(252) 356-3700

Mill Test Report

1505 River Rd
Cofield, NC 27922
(252) 356-3700

NUCOR
It's Our Nature

Issuing Date: 01/24/2021 Bill. No. : 580221 Load No. : 593433 Our Order No. : 184010/1 Cust. Order No. : 125986

Vehicle No: TTPX81308

Specification: 0.3125" x 96.000" x 480.000"
ASTM A516 70/65/60-17/ASMESA516-70/65/60 PVQ 2019/2017
Normalized Plate NACEMR0175 Annex 2.1.2 (2015), MR0103 (2018)
Section 2.1.2 Compliant (2015) 13.1.1, 13.1.2)Vacuum Degassed

Marking: 125986

Sold To: AMERICAN ALLOY STEEL INC
6230 N HOUSTON ROSSLYN RD
PO BOX 40469
NORTH HOUSTON,TX 77091

Ship To: AMERICAN ALLOY STEEL
6230 N HOUSTON ROSSLYN RD
BNSF TR # 7226
MILE664 LN SEG 492
NORTH HOUSTON,TX 77091

Heat No	C	Mn	P	S	Si	Cu	Ni	Cr	Mo	Al(tot)	V	Nb	Ti	N	Ca	B	Sn	Ceq	Pcm
0602533	0.19	1.06	0.012	0.001	0.22	0.13	0.09	0.07	0.01	0.024	0.005	0.002	0.002	0.0049	0.0014	0.0001	0.009	0.40	0.27
1600012	0.18	1.04	0.006	0.001	0.17	0.22	0.10	0.09	0.02	0.033	0.004	0.003	0.002	0.0069	0.0021	0.0003	0.009	0.40	0.26

Tensile Test / Heat Treat

Plate Serial No	Pieces	Tons	Dir.	Yield (psi)	Tensile (psi)	Elong. % in 2"	Elong. % in 8"	Heat Treat Norm (°F)	Norm Time (min)	Temper (°F)	Temper Time (min)
0602533-08	2	4.08	H-T	52,800	76,700	38.5					
→ 1600012-03	2	4.08	H-T	53,200	78,300	33.9		1650	16		
								1650	16		

Charpy Impacts

Plate Serial No	Pieces	Tons	Dir.	Absorbed Energy (Ft-lbs) (ft-lbs) 1	(ft-lbs) 2	(ft-lbs) 3	(ft-lbs) Ave	Min	Lateral Expansion (in.) (in.) 1	(in.) 2	(in.) 3	(in.) Ave	(in.) Min	Shear (%) (%) 1	(%) 2	(%) 3	(%) Ave	Min	Temp (°F)	Size
0602533-08	2	4.08	H-L	91.7	102.0	111.0	101.6	15											-50	10mm
1600012-03	2	4.08	H-L	54.7	40.8	52.6	49.4	15											-50	5mm

Certified a true copy of the original, retained in our file.
AMERICAN ALLOY STEEL.
JK 3/4/2024

HOT ROLLED CARBON STEEL PLATE
TEST COUPONS TAKEN FROM HEAT TREATED PLATE
Piece frequency charpy:

Manufactured to fully killed fine grain practice by Electric Arc Furnace. Welding or weld repair was not performed on this material.
Mercury has not been used in the direct manufacturing of this material. Produced as continuous cast discrete plate, unless otherwise noted in Specification. For Mexico shipments:nhc-SalesMX@nucor.com
Yield by 0.5EUL method unless otherwise specified. Ceq = C+(Mn/6)+((Cr+Mo+V)/5)+((Cu+Ni)/15)
Pcm = C+(Si/30)+(Mn/20)+(Cu/20)+(Ni/60)+(Cr/20)+(Mo/15)+(V/10)+5B
Melted and Manufactured in the USA. ISO 9001:2015 certified. PED 97/23/EC 7/2 Annex 1, Para. 4.3 Compliant.
DIN 50049 3.1.B/EN 10204 3.1B(2004), DIN EN 10204 3.1(2005) compliant. For ABS grades only, Quality Assurance certificate QA-3624368

We hereby certify that the contents of this report are accurate and correct. All test results and operations performed by the material manufacturer are in compliance with the applicable specifications, including customer specifications.

T. A. Dapratis, Metallurgist

1/24/2021 4:10:30 PM

03/05/2021 From: AMERICAN ALLOY STEEL, INC. To: INUKSHUK CONSTRUCTION LIMITED
P.O.#: 341-1001-TX S.O.#: 677336 AA PL#: 5237395
Item: 1 (1 PC) 5/16" X 96" X 480"

AMERICAN ALLOY
PLATE #5237395

NUCOR
PLATE MILL

P.O.Box 279
Winton, NC 27986
(252) 356-3709

Mill Test Report

1505 River Rd
Cofield, NC 27922
(252) 356-3709

NUCOR
It's Our Nature.

Issuing Date: 01/24/2021 B/L No.: 580221 Load No.: 593433 Our Order No.: 184010/1 Cust. Order No.: 125988

Vehicle No: TTPX81308

Specification: 0.3125" x 96.000" x 480.000"
ASTM A516 70/65/60-17/ASME SA516-70/65/60 PVQ 2019/2017
Normalized Plate NACE MR0175 Annex 2.1.2 (2015), MR0103 (2010)
Section 2.1.2 Compliant (2015) 13.1.1, 13.1.2) Vacuum Degassed

Marking: 125988

Sold To: AMERICAN ALLOY STEEL INC
6230 N HOUSTON ROSSLYN RD
PO BOX 40469
NORTH HOUSTON,TX 77091

Ship To: AMERICAN ALLOY STEEL
6230 N HOUSTON ROSSLYN RD
BNSF TR # 7226
MILE 664 LN SEG 492
NORTH HOUSTON,TX 77091

Heat No	C	Mn	P	S	Si	Cu	Ni	Cr	Mo	Al(tot)	V	Nb	Ti	N	Ca	B	Sn	Ceq	Pcm
0602533	0.19	1.06	0.012	0.001	0.22	0.13	0.09	0.07	0.01	0.024	0.005	0.002	0.002	0.0049	0.0014	0.0001	0.009	0.40	0.27
1600012	0.18	1.04	0.008	0.001	0.17	0.22	0.10	0.09	0.02	0.033	0.004	0.003	0.002	0.0069	0.0021	0.0003	0.009	0.40	0.28

Tensile Test / Heat Treat

Plate Serial No	Pieces	Tons	Dir.	Yield (psi)	Tensile (psi)	Elong. % in 2"	Elong. % in 8"	Norm (°F)	Time (min)	Temper (°F)	Time (min)
0602533-08	2	4.08	H-T	52,800	76,700	38.5					
1600012-03	2	4.08	H-T	53,200	78,300	33.9		1650	16		
								1650	16		

Charpy Impacts

Plate Serial No	Pieces	Tons	Dir.	Absorbed Energy (Ft-lbs) (ft-lbs) 1	(ft-lbs) 2	(ft-lbs) 3	(ft-lbs) Ave	Min	Lateral Expansion (in.) (in.) 1	(in.) 2	(in.) 3	(in.) Ave	(in.) Min	Shear (%) (%) 1	(%) 2	(%) 3	(%) Ave	Min	Temp (°F)	Size
0602533-08	2	4.08	H-L	91.7	102.0	111.0	101.6	15											-50	10mm
1600012-03	2	4.08	H-L	54.7	40.8	52.6	49.4	15											-50	5mm

Certified a true copy of the original, retained in our file.
AMERICAN ALLOY STEEL.
JK 3/4/2021

HOT ROLLED CARBON STEEL PLATE
TEST COUPONS TAKEN FROM HEAT TREATED PLATE
Piece frequency charpy:

Manufactured to fully killed fine grain practice by Electric Arc Furnace. Welding or weld repair was not performed on this material.
Mercury has not been used in the direct manufacturing of this material. Produced as continuous cast discrete plate, unless otherwise noted in Specification. For Mexico shipments:nho-SalesMX@nucor.com
Yield by 0.5EUL method unless otherwise specified. Ceq = C+(Mn/6)+((Cr+Mo+V)/5)+((Cu+Ni)/15)
Pcm = C+(Si/30)+(Mn/20)+(Cu/20)+(Ni/60)+(Cr/20)+(Mo/15)+(V/10)+5B
Melted and Manufactured in the USA. ISO 9001:2015 certified. PED 97/23/EC 7/2 Annex 1, Para. 4.3 Compliant.
DIN 50049 3.1.B/EN 10204 3.1B(2004), DIN EN 10204 3.1(2005) compliant. For ABS grades only, Quality Assurance certificate QA-3624366

We hereby certify that the contents of this report are accurate and correct. All test results and operations performed by the material manufacturer are in compliance with the applicable specifications, including customer specifications.

T. A Deprete

T. A. Deprete, Metallurgist

1/24/2021 4:10:30 PM

03/05/2021 From: AMERICAN ALLOY STEEL, INC. To: INUKSHUK CONSTRUCTION LIMITED
P.O.#: 341-1001-TX S.O.#: 677336 AA PL#: 5237396
Item: 1 (1 PC) 5/16" X 96" X 480"

AMERICAN ALLOY
PLATE #5237396

NUCOR
PLATE MILL

P.O.Box 279
Winton, NC 27986
(252) 356-3700

Mill Test Report

1505 River Rd
Cofield, NC 27922
(252) 356-3700

NUCOR
It's Our Nature

Issuing Date: 01/24/2021 BL No. : 590221 Load No. : 593433 Our Order No. : 184010/1 Cust. Order No. : 125866

Vehicle No: TTPX 81308

Specification: 0.3125" x 96.000" x 480.000"
ASTM A516 70/65/60-17/ASME SA516-70/65/60 PVQ 2019/2017
Normalized Plate NACE MR0175 Annex 2.1.2 (2015), MR0103 (2010)
Section 2.1.2 Compliant (2015) 13.1.1, 13.1.2) Vacuum Degassed

Marking: 125866

Sold To: AMERICAN ALLOY STEEL INC
6230 N HOUSTON ROSSLYN RD
PO BOX 40469
NORTH HOUSTON,TX 77091

Ship To: AMERICAN ALLOY STEEL
6230 N HOUSTON ROSSLYN RD
SNEF TR # 7226
MILE 664 LN SEG 492
NORTH HOUSTON,TX 77091

Heat No	C	Mn	P	S	Si	Cu	Ni	Cr	Mo	Al(tot)	V	Nb	Ti	N	Ca	B	Sn	Ceq	Pcm
0602533	0.19	1.06	0.012	0.001	0.22	0.13	0.09	0.07	0.01	0.024	0.005	0.002	0.002	0.0049	0.0014	0.0001	0.009	0.40	0.27
1600012	0.18	1.04	0.008	0.001	0.17	0.22	0.10	0.09	0.02	0.033	0.004	0.003	0.002	0.0069	0.0021	0.0003	0.009	0.40	0.28

Tensile Test / Heat Treat

Plate Serial No	Pieces	Tons	Dir.	Yield (psi)	Tensile (psi)	Elong. % in 2"	Elong. % in 8"	Norm (°F)	Time (min)	Temper (°F)	Time (min)
0602533-08	2	4.08	H-T	52,600	76,700	38.5		1650	16		
1600012-03	2	4.08	H-T	53,200	78,300	33.9		1650	16		

Charpy Impacts

Plate Serial No	Pieces	Tons	Dir.	Absorbed Energy (Ft-lbs) (ft-lbs) 1	(ft-lbs) 2	(ft-lbs) 3	(ft-lbs) Ave	Min	Lateral Expansion (in.) (in.) 1	(in.) 2	(in.) 3	(in.) Ave	(in.) Min	Shear (%) (%) 1	(%) 2	(%) 3	(%) Ave	Min	Temp (°F)	Size
0602533-08	2	4.08	H-L	91.7	102.0	111.0	101.6	15											-50	10mm
1600012-03	2	4.08	H-L	54.7	40.8	52.6	49.4	15											-50	5mm

Certified a true copy of the original, retained in our file.
AMERICAN ALLOY STEEL.
J.P 3/4/2021

HOT ROLLED CARBON STEEL PLATE
TEST COUPONS TAKEN FROM HEAT TREATED PLATE
Piece frequency charpy:

Manufactured to fully killed fine grain practice by Electric Arc Furnace. Welding or weld repair was not performed on this material.
Mercury has not been used in the direct manufacturing of this material. Produced as continuous cast discrete plate, unless otherwise noted in Specification. For Mexico shipments:nho-SalesMX@nucor.com
Yield by 0.6EUL method unless otherwise specified. Ceq = C+(Mn/6)+((Cr+Mo+V)/5)+((Cu+Ni)/15)
Pcm = C+(Si/30)+(Mn/20)+(Cu/20)+(Ni/60)+(Cr/20)+(Mo/15)+(V/10)+5B
Melted and Manufactured in the USA. ISO 9001:2015 certified. PED 97/23/EC 7/2 Annex 1, Para. 4.3 Compliant.
DIN 50049 3.1.B/EN 10204 3.1B(2004), DIN EN 10204 3.1(2005) compliant. For ABS grades only, Quality Assurance certificate QA-3624366

We hereby certify that the contents of this report are accurate and correct. All test results and operations performed by the material manufacturer are in compliance with the applicable specifications, including customer specifications.

T. A. Depratis

T. A. Depratis, Metallurgist

1/24/2021 4:10:30 PM

Canada Customs and Revenue Agency | Agence des douanes et du revenu du Canada

CANADA CUSTOMS INVOICE
FACTURE DES DOUANES CANADIENNES

MRR #005

1. Vendor (name and address) - Vendeur (nom et adresse)

American Alloy Steel
650 Harbor Way
Rome, NY 13440
Tel: (800) 231-3502 Fax: (315) 371-9089

2. Date of direct shipment to Canada - Date d'expédition directe vers le Canada
4/7/21

3. Other references (include purchaser's order no.)
Autres références (inclure le n° de commande de l'acheteur SO#677328, PO#341-1001-NY

4. Consignee (name and address) - Destinataire (nom et adresse)

Techform-Montal
3139 Boul Des Entreprises
Terrebonne, QC J6X 4J9
Canada

CUSTOMS Seamont Brokerage
Phone 514-931-0306
Fax 514-363-5564

5. Purchaser's name and address (if other than consignee)
Nom et adresse de l'acheteur (s'il diffère du destinataire)
American Alloy Steel
650 Harbor Way
Rome, NY 13440

6. Country of transhipment - Pays de transbordement
USA

7. Country of origin of goods
Pays d'origine des marchandises
USA

IF SHIPMENT INCLUDES GOODS OF DIFFERENT ORIGINS AGAINST ITEMS IN 12. SI L'EXPEDITION COMPREND DES MARCHANDISES D'ORIGINES DIFFERENTES, PRECISEZ LEUR PROVENANCE EN 12

8. Transportation: Give mode and place of direct shipment to Canada
Transport: Precisez model et point d'expedition directe vers le Canada

9. Conditions of sale and terms of payment
(i.e. Sale, consignment shipment, leased goods, etc.)
Conditions de vente et modalitiés de paiement
(p. ex. vente, expédition en consignation, location de marchandises, etc.)
SALE

10. Currency of settlement - Devises du paiement
US FUNDS

11. Number of packages Nombre de colis	12. Specification of commodities (kind of packages, marks and numbers, general description and characteristics, i.e., grad,e quality) Désignation des articles (nature des colis, marques et numéros, description générale et caractéristiques, p. ex, classe, qualité)	13. Quantity (state unit) Quantité (précisez l'unité)	Selling price - Prix de vente	
			14. Unit Price Prix unitaire	15. Total
4	STEEL PLATE CARBON	EACH	3676.00	14704.00
1			3349.00	3349.00
6			2679.00	16074.00

If any of fields 1 to 17 are included on an attached commercial invoice, check this box
Si tout renseignement relativement aux zones 1 à 17 figure sur une ou des factures commerciales ci-attachees, cochez cette case ☐
Commercial Invoice No. / N° de la facture commerciale _____

16. Total Weight - Poids Total
Net 43,290
Gross - Brut 43,290

17. Invoice total
Total de la fac 34,127.00

19. Exporter's name and address (if other than vendor)
Nom et adresse de l'exportateur (s'il differe du vendeur)

20. Originator (name and address) - Expéditeur d'origine (nom et adresse)
American Alloy Steel
650 Harbor Way
Rome, NY 13440

21. CCRA ruling (if applicable) - Décision de l'Agence (s'il y a lieu)

22. If fields 23 to 25 are not applicable, check this box
Si les zones 23 à 25 sont sans objet, cochez cette case ☒

23. If included in field 17 indicate amount:
Si compris dans le total à la zone 17, précisez:

(i) Transportation charges, expenses and insurance from the place of direct shipment to Canada
Les frais de transport, dépenses et assurances à partir du point d'expédition directe vers le Canada
_____

(ii) Costs for construction, erection and assembly incurred after importation into Canada
Les coûts de construction ,d'érection et d'assemblage après importation au Canada
_____

(iii) Export packing
Le coût de l'emballage d'exportation
_____

24. If not included in field 17 indicate amount:
Si non compris dans le total à la zone 17, précisez:

(i) Transportation charges, expenses, and insurance from the place of direct shipment to Canada
Les frais de transport, dépenses et assurances jusqu'au point d'expédition directe vers le Canada
_____

(ii) Amounts for commissions other than buying commissions
Les commissions autres que celles versées pour l'achat
_____

(iii) Export packing
Le coût de l'emballage d'exportation
_____

25. Check (if applicable):
Cochez (s'il y a lieu):

(i) Royalty payments or subsequent proceeds are paid or payable by the purchaser
Des redevances ou produits ont été ou seront versés par l'acheteur ☐

(ii) The purchaser has supplied goods or services for use in the production of these goods
L'acheteur a fourni des marchandises ou des services pour la production de ces marchandises ☐

UNITED STATES–MEXICO–CANADA AGREEMENT (USMCA)

CERTIFICATE OF ORIGIN

(Please print or type.)

1. CERTIFIER NAME AND ADDRESS:	2. EXPORTER NAME AND ADDRESS:
PATTI KEYES 650 HARBOR WAY ROME, NY 13440 DIRECT TEL: 315-371-9058 EMAIL: PATTI@AASTEEL.COM	AMERICAN ALLOY STEEL, INC. 650 HARBOR WAY ROME, NY 13440 TEL: 800-325-2479 TAX IDENTIFICATION NUMBER: 1-74-1688398-5
3. PRODUCER NAME AND ADDRESS: Mittel, Coatesvillel, PA Nucor, TEL: N/A EMAIL:N/A TAX IDENTIFICATION NUMBER: N/A	4. IMPORTER NAME AND ADDRESS: Inukshuk Construction Limited 1869 Upper Water Street Suire AH202 HaLIFAX, NS B3J 1S9 Canaada TEL: N/A EMAIL: N/A TAX IDENTIFICATION NUMBER: N/A

5. DESCRIPTION OF GOOD(S): STEEL PLATE S/O# 677328 PO# 341-1001-NY	6. H.S. TARIFF CLASSIFICATION NUMBER	7. PREFERENCE CRITERION	10. COUNTRY OF ORIGIN
Item 2, Qty 4, 3/8 X 96 X 480 Item 3, Qty 1, 5/16 X 96 X 480 Item 4, Qty 6, ¼ X 96 X 480	7225.40/0000	B	USA

I CERTIFY THAT:

-THE GOODS DESCRIBED IN THIS DOUCMENT QUALIFY AS ORIGINATING AND THE INFORMATION CONTAINED IN THIS DOCUMENT IS TRUE AND ACCURATE. I ASSUME RESPONSIBILITY FOR PROVING SUCH REPRESENTATIONS AND AGREE TO MAINTAIN AND PRRESENT UPON REQUEST OR TO MAKE AVAILABLE DURING A VERIFICATION VISIT, DOCUMENTATION NECESSARY TO SUPPORT THIS CERTIFICATION.

-THIS CERTIFICATE CONSISTS OF ___ PAGES, INCLUDING ALL ATTACHMENTS.

11. AUTHORIZED SIGNATURE: Patti Keyes	COMPANY: AMERICAN ALLOY STEEL, INC.
NAME (PRINT OR TYPE): PATTI KEYES	TITLE: Ass't Traffic Manager
DATE: 4/7/21	TELEPHONE: 315 371-9058 FAX:315-371-9089

AMERICAN ALLOY STEEL, INC.
6230 N. HOUSTON ROSSLYN ROAD
HOUSTON, TEXAS 77091
Phone: 713-462-8081 Fax: 713-462-8209

M.T.R. COVER SHEET
04/07/2021

Customer Name : INUKSHUK CONSTRUCTION LIMITED
Address :
City, State Zip : HALIFAX, NS B3J 1S9
Attention : M.LOSIER
Phone Number : 1-902-429-0272
Reference Number : 677328
Notes 1 : P.O. NO. 341-1001-NY

Control Number: 1091103
Queued By : Alex Garza
Page Number : 1
Total Pages : 12
Fax Number : 1-902-429-7762

THE INFORMATION YOU REQUESTED IS ATTACHED.
THANK YOU FOR YOUR BUSINESS !

AASI PLATE NUMBER	HEAT # / SLAB #	MILL
5232373	0605092 05	NUCOR PLATE
5236040	813S61760 T030268	ARCELORMITTAL
5236041	813S61760 T030268	ARCELORMITTAL
5236042	813S61760 T030268	ARCELORMITTAL
5237332	1600012 01	NUCOR PLATE
5231254	0200022 01	NUCOR PLATE
5231255	0200022 01	NUCOR PLATE
5231256	0200022 01	NUCOR PLATE
5231257	0200022 01	NUCOR PLATE
5231258	0200022 01	NUCOR PLATE
5231259	0200022 01	NUCOR PLATE

04/07/2021 From: AMERICAN ALLOY STEEL, INC. To: INUKSHUK CONSTRUCTION LIMITED
P.O.#: 341-1001-NY S.O.#: 677328
Item: 2 (1 PC) 3/8" X 96" X 480" AA PL#: 5232373

NUCOR PLATE MILL

P.O.Box 279
Winton, NC 27986
(252) 356-3700

Mill Test Report

AMERICAN ALLOY PLATE # 5232373

1505 River Rd
Cofield, NC 27922
(252) 356-3700

NUCOR It's Our Nature.

Issuing Date: 09/13/2020 B/L No. : 570071 Load No. : 583008 Our Order No. : 180430/1 Cust. Order No. : 125050-NY

Vehicle No: LW 62085

Specification: 0.3750" x 96.000" x 480.000"
ASTM A516 70/65/60-17/ASME SA516-70/65/60 PVQ 2012/2017
Normalized Plate NACE MR0175 Annex 2.1.2 (2015), MR0103 (2010)
Section 2.1.2 Compliant (2015) 13.1.1, 13.1.2) Vacuum Degassed

Marking: 125050-NY

Sold To: AMERICAN ALLOY STEEL INC
6230 N HOUSTON ROSSLYN RD
PO BOX 40469
NORTH HOUSTON,TX 77091

Ship To: AMERICAN ALLOY STEEL INC
650 HARBOR WAY
ROME,NY 13440

Heat No	C	Mn	P	S	Si	Cu	Ni	Cr	Mo	Al(tot)	V	Nb	Ti	N	Ca	B	Sn	Ceq	Pcm
0605092	0.19	1.02	0.010	0.000	0.21	0.17	0.08	0.11	0.01	0.027	0.005	0.001	0.004	0.0071	0.0011	0.0002	0.008	0.40	0.27

Tensile Test / Heat Treat

Plate Serial No	Pieces	Tons	Dir.	Yield (psi)	Tensile (psi)	Elong. % in 2"	Elong. % in 8"	Norm (°F)	Time (min)	Temper (°F)	Time (min)
0605092-05	2	4.90	H-T	51,400	74,100	41.5		1650	18		
0605092-06	1	2.45	H-T	51,600	74,900	40.7		1650	18		
0605092-07	1	2.45	H-T	52,900	76,000	40.7		1650	18		

Charpy Impacts

Plate Serial No	Pieces	Tons	Dir.	Absorbed Energy (Ft-lbs) (ft-lbs) 1	(ft-lbs) 2	(ft-lbs) 3	(ft-lbs) Ave	Min	Lateral Expension (in.) (in.) 1	(in.) 2	(in.) 3	(in.) Ave	(in.) Min	Shear (%) (%) 1	(%) 2	(%) 3	(%) Ave	Min	Temp (°F)	Size
0605092-05	2	4.90	H-L	109.4	95.9	83.9	96.4	15											-50	7.5mm
0605092-06	1	2.45	H-L	99.5	88.4	110.5	99.5	15											-50	7.5mm
0605092-07	1	2.45	H-L	105.9	80.1	83.2	89.7	15											-50	7.5mm

Certified a true copy of the original, retained in our file.
AMERICAN ALLOY STEEL, INC.
Reviewed By:
J.P 9/30/2020

HOT ROLLED CARBON STEEL PLATE
TEST COUPONS TAKEN FROM HEAT TREATED PLATE
Piece frequency charpy;

Manufactured to fully killed fine grain practice by Electric Arc Furnace. Welding or weld repair was not performed on this material. Mercury has not been used in the direct manufacturing of this material. Produced as continuous cast discrete plate, unless otherwise noted in Specification. For Mexico shipments: nhc-SalesMX@nucor.com
Yield by 0.5EUL method unless otherwise specified. Ceq = C+(Mn/6)+((Cr+Mo+V)/5)+((Cu+Ni)/15)
Pcm = C+(Si/30)+(Mn/20)+(Cu/20)+(Ni/60)+(Cr/20)+(Mo/15)+(V/10)+5B
Melted and Manufactured in the USA. ISO 9001:2015 certified. PED 97/23/EC 7/2 Annex 1, Para. 4.3 Compliant.
DIN 50049 3.1.B/EN 10204 3.1B(2004), DIN EN 10204 3.1(2005) compliant. For ABS grades only, Quality Assurance certificate QA-3624356

We hereby certify that the contents of this report are accurate and correct. All test results and operations performed by the material manufacturer are in compliance with the applicable specifications, including customer specifications.

T. A. Depretis, Metallurgist

9/13/2020 8:01:41 AM

04/07/2021 From: AMERICAN ALLOY STEEL, INC. To: INUKSHUK CONSTRUCTION LIMITED
P.O.#: 341-1001-NY S.O.#: 677328 AA PL#: 5236040
Item: 2 (1 PC) 3/8" X 96" X 480"

ArcelorMittal Burns Harbor Plate

QUALITY ASSURANCE
REPORT OF TEST AND ANAYLSES

US HWY 12 Burns Harbor, Indiana

SHIPMENT NO. 803-69362
DATE SHIPPED 02-02-21
CAR OR VEHICLE NO. CSS-CHGO-CSXT-UTICAATW 317152

SOLD TO
AMERICAN ALLOY STEEL INC
PO BOX 40469
HOUSTON TX 77240-0469

SHIP TO
AMERICAN ALLOY STEEL INC
THEIR SIDING
650 HARBOR WAY
ROME NY 13440

NOTE

SERIAL NUMBER	PAT NO.	HEAT NUMBER	NO. PCS.	SIZE AND QUANTITY: THICKNESS	WIDTH OR DIA.	LENGTH	WEIGHT	YIELD POINT	TENSILE STRENGTH	AF FRAC. ELONG.	RED.
				INCHES	INCHES	INCHES	POUNDS	PSI	PSI	IN	% %

QUALITY STEEL MELTED & MANUFACTURED IN THE U. S. A.
PLATES - ASTM A516-17 GR 70 PVQ KLD FINE GRAIN PRAC, ASTM A516-17 GR 65 PVQ, ASTM A516-17 GR 60 PVQ, ASME SA516 GR 70 PVQ 2019 EDITION, ASME SA516 GR 65 PVQ 2019 EDITION, ASME SA516 GR 60 PVQ 2019 EDITION, CH-V SA2085 PLT L 15/12 FTLBS AT -50F, VACUUM DEGASSED --- PLT NORMALIZED & COOLED IN STILL AIR --- IN ACCORDANCE WITH EN 10204:2004 TYPE 3.1 10204:2004 TYPE 3.1
CO# 125825-NY GH 377-1563A
PLATES HEAT TREATED - TEST SPECIMENS ATTACHED & YIELD STRENGTH @ .5% EUL
MERCURY IN ANY FORM HAS NOT BEEN USED IN THE PRODUCTION OF THIS ORDER

T030268	813861760	3	3/8	96	480	14703	52900	74700	8	26	

N 1650 DEG F - 18 MIN
(M55)MFST REF#:2

Q-QUENCH TEMPERATURE
T-TEMPER TEMPERATURE
N-NORMALIZE TEMPERATURE

SERIAL NUMBER	PAT NO.	HEAT NUMBER	HARD BHN	BEND	THICKNESS INCHES	TYPE	SIZE	DIR	TEST TEMP °F	CHARPY IMPACT ENERGY FT LBS 1	2	3	SHEAR(%) 1	2	3	LAT. EXP MILS 1	2	3
T030268		813861760			.375	V	3/4	L	-50	154	126	92						

Certified a true copy of the original, retained in our file.
AMERICAN ALLOY STEEL
J.K 2/25/2021

HEAT NUMBER	CHEMICAL ANALYSIS C	Mn	P	S	Si	Cu	Ni	Cr	Mo	V	Ti	Al	B	Cb	N	Sn	AQUAD GRAIN SIZE
813861760	.16	1.04	.014	.002	.33	2.21	3.19	.03	.005	.001	.002	.035	.0002	.002	.004	.003	

I certify that the above results are a true and correct copy of actual results contained in records maintained by ArcelorMittal Burns Harbor and are in full compliance with the requirements of the specification cited above. This test report cannot be altered and must be transmitted intact with any subsequent third party test reports, if required.

BHPLTRPT.TIF

SUPV. QUALITY ASSURANCE FARID HASSANI PER MWT

AMERICAN ALLOY
PLATE #5236040

04/07/2021 From: AMERICAN ALLOY STEEL, INC. To: INUKSHUK CONSTRUCTION LIMITED
P.O.#: 341-1001-NY S.O.#: 677328 AA PL#: 5236041
Item: 2 (1 PC) 3/8" X 96" X 480"

ArcelorMittal Burns Harbor Plate

QUALITY ASSURANCE
REPORT OF TEST AND ANAYLSES

US HWY 12 Burns Harbor, Indiana

SHIPMENT NO. 803-69362
DATE SHIPPED 02-02-21
CAR OR VEHICLE NO. CSS-CHGO-CSKT-UTICAATW 317152

SOLD TO:
AMERICAN ALLOY STEEL INC
PO BOX 40469
HOUSTON TX 77240-0469

SHIP TO:
AMERICAN ALLOY STEEL INC
THEIR SIDING
650 HARBOR WAY
ROME NY 13440

NOTE	SERIAL NUMBER	PAT NO.	HEAT NUMBER	NO. PCS.	SIZE AND QUANTITY: THICKNESS	WIDTH OR DIA.	LENGTH	WEIGHT	YIELD POINT	TENSILE STRENGTH	AF FRAC. ELONG.	RED.
					INCHES	INCHES	INCHES	POUNDS	PSI	PSI	IN	% %

QUALITY STEEL MELTED & MANUFACTURED IN THE U. S. A.
PLATES - ASTM A516-17 GR 70 PVQ KLD FINE GRAIN PRAC, ASTM A516-17 GR 65 PVQ, ASTM A516-17 GR 60 PVQ, ASME SA516 GR 70 PVQ 2019 EDITION, ASME SA516 GR 65 PVQ 2019 EDITION, ASME SA516 GR 60 PVQ 2019 EDITION, CH-V SA20S5 PLT L 15/12 FTLBS AT -50F, VACUUM DEGASSED --- PLT NORMALIZED & COOLED IN STILL AIR --- IN ACCORDANCE WITH EN 10204:2004 TYPE 3.1 10204:2004 TYPE 3.1
NO WELD REPAIR WAS PERFORMED ON BELOW PLATE(S)
CO# 125825-NY GH 377-1563A
PLATES HEAT TREATED - TEST SPECIMENS ATTACHED & YIELD STRENGTH @ .5% EUL
MERCURY IN ANY FORM HAS NOT BEEN USED IN THE PRODUCTION OF THIS ORDER

T030268	813861760	3	3/8		96		480		14703	52900	74700	8	26		
				N	1650 DEG F - 18 MIN										

(M55)MFST REF#:2

Q-QUENCH TEMPERATURE
T-TEMPER TEMPERATURE
N-NORMALIZE TEMPERATURE

SERIAL NUMBER	PAT NO.	HEAT NUMBER	HARD BHN	BEND	THICKNESS INCHES	TYPE	SIZE	DIR	TEST TEMP F	CHARPY IMPACT ENERGY FT LBS 1	2	3	SHEAR(%) 1	2	3	LAT. EXP MILS 1	2	3
T030268		813861760			.375	V	3/4 L		-50	154	126	92						

Certified a true copy of the original, retained in our file.
AMERICAN ALLOY STEEL
JK 2/25/2021

HEAT NUMBER	CHEMICAL ANALYSIS C	Mn	P	S	Si	Cu	Ni	Cr	Mo	V	Ti	Al	B	Cb	N	Sn	MOLIED GRAIN SIZE
813861760	.16	1.04	.014	.002	.332	.213	.19	.03	.005	.001	.002	.035	.0002	.002	.004	.003	

I certify that the above results are a true and correct copy of actual results contained in records maintained by ArcelorMittal Burns Harbor and are in full compliance with the requirements of the specification cited above. This test report cannot be altered and must be transmitted intact with any subsequent third party test reports, if required.

BHPLTRPT.TIF

SUPV. QUALITY ASSURANCE FARID HASSANI PER MWT

AMERICAN ALLOY
PLATE # 5236041

04/07/2021 From: AMERICAN ALLOY STEEL, INC. To: INUKSHUK CONSTRUCTION LIMITED
P.O.#: 341-1001-NY S.O.#: 677328 AA PL#: 5236042
Item: 2 (1 PC) 3/8" X 96" X 480"

ArcelorMittal Burns Harbor Plate

QUALITY ASSURANCE
REPORT OF TEST AND ANALYSES

US HWY 12 Burns Harbor, Indiana

SHIPMENT NO. 803-69362
DATE SHIPPED 02-02-21
CAR OR VEHICLE NO. CSS-CHGO-CSXT-UTICAATW 317152

SOLD TO:
AMERICAN ALLOY STEEL INC
PO BOX 40469
HOUSTON TX 77240-0469

SHIP TO:
AMERICAN ALLOY STEEL INC
THEIR SIDING
650 HARBOR WAY
ROME NY 13440

NOTE	SERIAL NUMBER	PAT NO.	HEAT NUMBER	NO. PCS.	SIZE AND QUANTITY: THICKNESS	WIDTH OR DIA.	LENGTH	WEIGHT	YIELD POINT	TENSILE STRENGTH	AF FRAC. ELONG.	RED.
					INCHES	INCHES	INCHES	POUNDS	PSI	PSI	IN	% %

QUALITY STEEL MELTED & MANUFACTURED IN THE U. S. A.
PLATES - ASTM A516-17 GR 70 PVQ KLD FINE GRAIN PRAC, ASTM A516-17 GR 65 PVQ, ASTM A516-17 GR 60 PVQ, ASME SA516 GR 70 PVQ 2019 EDITION, ASME SA516 GR 65 PVQ 2019 EDITION, ASME SA516 GR 60 PVQ 2019 EDITION, CH-V SA2085 PLT L 15/12 FTLBS AT -50F, VACUUM DEGASSED --- PLT NORMALIZED & COOLED IN STILL AIR --- IN ACCORDANCE WITH EN 10204:2004 TYPE 3.1 10204:2004 TYPE 3.1
NO WELD REPAIR WAS PERFORMED ON BELOW PLATE(S)
CO# 125825-NY GH 377-1563A
PLATES HEAT TREATED - TEST SPECIMENS ATTACHED & YIELD STRENGTH @ .5% EUL
MERCURY IN ANY FORM HAS NOT BEEN USED IN THE PRODUCTION OF THIS ORDER

T030268	813S61760	3	3/8	96	480	14703	52900	74700	8	26		

N 1650 DEG F - 18 MIN

(M55)MFST REF#:2

Q-QUENCH TEMPERATURE T-TEMPER TEMPERATURE N-NORMALIZE TEMPERATURE

SERIAL NUMBER	PAT NO.	HEAT NUMBER	HARD BHN	BEND	TENSILE: THICKNESS	TYPE	SIZE	DIR	TEST TEMP F	CHARPY IMPACT FT LBS: ENERGY 1	2	3	SHEAR(%) 1	2	3	LAT. EXP MILS 1	2	3
					INCHES													
T030268		813S61760			.375	V	3/4 L		-50	154	126	92						

Certified a true copy of the original, retained in our file.
AMERICAN ALLOY STEEL.
JV 2/25/2021

HEAT NUMBER	CHEMICAL ANALYSIS: C	Mn	P	S	Si	Cu	Ni	Cr	Mo	V	Ti	Al	B	Cb	N	Sn	MQUAID GRAIN SIZE
813S61760	.16	1.04	.014	.002	.33	2.213	.19	.03	.005	.001	.002	.035	.0002	.002	.004	.003	

I certify that the above results are a true and correct copy of actual results contained in records maintained by ArcelorMittal Burns Harbor and are in full compliance with the requirements of the specification cited above. This test report cannot be altered and must be transmitted intact with any subsequent third party test reports, if required.

BHPLTRPT.TIF

FARID HASSANI PER MWT
SUPV. QUALITY ASSURANCE

AMERICAN ALLOY
PLATE # 2236042

04/07/2021 From: AMERICAN ALLOY STEEL, INC. To: INUKSHUK CONSTRUCTION LIMITED
P.O.#: 341-1001-NY S.O.#: 677328
Item: 3 (1 PC) 5/16" X 96" X 480" AA PL#: 5237332

NUCOR
PLATE MILL

P.O.Box 279
Winton, NC 27986
(252) 358-3700

Mill Test Report

AMERICAN ALLOY
PLATE #5231222

1505 River Rd
Cofield, NC 27922
(252) 358-3700

NUCOR
It's Our Nature

Issuing Date: 01/23/2021 B/L No.: 580151 Load No.: 593702 Our Order No.: 184003/1 Cust. Order No.: 126000-NY

Vehicle No: TTPX 81342

Specification: 0.3125" x 96.000" x 480.000"
ASTM A516 70/65/60-17/ASME SA516-70/65/60 PVQ 2019/2017
Normalized Plate NACE MR0175 Annex 2.1.2 (2015), MR0103 (2016)
Section 2.1.2 Compliant (2015) 13.1.1, 13.1.2) Vacuum Degassed

Marking: 126000-NY

Sold To: AMERICAN ALLOY STEEL INC
6230 N HOUSTON ROSSLYN RD
PO BOX 40469
NORTH HOUSTON,TX 77091

Ship To: AMERICAN ALLOY STEEL INC
650 HARBOR WAY
ROME,NY 13440

Heat No	C	Mn	P	S	Si	Cu	Ni	Cr	Mo	Al(tot)	V	Nb	Ti	N	Ca	B	Sn	Ceq	Pcm
1600012	0.18	1.04	0.008	0.001	0.17	0.22	0.10	0.09	0.02	0.033	0.004	0.003	0.002	0.0089	0.0021	0.0003	0.009	0.40	0.29

Plate Serial No	Pieces	Tons	Tensile Test Dir.	Yield (psi)	Tensile (psi)	Elong. % in 2"	Elong. % in 8"	Heat Treat Norm (°F)	Norm Time (min)	Temper (°F)	Temper Time (min)
1600012-01	6	12.25	H-T	53,200	77,900	38.5		1650	16		
1600012-02	1	2.04	H-T	54,800	79,900	37.2		1650	16		

Plate Serial No	Pieces	Tons	Charpy Impacts Dir.	Absorbed Energy (Ft-lbs) (ft-lbs) 1	(ft-lbs) 2	(ft-lbs) 3	(ft-lbs) Ave	Min	Lateral Expansion (in.) (in.) 1	(in.) 2	(in.) 3	(in.) Ave	(in.) Min	Shear (%) (%) 1	(%) 2	(%) 3	(%) Ave	Min	Temp (°F)	Size
1600012-01	6	12.25	H-L	34.2	49.5	41.0	41.6	15											-50	5mm
1600012-02	1	2.04	H-L	31.2	33.6	30.4	31.7	15											-50	10mm

Certified a true copy of the original, retained in our file.
AMERICAN ALLOY STEEL
JK 2/12/2021

HOT ROLLED CARBON STEEL PLATE
TEST COUPONS TAKEN FROM HEAT TREATED PLATE
Piece frequency charpy;

Manufactured to fully killed fine grain practice by Electric Arc Furnace. Welding or weld repair was not performed on this material. Mercury has not been used in the direct manufacturing of this material. Produced as continuous cast discrete plate, unless otherwise noted in Specification. For Mexico shipments: nhc-SalesMX@nucor.com
Yield by 0.5EUL method unless otherwise specified. Ceq = C+(Mn/6)+((Cr+Mo+V)/5)+((Cu+Ni)/15)
Pcm = C+(Si/30)+(Mn/20)+(Cu/20)+(Ni/60)+(Cr/20)+(Mo/15)+(V/10)+5B
Melted and Manufactured in the USA. ISO 9001:2015 certified. PED 97/23/EC 7/2 Annex 1, Para. 4.3 Compliant.
DIN 50049 3.1.B/EN 10204 3.1B(2004). DIN EN 10204 3.1(2005) compliant. For ABS grades only, Quality Assurance certificate QA-3624366

We hereby certify that the contents of this report are accurate and correct. All test results and operations performed by the material manufacturer are in compliance with the applicable specifications, including customer specifications.

T. A. Deprete

T. A. Deprete, Metallurgist

1/23/2021 5:04:15 PM

04/07/2021 From: AMERICAN ALLOY STEEL, INC. TO: INUKSHUK CONSTRUCTION LIMITED
P.O.#: 341-1001-NY S.O.#: 677328 AA PL#: 5231254
Item: 4 (1 PC) 1/4" X 96" X 480"

NUCOR PLATE MILL

P.O.Box 279
Winton, NC 27986
(252) 356-3700

Mill Test Report

1505 River Rd
Cofield, NC 27922
(252) 356-3700

AMERICAN ALLOY
PLATE #5231254

NUCOR It's Our Nature.

Issuing Date : 08/03/2020 B/L No. : 567381 Load No. : 579939 Our Order No. : 177425/1 Cust. Order No. : 124182-NY

Vehicle No: NOKL 725075

Specification: 0.2500" x 96.000" x 480.000"
ASTM A516 70/65/60/485-17/ASME SA516-70/65/60/485 PVQ 2019/2017
Normalized Plate NACE MR0175 Annex 2.1.2 (2015), MR0103 (2010)
Section 2.1.2 (2015) 13.1.1, 13.1.2)Compliant

Sold To: AMERICAN ALLOY STEEL INC
6230 N HOUSTON ROSSLYN RD
PO BOX 40469
NORTH HOUSTON,TX 77091

Ship To: AMERICAN ALLOY STEEL INC
658 HARBOR WAY
ROME,NY 13440

Marking : 124182-NY

Heat No	C	Mn	P	S	Si	Cu	Ni	Cr	Mo	Al(tot)	V	Nb	Ti	N	Ca	B	Sn	Ceq	Pcm
0200022	0.18	0.92	0.010	0.000	0.18	0.16	0.05	0.05	0.02	0.026	0.005	0.002	0.002		0.0020	0.0001	0.000	0.36	0.25

Plate Serial No	Pieces	Tons	Tensile Test Dir.	Yield (psi)	Tensile (psi)	Elong. % in 2"	Elong. % in 8"	Heat Treat Norm (°F)	Time (min)	Temper (°F)	Time (min)
0200022-01	9	14.70	H-T	49,000	71,200	40.8		1650	14		

Plate Serial No	Pieces	Tons	Charpy Impacts Dir.	Absorbed Energy (Ft-lbs) (ft-lbs) 1	(ft-lbs) 2	(ft-lbs) 3	(ft-lbs) Ave	Min	Lateral Expansion (in.) (in.) 1	(in.) 2	(in.) 3	(in.) Ave	(in.) Min	Shear (%) (%) 1	(%) 2	(%) 3	(%) Ave	Min	Temp (°F)	Size
0200022-01	9	14.70	H-L	56.7	44.5	58.4	53.2	15											-50	6.67mm

Certified a true copy of the original, retained in our file.
AMERICAN ALLOY STEEL
JK 8/19/2020

HOT ROLLED CARBON STEEL PLATE
TEST COUPONS TAKEN FROM HEAT TREATED PLATE
Piece frequency charpy:

Manufactured to fully killed fine grain practice by Electric Arc Furnace. Welding or weld repair was not performed on this material.
Mercury has not been used in the direct manufacturing of this material. Produced as continuous cast discrete plate, unless otherwise noted in Specification. For Mexico shipments:nhc-SalesMX@nucor.com
Yield by 0.5EUL method unless otherwise specified. Ceq = C+(Mn/6)+((Cr+Mo+V)/5)+((Cu+Ni)/15)
Pcm = C+(Si/30)+(Mn/20)+(Cu/20)+(Ni/60)+(Cr/20)+(Mo/15)+(V/10)+5B
Melted and Manufactured in the USA. ISO 9001:2015 certified. PED 97/23/EC 7/2 Annex 1, Para. 4.3 Compliant.
DIN 50049 3.1.B/EN 10204 3.1B(2004), DIN EN 10204 3.1(2005) compliant. For ABS grades only, Quality Assurance certificate QA-3824388

We hereby certify that the contents of this report are accurate and correct. All test results and operations performed by the material manufacturer are in compliance with the applicable specifications, including customer specifications.

T. A. Depretis

T. A. Depretis, Metallurgist

8/4/2020 9:36:58 AM

04/07/2021 From:AMERICAN ALLOY STEEL, INC. TO: INUKSHUK CONSTRUCTION LIMITED
P.O.#: 341-1001-NY S.O.#: 677328 AA PL#: 5231255
Item: 4 (1 PC) 1/4" X 96" X 480"

NUCOR
PLATE MILL

P.O.Box 279
Winton, NC 27986
(252) 356-3700

Mill Test Report

1505 River Rd
Cofield, NC 27922
(252) 356-3700

NUCOR
It's Our Nature.

AMERICAN ALLOY
PLATE # 5231255

Issuing Date : 08/03/2020 B/L No. : 567381 Load No. : 579839 Our Order No. : 177425/1 Cust. Order No. : 124182-NY

Vehicle No: NONE 725075

Specification: 0.2500" x 96.000" x 480.000"
ASTM A516 70/65/60/485-17/ASME SA516-70/65/60/485 PVQ 2019/2017
Normalized Plate NACE MR0175 Annex 2.1.2 (2015), MR0103 (2010)
Section 2.1.2 (2015) 13.1.1, 13.1.2)Compliant

Marking : 124182-NY

Sold To: AMERICAN ALLOY STEEL INC
6230 N HOUSTON ROSSLYN RD
PO BOX 40469
NORTH HOUSTON,TX 77091

Ship To: AMERICAN ALLOY STEEL INC
850 HARBOR WAY
ROME,NY 13440

Heat No	C	Mn	P	S	Si	Cu	Ni	Cr	Mo	Al(tot)	V	Nb	Ti	N	Ca	B	Sn	Ceq	Pcm
0200022	0.18	0.92	0.010	0.000	0.18	0.18	0.05	0.05	0.02	0.026	0.005	0.002	0.002		0.0020	0.0001	0.000	0.36	0.25

Plate Serial No	Pieces	Tons	Tensile Test Dir.	Yield (psi)	Tensile (psi)	Elong. % in 2"	Elong. % in 8"	Heat Treat Norm (°F)	Norm Time (min)	Temper (°F)	Temper Time (min)
0200022-01	9	14.70	H-T	49,000	71,200	40.8		1650	14		

Plate Serial No	Pieces	Tons	Charpy Impacts Dir.	Absorbed Energy (Ft-lbs) (ft-lbs) 1	(ft-lbs) 2	(ft-lbs) 3	(ft-lbs) Ave	Min	Lateral Expansion (in.) (in.) 1	(in.) 2	(in.) 3	(in.) Ave	(in.) Min	Shear (%) (%) 1	(%) 2	(%) 3	(%) Ave	Min	Temp (°F)	Size
0200022-01	9	14.70	H-L	56.7	44.5	58.4	53.2	15											-50	6.67mm

Certified a true copy of the original, retained in our file.
AMERICAN ALLOY STEEL
JK 8/19/2020

HOT ROLLED CARBON STEEL PLATE
TEST COUPONS TAKEN FROM HEAT TREATED PLATE
Piece frequency charpy;

Manufactured to fully killed fine grain practice by Electric Arc Furnace. Welding or weld repair was not performed on this material.
Mercury has not been used in the direct manufacturing of this material. Produced as continuous cast discrete plate, unless otherwise noted in Specification. For Mexico shipments:nhc-SalesMX@nucor.com
Yield by 0.5EUL method unless otherwise specified. Ceq = C+(Mn/6)+((Cr+Mo+V)/5)+((Cu+Ni)/15)
Pcm = C+(Si/30)+(Mn/20)+(Cu/20)+(Ni/60)+(Cr/20)+(Mo/15)+(V/10)+5B
Melted and Manufactured in the USA. ISO 9001:2015 certified. PED 97/23/EC 7/2 Annex 1, Para. 4.3 Compliant.
DIN 50049 3.1.B/EN 10204 3.1B(2004), DIN EN 10204 3.1(2005) compliant. For ABS grades only, Quality Assurance certificate QA-3624368

We hereby certify that the contents of this report are accurate and correct. All test results and operations performed by the material manufacturer are in compliance with the applicable specifications, including customer specifications.

T. A. Depretis, Metallurgist

8/4/2020 9:36:58 AM

04/07/2021 From: AMERICAN ALLOY STEEL, INC. To: INUKSHUK CONSTRUCTION LIMITED
P.O.#: 341-1001-NY S.O.#: 677328 AA PL#: 5231256
Item: 4 (1 PC) 1/4" X 96" X 480"

NUCOR PLATE MILL
P.O.Box 279
Winton, NC 27986
(252) 356-3700

Mill Test Report

1505 River Rd
Cofield, NC 27922
(252) 356-3700

NUCOR It's Our Nature.

AMERICAN ALLOY
PLATE #5231256

Issuing Date : 08/03/2020 B/L No. : 567381 Load No. : 578939 Our Order No. : 177425/1 Cust. Order No. : 124182-NY

Vehicle No: NOKL 728075

Specification: 0.2500" x 96.000" x 480.000"
ASTM A516 70/65/60/485-17/ASME SA516-70/65/60/485 PVQ 2019/2017
Normalized Plate NACE MR0175 Annex 2.1.2 (2015), MR0103 (2010)
Section 2.1.2 (2015) 13.1.1, 13.1.2)Compliant

Marking : 124182-NY

Sold To: AMERICAN ALLOY STEEL INC
6230 N HOUSTON ROSSLYN RD
PO BOX 40469
NORTH HOUSTON,TX 77091

Ship To: AMERICAN ALLOY STEEL INC
650 HARBOR WAY
ROME,NY 13440

Heat No	C	Mn	P	S	Si	Cu	Ni	Cr	Mo	Al(tot)	V	Nb	Ti	N	Ca	B	Sn	Ceq	Pcm
0200022	0.18	0.92	0.010	0.000	0.18	0.16	0.05	0.05	0.02	0.028	0.005	0.002	0.002		0.0020	0.0001	0.000	0.38	0.25

Plate Serial No	Pieces	Tons	Tensile Test Dir.	Yield (psi)	Tensile (psi)	Elong. % in 2"	Elong. % in 8"	Heat Treat Norm (°F)	Norm Time (min)	Temper (°F)	Temper Time (min)
0200022-01	9	14.70	H-T	49,000	71,200	40.8		1650	14		

Plate Serial No	Pieces	Tons	Charpy Impacts Dir.	Absorbed Energy (Ft-lbs) (ft-lbs) 1	(ft-lbs) 2	(ft-lbs) 3	(ft-lbs) Ave	Min	Lateral Expansion (in.) (in.) 1	(in.) 2	(in.) 3	(in.) Ave	(in.) Min	Shear (%) (%) 1	(%) 2	(%) 3	(%) Ave	Min	Temp (°F)	Size
0200022-01	9	14.70	H-L	56.7	44.5	58.4	53.2	15											-50	6.67m m

HOT ROLLED CARBON STEEL PLATE
TEST COUPONS TAKEN FROM HEAT TREATED PLATE
Plate frequency charpy:

Manufactured to fully killed fine grain practice by Electric Arc Furnace. Welding or weld repair was not performed on this material.
Mercury has not been used in the direct manufacturing of this material. Produced as continuous cast discrete plate, unless otherwise noted in Specification. For Mexico shipments:nhc-SalesMX@nucor.com
Yield by 0.5EUL method unless otherwise specified. Ceq = C+(Mn/6)+((Cr+Mo+V)/5)+((Cu+Ni)/15)
Pcm = C+(Si/30)+(Mn/20)+(Cu/20)+(Ni/60)+(Cr/20)+(Mo/15)+(V/10)+5B
Melted and Manufactured in the USA. ISO 9001:2015 certified. PED 97/23/EC 7/2 Annex 1, Para. 4.3 Compliant.
DIN 50049 3.1.B/EN 10204 3.1B(2004), DIN EN 10204 3.1(2005) compliant. For ABS grades only, Quality Assurance certificate QA-3624366

Certified a true copy of the original, retained in our file.
AMERICAN ALLOY STEEL
JK 8/19/2020

We hereby certify that the contents of this report are accurate and correct. All test results and operations performed by the material manufacturer are in compliance with the applicable specifications, including customer specifications.

T. A. Depretis, Metallurgist

8/4/2020 9:36:58 AM

04/07/2021 From: AMERICAN ALLOY STEEL, INC. To: INUKSHUK CONSTRUCTION LIMITED
P.O.#: 341-1001-NY S.O.#: 677328 AA PL#: 5231257
Item: 4 (1 PC) 1/4" X 96" X 480"

NUCOR PLATE MILL
P.O.Box 279
Winton, NC 27986
(252) 356-3700

Mill Test Report

1505 River Rd
Cofield, NC 27922
(252) 356-3700

AMERICAN ALLOY
PLATE #5231257

NUCOR It's Our Nature

Issuing Date : 08/03/2020 B/L No. : 567381 Load No. : 579939 Our Order No. : 177425/1 Cust. Order No. : 124182-NY

Vehicle No: NOKL 725075

Specification: 0.2509" x 96.000" x 480.000"
ASTM A516 70/65/60/485-17/ASME SA516-70/65/60/485 PVQ 2019/2017
Normalized Plate NACE MR0175 Annex 2.1.2 (2015), MR0103 (2010)
Section 2.1.2 (2015) 13.1.1, 13.1.2)Compliant

Marking : 124182-NY

Sold To: AMERICAN ALLOY STEEL INC
6230 N HOUSTON ROSSLYN RD
PO BOX 40469
NORTH HOUSTON,TX 77091

Ship To: AMERICAN ALLOY STEEL INC
650 HARBOR WAY
ROME,NY 13440

Heat No	C	Mn	P	S	Si	Cu	Ni	Cr	Mo	Al(tot)	V	Nb	Ti	N	Ca	B	Sn	Ceq	Pcm
0200022	0.18	0.92	0.010	0.000	0.18	0.16	0.05	0.05	0.02	0.026	0.005	0.002	0.002		0.0020	0.0001	0.000	0.38	0.25

Tensile Test

Plate Serial No	Pieces	Tons	Dir.	Yield (psi)	Tensile (psi)	Elong. % in 2"	Elong. % in 8"
0200022-01	9	14.70	H-T	49,000	71,200	40.8	

Heat Treat

Norm (°F)	Time (min)	Temper (°F)	Time (min)
1650	14		

Charpy Impacts

Plate Serial No	Pieces	Tons	Dir.	Absorbed Energy (Ft-lbs) 1 (ft-lbs)	2 (ft-lbs)	3 (ft-lbs)	Ave (ft-lbs)	Min	Lateral Expansion (in.) 1 (in.)	2 (in.)	3 (in.)	Ave (in.)	Min (in.)	Shear (%) 1 (%)	2 (%)	3 (%)	Ave (%)	Min	Temp (°F)	Size
0200022-01	9	14.70	H-L	56.7	44.5	58.4	53.2	15											-50	6.67m m

HOT ROLLED CARBON STEEL PLATE
TEST COUPONS TAKEN FROM HEAT TREATED PLATE
Place frequency charpy;

Manufactured to fully killed fine grain practice by Electric Arc Furnace. Welding or weld repair was not performed on this material. Mercury has not been used in the direct manufacturing of this material. Produced as continuous cast discrete plate, unless otherwise noted in Specification. For Mexico shipments:nhc-SalesMX@nucor.com
Yield by 0.5EUL method unless otherwise specified. Ceq = C+(Mn/6)+((Cr+Mo+V)/5)+((Cu+Ni)/15)
Pcm = C+(Si/30)+(Mn/20)+(Cu/20)+(Ni/60)+(Cr/20)+(Mo/15)+(V/10)+5B
Melted and Manufactured in the USA. ISO 9001:2015 certified. PED 97/23/EC 7/2 Annex 1, Para. 4.3 Compliant.
DIN 50049 3.1.B/EN 10204 3.1B(2004), DIN EN 10204 3.1(2005) compliant. For ABS grades only, Quality Assurance certificate QA-3624368

We hereby certify that the contents of this report are accurate and correct. All test results and operations performed by the material manufacturer are in compliance with the applicable specifications, including customer specifications.

T. A. Depretis, Metallurgist

8/4/2020 9:36:58 AM

Certified a true copy of the original, retained in our file.
AMERICAN ALLOY STEEL
JK 8/19/2020

04/07/2021 From: AMERICAN ALLOY STEEL, INC. To: INUKSHUK CONSTRUCTION LIMITED
P.O.#: 341-1001-NY S.O.#: 677328 AA PL#: 5231258
Item: 4 (1 PC) 1/4" X 96" X 480"

NUCOR
PLATE MILL

P.O.Box 279
Winton, NC 27986
(252) 356-3700

Mill Test Report

1505 River Rd
Cofield, NC 27922
(252) 356-3700

NUCOR
It's Our Nature.

AMERICAN ALLOY
PLATE #5231258

Issuing Date : 08/03/2020 B/L No. : 567381 Load No. : 579939 Our Order No. : 177425/1 Cust. Order No. : 124182-NY

Vehicle No: NOKL 725075

Specification: 0.2500" x 96.000" x 480.000"
ASTM A516 70/65/60/485-17/ASME SA516-70/65/60/485 PVQ 2015/2017
Normalized Plate NACE MR0175 Annex 2.1.2 (2015), MR0103 (2010)
Section 2.1.2 (2015) 13.1.1, 13.1.2)Compliant

Marking : 124182-NY

Sold To: AMERICAN ALLOY STEEL INC
6230 N HOUSTON ROSSLYN RD
PO BOX 40469
NORTH HOUSTON,TX 77091

Ship To: AMERICAN ALLOY STEEL INC
650 HARBOR WAY
ROME,NY 13440

Heat No	C	Mn	P	S	Si	Cu	Ni	Cr	Mo	Al(tot)	V	Nb	Ti	N	Ca	B	Sn	Ceq	Pcm
0200022	0.18	0.92	0.010	0.000	0.18	0.16	0.05	0.05	0.02	0.026	0.005	0.002	0.002		0.0020	0.0001	0.009	0.38	0.25

Plate Serial No	Pieces	Tons	Tensile Test Dir.	Yield (psi)	Tensile (psi)	Elong. % in 2"	Elong. % in 8"	Heat Treat Norm (°F)	Time (min)	Temper (°F)	Time (min)
0200022-01	9	14.70	H-T	49,000	71,200	40.8		1650	14		

Plate Serial No	Pieces	Tons	Charpy Impacts Dir.	Absorbed Energy (Ft-lbs) (ft-lbs) 1	(ft-lbs) 2	(ft-lbs) 3	(ft-lbs) Ave	Min	Lateral Expansion (in.) (in.) 1	(in.) 2	(in.) 3	(in.) Ave	(in.) Min	Shear (%) (%) 1	(%) 2	(%) 3	(%) Ave	Min	Temp (°F)	Size
0200022-01	9	14.70	H-L	56.7	44.5	58.4	53.2	15											-50	5.67mm

Certified a true copy of the original, retained in our file.
AMERICAN ALLOY STEEL
JK 8/19/2020

HOT ROLLED CARBON STEEL PLATE
TEST COUPONS TAKEN FROM HEAT TREATED PLATE
Plate frequency charpy:

Manufactured to fully killed fine grain practice by Electric Arc Furnace. Welding or weld repair was not performed on this material.
Mercury has not been used in the direct manufacturing of this material. Produced as continuous cast discrete plate, unless otherwise noted in Specification. For Mexico shipments:nhc-SalesMX@nucor.com
Yield by 0.5EUL method unless otherwise specified. Ceq = C+(Mn/6)+((Cr+Mo+V)/5)+((Cu+Ni)/15)
Pcm = C+(Si/30)+(Mn/20)+(Cu/20)+(Ni/60)+(Cr/20)+(Mo/15)+(V/10)+5B
Melted and Manufactured in the USA. ISO 9001:2015 certified. PED 97/23/EC 7/2 Annex 1, Para. 4.3 Compliant
DIN 50049 3.1.B/EN 10204 3.1B(2004), DIN EN 10204 3.1(2005) compliant. For ABS grades only, Quality Assurance certificate QA-3624366

We hereby certify that the contents of this report are accurate and correct. All test results and operations performed by the material manufacturer are in compliance with the applicable specifications, including customer specifications.

T. A. Deprotis, Metallurgist

8/4/2020 9:36:58 AM

04/07/2021 From: AMERICAN ALLOY STEEL, INC. To: INUKSHUK CONSTRUCTION LIMITED
P.O.#: 341-1001-NY S.O.#: 677328 AA PL#: 5231259
Item: 4 (1 PC) 1/4" X 96" X 480"

NUCOR PLATE MILL

P.O.Box 279
Winton, NC 27986
(252) 356-3700

Mill Test Report

1505 River Rd
Cofield, NC 27922
(252) 356-3700

NUCOR It's Our Nature.

AMERICAN ALLOY
PLATE #5231259

Issuing Date : 08/03/2020 **B/L No. :** 567381 **Load No. :** 572939 **Our Order No. :** 177425/1

Vehicle No: NOKL 725975

Specification: 0.2500" x 96.000" x 480.000"
ASTM A516 70/65/60/485-17/ASME SA516-70/65/60/485 PVQ 2019/2017
Normalized Plate NACE MR0175 Annex 2.1.2 (2018), MR0103 (2010)
Section 2.1.2 (2015) 13.1.1, 13.1.2)Compliant

Marking : 124182-NY

Sold To: AMERICAN ALLOY STEEL INC
6230 N HOUSTON ROSSLYN RD
PO BOX 40469
NORTH HOUSTON,TX 77091

Cust. Order No. : 124182-NY

Ship To: AMERICAN ALLOY STEEL INC
650 HARBOR WAY
ROME,NY 13440

Heat No	C	Mn	P	S	Si	Cu	Ni	Cr	Mo	Al(tot)	V	Nb	Ti	N	Ca	B	Sn	Ceq	Pcm
0200022	0.18	0.92	0.010	0.000	0.18	0.16	0.05	0.05	0.02	0.026	0.005	0.002	0.002		0.0020	0.0001	0.000	0.38	0.25

Plate Serial No	Pieces	Tons	Tensile Test Dir.	Yield (psi)	Tensile (psi)	Elong. % in 2"	Elong. % in 8"	Heat Treat Norm (°F)	Norm Time (min)	Temper (°F)	Temper Time (min)
0200022-01	9	14.70	H-T	49,000	71,200	40.8		1650	14		

Plate Serial No	Pieces	Tons	Charpy Impacts Dir.	Absorbed Energy (Ft-lbs) (ft-lbs) 1	(ft-lbs) 2	(ft-lbs) 3	(ft-lbs) Ave	Min	Lateral Expansion (in.) (in.) 1	(in.) 2	(in.) 3	(in.) Ave	(in.) Min	Shear (%) (%) 1	(%) 2	(%) 3	(%) Ave	Min	Temp (°F)	Size
0200022-01	9	14.70	H-L	56.7	44.5	58.4	53.2	15											-50	6.67mm

Certified a true copy of the original, retained in our file.
AMERICAN ALLOY STEEL
JK 8/19/2020

HOT ROLLED CARBON STEEL PLATE
TEST COUPONS TAKEN FROM HEAT TREATED PLATE
Place frequency charpy;

Manufactured to fully killed fine grain practice by Electric Arc Furnace. Welding or weld repair was not performed on this material. Mercury has not been used in the direct manufacturing of this material. Produced as continuous cast discrete plate, unless otherwise noted in Specification. For Mexico shipments:nhc-SalesMX@nucor.com
Yield by 0.5EUL method unless otherwise specified. Ceq = C+(Mn/6)+((Cr+Mo+V)/5)+((Cu+Ni)/15)
Pcm = C+(Si/30)+(Mn/20)+(Cu/20)+(Ni/60)+(Cr/20)+(Mo/15)+(V/10)+5B
Melted and Manufactured in the USA. ISO 9001:2015 certified. PED 97/23/EC 7/2 Annex 1, Para. 4.3 Compliant.
DIN 50049 3.1.B/EN 10204 3.1B(2004), DIN EN 10204 3.1(2005) compliant. For ABS grades only, Quality Assurance certificate QA-3624366

We hereby certify that the contents of this report are accurate and correct. All test results and operations performed by the material manufacturer are in compliance with the applicable specifications, including customer specifications.

T. A. Depretis, Metallurgist

8/4/2020 9:36:58 AM

AMERICAN ALLOY STEEL, INC.
650 Harbor Way
ROME, NY 13440
PHONE (315) 371-9055 FAX (315) 336-3529

PACKING LIST

PACKING LIST NO 711737 S/O NO 677328 DATE: 04/07/2021

SOLD TO: 308500 PHONE: 1-902-429-0272
INUKSHUK CONSTRUCTION LIMITED
1869 UPPER WATER STREET SUITE AH202
HALIFAX, NS B3J 1S9

SHIP TO: 3
TECHFORM-MONTAL
3139 BOUL DES ENTREPRISES
TERREBONNE, QC
J6X 4J9

CUSTOMER BUYER NAME:M.LOSIER PHONE NO: 1-902-429-0272

CUST PO NUMBER	FOB POINT	--- SHIP VIA -- ITM	SHIPPING REF	TERMS	DATE REQ
341-1001-NY	DELIVERED			PPD	04/06/2021

1 SET OF MTRs IS REQUIRED WITH SHIPMENT

LN#	ITM	QTY	THKNSS	MATERIAL/ITEM DESCRIPTION	UNT WGT	EXT WGT
				ASME SA 516 GRADE 70, KILLED FINE GRAIN, NORMALIZED		
1	2	4	3/8"	96" X 480"	4901	19604
2	3	1	5/16"	96" X 480"	4084	4084
3	4	6	1/4"	96" X 480"	3267	19602

Total Pieces on this Packing List 11

Total Weight on this Packing List 43290

MRR #006

STRAIGHT BILL OF LADING - SHORT FORM - ORIGINAL - NOT NEGOTIABLE
AMERICAN ALLOY STEEL, INC.

CARRIER: ITM

FROM: AMERICAN ALLOY STEEL, INC.
6230 N HOUSTON-ROSSLYN
HOUSTON, TX. 77091
1-713-462-8081

DATE: 03/08/2021

BILL OF LADING: 678583

CONSIGNED TO: TECHFORM-MONTAL
DESTINATION : 3139 BOUL DES ENTREPRISES
TERREBONNE, QC
J6X 4J9
CANADA

CUSTOMS: SEAMONT BROKERAGE
PH:514-931-0306/FAX:514-363-5564

SUBJECT TO SECTION 7 OF CONDITIONS OF APPLICABLE BILL OF LADING, IF THIS SHIPMENT IS TO BE DELIVERED TO THE CONSIGNEE WITHOUT RECOURSE ON THE CONSIGNOR, THE CONSIGNOR SHALL SIGN THE FOLLOWING STATEMENT: THE CARRIER SHALL NOT MAKE DELIVERY OF THIS SHIPMENT WITHOUT PAYMENT OF FREIGHT AND ALL OTHER LAWFUL CHARGES.

*** FREIGHT CHARGES: PREPAID

THE PROPERTY DESCRIBED BELOW, IN APPARENT GOOD ORDER, EXCEPT AS NOTED (CONTENTS AND CONDITION OF CONTENTS OF PACKAGES UNKNOWN), MARKED, CONSIGNED, AND DESTINED AS INDICATED BELOW, WHICH SAID CARRIER (THE WORD CARRIER BEING UNDERSTOOD THROUGHOUT THIS CONTRACT AS MEANING ANY PERSON OR CORPORATION IN POSSESSION OF THE PROPERTY UNDER THE CONTRACT) AGREES TO CARRY TO ITS USUAL PLACE OF DELIVERY AT SAID DESTINATION, IF ON ITS ROUTE TO SAID DESTINATION. IT IS MUTUALLY AGREED, AS TO EACH CARRIER OF ALL OR ANY OF SAID PROPERTY OVER ALL OR ANY PORTION OF SAID ROUTE TO DESTINATION, AND AS TO EACH PARTY AT ANY TIME INTERESTED IN ALL OR ANY SAID PROPERTY, THAT EVERY SERVICE TO BE PERFORMED HEREUNDER SHALL BE SUBJECT TO ALL THE TERMS AND CONDITIONS OF THE UNIFORM DOMESTIC STRAIGHT BILL OF LADING SET FORTH (1) IN THE UNIFORM FREIGHT CLASSIFICATION IN EFFECT ON THE DATE HEREOF, IF THIS IS A RAIL OR A RAIL-WATER SHIPMENT, OR (2) IN THE APPLICABLE MOTOR CARRIER CLASSIFICATION OR TARIFF IF THIS IS A MOTOR CARRIER SHIPMENT.

SHIPPER HEREBY CERTIFIES THAT HE IS FAMILIAR WITH ALL THE TERMS AND CONDITIONS OF THE SAID BILL OF LADING, INCLUDING THOSE ON THE BACK THEREOF, SET FORTH IN THE CLASSIFICATION OR TARIFF WHICH GOVERNS THE TRANSPORTATION OF THIS SHIPMENT, AND THE SAID TERMS AND CONDITIONS ARE HEREBY AGREED TO BY THE SHIPPER AND ACCEPTED FOR HIMSELF AND HIS ASSIGNS.

Permanent post-office address of shipper:
AMERICAN ALLOY STEEL, INC.
P.O.BOX 40469
HOUSTON, TX 77240

Load must be secured
before leaving premises.

Driver Signature/Date
ITM

QTY	DESCRIPTION OF ARTICLES	WGT (LBS)	PL NO	SO NO	PO NO
	--- C L A S S - 50 S T E E L ----				
11	5/16" X 96" X 480"	44924	709064	677336	341-1001-TX
11	T O T A L S	44924			

11 LOOSE STEEL PLATES
1 ENVELOPE
ENVELOPE MUST DELIVER WITH FREIGHT

LOADED BY_____ DATE_____ PER ATTACHED PACKING LIST(S)

RECEIVED BY_____ DATE_____

Time In: _____ Signature: _____ Time Out: _____ Signature: _____

AMERICAN ALLOY STEEL, INC.
6230 N. Houston-Rosslyn
HOUSTON, TX 77091
PHONE (713) 462-8081 FAX (713) 462-0527

PACKING LIST

PACKING LIST NO 709064 S/O NO 677336 DATE: 03/05/2021

SOLD TO: 308500 PHONE: 1-902-429-0272
INUKSHUK CONSTRUCTION LIMITED
1869 UPPER WATER STREET SUITE AH202
HALIFAX, NS B3J 1S9

SHIP TO: 3
TECHFORM-MONTAL
3139 BOUL DES ENTREPRISES
TERREBONNE, QC
J6X 4J9

CUSTOMER BUYER NAME:M.LOSIER PHONE NO: 1-902-429-0272

CUST PO NUMBER	FOB POINT	--- SHIP VIA --	SHIPPING REF	TERMS	DATE REQ
341-1001-TX	DELIVERED	ITM		PPD	04/05/2021

1 SET OF MTRs IS REQUIRED WITH SHIPMENT

LN#	ITM	QTY	THKNSS	MATERIAL/ITEM DESCRIPTION	UNT WGT	EXT WGT
				ASME SA 516 GRADE 70, KILLED, FINE GRAIN, NORMALIZED		
1	1	11	5/16"	96" X 480"	4084	44924

Total Pieces on this Packing List 11

Total Weight on this Packing List 44924

Canada Customs and Revenue Agency | Agence des douanes et du revenu du Canada

CANADA CUSTOMS INVOICE
FACTURE DES DOUANES CANADIENNES

1. Vendor (name and address) - Vendeur (nom et adresse)

American Alloy Steel
6230 N. Houston Rosslyn Rd
Houston, TX 77091
Tel: (713) 462-8081 Fax: (713) 462-1638

2. Date of direct shipment to Canada - Date d'expédition directe vers le Canada

03/05/2021

3. Other references (include purchaser's order no.)
Autres références (inclure le n° de commande de l'acheteur)

PO# 341-1001-TX S/O: 677336

4. Consignee (name and address) - Destinataire (nom et adresse)

TECHFORM-MONTAL
3139 BOUL DES ENTREPRISES
TERREBONNE, QC J6X 4J9
CANADA

5. Purchaser's name and address (if other than consignee)
Nom et adresse de l'acheteur (s'il diffère du destinataire)

AMERICAN ALLOY STEEL
6230 N. HOUSTON ROSSLYN RD.
HOUSTON, TX 77091
USA

6. Country of transhipment - Pays de transbordement

USA

7. Country of origin of goods
Pays d'origine des marchandises

USA

IF SHIPMENT INCLUDES GOODS OF DIFFERENT ORIGINS AGAINST ITEMS IN 12. SI L'EXPEDITION COMPREND DES MARCHANDISES D'ORIGINES DIFFERENTES, PRECISEZ LEUR PROVENANCE EN 12

8. Transportation: Give mode and place of direct shipment to Canada
Transport: Precisez model et point d'expedition directe vers le Canada

ITM
CUSTOMS: SEAMONT BROKERAGE
PH#514-931-0306

9. Conditions of sale and terms of payment
(i.e. Sale, consignment shipment, leased goods, etc.)
Conditions de vente et modalitiés de palement
(p. ex. vente, expédition en consignation, location de marchandises, etc.)

SALE

10. Currency of settlement - Devises du palement

US FUNDS

11. Number of packages Nombre de colis	12. Specification of commodities (kind of packages, marks and numbers, general description and characteristics, i.e., grad,e quality) Désignation des articles (nature des colis, marques et numéros, description générale et caractéristiques, p. ex, classe, qualité)	13. Quantity (state unit) Quantité (précisez l'unité)	Selling price - Prix de vente	
			14. Unit Price Prix unitaire	15. Total
	STEEL PLATE 5/16" x 96" x 480" - USA	11	$3349.00	$36839.00

18. If any of fields 1 to 17 are included on an attached commercial invoice, check this box
Si tout renseignement relativement aux zones 1 à 17 figure sur une ou des factures commerciales ci-attachees, cochez cette case ☑
Commercial Invoice No. / N° de la facture commerciale 3051001-2

16. Total Weight - Poids Total		17. Invoice total Total de la facture
Net	Gross - Brut	
44924 LBS	44924 LBS	$36839.00

19. Exporter's name and address (if other than vendor)
Nom et adresse de l'exportateur (s'il differe du vendeur)

20. Originator (name and address) - Expéditeur d'origine (nom et adresse)

21. CCRA ruling (if applicable) - Décision de l'Agence (s'il y a lieu)

22. If fields 23 to 25 are not applicable, check this box ☐
Si les zones 23 à 25 sont sans objet, cochez cette case

23. If included in field 17 indicate amount:
Si compris dans le total à la zone 17, précisez:

(i) Transportation charges, expenses and insurance from the place of direct shipment to Canada
Les frais de transport, dépenses et assurances à partir du point d'expédition directe vers le Canada

(ii) Costs for construction, erection and assembly incurred after importation into Canada
Les coûts de construction ,d'érection et d'assemblage après importation au Canada

(iii) Export packing
Le coût de l'emballage d'exportation

24. If not included in field 17 indicate amount:
Si non compris dans le total à la zone 17, précisez:

(i) Transportation charges, expenses, and insurance from the place of direct shipment to Canada
Les frais de transport, dépenses et assurances jusqu'au point d'expédition directe vers le Canada

(ii) Amounts for commissions other than buying commissions
Les commissions autres que celles versées pour l'achat

(iii) Export packing
Le coût de l'emballage d'exportation

25. Check (if applicable):
Cochez (s'il y a lieu):

(i) Royalty payments or subsequent proceeds are paid or payable by the purchaser
Des redevances ou produits ont été ou seront versés par l'acheteur ☐

(ii) The purchaser has supplied goods or services for use in the production of these goods
L'acheteur a fourni des marchandises ou des services pour la production de ces marchandises ☐

AMERICAN ALLOY STEEL, INC.
6230 N Houston-Rosslyn
P.O. Box 40469
HOUSTON, TX 77240-0469
PHONE (713) 462-8081 FAX (713) 462-0527

PINVOICE NO. 3051001-2 DATE: 03/05/2021

SHOP ORDER: 677336 ORDER LOC: TX ORDER DATE: 02/12/2021

SOLD TO: 308500 PHONE: 1-902-429-0272
INUKSHUK CONSTRUCTION LIMITED
1869 UPPER WATER STREET SUITE AH202
HALIFAX, NS B3J 1S9
CANADA
FAX: 1-902-429-7762

SHIP TO: 3
TECHFORM-MONTAL
3139 BOUL DES ENTREPRISES
TERREBONNE, QC
J6X 4J9
CANADA

CUST PO NO	BUYER NAME	---SALESMEN----
341-1001-TX	M.LOSIER	FCL/SEL/ /CAN

FOB POINT	SHIP VIA	TERMS	FED ID
DELIVERED	ITM	PPD	74-1688398

SHIPPING REF	MTRs REQD W/INV	W/SHP	SHIP WGT	PARTIAL OK	REQD SHIP
	0	1	44924	N	04/05/2021

ITEM	QTY	THKNSS	MATERIAL/ITEM DESCRIPTION	PRC EACH	PRC EXTD
			ASME SA 516 GRADE 70, KILLED, FINE GRAIN, NORMALIZED		
1	11	5/16"	96" X 480"	3349.00	36839.00

TOTAL AMOUNT (excl applicable taxes) 36839.00 USD

Please examine the above carefully and notify your American Alloy Steel salesman of any changes, otherwise the order will be shipped as shown.

UNITED STATES–MEXICO–CANADA AGREEMENT (USMCA)

CERTIFICATE OF ORIGIN

1. CERTIFIER NAME AND ADDRESS: DANIEL VENEGAS 6230 NORTH HOUSTON ROSSLYN ROAD HOUSTON, TX 77040 TEL:713-462-8081 EMAIL:DANIEL@AASTEEL.COM TAX ID NUMBER: 1-74-1688398-5	2. EXPORTER NAME AND ADDRESS: AMERICAN ALLOY STEEL, INC. 6230 NORTH HOUSTON ROSSLYN ROAD HOUSTON, TX 77040 TEL:713-462-8081 FAX:713-462-1638 TAX ID NUMBER: 1-74-1688398-5
3. PRODUCER NAME AND ADDRESS: ARCELORMITTAL BURNS HARBOR PLATE US HWY 12 BURNS HARBOR, IN USA TEL: N/A EMAIL: N/A TAX ID NUMBER: N/A	4. IMPORTER NAME AND ADDRESS: AMERICAN ALLOY STEEL 6230 N. HOUSTON ROSSLYN RD. HOUSTON, TX 77091 USA TEL: N/A EMAIL: N/A TAX ID NUMBER: N/A

5. DESCRIPTION OF GOOD(S): STEEL PLATE	6. H.S. TARIFF CLASSIFICATION NUMBER	7. ORIGIN CRITERION	8. COUNTRY OF ORIGIN
SO# 677336 PO# 341-1001-TX			
ITEM# 1 – 11 PCS 5/16" x 96" x 480"	7208.51.0030	B	USA

I CERTIFY THAT:

-THE GOODS DESCRIBED IN THIS DOCUMENT QUALIFY AS ORIGINATING AND THE INFORMATION CONTAINED IN THIS DOCUMENT IS TRUE AND ACCURATE. I ASSUME RESPONSIBILITY FOR PROVING SUCH REPRESENTATIONS AND AGREE TO MAINTAIN AND PRRESENT UPON REQUEST OR TO MAKE AVAILABLE DURING A VERIFICATION VISIT, DOCUMENTATION NECESSARY TO SUPPORT THIS CERTIFICATION.

-THIS CERTIFICATE CONSISTS OF ___ PAGES, INCLUDING ALL ATTACHMENTS.

9. CERTIFIER'S SIGNATURE: Daniel Venegas	COMPANY NAME: AMERICAN ALLOY STEEL, INC.
CERTIFIER'S NAME: DANIEL VENEGAS	CERTIFIER'S TITLE: Traffic Coordinator
DATE: 03/05/2021	CERTIFIER TYPE (IMPORT, EXPORTER, PRODUCER): EXPORTER



AMERICAN ALLOY STEEL, INC.

6230 N. HOUSTON ROSSLYN ROAD
HOUSTON, TEXAS 77091
Phone: 713-462-8081 Fax: 713-462-8209

M.T.R. COVER SHEET
03/05/2021

Customer Name : INUKSHUK CONSTRUCTION LIMITED
Address :
City, State Zip : HALIFAX, NS B3J 1S9
Attention : M.LOSIER
Phone Number : 1-902-429-0272
Reference Number : 677336
Notes 1 : P.O. NO. 341-1001-TX

Control Number: 1088263
Queued By : Alex Garza
Page Number : 1
Total Pages : 26
Fax Number : 1-902-429-7762

THE INFORMATION YOU REQUESTED IS ATTACHED.
THANK YOU FOR YOUR BUSINESS !

AASI PLATE NUMBER	HEAT # / SLAB #	MILL
5236100	811S00740 T030113	MITTAL
5236101	811S00740 T030113	MITTAL
5236102	813S60780 T030117	MITTAL
5236103	813S60780 T030116	MITTAL
5236106	813S60780 T030115	MITTAL
5236107	811S00740 T030114	MITTAL
5236108	811S00740 T030112	MITTAL
5236109	811S00740 T030112	ARCELORMITTAL
5236110	813S60780 T030116	ARCELORMITTAL
5236111	811S00740 T030114	ARCELORMITTAL
5236112	811S00740 T030110	ARCELORMITTAL

03/05/2021 From: AMERICAN ALLOY STEEL, INC. To: INUKSHUK CONSTRUCTION LIMITED
P.O.#: 341-1001-TX S.O.#: 677336 AA PL#: 5236100
Item: 1 (1 PC) 5/16" X 96" X 480"

ArcelorMittal Burns Harbor Plate

QUALITY ASSURANCE
REPORT OF TEST AND ANAYLSES

US HWY 12 Burns Harbor, Indiana

SHIPMENT NO. 803-69103 | DATE SHIPPED 01-28-21 | CAR OR VEHICLE NO. IHB-MCCOO-BNSF LMIC 007204

SOLD TO:
AMERICAN ALLOY STEEL INC
PO BOX 40469
HOUSTON TX 77240-0469

SHIP TO:
AMERICAN ALLOY STEEL INC
BNSF TR# 7226 MILE 66.4 LN SEG 492
6230 N HOUSTON ROSSLYN RD
HOUSTON TX 77091-3410

NOTE	SERIAL NUMBER	PAT NO.	HEAT NUMBER	NO. PCS.	SIZE AND QUANTITY: THICKNESS INCHES	WIDTH OR DIA. INCHES	LENGTH INCHES	WEIGHT POUNDS	YIELD POINT PSI	TENSILE STRENGTH PSI	AF FRAC. ELONG. IN	RED. % %

QUALITY STEEL MELTED & MANUFACTURED IN THE U. S. A.
PLATES - ASTM A516-17 GR 70 PVQ KLD FINE GRAIN PRAC, ASTM A516-17 GR 65 PVQ, ASTM A516-17 GR 60 PVQ, ASME SA516 GR 70 PVQ 2019 EDITION, ASME SA516 GR 65 PVQ 2019 EDITION, ASME SA516 GR 60 PVQ 2019 EDITION, CH-V SA2085 PLT L 15/12 FTLBS AT -50F, VACUUM DEGASSED --- PLT NORMALIZED & COOLED IN STILL AIR --- IN ACCORDANCE WITH EN 10204:2004 TYPE 3.1 10204:2004 TYPE 3.1
NO WELD REPAIR WAS PERFORMED ON BELOW PLATE(S)
CO# 125823 GH 377-1561A
PLATES HEAT TREATED - TEST SPECIMENS ATTACHED & YIELD STRENGTH @ .5% EUL
MERCURY IN ANY FORM HAS NOT BEEN USED IN THE PRODUCTION OF THIS ORDER

T030112	811S00740	1	5/16	96	480	4084	53100	74600	8	26		
			N 1650 DEG F - 15 MIN									
(M55)MFST REF#:2												
T030113 →	811S00740	2	5/16	96	480	8168	55100	75800	8	25		
			N 1650 DEG F - 15 MIN									
(M55)MFST REF#:2												
T030114	811S00740	1	5/16	96	480	4084	51400	71200	8	26		
			N 1650 DEG F - 15 MIN									
(M55)MFST REF#:2												

Q-QUENCH TEMPERATURE T-TEMPER TEMPERATURE N-NORMALIZE TEMPERATURE

SERIAL NUMBER	PAT NO.	HEAT NUMBER	HARD BHN	BEND	THICKNESS INCHES	TYPE	SIZE	DIR	TEST TEMP F	CHARPY IMPACT ENERGY FT LBS 1	2	3	SHEAR(%) 1	2	3	LAT. EXP MILS 1	2	3
T030112		811S00740			.312	V	2/3	L	-50	79	78	81						
T030113		811S00740			.312	V	2/3	L	-50	75	71	70						
T030114		811S00740			.312	V	2/3	L	-50	77	80	112						

Certified true copy of the original, retained in our file.
AMERICAN ALLOY STEEL, INC.
Reviewed By:

HEAT NUMBER	CHEMICAL ANALYSIS C	Mn	P	S	Si	Cu	Ni	Cr	Mo	V	Ti	Al	B	Cb	N	Sn	MQUAD GRAIN SIZE
811S00740	.17	1.07	.011	.006	.32	9.221	.19	.03	.007	.002	.002	.037	.0002	.002	.004	.003	

AMERICAN ALLOY PLATE #5236100

I certify that the above results are a true and correct copy of actual results contained in records maintained by ArcelorMittal Burns Harbor and are in full compliance with the requirements of the specification cited above. This test report cannot be altered and must be transmitted intact with any subsequent third party test reports, if required.

BHPLTRPT.TIF

FARID HASSANI PER MNT
SUPV. QUALITY ASSURANCE

03/05/2021 From: AMERICAN ALLOY STEEL, INC. To: INUKSHUK CONSTRUCTION LIMITED
P.O.#: 341-1001-TX S.O.#: 677336 AA PL#: 5236101
Item: 1 (1 PC) 5/16" X 96" X 480"

ArcelorMittal Burns Harbor Plate

QUALITY ASSURANCE
REPORT OF TEST AND ANAYLSES

US HWY 12 Burns Harbor, Indiana

SHIPMENT NO.	DATE SHIPPED	CAR OR VEHICLE NO.
803-69103	01-28-21	IHB-MCCOO-BNSF LMIC 007204

SOLD TO:
AMERICAN ALLOY STEEL INC
PO BOX 40469
HOUSTON TX 77240-0469

SHIP TO:
AMERICAN ALLOY STEEL INC
BNSF TR# 7226 MILE 66.4 LN SEG 492
6230 N HOUSTON ROSSLYN RD
HOUSTON TX 77091-3410

NOTE	SERIAL NUMBER	PAT NO.	HEAT NUMBER	NO. PCS.	SIZE AND QUANTITY: THICKNESS	WIDTH OR DIA.	LENGTH	WEIGHT	YIELD POINT	TENSILE STRENGTH	AF FRAC. ELONG.	RED.
					INCHES	INCHES	INCHES	POUNDS	PSI	PSI	IN	% %

QUALITY STEEL MELTED & MANUFACTURED IN THE U. S. A.
PLATES - ASTM A516-17 GR 70 PVQ KLD FINE GRAIN PRAC, ASTM A516-17 GR 65 PVQ, ASTM A516-17 GR 60 PVQ, ASME SA516 GR 70 PVQ 2019 EDITION, ASME SA516 GR 65 PVQ 2019 EDITION, ASME SA516 GR 60 PVQ 2019 EDITION, CH-V SA20S5 PLT L 15/12 FTLBS AT -50F, VACUUM DEGASSED --- PLT NORMALIZED & COOLED IN STILL AIR --- IN ACCORDANCE WITH EN 10204:2004 TYPE 3.1 10204:2004 TYPE 3.1
NO WELD REPAIR WAS PERFORMED ON BELOW PLATE(S)
CO# 125823 GH 377-1561A
PLATES HEAT TREATED - TEST SPECIMENS ATTACHED & YIELD STRENGTH @ .5% EUL
MERCURY IN ANY FORM HAS NOT BEEN USED IN THE PRODUCTION OF THIS ORDER

T030112	811S00740	1	5/16	96	480	4084	53100	74600	8	26	
			N 1650 DEG F - 15 MIN								
(M55)MFST REF#:2											
T030113 →	811S00740	2	5/16	96	480	8168	55100	75800	8	25	
			N 1650 DEG F - 15 MIN								
(M55)MFST REF#:2											
T030114	811S00740	1	5/16	96	480	4084	51400	71200	8	26	
			N 1650 DEG F - 15 MIN								
(M55)MFST REF#:2											

Q-QUENCH TEMPERATURE T-TEMPER TEMPERATURE N-NORMALIZE TEMPERATURE

SERIAL NUMBER	PAT NO.	HEAT NUMBER	HARD BHN	BEND	THICKNESS INCHES	TYPE	SIZE	DIR	TEST TEMP. F	CHARPY IMPACT ENERGY FT LBS 1	2	3	SHEAR(%) 1	2	3	LAT. EXP MILS 1	2	3
T030112		811S00740			.312	V	2/3	L	-50	79	78	81						
T030113		811S00740			.312	V	2/3	L	-50	75	71	70						
T030114		811S00740			.312	V	2/3	L	-50	77	80	112						

Certified a true copy of the original, retained in our file.
AMERICAN ALLOY STEEL, INC.
Reviewed By:
D 03/15/21

HEAT NUMBER	CHEMICAL ANALYSIS: C	Mn	P	S	Si	Cu	Ni	Cr	Mo	V	Ti	Al	B	Cb	N	Sn	MQUAID GRAIN SIZE
811S00740	.17	1.07	.011	.006	.329	.221	.19	.03	.007	.002	.002	.037	.0002	.002	.004	.003	

AMERICAN ALLOY PLATE #5236101

I certify that the above results are a true and correct copy of actual results contained in records maintained by ArcelorMittal Burns Harbor and are in full compliance with the requirements of the specification cited above. This test report cannot be altered and must be transmitted intact with any subsequent third party test reports, if required.

BHPLTRPT.TIF

SUPV. QUALITY ASSURANCE

FARID HASSANI PER MWT

03/05/2021 From: AMERICAN ALLOY STEEL, INC. To: INUKSHUK CONSTRUCTION LIMITED
P.O.#: 341-1001-TX S.O.#: 677336 AA PL#: 5236102
Item: 1 (1 PC) 5/16" X 96" X 480"

ArcelorMittal Burns Harbor Plate

QUALITY ASSURANCE
REPORT OF TEST AND ANAYLSES

US HWY 12 Burns Harbor, Indiana

SHIPMENT NO.	DATE SHIPPED	CAR OR VEHICLE NO.
803-69103	01-28-21	IHB-MCCOO-BNSF LMIC 007204

SOLD TO:
AMERICAN ALLOY STEEL INC
PO BOX 40469
HOUSTON TX 77240-0469

SHIP TO:
AMERICAN ALLOY STEEL INC
BNSF TR# 7226 MILE 66.4 LN SEG 492
6230 N HOUSTON ROSSLYN RD
HOUSTON TX 77091-3410

NOTE	SERIAL NUMBER	PAT NO.	HEAT NUMBER	NO. PCS.	SIZE AND QUANTITY THICKNESS	WIDTH OR DIA.	LENGTH	WEIGHT	YIELD POINT	TENSILE STRENGTH	AF FRAC. ELONG.	RED.
					INCHES	INCHES	INCHES	POUNDS	PSI	PSI	IN	% %

QUALITY STEEL MELTED & MANUFACTURED IN THE U. S. A.
PLATES - ASTM A516-17 GR 70 PVQ KLD FINE GRAIN PRAC, ASTM A516-17 GR 65 PVQ, ASTM A516-17 GR 60 PVQ, ASME SA516 GR 70 PVQ 2019 EDITION, ASME SA516 GR 65 PVQ 2019 EDITION, ASME SA516 GR 60 PVQ 2019 EDITION, CH-V SA20S5 PLT L 15/12 FTLBS AT -50F, VACUUM DEGASSED --- PLT NORMALIZED & COOLED IN STILL AIR --- IN ACCORDANCE WITH EN 10204:2004 TYPE 3.1 10204:2004 TYPE 3.1
NO WELD REPAIR WAS PERFORMED ON BELOW PLATE(S)
CO# 125823 GH 377-1561A
PLATES HEAT TREATED - TEST SPECIMENS ATTACHED & YIELD STRENGTH @ .5% EUL
MERCURY IN ANY FORM HAS NOT BEEN USED IN THE PRODUCTION OF THIS ORDER

T030115	813S60780	2	5/16	96	480	8168	55800	76800	8	25	
			N 1650 DEG F - 15 MIN								
(M55)MFST REF#:2											
T030116	813S60780	1	5/16	96	480	4084	53400	75300	8	26	
			N 1650 DEG F - 15 MIN								
(M55)MFST REF#:2											
T030117 →	813S60780	2	5/16	96	480	8168	56400	77100	8	25	
			N 1650 DEG F - 15 MIN								
(M55)MFST REF#:2											

Q-QUENCH TEMPERATURE T-TEMPER TEMPERATURE N-NORMALIZE TEMPERATURE

SERIAL NUMBER	PAT NO.	HEAT NUMBER	HARD BHN	BEND	THICKNESS INCHES	TYPE	SIZE	DIR	TEST TEMP F	CHARPY IMPACT ENERGY FT LBS 1	2	3	SHEAR(%) 1	2	3	LAT. EXP MILS 1	2	3
T030115		813S60780			.312	V	2/3	L	-50	73	87	65						
T030116		813S60780			.312	V	2/3	L	-50	119	77	81						
T030117		813S60780			.312	V	2/3	L	-50	122	74	39						

Certified a true copy of the original, retained in our file.
AMERICAN ALLOY STEEL, INC.
Reviewed By:
DO3/5/21

HEAT NUMBER	CHEMICAL ANALYSIS C	Mn	P	S	Si	Cu	Ni	Cr	Mo	V	Ti	Al	B	Cb	N	Sn	MQUAID GRAIN SIZE
813S60780	.17	1.08	.013	.004	.34	3.212	.17	.03	.006	.002	.002	.039	.0002	.002	.003	.003	

AMERICAN ALLOY
PLATE # 5236102

I certify that the above results are a true and correct copy of actual results contained in records maintained by ArcelorMittal Burns Harbor and are in full compliance with the requirements of the specification cited above. This test report cannot be altered and must be transmitted intact with any subsequent third party test reports, if required.

BHPLTRPT.TIF SUPV. QUALITY ASSURANCE FARID HASSANI PER MWT

03/05/2021 From: AMERICAN ALLOY STEEL, INC. To: INUKSHUK CONSTRUCTION LIMITED
P.O.#: 341-1001-TX S.O.#: 677336 AA PL#: 5236103
Item: 1 (1 PC) 5/16" X 96" X 480"

ArcelorMittal Burns Harbor Plate

QUALITY ASSURANCE
REPORT OF TEST AND ANAYLSES

US HWY 12 Burns Harbor, Indiana

SHIPMENT NO.	DATE SHIPPED	CAR OR VEHICLE NO.
803-69103	01-28-21	IHB-MCCOO-BNSF LMIC 007204

SOLD TO:
AMERICAN ALLOY STEEL INC
PO BOX 40469
HOUSTON TX 77240-0469

SHIP TO:
AMERICAN ALLOY STEEL INC
BNSF TR# 7226 MILE 66.4 LN SEG 492
6230 N HOUSTON ROSSLYN RD
HOUSTON TX 77091-3410

NOTE	SERIAL NUMBER	PAT NO.	HEAT NUMBER	NO. PCS.	SIZE AND QUANTITY THICKNESS	WIDTH OR DIA.	LENGTH	WEIGHT	YIELD POINT	TENSILE STRENGTH	AF FRAC. ELONG.	RED.
					INCHES	INCHES	INCHES	POUNDS	PSI	PSI	IN	% %

QUALITY STEEL MELTED & MANUFACTURED IN THE U. S. A.
PLATES - ASTM A516-17 GR 70 PVQ KLD FINE GRAIN PRAC, ASTM A516-17 GR 65 PVQ, ASTM A516-17 GR 60 PVQ, ASME SA516 GR 70 PVQ 2019 EDITION, ASME SA516 GR 65 PVQ 2019 EDITION, ASME SA516 GR 60 PVQ 2019 EDITION, CH-V SA20S5 PLT L 15/12 FTLBS AT -50F, VACUUM DEGASSED --- PLT NORMALIZED & COOLED IN STILL AIR --- IN ACCORDANCE WITH EN 10204:2004 TYPE 3.1 10204:2004 TYPE 3.1
NO WELD REPAIR WAS PERFORMED ON BELOW PLATE(S)
CO# 125823 GH 377-1561A
PLATES HEAT TREATED - TEST SPECIMENS ATTACHED & YIELD STRENGTH @ .5% EUL
MERCURY IN ANY FORM HAS NOT BEEN USED IN THE PRODUCTION OF THIS ORDER

T030115	813S60780	2	5/16	96	480	8168	55800	76800	8	25	
			N 1650 DEG F - 15 MIN								
(M55)MFST REF#:2											
T030116→	813S60780	1	5/16	96	480	4084	53400	75300	8	26	
			N 1650 DEG F - 15 MIN								
(M55)MFST REF#:2											
T030117	813S60780	2	5/16	96	480	8168	56400	77100	8	25	
			N 1650 DEG F - 15 MIN								
(M55)MFST REF#:2											

Q-QUENCH TEMPERATURE T-TEMPER TEMPERATURE N-NORMALIZE TEMPERATURE

SERIAL NUMBER	PAT NO.	HEAT NUMBER	HARD BHN	BEND	THICKNESS INCHES	TYPE	SIZE	DIR	TEST TEMP F	CHARPY IMPACT ENERGY FT LBS 1	2	3	SHEAR(%) 1	2	3	LAT. EXP MILS 1	2	3
T030115		813S60780			.312	V	2/3	L	-50	73	87	65						
T030116		813S60780			.312	V	2/3	L	-50	119	77	81						
T030117		813S60780			.312	V	2/3	L	-50	122	74	39						

Certified a true copy of the original, retained in our file.
AMERICAN ALLOY STEEL, INC.
Reviewed By:
D03/5/21

HEAT NUMBER	CHEMICAL ANALYSIS C	Mn	P	S	Si	Cu	Ni	Cr	Mo	V	Ti	Al	B	Cb	N	Sn	MQUAID GRAIN SIZE
813S60780	.17	1.08	.013	.004	.343	.212	.17	.03	.006	.002	.002	.039	.0002	.002	.003	.003	

AMERICAN ALLOY
PLATE # 5236103

I certify that the above results are a true and correct copy of actual results contained in records maintained by ArcelorMittal Burns Harbor and are in full compliance with the requirements of the specification cited above. This test report cannot be altered and must be transmitted intact with any subsequent third party test reports, if required.

BHPLTRPT.TIF

SUPV. QUALITY ASSURANCE

FARID HASSANI PER MWT

03/05/2021 From: AMERICAN ALLOY STEEL, INC. To: INUKSHUK CONSTRUCTION LIMITED
P.O.#: 341-1001-TX S.O.#: 677336 AA PL#: 5236106
Item: 1 (1 PC) 5/16" X 96" X 480"

ArcelorMittal Burns Harbor Plate

QUALITY ASSURANCE
REPORT OF TEST AND ANAYLSES

US HWY 12 Burns Harbor, Indiana

SHIPMENT NO.	DATE SHIPPED	CAR OR VEHICLE NO.
803-69103	01-28-21	IHB-MCCOO-BNSF LMIC 007204

SOLD TO:
AMERICAN ALLOY STEEL INC
PO BOX 40469
HOUSTON TX 77240-0469

SHIP TO:
AMERICAN ALLOY STEEL INC
BNSF TR# 7226 MILE 66.4 LN SEG 492
6230 N HOUSTON ROSSLYN RD
HOUSTON TX 77091-3410

NOTE	SERIAL NUMBER	PAT NO.	HEAT NUMBER	NO. PCS.	SIZE AND QUANTITY THICKNESS	WIDTH OR DIA.	LENGTH	WEIGHT	YIELD POINT	TENSILE STRENGTH	AF FRAC. ELONG.	RED.
					INCHES	INCHES	INCHES	POUNDS	PSI	PSI	IN	% %

QUALITY STEEL MELTED & MANUFACTURED IN THE U. S. A.
PLATES - ASTM A516-17 GR 70 PVQ KLD FINE GRAIN PRAC, ASTM A516-17 GR 65 PVQ, ASTM A516-17 GR 60 PVQ, ASME SA516 GR 70 PVQ 2019 EDITION, ASME SA516 GR 65 PVQ 2019 EDITION, ASME SA516 GR 60 PVQ 2019 EDITION, CH-V SA20S5 PLT L 15/12 FTLBS AT -50F, VACUUM DEGASSED --- PLT NORMALIZED & COOLED IN STILL AIR --- IN ACCORDANCE WITH EN 10204:2004 TYPE 3.1 10204:2004 TYPE 3.1
NO WELD REPAIR WAS PERFORMED ON BELOW PLATE(S)
CO# 125823 GH 377-1561A
PLATES HEAT TREATED - TEST SPECIMENS ATTACHED & YIELD STRENGTH @ .5% EUL
MERCURY IN ANY FORM HAS NOT BEEN USED IN THE PRODUCTION OF THIS ORDER

T030115 →	813S60780	2	5/16	96	480	8168	55800	76800	8	25
			N 1650 DEG F -	15 MIN						
(M55)MFST REF#:2										
T030116	813S60780	1	5/16	96	480	4084	53400	75300	8	26
			N 1650 DEG F -	15 MIN						
(M55)MFST REF#:2										
T030117	813S60780	2	5/16	96	480	8168	56400	77100	8	25
			N 1650 DEG F -	15 MIN						
(M55)MFST REF#:2										

Q-QUENCH TEMPERATURE T-TEMPER TEMPERATURE N-NORMALIZE TEMPERATURE

SERIAL NUMBER	PAT NO.	HEAT NUMBER	HARD BHN	BEND	THICKNESS INCHES	TYPE	SIZE	DIR	TEST TEMP. F	CHARPY IMPACT ENERGY FT LBS 1	2	3	SHEAR(%) 1	2	3	LAT. EXP MILS 1	2	3
T030115		813S60780			.312	V	2/3	L	-50	73	87	65						
T030116		813S60780			.312	V	2/3	L	-50	119	77	81						
T030117		813S60780			.312	V	2/3	L	-50	122	74	39						

Certified a true copy of the original, retained in our file.
AMERICAN ALLOY STEEL, INC.
Reviewed By:
D03/5/21

HEAT NUMBER	CHEMICAL ANALYSIS C	Mn	P	S	Si	Cu	Ni	Cr	Mo	V	Ti	Al	B	Cb	N	Sn	MQUAID GRAIN SIZE
813S60780	.17	1.08	.013	.004	.343	.212	.17	.03	.006	.002	.002	.039	.0002	.002	.003	.003	

AMERICAN ALLOY
PLATE #5236106

I certify that the above results are a true and correct copy of actual results contained in records maintained by ArcelorMittal Burns Harbor and are in full compliance with the requirements of the specification cited above. This test report cannot be altered and must be transmitted intact with any subsequent third party test reports, if required.

BHPLTRPT.TIF

SUPV. QUALITY ASSURANCE

FARID HASSANI PER MWT

03/05/2021 From: AMERICAN ALLOY STEEL, INC. To: INUKSHUK CONSTRUCTION LIMITED
P.O.#: 341-1001-TX S.O.#: 677336 AA PL#: 5236107
Item: 1 (1 PC) 5/16" X 96" X 480"

ArcelorMittal Burns Harbor Plate

QUALITY ASSURANCE
REPORT OF TEST AND ANAYLSES

US HWY 12 Burns Harbor, Indiana

SHIPMENT NO. 803-69103 | DATE SHIPPED 01-28-21 | CAR OR VEHICLE NO. IHB-MCCOO-BNSF LMIC 007204

SOLD TO:
AMERICAN ALLOY STEEL INC
PO BOX 40469
HOUSTON TX 77240-0469

SHIP TO:
AMERICAN ALLOY STEEL INC
BNSF TR# 7226 MILE 66.4 LN SEG 492
6230 N HOUSTON ROSSLYN RD
HOUSTON TX 77091-3410

NOTE	SERIAL NUMBER	PAT NO.	HEAT NUMBER	NO. PCS.	SIZE AND QUANTITY: THICKNESS	WIDTH OR DIA.	LENGTH	WEIGHT	YIELD POINT	TENSILE STRENGTH	AF FRAC. ELONG.	RED.
					INCHES	INCHES	INCHES	POUNDS	PSI	PSI	IN	% %

QUALITY STEEL MELTED & MANUFACTURED IN THE U. S. A.
PLATES - ASTM A516-17 GR 70 PVQ KLD FINE GRAIN PRAC, ASTM A516-17 GR 65 PVQ, ASTM A516-17 GR 60 PVQ, ASME SA516 GR 70 PVQ 2019 EDITION, ASME SA516 GR 65 PVQ 2019 EDITION, ASME SA516 GR 60 PVQ 2019 EDITION, CH-V SA20S5 PLT L 15/12 FTLBS AT -50F, VACUUM DEGASSED --- PLT NORMALIZED & COOLED IN STILL AIR --- IN ACCORDANCE WITH EN 10204:2004 TYPE 3.1 10204:2004 TYPE 3.1
NO WELD REPAIR WAS PERFORMED ON BELOW PLATE(S)
CO# 125823 GH 377-1561A
PLATES HEAT TREATED - TEST SPECIMENS ATTACHED & YIELD STRENGTH @ .5% EUL
MERCURY IN ANY FORM HAS NOT BEEN USED IN THE PRODUCTION OF THIS ORDER

T030112	811S00740	1	5/16	96	480		4084	53100	74600	8	26	
			N 1650 DEG F - 15 MIN									
(M55)MFST REF#:2												
T030113	811S00740	2	5/16	96	480		8168	55100	75800	8	25	
			N 1650 DEG F - 15 MIN									
(M55)MFST REF#:2												
T030114 →	811S00740	1	5/16	96	480		4084	51400	71200	8	26	
			N 1650 DEG F - 15 MIN									
(M55)MFST REF#:2												

Q-QUENCH TEMPERATURE T-TEMPER TEMPERATURE N-NORMALIZE TEMPERATURE

SERIAL NUMBER	PAT NO.	HEAT NUMBER	HARD BHN	BEND	THICKNESS INCHES	TYPE	SIZE	DIR	TEST TEMP °F	CHARPY IMPACT ENERGY FT LBS 1	2	3	SHEAR(%) 1	2	3	LAT. EXP MILS 1	2	3
T030112		811S00740			.312	V	2/3	L	-50	79	76	81						
T030113		811S00740			.312	V	2/3	L	-50	75	71	70						
T030114		811S00740			.312	V	2/3	L	-50	77	80	112						

Certified a true copy of the original, retained in our file.
AMERICAN ALLOY STEEL, INC.
Reviewed By:

HEAT NUMBER	CHEMICAL ANALYSIS C	Mn	P	S	Si	Cu	Ni	Cr	Mo	V	Ti	Al	B	Cb	N	Sn	MOLIND GRAIN SIZE
811S00740	.17	1.07	.011	.006	.32	9.221	.19	.03	.007	.002	.002	.037	.0002	.002	.004	.003	

AMERICAN ALLOY PLATE #

I certify that the above results are a true and correct copy of actual results contained in records maintained by ArcelorMittal Burns Harbor and are in full compliance with the requirements of the specification cited above. This test report cannot be altered and must be transmitted intact with any subsequent third party test reports, if required.

BHPLTRPT.TIF

FARID HASSANI PER MMT
SUPV. QUALITY ASSURANCE

03/05/2021 From: AMERICAN ALLOY STEEL, INC. To: INUKSHUK CONSTRUCTION LIMITED
P.O.#: 341-1001-TX S.O.#: 677336 AA PL#: 5236108
Item: 1 (1 PC) 5/16" X 96" X 480"

ArcelorMittal Burns Harbor Plate

QUALITY ASSURANCE REPORT OF TEST AND ANALYSES

US HWY 12 Burns Harbor, Indiana

SHIPMENT NO. 803-69103 | DATE SHIPPED 01-28-21 | CAR OR VEHICLE NO. IHB-MCCOO-BNSF LMIC 007204

SOLD TO:
AMERICAN ALLOY STEEL INC
PO BOX 40469
HOUSTON TX 77240-0469

SHIP TO:
AMERICAN ALLOY STEEL INC
BNSF TR# 7226 MILE 66.4 LN SEG 492
6230 N HOUSTON ROSSLYN RD
HOUSTON TX 77091-3410

NOTE	SERIAL NUMBER	PAT NO.	HEAT NUMBER	NO. PCS.	SIZE AND QUANTITY: THICKNESS INCHES	WIDTH OR DIA. INCHES	LENGTH INCHES	WEIGHT POUNDS	YIELD POINT PSI	TENSILE STRENGTH PSI	AF FRAC. ELONG. IN	RED. %	%

QUALITY STEEL MELTED & MANUFACTURED IN THE U. S. A.
PLATES - ASTM A516-17 GR 70 PVQ KLD FINE GRAIN PRAC, ASTM A516-17 GR 65 PVQ, ASTM A516-17 GR 60 PVQ, ASME SA516 GR 70 PVQ 2019 EDITION, ASME SA516 GR 65 PVQ 2019 EDITION, ASME SA516 GR 60 PVQ 2019 EDITION, CH-V SA20S5 PLT L 15/12 FTLBS AT -50F, VACUUM DEGASSED --- PLT NORMALIZED & COOLED IN STILL AIR --- IN ACCORDANCE WITH EN 10204:2004 TYPE 3.1 10204:2004 TYPE 3.1
NO WELD REPAIR WAS PERFORMED ON BELOW PLATE(S)
CO# 125823 GH 377-1561A
PLATES HEAT TREATED - TEST SPECIMENS ATTACHED & YIELD STRENGTH @ .5% EUL
MERCURY IN ANY FORM HAS NOT BEEN USED IN THE PRODUCTION OF THIS ORDER

T030112 →	811S00740	1	5/16	96	480	4084	53100	74600	8	26			
			N 1650 DEG F - 15 MIN										
(M55)MFST REF#:2													
T030113	811S00740	2	5/16	96	480	8168	55100	75800	8	25			
			N 1650 DEG F - 15 MIN										
(M55)MFST REF#:2													
T030114	811S00740	1	5/16	96	480	4084	51400	71200	8	26			
			N 1650 DEG F - 15 MIN										
(M55)MFST REF#:2													

Q-QUENCH TEMPERATURE T-TEMPER TEMPERATURE N-NORMALIZE TEMPERATURE

SERIAL NUMBER	PAT NO.	HEAT NUMBER	HARD BHN	BEND	THICKNESS INCHES	TYPE	SIZE	DIR	TEST TEMP F	CHARPY IMPACT ENERGY FT LBS 1	2	3	SHEAR(%) 1	2	3	LAT. EXP MILS 1	2	3
T030112		811S00740			.312	V	2/3	L	-50	79	78	81						
T030113		811S00740			.312	V	2/3	L	-50	75	71	70						
T030114		811S00740			.312	V	2/3	L	-50	77	80	112						

Certified a true copy of the original, retained in our file.
AMERICAN ALLOY STEEL, INC.
Reviewed By:

HEAT NUMBER	CHEMICAL ANALYSIS C	Mn	P	S	Si	Cu	Ni	Cr	Mo	V	Ti	Al	B	Cb	N	Sn	EQUIAX GRAIN SIZE
811S00740	.17	1.07	.011	.006	.32	9.221	.19	.03	.007	.002	.002	.037	.0002	.002	.004	.003	

AMERICAN ALLOY PLATE #5236108

I certify that the above results are a true and correct copy of actual results contained in records maintained by ArcelorMittal Burns Harbor and are in full compliance with the requirements of the specification cited above. This test report cannot be altered and must be transmitted intact with any subsequent third party test reports, if required.

BHPLTRPT.TIF

FARID HASSANI PER MNT
SUPV. QUALITY ASSURANCE

03/05/2021 From: AMERICAN ALLOY STEEL, INC. To: INUKSHUK CONSTRUCTION LIMITED
P.O.#: 341-1001-TX S.O.#: 677336 AA PL#: 5236109
Item: 1 (1 PC) 5/16" X 96" X 480"

ArcelorMittal Burns Harbor Plate

QUALITY ASSURANCE
REPORT OF TEST AND ANAYLBES

US HWY 12 Burns Harbor, Indiana

SHIPMENT NO.	DATE SHIPPED	CAR OR VEHICLE NO.
803-69100	01-28-21	IHB-MCCOO-BNSF ATW 317180

SOLD TO
AMERICAN ALLOY STEEL INC
PO BOX 40469
HOUSTON TX 77240-0469

SHIP TO
AMERICAN ALLOY STEEL INC
BNSF TR# 7226 MILE 66.4 LN SEG 492
6230 N HOUSTON ROSSLYN RD
HOUSTON TX 77091-3410

NOTE	SERIAL NUMBER	PAT NO.	HEAT NUMBER	NO. PCS.	SIZE AND QUANTITY: THICKNESS	WIDTH OR DIA.	LENGTH	WEIGHT	YIELD POINT	TENSILE STRENGTH	AF FRAC. ELONG.	RED.
					INCHES	INCHES	INCHES	POUNDS	PSI	PSI	IN	% %

QUALITY STEEL MELTED & MANUFACTURED IN THE U. S. A.
PLATES - ASTM A516-17 GR 70 PVQ KLD FINE GRAIN PRAC, ASTM A516-17 GR 65 PVQ,
ASTM A516-17 GR 60 PVQ, ASME SA516 GR 70 PVQ 2019 EDITION, ASME
SA516 GR 65 PVQ 2019 EDITION, ASME SA516 GR 60 PVQ 2019 EDITION,
CH-V SA20S5 PLT L 15/12 FTLBS AT -50F, VACUUM DEGASSED --- PLT
NORMALIZED & COOLED IN STILL AIR --- IN ACCORDANCE WITH EN
10204:2004 TYPE 3.1 10204:2004 TYPE 3.1
NO WELD REPAIR WAS PERFORMED ON BELOW PLATE(S)
CO# 125823 GH 377-1561A
PLATES HEAT TREATED - TEST SPECIMENS ATTACHED & YIELD STRENGTH @ .5% EUL
MERCURY IN ANY FORM HAS NOT BEEN USED IN THE PRODUCTION OF THIS ORDER

T030112	811S00740	1	5/16	96	480			4084	53100	74600	8	26

N 1650 DEG F - 15 MIN

(M55)MFST REF#:2

Q-QUENCH TEMPERATURE T-TEMPER TEMPERATURE N-NORMALIZE TEMPERATURE

SERIAL NUMBER	PAT NO.	HEAT NUMBER	HARD BHN	BEND	THICKNESS INCHES	TYPE	SIZE	DIR	TEST TEMP F	CHARPY IMPACT ENERGY FT LBS 1	2	3	SHEAR(%) 1	2	3	LAT. EXP MILS 1	2	3
T030112		811S00740			.312	V	2/3	L	-50	79	78	81						

Certified a true copy of the original, retained in our file.
AMERICAN ALLOY STEEL
J.K 2/24/2021

HEAT NUMBER	CHEMICAL ANALYSIS C	Mn	P	S	Si	Cu	Ni	Cr	Mo	V	Ti	Al	B	Cb	N	Sn	MCUAID GRAIN SIZE
811S00740	.17	1.07	.011	.006	.32	9.221	.19	.03	.007	.002	.002	.037	.0002	.002	.004	.003	

I certify that the above results are a true and correct copy of actual results contained in records maintained by ArcelorMittal Burns Harbor and are in full compliance with the requirements of the specification cited above. This test report cannot be altered and must be transmitted intact with any subsequent third party test reports, if required.

BHPLTRPT.TIF

FARID HASSANI PER MNT
SUPV. QUALITY ASSURANCE

AMERICAN ALLOY PLATE #5236109

03/05/2021 From: AMERICAN ALLOY STEEL, INC. To: INUKSHUK CONSTRUCTION LIMITED
P.O.#: 341-1001-TX S.O.#: 677336 AA PL#: 5236110
Item: 1 (1 PC) 5/16" X 96" X 480"

ArcelorMittal Burns Harbor Plate

QUALITY ASSURANCE
REPORT OF TEST AND ANAYLSES

US HWY 12 Burns Harbor, Indiana

SHIPMENT NO.	DATE SHIPPED	CAR OR VEHICLE NO.
803-69105	01-29-21	IHB-MCCOO-BNSF LMIC 200040

SOLD TO:
AMERICAN ALLOY STEEL INC
PO BOX 40469
HOUSTON TX 77240-0469

SHIP TO:
AMERICAN ALLOY STEEL INC
BNSF TR# 7226 MILE 66.4 LN SEG 492
6230 N HOUSTON ROSSLYN RD
HOUSTON TX 77091-3410

NOTE	SERIAL NUMBER	PAT NO.	HEAT NUMBER	NO. PCS.	SIZE AND QUANTITY: THICKNESS	WIDTH OR DIA.	LENGTH	WEIGHT	YIELD POINT	TENSILE STRENGTH	AF FRAC. ELONG.	RED.
					INCHES	INCHES	INCHES	POUNDS	PSI	PSI	IN	% %

QUALITY STEEL MELTED & MANUFACTURED IN THE U. S. A.
PLATES - ASTM A516-17 GR 70 PVQ KLD FINE GRAIN PRAC, ASTM A516-17 GR 65 PVQ, ASTM A516-17 GR 60 PVQ, ASME SA516 GR 70 PVQ 2019 EDITION, ASME SA516 GR 65 PVQ 2019 EDITION, ASME SA516 GR 60 PVQ 2019 EDITION, CH-V SA20S5 PLT L 15/12 FTLBS AT -50F, VACUUM DEGASSED --- PLT NORMALIZED & COOLED IN STILL AIR --- IN ACCORDANCE WITH EN 10204:2004 TYPE 3.1 10204:2004 TYPE 3.1
NO WELD REPAIR WAS PERFORMED ON BELOW PLATE(S)
CO# 125823 GH 377-1561A
PLATES HEAT TREATED - TEST SPECIMENS ATTACHED & YIELD STRENGTH @ .5% EUL
MERCURY IN ANY FORM HAS NOT BEEN USED IN THE PRODUCTION OF THIS ORDER

T030110	811S00740	1	5/16	96	480			4084	54500	75100	8	26
(M55)MFST REF#:2			N 1650 DEG F - 15 MIN										
T030114	811S00740	1	5/16	96	480			4084	51400	71200	8	26
(M55)MFST REF#:2			N 1650 DEG F - 15 MIN										
T030116	813S60780	1	5/16	96	480			4084	53400	75300	8	26
(M55)MFST REF#:2			N 1650 DEG F - 15 MIN										

Q-QUENCH TEMPERATURE T-TEMPER TEMPERATURE N-NORMALIZE TEMPERATURE

SERIAL NUMBER	PAT NO.	HEAT NUMBER	HARD BHN	BEND	THICKNESS INCHES	TYPE	SIZE	DIR	TEST TEMP. F	CHARPY IMPACT ENERGY FT LBS 1	2	3	SHEAR(%) 1	2	3	LAT. EXP MILS 1	2	3
T030110		811S00740			.312	V	2/3	L	-50	73	71	61						
T030114		811S00740			.312	V	2/3	L	-50	77	80	112						
T030116		813S60780			.312	V	2/3	L	-50	119	77	81						

Certified a true copy of the original, retained in our file.
AMERICAN ALLOY STEEL
J.P 3/3/2021

HEAT NUMBER	CHEMICAL ANALYSIS C	Mn	P	S	Si	Cu	Ni	Cr	Mo	V	Ti	Al	B	Cb	N	Sn	MQUAD GRAIN SIZE
811S00740	.17	1.07	.011	.006	.329	.221	.19	.03	.007	.002	.002	.037	.0002	.002	.004	.003	
813S60780	.17	1.08	.013	.004	.343	.212	.17	.03	.006	.002	.002	.039	.0002	.002	.003	.003	

I certify that the above results are a true and correct copy of actual results contained in records maintained by ArcelorMittal Burns Harbor and are in full compliance with the requirements of the specification cited above. This test report cannot be altered and must be transmitted intact with any subsequent third party test reports, if required.

BHPLTRPT.TIF

FARID HASSANI PER MNT
SUPV. QUALITY ASSURANCE

AMERICAN ALLOY
PLATE # 5236110

03/05/2021 From: AMERICAN ALLOY STEEL, INC. To: INUKSHUK CONSTRUCTION LIMITED
P.O.#: 341-1001-TX S.O.#: 677336 AA PL#: 5236111
Item: 1 (1 PC) 5/16" X 96" X 480"

ArcelorMittal Burns Harbor Plate

QUALITY ASSURANCE
REPORT OF TEST AND ANAYLSES

US HWY 12 Burns Harbor, Indiana

SHIPMENT NO. 803-69105 | DATE SHIPPED 01-29-21 | CAR OR VEHICLE NO. IHB-MCCOO-BNSF LMIC 200040

SOLD TO
AMERICAN ALLOY STEEL INC
PO BOX 40469
HOUSTON TX 77240-0469

SHIP TO
AMERICAN ALLOY STEEL INC
BNSF TR# 7226 MILE 66.4 LN SEG 492
6230 N HOUSTON ROSSLYN RD
HOUSTON TX 77091-3410

NOTE	SERIAL NUMBER	PAT NO.	HEAT NUMBER	NO. PCS.	SIZE AND QUANTITY THICKNESS INCHES	WIDTH OR DIA. INCHES	LENGTH INCHES	WEIGHT POUNDS	YIELD POINT PSI	TENSILE STRENGTH PSI	AF FRAC. ELONG. IN	RED. % %
			QUALITY STEEL MELTED & MANUFACTURED IN THE U. S. A.									
			PLATES - ASTM A516-17 GR 70 PVQ KLD FINE GRAIN PRAC, ASTM A516-17 GR 65 PVQ, ASTM A516-17 GR 60 PVQ, ASME SA516 GR 70 PVQ 2019 EDITION, ASME SA516 GR 65 PVQ 2019 EDITION, ASME SA516 GR. 60 PVQ 2019 EDITION, CH-V SA2085 PLT L 15/12 FTLBS AT -50F, VACUUM DEGASSED --- PLT NORMALIZED & COOLED IN STILL AIR --- IN ACCORDANCE WITH EN 10204:2004 TYPE 3.1 10204:2004 TYPE 3.1									
			NO WELD REPAIR WAS PERFORMED ON BELOW PLATE(S)									
			CO# 125823 GH 377-1561A									
			PLATES HEAT TREATED - TEST SPECIMENS ATTACHED & YIELD STRENGTH @ .5% EUL									
			MERCURY IN ANY FORM HAS NOT BEEN USED IN THE PRODUCTION OF THIS ORDER									
	T030110	811S00740	1	5/16	96	480		4084	54500	75100	8	26
	(M55)MFST REF#:2			N 1650 DEG F - 15 MIN								
→	T030114	811S00740	1	5/16	96	480		4084	51400	71200	8	26
	(M55)MFST REF#:2			N 1650 DEG F - 15 MIN								
	T030116	813S60780	1	5/16	96	480		4084	53400	75300	8	26
	(M55)MFST REF#:2			N 1650 DEG F - 15 MIN								

Q-QUENCH TEMPERATURE
T-TEMPER TEMPERATURE
N-NORMALIZE TEMPERATURE

SERIAL NUMBER	PAT NO.	HEAT NUMBER	HARD BHN	BEND	THICKNESS INCHES	TYPE	SIZE	DIR	TEST TEMP F	CHARPY IMPACT ENERGY FT LBS 1	2	3	SHEAR(%) 1	2	3	LAT. EXP MILS 1	2	3
T030110		811S00740			.312	V	2/3	L	-50	75	71	61						
T030114		811S00740			.312	V	2/3	L	-50	77	80	112						
T030116		813S60780			.312	V	2/3	L	-50	119	77	81						

Certified a true copy of the original, retained in our file.
AMERICAN ALLOY STEEL
J.V 3/3/2021

HEAT NUMBER	CHEMICAL ANALYSIS C	Mn	P	S	Si	Cu	Ni	Cr	Mo	V	Ti	Al	B	Cb	N	Sn	MIXED GRAIN SIZE
811S00740	.17	1.07	.011	.006	.329	.221	.19	.03	.007	.002	.002	.037	.0002	.002	.004	.003	
813S60780	.17	1.08	.013	.004	.343	.212	.17	.03	.006	.002	.002	.039	.0002	.002	.003	.003	

I certify that the above results are a true and correct copy of actual results contained in records maintained by ArcelorMittal Burns Harbor and are in full compliance with the requirements of the specification cited above. This test report cannot be altered and must be transmitted intact with any subsequent third party test reports, if required.

SHPLTRPT.TIF

SUPV. QUALITY ASSURANCE

FARID HASSANI PER MWT

AMERICAN ALLOY
PLATE # 5236111

03/05/2021 From: AMERICAN ALLOY STEEL, INC. To: INUKSHUK CONSTRUCTION LIMITED
P.O.#: 341-1001-TX S.O.#: 677336 AA PL#: 5236112
Item: 1 (1 PC) 5/16" X 96" X 480"

ArcelorMittal Burns Harbor Plate

QUALITY ASSURANCE
REPORT OF TEST AND ANAYLSES

US HWY 12 Burns Harbor, Indiana

SHIPMENT NO. 803-69105 | DATE SHIPPED 01-29-21 | CAR OR VEHICLE NO. IHB-MCCOO-BNSF LMIC 200040

SOLD TO
AMERICAN ALLOY STEEL INC
PO BOX 40469
HOUSTON TX 77240-0469

SHIP TO
AMERICAN ALLOY STEEL INC
BNSF TR# 7226 MILE 66.4 LN SEG 492
6230 N HOUSTON ROSSLYN RD
HOUSTON TX 77091-3410

NOTE	SERIAL NUMBER	PAT NO.	HEAT NUMBER	NO. PCS.	SIZE AND QUANTITY THICKNESS INCHES	WIDTH OR DIA. INCHES	LENGTH INCHES	WEIGHT POUNDS	YIELD POINT PSI	TENSILE STRENGTH PSI	AF FRAC. ELONG. IN	RED. % %
			QUALITY STEEL MELTED & MANUFACTURED IN THE U. S. A.									
			PLATES - ASTM A516-17 GR 70 PVQ KLD FINE GRAIN PRAC, ASTM A516-17 GR 65 PVQ, ASTM A516-17 GR 60 PVQ, ASME SA516 GR 70 PVQ 2019 EDITION, ASME SA516 GR 65 PVQ 2019 EDITION, ASME SA516 GR 60 PVQ 2019 EDITION, CH-V SA20S5 PLT L 15/12 FTLBS AT -50F, VACUUM DEGASSED --- PLT NORMALIZED & COOLED IN STILL AIR --- IN ACCORDANCE WITH EN 10204:2004 TYPE 3.1 10204:2004 TYPE 3.1									
			CO# 125823 GH 377-1561A									
			PLATES HEAT TREATED - TEST SPECIMENS ATTACHED & YIELD STRENGTH @ .5% EUL									
→			MERCURY IN ANY FORM HAS NOT BEEN USED IN THE PRODUCTION OF THIS ORDER									
	T030110	811S00740	1	5/16	96	480		4084	54500	75100	8	26
	(M55)MFST REF#:2				N 1650 DEG F - 15 MIN							
	T030114	811S00740	1	5/16	96	480		4084	51400	71200	8	26
	(M55)MFST REF#:2				N 1650 DEG F - 15 MIN							
	T030116	813S60780	1	5/16	96	480		4084	53400	75300	8	26
	(M55)MFST REF#:2				N 1650 DEG F - 15 MIN							

Q-QUENCH TEMPERATURE
T-TEMPER TEMPERATURE
N-NORMALIZE TEMPERATURE

SERIAL NUMBER	PAT NO.	HEAT NUMBER	HARD BHN	BEND	THICKNESS INCHES	TYPE	SIZE	DIR	TEST TEMP F	CHARPY IMPACT ENERGY FT LBS 1	2	3	SHEAR(%) 1	2	3	LAT. EXP MILS 1	2	3
T030110		811S00740			.312	V	2/3	L	-50	75	71	61						
T030114		811S00740			.312	V	2/3	L	-50	77	80	112						
T030116		813S60780			.312	V	2/3	L	-50	119	77	81						

Certified a true copy of the original, retained in our file.
AMERICAN ALLOY STEEL
3/3/2021

HEAT NUMBER	CHEMICAL ANALYSIS C	Mn	P	S	Si	Cu	Ni	Cr	Mo	V	Ti	Al	B	Cb	N	Sn	MOLIAD GRAIN SIZE
811S00740	.17	1.07	.011	.006	.329	.221	.19	.03	.007	.002	.002	.037	.0002	.002	.004	.003	
813S60780	.17	1.08	.013	.004	.343	.212	.17	.03	.006	.002	.002	.039	.0002	.002	.003	.003	

I certify that the above results are a true and correct copy of actual results contained in records maintained by ArcelorMittal Burns Harbor and are in full compliance with the requirements of the specification cited above. This test report cannot be altered and must be transmitted intact with any subsequent third party test reports, if required.

BHPLTRPT.TIF

SUPV. QUALITY ASSURANCE FARID HASSANI PER MWT

AMERICAN ALLOY
PLATE # 5236112

STRAIGHT BILL OF LADING - SHORT FORM - ORIGINAL - NOT NEGOTIABLE
AMERICAN ALLOY STEEL, INC.

CARRIER: ITM

FROM: AMERICAN ALLOY STEEL, INC.
6230 N HOUSTON-ROSSLYN
HOUSTON, TX. 77091
1-713-462-8081

DATE: 03/17/2021

BILL OF LADING: 679464

CONSIGNED TO: TECHFORM-MONTAL
DESTINATION : 3139 BOUL DES ENTREPRISES
TERREBONNE, QC
J6X 4J9
CANADA

CUSTOMS: SEAMONT BROKERAGE
PH:514-931-0306/FAX:514-363-5564

SUBJECT TO SECTION 7 OF CONDITIONS OF APPLICABLE BILL OF LADING, IF THIS SHIPMENT IS TO BE DELIVERED TO THE CONSIGNEE WITHOUT RECOURSE ON THE CONSIGNOR, THE CONSIGNOR SHALL SIGN THE FOLLOWING STATEMENT: THE CARRIER SHALL NOT MAKE DELIVERY OF THIS SHIPMENT WITHOUT PAYMENT OF FREIGHT AND ALL OTHER LAWFUL CHARGES.

*** FREIGHT CHARGES: PREPAID

THE PROPERTY DESCRIBED BELOW, IN APPARENT GOOD ORDER, EXCEPT AS NOTED (CONTENTS AND CONDITION OF CONTENTS OF PACKAGES UNKNOWN), MARKED, CONSIGNED, AND DESTINED AS INDICATED BELOW, WHICH SAID CARRIER (THE WORD CARRIER BEING UNDERSTOOD THROUGHOUT THIS CONTRACT AS MEANING ANY PERSON OR CORPORATION IN POSSESSION OF THE PROPERTY UNDER THE CONTRACT) AGREES TO CARRY TO ITS USUAL PLACE OF DELIVERY AT SAID DESTINATION, IF ON ITS ROUTE TO SAID DESTINATION. IT IS MUTUALLY AGREED, AS TO EACH CARRIER OF ALL OR ANY OF SAID PROPERTY OVER ALL OR ANY PORTION OF SAID ROUTE TO DESTINATION, AND AS TO EACH PARTY AT ANY TIME INTERESTED IN ALL OR ANY SAID PROPERTY, THAT EVERY SERVICE TO BE PERFORMED HEREUNDER SHALL BE SUBJECT TO ALL THE TERMS AND CONDITIONS OF THE UNIFORM DOMESTIC STRAIGHT BILL OF LADING SET FORTH (1) IN THE UNIFORM FREIGHT CLASSIFICATION IN EFFECT ON THE DATE HEREOF, IF THIS IS A RAIL OR A RAIL-WATER SHIPMENT, OR (2) IN THE APPLICABLE MOTOR CARRIER CLASSIFICATION OR TARIFF IF THIS IS A MOTOR CARRIER SHIPMENT.

SHIPPER HEREBY CERTIFIES THAT HE IS FAMILIAR WITH ALL THE TERMS AND CONDITIONS OF THE SAID BILL OF LADING, INCLUDING THOSE ON THE BACK THEREOF, SET FORTH IN THE CLASSIFICATION OR TARIFF WHICH GOVERNS THE TRANSPORTATION OF THIS SHIPMENT, AND THE SAID TERMS AND CONDITIONS ARE HEREBY AGREED TO BY THE SHIPPER AND ACCEPTED FOR HIMSELF AND HIS ASSIGNS.

Permanent post-office address of shipper:
AMERICAN ALLOY STEEL, INC.
P.O.BOX 40469
HOUSTON, TX 77240

Load must be secured
before leaving premises.

Driver Signature/Date

ITM

QTY	DESCRIPTION OF ARTICLES	WGT (LBS)	PL NO	SO NO	PO NO
	--- C L A S S - 50 S T E E L ---				
9	5/16" X 96" X 480"	36756	709215	677336	341-1001-TX
3	1/4" X 96" X 480"	9801	709215	677336	341-1001-TX
	" X FREIGHT, CUSTOMS & BROKERAGE (BASED ON 4 FTL)		709215	677336	341-1001-TX
12	T O T A L S	46557			

12 LOOSE STEEL PLATES
1 ENVELOPE
ENVELOPE MUST DELIVER WITH FREIGHT

LOADED BY _____ DATE _____ PER ATTACHED PACKING LIST(S)

RECEIVED BY _____ DATE _____

MRR #007

STRAIGHT BILL OF LADING - SHORT FORM - ORIGINAL - NOT NEGOTIABLE
AMERICAN ALLOY STEEL, INC.

CARRIER: ITM

FROM: AMERICAN ALLOY STEEL, INC.
6230 N HOUSTON-ROSSLYN
HOUSTON, TX. 77091
1-713-462-8081

DATE: 03/17/2021

BILL OF LADING: 679464

CONSIGNED TO: TECHFORM-MONTAL
DESTINATION : 3139 BOUL DES ENTREPRISES
TERREBONNE, QC
J6X 4J9
CANADA

CUSTOMS: SEAMONT BROKERAGE
PH:514-931-0306/FAX:514-363-5564

SUBJECT TO SECTION 7 OF CONDITIONS OF APPLICABLE BILL OF LADING, IF THIS SHIPMENT IS TO BE DELIVERED TO THE CONSIGNEE WITHOUT RECOURSE ON THE CONSIGNOR, THE CONSIGNOR SHALL SIGN THE FOLLOWING STATEMENT: THE CARRIER SHALL NOT MAKE DELIVERY OF THIS SHIPMENT WITHOUT PAYMENT OF FREIGHT AND ALL OTHER LAWFUL CHARGES.

*** FREIGHT CHARGES: PREPAID

THE PROPERTY DESCRIBED BELOW, IN APPARENT GOOD ORDER, EXCEPT AS NOTED (CONTENTS AND CONDITION OF CONTENTS OF PACKAGES UNKNOWN), MARKED, CONSIGNED, AND DESTINED AS INDICATED BELOW, WHICH SAID CARRIER (THE WORD CARRIER BEING UNDERSTOOD THROUGHOUT THIS CONTRACT AS MEANING ANY PERSON OR CORPORATION IN POSSESSION OF THE PROPERTY UNDER THE CONTRACT) AGREES TO CARRY TO ITS USUAL PLACE OF DELIVERY AT SAID DESTINATION, IF ON ITS ROUTE TO SAID DESTINATION. IT IS MUTUALLY AGREED, AS TO EACH CARRIER OF ALL OR ANY OF SAID PROPERTY OVER ALL OR ANY PORTION OF SAID ROUTE TO DESTINATION, AND AS TO EACH PARTY AT ANY TIME INTERESTED IN ALL OR ANY SAID PROPERTY, THAT EVERY SERVICE TO BE PERFORMED HEREUNDER SHALL BE SUBJECT TO ALL THE TERMS AND CONDITIONS OF THE UNIFORM DOMESTIC STRAIGHT BILL OF LADING SET FORTH (1) IN THE UNIFORM FREIGHT CLASSIFICATION IN EFFECT ON THE DATE HEREOF, IF THIS IS A RAIL OR A RAIL-WATER SHIPMENT, OR (2) IN THE APPLICABLE MOTOR CARRIER CLASSIFICATION OR TARIFF IF THIS IS A MOTOR CARRIER SHIPMENT.

SHIPPER HEREBY CERTIFIES THAT HE IS FAMILIAR WITH ALL THE TERMS AND CONDITIONS OF THE SAID BILL OF LADING; INCLUDING THOSE ON THE BACK THEREOF, SET FORTH IN THE CLASSIFICATION OR TARIFF WHICH GOVERNS THE TRANSPORTATION OF THIS SHIPMENT, AND THE SAID TERMS AND CONDITIONS ARE HEREBY AGREED TO BY THE SHIPPER AND ACCEPTED FOR HIMSELF AND HIS ASSIGNS.

Permanent post-office address of shipper:
AMERICAN ALLOY STEEL, INC.
P.O.BOX 40469
HOUSTON, TX 77240

Load must be secured
before leaving premises.

Driver Signature/Date

ITM

QTY	DESCRIPTION OF ARTICLES	WGT (LBS)	PL NO	SO NO	PO NO
	--- C L A S S - 50 S T E E L ----				
9	5/16" X 96" X 480"	36756	709215	677336	341-1001-TX
3	1/4" X 96" X 480"	9801	709215	677336	341-1001-TX
	" X FREIGHT, CUSTOMS & BROKERAGE (BASED ON 4 FTL)		709215	677336	341-1001-TX
12	T O T A L S	46557			

12 LOOSE STEEL PLATES
1 ENVELOPE
ENVELOPE MUST DELIVER WITH FREIGHT

LOADED BY_____ DATE_____ PER ATTACHED PACKING LIST(S)

RECEIVED BY_____ DATE_____

Canada Customs and Revenue Agency | Agence des douanes et du revenu du Canada

CANADA CUSTOMS INVOICE
FACTURE DES DOUANES CANADIENNES

1. Vendor (name and address) - Vendeur (nom et adresse)

American Alloy Steel
230 N. Houston Rosslyn Rd
Houston, TX 77091
Tel: (713) 462-8081 Fax: (713) 462-1638

2. Date of direct shipment to Canada - Date d'expédition directe vers le Canada

03/17/2021

3. Other references (include purchaser's order no.)
Autres références (inclure le n° de commande de l'acheteur)

PO# 341-1001-TX S/O: 677336

4. Consignee (name and address) - Destinataire (nom et adresse)

TECHFORM-MONTAL
3139 BOUL DES ENTREPRISES
TERREBONNE, QC J6X 4J9
CANADA

5. Purchaser's name and address (if other than consignee)
Nom et adresse de l'acheteur (s'il diffère du destinataire)

AMERICAN ALLOY STEEL
6230 N. HOUSTON ROSSLYN RD.
HOUSTON, TX 77091
USA

6. Country of transhipment - Pays de transbordement

USA

7. Country of origin of goods
Pays d'origine des marchandises

USA

IF SHIPMENT INCLUDES GOODS OF DIFFERENT ORIGINS AGAINST ITEMS IN 12. SI L'EXPEDITION COMPREND DES MARCHANDISES D'ORIGINES DIFFERENTES, PRECISEZ LEUR PROVENANCE EN 12

8. Transportation: Give mode and place of direct shipment to Canada
Transport: Precisez model et point d'expedition directe vers le Canada

ITM
CUSTOMS: SEAMONT BROKERAGE
PH#514-931-0306 FAX#514-363-5564

9. Conditions of sale and terms of payment
(i.e. Sale, consignment shipment, leased goods, etc.)
Conditions de vente et modalitiés de palement
(p. ex. vente, expédition en consignation, location de marchandises, etc.)

SALE

10. Currency of settlement - Devises du palement

US FUNDS

11. Number of packages Nombre de colis	12. Specification of commodities (kind of packages, marks and numbers, general description and characteristics, i.e., grad,e quality) Désignation des articles (nature des colis, marques et numéros, description générale et caractéristiques, p. ex, classe, qualité)	13. Quantity (state unit) Quantité (précisez l'unité)	Selling price - Prix de vente	
			14. Unit Price Prix unitaire	15. Total
	STEEL PLATE			
	5/16" x 96" x 480" - USA	9	$3349.00	$30141.00
	1/4" x 96" x 480" - USA	3	$2679.00	$8037.00

18. If any of fields 1 to 17 are included on an attached commercial invoice, check this box
Si tout renseignement relativement aux zones 1 à 17 figure sur une ou des factures commerciales ci-attachees, cochez cette case ☑
Commercial Invoice No. / N° de la facture commerciale 0321336/001IX

16. Total Weight - Poids Total

Net	Gross - Brut
46557 LBS	46557 LBS

17. Invoice total
Total de la facture

$38178.00

19. Exporter's name and address (if other than vendor)
Nom et adresse de l'exportateur (s'il differe du vendeur)

20. Originator (name and address) - Expéditeur d'origine (nom et adresse)

21. CCRA ruling (if applicable) - Décision de l'Agence (s'il y a lieu)

22. If fields 23 to 25 are not applicable, check this box ☐
Si les zones 23 à 25 sont sans objet, cochez cette case

23. If included in field 17 indicate amount:
Si compris dans le total à la zone 17, précisez:

(i) Transportation charges, expenses and insurance from the place of direct shipment to Canada
Les frais de transport, dépenses et assurances à partir du point d'expédition directe vers le Canada

(ii) Costs for construction, erection and assembly incurred after importation into Canada
Les coûts de construction ,d'érection et d'assemblage après importation au Canada

(iii) Export packing
Le coût de l'emballage d'exportation

24. If not included in field 17 indicate amount:
Si non compris dans le total à la zone 17, précisez:

(i) Transportation charges, expenses, and insurance from the place of direct shipment to Canada
Les frais de transport, dépenses et assurances jusqu'au point d'expédition directe vers le Canada

(ii) Amounts for commissions other than buying commissions
Les commissions autres que celles versées pour l'achat

(iii) Export packing
Le coût de l'emballage d'exportation

25. Check (if applicable):
Cochez (s'il y a lieu):

(i) Royalty payments or subsequent proceeds are paid or payable by the purchaser
Des redevances ou produits ont été ou seront versés par l'acheteur ☐

(ii) The purchaser has supplied goods or services for use in the production of these goods
L'acheteur a fourni des marchandises ou des services pour la production de ces marchandises ☐

AMERICAN ALLOY STEEL, INC.
6230 N Houston-Rosslyn
P.O. Box 40469
HOUSTON, TX 77240-0469
PHONE (713) 462-8081 FAX (713) 462-0527

PINVOICE NO. 0321336/001TX **DATE: 03/17/2021**

SHOP ORDER: 677336

SOLD TO: 308500 PHONE: 1-902-429-0272
INUKSHUK CONSTRUCTION LIMITED
1869 UPPER WATER STREET SUITE AH202
HALIFAX, NS B3J 1S9
CANADA
FAX: 1-902-429-7762

SHIP TO: 3
TECHFORM-MONTAL
3139 BOUL DES ENTREPRISES
TERREBONNE, QC
J6X 4J9

CUST PO NO	BUYER NAME	---SALESMEN----
341-1001-TX	M.LOSIER	FCL/SEL/ /CAN

FOB POINT	SHIP VIA	TERMS	TAX ID
DELIVERED	ITM	PPD	74-1688398

SHIPPING REF	MTRs REQD W/INV	W/SHP	SHIP WGT	PARTIAL OK	REQD SHIP
	0	1	46557	N	04/05/2021

ITEM	QTY	THKNSS	MATERIAL/ITEM DESCRIPTION	PRC EACH	PRC EXTD
			ASME SA 516 GRADE 70, KILLED, FINE GRAIN, NORMALIZED		
1	9	5/16"	96" X 480"	3349.00	30141.00
2	3	1/4"	96" X 480"	2679.00	8037.00

TOTAL AMOUNT (excl applicable taxes) 38178.00 US DLRS

Please examine the above carefully and notify your American Alloy Steel salesman of any changes, otherwise the order will be shipped as shown.

UNITED STATES–MEXICO–CANADA AGREEMENT (USMCA)

CERTIFICATE OF ORIGIN

1. CERTIFIER NAME AND ADDRESS:	2. EXPORTER NAME AND ADDRESS:
DANIEL VENEGAS 6230 NORTH HOUSTON ROSSLYN ROAD HOUSTON, TX 77040 TEL:713-462-8081 EMAIL:DANIEL@AASTEEL.COM TAX ID NUMBER: 1-74-1688398-5	AMERICAN ALLOY STEEL, INC. 6230 NORTH HOUSTON ROSSLYN ROAD HOUSTON, TX 77040 TEL:713-462-8081 FAX:713-462-1638 TAX ID NUMBER: 1-74-1688398-5
3. PRODUCER NAME AND ADDRESS: ARCELORMITTAL BURNS HARBOR PLATE US HWY 12 BURNS HARBOR, IN USA TEL: N/A EMAIL: N/A TAX ID NUMBER: N/A	4. IMPORTER NAME AND ADDRESS: AMERICAN ALLOY STEEL 6230 N. HOUSTON ROSSLYN RD. HOUSTON, TX 77091 USA TEL: N/A EMAIL: N/A TAX ID NUMBER: N/A

5. DESCRIPTION OF GOOD(S): STEEL PLATE SO# 677336 PO# 341-1001-TX	6. H.S. TARIFF CLASSIFICATION NUMBER	7. ORIGIN CRITERION	8. COUNTRY OF ORIGIN
ITEM# 1 – 8 PCS 5/16" x 96" x 480"	7208.51.0030	B	USA

I CERTIFY THAT:

-THE GOODS DESCRIBED IN THIS DOUCUMENT QUALIFY AS ORIGINATING AND THE INFORMATION CONTAINED IN THIS DOCUMENT IS TRUE AND ACCURATE. I ASSUME RESPONSIBILITY FOR PROVING SUCH REPRESENTATIONS AND AGREE TO MAINTAIN AND PRESENT UPON REQUEST OR TO MAKE AVAILABLE DURING A VERIFICATION VISIT, DOCUMENTATION NECESSARY TO SUPPORT THIS CERTIFICATION.

-THIS CERTIFICATE CONSISTS OF ___ PAGES, INCLUDING ALL ATTACHMENTS.

10. CERTIFIER'S SIGNATURE: Daniel Venegas	COMPANY NAME: AMERICAN ALLOY STEEL, INC.
CERTIFIER'S NAME: DANIEL VENEGAS	CERTIFIER'S TITLE: Traffic Coordinator
DATE: 03/17/2021	CERTIFIER TYPE (IMPORT, EXPORTER, PRODUCER): EXPORTER

UNITED STATES–MEXICO–CANADA AGREEMENT (USMCA)

CERTIFICATE OF ORIGIN

1. CERTIFIER NAME AND ADDRESS:	2. EXPORTER NAME AND ADDRESS:
DANIEL VENEGAS 6230 NORTH HOUSTON ROSSLYN ROAD HOUSTON, TX 77040 TEL:713-462-8081 EMAIL:DANIEL@AASTEEL.COM TAX ID NUMBER: 1-74-1688398-5	AMERICAN ALLOY STEEL, INC. 6230 NORTH HOUSTON ROSSLYN ROAD HOUSTON, TX 77040 TEL:713-462-8081 FAX:713-462-1638 TAX ID NUMBER: 1-74-1688398-5
3. PRODUCER NAME AND ADDRESS:	4. IMPORTER NAME AND ADDRESS:
NUCOR PLATE MILL P.O. BOX 279 WINTON, NC 27986 USA TEL: N/A EMAIL: N/A TAX ID NUMBER: N/A	AMERICAN ALLOY STEEL 6230 N. HOUSTON ROSSLYN RD. HOUSTON, TX 77091 USA TEL: N/A EMAIL: N/A TAX ID NUMBER: N/A

5. DESCRIPTION OF GOOD(S): STEEL PLATE SO# 677336 PO# 341-1001-TX	6. H.S. TARIFF CLASSIFICATION NUMBER	7. ORIGIN CRITERION	8. COUNTRY OF ORIGIN
ITEM# 1 – 1 PC 5/16" x 96" x 480"	7208.51.0030	B	USA
ITEM# 2 – 3 PCS 1/4" x 96" x 480"	7208.52.0000	B	USA

I CERTIFY THAT:

-THE GOODS DESCRIBED IN THIS DOCUMENT QUALIFY AS ORIGINATING AND THE INFORMATION CONTAINED IN THIS DOCUMENT IS TRUE AND ACCURATE. I ASSUME RESPONSIBILITY FOR PROVING SUCH REPRESENTATIONS AND AGREE TO MAINTAIN AND PRESENT UPON REQUEST OR TO MAKE AVAILABLE DURING A VERIFICATION VISIT, DOCUMENTATION NECESSARY TO SUPPORT THIS CERTIFICATION.

-THIS CERTIFICATE CONSISTS OF ___ PAGES, INCLUDING ALL ATTACHMENTS.

10. CERTIFIER'S SIGNATURE: Daniel Venegas	COMPANY NAME: AMERICAN ALLOY STEEL, INC.
CERTIFIER'S NAME: DANIEL VENEGAS	CERTIFIER'S TITLE: Traffic Coordinator
DATE: 03/17/2021	CERTIFIER TYPE (IMPORT, EXPORTER, PRODUCER): EXPORTER

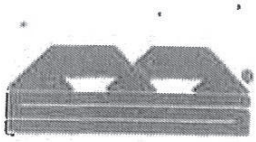

AMERICAN ALLOY STEEL, INC.

6230 N. HOUSTON ROSSLYN ROAD
HOUSTON, TEXAS 77091
Phone: 713-462-8081 Fax: 713-462-8209

M.T.R. COVER SHEET
03/17/2021

Customer Name	:	INUKSHUK CONSTRUCTION LIMITED	**Control Number:**		1089308
Address	:		**Queued By**	:	Alex Garza
City, State Zip	:	HALIFAX, NS B3J 1S9	**Page Number**	:	1
Attention	:	M.LOSIER	**Total Pages**	:	
Phone Number	:	1-902-429-0272	**Fax Number**	:	1-902-429-7762
Reference Number	:	677336			
Notes 1	:	P.O. NO. 341-1001-TX			

THE INFORMATION YOU REQUESTED IS ATTACHED.
THANK YOU FOR YOUR BUSINESS !

AASI PLATE NUMBER	HEAT # / SLAB #	MILL
5236099	811S00740 T030110	ARCELORMITTAL
5236114	813S60780 T030119	MITTAL
5236115	813S60780 T030118	MITTAL
5236116	811S00740 T030111	MITTAL
5236117	811S00740 T030111	MITTAL
5236118	813S60780 T030120	MITTAL
5239608	813S60780 T030119	MITTAL
5239609	813S60780 T030118	MITTAL
5239636	1600012 03	NUCOR MILL

03/17/2021 From: AMERICAN ALLOY STEEL, INC. To: INUKSHUK CONSTRUCTION LIMITED
P.O.#: 341-1001-TX S.O.#: 677336 AA PL#: 5236099
Item: 1 (1 PC) 5/16" X 96" X 480"

ArcelorMittal Burns Harbor Plate

QUALITY ASSURANCE
REPORT OF TEST AND ANAYLSES

US HWY 12 Burns Harbor, Indiana

SHIPMENT NO.	DATE SHIPPED	CAR OR VEHICLE NO.
803-68843	01-20-21	THB-MCCOO-BNSF LMIC 007002

SOLD TO:
AMERICAN ALLOY STEEL INC
PO BOX 40469
HOUSTON TX 77240-0469

SHIP TO:
AMERICAN ALLOY STEEL INC
BNSF TR# 7226 MILE 66.4 LN SEG 492
6230 N HOUSTON ROSSLYN RD
HOUSTON TX 77091-3410

NOTE	SERIAL NUMBER	PAT NO.	HEAT NUMBER	NO. PCS.	SIZE AND QUANTITY: THICKNESS	WIDTH OR DIA.	LENGTH	WEIGHT	YIELD POINT	TENSILE STRENGTH	AF FRAC. ELONG.	RED.
					INCHES	INCHES	INCHES	POUNDS	PSI	PSI	IN	% %

QUALITY STEEL MELTED & MANUFACTURED IN THE U. S. A.
PLATES - ASTM A516-17 GR 70 PVQ KLD FINE GRAIN PRAC, ASTM A516-17 GR 65 PVQ, ASTM A516-17 GR 60 PVQ, ASME SA516 GR 70 PVQ 2019 EDITION, ASME SA516 GR 65 PVQ 2019 EDITION, ASME SA516 GR 60 PVQ 2019 EDITION, CH-V SA20S5 PLT L 15/12 FTLBS AT -50F, VACUUM DEGASSED --- PLT NORMALIZED & COOLED IN STILL AIR --- IN ACCORDANCE WITH EN 10204:2004 TYPE 3.1 10204:2004 TYPE 3.1
NO WELD REPAIR WAS PERFORMED ON BELOW PLATE(S)
CO# 125823 GH 377-1561A
PLATES HEAT TREATED - TEST SPECIMENS ATTACHED & YIELD STRENGTH @ .5% EUL
MERCURY IN ANY FORM HAS NOT BEEN USED IN THE PRODUCTION OF THIS ORDER

T030110	811S00740	1	5/16	96	480		4084	54500	75100	8	26	
			N	1650 DEG F -	15 MIN							

(M55)MFST REF#:2

Q-QUENCH TEMPERATURE T-TEMPER TEMPERATURE N-NORMALIZE TEMPERATURE

SERIAL NUMBER	PAT NO.	HEAT NUMBER	HARD BHN	BEND	THICKNESS	TYPE	SIZE	DIR	TEST TEMP F	CHARPY IMPACT ENERGY FT LBS 1	2	3	SHEAR(%) 1	2	3	LAT. EXP MILS 1	2	3
T030110		811S00740			INCHES .312	V	2/3	L	-50	75	71	61						

Certified a true copy of the original, retained in our file.
AMERICAN ALLOY STEEL.
J.P 3/8/2021

HEAT NUMBER	CHEMICAL ANALYSIS C	Mn	P	S	Si	Cu	Ni	Cr	Mo	V	Ti	Al	B	Cb	N	Sn	MOLIARD GRAIN SIZE
811S00740	.17	1.07	.011	.006	.32	9.221	.19	.03	.007	.002	.002	.037	.0002	.002	.004	.003	

AMERICAN ALLOY
PLATE #5236099

I certify that the above results are a true and correct copy of actual results contained in records maintained by ArcelorMittal Burns Harbor and are in full compliance with the requirements of the specification cited above. This test report cannot be altered and must be transmitted intact with any subsequent third party test reports, if required.

BHPLTRPT.TIF

FARID HASSANI PER MWT
SUPV. QUALITY ASSURANCE

03/17/2021 From: AMERICAN ALLOY STEEL, INC. To: INUKSHUK CONSTRUCTION LIMITED
P.O.#: 341-1001-TX S.O.#: 677336 AA PL#: 5236114
Item: 1 (1 PC) 5/16" X 96" X 480"

ArcelorMittal Burns Harbor Plate

QUALITY ASSURANCE
REPORT OF TEST AND ANALYSES

US HWY 12 Burns Harbor, Indiana

SHIPMENT NO. 803-69511 | DATE SHIPPED 02-04-21 | CAR OR VEHICLE NO. IHB-MCCOO-BNSF BVRY 062064

SOLD TO:
AMERICAN ALLOY STEEL INC
PO BOX 40469
HOUSTON TX 77240-0469

SHIP TO:
AMERICAN ALLOY STEEL INC
BNSF TR# 7226 MILE 66.4 LN SEG 492
6230 N HOUSTON ROSSLYN RD
HOUSTON TX 77091-3410

NOTE	SERIAL NUMBER	PAT NO.	HEAT NUMBER	NO. PCS.	SIZE AND QUANTITY: THICKNESS	WIDTH OR DIA.	LENGTH	WEIGHT	YIELD POINT	TENSILE STRENGTH	AF FRAC. ELONG.	RED.
					INCHES	INCHES	INCHES	POUNDS	PSI	PSI	IN	% %

QUALITY STEEL MELTED & MANUFACTURED IN THE U. S. A.
PLATES - ASTM A516-17 GR 70 PVQ KLD FINE GRAIN PRAC, ASTM A516-17 GR 65 PVQ, ASTM A516-17 GR 60 PVQ, ASME SA516 GR 70 PVQ 2019 EDITION, ASME SA516 GR 65 PVQ 2019 EDITION, ASME SA516 GR 60 PVQ 2019 EDITION, CH-V SA20S5 PLT L 15/12 FTLBS AT -50F, VACUUM DEGASSED --- PLT NORMALIZED & COOLED IN STILL AIR --- IN ACCORDANCE WITH EN 10204:2004 TYPE 3.1 10204:2004 TYPE 3.1
NO WELD REPAIR WAS PERFORMED ON BELOW PLATE(S)
CO# 125823 GH 377-1561A
PLATES HEAT TREATED - TEST SPECIMENS ATTACHED & YIELD STRENGTH @ .5% EUL
MERCURY IN ANY FORM HAS NOT BEEN USED IN THE PRODUCTION OF THIS ORDER

T030111	811S00740	2	5/16	96	480		8168	54800	75600	8	25		
			N 1650 DEG F - 15 MIN										
(M55)MFST REF#:2													
T030118	813S60780	2	5/16	96	480		8168	54000	75500	8	26		
			N 1650 DEG F - 15 MIN										
(M55)MFST REF#:2													
T030119 →	813S60780	2	5/16	96	480		8168	53700	75800	8	26		
			N 1650 DEG F - 15 MIN										
(M55)MFST REF#:2													

Q-QUENCH TEMPERATURE T-TEMPER TEMPERATURE N-NORMALIZE TEMPERATURE

SERIAL NUMBER	PAT NO.	HEAT NUMBER	HARD BHN	BEND	THICKNESS INCHES	TYPE	SIZE	DIR	TEST TEMP F	CHARPY IMPACT ENERGY FT LBS 1	2	3	SHEAR(%) 1	2	3	LAT. EXP MILS 1	2	3
T030111		811S00740			.312	V	2/3	L	-50	104	79	87						
T030118		813S60780			.312	V	2/3	L	-50	116	115	114						
T030119		813S60780			.312	V	2/3	L	-50	82	82	72						

Certified a true copy of the original, retained in our file.
AMERICAN ALLOY STEEL, INC.
Reviewed By:
3/17/21

HEAT NUMBER	CHEMICAL ANALYSIS C	Mn	P	S	Si	Cu	Ni	Cr	Mo	V	Ti	Al	B	Cb	N	Sn	MQUAD GRAIN SIZE
811S00740	.17	1.07	.011	.006	.329	.221	.19	.03	.007	.002	.002	.037	.0002	.002	.004	.003	
813S60780	.17	1.08	.013	.004	.343	.212	.17	.03	.006	.002	.002	.039	.0002	.002	.003	.003	

AMERICAN ALLOY
PLATE #5236114

I certify that the above results are a true and correct copy of actual results contained in records maintained by ArcelorMittal Burns Harbor and are in full compliance with the requirements of the specification cited above. This test report cannot be altered and must be transmitted intact with any subsequent third party test reports, if required.

BHPLTRPT.TIF

FARID HASSANI PER MWT
SUPV. QUALITY ASSURANCE

03/17/2021 From: AMERICAN ALLOY STEEL, INC. To: INUKSHUK CONSTRUCTION LIMITED
P.O.#: 341-1001-TX . . S.O.#: 677336 AA PL#: 5236115
Item: 1 (1 PC) 5/16" X 96" X 480"

ArcelorMittal Burns Harbor Plate

QUALITY ASSURANCE
REPORT OF TEST AND ANAYLSIS

US HWY 12 Burns Harbor, Indiana

SHIPMENT NO. 803-69511 | DATE SHIPPED 02-04-21 | CAR OR VEHICLE NO. IHB-MCCOO-BNSF BVRY 062064

SOLD TO
AMERICAN ALLOY STEEL INC
PO BOX 40469
HOUSTON TX 77240-0469

SHIP TO
AMERICAN ALLOY STEEL INC
BNSF TR# 7226 MILE 66.4 LN SEG 492
6230 N HOUSTON ROSSLYN RD
HOUSTON TX 77091-3410

NOTE	SERIAL NUMBER	PAT NO.	HEAT NUMBER	NO. PCS.	SIZE AND QUANTITY: THICKNESS	WIDTH OR DIA.	LENGTH	WEIGHT	YIELD POINT	TENSILE STRENGTH	AF FRAC. ELONG.	RED.
					INCHES	INCHES	INCHES	POUNDS	PSI	PSI	IN %	%

QUALITY STEEL MELTED & MANUFACTURED IN THE U. S. A.
PLATES - ASTM A516-17 GR 70 PVQ KLD FINE GRAIN PRAC, ASTM A516-17 GR 65 PVQ, ASTM A516-17 GR 60 PVQ, ASME SA516 GR 70 PVQ 2019 EDITION, ASME SA516 GR 65 PVQ 2019 EDITION, ASME SA516 GR 60 PVQ 2019 EDITION, CH-V SA20S5 PLT L 15/12 FTLBS AT -50F, VACUUM DEGASSED --- PLT NORMALIZED & COOLED IN STILL AIR --- IN ACCORDANCE WITH EN 10204:2004 TYPE 3.1 10204:2004 TYPE 3.1
NO WELD REPAIR WAS PERFORMED ON BELOW PLATE(S)
CO# 125823 GH 377-1561A
PLATES HEAT TREATED - TEST SPECIMENS ATTACHED & YIELD STRENGTH @ .5% EUL
MERCURY IN ANY FORM HAS NOT BEEN USED IN THE PRODUCTION OF THIS ORDER

T030111	811S00740	2	5/16	96	480	8168	54800	75600	8	25			
			N 1650 DEG F - 15 MIN										
(M55)MFST REF#:2													
T030118 →	813S60780	2	5/16	96	480	8168	54000	75500	8	26			
			N 1650 DEG F - 15 MIN										
(M55)MFST REF#:2													
T030119	813S60780	2	5/16	96	480	8168	53700	75800	8	26			
			N 1650 DEG F - 15 MIN										
(M55)MFST REF#:2													

Q-QUENCH TEMPERATURE T-TEMPER TEMPERATURE N-NORMALIZE TEMPERATURE

SERIAL NUMBER	PAT NO.	HEAT NUMBER	HARD BHN	BEND	THICKNESS INCHES	TYPE	SIZE	DIR	TEST TEMP F	CHARPY IMPACT ENERGY FT LBS 1	2	3	SHEAR(%) 1	2	3	LAT. EXP MILS 1	2	3
T030111		811S00740			.312	V	2/3	L	-50	104	79	87						
T030118		813S60780			.312	V	2/3	L	-50	116	115	114						
T030119		813S60780			.312	V	2/3	L	-50	82	82	72						

Certified a true copy of the original, retained in our file.
AMERICAN ALLOY STEEL, INC.
Reviewed By:
3/17/21

HEAT NUMBER	CHEMICAL ANALYSIS C	Mn	P	S	Si	Cu	Ni	Cr	Mo	V	Ti	Al	B	Cb	N	Sn	MIXED GRAIN SIZE
811S00740	.17	1.07	.011	.006	.329	.221	.19	.03	.007	.002	.002	.037	.0002	.002	.004	.003	
813S60780	.17	1.08	.013	.004	.343	.212	.17	.03	.006	.002	.002	.039	.0002	.002	.003	.003	

AMERICAN ALLOY PLATE # S236115

I certify that the above results are a true and correct copy of actual results contained in records maintained by ArcelorMittal Burns Harbor and are in full compliance with the requirements of the specification cited above. This test report cannot be altered and must be transmitted intact with any subsequent third party test reports, if required.

SHPLTRPT.TIF

FARID HASSANI PER MWT
SUPV. QUALITY ASSURANCE

03/17/2021 From: AMERICAN ALLOY STEEL, INC. To: INUKSHUK CONSTRUCTION LIMITED
P.O.#: 341-1001-TX S.O.#: 677336 AA PL#: 5236116
Item: 1 (1 PC) 5/16" X 96" X 480"

ArcelorMittal Burns Harbor Plate

QUALITY ASSURANCE
REPORT OF TEST AND ANALYSES

US HWY 12 Burns Harbor, Indiana

SHIPMENT NO.	DATE SHIPPED	CAR OR VEHICLE NO.
803-69511	02-04-21	IHB-MCCOO-BNSF BVRY 062064

SOLD TO:
AMERICAN ALLOY STEEL INC
PO BOX 40469
HOUSTON TX 77240-0469

SHIP TO:
AMERICAN ALLOY STEEL INC
BNSF TR# 7226 MILE 66.4 LN SEG 492
6230 N HOUSTON ROSSLYN RD
HOUSTON TX 77091-3410

NOTE	SERIAL NUMBER	PAT NO.	HEAT NUMBER	NO. PCS.	SIZE AND QUANTITY: THICKNESS INCHES	WIDTH OR DIA. INCHES	LENGTH INCHES	WEIGHT POUNDS	YIELD POINT PSI	TENSILE STRENGTH PSI	AF FRAC. ELONG. IN	RED. % %

QUALITY STEEL MELTED & MANUFACTURED IN THE U. S. A.
PLATES - ASTM A516-17 GR 70 PVQ KLD FINE GRAIN PRAC, ASTM A516-17 GR 65 PVQ, ASTM A516-17 GR 60 PVQ, ASME SA516 GR 70 PVQ 2019 EDITION, ASME SA516 GR 65 PVQ 2019 EDITION, ASME SA516 GR 60 PVQ 2019 EDITION, CH-V SA2085 PLT L 15/12 FTLBS AT -50F, VACUUM DEGASSED --- PLT NORMALIZED & COOLED IN STILL AIR --- IN ACCORDANCE WITH EN 10204:2004 TYPE 3.1 10204:2004 TYPE 3.1
NO WELD REPAIR WAS PERFORMED ON BELOW PLATE(S)
CO# 125823 GH 377-1561A
PLATES HEAT TREATED - TEST SPECIMENS ATTACHED & YIELD STRENGTH @ .5% EUL
MERCURY IN ANY FORM HAS NOT BEEN USED IN THE PRODUCTION OF THIS ORDER

T030111 →	811800740	2	5/16	96	480	8168	54800	75600	8	25		
			N 1650 DEG F - 15 MIN									
(M55)MFST REF#:2												
T030118	813860780	2	5/16	96	480	8168	54000	75500	8	26		
			N 1650 DEG F - 15 MIN									
(M55)MFST REF#:2												
T030119	813860780	2	5/16	96	480	8168	53700	75800	8	26		
			N 1650 DEG F - 15 MIN									
(M55)MFST REF#:2												

Q-QUENCH TEMPERATURE T-TEMPER TEMPERATURE N-NORMALIZE TEMPERATURE

SERIAL NUMBER	PAT NO.	HEAT NUMBER	HARD BHN	BEND	THICKNESS INCHES	TYPE	SIZE	DIR	TEST TEMP °F	CHARPY IMPACT ENERGY FT LBS 1	2	3	SHEAR(%) 1	2	3	LAT. EX[3] MILS 1	2	3
T030111		811800740			.312	V	2/3	L	-50	104	79	87						
T030118		813860780			.312	V	2/3	L	-50	116	115	114						
T030119		813860780			.312	V	2/3	L	-50	82	82	72						

Certified a true copy of the original, retained in our file.
AMERICAN ALLOY STEEL, INC.
Reviewed By:
3/17/21

HEAT NUMBER	CHEMICAL ANALYSIS C	Mn	P	S	Si	Cu	Ni	Cr	Mo	V	Ti	Al	B	Cb	N	Sn	MIQUAID GRAIN SIZE
811800740	.17	1.07	.011	.006	.329	.221	.19	.03	.007	.002	.002	.037	.0002	.002	.004	.003	
813860780	.17	1.08	.013	.004	.343	.212	.17	.03	.006	.002	.002	.039	.0002	.002	.003	.003	

AMERICAN ALLOY
PLATE# 5236116

I certify that the above results are a true and correct copy of actual results contained in records maintained by ArcelorMittal Burns Harbor and are in full compliance with the requirements of the specification cited above. This test report cannot be altered and must be transmitted intact with any subsequent third party test reports, if required.

BHPLTRPT.TIF

FARID HASSANI PER MWT
SUPV. QUALITY ASSURANCE

03/17/2021 From: AMERICAN ALLOY STEEL, INC. To: INUKSHUK CONSTRUCTION LIMITED
P:O.#: 341-1001-TX S.O.#: 677336 AA PL#: 5236117
Item: 1 (1 PC) 5/16" X 96" X 480"

ArcelorMittal Burns Harbor Plate

QUALITY ASSURANCE
REPORT OF TEST AND ANAYLSES

US HWY 12 Burns Harbor, Indiana

SHIPMENT NO. 803-69511 | DATE SHIPPED 02-04-21 | CAR OR VEHICLE NO. IHB-MCCOO-BNSF BVRY 062064

SOLD TO:
AMERICAN ALLOY STEEL INC
PO BOX 40469
HOUSTON TX 77240-0469

SHIP TO:
AMERICAN ALLOY STEEL INC
BNSF TR# 7226 MILE 66.4 LN SEG 492
6230 N HOUSTON ROSSLYN RD
HOUSTON TX 77091-3410

NOTE	SERIAL NUMBER	PAT NO.	HEAT NUMBER	NO. PCS.	SIZE AND QUANTITY: THICKNESS	WIDTH OR DIA.	LENGTH	WEIGHT	YIELD POINT	TENSILE STRENGTH	AF FRAC. ELONG.	RED.
					INCHES	INCHES	INCHES	POUNDS	PSI	PSI	IN	% %

QUALITY STEEL MELTED & MANUFACTURED IN THE U. S. A.
PLATES - ASTM A516-17 GR 70 PVQ KLD FINE GRAIN PRAC, ASTM A516-17 GR 65 PVQ, ASTM A516-17 GR 60 PVQ, ASME SA516 GR 70 PVQ 2019 EDITION, ASME SA516 GR 65 PVQ 2019 EDITION, ASME SA516 GR 60 PVQ 2019 EDITION, CH-V SA20S5 PLT L 15/12 FTLBS AT -50F, VACUUM DEGASSED --- PLT NORMALIZED & COOLED IN STILL AIR --- IN ACCORDANCE WITH EN 10204:2004 TYPE 3.1 10204:2004 TYPE 3.1
NO WELD REPAIR WAS PERFORMED ON BELOW PLATE(S)
CO# 125823 GH 377-1561A
PLATES HEAT TREATED - TEST SPECIMENS ATTACHED & YIELD STRENGTH @ .5% EUL
MERCURY IN ANY FORM HAS NOT BEEN USED IN THE PRODUCTION OF THIS ORDER

T030111 →	811S00740	2	5/16	96	480			8168	54800	75600	8	25	
			N 1650 DEG F - 15 MIN										
(M55)MFST REF#:2													
T030118	813S60780	2	5/16	96	480			8168	54000	75500	8	26	
			N 1650 DEG F - 15 MIN										
(M55)MFST REF#:2													
T030119	813S60780	2	5/16	96	480			8168	53700	75800	8	26	
			N 1650 DEG F - 15 MIN										
(M55)MFST REF#:2													

Q-QUENCH TEMPERATURE | T-TEMPER TEMPERATURE | N-NORMALIZE TEMPERATURE

SERIAL NUMBER	PAT NO.	HEAT NUMBER	HARD BHN	BEND	THICKNESS INCHES	TYPE	SIZE	DIR	TEST TEMP F	CHARPY IMPACT ENERGY FT LBS 1	2	3	SHEAR(%) 1	2	3	LAT. EXP MILS 1	2	3
T030111		811S00740			.312	V	2/3	L	-50	104	79	87						
T030118		813S60780			.312	V	2/3	L	-50	116	115	114						
T030119		813S60780			.312	V	2/3	L	-50	82	82	72						

Certified a true copy of the original, retained in our file.
AMERICAN ALLOY STEEL, INC.
Reviewed By:
3/17/21

HEAT NUMBER	CHEMICAL ANALYSIS C	Mn	P	S	Si	Cu	Ni	Cr	Mo	V	Ti	Al	B	Cb	N	Sn	MOLVD GRAIN SIZE
811S00740	.17	1.07	.011	.006	.329	.221	.19	.03	.007	.002	.002	.037	.0002	.002	.004	.003	
813S60780	.17	1.08	.013	.004	.343	.212	.17	.03	.006	.002	.002	.039	.0002	.002	.003	.003	

AMERICAN ALLOY PLATE # 5236117

I certify that the above results are a true and correct copy of actual results contained in records maintained by ArcelorMittal Burns Harbor and are in full compliance with the requirements of the specification cited above. This test report cannot be altered and must be transmitted intact with any subsequent third party test reports, if required.

BHPLTRPT.TIF

FARID HASSANI PER MWT
SUPV. QUALITY ASSURANCE

03/17/2021. From: AMERICAN ALLOY STEEL, INC. To: INUKSHUK CONSTRUCTION LIMITED
P.O.#: 341-1001-TX S.O.#: 677336 AA PL#: 5236118
Item: 1 (1 PC) 5/16" X 96" X 480"

ArcelorMittal Burns Harbor Plate

QUALITY ASSURANCE
REPORT OF TEST AND ANALYSES

US HWY 12 Burns Harbor, Indiana

SHIPMENT NO. 803-69511 | DATE SHIPPED 02-04-21 | CAR OR VEHICLE NO. IHB-MCCOO-BNSF BVRY 062064

SOLD TO:
AMERICAN ALLOY STEEL INC
PO BOX 40469
HOUSTON TX 77240-0469

SHIP TO:
AMERICAN ALLOY STEEL INC
BNSF TR# 7226 MILE 66.4 LN SEG 492
6230 N HOUSTON ROSSLYN RD
HOUSTON TX 77091-3410

NOTE	SERIAL NUMBER	PAT NO.	HEAT NUMBER	NO. PCS.	SIZE AND QUANTITY: THICKNESS	WIDTH OR DIA.	LENGTH	WEIGHT	YIELD POINT	TENSILE STRENGTH	AF FRAC. ELONG.	RED.
					INCHES	INCHES	INCHES	POUNDS	PSI	PSI	IN	% %

QUALITY STEEL MELTED & MANUFACTURED IN THE U. S. A.
PLATES - ASTM A516-17 GR 70 PVQ KLD FINE GRAIN PRAC, ASTM A516-17 GR 65 PVQ, ASTM A516-17 GR 60 PVQ, ASME SA516 GR 70 PVQ 2019 EDITION, ASME SA516 GR 65 PVQ 2019 EDITION, ASME SA516 GR 60 PVQ 2019 EDITION, CH-V SA20S5 PLT L 15/12 FTLBS AT -50F, VACUUM DEGASSED --- PLT NORMALIZED & COOLED IN STILL AIR --- IN ACCORDANCE WITH EN 10204:2004 TYPE 3.1 10204:2004 TYPE 3.1
NO WELD REPAIR WAS PERFORMED ON BELOW PLATE(S)
CO# 125823 GH 377-1561A
PLATES HEAT TREATED - TEST SPECIMENS ATTACHED & YIELD STRENGTH @ .5% EUL
MERCURY IN ANY FORM HAS NOT BEEN USED IN THE PRODUCTION OF THIS ORDER

T030120	813860780	1	5/16	96	480	4084	53200	75500	8	26		
			N	1650 DEG F -	15 MIN							

(M55)MFST REF#:2

Q-QUENCH TEMPERATURE T-TEMPER TEMPERATURE N-NORMALIZE TEMPERATURE

SERIAL NUMBER	PAT NO.	HEAT NUMBER	HARD BHN	BEND	CHARPY IMPACT: THICKNESS	TYPE	SIZE	DIR	TEST TEMP F	ENERGY FT LBS 1	2	3	SHEAR(%) 1	2	3	LAT. EXP MILS 1	2	3
					INCHES													
T030120		813860780			.312	V	2/3	L	-50	73	68	80						

Certified a true copy of the original, retained in our file.
AMERICAN ALLOY STEEL, INC.
Reviewed By:
3/17/21

HEAT NUMBER	CHEMICAL ANALYSIS: C	Mn	P	S	Si	Cu	Ni	Cr	Mo	V	Ti	Al	B	Cb	N	Sn	MODIFIED GRAIN SIZE
813860780	.17	1.08	.013	.004	.34	3.21	2.17	.03	.006	.002	.002	.039	.0002	.002	.003	.003	

AMERICAN ALLOY
PLATE # 5236118

I certify that the above results are a true and correct copy of actual results contained in records maintained by ArcelorMittal Burns Harbor and are in full compliance with the requirements of the specification cited above. This test report cannot be altered and must be transmitted intact with any subsequent third party test reports, if required.

BHPLTRPT.TIF

FARID HASSANI PER MMT
SUPV. QUALITY ASSURANCE

03/17/2021, From: AMERICAN ALLOY STEEL, INC. To: INUKSHUK CONSTRUCTION LIMITED
P:O.#: 341-1001-TX S.O.#: 677336 AA PL#: 5239608
Item: 1 (1 PC) 5/16" X 96" X 480"

ArcelorMittal Burns Harbor Plate

QUALITY ASSURANCE
REPORT OF TEST AND ANALYSES

US HWY 12 Burns Harbor, Indiana

SHIPMENT NO.	DATE SHIPPED	CAR OR VEHICLE NO.
803-69511	02-04-21	IHB-MCCOO-BNSF BVRY 062064

SOLD TO: AMERICAN ALLOY STEEL INC
PO BOX 40469
HOUSTON TX 77240-0469

SHIP TO: AMERICAN ALLOY STEEL INC
BNSF TR# 7226 MILE 66.4 LN SEG 492
6230 N HOUSTON ROSSLYN RD
HOUSTON TX 77091-3410

NOTE	SERIAL NUMBER	PAT NO.	HEAT NUMBER	NO. PCS.	SIZE AND QUANTITY: THICKNESS	WIDTH OR DIA.	LENGTH	WEIGHT	YIELD POINT	TENSILE STRENGTH	AF FRAC. ELONG.	RED.
					INCHES	INCHES	INCHES	POUNDS	PSI	PSI	IN	% %

QUALITY STEEL MELTED & MANUFACTURED IN THE U. S. A.
PLATES - ASTM A516-17 GR 70 PVQ KLD FINE GRAIN PRAC, ASTM A516-17 GR 65 PVQ, ASTM A516-17 GR 60 PVQ, ASME SA516 GR 70 PVQ 2019 EDITION, ASME SA516 GR 65 PVQ 2019 EDITION, ASME SA516 GR 60 PVQ 2019 EDITION, CH-V SA20S5 PLT L 15/12 FTLBS AT -50F, VACUUM DEGASSED --- PLT NORMALIZED & COOLED IN STILL AIR --- IN ACCORDANCE WITH EN 10204:2004 TYPE 3.1 10204:2004 TYPE 3.1
NO WELD REPAIR WAS PERFORMED ON BELOW PLATE(S)
CO# 125823 GH 377-1561A
PLATES HEAT TREATED - TEST SPECIMENS ATTACHED & YIELD STRENGTH @ .5% EUL
MERCURY IN ANY FORM HAS NOT BEEN USED IN THE PRODUCTION OF THIS ORDER

T030111	811S00740	2	5/16	96	480		8168	54800	75600	8	25
			N 1650 DEG F - 15 MIN									
(M55)MFST REF#:2												
T030118	813S60780	2	5/16	96	480		8168	54000	75500	8	26
			N 1650 DEG F - 15 MIN									
(M55)MFST REF#:2												
T030119 →	813S60780	2	5/16	96	480		8168	53700	75800	8	26
			N 1650 DEG F - 15 MIN									
(M55)MFST REF#:2												

Q-QUENCH TEMPERATURE T-TEMPER TEMPERATURE N-NORMALIZE TEMPERATURE

SERIAL NUMBER	PAT NO.	HEAT NUMBER	HARD BHN	BEND	THICKNESS INCHES	TYPE	SIZE	DIR	TEST TEMP °F	CHARPY IMPACT ENERGY FT LBS 1	2	3	SHEAR(%) 1	2	3	LAT. EXP MILS 1	2	3
T030111		811S00740			.312	V	2/3	L	-50	104	79	87						
T030118		813S60780			.312	V	2/3	L	-50	116	115	114						
T030119		813S60780			.312	V	2/3	L	-50	82	82	72						

Certified a true copy of the original, retained in our file.
AMERICAN ALLOY STEEL, INC.
Reviewed By:
3/17/21

HEAT NUMBER	CHEMICAL ANALYSIS C	Mn	P	S	Si	Cu	Ni	Cr	Mo	V	Ti	Al	B	Cb	N	Sn	MQUAID GRAIN SIZE
811S00740	.17	1.07	.011	.006	.329	.221	.19	.03	.007	.002	.002	.037	.0002		.002	.004	.003
813S60780	.17	1.08	.013	.004	.343	.212	.17	.03	.006	.002	.002	.039	.0002		.002	.003	.003

AMERICAN ALLOY
PLATE # 5239608

I certify that the above results are a true and correct copy of actual results contained in records maintained by ArcelorMittal Burns Harbor and are in full compliance with the requirements of the specification cited above. This test report cannot be altered and must be transmitted intact with any subsequent third party test reports, if required.

BHPLTRPT.TIF

FARID HASSANI PER MNT
SUPV. QUALITY ASSURANCE

03/17/2021 From: AMERICAN ALLOY STEEL, INC. To: INUKSHUK CONSTRUCTION LIMITED
P.O.#: 341-1001-TX S.O.#: 677336 AA PL#: 5239609
Item: 1 (1 PC) 5/16" X 96" X 480"

ArcelorMittal Burns Harbor Plate

QUALITY ASSURANCE
REPORT OF TEST AND ANALYSES

US HWY 12 Burns Harbor, Indiana

SHIPMENT NO. 803-69511 | DATE SHIPPED 02-04-21 | CAR OR VEHICLE NO. IHB-MCCOO-BNSF BVRY 062064

SOLD TO:
AMERICAN ALLOY STEEL INC
PO BOX 40469
HOUSTON TX 77240-0469

SHIP TO:
AMERICAN ALLOY STEEL INC
BNSF TR# 7226 MILE 66.4 LN SEG 492
6230 N HOUSTON ROSSLYN RD
HOUSTON TX 77091-3410

NOTE	SERIAL NUMBER	PAT NO.	HEAT NUMBER	NO. PCS.	SIZE AND QUANTITY: THICKNESS INCHES	WIDTH OR DIA. INCHES	LENGTH INCHES	WEIGHT POUNDS	YIELD POINT PSI	TENSILE STRENGTH PSI	AF FRAC. ELONG. IN	RED. % %
	T030111		811800740	2	5/16	96	480	8168	54800	75600	8	25
					N 1650 DEG F - 15 MIN							
	T030118		813860780	2	5/16	96	480	8168	54000	75500	8	26
					N 1650 DEG F - 15 MIN							
	T030119		813860780	2	5/16	96	480	8168	53700	75800	8	26
					N 1650 DEG F - 15 MIN							

QUALITY STEEL MELTED & MANUFACTURED IN THE U. S. A.
PLATES - ASTM A516-17 GR 70 PVQ KLD FINE GRAIN PRAC, ASTM A516-17 GR 65 PVQ, ASTM A516-17 GR 60 PVQ, ASME SA516 GR 70 PVQ 2019 EDITION, ASME SA516 GR 65 PVQ 2019 EDITION, ASME SA516 GR 60 PVQ 2019 EDITION, CH-V SA2085 PLT L 15/12 FTLBS AT -50F, VACUUM DEGASSED --- PLT NORMALIZED & COOLED IN STILL AIR --- IN ACCORDANCE WITH EN 10204:2004 TYPE 3.1 10204:2004 TYPE 3.1
NO WELD REPAIR WAS PERFORMED ON BELOW PLATE(S)
CO# 125823 GH 377-1561A
PLATES HEAT TREATED - TEST SPECIMENS ATTACHED & YIELD STRENGTH @ .5% EUL
MERCURY IN ANY FORM HAS NOT BEEN USED IN THE PRODUCTION OF THIS ORDER

(M55)MFST REF#:2

(M55)MFST REF#:2

(M55)MFST REF#:2

Q-QUENCH TEMPERATURE | T-TEMPER TEMPERATURE | N-NORMALIZE TEMPERATURE

SERIAL NUMBER	PAT NO.	HEAT NUMBER	HARD BHN	BEND	THICKNESS INCHES	TYPE	SIZE	DIR	TEST TEMP F	CHARPY IMPACT ENERGY FT LBS 1	2	3	SHEAR(%) 1	2	3	LAT. EXP MILS 1	2	3
T030111		811800740			.312	V	2/3	L	-50	104	79	87						
T030118		813860780			.312	V	2/3	L	-50	116	115	114						
T030119		813860780			.312	V	2/3	L	-50	82	82	72						

Certified a true copy of the original, retained in our file.
AMERICAN ALLOY STEEL, INC.
Reviewed By:
3/17/21

HEAT NUMBER	CHEMICAL ANALYSIS C	Mn	P	S	Si	Cu	Ni	Cr	Mo	V	Ti	Al	B	Cb	N	Sn	MOLARD GRAIN SIZE
811800740	.17	1.07	.011	.006	.329	.221	.19	.03	.007	.002	.002	.037	.0002	.002	.004	.003	
813860780	.17	1.08	.013	.004	.343	.212	.17	.03	.006	.002	.002	.039	.0002	.002	.003	.003	

AMERICAN ALLOY PLATE # 5239609

I certify that the above results are a true and correct copy of actual results contained in records maintained by ArcelorMittal Burns Harbor and are in full compliance with the requirements of the specification cited above. This test report cannot be altered and must be transmitted intact with any subsequent third party test reports, if required.

BHPLTRPT.TIF

FARID HASSANI PER MWT
SUPV. QUALITY ASSURANCE

03/17/2021 From: AMERICAN ALLOY STEEL, INC. To: INUKSHUK CONSTRUCTION LIMITED
P.O.#: 341-1001-TX S.O.#: 677336 AA PL#: 5239636
Item: 1 (1 PC) 5/16" X 96" X 480"

AMERICAN ALLOY
PLATE # 5239636

NUCOR
PLATE MILL

P.O.Box 279
Winton, NC 27986
(252) 356-3700

Mill Test Report

1505 River Rd
Cofield, NC 27922
(252) 356-3700

NUCOR
It's Our Nature.

Issuing Date : 02/04/2021 B/L No. : 581266 Load No. : 593742 Our Order No. : 184010/1 Cust. Order No. : 125998

Vehicle No: LW 62025

Specification: 0.3125" x 96.000" x 480.000"
ASTM A516 70/65/60-17/ASME SA516-70/65/60 PVQ 2019/2017
Normalized Plate NACE MR0175 Annex 2.1.2 (2015), MR0103 (2016)
Section 2.1.2 Compliant (2015) 13.1.1, 13.1.2)Vacuum Degassed

Marking : 125998

Sold To: AMERICAN ALLOY STEEL INC
6230 N HOUSTON ROSSLYN RD
PO BOX 40469
NORTH HOUSTON,TX 77091

Ship To: AMERICAN ALLOY STEEL
6230 N HOUSTON ROSSLYN RD
BNSF TR # 7238
MILE 664 LN SEG 492
NORTH HOUSTON,TX 77091

Heat No	C	Mn	P	S	Si	Cu	Ni	Cr	Mo	Al(tot)	V	Nb	Ti	N	Ca	B	Sn	Ceq	Pcm
1600012	0.18	1.04	0.008	0.001	0.17	0.22	0.10	0.09	0.02	0.033	0.004	0.003	0.002	0.0019	0.0021	0.0003	0.009	0.40	0.26

Plate Serial No	Pieces	Tons	Tensile Test Dir.	Yield (psi)	Tensile (psi)	Elong. % in 2"	Elong. % in 8"	Heat Treat Norm (°F)	Time (min)	Temper (°F)	Time (min)
1600012-03	1	2.04	H-T	53,200	78,300	33.9		1650	16		

Plate Serial No	Pieces	Tons	Charpy Impacts Dir.	Absorbed Energy (Ft-lbs) (ft-lbs) 1	(ft-lbs) 2	(ft-lbs) 3	(ft-lbs) Ave	Min	Lateral Expansion (in.) (in.) 1	(in.) 2	(in.) 3	(in.) Ave	(in.) Min	Shear (%) (%) 1	(%) 2	(%) 3	(%) Ave	Min	Temp (°F)	Size
1600012-03	1	2.04	H-L	54.7	40.8	52.6	49.4	15											-50	5mm

Certified a true copy of the
original, retained in our file.
AMERICAN ALLOY STEEL, INC.
Reviewed By:
2/3/21

HOT ROLLED CARBON STEEL PLATE
TEST COUPONS TAKEN FROM HEAT TREATED PLATE
Piece frequency charpy;

Manufactured to fully killed fine grain practice by Electric Arc Furnace. Welding or weld repair was not performed on this material. Mercury has not been used in the direct manufacturing of this material. Produced as continuous cast discrete plate, unless otherwise noted in Specification. For Mexico shipments:nhc-SalesMX@nucor.com
Yield by 0.5EUL method unless otherwise specified. Ceq = C+(Mn/6)+((Cr+Mo+V)/5)+((Cu+Ni)/15)
Pcm = C+(Si/30)+(Mn/20)+(Cu/20)+(Ni/60)+(Cr/20)+(Mo/15)+(V/10)+5B
Melted and Manufactured in the USA. ISO 9001:2015 certified. PED 97/23/EC 7/2 Annex 1, Para. 4.3 Compliant.
DIN 50049 3.1.B/EN 10204 3.1B(2004), DIN EN 10204 3.1(2005) compliant. For ABS grades only, Quality Assurance certificate QA-3624366

We hereby certify that the contents of this report are accurate and correct. All test results and operations performed by the material manufacturer are in compliance with the applicable specifications, including customer specifications.

T. A. Depretis, Metallurgist

2/4/2021 5:56:04 PM

AMERICAN ALLOY STEEL, INC.

6230 N. HOUSTON ROSSLYN ROAD
HOUSTON, TEXAS 77091
Phone: 713-462-8081 Fax: 713-462-8209

M.T.R. COVER SHEET
03/17/2021

Customer Name : INUKSHUK CONSTRUCTION LIMITED
Address :
City, State Zip : HALIFAX, NS B3J 1S9
Attention : M.LOSIER
Phone Number : 1-902-429-0272
Reference Number : 677336
Notes 1 : P.O. NO. 341-1001-TX

Control Number: 1089316
Queued By : Alex Garza
Page Number : 1
Total Pages : 4
Fax Number : 1-902-429-7762

THE INFORMATION YOU REQUESTED IS ATTACHED.
THANK YOU FOR YOUR BUSINESS !

AASI PLATE NUMBER	HEAT # / SLAB #	MILL
5232725	0200021 01	NUCOR PLATE
5232726	0200021 01	NUCOR PLATE
5232727	0200021 01	NUCOR PLATE

03/17/2021 From: AMERICAN ALLOY STEEL, INC. To: INUKSHUK CONSTRUCTION LIMITED
P.O.#: 341-1001-TX S.O.#: 677336 AA PL#: 5232725
Item: 2 (1 PC) 1/4" X 96" X 480"

NUCOR PLATE MILL
P.O.Box 279
Winton, NC 27986
(252) 358-3700

Mill Test Report

AMERICAN ALLOY PLATE # 5232725

1505 River Rd
Cofield, NC 27922
(252) 358-3700

NUCOR It's Our Nature

Issuing Date: 01/17/2021 B/L No.: 579490 Load No.: 592185 Our Order No.: 180671/6

Vehicle No: ALY 91698

Specification: 0.2500" x 96.000" x 480.000"
ASTM A516 70/65/60/485-17/ASME SA516-70/65/60/485 PVQ 2019/2017
Normalized Plate NACE MR0175 Annex 2.1.2 (2015), MR0103 (2010)
Section 2.1.2 (2015) 13.1.1, 13.1.2) Compliant

Marking: 125135

Sold To: AMERICAN ALLOY STEEL INC
6230 N HOUSTON ROSSLYN RD
PO BOX 40469
NORTH HOUSTON,TX 77091

Cust. Order No.: 125135

Ship To: AMERICAN ALLOY STEEL
6230 N HOUSTON ROSSLYN RD
BNSF TR # 7226
MILE 664 LN SEG 492
NORTH HOUSTON,TX 77091

Heat No	C	Mn	P	S	Si	Cu	Ni	Cr	Mo	Al(tot)	V	Nb	Ti	N	Ca	B	Sn	Ceq	Pcm
0200021	0.19	0.96	0.010	0.000	0.21	0.16	0.05	0.04	0.01	0.027	0.004	0.000	0.001		0.0010	0.0001	0.000	0.38	0.28

Tensile Test

Plate Serial No	Pieces	Tons	Dir.	Yield (psi)	Tensile (psi)	Elong. % in 2"	Elong. % in 8"
0200021-01	4	6.53	H-T	49,400	71,900	40.0	

Heat Treat

Norm (°F)	Time (min)	Temper (°F)	Time (min)
1650	14		

Charpy Impacts

Plate Serial No	Pieces	Tons	Dir.	Absorbed Energy (Ft-lbs) (ft-lbs) 1	(ft-lbs) 2	(ft-lbs) 3	(ft-lbs) Ave	Min	Lateral Expansion (in.) (in.) 1	(in.) 2	(in.) 3	(in.) Ave	(in.) Min	Shear (%) (%) 1	(%) 2	(%) 3	(%) Ave	Min	Temp (°F)	Size
0200021-01	4	6.53	H-L	60.5	56.2	62.4	59.4	15											-50	5mm

Certified a true copy of the original, retained in our file.
AMERICAN ALLOY STEEL
J.K 2/26/2021

HOT ROLLED CARBON STEEL PLATE
TEST COUPONS TAKEN FROM HEAT TREATED PLATE
Place frequency charpy;

Manufactured to fully killed fine grain practice by Electric Arc Furnace. Welding or weld repair was not performed on this material. Mercury has not been used in the direct manufacturing of this material. Produced as continuous cast discrete plate, unless otherwise noted in Specification. For Mexico shipments:nhc-Sales@nucor.com
Yield by 0.5EUL method unless otherwise specified. Ceq = C+(Mn/6)+((Cr+Mo+V)/5)+((Cu+Ni)/15)
Pcm = C+(Si/30)+(Mn/20)+(Cu/20)+(Ni/60)+(Cr/20)+(Mo/15)+(V/10)+5B
Melted and Manufactured in the USA. ISO 9001:2015 certified. PED 97/23/EC 7/2 Annex 1, Para. 4.3 Compliant.
DIN 50049 3.1.B/EN 10204 3.1B(2004), DIN EN 10204 3.1(2005) compliant. For ABS grades only, Quality Assurance certificate QA-3824366

We hereby certify that the contents of this report are accurate and correct. All test results and operations performed by the material manufacturer are in compliance with the applicable specifications, including customer specifications.

T. A. Depretis, Metallurgist

1/17/2021 10:03:29 AM

03/17/2021 From: AMERICAN ALLOY STEEL, INC. To: INUKSHUK CONSTRUCTION LIMITED
P.O.#: 341-1001-TX S.O.#: 677336 AA PL#: 5232726
Item: 2 (1 PC) 1/4" X 96" X 480"

NUCOR PLATE MILL
P.O.Box 279
Winton, NC 27986
(252) 356-3700

Mill Test Report

1505 River Rd
Cofield, NC 27922
(252) 356-3700
NUCOR It's Our Nature

AMERICAN ALLOY PLATE #5232726

Issuing Date: 01/17/2021 B/L No. : 579490 Load No. : 592195 Our Order No. : 1806716 Cust. Order No. : 125135

Vehicle No: ALY91696

Specification: 0.2500" x 96.000" x 480.000"
ASTM A516 70/65/60/485-17/ASME SA516-70/65/60/485 PVQ 2019/2017
Normalized Plate NACE MR0175 Annex 2.1.2 (2015), MR0103 (2016)
Section 2.1.2 (2015) 13.1.1, 13.1.2) Compliant

Marking: 125135

Sold To: AMERICAN ALLOY STEEL INC
6230 N HOUSTON ROSSLYN RD
PO BOX 40469
NORTH HOUSTON,TX 77091

Ship To: AMERICAN ALLOY STEEL
6230 N HOUSTON ROSSLYN RD
BNSF TR # 72:26
MILE 664 LN # EB 492
NORTH HOUSTON,TX 77091

Heat No	C	Mn	P	S	Si	Cu	Ni	Cr	Mo	Al(tot)	V	Nb	Ti	N	Ca	B	Sn	Ceq	Pcm
0200021	0.19	0.98	0.010	0.000	0.21	0.16	0.05	0.04	0.01	0.027	0.004	0.000	0.031		0.0010	0.0001	0.000	0.38	0.25

Plate Serial No	Pieces	Tons	Tensile Test Dir.	Yield (psi)	Tensile (psi)	Elong. % in 2"	Elong. % in 8"	Heat Treat Norm (°F)	Time (min)	Temper (°F)	Time (min)
0200021-01	4	6.53	H-T	49,400	71,900	40.0		1650	14		

Plate Serial No	Pieces	Tons	Charpy Impacts Dir.	Absorbed Energy (Ft-lbs) (ft-lbs) 1	(ft-lbs) 2	(ft-lbs) 3	(ft-lbs) Ave	Min	Lateral Expansion (in.) (in.) 1	(in.) 2	(in.) 3	(in.) Ave	(in.) Min	Shear (%) (%) 1	(%) 2	(%) 3	(%) Ave	Min	Temp (°F)	Size
0200021-01	4	6.53	H-L	60.5	55.2	62.4	59.4	15											-50	5mm

HOT ROLLED CARBON STEEL PLATE
TEST COUPONS TAKEN FROM HEAT TREATED PLATE
Piece frequency charpy:

Certified a true copy of the original, retained in our file.
AMERICAN ALLOY STEEL
JK 2/26/2021

Manufactured to fully killed fine grain practice by Electric Arc Furnace. Welding or weld repair was not performed on this material.
Mercury has not been used in the direct manufacturing of this material. Produced as continuous cast discrete plate, unless otherwise noted in Specification. For Mexico shipments: nhc-SalesMX@nucor.com
Yield by 0.5EUL method unless otherwise specified. Ceq = C+(Mn/6)+((Cr+Mo+V)/5)+((Cu+Ni)/15)
Pcm = C+(Si/30)+(Mn/20)+(Cu/20)+(Ni/60)+(Cr/20)+(Mo/15)+(V/10)+5B
Melted and Manufactured in the USA. ISO 9001:2015 certified. PED 97/23/EC 7/2 Annex 1, Para. 4.3 Compliant.
DIN 50049 3.1.B/EN 10204 3.1B(2004), DIN EN 10204 3.1(2005) compliant. For ABS grades only, Quality Assurance certificate QA-3624366

We hereby certify that the contents of this report are accurate and correct. All test results and operations performed by the material manufacturer are in compliance with the applicable specifications, including customer specifications.

T. A. Depretis, Metallurgist

1/17/2021 10:03:29 AM

03/17/2021 From: AMERICAN ALLOY STEEL, INC. To: INUKSHUK CONSTRUCTION LIMITED
P.O.#: 341-1001-TX S.O.#: 677336 AA PL#: 5232727
Item: 2 (1 PC) 1/4" X 96" X 480"

NUCOR
PLATE MILL

P.O.Box 279
Winton, NC 27986
(252) 356-3700

Mill Test Report

1505 River Rd
Cofield, NC 27922
(252) 356-3700

NUCOR
It's Our Nature.

AMERICAN ALLOY PLATE # 5232727

Issuing Date: 01/17/2021 B/L No.: 578490 Load No.: 582195 Our Order No.: 180671/6 Cust. Order No.: 125135

Vehicle No: ALY91698

Specification: 0.2500" x 96.000" x 480.000"
ASTM A516 70/65/60/485-17/ASMESA516-70/65/60/485 PVQ 2019/2017
Normalized Plate NACEMR0175 Annex 2.1.2 (2015), MR0103 (2010)
Section 2.1.2 (2015) 13.1.1, 13.1.2)Compliant

Marking: 125135

Sold To: AMERICAN ALLOY STEEL INC
6230 N HOUSTON ROSSLYN RD
PO BOX 40469
NORTH HOUSTON,TX 77091

Ship To: AMERICAN ALLOY STEEL
6230 N HOUSTON ROSSLYN RD
BNSF TR # 7226
MILE664 LN SEG 492
NORTH HOUSTON,TX 77091

Heat No	C	Mn	P	S	Si	Cu	Ni	Cr	Mo	Al(tot)	V	Nb	Ti	N	Ca	B	Sn	Ceq	Pcm
0200021	0.19	0.96	0.010	0.000	0.21	0.16	0.05	0.04	0.01	0.027	0.004	0.000	0.001		0.0010	0.0001	0.000	0.38	0.28

Plate Serial No	Pieces	Tons	Tensile Test Dir.	Yield (psi)	Tensile (psi)	Elong. % in 2"	Elong. % in 8"	Heat Treat Norm (°F)	Norm Time (min)	Temper (°F)	Temper Time (min)
0200021-01	4	6.53	H-T	49,400	71,900	40.0		1650	14		

Plate Serial No	Pieces	Tons	Charpy Impacts Dir.	Absorbed Energy (Ft-lbs) (ft-lbs) 1	(ft-lbs) 2	(ft-lbs) 3	(ft-lbs) Ave	Min	Lateral Expansion (in.) (in.) 1	(in.) 2	(in.) 3	(in.) Ave	(in.) Min	Shear (%) (%) 1	(%) 2	(%) 3	(%) Ave	Min	Temp (°F)	Size
0200021-01	4	6.53	H-L	80.5	55.2	62.4	59.4	15											-50	5mm

HOT ROLLED CARBON STEEL PLATE
TEST COUPONS TAKEN FROM HEAT TREATED PLATE
Place frequency charpy;

Manufactured to fully killed fine grain practice by Electric Arc Furnace. Welding or weld repair was not performed on this material.
Mercury has not been used in the direct manufacturing of this material. Produced as continuous cast discrete plate, unless otherwise noted in Specification. For Mexico shipments:nhc-Sales400@nucor.com
Yield by 0.5EUL method unless otherwise specified. Ceq = C+(Mn/6)+((Cr+Mo+V)/5)+((Cu+Ni)/15)
Pcm = C+(Si/30)+(Mn/20)+(Cu/20)+(Ni/60)+(Cr/20)+(Mo/15)+(V/10)+5B
Melted and Manufactured in the USA. ISO 9001:2015 certified. PED 97/23/EC 7/2 Annex 1, Para. 4.3 Compliant.
DIN 50049 3.1.B/EN 10204 3.1B(2004), DIN EN 10204 3.1(2006) compliant. For ABS grades only, Quality Assurance certificate QA-3824386

Certified a true copy of the original, retained in our file.
AMERICAN ALLOY STEEL
J.P 2/26/2021

We hereby certify that the contents of this report are accurate and correct. All test results and operations performed by the material manufacturer are in compliance with the applicable specifications, including customer specifications.

T. A. Depratis

T. A. Depratis, Metallurgist

1/17/2021 10:03:29 AM

MRR #008

AMERICAN ALLOY STEEL, INC.

6230 N. HOUSTON ROSSLYN ROAD
HOUSTON, TEXAS 77091
Phone: 713-462-8081 Fax: 713-462-8209

M.T.R. COVER SHEET
03/19/2021

Customer Name	:	INUKSHUK CONSTRUCTION LIMITED
Address	:	
City, State Zip	:	HALIFAX, NS B3J 1S9
Attention	:	M.LOSIER
Phone Number	:	1-902-429-0272
Reference Number	:	677336
Notes 1	:	P.O. NO. 341-1001-TX

Control Number:		1089582
Queued By	:	Alex Garza
Page Number	:	1
Total Pages	:	36
Fax Number	:	1-902-429-7762

THE INFORMATION YOU REQUESTED IS ATTACHED.
THANK YOU FOR YOUR BUSINESS !

AASI PLATE NUMBER	HEAT # / SLAB #	MILL
5236099	811S00740 T030110	ARCELORMITTAL
5236100	811S00740 T030113	MITTAL
5236101	811S00740 T030113	MITTAL
5236102	813S60780 T030117	MITTAL
5236103	813S60780 T030116	MITTAL
5236104	813S60780 T030117	MITTAL
5236105	813S60780 T030115	MITTAL
36106	813S60780 T030115	MITTAL
5236107	811S00740 T030114	MITTAL
5236108	811S00740 T030112	MITTAL
5236109	811S00740 T030112	ARCELORMITTAL
5236110	813S60780 T030116	ARCELORMITTAL
5236111	811S00740 T030114	ARCELORMITTAL
5236112	811S00740 T030110	ARCELORMITTAL
5236114	813S60780 T030119	MITTAL
5236115	813S60780 T030118	MITTAL
5236116	811S00740 T030111	MITTAL
5236117	811S00740 T030111	MITTAL
5236118	813S60780 T030120	MITTAL
5237388	0604883 06	NUCOR PLATE
5237389	0602533 08	NUCOR PLATE
5237390	1600012 02	NUCOR PLATE
5237391	1600011 08	NUCOR PLATE
5237392	1600011 08	NUCOR PLATE
5237393	0602533 08	NUCOR MILL
5237394	1600012 03	NUCOR MILL
5237395	1600012 03	NUCOR MILL
5237396	0602533 08	NUCOR MILL
5239608	813S60780 T030119	MITTAL

AMERICAN ALLOY STEEL, INC.

6230 N. HOUSTON ROSSLYN ROAD
HOUSTON, TEXAS 77091
Phone: 713-462-8081 Fax: 713-462-8209

M.T.R. COVER SHEET
03/19/2021

Customer Name	:	INUKSHUK CONSTRUCTION LIMITED	**Control Number:**		1089582
Address	:		**Queued By**	:	Alex Garza
City, State Zip	:	HALIFAX, NS B3J 1S9	**Page Number**	:	2
Attention	:	M.LOSIER	**Total Pages**	:	36
Phone Number	:	1-902-429-0272	**Fax Number**	:	1-902-429-7762
Reference Number	:	677336			
Notes 1	:	P.O. NO. 341-1001-TX			

THE INFORMATION YOU REQUESTED IS ATTACHED.
THANK YOU FOR YOUR BUSINESS !

AASI PLATE NUMBER	HEAT # / SLAB #	MILL
5239609	813S60780 T030118	MITTAL
5239636	1600012 03	NUCOR MILL
5232725	0200021 01	NUCOR PLATE
5232726	0200021 01	NUCOR PLATE
5232727	0200021 01	NUCOR PLATE

03/19/2021 From: AMERICAN ALLOY STEEL, INC. To: INUKSHUK CONSTRUCTION LIMITED
P.O.#: 341-1001-TX S.O.#: 677336 AA PL#: 5236099
Item: 1 (1 PC) 5/16" X 96" X 480"

ArcelorMittal Burns Harbor Plate

QUALITY ASSURANCE
REPORT OF TEST AND ANAYLSES

US HWY 12 Burns Harbor, Indiana

SHIPMENT NO. 803-68843 | DATE SHIPPED 01-20-21 | CAR OR VEHICLE NO. IHB-MCCOO-BNSF LMIC 007002

SOLD TO:
AMERICAN ALLOY STEEL INC
PO BOX 40469
HOUSTON TX 77240-0469

SHIP TO:
AMERICAN ALLOY STEEL INC
BNSF TR# 7226 MILE 66.4 LN SEG 492
6230 N HOUSTON ROSSLYN RD
HOUSTON TX 77091-3410

NOTE	SERIAL NUMBER	PAT NO.	HEAT NUMBER	NO. PCS.	SIZE AND QUANTITY: THICKNESS	WIDTH OR DIA.	LENGTH	WEIGHT	YIELD POINT	TENSILE STRENGTH	AF FRAC. ELONG.	RED.
					INCHES	INCHES	INCHES	POUNDS	PSI	PSI	IN	% %

QUALITY STEEL MELTED & MANUFACTURED IN THE U. S. A.
PLATES - ASTM A516-17 GR 70 PVQ KLD FINE GRAIN PRAC, ASTM A516-17 GR 65 PVQ, ASTM A516-17 GR 60 PVQ, ASME SA516 GR 70 PVQ 2019 EDITION, ASME SA516 GR 65 PVQ 2019 EDITION, ASME SA516 GR 60 PVQ 2019 EDITION, CH-V SA20S5 PLT L 15/12 FTLBS AT -50F, VACUUM DEGASSED --- PLT NORMALIZED & COOLED IN STILL AIR --- IN ACCORDANCE WITH EN 10204:2004 TYPE 3.1 10204:2004 TYPE 3.1
NO WELD REPAIR WAS PERFORMED ON BELOW PLATE(S)
CO# 125823 GH 377-1561A
PLATES HEAT TREATED - TEST SPECIMENS ATTACHED & YIELD STRENGTH @ .5% EUL
MERCURY IN ANY FORM HAS NOT BEEN USED IN THE PRODUCTION OF THIS ORDER

T030110	811S00740	1	5/16	96	480			4084	54500	75100	8	26	
			N	1650 DEG F -	15 MIN								

(M55)MFST REF#:2

Q-QUENCH TEMPERATURE T-TEMPER TEMPERATURE N-NORMALIZE TEMPERATURE

SERIAL NUMBER	PAT NO.	HEAT NUMBER	HARD BHN	BEND	THICKNESS INCHES	TYPE	SIZE	DIR	TEST TEMP F	CHARPY IMPACT ENERGY FT LBS 1	2	3	SHEAR(%) 1	2	3	LAT. EXP MILS 1	2	3
T030110		811S00740			.312	V	2/3	L	-50	75	71	61						

Certified a true copy of the original, retained in our file.
AMERICAN ALLOY STEEL.
J.P 3/8/2021

HEAT NUMBER	CHEMICAL ANALYSIS C	Mn	P	S	Si	Cu	Ni	Cr	Mo	V	Ti	Al	B	Cb	N	Sn	MOLIAID GRAIN SIZE
811S00740	.17	1.07	.011	.006	.329	.221	.19	.03	.007	.002	.002	.037	.0002	.002	.004	.003	

I certify that the above results are a true and correct copy of actual results contained in records maintained by ArcelorMittal Burns Harbor and are in full compliance with the requirements of the specification cited above. This test report cannot be altered and must be transmitted intact with any subsequent third party test reports, if required.

BHPLTRPT.TIF

FARID HASSANI PER MWT
SUPV. QUALITY ASSURANCE

AMERICAN ALLOY
PLATE #5234049

03/19/2021 From: AMERICAN ALLOY STEEL, INC. To: INUKSHUK CONSTRUCTION LIMITED
P.O.#: 341-1001-TX S.O.#: 677336 AA PL#: 5236100
Item: 1 (1 PC) 5/16" X 96" X 480"

ArcelorMittal Burns Harbor Plate

QUALITY ASSURANCE
REPORT OF TEST AND ANAYLSES

US HWY 12 Burns Harbor, Indiana

SHIPMENT NO. 803-69103 | DATE SHIPPED 01-28-21 | CAR OR VEHICLE NO. IHB-MCCOO-BNSF LMIC 007204

SOLD TO:
AMERICAN ALLOY STEEL INC
PO BOX 40469
HOUSTON TX 77240-0469

SHIP TO:
AMERICAN ALLOY STEEL INC
BNSF TR# 7226 MILE 66.4 LN SEG 492
6230 N HOUSTON ROSSLYN RD
HOUSTON TX 77091-3410

NOTE	SERIAL NUMBER	PAT NO.	HEAT NUMBER	NO. PCS.	SIZE AND QUANTITY: THICKNESS	WIDTH OR DIA.	LENGTH	WEIGHT	YIELD POINT	TENSILE STRENGTH	AF FRAC. ELONG.	RED.
					INCHES	INCHES	INCHES	POUNDS	PSI	PSI	IN	% %

QUALITY STEEL MELTED & MANUFACTURED IN THE U. S. A.
PLATES - ASTM A516-17 GR 70 PVQ KLD FINE GRAIN PRAC, ASTM A516-17 GR 65 PVQ, ASTM A516-17 GR 60 PVQ, ASME SA516 GR 70 PVQ 2019 EDITION, ASME SA516 GR 65 PVQ 2019 EDITION, ASME SA516 GR 60 PVQ 2019 EDITION, CH-V SA20S5 PLT L 15/12 FTLBS AT -50F, VACUUM DEGASSED --- PLT NORMALIZED & COOLED IN STILL AIR --- IN ACCORDANCE WITH EN 10204:2004 TYPE 3.1 10204:2004 TYPE 3.1
NO WELD REPAIR WAS PERFORMED ON BELOW PLATE(S)
CO# 125823 GH 377-1561A
PLATES HEAT TREATED - TEST SPECIMENS ATTACHED & YIELD STRENGTH @ .5% EUL
MERCURY IN ANY FORM HAS NOT BEEN USED IN THE PRODUCTION OF THIS ORDER

T030112	811S00740	1	5/16	96	480		4084	53100	74600	8	26	
			N 1650 DEG F - 15 MIN									
(M55)MFST REF#:2												
T030113 →	811S00740	2	5/16	96	480		8168	55100	75800	8	25	
			N 1650 DEG F - 15 MIN									
(M55)MFST REF#:2												
T030114	811S00740	1	5/16	96	480		4084	51400	71200	8	26	
			N 1650 DEG F - 15 MIN									
(M55)MFST REF#:2												

Q-QUENCH TEMPERATURE T-TEMPER TEMPERATURE N-NORMALIZE TEMPERATURE

SERIAL NUMBER	PAT NO.	HEAT NUMBER	HARD BHN	BEND	THICKNESS INCHES	TYPE	SIZE	DIR	TEST TEMP F	CHARPY IMPACT ENERGY FT LBS 1	2	3	SHEAR(%) 1	2	3	LAT. EXP MILS 1	2	3
T030112		811S00740			.312	V	2/3	L	-50	79	78	81						
T030113		811S00740			.312	V	2/3	L	-50	75	71	70						
T030114		811S00740			.312	V	2/3	L	-50	77	80	112						

Certified true copy of the original, retained in our file.
AMERICAN ALLOY STEEL, INC.
Reviewed By:
D 03/16/21

HEAT NUMBER	CHEMICAL ANALYSIS C	Mn	P	S	Si	Cu	Ni	Cr	Mo	V	Ti	Al	B	Cb	N	Sn	MQUAID GRAIN SIZE
811S00740	.17	1.07	.011	.006	.329	.221	.19	.03	.007	.002	.002	.037	.0002	.002	.004	.003	

AMERICAN ALLOY PLATE # E23100

I certify that the above results are a true and correct copy of actual results contained in records maintained by ArcelorMittal Burns Harbor and are in full compliance with the requirements of the specification cited above. This test report cannot be altered and must be transmitted intact with any subsequent third party test reports, if required.

BHPLTRPT.TIF

FARID HASSANI PER MWT
SUPV. QUALITY ASSURANCE

03/19/2021 From: AMERICAN ALLOY STEEL, INC. To: INUKSHUK CONSTRUCTION LIMITED
P.O.#: 341-1001-TX S.O.#: 677336 AA PL#: 5236101
Item: 1 (1 PC) 5/16" X 96" X 480"

ArcelorMittal Burns Harbor Plate

QUALITY ASSURANCE
REPORT OF TEST AND ANAYLSES

US HWY 12 Burns Harbor, Indiana

SHIPMENT NO. 803-69103 | DATE SHIPPED 01-28-21 | CAR OR VEHICLE NO. IHB-MCCOO-BNSF LMIC 007204

SOLD TO:
AMERICAN ALLOY STEEL INC
PO BOX 40469
HOUSTON TX 77240-0469

SHIP TO:
AMERICAN ALLOY STEEL INC
BNSF TR# 7226 MILE 66.4 LN SEG 492
6230 N HOUSTON ROSSLYN RD
HOUSTON TX 77091-3410

NOTE	SERIAL NUMBER	PAT NO.	HEAT NUMBER	NO. PCS.	SIZE AND QUANTITY: THICKNESS	WIDTH OR DIA.	LENGTH	WEIGHT	YIELD POINT	TENSILE STRENGTH	AF FRAC. ELONG.	RED.
					INCHES	INCHES	INCHES	POUNDS	PSI	PSI	IN	% %

QUALITY STEEL MELTED & MANUFACTURED IN THE U. S. A.
PLATES - ASTM A516-17 GR 70 PVQ KLD FINE GRAIN PRAC, ASTM A516-17 GR 65 PVQ, ASTM A516-17 GR 60 PVQ, ASME SA516 GR 70 PVQ 2019 EDITION, ASME SA516 GR 65 PVQ 2019 EDITION, ASME SA516 GR 60 PVQ 2019 EDITION, CH-V SA20S5 PLT L 15/12 FTLBS AT -50F, VACUUM DEGASSED --- PLT NORMALIZED & COOLED IN STILL AIR --- IN ACCORDANCE WITH EN 10204:2004 TYPE 3.1 10204:2004 TYPE 3.1
NO WELD REPAIR WAS PERFORMED ON BELOW PLATE(S)
CO# 125823 GH 377-1561A
PLATES HEAT TREATED - TEST SPECIMENS ATTACHED & YIELD STRENGTH @ .5% EUL
MERCURY IN ANY FORM HAS NOT BEEN USED IN THE PRODUCTION OF THIS ORDER

T030112	811S00740	1	5/16	96	480	4084	53100	74600	8	26
			N 1650 DEG F - 15 MIN							
(M55)MFST REF#:2											
T030113 →	811S00740	2	5/16	96	480	8168	55100	75800	8	25
			N 1650 DEG F - 15 MIN							
(M55)MFST REF#:2											
T030114	811S00740	1	5/16	96	480	4084	51400	71200	8	26
			N 1650 DEG F - 15 MIN							
(M55)MFST REF#:2											

Q-QUENCH TEMPERATURE T-TEMPER TEMPERATURE N-NORMALIZE TEMPERATURE

SERIAL NUMBER	PAT NO.	HEAT NUMBER	HARD BHN	BEND	THICKNESS INCHES	TYPE	SIZE	DIR	TEST TEMP °F	CHARPY IMPACT ENERGY FT LBS 1	2	3	SHEAR(%) 1	2	3	LAT. EXP MILS 1	2	3
T030112	811S00740				.312	V	2/3	L	-50	79	78	81						
T030113	811S00740				.312	V	2/3	L	-50	75	71	70						
T030114	811S00740				.312	V	2/3	L	-50	77	80	112						

Certified a true copy of the original, retained in our file.
AMERICAN ALLOY STEEL, INC.
Reviewed By: DO 3/16/21

HEAT NUMBER	CHEMICAL ANALYSIS C	Mn	P	S	Si	Cu	Ni	Cr	Mo	V	Ti	Al	B	Cb	N	Sn	MQUAID GRAIN SIZE
811S00740	.17	1.07	.011	.006	.32	9.221	.19	.03	.007	.002	.002	.037	.0002	.002	.004	.003	

AMERICAN ALLOY PLATE #5231121

I certify that the above results are a true and correct copy of actual results contained in records maintained by ArcelorMittal Burns Harbor and are in full compliance with the requirements of the specification cited above. This test report cannot be altered and must be transmitted intact with any subsequent third party test reports, if required.

BHPLTRPT.TIF

FARID HASSANI PER MWT
SUPV. QUALITY ASSURANCE

03/19/2021 From: AMERICAN ALLOY STEEL, INC. To: INUKSHUK CONSTRUCTION LIMITED
P.O.#: 341-1001-TX S.O.#: 677336 AA PL#: 5236102
Item: 1 (1 PC) 5/16" X 96" X 480"

ArcelorMittal Burns Harbor Plate

QUALITY ASSURANCE
REPORT OF TEST AND ANAYLSES

US HWY 12 Burns Harbor, Indiana

SHIPMENT NO. 803-69103 | DATE SHIPPED 01-28-21 | CAR OR VEHICLE NO. IHB-MCCOO-BNSF LMIC 007204

SOLD TO:
AMERICAN ALLOY STEEL INC
PO BOX 40469
HOUSTON TX 77240-0469

SHIP TO:
AMERICAN ALLOY STEEL INC
BNSF TR# 7226 MILE 66.4 LN SEG 492
6230 N HOUSTON ROSSLYN RD
HOUSTON TX 77091-3410

NOTE	SERIAL NUMBER	PAT NO.	HEAT NUMBER	NO. PCS.	SIZE AND QUANTITY: THICKNESS	WIDTH OR DIA.	LENGTH	WEIGHT	YIELD POINT	TENSILE STRENGTH	AF FRAC. ELONG.	RED.
					INCHES	INCHES	INCHES	POUNDS	PSI	PSI	IN	% %

QUALITY STEEL MELTED & MANUFACTURED IN THE U. S. A.
PLATES - ASTM A516-17 GR 70 PVQ KLD FINE GRAIN PRAC, ASTM A516-17 GR 65 PVQ, ASTM A516-17 GR 60 PVQ, ASME SA516 GR 70 PVQ 2019 EDITION, ASME SA516 GR 65 PVQ 2019 EDITION, ASME SA516 GR 60 PVQ 2019 EDITION, CH-V SA20S5 PLT L 15/12 FTLBS AT -50F, VACUUM DEGASSED --- PLT NORMALIZED & COOLED IN STILL AIR --- IN ACCORDANCE WITH EN 10204:2004 TYPE 3.1 10204:2004 TYPE 3.1
NO WELD REPAIR WAS PERFORMED ON BELOW PLATE(S)
CO# 125823 GH 377-1561A
PLATES HEAT TREATED - TEST SPECIMENS ATTACHED & YIELD STRENGTH @ .5% EUL
MERCURY IN ANY FORM HAS NOT BEEN USED IN THE PRODUCTION OF THIS ORDER

T030115	813S60780	2	5/16	96	480	8168	55800	76800	8	25		
			N 1650 DEG F - 15 MIN									
(M55)MFST REF#:2												
T030116	813S60780	1	5/16	96	480	4084	53400	75300	8	26		
			N 1650 DEG F - 15 MIN									
(M55)MFST REF#:2												
T030117 →	813S60780	2	5/16	96	480	8168	56400	77100	8	25		
			N 1650 DEG F - 15 MIN									
(M55)MFST REF#:2												

Q-QUENCH TEMPERATURE T-TEMPER TEMPERATURE N-NORMALIZE TEMPERATURE

SERIAL NUMBER	PAT NO.	HEAT NUMBER	HARD BHN	BEND	THICKNESS INCHES	TYPE	SIZE	DIR	TEST TEMP °F	CHARPY IMPACT ENERGY FT LBS 1	2	3	SHEAR(%) 1	2	3	LAT. EXP MILS 1	2	3
T030115		813S60780			.312	V	2/3	L	-50	73	87	65						
T030116		813S60780			.312	V	2/3	L	-50	119	77	81						
T030117		813S60780			.312	V	2/3	L	-50	122	74	39						

Certified a true copy of the original, retained in our file.
AMERICAN ALLOY STEEL, INC.
Reviewed By:

HEAT NUMBER	CHEMICAL ANALYSIS C	Mn	P	S	Si	Cu	Ni	Cr	Mo	V	Ti	Al	B	Cb	N	Sn	MQUAD GRAIN SIZE
813S60780	.17	1.08	.013	.004	.34	3.212	.17	.03	.006	.002	.002	.039	.0002	.002	.003	.003	

AMERICAN ALLOY
PLATE # S23W02

I certify that the above results are a true and correct copy of actual results contained in records maintained by ArcelorMittal Burns Harbor and are in full compliance with the requirements of the specification cited above. This test report cannot be altered and must be transmitted intact with any subsequent third party test reports, if required.

FARID HASSANI PER MWT

BHPLTRPT.TIF

SUPV. QUALITY ASSURANCE

03/19/2021 From: AMERICAN ALLOY STEEL, INC. To: INUKSHUK CONSTRUCTION LIMITED
P.O.#: 341-1001-TX S.O.#: 677336 AA PL#: 5236103
Item: 1 (1 PC) 5/16" X 96" X 480"

ArcelorMittal Burns Harbor Plate

QUALITY ASSURANCE
REPORT OF TEST AND ANAYLSES

US HWY 12 Burns Harbor, Indiana

SHIPMENT NO.	DATE SHIPPED	CAR OR VEHICLE NO.
803-69103	01-28-21	IHB-MCCOO-BNSF LMIC 007204

SOLD TO:
AMERICAN ALLOY STEEL INC
PO BOX 40469
HOUSTON TX 77240-0469

SHIP TO:
AMERICAN ALLOY STEEL INC
BNSF TR# 7226 MILE 66.4 LN SEG 492
6230 N HOUSTON ROSSLYN RD
HOUSTON TX 77091-3410

NOTE	SERIAL NUMBER	PAT NO.	HEAT NUMBER	NO. PCS.	SIZE AND QUANTITY THICKNESS	WIDTH OR DIA.	LENGTH	WEIGHT	YIELD POINT	TENSILE STRENGTH	AF FRAC. ELONG.	RED.
					INCHES	INCHES	INCHES	POUNDS	PSI	PSI	IN	% %

QUALITY STEEL MELTED & MANUFACTURED IN THE U. S. A.
PLATES - ASTM A516-17 GR 70 PVQ KLD FINE GRAIN PRAC, ASTM A516-17 GR 65 PVQ, ASTM A516-17 GR 60 PVQ, ASME SA516 GR 70 PVQ 2019 EDITION, ASME SA516 GR 65 PVQ 2019 EDITION, ASME SA516 GR 60 PVQ 2019 EDITION, CH-V SA20S5 PLT L 15/12 FTLBS AT -50F, VACUUM DEGASSED --- PLT NORMALIZED & COOLED IN STILL AIR --- IN ACCORDANCE WITH EN 10204:2004 TYPE 3.1 10204:2004 TYPE 3.1
NO WELD REPAIR WAS PERFORMED ON BELOW PLATE(S)
CO# 125823 GH 377-1561A
PLATES HEAT TREATED - TEST SPECIMENS ATTACHED & YIELD STRENGTH @ .5% EUL
MERCURY IN ANY FORM HAS NOT BEEN USED IN THE PRODUCTION OF THIS ORDER

T030115	813S60780	2	5/16	96	480	8168	55800	76800	8	25
			N 1650 DEG F - 15 MIN							
(M55)MFST REF#:2										
T030116→	813S60780	1	5/16	96	480	4084	53400	75300	8	26
			N 1650 DEG F - 15 MIN							
(M55)MFST REF#:2										
T030117	813S60780	2	5/16	96	480	8168	56400	77100	8	25
			N 1650 DEG F - 15 MIN							
(M55)MFST REF#:2										

Q-QUENCH TEMPERATURE T-TEMPER TEMPERATURE N-NORMALIZE TEMPERATURE

SERIAL NUMBER	PAT NO.	HEAT NUMBER	HARD BHN	BEND	THICKNESS INCHES	TYPE	SIZE	DIR	TEST TEMP F	CHARPY IMPACT ENERGY FT LBS 1	2	3	SHEAR(%) 1	2	3	LAT. EXP MILS 1	2	3
T030115		813S60780			.312	V	2/3	L	-50	73	87	65						
T030116		813S60780			.312	V	2/3	L	-50	119	77	81						
T030117		813S60780			.312	V	2/3	L	-50	122	74	39						

Certified a true copy of the original, retained in our file.
AMERICAN ALLOY STEEL, INC.
Reviewed By:
D03/5/21

HEAT NUMBER	CHEMICAL ANALYSIS C	Mn	P	S	Si	Cu	Ni	Cr	Mo	V	Ti	Al	B	Cb	N	Sn	MQUAID GRAIN SIZE
813S60780	.17	1.08	.013	.004	.343	.212	.17	.03	.006	.002	.002	.039	.0002	.002	.003	.003	

AMERICAN ALLOY
PLATE # 5236103

I certify that the above results are a true and correct copy of actual results contained in records maintained by ArcelorMittal Burns Harbor and are in full compliance with the requirements of the specification cited above. This test report connot be altered and must be transmitted intact with any subsequent third party test reports, if required.

BHPLTRPT.TIF

SUPV. QUALITY ASSURANCE

FARID HASSANI PER MWT

03/19/2021 From: AMERICAN ALLOY STEEL, INC. To: INUKSHUK CONSTRUCTION LIMITED
P.O.#: 341-1001-TX S.O.#: 677336 AA PL#: 5236104
Item: 1 (1 PC) 5/16" X 96" X 480"

ArcelorMittal Burns Harbor Plate

QUALITY ASSURANCE
REPORT OF TEST AND ANAYLSES

US HWY 12 Burns Harbor, Indiana

SHIPMENT NO.	DATE SHIPPED	CAR OR VEHICLE NO.
803-69103	01-28-21	IHB-MCCOO-BNSF LMIC 007204

SOLD TO:
AMERICAN ALLOY STEEL INC
PO BOX 40469
HOUSTON TX 77240-0469

SHIP TO:
AMERICAN ALLOY STEEL INC
BNSF TR# 7226 MILE 66.4 LN SEG 492
6230 N HOUSTON ROSSLYN RD
HOUSTON TX 77091-3410

NOTE	SERIAL NUMBER	PAT NO.	HEAT NUMBER	NO. PCS.	SIZE AND QUANTITY: THICKNESS	WIDTH OR DIA.	LENGTH	WEIGHT	YIELD POINT	TENSILE STRENGTH	AF FRAC. ELONG.	RED.
					INCHES	INCHES	INCHES	POUNDS	PSI	PSI	IN	% %

QUALITY STEEL MELTED & MANUFACTURED IN THE U. S. A.
PLATES - ASTM A516-17 GR 70 PVQ KLD FINE GRAIN PRAC, ASTM A516-17 GR 65 PVQ, ASTM A516-17 GR 60 PVQ, ASME SA516 GR 70 PVQ 2019 EDITION, ASME SA516 GR 65 PVQ 2019 EDITION, ASME SA516 GR 60 PVQ 2019 EDITION, CH-V SA20S5 PLT L 15/12 FTLBS AT -50F, VACUUM DEGASSED --- PLT NORMALIZED & COOLED IN STILL AIR --- IN ACCORDANCE WITH EN 10204:2004 TYPE 3.1 10204:2004 TYPE 3.1
NO WELD REPAIR WAS PERFORMED ON BELOW PLATE(S)
CO# 125823 GH 377-1561A
PLATES HEAT TREATED - TEST SPECIMENS ATTACHED & YIELD STRENGTH @ .5% EUL
MERCURY IN ANY FORM HAS NOT BEEN USED IN THE PRODUCTION OF THIS ORDER

T030115	813S60780	2	5/16	96	480		8168	55800	76800	8	25	
			N 1650 DEG F - 15 MIN									
(M55)MFST REF#:2												
T030116	813S60780	1	5/16	96	480		4084	53400	75300	8	26	
			N 1650 DEG F - 15 MIN									
(M55)MFST REF#:2												
T030117 →	813S60780	2	5/16	96	480		8168	56400	77100	8	25	
			N 1650 DEG F - 15 MIN									
(M55)MFST REF#:2												

Q-QUENCH TEMPERATURE T-TEMPER TEMPERATURE N-NORMALIZE TEMPERATURE

SERIAL NUMBER	PAT NO.	HEAT NUMBER	HARD BHN	BEND	THICKNESS INCHES	TYPE	SIZE	DIR	TEST TEMP F	CHARPY IMPACT ENERGY FT LBS 1	2	3	SHEAR(%) 1	2	3	LAT. EXP MILS 1	2	3
T030115		813S60780			.312	V	2/3	L	-50	73	87	65						
T030116		813S60780			.312	V	2/3	L	-50	119	77	81						
T030117		813S60780			.312	V	2/3	L	-50	122	74	39						

Certified a true copy of the original, retained in our file.
AMERICAN ALLOY STEEL, INC.
Reviewed By:

HEAT NUMBER	CHEMICAL ANALYSIS C	Mn	P	S	Si	Cu	Ni	Cr	Mo	V	Ti	Al	B	Cb	N	Sn	MQUAID GRAIN SIZE
813S60780	.17	1.08	.013	.004	.34	3.212	.17	.03	.006	.002	.002	.039	.0002	.002	.003	.003	

AMERICAN ALLOY PLATE # S23U104

I certify that the above results are a true and correct copy of actual results contained in records maintained by ArcelorMittal Burns Harbor and are in full compliance with the requirements of the specification cited above. This test report cannot be altered and must be transmitted intact with any subsequent third party test reports, if required.

BHPLTRPT.TIF

FARID HASSANI PER MWT
SUPV. QUALITY ASSURANCE

03/19/2021 From: AMERICAN ALLOY STEEL, INC. To: INUKSHUK CONSTRUCTION LIMITED
P.O.#: 341-1001-TX S.O.#: 677336 AA PL#: 5236105
Item: 1 (1 PC) 5/16" X 96" X 480"

ArcelorMittal Burns Harbor Plate

QUALITY ASSURANCE
REPORT OF TEST AND ANAYLSES

US HWY 12 Burns Harbor, Indiana

SHIPMENT NO.	DATE SHIPPED	CAR OR VEHICLE NO.
803-69103	01-28-21	IHB-MCCOO-BNSF LMIC 007204

SOLD TO:
AMERICAN ALLOY STEEL INC
PO BOX 40469
HOUSTON TX 77240-0469

SHIP TO:
AMERICAN ALLOY STEEL INC
BNSF TR# 7226 MILE 66.4 LN SEG 492
6230 N HOUSTON ROSSLYN RD
HOUSTON TX 77091-3410

NOTE	SERIAL NUMBER	PAT NO.	HEAT NUMBER	NO. PCS.	SIZE AND QUANTITY: THICKNESS	WIDTH OR DIA.	LENGTH	WEIGHT	YIELD POINT	TENSILE STRENGTH	AF FRAC. ELONG.	RED.
					INCHES	INCHES	INCHES	POUNDS	PSI	PSI	IN	% %

QUALITY STEEL MELTED & MANUFACTURED IN THE U. S. A.
PLATES - ASTM A516-17 GR 70 PVQ KLD FINE GRAIN PRAC, ASTM A516-17 GR 65 PVQ, ASTM A516-17 GR 60 PVQ, ASME SA516 GR 70 PVQ 2019 EDITION, ASME SA516 GR 65 PVQ 2019 EDITION, ASME SA516 GR 60 PVQ 2019 EDITION, CH-V SA2085 PLT L 15/12 FTLBS AT -50F, VACUUM DEGASSED --- PLT NORMALIZED & COOLED IN STILL AIR --- IN ACCORDANCE WITH EN 10204:2004 TYPE 3.1 10204:2004 TYPE 3.1
NO WELD REPAIR WAS PERFORMED ON BELOW PLATE(S)
CO# 125823 GH 377-1561A
PLATES HEAT TREATED - TEST SPECIMENS ATTACHED & YIELD STRENGTH @ .5% EUL
MERCURY IN ANY FORM HAS NOT BEEN USED IN THE PRODUCTION OF THIS ORDER

T030115 →	813S60780	2	5/16	96	480		8168	55800	76800	8	25	
			N 1650 DEG F - 15 MIN									
(M55)MFST REF#:2												
T030116	813S60780	1	5/16	96	480		4084	53400	75300	8	26	
			N 1650 DEG F - 15 MIN									
(M55)MFST REF#:2												
T030117	813S60780	2	5/16	96	480		8168	56400	77100	8	25	
			N 1650 DEG F - 15 MIN									
(M55)MFST REF#:2												

Q-QUENCH TEMPERATURE T-TEMPER TEMPERATURE N-NORMALIZE TEMPERATURE

SERIAL NUMBER	PAT NO.	HEAT NUMBER	HARD BHN	BEND	THICKNESS INCHES	TYPE	SIZE	DIR	TEST TEMP F	CHARPY IMPACT ENERGY FT LBS 1	2	3	SHEAR(%) 1	2	3	LAT. EXP MILS 1	2	3
T030115		813S60780			.312	V	2/3	L	-50	73	87	65						
T030116		813S60780			.312	V	2/3	L	-50	119	77	81						
T030117		813S60780			.312	V	2/3	L	-50	122	74	39						

Certified a true copy of the original, retained in our file.
AMERICAN ALLOY STEEL, INC.
Reviewed By:

HEAT NUMBER	CHEMICAL ANALYSIS C	Mn	P	S	Si	Cu	Ni	Cr	Mo	V	Ti	Al	B	Cb	N	Sn	MQUAID GRAIN SIZE
813S60780	.17	1.08	.013	.004	.34	3.212	.17	.03	.006	.002	.002	.039	.0002	.002	.003	.003	

AMERICAN ALLOY PLATE # 5236105

I certify that the above results are a true and correct copy of actual results contained in records maintained by ArcelorMittal Burns Harbor and are in full compliance with the requirements of the specification cited above. This test report cannot be altered and must be transmitted intact with any subsequent third party test reports, if required.

BHPLTRPT.TIF

FARID HASSANI PER MWT
SUPV. QUALITY ASSURANCE

03/19/2021 From: AMERICAN ALLOY STEEL, INC. To: INUKSHUK CONSTRUCTION LIMITED
P.O.#: 341-1001-TX S.O.#: 677336 AA PL#: 5236106
Item: 1 (1 PC) 5/16" X 96" X 480"

ArcelorMittal Burns Harbor Plate

QUALITY ASSURANCE
REPORT OF TEST AND ANAYLSES

US HWY 12 Burns Harbor, Indiana

SHIPMENT NO.	DATE SHIPPED	CAR OR VEHICLE NO.
803-69103	01-28-21	IHB-MCCOO-BNSF LMIC 007204

SOLD TO:
AMERICAN ALLOY STEEL INC
PO BOX 40469
HOUSTON TX 77240-0469

SHIP TO:
AMERICAN ALLOY STEEL INC
BNSF TR# 7226 MILE 66.4 LN SEG 492
6230 N HOUSTON ROSSLYN RD
HOUSTON TX 77091-3410

NOTE	SERIAL NUMBER	PAT NO.	HEAT NUMBER	NO. PCS.	SIZE AND QUANTITY THICKNESS	WIDTH OR DIA.	LENGTH	WEIGHT	YIELD POINT	TENSILE STRENGTH	AF FRAC. ELONG.	RED.
					INCHES	INCHES	INCHES	POUNDS	PSI	PSI	IN	% %

QUALITY STEEL MELTED & MANUFACTURED IN THE U. S. A.
PLATES - ASTM A516-17 GR 70 PVQ KLD FINE GRAIN PRAC, ASTM A516-17 GR 65 PVQ, ASTM A516-17 GR 60 PVQ, ASME SA516 GR 70 PVQ 2019 EDITION, ASME SA516 GR 65 PVQ 2019 EDITION, ASME SA516 GR 60 PVQ 2019 EDITION, CH-V SA20S5 PLT L 15/12 FTLBS AT -50F, VACUUM DEGASSED --- PLT NORMALIZED & COOLED IN STILL AIR --- IN ACCORDANCE WITH EN 10204:2004 TYPE 3.1 10204:2004 TYPE 3.1
NO WELD REPAIR WAS PERFORMED ON BELOW PLATE(S)
CO# 125823 GH 377-1561A
PLATES HEAT TREATED - TEST SPECIMENS ATTACHED & YIELD STRENGTH @ .5% EUL
MERCURY IN ANY FORM HAS NOT BEEN USED IN THE PRODUCTION OF THIS ORDER

T030115 →	813S60780	2	5/16	96	480	8168	55800	76800	8	25
			N 1650 DEG F - 15 MIN							
(M55)MFST REF#:2										
T030116	813S60780	1	5/16	96	480	4084	53400	75300	8	26
			N 1650 DEG F - 15 MIN							
(M55)MFST REF#:2										
T030117	813S60780	2	5/16	96	480	8168	56400	77100	8	25
			N 1650 DEG F - 15 MIN							
(M55)MFST REF#:2										

Q-QUENCH TEMPERATURE T-TEMPER TEMPERATURE N-NORMALIZE TEMPERATURE

SERIAL NUMBER	PAT NO.	HEAT NUMBER	HARD BHN	BEND	THICKNESS INCHES	TYPE	SIZE	DIR	TEST TEMP F	CHARPY IMPACT ENERGY FT LBS 1	2	3	SHEAR(%) 1	2	3	LAT. EXP MILS 1	2	3
T030115		813S60780			.312	V	2/3	L	-50	73	87	65						
T030116		813S60780			.312	V	2/3	L	-50	119	77	81						
T030117		813S60780			.312	V	2/3	L	-50	122	74	39						

Certified a true copy of the original, retained in our file.
AMERICAN ALLOY STEEL, INC.
Reviewed By:
D 03/5/21

HEAT NUMBER	CHEMICAL ANALYSIS C	Mn	P	S	Si	Cu	Ni	Cr	Mo	V	Ti	Al	B	Cb	N	Sn	MQUAID GRAIN SIZE
813S60780	.17	1.08	.013	.004	.34	3.212	.17	.03	.006	.002	.002	.039	.0002	.002	.003	.003	

AMERICAN ALLOY
PLATE # 5236106

I certify that the above results are a true and correct copy of actual results contained in records maintained by ArcelorMittal Burns Harbor and are in full compliance with the requirements of the specification cited above. This test report cannot be altered and must be transmitted intact with any subsequent third party test reports, if required.

BHPLTRPT.TIF

SUPV. QUALITY ASSURANCE

FARID HASSANI PER MWT

03/19/2021 From: AMERICAN ALLOY STEEL, INC. To: INUKSHUK CONSTRUCTION LIMITED
P.O.#: 341-1001-TX S.O.#: 677336 AA PL#: 5236107
Item: 1 (1 PC) 5/16" X 96" X 480"

ArcelorMittal Burns Harbor Plate

QUALITY ASSURANCE
REPORT OF TEST AND ANAYLSES

US HWY 12 Burns Harbor, Indiana

SHIPMENT NO. 803-69103 | DATE SHIPPED 01-28-21 | CAR OR VEHICLE NO. IHB-MCCOO-BNSF LMIC 007204

SOLD TO: AMERICAN ALLOY STEEL INC
PO BOX 40469
HOUSTON TX 77240-0469

SHIP TO: AMERICAN ALLOY STEEL INC
BNSF TR# 7226 MILE 66.4 LN SEG 492
6230 N HOUSTON ROSSLYN RD
HOUSTON TX 77091-3410

NOTE	SERIAL NUMBER	PAT NO.	HEAT NUMBER	NO. PCS.	SIZE AND QUANTITY: THICKNESS	WIDTH OR DIA.	LENGTH	WEIGHT	YIELD POINT	TENSILE STRENGTH	AF FRAC. ELONG.	RED.
					INCHES	INCHES	INCHES	POUNDS	PSI	PSI	IN	% %

QUALITY STEEL MELTED & MANUFACTURED IN THE U. S. A.
PLATES - ASTM A516-17 GR 70 PVQ KLD FINE GRAIN PRAC, ASTM A516-17 GR 65 PVQ, ASTM A516-17 GR 60 PVQ, ASME SA516 GR 70 PVQ 2019 EDITION, ASME SA516 GR 65 PVQ 2019 EDITION, ASME SA516 GR 60 PVQ 2019 EDITION, CH-V SA20S5 PLT L 15/12 FTLBS AT -50F, VACUUM DEGASSED --- PLT NORMALIZED & COOLED IN STILL AIR --- IN ACCORDANCE WITH EN 10204:2004 TYPE 3.1 10204:2004 TYPE 3.1
NO WELD REPAIR WAS PERFORMED ON BELOW PLATE(S)
CO# 125823 GH 377-1561A
PLATES HEAT TREATED - TEST SPECIMENS ATTACHED & YIELD STRENGTH @ .5% EUL
MERCURY IN ANY FORM HAS NOT BEEN USED IN THE PRODUCTION OF THIS ORDER

T030112	811S00740	1	5/16	96	480	4084	53100	74600	8	26	
			N 1650 DEG F - 15 MIN								
(M55)MFST REF#:2											
T030113	811S00740	2	5/16	96	480	8168	55100	75800	8	25	
			N 1650 DEG F - 15 MIN								
(M55)MFST REF#:2											
T030114 →	811S00740	1	5/16	96	480	4084	51400	71200	8	26	
			N 1650 DEG F - 15 MIN								
(M55)MFST REF#:2											

Q-QUENCH TEMPERATURE T-TEMPER TEMPERATURE N-NORMALIZE TEMPERATURE

SERIAL NUMBER	PAT NO.	HEAT NUMBER	HARD BHN	BEND	THICKNESS INCHES	TYPE	SIZE	DIR	TEST TEMP °F	CHARPY IMPACT ENERGY FT LBS 1	2	3	SHEAR(%) 1	2	3	LAT. EXP MILS 1	2	3
T030112		811S00740			.312	V	2/3	L	-50	79	78	81						
T030113		811S00740			.312	V	2/3	L	-50	75	71	70						
T030114		811S00740			.312	V	2/3	L	-50	77	80	112						

Certified a true copy of the original, retained in our file.
AMERICAN ALLOY STEEL, INC.
Reviewed By:
D03161n

HEAT NUMBER	CHEMICAL ANALYSIS C	Mn	P	S	Si	Cu	Ni	Cr	Mo	V	Ti	Al	B	Cb	N	Sn	MOUAID GRAIN SIZE
811S00740	.17	1.07	.011	.006	.329	.221	.19	.03	.007	.002	.002	.037	.0002	.002	.004	.003	

AMERICAN ALLOY PLATE # 52361607

I certify that the above results are a true and correct copy of actual results contained in records maintained by ArcelorMittal Burns Harbor and are in full compliance with the requirements of the specification cited above. This test report cannot be altered and must be transmitted intact with any subsequent third party test reports, if required.

BHPLTRPT.TIF

FARID HASSANI PER MWT
SUPV. QUALITY ASSURANCE

03/19/2021 From: AMERICAN ALLOY STEEL, INC. To: INUKSHUK CONSTRUCTION LIMITED
P.O.#: 341-1001-TX S.O.#: 677336 AA PL#: 5236108
Item: 1 (1 PC) 5/16" X 96" X 480"

ArcelorMittal Burns Harbor Plate

QUALITY ASSURANCE
REPORT OF TEST AND ANAYLSES

US HWY 12 Burns Harbor, Indiana

SHIPMENT NO. 803-69103 | DATE SHIPPED 01-28-21 | CAR OR VEHICLE NO. IHB-MCCOO-BNSF LMIC 007204

SOLD TO:
AMERICAN ALLOY STEEL INC
PO BOX 40469
HOUSTON TX 77240-0469

SHIP TO:
AMERICAN ALLOY STEEL INC
BNSF TR# 7226 MILE 66.4 LN SEG 492
6230 N HOUSTON ROSSLYN RD
HOUSTON TX 77091-3410

NOTE	SERIAL NUMBER	PAT NO.	HEAT NUMBER	NO. PCS.	SIZE AND QUANTITY: THICKNESS	WIDTH OR DIA.	LENGTH	WEIGHT	YIELD POINT	TENSILE STRENGTH	AF FRAC. ELONG.	RED.
					INCHES	INCHES	INCHES	POUNDS	PSI	PSI	IN	% %

QUALITY STEEL MELTED & MANUFACTURED IN THE U. S. A.
PLATES - ASTM A516-17 GR 70 PVQ KLD FINE GRAIN PRAC, ASTM A516-17 GR 65 PVQ, ASTM A516-17 GR 60 PVQ, ASME SA516 GR 70 PVQ 2019 EDITION, ASME SA516 GR 65 PVQ 2019 EDITION, ASME SA516 GR 60 PVQ 2019 EDITION, CH-V SA20S5 PLT L 15/12 FTLBS AT -50F, VACUUM DEGASSED --- PLT NORMALIZED & COOLED IN STILL AIR --- IN ACCORDANCE WITH EN 10204:2004 TYPE 3.1 10204:2004 TYPE 3.1
NO WELD REPAIR WAS PERFORMED ON BELOW PLATE(S)
CO# 125823 GH 377-1561A
PLATES HEAT TREATED - TEST SPECIMENS ATTACHED & YIELD STRENGTH @ .5% EUL
MERCURY IN ANY FORM HAS NOT BEEN USED IN THE PRODUCTION OF THIS ORDER

T030112 →	811S00740	1	5/16	96	480		4084	53100	74600	8	26	
			N 1650 DEG F - 15 MIN									
(M55)MFST REF#:2												
T030113	811S00740	2	5/16	96	480		8168	55100	75800	8	25	
			N 1650 DEG F - 15 MIN									
(M55)MFST REF#:2												
T030114	811S00740	1	5/16	96	480		4084	51400	71200	8	26	
			N 1650 DEG F - 15 MIN									
(M55)MFST REF#:2												

Q-QUENCH TEMPERATURE T-TEMPER TEMPERATURE N-NORMALIZE TEMPERATURE

SERIAL NUMBER	PAT NO.	HEAT NUMBER	HARD BHN	BEND	THICKNESS INCHES	TYPE	SIZE	DIR	TEST TEMP F	CHARPY IMPACT ENERGY FT LBS 1	2	3	SHEAR(%) 1	2	3	LAT. EXP MILS 1	2	3
T030112		811S00740			.312	V	2/3	L	-50	79	78	81						
T030113		811S00740			.312	V	2/3	L	-50	75	71	70						
T030114		811S00740			.312	V	2/3	L	-50	77	80	112						

Certified a true copy of the original, retained in our file.
AMERICAN ALLOY STEEL, INC.
Reviewed By:
D03161

HEAT NUMBER	CHEMICAL ANALYSIS C	Mn	P	S	Si	Cu	Ni	Cr	Mo	V	Ti	Al	B	Cb	N	Sn	MO/AIM GRAIN SIZE
811S00740	.17	1.07	.011	.006	.329	.221	.19	.03	.007	.002	.002	.037	.0002	.002	.004	.003	

AMERICAN ALLOY PLATE # 5236108

I certify that the above results are a true and correct copy of actual results contained in records maintained by ArcelorMittal Burns Harbor and are in full compliance with the requirements of the specification cited above. This test report cannot be altered and must be transmitted intact with any subsequent third party test reports, if required.

BHPLTRPT.TIF

FARID HASSANI PER MWT
SUPV. QUALITY ASSURANCE

03/19/2021 From: AMERICAN ALLOY STEEL, INC. To: INUKSHUK CONSTRUCTION LIMITED
P.O.#: 341-1001-TX S.O.#: 677336 AA PL#: 5236109
Item: 1 (1 PC) 5/16" X 96" X 480"

ArcelorMittal Burns Harbor Plate

QUALITY ASSURANCE
REPORT OF TEST AND ANAYLSES

US HWY 12 Burns Harbor, Indiana

SHIPMENT NO. 803-69100 | DATE SHIPPED 01-28-21 | CAR OR VEHICLE NO. IHB-MCCOO-BNSF ATW 317180

SOLD TO
AMERICAN ALLOY STEEL INC
PO BOX 40469
HOUSTON TX 77240-0469

SHIP TO
AMERICAN ALLOY STEEL INC
BNSF TR# 7226 MILE 66.4 LN SEG 492
6230 N HOUSTON ROSSLYN RD
HOUSTON TX 77091-3410

NOTE	SERIAL NUMBER	PAT NO.	HEAT NUMBER	NO. PCS.	SIZE AND QUANTITY THICKNESS	WIDTH OR DIA.	LENGTH	WEIGHT	YIELD POINT	TENSILE STRENGTH	AF FRAC. ELONG.	RED.
					INCHES	INCHES	INCHES	POUNDS	PSI	PSI	IN	% %

QUALITY STEEL MELTED & MANUFACTURED IN THE U. S. A.
PLATES - ASTM A516-17 GR 70 PVQ KLD FINE GRAIN PRAC, ASTM A516-17 GR 65 PVQ, ASTM A516-17 GR 60 PVQ, ASME SA516 GR 70 PVQ 2019 EDITION, ASME SA516 GR 65 PVQ 2019 EDITION, ASME SA516 GR 60 PVQ 2019 EDITION, CH-V SA20S5 PLT L 15/12 FTLBS AT -50F, VACUUM DEGASSED --- PLT NORMALIZED & COOLED IN STILL AIR --- IN ACCORDANCE WITH EN 10204:2004 TYPE 3.1 10204:2004 TYPE 3.1
NO WELD REPAIR WAS PERFORMED ON BELOW PLATE(S)
CO# 125823 GH 377-1561A
PLATES HEAT TREATED - TEST SPECIMENS ATTACHED & YIELD STRENGTH @ .5% EUL
MERCURY IN ANY FORM HAS NOT BEEN USED IN THE PRODUCTION OF THIS ORDER

T030112	811S00740	1	5/16	96	480			4084	53100	74600	8	26

N 1650 DEG F - 15 MIN

(M55)MFST REF#:2

Q-QUENCH TEMPERATURE T-TEMPER TEMPERATURE N-NORMALIZE TEMPERATURE

SERIAL NUMBER	PAT NO.	HEAT NUMBER	HARD BHN	BEND	THICKNESS INCHES	TYPE	SIZE	DIR	TEST TEMP °F	CHARPY IMPACT ENERG FT LBS 1	2	3	SHEAR(%) 1	2	3	LAT. EXP MILS 1	2	3
T030112		811S00740			.312	V	2/3	L	-50	79	78	81						

Certified a true copy of the original, retained in our file.
AMERICAN ALLOY STEEL.
J.K 2/24/2021

HEAT NUMBER	CHEMICAL ANALYSIS C	Mn	P	S	Si	Cu	Ni	Cr	Mo	V	Ti	Al	B	Cb	N	Sn	MQUAID GRAIN SIZE
811S00740	.17	1.07	.011	.006	.32	9.221	.19	.03	.007	.002	.002	.037	.0002		.002	.004	.003

I certify that the above results are a true and correct copy of actual results contained in records maintained by ArcelorMittal Burns Harbor and are in full compliance with the requirements of the specification cited above. This test report cannot be altered and must be transmitted intact with any subsequent third party test reports, if required.

BHPLTRPT.TIF

FARID HASSANI PER MWT
SUPV. QUALITY ASSURANCE

AMERICAN ALLOY
PLATE #5236109

03/19/2021 From: AMERICAN ALLOY STEEL, INC. To: INUKSHUK CONSTRUCTION LIMITED
P.O.#: 341-1001-TX S.O.#: 677336 AA PL#: 5236110
Item: 1 (1 PC) 5/16" X 96" X 480"

ArcelorMittal Burns Harbor Plate

QUALITY ASSURANCE
REPORT OF TEST AND ANAYLSES

US HWY 12 Burns Harbor, Indiana

SHIPMENT NO. 803-69105 | DATE SHIPPED 01-29-21 | CAR OR VEHICLE NO. IHB-MCCOO-BNSF LMIC 200040

SOLD TO:
AMERICAN ALLOY STEEL INC
PO BOX 40469
HOUSTON TX 77240-0469

SHIP TO:
AMERICAN ALLOY STEEL INC
BNSF TR# 7226 MILE 66.4 LN SEG 492
6230 N HOUSTON ROSSLYN RD
HOUSTON TX 77091-3410

NOTE	SERIAL NUMBER	PAT NO.	HEAT NUMBER	NO. PCS.	SIZE AND QUANTITY: THICKNESS	WIDTH OR DIA.	LENGTH	WEIGHT	YIELD POINT	TENSILE STRENGTH	AF FRAC. ELONG.	RED.
					INCHES	INCHES	INCHES	POUNDS	PSI	PSI	IN	% %

QUALITY STEEL MELTED & MANUFACTURED IN THE U. S. A.
PLATES - ASTM A516-17 GR 70 PVQ KLD FINE GRAIN PRAC, ASTM A516-17 GR 65 PVQ, ASTM A516-17 GR 60 PVQ, ASME SA516 GR 70 PVQ 2019 EDITION, ASME SA516 GR 65 PVQ 2019 EDITION, ASME SA516 GR 60 PVQ 2019 EDITION, CH-V SA20S5 PLT L 15/12 FTLBS AT -50F, VACUUM DEGASSED --- PLT NORMALIZED & COOLED IN STILL AIR --- IN ACCORDANCE WITH EN 10204:2004 TYPE 3.1 10204:2004 TYPE 3.1
NO WELD REPAIR WAS PERFORMED ON BELOW PLATE(S)
CO# 125823 GH 377-1561A
PLATES HEAT TREATED - TEST SPECIMENS ATTACHED & YIELD STRENGTH @ .5% EUL
MERCURY IN ANY FORM HAS NOT BEEN USED IN THE PRODUCTION OF THIS ORDER

T030110	811S00740	1	5/16	96	480		4084	54500	75100	8	26	
			N	1650 DEG F -	15 MIN							
(M55)MFST REF#:2												
T030114	811S00740	1	5/16	96	480		4084	51400	71200	8	26	
			N	1650 DEG F -	15 MIN							
(M55)MFST REF#:2												
T030116	813S60780	1	5/16	96	480		4084	53400	75300	8	26	
			N	1650 DEG F -	15 MIN							
(M55)MFST REF#:2												

Q-QUENCH TEMPERATURE T-TEMPER TEMPERATURE N-NORMALIZE TEMPERATURE

SERIAL NUMBER	PAT NO.	HEAT NUMBER	HARD BHN	BEND	THICKNESS INCHES	TYPE	SIZE	DIR	TEST TEMP. F	CHARPY IMPACT ENERGY FT LBS 1	2	3	SHEAR(%) 1	2	3	LAT. EXP MILS 1	2	3
T030110		811S00740			.312	V	2/3	L	-50	75	71	61						
T030114		811S00740			.312	V	2/3	L	-50	77	80	112						
T030116		813S60780			.312	V	2/3	L	-50	119	77	81						

Certified a true copy of the original, retained in our file.
AMERICAN ALLOY STEEL
J.V 3/3/2021

HEAT NUMBER	CHEMICAL ANALYSIS C	Mn	P	S	Si	Cu	Ni	Cr	Mo	V	Ti	Al	B	Cb	N	Sn	MQUAID GRAIN SIZE
811S00740	.17	1.07	.011	.006	.329	.221	.19	.03	.007	.002	.002	.037	.0002	.002	.004	.003	
813S60780	.17	1.08	.013	.004	.343	.212	.17	.03	.006	.002	.002	.039	.0002	.002	.003	.003	

I certify that the above results are a true and correct copy of actual results contained in records maintained by ArcelorMittal Burns Harbor and are in full compliance with the requirements of the specification cited above. This test report cannot be altered and must be transmitted intact with any subsequent third party test reports, if required.

BHPLTRPT.TIF

FARID HASSANI PER MWT
SUPV. QUALITY ASSURANCE

AMERICAN ALLOY
LATE # 5236110

03/19/2021 From: AMERICAN ALLOY STEEL, INC. To: INUKSHUK CONSTRUCTION LIMITED
P.O.#: 341-1001-TX S.O.#: 677336 AA PL#: 5236111
Item: 1 (1 PC) 5/16" X 96" X 480"

ArcelorMittal Burns Harbor Plate

QUALITY ASSURANCE
REPORT OF TEST AND ANAYLSES

US HWY 12 Burns Harbor, Indiana

SHIPMENT NO. 803-69105 | DATE SHIPPED 01-29-21 | CAR OR VEHICLE NO. IHB-MCCOO-BNSF LMIC 200040

SOLD TO
AMERICAN ALLOY STEEL INC
PO BOX 40469
HOUSTON TX 77240-0469

SHIP TO
AMERICAN ALLOY STEEL INC
BNSF TR# 7226 MILE 66.4 LN SEG 492
6230 N HOUSTON ROSSLYN RD
HOUSTON TX 77091-3410

NOTE	SERIAL NUMBER	PAT NO.	HEAT NUMBER	NO. PCS.	SIZE AND QUANTITY THICKNESS	WIDTH OR DIA.	LENGTH	WEIGHT	YIELD POINT	TENSILE STRENGTH	AF FRAC. ELONG.	RED.
					INCHES	INCHES	INCHES	POUNDS	PSI	PSI	IN	% %

QUALITY STEEL MELTED & MANUFACTURED IN THE U. S. A.
PLATES - ASTM A516-17 GR 70 PVQ KLD FINE GRAIN PRAC, ASTM A516-17 GR 65 PVQ, ASTM A516-17 GR 60 PVQ, ASME SA516 GR 70 PVQ 2019 EDITION, ASME SA516 GR 65 PVQ 2019 EDITION, ASME SA516 GR 60 PVQ 2019 EDITION, CH-V SA20S5 PLT L 15/12 FTLBS AT -50F, VACUUM DEGASSED --- PLT NORMALIZED & COOLED IN STILL AIR --- IN ACCORDANCE WITH EN 10204:2004 TYPE 3.1 10204:2004 TYPE 3.1
NO WELD REPAIR WAS PERFORMED ON BELOW PLATE(S)
CO# 125823 GH 377-1561A
PLATES HEAT TREATED - TEST SPECIMENS ATTACHED & YIELD STRENGTH @ .5% EUL
MERCURY IN ANY FORM HAS NOT BEEN USED IN THE PRODUCTION OF THIS ORDER

T030110	811S00740	1	5/16	96	480		4084	54500	75100	8	26
			N 1650 DEG F - 15 MIN									
(M55)MFST REF#:2												
T030114	811S00740	1	5/16	96	480		4084	51400	71200	8	26
			N 1650 DEG F - 15 MIN									
(M55)MFST REF#:2												
T030116	813S60780	1	5/16	96	480		4084	53400	75300	8	26
			N 1650 DEG F - 15 MIN									
(M55)MFST REF#:2												

Q-QUENCH TEMPERATURE T-TEMPER TEMPERATURE N-NORMALIZE TEMPERATURE

SERIAL NUMBER	PAT NO.	HEAT NUMBER	HARD BHN	BEND	THICKNESS INCHES	TYPE	SIZE	DIR	TEST TEMP F	CHARPY IMPACT ENERGY FT LBS 1	2	3	SHEAR(%) 1	2	3	LAT. EXP MILS 1	2	3
T030110		811S00740			.312	V	2/3	L	-50	75	71	61						
T030114		811S00740			.312	V	2/3	L	-50	77	80	112						
T030116		813S60780			.312	V	2/3	L	-50	119	77	81						

Certified a true copy of the original, retained in our file.
AMERICAN ALLOY STEEL
J.V 3/3/2021

HEAT NUMBER	CHEMICAL ANALYSIS C	Mn	P	S	Si	Cu	Ni	Cr	Mo	V	Ti	Al	B	Cb	N	Sn	MQUAID GRAIN SIZE
811S00740	.17	1.07	.011	.006	.329	.221	.19	.03	.007	.002	.002	.037	.0002		.002	.004	.003
813S60780	.17	1.08	.013	.004	.343	.212	.17	.03	.006	.002	.002	.039	.0002		.002	.003	.003

AMERICAN ALLOY
PLATE # 5236111

I certify that the above results are a true and correct copy of actual results contained in records maintained by ArcelorMittal Burns Harbor and are in full compliance with the requirements of the specification cited above. This test report cannot be altered and must be transmitted intact with any subsequent third party test reports, if required.

BHPLTRPT.TIF

FARID HASSANI PER MWT
SUPV. QUALITY ASSURANCE

03/19/2021 From: AMERICAN ALLOY STEEL, INC. To: INUKSHUK CONSTRUCTION LIMITED
P.O.#: 341-1001-TX S.O.#: 677336 AA PL#: 5236112
Item: 1 (1 PC) 5/16" X 96" X 480"

ArcelorMittal Burns Harbor Plate

QUALITY ASSURANCE
REPORT OF TEST AND ANAYLSES

US HWY 12 Burns Harbor, Indiana

SHIPMENT NO. 803-69105 | DATE SHIPPED 01-29-21 | CAR OR VEHICLE NO. IHB-MCCOO-BNSF LMIC 200040

SOLD TO:
AMERICAN ALLOY STEEL INC
PO BOX 40469
HOUSTON TX 77240-0469

SHIP TO:
AMERICAN ALLOY STEEL INC
BNSF TR# 7226 MILE 66.4 LN SEG 492
6230 N HOUSTON ROSSLYN RD
HOUSTON TX 77091-3410

NOTE	SERIAL NUMBER	PAT NO.	HEAT NUMBER	NO. PCS.	SIZE AND QUANTITY THICKNESS	WIDTH OR DIA.	LENGTH	WEIGHT	YIELD POINT	TENSILE STRENGTH	AF FRAC. ELONG.	RED.
					INCHES	INCHES	INCHES	POUNDS	PSI	PSI	IN	% %

QUALITY STEEL MELTED & MANUFACTURED IN THE U. S. A.
PLATES - ASTM A516-17 GR 70 PVQ KLD FINE GRAIN PRAC, ASTM A516-17 GR 65 PVQ, ASTM A516-17 GR 60 PVQ, ASME SA516 GR 70 PVQ 2019 EDITION, ASME SA516 GR 65 PVQ 2019 EDITION, ASME SA516 GR 60 PVQ 2019 EDITION, CH-V SA20S5 PLT L 15/12 FTLBS AT -50F, VACUUM DEGASSED --- PLT NORMALIZED & COOLED IN STILL AIR --- IN ACCORDANCE WITH EN 10204:2004 TYPE 3.1 10204:2004 TYPE 3.1
NO WELD REPAIR WAS PERFORMED ON BELOW PLATE(S)
CO# 125823 GH 377-1561A
PLATES HEAT TREATED - TEST SPECIMENS ATTACHED & YIELD STRENGTH @ .5% EUL
MERCURY IN ANY FORM HAS NOT BEEN USED IN THE PRODUCTION OF THIS ORDER

T030110	811S00740	1	5/16	96	480		4084	54500	75100	8	26	
			N 1650 DEG F - 15 MIN									
(M55)MFST REF#:2												
T030114	811S00740	1	5/16	96	480		4084	51400	71200	8	26	
			N 1650 DEG F - 15 MIN									
(M55)MFST REF#:2												
T030116	813S60780	1	5/16	96	480		4084	53400	75300	8	26	
			N 1650 DEG F - 15 MIN									
(M55)MFST REF#:2												

Q-QUENCH TEMPERATURE T-TEMPER TEMPERATURE N-NORMALIZE TEMPERATURE

SERIAL NUMBER	PAT NO.	HEAT NUMBER	HARD BHN	BEND	THICKNESS INCHES	TYPE	SIZE	DIR	TEST TEMP F	CHARPY IMPACT ENERGY FT LBS 1	2	3	SHEAR(%) 1	2	3	LAT. EXP MILS 1	2	3
T030110		811S00740			.312	V	2/3	L	-50	75	71	61						
T030114		811S00740			.312	V	2/3	L	-50	77	80	112						
T030116		813S60780			.312	V	2/3	L	-50	119	77	81						

Certified a true copy of the original, retained in our file.
AMERICAN ALLOY STEEL
J.P. 3/3/2021

HEAT NUMBER	CHEMICAL ANALYSIS C	Mn	P	S	Si	Cu	Ni	Cr	Mo	V	Ti	Al	B	Cb	N	Sn	MQUAID GRAIN SIZE
811S00740	.17	1.07	.011	.006	.329	.221	.19	.03	.007	.002	.002	.037	.0002	.002	.004	.003	
813S60780	.17	1.08	.013	.004	.343	.212	.17	.03	.006	.002	.002	.039	.0002	.002	.003	.003	

AMERICAN ALLOY
PLATE # 5236112

I certify that the above results are a true and correct copy of actual results contained in records maintained by ArcelorMittal Burns Harbor and are in full compliance with the requirements of the specification cited above. This test report cannot be altered and must be transmitted intact with any subsequent third party test reports, if required.

BHPLTRPT.TIF

FARID HASSANI PER MWT
SUPV. QUALITY ASSURANCE

03/19/2021 From: AMERICAN ALLOY STEEL, INC. To: INUKSHUK CONSTRUCTION LIMITED
P.O.#: 341-1001-TX S.O.#: 677336 AA PL#: 5236114
Item: 1 (1 PC) 5/16" X 96" X 480"

ArcelorMittal Burns Harbor Plate

QUALITY ASSURANCE
REPORT OF TEST AND ANAYLSES

US HWY 12 Burns Harbor, Indiana

SHIPMENT NO. 803-69511 | DATE SHIPPED 02-04-21 | CAR OR VEHICLE NO. IHB-MCCOO-BNSF BVRY 062064

SOLD TO:
AMERICAN ALLOY STEEL INC
PO BOX 40469
HOUSTON TX 77240-0469

SHIP TO:
AMERICAN ALLOY STEEL INC
BNSF TR# 7226 MILE 66.4 LN SEG 492
6230 N HOUSTON ROSSLYN RD
HOUSTON TX 77091-3410

NOTE	SERIAL NUMBER	PAT NO.	HEAT NUMBER	NO. PCS.	SIZE AND QUANTITY: THICKNESS	WIDTH OR DIA.	LENGTH	WEIGHT	YIELD POINT	TENSILE STRENGTH	AF FRAC. ELONG.	RED.
					INCHES	INCHES	INCHES	POUNDS	PSI	PSI	IN	% %

QUALITY STEEL MELTED & MANUFACTURED IN THE U. S. A.
PLATES - ASTM A516-17 GR 70 PVQ KLD FINE GRAIN PRAC, ASTM A516-17 GR 65 PVQ, ASTM A516-17 GR 60 PVQ, ASME SA516 GR 70 PVQ 2019 EDITION, ASME SA516 GR 65 PVQ 2019 EDITION, ASME SA516 GR 60 PVQ 2019 EDITION, CH-V SA20S5 PLT L 15/12 FTLBS AT -50F, VACUUM DEGASSED --- PLT NORMALIZED & COOLED IN STILL AIR --- IN ACCORDANCE WITH EN 10204:2004 TYPE 3.1 10204:2004 TYPE 3.1
NO WELD REPAIR WAS PERFORMED ON BELOW PLATE(S)
CO# 125823 GH 377-1561A
PLATES HEAT TREATED - TEST SPECIMENS ATTACHED & YIELD STRENGTH @ .5% EUL
MERCURY IN ANY FORM HAS NOT BEEN USED IN THE PRODUCTION OF THIS ORDER

T030111	811S00740	2	5/16	96	480		8168	54800	75600	8	25	
			N 1650 DEG F - 15 MIN									
(M55)MFST REF#:2												
T030118	813S60780	2	5/16	96	480		8168	54000	75500	8	26	
			N 1650 DEG F - 15 MIN									
(M55)MFST REF#:2												
T030119 →	813S60780	2	5/16	96	480		8168	53700	75800	8	26	
			N 1650 DEG F - 15 MIN									
(M55)MFST REF#:2												

Q-QUENCH TEMPERATURE T-TEMPER TEMPERATURE N-NORMALIZE TEMPERATURE

SERIAL NUMBER	PAT NO.	HEAT NUMBER	HARD BHN	BEND	THICKNESS INCHES	TYPE	SIZE	DIR	TEST TEMP. F	CHARPY IMPACT ENERGY FT LBS 1	2	3	SHEAR(%) 1	2	3	LAT. EXP MILS 1	2	3
T030111		811S00740			.312	V	2/3	L	-50	104	79	87						
T030118		813S60780			.312	V	2/3	L	-50	116	115	114						
T030119		813S60780			.312	V	2/3	L	-50	82	82	72						

Certified a true copy of the original, retained in our file.
AMERICAN ALLOY STEEL, INC.
Reviewed By:
3/17/21

HEAT NUMBER	CHEMICAL ANALYSIS C	Mn	P	S	Si	Cu	Ni	Cr	Mo	V	Ti	Al	B	Cb	N	Sn	MQUAD GRAIN SIZE
811S00740	.17	1.07	.011	.006	.329	.221	.19	.03	.007	.002	.002	.037	.0002	.002	.004	.003	
813S60780	.17	1.08	.013	.004	.343	.212	.17	.03	.006	.002	.002	.039	.0002	.002	.003	.003	

AMERICAN ALLOY
PLATE #5236114

I certify that the above results are a true and correct copy of actual results contained in records maintained by ArcelorMittal Burns Harbor and are in full compliance with the requirements of the specification cited above. This test report cannot be altered and must be transmitted intact with any subsequent third party test reports, if required.

BHPLTRPT.TIF

FARID HASSANI PER MWT
SUPV. QUALITY ASSURANCE

03/19/2021 From: AMERICAN ALLOY STEEL, INC. To: INUKSHUK CONSTRUCTION LIMITED
P.O.#: 341-1001-TX S.O.#: 677336 AA PL#: 5236115
Item: 1 (1 PC) 5/16" X 96" X 480"

ArcelorMittal Burns Harbor Plate

QUALITY ASSURANCE
REPORT OF TEST AND ANAYLSES

US HWY 12 Burns Harbor, Indiana

SHIPMENT NO. 803-69511 | DATE SHIPPED 02-04-21 | CAR OR VEHICLE NO. IHB-MCCOO-BNSF BVRY 062064

SOLD TO:
AMERICAN ALLOY STEEL INC
PO BOX 40469
HOUSTON TX 77240-0469

SHIP TO:
AMERICAN ALLOY STEEL INC
BNSF TR# 7226 MILE 66.4 LN SEG 492
6230 N HOUSTON ROSSLYN RD
HOUSTON TX 77091-3410

NOTE	SERIAL NUMBER	PAT NO.	HEAT NUMBER	NO. PCS.	SIZE AND QUANTITY: THICKNESS	WIDTH OR DIA.	LENGTH	WEIGHT	YIELD POINT	TENSILE STRENGTH	AF FRAC. ELONG.	RED.
					INCHES	INCHES	INCHES	POUNDS	PSI	PSI	IN	% %

QUALITY STEEL MELTED & MANUFACTURED IN THE U. S. A.
PLATES - ASTM A516-17 GR 70 PVQ KLD FINE GRAIN PRAC, ASTM A516-17 GR 65 PVQ, ASTM A516-17 GR 60 PVQ, ASME SA516 GR 70 PVQ 2019 EDITION, ASME SA516 GR 65 PVQ 2019 EDITION, ASME SA516 GR 60 PVQ 2019 EDITION, CH-V SA20S5 PLT L 15/12 FTLBS AT -50F, VACUUM DEGASSED --- PLT NORMALIZED & COOLED IN STILL AIR --- IN ACCORDANCE WITH EN 10204:2004 TYPE 3.1 10204:2004 TYPE 3.1
NO WELD REPAIR WAS PERFORMED ON BELOW PLATE(S)
CO# 125823 GH 377-1561A
PLATES HEAT TREATED - TEST SPECIMENS ATTACHED & YIELD STRENGTH @ .5% EUL
MERCURY IN ANY FORM HAS NOT BEEN USED IN THE PRODUCTION OF THIS ORDER

T030111	811S00740	2	5/16	96	480		8168	54800	75600	8	25	
			N 1650 DEG F - 15 MIN									
(M55)MFST REF#:2												
T030118 →	813S60780	2	5/16	96	480		8168	54000	75500	8	26	
			N 1650 DEG F - 15 MIN									
(M55)MFST REF#:2												
T030119	813S60780	2	5/16	96	480		8168	53700	75800	8	26	
			N 1650 DEG F - 15 MIN									
(M55)MFST REF#:2												

Q-QUENCH TEMPERATURE | T-TEMPER TEMPERATURE | N-NORMALIZE TEMPERATURE

SERIAL NUMBER	PAT NO.	HEAT NUMBER	HARD BHN	BEND	THICKNESS INCHES	TYPE	SIZE	DIR	TEST TEMP °F	CHARPY IMPACT ENERGY FT LBS 1	2	3	SHEAR(%) 1	2	3	LAT. EXP MILS 1	2	3
T030111		811S00740			.312	V	2/3	L	-50	104	79	87						
T030118		813S60780			.312	V	2/3	L	-50	116	115	114						
T030119		813S60780			.312	V	2/3	L	-50	82	82	72						

Certified a true copy of the original, retained in our file.
AMERICAN ALLOY STEEL, INC.
Reviewed By:
3/17/21

HEAT NUMBER	CHEMICAL ANALYSIS C	Mn	P	S	Si	Cu	Ni	Cr	Mo	V	Ti	Al	B	Cb	N	Sn	MOLAID GRAIN SIZE
811S00740	.17	1.07	.011	.006	.329	.221	.19	.03	.007	.002	.002	.037	.0002		.002	.004	.003
813S60780	.17	1.08	.013	.004	.343	.212	.17	.03	.006	.002	.002	.039	.0002		.002	.003	.003

AMERICAN ALLOY
PLATE # 5236115

I certify that the above results are a true and correct copy of actual results contained in records maintained by ArcelorMittal Burns Harbor and are in full compliance with the requirements of the specification cited above. This test report cannot be altered and must be transmitted intact with any subsequent third party test reports, if required.

BHPLTRPT.TIF

FARID HASSANI PER MWT
SUPV. QUALITY ASSURANCE

03/19/2021 From: AMERICAN ALLOY STEEL, INC. To: INUKSHUK CONSTRUCTION LIMITED
P.O.#: 341-1001-TX S.O.#: 677336 AA PL#: 5236116
Item: 1 (1 PC) 5/16" X 96" X 480"

ArcelorMittal Burns Harbor Plate

QUALITY ASSURANCE
REPORT OF TEST AND ANAYLSES

US HWY 12 Burns Harbor, Indiana

SHIPMENT NO.	DATE SHIPPED	CAR OR VEHICLE NO.
803-69511	02-04-21	IHB-MCCOO-BNSF BVRY 062064

SOLD TO:
AMERICAN ALLOY STEEL INC
PO BOX 40469
HOUSTON TX 77240-0469

SHIP TO:
AMERICAN ALLOY STEEL INC
BNSF TR# 7226 MILE 66.4 LN SEG 492
6230 N HOUSTON ROSSLYN RD
HOUSTON TX 77091-3410

NOTE	SERIAL NUMBER	PAT NO.	HEAT NUMBER	NO. PCS.	SIZE AND QUANTITY: THICKNESS	WIDTH OR DIA.	LENGTH	WEIGHT	YIELD POINT	TENSILE STRENGTH	AF FRAC. ELONG.	RED.
					INCHES	INCHES	INCHES	POUNDS	PSI	PSI	IN	% %

QUALITY STEEL MELTED & MANUFACTURED IN THE U. S. A.
PLATES - ASTM A516-17 GR 70 PVQ KLD FINE GRAIN PRAC, ASTM A516-17 GR 65 PVQ, ASTM A516-17 GR 60 PVQ, ASME SA516 GR 70 PVQ 2019 EDITION, ASME SA516 GR 65 PVQ 2019 EDITION, ASME SA516 GR 60 PVQ 2019 EDITION, CH-V SA20S5 PLT L 15/12 FTLBS AT -50F, VACUUM DEGASSED --- PLT NORMALIZED & COOLED IN STILL AIR --- IN ACCORDANCE WITH EN 10204:2004 TYPE 3.1 10204:2004 TYPE 3.1
NO WELD REPAIR WAS PERFORMED ON BELOW PLATE(S)
CO# 125823 GH 377-1561A
PLATES HEAT TREATED - TEST SPECIMENS ATTACHED & YIELD STRENGTH @ .5% EUL
MERCURY IN ANY FORM HAS NOT BEEN USED IN THE PRODUCTION OF THIS ORDER

T030111 →	811S00740	2	5/16	96	480		8168	54800	75600	8	25	
			N 1650 DEG F - 15 MIN									
(M55)MFST REF#:2												
T030118	813S60780	2	5/16	96	480		8168	54000	75500	8	26	
			N 1650 DEG F - 15 MIN									
(M55)MFST REF#:2												
T030119	813S60780	2	5/16	96	480		8168	53700	75800	8	26	
			N 1650 DEG F - 15 MIN									
(M55)MFST REF#:2												

Q-QUENCH TEMPERATURE T-TEMPER TEMPERATURE N-NORMALIZE TEMPERATURE

SERIAL NUMBER	PAT NO.	HEAT NUMBER	HARD BHN	BEND	THICKNESS INCHES	TYPE	SIZE	DIR	TEST TEMP °F	CHARPY IMPACT ENERGY FT LBS 1	2	3	SHEAR(%) 1	2	3	LAT. EXP MILS 1	2	3
T030111		811S00740			.312	V	2/3	L	-50	104	79	87						
T030118		813S60780			.312	V	2/3	L	-50	116	115	114						
T030119		813S60780			.312	V	2/3	L	-50	82	82	72						

Certified a true copy of the original, retained in our file.
AMERICAN ALLOY STEEL, INC.
Reviewed By:
2/17/21

HEAT NUMBER	CHEMICAL ANALYSIS C	Mn	P	S	Si	Cu	Ni	Cr	Mo	V	Ti	Al	B	Cb	N	Sn	MQUAID GRAIN SIZE
811S00740	.17	1.07	.011	.006	.329	.221	.19	.03	.007	.002	.002	.037	.0002	.002	.004	.003	
813S60780	.17	1.08	.013	.004	.343	.212	.17	.03	.006	.002	.002	.039	.0002	.002	.003	.003	

AMERICAN ALLOY
PLATE # 523116

I certify that the above results are a true and correct copy of actual results contained in records maintained by ArcelorMittal Burns Harbor and are in full compliance with the requirements of the specification cited above. This test report cannot be altered and must be transmitted intact with any subsequent third party test reports, if required.

FARID HASSANI PER MWT
SUPV. QUALITY ASSURANCE

BMPLTRPT.TIF

03/19/2021 From: AMERICAN ALLOY STEEL, INC. To: INUKSHUK CONSTRUCTION LIMITED
P.O.#: 341-1001-TX S.O.#: 677336 AA PL#: 5236117
Item: 1 (1 PC) 5/16" X 96" X 480"

ArcelorMittal Burns Harbor Plate

QUALITY ASSURANCE
REPORT OF TEST AND ANAYLSES

US HWY 12 Burns Harbor, Indiana

SHIPMENT NO. 803-69511 | DATE SHIPPED 02-04-21 | CAR OR VEHICLE NO. IHB-MCCOO-BNSF BVRY 062064

SOLD TO:
AMERICAN ALLOY STEEL INC
PO BOX 40469
HOUSTON TX 77240-0469

SHIP TO:
AMERICAN ALLOY STEEL INC
BNSF TR# 7226 MILE 66.4 LN SEG 492
6230 N HOUSTON ROSSLYN RD
HOUSTON TX 77091-3410

NOTE	SERIAL NUMBER	PAT NO.	HEAT NUMBER	NO. PCS.	SIZE AND QUANTITY: THICKNESS	WIDTH OR DIA.	LENGTH	WEIGHT	YIELD POINT	TENSILE STRENGTH	AF FRAC. ELONG.	RED.
					INCHES	INCHES	INCHES	POUNDS	PSI	PSI	IN %	%

QUALITY STEEL MELTED & MANUFACTURED IN THE U. S. A.
PLATES - ASTM A516-17 GR 70 PVQ KLD FINE GRAIN PRAC, ASTM A516-17 GR 65 PVQ, ASTM A516-17 GR 60 PVQ, ASME SA516 GR 70 PVQ 2019 EDITION, ASME SA516 GR 65 PVQ 2019 EDITION, ASME SA516 GR 60 PVQ 2019 EDITION, CH-V SA20S5 PLT L 15/12 FTLBS AT -50F, VACUUM DEGASSED --- PLT NORMALIZED & COOLED IN STILL AIR --- IN ACCORDANCE WITH EN 10204:2004 TYPE 3.1 10204:2004 TYPE 3.1
NO WELD REPAIR WAS PERFORMED ON BELOW PLATE(S)
CO# 125823 GH 377-1561A
PLATES HEAT TREATED - TEST SPECIMENS ATTACHED & YIELD STRENGTH @ .5% EUL
MERCURY IN ANY FORM HAS NOT BEEN USED IN THE PRODUCTION OF THIS ORDER

T030111 →	811S00740	2	5/16	96	480		8168	54800	75600	8	25
			N 1650 DEG F - 15 MIN								
(M55)MFST REF#:2												
T030118	813S60780	2	5/16	96	480		8168	54000	75500	8	26
			N 1650 DEG F - 15 MIN								
(M55)MFST REF#:2												
T030119	813S60780	2	5/16	96	480		8168	53700	75800	8	26
			N 1650 DEG F - 15 MIN								
(M55)MFST REF#:2												

Q-QUENCH TEMPERATURE T-TEMPER TEMPERATURE N-NORMALIZE TEMPERATURE

SERIAL NUMBER	PAT NO.	HEAT NUMBER	HARD BHN	BEND	THICKNESS INCHES	TYPE	SIZE	DIR	TEST TEMP °F	CHARPY IMPACT ENERGY FT LBS 1	2	3	SHEAR(%) 1	2	3	LAT. EXP MILS 1	2	3
T030111		811S00740			.312	V	2/3	L	-50	104	79	87						
T030118		813S60780			.312	V	2/3	L	-50	116	115	114						
T030119		813S60780			.312	V	2/3	L	-50	82	82	72						

Certified a true copy of the original, retained in our file.
AMERICAN ALLOY STEEL, INC.
Reviewed By:
3/17/21

HEAT NUMBER	CHEMICAL ANALYSIS C	Mn	P	S	Si	Cu	Ni	Cr	Mo	V	Ti	Al	B	Cb	N	Sn	MQUAID GRAIN SIZE
811S00740	.17	1.07	.011	.006	.329	.221	.19	.03	.007	.002	.002	.037	.0002	.002	.004	.003	
813S60780	.17	1.08	.013	.004	.343	.212	.17	.03	.006	.002	.002	.039	.0002	.002	.003	.003	

AMERICAN ALLOY
PLATE # 5236117

I certify that the above results are a true and correct copy of actual results contained in records maintained by ArcelorMittal Burns Harbor and are in full compliance with the requirements of the specification cited above. This test report cannot be altered and must be transmitted intact with any subsequent third party test reports, if required.

BHPLTRPT.TIF

FARID HASSANI PER MWT
SUPV. QUALITY ASSURANCE

03/19/2021 From: AMERICAN ALLOY STEEL, INC. To: INUKSHUK CONSTRUCTION LIMITED
P.O.#: 341-1001-TX S.O.#: 677336 AA PL#: 5236118
Item: 1 (1 PC) 5/16" X 96" X 480"

ArcelorMittal Burns Harbor Plate

QUALITY ASSURANCE
REPORT OF TEST AND ANAYLSES

US HWY 12 Burns Harbor, Indiana

SHIPMENT NO.	DATE SHIPPED	CAR OR VEHICLE NO.
803-69511	02-04-21	IHB-MCCOO-BNSF BVRY 062064

SOLD TO
AMERICAN ALLOY STEEL INC
PO BOX 40469
HOUSTON TX 77240-0469

SHIP TO
AMERICAN ALLOY STEEL INC
BNSF TR# 7226 MILE 66.4 LN SEG 492
6230 N HOUSTON ROSSLYN RD
HOUSTON TX 77091-3410

NOTE	SERIAL NUMBER	PAT NO.	HEAT NUMBER	NO. PCS.	SIZE AND QUANTITY THICKNESS	WIDTH OR DIA.	LENGTH	WEIGHT	YIELD POINT	TENSILE STRENGTH	AF FRAC. ELONG.	RED.
					INCHES	INCHES	INCHES	POUNDS	PSI	PSI	IN	% %

QUALITY STEEL MELTED & MANUFACTURED IN THE U. S. A.
PLATES - ASTM A516-17 GR 70 PVQ KLD FINE GRAIN PRAC, ASTM A516-17 GR 65 PVQ, ASTM A516-17 GR 60 PVQ, ASME SA516 GR 70 PVQ 2019 EDITION, ASME SA516 GR 65 PVQ 2019 EDITION, ASME SA516 GR 60 PVQ 2019 EDITION, CH-V SA20S5 PLT L 15/12 FTLBS AT -50F, VACUUM DEGASSED --- PLT NORMALIZED & COOLED IN STILL AIR --- IN ACCORDANCE WITH EN 10204:2004 TYPE 3.1 10204:2004 TYPE 3.1
NO WELD REPAIR WAS PERFORMED ON BELOW PLATE(S)
CO# 125823 GH 377-1561A
PLATES HEAT TREATED - TEST SPECIMENS ATTACHED & YIELD STRENGTH @ .5% EUL
MERCURY IN ANY FORM HAS NOT BEEN USED IN THE PRODUCTION OF THIS ORDER

T030120	813S60780	1	5/16	96	480		4084	53200	75500	8	26	
			N	1650 DEG F - 15 MIN								

(M55)MFST REF#:2

Q-QUENCH TEMPERATURE T-TEMPER TEMPERATURE N-NORMALIZE TEMPERATURE

SERIAL NUMBER	PAT NO.	HEAT NUMBER	HARD BHN	BEND	THICKNESS INCHES	TYPE	SIZE	DIR	TEST TEMP °F	CHARPY IMPACT ENERGY FT LBS 1	2	3	SHEAR(%) 1	2	3	LAT. EXP MILS 1	2	3
T030120		813S60780			.312	V	2/3	L	-50	73	68	80						

Certified a true copy of the original, retained in our file.
AMERICAN ALLOY STEEL, INC.
Reviewed By:
3/17/21

HEAT NUMBER	CHEMICAL ANALYSIS C	Mn	P	S	Si	Cu	Ni	Cr	Mo	V	Ti	Al	B	Cb	N	Sn	MO/ASD GRAIN SIZE
813S60780	.17	1.08	.013	.004	.34	3.212	.17	.03	.006	.002	.002	.039	.0002	.002	.003	.003	

AMERICAN ALLOY
PLATE # 5236118

I certify that the above results are a true and correct copy of actual results contained in records maintained by ArcelorMittal Burns Harbor and are in full compliance with the requirements of the specification cited above. This test report cannot be altered and must be transmitted intact with any subsequent third party test reports, if required.

FARID HASSANI PER MWT
SUPV. QUALITY ASSURANCE

BHPLTRPT.TIF

03/19/2021 From: AMERICAN ALLOY STEEL, INC. To: INUKSHUK CONSTRUCTION LIMITED
P.O.#: 341-1001-TX S.O.#: 677336 AA PL#: 5237388
Item: 1 (1 PC) 5/16" X 96" X 480"

AMERICAN ALLOY
PLATE #5237388

NUCOR
PLATE MILL

P.O.Box 279
Winton, NC 27986
(252) 356-3700

Mill Test Report

1505 River Rd
Cofield, NC 27922
(252) 356-3700

NUCOR
It's Our Nature.

Issuing Date : 01/02/2021 B/L No. : 578134 Load No. : 591370 Our Order No. : 184010/1 Cust. Order No. : 125998

Vehicle No: TTPX 804057

Specification: 0.3125" x 96.000" x 480.000"
ASTM A516 70/65/60-17/ASME SA516-70/65/60 PVQ 2019/2017
Normalized Plate NACE MR0175 Annex 2.1.2 (2015), MR0103 (2010)
Section 2.1.2 Compliant (2015) 13.1.1, 13.1.2) Vacuum Degassed

Marking : 125998

Sold To: AMERICAN ALLOY STEEL INC
6230 N HOUSTON ROSSLYN RD
PO BOX 40469
NORTH HOUSTON,TX 77091

Ship To: AMERICAN ALLOY STEEL
6230 N HOUSTON ROSSLYN RD
BNSF TR # 7226
MILE 664 LN SEG 492
NORTH HOUSTON,TX 77091

Heat No	C	Mn	P	S	Si	Cu	Ni	Cr	Mo	Al(tot)	V	Nb	Ti	N	Ca	B	Sn	Ceq	Pcm
0602533	0.19	1.06	0.012	0.001	0.22	0.13	0.09	0.07	0.01	0.024	0.005	0.002	0.002	0.0049	0.0014	0.0001	0.009	0.40	0.27
0604883	0.18	1.06	0.008	0.002	0.20	0.18	0.09	0.09	0.02	0.036	0.006	0.001	0.003	0.0080	0.0023	0.0001	0.008	0.40	0.26

Tensile Test / Heat Treat

Plate Serial No	Pieces	Tons	Dir.	Yield (psi)	Tensile (psi)	Elong. % in 2"	Elong. % in 8"	Norm (°F)	Time (min)	Temper (°F)	Time (min)
0602533-08	1	2.04	H-T	52,800	78,700	38.5		1650	16		
0604883-06	2	4.08	H-T	51,500	74,000	38.6		1650	16		

Charpy Impacts

Plate Serial No	Pieces	Tons	Dir.	Absorbed Energy (Ft-lbs) (ft-lbs) 1	(ft-lbs) 2	(ft-lbs) 3	(ft-lbs) Ave	Min	Lateral Expansion (in.) (in.) 1	(in.) 2	(in.) 3	(in.) Ave	(in.) Min	Shear (%) (%) 1	(%) 2	(%) 3	(%) Ave	Min	Temp (°F)	Size
0602533-08	1	2.04	H-L	91.7	102.0	111.0	101.6	15											-50	10mm
0604883-06	2	4.08	H-L	33.2	43.0	44.1	40.1	15											-50	6.67mm

HOT ROLLED CARBON STEEL PLATE
TEST COUPONS TAKEN FROM HEAT TREATED PLATE
Piece frequency charpy;

Certified a true copy of the original, retained in our file.
AMERICAN ALLOY STEEL
J.K 1/25/2021

Manufactured to fully killed fine grain practice by Electric Arc Furnace. Welding or weld repair was not performed on this material.
Mercury has not been used in the direct manufacturing of this material. Produced as continuous cast discrete plate, unless otherwise noted in Specification. For Mexico shipments:nhc-SalesMX@nucor.com
Yield by 0.5EUL method unless otherwise specified. Ceq = C+(Mn/6)+((Cr+Mo+V)/5)+((Cu+Ni)/15)
Pcm = C+(Si/30)+(Mn/20)+(Cu/20)+(Ni/60)+(Cr/20)+(Mo/15)+(V/10)+5B
Melted and Manufactured in the USA. ISO 9001:2015 certified. PED 97/23/EC 7/2 Annex 1, Para. 4.3 Compliant.
DIN 50049 3.1.B/EN 10204 3.1B(2004), DIN EN 10204 3.1(2005) compliant. For ABS grades only, Quality Assurance certificate QA-3624366

We hereby certify that the contents of this report are accurate and correct. All test results and operations performed by the material manufacturer are in compliance with the applicable specifications, including customer specifications.

T. A. Dapretis

T. A. Dapretis, Metallurgist

1/2/2021 3:02:49 PM

03/19/2021 From: AMERICAN ALLOY STEEL, INC. To: INUKSHUK CONSTRUCTION LIMITED
P.O.#: 341-1001-TX S.O.#: 677336 AA PL#: 5237389
Item: 1 (1 PC) 5/16" X 96" X 480"

AMERICAN ALLOY
PLATE #5237389

NUCOR
PLATE MILL

P.O.Box 279
Winton, NC 27986
(252) 356-3700

Mill Test Report

1505 River Rd
Cofield, NC 27922
(252) 356-3700

NUCOR
It's Our Nature

Issuing Date: 01/02/2021 **B/L No.:** 578134 **Load No.:** 591370 **Our Order No.:** 184010/1 **Cust. Order No.:** 125998

Vehicle No: TTPX 804057

Specification: 0.3125" x 96.000" x 480.000"
ASTM A516 70/65/60-17/ASME SA516-70/65/60 PVQ 2019/2017
Normalized Plate NACE MR0175 Annex 2.1.2 (2015), MR0103 (2010)
Section 2.1.2 Compliant (2015) 13.1.1, 13.1.2) Vacuum Degassed

Marking: 125998

Sold To: AMERICAN ALLOY STEEL INC
6230 N HOUSTON ROSSLYN RD
PO BOX 40469
NORTH HOUSTON,TX 77091

Ship To: AMERICAN ALLOY STEEL
6230 N HOUSTON ROSSLYN RD
BNSF TR # 7226
MILE 664 LN SEG 492
NORTH HOUSTON,TX 77091

Heat No	C	Mn	P	S	Si	Cu	Ni	Cr	Mo	Al(tot)	V	Nb	Ti	N	Ca	B	Sn	Ceq	Pcm
0602533	0.19	1.06	0.012	0.001	0.22	0.13	0.09	0.07	0.01	0.024	0.005	0.002	0.002	0.0049	0.0014	0.0001	0.009	0.40	0.27
0604883	0.18	1.06	0.008	0.002	0.20	0.18	0.09	0.09	0.02	0.036	0.006	0.001	0.003	0.0060	0.0023	0.0001	0.008	0.40	0.26

Plate Serial No	Pieces	Tons	Tensile Test Dir.	Yield (psi)	Tensile (psi)	Elong. % in 2"	Elong. % in 8"	Heat Treat Norm (°F)	Norm Time (min)	Temper (°F)	Temper Time (min)
0602533-08	1	2.04	H-T	52,800	76,700	38.5		1650	16		
0604883-06	2	4.08	H-T	51,500	74,000	38.6		1650	16		

Plate Serial No	Pieces	Tons	Charpy Impacts Dir.	Absorbed Energy (Ft-lbs) (ft-lbs) 1	(ft-lbs) 2	(ft-lbs) 3	(ft-lbs) Ave	Min	Lateral Expansion (in.) (in.) 1	(in.) 2	(in.) 3	(in.) Ave	(in.) Min	Shear (%) (%) 1	(%) 2	(%) 3	(%) Ave	Min	Temp (°F)	Size
0602533-08	1	2.04	H-L	91.7	102.0	111.0	101.6	15											-50	10mm
0604883-06	2	4.08	H-L	33.2	43.0	44.1	40.1	15											-50	6.67mm

Certified a true copy of the original, retained in our file.
AMERICAN ALLOY STEEL
J.K 1/25/2021

HOT ROLLED CARBON STEEL PLATE
TEST COUPONS TAKEN FROM HEAT TREATED PLATE
Piece frequency charpy;

Manufactured to fully killed fine grain practice by Electric Arc Furnace. Welding or weld repair was not performed on this material. Mercury has not been used in the direct manufacturing of this material. Produced as continuous cast discrete plate, unless otherwise noted in Specification. For Mexico shipments: nhc-SalesMX@nucor.com
Yield by 0.5EUL method unless otherwise specified. Ceq = C+(Mn/6)+((Cr+Mo+V)/5)+((Cu+Ni)/15)
Pcm = C+(Si/30)+(Mn/20)+(Cu/20)+(Ni/60)+(Cr/20)+(Mo/15)+(V/10)+5B
Melted and Manufactured in the USA. ISO 9001:2015 certified. PED 97/23/EC 7/2 Annex 1, Para. 4.3 Compliant.
DIN 50049 3.1.B/EN 10204 3.1B(2004), DIN EN 10204 3.1(2005) compliant. For ABS grades only, Quality Assurance certificate QA-3624366

We hereby certify that the contents of this report are accurate and correct. All test results and operations performed by the material manufacturer are in compliance with the applicable specifications, including customer specifications.

T. A. Depretis, Metallurgist

1/2/2021 3:02:49 PM

To: INUKSHUK CONSTRUCTION LIMITED
AA PL#: 5237390
S.O.#: 677336
From: AMERICAN ALLOY STEEL, INC.
341-1001-TX
P.O.#:
Item: 1 (1 PC) 5/16" X 96" X 480"
03/19/2021

AMERICAN ALLOY
PLATE # 5237390

NUCOR
PLATE MILL

P.O.Box 279
Winton, NC 27986
(252) 356-3700

Mill Test Report

1505 River Rd
Cofield, NC 27922
(252) 356-3700

NUCOR
It's Our Nature.

Issuing Date: 01/17/2021 **B/L No.:** 579490 **Load No.:** 592195 **Our Order No.:** 184010/1 **Cust. Order No.:** 125998

Vehicle No: ALY 91698

Specification: 0.3125" x 96.000" x 480.000"
ASTM A516 70/65/60-17/ASME SA516-70/65/60 PVQ 2019/2017
Normalized Plate NACE MR0175 Annex 2.1.2 (2015), MR0103 (2010)
Section 2.1.2 Compliant (2015) 13.1.1, 13.1.2) Vacuum Degassed

Marking: 125998

Sold To: AMERICAN ALLOY STEEL INC
6230 N HOUSTON ROSSLYN RD
PO BOX 40469
NORTH HOUSTON,TX 77091

Ship To: AMERICAN ALLOY STEEL
6230 N HOUSTON ROSSLYN RD
BNSF TR # 7226
MILE664 LN SEG 492
NORTH HOUSTON,TX 77091

Heat No	C	Mn	P	S	Si	Cu	Ni	Cr	Mo	Al(tot)	V	Nb	Ti	N	Ca	B	Sn	Ceq	Pcm
1600011	0.19	1.04	0.011	0.001	0.19	0.23	0.09	0.12	0.02	0.027	0.004	0.003	0.002	0.0048	0.0015	0.0003	0.009	0.42	0.27
1600012	0.18	1.04	0.008	0.001	0.17	0.22	0.10	0.09	0.02	0.033	0.004	0.003	0.002	0.0089	0.0021	0.0003	0.009	0.40	0.26

Tensile Test / Heat Treat

Plate Serial No	Pieces	Tons	Dir.	Yield (psi)	Tensile (psi)	Elong. % in 2"	Elong. % in 8"	Norm (°F)	Time (min)	Temper (°F)	Time (min)
1600011-08	2	4.08	H-T	53,900	78,200	37.6		1650	16		
→ 1600012-02	1	2.04	H-T	54,800	79,900	37.2		1650	16		

Charpy Impacts

Plate Serial No	Pieces	Tons	Dir.	Absorbed Energy (Ft-lbs) (ft-lbs) 1	(ft-lbs) 2	(ft-lbs) 3	(ft-lbs) Ave	Min	Lateral Expansion (in.) (in.) 1	(in.) 2	(in.) 3	(in.) Ave	(in.) Min	Shear (%) (%) 1	(%) 2	(%) 3	(%) Ave	Min	Temp (°F)	Size
1600011-08	2	4.08	H-L	31.0	29.7	30.7	30.5	15											-50	5mm
1600012-02	1	2.04	H-L	31.2	33.6	30.4	31.7	15											-50	10mm

Certified a true copy of the original, retained in our file.
AMERICAN ALLOY STEEL
J.k 2/12/2021

HOT ROLLED CARBON STEEL PLATE
TEST COUPONS TAKEN FROM HEAT TREATED PLATE
Piece frequency charpy;

Manufactured to fully killed fine grain practice by Electric Arc Furnace. Welding or weld repair was not performed on this material.
Mercury has not been used in the direct manufacturing of this material. Produced as continuous cast discrete plate, unless otherwise noted in Specification. For Mexico shipments: nhc-SalesMX@nucor.com
Yield by 0.5EUL method unless otherwise specified. Ceq = C+(Mn/6)+((Cr+Mo+V)/5)+((Cu+Ni)/15)
Pcm = C+(Si/30)+(Mn/20)+(Cu/20)+(Ni/60)+(Cr/20)+(Mo/15)+(V/10)+5B
Melted and Manufactured in the USA. ISO 9001:2015 certified. PED 97/23/EC 7/2 Annex 1, Para. 4.3 Compliant.
DIN 50049 3.1.B/EN 10204 3.1B(2004), DIN EN 10204 3.1(2005) compliant. For ABS grades only, Quality Assurance certificate QA-3624366

We hereby certify that the contents of this report are accurate and correct. All test results and operations performed by the material manufacturer are in compliance with the applicable specifications, including customer specifications.

T. A. Depreitis, Metallurgist

1/17/2021 10:03:29 AM

03/19/2021 From: AMERICAN ALLOY STEEL, INC. To: INUKSHUK CONSTRUCTION LIMITED
P.O.#: 341-1001-TX S.O.#: 677336 AA PL#: 5237391
Item: 1 (1 PC) 5/16" X 96" X 480"

AMERICAN ALLOY
PLATE # 5237391

NUCOR
PLATE MILL

P.O.Box 279
Winton, NC 27986
(252) 356-3700

Mill Test Report

1505 River Rd
Cofield, NC 27922
(252) 356-3700

NUCOR
It's Our Nature

Issuing Date: 01/17/2021 **B/L No.:** 579490 **Load No.:** 592195 **Our Order No.:** 184010/1 **Cust. Order No.:** 125998

Vehicle No: ALY 91698

Specification: 0.3125" x 96.000" x 480.000"
ASTM A516 70/65/60-17/ASME SA516-70/65/60 PVQ 2019/2017
Normalized Plate NACE MR0175 Annex 2.1.2 (2015), MR0103 (2010)
Section 2.1.2 Compliant (2015) 13.1.1, 13.1.2) Vacuum Degassed

Marking: 125998

Sold To: AMERICAN ALLOY STEEL INC
6230 N HOUSTON ROSSLYN RD
PO BOX 40469
NORTH HOUSTON,TX 77091

Ship To: AMERICAN ALLOY STEEL
6230 N HOUSTON ROSSLYN RD
BNSF TR # 7228
MILE684 LN SEG 492
NORTH HOUSTON,TX 77091

Heat No	C	Mn	P	S	Si	Cu	Ni	Cr	Mo	Al(tot)	V	Nb	Ti	N	Ca	B	Sn	Ceq	Pcm
1600011	0.19	1.04	0.011	0.001	0.19	0.23	0.09	0.12	0.02	0.027	0.004	0.003	0.002	0.0048	0.0015	0.0003	0.009	0.42	0.27
1600012	0.18	1.04	0.008	0.001	0.17	0.22	0.10	0.09	0.02	0.033	0.004	0.003	0.002	0.0088	0.0021	0.0003	0.009	0.40	0.26

			Tensile Test				Heat Treat			
Plate Serial No	Pieces	Tons	Dir.	Yield (psi)	Tensile (psi)	Elong. % in 2"	Elong. % in 8"	Norm (°F)	Time (min)	Temper (°F)	Time (min)
1600011-08	2	4.08	H-T	53,900	78,200	37.6		1650	16		
1600012-02	1	2.04	H-T	54,800	79,900	37.2		1650	16		

			Charpy Impacts																
				Absorbed Energy (Ft-lbs)					Lateral Expansion (in.)					Shear (%)					
Plate Serial No	Pieces	Tons	Dir.	(ft-lbs) 1	(ft-lbs) 2	(ft-lbs) 3	(ft-lbs) Ave	Min	(in.) 1	(in.) 2	(in.) 3	(in.) Ave	(in.) Min	(%) 1	(%) 2	(%) 3	(%) Ave	Min	Temp (°F)	Size
1600011-08	2	4.08	H-L	31.0	29.7	30.7	30.5	15											-50	5mm
1600012-02	1	2.04	H-L	31.2	33.6	30.4	31.7	15											-50	10mm

Certified a true copy of the original, retained in our file.
AMERICAN ALLOY STEEL
J.K 2/12/2021

HOT ROLLED CARBON STEEL PLATE
TEST COUPONS TAKEN FROM HEAT TREATED PLATE
Piece frequency charpy;

Manufactured to fully killed fine grain practice by Electric Arc Furnace. Welding or weld repair was not performed on this material.
Mercury has not been used in the direct manufacturing of this material. Produced as continuous cast discrete plate, unless otherwise noted in Specification. For Mexico shipments:nhc-SalesMX@nucor.com
Yield by 0.5EUL method unless otherwise specified. Ceq = C+(Mn/6)+((Cr+Mo+V)/5)+((Cu+Ni)/15)
Pcm = C+(Si/30)+(Mn/20)+(Cu/20)+(Ni/60)+(Cr/20)+(Mo/15)+(V/10)+5B
Melted and Manufactured in the USA. ISO 9001:2015 certified. PED 97/23/EC 7/2 Annex 1, Para. 4.3 Compliant.
DIN 50049 3.1.B/EN 10204 3.1B(2004), DIN EN 10204 3.1(2005) compliant. For ABS grades only, Quality Assurance certificate QA-3624366

We hereby certify that the contents of this report are accurate and correct. All test results and operations performed by the material manufacturer are in compliance with the applicable specifications, including customer specifications.

T. A. Depretis

T. A. Depretis, Metallurgist

1/17/2021 10:03:29 AM

To: INUKSHUK CONSTRUCTION LIMITED
AA PL#: 5237392
S.O.#: 677336
From: AMERICAN ALLOY STEEL, INC.
P.O.#: 341-1001-TX
Item: 1 (1 PC) 5/16" X 96" X 480"
03/19/2021

AMERICAN ALLOY
PLATE #5237392

NUCOR
PLATE MILL

P.O.Box 279
Winton, NC 27986
(252) 356-3700

Mill Test Report

1505 River Rd
Cofield, NC 27922
(252) 356-3700

NUCOR
It's Our Nature

Issuing Date: 01/17/2021 **B/L No.:** 579490 **Load No.:** 592195 **Our Order No.:** 184010/1 **Cust. Order No.:** 125998

Vehicle No: ALY 91698

Specification: 0.3125" x 96.000" x 480.000"
ASTM A516 70/65/60-17/ASME SA516-70/65/60 PVQ 2019/2017
Normalized Plate NACE MR0175 Annex 2.1.2 (2015), MR0103 (2010)
Section 2.1.2 Compliant (2015) 13.1.1, 13.1.2) Vacuum Degassed

Marking: 125998

Sold To: AMERICAN ALLOY STEEL INC
6230 N HOUSTON ROSSLYN RD
PO BOX 40469
NORTH HOUSTON,TX 77091

Ship To: AMERICAN ALLOY STEEL
6230 N HOUSTON ROSSLYN RD
BNSF TR # 7226
MILE 664 LN SEG 492
NORTH HOUSTON,TX 77091

Heat No	C	Mn	P	S	Si	Cu	Ni	Cr	Mo	Al(tot)	V	Nb	Ti	N	Ca	B	Sn	Ceq	Pcm
1600011	0.19	1.04	0.011	0.001	0.19	0.23	0.09	0.12	0.02	0.027	0.004	0.003	0.002	0.0048	0.0015	0.0003	0.009	0.42	0.27
1600012	0.18	1.04	0.008	0.001	0.17	0.22	0.10	0.09	0.02	0.033	0.004	0.003	0.002	0.0089	0.0021	0.0003	0.009	0.40	0.26

			Tensile Test				Heat Treat			
Plate Serial No	Pieces	Tons	Dir.	Yield (psi)	Tensile (psi)	Elong. % in 2"	Elong. % in 8"	Norm (°F)	Time (min)	Temper (°F)	Time (min)
1600011-08	2	4.08	H-T	53,900	78,200	37.6		1650	16		
1600012-02	1	2.04	H-T	54,800	79,900	37.2		1650	16		

			Charpy Impacts															
			Absorbed Energy (Ft-lbs)					Lateral Expansion (in.)					Shear (%)					
Plate Serial No	Pieces	Tons	Dir.	(ft-lbs) 1	(ft-lbs) 2	(ft-lbs) 3	(ft-lbs) Ave	Min	(in.) 1	(in.) 2	(in.) 3	(in.) Ave	(in.) Min	(%) 1	(%) 2	(%) 3	(%) Ave	Min	Temp (°F)	Size
1600011-08	2	4.08	H-L	31.0	29.7	30.7	30.5	15											-50	5mm
1600012-02	1	2.04	H-L	31.2	33.6	30.4	31.7	15											-50	10mm

Certified a true copy of the original, retained in our file.
AMERICAN ALLOY STEEL
J.K 2/12/2021

HOT ROLLED CARBON STEEL PLATE
TEST COUPONS TAKEN FROM HEAT TREATED PLATE
Piece frequency charpy;

Manufactured to fully killed fine grain practice by Electric Arc Furnace. Welding or weld repair was not performed on this material.
Mercury has not been used in the direct manufacturing of this material. Produced as continuous cast discrete plate, unless otherwise noted in Specification. For Mexico shipments:nhc-SalesMX@nucor.com
Yield by 0.5EUL method unless otherwise specified. Ceq = C+(Mn/6)+((Cr+Mo+V)/5)+((Cu+Ni)/15)
Pcm = C+(Si/30)+(Mn/20)+(Cu/20)+(Ni/60)+(Cr/20)+(Mo/15)+(V/10)+5B
Melted and Manufactured in the USA. ISO 9001:2015 certified. PED 97/23/EC 7/2 Annex 1, Para. 4.3 Compliant.
DIN 50049 3.1.B/EN 10204 3.1B(2004), DIN EN 10204 3.1(2005) compliant. For ABS grades only, Quality Assurance certificate QA-3624366

We hereby certify that the contents of this report are accurate and correct. All test results and operations performed by the material manufacturer are in compliance with the applicable specifications, including customer specifications.

T. A. Depretis, Metallurgist

1/17/2021 10:03:29 AM

03/19/2021 From: AMERICAN ALLOY STEEL, INC. To: INUKSHUK CONSTRUCTION LIMITED
P.O.#: 341-1001-TX S.O.#: 677336 AA PL#: 5237393
Item: 1 (1 PC) 5/16" X 96" X 480"

AMERICAN ALLOY
PLATE # 5237393

NUCOR
PLATE MILL

P.O.Box 279
Winton, NC 27986
(252) 356-3700

Mill Test Report

1505 River Rd
Cofield, NC 27922
(252) 356-3700

NUCOR
It's Our Nature.

Issuing Date: 01/24/2021 **B/L No.:** 580221 **Load No.:** 593433 **Our Order No.:** 184010/1 **Cust. Order No.:** 125998

Vehicle No: TTPX 81308

Specification: 0.3125" x 96.000" x 480.000"
ASTM A516 70/65/60-17/ASME SA516-70/65/60 PVQ 2019/2017
Normalized Plate NACE MR0175 Annex 2.1.2 (2015), MR0103 (2010)
Section 2.1.2 Compliant (2015) 13.1.1, 13.1.2) Vacuum Degassed

Marking: 125998

Sold To: AMERICAN ALLOY STEEL INC
6230 N HOUSTON ROSSLYN RD
PO BOX 40469
NORTH HOUSTON,TX 77091

Ship To: AMERICAN ALLOY STEEL
6230 N HOUSTON ROSSLYN RD
BNSF TR # 7226
MILE664 LN SEG 492
NORTH HOUSTON,TX 77091

Heat No	C	Mn	P	S	Si	Cu	Ni	Cr	Mo	Al(tot)	V	Nb	Ti	N	Ca	B	Sn	Ceq	Pcm
0602533	0.19	1.06	0.012	0.001	0.22	0.13	0.09	0.07	0.01	0.024	0.005	0.002	0.002	0.0049	0.0014	0.0001	0.009	0.40	0.27
1600012	0.18	1.04	0.008	0.001	0.17	0.22	0.10	0.09	0.02	0.033	0.004	0.003	0.002	0.0089	0.0021	0.0003	0.009	0.40	0.26

Plate Serial No	Pieces	Tons	Tensile Test Dir.	Yield (psi)	Tensile (psi)	Elong. % in 2"	Elong. % in 8"	Heat Treat Norm (°F)	Norm Time (min)	Temper (°F)	Temper Time (min)
0602533-08	2	4.08	H-T	52,800	76,700	38.5		1650	16		
1600012-03	2	4.08	H-T	53,200	78,300	33.9		1650	16		

Plate Serial No	Pieces	Tons	Charpy Impacts Dir.	Absorbed Energy (Ft-lbs) (ft-lbs) 1	(ft-lbs) 2	(ft-lbs) 3	(ft-lbs) Ave	Min	Lateral Expansion (in.) (in.) 1	(in.) 2	(in.) 3	(in.) Ave	(in.) Min	Shear (%) (%) 1	(%) 2	(%) 3	(%) Ave	Min	Temp (°F)	Size
0602533-08	2	4.08	H-L	91.7	102.0	111.0	101.6	15											-50	10mm
1600012-03	2	4.08	H-L	54.7	40.8	52.6	49.4	15											-50	5mm

Certified a true copy of the original, retained in our file.
AMERICAN ALLOY STEEL.
JH 3/4/2021

HOT ROLLED CARBON STEEL PLATE
TEST COUPONS TAKEN FROM HEAT TREATED PLATE
Piece frequency charpy;

Manufactured to fully killed fine grain practice by Electric Arc Furnace. Welding or weld repair was not performed on this material. Mercury has not been used in the direct manufacturing of this material. Produced as continuous cast discrete plate, unless otherwise noted in Specification. For Mexico shipments: nhc-SalesMX@nucor.com
Yield by 0.5EUL method unless otherwise specified. Ceq = C+(Mn/6)+((Cr+Mo+V)/5)+((Cu+Ni)/15)
Pcm = C+(Si/30)+(Mn/20)+(Cu/20)+(Ni/60)+(Cr/20)+(Mo/15)+(V/10)+5B
Melted and Manufactured in the USA. ISO 9001:2015 certified. PED 97/23/EC 7/2 Annex 1, Para. 4.3 Compliant.
DIN 50049 3.1.B/EN 10204 3.1B(2004), DIN EN 10204 3.1(2005) compliant. For ABS grades only, Quality Assurance certificate QA-3624386

We hereby certify that the contents of this report are accurate and correct. All test results and operations performed by the material manufacturer are in compliance with the applicable specifications, including customer specifications.

T. A. Depretis, Metallurgist

1/24/2021 4:10:30 PM

03/19/2021 From: AMERICAN ALLOY STEEL, INC. To: INUKSHUK CONSTRUCTION LIMITED
P.O.#: 341-1001-TX S.O.#: 677336 AA PL#: 5237394
Item: 1 (1 PC) 5/16" X 96" X 480"

AMERICAN ALLOY
PLATE # 5237394

NUCOR
PLATE MILL

P.O.Box 279
Winton, NC 27986
(252) 356-3700

Mill Test Report

1505 River Rd
Cofield, NC 27922
(252) 356-3700

NUCOR
It's Our Nature.

Issuing Date : 01/24/2021 B/L No. : 580221 Load No. : 593433 Our Order No. : 184010/1 Cust. Order No. : 125998

Vehicle No: TTPX 81308

Specification: 0.3125" x 96.000" x 480.000"
ASTM A516 70/65/60-17/ASMESA516-70/65/60 PVQ 2019/2017
Normalized Plate NACEMR0175 Annex 2.1.2 (2015), MR0103 (2010)
Section 2.1.2 Compliant (2015) 13.1.1, 13.1.2) Vacuum Degassed

Marking : 125998

Sold To: AMERICAN ALLOY STEEL INC
6230 N HOUSTON ROSSLYN RD
PO BOX 40469
NORTH HOUSTON,TX 77091

Ship To: AMERICAN ALLOY STEEL
6230 N HOUSTON ROSSLYN RD
BNSF TR # 7226
MILE 664 LN SEG 492
NORTH HOUSTON,TX 77091

Heat No	C	Mn	P	S	Si	Cu	Ni	Cr	Mo	Al(tot)	V	Nb	Ti	N	Ca	B	Sn	Ceq	Pcm
0602533	0.19	1.06	0.012	0.001	0.22	0.13	0.09	0.07	0.01	0.024	0.005	0.002	0.002	0.0049	0.0014	0.0001	0.009	0.40	0.27
1600012	0.18	1.04	0.008	0.001	0.17	0.22	0.10	0.09	0.02	0.033	0.004	0.003	0.002	0.0089	0.0021	0.0003	0.009	0.40	0.26

			Tensile Test				Heat Treat			
Plate Serial No	Pieces	Tons	Dir.	Yield (psi)	Tensile (psi)	Elong. % in 2"	Elong. % in 8"	Norm (°F)	Time (min)	Temper (°F)	Time (min)
0602533-08	2	4.08	H-T	52,800	76,700	38.5		1650	16		
1600012-03	2	4.08	H-T	53,200	78,300	33.9		1650	16		

			Charpy Impacts																
			Absorbed Energy (Ft-lbs)					Lateral Expansion (in.)					Shear (%)						
Plate Serial No	Pieces	Tons	Dir.	(ft-lbs) 1	(ft-lbs) 2	(ft-lbs) 3	(ft-lbs) Ave	Min	(in.) 1	(in.) 2	(in.) 3	(in.) Ave	(in.) Min	(%) 1	(%) 2	(%) 3	(%) Ave	Min	Temp (°F)	Size
0602533-08	2	4.08	H-L	91.7	102.0	111.0	101.6	15											-50	10mm
1600012-03	2	4.08	H-L	54.7	40.8	52.6	49.4	15											-50	5mm

Certified a true copy of the original, retained in our file.
AMERICAN ALLOY STEEL
JV 3/4/2024

HOT ROLLED CARBON STEEL PLATE
TEST COUPONS TAKEN FROM HEAT TREATED PLATE
Piece frequency charpy;

Manufactured to fully killed fine grain practice by Electric Arc Furnace. Welding or weld repair was not performed on this material.
Mercury has not been used in the direct manufacturing of this material. Produced as continuous cast discrete plate, unless otherwise noted in Specification. For Mexico shipments:nhc-SalesMX@nucor.com
Yield by 0.5EUL method unless otherwise specified. Ceq = C+(Mn/6)+((Cr+Mo+V)/5)+((Cu+Ni)/15)
Pcm = C+(Si/30)+(Mn/20)+(Cu/20)+(Ni/60)+(Cr/20)+(Mo/15)+(V/10)+5B
Melted and Manufactured in the USA. ISO 9001:2015 certified. PED 97/23/EC 7/2 Annex 1, Para. 4.3 Compliant.
DIN 50049 3.1.B/EN 10204 3.1B(2004), DIN EN 10204 3.1(2005) compliant. For ABS grades only, Quality Assurance certificate QA-3624366

We hereby certify that the contents of this report are accurate and correct. All test results and operations performed by the material manufacturer are in compliance with the applicable specifications, including customer specifications.

T. A. Deprotis, Metallurgist

1/24/2021 4:10:30 PM

03/19/2021 From: AMERICAN ALLOY STEEL, INC. To: INUKSHUK CONSTRUCTION LIMITED
P.O.#: 341-1001-TX S.O.#: 677336 AA PL#: 5237395
Item: 1 (1 PC) 5/16" X 96" X 480"

AMERICAN ALLOY
PLATE # 5237395

NUCOR
PLATE MILL

P.O.Box 279
Winton, NC 27986
(252) 356-3700

Mill Test Report

1505 River Rd
Cofield, NC 27922
(252) 356-3700

NUCOR
It's Our Nature.

Issuing Date: 01/24/2021 **B/L No.:** 580221 **Load No.:** 593433 **Our Order No.:** 184010/1 **Cust. Order No.:** 125998

Vehicle No: TTPX 81308

Specification: 0.3125" x 96.000" x 480.000"
ASTM A516 70/65/60-17/ASME SA516-70/65/60 PVQ 2019/2017
Normalized Plate NACE MR0175 Annex 2.1.2 (2015), MR0103 (2010)
Section 2.1.2 Compliant (2015) 13.1.1, 13.1.2) Vacuum Degassed

Marking: 125998

Sold To: AMERICAN ALLOY STEEL INC
6230 N HOUSTON ROSSLYN RD
PO BOX 40469
NORTH HOUSTON,TX 77091

Ship To: AMERICAN ALLOY STEEL
6230 N HOUSTON ROSSLYN RD
BNSF TR # 7226
MILE 664 LN SEG 492
NORTH HOUSTON,TX 77091

Heat No	C	Mn	P	S	Si	Cu	Ni	Cr	Mo	Al(tot)	V	Nb	Ti	N	Ca	B	Sn	Ceq	Pcm
0602533	0.19	1.06	0.012	0.001	0.22	0.13	0.09	0.07	0.01	0.024	0.006	0.002	0.002	0.0049	0.0014	0.0001	0.009	0.40	0.27
1600012	0.18	1.04	0.008	0.001	0.17	0.22	0.10	0.09	0.02	0.033	0.004	0.003	0.002	0.0089	0.0021	0.0003	0.009	0.40	0.26

Tensile Test / **Heat Treat**

Plate Serial No	Pieces	Tons	Dir.	Yield (psi)	Tensile (psi)	Elong. % in 2"	Elong. % in 8"	Norm (°F)	Time (min)	Temper (°F)	Time (min)
0602533-08	2	4.08	H-T	52,800	76,700	38.5		1650	16		
1600012-03	2	4.08	H-T	53,200	78,300	33.9		1650	16		

Charpy Impacts

Plate Serial No	Pieces	Tons	Dir.	Absorbed Energy (Ft-lbs) (ft-lbs) 1	(ft-lbs) 2	(ft-lbs) 3	(ft-lbs) Ave	Min	Lateral Expansion (in.) (in.) 1	(in.) 2	(in.) 3	(in.) Ave	(in.) Min	Shear (%) (%) 1	(%) 2	(%) 3	(%) Ave	Min	Temp (°F)	Size
0602533-08	2	4.08	H-L	91.7	102.0	111.0	101.6	15											-50	10mm
1600012-03	2	4.08	H-L	54.7	40.8	52.6	49.4	15											-50	5mm

Certified a true copy of the original, retained in our file.
AMERICAN ALLOY STEEL
JK 3/4/2021

HOT ROLLED CARBON STEEL PLATE
TEST COUPONS TAKEN FROM HEAT TREATED PLATE
Piece frequency charpy;

Manufactured to fully killed fine grain practice by Electric Arc Furnace. Welding or weld repair was not performed on this material.
Mercury has not been used in the direct manufacturing of this material. Produced as continuous cast discrete plate, unless otherwise noted in Specification. For Mexico shipments:nhc-SalesMX@nucor.com
Yield by 0.5EUL method unless otherwise specified. Ceq = C+(Mn/6)+((Cr+Mo+V)/5)+((Cu+Ni)/15)
Pcm = C+(Si/30)+(Mn/20)+(Cu/20)+(Ni/60)+(Cr/20)+(Mo/15)+(V/10)+5B
Melted and Manufactured in the USA. ISO 9001:2015 certified. PED 97/23/EC 7/2 Annex 1, Para. 4.3 Compliant.
DIN 50049 3.1.B/EN 10204 3.1B(2004), DIN EN 10204 3.1(2005) compliant. For ABS grades only, Quality Assurance certificate QA-3624366

We hereby certify that the contents of this report are accurate and correct. All test results and operations performed by the material manufacturer are in compliance with the applicable specifications, including customer specifications.

T. A. Depretis

T. A. Depretis, Metallurgist

1/24/2021 4:10:30 PM

03/19/2021 From: AMERICAN ALLOY STEEL, INC. To: INUKSHUK CONSTRUCTION LIMITED
P.O.#: 341-1001-TX S.O.#: 677336 AA PL#: 5237396
Item: 1 (1 PC) 5/16" X 96" X 480"

AMERICAN ALLOY
PLATE #5237396

NUCOR
PLATE MILL

P.O.Box 279
Winton, NC 27986
(252) 356-3700

Mill Test Report

1505 River Rd
Cofield, NC 27922
(252) 356-3700

NUCOR
It's Our Nature.

Issuing Date : 01/24/2021 B/L No. : 580221 Load No. : 593433 Our Order No. : 184010/1 Cust. Order No. : 125998

Vehicle No: TTPX 81308

Specification: 0.3125" x 96.000" x 480.000"
ASTM A516 70/65/60-17/ASME SA516-70/65/60 PVQ 2019/2017
Normalized Plate NACE MR0175 Annex 2.1.2 (2015), MR0103 (2010)
Section 2.1.2 Compliant (2015) 13.1.1, 13.1.2) Vacuum Degassed

Marking : 125998

Sold To: AMERICAN ALLOY STEEL INC
6230 N HOUSTON ROSSLYN RD
PO BOX 40469
NORTH HOUSTON,TX 77091

Ship To: AMERICAN ALLOY STEEL
6230 N HOUSTON ROSSLYN RD
BNSF TR # 7226
MILE 664 LN SEG 492
NORTH HOUSTON,TX 77091

Heat No	C	Mn	P	S	Si	Cu	Ni	Cr	Mo	Al(tot)	V	Nb	Ti	N	Ca	B	Sn	Ceq	Pcm
0602533	0.19	1.06	0.012	0.001	0.22	0.13	0.09	0.07	0.01	0.024	0.005	0.002	0.002	0.0049	0.0014	0.0001	0.009	0.40	0.27
1600012	0.18	1.04	0.008	0.001	0.17	0.22	0.10	0.09	0.02	0.033	0.004	0.003	0.002	0.0089	0.0021	0.0003	0.009	0.40	0.26

Plate Serial No	Pieces	Tons	Tensile Test Dir.	Yield (psi)	Tensile (psi)	Elong. % in 2"	Elong. % in 8"	Heat Treat Norm (°F)	Norm Time (min)	Temper (°F)	Temper Time (min)
0602533-08	2	4.08	H-T	52,800	76,700	38.5		1650	16		
1600012-03	2	4.08	H-T	53,200	78,300	33.9		1650	16		

Plate Serial No	Pieces	Tons	Charpy Impacts Dir.	Absorbed Energy (Ft-lbs) 1	2	3	Ave	Min	Lateral Expansion (in.) 1	2	3	Ave	Min	Shear (%) 1	2	3	Ave	Min	Temp (°F)	Size
0602533-08	2	4.08	H-L	91.7	102.0	111.0	101.6	15											-50	10mm
1600012-03	2	4.08	H-L	54.7	40.8	52.6	49.4	15											-50	5mm

Certified a true copy of the original, retained in our file.
AMERICAN ALLOY STEEL
J.P 3/4/2021

HOT ROLLED CARBON STEEL PLATE
TEST COUPONS TAKEN FROM HEAT TREATED PLATE
Piece frequency charpy;

Manufactured to fully killed fine grain practice by Electric Arc Furnace. Welding or weld repair was not performed on this material.
Mercury has not been used in the direct manufacturing of this material. Produced as continuous cast discrete plate, unless otherwise noted in Specification. For Mexico shipments:nhc-SalesMX@nucor.com
Yield by 0.5EUL method unless otherwise specified. Ceq = C+(Mn/6)+((Cr+Mo+V)/5)+((Cu+Ni)/15)
Pcm = C+(Si/30)+(Mn/20)+(Cu/20)+(Ni/60)+(Cr/20)+(Mo/15)+(V/10)+5B
Melted and Manufactured in the USA. ISO 9001:2015 certified. PED 97/23/EC 7/2 Annex 1, Para. 4.3 Compliant.
DIN 50049 3.1.B/EN 10204 3.1B(2004), DIN EN 10204 3.1(2005) compliant. For ABS grades only, Quality Assurance certificate QA-3624366

We hereby certify that the contents of this report are accurate and correct. All test results and operations performed by the material manufacturer are in compliance with the applicable specifications, including customer specifications.

T. A. Depretis, Metallurgist

1/24/2021 4:10:30 PM

03/19/2021 From: AMERICAN ALLOY STEEL, INC. To: INUKSHUK CONSTRUCTION LIMITED
P.O.#: 341-1001-TX S.O.#: 677336 AA PL#: 5239608
Item: 1 (1 PC) 5/16" X 96" X 480"

ArcelorMittal Burns Harbor Plate

QUALITY ASSURANCE
REPORT OF TEST AND ANAYLSES

US HWY 12 Burns Harbor, Indiana

SHIPMENT NO. 803-69511 | DATE SHIPPED 02-04-21 | CAR OR VEHICLE NO. IHB-MCCOO-BNSF BVRY 062064

SOLD TO
AMERICAN ALLOY STEEL INC
PO BOX 40469
HOUSTON TX 77240-0469

SHIP TO
AMERICAN ALLOY STEEL INC
BNSF TR# 7226 MILE 66.4 LN SEG 492
6230 N HOUSTON ROSSLYN RD
HOUSTON TX 77091-3410

NOTE	SERIAL NUMBER	PAT NO.	HEAT NUMBER	NO. PCS.	SIZE AND QUANTITY: THICKNESS	WIDTH OR DIA.	LENGTH	WEIGHT	YIELD POINT	TENSILE STRENGTH	AF FRAC. ELONG.	RED.
					INCHES	INCHES	INCHES	POUNDS	PSI	PSI	IN	% %

QUALITY STEEL MELTED & MANUFACTURED IN THE U. S. A.
PLATES - ASTM A516-17 GR 70 PVQ KLD FINE GRAIN PRAC, ASTM A516-17 GR 65 PVQ, ASTM A516-17 GR 60 PVQ, ASME SA516 GR 70 PVQ 2019 EDITION, ASME SA516 GR 65 PVQ 2019 EDITION, ASME SA516 GR 60 PVQ 2019 EDITION, CH-V SA20S5 PLT L 15/12 FTLBS AT -50F, VACUUM DEGASSED --- PLT NORMALIZED & COOLED IN STILL AIR --- IN ACCORDANCE WITH EN 10204:2004 TYPE 3.1 10204:2004 TYPE 3.1
NO WELD REPAIR WAS PERFORMED ON BELOW PLATE(S)
CO# 125823 GH 377-1561A
PLATES HEAT TREATED - TEST SPECIMENS ATTACHED & YIELD STRENGTH @ .5% EUL
MERCURY IN ANY FORM HAS NOT BEEN USED IN THE PRODUCTION OF THIS ORDER

T030111	811S00740	2	5/16	96	480			8168	54800	75600	8	25
			N 1650 DEG F - 15 MIN									
(M55)MFST REF#:2												
T030118	813S60780	2	5/16	96	480			8168	54000	75500	8	26
			N 1650 DEG F - 15 MIN									
(M55)MFST REF#:2												
T030119 →	813S60780	2	5/16	96	480			8168	53700	75800	8	26
			N 1650 DEG F - 15 MIN									
(M55)MFST REF#:2												

Q-QUENCH TEMPERATURE T-TEMPER TEMPERATURE N-NORMALIZE TEMPERATURE

SERIAL NUMBER	PAT NO.	HEAT NUMBER	HARD BHN	BEND	THICKNESS INCHES	TYPE	SIZE	DIR	TEST TEMP °F	CHARPY IMPACT ENERGY FT LBS 1	2	3	SHEAR(%) 1	2	3	LAT. EXP MILS 1	2	3
T030111		811S00740			.312	V	2/3	L	-50	104	79	87						
T030118		813S60780			.312	V	2/3	L	-50	116	115	114						
T030119		813S60780			.312	V	2/3	L	-50	82	82	72						

Certified a true copy of the original, retained in our file.
AMERICAN ALLOY STEEL, INC.
Reviewed By:
10/8/17/21

HEAT NUMBER	CHEMICAL ANALYSIS C	Mn	P	S	Si	Cu	Ni	Cr	Mo	V	Ti	Al	B	Cb	N	Sn	MQUAID GRAIN SIZE
811S00740	.17	1.07	.011	.006	.329	.221	.19	.03	.007	.002	.002	.037	.0002	.002	.004	.003	
813S60780	.17	1.08	.013	.004	.343	.212	.17	.03	.006	.002	.002	.039	.0002	.002	.003	.003	

AMERICAN ALLOY PLATE #5239608

I certify that the above results are a true and correct copy of actual results contained in records maintained by ArcelorMittal Burns Harbor and are in full compliance with the requirements of the specification cited above. This test report connot be altered and must be transmitted intact with any subsquent third party test reports, if required.

BHPLTRPT.TIF

FARID HASSANI PER MWT
SUPV. QUALITY ASSURANCE

03/19/2021 From: AMERICAN ALLOY STEEL, INC. To: INUKSHUK CONSTRUCTION LIMITED
P.O.#: 341-1001-TX S.O.#: 677336 AA PL#: 5239609
Item: 1 (1 PC) 5/16" X 96" X 480"

ArcelorMittal Burns Harbor Plate

QUALITY ASSURANCE
REPORT OF TEST AND ANAYLSES

US HWY 12 Burns Harbor, Indiana

SHIPMENT NO. 803-69511 | DATE SHIPPED 02-04-21 | CAR OR VEHICLE NO. IHB-MCCOO-BNSF BVRY 062064

SOLD TO:
AMERICAN ALLOY STEEL INC
PO BOX 40469
HOUSTON TX 77240-0469

SHIP TO:
AMERICAN ALLOY STEEL INC
BNSF TR# 7226 MILE 66.4 LN SEG 492
6230 N HOUSTON ROSSLYN RD
HOUSTON TX 77091-3410

NOTE	SERIAL NUMBER	PAT NO.	HEAT NUMBER	NO. PCS.	SIZE AND QUANTITY: THICKNESS	WIDTH OR DIA.	LENGTH	WEIGHT	YIELD POINT	TENSILE STRENGTH	AF FRAC. ELONG.	RED.
					INCHES	INCHES	INCHES	POUNDS	PSI	PSI	IN	% %

QUALITY STEEL MELTED & MANUFACTURED IN THE U. S. A.
PLATES - ASTM A516-17 GR 70 PVQ KLD FINE GRAIN PRAC, ASTM A516-17 GR 65 PVQ, ASTM A516-17 GR 60 PVQ, ASME SA516 GR 70 PVQ 2019 EDITION, ASME SA516 GR 65 PVQ 2019 EDITION, ASME SA516 GR 60 PVQ 2019 EDITION, CH-V SA20S5 PLT L 15/12 FTLBS AT -50F, VACUUM DEGASSED --- PLT NORMALIZED & COOLED IN STILL AIR --- IN ACCORDANCE WITH EN 10204:2004 TYPE 3.1 10204:2004 TYPE 3.1
NO WELD REPAIR WAS PERFORMED ON BELOW PLATE(S)
CO# 125823 GH 377-1561A
PLATES HEAT TREATED - TEST SPECIMENS ATTACHED & YIELD STRENGTH @ .5% EUL
MERCURY IN ANY FORM HAS NOT BEEN USED IN THE PRODUCTION OF THIS ORDER

T030111	811S00740	2	5/16	96	480		8168	54800	75600	8	25	
			N 1650 DEG F - 15 MIN									
(M55)MFST REF#:2												
T030118 →	813S60780	2	5/16	96	480		8168	54000	75500	8	26	
			N 1650 DEG F - 15 MIN									
(M55)MFST REF#:2												
T030119	813S60780	2	5/16	96	480		8168	53700	75800	8	26	
			N 1650 DEG F - 15 MIN									
(M55)MFST REF#:2												

Q-QUENCH TEMPERATURE T-TEMPER TEMPERATURE N-NORMALIZE TEMPERATURE

SERIAL NUMBER	PAT NO.	HEAT NUMBER	HARD BHN	BEND	THICKNESS INCHES	TYPE	SIZE	DIR	TEST TEMP F	CHARPY IMPACT ENERGY FT LBS 1	2	3	SHEAR(%) 1	2	3	LAT. EXP MILS 1	2	3
T030111		811S00740			.312	V	2/3	L	-50	104	79	87						
T030118		813S60780			.312	V	2/3	L	-50	116	115	114						
T030119		813S60780			.312	V	2/3	L	-50	82	82	72						

Certified a true copy of the original, retained in our file.
AMERICAN ALLOY STEEL, INC.
Reviewed By:
2021/17/2

HEAT NUMBER	CHEMICAL ANALYSIS C	Mn	P	S	Si	Cu	Ni	Cr	Mo	V	Ti	Al	B	Cb	N	Sn	MQUAID GRAIN SIZE
811S00740	.17	1.07	.011	.006	.329	.221	.19	.03	.007	.002	.002	.037	.0002		.002	.004	
813S60780	.17	1.08	.013	.004	.343	.212	.17	.03	.006	.002	.002	.039	.0002		.002	.003	

I certify that the above results are a true and correct copy of actual results contained in records maintained by ArcelorMittal Burns Harbor and are in full compliance with the requirements of the specification cited above. This test report cannot be altered and must be transmitted intact with any subsequent third party test reports, if required.

BHPLTRPT.TIF

FARID HASSANI PER MWT
SUPV. QUALITY ASSURANCE

AMERICAN ALLOY PLATE # 5239609

03/19/2021 From:AMERICAN ALLOY STEEL, INC. To: INUKSHUK CONSTRUCTION LIMITED
P.O.#: 341-1001-TX S.O.#: 677336 AA PL#: 5239636
Item: 1 (1 PC) 5/16" X 96" X 480"

AMERICAN ALLOY
PLATE # 5239636

NUCOR PLATE MILL
P.O.Box 279
Winton, NC 27986
(252) 356-3700

Mill Test Report

1505 River Rd
Cofield, NC 27922
(252) 356-3700

NUCOR It's Our Nature.

Issuing Date : 02/04/2021 **B/L No. : 581266** **Load No. : 593742** **Our Order No. : 184010/1** **Cust. Order No. : 125998**

Vehicle No: LW 62025

Specification: 0.3125" x 96.000" x 480.000"
ASTM A516 70/65/60-17/ASME SA516-70/65/60 PVQ 2019/2017
Normalized Plate NACE MR0175 Annex 2.1.2 (2015), MR0103 (2010)
Section 2.1.2 Compliant (2015) 13.1.1, 13.1.2)Vacuum Degassed

Marking : 125998

Sold To: AMERICAN ALLOY STEEL INC
6230 N HOUSTON ROSSLYN RD
PO BOX 40469
NORTH HOUSTON,TX 77091

Ship To: AMERICAN ALLOY STEEL
6230 N HOUSTON ROSSLYN RD
BNSF TR # 7226
MILE 664 LN SEG 492
NORTH HOUSTON,TX 77091

Heat No	C	Mn	P	S	Si	Cu	Ni	Cr	Mo	Al(tot)	V	Nb	Ti	N	Ca	B	Sn	Ceq	Pcm
1600012	0.16	1.04	0.008	0.001	0.17	0.22	0.10	0.09	0.02	0.033	0.004	0.003	0.002	0.0089	0.0021	0.0003	0.009	0.40	0.26

Tensile Test / **Heat Treat**

Plate Serial No	Pieces	Tons	Dir.	Yield (psi)	Tensile (psi)	Elong. % in 2"	Elong. % in 8"	Norm (°F)	Time (min)	Temper (°F)	Time (min)
1600012-03	1	2.04	H-T	53,200	78,300	33.9		1650	16		

Charpy Impacts

Plate Serial No	Pieces	Tons	Dir.	Absorbed Energy (Ft-lbs) (ft-lbs) 1	(ft-lbs) 2	(ft-lbs) 3	(ft-lbs) Ave	Min	Lateral Expansion (in.) (in.) 1	(in.) 2	(in.) 3	(in.) Ave	(in.) Min	Shear (%) (%) 1	(%) 2	(%) 3	(%) Ave	Min	Temp (°F)	Size
1600012-03	1	2.04	H-L	54.7	40.8	52.6	49.4	15											-50	5mm

Certified a true copy of the
original, retained in our file.
AMERICAN ALLOY STEEL, INC.
Reviewed By:
3/15/21

HOT ROLLED CARBON STEEL PLATE
TEST COUPONS TAKEN FROM HEAT TREATED PLATE
Piece frequency charpy;

Manufactured to fully killed fine grain practice by Electric Arc Furnace. Welding or weld repair was not performed on this material.
Mercury has not been used in the direct manufacturing of this material. Produced as continuous cast discrete plate, unless otherwise noted in Specification. For Mexico shipments:nhc-SalesMX@nucor.com
Yield by 0.5EUL method unless otherwise specified. Ceq = C+(Mn/6)+((Cr+Mo+V)/5)+((Cu+Ni)/15)
Pcm = C+(Si/30)+(Mn/20)+(Cu/20)+(Ni/60)+(Cr/20)+(Mo/15)+(V/10)+5B
Melted and Manufactured in the USA. ISO 9001:2015 certified. PED 97/23/EC 7/2 Annex 1, Para. 4.3 Compliant.
DIN 50049 3.1.B/EN 10204 3.1B(2004), DIN EN 10204 3.1(2005) compliant. For ABS grades only, Quality Assurance certificate QA-3624366

We hereby certify that the contents of this report are accurate and correct. All test results and operations performed by the material manufacturer are in compliance with the applicable specifications, including customer specifications.

T. A. Depretis

T. A. Depretis, Metallurgist

2/4/2021 5:58:04 PM

03/19/2021 From:AMERICAN ALLOY STEEL, INC. To: INUKSHUK CONSTRUCTION LIMITED
P.O.#: 341-1001-TX S.O.#: 677336 AA PL#: 5232725
Item: 2 (1 PC) 1/4" X 96" X 480"

AMERICAN ALLOY
PLATE #5232725

NUCOR
PLATE MILL

P.O.Box 279
Winton, NC 27986
(252) 356-3700

Mill Test Report

1505 River Rd
Cofield, NC 27922
(252) 356-3700

NUCOR
It's Our Nature

Issuing Date: 01/17/2021 **B/L No.:** 579490 **Load No.:** 592195 **Our Order No.:** 180671/6 **Cust. Order No.:** 125135

Vehicle No: ALY 91698

Specification: 0.2500" x 96.000" x 480.000"
ASTM A516 70/65/60/485-17/ASME SA516-70/65/60/485 PVQ 2019/2017
Normalized Plate NACE MR0175 Annex 2.1.2 (2015), MR0103 (2010)
Section 2.1.2 (2015) 13.1.1, 13.1.2) Compliant

Marking: 125135

Sold To: AMERICAN ALLOY STEEL INC
6230 N HOUSTON ROSSLYN RD
PO BOX 40469
NORTH HOUSTON,TX 77091

Ship To: AMERICAN ALLOY STEEL
6230 N HOUSTON ROSSLYN RD
BNSF TR # 7226
MILE 664 LN SEG 492
NORTH HOUSTON,TX 77091

Heat No	C	Mn	P	S	Si	Cu	Ni	Cr	Mo	Al(tot)	V	Nb	Ti	N	Ca	B	Sn	Ceq	Pcm
0200021	0.19	0.96	0.010	0.000	0.21	0.16	0.05	0.04	0.01	0.027	0.004	0.000	0.001		0.0010	0.0001	0.000	0.38	0.26

Tensile Test

Plate Serial No	Pieces	Tons	Dir.	Yield (psi)	Tensile (psi)	Elong. % in 2"	Elong. % in 8"
0200021-01	4	6.53	H-T	49,400	71,900	40.0	

Heat Treat

Norm (°F)	Time (min)	Temper (°F)	Time (min)
1650	14		

Charpy Impacts

Plate Serial No	Pieces	Tons	Dir.	Absorbed Energy (Ft-lbs) (ft-lbs) 1	(ft-lbs) 2	(ft-lbs) 3	(ft-lbs) Ave	Min	Lateral Expansion (in.) (in.) 1	(in.) 2	(in.) 3	(in.) Ave	(in.) Min	Shear (%) (%) 1	(%) 2	(%) 3	(%) Ave	Min	Temp (°F)	Size
0200021-01	4	6.53	H-L	60.5	55.2	62.4	59.4	15											-50	5mm

Certified a true copy of the
original, retained in our file.
AMERICAN ALLOY STEEL
J.K 2/26/2021

HOT ROLLED CARBON STEEL PLATE
TEST COUPONS TAKEN FROM HEAT TREATED PLATE
Piece frequency charpy;

Manufactured to fully killed fine grain practice by Electric Arc Furnace. Welding or weld repair was not performed on this material. Mercury has not been used in the direct manufacturing of this material. Produced as continuous cast discrete plate, unless otherwise noted in Specification. For Mexico shipments:nhc-SalesMX@nucor.com
Yield by 0.5EUL method unless otherwise specified. Ceq = C+(Mn/6)+((Cr+Mo+V)/5)+((Cu+Ni)/15)
Pcm = C+(Si/30)+(Mn/20)+(Cu/20)+(Ni/60)+(Cr/20)+(Mo/15)+(V/10)+5B
Melted and Manufactured in the USA. ISO 9001:2015 certified. PED 97/23/EC 7/2 Annex 1, Para. 4.3 Compliant.
DIN 50049 3.1.B/EN 10204 3.1B(2004), DIN EN 10204 3.1(2005) compliant. For ABS grades only, Quality Assurance certificate QA-3624366

We hereby certify that the contents of this report are accurate and correct. All test results and operations performed by the material manufacturer are in compliance with the applicable specifications, including customer specifications.

T. A. Depretis

T. A. Depretis, Metallurgist

1/17/2021 10:03:29 AM

03/19/2021 From: AMERICAN ALLOY STEEL, INC. To: INUKSHUK CONSTRUCTION LIMITED
P.O.#: 341-1001-TX S.O.#: 677336 AA PL#: 5232726
Item: 2 (1 PC) 1/4" X 96" X 480"

NUCOR
PLATE MILL

P.O.Box 279
Winton, NC 27986
(252) 356-3700

Mill Test Report

AMERICAN ALLOY
PLATE #5232726

1505 River Rd
Cofield, NC 27922
(252) 356-3700

NUCOR
It's Our Nature

Issuing Date : 01/17/2021 B/L No. : 579490 Load No. : 592195 Our Order No. : 180671/6 Cust. Order No. : 125135

Vehicle No: ALY 91698

Specification: 0.2500" x 96.000" x 480.000"
ASTM A516 70/65/60/485-17/ASMESA516-70/65/60/485 PVQ 2019/2017
Normalized Plate NACEMR0175 Annex 2.1.2 (2015), MR0103 (2010)
Section 2.1.2 (2015) 13.1.1, 13.1.2)Compliant

Marking: 125135

Sold To: AMERICAN ALLOY STEEL INC
6230 N HOUSTON ROSSLYN RD
PO BOX 40469
NORTH HOUSTON,TX 77091

Ship To: AMERICAN ALLOY STEEL
6230 N HOUSTON ROSSLYN RD
BNSF TR # 7226
MILE664 LN SEG 492
NORTH HOUSTON,TX 77091

Heat No	C	Mn	P	S	Si	Cu	Ni	Cr	Mo	Al(tot)	V	Nb	Ti	N	Ca	B	Sn	Ceq	Pcm
0200021	0.18	0.96	0.010	0.000	0.21	0.16	0.05	0.04	0.01	0.027	0.004	0.000	0.001		0.0010	0.0001	0.000	0.38	0.26

Plate Serial No	Pieces	Tons	Tensile Test Dir.	Yield (psi)	Tensile (psi)	Elong. % in 2"	Elong. % in 8"	Heat Treat Norm (°F)	Time (min)	Temper (°F)	Time (min)
0200021-01	4	6.53	H-T	49,400	71,900	40.0		1650	14		

Plate Serial No	Pieces	Tons	Charpy Impacts Dir.	Absorbed Energy (Ft-lbs) (ft-lbs) 1	(ft-lbs) 2	(ft-lbs) 3	(ft-lbs) Ave	Min	Lateral Expansion (in.) (in.) 1	(in.) 2	(in.) 3	(in.) Ave	(in.) Min	Shear (%) (%) 1	(%) 2	(%) 3	(%) Ave	Min	Temp (°F)	Size
0200021-01	4	6.53	H-L	60.5	55.2	62.4	59.4	15											-50	5mm

HOT ROLLED CARBON STEEL PLATE
TEST COUPONS TAKEN FROM HEAT TREATED PLATE
Piece frequency charpy;

Certified a true copy of the original, retained in our file.
AMERICAN ALLOY STEEL
JK 2/26/2021

Manufactured to fully killed fine grain practice by Electric Arc Furnace. Welding or weld repair was not performed on this material. Mercury has not been used in the direct manufacturing of this material. Produced as continuous cast discrete plate, unless otherwise noted in Specification. For Mexico shipments:nhc-SalesMX@nucor.com
Yield by 0.5EUL method unless otherwise specified. Ceq = C+(Mn/6)+((Cr+Mo+V)/5)+((Cu+Ni)/15)
Pcm = C+(Si/30)+(Mn/20)+(Cu/20)+(Ni/60)+(Cr/20)+(Mo/15)+(V/10)+5B
Melted and Manufactured in the USA. ISO 9001:2015 certified. PED 97/23/EC 7/2 Annex 1, Para. 4.3 Compliant.
DIN 50049 3.1.B/EN 10204 3.1B(2004), DIN EN 10204 3.1(2005) compliant. For ABS grades only, Quality Assurance certificate QA-3624366

We hereby certify that the contents of this report are accurate and correct. All test results and operations performed by the material manufacturer are in compliance with the applicable specifications, including customer specifications.

T. A. Depretis

T. A. Depretis, Metallurgist

1/17/2021 10:03:29 AM

03/19/2021 From: AMERICAN ALLOY STEEL, INC. To: INUKSHUK CONSTRUCTION LIMITED
P.O.#: 341-1001-TX S.O.#: 677336 AA PL#: 5232727
Item: 2 (1 PC) 1/4" X 96" X 480"

NUCOR PLATE MILL

P.O.Box 279
Winton, NC 27986
(252) 356-3700

Mill Test Report

1505 River Rd
Cofield, NC 27922
(252) 356-3700

NUCOR It's Our Nature.

AMERICAN ALLOY
PLATE # 5232727

Issuing Date : 01/17/2021 B/L No. : 579490 Load No. : 592195 Our Order No. : 180671/6 Cust. Order No. : 125135

Vehicle No: ALY91698

Specification: 0.2500" x 96.000" x 480.000"
ASTM A516 70/65/60/485-17/ASMESA516-70/65/60/485 PVQ 2019/2017
Normalized Plate NACEMR0175 Annex 2.1.2 (2015), MR0103 (2010)
Section 2.1.2 (2015) 13.1.1, 13.1.2) Compliant

Marking : 125135

Sold To: AMERICAN ALLOY STEEL INC
6230 N HOUSTON ROSSLYN RD
PO BOX 40469
NORTH HOUSTON,TX 77091

Ship To: AMERICAN ALLOY STEEL
6230 N HOUSTON ROSSLYN RD
BNSF TR # 7226
MILE664 LN SEG 492
NORTH HOUSTON,TX 77091

Heat No	C	Mn	P	S	Si	Cu	Ni	Cr	Mo	Al(tot)	V	Nb	Ti	N	Ca	B	Sn	Ceq	Pcm
0200021	0.19	0.96	0.010	0.000	0.21	0.16	0.05	0.04	0.01	0.027	0.004	0.000	0.001		0.0010	0.0001	0.000	0.38	0.26

Tensile Test

Plate Serial No	Pieces	Tons	Dir.	Yield (psi)	Tensile (psi)	Elong. % in 2"	Elong. % in 8"
0200021-01	4	6.53	H-T	49,400	71,900	40.0	

Heat Treat

Norm (°F)	Time (min)	Temper (°F)	Time (min)
1650	14		

Charpy Impacts

Plate Serial No	Pieces	Tons	Dir.	Absorbed Energy (Ft-lbs) (ft-lbs) 1	(ft-lbs) 2	(ft-lbs) 3	(ft-lbs) Ave	Min	Lateral Expansion (in.) (in.) 1	(in.) 2	(in.) 3	(in.) Ave	(in.) Min	Shear (%) (%) 1	(%) 2	(%) 3	(%) Ave	Min	Temp (°F)	Size
0200021-01	4	6.53	H-L	60.5	55.2	62.4	59.4	15											-50	5mm

Certified a true copy of the original, retained in our file.
AMERICAN ALLOY STEEL
J.K 2/26/2021

HOT ROLLED CARBON STEEL PLATE
TEST COUPONS TAKEN FROM HEAT TREATED PLATE
Piece frequency charpy;

Manufactured to fully killed fine grain practice by Electric Arc Furnace. Welding or weld repair was not performed on this material. Mercury has not been used in the direct manufacturing of this material. Produced as continuous cast discrete plate, unless otherwise noted in Specification. For Mexico shipments:nhc-SalesMX@nucor.com
Yield by 0.5EUL method unless otherwise specified. Ceq = C+(Mn/6)+((Cr+Mo+V)/5)+((Cu+Ni)/15)
Pcm = C+(Si/30)+(Mn/20)+(Cu/20)+(Ni/60)+(Cr/20)+(Mo/15)+(V/10)+5B
Melted and Manufactured in the USA. ISO 9001:2015 certified. PED 97/23/EC 7/2 Annex 1, Para. 4.3 Compliant.
DIN 50049 3.1.B/EN 10204 3.1B(2004), DIN EN 10204 3.1(2005) compliant. For ABS grades only, Quality Assurance certificate QA-3624366

We hereby certify that the contents of this report are accurate and correct. All test results and operations performed by the material manufacturer are in compliance with the applicable specifications, including customer specifications.

T. A. Depretis, Metallurgist

1/17/2021 10:03:29 AM



ABF ARCTIC

6129-C-265-002

740 Baker Lake Tank 8

Quality Assurance/Quality Control

Piping Bender

Préparé par
CONSULTANTS EN SOUDAGE MEQUALTECH Pour
16C-224

ÉPREUVE DE SOUDEUR OU D'OPÉRATEUR
WELDER OR WELDING OPERATOR QUALIFICATION TEST

Note: Les titres désignent également les hommes et les femmes

A. B. F Construction
1310, Avenue Davy,
Rouyn-Noranda,
Québec Canada J9Y 0A8

Désignation de la DMS / *Using WPS No.*: SMAW-11-1

Enregistrement provincial / *Provincial registration*: RN-72.6

Nom du soudeur ou opérateur / *Welder or operator's name*: MACÉ, FREDERICK (FM)

	Variables / *Variables*	Inscrire valeurs / *Record actual values*		Gamme qualifiée / *Qualification range*	
QW-353 Procédé/*Less*	Shielded metal arc welding	SMAW F3 Manuel / *Manual*	SMAW F4 Manuel / *Manual*	**SMAW F3** Manuel / *Manual*	**SMAW F4** Manuel / *Manual*
QW-403 Métaux de base / *Base metals*	Matériaux / *Material*	P1 à/*to* P1	P1 à/*to* P1	**(P1 à/*to* P15F) (P34) (P41 à/*to* P49)**	**(P1 à/*to* P15F) (P34) (P41 à/*to* P49)**
	Diamètre / *Diameter*	2.375" D.E / *O.D*	2.375" D.E / *O.D*	**≥ 1" D.E / *O.D***	**≥ 1" D.E / *O.D***
	Chanf. épaisseur / *Groove thick*	0.343"	0.343"	**Aucune limite / *No limit***	**Aucune limite / *No limit***
	Angle épais. / *Fillet thickness*	Tous / *All*	Tous / *All*	**Aucune limite / *No limit***	**Aucune limite / *No limit***
QW-408 Gaz / *Gaz*	Gaz de soutien / *Backing gas*	N/A	N/A	**N/A**	**N/A**
QW-409 Électricité / *Electrecity*	Courant / *Current*	CC / *DC*	CC / *DC*	**Tous / *All***	**Tous / *All***
	Polarité / *Polarity*	EP / *RP*	EP / *RP*	**Tous / *All***	**Tous / *All***
	Mode transfert / *Transfer mode*	N/A	N/A	**N/A**	**N/A**
QW-404 Métaux d'apport / *Filler metals*	No spec. / Spec No (SFA)	5.1	5.1	**5.1 5.4 5.5**	**5.1 5.4 5.5**
	AWS Classe / *Class*	F3 E-6010	F4 E-7018	**F3**	**F1, F2, F4**
	Dépôt soudure / *Weld deposit*	0.125"	0.218"	**0.250" Maximum**	**0.436" Maximum**
	Pièce inserée / *Insert*	Aucune / *None*	Aucune / *None*	**N/A**	**N/A**
QW-402 Joint	Soutien / *Backing*	Sans soutien *Without backing*	Avec soutien *With backing*	**Avec ou sans soutien *With or without backing***	**Avec soutien *With backing***
QW-405 Position	Position / *Progression*	6G Montant / *Up*	6G Montant / *Up*	**Toutes positions-montant *All positions-up***	**Toutes positions-montant *All positions-up***
QW-360 Machine	Automatique / *Automatic*	N/A	N/A	**N/A**	**N/A**

Résultat de pliage ou de radiographie / ***Guided bend or radiographic results***

QW-191 Specimens	Pliage de coté *Side bend*	Pliage transversal *Transverse bend*	Pliage longitudinal *Longitudinal bend*	Radiogrphie *Radiographic*	ACCEPTÉ / *QUALIFIED*	REFUSÉ / *REFUSED*
FM				√	ACCEPTÉ	

QW-194 Visu / el / *al*: Pénétration complète, fusion complète / *Complete joint penetration, complete fusion*

LABORATOIRE D'ESSAI MEQUALTECH

ONGC/ASNT-TC-1A Level II

0 8 OCT. 2020

Nous certifions que les renseignements ci-dessus sont exacts et que les essais de soudage ont été préparés et exécutés conformement aux exigences de la section IX du Code ASME
We certify that the statements in this record are correct and the test welds were prepared, welded and tested in accordance with the requirements of Section IX of the ASME Code

Entreprise / ***Organization***

A. B. F Construction

Organisme autorisé / ***Accredited organization***

Soudé le / *Welded on*: 2020-10-02

Inspecteur / *Inspetor*:

Accepté / *Accepted*:

Vérifié le / *Inspected on*:

Inspecteur / *Inspector*:

Refusé / *Refused*:

Préparé par
CONSULTANTS EN SOUDAGE MEQUALTECH Pour
16C-224

ÉPREUVE DE SOUDEUR OU D'OPÉRATEUR
WELDER OR WELDING OPERATOR QUALIFICATION TEST

Note: Les titres désignent également les hommes et les femmes

A. B. F Construction
1310, Avenue Davy,
Rouyn-Noranda,
Québec Canada J9Y 0A8

Désignation de la DMS / ***Using WPS No.***: GTSM-88-1

Enregistrement provincial / ***Provincial registration***: RN-74.6

Nom du soudeur ou opérateur / ***Welder or operator's name***: MACÉ, FREDERICK (FM)

	Variables / ***Variables***	**Inscrire valeurs** / ***Record actual values***		**Gamme qualifiée** / ***Qualification range***	
QW-356	Gas Tungsten Arc Welding	GTAW F6	SMAW F5	**GTAW F6**	**SMAW F5**
QW-353	Shielded Metal Arc Welding	Manuel / *Manual*	Manuel / *Manuel*	**Manuel-*Manual***	**Manuel-*Manual***
QW-403 Métaux de base *Base metals*	Matériel / *Material* (P.-No):	P1 à/to P1	P1 à/to P1	**(P1 à/*to* P15F) (P34) (P41 à/*to* P49)**	**(P1 à/*to* P15F) (P34) (P41 à/*to* P49)**
	Diamètre / *Diameter*	2" Sch 160	2" Sch 160	**≥ 1" D.E / O.D**	**≥ 1" D.E / O.D**
	Chanfrein épais. / *Groove thick*	0.343"	0.343"	**Aucune limite / *No limit***	**Aucune limite / *No limit***
	Angle épais. / *Fillet thick*	Tous / *All*	Tous / *All*	**Aucune limite / *No limit***	**Aucune limite / *No limit***
QW-408 Gaz / *Gas*	Gaz de soutien / *Backing gas*	Argon	N/A	**Avec gaz / *With gas***	N/A
QW-409 Électricité *Electricity*	Courant / *Current*	CC / *DC*	CC / *DC*	**CC / *DC***	**Tous / *All***
	Polarité / *Polarity*	EN / *SP*	EP / *RP*	**EN / *SP***	**Tous / *All***
	Mode transfert / *Transfer mode*	N/A	N/A	**N/A**	**N/A**
QW-404 Métaux d'apport *Filler metals*	No spec / *Spec No* (SFA)	5,9	5,4	**5.9 5.18 5.28**	5,4
	AWS Classe / *Class*	F6 ER-309L	F5 E-309L	F6	F5
	Dépôt soudure / *Weld deposit*	0.125"	0.218"	**0.250"**	**0.436" max.**
	Pièce inserée / *Insert*	Aucune / *None*	Aucune / *None*	**N/A**	**N/A**
QW-402 Joint	Soutien / *Backing*	Sans soutien *Without backing*	Avec soutien *With backing*	**Avec ou sans soutien *With or without backing***	**Avec soutien *With backing***
QW-405 Position	Position / *Progression*	6G Montant / *Up*	6G Montant / *Up*	**Toutes positions-montant *All positions-up***	**Toutes positions-montant *All positions-up***
QW-360 Machine	N/A	N/A	N/A	**N/A**	**N/A**

Résultat de pliage ou de radiographie / ***Guided bend or radiographic results***

QW-194 Specimens	Pliage de coté *Side bend*	Pliage transversal *Transverse bend*	Pliage longitudinal *Longitudinal bend*	Radiogrphie *Radiographic*	**ACCEPTÉ** / ***QUALIFIED***	**REFUSÉ** / ***REFUSED***
					√	

ACCEPTÉ

QW-302.4 Visu / el / al
Pénétration complète, fusion complète / *Complete joint penetration, complete fusion*
Résultats de soudure d'angle:(voir verso) / *For fillet weld test results: (see over)*

LABORATOIRE D'ESSAI MEQUALTECH ONGC/ASNT-TC-1A Level II

0 8 OCT. 2020

Nous certifions que les renseignements ci-dessus sont exacts et que les essais de soudage ont été preparés et executés conformément aux exigences de la section IX du Code ASME
We certify that the statements in this record are correct and the test welds were prepared welded and tested in accordance with the requirements of Section IX of the ASME Code

Entreprise / ***Organization***

A. B. F Construction

Organisme autorisé / ***Accredited organization***

Soudé le: 2020-10-02 *Welded on*
Inspecteur: *Inspector*
Accepté: *Qualified on*

Vérifié le: *Inspected on*
Inspecteur: *Inspector*
Refusé: *Refused on*

Préparé par
CONSULTANTS EN SOUDAGE MEQUALTECH Pour
16C-224

ÉPREUVE DE SOUDEUR OU D'OPÉRATEUR
WELDER OR WELDING OPERATOR QUALIFICATION TEST

Note: Les titres désignent également les hommes et les femmes

A. B. F Construction
1310, Avenue Davy,
Rouyn-Noranda,
Québec Canada J9Y 0A8

Désignation de la DMS / *Using WPS No.*: SMAW-11-1

Enregistrement provincial / *Provincial registration*: RN-72.6

Nom du soudeur ou opérateur / *Welder or operator's name*: RENÉ, KEVEN (K2)

	Variables / *Variables*	Inscrire valeurs / *Record actual values*		Gamme qualifiée / *Qualification range*	
QW-353 Procédé/*ess*	Shielded metal arc welding	SMAW F3 Manuel / *Manual*	SMAW F4 Manuel / *Manual*	**SMAW F3** Manuel / *Manual*	**SMAW F4** Manuel / *Manual*
QW-403 Métaux de base / *Base metals*	Matériaux / *Material*	P1 à/*to* P1	P1 à/*to* P1	**(P1 à/*to* P15F) (P34) (P41 à/*to* P49)**	**(P1 à/*to* P15F) (P34) (P41 à/*to* P49)**
	Diamètre / *Diameter*	2.375" D.E / *O.D*	2.375" D.E / *O.D*	**≥ 1" D.E / *O.D***	**≥ 1" D.E / *O.D***
	Chanf. épaisseur / *Groove thick*	0.343"	0.343"	**Aucune limite / *No limit***	**Aucune limite / *No limit***
	Angle épais. / *Fillet thickness*	Tous / *All*	Tous / *All*	**Aucune limite / *No limit***	**Aucune limite / *No limit***
QW-408 Gas / *Gaz*	Gaz de soutien / *Backing gas*	N/A	N/A	**N/A**	**N/A**
QW-409 Électricité / *Electrecity*	Courant / *Current*	CC / *DC*	CC / *DC*	**Tous / *All***	**Tous / *All***
	Polarité / *Polarity*	EP / *RP*	EP / *RP*	**Tous / *All***	**Tous / *All***
	Mode transfert / *Transfer mode*	N/A	N/A	**N/A**	**N/A**
QW-404 Métaux d'apport / *Filler metals*	No spec. / Spec No (SFA)	5.1	5.1	**5.1 5.4 5.5**	**5.1 5.4 5.5**
	AWS Classe / *Class*	F3 E-6010	F4 E-7018	**F3**	**F1, F2, F4**
	Dépôt soudure / *Weld deposit*	0.125"	0.218"	**0.250" Maximum**	**0.436" Maximum**
	Pièce inserée / *Insert*	Aucune / *None*	Aucune / *None*	**N/A**	**N/A**
QW-402 Joint	Soutien / *Backing*	Sans soutien *Without backing*	Avec soutien *With backing*	**Avec ou sans soutien *With or without backing***	**Avec soutien *With backing***
QW-405 Position	Position / *Progression*	6G Montant / *Up*	6G Montant / *Up*	**Toutes positions-montant *All positions-up***	**Toutes positions-montant *All positions-up***
QW-360 Machine	Automatique / *Automatic*	N/A	N/A	**N/A**	**N/A**

Résultat de pliage ou de radiographie / ***Guided bend or radiographic results***

QW-191 Specimens	Pliage de coté *Side bend*	Pliage transversal *Transverse bend*	Pliage longitudinal *Longitudinal bend*	Radiogrphie *Radiographic*	ACCEPTÉ / *QUALIFIED*	REFUSÉ / *REFUSED*
				√	✓	

QW-194 Visu / el / *al*: Pénétration complète, fusion complète / *Complete joint penetration, complete fusion*

LABORATOIRE D'ESSAI MEQUALTECH

ONGC/ASNT-TC-1A Level II

2020-01-23

J-0110252-11

Nous certifions que les renseignements ci-dessus sont exacts et que les essais de soudage ont été préparés et exécutés conformement aux exigences de la section IX du Code ASME
We certify that the statements in this record are correct and the test welds were prepared, welded and tested in accordance with the requirements of Section IX of the ASME Code.

Entreprise / ***Organization***

A. B. F Construction

Organisme autorisé / ***Accredited organization***

Soudé le: *Welded on* 2020 JAN 16

Inspecteur: *Inspetor*

Accepté: *Accepted*

Vérifié le: *Inspected on*

Inspecteur *Inspector*

Refusé: *Refused*

Préparé par
CONSULTANTS EN SOUDAGE MEQUALTECH Pour
16C-224

ÉPREUVE DE SOUDEUR OU D'OPÉRATEUR
WELDER OR WELDING OPERATOR QUALIFICATION TEST

Note: Les titres désignent également les hommes et les femmes

A. B. F Construction
1310, Avenue Davy,
Rouyn-Noranda,
Québec Canada J9Y 0A8

Désignation de la DMS / ***Using WPS No.***: GTSM-88-1

Enregistrement provincial / ***Provincial registration***: RN-74.6

Nom du soudeur ou opérateur / ***Welder or operator's name***: RENÉ, KEVEN (K2)

	Variables / *Variables*	Inscrire valeurs / *Record actual values*		Gamme qualifiée / *Qualification range*	
QW-356 / QW-353	Gas Tungsten Arc Welding / Shielded Metal Arc Welding	GTAW F6 Manuel / *Manuel*	SMAW F5 Manuel / *Manuel*	GTAW F6 Manuel-*Manual*	SMAW F5 Manuel-*Manual*
QW-403 Métaux de base / *Base metals*	Matériel / *Material* (P.-No):	P8 à/to P8 (M)	P8 à/to P8 (M)	(P1 à/to P15F) (P34) (P41 à/to P49)	(P1 à/to P15F) (P34) (P41 à/to P49)
	Diamètre / *Diameter*	2" Sch 160	2" Sch 160	≥ 1" D.E / O.D	≥ 1" D.E / O.D
	Chanfrein épais. / *Groove thick*	0.343"	0.343"	Aucune limite / *No limit*	Aucune limite / *No limit*
	Angle épais. / *Fillet thick.*	Tous / *All*	Tous / *All*	Aucune limite / *No limit*	Aucune limite / *No limit*
QW-408 Gaz / *Gas*	Gaz de soutien / *Backing gas*	Argon	N/A	Avec gaz / *With gas*	N/A
QW-409 Électricité / *Electricity*	Courant / *Current*	CC / *DC*	CC / *DC*	CC / *DC*	Tous / *All*
	Polarité / *Polarity*	EN / *SP*	EP / *RP*	EN / *SP*	Tous / *All*
	Mode transfert / *Transfer mode*	N/A	N/A	N/A	N/A
QW-404 Métaux d'apport / *Filler metals*	No spec / *Spec No* (SFA)	5,9	5,4	5.9 5.18 5.28	5,4
	AWS Classe / *Class*	F6 ER-309L	F5 E-309L	F6	F5
	Dépôt soudure / *Weld deposit*	0.125"	0.218"	0.250"	0.436" max.
	Pièce insérée / *Insert*	Aucune / *None*	Aucune / *None*	N/A	N/A
QW-402 Joint	Soutien / *Backing*	Sans soutien *Without backing*	Avec soutien *With backing*	Avec ou sans soutien *With or without backing*	Avec soutien *With backing*
QW-405 Position	Position / *Progression*	6G Montant / *Up*	6G Montant / *Up*	Toutes positions-montant *All positions-up*	Toutes positions-montant *All positions-up*
QW-360 Machine	N/A	N/A	N/A	N/A	N/A

Résultat de pliage ou de radiographie / ***Guided bend or radiographic results***

QW-194 Specimens	Pliage de coté / *Side bend*	Pliage transversal / *Transverse bend*	Pliage longitudinal / *Longitudinal bend*	Radiogrphie / *Radiographic*	ACCEPTÉ / *QUALIFIED*	REFUSÉ / *REFUSED*
				√	✓	

QW-302.4 Visu / el / al — Pénétration complète, fusion complète / *Complete joint penetration, complete fusion*
Résultats de soudure d'angle:(voir verso) / *For fillet weld test results : (see over)*

LABORATOIRE D'ESSAI MEQUALTECH — ONGC/ASNT-TC-1A Level II

2020-01-23

20M0252-11

Nous certifions que les renseignements ci-dessus sont exacts et que les essais de soudage ont été préparés et exécutés conformement aux exigences de la section IX du Code ASME
We certify that the statements in this record are correct and the test welds were prepared, welded and tested in accordance with the requirements of Section IX of the ASME Code

Entreprise / ***Organization***

A. B. F Construction

Organisme autorisé / ***Accredited organization***

Soudé le : *Welded on* 2020 JAN 16

Inspecteur: *Inspector* (M)

Accepté: *Qualified on*

Vérifié le: *Inspected on*

Inspecteur: *Inspector*

Refusé: *Refused on*

Garlock Sealing Technologies
1666 Division Street
Palmyra, NY 14522
(800) 448-6688

Garlock

Gasket Calculator 6.0

ASME Raised Face Flange *Quick Torque* Reference

(The following table is for Standard **Raised Face Flanges** with ASTM 193 B7 bolts and A194 2H nuts)
(For non-standard flanges please refer to the appropriate tab above. For FLAT FACE Flanges see next section below)

*** - Required Fields**

*** Flange Size & Class:** 6) 2"-150#
Please choose from the list of sizes and classes provided

Bolt Quantity: 4 **Bolt Size:** 5/8 in.

Compressed Sheet, GYLON®, GYLON EPIX™, HOCHDRUCK® 3128 & GRAPH-LOCK® 3125TC Ring Gaskets

Minimum: 69 ft.lbs. **Maximum (Preferred):** 120 ft.lbs.

GRAPH-LOCK® (except 3128 & 3125TC) and MULTI-SWELL™ 3760 & 3760-U Ring Gaskets

Minimum: 69 ft.lbs. **Maximum (Preferred):** 120 ft.lbs.

CMG - Corrugated Metal Gaskets (GRAPHONIC®, TEPHONIC®, GET®, & THERPHONIC®)

Minimum: 87 ft.lbs. **Maximum (Preferred):** 120 ft.lbs.

Kammprofile Gaskets

Minimum: 55 ft.lbs. **Maximum (Preferred):** 120 ft.lbs.

FLEXSEAL® Spiral Wound Gaskets

Minimum: 74 ft.lbs. **Maximum (Preferred):** 120 ft.lbs.

NOTE: The maximum recommended torque does not exceed 60,000 psi bolt stress.

Garlock Sealing Technologies
1666 Division Street
Palmyra, NY 14522
(800) 448-6688

Garlock

Gasket Calculator 6.0

ASME Raised Face Flange *Quick Torque* Reference

(The following table is for Standard **Raised Face Flanges** with ASTM 193 B7 bolts and A194 2H nuts)
(For non-standard flanges please refer to the appropriate tab above. For FLAT FACE Flanges see next section below)

* - Required Fields

* **Flange Size & Class:** 8) 3"-150#
Please choose from the list of sizes and classes provided

Bolt Quantity: 4 **Bolt Size:** 5/8 in.

Compressed Sheet, GYLON®, GYLON EPIX™, HOCHDRUCK® 3128 & GRAPH-LOCK® 3125TC Ring Gaskets

Minimum: 119 ft.lbs. **Maximum (Preferred):** 120 ft.lbs.

GRAPH-LOCK® (except 3128 & 3125TC) and MULTI-SWELL™ 3760 & 3760-U Ring Gaskets

Minimum: 119 ft.lbs. **Maximum (Preferred):** 120 ft.lbs.

CMG - Corrugated Metal Gaskets (GRAPHONIC®, TEPHONIC®, GET®, & THERPHONIC®)

Minimum: 120 ft.lbs. **Maximum (Preferred):** 120 ft.lbs.

Kammprofile Gaskets

Minimum: 102 ft.lbs. **Maximum (Preferred):** 120 ft.lbs.

FLEXSEAL® Spiral Wound Gaskets

Minimum: 120 ft.lbs. **Maximum (Preferred):** 120 ft.lbs.

NOTE: The maximum recommended torque does not exceed 60,000 psi bolt stress.

Garlock Sealing Technologies
1666 Division Street
Palmyra, NY 14522
(800) 448-6688

Garlock

Gasket Calculator 6.0

ASME Raised Face Flange *Quick Torque* Reference

(The following table is for Standard **Raised Face Flanges** with ASTM 193 B7 bolts and A194 2H nuts)
(For non-standard flanges please refer to the appropriate tab above. For FLAT FACE Flanges see next section below)

*** - Required Fields**

*** Flange Size & Class:** 10) 4"-150#
Please choose from the list of sizes and classes provided

Bolt Quantity: 8 **Bolt Size:** 5/8 in.

Compressed Sheet, GYLON®, GYLON EPIX™, HOCHDRUCK® 3128 & GRAPH-LOCK® 3125TC Ring Gaskets

Minimum: 84 ft.lbs. **Maximum (Preferred):** 120 ft.lbs.

GRAPH-LOCK® (except 3128 & 3125TC) and MULTI-SWELL™ 3760 & 3760-U Ring Gaskets

Minimum: 84 ft.lbs. **Maximum (Preferred):** 120 ft.lbs.

CMG - Corrugated Metal Gaskets (GRAPHONIC®, TEPHONIC®, GET®, & THERPHONIC®)

Minimum: 105 ft.lbs. **Maximum (Preferred):** 120 ft.lbs.

Kammprofile Gaskets

Minimum: 76 ft.lbs. **Maximum (Preferred):** 120 ft.lbs.

FLEXSEAL® Spiral Wound Gaskets

Minimum: 92 ft.lbs. **Maximum (Preferred):** 120 ft.lbs.

NOTE: The maximum recommended torque does not exceed 60,000 psi bolt stress.

Garlock Sealing Technologies
1666 Division Street
Palmyra, NY 14522
(800) 448-6688

Garlock

Gasket Calculator 6.0

ASME Raised Face Flange *Quick Torque* Reference

(The following table is for Standard **Raised Face Flanges** with ASTM 193 B7 bolts and A194 2H nuts)
(For non-standard flanges please refer to the appropriate tab above. For FLAT FACE Flanges see next section below)

*** - Required Fields**

*** Flange Size & Class:** 12) 6"-150#
Please choose from the list of sizes and classes provided

Bolt Quantity: 8 **Bolt Size:** 3/4 in.

Compressed Sheet, GYLON®, GYLON EPIX™, HOCHDRUCK® 3128 & GRAPH-LOCK® 3125TC Ring Gaskets

Minimum: 148 ft.lbs. **Maximum (Preferred):** 200 ft.lbs.

GRAPH-LOCK® (except 3128 & 3125TC) and MULTI-SWELL™ 3760 & 3760-U Ring Gaskets

Minimum: 148 ft.lbs. **Maximum (Preferred):** 200 ft.lbs.

CMG - Corrugated Metal Gaskets (GRAPHONIC®, TEPHONIC®, GET®, & THERPHONIC®)

Minimum: 185 ft.lbs. **Maximum (Preferred):** 200 ft.lbs.

Kammprofile Gaskets

Minimum: 137 ft.lbs. **Maximum (Preferred):** 200 ft.lbs.

FLEXSEAL® Spiral Wound Gaskets

Minimum: 178 ft.lbs. **Maximum (Preferred):** 200 ft.lbs.

NOTE: The maximum recommended torque does not exceed 60,000 psi bolt stress.

Garlock Sealing Technologies
1666 Division Street
Palmyra, NY 14522
(800) 448-6688

Garlock

Gasket Calculator 6.0

ASME Raised Face Flange *Quick Torque* Reference

(The following table is for Standard **Raised Face Flanges** with ASTM 193 B7 bolts and A194 2H nuts)
(For non-standard flanges please refer to the appropriate tab above. For FLAT FACE Flanges see next section below)

*** - Required Fields**

*** Flange Size & Class:** 68) 6"-300#
Please choose from the list of sizes and classes provided

Bolt Quantity: 12 **Bolt Size:** 3/4 in.

Compressed Sheet, GYLON®, GYLON EPIX™, HOCHDRUCK® 3128 & GRAPH-LOCK® 3125TC Ring Gaskets

Minimum: 131 ft.lbs. **Maximum (Preferred):** 200 ft.lbs.

GRAPH-LOCK® (except 3128 & 3125TC) and MULTI-SWELL™ 3760 & 3760-U Ring Gaskets

Minimum: 131 ft.lbs. **Maximum (Preferred):** 200 ft.lbs.

CMG - Corrugated Metal Gaskets (GRAPHONIC®, TEPHONIC®, GET®, & THERPHONIC®)

Minimum: 123 ft.lbs. **Maximum (Preferred):** 200 ft.lbs.

Kammprofile Gaskets

Minimum: 92 ft.lbs. **Maximum (Preferred):** 200 ft.lbs.

FLEXSEAL® Spiral Wound Gaskets

Minimum: 118 ft.lbs. **Maximum (Preferred):** 200 ft.lbs.

NOTE: The maximum recommended torque does not exceed 60,000 psi bolt stress.

Garlock Sealing Technologies
1666 Division Street
Palmyra, NY 14522
(800) 448-6688

Garlock

Gasket Calculator 6.0

ASME Raised Face Flange *Quick Torque* Reference

(The following table is for Standard **Raised Face Flanges** with ASTM 193 B7 bolts and A194 2H nuts)
(For non-standard flanges please refer to the appropriate tab above. For FLAT FACE Flanges see next section below)

* - Required Fields

* Flange Size & Class: 13) 8"-150#
Please choose from the list of sizes and classes provided

Bolt Quantity: 8 Bolt Size: 3/4 in.

Compressed Sheet, GYLON®, GYLON EPIX™, HOCHDRUCK® 3128 & GRAPH-LOCK® 3125TC Ring Gaskets

Minimum: 200 ft.lbs. Maximum (Preferred): 200 ft.lbs.

GRAPH-LOCK® (except 3128 & 3125TC) and MULTI-SWELL™ 3760 & 3760-U Ring Gaskets

Minimum: 200 ft.lbs. Maximum (Preferred): 200 ft.lbs.

CMG - Corrugated Metal Gaskets (GRAPHONIC®, TEPHONIC®, GET®, & THERPHONIC®)

Minimum: 250 ft.lbs. Maximum (Preferred): 200 ft.lbs.

Kammprofile Gaskets

Minimum: 190 ft.lbs. Maximum (Preferred): 200 ft.lbs.

FLEXSEAL® Spiral Wound Gaskets

Minimum: 200 ft.lbs. Maximum (Preferred): 200 ft.lbs.

NOTE: The maximum recommended torque does not exceed 60,000 psi bolt stress.

Garlock Sealing Technologies
1666 Division Street
Palmyra, NY 14522
(800) 448-6688

Garlock

Gasket Calculator 6.0

ASME Flat Face Flange *Quick Torque* Reference

(The following table is for Standard **Flat Face Flanges** with ASTM 193 B7 bolts and A194 2H nuts)
WARNING: Garlock does NOT recommend exceeding the flange manufacturer's maximum recommended torque specifically with non-metallic flanges.

*** Flange Size & Class:**
Please choose from the list of sizes and classes provided

Bolt Quantity: #N/A **Bolt Size:** #N/A in.

Elastomeric Gaskets - LESS THAN 70 durometer Shore A

Minimum Recommended Torque per Bolt: #N/A ft.lbs.

Maximum Recommended Torque per Bolt: #N/A ft.lbs.

Elastomeric Gaskets - 70 durometer Shore A AND HIGHER (Including STRESS SAVER Gaskets)

Minimum Recommended Torque per Bolt: #N/A ft.lbs.

Maximum Recommended Torque per Bolt: #N/A ft.lbs.

Verification of Insulation and Continuity of Equipment

90-IDT-5001-SA-00

Circuit : 6174 LT08A - d1 From 6174 LT08A to 6174-LT-09A

Discipline : Electric/Electronic System : _____

INFORMATIONS

Equipment No :	6174 LT-09 A
Voltage used :	4a 20 mA

TESTS

Dielectric Value

	A/G	B/G	C/G	N/G
Reading :				

A/B	A/C	B/C

Megger Model :

Ohmic Value

Pin 1

	A/G	B/G	C/G	N/G
Reading :	OK / OK	OK / OK	N/A / N/A	N/A / N/A

2

1	A/B	A/C	B/C
2	OK / OK	N/A / N/A	N/A / N/A

Multimeter Model : Fluke 1587

	NAME	Signature	Date
Blais Representative	Denis Paquet	Denis Paquet	19-09-2021
Client Representative	MARIO MARCIL	Mario Marcil	19-09-2021

Inspection and Test Data Sheet – Warning Device

90-IDT-5007-SA-00

Circuit : 6174TT08B-J1

Discipline :

Instrument No :	6174TT08
Instrument type :	PRO THERMO NMT539
Manufacturer :	ENDRESS + HAUSER
Serial No :	FM17CA0088

Voltage :	120 mA
Amperage :	
Localisation :	Fuel tank 8
System No :	—

	VERIFICATION BEFORE INSTALLATION	YES	NO	N/A
1.	Power the instrument	☑	☐	☐
2.	Verify the proper functioning	☑	☐	☐

VERIFICATION CARRIED OUT BY CONTRACTOR :			
	NAME	Signature	Date
Contractor representative	Denis Paquet	Denis Paquet	17-09-2021
Client representative			

	INSPECTION	YES	NO	N/A
1.	Instrument are installed as per scope	☑	☐	☐
2.	Equipment ID installed	☑	☐	☐
3.	Cable ID installed	☑	☐	☐
4.	Connection ID at both end	☑	☐	☐
5.	Grounding shield installed	☑	☐	☐
6.	Ground was installed and connected	☑	☐	☐

INSPECTION CARRIED OUT BY CONTRACTOR :			
	NAME	Signature	Date
Contractor representative	Denis Paquet	Denis Paquet	19-09-2021
Client representative			

	TEST	YES	NO	N/A
1.	Simulate the output signal from the instrument to the PLC	☑	☐	☐

TEST CARRIED OUT BY CONTRACTOR :			
	NAME	Signature	Date
Contractor representative	Denis Paquet		19-09-2021
Client representative	MARIO MARCIL	Mario Marcil	19-09-2021

COMPLETED AND COMPLIANT INSTRUMENT INSTALLATION			
	NAME	Signature	Date
Client representative			

Inspection and Test Data Sheet – Warning Device

90-IDT-5007-SA-00

Circuit : 6174 LSHH08 - J1

Discipline :

Instrument No :	6174 LSHH 08
Instrument type :	4 f / 6P encl.
Manufacturer :	Endress + Hauser
Serial No :	S401FS15027

Voltage :	–
Amperage :	–
Localisation :	Fuel tank 08
System No :	–

	VERIFICATION BEFORE INSTALLATION	YES	NO	N/A
1.	Power the instrument	☑	☐	☐
2.	Verify the proper functioning	☑	☐	☐

VERIFICATION CARRIED OUT BY CONTRACTOR :			
	NAME	Signature	Date
Contractor representative	Denis Paquet	Denis Paquet	17-06-202
Client representative			

	INSPECTION	YES	NO	N/A
1.	Instrument are installed as per scope	☑	☐	☐
2.	Equipment ID installed	☑	☐	☐
3.	Cable ID installed	☑	☐	☐
4.	Connection ID at both end	☑	☐	☐
5.	Grounding shield installed	☑	☐	☐
6.	Ground was installed and connected	☑	☐	☐

INSPECTION CARRIED OUT BY CONTRACTOR :			
	NAME	Signature	Date
Contractor representative	Denis Paquet	Denis Paquet	18-05-2021
Client representative			

	TEST	YES	NO	N/A
1.	Simulate the output signal from the instrument to the PLC	☑	☐	☐

TEST CARRIED OUT BY CONTRACTOR :			
	NAME	Signature	Date
Contractor representative	Denis Paquet	Denis Paquet	18-05-2021
Client representative	MARIO MARCIL	Mario Marcil	19-05-2021

COMPLETED AND COMPLIANT INSTRUMENT INSTALLATION			
	NAME	Signature	Date
Client representative			

Inspection and Test Data Sheet – Warning Device

90-IDT-5007-SA-00

Circuit : 6174 LT08A - J1

Discipline :

Instrument No :	6174-LT-08A
Instrument type :	FM 160 S0006X
Manufacturer :	Endress + Hauser
Serial No :	54008001172

Voltage :	85V à 264V
Amperage :	5A
Localisation :	Fuel tank 08
System No :	–

	VERIFICATION BEFORE INSTALLATION	YES	NO	N/A
1.	Power the instrument	☑	☐	☐
2.	Verify the proper functioning	☑	☐	☐

VERIFICATION CARRIED OUT BY CONTRACTOR :			
	NAME	Signature	Date
Contractor representative	Denis Paquet	Denis Paquet	17-05-2021
Client representative			

	INSPECTION	YES	NO	N/A
1.	Instrument are installed as per scope	☑	☐	☐
2.	Equipment ID installed	☑	☐	☐
3.	Cable ID installed	☑	☐	☐
4.	Connection ID at both end	☑	☐	☐
5.	Grounding shield installed	☑	☐	☐
6.	Ground was installed and connected	☑	☐	☐

INSPECTION CARRIED OUT BY CONTRACTOR :			
	NAME	Signature	Date
Contractor representative	Denis Paquet	Denis Paquet	18-09-2021
Client representative			

	TEST	YES	NO	N/A
1.	Simulate the output signal from the instrument to the PLC	☑	☐	☐

TEST CARRIED OUT BY CONTRACTOR :			
	NAME	Signature	Date
Contractor representative	Denis Paquet	Denis Paquet	18-09-2021
Client representative	MARIO MARCIL	Mario Marcil	19-09-2021

COMPLETED AND COMPLIANT INSTRUMENT INSTALLATION			
	NAME	Signature	Date
Client representative			

Inspection and Test Data Sheet – Warning Device

90-IDT-5007-SA-00

Circuit : 6174 LI08 - C1

Discipline : _____

Instrument No :	6174 LI 08
Instrument type :	DK X001
Manufacturer :	Endress + Hauser
Serial No :	S40AE 702000

Voltage :	4a 20 mA
Amperage :	—
Localisation :	C-CAN Fuel TANK
System No :	—

	VERIFICATION BEFORE INSTALLATION	YES	NO	N/A
1.	Power the instrument	☑	☐	☐
2.	Verify the proper functioning	☑	☐	☐

VERIFICATION CARRIED OUT BY CONTRACTOR :			
	NAME	Signature	Date
Contractor representative	Denis Paquet	Denis Paquet	17-09-2021
Client representative			

	INSPECTION	YES	NO	N/A
1.	Instrument are installed as per scope	☑	☐	☐
2.	Equipment ID installed	☑	☐	☐
3.	Cable ID installed	☑	☐	☐
4.	Connection ID at both end	☑	☐	☐
5.	Grounding shield installed	☑	☐	☐
6.	Ground was installed and connected	☑	☐	☐

INSPECTION CARRIED OUT BY CONTRACTOR :			
	NAME	Signature	Date
Contractor representative	Denis Paquet	Denis Paquet	18-09-2021
Client representative			

	TEST	YES	NO	N/A
1.	Simulate the output signal from the instrument to the PLC	☑	☐	☐

TEST CARRIED OUT BY CONTRACTOR :			
	NAME	Signature	Date
Contractor representative	Denis Paquet	Denis Paquet	18-09-2021
Client representative	MARIO BARCIL	Mario Barcil	18-09-2021

COMPLETED AND COMPLIANT INSTRUMENT INSTALLATION			
	NAME	Signature	Date
Client representative			

Inspection and Test Data Sheet – Warning Device

90-IDT-5007-SA-00

Circuit : 6174-XV-08-P1

Discipline :

Instrument No :	6174 XV-08
Instrument type :	SURE 150-15-CW
Manufacturer :	DRESSER
Serial No :	710397 0101

Voltage :	230V
Amperage :	1.40 AMP
Localisation :	Bottom Fuel tank #8
System No :	N/A

	VERIFICATION BEFORE INSTALLATION	YES	NO	N/A
1.	Power the instrument	☑	☐	☐
2.	Verify the proper functioning	☑	☐	☐

VERIFICATION CARRIED OUT BY CONTRACTOR :			
	NAME	Signature	Date
Contractor representative	Denis Paquet	Denis Paquet	19-09-2021
Client representative			

	INSPECTION	YES	NO	N/A
1.	Instrument are installed as per scope	☑	☐	☐
2.	Equipment ID installed	☐	☐	☑
3.	Cable ID installed	☑	☐	☐
4.	Connection ID at both end	☑	☐	☐
5.	Grounding shield installed	☑	☐	☐
6.	Ground was installed and connected	☑	☐	☐

INSPECTION CARRIED OUT BY CONTRACTOR :			
	NAME	Signature	Date
Contractor representative	Denis Paquet	Denis Paquet	19-09-2021
Client representative			

	TEST	YES	NO	N/A
1.	Simulate the output signal from the instrument to the PLC	☑	☐	☐

TEST CARRIED OUT BY CONTRACTOR :			
	NAME	Signature	Date
Contractor representative	Denis Paquet	Denis Paquet	19-09-2021
Client representative	MARIO MARCIL	Mario Marcil	19-09-2021

COMPLETED AND COMPLIANT INSTRUMENT INSTALLATION			
	NAME	Signature	Date
Client representative			

Verification of Insulation and Continuity of Equipment

90-IDT-5001-SA-00

Circuit : 6174LT08A-P1 From - 10P-003 # CB 10

Discipline : Electric/Electronic System : _____

INFORMATIONS

Equipment No :	6174 LT 8A
Voltage used :	120 V

TESTS

Dielectric Value

	A/G	B/G	C/G	N/G
Reading :	< 2.2 GΩ	< 2.2 GΩ	< 2.2 GΩ	N/A

	A/B	A/C	B/C
	< 2.2 GΩ	< 2.2 GΩ	< 2.2 GΩ

Megger Model : Fluke 1587

Ohmic Value

	A/G	B/G	C/G	N/G
Reading :				

	A/B	A/C	B/C

Multimeter Model : _____

	NAME	Signature	Date
Blais Representative	Denis Paquet	Denis Paquet	18-09-2021
Client Representative	MARIO MARCIL	Mario Marcil	19-09-21

Verification of Insulation and Continuity of Equipment

90-IDT-5001-SA-00

Circuit : equip 6174 - HEA - 08 From 6174-DP-06 # 26-28 CB

Discipline : Electric/Electronic System : _____

INFORMATIONS

Equipment No :	6174 - HEA-08
Voltage used :	208 V

TESTS

Dielectric Value

	A/G	B/G	C/G	N/G
Reading :	< 2.2 GΩ	< 2.2 GΩ	< 2.2 GΩ	n/a

A/B	A/C	B/C
< 2.2 GΩ	< 2.2 GΩ	< 2.2 GΩ

Megger Model : Fluke 1587

Ohmic Value

	A/G	B/G	C/G	N/G
Reading :				

A/B	A/C	B/C

Multimeter Model :

	NAME	Signature	Date
Blais Representative	Dave Paquet		18-09-2001
Client Representative	MARIO MACCIA		18-09-2021

Verification of Insulation and Continuity of Equipment

90-IDT-5001-SA-00

Circuit : 6174-XV-09-P1 From 6174i09-003 # 22 CB CCT 25-27

Discipline : Electric/Electronic System : _____

INFORMATIONS

Equipment No :	6124XV-08
Voltage used :	208 V

TESTS

Dielectric Value

	A/G	B/G	C/G	N/G
Reading :	< 2.2 GΩ	< 2.2 GΩ	< 2.2 GΩ	N/A

A/B	A/C	B/C
< 2.2 GΩ	< 2.2 GΩ	< 2.2 GΩ

Megger Model : Fluke 1587

Ohmic Value

	A/G	B/G	C/G	N/G
Reading :				

A/B	A/C	B/C

Multimeter Model : _____

	NAME	Signature	Date
Blais Representative	Denis Paquet	Denis Paquet	18-09-2021
Client Representative	MARIO MARCIL	Mario Marcil	18-09-2021

Verification of Insulation and Continuity of Equipment

90-IDT-5001-SA-00

Circuit : 6174XV-08-C1 From iOP003 # CB 13

Discipline : Electric/Electronic System : _____

INFORMATIONS

Equipment No : 6174XV-08
Voltage used : 120 V

TESTS

Dielectric Value

Reading :

A/G	B/G	C/G	N/G
< 2.2 GΩ	< 2.2 GΩ	< 2.2 GΩ	N/C

A/B	A/C	B/C
< 2.2 GΩ	< 2.2 GΩ	< 2.2 GΩ

Megger Model : FLUKE 1587

Ohmic Value

Reading :

A/G	B/G	C/G	N/G

A/B	A/C	B/C

Multimeter Model :

	NAME	Signature	Date
Blais Representative	Denis Paquet	Denis Paquet	19-09-2021
Client Representative	MARIO MARCIL	Mario Marcil	19-09-2021

Verification of Insulation and Continuity of Equipment

90-IDT-5001-SA-00

Circuit : 6174TT09B-J1 From 6174LT-08A

Discipline : Electric/Electronic System : _____

INFORMATIONS

Equipment No :	6174 TT 09B
Voltage used :	4-20MA

TESTS

Dielectric Value

	A/G	B/G	C/G	N/G
Reading :				

A/B	A/C	B/C

Megger Model :

Ohmic Value

	A/G	B/G	C/G	N/G
Reading :	OK	OK	N/A	N/A

A/B	A/C	B/C
OK	N/A	N/A

Multimeter Model : FLUKE 1587

	NAME	Signature	Date
Blais Representative	Denis Paquet	Denis Paquet	18-09-21
Client Representative	MARIO MARCOTTE	Mario Marcotte	18-09-2021

Verification of Insulation and Continuity of Equipment

90-IDT-5001-SA-00

Circuit : 6174 LI 09 - C1 From 6174LT-08A

Discipline : Electric/Electronic System : _____

INFORMATIONS

Equipment No :	6174 LI 09
Voltage used :	4 à 20ma

TESTS

Dielectric Value

	A/G	B/G	C/G	N/G
Reading :				

A/B	A/C	B/C

Megger Model :

Ohmic Value

Pair

	A/G	B/G	C/G	N/G
Reading : 1	OK	OK	N/A	N/A
2	OK	OK	N/A	N/A

	A/B	A/C	B/C
1	OK	N/A	N/A
2	OK		

Multimeter Model : Fluke 1587

	NAME	Signature	Date
Blais Representative	Denis Paquet	Denis Paquet	18-09-2021
Client Representative	MARIO MACCIA	Mario Maccia	18-09-2021

Verification of Insulation and Continuity of Equipment

90-IDT-5001-SA-00

Circuit : 6174 LSHH09 - J1 From 6174 - 10P-003

Discipline : Electric/Electronic System : _____

INFORMATIONS

Equipment No :	6174 LSH H09
Voltage used :	120 V

TESTS

Dielectric Value

	A/G	B/G	C/G	N/G
Reading :				

A/B	A/C	B/C

Megger Model :

Ohmic Value

	A/G	B/G	C/G	N/G
Reading :	ok	ok	N/A	N/A

A/B	A/C	B/C
ok	N/A	N/A

Multimeter Model : Fluke 1587

	NAME	Signature	Date
Blais Representative	Denis Paquet	Denis Paquet	18-09-2021
Client Representative	MARIO MARCOUX	Mario Marcoux	19-05-2021

ABF ARCTIC

AEM Meadowbank
Project no.6129-C-265-002
Piping Pressure Testing Report

Date	Hydro (Check)	AIR (Check)	Line # or Piping Localisation From	TO	Service		Test Pressure (PSI)	Time	Result #1 OK	Result #1 Drop	Result #2 OK	Result #2 Drop
21/09/21		X	In Tank #8				120	1h	✓	2PSI		
21/09/21		X	Out Tank #8				120	1h	✓	2PSI		
			1h at 120 PSI									

Alex Ste-Marie	21/09/21	Alex Ste-Marie	Rep. ABF Arctic
(Signature)	(Date)	(Print)	
Mario Marcil	21-09-21	MARIO MARCIL	Rep. AEM
(Signature)	(Date)	(Print)	
			Rep. Gouv (if required)
(Signature)	(Date)	(Print)	



ABF ARCTIC

6129-C-265-002

740 Baker Lake Tank 8

Quality Assurance/Quality Control

Electrical Bender

Flange / Joint Assembly Checklist

Company: ASM

Project:	Baker lake tanks 8	Contract No.	6129-C-265-002
Date of installation:	18-09-2021	Document No.	
Location:	Baker Lake		

Drawing Number	Revision	Flange Number:	B1
C1-740-270-001	0	Size	8"
		Class	150
		Grade	A350 / A350

No.	Inspection Activities	Conforms ACCEPT	Conforms N/A	Comments
1	**FLANGES**			
1.1	Check both flanges faces are clean, damage free, finish is in good condition	✓		
1.2	Ensure that the flange surface comply to allowable gasket contact surface flatness and defect depth	✓		
1.3	Are the flanges aligned within tolerance (record the maximum angular mis-alignment in the comments column)	✓		
1.4	Are the flanges aligned within tolerance (record the maximum parallel mis-alignment in the comments column)	✓		
1.5	Confirm the nut seating area on the flanges is clean and smooth	✓		
2	**GASKETS AND STUDS**			
2.1	Is the new gasket free of damage, check for defects in the spiral winding or scoring of the ring type joint surface	✓		3125 ring
2.2	Check that the studs are in good condition and are the correct size and material for the pipe class.	✓		3/4 B7/2H.
3	**TORQUE WRENCH**			
3.1	Equipment and tag:			
3.2	Model / Serial No: 2466 Milwaukee 1/2			
3.3	Torque Range: 12.5-150			
3.4	Calibration expiration Date: New			
4	**BOLT TORQUE**			
4.1	Confirm approved Anti-Seize has been Applied to the studs and the nut seating aera.	—		
4.2	Torque Studs at 33%: 66 LBS/FT	✓		
4.3	Torque Studs at 66%: 132 LBS/FT	✓		
4.4	Torque Studs at 100%: 200 LBS/FT	✓		
4.5	Confirm all studs are 100% tight (complete run)	✓		
4.6	Confirm Flange Identification is installed (written)			

Contractor Inspector

Name: Francois Caouette ASM

Signature:

Date: 18-09-2021

Client Representative

Name: MARIO MARCIL

Signature:

Date: 20-09-21

Flange / Joint Assembly Checklist

Company: AEM

Project:	Baker Lake tank 8	Contract No.	6129-C-005-002
Date of installation:	18-09-2021	Document No.	
Location:	Baker Lake Fuel Farm.		

Drawing Number	Revision	Flange Number:	B2
61-740-270-001	R0	Size	8"
		Class	300#
		Grade	A350/Valve Body

No.	Inspection Activities	Conforms ACCEPT	Conforms N/A	Comments
1	**FLANGES**			
1.1	Check both flanges faces are clean, damage free, finish is in good condition	✓		
1.2	Ensure that the flange surface comply to allowable gasket contact surface flatness and defect depth	✓		
1.3	Are the flanges aligned within tolerance (record the maximum angular mis-alignment in the comments column)	✓		
1.4	Are the flanges aligned within tolerance (record the maximum parallel mis-alignment in the comments column)	✓		
1.5	Confirm the nut seating area on the flanges is clean and smooth	✓		
2	**GASKETS AND STUDS**			
2.1	Is the new gasket free of damage, check for defects in the spiral winding or scoring of the ring type joint surface	✓		3125 Mag
2.2	Check that the studs are in good condition and are the correct size and material for the pipe class.	✓		7/8" B7/2H.
3	**TORQUE WRENCH**			
3.1	Equipment and tag:			
3.2	Model / Serial No: Milwaukee 2466 1/2			
3.3	Torque Range: 12.5/150 —			
3.4	Calibration expiration Date: NEW —			
4	**BOLT TORQUE**			
4.1	Confirm approved Anti-Seize has been Applied to the studs and the nut seating aera.	—		
4.2	Torque Studs at 33%: 106 LBS/FT	✓		
4.3	Torque Studs at 66%: 212. LBS/FT	✓		
4.4	Torque Studs at 100%: 320 LBS/FT	✓		
4.5	Confirm all studs are 100% tight (complete run)	✓		
4.6	Confirm Flange Identification is installed (written)			

Contractor Inspector

Name: Francois Cayette AGM

Signature:

Date: 18-09-2021

Client Representative

Name: MARIO MARCIL

Signature:

Date: 20-09-21

Flange / Joint Assembly Checklist

Company: Agnico-Eagle / Meadowbank

Project:	Baker Lake Tank 8	Contract No.	6129-C-265-003
Date of installation:	18-09-2021	Document No.	
Location:	Baker Lake Fuel Farm		

Drawing Number	Revision	Flange Number:	B3
61-740-270-001	R0	Size	8"
		Class	300#
		Grade	A 350 / Valve Body

No.	Inspection Activities	Conforms ACCEPT	Conforms N/A	Comments
1	**FLANGES**			
1.1	Check both flanges faces are clean, damage free, finish is in good condition	✓		
1.2	Ensure that the flange surface comply to allowable gasket contact surface flatness and defect depth	✓		
1.3	Are the flanges aligned within tolerance (record the maximum angular mis-alignment in the comments column)	✓		
1.4	Are the flanges aligned within tolerance (record the maximum parallel mis-alignment in the comments column)	✓		
1.5	Confirm the nut seating area on the flanges is clean and smooth	✓		
2	**GASKETS AND STUDS**			
2.1	Is the new gasket free of damage, check for defects in the spiral winding or scoring of the ring type joint surface	✓		3175 mng
2.2	Check that the studs are in good condition and are the correct size and material for the pipe class.	✓		7/8 B7-2H
3	**TORQUE WRENCH**			
3.1	Equipment and tag:			
3.2	Model / Serial No: Milwaukee 2466 1/2			
3.3	Torque Range: 12.5/150 -			
3.4	Calibration expiration Date: New -			
4	**BOLT TORQUE**			
4.1	Confirm approved Anti-Seize has been Applied to the studs and the nut seating aera.	—		
4.2	Torque Studs at 33%: 106 LBS/FT	✓		
4.3	Torque Studs at 66%: 212 LBS/FT	✓		
4.4	Torque Studs at 100%: 320 LBS/FT	✓		
4.5	Confirm all studs are 100% tigh: (complete run)	✓		
4.6	Confirm Flange Identification is installed (written)			

Contractor Inspector

Name: François Caouette ASM

Signature:

Date: 18-09-2021

Client Representative

Name: MARIO MARCIL

Signature:

Date: 20-09-21

Flange / Joint Assembly Checklist

Company: Agnico-Eagle Meadowbank.

Project:	Baker Lake Tank 8	Contract No.	6129-C-265-002.
Date of installation:	18-09-2021	Document No.	
Location:	Baker Lake Fuel Farm.		

Drawing Number	Revision	Flange Number:	B4
61-740-270-001	R0	Size	8"
		Class	#300
		Grade	A350 / Valve Body

No.	Inspection Activities	Conforms ACCEPT	Conforms N/A	Comments
1	**FLANGES**			
1.1	Check both flanges faces are clean, damage free, finish is in good condition	✓		
1.2	Ensure that the flange surface comply to allowable gasket contact surface flatness and defect depth	✓		
1.3	Are the flanges aligned within tolerance (record the maximum angular mis-alignment in the comments column)	✓		
1.4	Are the flanges aligned within tolerance (record the maximum parallel mis-alignment in the comments column)	✓		
1.5	Confirm the nut seating area on the flanges is clean and smooth	✓		
2	**GASKETS AND STUDS**			
2.1	Is the new gasket free of damage, check for defects in the spiral winding or scoring of the ring type joint surface	✓		3125-Ring.
2.2	Check that the studs are in good condition and are the correct size and material for the pipe class.	✓		7/8" B7 - 2H.
3	**TORQUE WRENCH**			
3.1	Equipment and tag:			
3.2	Model / Serial No: Milwaukee 2466			
3.3	Torque Range: 12.5 à 150			
3.4	Calibration expiration Date: New.			
4	**BOLT TORQUE**			
4.1	Confirm approved Anti-Seize has been Applied to the studs and the nut seating aera.	—		
4.2	Torque Studs at 33%: 106 LBS/FT	✓		
4.3	Torque Studs at 66%: 212 LBS/FT	✓		
4.4	Torque Studs at 100%: 320 LBS/FT	✓		
4.5	Confirm all studs are 100% tight (complete run)	✓		
4.6	Confirm Flange Identification is installed (written)			

Contractor Inspector

Name: François Cauvette AS

Signature:

Date: 20-09-2021

Client Representative

Name: MARIO MARCIC

Signature:

Date: 20-09-21

Flange / Joint Assembly Checklist

Company: Agnico Eagle Meadowbank

Project:	Baker lake tank 8	Contract No.	6129-C-2765-002
Date of installation:	18-09-2021	Document No.	
Location:	Baker Lake Fuel Farm.		

Drawing Number	Revision	Flange Number:	B5
61-740-270-001	R0	Size	8"
		Class	#300
		Grade	A 350 / Valve Body

No.	Inspection Activities	Conforms ACCEPT	Conforms N/A	Comments
1	**FLANGES**			
1.1	Check both flanges faces are clean, damage free, finish is in good condition	✓		
1.2	Ensure that the flange surface comply to allowable gasket contact surface flatness and defect depth	✓		
1.3	Are the flanges aligned within tolerance (record the maximum angular mis-alignment in the comments column)	✓		
1.4	Are the flanges aligned within tolerance (record the maximum parallel mis-alignment in the comments column)	✓		
1.5	Confirm the nut seating area on the flanges is clean and smooth	✓		
2	**GASKETS AND STUDS**			
2.1	Is the new gasket free of damage, check for defects in the spiral winding or scoring of the ring type joint surface	✓		3125 ring.
2.2	Check that the studs are in good condition and are the correct size and material for the pipe class.	✓		7/8" B7/2H.
3	**TORQUE WRENCH**			
3.1	Equipment and tag:			
3.2	Model / Serial No: Milwaukee 2466 1/2"			
3.3	Torque Range: 125/150.			
3.4	Calibration expiration Date: New			
4	**BOLT TORQUE**			
4.1	Confirm approved Anti-Seize has been Applied to the studs and the nut seating aera.	—		
4.2	Torque Studs at 33%: 106. LBS/FT	✓		
4.3	Torque Studs at 66%: 212 LBS/FT	✓		
4.4	Torque Studs at 100%: 320 LBS/FT	✓		
4.5	Confirm all studs are 100% tight (complete run)	✓		
4.6	Confirm Flange Identification is installed (written)			

Contractor Inspector

Name: Francois Caouette ASM

Signature:

Date: 20-09-2021

Client Representative

Name: MARIO MACCIZ

Signature:

Date: 20-09-21

Flange / Joint Assembly Checklist

Company: Agnico Eagle Meadowbank.

Project:	Baker Lake Tank 8	Contract No.	6129-C-265-003.
Date of installation:	18-09-2021	Document No.	
Location:	Baker Lake Fuel Farm		

Drawing Number	Revision	Flange Number:	B6
61-740-270-001	R0	Size	8"
		Class	#300
		Grade	A350 / A350.

No.	Inspection Activities	Conforms ACCEPT	Conforms N/A	Comments
1	**FLANGES**			
1.1	Check both flanges faces are clean, damage free, finish is in good condition	✓		
1.2	Ensure that the flange surface comply to allowable gasket contact surface flatness and defect depth	✓		
1.3	Are the flanges aligned within tolerance (record the maximum angular mis-alignment in the comments column)	✓		
1.4	Are the flanges aligned within tolerance (record the maximum parallel mis-alignment in the comments column)	✓		
1.5	Confirm the nut seating area on the flanges is clean and smooth	✓		
2	**GASKETS AND STUDS**			
2.1	Is the new gasket free of damage, check for defects in the spiral winding or scoring of the ring type joint surface	✓		3125 ring
2.2	Check that the studs are in good condition and are the correct size and material for the pipe class.	✓		7/8 B7/2H.
3	**TORQUE WRENCH**			
3.1	Equipment and tag:			
3.2	Model / Serial No: Milwaukee 2466.			
3.3	Torque Range: 12.5 – 150			
3.4	Calibration expiration Date: New.			
4	**BOLT TORQUE**			
4.1	Confirm approved Anti-Seize has been Applied to the studs and the nut seating aera.	—		
4.2	Torque Studs at 33%: 106 LBS/FT	✓		
4.3	Torque Studs at 66%: 212 LBS/FT	✓		
4.4	Torque Studs at 100%: 320 LBS/FT	✓		
4.5	Confirm all studs are 100% tight (complete run)	✓		
4.6	Confirm Flange Identification is installed (written)			

Contractor Inspector

Name: François Gauvette ASM

Signature:

Date: 20-09-2021

Client Representative

Name: MARIO MARCIL

Signature:

Date: 20-09-21

Flange / Joint Assembly Checklist

Company: Agnico-Eagle Meadowbank

Project:	Baker lake Fuel Farm tank 8	Contract No.	6029-C-265-002.
Date of installation:	19-09-2021	Document No.	
Location:	Baker Lake.		

Drawing Number	Revision	Flange Number:	B7
61-740-270-001	R0	Size	8"
		Class	#300
		Grade	A350 / A350.

No.	Inspection Activities	Conforms ACCEPT	Conforms N/A	Comments
1	**FLANGES**			
1.1	Check both flanges faces are clean, damage free, finish is in good condition	✓		
1.2	Ensure that the flange surface comply to allowable gasket contact surface flatness and defect depth	✓		
1.3	Are the flanges aligned within tolerance (record the maximum angular mis-alignment in the comments column)	✓		
1.4	Are the flanges aligned within tolerance (record the maximum parallel mis-alignment in the comments column)	✓		
1.5	Confirm the nut seating area on the flanges is clean and smooth	✓		
2	**GASKETS AND STUDS**			
2.1	Is the new gasket free of damage, check for defects in the spiral winding or scoring of the ring type joint surface	✓		3/25 Mag
2.2	Check that the studs are in good condition and are the correct size and material for the pipe class.	✓		7/8 B7-2H.
3	**TORQUE WRENCH**			
3.1	Equipment and tag:			
3.2	Model / Serial No: Milwaukee 2466.			
3.3	Torque Range: 12.5 / 150			
3.4	Calibration expiration Date: New			
4	**BOLT TORQUE**			
4.1	Confirm approved Anti-Seize has been Applied to the studs and the nut seating aera.	✓		
4.2	Torque Studs at 33%: 106 LBS/FT	✓		
4.3	Torque Studs at 66%: 212. LBS/FT	✓		
4.4	Torque Studs at 100%: 320 LBS/FT	✓		
4.5	Confirm all studs are 100% tight (complete run)	✓		
4.6	Confirm Flange Identification is installed (written)			

Contractor Inspector

Name: Francois Caouette AEM

Signature:

Date: 20-09-2021

Client Representative

Name: MARIO BARRE

Signature:

Date: 20-09-21

Flange / Joint Assembly Checklist

Company: Agnico-Eagle Meadowbank.

Project:	Baker Lake tank 08	Contract No.	6189-C-265-002
Date of installation:	18-09-2021	Document No.	
Location:	Baker Lake tank farm		

Drawing Number	Revision	Flange Number:	B8
61-740-270-001	R0.	Size	8"
		Class	#300
		Grade	A350 / Valve body.

No.	Inspection Activities	Conforms ACCEPT	Conforms N/A	Comments
1	**FLANGES**			
1.1	Check both flanges faces are clean, damage free, finish is in good condition	✓		
1.2	Ensure that the flange surface comply to allowable gasket contact surface flatness and defect depth	✓		
1.3	Are the flanges aligned within tolerance (record the maximum angular mis-alignment in the comments column)	✓		
1.4	Are the flanges aligned within tolerance (record the maximum parallel mis-alignment in the comments column)	✓		
1.5	Confirm the nut seating area on the flanges is clean and smooth	✓		
2	**GASKETS AND STUDS**			
2.1	Is the new gasket free of damage, check for defects in the spiral winding or scoring of the ring type joint surface	✓		3125 ring
2.2	Check that the studs are in good condition and are the correct size and material for the pipe class.	✓		7/8 B7-2H.
3	**TORQUE WRENCH**			
3.1	Equipment and tag:			
3.2	Model / Serial No: Milwaukee. 2466.			
3.3	Torque Range: 12.5-150			
3.4	Calibration expiration Date: New			
4	**BOLT TORQUE**			
4.1	Confirm approved Anti-Seize has been Applied to the studs and the nut seating aera.	✓		
4.2	Torque Studs at 33%: 106 LBS/FT	✓		
4.3	Torque Studs at 66%: 212. LBS/FT	✓		
4.4	Torque Studs at 100%: 300. LBS/FT	✓		
4.5	Confirm all studs are 100% tight (complete run)	✓		
4.6	Confirm Flange Identification is installed (written)			

Contractor Inspector

Name: Francois Gouette ASM

Signature:

Date: 20-09-2021

Client Representative

Name: MARIO MARCIL

Signature: Mario Marcil

Date: 20-09-21

Flange / Joint Assembly Checklist

Company: Agnico -Eagle Meadowbank

Project:	Baker lake tank 8.	Contract No.	6179-C-265-002.
Date of installation:	19-09-2021	Document No.	
Location:	Baker lake tank Farm.		

Drawing Number	Revision	Flange Number:	B9
61-740-270-001	R0.	Size	8"
		Class	#150
		Grade	A350 - Valve body

No.	Inspection Activities	Conforms ACCEPT	Conforms N/A	Comments
1	**FLANGES**			
1.1	Check both flanges faces are clean, damage free, finish is in good condition	✓		
1.2	Ensure that the flange surface comply to allowable gasket contact surface flatness and defect depth	✓		
1.3	Are the flanges aligned within tolerance (record the maximum angular mis-alignment in the comments column)	✓		
1.4	Are the flanges aligned within tolerance (record the maximum parallel mis-alignment in the comments column)	✓		
1.5	Confirm the nut seating area on the flanges is clean and smooth	✓		
2	**GASKETS AND STUDS**			
2.1	Is the new gasket free of damage, check for defects in the spiral winding or scoring of the ring type joint surface	✓		3125 - Ring.
2.2	Check that the studs are in good condition and are the correct size and material for the pipe class.	✓		3/4" B7 - 2H.
3	**TORQUE WRENCH**			
3.1	Equipment and tag:			
3.2	Model / Serial No: Milwaukee 2466.			
3.3	Torque Range: 125-150			
3.4	Calibration expiration Date: New			
4	**BOLT TORQUE**			
4.1	Confirm approved Anti-Seize has been Applied to the studs and the nut seating aera.	—		
4.2	Torque Studs at 33%: 66. LBS/FT	✓		
4.3	Torque Studs at 66%: 132 LBS/FT	✓		
4.4	Torque Studs at 100%: 200 LBS/FT	✓		
4.5	Confirm all studs are 100% tight (complete run)	✓		
4.6	Confirm Flange Identification is installed (written)			

Contractor Inspector

Name: Francois Cauette ASM

Signature:

Date: 20-09-2021

Client Representative

Name: MARIO MARCIL

Signature:

Date: 20-09-21

Flange / Joint Assembly Checklist

Company: Agnico Eagle Meadowbank

Project:	Baker lake tank 8	Contract No.	6129-C-265-002
Date of installation:	18-09-2021	Document No.	
Location:	Baker Lake Fuel Farm.		

Drawing Number	Revision	Flange Number:	B10
61-740-270-001	R0	Size	8"
		Class	#150
		Grade	A350-Valve Body

No.	Inspection Activities	Conforms ACCEPT	Conforms N/A	Comments
1	**FLANGES**			
1.1	Check both flanges faces are clean, damage free, finish is in good condition	✓		
1.2	Ensure that the flange surface comply to allowable gasket contact surface flatness and defect depth	✓		
1.3	Are the flanges aligned within tolerance (record the maximum angular mis-alignment in the comments column)	✓		
1.4	Are the flanges aligned within tolerance (record the maximum parallel mis-alignment in the comments column)	✓		
1.5	Confirm the nut seating area on the flanges is clean and smooth	✓		
2	**GASKETS AND STUDS**			
2.1	Is the new gasket free of damage, check for defects in the spiral winding or scoring of the ring type joint surface	✓		3125-Ring
2.2	Check that the studs are in good condition and are the correct size and material for the pipe class.	✓		3/4" B7 -2H.
3	**TORQUE WRENCH**			
3.1	Equipment and tag:			
3.2	Model / Serial No: Milwaukee 2466			
3.3	Torque Range: 12.5-150.			
3.4	Calibration expiration Date: New			
4	**BOLT TORQUE**			
4.1	Confirm approved Anti-Seize has been Applied to the studs and the nut seating aera.	—		
4.2	Torque Studs at 33%: 66. LBS/FT	✓		
4.3	Torque Studs at 66%: 132 LBS/FT	✓		
4.4	Torque Studs at 100%: 200 LBS/FT	✓		
4.5	Confirm all studs are 100% tight (complete run)	✓		
4.6	Confirm Flange Identification is installed (written)			

Contractor Inspector

Name: Francois Caouette ASM

Signature:

Date: 20-09-2021

Client Representative

Name: MARIO MARCIL

Signature:

Date: 20-09-21

Flange / Joint Assembly Checklist

Company: Agnico Eagle Meadowbank.

Project:	Baker Lake Tank 8	Contract No.	6129-C-265-002.
Date of installation:	18-09-2021	Document No.	
Location:	Baker Lake Fuel Farm.		

Drawing Number	Revision	Flange Number:	B11
61-740-270-001	R0	Size	6"
		Class	#300
		Grade	A350 - Valve body

No.	Inspection Activities	Conforms ACCEPT	Conforms N/A	Comments
1	**FLANGES**			
1.1	Check both flanges faces are clean, damage free, finish is in good condition	✓		
1.2	Ensure that the flange surface comply to allowable gasket contact surface flatness and defect depth	✓		
1.3	Are the flanges aligned within tolerance (record the maximum angular mis-alignment in the comments column)	✓		
1.4	Are the flanges aligned within tolerance (record the maximum parallel mis-alignment in the comments column)	✓		
1.5	Confirm the nut seating area on the flanges is clean and smooth	✓		
2	**GASKETS AND STUDS**			
2.1	Is the new gasket free of damage, check for defects in the spiral winding or scoring of the ring type joint surface	✓		3125 - Ring
2.2	Check that the studs are in good condition and are the correct size and material for the pipe class.	✓		3/4 B7 - 2H.
3	**TORQUE WRENCH**			
3.1	Equipment and tag:			
3.2	Model / Serial No: Milwaukee 2466			
3.3	Torque Range: 12.5 - 150			
3.4	Calibration expiration Date: Now.			
4	**BOLT TORQUE**			
4.1	Confirm approved Anti-Seize has been Applied to the studs and the nut seating aera.	✓		
4.2	Torque Studs at 33%: 66. LBS/FT	✓		
4.3	Torque Studs at 66%: 132. LBS/FT	✓		
4.4	Torque Studs at 100%: 200 LBS/FT	✓		
4.5	Confirm all studs are 100% tight (complete run)	✓		
4.6	Confirm Flange Identification is installed (written)			

Contractor Inspector

Name: François Caouette ASM

Signature:

Date: 28-09-2021.

Client Representative

Name: MARIO MARCIL

Signature:

Date: 20-19-20

Flange / Joint Assembly Checklist

Company: Agnico-Eagle Meadowbank

Project:	Baker Lake tank 8	Contract No.	6129-C-265-002
Date of installation:	18-09-2021	Document No.	
Location:	Baker Lake Fuel Farm.		

Drawing Number	Revision	Flange Number:	B12
61-740-270-001	R0	Size	6"
		Class	#300
		Grade	A350 - Valve body

No.	Inspection Activities	Conforms ACCEPT	Conforms N/A	Comments
1	**FLANGES**			
1.1	Check both flanges faces are clean, damage free, finish is in good condition	✓		
1.2	Ensure that the flange surface comply to allowable gasket contact surface flatness and defect depth	✓		
1.3	Are the flanges aligned within tolerance (record the maximum angular mis-alignment in the comments column)	✓		
1.4	Are the flanges aligned within tolerance (record the maximum parallel mis-alignment in the comments column)	✓		
1.5	Confirm the nut seating area on the flanges is clean and smooth	✓		
2	**GASKETS AND STUDS**			
2.1	Is the new gasket free of damage, check for defects in the spiral winding or scoring of the ring type joint surface	✓		3125 - Ring
2.2	Check that the studs are in good condition and are the correct size and material for the pipe class.	✓		5/4 B7 - 2H
3	**TORQUE WRENCH**			
3.1	Equipment and tag: TW 3401			
3.2	Model / Serial No: Milwaukee 2466			
3.3	Torque Range: 125-150 — 50-600	✓		
3.4	Calibration expiration Date: New.	✓		
4	**BOLT TORQUE**			
4.1	Confirm approved Anti-Seize has been Applied to the studs and the nut seating aera.	✓		
4.2	Torque Studs at 33%: 66 LBS/FT	✓		
4.3	Torque Studs at 66%: 132 LBS/FT	✓		
4.4	Torque Studs at 100%: 200 LBS/FT	✓		
4.5	Confirm all studs are 100% tight (complete run)	✓		
4.6	Confirm Flange Identification is installed (written)	✓		

Contractor Inspector

Name: Francois Gauvette

Signature:

Date: 19-09-2021

Client Representative

Name: MARIO MARCIL

Signature:

Date: 19-09-21

Flange / Joint Assembly Checklist

Company: Agnico Eagle Meadowbank.

Project:	Baker Lake tank 8	Contract No.	6129-C-265-002
Date of installation:	18-09-2021	Document No.	
Location:	Baker Lake tank Farm		

Drawing Number	Revision	Flange Number:	B13
61-740-270-001	RD	Size	6"
		Class	150 #
		Grade	A350 - Valve body

No.	Inspection Activities	Conforms ACCEPT	Conforms N/A	Comments
1	**FLANGES**			
1.1	Check both flanges faces are clean, damage free, finish is in good condition	✓		
1.2	Ensure that the flange surface comply to allowable gasket contact surface flatness and defect depth	✓		
1.3	Are the flanges aligned within tolerance (record the maximum angular mis-alignment in the comments column)	✓		
1.4	Are the flanges aligned within tolerance (record the maximum parallel mis-alignment in the comments column)	✓		
1.5	Confirm the nut seating area on the flanges is clean and smooth	✓		
2	**GASKETS AND STUDS**			
2.1	Is the new gasket free of damage, check for defects in the spiral winding or scoring of the ring type joint surface	✓		3125-Ring
2.2	Check that the studs are in good condition and are the correct size and material for the pipe class.	✓		3/4 B7 -2H.
3	**TORQUE WRENCH**			
3.1	Equipment and tag: TW 3/4 01	✓		
3.2	Model / Serial No: Milwaukee 2466.	✓		
3.3	Torque Range: 12.5 - 150 — 50 - 600	✓		
3.4	Calibration expiration Date: New.	✓		
4	**BOLT TORQUE**			
4.1	Confirm approved Anti-Seize has been Applied to the studs and the nut seating aera.	—		
4.2	Torque Studs at 33%: 66 LBS/FT	✓		
4.3	Torque Studs at 66%: 130. LBS/FT	✓		
4.4	Torque Studs at 100%: 200 LBS/FT	✓		
4.5	Confirm all studs are 100% tight (complete run)	✓		
4.6	Confirm Flange Identification is installed (written)	✓		

Contractor Inspector

Name: François Gauvette

Signature:

Date: 18-09-2021

Client Representative

Name: MARIO MARCIL

Signature:

Date: 18-09-21

Flange / Joint Assembly Checklist

Company: Agnico-Eagle. Meadow bank.

Project:	Baker Lake tank 8	Contract No.	6129-C-265-003
Date of installation:	18-09-2024	Document No.	
Location:	Baker Lake Fuel Farm.		

Drawing Number	Revision	Flange Number:	B/4
61-740-270-001	R0	Size	6"
		Class	#150
		Grade	Flex-valve body

No.	Inspection Activities	Conforms ACCEPT	Conforms N/A	Comments
1	**FLANGES**			
1.1	Check both flanges faces are clean, damage free, finish is in good condition	✓		
1.2	Ensure that the flange surface comply to allowable gasket contact surface flatness and defect depth	✓		
1.3	Are the flanges aligned within tolerance (record the maximum angular mis-alignment in the comments column)	✓		
1.4	Are the flanges aligned within tolerance (record the maximum parallel mis-alignment in the comments column)	✓		
1.5	Confirm the nut seating area on the flanges is clean and smooth	✓		
2	**GASKETS AND STUDS**			
2.1	Is the new gasket free of damage, check for defects in the spiral winding or scoring of the ring type joint surface	✓		3/25-Ring
2.2	Check that the studs are in good condition and are the correct size and material for the pipe class.	✓		3/4 B7-2H.
3	**TORQUE WRENCH**			
3.1	Equipment and tag: TW 3/4 01			
3.2	Model / Serial No: Milwaukee 2466.			
3.3	Torque Range: 12.5-150 — 50-600	✓		
3.4	Calibration expiration Date: New.	✓		
4	**BOLT TORQUE**			
4.1	Confirm approved Anti-Seize has been Applied to the studs and the nut seating aera.	—		
4.2	Torque Studs at 33%: 66 LBS/FT	✓		
4.3	Torque Studs at 66%: 132 LBS/FT	✓		
4.4	Torque Studs at 100%: 200 LBS/FT	✓		
4.5	Confirm all studs are 100% tight (complete run)	✓		
4.6	Confirm Flange Identification is installed (written)	✓		

Contractor Inspector

Name: François Caouette

Signature:

Date: 18-09-2024

Client Representative

Name: MARIO MAREIL

Signature:

Date: 19-09-24

Flange / Joint Assembly Checklist

Company: Agnico Eagle Meadowbank.

Project:	Baker Lake tank 8	Contract No.	6129-C-265-002.
Date of installation:	19-09-2021	Document No.	
Location:	Baker Lake Fuel Farm.		

Drawing Number	Revision	Flange Number:	B15
61-740-270-001	R0.	Size	6"
		Class	#150
		Grade	A350/A350

No.	Inspection Activities	Conforms ACCEPT	Conforms N/A	Comments
1	**FLANGES**			
1.1	Check both flanges faces are clean, damage free, finish is in good condition	✓		
1.2	Ensure that the flange surface comply to allowable gasket contact surface flatness and defect depth	✓		
1.3	Are the flanges aligned within tolerance (record the maximum angular mis-alignment in the comments column)	✓		
1.4	Are the flanges aligned within tolerance (record the maximum parallel mis-alignment in the comments column)	✓		
1.5	Confirm the nut seating area on the flanges is clean and smooth	✓		
2	**GASKETS AND STUDS**			
2.1	Is the new gasket free of damage, check for defects in the spiral winding or scoring of the ring type joint surface	✓		3/25 - Ring
2.2	Check that the studs are in good condition and are the correct size and material for the pipe class.	✓		3/4 B7-2H.
3	**TORQUE WRENCH**			
3.1	Equipment and tag: TW 3/4 01			
3.2	Model / Serial No: Milwaukee D4466			
3.3	Torque Range: 12.5 - 150. — 50 - 600			
3.4	Calibration expiration Date: New.			
4	**BOLT TORQUE**			
4.1	Confirm approved Anti-Seize has been Applied to the studs and the nut seating aera.	✓		
4.2	Torque Studs at 33%: 66 LBS/FT	✓		
4.3	Torque Studs at 66%: 132. LBS/FT	✓		
4.4	Torque Studs at 100%: 200 LBS/FT	✓		
4.5	Confirm all studs are 100% tight (complete run)	✓		
4.6	Confirm Flange Identification is installed (written)	✓		

Contractor Inspector

Name: François Caouette

Signature:

Date: 19-09-2021

Client Representative

Name: MARIO MARCIL

Signature:

Date: 19-09-21

Flange / Joint Assembly Checklist

Company: Agnico Eagle Meadowbank.

Project:	Baker lake tank 8	Contract No.	6129-C-265-002.
Date of installation:	18-09-2021	Document No.	
Location:	Baker Lake Fuel Farm		

Drawing Number	Revision	Flange Number:	B16
61-740-270-001	R0	Size	6"
		Class	#150
		Grade	A350 / Valve Body

No.	Inspection Activities	Conforms ACCEPT	Conforms N/A	Comments
1	**FLANGES**			
1.1	Check both flanges faces are clean, damage free, finish is in good condition	✓		
1.2	Ensure that the flange surface comply to allowable gasket contact surface flatness and defect depth	✓		
1.3	Are the flanges aligned within tolerance (record the maximum angular mis-alignment in the comments column)	✓		
1.4	Are the flanges aligned within tolerance (record the maximum parallel mis-alignment in the comments column)	✓		
1.5	Confirm the nut seating area on the flanges is clean and smooth	✓		
2	**GASKETS AND STUDS**			
2.1	Is the new gasket free of damage, check for defects in the spiral winding or scoring of the ring type joint surface	✓		3125-Ring
2.2	Check that the studs are in good condition and are the correct size and material for the pipe class.	✓		3/4 B7-2H
3	**TORQUE WRENCH**			
3.1	Equipment and tag: TW-34-01			
3.2	Model / Serial No: Milwaukee 2466			
3.3	Torque Range: 12.5-150 — 50-600			
3.4	Calibration expiration Date: New			
4	**BOLT TORQUE**			
4.1	Confirm approved Anti-Seize has been Applied to the studs and the nut seating aera.	—		
4.2	Torque Studs at 33%: 66 LBS/FT	✓		
4.3	Torque Studs at 66%: 132 LBS/FT	✓		
4.4	Torque Studs at 100%: 200 LBS/FT	✓		
4.5	Confirm all studs are 100% tight (complete run)	✓		
4.6	Confirm Flange Identification is installed (written)	✓		

Contractor Inspector

Name: Francois Caouette

Signature:

Date: 19-09-2021

Client Representative

Name: MARIO MARCIL

Signature:

Date: 19-09-21

Flange / Joint Assembly Checklist

Company: Agnico Eagle Meadowbank

Project:	Baker lake tank 8	Contract No.	6129-C-265-002
Date of installation:	18-09-2021	Document No.	
Location:	Baker lake Fuel Farm		

Drawing Number	Revision	Flange Number:	B17.
61-740-270-0001	R0	Size	2"
		Class	# 150
		Grade	A350 . Tank. A350

No.	Inspection Activities	Conforms ACCEPT	Conforms N/A	Comments
1	**FLANGES**			
1.1	Check both flanges faces are clean, damage free, finish is in good condition	✓		
1.2	Ensure that the flange surface comply to allowable gasket contact surface flatness and defect depth	✓		
1.3	Are the flanges aligned within tolerance (record the maximum angular mis-alignment in the comments column)	✓		
1.4	Are the flanges aligned within tolerance (record the maximum parallel mis-alignment in the comments column)	✓		
1.5	Confirm the nut seating area on the flanges is clean and smooth	✓		
2	**GASKETS AND STUDS**			
2.1	Is the new gasket free of damage, check for defects in the spiral winding or scoring of the ring type joint surface	✓		3125-Ring
2.2	Check that the studs are in good condition and are the correct size and material for the pipe class.	✓		1 5/8" B7-2H
3	**TORQUE WRENCH**			
3.1	Equipment and tag:			
3.2	Model / Serial No: Milwaukee 2466			
3.3	Torque Range: 12.5-150.			
3.4	Calibration expiration Date: New			
4	**BOLT TORQUE**			
4.1	Confirm approved Anti-Seize has been Applied to the studs and the nut seating aera.	—		
4.2	Torque Studs at 33%: 40 LBS/FT	✓		
4.3	Torque Studs at 66%: 80 LBS/FT	✓		
4.4	Torque Studs at 100%: 120 LBS/FT	✓		
4.5	Confirm all studs are 100% tight (complete run)	✓		
4.6	Confirm Flange Identification is installed (written)			

Contractor Inspector

Name: Alex Ste-Marie

Signature: ASM

Date: 20/09/21

Client Representative

Name: MARIO MARCIL

Signature: Mario Marcil

Date: 20-09-21

Flange / Joint Assembly Checklist

Company: Agnico-Eagle Meadowbank

Project:	Baker lake tank 8	Contract No.	6129-C-265-002.
Date of installation:	8-09-2021	Document No.	
Location:	Baker lake Fuel Farm		

Drawing Number	Revision		
61-740-270-001	R0	Flange Number:	B18
		Size	2"
		Class	#150
		Grade	A350 / Tank A350

No.	Inspection Activities	Conforms		Comments
		ACCEPT	N/A	
1	**FLANGES**			
1.1	Check both flanges faces are clean, damage free, finish is in good condition	✓		
1.2	Ensure that the flange surface comply to allowable gasket contact surface flatness and defect depth	✓		
1.3	Are the flanges aligned within tolerance (record the maximum angular mis-alignment in the comments column)	✓		
1.4	Are the flanges aligned within tolerance (record the maximum parallel mis-alignment in the comments column)	✓		
1.5	Confirm the nut seating area on the flanges is clean and smooth	✓		
2	**GASKETS AND STUDS**			
2.1	Is the new gasket free of damage, check for defects in the spiral winding or scoring of the ring type joint surface	✓		3125-Ring
2.2	Check that the studs are in good condition and are the correct size and material for the pipe class.	✓		5/8" B7 - 2H
3	**TORQUE WRENCH**			
3.1	Equipment and tag:			
3.2	Model / Serial No: Milwaukee 2466			
3.3	Torque Range: 125-150			
3.4	Calibration expiration Date: New			
4	**BOLT TORQUE**			
4.1	Confirm approved Anti-Seize has been Applied to the studs and the nut seating aera.	—		
4.2	Torque Studs at 33%: 40 LBS/FT	✓		
4.3	Torque Studs at 66%: 80 LBS/FT	✓		
4.4	Torque Studs at 100%: 120 LBS/FT	✓		
4.5	Confirm all studs are 100% tight (complete run)	✓		
4.6	Confirm Flange Identification is installed (written)			

Contractor Inspector

Name: Alex Ste. Marie

Signature: ASM

Date: 20/09/21

Client Representative

Name: MARIO MARCIL

Signature: Mario Marcil

Date: 20-09-21

Flange / Joint Assembly Checklist

Company: Agnico-Eagle Meadowbank.

Project:	Baker lake tank 8	Contract No.	6129-C-265-002.
Date of installation:	18-09-2021	Document No.	
Location:	Baker lake Fuel Farm		

Drawing Number	Revision	Flange Number:	B19
6-340-270-001	R0	Size	6"
		Class	#150.
		Grade	A350 / A. Valve Casting.

No.	Inspection Activities	Conforms ACCEPT	Conforms N/A	Comments
1	**FLANGES**			
1.1	Check both flanges faces are clean, damage free, finish is in good condition	✓		
1.2	Ensure that the flange surface comply to allowable gasket contact surface flatness and defect depth	✓		
1.3	Are the flanges aligned within tolerance (record the maximum angular mis-alignment in the comments column)	✓		
1.4	Are the flanges aligned within tolerance (record the maximum parallel mis-alignment in the comments column)	✓		
1.5	Confirm the nut seating area on the flanges is clean and smooth	✓		
2	**GASKETS AND STUDS**			
2.1	Is the new gasket free of damage, check for defects in the spiral winding or scoring of the ring type joint surface	✓		3125-Ring
2.2	Check that the studs are in good condition and are the correct size and material for the pipe class.	✓		3/4 B7-2H.
3	**TORQUE WRENCH**			
3.1	Equipment and tag:			
3.2	Model / Serial No: Milwaukee 2466			
3.3	Torque Range: 12.5-150			
3.4	Calibration expiration Date: New.			
4	**BOLT TORQUE**			
4.1	Confirm approved Anti-Seize has been Applied to the studs and the nut seating aera.	✓		
4.2	Torque Studs at 33%: 66 LBS/FT	✓		
4.3	Torque Studs at 66%: 132. LBS/FT	✓		
4.4	Torque Studs at 100%: 200 LBS/FT	✓		
4.5	Confirm all studs are 100% tight (complete run)	✓		
4.6	Confirm Flange Identification is installed (written)			

Contractor Inspector

Name: Alex St-Marie

Signature: ASM

Date: 20/09/21

Client Representative

Name: MARIO MARCIL

Signature: Mario Marcil

Date: 19-09-21

Flange / Joint Assembly Checklist

Company: Agnico-Eagle Meadowbank.

Project:	Baker lake Tank 8.	Contract No.	6129-C-265-002
Date of installation:	18-09-2021	Document No.	
Location:	Baker lake tank Farm.		

Drawing Number	Revision	Flange Number:	B30
61- 740-270-001	R0.	Size	6"
		Class	150#
		Grade	A350. /valve casing.

No.	Inspection Activities	Conforms ACCEPT	Conforms N/A	Comments
1	**FLANGES**			
1.1	Check both flanges faces are clean, damage free, finish is in good condition	✓		
1.2	Ensure that the flange surface comply to allowable gasket contact surface flatness and defect depth	✓		
1.3	Are the flanges aligned within tolerance (record the maximum angular mis-alignment in the comments column)	✓		
1.4	Are the flanges aligned within tolerance (record the maximum parallel mis-alignment in the comments column)	✓		
1.5	Confirm the nut seating area on the flanges is clean and smooth	✓		
2	**GASKETS AND STUDS**			
2.1	Is the new gasket free of damage, check for defects in the spiral winding or scoring of the ring type joint surface	✓		3125 - Ring
2.2	Check that the studs are in good condition and are the correct size and material for the pipe class.	✓		3/4 B7 - 2H.
3	**TORQUE WRENCH**			
3.1	Equipment and tag:			
3.2	Model / Serial No: Milwaukee 2466			
3.3	Torque Range: 12.5 - 150			
3.4	Calibration expiration Date: New.			
4	**BOLT TORQUE**			
4.1	Confirm approved Anti-Seize has been Applied to the studs and the nut seating aera.	-		
4.2	Torque Studs at 33%: 66 LBS/FT	✓		
4.3	Torque Studs at 66%: 132. LBS/FT	✓		
4.4	Torque Studs at 100%: 200 LBS/FT	✓		
4.5	Confirm all studs are 100% tight (complete run)	✓		
4.6	Confirm Flange Identification is installed (written)			

Contractor Inspector

Name: Alex Ste-Marie

Signature: ASM

Date: 20/09/21

Client Representative

Name: MARIO MARCIL

Signature: Mario Marcil

Date: 19-09-21

Flange / Joint Assembly Checklist

Company: Agnico-Eagle Meadowbank.

Project:	Baker lake tank 8	Contract No.	6129-C-265-002.
Date of installation:	19-09-2021.	Document No.	
Location:	Baker lake ~~yard~~ Tank Farm.		

Drawing Number	Revision	Flange Number:	B21
61-740-270-001	R0.	Size	3"
		Class	#150.
		Grade	A350 tank / Valve casing

No.	Inspection Activities	Conforms ACCEPT	Conforms N/A	Comments
1	**FLANGES**			
1.1	Check both flanges faces are clean, damage free, finish is in good condition	✓		
1.2	Ensure that the flange surface comply to allowable gasket contact surface flatness and defect depth	✓		
1.3	Are the flanges aligned within tolerance (record the maximum angular mis-alignment in the comments column)	✓		
1.4	Are the flanges aligned within tolerance (record the maximum parallel mis-alignment in the comments column)	✓		
1.5	Confirm the nut seating area on the flanges is clean and smooth	✓		
2	**GASKETS AND STUDS**			
2.1	Is the new gasket free of damage, check for defects in the spiral winding or scoring of the ring type joint surface	✓		3/25 - Ring
2.2	Check that the studs are in good condition and are the correct size and material for the pipe class.	✓		5/8 B7 - 2H
3	**TORQUE WRENCH**			
3.1	Equipment and tag:			
3.2	Model / Serial No: Milwaukee 2466			
3.3	Torque Range: 12.5 - 150	✓		
3.4	Calibration expiration Date: New.	✓		
4	**BOLT TORQUE**			
4.1	Confirm approved Anti-Seize has been Applied to the studs and the nut seating aera.	—		
4.2	Torque Studs at 33%: 40 LBS/FT	✓		
4.3	Torque Studs at 66%: 80 LBS/FT	✓		
4.4	Torque Studs at 100%: 120 LBS/FT	✓		
4.5	Confirm all studs are 100% tight (complete run)	✓		
4.6	Confirm Flange Identification is installed (written)			

Contractor Inspector

Name: Francois Cauchette

Signature:

Date: 19-09-2021

Client Representative

Name: MARIO MARCIL

Signature: Mario Marcil

Date: 19-09-20

Flange / Joint Assembly Checklist

Company: Agnico Eagle Meadowbank.

Project:	Baker lake Tank 8.	Contract No.	6129-C-265-002.
Date of installation:	18-09-2021	Document No.	
Location:	Baker lake tank Farm.		

Drawing Number	Revision	Flange Number:	B22
61-740-270-001	R0.	Size	3"
		Class	#150
		Grade	A350 tank / valve casing

No.	Inspection Activities	Conforms		Comments
		ACCEPT	N/A	
1	**FLANGES**			
1.1	Check both flanges faces are clean, damage free, finish is in good condition	✓		
1.2	Ensure that the flange surface comply to allowable gasket contact surface flatness and defect depth	✓		
1.3	Are the flanges aligned within tolerance (record the maximum angular mis-alignment in the comments column)	✓		
1.4	Are the flanges aligned within tolerance (record the maximum parallel mis-alignment in the comments column)	✓		
1.5	Confirm the nut seating area on the flanges is clean and smooth	✓		
2	**GASKETS AND STUDS**			
2.1	Is the new gasket free of damage, check for defects in the spiral winding or scoring of the ring type joint surface	✓		3125-Ring
2.2	Check that the studs are in good condition and are the correct size and material for the pipe class.	✓		5/8 B7-2H.
3	**TORQUE WRENCH**			
3.1	Equipment and tag:			
3.2	Model / Serial No: Milwaukee 2466.			
3.3	Torque Range: 12.5-150	✓		
3.4	Calibration expiration Date: New	✓		
4	**BOLT TORQUE**			
4.1	Confirm approved Anti-Seize has been Applied to the studs and the nut seating aera.	—		
4.2	Torque Studs at 33%: 40 LBS/FT	✓		
4.3	Torque Studs at 66%: 80 LBS/FT	✓		
4.4	Torque Studs at 100%: 120 LBS/FT	✓		
4.5	Confirm all studs are 100% tight (complete run)	✓		
4.6	Confirm Flange Identification is installed (written)			

Contractor ~~Inspector~~

Name: Francois Cassette

Signature:

Date: 19-09-2021

Client Representative

Name: MARIO MARCIL

Signature: Mario Marcil

Date: 19-09-21

Flange / Joint Assembly Checklist

Company: Agnico Eagle Meadowbank.

Project:	Baker Lake Tank 8	Contract No.	6129-C-265-000
Date of installation:	18-09-2021	Document No.	
Location:	Baker lake tank Farm		

Drawing Number	Revision	Flange Number:	B23
6-740-270-001	R0	Size	3"
		Class	#150
		Grade	A350 / valve casing.

No.	Inspection Activities	Conforms		Comments
		ACCEPT	N/A	
1	**FLANGES**			
1.1	Check both flanges faces are clean, damage free, finish is in good condition	✓		
1.2	Ensure that the flange surface comply to allowable gasket contact surface flatness and defect depth	✓		
1.3	Are the flanges aligned within tolerance (record the maximum angular mis-alignment in the comments column)	✓		
1.4	Are the flanges aligned within tolerance (record the maximum parallel mis-alignment in the comments column)	✓		
1.5	Confirm the nut seating area on the flanges is clean and smooth	✓		
2	**GASKETS AND STUDS**			
2.1	Is the new gasket free of damage, check for defects in the spiral winding or scoring of the ring type joint surface	✓		3125 ring.
2.2	Check that the studs are in good condition and are the correct size and material for the pipe class.	✓		5/8 B7-2H
3	**TORQUE WRENCH**			
3.1	Equipment and tag:			
3.2	Model / Serial No: Milwaukee 2466.			
3.3	Torque Range: 12.5 - 150.	✓		
3.4	Calibration expiration Date: New	✓		
4	**BOLT TORQUE**			
4.1	Confirm approved Anti-Seize has been Applied to the studs and the nut seating aera.	✓		
4.2	Torque Studs at 33%: 40 LBS/FT	✓		
4.3	Torque Studs at 66%: 80 LBS/FT	✓		
4.4	Torque Studs at 100%: 120 LBS/FT	✓		
4.5	Confirm all studs are 100% tight (complete run)	✓		
4.6	Confirm Flange Identification is installed (written)			

Contractor Inspector

Name: Francois Caron

Signature:

Date: 19-09-2021

Client Representative

Name: MARIO MARCIL

Signature:

Date: 19-09-21

Flange / Joint Assembly Checklist

Company: Agnico Eagle Meadowbank.

Project:	Bakey Lake. tank 8	Contract No.	6129-C-265-003
Date of installation:	18-09-2021	Document No.	
Location:	Bakey lake. tank Farm.		

Drawing Number	Revision	Flange Number:	B24
61-740-270-001	R0	Size	3"
		Class	#150
		Grade	A350 / valve casing.

No.	Inspection Activities	Conforms ACCEPT	Conforms N/A	Comments
1	**FLANGES**			
1.1	Check both flanges faces are clean, damage free, finish is in good condition	✓		
1.2	Ensure that the flange surface comply to allowable gasket contact surface flatness and defect depth	✓		
1.3	Are the flanges aligned within tolerance (record the maximum angular mis-alignment in the comments column)	✓		
1.4	Are the flanges aligned within tolerance (record the maximum parallel mis-alignment in the comments column)	✓		
1.5	Confirm the nut seating area on the flanges is clean and smooth	✓		
2	**GASKETS AND STUDS**			
2.1	Is the new gasket free of damage, check for defects in the spiral winding or scoring of the ring type joint surface	✓		3125 ring.
2.2	Check that the studs are in good condition and are the correct size and material for the pipe class.	✓		5/8 B7- 2H.
3	**TORQUE WRENCH**			
3.1	Equipment and tag:			
3.2	Model / Serial No: Milwaukee 2466.			
3.3	Torque Range: 12.5-150.	✓		
3.4	Calibration expiration Date: New.	✓		
4	**BOLT TORQUE**			
4.1	Confirm approved Anti-Seize has been Applied to the studs and the nut seating aera.	✓		
4.2	Torque Studs at 33%: 40 LBS/FT	✓		
4.3	Torque Studs at 66%: 80 LBS/FT	✓		
4.4	Torque Studs at 100%: 180 LBS/FT	✓		
4.5	Confirm all studs are 100% tight (complete run)	✓		
4.6	Confirm Flange Identification is installed (written)			

Contractor Inspector

Name: Francois Cornette.

Signature:

Date: 19-09-2021

Client Representative

Name: MARIO MARCIL

Signature:

Date: 20-09-21

Flange / Joint Assembly Checklist

Company: Agnico Eagle Meadowbank

Project:	Baker Lake Tank 8.	Contract No.	6129-C-265-002
Date of installation:	18-09-2021.	Document No.	
Location:	Baker Lake Tank Farm.		

Drawing Number	Revision	Flange Number:	B25
61-840-270-001	R0.	Size	3"
		Class	#150
		Grade	A350 / Valve Flange.

No.	Inspection Activities	Conforms ACCEPT	Conforms N/A	Comments
1	**FLANGES**			
1.1	Check both flanges faces are clean, damage free, finish is in good condition	✓		
1.2	Ensure that the flange surface comply to allowable gasket contact surface flatness and defect depth	✓		
1.3	Are the flanges aligned within tolerance (record the maximum angular mis-alignment in the comments column)	✓		
1.4	Are the flanges aligned within tolerance (record the maximum parallel mis-alignment in the comments column)	✓		
1.5	Confirm the nut seating area on the flanges is clean and smooth	✓		
2	**GASKETS AND STUDS**			
2.1	Is the new gasket free of damage, check for defects in the spiral winding or scoring of the ring type joint surface	✓		3125 ring.
2.2	Check that the studs are in good condition and are the correct size and material for the pipe class.	✓		5/8 B7-2H.
3	**TORQUE WRENCH**			
3.1	Equipment and tag:			
3.2	Model / Serial No: Milwaukee 2466.			
3.3	Torque Range: 12.5-150.	✓		
3.4	Calibration expiration Date: New.	✓		
4	**BOLT TORQUE**			
4.1	Confirm approved Anti-Seize has been Applied to the studs and the nut seating aera.	✓		
4.2	Torque Studs at 33%: 40 LBS/FT	✓		
4.3	Torque Studs at 66%: 80 LBS/FT	✓		
4.4	Torque Studs at 100%: 120 LBS/FT	✓		
4.5	Confirm all studs are 100% tight (complete run)	✓		
4.6	Confirm Flange Identification is installed (written)			

Contractor Inspector

Name: Francois Cavelt

Signature:

Date: 19-09-2021

Client Representative

Name: MARIO MARCIL

Signature:

Date: 19-09-21

Flange / Joint Assembly Checklist

Company: Agnico Eagle Meadowbank.

Project:	Baker Lake Tank 8.	Contract No.	
Date of installation:	18-09-2021.	Document No.	
Location:	Baker Lake Tanks Farm.		

Drawing Number	Revision	Flange Number:	B26
61-740-270-001	R0	Size	3"
		Class	#150
		Grade	A 350 Valve Flange.

No.	Inspection Activities	Conforms		Comments
		ACCEPT	N/A	
1	**FLANGES**			
1.1	Check both flanges faces are clean, damage free, finish is in good condition	✓		
1.2	Ensure that the flange surface comply to allowable gasket contact surface flatness and defect depth	✓		
1.3	Are the flanges aligned within tolerance (record the maximum angular mis-alignment in the comments column)	✓		
1.4	Are the flanges aligned within tolerance (record the maximum parallel mis-alignment in the comments column)	✓		
1.5	Confirm the nut seating area on the flanges is clean and smooth	✓		
2	**GASKETS AND STUDS**			
2.1	Is the new gasket free of damage, check for defects in the spiral winding or scoring of the ring type joint surface	✓		3125 Ring.
2.2	Check that the studs are in good condition and are the correct size and material for the pipe class.	✓		5/8 B7-2H.
3	**TORQUE WRENCH**			
3.1	Equipment and tag:			
3.2	Model / Serial No: Milwaukee. 2466.			
3.3	Torque Range: 12.5-150.	✓		
3.4	Calibration expiration Date: Nov.	✓		
4	**BOLT TORQUE**			
4.1	Confirm approved Anti-Seize has been Applied to the studs and the nut seating aera.	✓		
4.2	Torque Studs at 33%: 40. LBS/FT	✓		
4.3	Torque Studs at 66%: 80 LBS/FT	✓		
4.4	Torque Studs at 100%: 120 LBS/FT	✓		
4.5	Confirm all studs are 100% tight (complete run)	✓		
4.6	Confirm Flange Identification is installed (written)			

Contractor Inspector

Name: Francois Caouette

Signature:

Date: 19-09-2021.

Client Representative

Name: MARIO MARCIC

Signature:

Date: 19-09-21

Flange / Joint Assembly Checklist

Company: _____

Project:		**Contract No.**	
Date of installation:		**Document No.**	
Location:			

Drawing Number	Revision	Flange Number:	B27.
		Size	3h
		Class	#150
		Grade	

No.	Inspection Activities	Conforms		Comments
		ACCEPT	N/A	
1	**FLANGES**			
1.1	Check both flanges faces are clean, damage free, finish is in good condition			
1.2	Ensure that the flange surface comply to allowable gasket contact surface flatness and defect depth			
1.3	Are the flanges aligned within tolerance (record the maximum angular mis-alignment in the comments column)			
1.4	Are the flanges aligned within tolerance (record the maximum parallel mis-alignment in the comments column)			
1.5	Confirm the nut seating area on the flanges is clean and smooth			
2	**GASKETS AND STUDS**			
2.1	Is the new gasket free of damage, check for defects in the spiral winding or scoring of the ring type joint surface			
2.2	Check that the studs are in good condition and are the correct size and material for the pipe class.			
3	**TORQUE WRENCH**			
3.1	Equipment and tag:			
3.2	Model / Serial No:			
3.3	Torque Range:			
3.4	Calibration expiration Date:			
4	**BOLT TORQUE**			
4.1	Confirm approved Anti-Seize has been Applied to the studs and the nut seating aera.			
4.2	Torque Studs at 33%: LBS/FT			
4.3	Torque Studs at 66%: LBS/FT			
4.4	Torque Studs at 100%: 120 LBS/FT			
4.5	Confirm all studs are 100% tight (complete run)			
4.6	Confirm Flange Identification is installed (written)			

Contractor Inspector

Name: _____

Signature: _____

Date: _____

Client Representative

Name: _____

Signature: _____

Date: _____

Garlock Sealing Technologies
1666 Division Street
Palmyra, NY 14522
(800) 448-6688

Garlock

Gasket Calculator 6.0

ASME Raised Face Flange *Quick Torque* Reference

(The following table is for Standard **Raised Face Flanges** with ASTM 193 B7 bolts and A194 2H nuts)
(For non-standard flanges please refer to the appropriate tab above. For FLAT FACE Flanges see next section below)

* - Required Fields

* Flange Size & Class: 69) 8"-300#
Please choose from the list of sizes and classes provided

Bolt Quantity: 12 Bolt Size: 7/8 in.

Compressed Sheet, GYLON®, GYLON EPIX™, HOCHDRUCK® 3128 & GRAPH-LOCK® 3125TC Ring Gaskets

Minimum: 205 ft.lbs. Maximum (Preferred): 320 ft.lbs.

GRAPH-LOCK® (except 3128 & 3125TC) and MULTI-SWELL™ 3760 & 3760-U Ring Gaskets

Minimum: 205 ft.lbs. Maximum (Preferred): 320 ft.lbs.

CMG - Corrugated Metal Gaskets (GRAPHONIC®, TEPHONIC®, GET®, & THERPHONIC®)

Minimum: 192 ft.lbs. Maximum (Preferred): 320 ft.lbs.

Kammprofile Gaskets

Minimum: 146 ft.lbs. Maximum (Preferred): 320 ft.lbs.

FLEXSEAL® Spiral Wound Gaskets

Minimum: 194 ft.lbs. Maximum (Preferred): 320 ft.lbs.

NOTE: The maximum recommended torque does not exceed 60,000 psi bolt stress.

Garlock Sealing Technologies
1666 Division Street
Palmyra, NY 14522
(800) 448-6688

Garlock

Gasket Calculator 6.0

ASME Flat Face Flange *Quick Torque* Reference

(The following table is for Standard **Flat Face Flanges** with ASTM 193 B7 bolts and A194 2H nuts)
WARNING: Garlock does NOT recommend exceeding the flange manufacturer's maximum recommended torque specifically with non-metallic flanges.

*** Flange Size & Class:**
Please choose from the list of sizes and classes provided

Bolt Quantity: #N/A **Bolt Size:** #N/A in.

Elastomeric Gaskets - LESS THAN 70 durometer Shore A

Minimum Recommended Torque per Bolt: #N/A ft.lbs.

Maximum Recommended Torque per Bolt: #N/A ft.lbs.

Elastomeric Gaskets - 70 durometer Shore A AND HIGHER (Including STRESS SAVER Gaskets)

Minimum Recommended Torque per Bolt: #N/A ft.lbs.

Maximum Recommended Torque per Bolt: #N/A ft.lbs.

Garlock Sealing Technologies
1666 Division Street
Palmyra, NY 14522
(800) 448-6688

Garlock

Gasket Calculator 6.0

ASME Flat Face Flange *Quick Torque* Reference

(The following table is for Standard **Flat Face Flanges** with ASTM 193 B7 bolts and A194 2H nuts)
WARNING: Garlock does NOT recommend exceeding the flange manufacturer's maximum recommended torque specifically with non-metallic flanges.

*** Flange Size & Class:**
Please choose from the list of sizes and classes provided

Bolt Quantity: #N/A **Bolt Size:** #N/A in.

Elastomeric Gaskets - LESS THAN 70 durometer Shore A

Minimum Recommended Torque per Bolt: #N/A ft.lbs.

Maximum Recommended Torque per Bolt: #N/A ft.lbs.

Elastomeric Gaskets - 70 durometer Shore A AND HIGHER (Including STRESS SAVER Gaskets)

Minimum Recommended Torque per Bolt: #N/A ft.lbs.

Maximum Recommended Torque per Bolt: #N/A ft.lbs.

Garlock Sealing Technologies
1666 Division Street
Palmyra, NY 14522
(800) 448-6688

Garlock

Gasket Calculator 6.0

ASME Flat Face Flange *Quick Torque* Reference

(The following table is for Standard **Flat Face Flanges** with ASTM 193 B7 bolts and A194 2H nuts)
WARNING: Garlock does NOT recommend exceeding the flange manufacturer's maximum recommended torque specifically with non-metallic flanges.

*** Flange Size & Class:**
Please choose from the list of sizes and classes provided

Bolt Quantity: #N/A **Bolt Size:** #N/A in.

Elastomeric Gaskets - LESS THAN 70 durometer Shore A

Minimum Recommended Torque per Bolt: #N/A ft.lbs.

Maximum Recommended Torque per Bolt: #N/A ft.lbs.

Elastomeric Gaskets - 70 durometer Shore A AND HIGHER (Including STRESS SAVER Gaskets)

Minimum Recommended Torque per Bolt: #N/A ft.lbs.

Maximum Recommended Torque per Bolt: #N/A ft.lbs.

Garlock Sealing Technologies
1666 Division Street
Palmyra, NY 14522
(800) 448-6688

Garlock

Gasket Calculator 6.0

ASME Flat Face Flange *Quick Torque* Reference

(The following table is for Standard **Flat Face Flanges** with ASTM 193 B7 bolts and A194 2H nuts)
WARNING: Garlock does NOT recommend exceeding the flange manufacturer's maximum recommended torque specifically with non-metallic flanges.

*** Flange Size & Class:**
Please choose from the list of sizes and classes provided

Bolt Quantity: #N/A **Bolt Size:** #N/A in.

Elastomeric Gaskets - LESS THAN 70 durometer Shore A

Minimum Recommended Torque per Bolt: #N/A ft.lbs.

Maximum Recommended Torque per Bolt: #N/A ft.lbs.

Elastomeric Gaskets - 70 durometer Shore A AND HIGHER (Including STRESS SAVER Gaskets)

Minimum Recommended Torque per Bolt: #N/A ft.lbs.

Maximum Recommended Torque per Bolt: #N/A ft.lbs.

Garlock Sealing Technologies
1666 Division Street
Palmyra, NY 14522
(800) 448-6688

Garlock

Gasket Calculator 6.0

ASME Flat Face Flange *Quick Torque* Reference

(The following table is for Standard **Flat Face Flanges** with ASTM 193 B7 bolts and A194 2H nuts)
WARNING: Garlock does NOT recommend exceeding the flange manufacturer's maximum recommended torque specifically with non-metallic flanges.

*** Flange Size & Class:**
Please choose from the list of sizes and classes provided

Bolt Quantity: #N/A **Bolt Size:** #N/A in.

Elastomeric Gaskets - LESS THAN 70 durometer Shore A

Minimum Recommended Torque per Bolt: #N/A ft.lbs.

Maximum Recommended Torque per Bolt: #N/A ft.lbs.

Elastomeric Gaskets - 70 durometer Shore A AND HIGHER (Including STRESS SAVER Gaskets)

Minimum Recommended Torque per Bolt: #N/A ft.lbs.

Maximum Recommended Torque per Bolt: #N/A ft.lbs.

Garlock Sealing Technologies
1666 Division Street
Palmyra, NY 14522
(800) 448-6688

Garlock

Gasket Calculator 6.0

ASME Flat Face Flange *Quick Torque* Reference

(The following table is for Standard **Flat Face Flanges** with ASTM 193 B7 bolts and A194 2H nuts)
WARNING: Garlock does NOT recommend exceeding the flange manufacturer's maximum recommended torque specifically with non-metallic flanges.

* **Flange Size & Class:**
Please choose from the list of sizes and classes provided

Bolt Quantity: #N/A **Bolt Size:** #N/A in.

Elastomeric Gaskets - LESS THAN 70 durometer Shore A

Minimum Recommended Torque per Bolt: #N/A ft.lbs.

Maximum Recommended Torque per Bolt: #N/A ft.lbs.

Elastomeric Gaskets - 70 durometer Shore A AND HIGHER (Including STRESS SAVER Gaskets)

Minimum Recommended Torque per Bolt: #N/A ft.lbs.

Maximum Recommended Torque per Bolt: #N/A ft.lbs.

LABORATOIRE D'ESSAI MEQUALTECH
Montréal : 8740, Bl. Pie IX Montréal QC H1Z 3V1
Québec : 2883, Bl. Guillaume-Couture Lévis QC G6W 6N9
Bécancour : 700, Bl. Alphonse Deshaies Bécancour QC G9H 2Y9
Sherbrooke : 5, Rue Mallory Sherbrooke QC J1M 2E7 Tel.: 1(800) 625-5755

RAPPORT D'INSPECTION RADIOGRAPHIQUE
RADIOGRAPHIC INSPECTION REPORT

NO. DE RAPPORT / REPORT No. 20M3802-11
DATE 2020-10-07 Page 1 de 1

Client / Customer	Procédure / Procedure	Position / Position	Technicien / Technicien
A.B.F. Construction	P4a-RT-101	27	Nicolas Vidril

Manufacturer / Manufacturing	Type / Type	Qualification soudeur	No. de commande / P.O. Number
Même / Same	Tuyau	Qualification soudeur	19943-20327

Étape / Stage	Qualification soudeur	Type / Type
		ASME Sect. IX, QW-191.1.2, Ed. 2019

Étape de l'ordre / Stage of Fill: ☐ Matériel de base / Base Metal ☑ Fil de soudure / Accessoire ☐ Après-traitement / Après-traitement ☐ Après-réparation / After-repair

Matériel / Material: ☑ ☑

☐	Qtée/Qty		Format	
☐	Qtée/Qty		Format	
☑	Qtée/Qty	4	Format	4,5" X 8,5"
☐	Qtée/Qty		Format	
☐	Qtée/Qty		Format	

Épaisseur / Thickness ☐ mm ☑ Po/In — Plateau / Plateau A — Plateau / Plateau B — Plateau / Plateau C

DÉTAILS TECHNIQUES / TECHNICAL DATA

No. / Nombre de pénétrations / No. of exposures per unit	Exposition / Exposure	Localisation des marqueurs / Marker Location	Changement des films / Film Change	Écran / Screen
2	☐ Paroi simple / single wall ☑ Paroi double / double wall ☐ Paroi simple / single wall ☑ Paroi double / double wall	☑ Côté source / Source side ☐ Côté film / film side	☑ Simple / Single ☐ Double ☐ Triple	☑ 0,010" / 0,010" ☐ 0,005" / 0,010" ☐ Autre/Other:

Ir 192 ☑ / Co 60 ☐ / Rayon-X ☐	Curies / Kv	Dimensions / Size	D.S.O. / S.O.D.	D.O.F. / F.O.D.	Pelle	Cale / Shim	Temps d'exposition / Exposure time
	93 Ci	0,126"	19"	2,5"	ASTM 1B	N/A	90s

Identification	Joint #	Soudeur / Welder	A	B	C	Dim.	Region	ACC.	REJ.	Défaut / Defect	Localisation du manque / Location defect
Frédérick Macé	SMAW F3-F4	FM	0,343	0,125	0,468	2" dia.	12	√		P.	
							3	√			
Heinrick Côté-Barbe	SMAW F3-F4	H	0,343	0,125	0,468	2" dia.	12	√		I.U.C.	
							3	√		I.U.C.	
Frédérick Macé	GTSM F6-F5	FM	0,343	0,125	0,468	2" dia.	12	√		I.U.C.	
							3	√			
Heinrick Côté-Barbe	GTSM F6-F5	H	0,343	0,125	0,468	2" dia.	12	√			
							3	√			

L.O.P.	Manque de pénétration / Lack of penetration	P.	Porosity / Porosity	I.U.C	Inclusion de l'oxyde / Inclusion de l'oxyde
L.O.F	Manque de fusion / Lack of fusion	B.T.	Tension / Tension	O.U.C	Surface / Surface
C.K.	Crevasse / Crevasse	S.S.	Auto-crevasse / Auto-crevasse	F.A.	Dimensions / Dimensions
S.I	Scorie / Scorie	C.	Cavité / Cavité	B.I.	Surface / Surface
Surf.	Surface / Surface				

RADIOGRAPHE / RADIOGRAPH: Richard Martin — 2020-10-08
CONOC. / CONOC. ☑ SNT-TC-1A ☑ NIVEAU / LEVEL II ☑ III ☐
SIGNATURE / SIGNATURE

LABORATOIRE D'ESSAI MEQUALTECH
Montréal : 8740, Bl. Pie IX Montréal QC H1Z 3V1
Québec : 2883, Bl. Guillaume-Couture Lévis QC G6W 6N9
Bécancour : 700, Bl. Alphonse Deshaies Bécancour QC G9H 2Y9
Sherbrooke : 5, Rue Mallory Sherbrooke QC J1M 2E7 Tel.: 1(800) 625-5755

RAPPORT D'INSPECTION RADIOGRAPHIQUE
RADIOGRAPHIC INSPECTION REPORT

N° RAPPORT / REPORT N° 20M3802-11
DATE 2020-10-07 Page 1 de 1

Client / Customer	Procédure / Procedure	Feuille / Sheet	Technicien / Technician
A.B.F. Construction	P4a-RT-101	27	Nicolas Vidril

Identification	Type de joint	Qualification soudeur	Code / Code
Même / Same	Tuyau	Qualification soudeur	19943-20327

Exigences / Requirements		Procédure de référence / Reference procedure
Qualification soudeur		ASME Sect. IX, QW-191.1.2, Ed. 2019

Étape de soudage: ☐ Montage / Fit-up ☑ Soudage / Welded ☐ Après traitement thermique / After heat treatment ☐ Après réparation / After repair

Matériau / Material: ☑ Tuyau / Pipe ☑ Tôle / Plate

Joints: ☐ Cp ☐ Cf ☑ Bw ☐ Sw ☐ Autre / Other — Qté / Qty 4 — Format / Format 4,5" X 8,5"

Épaisseur / Thickness: ☐ mm ☑ Po/In — Matériau / Material: A — Diamètre / Diameter: B — Épaisseur / Thickness: C

DÉTAILS DE L'INSPECTION / INSPECTION DETAILS

Nb. d'expos. par joint / No. of exposures per joint	Exposition / Exposure	Localisation des soudures / Weld location	Configuration / Configuration	Écran / Screen
2	☐ Paroi simple / single wall ☑ Paroi double / double wall	☑ Côté source / Source side ☐ Côté film / film side	☑ Simple / Single ☐ Double ☐ Triple	☑ 0,010" / 0,010" ☐ 0,005" / 0,010" ☐ Autre/Other:
Détection / Detection: ☐ Ir 192 ☑ Co 60 ☐ Rayon-X	Curies / Curie: 93 Ci	Dimensions / Size: 0,126"	DSO / SOD: 19"	DOF / FOD: 2,5"

Pellicule / Film	Calibre / Shim	Temps d'exposition / Exposure time
ASTM 1B	N/A	90s

Identification	Joint #	Soudeur / Welder	A	B	C	Dim	Région	ACC	REJ	Défaut / Defect	Localisation du défaut / Location defect
Frédérick Macé	SMAW F3-F4	FM	0,343	0,125	0,468	2" dia.	12	√		P.	
							3	√			
Heinrick Côté-Barbe	SMAW F3-F4	H	0,343	0,125	0,468	2" dia.	12	√		I.U.C.	
							3	√		I.U.C.	
Frédérick Macé	GTSM F6-F5	FM	0,343	0,125	0,468	2" dia.	12	√		I.U.C.	
							3	√			
Heinrick Côté-Barbe	GTSM F6-F5	H	0,343	0,125	0,468	2" dia.	12	√			
							3	√			

L.O.P. Manque de pénétration / Lack of penetration	P. Porosité / Porosity	I.U.C Inclusions de tungstène / Inclusions
L.O.F Manque de fusion / Lack of fusion	B.T. Soudure bombée / Convex weld	O.U.C Caniveau / Undercut
C.K. Fissure / Crack	S.S. Soudure sursoudée / Overwelded	F.A. Amorce / Arc strike
S.I Inclusion de scorie / Slag inclusion	C. Concavité / Concave weld	B.I. Manque de fusion / Lack of fusion
Surf. Surface		

RADIOGRAPHE / RADIOGRAPHER: Richard Martin — 2020-10-08
NDT LEVEL: SNT-TC-1A ☑ — CSA Z 662 ☑ — II ☑ III ☐
CLIENT REPRESENTATIVE

FLANGE BOLT TORQUE SEQUENCE

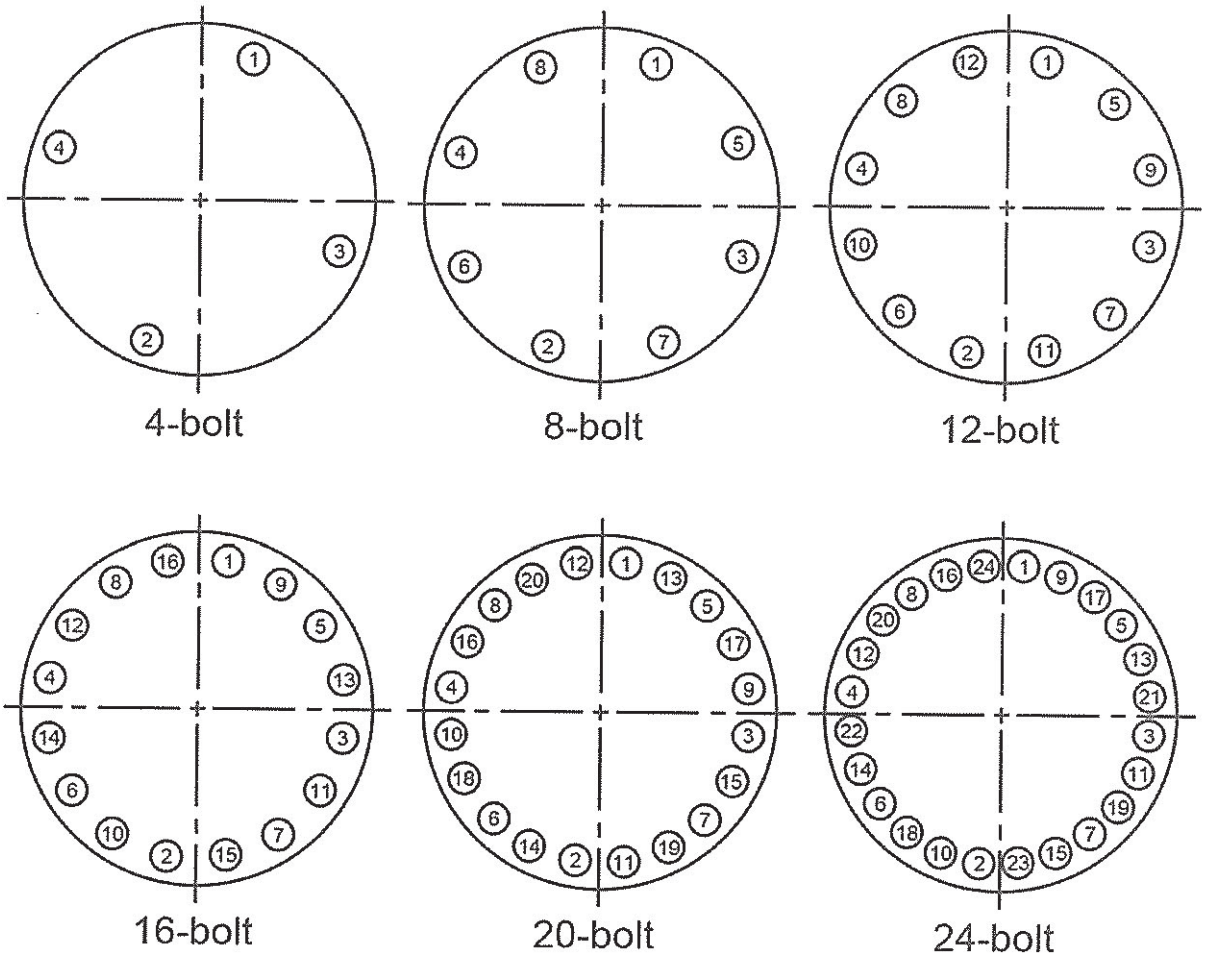



SNC·LAVALIN
532, 7th Street West, Suite 101
Amos, Qc J9T 3W7
819.732.8355 - 819.732.0259
www.snclavalin.com