Item 14 - Nozzles - Weld Map

PARTS LIST		
ITEM	ITEM QTY	PART NUMBER
1	55	SHELL PLATE 2798 X 9203 THICKNESS
2	5	SHELL PLATE LAST ON COURSE 2798 X 9127 (TRIM AT SITE)
3	4	900ns SHELL MANHOLE
5	8	Grounding Lug
6	3	150NS SHELL NOZZLE
8	6	75NS WATER DRAWOFF
10	1	20NS THERMOMETER CONNECTION
11	1	AISC - L 4 x 4 x 1/4 - 15.748031 TEMPERATURE CONNECTION PROTECTION
12	1	400NS VENT
13	4	PLATFORM
14	119	STEPS
18	14	AISC - L 3 x 3 x 1/4 - 15.748031 PRV PIPE SUPPORT
19	1	200NS SHELL NOZZLE - FIX LOADING PIPE

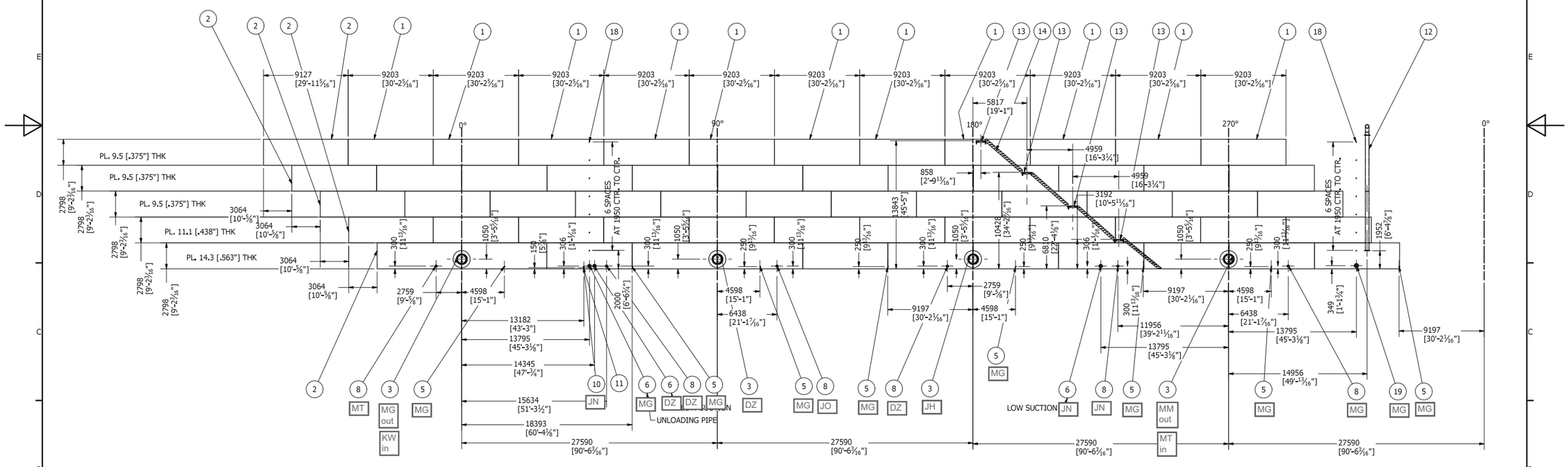

SHELL DEVELOPED VIEW
SCALE 1/200

REVISION HISTORY		
REV	DESCRIPTION	DATE
6	THIS SHEET ADDED	7/12/2017

DRAWN MARC LOSIER	3/9/2017	DEVELOP VIEW
CHECKED		TITLE
QA		AGNICO EAGLE - MELIADINE GOLD MINE - TK #2 - 13,500CUM 35.1M DIA X 14M H
MFG		
APPROVED		
		SIZE A1 / DWG NO 295-M10 / REV 6
		SCALE / SHEET 7 OF 7

16-Jul-2017
Permit Number: P471

Sub-Arc Systems Inc.

4605-47 Street
Vermillion, AB, T9X 1L6
780-608-9589

QUALITY CONTROL MANUAL

Exhibit 19, Rev A

DIMENSIONAL CHECK REPORT – PLUMBNESS

Customer: AGNICO EAGLE

Location: RANKIN INLET TK-02.

Equipment Tag No.:

Equipment Type:

Equipment Description:

Code Requiring Test: API 650 Reason for Test: New Construction

(The tank shell will be checked for plumb at 12" below the tank roof. Plumb measurements will be checked at 45 degree intervals or less, max. 20' spacing)

Test Date(s):

Tested by:

Seam Test Results:

TANK SHELL IS PLUMB IN ALL AREAS THAT HAVE NOZZLES.

Sub-Arc Representative Signature: [signature] Date: Aug 31/17

Client Representative Signature: _____ Date: _____

Client Signature: Glen Bona Date: Sept 04/17

Item 14 - Nozzles - Dimension Report and Plumbness

External Nozzle Dimension Report

Submit sketch for unusual deadwood

External

Quantity	Description	MW = Manway V = Valve F = Flange Hatch = Hatch	Code	Diameter	Length	Height	Height From Bottom	To	Office Use Bbls/8th	Gls/8th
4	Manway		MW	34	7 3/4	59	25	59	0.0107	
6	Pipe		F	3	6 3/4	13 1/2	10 1/2	13 1/2	0.0002	
1	Valve		V	8	14	18 1/2	10 1/2	18 1/2	0.0002	
2	Valve		V	6	14	15 1/2	9	15 1/2	0.0004	
1	Valve		V	6	8	15 1/2	9 1/2	15 1/2	0.0001	

It is very important to note if tubular roof supports (pipes) are open (fills with product) or closed.

PAGE 6

DEADWOOD

TANK No.: 2

ALL MEASUREMENTS TO BE SHOWN AS INCHES

Enter SUMP details in this first row ONLY

Use Proper Codes and Enter all data

op = Open Pipe ch = Channel
cp = Closed Pipe

Quantity	Description		Code	Diameter	Length	Height	Height From Bottom	To	Office Use Bbls/8th	Gls/8th
6	Pipe		OP	3	52	13	10	13	-0.0047	-0.1988995
6	Pipe		OP	8	460	18	10	18	-0.0419	-1.7594959
2	Pipe		OP	6	466	15	9	15	-0.0141	-0.5941486
1	Pipe		OP	6	35	15	9	15	-0.0005	-0.0223124
2	Pipe		OP	6	36	15	9	15	-0.0011	-0.0458999
8	Beam		OP	14	47				-0.0057	-0.2396994
1	Center Beam		OP	14	576				-0.0087	-0.3671991

Sub-Arc Systems Inc.

4605-47 Street
Vermillion, AB, T9X 1L6
780-608-9589

QUALITY CONTROL MANUAL

Exhibit 15c, Rev 1

VISUAL TEST REPORT

Customer: Agnico Eagle

Location: Rankin Inlet

Code Requiring Test: API 650 (section 8.5.2) Reason for Test: New Construction

A weld shall be acceptable by visual examination if the inspection shows the following.

a) There are no crater cracks, other surface cracks or arc strikes in or adjacent to the welded joints.
b) Maximum permissible undercut is 0.4 mm (1/64 in.) in depth for vertical butt joints, vertically oriented permanent attachments, attachment welds for nozzles, manholes, flush-type openings, and the inside shell-to-bottom welds. For horizontal butt joints, horizontally oriented permanent attachments, and annular-ring butt joints, the maximum permissible undercut is 0.8 mm (1/32 in.) in depth.
c) The frequency of surface porosity in the weld does not exceed one cluster (one or more pores) in any 100 mm (4 in.) of length, and the diameter of each cluster does not exceed 2.5 mm (3/32 in.).
d) The reinforcement of the welds on all thicknesses:

Plate Thickness mm (in.)	Maximum Reinforcement Thickness mm (in.)	
	Vertical Joints	Horizontal Joints
≤ 13 (1/2)	2.5 (3/32)	3 (1/8)
> 13 (1/2) to 25 (1)	3 (1/8)	5 (3/16)
> 25 (1)	5 (3/16)	6 (1/4)

Surface Condition (As Welded)

Test Solution: N/A Test Date(s): AUG 31/17

Tested by: MATT MACKENZIE Ambient Conditions: 10°

Items Tested:

SHELL NOZZLES.

Results:

ALL WELDING ACCEPTABLE ON SHELL NOZZLES.

Sub-Arc Representative Signature: Matt MacKenzie. Date: AUG 31/17.

Client Representative Signature: _____ Date: _____

Client Signature: Clem Bonica Date: Sept 04/17

Sub-Arc Systems Inc.

4605-47 Street
Vermillion, AB, T9X 1L6
780-608-9589

QUALITY CONTROL MANUAL

Exhibit 12, Rev 1

AIR TEST REPORT – NOZZLE REINFORCEMENT PLATE WELDS

Customer: AGNICO EAGLE

Location: RANKIN INLET TK-02

Equipment Tag No.:

Equipment Type:

Equipment Description:

Code Requiring Test: API 650 Reason for Test: New Construction

(An air pressure/soap solution test for nozzle reinforcement plate weld seams is required for new construction or major alterations, no visible leaks should be observed)

Test Pressure: 100 kPa (15 psi) Surface Condition (As Welded, Painted, Blasted)

Test Solution: Water / Snoop: Test Date(s): Aug 31/17

Tested by: MATT TURNER Pressure Gauge: 15 Ambient Conditions: 10°

Items Tested:

NOZZLE REPADS.

Results:

ALL NOZZLE REPADS WERE AIR TESTED.
NO LEAKS WERE FOUND AT TIME OF INSPECTION.

Sub-Arc Representative Signature: [signature] Date: Aug 31/17.

Client Representative Signature: _____ Date: _____

Client Signature: [signature] Date: Sept 04/17

Client :	**Inukshuk Construction Ltd,**	**Date d'intervention :** **Intervention date :**	2017-08-30
Adresse/Address :	PO Box 654 Rankin Inlet, Nunavut X0C 0G0		
Contact :	Marc Losier	**Date du rapport :** **Report date :**	2017-09-08
Entrepreneur : **Contractor :**	N/A	**Nº dossier :** **File no :**	INS-117107-01_R01
Endroit du travail : **Job location :**	Rankin Inlet , Nunavut	**Commande :** **Order :**	295-1046

INSP. VISUELLE VISUAL INSP.	☐	MAGNÉTOSCOPIE MAGNETIC PARTICLES	☒	RESSUAGE LIQUID PENETRANT	☐	ULTRASONS ULTRASONIC	☒

DESCRIPTION :

Magnetic particles inspection and Ultrasonic inspection on tank 2

The client is opting to use an ultrasonic testing, instead of radiographic testing

Remark : Visual testing was performed by client
I

INSP. VISUELLE / VISUAL INSP.

NORME : **SPECIFICATION :**

N° équip. : **Equip. no :** N/A

MAGNÉTOSCOPIE MAGNETIC PARTICLES

NORME : **SPECIFICATION :** API 650

N° équip. : **Equip. no :** MP-Q-27

Ampérage : **Amperage :**	Culasse/Yoke	**Continue** **Continuous**	☒	**Résiduelle** **Residual**	☐	**Humide** **Wet**	☐	**Sèche** **Dry**	☒
Longitudinale **Longitudinal**	☐	**Circulaire** **Circular**	☐	**C.A.** **A.C.**	☒	**C.C.** **D.C.**	☐	**Démagnétisée** **Demagnetized**	☐

RESSUAGE LIQUID PENETRANT

NORME : **SPECIFICATION :**

N° équip. : **Equip. no :**

Pénétrant/Penetrant :

Émulsifiant/Emulsifier :

Révélateur/Developer :

Temps/Time :

Temps/Time :

Temps/Time :

ULTRASONS / ULTRASONIC

NORME : **SPECIFICATION :** API 650

ÉTALONNAGE/CALIBRATION :

Bloc/Block : IIW Type 2 **Trou/Hole :** N/A **C.A.D. /D.A.C. :** X☐

APPAREIL/EQUIPMENT :

Instrument : USM GO+ **Couplant :** Echogel **Échelle/Sweep length :**

Nº équip./Equip. no : UT-Q-34 **Palpeur/Transducer :** 0º degré and 70º degré

RÉSULTATS/RESULTS :

For ultrasonic results: **All spots are acceptable. See attached tables for locations.**

Magnetic particles inspection was performed on angle joint between the shell and nozzle, inside and outside the tank:

- *-Inside tank, weld between shell/nozzle, with a 100%: magnetic particles inspection, is acceptable*
- *-Outside tank, weld between shell/pad & weld between pad/nozzle, with 100% (note 1): magnetic particles inspection, is acceptable.*

Note 1: Fourteen (14) nozzles including four (4) manholes and one nozzle outside, does not have pad . Please refer to drawing 295-M10; part section K-K item #10. This nozzle corresponds to a ¾" coupling for a water temperature gauge in the shell and the client has advised that no repad is needed for this specific coupling.

Techniciens : **Technicians :** Sylvain Germain CSA W178.2 level 2	**Assistants:**	**Approuvé par :** **Approved by :** Pierre Dostie Technical Supervisor CSA W178.2, niveau 3

Ce rapport ne doit pas être reproduit, sinon en entier, sans l'autorisation écrite de SGS CANADA inc.
Le présent rapport est émis par la Société conformément à ses Conditions Générales de Service accessibles sur http://www.sgs.ca/fr-FR/Terms-and-Conditions.aspx
This report is confidential and shall not be reproduced without the written approval of SGS CANADA Inc
This document is issued by the Company under its General Conditions of Service accessible at http://www.sgs.ca/en/Terms-and-Conditions.aspx

Client :	**Inukshuk Construction Ltd,**	**Date d'intervention :** **Intervention date :**	2017-08-30
Adresse/Address :	PO Box 654 Rankin Inlet, Nunavut X0C 0G0		
Contact :	Marc Losier	**Date du rapport :** **Report date :**	2017-09-08
Entrepreneur : **Contractor :**	N/A	**Nº dossier :** **File no :**	INS-117107-01_R01
Endroit du travail : **Job location :**	Rankin Inlet , Nunavut	**Commande :** **Order :**	295-1046

Picture : 1

View of some nozzles

Picture : 2

View of tank 2

Techniciens : **Technicians :** Sylvain Germain CSA W178.2 level 2	**Assistants:**	**Approuvé par :** **Approved by :** Pierre Dostie Technical Supervisor CSA W178.2, niveau 3

Ce rapport ne doit pas être reproduit, sinon en entier, sans l'autorisation écrite de SGS CANADA inc.
Le présent rapport est émis par la Société conformément à ses Conditions Générales de Service accessibles sur http://www.sgs.ca/fr-FR/Terms-and-Conditions.aspx
This report is confidential and shall not be reproduced without the written approval of SGS CANADA Inc
This document is issued by the Company under its General Conditions of Service accessible at http://www.sgs.ca/en/Terms-and-Conditions.aspx

Client :	**Inukshuk Construction Ltd,**	**Date d'intervention :** **Intervention date :**	2017-08-30
Adresse/Address :	PO Box 654 Rankin Inlet, Nunavut X0C 0G0		
Contact :	Marc Losier	**Date du rapport :** **Report date :**	2017-09-08
Entrepreneur : **Contractor :**	N/A	**Nº dossier :** **File no :**	INS-117107-01_R01
Endroit du travail : **Job location :**	Rankin Inlet , Nunavut	**Commande :** **Order :**	295-1046

Picture :3

View of manhole before padding

Techniciens : **Technicians :** Sylvain Germain CSA W178.2 level 2	**Assistants:**	**Approuvé par :** **Approved by :** Pierre Dostie Technical Supervisor CSA W178.2, niveau 3

Ce rapport ne doit pas être reproduit, sinon en entier, sans l'autorisation écrite de SGS CANADA inc.
Le présent rapport est émis par la Société conformément à ses Conditions Générales de Service accessibles sur http://www.sgs.ca/fr-FR/Terms-and-Conditions.aspx
This report is confidential and shall not be reproduced without the written approval of SGS CANADA Inc
This document is issued by the Company under its General Conditions of Service accessible at http://www.sgs.ca/en/Terms-and-Conditions.aspx

Tank #2 Rankin Inlet (AEM)

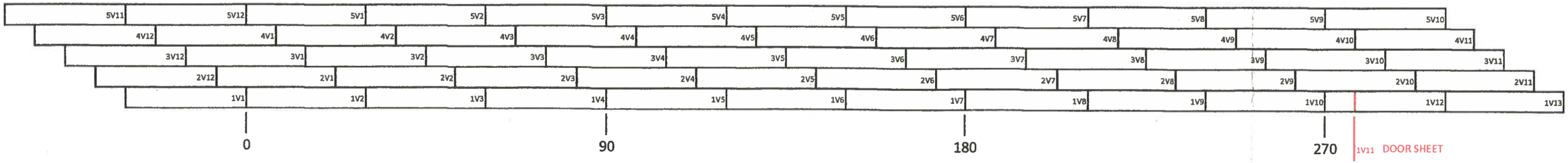

NDT TECHNICIAN WILL INITIAL EACH BOX WHEN WELD IS ACCEPTABLE

B ----> BOTTOM OF THE VERT (0-6")	M ----> MIDDLE OF THE VERT (53"-59")	T ----> TOP OF THE VERT (104 3/16" - 110 3/16")

VERTICAL SEAMS MAPPING UT

	B	M	T	FULL
1V1	UT FULL BECAUSE NOZZLE INTO VERT			SC
1V2	SG	SG	SG	
1V3	SG	SG	SC	
1V4	UT FULL BECAUSE NOZZLE INTO VERT			SC
1V5	SG	SG	SG	
1V6	SC	SC	SC	
1V7	UT FULL BECAUSE NOZZLE INTO VERT			SG
1V8	SG	SG	SG	
1V9	SG	SG	SC	
1V10	UT FULL BECAUSE NOZZLE INTO VERT			SG
1V11 (DOOR SHEET)	SG	SG	SG	
1V12	SG	SG	SG	
1V13	SG	SG	SG	

	B	M	T
2V1	SG	SC	SG
2V2	SG	SG	SG
2V3	SG	SG	SG
2V4	SC	SG	SG
2V5	SC	SG	SC
2V6	SG	SG	SG
2V7	SG	SG	SG
2V8	SG	SG	SG
2V9	SG	SG	SG
2V10	SG	SG	SG
2V11	SG	SG	SG
2V12	SG	SG	SG

	B	T
3V1	SG	SC
3V2	SC	SG
3V3	SG	SG
3V4	SG	SG
3V5	SG	SG
3V6	SG	SG
3V7	SG	SG
3V8	SG	SG
3V9	SG	SG
3V10	SG	SG
3V11	SG	SG
3V12	SG	SG

	B	T
4V1	SG	SG
4V2	SG	SG
4V3	SG	SG
4V4	SG	SG
4V5	SG	SG
4V6	SG	SG
4V7	SG	SG
4V8	SG	SG
4V9	SG	SG
4V10	SG	SG
4V11	SG	SG
4V12	SG	SG

	B	T
5V1	SG	
5V2	SG	
5V3	SG	
5V4	SG	
5V5	SG	
5V6	SC	
5V7	SG	
5V8	SG	
5V9	SG	
5V10	SG	
5V11	SG	
5V12	SG	

HORIZONTAL SEAMS MAPPING UT

H1V2	48"-54"	SG
H1V8	60"-66"	SG
H1V10	42"-48"	SG

H2V3	48"-54"	SG
H2V9	72"-78"	SC

H3V1	60"-66"	SG
H3V7	42"-48"	SG

H4V5	30"-36"	SG
H4V11	72"-78"	SG

Sub-Arc Representative Signature: [signature] Date: Aug 26/17.

Client Representative Signature: _____ Date: _____

NDT Representative Signature: [signature] Date: August 26 2017

EMERSON

Pressure/Vacuum Relief Valve (PVRV) Test Report

Emerson Process Management Regulator Technologies Tulsa, LLC
9932 East 56th Street
Tulsa, OK 74146-6411
918-622-6161

Customer Name	SPARTAN CONTROLS LTD	Customer P.O.		Project Name	
Sales Order No.		Factory Order No.	O0067397	Project No.	
Item / Line		Tag No.		Serial No.	A 30933

Work Order Number	Model Number	Part Number
74739373	950-12-111	E8552537

Test Stand ID# 2

Pressure / Vacuum Settings

Pressure Setting: z1.0

Part No.	Qty.	Description	Equivalent Setting	
			Unit	Total
E8559902	1	Pallet Assy	0.5	0.5
E8550917	1	Weight	0.5	0.5

Vacuum Setting: z0.5

Part No.	Qty.	Description	Equivalent Setting	
			Unit	Total
E8559901	1	Pallet Assy	0.5	0.5

Weights have been removed for shipping purposes. **Weights must be installed prior to placing the PVRV into service**; if PVRV is Spring loaded, settings will be adjusted at the factory and no installation is required. See operating manual for additional information.

Emerson certifies that the referenced product has been successfully pressure tested in accordance with our quality system procedures and exhibits a leakage rate not exceeding 1.0 SCFH at 90% of pressure and/or vacuum setting.

Test Date: 9/7/2017 Tested By: SW

Providing Responsive Solutions with Safety and Environmental Vapor Control Products

EMERSON
Process Management

Declaration of Conformity

ATEX Directive 14/34/EU

Manufacturer: Emerson Process Management Regulator Technologies Tulsa, LLC
Address: 9932 East 58th Street, Tulsa, OK 74143-6411

Product: Emergency Pressure Vacuum Relief Vent & Pressure Vacuum Relief Vent

Model/Type: 450 & 850 (pipe-away) Combination pressure/vacuum relief valve
550 & 950 (vent-to-atmosphere) Combination pressure/vacuum relief valve
850 & 950 with Wireless Option

Conformity: This document certifies that the above equipment complies with the requirements of ATEX Directive 14/34/EU.

Standards Compliance: EN 60079-0:2012, EN 60079-11:2012, EN 13463-1:2009 AND EN13463-5:2011

Based on EC-Type Examination Certificate:
DNV-08-ATEX-19407

Quality System Audited by and EC-Type Examination Certificate Issued by Notified Body **0575**:
DET NORSKE VERITAS AS
Veritasveien 1, 1322 HOVIK
Norway, www.dnvcert.com

The product described in this Declaration of Conformity complies with the Applicable European Directives and relevant sections of the Applicable International Standards. The Signature on this document authorizes the distinctive European mark to be applied to the equipment described. A Technical Construction File is available for inspection by designated bodies.

CE 0575	Ex II 1 G c T6 Ex II 1 G c T5, Ex ia IIC T5 Ga Ex II 2 G c T6 Ex II 2 G c T5, Ex ia IIC T5 Gb		Authorized Signature		
DOC NO.	6300047	REV.	G	DATE:	04/20/2016

ENARDO

EMERSON

Pressure/Vacuum Relief Valve (PVRV) Test Report

Emerson Process Management Regulator Technologies Tulsa, LLC
9932 East 56th Street
Tulsa, OK 74146-6411
918-622-6161

Customer Name	SPARTAN CONTROLS LTD	Customer P.O.		Project Name	
Sales Order No.		Factory Order No.	O0067397	Project No.	
Item / Line		Tag No.		Serial No.	A 30934

Work Order Number	Model Number	Part Number
74739370	950-12-111	E8552537

Test Stand ID# 2

Pressure / Vacuum Settings

Pressure Setting: z1.35

Part No.	Qty.	Description	Equivalent Setting	
			Unit	Total
E8559953	1	Pallet Assy	0.5	0.5
E8550917	1	Weight	0.5	0.5
E8550987	1	Weight	0.35	0.35

Vacuum Setting: z0.5

Part No.	Qty.	Description	Equivalent Setting	
			Unit	Total
E8559901	1	Pallet Assy	0.5	0.5

Weights have been removed for shipping purposes. **Weights must be installed prior to placing the PVRV into service**; if PVRV is Spring loaded, settings will be adjusted at the factory and no installation is required. See operating manual for additional information.

Emerson certifies that the referenced product has been successfully pressure tested in accordance with our quality system procedures and exhibits a leakage rate not exceeding 1.0 SCFH at 90% of pressure and/or vacuum setting.

Test Date 9/7/2017 Tested By SW

Providing Responsive Solutions with Safety and Environmental Vapor Control Products

EMERSON
Process Management

Declaration of Conformity

ATEX Directive 14/34/EU

Manufacturer: Emerson Process Management Regulator Technologies Tulsa, LLC
Address: 9932 East 58th Street, Tulsa, OK 74143-6411

Product: Emergency Pressure Vacuum Relief Vent & Pressure Vacuum Relief Vent

Model/Type: 450 & 850 (pipe-away) Combination pressure/vacuum relief valve
550 & 950 (vent-to-atmosphere) Combination pressure/vacuum relief valve
850 & 950 with Wireless Option

Conformity: This document certifies that the above equipment complies with the requirements of ATEX Directive 14/34/EU.

Standards Compliance: EN 60079-0:2012, EN 60079-11:2012, EN 13463-1:2009 AND EN13463-5:2011

Based on EC-Type Examination Certificate:
DNV-08-ATEX-19407

Quality System Audited by and EC-Type Examination Certificate Issued by Notified Body **0575**:
DET NORSKE VERITAS AS
Veritasveien 1, 1322 HOVIK
Norway, www.dnvcert.com

The product described in this Declaration of Conformity complies with the Applicable European Directives and relevant sections of the Applicable International Standards. The Signature on this document authorizes the distinctive European mark to be applied to the equipment described. A Technical Construction File is available for inspection by designated bodies.

CE 0575	Ex II 1 G c T6 Ex II 1 G c T5, Ex ia IIC T5 Ga Ex II 2 G c T6 Ex II 2 G c T5, Ex ia IIC T5 Gb		Authorized Signature		
DOC NO.	6300047	REV.	G	DATE:	04/20/2016

ENARDO

Item 15 – Manways

Contents

1. Weld Map
2. Visual Report
3. Dimension Report – Plumbness
4. Air Test Report
5. Bolting Pattern and Torque Wrench Photos
6. Torque Wrench Specs
7. MPI Report

Item 15 - Manways - Weld Map

PARTS LIST		
ITEM	ITEM QTY	PART NUMBER
1	55	SHELL PLATE 2798 X 9203 THICKNESS
2	5	SHELL PLATE LAST ON COURSE 2798 X 9127 (TRIM AT SITE)
3	4	900ns SHELL MANHOLE
5	8	Grounding Lug
6	3	150NS SHELL NOZZLE
8	6	75NS WATER DRAWOFF
10	1	20NS THERMOMETER CONNECTION
11	1	AISC - L 4 x 4 x 1/4 - 15.748031 TEMPERATURE CONNECTION PROTECTION
12	1	400NS VENT
13	4	PLATFORM
14	119	STEPS
18	14	AISC - L 3 x 3 x 1/4 - 15.748031 PRV PIPE SUPPORT
19	1	200NS SHELL NOZZLE - FIX LOADING PIPE

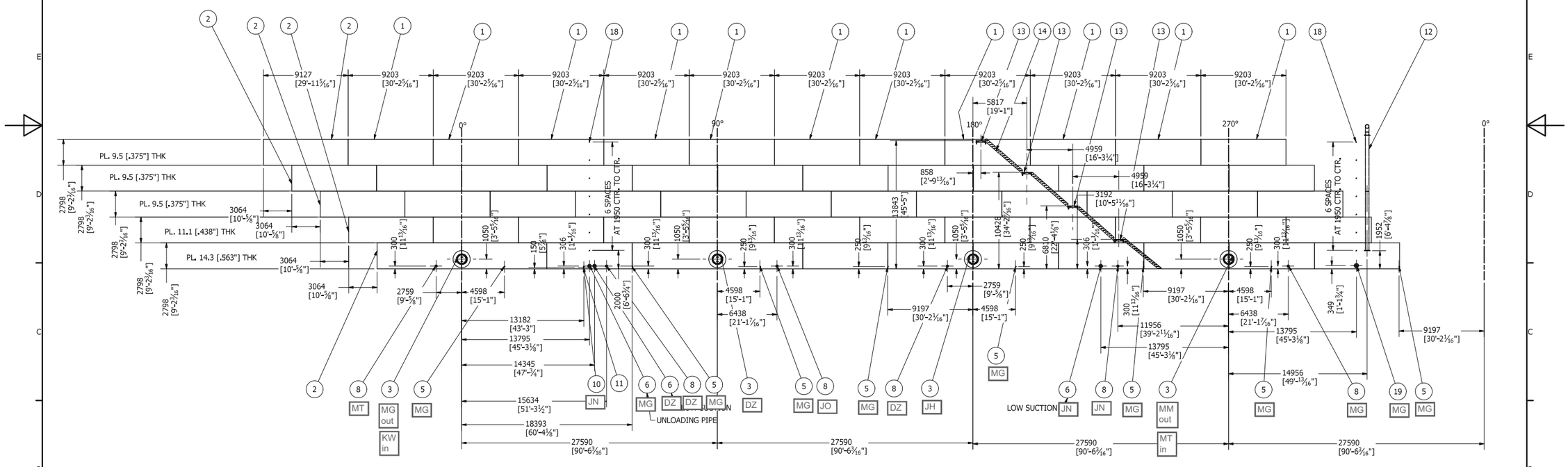

SHELL DEVELOPED VIEW
SCALE 1/200

REVISION HISTORY		
REV	DESCRIPTION	DATE
6	THIS SHEET ADDED	7/12/2017

DRAWN MARC LOSIER	3/9/2017	DEVELOP VIEW
CHECKED		TITLE
QA		AGNICO EAGLE - MELIADINE GOLD MINE - TK #2 - 13,500CUM 35.1M DIA X 14M H
MFG		
APPROVED		
		SIZE A1 / DWG NO 295-M10 / REV 6
		SCALE / SHEET 7 OF 7

16-Jul-2017

Permit Number: P471

Sub-Arc Systems Inc.

4605-47 Street
Vermillion, AB, T9X 1L6
780-608-9589

QUALITY CONTROL MANUAL

Exhibit 15c, Rev 1

VISUAL TEST REPORT

Customer: Agnico Eagle

Location: Rankin Inlet

Code Requiring Test: API 650 (section 8.5.2) Reason for Test: New Construction

A weld shall be acceptable by visual examination if the inspection shows the following.

a) There are no crater cracks, other surface cracks or arc strikes in or adjacent to the welded joints.
b) Maximum permissible undercut is 0.4 mm (1/64 in.) in depth for vertical butt joints, vertically oriented permanent attachments, attachment welds for nozzles, manholes, flush-type openings, and the inside shell-to-bottom welds. For horizontal butt joints, horizontally oriented permanent attachments, and annular-ring butt joints, the maximum permissible undercut is 0.8 mm (1/32 in.) in depth.
c) The frequency of surface porosity in the weld does not exceed one cluster (one or more pores) in any 100 mm (4 in.) of length, and the diameter of each cluster does not exceed 2.5 mm (3/32 in.).
d) The reinforcement of the welds on all thicknesses:

Plate Thickness mm (in.)	Maximum Reinforcement Thickness mm (in.)	
	Vertical Joints	Horizontal Joints
≤ 13 (1/2)	2.5 (3/32)	3 (1/8)
> 13 (1/2) to 25 (1)	3 (1/8)	5 (3/16)
> 25 (1)	5 (3/16)	6 (1/4)

Surface Condition (As Welded)

Test Solution: N/A Test Date(s):

Tested by: Ambient Conditions:

Items Tested:

SHELL MANWAYS.

Results:

ALL WELDING. ON SHELL MANWAYS ACCEPTABLE.

Sub-Arc Representative Signature: Matt MacLeod Date: Aug 31/17

Client Representative Signature: _____ Date: _____

Client Signature: Clem Bonin Date: Sept 04/17

Sub-Arc Systems Inc.

4605-47 Street
Vermillion, AB, T9X 1L6
780-608-9589

QUALITY CONTROL MANUAL

Exhibit 19, Rev A

DIMENSIONAL CHECK REPORT – PLUMBNESS

Customer: AGNICO EAGLE

Location: RANKIN INLET TK-02

Equipment Tag No.:

Equipment Type:

Equipment Description:

Code Requiring Test: API 650 Reason for Test: New Construction

(The tank shell will be checked for plumb at 12" below the tank roof. Plumb measurements will be checked at 45 degree intervals or less, max. 20' spacing)

Test Date(s): AUG 31/17

Tested by: MATT MACKENZIE

Seam Test Results:

ALL SHELL IS PLUMB IN AREAS THAT HAVE MANWAYS.

Sub-Arc Representative Signature: [signature] Date: AUG 31/17

Client Representative Signature: _____ Date: _____

Client Signature: [signature] Date: Sept 04/17

Sub-Arc Systems Inc.

4605-47 Street
Vermillion, AB, T9X 1L6
780-608-9589

QUALITY CONTROL MANUAL

Exhibit 12, Rev 1

AIR TEST REPORT – NOZZLE REINFORCEMENT PLATE WELDS

Customer: AGNICO EAGLE

Location: RANKIN INLET TK-2

Equipment Tag No.:

Equipment Type:

Equipment Description:

Code Requiring Test: API 650 Reason for Test: New Construction

(An air pressure/soap solution test for nozzle reinforcement plate weld seams is required for new construction or major alterations, no visible leaks should be observed)

Test Pressure: 100 kPa (15 psi) Surface Condition (As Welded, Painted, Blasted)

Test Solution: Water / Snoop: Test Date(s): AUG 31/17.

Tested by: Pressure Gauge: 15 Ambient Conditions: 10°

Items Tested:

MANWAYS.

Results:

ALL MANWAYS WERE AIR TESTED. NO LEAKS WERE FOUND AT TIME OF INSPECTION.

Sub-Arc Representative Signature: [signature] Date: AUG 31/17.

Client Representative Signature: _____ Date: _____

Client Signature: [signature] Date: Sept 04/17

Item 15 - Manways Bolting Pattern and Torque Wrench Photos

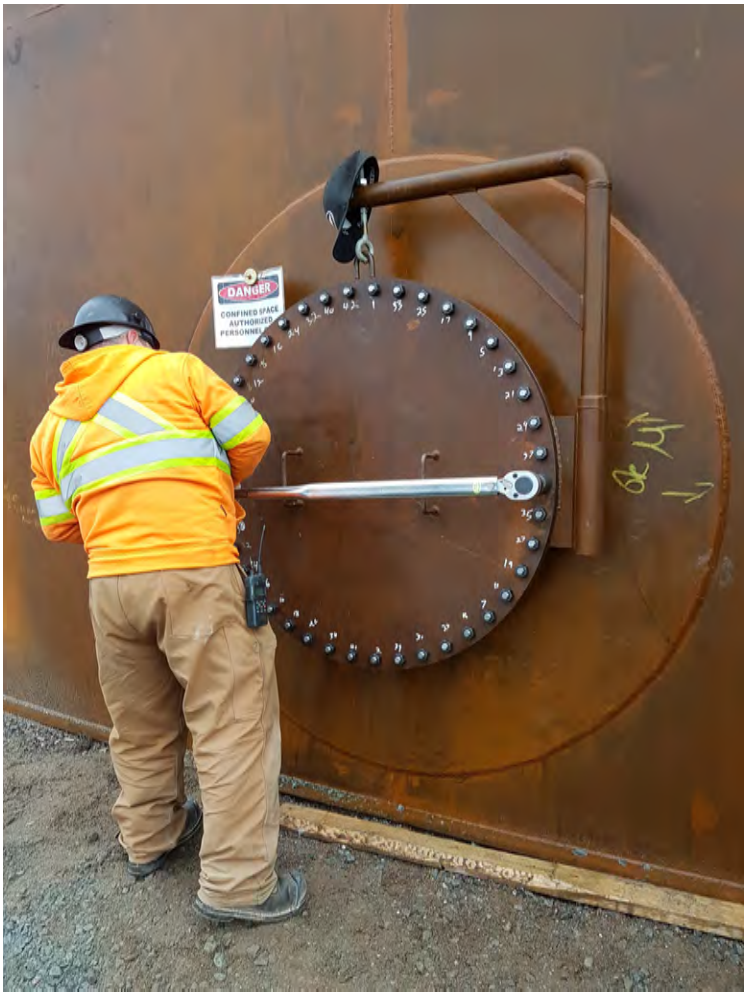

Item 15 - Manways - Torque Wrench Specs

Certification of calibration					
Model : 8229239			Serial No : E20140301		
Calibrator :			Date : 2014-10-21		
Set Torque	Min	Max	Actual Readings		
100FT	96.0	104.0	101.2	101.6	101.9
400FT	384.0	416.0	400	407.1	407.9
700FT	672.0	728.0	712.1	712.7	712.5

Client :	**Inukshuk Construction Ltd,**	**Date d'intervention :** **Intervention date :**	2017-08-30
Adresse/Address :	PO Box 654 Rankin Inlet, Nunavut X0C 0G0		
Contact :	Marc Losier	**Date du rapport :** **Report date :**	2017-09-08
Entrepreneur : **Contractor :**	N/A	**Nº dossier :** **File no :**	INS-117107-01_R01
Endroit du travail : **Job location :**	Rankin Inlet , Nunavut	**Commande :** **Order :**	295-1046

INSP. VISUELLE VISUAL INSP.	☐	MAGNÉTOSCOPIE MAGNETIC PARTICLES	☒	RESSUAGE LIQUID PENETRANT	☐	ULTRASONS ULTRASONIC	☒

DESCRIPTION :

Magnetic particles inspection and Ultrasonic inspection on tank 2

The client is opting to use an ultrasonic testing, instead of radiographic testing

Remark : Visual testing was performed by client
I

INSP. VISUELLE / VISUAL INSP.

NORME : **SPECIFICATION :**

N° équip. : **Equip. no :** N/A

MAGNÉTOSCOPIE MAGNETIC PARTICLES

NORME : **SPECIFICATION :** API 650

N° équip. : **Equip. no :** MP-Q-27

Ampérage : **Amperage :**	Culasse/Yoke	**Continue** **Continuous**	☒	**Résiduelle** **Residual**	☐	**Humide** **Wet**	☐	**Sèche** **Dry**	☒
Longitudinale **Longitudinal**	☐	**Circulaire** **Circular**	☐	**C.A.** **A.C.**	☒	**C.C.** **D.C.**	☐	**Démagnétisée** **Demagnetized**	☐

RESSUAGE LIQUID PENETRANT

NORME : **SPECIFICATION :**

N° équip. : **Equip. no :**

Pénétrant/Penetrant :

Émulsifiant/Emulsifier :

Révélateur/Developer :

Temps/Time :

Temps/Time :

Temps/Time :

ULTRASONS / ULTRASONIC

NORME : **SPECIFICATION :** API 650

ÉTALONNAGE/CALIBRATION :

Bloc/Block : IIW Type 2 **Trou/Hole :** N/A **C.A.D. /D.A.C. :** X☐

APPAREIL/EQUIPMENT :

Instrument : USM GO+ **Couplant :** Echogel **Échelle/Sweep length :**

Nº équip./Equip. no : UT-Q-34 **Palpeur/Transducer :** 0º degré and 70º degré

RÉSULTATS/RESULTS :

For ultrasonic results: **All spots are acceptable. See attached tables for locations.**

Magnetic particles inspection was performed on angle joint between the shell and nozzle, inside and outside the tank:

- *-Inside tank, weld between shell/nozzle, with a 100%: magnetic particles inspection, is acceptable*
- *-Outside tank, weld between shell/pad & weld between pad/nozzle, with 100% (note 1): magnetic particles inspection, is acceptable.*

Note 1: Fourteen (14) nozzles including four (4) manholes and one nozzle outside, does not have pad . Please refer to drawing 295-M10; part section K-K item #10. This nozzle corresponds to a ¾" coupling for a water temperature gauge in the shell and the client has advised that no repad is needed for this specific coupling.

Techniciens : **Technicians :** Sylvain Germain CSA W178.2 level 2	**Assistants:**	**Approuvé par :** **Approved by :** Pierre Dostie Technical Supervisor CSA W178.2, niveau 3

Ce rapport ne doit pas être reproduit, sinon en entier, sans l'autorisation écrite de SGS CANADA inc.
Le présent rapport est émis par la Société conformément à ses Conditions Générales de Service accessibles sur http://www.sgs.ca/fr-FR/Terms-and-Conditions.aspx
This report is confidential and shall not be reproduced without the written approval of SGS CANADA Inc
This document is issued by the Company under its General Conditions of Service accessible at http://www.sgs.ca/en/Terms-and-Conditions.aspx

Client :	**Inukshuk Construction Ltd,**	**Date d'intervention :** **Intervention date :**	2017-08-30
Adresse/Address :	PO Box 654 Rankin Inlet, Nunavut X0C 0G0		
Contact :	Marc Losier	**Date du rapport :** **Report date :**	2017-09-08
Entrepreneur : **Contractor :**	N/A	**Nº dossier :** **File no :**	INS-117107-01_R01
Endroit du travail : **Job location :**	Rankin Inlet , Nunavut	**Commande :** **Order :**	295-1046

Picture : 1

View of some nozzles

Picture : 2

View of tank 2

Techniciens : **Technicians :** Sylvain Germain CSA W178.2 level 2	**Assistants:**	**Approuvé par :** **Approved by :** Pierre Dostie Technical Supervisor CSA W178.2, niveau 3

Ce rapport ne doit pas être reproduit, sinon en entier, sans l'autorisation écrite de SGS CANADA inc.
Le présent rapport est émis par la Société conformément à ses Conditions Générales de Service accessibles sur http://www.sgs.ca/fr-FR/Terms-and-Conditions.aspx
This report is confidential and shall not be reproduced without the written approval of SGS CANADA Inc
This document is issued by the Company under its General Conditions of Service accessible at http://www.sgs.ca/en/Terms-and-Conditions.aspx

Client :	**Inukshuk Construction Ltd,**	**Date d'intervention :** **Intervention date :**	2017-08-30
Adresse/Address :	PO Box 654 Rankin Inlet, Nunavut X0C 0G0		
Contact :	Marc Losier	**Date du rapport :** **Report date :**	2017-09-08
Entrepreneur : **Contractor :**	N/A	**Nº dossier :** **File no :**	INS-117107-01_R01
Endroit du travail : **Job location :**	Rankin Inlet , Nunavut	**Commande :** **Order :**	295-1046

Picture :3

View of manhole before padding

Techniciens : **Technicians :** Sylvain Germain CSA W178.2 level 2	**Assistants:**	**Approuvé par :** **Approved by :** Pierre Dostie Technical Supervisor CSA W178.2, niveau 3

Ce rapport ne doit pas être reproduit, sinon en entier, sans l'autorisation écrite de SGS CANADA inc.
Le présent rapport est émis par la Société conformément à ses Conditions Générales de Service accessibles sur http://www.sgs.ca/fr-FR/Terms-and-Conditions.aspx
This report is confidential and shall not be reproduced without the written approval of SGS CANADA Inc
This document is issued by the Company under its General Conditions of Service accessible at http://www.sgs.ca/en/Terms-and-Conditions.aspx

Tank #2 Rankin Inlet (AEM)

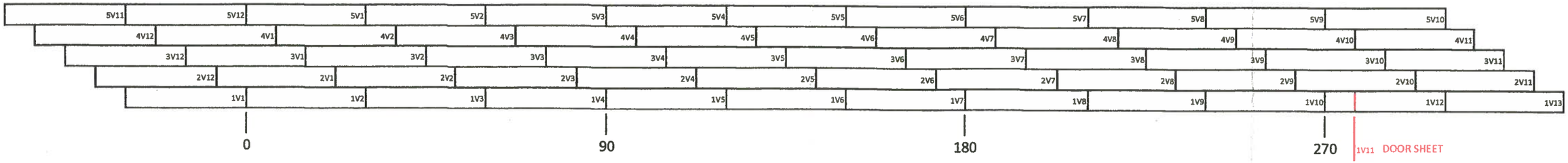

NDT TECHNICIAN WILL INITIAL EACH BOX WHEN WELD IS ACCEPTABLE

B ----> BOTTOM OF THE VERT (0-6")	M ----> MIDDLE OF THE VERT (53"-59")	T ----> TOP OF THE VERT (104 3/16" - 110 3/16")

VERTICAL SEAMS MAPPING UT

	B	M	T	FULL
1V1	UT FULL BECAUSE NOZZLE INTO VERT			SC
1V2	SG	SG	SG	
1V3	SG	SG	SC	
1V4	UT FULL BECAUSE NOZZLE INTO VERT			SC
1V5	SG	SG	SG	
1V6	SC	SC	SC	
1V7	UT FULL BECAUSE NOZZLE INTO VERT			SG
1V8	SG	SG	SG	
1V9	SG	SG	SC	
1V10	UT FULL BECAUSE NOZZLE INTO VERT			SG
1V11 (DOOR SHEET)	SG	SG	SG	
1V12	SG	SG	SG	
1V13	SG	SG	SG	

	B	M	T
2V1	SG	SC	SG
2V2	SG	SG	SG
2V3	SG	SG	SG
2V4	SC	SG	SG
2V5	SC	SG	SC
2V6	SG	SG	SG
2V7	SG	SG	SG
2V8	SG	SG	SG
2V9	SG	SG	SG
2V10	SG	SG	SG
2V11	SG	SG	SG
2V12	SG	SG	SG

	B	T
3V1	SG	SC
3V2	SC	SG
3V3	SG	SG
3V4	SG	SG
3V5	SG	SG
3V6	SG	SG
3V7	SG	SG
3V8	SG	SG
3V9	SG	SG
3V10	SG	SG
3V11	SG	SG
3V12	SG	SG

	B	T
4V1	SG	SG
4V2	SG	SG
4V3	SG	SG
4V4	SG	SG
4V5	SG	SG
4V6	SG	SG
4V7	SG	SG
4V8	SG	SG
4V9	SG	SG
4V10	SG	SG
4V11	SG	SG
4V12	SG	SG

	B	T
5V1	SG	
5V2	SG	
5V3	SG	
5V4	SG	
5V5	SG	
5V6	SC	
5V7	SG	
5V8	SG	
5V9	SG	
5V10	SG	
5V11	SG	
5V12	SG	

HORIZONTAL SEAMS MAPPING UT

H1V2	48"-54"	SG
H1V8	60"-66"	SG
H1V10	42"-48"	SG

H2V3	48"-54"	SG
H2V9	72"-78"	SC

H3V1	60"-66"	SG
H3V7	42"-48"	SG

H4V5	30"-36"	SG
H4V11	72"-78"	SG

Sub-Arc Representative Signature: [signature] Date: Aug 26/17.

Client Representative Signature: _____ Date: _____

NDT Representative Signature: [signature] Date: August 26 2017

Item 16 – Internals

Contents

1. Visual Report (SAS)
2. Visual Report of Water Draw off Extension (ICL)
3. Internal Dimensional Report (AmSpec)

QUALITY CONTROL MANUAL

Exhibit 15c, Rev 1

VISUAL TEST REPORT

Customer: Agnico Eagle

Location: Rankin Inlet TK-02

Code Requiring Test: API 650 (section 8.5.2) Reason for Test: New Construction

A weld shall be acceptable by visual examination if the inspection shows the following.

a) There are no crater cracks, other surface cracks or arc strikes in or adjacent to the welded joints.
b) Maximum permissible undercut is 0.4 mm (1/64 in.) in depth for vertical butt joints, vertically oriented permanent attachments, attachment welds for nozzles, manholes, flush-type openings, and the inside shell-to-bottom welds. For horizontal butt joints, horizontally oriented permanent attachments, and annular-ring butt joints, the maximum permissible undercut is 0.8 mm (1/32 in.) in depth.
c) The frequency of surface porosity in the weld does not exceed one cluster (one or more pores) in any 100 mm (4 in.) of length, and the diameter of each cluster does not exceed 2.5 mm (3/32 in.).
d) The reinforcement of the welds on all thicknesses:

Plate Thickness mm [in]	Maximum reinforcement thickness mm [in]	
	Vertical Joints	Horizontal Joints
[illegible]	[illegible]	[illegible]
[illegible]	[illegible]	[illegible]
[illegible]	[illegible]	[illegible]

Surface Condition (As Welded)

Test Solution: N/A Test Date(s): Sept 3/17

Tested by: Matt MacKenzie Ambient Conditions: 5

Items Tested:

Internal Column Repads + Pipe Supports.

Results:

Visual inspection completed on Column Repads + Internal Pipe Supports. All welds acceptable at time of inspection.

Sub-Arc Representative Signature: [signature] Date: Sept 3/17.

Client Representative Signature: _____ Date: _____

Client Signature: _____ Date: _____

Item 16 - Internals - Visual Report

All internal piping and structure was visually inspected and found to be acceptable.

6" pipe extensions were added to the water draw off valves as per ECN-001.

ICL Supervisor (Water Draw Off Extension)

Sign: Sheldon Burry

Print Name: Sheldon Burry

Tk # 2

Photo of Water Draw Off Valve with 6" Extension

It is very important to note if tubular roof supports (pipes) are open (fills with product) or closed.

PAGE 6

DEADWOOD

TANK No.: 2

ALL MEASUREMENTS TO BE SHOWN AS INCHES

Enter SUMP details in this first row ONLY

Use Proper Codes and Enter all data

op = Open Pipe ch = Channel
cp = Closed Pipe

Quantity	Description		Code	Diameter	Length	Height	Height From Bottom	To	Office Use Bbls/8th	Gls/8th
6	Pipe		OP	3	52	13	10	13	-0.0047	-0.1988995
6	Pipe		OP	8	460	18	10	18	-0.0419	-1.7594959
2	Pipe		OP	6	466	15	9	15	-0.0141	-0.5941486
1	Pipe		OP	6	35	15	9	15	-0.0005	-0.0223124
2	Pipe		OP	6	36	15	9	15	-0.0011	-0.0458999
8	Beam		OP	14	47				-0.0057	-0.2396994
1	Center Beam		OP	14	576				-0.0087	-0.3671991

Item 17 - Externals

Contents

1. Visual Report (SAS)
2. External Nozzle Dimensional Report (AmSpec)

QUALITY CONTROL MANUAL

Exhibit 15c, Rev 1

VISUAL TEST REPORT

Customer: Agnico Eagle

Location: Rankin Inlet TK-02

Code Requiring Test: API 650 (section 8.5.2) Reason for Test: New Construction

A weld shall be acceptable by visual examination if the inspection shows the following.

a) There are no crater cracks, other surface cracks or arc strikes in or adjacent to the welded joints.
b) Maximum permissible undercut is 0.4 mm (1/64 in.) in depth for vertical butt joints, vertically oriented permanent attachments, attachment welds for nozzles, manholes, flush-type openings, and the inside shell-to-bottom welds. For horizontal butt joints, horizontally oriented permanent attachments, and annular-ring butt joints, the maximum permissible undercut is 0.8 mm (1/32 in.) in depth.
c) The frequency of surface porosity in the weld does not exceed one cluster (one or more pores) in any 100 mm (4 in.) of length, and the diameter of each cluster does not exceed 2.5 mm (3/32 in.).
d) The reinforcement of the welds on all thicknesses:

Plate Thickness, mm (in.)	Maximum Reinforcement, mm (in.)	
	Vertical Joints	Horizontal Joints
[illegible]	[illegible]	[illegible]
[illegible]	[illegible]	[illegible]
[illegible]	[illegible]	[illegible]

Surface Condition: (As Welded)

Test Solution: N/A Test Date(s): SEPT 9/17.

Tested by: CHRIS JAGNES. Ambient Conditions: 7°

Items Tested:

EXTERNAL BRACKETS/CABLE TRAY.

Results:

VISUAL INSPECTION COMPLETED. ON CABLE TRAY SUPPORTS + BRACKETS FOR 16" PIPE. ALL WELDS ACCEPTABLE AT TIME OF INSPECTION.

Sub-Arc Representative Signature: [signature] Date: Sept 9/17

Client Representative Signature: _____ Date: _____

Client Signature: _____ Date: _____

QUALITY CONTROL MANUAL

Exhibit 15c, Rev 1

VISUAL TEST REPORT

Customer: Agnico Eagle

Location: Rankin Inlet TK-02

Code Requiring Test: API 650 (section 8.5.2) Reason for Test: New Construction

A weld shall be acceptable by visual examination if the inspection shows the following.

a) There are no crater cracks, other surface cracks or arc strikes in or adjacent to the welded joints.
b) Maximum permissible undercut is 0.4 mm (1/64 in.) in depth for vertical butt joints, vertically oriented permanent attachments, attachment welds for nozzles, manholes, flush-type openings, and the inside shell-to-bottom welds. For horizontal butt joints, horizontally oriented permanent attachments, and annular-ring butt joints, the maximum permissible undercut is 0.8 mm (1/32 in.) in depth.
c) The frequency of surface porosity in the weld does not exceed one cluster (one or more pores) in any 100 mm (4 in.) of length, and the diameter of each cluster does not exceed 2.5 mm (3/32 in.).
d) The reinforcement of the welds on all thicknesses:

From Thickness mm (in.)	Maximum reinforcement mm (in.)	
	Vertical Joints	Horizontal Joints
[illegible]	[illegible]	[illegible]
[illegible]	[illegible]	[illegible]
[illegible]	[illegible]	[illegible]

Surface Condition (As Welded)

Test Solution: N/A Test Date(s): Sept 3/17

Tested by: Matt Mackenzie Ambient Conditions: [illegible] 5

Items Tested:

Painters Post.

Results:

Visual inspection completed on roof painter post. All welds acceptable at time of inspection.

Sub-Arc Representative Signature: [signature] Date: Sept 3/17.

Client Representative Signature: _____ Date: _____

Client Signature: _____ Date: _____

Item 17 - External Nozzle Dimension Report (AmSpec 3rd Party)

Submit sketch for unusual deadwood

External

Quantity	Description	MW = Manway V = Valve F = Flange Hatch = Hatch	Code	Diameter	Length	Height	Height From Bottom	To	Office Use Bbls/8th	Gls/8th
4	Manway		MW	34	7 3/4	59	25	59	0.0107	
6	Pipe		F	3	6 3/4	13 1/2	10 1/2	13 1/2	0.0002	
1	Valve		V	8	14	18 1/2	10 1/2	18 1/2	0.0002	
2	Valve		V	6	14	15 1/2	9	15 1/2	0.0004	
1	Valve		V	6	8	15 1/2	9 1/2	15 1/2	0.0001	

Item 18 – Stairs and Platforms

Contents

1. Visual Reports
2. Visual Report of Changes Made (ICL)

VISUAL TEST REPORT

Customer: Agrico Eagle

Location: Rankin Inlet TK - 02

Code Requiring Test: API 650 (section 8.5.2) Reason for Test: New Construction

A weld shall be acceptable by visual examination if the inspection shows the following.

a) There are no crater cracks, other surface cracks or arc strikes in or adjacent to the welded joints.
b) Maximum permissible undercut is 0.4 mm (1/64 in.) in depth for vertical butt joints, vertically oriented permanent attachments, attachment welds for nozzles, manholes, flush-type openings, and the inside shell-to-bottom welds. For horizontal butt joints, horizontally oriented permanent attachments, and annular-ring butt joints, the maximum permissible undercut is 0.8 mm (1/32 in.) in depth
c) The frequency of surface porosity in the weld does not exceed one cluster (one or more pores) in any 100 mm (4 in.) of length, and the diameter of each cluster does not exceed 2.5 mm (3/32 in.).
d) The reinforcement of the welds on all thicknesses:

Plate Thickness mm (in.)	Maximum Reinforcement Thickness mm (in.)	
	Vertical Joints	Horizontal Joints
≤ 13 (1/2)	2.5 (3/32)	3 (1/8)
> 13 (1/2) to 25 (1)	3 (1/8)	5 (3/16)
> 25 (1)	4 (5/32)	6 (1/4)

Surface Condition: (As Welded)

Test Solution: N/A Test Date(s): SEPT 5/17

Tested by: Matt MacKenzie. Ambient Conditions: 5

Items Tested:

STAIRCASE SUPPORT BRACKETS / REPADS

Results:

VISUAL INSPECTION COMPLETED ON STAIRCASE BRACKETS / REPADS.
ALL WELDS ACCEPTABLE. AT TIME OF INSPECTION.

Sub-Arc Representative Signature: [signature] Date: Sept 5/17.

Client Representative Signature: _____ Date: _____

Client Signature: _____ Date: _____

Sub-Arc Systems Inc.

4605-47 Street
Vermillion, AB, T9X 1L6
780-608-9589

QUALITY CONTROL MANUAL

Exhibit 15c, Rev 1

VISUAL TEST REPORT

Customer: Agnico Eagle

Location: Rankin Inlet

Code Requiring Test: API 650 (section 8.5.2) Reason for Test: New Construction

A weld shall be acceptable by visual examination if the inspection shows the following.

a) There are no crater cracks, other surface cracks or arc strikes in or adjacent to the welded joints.
b) Maximum permissible undercut is 0.4 mm (1/64 in.) in depth for vertical butt joints, vertically oriented permanent attachments, attachment welds for nozzles, manholes, flush-type openings, and the inside shell-to-bottom welds. For horizontal butt joints, horizontally oriented permanent attachments, and annular-ring butt joints, the maximum permissible undercut is 0.8 mm (1/32 in.) in depth.
c) The frequency of surface porosity in the weld does not exceed one cluster (one or more pores) in any 100 mm (4 in.) of length, and the diameter of each cluster does not exceed 2.5 mm (3/32 in.).
d) The reinforcement of the welds on all thicknesses:

Plate Thickness mm (in.)	Maximum Reinforcement Thickness mm (in.)	
	Vertical Joints	Horizontal Joints
≤ 13 (1/2)	2.5 (3/32)	3 (1/8)
> 13 (1/2) to 25 (1)	3 (1/8)	5 (3/16)
> 25 (1)	5 (3/16)	6 (1/4)

Surface Condition (As Welded)

Test Solution: N/A Test Date(s): AUG 31/17

Tested by: MATT MACKENZIE Ambient Conditions: 10°

Items Tested:

STAIRS + PLATFORMS.

Results:

ALL WELDING ACCEPTABLE ON STAIRS + PLATFORMS.

Sub-Arc Representative Signature: Matt MacKenzie Date: Aug 31/17.

Client Representative Signature: _____ Date: _____

Client Signature: Glen Bonia Date: Sept 04/17

Visual Inspection of Stairway and Platforms was performed:

- Bottom step found to be too close to ground, potential issue with freeze/thaw expansion of the foundation
- Solution: Remove bottom step, this was completed by ICL (see below photo)

- Handrails were not connected making for potential pinch points at each platform
- Solution: Welded together handrails at each point where stairway handrail met platform handrails. This was completed by ICL and approved by Stephane Dubois (AEM).

ICL Supervisor

Sign: Sheldon Burry

Print Name: Sheldon Burry

TK # 2

Photo of stairway after bottom step removed

Item 19 – Bolts and Nuts

Contents

1. Fastener List
2. Torque Wrench Specs

Item 19 - Bolts and Nuts - Fastener List

Tank #	qty	Qty of Component	Connection	Description	Lght (in)
2	128.00	64	Shell to Rafter Connection	Bolt, Structural A325, 3/4"	2
2	64.00	32	Rafter to Center Column	Bolt, Structural A325, 3/4"	3.5
2	14.00	96	Rafter to intermediate beam	Bolt, Structural A325, 3/4"	2.25
2	112.00	7	Beam to top plate and intermediate colur	Bolt, Structural A325, 3/4"	2.5
2	318.00			Nut, Structural heavy hex 3/4"	
2	636.00			Washer, type A, 3/4"	
2	168.00	4	36"Shell Manhole	Stud, L7, 3/4"	3 3/4
2	16.00	2	8" in/out Nozzle	Stud, L7, 3/4"	4 1/4
2	48.00	6	6" in/out Nozzle	Stud, L7, 3/4"	4
2	-	6	3" Water Drawoff	Stud, L7, 5/8"	3 1/2
2	60.00	3	24" Roof manhole	Stud, L7, 5/8"	2 1/4
2	20.00	1	24" Roof manhole emergency vent	Stud, L7, 5/8"	9.5
2	16.00	1	16" Vent	Stud, L7, 1"	5 1/4
2	8.00	1	8" Roof Nozzle	Stud, L7, 3/4"	4 1/4
2	8.00	1	6" Gauge Hatch	Stud, L7, 3/4"	4
2	8.00	1	4" Roof Nozzle	Stud, L7, 5/8"	3.5
2	32.00			Nut, A194, Gr. 4, 1"	
2	496.00			Nut, A194, Gr. 4, 3/4"	
2	176.00			Nut, A194, Gr. 4, 5/8"	
2	4.00	4	36"Shell Manhole	Gasket, Ring, Durlon 8500, 1/8", 1051 o.d.x 914 i.d.	
2	2.00	2	8" in/out Nozzle	Gasket, Ring, Durlon 8500,1/8" x 8" x 150#	
2	6.00	6	6" in/out Nozzle	Gasket, Ring, Durlon 8500,1/8" x 6" x 150#	
2	-	6	3" Water Drawoff	Gasket, Ring, Durlon 8500,1/8" x 3" x 150#	
2	4.00	4	24" Roof manhole	Gasket, Ring, Durlon 8500, 1/16" x 762 x 610	
2	1.00	1	8" High Level	Gasket, Ring, Durlon 8500, 1/16" x 150#, 8"	
2	1.00	1	6" Gauge Hatch	Gasket, Full Face, Durlon 8500, 1/16" x 150#, 6"	

Item 19 - Bolts and Nuts - Torque Wrench Specs

Certification of Calibration
For Torque Wrench Used to Seal Shell Manholes

Certification of calibration					
Model : 8229239 Calibrator :			Serial No : E20140301 Date : 2014-10-21		
Set Torque	Min	Max	Actual Readings		
100FT	96.0	104.0	101.3	101.6	101.9
400FT	384.0	416.0	400	407.1	407.9
700FT	672.0	728.0	712.1	712.7	712.5

Item 20 - Final

Contents

1. Name Plate Scan
2. Punch List
3. Manufacturer's Certification (3rd Party)
4. Data Sheet (Innage)

Item 20 - Final - Name Plate Scan

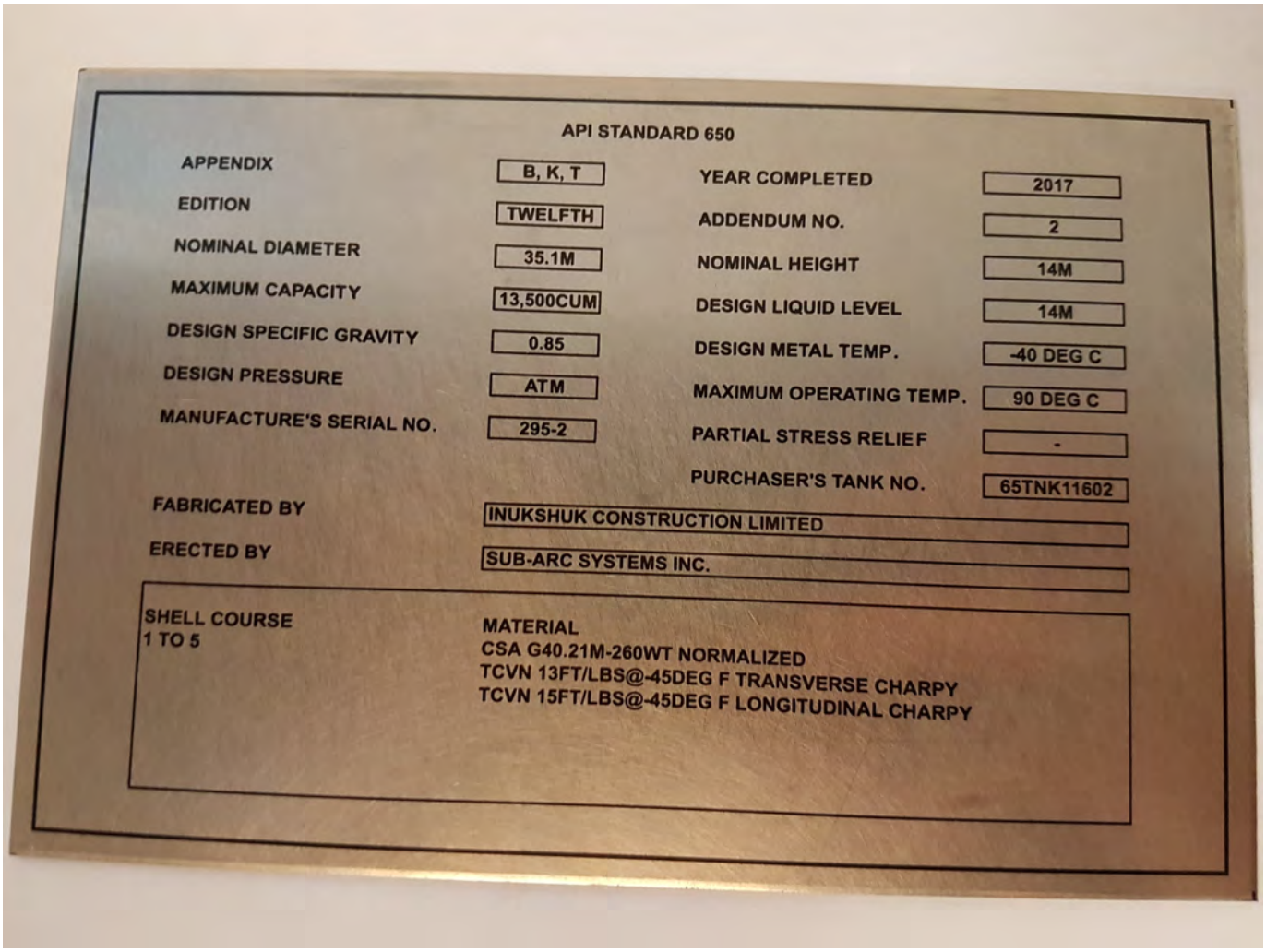

API STANDARD 650

APPENDIX	B, K, T	YEAR COMPLETED	2017
EDITION	TWELFTH	ADDENDUM NO.	2
NOMINAL DIAMETER	35.1M	NOMINAL HEIGHT	14M
MAXIMUM CAPACITY	13,500CUM	DESIGN LIQUID LEVEL	14M
DESIGN SPECIFIC GRAVITY	0.85	DESIGN METAL TEMP.	-40 DEG C
DESIGN PRESSURE	ATM	MAXIMUM OPERATING TEMP.	90 DEG C
MANUFACTURE'S SERIAL NO.	295-2	PARTIAL STRESS RELIEF	-
		PURCHASER'S TANK NO.	65TNK11602

FABRICATED BY INUKSHUK CONSTRUCTION LIMITED

ERECTED BY SUB-ARC SYSTEMS INC.

SHELL COURSE
1 TO 5

MATERIAL
CSA G40.21M-260WT NORMALIZED
TCVN 13FT/LBS@-45DEG F TRANSVERSE CHARPY
TCVN 15FT/LBS@-45DEG F LONGITUDINAL CHARPY

Inukshuk Construction Limited
Industrial Contracting Project Management

PO Box 654
Rankin Inlet, NU X0C 0G0
T 867.645.4030 F 867.645.4064

Item 20 – Final – Punch List

ICL Project No.: 295 Tank No.: 2 Client: AEM Site: Rankin Inlet

Punch List

Initial When Complete

Description	To be Completed By	ICL	Client
Install 12" Emergency P/V Vent when it arrives on site	ICL	SB	
Weld stairway and platform handrails together to eliminate pinch points	ICL	SB	

MANUFACTURER'S CERTIFICATION FOR
A TANK BUILT TO API STANDARD 650

To **AGNICO EAGLE MINES LIMITED**

(name and address of Purchaser)

145 KING STREET EAST, SUITE 400, TORONTO, ONTARIO M5C 2Y7

We hereby certify that the tank constructed for you at

(location)

RANKIN INLET, NUNAVUT - MELIADINE FIELD ERECTED TANKS PROJECT

and described as follows: **TANK NO. 2, 35.1 M DIA X 14M HIGH, 13,500 M3, FIXED CONE ROOF**

(serial or contract number, diameter, height, capacity, floating or fixed roof)

AEM PO: OC-568510

meets all applicable requirements of API Standard 650, **12th** Edition, **Addendum 2** Revision, Appendix

_____ dated **JAN 2016** including the requirements for design, materials, fabrication, and erection.

REGISTERED PROFESSIONAL ENGINEER
K.G. BROWN
LICENSEE
NT/NU

29-Oct-2017

Permit Number: P471

INUKSHUK CONSTRUCTION LIMITED

Manufacturer

Kyle Brown

Design Engineer

29-Oct-17

Date

Meliadine

Rankin Inlet

Item 20 - Final - Data Sheet (Innage)

Tank No. 2

INNAGE TABLE

Calibration@AmSpecGroup.com

CAPACITIES GIVEN IN CUBIC METERS

GAUGE HEIGHT: 14.269 M

mm	0 M	mm	0 M	mm	0 M	mm	0 M	mm	0 M	mm	0 M	mm	0 M	mm	0 M	mm	0 M	mm	0 M
0.000	0.609	0.100	48.414	0.200	142.249	0.300	238.685	0.400	335.078	0.500	431.640	0.600	528.277	0.700	624.959	0.800	721.650	0.900	818.340
0.001	0.787	0.101	49.291	0.201	143.215	0.301	239.649	0.401	336.042	0.501	432.606	0.601	529.243	0.701	625.926	0.801	722.617	0.901	819.307
0.002	0.966	0.102	50.169	0.202	144.181	0.302	240.612	0.402	337.006	0.502	433.572	0.602	530.209	0.702	626.893	0.802	723.584	0.902	820.274
0.003	1.144	0.103	51.046	0.203	145.147	0.303	241.576	0.403	337.971	0.503	434.539	0.603	531.176	0.703	627.860	0.803	724.551	0.903	821.241
0.004	1.322	0.104	51.924	0.204	146.113	0.304	242.539	0.404	338.935	0.504	435.505	0.604	532.143	0.704	628.827	0.804	725.518	0.904	822.208
0.005	1.500	0.105	52.802	0.205	147.079	0.305	243.503	0.405	339.899	0.505	436.471	0.605	533.109	0.705	629.794	0.805	726.484	0.905	823.175
0.006	1.679	0.106	53.679	0.206	148.045	0.306	244.467	0.406	340.864	0.506	437.438	0.606	534.076	0.706	630.761	0.806	727.451	0.906	824.142
0.007	1.857	0.107	54.557	0.207	149.011	0.307	245.430	0.407	341.828	0.507	438.404	0.607	535.043	0.707	631.728	0.807	728.418	0.907	825.109
0.008	2.035	0.108	55.434	0.208	149.977	0.308	246.394	0.408	342.792	0.508	439.371	0.608	536.009	0.708	632.695	0.808	729.385	0.908	826.076
0.009	2.213	0.109	56.312	0.209	150.944	0.309	247.357	0.409	343.757	0.509	440.337	0.609	536.976	0.709	633.662	0.809	730.352	0.909	827.043
0.010	2.392	0.110	57.190	0.210	151.910	0.310	248.321	0.410	344.721	0.510	441.303	0.610	537.943	0.710	634.628	0.810	731.319	0.910	828.009
0.011	2.570	0.111	58.067	0.211	152.876	0.311	249.285	0.411	345.685	0.511	442.270	0.611	538.909	0.711	635.595	0.811	732.286	0.911	828.976
0.012	2.748	0.112	58.945	0.212	153.842	0.312	250.248	0.412	346.650	0.512	443.236	0.612	539.876	0.712	636.562	0.812	733.253	0.912	829.943
0.013	2.926	0.113	59.822	0.213	154.808	0.313	251.212	0.413	347.614	0.513	444.202	0.613	540.842	0.713	637.529	0.813	734.220	0.913	830.910
0.014	3.105	0.114	60.700	0.214	155.774	0.314	252.175	0.414	348.578	0.514	445.169	0.614	541.809	0.714	638.496	0.814	735.187	0.914	831.877
0.015	3.283	0.115	61.577	0.215	156.740	0.315	253.139	0.415	349.543	0.515	446.135	0.615	542.776	0.715	639.463	0.815	736.153	0.915	832.844
0.016	3.461	0.116	62.455	0.216	157.706	0.316	254.103	0.416	350.507	0.516	447.102	0.616	543.742	0.716	640.430	0.816	737.120	0.916	833.811
0.017	3.639	0.117	63.333	0.217	158.672	0.317	255.066	0.417	351.471	0.517	448.068	0.617	544.709	0.717	641.397	0.817	738.087	0.917	834.778
0.018	3.818	0.118	64.210	0.218	159.638	0.318	256.030	0.418	352.436	0.518	449.034	0.618	545.676	0.718	642.364	0.818	739.054	0.918	835.745
0.019	3.996	0.119	65.088	0.219	160.604	0.319	256.993	0.419	353.400	0.519	450.001	0.619	546.642	0.719	643.331	0.819	740.021	0.919	836.712
0.020	4.174	0.120	65.965	0.220	161.570	0.320	257.957	0.420	354.364	0.520	450.967	0.620	547.609	0.720	644.297	0.820	740.988	0.920	837.678
0.021	4.352	0.121	66.843	0.221	162.536	0.321	258.921	0.421	355.329	0.521	451.933	0.621	548.576	0.721	645.264	0.821	741.955	0.921	838.645
0.022	4.531	0.122	67.721	0.222	163.502	0.322	259.884	0.422	356.293	0.522	452.900	0.622	549.542	0.722	646.231	0.822	742.922	0.922	839.612
0.023	4.709	0.123	68.598	0.223	164.468	0.323	260.848	0.423	357.257	0.523	453.866	0.623	550.509	0.723	647.198	0.823	743.889	0.923	840.579
0.024	4.887	0.124	69.476	0.224	165.434	0.324	261.811	0.424	358.222	0.524	454.832	0.624	551.475	0.724	648.165	0.824	744.856	0.924	841.546
0.025	5.065	0.125	70.353	0.225	166.400	0.325	262.775	0.425	359.186	0.525	455.799	0.625	552.442	0.725	649.132	0.825	745.823	0.925	842.513
0.026	5.467	0.126	71.298	0.226	167.364	0.326	263.739	0.426	360.151	0.526	456.765	0.626	553.409	0.726	650.099	0.826	746.789	0.926	843.480
0.027	5.868	0.127	72.243	0.227	168.329	0.327	264.702	0.427	361.117	0.527	457.732	0.627	554.375	0.727	651.066	0.827	747.756	0.927	844.447
0.028	6.269	0.128	73.188	0.228	169.293	0.328	265.666	0.428	362.082	0.528	458.698	0.628	555.342	0.728	652.033	0.828	748.723	0.928	845.414
0.029	6.670	0.129	74.133	0.229	170.258	0.329	266.630	0.429	363.047	0.529	459.664	0.629	556.309	0.729	653.000	0.829	749.690	0.929	846.381
0.030	7.072	0.130	75.078	0.230	171.222	0.330	267.593	0.430	364.013	0.530	460.631	0.630	557.276	0.730	653.967	0.830	750.657	0.930	847.348
0.031	7.473	0.131	76.023	0.231	172.187	0.331	268.557	0.431	364.978	0.531	461.597	0.631	558.243	0.731	654.933	0.831	751.624	0.931	848.314
0.032	7.874	0.132	76.968	0.232	173.151	0.332	269.521	0.432	365.944	0.532	462.563	0.632	559.210	0.732	655.900	0.832	752.591	0.932	849.281
0.033	8.275	0.133	77.912	0.233	174.116	0.333	270.484	0.433	366.909	0.533	463.530	0.633	560.177	0.733	656.867	0.833	753.558	0.933	850.248
0.034	8.677	0.134	78.857	0.234	175.081	0.334	271.448	0.434	367.874	0.534	464.496	0.634	561.144	0.734	657.834	0.834	754.525	0.934	851.215
0.035	9.078	0.135	79.802	0.235	176.045	0.335	272.412	0.435	368.840	0.535	465.463	0.635	562.111	0.735	658.801	0.835	755.492	0.935	852.182
0.036	9.479	0.136	80.747	0.236	177.010	0.336	273.375	0.436	369.805	0.536	466.429	0.636	563.077	0.736	659.768	0.836	756.458	0.936	853.149
0.037	9.880	0.137	81.692	0.237	177.974	0.337	274.339	0.437	370.770	0.537	467.395	0.637	564.044	0.737	660.735	0.837	757.425	0.937	854.116
0.038	10.281	0.138	82.637	0.238	178.939	0.338	275.303	0.438	371.736	0.538	468.362	0.638	565.011	0.738	661.702	0.838	758.392	0.938	855.083
0.039	10.683	0.139	83.582	0.239	179.903	0.339	276.266	0.439	372.701	0.539	469.328	0.639	565.978	0.739	662.669	0.839	759.359	0.939	856.050
0.040	11.084	0.140	84.527	0.240	180.868	0.340	277.230	0.440	373.667	0.540	470.294	0.640	566.945	0.740	663.636	0.840	760.326	0.940	857.017
0.041	11.485	0.141	85.472	0.241	181.832	0.341	278.194	0.441	374.632	0.541	471.261	0.641	567.912	0.741	664.603	0.841	761.293	0.941	857.983
0.042	11.886	0.142	86.416	0.242	182.797	0.342	279.157	0.442	375.597	0.542	472.227	0.642	568.879	0.742	665.569	0.842	762.260	0.942	858.950
0.043	12.288	0.143	87.361	0.243	183.761	0.343	280.121	0.443	376.563	0.543	473.194	0.643	569.846	0.743	666.536	0.843	763.227	0.943	859.917
0.044	12.689	0.144	88.306	0.244	184.726	0.344	281.085	0.444	377.528	0.544	474.160	0.644	570.813	0.744	667.503	0.844	764.194	0.944	860.884
0.045	13.090	0.145	89.251	0.245	185.690	0.345	282.049	0.445	378.493	0.545	475.126	0.645	571.780	0.745	668.470	0.845	765.161	0.945	861.851
0.046	13.491	0.146	90.196	0.246	186.655	0.346	283.012	0.446	379.459	0.546	476.093	0.646	572.747	0.746	669.437	0.846	766.128	0.946	862.818
0.047	13.893	0.147	91.141	0.247	187.619	0.347	283.976	0.447	380.424	0.547	477.059	0.647	573.713	0.747	670.404	0.847	767.094	0.947	863.785
0.048	14.294	0.148	92.086	0.248	188.584	0.348	284.940	0.448	381.390	0.548	478.025	0.648	574.680	0.748	671.371	0.848	768.061	0.948	864.752
0.049	14.695	0.149	93.031	0.249	189.548	0.349	285.903	0.449	382.355	0.549	478.992	0.649	575.647	0.749	672.338	0.849	769.028	0.949	865.719
0.050	15.096	0.150	93.975	0.250	190.513	0.350	286.867	0.450	383.320	0.550	479.958	0.650	576.614	0.750	673.305	0.850	769.995	0.950	866.686
0.051	15.679	0.151	94.940	0.251	191.476	0.351	287.831	0.451	384.287	0.551	480.924	0.651	577.581	0.751	674.272	0.851	770.962	0.951	867.653
0.052	16.261	0.152	95.905	0.252	192.440	0.352	288.795	0.452	385.253	0.552	481.891	0.652	578.548	0.752	675.238	0.852	771.929	0.952	868.619
0.053	16.843	0.153	96.870	0.253	193.403	0.353	289.759	0.453	386.220	0.553	482.857	0.653	579.515	0.753	676.205	0.853	772.896	0.953	869.586
0.054	17.426	0.154	97.835	0.254	194.367	0.354	290.723	0.454	387.186	0.554	483.824	0.654	580.482	0.754	677.172	0.854	773.863	0.954	870.553
0.055	18.008	0.155	98.800	0.255	195.330	0.355	291.687	0.455	388.152	0.555	484.790	0.655	581.449	0.755	678.139	0.855	774.830	0.955	871.520
0.056	18.590	0.156	99.764	0.256	196.293	0.356	292.651	0.456	389.119	0.556	485.756	0.656	582.416	0.756	679.106	0.856	775.797	0.956	872.487
0.057	19.173	0.157	100.729	0.257	197.257	0.357	293.615	0.457	390.085	0.557	486.723	0.657	583.382	0.757	680.073	0.857	776.763	0.957	873.454
0.058	19.755	0.158	101.694	0.258	198.220	0.358	294.579	0.458	391.052	0.558	487.689	0.658	584.349	0.758	681.040	0.858	777.730	0.958	874.421
0.059	20.337	0.159	102.659	0.259	199.184	0.359	295.543	0.459	392.018	0.559	488.655	0.659	585.316	0.759	682.007	0.859	778.697	0.959	875.388
0.060	20.920	0.160	103.624	0.260	200.147	0.360	296.507	0.460	392.984	0.560	489.622	0.660	586.283	0.760	682.974	0.860	779.664	0.960	876.355
0.061	21.502	0.161	104.589	0.261	201.110	0.361	297.471	0.461	393.951	0.561	490.588	0.661	587.250	0.761	683.941	0.861	780.631	0.961	877.322
0.062	22.085	0.162	105.553	0.262	202.074	0.362	298.435	0.462	394.917	0.562	491.555	0.662	588.217	0.762	684.908	0.862	781.598	0.962	878.288
0.063	22.667	0.163	106.518	0.263	203.037	0.363	299.399	0.463	395.884	0.563	492.521	0.663	589.184	0.763	685.874	0.863	782.565	0.963	879.255
0.064	23.249	0.164	107.483	0.264	204.001	0.364	300.364	0.464	396.850	0.564	493.487	0.664	590.151	0.764	686.841	0.864	783.532	0.964	880.222
0.065	23.832	0.165	108.448	0.265	204.964	0.365	301.328	0.465	397.816	0.565	494.454	0.665	591.118	0.765	687.808	0.865	784.499	0.965	881.189
0.066	24.414	0.166	109.413	0.266	205.928	0.366	302.292	0.466	398.783	0.566	495.420	0.666	592.085	0.766	688.775	0.866	785.466	0.966	882.156
0.067	24.996	0.167	110.378	0.267	206.891	0.367	303.256	0.467	399.749	0.567	496.386	0.667	593.052	0.767	689.742	0.867	786.433	0.967	883.123
0.068	25.579	0.168	111.342	0.268	207.854	0.368	304.220	0.468	400.716	0.568	497.353	0.668	594.018	0.768	690.709	0.868	787.399	0.968	884.090
0.069	26.161	0.169	112.307	0.269	208.818	0.369	305.184	0.469	401.682	0.569	498.319	0.669	594.985	0.769	691.676	0.869	788.366	0.969	885.057
0.070	26.743	0.170	113.272	0.270	209.781	0.370	306.148	0.470	402.648	0.570	499.286	0.670	595.952	0.770	692.643	0.870	789.333	0.970	886.024
0.071	27.326	0.171	114.237	0.271	210.745	0.371	307.112	0.471	403.615	0.571	500.252	0.671	596.919	0.771	693.610	0.871	790.300	0.971	886.991
0.072	27.908	0.172	115.202	0.272	211.708	0.372	308.076	0.472	404.581	0.572	501.218	0.672	597.886	0.772	694.577	0.872	791.267	0.972	887.958
0.073	28.491	0.173	116.167	0.273	212.671	0.373	309.040	0.473	405.548	0.573	502.185	0.673	598.853	0.773	695.543	0.873	792.234	0.973	888.924
0.074	29.073	0.174	117.131	0.274	213.635	0.374	310.004	0.474	406.514	0.574	503.151	0.674	599.820	0.774	696.510	0.874	793.201	0.974	889.891
0.075	29.655	0.175	118.096	0.275	214.598	0.375	310.968	0.475	407.480	0.575	504.117	0.675	600.787	0.775	697.477	0.875	794.168	0.975	890.858
0.076	30.406	0.176	119.062	0.276	215.562	0.376	311.932	0.476	408.447	0.576	505.084	0.676	601.754	0.776	698.444	0.876	795.135	0.976	891.825
0.077	31.156	0.177	120.029	0.277	216.525	0.377	312.897	0.477	409.413	0.577	506.050	0.677	602.721	0.777	699.411	0.877	796.102	0.977	892.792
0.078	31.906	0.178	120.995	0.278	217.489	0.378	313.861	0.478	410.379	0.578	507.017	0.678	603.687	0.778	700.378	0.878	797.068	0.978	893.759
0.079	32.657	0.179	121.961	0.279	218.452	0.379	314.826	0.479	411.346	0.579	507.983	0.679	604.654	0.779	701.345	0.879	798.035	0.979	894.726
0.080	33.407	0.180	122.927	0.280	219.416	0.380	315.790	0.480	412.312	0.580	508.949	0.680	605.621	0.780	702.312	0.880	799.002	0.980	895.693
0.081	34.157	0.181	123.893	0.281	220.379	0.381	316.754	0.481	413.279	0.581	509.916	0.681	606.588	0.781	703.279	0.881	799.969	0.981	896.660
0.082	34.908	0.182	124.859	0.282	221.343	0.382	317.719	0.482	414.245	0.582	510.882	0.682	607.555	0.782	704.246	0.882	800.936	0.982	897.627
0.083	35.658	0.183	125.825	0.283	222.306	0.383	318.683	0.483	415.211	0.583	511.848	0.683	608.522	0.783	705.213	0.883	801.903	0.983	898.593
0.084	36.408	0.184	126.791	0.284	223.270	0.384	319.647	0.484	416.178	0.584	512.815	0.684	609.489	0.784	706.179	0.884	802.870	0.984	899.560
0.085	37.159	0.185	127.758	0.285	224.233	0.385	320.612	0.485	417.144	0.585	513.781	0.685	610.456	0.785	707.146	0.885	803.837	0.985	900.527
0.086	37.909	0.186	128.724	0.286	225.196	0.386	321.576	0.486	418.110	0.586	514.747	0.686	611.423	0.786	708.113	0.886	804.804	0.986	901.494
0.087	38.659	0.187	129.690	0.287	226.160	0.387	322.541	0.487	419.077	0.587	515.714	0.687	612.390	0.787	709.080	0.887	805.771	0.987	902.461
0.088	39.410	0.188	130.656	0.288	227.123	0.388	323.505	0.488	420.043	0.588	516.680	0.688	613.357	0.788	710.047	0.888	806.738	0.988	903.428
0.089	40.160	0.189	131.622	0.289	228.087	0.389	324.469	0.489	421.010	0.589	517.647	0.689	614.323	0.789	711.014	0.889	807.704	0.989	904.395
0.090	40.910	0.190	132.588	0.290	229.050	0.390	325.434	0.490	421.976	0.590	518.613	0.690	615.290	0.790	711.981	0.890	808.671	0.990	905.362
0.091	41.661	0.191	133.554	0.291	230.014	0.391	326.398	0.491	422.942	0.591	519.579	0.691	616.257	0.791	712.948	0.891	809.638	0.991	906.329
0.092	42.411	0.192	134.520	0.292	230.977	0.392	327.363	0.492	423.909	0.592	520.546	0.692	617.224	0.792	713.915	0.892	810.605	0.992	907.296
0.093	43.161	0.193	135.486	0.293	231.941	0.393	328.327	0.493	424.875	0.593	521.512	0.693	618.191	0.793	714.882	0.893	811.572	0.993	908.263
0.094	43.912	0.194	136.453	0.294	232.904	0.394	329.291	0.494	425.841	0.594	522.478	0.694	619.158	0.794	715.848	0.894	812.539	0.994	909.229
0.095	44.662	0.195	137.419	0.295	233.868	0.395	330.256	0.495	426.808	0.595	523.445	0.695	620.125	0.795	716.815	0.895	813.506	0.995	910.196
0.096	45.412	0.196	138.385	0.296	234.831	0.396	331.220	0.496	427.774	0.596	524.411	0.696	621.092	0.796	717.782	0.896	814.473	0.996	911.163
0.097	46.163	0.197	139.351	0.297	235.795	0.397	332.184	0.497	428.740	0.597	525.378	0.697	622.059	0.797	718.749	0.897	815.440	0.997	912.130
0.098	46.913	0.198	140.317	0.298	236.758	0.398	333.149	0.498	429.707	0.598	526.344	0.698	623.026	0.798	719.716	0.898	816.407	0.998	913.097
0.099	47.663	0.199	141.283	0.299	237.722	0.399	334.113	0.499	430.673	0.599	527.310	0.699	623.992	0.799	720.683	0.899	817.373	0.999	914.064

NOTE: TANK STRAPPED AND COMPUTED IN ACCORDANCE WITH API STANDARD MPMS CHAPTER 2.2C.
NOTE: CAPACITY TABLE REFLECTS AN OPERATING TEMPERATURE OF 60 DEGREES F.
NOTE: LIQUID HEAD STRESS HAS BEEN APPLIED TO CAPACITY TABLE AT SPECIFIC GRAVITY 0.8500.
NOTE: A 19 CM CONE BOTTOM HAS BEEN APPLIED BELOW 18 CM
NOTE: NOMINAL TANK DIAMETER = 35.08 M SHELL HEIGHT = 13.97 M

DATE STRAPPED: 09/19/17 BY: RJ
DATE COMPUTED: 09/26/17 BY: WLH
DATE ISSUED: 09/26/17

AMSPEC

Meliadine
Rankin Inlet

Tank No. 2
INNAGE TABLE

Calibration@AmSpecGroup.com

CAPACITIES GIVEN IN CUBIC METERS

Item 20 - Final - Data Sheet (Innage)

GAUGE HEIGHT: 14.269 M

mm	1 M	mm	1 M	mm	1 M	mm	1 M	mm	1 M	mm	1 M	mm	1 M	mm	1 M	mm	1 M	mm	1 M
0.000	915.031	0.100	1,011.721	0.200	1,108.412	0.300	1,205.102	0.400	1,301.793	0.500	1,398.471	0.600	1,495.108	0.700	1,591.745	0.800	1,688.382	0.900	1,785.020
0.001	915.998	0.101	1,012.688	0.201	1,109.379	0.301	1,206.069	0.401	1,302.760	0.501	1,399.438	0.601	1,496.075	0.701	1,592.712	0.801	1,689.349	0.901	1,785.986
0.002	916.965	0.102	1,013.655	0.202	1,110.346	0.302	1,207.036	0.402	1,303.727	0.502	1,400.404	0.602	1,497.041	0.702	1,593.678	0.802	1,690.315	0.902	1,786.952
0.003	917.932	0.103	1,014.622	0.203	1,111.313	0.303	1,208.003	0.403	1,304.694	0.503	1,401.370	0.603	1,498.007	0.703	1,594.645	0.803	1,691.282	0.903	1,787.919
0.004	918.898	0.104	1,015.589	0.204	1,112.279	0.304	1,208.970	0.404	1,305.660	0.504	1,402.337	0.604	1,498.974	0.704	1,595.611	0.804	1,692.248	0.904	1,788.885
0.005	919.865	0.105	1,016.556	0.205	1,113.246	0.305	1,209.937	0.405	1,306.627	0.505	1,403.303	0.605	1,499.940	0.705	1,596.577	0.805	1,693.214	0.905	1,789.851
0.006	920.832	0.106	1,017.523	0.206	1,114.213	0.306	1,210.904	0.406	1,307.594	0.506	1,404.269	0.606	1,500.907	0.706	1,597.544	0.806	1,694.181	0.906	1,790.818
0.007	921.799	0.107	1,018.490	0.207	1,115.180	0.307	1,211.871	0.407	1,308.561	0.507	1,405.236	0.607	1,501.873	0.707	1,598.510	0.807	1,695.147	0.907	1,791.784
0.008	922.766	0.108	1,019.457	0.208	1,116.147	0.308	1,212.838	0.408	1,309.528	0.508	1,406.202	0.608	1,502.839	0.708	1,599.476	0.808	1,696.113	0.908	1,792.751
0.009	923.733	0.109	1,020.423	0.209	1,117.114	0.309	1,213.804	0.409	1,310.495	0.509	1,407.169	0.609	1,503.806	0.709	1,600.443	0.809	1,697.080	0.909	1,793.717
0.010	924.700	0.110	1,021.390	0.210	1,118.081	0.310	1,214.771	0.410	1,311.462	0.510	1,408.135	0.610	1,504.772	0.710	1,601.409	0.810	1,698.046	0.910	1,794.683
0.011	925.667	0.111	1,022.357	0.211	1,119.048	0.311	1,215.738	0.411	1,312.429	0.511	1,409.101	0.611	1,505.738	0.711	1,602.375	0.811	1,699.013	0.911	1,795.650
0.012	926.634	0.112	1,023.324	0.212	1,120.015	0.312	1,216.705	0.412	1,313.396	0.512	1,410.068	0.612	1,506.705	0.712	1,603.342	0.812	1,699.979	0.912	1,796.616
0.013	927.601	0.113	1,024.291	0.213	1,120.982	0.313	1,217.672	0.413	1,314.363	0.513	1,411.034	0.613	1,507.671	0.713	1,604.308	0.813	1,700.945	0.913	1,797.582
0.014	928.568	0.114	1,025.258	0.214	1,121.948	0.314	1,218.639	0.414	1,315.329	0.514	1,412.000	0.614	1,508.638	0.714	1,605.275	0.814	1,701.912	0.914	1,798.549
0.015	929.534	0.115	1,026.225	0.215	1,122.915	0.315	1,219.606	0.415	1,316.296	0.515	1,412.967	0.615	1,509.604	0.715	1,606.241	0.815	1,702.878	0.915	1,799.515
0.016	930.501	0.116	1,027.192	0.216	1,123.882	0.316	1,220.573	0.416	1,317.263	0.516	1,413.933	0.616	1,510.570	0.716	1,607.207	0.816	1,703.844	0.916	1,800.481
0.017	931.468	0.117	1,028.159	0.217	1,124.849	0.317	1,221.540	0.417	1,318.230	0.517	1,414.900	0.617	1,511.537	0.717	1,608.174	0.817	1,704.811	0.917	1,801.448
0.018	932.435	0.118	1,029.126	0.218	1,125.816	0.318	1,222.507	0.418	1,319.197	0.518	1,415.866	0.618	1,512.503	0.718	1,609.140	0.818	1,705.777	0.918	1,802.414
0.019	933.402	0.119	1,030.093	0.219	1,126.783	0.319	1,223.473	0.419	1,320.164	0.519	1,416.832	0.619	1,513.469	0.719	1,610.106	0.819	1,706.744	0.919	1,803.381
0.020	934.369	0.120	1,031.059	0.220	1,127.750	0.320	1,224.440	0.420	1,321.131	0.520	1,417.799	0.620	1,514.436	0.720	1,611.073	0.820	1,707.710	0.920	1,804.347
0.021	935.336	0.121	1,032.026	0.221	1,128.717	0.321	1,225.407	0.421	1,322.098	0.521	1,418.765	0.621	1,515.402	0.721	1,612.039	0.821	1,708.676	0.921	1,805.313
0.022	936.303	0.122	1,032.993	0.222	1,129.684	0.322	1,226.374	0.422	1,323.065	0.522	1,419.731	0.622	1,516.368	0.722	1,613.006	0.822	1,709.643	0.922	1,806.280
0.023	937.270	0.123	1,033.960	0.223	1,130.651	0.323	1,227.341	0.423	1,324.032	0.523	1,420.698	0.623	1,517.335	0.723	1,613.972	0.823	1,710.609	0.923	1,807.246
0.024	938.237	0.124	1,034.927	0.224	1,131.618	0.324	1,228.308	0.424	1,324.999	0.524	1,421.664	0.624	1,518.301	0.724	1,614.938	0.824	1,711.575	0.924	1,808.212
0.025	939.203	0.125	1,035.894	0.225	1,132.584	0.325	1,229.275	0.425	1,325.965	0.525	1,422.631	0.625	1,519.268	0.725	1,615.905	0.825	1,712.542	0.925	1,809.179
0.026	940.170	0.126	1,036.861	0.226	1,133.551	0.326	1,230.242	0.426	1,326.932	0.526	1,423.597	0.626	1,520.234	0.726	1,616.871	0.826	1,713.508	0.926	1,810.145
0.027	941.137	0.127	1,037.828	0.227	1,134.518	0.327	1,231.209	0.427	1,327.899	0.527	1,424.563	0.627	1,521.200	0.727	1,617.837	0.827	1,714.474	0.927	1,811.112
0.028	942.104	0.128	1,038.795	0.228	1,135.485	0.328	1,232.176	0.428	1,328.866	0.528	1,425.530	0.628	1,522.167	0.728	1,618.804	0.828	1,715.441	0.928	1,812.078
0.029	943.071	0.129	1,039.762	0.229	1,136.452	0.329	1,233.143	0.429	1,329.833	0.529	1,426.496	0.629	1,523.133	0.729	1,619.770	0.829	1,716.407	0.929	1,813.044
0.030	944.038	0.130	1,040.728	0.230	1,137.419	0.330	1,234.109	0.430	1,330.800	0.530	1,427.462	0.630	1,524.099	0.730	1,620.737	0.830	1,717.374	0.930	1,814.011
0.031	945.005	0.131	1,041.695	0.231	1,138.386	0.331	1,235.076	0.431	1,331.767	0.531	1,428.429	0.631	1,525.066	0.731	1,621.703	0.831	1,718.340	0.931	1,814.977
0.032	945.972	0.132	1,042.662	0.232	1,139.353	0.332	1,236.043	0.432	1,332.734	0.532	1,429.395	0.632	1,526.032	0.732	1,622.669	0.832	1,719.306	0.932	1,815.943
0.033	946.939	0.133	1,043.629	0.233	1,140.320	0.333	1,237.010	0.433	1,333.701	0.533	1,430.361	0.633	1,526.999	0.733	1,623.636	0.833	1,720.273	0.933	1,816.910
0.034	947.906	0.134	1,044.596	0.234	1,141.287	0.334	1,237.977	0.434	1,334.668	0.534	1,431.328	0.634	1,527.965	0.734	1,624.602	0.834	1,721.239	0.934	1,817.876
0.035	948.873	0.135	1,045.563	0.235	1,142.253	0.335	1,238.944	0.435	1,335.634	0.535	1,432.294	0.635	1,528.931	0.735	1,625.568	0.835	1,722.205	0.935	1,818.843
0.036	949.839	0.136	1,046.530	0.236	1,143.220	0.336	1,239.911	0.436	1,336.601	0.536	1,433.261	0.636	1,529.898	0.736	1,626.535	0.836	1,723.172	0.936	1,819.809
0.037	950.806	0.137	1,047.497	0.237	1,144.187	0.337	1,240.878	0.437	1,337.568	0.537	1,434.227	0.637	1,530.864	0.737	1,627.501	0.837	1,724.138	0.937	1,820.775
0.038	951.773	0.138	1,048.464	0.238	1,145.154	0.338	1,241.845	0.438	1,338.535	0.538	1,435.193	0.638	1,531.830	0.738	1,628.467	0.838	1,725.105	0.938	1,821.742
0.039	952.740	0.139	1,049.431	0.239	1,146.121	0.339	1,242.812	0.439	1,339.502	0.539	1,436.160	0.639	1,532.797	0.739	1,629.434	0.839	1,726.071	0.939	1,822.708
0.040	953.707	0.140	1,050.398	0.240	1,147.088	0.340	1,243.778	0.440	1,340.469	0.540	1,437.126	0.640	1,533.763	0.740	1,630.400	0.840	1,727.037	0.940	1,823.674
0.041	954.674	0.141	1,051.364	0.241	1,148.055	0.341	1,244.745	0.441	1,341.436	0.541	1,438.092	0.641	1,534.730	0.741	1,631.367	0.841	1,728.004	0.941	1,824.641
0.042	955.641	0.142	1,052.331	0.242	1,149.022	0.342	1,245.712	0.442	1,342.403	0.542	1,439.059	0.642	1,535.696	0.742	1,632.333	0.842	1,728.970	0.942	1,825.607
0.043	956.608	0.143	1,053.298	0.243	1,149.989	0.343	1,246.679	0.443	1,343.370	0.543	1,440.025	0.643	1,536.662	0.743	1,633.299	0.843	1,729.936	0.943	1,826.573
0.044	957.575	0.144	1,054.265	0.244	1,150.956	0.344	1,247.646	0.444	1,344.337	0.544	1,440.992	0.644	1,537.629	0.744	1,634.266	0.844	1,730.903	0.944	1,827.540
0.045	958.542	0.145	1,055.232	0.245	1,151.923	0.345	1,248.613	0.445	1,345.304	0.545	1,441.958	0.645	1,538.595	0.745	1,635.232	0.845	1,731.869	0.945	1,828.506
0.046	959.508	0.146	1,056.199	0.246	1,152.889	0.346	1,249.580	0.446	1,346.270	0.546	1,442.924	0.646	1,539.561	0.746	1,636.198	0.846	1,732.836	0.946	1,829.473
0.047	960.475	0.147	1,057.166	0.247	1,153.856	0.347	1,250.547	0.447	1,347.237	0.547	1,443.891	0.647	1,540.528	0.747	1,637.165	0.847	1,733.802	0.947	1,830.439
0.048	961.442	0.148	1,058.133	0.248	1,154.823	0.348	1,251.514	0.448	1,348.204	0.548	1,444.857	0.648	1,541.494	0.748	1,638.131	0.848	1,734.768	0.948	1,831.405
0.049	962.409	0.149	1,059.100	0.249	1,155.790	0.349	1,252.481	0.449	1,349.171	0.549	1,445.823	0.649	1,542.460	0.749	1,639.098	0.849	1,735.735	0.949	1,832.372
0.050	963.376	0.150	1,060.067	0.250	1,156.757	0.350	1,253.448	0.450	1,350.138	0.550	1,446.790	0.650	1,543.427	0.750	1,640.064	0.850	1,736.701	0.950	1,833.338
0.051	964.343	0.151	1,061.033	0.251	1,157.724	0.351	1,254.414	0.451	1,351.105	0.551	1,447.756	0.651	1,544.393	0.751	1,641.030	0.851	1,737.667	0.951	1,834.304
0.052	965.310	0.152	1,062.000	0.252	1,158.691	0.352	1,255.381	0.452	1,352.072	0.552	1,448.723	0.652	1,545.360	0.752	1,641.997	0.852	1,738.634	0.952	1,835.271
0.053	966.277	0.153	1,062.967	0.253	1,159.658	0.353	1,256.348	0.453	1,353.039	0.553	1,449.689	0.653	1,546.326	0.753	1,642.963	0.853	1,739.600	0.953	1,836.237
0.054	967.244	0.154	1,063.934	0.254	1,160.625	0.354	1,257.315	0.454	1,354.006	0.554	1,450.655	0.654	1,547.292	0.754	1,643.929	0.854	1,740.567	0.954	1,837.204
0.055	968.211	0.155	1,064.901	0.255	1,161.592	0.355	1,258.282	0.455	1,354.973	0.555	1,451.622	0.655	1,548.259	0.755	1,644.896	0.855	1,741.533	0.955	1,838.170
0.056	969.178	0.156	1,065.868	0.256	1,162.558	0.356	1,259.249	0.456	1,355.939	0.556	1,452.588	0.656	1,549.225	0.756	1,645.862	0.856	1,742.499	0.956	1,839.136
0.057	970.144	0.157	1,066.835	0.257	1,163.525	0.357	1,260.216	0.457	1,356.906	0.557	1,453.554	0.657	1,550.191	0.757	1,646.829	0.857	1,743.466	0.957	1,840.103
0.058	971.111	0.158	1,067.802	0.258	1,164.492	0.358	1,261.183	0.458	1,357.873	0.558	1,454.521	0.658	1,551.158	0.758	1,647.795	0.858	1,744.432	0.958	1,841.069
0.059	972.078	0.159	1,068.769	0.259	1,165.459	0.359	1,262.150	0.459	1,358.840	0.559	1,455.487	0.659	1,552.124	0.759	1,648.761	0.859	1,745.398	0.959	1,842.035
0.060	973.045	0.160	1,069.736	0.260	1,166.426	0.360	1,263.117	0.460	1,359.807	0.560	1,456.453	0.660	1,553.091	0.760	1,649.728	0.860	1,746.365	0.960	1,843.002
0.061	974.012	0.161	1,070.703	0.261	1,167.393	0.361	1,264.083	0.461	1,360.774	0.561	1,457.420	0.661	1,554.057	0.761	1,650.694	0.861	1,747.331	0.961	1,843.968
0.062	974.979	0.162	1,071.669	0.262	1,168.360	0.362	1,265.050	0.462	1,361.741	0.562	1,458.386	0.662	1,555.023	0.762	1,651.660	0.862	1,748.297	0.962	1,844.935
0.063	975.946	0.163	1,072.636	0.263	1,169.327	0.363	1,266.017	0.463	1,362.708	0.563	1,459.353	0.663	1,555.990	0.763	1,652.627	0.863	1,749.264	0.963	1,845.901
0.064	976.913	0.164	1,073.603	0.264	1,170.294	0.364	1,266.984	0.464	1,363.675	0.564	1,460.319	0.664	1,556.956	0.764	1,653.593	0.864	1,750.230	0.964	1,846.867
0.065	977.880	0.165	1,074.570	0.265	1,171.261	0.365	1,267.951	0.465	1,364.642	0.565	1,461.285	0.665	1,557.922	0.765	1,654.560	0.865	1,751.197	0.965	1,847.834
0.066	978.847	0.166	1,075.537	0.266	1,172.228	0.366	1,268.918	0.466	1,365.608	0.566	1,462.252	0.666	1,558.889	0.766	1,655.526	0.866	1,752.163	0.966	1,848.800
0.067	979.813	0.167	1,076.504	0.267	1,173.194	0.367	1,269.885	0.467	1,366.575	0.567	1,463.218	0.667	1,559.855	0.767	1,656.492	0.867	1,753.129	0.967	1,849.766
0.068	980.780	0.168	1,077.471	0.268	1,174.161	0.368	1,270.852	0.468	1,367.542	0.568	1,464.184	0.668	1,560.822	0.768	1,657.459	0.868	1,754.096	0.968	1,850.733
0.069	981.747	0.169	1,078.438	0.269	1,175.128	0.369	1,271.819	0.469	1,368.508	0.569	1,465.151	0.669	1,561.788	0.769	1,658.425	0.869	1,755.062	0.969	1,851.699
0.070	982.714	0.170	1,079.405	0.270	1,176.095	0.370	1,272.786	0.470	1,369.475	0.570	1,466.117	0.670	1,562.754	0.770	1,659.391	0.870	1,756.028	0.970	1,852.666
0.071	983.681	0.171	1,080.372	0.271	1,177.062	0.371	1,273.753	0.471	1,370.441	0.571	1,467.084	0.671	1,563.721	0.771	1,660.358	0.871	1,756.995	0.971	1,853.632
0.072	984.648	0.172	1,081.338	0.272	1,178.029	0.372	1,274.719	0.472	1,371.408	0.572	1,468.050	0.672	1,564.687	0.772	1,661.324	0.872	1,757.961	0.972	1,854.598
0.073	985.615	0.173	1,082.305	0.273	1,178.996	0.373	1,275.686	0.473	1,372.375	0.573	1,469.016	0.673	1,565.653	0.773	1,662.290	0.873	1,758.928	0.973	1,855.565
0.074	986.582	0.174	1,083.272	0.274	1,179.963	0.374	1,276.653	0.474	1,373.341	0.574	1,469.983	0.674	1,566.620	0.774	1,663.257	0.874	1,759.894	0.974	1,856.531
0.075	987.549	0.175	1,084.239	0.275	1,180.930	0.375	1,277.620	0.475	1,374.308	0.575	1,470.949	0.675	1,567.586	0.775	1,664.223	0.875	1,760.860	0.975	1,857.497
0.076	988.516	0.176	1,085.206	0.276	1,181.897	0.376	1,278.587	0.476	1,375.275	0.576	1,471.915	0.676	1,568.553	0.776	1,665.190	0.876	1,761.827	0.976	1,858.464
0.077	989.483	0.177	1,086.173	0.277	1,182.863	0.377	1,279.554	0.477	1,376.241	0.577	1,472.882	0.677	1,569.519	0.777	1,666.156	0.877	1,762.793	0.977	1,859.430
0.078	990.449	0.178	1,087.140	0.278	1,183.830	0.378	1,280.521	0.478	1,377.208	0.578	1,473.848	0.678	1,570.485	0.778	1,667.122	0.878	1,763.759	0.978	1,860.396
0.079	991.416	0.179	1,088.107	0.279	1,184.797	0.379	1,281.488	0.479	1,378.175	0.579	1,474.815	0.679	1,571.452	0.779	1,668.089	0.879	1,764.726	0.979	1,861.363
0.080	992.383	0.180	1,089.074	0.280	1,185.764	0.380	1,282.455	0.480	1,379.141	0.580	1,475.781	0.680	1,572.418	0.780	1,669.055	0.880	1,765.692	0.980	1,862.329
0.081	993.350	0.181	1,090.041	0.281	1,186.731	0.381	1,283.422	0.481	1,380.108	0.581	1,476.747	0.681	1,573.384	0.781	1,670.021	0.881	1,766.659	0.981	1,863.296
0.082	994.317	0.182	1,091.008	0.282	1,187.698	0.382	1,284.388	0.482	1,381.074	0.582	1,477.714	0.682	1,574.351	0.782	1,670.988	0.882	1,767.625	0.982	1,864.262
0.083	995.284	0.183	1,091.974	0.283	1,188.665	0.383	1,285.355	0.483	1,382.041	0.583	1,478.680	0.683	1,575.317	0.783	1,671.954	0.883	1,768.591	0.983	1,865.228
0.084	996.251	0.184	1,092.941	0.284	1,189.632	0.384	1,286.322	0.484	1,383.008	0.584	1,479.646	0.684	1,576.283	0.784	1,672.921	0.884	1,769.558	0.984	1,866.195
0.085	997.218	0.185	1,093.908	0.285	1,190.599	0.385	1,287.289	0.485	1,383.974	0.585	1,480.613	0.685	1,577.250	0.785	1,673.887	0.885	1,770.524	0.985	1,867.161
0.086	998.185	0.186	1,094.875	0.286	1,191.566	0.386	1,288.256	0.486	1,384.941	0.586	1,481.579	0.686	1,578.216	0.786	1,674.853	0.886	1,771.490	0.986	1,868.127
0.087	999.152	0.187	1,095.842	0.287	1,192.533	0.387	1,289.223	0.487	1,385.908	0.587	1,482.546	0.687	1,579.183	0.787	1,675.820	0.887	1,772.457	0.987	1,869.094
0.088	1,000.118	0.188	1,096.809	0.288	1,193.499	0.388	1,290.190	0.488	1,386.874	0.588	1,483.512	0.688	1,580.149	0.788	1,676.786	0.888	1,773.423	0.988	1,870.060
0.089	1,001.085	0.189	1,097.776	0.289	1,194.466	0.389	1,291.157	0.489	1,387.841	0.589	1,484.478	0.689	1,581.115	0.789	1,677.752	0.889	1,774.389	0.989	1,871.027
0.090	1,002.052	0.190	1,098.743	0.290	1,195.433	0.390	1,292.124	0.490	1,388.808	0.590	1,485.445	0.690	1,582.082	0.790	1,678.719	0.890	1,775.356	0.990	1,871.993
0.091	1,003.019	0.191	1,099.710	0.291	1,196.400	0.391	1,293.091	0.491	1,389.774	0.591	1,486.411	0.691	1,583.048	0.791	1,679.685	0.891	1,776.322	0.991	1,872.959
0.092	1,003.986	0.192	1,100.677	0.292	1,197.367	0.392	1,294.058	0.492	1,390.740	0.592	1,487.377	0.692	1,584.014	0.792	1,680.652	0.892	1,777.289	0.992	1,873.926
0.093	1,004.953	0.193	1,101.643	0.293	1,198.334	0.393	1,295.024	0.493	1,391.707	0.593	1,488.344	0.693	1,584.981	0.793	1,681.618	0.893	1,778.255	0.993	1,874.892
0.094	1,005.920	0.194	1,102.610	0.294	1,199.301	0.394	1,295.991	0.494	1,392.673	0.594	1,489.310	0.694	1,585.947	0.794	1,682.584	0.894	1,779.221	0.994	1,875.858
0.095	1,006.887	0.195	1,103.577	0.295	1,200.268	0.395	1,296.958	0.495	1,393.639	0.595	1,490.276	0.695	1,586.914	0.795	1,683.551	0.895	1,780.188	0.995	1,876.825
0.096	1,007.854	0.196	1,104.544	0.296	1,201.235	0.396	1,297.925	0.496	1,394.606	0.596	1,491.243	0.696	1,587.880	0.796	1,684.517	0.896	1,781.154	0.996	1,877.791
0.097	1,008.821	0.197	1,105.511	0.297	1,202.202	0.397	1,298.892	0.497	1,395.572	0.597	1,492.209	0.697	1,588.846	0.797	1,685.483	0.897	1,782.120	0.997	1,878.758
0.098	1,009.788	0.198	1,106.478	0.298	1,203.168	0.398	1,299.859	0.498	1,396.539	0.598	1,493.176	0.698	1,589.813	0.798	1,686.450	0.898	1,783.087	0.998	1,879.724
0.099	1,010.754	0.199	1,107.445	0.299	1,204.135	0.399	1,300.826	0.499	1,397.505	0.599	1,494.142	0.699	1,590.779	0.799	1,687.416	0.899	1,784.053	0.999	1,880.690

DATE STRAPPED: 09/19/17 BY: RJ
DATE COMPUTED: 09/26/17 BY: WLH
DATE ISSUED: 09/26/17

AMSPEC

Meliadine
Rankin Inlet
Item 20 - Final - Data Sheet (Innage)

Tank No. 2
INNAGE TABLE

Calibration@AmSpecGroup.com

CAPACITIES GIVEN IN CUBIC METERS

GAUGE HEIGHT: 14.269 M

mm	2 M	mm	2 M	mm	2 M	mm	2 M	mm	2 M	mm	2 M	mm	2 M	mm	2 M	mm	2 M	mm	2 M
0.000	1,881.657	0.100	1,978.294	0.200	2,074.931	0.300	2,171.568	0.400	2,268.205	0.500	2,364.842	0.600	2,461.479	0.700	2,558.116	0.800	2,654.750	0.900	2,751.374
0.001	1,882.623	0.101	1,979.260	0.201	2,075.897	0.301	2,172.534	0.401	2,269.171	0.501	2,365.808	0.601	2,462.445	0.701	2,559.083	0.801	2,655.716	0.901	2,752.341
0.002	1,883.589	0.102	1,980.226	0.202	2,076.864	0.302	2,173.501	0.402	2,270.138	0.502	2,366.775	0.602	2,463.412	0.702	2,560.049	0.802	2,656.682	0.902	2,753.307
0.003	1,884.556	0.103	1,981.193	0.203	2,077.830	0.303	2,174.467	0.403	2,271.104	0.503	2,367.741	0.603	2,464.378	0.703	2,561.015	0.803	2,657.649	0.903	2,754.273
0.004	1,885.522	0.104	1,982.159	0.204	2,078.796	0.304	2,175.433	0.404	2,272.070	0.504	2,368.707	0.604	2,465.345	0.704	2,561.982	0.804	2,658.615	0.904	2,755.239
0.005	1,886.488	0.105	1,983.126	0.205	2,079.763	0.305	2,176.400	0.405	2,273.037	0.505	2,369.674	0.605	2,466.311	0.705	2,562.948	0.805	2,659.581	0.905	2,756.206
0.006	1,887.455	0.106	1,984.092	0.206	2,080.729	0.306	2,177.366	0.406	2,274.003	0.506	2,370.640	0.606	2,467.277	0.706	2,563.914	0.806	2,660.547	0.906	2,757.172
0.007	1,888.421	0.107	1,985.058	0.207	2,081.695	0.307	2,178.332	0.407	2,274.970	0.507	2,371.607	0.607	2,468.244	0.707	2,564.881	0.807	2,661.514	0.907	2,758.138
0.008	1,889.388	0.108	1,986.025	0.208	2,082.662	0.308	2,179.299	0.408	2,275.936	0.508	2,372.573	0.608	2,469.210	0.708	2,565.847	0.808	2,662.480	0.908	2,759.104
0.009	1,890.354	0.109	1,986.991	0.209	2,083.628	0.309	2,180.265	0.409	2,276.902	0.509	2,373.539	0.609	2,470.176	0.709	2,566.814	0.809	2,663.446	0.909	2,760.071
0.010	1,891.320	0.110	1,987.957	0.210	2,084.594	0.310	2,181.232	0.410	2,277.869	0.510	2,374.506	0.610	2,471.143	0.710	2,567.780	0.810	2,664.412	0.910	2,761.037
0.011	1,892.287	0.111	1,988.924	0.211	2,085.561	0.311	2,182.198	0.411	2,278.835	0.511	2,375.472	0.611	2,472.109	0.711	2,568.746	0.811	2,665.379	0.911	2,762.003
0.012	1,893.253	0.112	1,989.890	0.212	2,086.527	0.312	2,183.164	0.412	2,279.801	0.512	2,376.438	0.612	2,473.076	0.712	2,569.713	0.812	2,666.345	0.912	2,762.969
0.013	1,894.219	0.113	1,990.857	0.213	2,087.494	0.313	2,184.131	0.413	2,280.768	0.513	2,377.405	0.613	2,474.042	0.713	2,570.679	0.813	2,667.311	0.913	2,763.936
0.014	1,895.186	0.114	1,991.823	0.214	2,088.460	0.314	2,185.097	0.414	2,281.734	0.514	2,378.371	0.614	2,475.008	0.714	2,571.645	0.814	2,668.277	0.914	2,764.902
0.015	1,896.152	0.115	1,992.789	0.215	2,089.426	0.315	2,186.063	0.415	2,282.700	0.515	2,379.338	0.615	2,475.975	0.715	2,572.612	0.815	2,669.243	0.915	2,765.868
0.016	1,897.119	0.116	1,993.756	0.216	2,090.393	0.316	2,187.030	0.416	2,283.667	0.516	2,380.304	0.616	2,476.941	0.716	2,573.578	0.816	2,670.210	0.916	2,766.834
0.017	1,898.085	0.117	1,994.722	0.217	2,091.359	0.317	2,187.996	0.417	2,284.633	0.517	2,381.270	0.617	2,477.907	0.717	2,574.544	0.817	2,671.176	0.917	2,767.801
0.018	1,899.051	0.118	1,995.688	0.218	2,092.325	0.318	2,188.963	0.418	2,285.600	0.518	2,382.237	0.618	2,478.874	0.718	2,575.511	0.818	2,672.142	0.918	2,768.767
0.019	1,900.018	0.119	1,996.655	0.219	2,093.292	0.319	2,189.929	0.419	2,286.566	0.519	2,383.203	0.619	2,479.840	0.719	2,576.477	0.819	2,673.108	0.919	2,769.733
0.020	1,900.984	0.120	1,997.621	0.220	2,094.258	0.320	2,190.895	0.420	2,287.532	0.520	2,384.169	0.620	2,480.807	0.720	2,577.444	0.820	2,674.075	0.920	2,770.699
0.021	1,901.950	0.121	1,998.587	0.221	2,095.225	0.321	2,191.862	0.421	2,288.499	0.521	2,385.136	0.621	2,481.773	0.721	2,578.410	0.821	2,675.041	0.921	2,771.666
0.022	1,902.917	0.122	1,999.554	0.222	2,096.191	0.322	2,192.828	0.422	2,289.465	0.522	2,386.102	0.622	2,482.739	0.722	2,579.376	0.822	2,676.007	0.922	2,772.632
0.023	1,903.883	0.123	2,000.520	0.223	2,097.157	0.323	2,193.794	0.423	2,290.431	0.523	2,387.069	0.623	2,483.706	0.723	2,580.343	0.823	2,676.973	0.923	2,773.598
0.024	1,904.850	0.124	2,001.487	0.224	2,098.124	0.324	2,194.761	0.424	2,291.398	0.524	2,388.035	0.624	2,484.672	0.724	2,581.309	0.824	2,677.940	0.924	2,774.564
0.025	1,905.816	0.125	2,002.453	0.225	2,099.090	0.325	2,195.727	0.425	2,292.364	0.525	2,389.001	0.625	2,485.638	0.725	2,582.275	0.825	2,678.906	0.925	2,775.530
0.026	1,906.782	0.126	2,003.419	0.226	2,100.056	0.326	2,196.694	0.426	2,293.331	0.526	2,389.968	0.626	2,486.605	0.726	2,583.242	0.826	2,679.872	0.926	2,776.497
0.027	1,907.749	0.127	2,004.386	0.227	2,101.023	0.327	2,197.660	0.427	2,294.297	0.527	2,390.934	0.627	2,487.571	0.727	2,584.208	0.827	2,680.838	0.927	2,777.463
0.028	1,908.715	0.128	2,005.352	0.228	2,101.989	0.328	2,198.626	0.428	2,295.263	0.528	2,391.900	0.628	2,488.537	0.728	2,585.175	0.828	2,681.805	0.928	2,778.429
0.029	1,909.681	0.129	2,006.318	0.229	2,102.956	0.329	2,199.593	0.429	2,296.230	0.529	2,392.867	0.629	2,489.504	0.729	2,586.141	0.829	2,682.771	0.929	2,779.395
0.030	1,910.648	0.130	2,007.285	0.230	2,103.922	0.330	2,200.559	0.430	2,297.196	0.530	2,393.833	0.630	2,490.470	0.730	2,587.107	0.830	2,683.737	0.930	2,780.362
0.031	1,911.614	0.131	2,008.251	0.231	2,104.888	0.331	2,201.525	0.431	2,298.162	0.531	2,394.800	0.631	2,491.437	0.731	2,588.074	0.831	2,684.703	0.931	2,781.328
0.032	1,912.580	0.132	2,009.218	0.232	2,105.855	0.332	2,202.492	0.432	2,299.129	0.532	2,395.766	0.632	2,492.403	0.732	2,589.040	0.832	2,685.670	0.932	2,782.294
0.033	1,913.547	0.133	2,010.184	0.233	2,106.821	0.333	2,203.458	0.433	2,300.095	0.533	2,396.732	0.633	2,493.369	0.733	2,590.006	0.833	2,686.636	0.933	2,783.260
0.034	1,914.513	0.134	2,011.150	0.234	2,107.787	0.334	2,204.424	0.434	2,301.062	0.534	2,397.699	0.634	2,494.336	0.734	2,590.973	0.834	2,687.602	0.934	2,784.227
0.035	1,915.480	0.135	2,012.117	0.235	2,108.754	0.335	2,205.391	0.435	2,302.028	0.535	2,398.665	0.635	2,495.302	0.735	2,591.939	0.835	2,688.568	0.935	2,785.193
0.036	1,916.446	0.136	2,013.083	0.236	2,109.720	0.336	2,206.357	0.436	2,302.994	0.536	2,399.631	0.636	2,496.268	0.736	2,592.906	0.836	2,689.535	0.936	2,786.159
0.037	1,917.412	0.137	2,014.049	0.237	2,110.687	0.337	2,207.324	0.437	2,303.961	0.537	2,400.598	0.637	2,497.235	0.737	2,593.872	0.837	2,690.501	0.937	2,787.125
0.038	1,918.379	0.138	2,015.016	0.238	2,111.653	0.338	2,208.290	0.438	2,304.927	0.538	2,401.564	0.638	2,498.201	0.738	2,594.838	0.838	2,691.467	0.938	2,788.092
0.039	1,919.345	0.139	2,015.982	0.239	2,112.619	0.339	2,209.256	0.439	2,305.893	0.539	2,402.530	0.639	2,499.168	0.739	2,595.805	0.839	2,692.433	0.939	2,789.058
0.040	1,920.311	0.140	2,016.949	0.240	2,113.586	0.340	2,210.223	0.440	2,306.860	0.540	2,403.497	0.640	2,500.134	0.740	2,596.771	0.840	2,693.400	0.940	2,790.024
0.041	1,921.278	0.141	2,017.915	0.241	2,114.552	0.341	2,211.189	0.441	2,307.826	0.541	2,404.463	0.641	2,501.100	0.741	2,597.737	0.841	2,694.366	0.941	2,790.990
0.042	1,922.244	0.142	2,018.881	0.242	2,115.518	0.342	2,212.155	0.442	2,308.793	0.542	2,405.430	0.642	2,502.067	0.742	2,598.704	0.842	2,695.332	0.942	2,791.957
0.043	1,923.211	0.143	2,019.848	0.243	2,116.485	0.343	2,213.122	0.443	2,309.759	0.543	2,406.396	0.643	2,503.033	0.743	2,599.670	0.843	2,696.298	0.943	2,792.923
0.044	1,924.177	0.144	2,020.814	0.244	2,117.451	0.344	2,214.088	0.444	2,310.725	0.544	2,407.362	0.644	2,503.999	0.744	2,600.636	0.844	2,697.265	0.944	2,793.889
0.045	1,925.143	0.145	2,021.780	0.245	2,118.417	0.345	2,215.055	0.445	2,311.692	0.545	2,408.329	0.645	2,504.966	0.745	2,601.603	0.845	2,698.231	0.945	2,794.855
0.046	1,926.110	0.146	2,022.747	0.246	2,119.384	0.346	2,216.021	0.446	2,312.658	0.546	2,409.295	0.646	2,505.932	0.746	2,602.569	0.846	2,699.197	0.946	2,795.822
0.047	1,927.076	0.147	2,023.713	0.247	2,120.350	0.347	2,216.987	0.447	2,313.624	0.547	2,410.261	0.647	2,506.899	0.747	2,603.536	0.847	2,700.163	0.947	2,796.788
0.048	1,928.042	0.148	2,024.680	0.248	2,121.317	0.348	2,217.954	0.448	2,314.591	0.548	2,411.228	0.648	2,507.865	0.748	2,604.502	0.848	2,701.130	0.948	2,797.754
0.049	1,929.009	0.149	2,025.646	0.249	2,122.283	0.349	2,218.920	0.449	2,315.557	0.549	2,412.194	0.649	2,508.831	0.749	2,605.468	0.849	2,702.096	0.949	2,798.720
0.050	1,929.975	0.150	2,026.612	0.250	2,123.249	0.350	2,219.886	0.450	2,316.523	0.550	2,413.161	0.650	2,509.798	0.750	2,606.435	0.850	2,703.062	0.950	2,799.687
0.051	1,930.942	0.151	2,027.579	0.251	2,124.216	0.351	2,220.853	0.451	2,317.490	0.551	2,414.127	0.651	2,510.764	0.751	2,607.401	0.851	2,704.028	0.951	2,800.653
0.052	1,931.908	0.152	2,028.545	0.252	2,125.182	0.352	2,221.819	0.452	2,318.456	0.552	2,415.093	0.652	2,511.730	0.752	2,608.367	0.852	2,704.995	0.952	2,801.619
0.053	1,932.874	0.153	2,029.511	0.253	2,126.148	0.353	2,222.786	0.453	2,319.423	0.553	2,416.060	0.653	2,512.697	0.753	2,609.334	0.853	2,705.961	0.953	2,802.585
0.054	1,933.841	0.154	2,030.478	0.254	2,127.115	0.354	2,223.752	0.454	2,320.389	0.554	2,417.026	0.654	2,513.663	0.754	2,610.300	0.854	2,706.927	0.954	2,803.552
0.055	1,934.807	0.155	2,031.444	0.255	2,128.081	0.355	2,224.718	0.455	2,321.355	0.555	2,417.992	0.655	2,514.629	0.755	2,611.267	0.855	2,707.893	0.955	2,804.518
0.056	1,935.773	0.156	2,032.410	0.256	2,129.048	0.356	2,225.685	0.456	2,322.322	0.556	2,418.959	0.656	2,515.596	0.756	2,612.233	0.856	2,708.860	0.956	2,805.484
0.057	1,936.740	0.157	2,033.377	0.257	2,130.014	0.357	2,226.651	0.457	2,323.288	0.557	2,419.925	0.657	2,516.562	0.757	2,613.199	0.857	2,709.826	0.957	2,806.450
0.058	1,937.706	0.158	2,034.343	0.258	2,130.980	0.358	2,227.617	0.458	2,324.254	0.558	2,420.892	0.658	2,517.529	0.758	2,614.166	0.858	2,710.792	0.958	2,807.417
0.059	1,938.673	0.159	2,035.310	0.259	2,131.947	0.359	2,228.584	0.459	2,325.221	0.559	2,421.858	0.659	2,518.495	0.759	2,615.132	0.859	2,711.758	0.959	2,808.383
0.060	1,939.639	0.160	2,036.276	0.260	2,132.913	0.360	2,229.550	0.460	2,326.187	0.560	2,422.824	0.660	2,519.461	0.760	2,616.098	0.860	2,712.725	0.960	2,809.349
0.061	1,940.605	0.161	2,037.242	0.261	2,133.879	0.361	2,230.516	0.461	2,327.154	0.561	2,423.791	0.661	2,520.428	0.761	2,617.065	0.861	2,713.691	0.961	2,810.315
0.062	1,941.572	0.162	2,038.209	0.262	2,134.846	0.362	2,231.483	0.462	2,328.120	0.562	2,424.757	0.662	2,521.394	0.762	2,618.031	0.862	2,714.657	0.962	2,811.282
0.063	1,942.538	0.163	2,039.175	0.263	2,135.812	0.363	2,232.449	0.463	2,329.086	0.563	2,425.723	0.663	2,522.360	0.763	2,618.997	0.863	2,715.623	0.963	2,812.248
0.064	1,943.504	0.164	2,040.141	0.264	2,136.779	0.364	2,233.416	0.464	2,330.053	0.564	2,426.690	0.664	2,523.327	0.764	2,619.964	0.864	2,716.590	0.964	2,813.214
0.065	1,944.471	0.165	2,041.108	0.265	2,137.745	0.365	2,234.382	0.465	2,331.019	0.565	2,427.656	0.665	2,524.293	0.765	2,620.930	0.865	2,717.556	0.965	2,814.180
0.066	1,945.437	0.166	2,042.074	0.266	2,138.711	0.366	2,235.348	0.466	2,331.985	0.566	2,428.622	0.666	2,525.260	0.766	2,621.896	0.866	2,718.522	0.966	2,815.147
0.067	1,946.403	0.167	2,043.041	0.267	2,139.678	0.367	2,236.315	0.467	2,332.952	0.567	2,429.589	0.667	2,526.226	0.767	2,622.863	0.867	2,719.488	0.967	2,816.113
0.068	1,947.370	0.168	2,044.007	0.268	2,140.644	0.368	2,237.281	0.468	2,333.918	0.568	2,430.555	0.668	2,527.192	0.768	2,623.829	0.868	2,720.454	0.968	2,817.079
0.069	1,948.336	0.169	2,044.973	0.269	2,141.610	0.369	2,238.247	0.469	2,334.885	0.569	2,431.522	0.669	2,528.159	0.769	2,624.795	0.869	2,721.421	0.969	2,818.045
0.070	1,949.303	0.170	2,045.940	0.270	2,142.577	0.370	2,239.214	0.470	2,335.851	0.570	2,432.488	0.670	2,529.125	0.770	2,625.761	0.870	2,722.387	0.970	2,819.012
0.071	1,950.269	0.171	2,046.906	0.271	2,143.543	0.371	2,240.180	0.471	2,336.817	0.571	2,433.454	0.671	2,530.091	0.771	2,626.728	0.871	2,723.353	0.971	2,819.978
0.072	1,951.235	0.172	2,047.872	0.272	2,144.509	0.372	2,241.147	0.472	2,337.784	0.572	2,434.421	0.672	2,531.058	0.772	2,627.694	0.872	2,724.319	0.972	2,820.944
0.073	1,952.202	0.173	2,048.839	0.273	2,145.476	0.373	2,242.113	0.473	2,338.750	0.573	2,435.387	0.673	2,532.024	0.773	2,628.660	0.873	2,725.286	0.973	2,821.910
0.074	1,953.168	0.174	2,049.805	0.274	2,146.442	0.374	2,243.079	0.474	2,339.716	0.574	2,436.353	0.674	2,532.991	0.774	2,629.627	0.874	2,726.252	0.974	2,822.877
0.075	1,954.134	0.175	2,050.772	0.275	2,147.409	0.375	2,244.046	0.475	2,340.683	0.575	2,437.320	0.675	2,533.957	0.775	2,630.593	0.875	2,727.218	0.975	2,823.843
0.076	1,955.101	0.176	2,051.738	0.276	2,148.375	0.376	2,245.012	0.476	2,341.649	0.576	2,438.286	0.676	2,534.923	0.776	2,631.559	0.876	2,728.184	0.976	2,824.809
0.077	1,956.067	0.177	2,052.704	0.277	2,149.341	0.377	2,245.978	0.477	2,342.615	0.577	2,439.253	0.677	2,535.890	0.777	2,632.526	0.877	2,729.151	0.977	2,825.775
0.078	1,957.034	0.178	2,053.671	0.278	2,150.308	0.378	2,246.945	0.478	2,343.582	0.578	2,440.219	0.678	2,536.856	0.778	2,633.492	0.878	2,730.117	0.978	2,826.742
0.079	1,958.000	0.179	2,054.637	0.279	2,151.274	0.379	2,247.911	0.479	2,344.548	0.579	2,441.185	0.679	2,537.822	0.779	2,634.458	0.879	2,731.083	0.979	2,827.708
0.080	1,958.966	0.180	2,055.603	0.280	2,152.240	0.380	2,248.878	0.480	2,345.515	0.580	2,442.152	0.680	2,538.789	0.780	2,635.425	0.880	2,732.049	0.980	2,828.674
0.081	1,959.933	0.181	2,056.570	0.281	2,153.207	0.381	2,249.844	0.481	2,346.481	0.581	2,443.118	0.681	2,539.755	0.781	2,636.391	0.881	2,733.016	0.981	2,829.640
0.082	1,960.899	0.182	2,057.536	0.282	2,154.173	0.382	2,250.810	0.482	2,347.447	0.582	2,444.084	0.682	2,540.721	0.782	2,637.357	0.882	2,733.982	0.982	2,830.606
0.083	1,961.865	0.183	2,058.502	0.283	2,155.140	0.383	2,251.777	0.483	2,348.414	0.583	2,445.051	0.683	2,541.688	0.783	2,638.323	0.883	2,734.948	0.983	2,831.573
0.084	1,962.832	0.184	2,059.469	0.284	2,156.106	0.384	2,252.743	0.484	2,349.380	0.584	2,446.017	0.684	2,542.654	0.784	2,639.290	0.884	2,735.914	0.984	2,832.539
0.085	1,963.798	0.185	2,060.435	0.285	2,157.072	0.385	2,253.709	0.485	2,350.346	0.585	2,446.984	0.685	2,543.621	0.785	2,640.256	0.885	2,736.881	0.985	2,833.505
0.086	1,964.765	0.186	2,061.402	0.286	2,158.039	0.386	2,254.676	0.486	2,351.313	0.586	2,447.950	0.686	2,544.587	0.786	2,641.222	0.886	2,737.847	0.986	2,834.471
0.087	1,965.731	0.187	2,062.368	0.287	2,159.005	0.387	2,255.642	0.487	2,352.279	0.587	2,448.916	0.687	2,545.553	0.787	2,642.189	0.887	2,738.813	0.987	2,835.438
0.088	1,966.697	0.188	2,063.334	0.288	2,159.971	0.388	2,256.608	0.488	2,353.246	0.588	2,449.883	0.688	2,546.520	0.788	2,643.155	0.888	2,739.779	0.988	2,836.404
0.089	1,967.664	0.189	2,064.301	0.289	2,160.938	0.389	2,257.575	0.489	2,354.212	0.589	2,450.849	0.689	2,547.486	0.789	2,644.121	0.889	2,740.746	0.989	2,837.370
0.090	1,968.630	0.190	2,065.267	0.290	2,161.904	0.390	2,258.541	0.490	2,355.178	0.590	2,451.815	0.690	2,548.452	0.790	2,645.087	0.890	2,741.712	0.990	2,838.336
0.091	1,969.596	0.191	2,066.233	0.291	2,162.871	0.391	2,259.508	0.491	2,356.145	0.591	2,452.782	0.691	2,549.419	0.791	2,646.054	0.891	2,742.678	0.991	2,839.303
0.092	1,970.563	0.192	2,067.200	0.292	2,163.837	0.392	2,260.474	0.492	2,357.111	0.592	2,453.748	0.692	2,550.385	0.792	2,647.020	0.892	2,743.644	0.992	2,840.269
0.093	1,971.529	0.193	2,068.166	0.293	2,164.803	0.393	2,261.440	0.493	2,358.077	0.593	2,454.714	0.693	2,551.352	0.793	2,647.986	0.893	2,744.611	0.993	2,841.235
0.094	1,972.495	0.194	2,069.133	0.294	2,165.770	0.394	2,262.407	0.494	2,359.044	0.594	2,455.681	0.694	2,552.318	0.794	2,648.952	0.894	2,745.577	0.994	2,842.201
0.095	1,973.462	0.195	2,070.099	0.295	2,166.736	0.395	2,263.373	0.495	2,360.010	0.595	2,456.647	0.695	2,553.284	0.795	2,649.919	0.895	2,746.543	0.995	2,843.168
0.096	1,974.428	0.196	2,071.065	0.296	2,167.702	0.396	2,264.339	0.496	2,360.977	0.596	2,457.614	0.696	2,554.251	0.796	2,650.885	0.896	2,747.509	0.996	2,844.134
0.097	1,975.395	0.197	2,072.032	0.297	2,168.669	0.397	2,265.306	0.497	2,361.943	0.597	2,458.580	0.697	2,555.217	0.797	2,651.851	0.897	2,748.476	0.997	2,845.100
0.098	1,976.361	0.198	2,072.998	0.298	2,169.635	0.398	2,266.272	0.498	2,362.909	0.598	2,459.546	0.698	2,556.183	0.798	2,652.817	0.898	2,749.442	0.998	2,846.066
0.099	1,977.327	0.199	2,073.964	0.299	2,170.601	0.399	2,267.239	0.499	2,363.876	0.599	2,460.513	0.699	2,557.150	0.799	2,653.784	0.899	2,750.408	0.999	2,847.033

NOTE: 42.0 GALLONS EQUAL 1.0 BARRELS
NOTE: 1 KILOLITER EQUALS 1 CUBIC METER

DATE STRAPPED: 09/19/17 BY: RJ
DATE COMPUTED: 09/26/17 BY: WLH
DATE ISSUED: 09/26/17

AMSPEC

Meliadine
Rankin Inlet
Item 20 - Final - Data Sheet (Innage)

Tank No. 2
INNAGE TABLE

Calibration@AmSpecGroup.com

CAPACITIES GIVEN IN CUBIC METERS

GAUGE HEIGHT: 14.269 M

mm	3 M	mm	3 M	mm	3 M	mm	3 M	mm	3 M	mm	3 M	mm	3 M	mm	3 M	mm	3 M	mm	3 M
0.000	2,847.999	0.100	2,944.623	0.200	3,041.248	0.300	3,137.873	0.400	3,234.497	0.500	3,331.122	0.600	3,427.746	0.700	3,524.371	0.800	3,620.995	0.900	3,717.620
0.001	2,848.965	0.101	2,945.590	0.201	3,042.214	0.301	3,138.839	0.401	3,235.463	0.501	3,332.088	0.601	3,428.713	0.701	3,525.337	0.801	3,621.962	0.901	3,718.586
0.002	2,849.931	0.102	2,946.556	0.202	3,043.181	0.302	3,139.805	0.402	3,236.430	0.502	3,333.054	0.602	3,429.679	0.702	3,526.303	0.802	3,622.928	0.902	3,719.552
0.003	2,850.898	0.103	2,947.522	0.203	3,044.147	0.303	3,140.771	0.403	3,237.396	0.503	3,334.020	0.603	3,430.645	0.703	3,527.270	0.803	3,623.894	0.903	3,720.519
0.004	2,851.864	0.104	2,948.488	0.204	3,045.113	0.304	3,141.738	0.404	3,238.362	0.504	3,334.987	0.604	3,431.611	0.704	3,528.236	0.804	3,624.860	0.904	3,721.485
0.005	2,852.830	0.105	2,949.455	0.205	3,046.079	0.305	3,142.704	0.405	3,239.328	0.505	3,335.953	0.605	3,432.577	0.705	3,529.202	0.805	3,625.827	0.905	3,722.451
0.006	2,853.796	0.106	2,950.421	0.206	3,047.046	0.306	3,143.670	0.406	3,240.295	0.506	3,336.919	0.606	3,433.544	0.706	3,530.168	0.806	3,626.793	0.906	3,723.417
0.007	2,854.763	0.107	2,951.387	0.207	3,048.012	0.307	3,144.636	0.407	3,241.261	0.507	3,337.885	0.607	3,434.510	0.707	3,531.135	0.807	3,627.759	0.907	3,724.384
0.008	2,855.729	0.108	2,952.353	0.208	3,048.978	0.308	3,145.603	0.408	3,242.227	0.508	3,338.852	0.608	3,435.476	0.708	3,532.101	0.808	3,628.725	0.908	3,725.350
0.009	2,856.695	0.109	2,953.320	0.209	3,049.944	0.309	3,146.569	0.409	3,243.193	0.509	3,339.818	0.609	3,436.442	0.709	3,533.067	0.809	3,629.692	0.909	3,726.316
0.010	2,857.661	0.110	2,954.286	0.210	3,050.910	0.310	3,147.535	0.410	3,244.160	0.510	3,340.784	0.610	3,437.409	0.710	3,534.033	0.810	3,630.658	0.910	3,727.282
0.011	2,858.628	0.111	2,955.252	0.211	3,051.877	0.311	3,148.501	0.411	3,245.126	0.511	3,341.750	0.611	3,438.375	0.711	3,535.000	0.811	3,631.624	0.911	3,728.249
0.012	2,859.594	0.112	2,956.218	0.212	3,052.843	0.312	3,149.468	0.412	3,246.092	0.512	3,342.717	0.612	3,439.341	0.712	3,535.966	0.812	3,632.590	0.912	3,729.215
0.013	2,860.560	0.113	2,957.185	0.213	3,053.809	0.313	3,150.434	0.413	3,247.058	0.513	3,343.683	0.613	3,440.307	0.713	3,536.932	0.813	3,633.557	0.913	3,730.181
0.014	2,861.526	0.114	2,958.151	0.214	3,054.775	0.314	3,151.400	0.414	3,248.025	0.514	3,344.649	0.614	3,441.274	0.714	3,537.898	0.814	3,634.523	0.914	3,731.147
0.015	2,862.493	0.115	2,959.117	0.215	3,055.742	0.315	3,152.366	0.415	3,248.991	0.515	3,345.615	0.615	3,442.240	0.715	3,538.865	0.815	3,635.489	0.915	3,732.114
0.016	2,863.459	0.116	2,960.083	0.216	3,056.708	0.316	3,153.333	0.416	3,249.957	0.516	3,346.582	0.616	3,443.206	0.716	3,539.831	0.816	3,636.455	0.916	3,733.080
0.017	2,864.425	0.117	2,961.050	0.217	3,057.674	0.317	3,154.299	0.417	3,250.923	0.517	3,347.548	0.617	3,444.172	0.717	3,540.797	0.817	3,637.422	0.917	3,734.046
0.018	2,865.391	0.118	2,962.016	0.218	3,058.640	0.318	3,155.265	0.418	3,251.890	0.518	3,348.514	0.618	3,445.139	0.718	3,541.763	0.818	3,638.388	0.918	3,735.012
0.019	2,866.358	0.119	2,962.982	0.219	3,059.607	0.319	3,156.231	0.419	3,252.856	0.519	3,349.480	0.619	3,446.105	0.719	3,542.729	0.819	3,639.354	0.919	3,735.979
0.020	2,867.324	0.120	2,963.948	0.220	3,060.573	0.320	3,157.197	0.420	3,253.822	0.520	3,350.447	0.620	3,447.071	0.720	3,543.696	0.820	3,640.320	0.920	3,736.945
0.021	2,868.290	0.121	2,964.915	0.221	3,061.539	0.321	3,158.164	0.421	3,254.788	0.521	3,351.413	0.621	3,448.037	0.721	3,544.662	0.821	3,641.287	0.921	3,737.911
0.022	2,869.256	0.122	2,965.881	0.222	3,062.505	0.322	3,159.130	0.422	3,255.755	0.522	3,352.379	0.622	3,449.004	0.722	3,545.628	0.822	3,642.253	0.922	3,738.877
0.023	2,870.223	0.123	2,966.847	0.223	3,063.472	0.323	3,160.096	0.423	3,256.721	0.523	3,353.345	0.623	3,449.970	0.723	3,546.594	0.823	3,643.219	0.923	3,739.844
0.024	2,871.189	0.124	2,967.813	0.224	3,064.438	0.324	3,161.062	0.424	3,257.687	0.524	3,354.312	0.624	3,450.936	0.724	3,547.561	0.824	3,644.185	0.924	3,740.810
0.025	2,872.155	0.125	2,968.780	0.225	3,065.404	0.325	3,162.029	0.425	3,258.653	0.525	3,355.278	0.625	3,451.902	0.725	3,548.527	0.825	3,645.152	0.925	3,741.776
0.026	2,873.121	0.126	2,969.746	0.226	3,066.370	0.326	3,162.995	0.426	3,259.620	0.526	3,356.244	0.626	3,452.869	0.726	3,549.493	0.826	3,646.118	0.926	3,742.742
0.027	2,874.088	0.127	2,970.712	0.227	3,067.337	0.327	3,163.961	0.427	3,260.586	0.527	3,357.210	0.627	3,453.835	0.727	3,550.459	0.827	3,647.084	0.927	3,743.709
0.028	2,875.054	0.128	2,971.678	0.228	3,068.303	0.328	3,164.927	0.428	3,261.552	0.528	3,358.177	0.628	3,454.801	0.728	3,551.426	0.828	3,648.050	0.928	3,744.675
0.029	2,876.020	0.129	2,972.645	0.229	3,069.269	0.329	3,165.894	0.429	3,262.518	0.529	3,359.143	0.629	3,455.767	0.729	3,552.392	0.829	3,649.016	0.929	3,745.641
0.030	2,876.986	0.130	2,973.611	0.230	3,070.235	0.330	3,166.860	0.430	3,263.485	0.530	3,360.109	0.630	3,456.734	0.730	3,553.358	0.830	3,649.983	0.930	3,746.607
0.031	2,877.953	0.131	2,974.577	0.231	3,071.202	0.331	3,167.826	0.431	3,264.451	0.531	3,361.075	0.631	3,457.700	0.731	3,554.324	0.831	3,650.949	0.931	3,747.574
0.032	2,878.919	0.132	2,975.543	0.232	3,072.168	0.332	3,168.792	0.432	3,265.417	0.532	3,362.042	0.632	3,458.666	0.732	3,555.291	0.832	3,651.915	0.932	3,748.540
0.033	2,879.885	0.133	2,976.510	0.233	3,073.134	0.333	3,169.759	0.433	3,266.383	0.533	3,363.008	0.633	3,459.632	0.733	3,556.257	0.833	3,652.881	0.933	3,749.506
0.034	2,880.851	0.134	2,977.476	0.234	3,074.100	0.334	3,170.725	0.434	3,267.349	0.534	3,363.974	0.634	3,460.599	0.734	3,557.223	0.834	3,653.848	0.934	3,750.472
0.035	2,881.818	0.135	2,978.442	0.235	3,075.067	0.335	3,171.691	0.435	3,268.316	0.535	3,364.940	0.635	3,461.565	0.735	3,558.189	0.835	3,654.814	0.935	3,751.439
0.036	2,882.784	0.136	2,979.408	0.236	3,076.033	0.336	3,172.657	0.436	3,269.282	0.536	3,365.907	0.636	3,462.531	0.736	3,559.156	0.836	3,655.780	0.936	3,752.405
0.037	2,883.750	0.137	2,980.375	0.237	3,076.999	0.337	3,173.624	0.437	3,270.248	0.537	3,366.873	0.637	3,463.497	0.737	3,560.122	0.837	3,656.746	0.937	3,753.371
0.038	2,884.716	0.138	2,981.341	0.238	3,077.965	0.338	3,174.590	0.438	3,271.214	0.538	3,367.839	0.638	3,464.464	0.738	3,561.088	0.838	3,657.713	0.938	3,754.337
0.039	2,885.682	0.139	2,982.307	0.239	3,078.932	0.339	3,175.556	0.439	3,272.181	0.539	3,368.805	0.639	3,465.430	0.739	3,562.054	0.839	3,658.679	0.939	3,755.304
0.040	2,886.649	0.140	2,983.273	0.240	3,079.898	0.340	3,176.522	0.440	3,273.147	0.540	3,369.772	0.640	3,466.396	0.740	3,563.021	0.840	3,659.645	0.940	3,756.270
0.041	2,887.615	0.141	2,984.240	0.241	3,080.864	0.341	3,177.489	0.441	3,274.113	0.541	3,370.738	0.641	3,467.362	0.741	3,563.987	0.841	3,660.611	0.941	3,757.236
0.042	2,888.581	0.142	2,985.206	0.242	3,081.830	0.342	3,178.455	0.442	3,275.079	0.542	3,371.704	0.642	3,468.329	0.742	3,564.953	0.842	3,661.578	0.942	3,758.202
0.043	2,889.547	0.143	2,986.172	0.243	3,082.797	0.343	3,179.421	0.443	3,276.046	0.543	3,372.670	0.643	3,469.295	0.743	3,565.919	0.843	3,662.544	0.943	3,759.168
0.044	2,890.514	0.144	2,987.138	0.244	3,083.763	0.344	3,180.387	0.444	3,277.012	0.544	3,373.637	0.644	3,470.261	0.744	3,566.886	0.844	3,663.510	0.944	3,760.135
0.045	2,891.480	0.145	2,988.105	0.245	3,084.729	0.345	3,181.354	0.445	3,277.978	0.545	3,374.603	0.645	3,471.227	0.745	3,567.852	0.845	3,664.476	0.945	3,761.101
0.046	2,892.446	0.146	2,989.071	0.246	3,085.695	0.346	3,182.320	0.446	3,278.944	0.546	3,375.569	0.646	3,472.194	0.746	3,568.818	0.846	3,665.443	0.946	3,762.067
0.047	2,893.412	0.147	2,990.037	0.247	3,086.662	0.347	3,183.286	0.447	3,279.911	0.547	3,376.535	0.647	3,473.160	0.747	3,569.784	0.847	3,666.409	0.947	3,763.033
0.048	2,894.379	0.148	2,991.003	0.248	3,087.628	0.348	3,184.252	0.448	3,280.877	0.548	3,377.501	0.648	3,474.126	0.748	3,570.751	0.848	3,667.375	0.948	3,764.000
0.049	2,895.345	0.149	2,991.970	0.249	3,088.594	0.349	3,185.219	0.449	3,281.843	0.549	3,378.468	0.649	3,475.092	0.749	3,571.717	0.849	3,668.341	0.949	3,764.966
0.050	2,896.311	0.150	2,992.936	0.250	3,089.560	0.350	3,186.185	0.450	3,282.809	0.550	3,379.434	0.650	3,476.059	0.750	3,572.683	0.850	3,669.308	0.950	3,765.932
0.051	2,897.277	0.151	2,993.902	0.251	3,090.527	0.351	3,187.151	0.451	3,283.776	0.551	3,380.400	0.651	3,477.025	0.751	3,573.649	0.851	3,670.274	0.951	3,766.898
0.052	2,898.244	0.152	2,994.868	0.252	3,091.493	0.352	3,188.117	0.452	3,284.742	0.552	3,381.366	0.652	3,477.991	0.752	3,574.616	0.852	3,671.240	0.952	3,767.865
0.053	2,899.210	0.153	2,995.834	0.253	3,092.459	0.353	3,189.084	0.453	3,285.708	0.553	3,382.333	0.653	3,478.957	0.753	3,575.582	0.853	3,672.206	0.953	3,768.831
0.054	2,900.176	0.154	2,996.801	0.254	3,093.425	0.354	3,190.050	0.454	3,286.674	0.554	3,383.299	0.654	3,479.924	0.754	3,576.548	0.854	3,673.173	0.954	3,769.797
0.055	2,901.142	0.155	2,997.767	0.255	3,094.392	0.355	3,191.016	0.455	3,287.641	0.555	3,384.265	0.655	3,480.890	0.755	3,577.514	0.855	3,674.139	0.955	3,770.763
0.056	2,902.109	0.156	2,998.733	0.256	3,095.358	0.356	3,191.982	0.456	3,288.607	0.556	3,385.231	0.656	3,481.856	0.756	3,578.481	0.856	3,675.105	0.956	3,771.730
0.057	2,903.075	0.157	2,999.699	0.257	3,096.324	0.357	3,192.949	0.457	3,289.573	0.557	3,386.198	0.657	3,482.822	0.757	3,579.447	0.857	3,676.071	0.957	3,772.696
0.058	2,904.041	0.158	3,000.666	0.258	3,097.290	0.358	3,193.915	0.458	3,290.539	0.558	3,387.164	0.658	3,483.789	0.758	3,580.413	0.858	3,677.038	0.958	3,773.662
0.059	2,905.007	0.159	3,001.632	0.259	3,098.257	0.359	3,194.881	0.459	3,291.506	0.559	3,388.130	0.659	3,484.755	0.759	3,581.379	0.859	3,678.004	0.959	3,774.628
0.060	2,905.974	0.160	3,002.598	0.260	3,099.223	0.360	3,195.847	0.460	3,292.472	0.560	3,389.096	0.660	3,485.721	0.760	3,582.346	0.860	3,678.970	0.960	3,775.595
0.061	2,906.940	0.161	3,003.564	0.261	3,100.189	0.361	3,196.814	0.461	3,293.438	0.561	3,390.063	0.661	3,486.687	0.761	3,583.312	0.861	3,679.936	0.961	3,776.561
0.062	2,907.906	0.162	3,004.531	0.262	3,101.155	0.362	3,197.780	0.462	3,294.404	0.562	3,391.029	0.662	3,487.653	0.762	3,584.278	0.862	3,680.903	0.962	3,777.527
0.063	2,908.872	0.163	3,005.497	0.263	3,102.122	0.363	3,198.746	0.463	3,295.371	0.563	3,391.995	0.663	3,488.620	0.763	3,585.244	0.863	3,681.869	0.963	3,778.493
0.064	2,909.839	0.164	3,006.463	0.264	3,103.088	0.364	3,199.712	0.464	3,296.337	0.564	3,392.961	0.664	3,489.586	0.764	3,586.211	0.864	3,682.835	0.964	3,779.460
0.065	2,910.805	0.165	3,007.429	0.265	3,104.054	0.365	3,200.679	0.465	3,297.303	0.565	3,393.928	0.665	3,490.552	0.765	3,587.177	0.865	3,683.801	0.965	3,780.426
0.066	2,911.771	0.166	3,008.396	0.266	3,105.020	0.366	3,201.645	0.466	3,298.269	0.566	3,394.894	0.666	3,491.518	0.766	3,588.143	0.866	3,684.768	0.966	3,781.392
0.067	2,912.737	0.167	3,009.362	0.267	3,105.986	0.367	3,202.611	0.467	3,299.236	0.567	3,395.860	0.667	3,492.485	0.767	3,589.109	0.867	3,685.734	0.967	3,782.358
0.068	2,913.704	0.168	3,010.328	0.268	3,106.953	0.368	3,203.577	0.468	3,300.202	0.568	3,396.826	0.668	3,493.451	0.768	3,590.076	0.868	3,686.700	0.968	3,783.325
0.069	2,914.670	0.169	3,011.294	0.269	3,107.919	0.369	3,204.544	0.469	3,301.168	0.569	3,397.793	0.669	3,494.417	0.769	3,591.042	0.869	3,687.666	0.969	3,784.291
0.070	2,915.636	0.170	3,012.261	0.270	3,108.885	0.370	3,205.510	0.470	3,302.134	0.570	3,398.759	0.670	3,495.383	0.770	3,592.008	0.870	3,688.633	0.970	3,785.257
0.071	2,916.602	0.171	3,013.227	0.271	3,109.851	0.371	3,206.476	0.471	3,303.101	0.571	3,399.725	0.671	3,496.350	0.771	3,592.974	0.871	3,689.599	0.971	3,786.223
0.072	2,917.569	0.172	3,014.193	0.272	3,110.818	0.372	3,207.442	0.472	3,304.067	0.572	3,400.691	0.672	3,497.316	0.772	3,593.940	0.872	3,690.565	0.972	3,787.190
0.073	2,918.535	0.173	3,015.159	0.273	3,111.784	0.373	3,208.409	0.473	3,305.033	0.573	3,401.658	0.673	3,498.282	0.773	3,594.907	0.873	3,691.531	0.973	3,788.156
0.074	2,919.501	0.174	3,016.126	0.274	3,112.750	0.374	3,209.375	0.474	3,305.999	0.574	3,402.624	0.674	3,499.248	0.774	3,595.873	0.874	3,692.498	0.974	3,789.122
0.075	2,920.467	0.175	3,017.092	0.275	3,113.716	0.375	3,210.341	0.475	3,306.966	0.575	3,403.590	0.675	3,500.215	0.775	3,596.839	0.875	3,693.464	0.975	3,790.088
0.076	2,921.434	0.176	3,018.058	0.276	3,114.683	0.376	3,211.307	0.476	3,307.932	0.576	3,404.556	0.676	3,501.181	0.776	3,597.805	0.876	3,694.430	0.976	3,791.055
0.077	2,922.400	0.177	3,019.024	0.277	3,115.649	0.377	3,212.273	0.477	3,308.898	0.577	3,405.523	0.677	3,502.147	0.777	3,598.772	0.877	3,695.396	0.977	3,792.021
0.078	2,923.366	0.178	3,019.991	0.278	3,116.615	0.378	3,213.240	0.478	3,309.864	0.578	3,406.489	0.678	3,503.113	0.778	3,599.738	0.878	3,696.363	0.978	3,792.987
0.079	2,924.332	0.179	3,020.957	0.279	3,117.581	0.379	3,214.206	0.479	3,310.831	0.579	3,407.455	0.679	3,504.080	0.779	3,600.704	0.879	3,697.329	0.979	3,793.953
0.080	2,925.299	0.180	3,021.923	0.280	3,118.548	0.380	3,215.172	0.480	3,311.797	0.580	3,408.421	0.680	3,505.046	0.780	3,601.670	0.880	3,698.295	0.980	3,794.920
0.081	2,926.265	0.181	3,022.889	0.281	3,119.514	0.381	3,216.138	0.481	3,312.763	0.581	3,409.388	0.681	3,506.012	0.781	3,602.637	0.881	3,699.261	0.981	3,795.886
0.082	2,927.231	0.182	3,023.856	0.282	3,120.480	0.382	3,217.105	0.482	3,313.729	0.582	3,410.354	0.682	3,506.978	0.782	3,603.603	0.882	3,700.228	0.982	3,796.852
0.083	2,928.197	0.183	3,024.822	0.283	3,121.446	0.383	3,218.071	0.483	3,314.696	0.583	3,411.320	0.683	3,507.945	0.783	3,604.569	0.883	3,701.194	0.983	3,797.818
0.084	2,929.164	0.184	3,025.788	0.284	3,122.413	0.384	3,219.037	0.484	3,315.662	0.584	3,412.286	0.684	3,508.911	0.784	3,605.535	0.884	3,702.160	0.984	3,798.785
0.085	2,930.130	0.185	3,026.754	0.285	3,123.379	0.385	3,220.003	0.485	3,316.628	0.585	3,413.253	0.685	3,509.877	0.785	3,606.502	0.885	3,703.126	0.985	3,799.751
0.086	2,931.096	0.186	3,027.721	0.286	3,124.345	0.386	3,220.970	0.486	3,317.594	0.586	3,414.219	0.686	3,510.843	0.786	3,607.468	0.886	3,704.092	0.986	3,800.717
0.087	2,932.062	0.187	3,028.687	0.287	3,125.311	0.387	3,221.936	0.487	3,318.561	0.587	3,415.185	0.687	3,511.810	0.787	3,608.434	0.887	3,705.059	0.987	3,801.683
0.088	2,933.029	0.188	3,029.653	0.288	3,126.278	0.388	3,222.902	0.488	3,319.527	0.588	3,416.151	0.688	3,512.776	0.788	3,609.400	0.888	3,706.025	0.988	3,802.650
0.089	2,933.995	0.189	3,030.619	0.289	3,127.244	0.389	3,223.868	0.489	3,320.493	0.589	3,417.118	0.689	3,513.742	0.789	3,610.367	0.889	3,706.991	0.989	3,803.616
0.090	2,934.961	0.190	3,031.586	0.290	3,128.210	0.390	3,224.835	0.490	3,321.459	0.590	3,418.084	0.690	3,514.708	0.790	3,611.333	0.890	3,707.957	0.990	3,804.582
0.091	2,935.927	0.191	3,032.552	0.291	3,129.176	0.391	3,225.801	0.491	3,322.425	0.591	3,419.050	0.691	3,515.675	0.791	3,612.299	0.891	3,708.924	0.991	3,805.548
0.092	2,936.894	0.192	3,033.518	0.292	3,130.143	0.392	3,226.767	0.492	3,323.392	0.592	3,420.016	0.692	3,516.641	0.792	3,613.265	0.892	3,709.890	0.992	3,806.515
0.093	2,937.860	0.193	3,034.484	0.293	3,131.109	0.393	3,227.733	0.493	3,324.358	0.593	3,420.983	0.693	3,517.607	0.793	3,614.232	0.893	3,710.856	0.993	3,807.481
0.094	2,938.826	0.194	3,035.451	0.294	3,132.075	0.394	3,228.700	0.494	3,325.324	0.594	3,421.949	0.694	3,518.573	0.794	3,615.198	0.894	3,711.822	0.994	3,808.447
0.095	2,939.792	0.195	3,036.417	0.295	3,133.041	0.395	3,229.666	0.495	3,326.290	0.595	3,422.915	0.695	3,519.540	0.795	3,616.164	0.895	3,712.789	0.995	3,809.413
0.096	2,940.758	0.196	3,037.383	0.296	3,134.008	0.396	3,230.632	0.496	3,327.257	0.596	3,423.881	0.696	3,520.506	0.796	3,617.130	0.896	3,713.755	0.996	3,810.380
0.097	2,941.725	0.197	3,038.349	0.297	3,134.974	0.397	3,231.598	0.497	3,328.223	0.597	3,424.848	0.697	3,521.472	0.797	3,618.097	0.897	3,714.721	0.997	3,811.346
0.098	2,942.691	0.198	3,039.316	0.298	3,135.940	0.398	3,232.565	0.498	3,329.189	0.598	3,425.814	0.698	3,522.438	0.798	3,619.063	0.898	3,715.687	0.998	3,812.312
0.099	2,943.657	0.199	3,040.282	0.299	3,136.906	0.399	3,233.531	0.499	3,330.155	0.599	3,426.780	0.699	3,523.405	0.799	3,620.029	0.899	3,716.654	0.999	3,813.278

DATE STRAPPED: 09/19/17 BY: RJ
DATE COMPUTED: 09/26/17 BY: WLH
DATE ISSUED: 09/26/17

AMSPEC

Meliadine
Rankin Inlet
Item 20 - Final - Data Sheet (Innage)

Tank No. 2
INNAGE TABLE

Calibration@AmSpecGroup.com

CAPACITIES GIVEN IN CUBIC METERS

GAUGE HEIGHT: 14.269 M

mm	4 M	mm	4 M	mm	4 M	mm	4 M	mm	4 M	mm	4 M	mm	4 M	mm	4 M	mm	4 M	mm	4 M
0.000	3,814.244	0.100	3,910.869	0.200	4,007.494	0.300	4,104.118	0.400	4,200.743	0.500	4,297.367	0.600	4,393.992	0.700	4,490.616	0.800	4,587.241	0.900	4,683.866
0.001	3,815.211	0.101	3,911.835	0.201	4,008.460	0.301	4,105.084	0.401	4,201.709	0.501	4,298.334	0.601	4,394.958	0.701	4,491.583	0.801	4,588.207	0.901	4,684.832
0.002	3,816.177	0.102	3,912.802	0.202	4,009.426	0.302	4,106.051	0.402	4,202.675	0.502	4,299.300	0.602	4,395.924	0.702	4,492.549	0.802	4,589.173	0.902	4,685.798
0.003	3,817.143	0.103	3,913.768	0.203	4,010.392	0.303	4,107.017	0.403	4,203.641	0.503	4,300.266	0.603	4,396.891	0.703	4,493.515	0.803	4,590.140	0.903	4,686.764
0.004	3,818.109	0.104	3,914.734	0.204	4,011.359	0.304	4,107.983	0.404	4,204.608	0.504	4,301.232	0.604	4,397.857	0.704	4,494.481	0.804	4,591.106	0.904	4,687.730
0.005	3,819.076	0.105	3,915.700	0.205	4,012.325	0.305	4,108.949	0.405	4,205.574	0.505	4,302.199	0.605	4,398.823	0.705	4,495.448	0.805	4,592.072	0.905	4,688.697
0.006	3,820.042	0.106	3,916.667	0.206	4,013.291	0.306	4,109.916	0.406	4,206.540	0.506	4,303.165	0.606	4,399.789	0.706	4,496.414	0.806	4,593.038	0.906	4,689.663
0.007	3,821.008	0.107	3,917.633	0.207	4,014.257	0.307	4,110.882	0.407	4,207.506	0.507	4,304.131	0.607	4,400.756	0.707	4,497.380	0.807	4,594.005	0.907	4,690.629
0.008	3,821.974	0.108	3,918.599	0.208	4,015.224	0.308	4,111.848	0.408	4,208.473	0.508	4,305.097	0.608	4,401.722	0.708	4,498.346	0.808	4,594.971	0.908	4,691.595
0.009	3,822.941	0.109	3,919.565	0.209	4,016.190	0.309	4,112.814	0.409	4,209.439	0.509	4,306.063	0.609	4,402.688	0.709	4,499.313	0.809	4,595.937	0.909	4,692.562
0.010	3,823.907	0.110	3,920.532	0.210	4,017.156	0.310	4,113.781	0.410	4,210.405	0.510	4,307.030	0.610	4,403.654	0.710	4,500.279	0.810	4,596.903	0.910	4,693.528
0.011	3,824.873	0.111	3,921.498	0.211	4,018.122	0.311	4,114.747	0.411	4,211.371	0.511	4,307.996	0.611	4,404.621	0.711	4,501.245	0.811	4,597.870	0.911	4,694.494
0.012	3,825.839	0.112	3,922.464	0.212	4,019.089	0.312	4,115.713	0.412	4,212.338	0.512	4,308.962	0.612	4,405.587	0.712	4,502.211	0.812	4,598.836	0.912	4,695.460
0.013	3,826.806	0.113	3,923.430	0.213	4,020.055	0.313	4,116.679	0.413	4,213.304	0.513	4,309.928	0.613	4,406.553	0.713	4,503.178	0.813	4,599.802	0.913	4,696.427
0.014	3,827.772	0.114	3,924.396	0.214	4,021.021	0.314	4,117.646	0.414	4,214.270	0.514	4,310.895	0.614	4,407.519	0.714	4,504.144	0.814	4,600.768	0.914	4,697.393
0.015	3,828.738	0.115	3,925.363	0.215	4,021.987	0.315	4,118.612	0.415	4,215.236	0.515	4,311.861	0.615	4,408.486	0.715	4,505.110	0.815	4,601.735	0.915	4,698.359
0.016	3,829.704	0.116	3,926.329	0.216	4,022.954	0.316	4,119.578	0.416	4,216.203	0.516	4,312.827	0.616	4,409.452	0.716	4,506.076	0.816	4,602.701	0.916	4,699.325
0.017	3,830.671	0.117	3,927.295	0.217	4,023.920	0.317	4,120.544	0.417	4,217.169	0.517	4,313.793	0.617	4,410.418	0.717	4,507.043	0.817	4,603.667	0.917	4,700.292
0.018	3,831.637	0.118	3,928.261	0.218	4,024.886	0.318	4,121.511	0.418	4,218.135	0.518	4,314.760	0.618	4,411.384	0.718	4,508.009	0.818	4,604.633	0.918	4,701.258
0.019	3,832.603	0.119	3,929.228	0.219	4,025.852	0.319	4,122.477	0.419	4,219.101	0.519	4,315.726	0.619	4,412.351	0.719	4,508.975	0.819	4,605.600	0.919	4,702.224
0.020	3,833.569	0.120	3,930.194	0.220	4,026.819	0.320	4,123.443	0.420	4,220.068	0.520	4,316.692	0.620	4,413.317	0.720	4,509.941	0.820	4,606.566	0.920	4,703.190
0.021	3,834.536	0.121	3,931.160	0.221	4,027.785	0.321	4,124.409	0.421	4,221.034	0.521	4,317.658	0.621	4,414.283	0.721	4,510.908	0.821	4,607.532	0.921	4,704.157
0.022	3,835.502	0.122	3,932.126	0.222	4,028.751	0.322	4,125.376	0.422	4,222.000	0.522	4,318.625	0.622	4,415.249	0.722	4,511.874	0.822	4,608.498	0.922	4,705.123
0.023	3,836.468	0.123	3,933.093	0.223	4,029.717	0.323	4,126.342	0.423	4,222.966	0.523	4,319.591	0.623	4,416.215	0.723	4,512.840	0.823	4,609.465	0.923	4,706.089
0.024	3,837.434	0.124	3,934.059	0.224	4,030.683	0.324	4,127.308	0.424	4,223.933	0.524	4,320.557	0.624	4,417.182	0.724	4,513.806	0.824	4,610.431	0.924	4,707.055
0.025	3,838.401	0.125	3,935.025	0.225	4,031.650	0.325	4,128.274	0.425	4,224.899	0.525	4,321.523	0.625	4,418.148	0.725	4,514.773	0.825	4,611.397	0.925	4,708.022
0.026	3,839.367	0.126	3,935.991	0.226	4,032.616	0.326	4,129.241	0.426	4,225.865	0.526	4,322.490	0.626	4,419.114	0.726	4,515.739	0.826	4,612.363	0.926	4,708.988
0.027	3,840.333	0.127	3,936.958	0.227	4,033.582	0.327	4,130.207	0.427	4,226.831	0.527	4,323.456	0.627	4,420.080	0.727	4,516.705	0.827	4,613.330	0.927	4,709.954
0.028	3,841.299	0.128	3,937.924	0.228	4,034.548	0.328	4,131.173	0.428	4,227.798	0.528	4,324.422	0.628	4,421.047	0.728	4,517.671	0.828	4,614.296	0.928	4,710.920
0.029	3,842.266	0.129	3,938.890	0.229	4,035.515	0.329	4,132.139	0.429	4,228.764	0.529	4,325.388	0.629	4,422.013	0.729	4,518.638	0.829	4,615.262	0.929	4,711.887
0.030	3,843.232	0.130	3,939.856	0.230	4,036.481	0.330	4,133.106	0.430	4,229.730	0.530	4,326.355	0.630	4,422.979	0.730	4,519.604	0.830	4,616.228	0.930	4,712.853
0.031	3,844.198	0.131	3,940.823	0.231	4,037.447	0.331	4,134.072	0.431	4,230.696	0.531	4,327.321	0.631	4,423.945	0.731	4,520.570	0.831	4,617.195	0.931	4,713.819
0.032	3,845.164	0.132	3,941.789	0.232	4,038.413	0.332	4,135.038	0.432	4,231.663	0.532	4,328.287	0.632	4,424.912	0.732	4,521.536	0.832	4,618.161	0.932	4,714.785
0.033	3,846.131	0.133	3,942.755	0.233	4,039.380	0.333	4,136.004	0.433	4,232.629	0.533	4,329.253	0.633	4,425.878	0.733	4,522.502	0.833	4,619.127	0.933	4,715.752
0.034	3,847.097	0.134	3,943.721	0.234	4,040.346	0.334	4,136.971	0.434	4,233.595	0.534	4,330.220	0.634	4,426.844	0.734	4,523.469	0.834	4,620.093	0.934	4,716.718
0.035	3,848.063	0.135	3,944.688	0.235	4,041.312	0.335	4,137.937	0.435	4,234.561	0.535	4,331.186	0.635	4,427.810	0.735	4,524.435	0.835	4,621.060	0.935	4,717.684
0.036	3,849.029	0.136	3,945.654	0.236	4,042.278	0.336	4,138.903	0.436	4,235.528	0.536	4,332.152	0.636	4,428.777	0.736	4,525.401	0.836	4,622.026	0.936	4,718.650
0.037	3,849.996	0.137	3,946.620	0.237	4,043.245	0.337	4,139.869	0.437	4,236.494	0.537	4,333.118	0.637	4,429.743	0.737	4,526.367	0.837	4,622.992	0.937	4,719.617
0.038	3,850.962	0.138	3,947.586	0.238	4,044.211	0.338	4,140.835	0.438	4,237.460	0.538	4,334.085	0.638	4,430.709	0.738	4,527.334	0.838	4,623.958	0.938	4,720.583
0.039	3,851.928	0.139	3,948.553	0.239	4,045.177	0.339	4,141.802	0.439	4,238.426	0.539	4,335.051	0.639	4,431.675	0.739	4,528.300	0.839	4,624.925	0.939	4,721.549
0.040	3,852.894	0.140	3,949.519	0.240	4,046.143	0.340	4,142.768	0.440	4,239.393	0.540	4,336.017	0.640	4,432.642	0.740	4,529.266	0.840	4,625.891	0.940	4,722.515
0.041	3,853.861	0.141	3,950.485	0.241	4,047.110	0.341	4,143.734	0.441	4,240.359	0.541	4,336.983	0.641	4,433.608	0.741	4,530.232	0.841	4,626.857	0.941	4,723.482
0.042	3,854.827	0.142	3,951.451	0.242	4,048.076	0.342	4,144.700	0.442	4,241.325	0.542	4,337.950	0.642	4,434.574	0.742	4,531.199	0.842	4,627.823	0.942	4,724.448
0.043	3,855.793	0.143	3,952.418	0.243	4,049.042	0.343	4,145.667	0.443	4,242.291	0.543	4,338.916	0.643	4,435.540	0.743	4,532.165	0.843	4,628.790	0.943	4,725.414
0.044	3,856.759	0.144	3,953.384	0.244	4,050.008	0.344	4,146.633	0.444	4,243.258	0.544	4,339.882	0.644	4,436.507	0.744	4,533.131	0.844	4,629.756	0.944	4,726.380
0.045	3,857.726	0.145	3,954.350	0.245	4,050.975	0.345	4,147.599	0.445	4,244.224	0.545	4,340.848	0.645	4,437.473	0.745	4,534.097	0.845	4,630.722	0.945	4,727.347
0.046	3,858.692	0.146	3,955.316	0.246	4,051.941	0.346	4,148.565	0.446	4,245.190	0.546	4,341.815	0.646	4,438.439	0.746	4,535.064	0.846	4,631.688	0.946	4,728.313
0.047	3,859.658	0.147	3,956.283	0.247	4,052.907	0.347	4,149.532	0.447	4,246.156	0.547	4,342.781	0.647	4,439.405	0.747	4,536.030	0.847	4,632.654	0.947	4,729.279
0.048	3,860.624	0.148	3,957.249	0.248	4,053.873	0.348	4,150.498	0.448	4,247.123	0.548	4,343.747	0.648	4,440.372	0.748	4,536.996	0.848	4,633.621	0.948	4,730.245
0.049	3,861.591	0.149	3,958.215	0.249	4,054.840	0.349	4,151.464	0.449	4,248.089	0.549	4,344.713	0.649	4,441.338	0.749	4,537.962	0.849	4,634.587	0.949	4,731.212
0.050	3,862.557	0.150	3,959.181	0.250	4,055.806	0.350	4,152.430	0.450	4,249.055	0.550	4,345.680	0.650	4,442.304	0.750	4,538.929	0.850	4,635.553	0.950	4,732.178
0.051	3,863.523	0.151	3,960.148	0.251	4,056.772	0.351	4,153.397	0.451	4,250.021	0.551	4,346.646	0.651	4,443.270	0.751	4,539.895	0.851	4,636.519	0.951	4,733.144
0.052	3,864.489	0.152	3,961.114	0.252	4,057.738	0.352	4,154.363	0.452	4,250.987	0.552	4,347.612	0.652	4,444.237	0.752	4,540.861	0.852	4,637.486	0.952	4,734.110
0.053	3,865.456	0.153	3,962.080	0.253	4,058.705	0.353	4,155.329	0.453	4,251.954	0.553	4,348.578	0.653	4,445.203	0.753	4,541.827	0.853	4,638.452	0.953	4,735.077
0.054	3,866.422	0.154	3,963.046	0.254	4,059.671	0.354	4,156.295	0.454	4,252.920	0.554	4,349.545	0.654	4,446.169	0.754	4,542.794	0.854	4,639.418	0.954	4,736.043
0.055	3,867.388	0.155	3,964.013	0.255	4,060.637	0.355	4,157.262	0.455	4,253.886	0.555	4,350.511	0.655	4,447.135	0.755	4,543.760	0.855	4,640.384	0.955	4,737.009
0.056	3,868.354	0.156	3,964.979	0.256	4,061.603	0.356	4,158.228	0.456	4,254.852	0.556	4,351.477	0.656	4,448.102	0.756	4,544.726	0.856	4,641.351	0.956	4,737.975
0.057	3,869.320	0.157	3,965.945	0.257	4,062.570	0.357	4,159.194	0.457	4,255.819	0.557	4,352.443	0.657	4,449.068	0.757	4,545.692	0.857	4,642.317	0.957	4,738.942
0.058	3,870.287	0.158	3,966.911	0.258	4,063.536	0.358	4,160.160	0.458	4,256.785	0.558	4,353.410	0.658	4,450.034	0.758	4,546.659	0.858	4,643.283	0.958	4,739.908
0.059	3,871.253	0.159	3,967.878	0.259	4,064.502	0.359	4,161.127	0.459	4,257.751	0.559	4,354.376	0.659	4,451.000	0.759	4,547.625	0.859	4,644.249	0.959	4,740.874
0.060	3,872.219	0.160	3,968.844	0.260	4,065.468	0.360	4,162.093	0.460	4,258.717	0.560	4,355.342	0.660	4,451.967	0.760	4,548.591	0.860	4,645.216	0.960	4,741.840
0.061	3,873.185	0.161	3,969.810	0.261	4,066.435	0.361	4,163.059	0.461	4,259.684	0.561	4,356.308	0.661	4,452.933	0.761	4,549.557	0.861	4,646.182	0.961	4,742.806
0.062	3,874.152	0.162	3,970.776	0.262	4,067.401	0.362	4,164.025	0.462	4,260.650	0.562	4,357.275	0.662	4,453.899	0.762	4,550.524	0.862	4,647.148	0.962	4,743.773
0.063	3,875.118	0.163	3,971.743	0.263	4,068.367	0.363	4,164.992	0.463	4,261.616	0.563	4,358.241	0.663	4,454.865	0.763	4,551.490	0.863	4,648.114	0.963	4,744.739
0.064	3,876.084	0.164	3,972.709	0.264	4,069.333	0.364	4,165.958	0.464	4,262.582	0.564	4,359.207	0.664	4,455.832	0.764	4,552.456	0.864	4,649.081	0.964	4,745.705
0.065	3,877.050	0.165	3,973.675	0.265	4,070.300	0.365	4,166.924	0.465	4,263.549	0.565	4,360.173	0.665	4,456.798	0.765	4,553.422	0.865	4,650.047	0.965	4,746.671
0.066	3,878.017	0.166	3,974.641	0.266	4,071.266	0.366	4,167.890	0.466	4,264.515	0.566	4,361.139	0.666	4,457.764	0.766	4,554.389	0.866	4,651.013	0.966	4,747.638
0.067	3,878.983	0.167	3,975.608	0.267	4,072.232	0.367	4,168.857	0.467	4,265.481	0.567	4,362.106	0.667	4,458.730	0.767	4,555.355	0.867	4,651.979	0.967	4,748.604
0.068	3,879.949	0.168	3,976.574	0.268	4,073.198	0.368	4,169.823	0.468	4,266.447	0.568	4,363.072	0.668	4,459.697	0.768	4,556.321	0.868	4,652.946	0.968	4,749.570
0.069	3,880.915	0.169	3,977.540	0.269	4,074.165	0.369	4,170.789	0.469	4,267.414	0.569	4,364.038	0.669	4,460.663	0.769	4,557.287	0.869	4,653.912	0.969	4,750.536
0.070	3,881.882	0.170	3,978.506	0.270	4,075.131	0.370	4,171.755	0.470	4,268.380	0.570	4,365.004	0.670	4,461.629	0.770	4,558.254	0.870	4,654.878	0.970	4,751.503
0.071	3,882.848	0.171	3,979.472	0.271	4,076.097	0.371	4,172.722	0.471	4,269.346	0.571	4,365.971	0.671	4,462.595	0.771	4,559.220	0.871	4,655.844	0.971	4,752.469
0.072	3,883.814	0.172	3,980.439	0.272	4,077.063	0.372	4,173.688	0.472	4,270.312	0.572	4,366.937	0.672	4,463.562	0.772	4,560.186	0.872	4,656.811	0.972	4,753.435
0.073	3,884.780	0.173	3,981.405	0.273	4,078.030	0.373	4,174.654	0.473	4,271.279	0.573	4,367.903	0.673	4,464.528	0.773	4,561.152	0.873	4,657.777	0.973	4,754.401
0.074	3,885.747	0.174	3,982.371	0.274	4,078.996	0.374	4,175.620	0.474	4,272.245	0.574	4,368.869	0.674	4,465.494	0.774	4,562.119	0.874	4,658.743	0.974	4,755.368
0.075	3,886.713	0.175	3,983.337	0.275	4,079.962	0.375	4,176.587	0.475	4,273.211	0.575	4,369.836	0.675	4,466.460	0.775	4,563.085	0.875	4,659.709	0.975	4,756.334
0.076	3,887.679	0.176	3,984.304	0.276	4,080.928	0.376	4,177.553	0.476	4,274.177	0.576	4,370.802	0.676	4,467.426	0.776	4,564.051	0.876	4,660.676	0.976	4,757.300
0.077	3,888.645	0.177	3,985.270	0.277	4,081.895	0.377	4,178.519	0.477	4,275.144	0.577	4,371.768	0.677	4,468.393	0.777	4,565.017	0.877	4,661.642	0.977	4,758.266
0.078	3,889.612	0.178	3,986.236	0.278	4,082.861	0.378	4,179.485	0.478	4,276.110	0.578	4,372.734	0.678	4,469.359	0.778	4,565.984	0.878	4,662.608	0.978	4,759.233
0.079	3,890.578	0.179	3,987.202	0.279	4,083.827	0.379	4,180.452	0.479	4,277.076	0.579	4,373.701	0.679	4,470.325	0.779	4,566.950	0.879	4,663.574	0.979	4,760.199
0.080	3,891.544	0.180	3,988.169	0.280	4,084.793	0.380	4,181.418	0.480	4,278.042	0.580	4,374.667	0.680	4,471.291	0.780	4,567.916	0.880	4,664.541	0.980	4,761.165
0.081	3,892.510	0.181	3,989.135	0.281	4,085.759	0.381	4,182.384	0.481	4,279.009	0.581	4,375.633	0.681	4,472.258	0.781	4,568.882	0.881	4,665.507	0.981	4,762.131
0.082	3,893.477	0.182	3,990.101	0.282	4,086.726	0.382	4,183.350	0.482	4,279.975	0.582	4,376.599	0.682	4,473.224	0.782	4,569.849	0.882	4,666.473	0.982	4,763.098
0.083	3,894.443	0.183	3,991.067	0.283	4,087.692	0.383	4,184.317	0.483	4,280.941	0.583	4,377.566	0.683	4,474.190	0.783	4,570.815	0.883	4,667.439	0.983	4,764.064
0.084	3,895.409	0.184	3,992.034	0.284	4,088.658	0.384	4,185.283	0.484	4,281.907	0.584	4,378.532	0.684	4,475.156	0.784	4,571.781	0.884	4,668.406	0.984	4,765.030
0.085	3,896.375	0.185	3,993.000	0.285	4,089.624	0.385	4,186.249	0.485	4,282.874	0.585	4,379.498	0.685	4,476.123	0.785	4,572.747	0.885	4,669.372	0.985	4,765.996
0.086	3,897.342	0.186	3,993.966	0.286	4,090.591	0.386	4,187.215	0.486	4,283.840	0.586	4,380.464	0.686	4,477.089	0.786	4,573.714	0.886	4,670.338	0.986	4,766.963
0.087	3,898.308	0.187	3,994.932	0.287	4,091.557	0.387	4,188.182	0.487	4,284.806	0.587	4,381.431	0.687	4,478.055	0.787	4,574.680	0.887	4,671.304	0.987	4,767.929
0.088	3,899.274	0.188	3,995.899	0.288	4,092.523	0.388	4,189.148	0.488	4,285.772	0.588	4,382.397	0.688	4,479.021	0.788	4,575.646	0.888	4,672.271	0.988	4,768.895
0.089	3,900.240	0.189	3,996.865	0.289	4,093.489	0.389	4,190.114	0.489	4,286.739	0.589	4,383.363	0.689	4,479.988	0.789	4,576.612	0.889	4,673.237	0.989	4,769.861
0.090	3,901.207	0.190	3,997.831	0.290	4,094.456	0.390	4,191.080	0.490	4,287.705	0.590	4,384.329	0.690	4,480.954	0.790	4,577.578	0.890	4,674.203	0.990	4,770.828
0.091	3,902.173	0.191	3,998.797	0.291	4,095.422	0.391	4,192.047	0.491	4,288.671	0.591	4,385.296	0.691	4,481.920	0.791	4,578.545	0.891	4,675.169	0.991	4,771.794
0.092	3,903.139	0.192	3,999.764	0.292	4,096.388	0.392	4,193.013	0.492	4,289.637	0.592	4,386.262	0.692	4,482.886	0.792	4,579.511	0.892	4,676.136	0.992	4,772.760
0.093	3,904.105	0.193	4,000.730	0.293	4,097.354	0.393	4,193.979	0.493	4,290.604	0.593	4,387.228	0.693	4,483.853	0.793	4,580.477	0.893	4,677.102	0.993	4,773.726
0.094	3,905.072	0.194	4,001.696	0.294	4,098.321	0.394	4,194.945	0.494	4,291.570	0.594	4,388.194	0.694	4,484.819	0.794	4,581.443	0.894	4,678.068	0.994	4,774.693
0.095	3,906.038	0.195	4,002.662	0.295	4,099.287	0.395	4,195.911	0.495	4,292.536	0.595	4,389.161	0.695	4,485.785	0.795	4,582.410	0.895	4,679.034	0.995	4,775.659
0.096	3,907.004	0.196	4,003.629	0.296	4,100.253	0.396	4,196.878	0.496	4,293.502	0.596	4,390.127	0.696	4,486.751	0.796	4,583.376	0.896	4,680.001	0.996	4,776.625
0.097	3,907.970	0.197	4,004.595	0.297	4,101.219	0.397	4,197.844	0.497	4,294.469	0.597	4,391.093	0.697	4,487.718	0.797	4,584.342	0.897	4,680.967	0.997	4,777.591
0.098	3,908.937	0.198	4,005.561	0.298	4,102.186	0.398	4,198.810	0.498	4,295.435	0.598	4,392.059	0.698	4,488.684	0.798	4,585.308	0.898	4,681.933	0.998	4,778.558
0.099	3,909.903	0.199	4,006.527	0.299	4,103.152	0.399	4,199.776	0.499	4,296.401	0.599	4,393.026	0.699	4,489.650	0.799	4,586.275	0.899	4,682.899	0.999	4,779.524

DATE STRAPPED: 09/19/17 BY: RJ
DATE COMPUTED: 09/26/17 BY: WLH
DATE ISSUED: 09/26/17

AMSPEC

Meliadine
Rankin Inlet
Item 20 - Final - Data Sheet (Innage)

Tank No. 2
INNAGE TABLE

Calibration@AmSpecGroup.com

CAPACITIES GIVEN IN CUBIC METERS

GAUGE HEIGHT: 14.269 M

mm	5 M	mm	5 M	mm	5 M	mm	5 M	mm	5 M	mm	5 M	mm	5 M	mm	5 M	mm	5 M	mm	5 M
0.000	4,780.490	0.100	4,877.115	0.200	4,973.739	0.300	5,070.364	0.400	5,166.988	0.500	5,263.613	0.600	5,360.240	0.700	5,456.873	0.800	5,553.505	0.900	5,650.138
0.001	4,781.456	0.101	4,878.081	0.201	4,974.705	0.301	5,071.330	0.401	5,167.955	0.501	5,264.579	0.601	5,361.206	0.701	5,457.839	0.801	5,554.472	0.901	5,651.104
0.002	4,782.423	0.102	4,879.047	0.202	4,975.672	0.302	5,072.296	0.402	5,168.921	0.502	5,265.545	0.602	5,362.173	0.702	5,458.805	0.802	5,555.438	0.902	5,652.070
0.003	4,783.389	0.103	4,880.013	0.203	4,976.638	0.303	5,073.262	0.403	5,169.887	0.503	5,266.512	0.603	5,363.139	0.703	5,459.772	0.803	5,556.404	0.903	5,653.037
0.004	4,784.355	0.104	4,880.980	0.204	4,977.604	0.304	5,074.229	0.404	5,170.853	0.504	5,267.478	0.604	5,364.105	0.704	5,460.738	0.804	5,557.371	0.904	5,654.003
0.005	4,785.321	0.105	4,881.946	0.205	4,978.570	0.305	5,075.195	0.405	5,171.820	0.505	5,268.444	0.605	5,365.072	0.705	5,461.704	0.805	5,558.337	0.905	5,654.969
0.006	4,786.288	0.106	4,882.912	0.206	4,979.537	0.306	5,076.161	0.406	5,172.786	0.506	5,269.410	0.606	5,366.038	0.706	5,462.671	0.806	5,559.303	0.906	5,655.936
0.007	4,787.254	0.107	4,883.878	0.207	4,980.503	0.307	5,077.127	0.407	5,173.752	0.507	5,270.377	0.607	5,367.004	0.707	5,463.637	0.807	5,560.270	0.907	5,656.902
0.008	4,788.220	0.108	4,884.845	0.208	4,981.469	0.308	5,078.094	0.408	5,174.718	0.508	5,271.343	0.608	5,367.971	0.708	5,464.603	0.808	5,561.236	0.908	5,657.868
0.009	4,789.186	0.109	4,885.811	0.209	4,982.435	0.309	5,079.060	0.409	5,175.685	0.509	5,272.309	0.609	5,368.937	0.709	5,465.570	0.809	5,562.202	0.909	5,658.835
0.010	4,790.153	0.110	4,886.777	0.210	4,983.402	0.310	5,080.026	0.410	5,176.651	0.510	5,273.275	0.610	5,369.903	0.710	5,466.536	0.810	5,563.168	0.910	5,659.801
0.011	4,791.119	0.111	4,887.743	0.211	4,984.368	0.311	5,080.992	0.411	5,177.617	0.511	5,274.242	0.611	5,370.870	0.711	5,467.502	0.811	5,564.135	0.911	5,660.767
0.012	4,792.085	0.112	4,888.710	0.212	4,985.334	0.312	5,081.959	0.412	5,178.583	0.512	5,275.208	0.612	5,371.836	0.712	5,468.469	0.812	5,565.101	0.912	5,661.734
0.013	4,793.051	0.113	4,889.676	0.213	4,986.300	0.313	5,082.925	0.413	5,179.549	0.513	5,276.174	0.613	5,372.802	0.713	5,469.435	0.813	5,566.067	0.913	5,662.700
0.014	4,794.018	0.114	4,890.642	0.214	4,987.267	0.314	5,083.891	0.414	5,180.516	0.514	5,277.140	0.614	5,373.769	0.714	5,470.401	0.814	5,567.034	0.914	5,663.666
0.015	4,794.984	0.115	4,891.608	0.215	4,988.233	0.315	5,084.857	0.415	5,181.482	0.515	5,278.107	0.615	5,374.735	0.715	5,471.368	0.815	5,568.000	0.915	5,664.633
0.016	4,795.950	0.116	4,892.575	0.216	4,989.199	0.316	5,085.824	0.416	5,182.448	0.516	5,279.073	0.616	5,375.701	0.716	5,472.334	0.816	5,568.966	0.916	5,665.599
0.017	4,796.916	0.117	4,893.541	0.217	4,990.165	0.317	5,086.790	0.417	5,183.414	0.517	5,280.039	0.617	5,376.668	0.717	5,473.300	0.817	5,569.933	0.917	5,666.565
0.018	4,797.882	0.118	4,894.507	0.218	4,991.132	0.318	5,087.756	0.418	5,184.381	0.518	5,281.005	0.618	5,377.634	0.718	5,474.267	0.818	5,570.899	0.918	5,667.532
0.019	4,798.849	0.119	4,895.473	0.219	4,992.098	0.319	5,088.722	0.419	5,185.347	0.519	5,281.972	0.619	5,378.600	0.719	5,475.233	0.819	5,571.865	0.919	5,668.498
0.020	4,799.815	0.120	4,896.440	0.220	4,993.064	0.320	5,089.689	0.420	5,186.313	0.520	5,282.938	0.620	5,379.567	0.720	5,476.199	0.820	5,572.832	0.920	5,669.464
0.021	4,800.781	0.121	4,897.406	0.221	4,994.030	0.321	5,090.655	0.421	5,187.279	0.521	5,283.904	0.621	5,380.533	0.721	5,477.166	0.821	5,573.798	0.921	5,670.431
0.022	4,801.747	0.122	4,898.372	0.222	4,994.997	0.322	5,091.621	0.422	5,188.246	0.522	5,284.870	0.622	5,381.499	0.722	5,478.132	0.822	5,574.764	0.922	5,671.397
0.023	4,802.714	0.123	4,899.338	0.223	4,995.963	0.323	5,092.587	0.423	5,189.212	0.523	5,285.836	0.623	5,382.466	0.723	5,479.098	0.823	5,575.731	0.923	5,672.363
0.024	4,803.680	0.124	4,900.305	0.224	4,996.929	0.324	5,093.554	0.424	5,190.178	0.524	5,286.803	0.624	5,383.432	0.724	5,480.064	0.824	5,576.697	0.924	5,673.330
0.025	4,804.646	0.125	4,901.271	0.225	4,997.895	0.325	5,094.520	0.425	5,191.144	0.525	5,287.769	0.625	5,384.398	0.725	5,481.031	0.825	5,577.663	0.925	5,674.296
0.026	4,805.612	0.126	4,902.237	0.226	4,998.862	0.326	5,095.486	0.426	5,192.111	0.526	5,288.735	0.626	5,385.365	0.726	5,481.997	0.826	5,578.630	0.926	5,675.262
0.027	4,806.579	0.127	4,903.203	0.227	4,999.828	0.327	5,096.452	0.427	5,193.077	0.527	5,289.701	0.627	5,386.331	0.727	5,482.963	0.827	5,579.596	0.927	5,676.229
0.028	4,807.545	0.128	4,904.169	0.228	5,000.794	0.328	5,097.419	0.428	5,194.043	0.528	5,290.668	0.628	5,387.297	0.728	5,483.930	0.828	5,580.562	0.928	5,677.195
0.029	4,808.511	0.129	4,905.136	0.229	5,001.760	0.329	5,098.385	0.429	5,195.009	0.529	5,291.634	0.629	5,388.264	0.729	5,484.896	0.829	5,581.529	0.929	5,678.161
0.030	4,809.477	0.130	4,906.102	0.230	5,002.727	0.330	5,099.351	0.430	5,195.976	0.530	5,292.600	0.630	5,389.230	0.730	5,485.862	0.830	5,582.495	0.930	5,679.128
0.031	4,810.444	0.131	4,907.068	0.231	5,003.693	0.331	5,100.317	0.431	5,196.942	0.531	5,293.566	0.631	5,390.196	0.731	5,486.829	0.831	5,583.461	0.931	5,680.094
0.032	4,811.410	0.132	4,908.034	0.232	5,004.659	0.332	5,101.284	0.432	5,197.908	0.532	5,294.533	0.632	5,391.163	0.732	5,487.795	0.832	5,584.428	0.932	5,681.060
0.033	4,812.376	0.133	4,909.001	0.233	5,005.625	0.333	5,102.250	0.433	5,198.874	0.533	5,295.499	0.633	5,392.129	0.733	5,488.761	0.833	5,585.394	0.933	5,682.027
0.034	4,813.342	0.134	4,909.967	0.234	5,006.592	0.334	5,103.216	0.434	5,199.841	0.534	5,296.465	0.634	5,393.095	0.734	5,489.728	0.834	5,586.360	0.934	5,682.993
0.035	4,814.309	0.135	4,910.933	0.235	5,007.558	0.335	5,104.182	0.435	5,200.807	0.535	5,297.431	0.635	5,394.061	0.735	5,490.694	0.835	5,587.327	0.935	5,683.959
0.036	4,815.275	0.136	4,911.899	0.236	5,008.524	0.336	5,105.149	0.436	5,201.773	0.536	5,298.398	0.636	5,395.028	0.736	5,491.660	0.836	5,588.293	0.936	5,684.926
0.037	4,816.241	0.137	4,912.866	0.237	5,009.490	0.337	5,106.115	0.437	5,202.739	0.537	5,299.364	0.637	5,395.994	0.737	5,492.627	0.837	5,589.259	0.937	5,685.892
0.038	4,817.207	0.138	4,913.832	0.238	5,010.457	0.338	5,107.081	0.438	5,203.706	0.538	5,300.330	0.638	5,396.960	0.738	5,493.593	0.838	5,590.226	0.938	5,686.858
0.039	4,818.174	0.139	4,914.798	0.239	5,011.423	0.339	5,108.047	0.439	5,204.672	0.539	5,301.296	0.639	5,397.927	0.739	5,494.559	0.839	5,591.192	0.939	5,687.825
0.040	4,819.140	0.140	4,915.764	0.240	5,012.389	0.340	5,109.014	0.440	5,205.638	0.540	5,302.263	0.640	5,398.893	0.740	5,495.526	0.840	5,592.158	0.940	5,688.791
0.041	4,820.106	0.141	4,916.731	0.241	5,013.355	0.341	5,109.980	0.441	5,206.604	0.541	5,303.229	0.641	5,399.859	0.741	5,496.492	0.841	5,593.125	0.941	5,689.757
0.042	4,821.072	0.142	4,917.697	0.242	5,014.321	0.342	5,110.946	0.442	5,207.571	0.542	5,304.195	0.642	5,400.826	0.742	5,497.458	0.842	5,594.091	0.942	5,690.723
0.043	4,822.039	0.143	4,918.663	0.243	5,015.288	0.343	5,111.912	0.443	5,208.537	0.543	5,305.161	0.643	5,401.792	0.743	5,498.425	0.843	5,595.057	0.943	5,691.690
0.044	4,823.005	0.144	4,919.629	0.244	5,016.254	0.344	5,112.879	0.444	5,209.503	0.544	5,306.128	0.644	5,402.758	0.744	5,499.391	0.844	5,596.024	0.944	5,692.656
0.045	4,823.971	0.145	4,920.596	0.245	5,017.220	0.345	5,113.845	0.445	5,210.469	0.545	5,307.094	0.645	5,403.725	0.745	5,500.357	0.845	5,596.990	0.945	5,693.622
0.046	4,824.937	0.146	4,921.562	0.246	5,018.186	0.346	5,114.811	0.446	5,211.436	0.546	5,308.060	0.646	5,404.691	0.746	5,501.324	0.846	5,597.956	0.946	5,694.589
0.047	4,825.904	0.147	4,922.528	0.247	5,019.153	0.347	5,115.777	0.447	5,212.402	0.547	5,309.026	0.647	5,405.657	0.747	5,502.290	0.847	5,598.923	0.947	5,695.555
0.048	4,826.870	0.148	4,923.494	0.248	5,020.119	0.348	5,116.744	0.448	5,213.368	0.548	5,309.993	0.648	5,406.624	0.748	5,503.256	0.848	5,599.889	0.948	5,696.521
0.049	4,827.836	0.149	4,924.461	0.249	5,021.085	0.349	5,117.710	0.449	5,214.334	0.549	5,310.959	0.649	5,407.590	0.749	5,504.223	0.849	5,600.855	0.949	5,697.488
0.050	4,828.802	0.150	4,925.427	0.250	5,022.051	0.350	5,118.676	0.450	5,215.301	0.550	5,311.925	0.650	5,408.556	0.750	5,505.189	0.850	5,601.822	0.950	5,698.454
0.051	4,829.769	0.151	4,926.393	0.251	5,023.018	0.351	5,119.642	0.451	5,216.267	0.551	5,312.891	0.651	5,409.523	0.751	5,506.155	0.851	5,602.788	0.951	5,699.420
0.052	4,830.735	0.152	4,927.359	0.252	5,023.984	0.352	5,120.609	0.452	5,217.233	0.552	5,313.858	0.652	5,410.489	0.752	5,507.122	0.852	5,603.754	0.952	5,700.387
0.053	4,831.701	0.153	4,928.326	0.253	5,024.950	0.353	5,121.575	0.453	5,218.199	0.553	5,314.824	0.653	5,411.455	0.753	5,508.088	0.853	5,604.720	0.953	5,701.353
0.054	4,832.667	0.154	4,929.292	0.254	5,025.916	0.354	5,122.541	0.454	5,219.166	0.554	5,315.790	0.654	5,412.422	0.754	5,509.054	0.854	5,605.687	0.954	5,702.319
0.055	4,833.634	0.155	4,930.258	0.255	5,026.883	0.355	5,123.507	0.455	5,220.132	0.555	5,316.756	0.655	5,413.388	0.755	5,510.021	0.855	5,606.653	0.955	5,703.286
0.056	4,834.600	0.156	4,931.224	0.256	5,027.849	0.356	5,124.473	0.456	5,221.098	0.556	5,317.723	0.656	5,414.354	0.756	5,510.987	0.856	5,607.619	0.956	5,704.252
0.057	4,835.566	0.157	4,932.191	0.257	5,028.815	0.357	5,125.440	0.457	5,222.064	0.557	5,318.689	0.657	5,415.321	0.757	5,511.953	0.857	5,608.586	0.957	5,705.218
0.058	4,836.532	0.158	4,933.157	0.258	5,029.781	0.358	5,126.406	0.458	5,223.031	0.558	5,319.655	0.658	5,416.287	0.758	5,512.920	0.858	5,609.552	0.958	5,706.185
0.059	4,837.499	0.159	4,934.123	0.259	5,030.748	0.359	5,127.372	0.459	5,223.997	0.559	5,320.622	0.659	5,417.253	0.759	5,513.886	0.859	5,610.518	0.959	5,707.151
0.060	4,838.465	0.160	4,935.089	0.260	5,031.714	0.360	5,128.338	0.460	5,224.963	0.560	5,321.588	0.660	5,418.220	0.760	5,514.852	0.860	5,611.485	0.960	5,708.117
0.061	4,839.431	0.161	4,936.056	0.261	5,032.680	0.361	5,129.305	0.461	5,225.929	0.561	5,322.554	0.661	5,419.186	0.761	5,515.819	0.861	5,612.451	0.961	5,709.084
0.062	4,840.397	0.162	4,937.022	0.262	5,033.646	0.362	5,130.271	0.462	5,226.896	0.562	5,323.520	0.662	5,420.152	0.762	5,516.785	0.862	5,613.417	0.962	5,710.050
0.063	4,841.364	0.163	4,937.988	0.263	5,034.613	0.363	5,131.237	0.463	5,227.862	0.563	5,324.487	0.663	5,421.119	0.763	5,517.751	0.863	5,614.384	0.963	5,711.016
0.064	4,842.330	0.164	4,938.954	0.264	5,035.579	0.364	5,132.203	0.464	5,228.828	0.564	5,325.453	0.664	5,422.085	0.764	5,518.718	0.864	5,615.350	0.964	5,711.983
0.065	4,843.296	0.165	4,939.921	0.265	5,036.545	0.365	5,133.170	0.465	5,229.794	0.565	5,326.419	0.665	5,423.051	0.765	5,519.684	0.865	5,616.316	0.965	5,712.949
0.066	4,844.262	0.166	4,940.887	0.266	5,037.511	0.366	5,134.136	0.466	5,230.761	0.566	5,327.386	0.666	5,424.018	0.766	5,520.650	0.866	5,617.283	0.966	5,713.915
0.067	4,845.229	0.167	4,941.853	0.267	5,038.478	0.367	5,135.102	0.467	5,231.727	0.567	5,328.352	0.667	5,424.984	0.767	5,521.616	0.867	5,618.249	0.967	5,714.882
0.068	4,846.195	0.168	4,942.819	0.268	5,039.444	0.368	5,136.068	0.468	5,232.693	0.568	5,329.318	0.668	5,425.950	0.768	5,522.583	0.868	5,619.215	0.968	5,715.848
0.069	4,847.161	0.169	4,943.786	0.269	5,040.410	0.369	5,137.035	0.469	5,233.659	0.569	5,330.284	0.669	5,426.917	0.769	5,523.549	0.869	5,620.182	0.969	5,716.814
0.070	4,848.127	0.170	4,944.752	0.270	5,041.376	0.370	5,138.001	0.470	5,234.625	0.570	5,331.251	0.670	5,427.883	0.770	5,524.515	0.870	5,621.148	0.970	5,717.781
0.071	4,849.093	0.171	4,945.718	0.271	5,042.343	0.371	5,138.967	0.471	5,235.592	0.571	5,332.217	0.671	5,428.849	0.771	5,525.482	0.871	5,622.114	0.971	5,718.747
0.072	4,850.060	0.172	4,946.684	0.272	5,043.309	0.372	5,139.933	0.472	5,236.558	0.572	5,333.183	0.672	5,429.816	0.772	5,526.448	0.872	5,623.081	0.972	5,719.713
0.073	4,851.026	0.173	4,947.651	0.273	5,044.275	0.373	5,140.900	0.473	5,237.524	0.573	5,334.150	0.673	5,430.782	0.773	5,527.414	0.873	5,624.047	0.973	5,720.680
0.074	4,851.992	0.174	4,948.617	0.274	5,045.241	0.374	5,141.866	0.474	5,238.490	0.574	5,335.116	0.674	5,431.748	0.774	5,528.381	0.874	5,625.013	0.974	5,721.646
0.075	4,852.958	0.175	4,949.583	0.275	5,046.208	0.375	5,142.832	0.475	5,239.457	0.575	5,336.082	0.675	5,432.715	0.775	5,529.347	0.875	5,625.980	0.975	5,722.612
0.076	4,853.925	0.176	4,950.549	0.276	5,047.174	0.376	5,143.798	0.476	5,240.423	0.576	5,337.048	0.676	5,433.681	0.776	5,530.313	0.876	5,626.946	0.976	5,723.579
0.077	4,854.891	0.177	4,951.516	0.277	5,048.140	0.377	5,144.765	0.477	5,241.389	0.577	5,338.015	0.677	5,434.647	0.777	5,531.280	0.877	5,627.912	0.977	5,724.545
0.078	4,855.857	0.178	4,952.482	0.278	5,049.106	0.378	5,145.731	0.478	5,242.355	0.578	5,338.981	0.678	5,435.613	0.778	5,532.246	0.878	5,628.879	0.978	5,725.511
0.079	4,856.823	0.179	4,953.448	0.279	5,050.073	0.379	5,146.697	0.479	5,243.322	0.579	5,339.947	0.679	5,436.580	0.779	5,533.212	0.879	5,629.845	0.979	5,726.478
0.080	4,857.790	0.180	4,954.414	0.280	5,051.039	0.380	5,147.663	0.480	5,244.288	0.580	5,340.914	0.680	5,437.546	0.780	5,534.179	0.880	5,630.811	0.980	5,727.444
0.081	4,858.756	0.181	4,955.381	0.281	5,052.005	0.381	5,148.630	0.481	5,245.254	0.581	5,341.880	0.681	5,438.512	0.781	5,535.145	0.881	5,631.778	0.981	5,728.410
0.082	4,859.722	0.182	4,956.347	0.282	5,052.971	0.382	5,149.596	0.482	5,246.220	0.582	5,342.846	0.682	5,439.479	0.782	5,536.111	0.882	5,632.744	0.982	5,729.377
0.083	4,860.688	0.183	4,957.313	0.283	5,053.938	0.383	5,150.562	0.483	5,247.187	0.583	5,343.813	0.683	5,440.445	0.783	5,537.078	0.883	5,633.710	0.983	5,730.343
0.084	4,861.655	0.184	4,958.279	0.284	5,054.904	0.384	5,151.528	0.484	5,248.153	0.584	5,344.779	0.684	5,441.411	0.784	5,538.044	0.884	5,634.677	0.984	5,731.309
0.085	4,862.621	0.185	4,959.245	0.285	5,055.870	0.385	5,152.495	0.485	5,249.119	0.585	5,345.745	0.685	5,442.378	0.785	5,539.010	0.885	5,635.643	0.985	5,732.275
0.086	4,863.587	0.186	4,960.212	0.286	5,056.836	0.386	5,153.461	0.486	5,250.085	0.586	5,346.712	0.686	5,443.344	0.786	5,539.977	0.886	5,636.609	0.986	5,733.242
0.087	4,864.553	0.187	4,961.178	0.287	5,057.803	0.387	5,154.427	0.487	5,251.052	0.587	5,347.678	0.687	5,444.310	0.787	5,540.943	0.887	5,637.576	0.987	5,734.208
0.088	4,865.520	0.188	4,962.144	0.288	5,058.769	0.388	5,155.393	0.488	5,252.018	0.588	5,348.644	0.688	5,445.277	0.788	5,541.909	0.888	5,638.542	0.988	5,735.174
0.089	4,866.486	0.189	4,963.110	0.289	5,059.735	0.389	5,156.360	0.489	5,252.984	0.589	5,349.611	0.689	5,446.243	0.789	5,542.876	0.889	5,639.508	0.989	5,736.141
0.090	4,867.452	0.190	4,964.077	0.290	5,060.701	0.390	5,157.326	0.490	5,253.950	0.590	5,350.577	0.690	5,447.209	0.790	5,543.842	0.890	5,640.475	0.990	5,737.107
0.091	4,868.418	0.191	4,965.043	0.291	5,061.668	0.391	5,158.292	0.491	5,254.917	0.591	5,351.543	0.691	5,448.176	0.791	5,544.808	0.891	5,641.441	0.991	5,738.073
0.092	4,869.385	0.192	4,966.009	0.292	5,062.634	0.392	5,159.258	0.492	5,255.883	0.592	5,352.509	0.692	5,449.142	0.792	5,545.775	0.892	5,642.407	0.992	5,739.040
0.093	4,870.351	0.193	4,966.975	0.293	5,063.600	0.393	5,160.225	0.493	5,256.849	0.593	5,353.476	0.693	5,450.108	0.793	5,546.741	0.893	5,643.374	0.993	5,740.006
0.094	4,871.317	0.194	4,967.942	0.294	5,064.566	0.394	5,161.191	0.494	5,257.815	0.594	5,354.442	0.694	5,451.075	0.794	5,547.707	0.894	5,644.340	0.994	5,740.972
0.095	4,872.283	0.195	4,968.908	0.295	5,065.533	0.395	5,162.157	0.495	5,258.782	0.595	5,355.408	0.695	5,452.041	0.795	5,548.674	0.895	5,645.306	0.995	5,741.939
0.096	4,873.250	0.196	4,969.874	0.296	5,066.499	0.396	5,163.123	0.496	5,259.748	0.596	5,356.375	0.696	5,453.007	0.796	5,549.640	0.896	5,646.272	0.996	5,742.905
0.097	4,874.216	0.197	4,970.840	0.297	5,067.465	0.397	5,164.090	0.497	5,260.714	0.597	5,357.341	0.697	5,453.974	0.797	5,550.606	0.897	5,647.239	0.997	5,743.871
0.098	4,875.182	0.198	4,971.807	0.298	5,068.431	0.398	5,165.056	0.498	5,261.680	0.598	5,358.307	0.698	5,454.940	0.798	5,551.573	0.898	5,648.205	0.998	5,744.838
0.099	4,876.148	0.199	4,972.773	0.299	5,069.397	0.399	5,166.022	0.499	5,262.647	0.599	5,359.274	0.699	5,455.906	0.799	5,552.539	0.899	5,649.171	0.999	5,745.804

DATE STRAPPED: 09/19/17 BY: RJ
DATE COMPUTED: 09/26/17 BY: WLH
DATE ISSUED: 09/26/17

AMSPEC

Meliadine
Rankin Inlet
Item 20 - Final - Data Sheet (Innage)

Tank No. 2
INNAGE TABLE

Calibration@AmSpecGroup.com

CAPACITIES GIVEN IN CUBIC METERS

GAUGE HEIGHT: 14.269 M

mm	6 M	mm	6 M	mm	6 M	mm	6 M	mm	6 M	mm	6 M	mm	6 M	mm	6 M	mm	6 M	mm	6 M
0.000	5,746.770	0.100	5,843.403	0.200	5,940.036	0.300	6,036.668	0.400	6,133.301	0.500	6,229.933	0.600	6,326.566	0.700	6,423.198	0.800	6,519.831	0.900	6,616.463
0.001	5,747.737	0.101	5,844.369	0.201	5,941.002	0.301	6,037.634	0.401	6,134.267	0.501	6,230.900	0.601	6,327.532	0.701	6,424.165	0.801	6,520.797	0.901	6,617.430
0.002	5,748.703	0.102	5,845.336	0.202	5,941.968	0.302	6,038.601	0.402	6,135.233	0.502	6,231.866	0.602	6,328.498	0.702	6,425.131	0.802	6,521.764	0.902	6,618.396
0.003	5,749.669	0.103	5,846.302	0.203	5,942.934	0.303	6,039.567	0.403	6,136.200	0.503	6,232.832	0.603	6,329.465	0.703	6,426.097	0.803	6,522.730	0.903	6,619.362
0.004	5,750.636	0.104	5,847.268	0.204	5,943.901	0.304	6,040.533	0.404	6,137.166	0.504	6,233.799	0.604	6,330.431	0.704	6,427.064	0.804	6,523.696	0.904	6,620.329
0.005	5,751.602	0.105	5,848.235	0.205	5,944.867	0.305	6,041.500	0.405	6,138.132	0.505	6,234.765	0.605	6,331.397	0.705	6,428.030	0.805	6,524.663	0.905	6,621.295
0.006	5,752.568	0.106	5,849.201	0.206	5,945.833	0.306	6,042.466	0.406	6,139.099	0.506	6,235.731	0.606	6,332.364	0.706	6,428.996	0.806	6,525.629	0.906	6,622.261
0.007	5,753.535	0.107	5,850.167	0.207	5,946.800	0.307	6,043.432	0.407	6,140.065	0.507	6,236.697	0.607	6,333.330	0.707	6,429.963	0.807	6,526.595	0.907	6,623.228
0.008	5,754.501	0.108	5,851.134	0.208	5,947.766	0.308	6,044.399	0.408	6,141.031	0.508	6,237.664	0.608	6,334.296	0.708	6,430.929	0.808	6,527.562	0.908	6,624.194
0.009	5,755.467	0.109	5,852.100	0.209	5,948.732	0.309	6,045.365	0.409	6,141.998	0.509	6,238.630	0.609	6,335.263	0.709	6,431.895	0.809	6,528.528	0.909	6,625.160
0.010	5,756.434	0.110	5,853.066	0.210	5,949.699	0.310	6,046.331	0.410	6,142.964	0.510	6,239.596	0.610	6,336.229	0.710	6,432.862	0.810	6,529.494	0.910	6,626.127
0.011	5,757.400	0.111	5,854.033	0.211	5,950.665	0.311	6,047.298	0.411	6,143.930	0.511	6,240.563	0.611	6,337.195	0.711	6,433.828	0.811	6,530.461	0.911	6,627.093
0.012	5,758.366	0.112	5,854.999	0.212	5,951.631	0.312	6,048.264	0.412	6,144.897	0.512	6,241.529	0.612	6,338.162	0.712	6,434.794	0.812	6,531.427	0.912	6,628.059
0.013	5,759.333	0.113	5,855.965	0.213	5,952.598	0.313	6,049.230	0.413	6,145.863	0.513	6,242.495	0.613	6,339.128	0.713	6,435.761	0.813	6,532.393	0.913	6,629.026
0.014	5,760.299	0.114	5,856.931	0.214	5,953.564	0.314	6,050.197	0.414	6,146.829	0.514	6,243.462	0.614	6,340.094	0.714	6,436.727	0.814	6,533.359	0.914	6,629.992
0.015	5,761.265	0.115	5,857.898	0.215	5,954.530	0.315	6,051.163	0.415	6,147.796	0.515	6,244.428	0.615	6,341.061	0.715	6,437.693	0.815	6,534.326	0.915	6,630.958
0.016	5,762.232	0.116	5,858.864	0.216	5,955.497	0.316	6,052.129	0.416	6,148.762	0.516	6,245.394	0.616	6,342.027	0.716	6,438.660	0.816	6,535.292	0.916	6,631.925
0.017	5,763.198	0.117	5,859.830	0.217	5,956.463	0.317	6,053.096	0.417	6,149.728	0.517	6,246.361	0.617	6,342.993	0.717	6,439.626	0.817	6,536.258	0.917	6,632.891
0.018	5,764.164	0.118	5,860.797	0.218	5,957.429	0.318	6,054.062	0.418	6,150.695	0.518	6,247.327	0.618	6,343.960	0.718	6,440.592	0.818	6,537.225	0.918	6,633.857
0.019	5,765.131	0.119	5,861.763	0.219	5,958.396	0.319	6,055.028	0.419	6,151.661	0.519	6,248.293	0.619	6,344.926	0.719	6,441.559	0.819	6,538.191	0.919	6,634.824
0.020	5,766.097	0.120	5,862.729	0.220	5,959.362	0.320	6,055.995	0.420	6,152.627	0.520	6,249.260	0.620	6,345.892	0.720	6,442.525	0.820	6,539.157	0.920	6,635.790
0.021	5,767.063	0.121	5,863.696	0.221	5,960.328	0.321	6,056.961	0.421	6,153.593	0.521	6,250.226	0.621	6,346.859	0.721	6,443.491	0.821	6,540.124	0.921	6,636.756
0.022	5,768.030	0.122	5,864.662	0.222	5,961.295	0.322	6,057.927	0.422	6,154.560	0.522	6,251.192	0.622	6,347.825	0.722	6,444.458	0.822	6,541.090	0.922	6,637.723
0.023	5,768.996	0.123	5,865.628	0.223	5,962.261	0.323	6,058.894	0.423	6,155.526	0.523	6,252.159	0.623	6,348.791	0.723	6,445.424	0.823	6,542.056	0.923	6,638.689
0.024	5,769.962	0.124	5,866.595	0.224	5,963.227	0.324	6,059.860	0.424	6,156.492	0.524	6,253.125	0.624	6,349.758	0.724	6,446.390	0.824	6,543.023	0.924	6,639.655
0.025	5,770.929	0.125	5,867.561	0.225	5,964.194	0.325	6,060.826	0.425	6,157.459	0.525	6,254.091	0.625	6,350.724	0.725	6,447.356	0.825	6,543.989	0.925	6,640.622
0.026	5,771.895	0.126	5,868.527	0.226	5,965.160	0.326	6,061.793	0.426	6,158.425	0.526	6,255.058	0.626	6,351.690	0.726	6,448.323	0.826	6,544.955	0.926	6,641.588
0.027	5,772.861	0.127	5,869.494	0.227	5,966.126	0.327	6,062.759	0.427	6,159.391	0.527	6,256.024	0.627	6,352.657	0.727	6,449.289	0.827	6,545.922	0.927	6,642.554
0.028	5,773.827	0.128	5,870.460	0.228	5,967.093	0.328	6,063.725	0.428	6,160.358	0.528	6,256.990	0.628	6,353.623	0.728	6,450.255	0.828	6,546.888	0.928	6,643.521
0.029	5,774.794	0.129	5,871.426	0.229	5,968.059	0.329	6,064.692	0.429	6,161.324	0.529	6,257.957	0.629	6,354.589	0.729	6,451.222	0.829	6,547.854	0.929	6,644.487
0.030	5,775.760	0.130	5,872.393	0.230	5,969.025	0.330	6,065.658	0.430	6,162.290	0.530	6,258.923	0.630	6,355.556	0.730	6,452.188	0.830	6,548.821	0.930	6,645.453
0.031	5,776.726	0.131	5,873.359	0.231	5,969.992	0.331	6,066.624	0.431	6,163.257	0.531	6,259.889	0.631	6,356.522	0.731	6,453.154	0.831	6,549.787	0.931	6,646.420
0.032	5,777.693	0.132	5,874.325	0.232	5,970.958	0.332	6,067.591	0.432	6,164.223	0.532	6,260.856	0.632	6,357.488	0.732	6,454.121	0.832	6,550.753	0.932	6,647.386
0.033	5,778.659	0.133	5,875.292	0.233	5,971.924	0.333	6,068.557	0.433	6,165.189	0.533	6,261.822	0.633	6,358.455	0.733	6,455.087	0.833	6,551.720	0.933	6,648.352
0.034	5,779.625	0.134	5,876.258	0.234	5,972.891	0.334	6,069.523	0.434	6,166.156	0.534	6,262.788	0.634	6,359.421	0.734	6,456.053	0.834	6,552.686	0.934	6,649.319
0.035	5,780.592	0.135	5,877.224	0.235	5,973.857	0.335	6,070.489	0.435	6,167.122	0.535	6,263.755	0.635	6,360.387	0.735	6,457.020	0.835	6,553.652	0.935	6,650.285
0.036	5,781.558	0.136	5,878.191	0.236	5,974.823	0.336	6,071.456	0.436	6,168.088	0.536	6,264.721	0.636	6,361.354	0.736	6,457.986	0.836	6,554.619	0.936	6,651.251
0.037	5,782.524	0.137	5,879.157	0.237	5,975.790	0.337	6,072.422	0.437	6,169.055	0.537	6,265.687	0.637	6,362.320	0.737	6,458.952	0.837	6,555.585	0.937	6,652.218
0.038	5,783.491	0.138	5,880.123	0.238	5,976.756	0.338	6,073.388	0.438	6,170.021	0.538	6,266.654	0.638	6,363.286	0.738	6,459.919	0.838	6,556.551	0.938	6,653.184
0.039	5,784.457	0.139	5,881.090	0.239	5,977.722	0.339	6,074.355	0.439	6,170.987	0.539	6,267.620	0.639	6,364.252	0.739	6,460.885	0.839	6,557.518	0.939	6,654.150
0.040	5,785.423	0.140	5,882.056	0.240	5,978.689	0.340	6,075.321	0.440	6,171.954	0.540	6,268.586	0.640	6,365.219	0.740	6,461.851	0.840	6,558.484	0.940	6,655.117
0.041	5,786.390	0.141	5,883.022	0.241	5,979.655	0.341	6,076.287	0.441	6,172.920	0.541	6,269.553	0.641	6,366.185	0.741	6,462.818	0.841	6,559.450	0.941	6,656.083
0.042	5,787.356	0.142	5,883.989	0.242	5,980.621	0.342	6,077.254	0.442	6,173.886	0.542	6,270.519	0.642	6,367.151	0.742	6,463.784	0.842	6,560.417	0.942	6,657.049
0.043	5,788.322	0.143	5,884.955	0.243	5,981.588	0.343	6,078.220	0.443	6,174.853	0.543	6,271.485	0.643	6,368.118	0.743	6,464.750	0.843	6,561.383	0.943	6,658.016
0.044	5,789.289	0.144	5,885.921	0.244	5,982.554	0.344	6,079.186	0.444	6,175.819	0.544	6,272.452	0.644	6,369.084	0.744	6,465.717	0.844	6,562.349	0.944	6,658.982
0.045	5,790.255	0.145	5,886.888	0.245	5,983.520	0.345	6,080.153	0.445	6,176.785	0.545	6,273.418	0.645	6,370.050	0.745	6,466.683	0.845	6,563.316	0.945	6,659.948
0.046	5,791.221	0.146	5,887.854	0.246	5,984.486	0.346	6,081.119	0.446	6,177.752	0.546	6,274.384	0.646	6,371.017	0.746	6,467.649	0.846	6,564.282	0.946	6,660.914
0.047	5,792.188	0.147	5,888.820	0.247	5,985.453	0.347	6,082.085	0.447	6,178.718	0.547	6,275.351	0.647	6,371.983	0.747	6,468.616	0.847	6,565.248	0.947	6,661.881
0.048	5,793.154	0.148	5,889.787	0.248	5,986.419	0.348	6,083.052	0.448	6,179.684	0.548	6,276.317	0.648	6,372.949	0.748	6,469.582	0.848	6,566.215	0.948	6,662.847
0.049	5,794.120	0.149	5,890.753	0.249	5,987.385	0.349	6,084.018	0.449	6,180.651	0.549	6,277.283	0.649	6,373.916	0.749	6,470.548	0.849	6,567.181	0.949	6,663.813
0.050	5,795.087	0.150	5,891.719	0.250	5,988.352	0.350	6,084.984	0.450	6,181.617	0.550	6,278.250	0.650	6,374.882	0.750	6,471.515	0.850	6,568.147	0.950	6,664.780
0.051	5,796.053	0.151	5,892.686	0.251	5,989.318	0.351	6,085.951	0.451	6,182.583	0.551	6,279.216	0.651	6,375.848	0.751	6,472.481	0.851	6,569.114	0.951	6,665.746
0.052	5,797.019	0.152	5,893.652	0.252	5,990.284	0.352	6,086.917	0.452	6,183.550	0.552	6,280.182	0.652	6,376.815	0.752	6,473.447	0.852	6,570.080	0.952	6,666.712
0.053	5,797.986	0.153	5,894.618	0.253	5,991.251	0.353	6,087.883	0.453	6,184.516	0.553	6,281.148	0.653	6,377.781	0.753	6,474.414	0.853	6,571.046	0.953	6,667.679
0.054	5,798.952	0.154	5,895.585	0.254	5,992.217	0.354	6,088.850	0.454	6,185.482	0.554	6,282.115	0.654	6,378.747	0.754	6,475.380	0.854	6,572.013	0.954	6,668.645
0.055	5,799.918	0.155	5,896.551	0.255	5,993.183	0.355	6,089.816	0.455	6,186.449	0.555	6,283.081	0.655	6,379.714	0.755	6,476.346	0.855	6,572.979	0.955	6,669.611
0.056	5,800.885	0.156	5,897.517	0.256	5,994.150	0.356	6,090.782	0.456	6,187.415	0.556	6,284.047	0.656	6,380.680	0.756	6,477.313	0.856	6,573.945	0.956	6,670.578
0.057	5,801.851	0.157	5,898.484	0.257	5,995.116	0.357	6,091.749	0.457	6,188.381	0.557	6,285.014	0.657	6,381.646	0.757	6,478.279	0.857	6,574.911	0.957	6,671.544
0.058	5,802.817	0.158	5,899.450	0.258	5,996.082	0.358	6,092.715	0.458	6,189.348	0.558	6,285.980	0.658	6,382.613	0.758	6,479.245	0.858	6,575.878	0.958	6,672.510
0.059	5,803.784	0.159	5,900.416	0.259	5,997.049	0.359	6,093.681	0.459	6,190.314	0.559	6,286.946	0.659	6,383.579	0.759	6,480.212	0.859	6,576.844	0.959	6,673.477
0.060	5,804.750	0.160	5,901.382	0.260	5,998.015	0.360	6,094.648	0.460	6,191.280	0.560	6,287.913	0.660	6,384.545	0.760	6,481.178	0.860	6,577.810	0.960	6,674.443
0.061	5,805.716	0.161	5,902.349	0.261	5,998.981	0.361	6,095.614	0.461	6,192.247	0.561	6,288.879	0.661	6,385.512	0.761	6,482.144	0.861	6,578.777	0.961	6,675.409
0.062	5,806.683	0.162	5,903.315	0.262	5,999.948	0.362	6,096.580	0.462	6,193.213	0.562	6,289.845	0.662	6,386.478	0.762	6,483.111	0.862	6,579.743	0.962	6,676.376
0.063	5,807.649	0.163	5,904.281	0.263	6,000.914	0.363	6,097.547	0.463	6,194.179	0.563	6,290.812	0.663	6,387.444	0.763	6,484.077	0.863	6,580.709	0.963	6,677.342
0.064	5,808.615	0.164	5,905.248	0.264	6,001.880	0.364	6,098.513	0.464	6,195.145	0.564	6,291.778	0.664	6,388.411	0.764	6,485.043	0.864	6,581.676	0.964	6,678.308
0.065	5,809.582	0.165	5,906.214	0.265	6,002.847	0.365	6,099.479	0.465	6,196.112	0.565	6,292.744	0.665	6,389.377	0.765	6,486.010	0.865	6,582.642	0.965	6,679.275
0.066	5,810.548	0.166	5,907.180	0.266	6,003.813	0.366	6,100.446	0.466	6,197.078	0.566	6,293.711	0.666	6,390.343	0.766	6,486.976	0.866	6,583.608	0.966	6,680.241
0.067	5,811.514	0.167	5,908.147	0.267	6,004.779	0.367	6,101.412	0.467	6,198.044	0.567	6,294.677	0.667	6,391.310	0.767	6,487.942	0.867	6,584.575	0.967	6,681.207
0.068	5,812.481	0.168	5,909.113	0.268	6,005.746	0.368	6,102.378	0.468	6,199.011	0.568	6,295.643	0.668	6,392.276	0.768	6,488.909	0.868	6,585.541	0.968	6,682.174
0.069	5,813.447	0.169	5,910.079	0.269	6,006.712	0.369	6,103.345	0.469	6,199.977	0.569	6,296.610	0.669	6,393.242	0.769	6,489.875	0.869	6,586.507	0.969	6,683.140
0.070	5,814.413	0.170	5,911.046	0.270	6,007.678	0.370	6,104.311	0.470	6,200.943	0.570	6,297.576	0.670	6,394.209	0.770	6,490.841	0.870	6,587.474	0.970	6,684.106
0.071	5,815.379	0.171	5,912.012	0.271	6,008.645	0.371	6,105.277	0.471	6,201.910	0.571	6,298.542	0.671	6,395.175	0.771	6,491.807	0.871	6,588.440	0.971	6,685.073
0.072	5,816.346	0.172	5,912.978	0.272	6,009.611	0.372	6,106.244	0.472	6,202.876	0.572	6,299.509	0.672	6,396.141	0.772	6,492.774	0.872	6,589.406	0.972	6,686.039
0.073	5,817.312	0.173	5,913.945	0.273	6,010.577	0.373	6,107.210	0.473	6,203.842	0.573	6,300.475	0.673	6,397.108	0.773	6,493.740	0.873	6,590.373	0.973	6,687.005
0.074	5,818.278	0.174	5,914.911	0.274	6,011.544	0.374	6,108.176	0.474	6,204.809	0.574	6,301.441	0.674	6,398.074	0.774	6,494.706	0.874	6,591.339	0.974	6,687.972
0.075	5,819.245	0.175	5,915.877	0.275	6,012.510	0.375	6,109.143	0.475	6,205.775	0.575	6,302.408	0.675	6,399.040	0.775	6,495.673	0.875	6,592.305	0.975	6,688.938
0.076	5,820.211	0.176	5,916.844	0.276	6,013.476	0.376	6,110.109	0.476	6,206.741	0.576	6,303.374	0.676	6,400.007	0.776	6,496.639	0.876	6,593.272	0.976	6,689.904
0.077	5,821.177	0.177	5,917.810	0.277	6,014.443	0.377	6,111.075	0.477	6,207.708	0.577	6,304.340	0.677	6,400.973	0.777	6,497.605	0.877	6,594.238	0.977	6,690.871
0.078	5,822.144	0.178	5,918.776	0.278	6,015.409	0.378	6,112.041	0.478	6,208.674	0.578	6,305.307	0.678	6,401.939	0.778	6,498.572	0.878	6,595.204	0.978	6,691.837
0.079	5,823.110	0.179	5,919.743	0.279	6,016.375	0.379	6,113.008	0.479	6,209.640	0.579	6,306.273	0.679	6,402.906	0.779	6,499.538	0.879	6,596.171	0.979	6,692.803
0.080	5,824.076	0.180	5,920.709	0.280	6,017.342	0.380	6,113.974	0.480	6,210.607	0.580	6,307.239	0.680	6,403.872	0.780	6,500.504	0.880	6,597.137	0.980	6,693.770
0.081	5,825.043	0.181	5,921.675	0.281	6,018.308	0.381	6,114.940	0.481	6,211.573	0.581	6,308.206	0.681	6,404.838	0.781	6,501.471	0.881	6,598.103	0.981	6,694.736
0.082	5,826.009	0.182	5,922.642	0.282	6,019.274	0.382	6,115.907	0.482	6,212.539	0.582	6,309.172	0.682	6,405.804	0.782	6,502.437	0.882	6,599.070	0.982	6,695.702
0.083	5,826.975	0.183	5,923.608	0.283	6,020.241	0.383	6,116.873	0.483	6,213.506	0.583	6,310.138	0.683	6,406.771	0.783	6,503.403	0.883	6,600.036	0.983	6,696.669
0.084	5,827.942	0.184	5,924.574	0.284	6,021.207	0.384	6,117.839	0.484	6,214.472	0.584	6,311.105	0.684	6,407.737	0.784	6,504.370	0.884	6,601.002	0.984	6,697.635
0.085	5,828.908	0.185	5,925.541	0.285	6,022.173	0.385	6,118.806	0.485	6,215.438	0.585	6,312.071	0.685	6,408.703	0.785	6,505.336	0.885	6,601.969	0.985	6,698.601
0.086	5,829.874	0.186	5,926.507	0.286	6,023.140	0.386	6,119.772	0.486	6,216.405	0.586	6,313.037	0.686	6,409.670	0.786	6,506.302	0.886	6,602.935	0.986	6,699.568
0.087	5,830.841	0.187	5,927.473	0.287	6,024.106	0.387	6,120.738	0.487	6,217.371	0.587	6,314.004	0.687	6,410.636	0.787	6,507.269	0.887	6,603.901	0.987	6,700.534
0.088	5,831.807	0.188	5,928.440	0.288	6,025.072	0.388	6,121.705	0.488	6,218.337	0.588	6,314.970	0.688	6,411.602	0.788	6,508.235	0.888	6,604.868	0.988	6,701.500
0.089	5,832.773	0.189	5,929.406	0.289	6,026.038	0.389	6,122.671	0.489	6,219.304	0.589	6,315.936	0.689	6,412.569	0.789	6,509.201	0.889	6,605.834	0.989	6,702.466
0.090	5,833.740	0.190	5,930.372	0.290	6,027.005	0.390	6,123.637	0.490	6,220.270	0.590	6,316.903	0.690	6,413.535	0.790	6,510.168	0.890	6,606.800	0.990	6,703.433
0.091	5,834.706	0.191	5,931.339	0.291	6,027.971	0.391	6,124.604	0.491	6,221.236	0.591	6,317.869	0.691	6,414.501	0.791	6,511.134	0.891	6,607.767	0.991	6,704.399
0.092	5,835.672	0.192	5,932.305	0.292	6,028.937	0.392	6,125.570	0.492	6,222.203	0.592	6,318.835	0.692	6,415.468	0.792	6,512.100	0.892	6,608.733	0.992	6,705.365
0.093	5,836.639	0.193	5,933.271	0.293	6,029.904	0.393	6,126.536	0.493	6,223.169	0.593	6,319.802	0.693	6,416.434	0.793	6,513.067	0.893	6,609.699	0.993	6,706.332
0.094	5,837.605	0.194	5,934.238	0.294	6,030.870	0.394	6,127.503	0.494	6,224.135	0.594	6,320.768	0.694	6,417.400	0.794	6,514.033	0.894	6,610.666	0.994	6,707.298
0.095	5,838.571	0.195	5,935.204	0.295	6,031.836	0.395	6,128.469	0.495	6,225.102	0.595	6,321.734	0.695	6,418.367	0.795	6,514.999	0.895	6,611.632	0.995	6,708.264
0.096	5,839.538	0.196	5,936.170	0.296	6,032.803	0.396	6,129.435	0.496	6,226.068	0.596	6,322.700	0.696	6,419.333	0.796	6,515.966	0.896	6,612.598	0.996	6,709.231
0.097	5,840.504	0.197	5,937.137	0.297	6,033.769	0.397	6,130.402	0.497	6,227.034	0.597	6,323.667	0.697	6,420.299	0.797	6,516.932	0.897	6,613.565	0.997	6,710.197
0.098	5,841.470	0.198	5,938.103	0.298	6,034.735	0.398	6,131.368	0.498	6,228.001	0.598	6,324.633	0.698	6,421.266	0.798	6,517.898	0.898	6,614.531	0.998	6,711.163
0.099	5,842.437	0.199	5,939.069	0.299	6,035.702	0.399	6,132.334	0.499	6,228.967	0.599	6,325.599	0.699	6,422.232	0.799	6,518.865	0.899	6,615.497	0.999	6,712.130

DATE STRAPPED: 09/19/17 BY: RJ
DATE COMPUTED: 09/26/17 BY: WLH
DATE ISSUED: 09/26/17

AMSPEC

Meliadine
Rankin Inlet
Item 20 - Final - Data Sheet (Innage)

Tank No. 2
INNAGE TABLE

Calibration@AmSpecGroup.com

CAPACITIES GIVEN IN CUBIC METERS

GAUGE HEIGHT: 14.269 M

mm	7 M	mm	7 M	mm	7 M	mm	7 M	mm	7 M	mm	7 M	mm	7 M	mm	7 M	mm	7 M	mm	7 M
0.000	6,713.096	0.100	6,809.729	0.200	6,906.361	0.300	7,002.994	0.400	7,099.626	0.500	7,196.259	0.600	7,292.891	0.700	7,389.524	0.800	7,486.157	0.900	7,582.789
0.001	6,714.062	0.101	6,810.695	0.201	6,907.328	0.301	7,003.960	0.401	7,100.593	0.501	7,197.225	0.601	7,293.858	0.701	7,390.490	0.801	7,487.123	0.901	7,583.756
0.002	6,715.029	0.102	6,811.661	0.202	6,908.294	0.302	7,004.926	0.402	7,101.559	0.502	7,198.192	0.602	7,294.824	0.702	7,391.457	0.802	7,488.089	0.902	7,584.722
0.003	6,715.995	0.103	6,812.628	0.203	6,909.260	0.303	7,005.893	0.403	7,102.525	0.503	7,199.158	0.603	7,295.790	0.703	7,392.423	0.803	7,489.056	0.903	7,585.688
0.004	6,716.961	0.104	6,813.594	0.204	6,910.227	0.304	7,006.859	0.404	7,103.492	0.504	7,200.124	0.604	7,296.757	0.704	7,393.389	0.804	7,490.022	0.904	7,586.654
0.005	6,717.928	0.105	6,814.560	0.205	6,911.193	0.305	7,007.825	0.405	7,104.458	0.505	7,201.091	0.605	7,297.723	0.705	7,394.356	0.805	7,490.988	0.905	7,587.621
0.006	6,718.894	0.106	6,815.527	0.206	6,912.159	0.306	7,008.792	0.406	7,105.424	0.506	7,202.057	0.606	7,298.689	0.706	7,395.322	0.806	7,491.955	0.906	7,588.587
0.007	6,719.860	0.107	6,816.493	0.207	6,913.125	0.307	7,009.758	0.407	7,106.391	0.507	7,203.023	0.607	7,299.656	0.707	7,396.288	0.807	7,492.921	0.907	7,589.553
0.008	6,720.827	0.108	6,817.459	0.208	6,914.092	0.308	7,010.724	0.408	7,107.357	0.508	7,203.990	0.608	7,300.622	0.708	7,397.255	0.808	7,493.887	0.908	7,590.520
0.009	6,721.793	0.109	6,818.426	0.209	6,915.058	0.309	7,011.691	0.409	7,108.323	0.509	7,204.956	0.609	7,301.588	0.709	7,398.221	0.809	7,494.854	0.909	7,591.486
0.010	6,722.759	0.110	6,819.392	0.210	6,916.024	0.310	7,012.657	0.410	7,109.290	0.510	7,205.922	0.610	7,302.555	0.710	7,399.187	0.810	7,495.820	0.910	7,592.452
0.011	6,723.726	0.111	6,820.358	0.211	6,916.991	0.311	7,013.623	0.411	7,110.256	0.511	7,206.888	0.611	7,303.521	0.711	7,400.154	0.811	7,496.786	0.911	7,593.419
0.012	6,724.692	0.112	6,821.325	0.212	6,917.957	0.312	7,014.590	0.412	7,111.222	0.512	7,207.855	0.612	7,304.487	0.712	7,401.120	0.812	7,497.753	0.912	7,594.385
0.013	6,725.658	0.113	6,822.291	0.213	6,918.923	0.313	7,015.556	0.413	7,112.189	0.513	7,208.821	0.613	7,305.454	0.713	7,402.086	0.813	7,498.719	0.913	7,595.351
0.014	6,726.625	0.114	6,823.257	0.214	6,919.890	0.314	7,016.522	0.414	7,113.155	0.514	7,209.787	0.614	7,306.420	0.714	7,403.053	0.814	7,499.685	0.914	7,596.318
0.015	6,727.591	0.115	6,824.224	0.215	6,920.856	0.315	7,017.489	0.415	7,114.121	0.515	7,210.754	0.615	7,307.386	0.715	7,404.019	0.815	7,500.652	0.915	7,597.284
0.016	6,728.557	0.116	6,825.190	0.216	6,921.822	0.316	7,018.455	0.416	7,115.088	0.516	7,211.720	0.616	7,308.353	0.716	7,404.985	0.816	7,501.618	0.916	7,598.250
0.017	6,729.524	0.117	6,826.156	0.217	6,922.789	0.317	7,019.421	0.417	7,116.054	0.517	7,212.686	0.617	7,309.319	0.717	7,405.952	0.817	7,502.584	0.917	7,599.217
0.018	6,730.490	0.118	6,827.122	0.218	6,923.755	0.318	7,020.388	0.418	7,117.020	0.518	7,213.653	0.618	7,310.285	0.718	7,406.918	0.818	7,503.550	0.918	7,600.183
0.019	6,731.456	0.119	6,828.089	0.219	6,924.721	0.319	7,021.354	0.419	7,117.987	0.519	7,214.619	0.619	7,311.252	0.719	7,407.884	0.819	7,504.517	0.919	7,601.149
0.020	6,732.423	0.120	6,829.055	0.220	6,925.688	0.320	7,022.320	0.420	7,118.953	0.520	7,215.585	0.620	7,312.218	0.720	7,408.851	0.820	7,505.483	0.920	7,602.116
0.021	6,733.389	0.121	6,830.021	0.221	6,926.654	0.321	7,023.287	0.421	7,119.919	0.521	7,216.552	0.621	7,313.184	0.721	7,409.817	0.821	7,506.449	0.921	7,603.082
0.022	6,734.355	0.122	6,830.988	0.222	6,927.620	0.322	7,024.253	0.422	7,120.886	0.522	7,217.518	0.622	7,314.151	0.722	7,410.783	0.822	7,507.416	0.922	7,604.048
0.023	6,735.322	0.123	6,831.954	0.223	6,928.587	0.323	7,025.219	0.423	7,121.852	0.523	7,218.484	0.623	7,315.117	0.723	7,411.750	0.823	7,508.382	0.923	7,605.015
0.024	6,736.288	0.124	6,832.920	0.224	6,929.553	0.324	7,026.186	0.424	7,122.818	0.524	7,219.451	0.624	7,316.083	0.724	7,412.716	0.824	7,509.348	0.924	7,605.981
0.025	6,737.254	0.125	6,833.887	0.225	6,930.519	0.325	7,027.152	0.425	7,123.784	0.525	7,220.417	0.625	7,317.050	0.725	7,413.682	0.825	7,510.315	0.925	7,606.947
0.026	6,738.221	0.126	6,834.853	0.226	6,931.486	0.326	7,028.118	0.426	7,124.751	0.526	7,221.383	0.626	7,318.016	0.726	7,414.649	0.826	7,511.281	0.926	7,607.914
0.027	6,739.187	0.127	6,835.819	0.227	6,932.452	0.327	7,029.085	0.427	7,125.717	0.527	7,222.350	0.627	7,318.982	0.727	7,415.615	0.827	7,512.247	0.927	7,608.880
0.028	6,740.153	0.128	6,836.786	0.228	6,933.418	0.328	7,030.051	0.428	7,126.683	0.528	7,223.316	0.628	7,319.949	0.728	7,416.581	0.828	7,513.214	0.928	7,609.846
0.029	6,741.120	0.129	6,837.752	0.229	6,934.385	0.329	7,031.017	0.429	7,127.650	0.529	7,224.282	0.629	7,320.915	0.729	7,417.547	0.829	7,514.180	0.929	7,610.813
0.030	6,742.086	0.130	6,838.718	0.230	6,935.351	0.330	7,031.984	0.430	7,128.616	0.530	7,225.249	0.630	7,321.881	0.730	7,418.514	0.830	7,515.146	0.930	7,611.779
0.031	6,743.052	0.131	6,839.685	0.231	6,936.317	0.331	7,032.950	0.431	7,129.582	0.531	7,226.215	0.631	7,322.848	0.731	7,419.480	0.831	7,516.113	0.931	7,612.745
0.032	6,744.018	0.132	6,840.651	0.232	6,937.284	0.332	7,033.916	0.432	7,130.549	0.532	7,227.181	0.632	7,323.814	0.732	7,420.446	0.832	7,517.079	0.932	7,613.712
0.033	6,744.985	0.133	6,841.617	0.233	6,938.250	0.333	7,034.883	0.433	7,131.515	0.533	7,228.148	0.633	7,324.780	0.733	7,421.413	0.833	7,518.045	0.933	7,614.678
0.034	6,745.951	0.134	6,842.584	0.234	6,939.216	0.334	7,035.849	0.434	7,132.481	0.534	7,229.114	0.634	7,325.747	0.734	7,422.379	0.834	7,519.012	0.934	7,615.644
0.035	6,746.917	0.135	6,843.550	0.235	6,940.183	0.335	7,036.815	0.435	7,133.448	0.535	7,230.080	0.635	7,326.713	0.735	7,423.345	0.835	7,519.978	0.935	7,616.611
0.036	6,747.884	0.136	6,844.516	0.236	6,941.149	0.336	7,037.781	0.436	7,134.414	0.536	7,231.047	0.636	7,327.679	0.736	7,424.312	0.836	7,520.944	0.936	7,617.577
0.037	6,748.850	0.137	6,845.483	0.237	6,942.115	0.337	7,038.748	0.437	7,135.380	0.537	7,232.013	0.637	7,328.646	0.737	7,425.278	0.837	7,521.911	0.937	7,618.543
0.038	6,749.816	0.138	6,846.449	0.238	6,943.082	0.338	7,039.714	0.438	7,136.347	0.538	7,232.979	0.638	7,329.612	0.738	7,426.244	0.838	7,522.877	0.938	7,619.510
0.039	6,750.783	0.139	6,847.415	0.239	6,944.048	0.339	7,040.680	0.439	7,137.313	0.539	7,233.946	0.639	7,330.578	0.739	7,427.211	0.839	7,523.843	0.939	7,620.476
0.040	6,751.749	0.140	6,848.382	0.240	6,945.014	0.340	7,041.647	0.440	7,138.279	0.540	7,234.912	0.640	7,331.545	0.740	7,428.177	0.840	7,524.810	0.940	7,621.442
0.041	6,752.715	0.141	6,849.348	0.241	6,945.981	0.341	7,042.613	0.441	7,139.246	0.541	7,235.878	0.641	7,332.511	0.741	7,429.143	0.841	7,525.776	0.941	7,622.409
0.042	6,753.682	0.142	6,850.314	0.242	6,946.947	0.342	7,043.579	0.442	7,140.212	0.542	7,236.845	0.642	7,333.477	0.742	7,430.110	0.842	7,526.742	0.942	7,623.375
0.043	6,754.648	0.143	6,851.281	0.243	6,947.913	0.343	7,044.546	0.443	7,141.178	0.543	7,237.811	0.643	7,334.443	0.743	7,431.076	0.843	7,527.709	0.943	7,624.341
0.044	6,755.614	0.144	6,852.247	0.244	6,948.880	0.344	7,045.512	0.444	7,142.145	0.544	7,238.777	0.644	7,335.410	0.744	7,432.042	0.844	7,528.675	0.944	7,625.308
0.045	6,756.581	0.145	6,853.213	0.245	6,949.846	0.345	7,046.478	0.445	7,143.111	0.545	7,239.744	0.645	7,336.376	0.745	7,433.009	0.845	7,529.641	0.945	7,626.274
0.046	6,757.547	0.146	6,854.180	0.246	6,950.812	0.346	7,047.445	0.446	7,144.077	0.546	7,240.710	0.646	7,337.342	0.746	7,433.975	0.846	7,530.608	0.946	7,627.240
0.047	6,758.513	0.147	6,855.146	0.247	6,951.779	0.347	7,048.411	0.447	7,145.044	0.547	7,241.676	0.647	7,338.309	0.747	7,434.941	0.847	7,531.574	0.947	7,628.206
0.048	6,759.480	0.148	6,856.112	0.248	6,952.745	0.348	7,049.377	0.448	7,146.010	0.548	7,242.643	0.648	7,339.275	0.748	7,435.908	0.848	7,532.540	0.948	7,629.173
0.049	6,760.446	0.149	6,857.079	0.249	6,953.711	0.349	7,050.344	0.449	7,146.976	0.549	7,243.609	0.649	7,340.241	0.749	7,436.874	0.849	7,533.507	0.949	7,630.139
0.050	6,761.412	0.150	6,858.045	0.250	6,954.677	0.350	7,051.310	0.450	7,147.943	0.550	7,244.575	0.650	7,341.208	0.750	7,437.840	0.850	7,534.473	0.950	7,631.105
0.051	6,762.379	0.151	6,859.011	0.251	6,955.644	0.351	7,052.276	0.451	7,148.909	0.551	7,245.542	0.651	7,342.174	0.751	7,438.807	0.851	7,535.439	0.951	7,632.072
0.052	6,763.345	0.152	6,859.978	0.252	6,956.610	0.352	7,053.243	0.452	7,149.875	0.552	7,246.508	0.652	7,343.140	0.752	7,439.773	0.852	7,536.406	0.952	7,633.038
0.053	6,764.311	0.153	6,860.944	0.253	6,957.576	0.353	7,054.209	0.453	7,150.842	0.553	7,247.474	0.653	7,344.107	0.753	7,440.739	0.853	7,537.372	0.953	7,634.004
0.054	6,765.278	0.154	6,861.910	0.254	6,958.543	0.354	7,055.175	0.454	7,151.808	0.554	7,248.440	0.654	7,345.073	0.754	7,441.706	0.854	7,538.338	0.954	7,634.971
0.055	6,766.244	0.155	6,862.877	0.255	6,959.509	0.355	7,056.142	0.455	7,152.774	0.555	7,249.407	0.655	7,346.039	0.755	7,442.672	0.855	7,539.305	0.955	7,635.937
0.056	6,767.210	0.156	6,863.843	0.256	6,960.475	0.356	7,057.108	0.456	7,153.741	0.556	7,250.373	0.656	7,347.006	0.756	7,443.638	0.856	7,540.271	0.956	7,636.903
0.057	6,768.177	0.157	6,864.809	0.257	6,961.442	0.357	7,058.074	0.457	7,154.707	0.557	7,251.339	0.657	7,347.972	0.757	7,444.605	0.857	7,541.237	0.957	7,637.870
0.058	6,769.143	0.158	6,865.776	0.258	6,962.408	0.358	7,059.041	0.458	7,155.673	0.558	7,252.306	0.658	7,348.938	0.758	7,445.571	0.858	7,542.204	0.958	7,638.836
0.059	6,770.109	0.159	6,866.742	0.259	6,963.374	0.359	7,060.007	0.459	7,156.640	0.559	7,253.272	0.659	7,349.905	0.759	7,446.537	0.859	7,543.170	0.959	7,639.802
0.060	6,771.076	0.160	6,867.708	0.260	6,964.341	0.360	7,060.973	0.460	7,157.606	0.560	7,254.238	0.660	7,350.871	0.760	7,447.504	0.860	7,544.136	0.960	7,640.769
0.061	6,772.042	0.161	6,868.675	0.261	6,965.307	0.361	7,061.940	0.461	7,158.572	0.561	7,255.205	0.661	7,351.837	0.761	7,448.470	0.861	7,545.102	0.961	7,641.735
0.062	6,773.008	0.162	6,869.641	0.262	6,966.273	0.362	7,062.906	0.462	7,159.539	0.562	7,256.171	0.662	7,352.804	0.762	7,449.436	0.862	7,546.069	0.962	7,642.701
0.063	6,773.975	0.163	6,870.607	0.263	6,967.240	0.363	7,063.872	0.463	7,160.505	0.563	7,257.137	0.663	7,353.770	0.763	7,450.403	0.863	7,547.035	0.963	7,643.668
0.064	6,774.941	0.164	6,871.573	0.264	6,968.206	0.364	7,064.839	0.464	7,161.471	0.564	7,258.104	0.664	7,354.736	0.764	7,451.369	0.864	7,548.001	0.964	7,644.634
0.065	6,775.907	0.165	6,872.540	0.265	6,969.172	0.365	7,065.805	0.465	7,162.438	0.565	7,259.070	0.665	7,355.703	0.765	7,452.335	0.865	7,548.968	0.965	7,645.600
0.066	6,776.874	0.166	6,873.506	0.266	6,970.139	0.366	7,066.771	0.466	7,163.404	0.566	7,260.036	0.666	7,356.669	0.766	7,453.302	0.866	7,549.934	0.966	7,646.567
0.067	6,777.840	0.167	6,874.472	0.267	6,971.105	0.367	7,067.738	0.467	7,164.370	0.567	7,261.003	0.667	7,357.635	0.767	7,454.268	0.867	7,550.900	0.967	7,647.533
0.068	6,778.806	0.168	6,875.439	0.268	6,972.071	0.368	7,068.704	0.468	7,165.336	0.568	7,261.969	0.668	7,358.602	0.768	7,455.234	0.868	7,551.867	0.968	7,648.499
0.069	6,779.773	0.169	6,876.405	0.269	6,973.038	0.369	7,069.670	0.469	7,166.303	0.569	7,262.935	0.669	7,359.568	0.769	7,456.201	0.869	7,552.833	0.969	7,649.466
0.070	6,780.739	0.170	6,877.371	0.270	6,974.004	0.370	7,070.637	0.470	7,167.269	0.570	7,263.902	0.670	7,360.534	0.770	7,457.167	0.870	7,553.799	0.970	7,650.432
0.071	6,781.705	0.171	6,878.338	0.271	6,974.970	0.371	7,071.603	0.471	7,168.235	0.571	7,264.868	0.671	7,361.501	0.771	7,458.133	0.871	7,554.766	0.971	7,651.398
0.072	6,782.672	0.172	6,879.304	0.272	6,975.937	0.372	7,072.569	0.472	7,169.202	0.572	7,265.834	0.672	7,362.467	0.772	7,459.100	0.872	7,555.732	0.972	7,652.365
0.073	6,783.638	0.173	6,880.270	0.273	6,976.903	0.373	7,073.536	0.473	7,170.168	0.573	7,266.801	0.673	7,363.433	0.773	7,460.066	0.873	7,556.698	0.973	7,653.331
0.074	6,784.604	0.174	6,881.237	0.274	6,977.869	0.374	7,074.502	0.474	7,171.134	0.574	7,267.767	0.674	7,364.400	0.774	7,461.032	0.874	7,557.665	0.974	7,654.297
0.075	6,785.570	0.175	6,882.203	0.275	6,978.836	0.375	7,075.468	0.475	7,172.101	0.575	7,268.733	0.675	7,365.366	0.775	7,461.998	0.875	7,558.631	0.975	7,655.264
0.076	6,786.537	0.176	6,883.169	0.276	6,979.802	0.376	7,076.435	0.476	7,173.067	0.576	7,269.700	0.676	7,366.332	0.776	7,462.965	0.876	7,559.597	0.976	7,656.230
0.077	6,787.503	0.177	6,884.136	0.277	6,980.768	0.377	7,077.401	0.477	7,174.033	0.577	7,270.666	0.677	7,367.299	0.777	7,463.931	0.877	7,560.564	0.977	7,657.196
0.078	6,788.469	0.178	6,885.102	0.278	6,981.735	0.378	7,078.367	0.478	7,175.000	0.578	7,271.632	0.678	7,368.265	0.778	7,464.897	0.878	7,561.530	0.978	7,658.163
0.079	6,789.436	0.179	6,886.068	0.279	6,982.701	0.379	7,079.334	0.479	7,175.966	0.579	7,272.599	0.679	7,369.231	0.779	7,465.864	0.879	7,562.496	0.979	7,659.129
0.080	6,790.402	0.180	6,887.035	0.280	6,983.667	0.380	7,080.300	0.480	7,176.932	0.580	7,273.565	0.680	7,370.198	0.780	7,466.830	0.880	7,563.463	0.980	7,660.095
0.081	6,791.368	0.181	6,888.001	0.281	6,984.634	0.381	7,081.266	0.481	7,177.899	0.581	7,274.531	0.681	7,371.164	0.781	7,467.796	0.881	7,564.429	0.981	7,661.062
0.082	6,792.335	0.182	6,888.967	0.282	6,985.600	0.382	7,082.232	0.482	7,178.865	0.582	7,275.498	0.682	7,372.130	0.782	7,468.763	0.882	7,565.395	0.982	7,662.028
0.083	6,793.301	0.183	6,889.934	0.283	6,986.566	0.383	7,083.199	0.483	7,179.831	0.583	7,276.464	0.683	7,373.097	0.783	7,469.729	0.883	7,566.362	0.983	7,662.994
0.084	6,794.267	0.184	6,890.900	0.284	6,987.533	0.384	7,084.165	0.484	7,180.798	0.584	7,277.430	0.684	7,374.063	0.784	7,470.695	0.884	7,567.328	0.984	7,663.961
0.085	6,795.234	0.185	6,891.866	0.285	6,988.499	0.385	7,085.131	0.485	7,181.764	0.585	7,278.397	0.685	7,375.029	0.785	7,471.662	0.885	7,568.294	0.985	7,664.927
0.086	6,796.200	0.186	6,892.833	0.286	6,989.465	0.386	7,086.098	0.486	7,182.730	0.586	7,279.363	0.686	7,375.995	0.786	7,472.628	0.886	7,569.261	0.986	7,665.893
0.087	6,797.166	0.187	6,893.799	0.287	6,990.432	0.387	7,087.064	0.487	7,183.697	0.587	7,280.329	0.687	7,376.962	0.787	7,473.594	0.887	7,570.227	0.987	7,666.860
0.088	6,798.133	0.188	6,894.765	0.288	6,991.398	0.388	7,088.030	0.488	7,184.663	0.588	7,281.296	0.688	7,377.928	0.788	7,474.561	0.888	7,571.193	0.988	7,667.826
0.089	6,799.099	0.189	6,895.732	0.289	6,992.364	0.389	7,088.997	0.489	7,185.629	0.589	7,282.262	0.689	7,378.894	0.789	7,475.527	0.889	7,572.160	0.989	7,668.792
0.090	6,800.065	0.190	6,896.698	0.290	6,993.331	0.390	7,089.963	0.490	7,186.596	0.590	7,283.228	0.690	7,379.861	0.790	7,476.493	0.890	7,573.126	0.990	7,669.759
0.091	6,801.032	0.191	6,897.664	0.291	6,994.297	0.391	7,090.929	0.491	7,187.562	0.591	7,284.195	0.691	7,380.827	0.791	7,477.460	0.891	7,574.092	0.991	7,670.725
0.092	6,801.998	0.192	6,898.631	0.292	6,995.263	0.392	7,091.896	0.492	7,188.528	0.592	7,285.161	0.692	7,381.793	0.792	7,478.426	0.892	7,575.059	0.992	7,671.691
0.093	6,802.964	0.193	6,899.597	0.293	6,996.229	0.393	7,092.862	0.493	7,189.495	0.593	7,286.127	0.693	7,382.760	0.793	7,479.392	0.893	7,576.025	0.993	7,672.657
0.094	6,803.931	0.194	6,900.563	0.294	6,997.196	0.394	7,093.828	0.494	7,190.461	0.594	7,287.094	0.694	7,383.726	0.794	7,480.359	0.894	7,576.991	0.994	7,673.624
0.095	6,804.897	0.195	6,901.530	0.295	6,998.162	0.395	7,094.795	0.495	7,191.427	0.595	7,288.060	0.695	7,384.692	0.795	7,481.325	0.895	7,577.958	0.995	7,674.590
0.096	6,805.863	0.196	6,902.496	0.296	6,999.128	0.396	7,095.761	0.496	7,192.394	0.596	7,289.026	0.696	7,385.659	0.796	7,482.291	0.896	7,578.924	0.996	7,675.556
0.097	6,806.830	0.197	6,903.462	0.297	7,000.095	0.397	7,096.727	0.497	7,193.360	0.597	7,289.993	0.697	7,386.625	0.797	7,483.258	0.897	7,579.890	0.997	7,676.523
0.098	6,807.796	0.198	6,904.429	0.298	7,001.061	0.398	7,097.694	0.498	7,194.326	0.598	7,290.959	0.698	7,387.591	0.798	7,484.224	0.898	7,580.857	0.998	7,677.489
0.099	6,808.762	0.199	6,905.395	0.299	7,002.027	0.399	7,098.660	0.499	7,195.293	0.599	7,291.925	0.699	7,388.558	0.799	7,485.190	0.899	7,581.823	0.999	7,678.455

DATE STRAPPED: 09/19/17 BY: RJ
DATE COMPUTED: 09/26/17 BY: WLH
DATE ISSUED: 09/26/17

AMSPEC

Meliadine
Rankin Inlet
Item 20 - Final - Data Sheet (Innage)

Tank No. 2
INNAGE TABLE

Calibration@AmSpecGroup.com

CAPACITIES GIVEN IN CUBIC METERS

GAUGE HEIGHT: 14.269 M

mm	8 M	mm	8 M	mm	8 M	mm	8 M	mm	8 M	mm	8 M	mm	8 M	mm	8 M	mm	8 M	mm	8 M
0.000	7,679.422	0.100	7,776.054	0.200	7,872.687	0.300	7,969.319	0.400	8,065.973	0.500	8,162.657	0.600	8,259.342	0.700	8,356.027	0.800	8,452.711	0.900	8,549.396
0.001	7,680.388	0.101	7,777.021	0.201	7,873.653	0.301	7,970.286	0.401	8,066.939	0.501	8,163.624	0.601	8,260.309	0.701	8,356.993	0.801	8,453.678	0.901	8,550.363
0.002	7,681.354	0.102	7,777.987	0.202	7,874.620	0.302	7,971.252	0.402	8,067.906	0.502	8,164.591	0.602	8,261.276	0.702	8,357.960	0.802	8,454.645	0.902	8,551.330
0.003	7,682.321	0.103	7,778.953	0.203	7,875.586	0.303	7,972.218	0.403	8,068.873	0.503	8,165.558	0.603	8,262.242	0.703	8,358.927	0.803	8,455.612	0.903	8,552.296
0.004	7,683.287	0.104	7,779.920	0.204	7,876.552	0.304	7,973.185	0.404	8,069.840	0.504	8,166.525	0.604	8,263.209	0.704	8,359.894	0.804	8,456.579	0.904	8,553.263
0.005	7,684.253	0.105	7,780.886	0.205	7,877.519	0.305	7,974.151	0.405	8,070.807	0.505	8,167.491	0.605	8,264.176	0.705	8,360.861	0.805	8,457.545	0.905	8,554.230
0.006	7,685.220	0.106	7,781.852	0.206	7,878.485	0.306	7,975.117	0.406	8,071.774	0.506	8,168.458	0.606	8,265.143	0.706	8,361.828	0.806	8,458.512	0.906	8,555.197
0.007	7,686.186	0.107	7,782.819	0.207	7,879.451	0.307	7,976.084	0.407	8,072.741	0.507	8,169.425	0.607	8,266.110	0.707	8,362.794	0.807	8,459.479	0.907	8,556.164
0.008	7,687.152	0.108	7,783.785	0.208	7,880.418	0.308	7,977.050	0.408	8,073.707	0.508	8,170.392	0.608	8,267.077	0.708	8,363.761	0.808	8,460.446	0.908	8,557.131
0.009	7,688.119	0.109	7,784.751	0.209	7,881.384	0.309	7,978.016	0.409	8,074.674	0.509	8,171.359	0.609	8,268.044	0.709	8,364.728	0.809	8,461.413	0.909	8,558.097
0.010	7,689.085	0.110	7,785.718	0.210	7,882.350	0.310	7,978.983	0.410	8,075.641	0.510	8,172.326	0.610	8,269.010	0.710	8,365.695	0.810	8,462.380	0.910	8,559.064
0.011	7,690.051	0.111	7,786.684	0.211	7,883.316	0.311	7,979.949	0.411	8,076.608	0.511	8,173.293	0.611	8,269.977	0.711	8,366.662	0.811	8,463.347	0.911	8,560.031
0.012	7,691.018	0.112	7,787.650	0.212	7,884.283	0.312	7,980.915	0.412	8,077.575	0.512	8,174.259	0.612	8,270.944	0.712	8,367.629	0.812	8,464.313	0.912	8,560.998
0.013	7,691.984	0.113	7,788.617	0.213	7,885.249	0.313	7,981.882	0.413	8,078.542	0.513	8,175.226	0.613	8,271.911	0.713	8,368.596	0.813	8,465.280	0.913	8,561.965
0.014	7,692.950	0.114	7,789.583	0.214	7,886.215	0.314	7,982.848	0.414	8,079.508	0.514	8,176.193	0.614	8,272.878	0.714	8,369.562	0.814	8,466.247	0.914	8,562.932
0.015	7,693.917	0.115	7,790.549	0.215	7,887.182	0.315	7,983.814	0.415	8,080.475	0.515	8,177.160	0.615	8,273.845	0.715	8,370.529	0.815	8,467.214	0.915	8,563.899
0.016	7,694.883	0.116	7,791.516	0.216	7,888.148	0.316	7,984.781	0.416	8,081.442	0.516	8,178.127	0.616	8,274.811	0.716	8,371.496	0.816	8,468.181	0.916	8,564.865
0.017	7,695.849	0.117	7,792.482	0.217	7,889.114	0.317	7,985.747	0.417	8,082.409	0.517	8,179.094	0.617	8,275.778	0.717	8,372.463	0.817	8,469.148	0.917	8,565.832
0.018	7,696.816	0.118	7,793.448	0.218	7,890.081	0.318	7,986.713	0.418	8,083.376	0.518	8,180.060	0.618	8,276.745	0.718	8,373.430	0.818	8,470.114	0.918	8,566.799
0.019	7,697.782	0.119	7,794.415	0.219	7,891.047	0.319	7,987.680	0.419	8,084.343	0.519	8,181.027	0.619	8,277.712	0.719	8,374.397	0.819	8,471.081	0.919	8,567.766
0.020	7,698.748	0.120	7,795.381	0.220	7,892.013	0.320	7,988.646	0.420	8,085.310	0.520	8,181.994	0.620	8,278.679	0.720	8,375.363	0.820	8,472.048	0.920	8,568.733
0.021	7,699.715	0.121	7,796.347	0.221	7,892.980	0.321	7,989.612	0.421	8,086.276	0.521	8,182.961	0.621	8,279.646	0.721	8,376.330	0.821	8,473.015	0.921	8,569.700
0.022	7,700.681	0.122	7,797.313	0.222	7,893.946	0.322	7,990.579	0.422	8,087.243	0.522	8,183.928	0.622	8,280.613	0.722	8,377.297	0.822	8,473.982	0.922	8,570.666
0.023	7,701.647	0.123	7,798.280	0.223	7,894.912	0.323	7,991.545	0.423	8,088.210	0.523	8,184.895	0.623	8,281.579	0.723	8,378.264	0.823	8,474.949	0.923	8,571.633
0.024	7,702.614	0.124	7,799.246	0.224	7,895.879	0.324	7,992.511	0.424	8,089.177	0.524	8,185.862	0.624	8,282.546	0.724	8,379.231	0.824	8,475.916	0.924	8,572.600
0.025	7,703.580	0.125	7,800.212	0.225	7,896.845	0.325	7,993.478	0.425	8,090.144	0.525	8,186.828	0.625	8,283.513	0.725	8,380.198	0.825	8,476.882	0.925	8,573.567
0.026	7,704.546	0.126	7,801.179	0.226	7,897.811	0.326	7,994.444	0.426	8,091.111	0.526	8,187.795	0.626	8,284.480	0.726	8,381.165	0.826	8,477.849	0.926	8,574.534
0.027	7,705.513	0.127	7,802.145	0.227	7,898.778	0.327	7,995.410	0.427	8,092.077	0.527	8,188.762	0.627	8,285.447	0.727	8,382.131	0.827	8,478.816	0.927	8,575.501
0.028	7,706.479	0.128	7,803.111	0.228	7,899.744	0.328	7,996.377	0.428	8,093.044	0.528	8,189.729	0.628	8,286.414	0.728	8,383.098	0.828	8,479.783	0.928	8,576.468
0.029	7,707.445	0.129	7,804.078	0.229	7,900.710	0.329	7,997.343	0.429	8,094.011	0.529	8,190.696	0.629	8,287.380	0.729	8,384.065	0.829	8,480.750	0.929	8,577.434
0.030	7,708.412	0.130	7,805.044	0.230	7,901.677	0.330	7,998.309	0.430	8,094.978	0.530	8,191.663	0.630	8,288.347	0.730	8,385.032	0.830	8,481.717	0.930	8,578.401
0.031	7,709.378	0.131	7,806.010	0.231	7,902.643	0.331	7,999.276	0.431	8,095.945	0.531	8,192.629	0.631	8,289.314	0.731	8,385.999	0.831	8,482.683	0.931	8,579.368
0.032	7,710.344	0.132	7,806.977	0.232	7,903.609	0.332	8,000.242	0.432	8,096.912	0.532	8,193.596	0.632	8,290.281	0.732	8,386.966	0.832	8,483.650	0.932	8,580.335
0.033	7,711.311	0.133	7,807.943	0.233	7,904.576	0.333	8,001.208	0.433	8,097.879	0.533	8,194.563	0.633	8,291.248	0.733	8,387.932	0.833	8,484.617	0.933	8,581.302
0.034	7,712.277	0.134	7,808.909	0.234	7,905.542	0.334	8,002.175	0.434	8,098.845	0.534	8,195.530	0.634	8,292.215	0.734	8,388.899	0.834	8,485.584	0.934	8,582.269
0.035	7,713.243	0.135	7,809.876	0.235	7,906.508	0.335	8,003.141	0.435	8,099.812	0.535	8,196.497	0.635	8,293.182	0.735	8,389.866	0.835	8,486.551	0.935	8,583.235
0.036	7,714.209	0.136	7,810.842	0.236	7,907.475	0.336	8,004.107	0.436	8,100.779	0.536	8,197.464	0.636	8,294.148	0.736	8,390.833	0.836	8,487.518	0.936	8,584.202
0.037	7,715.176	0.137	7,811.808	0.237	7,908.441	0.337	8,005.074	0.437	8,101.746	0.537	8,198.431	0.637	8,295.115	0.737	8,391.800	0.837	8,488.485	0.937	8,585.169
0.038	7,716.142	0.138	7,812.775	0.238	7,909.407	0.338	8,006.040	0.438	8,102.713	0.538	8,199.397	0.638	8,296.082	0.738	8,392.767	0.838	8,489.451	0.938	8,586.136
0.039	7,717.108	0.139	7,813.741	0.239	7,910.374	0.339	8,007.006	0.439	8,103.680	0.539	8,200.364	0.639	8,297.049	0.739	8,393.734	0.839	8,490.418	0.939	8,587.103
0.040	7,718.075	0.140	7,814.707	0.240	7,911.340	0.340	8,007.972	0.440	8,104.646	0.540	8,201.331	0.640	8,298.016	0.740	8,394.700	0.840	8,491.385	0.940	8,588.070
0.041	7,719.041	0.141	7,815.674	0.241	7,912.306	0.341	8,008.939	0.441	8,105.613	0.541	8,202.298	0.641	8,298.983	0.741	8,395.667	0.841	8,492.352	0.941	8,589.037
0.042	7,720.007	0.142	7,816.640	0.242	7,913.273	0.342	8,009.905	0.442	8,106.580	0.542	8,203.265	0.642	8,299.949	0.742	8,396.634	0.842	8,493.319	0.942	8,590.003
0.043	7,720.974	0.143	7,817.606	0.243	7,914.239	0.343	8,010.871	0.443	8,107.547	0.543	8,204.232	0.643	8,300.916	0.743	8,397.601	0.843	8,494.286	0.943	8,590.970
0.044	7,721.940	0.144	7,818.573	0.244	7,915.205	0.344	8,011.838	0.444	8,108.514	0.544	8,205.198	0.644	8,301.883	0.744	8,398.568	0.844	8,495.252	0.944	8,591.937
0.045	7,722.906	0.145	7,819.539	0.245	7,916.172	0.345	8,012.804	0.445	8,109.481	0.545	8,206.165	0.645	8,302.850	0.745	8,399.535	0.845	8,496.219	0.945	8,592.904
0.046	7,723.873	0.146	7,820.505	0.246	7,917.138	0.346	8,013.770	0.446	8,110.448	0.546	8,207.132	0.646	8,303.817	0.746	8,400.501	0.846	8,497.186	0.946	8,593.871
0.047	7,724.839	0.147	7,821.472	0.247	7,918.104	0.347	8,014.737	0.447	8,111.414	0.547	8,208.099	0.647	8,304.784	0.747	8,401.468	0.847	8,498.153	0.947	8,594.838
0.048	7,725.805	0.148	7,822.438	0.248	7,919.071	0.348	8,015.703	0.448	8,112.381	0.548	8,209.066	0.648	8,305.751	0.748	8,402.435	0.848	8,499.120	0.948	8,595.804
0.049	7,726.772	0.149	7,823.404	0.249	7,920.037	0.349	8,016.670	0.449	8,113.348	0.549	8,210.033	0.649	8,306.717	0.749	8,403.402	0.849	8,500.087	0.949	8,596.771
0.050	7,727.738	0.150	7,824.371	0.250	7,921.003	0.350	8,017.636	0.450	8,114.315	0.550	8,211.000	0.650	8,307.684	0.750	8,404.369	0.850	8,501.054	0.950	8,597.738
0.051	7,728.704	0.151	7,825.337	0.251	7,921.970	0.351	8,018.603	0.451	8,115.282	0.551	8,211.966	0.651	8,308.651	0.751	8,405.336	0.851	8,502.020	0.951	8,598.705
0.052	7,729.671	0.152	7,826.303	0.252	7,922.936	0.352	8,019.569	0.452	8,116.249	0.552	8,212.933	0.652	8,309.618	0.752	8,406.303	0.852	8,502.987	0.952	8,599.672
0.053	7,730.637	0.153	7,827.270	0.253	7,923.902	0.353	8,020.536	0.453	8,117.215	0.553	8,213.900	0.653	8,310.585	0.753	8,407.269	0.853	8,503.954	0.953	8,600.639
0.054	7,731.603	0.154	7,828.236	0.254	7,924.868	0.354	8,021.503	0.454	8,118.182	0.554	8,214.867	0.654	8,311.552	0.754	8,408.236	0.854	8,504.921	0.954	8,601.606
0.055	7,732.570	0.155	7,829.202	0.255	7,925.835	0.355	8,022.469	0.455	8,119.149	0.555	8,215.834	0.655	8,312.518	0.755	8,409.203	0.855	8,505.888	0.955	8,602.572
0.056	7,733.536	0.156	7,830.169	0.256	7,926.801	0.356	8,023.436	0.456	8,120.116	0.556	8,216.801	0.656	8,313.485	0.756	8,410.170	0.856	8,506.855	0.956	8,603.539
0.057	7,734.502	0.157	7,831.135	0.257	7,927.767	0.357	8,024.402	0.457	8,121.083	0.557	8,217.768	0.657	8,314.452	0.757	8,411.137	0.857	8,507.821	0.957	8,604.506
0.058	7,735.469	0.158	7,832.101	0.258	7,928.734	0.358	8,025.369	0.458	8,122.050	0.558	8,218.734	0.658	8,315.419	0.758	8,412.104	0.858	8,508.788	0.958	8,605.473
0.059	7,736.435	0.159	7,833.068	0.259	7,929.700	0.359	8,026.336	0.459	8,123.017	0.559	8,219.701	0.659	8,316.386	0.759	8,413.070	0.859	8,509.755	0.959	8,606.440
0.060	7,737.401	0.160	7,834.034	0.260	7,930.666	0.360	8,027.302	0.460	8,123.983	0.560	8,220.668	0.660	8,317.353	0.760	8,414.037	0.860	8,510.722	0.960	8,607.407
0.061	7,738.368	0.161	7,835.000	0.261	7,931.633	0.361	8,028.269	0.461	8,124.950	0.561	8,221.635	0.661	8,318.320	0.761	8,415.004	0.861	8,511.689	0.961	8,608.373
0.062	7,739.334	0.162	7,835.967	0.262	7,932.599	0.362	8,029.235	0.462	8,125.917	0.562	8,222.602	0.662	8,319.286	0.762	8,415.971	0.862	8,512.656	0.962	8,609.340
0.063	7,740.300	0.163	7,836.933	0.263	7,933.565	0.363	8,030.202	0.463	8,126.884	0.563	8,223.569	0.663	8,320.253	0.763	8,416.938	0.863	8,513.623	0.963	8,610.307
0.064	7,741.267	0.164	7,837.899	0.264	7,934.532	0.364	8,031.168	0.464	8,127.851	0.564	8,224.535	0.664	8,321.220	0.764	8,417.905	0.864	8,514.589	0.964	8,611.274
0.065	7,742.233	0.165	7,838.865	0.265	7,935.498	0.365	8,032.135	0.465	8,128.818	0.565	8,225.502	0.665	8,322.187	0.765	8,418.872	0.865	8,515.556	0.965	8,612.241
0.066	7,743.199	0.166	7,839.832	0.266	7,936.464	0.366	8,033.102	0.466	8,129.784	0.566	8,226.469	0.666	8,323.154	0.766	8,419.838	0.866	8,516.523	0.966	8,613.208
0.067	7,744.166	0.167	7,840.798	0.267	7,937.431	0.367	8,034.068	0.467	8,130.751	0.567	8,227.436	0.667	8,324.121	0.767	8,420.805	0.867	8,517.490	0.967	8,614.175
0.068	7,745.132	0.168	7,841.764	0.268	7,938.397	0.368	8,035.035	0.468	8,131.718	0.568	8,228.403	0.668	8,325.087	0.768	8,421.772	0.868	8,518.457	0.968	8,615.141
0.069	7,746.098	0.169	7,842.731	0.269	7,939.363	0.369	8,036.001	0.469	8,132.685	0.569	8,229.370	0.669	8,326.054	0.769	8,422.739	0.869	8,519.424	0.969	8,616.108
0.070	7,747.065	0.170	7,843.697	0.270	7,940.330	0.370	8,036.968	0.470	8,133.652	0.570	8,230.337	0.670	8,327.021	0.770	8,423.706	0.870	8,520.390	0.970	8,617.075
0.071	7,748.031	0.171	7,844.663	0.271	7,941.296	0.371	8,037.935	0.471	8,134.619	0.571	8,231.303	0.671	8,327.988	0.771	8,424.673	0.871	8,521.357	0.971	8,618.042
0.072	7,748.997	0.172	7,845.630	0.272	7,942.262	0.372	8,038.901	0.472	8,135.586	0.572	8,232.270	0.672	8,328.955	0.772	8,425.639	0.872	8,522.324	0.972	8,619.009
0.073	7,749.964	0.173	7,846.596	0.273	7,943.229	0.373	8,039.868	0.473	8,136.552	0.573	8,233.237	0.673	8,329.922	0.773	8,426.606	0.873	8,523.291	0.973	8,619.976
0.074	7,750.930	0.174	7,847.562	0.274	7,944.195	0.374	8,040.835	0.474	8,137.519	0.574	8,234.204	0.674	8,330.889	0.774	8,427.573	0.874	8,524.258	0.974	8,620.942
0.075	7,751.896	0.175	7,848.529	0.275	7,945.161	0.375	8,041.801	0.475	8,138.486	0.575	8,235.171	0.675	8,331.855	0.775	8,428.540	0.875	8,525.225	0.975	8,621.909
0.076	7,752.863	0.176	7,849.495	0.276	7,946.128	0.376	8,042.768	0.476	8,139.453	0.576	8,236.138	0.676	8,332.822	0.776	8,429.507	0.876	8,526.192	0.976	8,622.876
0.077	7,753.829	0.177	7,850.461	0.277	7,947.094	0.377	8,043.735	0.477	8,140.420	0.577	8,237.104	0.677	8,333.789	0.777	8,430.474	0.877	8,527.158	0.977	8,623.843
0.078	7,754.795	0.178	7,851.428	0.278	7,948.060	0.378	8,044.702	0.478	8,141.387	0.578	8,238.071	0.678	8,334.756	0.778	8,431.441	0.878	8,528.125	0.978	8,624.810
0.079	7,755.761	0.179	7,852.394	0.279	7,949.027	0.379	8,045.669	0.479	8,142.353	0.579	8,239.038	0.679	8,335.723	0.779	8,432.407	0.879	8,529.092	0.979	8,625.777
0.080	7,756.728	0.180	7,853.360	0.280	7,949.993	0.380	8,046.636	0.480	8,143.320	0.580	8,240.005	0.680	8,336.690	0.780	8,433.374	0.880	8,530.059	0.980	8,626.744
0.081	7,757.694	0.181	7,854.327	0.281	7,950.959	0.381	8,047.603	0.481	8,144.287	0.581	8,240.972	0.681	8,337.656	0.781	8,434.341	0.881	8,531.026	0.981	8,627.710
0.082	7,758.660	0.182	7,855.293	0.282	7,951.926	0.382	8,048.569	0.482	8,145.254	0.582	8,241.939	0.682	8,338.623	0.782	8,435.308	0.882	8,531.993	0.982	8,628.677
0.083	7,759.627	0.183	7,856.259	0.283	7,952.892	0.383	8,049.536	0.483	8,146.221	0.583	8,242.906	0.683	8,339.590	0.783	8,436.275	0.883	8,532.959	0.983	8,629.644
0.084	7,760.593	0.184	7,857.226	0.284	7,953.858	0.384	8,050.503	0.484	8,147.188	0.584	8,243.872	0.684	8,340.557	0.784	8,437.242	0.884	8,533.926	0.984	8,630.611
0.085	7,761.559	0.185	7,858.192	0.285	7,954.825	0.385	8,051.470	0.485	8,148.155	0.585	8,244.839	0.685	8,341.524	0.785	8,438.208	0.885	8,534.893	0.985	8,631.578
0.086	7,762.526	0.186	7,859.158	0.286	7,955.791	0.386	8,052.437	0.486	8,149.121	0.586	8,245.806	0.686	8,342.491	0.786	8,439.175	0.886	8,535.860	0.986	8,632.545
0.087	7,763.492	0.187	7,860.125	0.287	7,956.757	0.387	8,053.404	0.487	8,150.088	0.587	8,246.773	0.687	8,343.458	0.787	8,440.142	0.887	8,536.827	0.987	8,633.511
0.088	7,764.458	0.188	7,861.091	0.288	7,957.724	0.388	8,054.370	0.488	8,151.055	0.588	8,247.740	0.688	8,344.424	0.788	8,441.109	0.888	8,537.794	0.988	8,634.478
0.089	7,765.425	0.189	7,862.057	0.289	7,958.690	0.389	8,055.337	0.489	8,152.022	0.589	8,248.707	0.689	8,345.391	0.789	8,442.076	0.889	8,538.761	0.989	8,635.445
0.090	7,766.391	0.190	7,863.024	0.290	7,959.656	0.390	8,056.304	0.490	8,152.989	0.590	8,249.673	0.690	8,346.358	0.790	8,443.043	0.890	8,539.727	0.990	8,636.412
0.091	7,767.357	0.191	7,863.990	0.291	7,960.623	0.391	8,057.271	0.491	8,153.956	0.591	8,250.640	0.691	8,347.325	0.791	8,444.010	0.891	8,540.694	0.991	8,637.379
0.092	7,768.324	0.192	7,864.956	0.292	7,961.589	0.392	8,058.238	0.492	8,154.922	0.592	8,251.607	0.692	8,348.292	0.792	8,444.976	0.892	8,541.661	0.992	8,638.346
0.093	7,769.290	0.193	7,865.923	0.293	7,962.555	0.393	8,059.205	0.493	8,155.889	0.593	8,252.574	0.693	8,349.259	0.793	8,445.943	0.893	8,542.628	0.993	8,639.313
0.094	7,770.256	0.194	7,866.889	0.294	7,963.522	0.394	8,060.172	0.494	8,156.856	0.594	8,253.541	0.694	8,350.225	0.794	8,446.910	0.894	8,543.595	0.994	8,640.279
0.095	7,771.223	0.195	7,867.855	0.295	7,964.488	0.395	8,061.138	0.495	8,157.823	0.595	8,254.508	0.695	8,351.192	0.795	8,447.877	0.895	8,544.562	0.995	8,641.246
0.096	7,772.189	0.196	7,868.822	0.296	7,965.454	0.396	8,062.105	0.496	8,158.790	0.596	8,255.475	0.696	8,352.159	0.796	8,448.844	0.896	8,545.528	0.996	8,642.213
0.097	7,773.155	0.197	7,869.788	0.297	7,966.420	0.397	8,063.072	0.497	8,159.757	0.597	8,256.441	0.697	8,353.126	0.797	8,449.811	0.897	8,546.495	0.997	8,643.180
0.098	7,774.122	0.198	7,870.754	0.298	7,967.387	0.398	8,064.039	0.498	8,160.724	0.598	8,257.408	0.698	8,354.093	0.798	8,450.778	0.898	8,547.462	0.998	8,644.147
0.099	7,775.088	0.199	7,871.721	0.299	7,968.353	0.399	8,065.006	0.499	8,161.690	0.599	8,258.375	0.699	8,355.060	0.799	8,451.744	0.899	8,548.429	0.999	8,645.114

DATE STRAPPED: 09/19/17 BY: RJ
DATE COMPUTED: 09/26/17 BY: WLH
DATE ISSUED: 09/26/17

AMSPEC

Meliadine
Rankin Inlet

Tank No. 2
INNAGE TABLE

Calibration@AmSpecGroup.com

Item 20 - Final - Data Sheet (Innage)

CAPACITIES GIVEN IN CUBIC METERS — **GAUGE HEIGHT: 14.269 M**

mm	9 M	mm	9 M	mm	9 M	mm	9 M	mm	9 M	mm	9 M	mm	9 M	mm	9 M	mm	9 M	mm	9 M
0.000	8,646.080	0.100	8,742.765	0.200	8,839.450	0.300	8,936.134	0.400	9,032.819	0.500	9,129.504	0.600	9,226.188	0.700	9,322.873	0.800	9,419.558	0.900	9,516.242
0.001	8,647.047	0.101	8,743.732	0.201	8,840.417	0.301	8,937.101	0.401	9,033.786	0.501	9,130.471	0.601	9,227.155	0.701	9,323.840	0.801	9,420.525	0.901	9,517.209
0.002	8,648.014	0.102	8,744.699	0.202	8,841.383	0.302	8,938.068	0.402	9,034.753	0.502	9,131.437	0.602	9,228.122	0.702	9,324.807	0.802	9,421.491	0.902	9,518.176
0.003	8,648.981	0.103	8,745.666	0.203	8,842.350	0.303	8,939.035	0.403	9,035.720	0.503	9,132.404	0.603	9,229.089	0.703	9,325.774	0.803	9,422.458	0.903	9,519.143
0.004	8,649.948	0.104	8,746.633	0.204	8,843.317	0.304	8,940.002	0.404	9,036.686	0.504	9,133.371	0.604	9,230.056	0.704	9,326.740	0.804	9,423.425	0.904	9,520.110
0.005	8,650.915	0.105	8,747.599	0.205	8,844.284	0.305	8,940.969	0.405	9,037.653	0.505	9,134.338	0.605	9,231.023	0.705	9,327.707	0.805	9,424.392	0.905	9,521.077
0.006	8,651.882	0.106	8,748.566	0.206	8,845.251	0.306	8,941.936	0.406	9,038.620	0.506	9,135.305	0.606	9,231.989	0.706	9,328.674	0.806	9,425.359	0.906	9,522.043
0.007	8,652.848	0.107	8,749.533	0.207	8,846.218	0.307	8,942.902	0.407	9,039.587	0.507	9,136.272	0.607	9,232.956	0.707	9,329.641	0.807	9,426.326	0.907	9,523.010
0.008	8,653.815	0.108	8,750.500	0.208	8,847.185	0.308	8,943.869	0.408	9,040.554	0.508	9,137.238	0.608	9,233.923	0.708	9,330.608	0.808	9,427.292	0.908	9,523.977
0.009	8,654.782	0.109	8,751.467	0.209	8,848.151	0.309	8,944.836	0.409	9,041.521	0.509	9,138.205	0.609	9,234.890	0.709	9,331.575	0.809	9,428.259	0.909	9,524.944
0.010	8,655.749	0.110	8,752.434	0.210	8,849.118	0.310	8,945.803	0.410	9,042.488	0.510	9,139.172	0.610	9,235.857	0.710	9,332.541	0.810	9,429.226	0.910	9,525.911
0.011	8,656.716	0.111	8,753.400	0.211	8,850.085	0.311	8,946.770	0.411	9,043.454	0.511	9,140.139	0.611	9,236.824	0.711	9,333.508	0.811	9,430.193	0.911	9,526.878
0.012	8,657.683	0.112	8,754.367	0.212	8,851.052	0.312	8,947.737	0.412	9,044.421	0.512	9,141.106	0.612	9,237.791	0.712	9,334.475	0.812	9,431.160	0.912	9,527.844
0.013	8,658.649	0.113	8,755.334	0.213	8,852.019	0.313	8,948.703	0.413	9,045.388	0.513	9,142.073	0.613	9,238.757	0.713	9,335.442	0.813	9,432.127	0.913	9,528.811
0.014	8,659.616	0.114	8,756.301	0.214	8,852.986	0.314	8,949.670	0.414	9,046.355	0.514	9,143.040	0.614	9,239.724	0.714	9,336.409	0.814	9,433.094	0.914	9,529.778
0.015	8,660.583	0.115	8,757.268	0.215	8,853.952	0.315	8,950.637	0.415	9,047.322	0.515	9,144.006	0.615	9,240.691	0.715	9,337.376	0.815	9,434.060	0.915	9,530.745
0.016	8,661.550	0.116	8,758.235	0.216	8,854.919	0.316	8,951.604	0.416	9,048.289	0.516	9,144.973	0.616	9,241.658	0.716	9,338.343	0.816	9,435.027	0.916	9,531.712
0.017	8,662.517	0.117	8,759.202	0.217	8,855.886	0.317	8,952.571	0.417	9,049.255	0.517	9,145.940	0.617	9,242.625	0.717	9,339.309	0.817	9,435.994	0.917	9,532.679
0.018	8,663.484	0.118	8,760.168	0.218	8,856.853	0.318	8,953.538	0.418	9,050.222	0.518	9,146.907	0.618	9,243.592	0.718	9,340.276	0.818	9,436.961	0.918	9,533.646
0.019	8,664.451	0.119	8,761.135	0.219	8,857.820	0.319	8,954.505	0.419	9,051.189	0.519	9,147.874	0.619	9,244.558	0.719	9,341.243	0.819	9,437.928	0.919	9,534.612
0.020	8,665.417	0.120	8,762.102	0.220	8,858.787	0.320	8,955.471	0.420	9,052.156	0.520	9,148.841	0.620	9,245.525	0.720	9,342.210	0.820	9,438.895	0.920	9,535.579
0.021	8,666.384	0.121	8,763.069	0.221	8,859.754	0.321	8,956.438	0.421	9,053.123	0.521	9,149.808	0.621	9,246.492	0.721	9,343.177	0.821	9,439.861	0.921	9,536.546
0.022	8,667.351	0.122	8,764.036	0.222	8,860.720	0.322	8,957.405	0.422	9,054.090	0.522	9,150.774	0.622	9,247.459	0.722	9,344.144	0.822	9,440.828	0.922	9,537.513
0.023	8,668.318	0.123	8,765.003	0.223	8,861.687	0.323	8,958.372	0.423	9,055.057	0.523	9,151.741	0.623	9,248.426	0.723	9,345.110	0.823	9,441.795	0.923	9,538.480
0.024	8,669.285	0.124	8,765.969	0.224	8,862.654	0.324	8,959.339	0.424	9,056.023	0.524	9,152.708	0.624	9,249.393	0.724	9,346.077	0.824	9,442.762	0.924	9,539.447
0.025	8,670.252	0.125	8,766.936	0.225	8,863.621	0.325	8,960.306	0.425	9,056.990	0.525	9,153.675	0.625	9,250.360	0.725	9,347.044	0.825	9,443.729	0.925	9,540.413
0.026	8,671.218	0.126	8,767.903	0.226	8,864.588	0.326	8,961.272	0.426	9,057.957	0.526	9,154.642	0.626	9,251.326	0.726	9,348.011	0.826	9,444.696	0.926	9,541.380
0.027	8,672.185	0.127	8,768.870	0.227	8,865.555	0.327	8,962.239	0.427	9,058.924	0.527	9,155.609	0.627	9,252.293	0.727	9,348.978	0.827	9,445.663	0.927	9,542.347
0.028	8,673.152	0.128	8,769.837	0.228	8,866.521	0.328	8,963.206	0.428	9,059.891	0.528	9,156.575	0.628	9,253.260	0.728	9,349.945	0.828	9,446.629	0.928	9,543.314
0.029	8,674.119	0.129	8,770.804	0.229	8,867.488	0.329	8,964.173	0.429	9,060.858	0.529	9,157.542	0.629	9,254.227	0.729	9,350.912	0.829	9,447.596	0.929	9,544.281
0.030	8,675.086	0.130	8,771.771	0.230	8,868.455	0.330	8,965.140	0.430	9,061.824	0.530	9,158.509	0.630	9,255.194	0.730	9,351.878	0.830	9,448.563	0.930	9,545.248
0.031	8,676.053	0.131	8,772.737	0.231	8,869.422	0.331	8,966.107	0.431	9,062.791	0.531	9,159.476	0.631	9,256.161	0.731	9,352.845	0.831	9,449.530	0.931	9,546.215
0.032	8,677.020	0.132	8,773.704	0.232	8,870.389	0.332	8,967.074	0.432	9,063.758	0.532	9,160.443	0.632	9,257.127	0.732	9,353.812	0.832	9,450.497	0.932	9,547.181
0.033	8,677.986	0.133	8,774.671	0.233	8,871.356	0.333	8,968.040	0.433	9,064.725	0.533	9,161.410	0.633	9,258.094	0.733	9,354.779	0.833	9,451.464	0.933	9,548.148
0.034	8,678.953	0.134	8,775.638	0.234	8,872.323	0.334	8,969.007	0.434	9,065.692	0.534	9,162.377	0.634	9,259.061	0.734	9,355.746	0.834	9,452.430	0.934	9,549.115
0.035	8,679.920	0.135	8,776.605	0.235	8,873.289	0.335	8,969.974	0.435	9,066.659	0.535	9,163.343	0.635	9,260.028	0.735	9,356.713	0.835	9,453.397	0.935	9,550.082
0.036	8,680.887	0.136	8,777.572	0.236	8,874.256	0.336	8,970.941	0.436	9,067.626	0.536	9,164.310	0.636	9,260.995	0.736	9,357.679	0.836	9,454.364	0.936	9,551.049
0.037	8,681.854	0.137	8,778.538	0.237	8,875.223	0.337	8,971.908	0.437	9,068.592	0.537	9,165.277	0.637	9,261.962	0.737	9,358.646	0.837	9,455.331	0.937	9,552.016
0.038	8,682.821	0.138	8,779.505	0.238	8,876.190	0.338	8,972.875	0.438	9,069.559	0.538	9,166.244	0.638	9,262.929	0.738	9,359.613	0.838	9,456.298	0.938	9,552.982
0.039	8,683.788	0.139	8,780.472	0.239	8,877.157	0.339	8,973.841	0.439	9,070.526	0.539	9,167.211	0.639	9,263.895	0.739	9,360.580	0.839	9,457.265	0.939	9,553.949
0.040	8,684.754	0.140	8,781.439	0.240	8,878.124	0.340	8,974.808	0.440	9,071.493	0.540	9,168.178	0.640	9,264.862	0.740	9,361.547	0.840	9,458.232	0.940	9,554.916
0.041	8,685.721	0.141	8,782.406	0.241	8,879.090	0.341	8,975.775	0.441	9,072.460	0.541	9,169.144	0.641	9,265.829	0.741	9,362.514	0.841	9,459.198	0.941	9,555.883
0.042	8,686.688	0.142	8,783.373	0.242	8,880.057	0.342	8,976.742	0.442	9,073.427	0.542	9,170.111	0.642	9,266.796	0.742	9,363.481	0.842	9,460.165	0.942	9,556.850
0.043	8,687.655	0.143	8,784.340	0.243	8,881.024	0.343	8,977.709	0.443	9,074.393	0.543	9,171.078	0.643	9,267.763	0.743	9,364.447	0.843	9,461.132	0.943	9,557.817
0.044	8,688.622	0.144	8,785.306	0.244	8,881.991	0.344	8,978.676	0.444	9,075.360	0.544	9,172.045	0.644	9,268.730	0.744	9,365.414	0.844	9,462.099	0.944	9,558.784
0.045	8,689.589	0.145	8,786.273	0.245	8,882.958	0.345	8,979.643	0.445	9,076.327	0.545	9,173.012	0.645	9,269.696	0.745	9,366.381	0.845	9,463.066	0.945	9,559.750
0.046	8,690.555	0.146	8,787.240	0.246	8,883.925	0.346	8,980.609	0.446	9,077.294	0.546	9,173.979	0.646	9,270.663	0.746	9,367.348	0.846	9,464.033	0.946	9,560.717
0.047	8,691.522	0.147	8,788.207	0.247	8,884.892	0.347	8,981.576	0.447	9,078.261	0.547	9,174.946	0.647	9,271.630	0.747	9,368.315	0.847	9,464.999	0.947	9,561.684
0.048	8,692.489	0.148	8,789.174	0.248	8,885.858	0.348	8,982.543	0.448	9,079.228	0.548	9,175.912	0.648	9,272.597	0.748	9,369.282	0.848	9,465.966	0.948	9,562.651
0.049	8,693.456	0.149	8,790.141	0.249	8,886.825	0.349	8,983.510	0.449	9,080.195	0.549	9,176.879	0.649	9,273.564	0.749	9,370.248	0.849	9,466.933	0.949	9,563.618
0.050	8,694.423	0.150	8,791.107	0.250	8,887.792	0.350	8,984.477	0.450	9,081.161	0.550	9,177.846	0.650	9,274.531	0.750	9,371.215	0.850	9,467.900	0.950	9,564.585
0.051	8,695.390	0.151	8,792.074	0.251	8,888.759	0.351	8,985.444	0.451	9,082.128	0.551	9,178.813	0.651	9,275.498	0.751	9,372.182	0.851	9,468.867	0.951	9,565.551
0.052	8,696.357	0.152	8,793.041	0.252	8,889.726	0.352	8,986.410	0.452	9,083.095	0.552	9,179.780	0.652	9,276.464	0.752	9,373.149	0.852	9,469.834	0.952	9,566.518
0.053	8,697.323	0.153	8,794.008	0.253	8,890.693	0.353	8,987.377	0.453	9,084.062	0.553	9,180.747	0.653	9,277.431	0.753	9,374.116	0.853	9,470.801	0.953	9,567.485
0.054	8,698.290	0.154	8,794.975	0.254	8,891.659	0.354	8,988.344	0.454	9,085.029	0.554	9,181.713	0.654	9,278.398	0.754	9,375.083	0.854	9,471.767	0.954	9,568.452
0.055	8,699.257	0.155	8,795.942	0.255	8,892.626	0.355	8,989.311	0.455	9,085.996	0.555	9,182.680	0.655	9,279.365	0.755	9,376.050	0.855	9,472.734	0.955	9,569.419
0.056	8,700.224	0.156	8,796.909	0.256	8,893.593	0.356	8,990.278	0.456	9,086.962	0.556	9,183.647	0.656	9,280.332	0.756	9,377.016	0.856	9,473.701	0.956	9,570.386
0.057	8,701.191	0.157	8,797.875	0.257	8,894.560	0.357	8,991.245	0.457	9,087.929	0.557	9,184.614	0.657	9,281.299	0.757	9,377.983	0.857	9,474.668	0.957	9,571.353
0.058	8,702.158	0.158	8,798.842	0.258	8,895.527	0.358	8,992.212	0.458	9,088.896	0.558	9,185.581	0.658	9,282.265	0.758	9,378.950	0.858	9,475.635	0.958	9,572.319
0.059	8,703.124	0.159	8,799.809	0.259	8,896.494	0.359	8,993.178	0.459	9,089.863	0.559	9,186.548	0.659	9,283.232	0.759	9,379.917	0.859	9,476.602	0.959	9,573.286
0.060	8,704.091	0.160	8,800.776	0.260	8,897.461	0.360	8,994.145	0.460	9,090.830	0.560	9,187.515	0.660	9,284.199	0.760	9,380.884	0.860	9,477.568	0.960	9,574.253
0.061	8,705.058	0.161	8,801.743	0.261	8,898.427	0.361	8,995.112	0.461	9,091.797	0.561	9,188.481	0.661	9,285.166	0.761	9,381.851	0.861	9,478.535	0.961	9,575.220
0.062	8,706.025	0.162	8,802.710	0.262	8,899.394	0.362	8,996.079	0.462	9,092.764	0.562	9,189.448	0.662	9,286.133	0.762	9,382.818	0.862	9,479.502	0.962	9,576.187
0.063	8,706.992	0.163	8,803.676	0.263	8,900.361	0.363	8,997.046	0.463	9,093.730	0.563	9,190.415	0.663	9,287.100	0.763	9,383.784	0.863	9,480.469	0.963	9,577.154
0.064	8,707.959	0.164	8,804.643	0.264	8,901.328	0.364	8,998.013	0.464	9,094.697	0.564	9,191.382	0.664	9,288.067	0.764	9,384.751	0.864	9,481.436	0.964	9,578.120
0.065	8,708.926	0.165	8,805.610	0.265	8,902.295	0.365	8,998.979	0.465	9,095.664	0.565	9,192.349	0.665	9,289.033	0.765	9,385.718	0.865	9,482.403	0.965	9,579.087
0.066	8,709.892	0.166	8,806.577	0.266	8,903.262	0.366	8,999.946	0.466	9,096.631	0.566	9,193.316	0.666	9,290.000	0.766	9,386.685	0.866	9,483.370	0.966	9,580.054
0.067	8,710.859	0.167	8,807.544	0.267	8,904.228	0.367	9,000.913	0.467	9,097.598	0.567	9,194.282	0.667	9,290.967	0.767	9,387.652	0.867	9,484.336	0.967	9,581.021
0.068	8,711.826	0.168	8,808.511	0.268	8,905.195	0.368	9,001.880	0.468	9,098.565	0.568	9,195.249	0.668	9,291.934	0.768	9,388.619	0.868	9,485.303	0.968	9,581.988
0.069	8,712.793	0.169	8,809.478	0.269	8,906.162	0.369	9,002.847	0.469	9,099.531	0.569	9,196.216	0.669	9,292.901	0.769	9,389.585	0.869	9,486.270	0.969	9,582.955
0.070	8,713.760	0.170	8,810.444	0.270	8,907.129	0.370	9,003.814	0.470	9,100.498	0.570	9,197.183	0.670	9,293.868	0.770	9,390.552	0.870	9,487.237	0.970	9,583.922
0.071	8,714.727	0.171	8,811.411	0.271	8,908.096	0.371	9,004.781	0.471	9,101.465	0.571	9,198.150	0.671	9,294.834	0.771	9,391.519	0.871	9,488.204	0.971	9,584.888
0.072	8,715.693	0.172	8,812.378	0.272	8,909.063	0.372	9,005.747	0.472	9,102.432	0.572	9,199.117	0.672	9,295.801	0.772	9,392.486	0.872	9,489.171	0.972	9,585.855
0.073	8,716.660	0.173	8,813.345	0.273	8,910.030	0.373	9,006.714	0.473	9,103.399	0.573	9,200.084	0.673	9,296.768	0.773	9,393.453	0.873	9,490.137	0.973	9,586.822
0.074	8,717.627	0.174	8,814.312	0.274	8,910.996	0.374	9,007.681	0.474	9,104.366	0.574	9,201.050	0.674	9,297.735	0.774	9,394.420	0.874	9,491.104	0.974	9,587.789
0.075	8,718.594	0.175	8,815.279	0.275	8,911.963	0.375	9,008.648	0.475	9,105.333	0.575	9,202.017	0.675	9,298.702	0.775	9,395.387	0.875	9,492.071	0.975	9,588.756
0.076	8,719.561	0.176	8,816.245	0.276	8,912.930	0.376	9,009.615	0.476	9,106.299	0.576	9,202.984	0.676	9,299.669	0.776	9,396.353	0.876	9,493.038	0.976	9,589.723
0.077	8,720.528	0.177	8,817.212	0.277	8,913.897	0.377	9,010.582	0.477	9,107.266	0.577	9,203.951	0.677	9,300.636	0.777	9,397.320	0.877	9,494.005	0.977	9,590.689
0.078	8,721.495	0.178	8,818.179	0.278	8,914.864	0.378	9,011.548	0.478	9,108.233	0.578	9,204.918	0.678	9,301.602	0.778	9,398.287	0.878	9,494.972	0.978	9,591.656
0.079	8,722.461	0.179	8,819.146	0.279	8,915.831	0.379	9,012.515	0.479	9,109.200	0.579	9,205.885	0.679	9,302.569	0.779	9,399.254	0.879	9,495.939	0.979	9,592.623
0.080	8,723.428	0.180	8,820.113	0.280	8,916.798	0.380	9,013.482	0.480	9,110.167	0.580	9,206.851	0.680	9,303.536	0.780	9,400.221	0.880	9,496.905	0.980	9,593.590
0.081	8,724.395	0.181	8,821.080	0.281	8,917.764	0.381	9,014.449	0.481	9,111.134	0.581	9,207.818	0.681	9,304.503	0.781	9,401.188	0.881	9,497.872	0.981	9,594.557
0.082	8,725.362	0.182	8,822.047	0.282	8,918.731	0.382	9,015.416	0.482	9,112.100	0.582	9,208.785	0.682	9,305.470	0.782	9,402.154	0.882	9,498.839	0.982	9,595.524
0.083	8,726.329	0.183	8,823.013	0.283	8,919.698	0.383	9,016.383	0.483	9,113.067	0.583	9,209.752	0.683	9,306.437	0.783	9,403.121	0.883	9,499.806	0.983	9,596.491
0.084	8,727.296	0.184	8,823.980	0.284	8,920.665	0.384	9,017.350	0.484	9,114.034	0.584	9,210.719	0.684	9,307.403	0.784	9,404.088	0.884	9,500.773	0.984	9,597.457
0.085	8,728.262	0.185	8,824.947	0.285	8,921.632	0.385	9,018.316	0.485	9,115.001	0.585	9,211.686	0.685	9,308.370	0.785	9,405.055	0.885	9,501.740	0.985	9,598.424
0.086	8,729.229	0.186	8,825.914	0.286	8,922.599	0.386	9,019.283	0.486	9,115.968	0.586	9,212.653	0.686	9,309.337	0.786	9,406.022	0.886	9,502.706	0.986	9,599.391
0.087	8,730.196	0.187	8,826.881	0.287	8,923.565	0.387	9,020.250	0.487	9,116.935	0.587	9,213.619	0.687	9,310.304	0.787	9,406.989	0.887	9,503.673	0.987	9,600.358
0.088	8,731.163	0.188	8,827.848	0.288	8,924.532	0.388	9,021.217	0.488	9,117.902	0.588	9,214.586	0.688	9,311.271	0.788	9,407.956	0.888	9,504.640	0.988	9,601.325
0.089	8,732.130	0.189	8,828.814	0.289	8,925.499	0.389	9,022.184	0.489	9,118.868	0.589	9,215.553	0.689	9,312.238	0.789	9,408.922	0.889	9,505.607	0.989	9,602.292
0.090	8,733.097	0.190	8,829.781	0.290	8,926.466	0.390	9,023.151	0.490	9,119.835	0.590	9,216.520	0.690	9,313.205	0.790	9,409.889	0.890	9,506.574	0.990	9,603.258
0.091	8,734.064	0.191	8,830.748	0.291	8,927.433	0.391	9,024.117	0.491	9,120.802	0.591	9,217.487	0.691	9,314.171	0.791	9,410.856	0.891	9,507.541	0.991	9,604.225
0.092	8,735.030	0.192	8,831.715	0.292	8,928.400	0.392	9,025.084	0.492	9,121.769	0.592	9,218.454	0.692	9,315.138	0.792	9,411.823	0.892	9,508.508	0.992	9,605.192
0.093	8,735.997	0.193	8,832.682	0.293	8,929.367	0.393	9,026.051	0.493	9,122.736	0.593	9,219.420	0.693	9,316.105	0.793	9,412.790	0.893	9,509.474	0.993	9,606.159
0.094	8,736.964	0.194	8,833.649	0.294	8,930.333	0.394	9,027.018	0.494	9,123.703	0.594	9,220.387	0.694	9,317.072	0.794	9,413.757	0.894	9,510.441	0.994	9,607.126
0.095	8,737.931	0.195	8,834.616	0.295	8,931.300	0.395	9,027.985	0.495	9,124.669	0.595	9,221.354	0.695	9,318.039	0.795	9,414.723	0.895	9,511.408	0.995	9,608.093
0.096	8,738.898	0.196	8,835.582	0.296	8,932.267	0.396	9,028.952	0.496	9,125.636	0.596	9,222.321	0.696	9,319.006	0.796	9,415.690	0.896	9,512.375	0.996	9,609.060
0.097	8,739.865	0.197	8,836.549	0.297	8,933.234	0.397	9,029.919	0.497	9,126.603	0.597	9,223.288	0.697	9,319.972	0.797	9,416.657	0.897	9,513.342	0.997	9,610.026
0.098	8,740.831	0.198	8,837.516	0.298	8,934.201	0.398	9,030.885	0.498	9,127.570	0.598	9,224.255	0.698	9,320.939	0.798	9,417.624	0.898	9,514.309	0.998	9,610.993
0.099	8,741.798	0.199	8,838.483	0.299	8,935.168	0.399	9,031.852	0.499	9,128.537	0.599	9,225.222	0.699	9,321.906	0.799	9,418.591	0.899	9,515.275	0.999	9,611.960

DATE STRAPPED: 09/19/17 BY: RJ
DATE COMPUTED: 09/26/17 BY: WLH
DATE ISSUED: 09/26/17

AMSPEC

Meliadine
Rankin Inlet

Tank No. 2
INNAGE TABLE

Calibration@AmSpecGroup.com

Item 20 - Final - Data Sheet (Innage)

CAPACITIES GIVEN IN CUBIC METERS

GAUGE HEIGHT: 14.269 M

mm	10 M	mm	10 M	mm	10 M	mm	10 M	mm	10 M	mm	10 M	mm	10 M	mm	10 M	mm	10 M	mm	10 M
0.000	9,612.927	0.100	9,709.612	0.200	9,806.296	0.300	9,902.981	0.400	9,999.666	0.500	10,096.350	0.600	10,193.035	0.700	10,289.719	0.800	10,386.404	0.900	10,483.089
0.001	9,613.894	0.101	9,710.578	0.201	9,807.263	0.301	9,903.948	0.401	10,000.632	0.501	10,097.317	0.601	10,194.002	0.701	10,290.686	0.801	10,387.371	0.901	10,484.056
0.002	9,614.861	0.102	9,711.545	0.202	9,808.230	0.302	9,904.915	0.402	10,001.599	0.502	10,098.284	0.602	10,194.969	0.702	10,291.653	0.802	10,388.338	0.902	10,485.022
0.003	9,615.828	0.103	9,712.512	0.203	9,809.197	0.303	9,905.881	0.403	10,002.566	0.503	10,099.251	0.603	10,195.935	0.703	10,292.620	0.803	10,389.305	0.903	10,485.989
0.004	9,616.794	0.104	9,713.479	0.204	9,810.164	0.304	9,906.848	0.404	10,003.533	0.504	10,100.218	0.604	10,196.902	0.704	10,293.587	0.804	10,390.272	0.904	10,486.956
0.005	9,617.761	0.105	9,714.446	0.205	9,811.130	0.305	9,907.815	0.405	10,004.500	0.505	10,101.184	0.605	10,197.869	0.705	10,294.554	0.805	10,391.238	0.905	10,487.923
0.006	9,618.728	0.106	9,715.413	0.206	9,812.097	0.306	9,908.782	0.406	10,005.467	0.506	10,102.151	0.606	10,198.836	0.706	10,295.521	0.806	10,392.205	0.906	10,488.890
0.007	9,619.695	0.107	9,716.380	0.207	9,813.064	0.307	9,909.749	0.407	10,006.433	0.507	10,103.118	0.607	10,199.803	0.707	10,296.487	0.807	10,393.172	0.907	10,489.857
0.008	9,620.662	0.108	9,717.346	0.208	9,814.031	0.308	9,910.716	0.408	10,007.400	0.508	10,104.085	0.608	10,200.770	0.708	10,297.454	0.808	10,394.139	0.908	10,490.824
0.009	9,621.629	0.109	9,718.313	0.209	9,814.998	0.309	9,911.683	0.409	10,008.367	0.509	10,105.052	0.609	10,201.736	0.709	10,298.421	0.809	10,395.106	0.909	10,491.790
0.010	9,622.595	0.110	9,719.280	0.210	9,815.965	0.310	9,912.649	0.410	10,009.334	0.510	10,106.019	0.610	10,202.703	0.710	10,299.388	0.810	10,396.073	0.910	10,492.757
0.011	9,623.562	0.111	9,720.247	0.211	9,816.932	0.311	9,913.616	0.411	10,010.301	0.511	10,106.986	0.611	10,203.670	0.711	10,300.355	0.811	10,397.039	0.911	10,493.724
0.012	9,624.529	0.112	9,721.214	0.212	9,817.898	0.312	9,914.583	0.412	10,011.268	0.512	10,107.952	0.612	10,204.637	0.712	10,301.322	0.812	10,398.006	0.912	10,494.691
0.013	9,625.496	0.113	9,722.181	0.213	9,818.865	0.313	9,915.550	0.413	10,012.235	0.513	10,108.919	0.613	10,205.604	0.713	10,302.288	0.813	10,398.973	0.913	10,495.658
0.014	9,626.463	0.114	9,723.147	0.214	9,819.832	0.314	9,916.517	0.414	10,013.201	0.514	10,109.886	0.614	10,206.571	0.714	10,303.255	0.814	10,399.940	0.914	10,496.625
0.015	9,627.430	0.115	9,724.114	0.215	9,820.799	0.315	9,917.484	0.415	10,014.168	0.515	10,110.853	0.615	10,207.538	0.715	10,304.222	0.815	10,400.907	0.915	10,497.591
0.016	9,628.397	0.116	9,725.081	0.216	9,821.766	0.316	9,918.450	0.416	10,015.135	0.516	10,111.820	0.616	10,208.504	0.716	10,305.189	0.816	10,401.874	0.916	10,498.558
0.017	9,629.363	0.117	9,726.048	0.217	9,822.733	0.317	9,919.417	0.417	10,016.102	0.517	10,112.787	0.617	10,209.471	0.717	10,306.156	0.817	10,402.841	0.917	10,499.525
0.018	9,630.330	0.118	9,727.015	0.218	9,823.699	0.318	9,920.384	0.418	10,017.069	0.518	10,113.753	0.618	10,210.438	0.718	10,307.123	0.818	10,403.807	0.918	10,500.492
0.019	9,631.297	0.119	9,727.982	0.219	9,824.666	0.319	9,921.351	0.419	10,018.036	0.519	10,114.720	0.619	10,211.405	0.719	10,308.090	0.819	10,404.774	0.919	10,501.459
0.020	9,632.264	0.120	9,728.949	0.220	9,825.633	0.320	9,922.318	0.420	10,019.002	0.520	10,115.687	0.620	10,212.372	0.720	10,309.056	0.820	10,405.741	0.920	10,502.426
0.021	9,633.231	0.121	9,729.915	0.221	9,826.600	0.321	9,923.285	0.421	10,019.969	0.521	10,116.654	0.621	10,213.339	0.721	10,310.023	0.821	10,406.708	0.921	10,503.393
0.022	9,634.198	0.122	9,730.882	0.222	9,827.567	0.322	9,924.252	0.422	10,020.936	0.522	10,117.621	0.622	10,214.305	0.722	10,310.990	0.822	10,407.675	0.922	10,504.359
0.023	9,635.164	0.123	9,731.849	0.223	9,828.534	0.323	9,925.218	0.423	10,021.903	0.523	10,118.588	0.623	10,215.272	0.723	10,311.957	0.823	10,408.642	0.923	10,505.326
0.024	9,636.131	0.124	9,732.816	0.224	9,829.501	0.324	9,926.185	0.424	10,022.870	0.524	10,119.555	0.624	10,216.239	0.724	10,312.924	0.824	10,409.608	0.924	10,506.293
0.025	9,637.098	0.125	9,733.783	0.225	9,830.467	0.325	9,927.152	0.425	10,023.837	0.525	10,120.521	0.625	10,217.206	0.725	10,313.891	0.825	10,410.575	0.925	10,507.260
0.026	9,638.065	0.126	9,734.750	0.226	9,831.434	0.326	9,928.119	0.426	10,024.804	0.526	10,121.488	0.626	10,218.173	0.726	10,314.857	0.826	10,411.542	0.926	10,508.227
0.027	9,639.032	0.127	9,735.716	0.227	9,832.401	0.327	9,929.086	0.427	10,025.770	0.527	10,122.455	0.627	10,219.140	0.727	10,315.824	0.827	10,412.509	0.927	10,509.194
0.028	9,639.999	0.128	9,736.683	0.228	9,833.368	0.328	9,930.053	0.428	10,026.737	0.528	10,123.422	0.628	10,220.107	0.728	10,316.791	0.828	10,413.476	0.928	10,510.160
0.029	9,640.966	0.129	9,737.650	0.229	9,834.335	0.329	9,931.019	0.429	10,027.704	0.529	10,124.389	0.629	10,221.073	0.729	10,317.758	0.829	10,414.443	0.929	10,511.127
0.030	9,641.932	0.130	9,738.617	0.230	9,835.302	0.330	9,931.986	0.430	10,028.671	0.530	10,125.356	0.630	10,222.040	0.730	10,318.725	0.830	10,415.410	0.930	10,512.094
0.031	9,642.899	0.131	9,739.584	0.231	9,836.268	0.331	9,932.953	0.431	10,029.638	0.531	10,126.322	0.631	10,223.007	0.731	10,319.692	0.831	10,416.376	0.931	10,513.061
0.032	9,643.866	0.132	9,740.551	0.232	9,837.235	0.332	9,933.920	0.432	10,030.605	0.532	10,127.289	0.632	10,223.974	0.732	10,320.659	0.832	10,417.343	0.932	10,514.028
0.033	9,644.833	0.133	9,741.518	0.233	9,838.202	0.333	9,934.887	0.433	10,031.571	0.533	10,128.256	0.633	10,224.941	0.733	10,321.625	0.833	10,418.310	0.933	10,514.995
0.034	9,645.800	0.134	9,742.484	0.234	9,839.169	0.334	9,935.854	0.434	10,032.538	0.534	10,129.223	0.634	10,225.908	0.734	10,322.592	0.834	10,419.277	0.934	10,515.962
0.035	9,646.767	0.135	9,743.451	0.235	9,840.136	0.335	9,936.821	0.435	10,033.505	0.535	10,130.190	0.635	10,226.874	0.735	10,323.559	0.835	10,420.244	0.935	10,516.928
0.036	9,647.733	0.136	9,744.418	0.236	9,841.103	0.336	9,937.787	0.436	10,034.472	0.536	10,131.157	0.636	10,227.841	0.736	10,324.526	0.836	10,421.211	0.936	10,517.895
0.037	9,648.700	0.137	9,745.385	0.237	9,842.070	0.337	9,938.754	0.437	10,035.439	0.537	10,132.124	0.637	10,228.808	0.737	10,325.493	0.837	10,422.177	0.937	10,518.862
0.038	9,649.667	0.138	9,746.352	0.238	9,843.036	0.338	9,939.721	0.438	10,036.406	0.538	10,133.090	0.638	10,229.775	0.738	10,326.460	0.838	10,423.144	0.938	10,519.829
0.039	9,650.634	0.139	9,747.319	0.239	9,844.003	0.339	9,940.688	0.439	10,037.373	0.539	10,134.057	0.639	10,230.742	0.739	10,327.427	0.839	10,424.111	0.939	10,520.796
0.040	9,651.601	0.140	9,748.285	0.240	9,844.970	0.340	9,941.655	0.440	10,038.339	0.540	10,135.024	0.640	10,231.709	0.740	10,328.393	0.840	10,425.078	0.940	10,521.763
0.041	9,652.568	0.141	9,749.252	0.241	9,845.937	0.341	9,942.622	0.441	10,039.306	0.541	10,135.991	0.641	10,232.676	0.741	10,329.360	0.841	10,426.045	0.941	10,522.729
0.042	9,653.535	0.142	9,750.219	0.242	9,846.904	0.342	9,943.588	0.442	10,040.273	0.542	10,136.958	0.642	10,233.642	0.742	10,330.327	0.842	10,427.012	0.942	10,523.696
0.043	9,654.501	0.143	9,751.186	0.243	9,847.871	0.343	9,944.555	0.443	10,041.240	0.543	10,137.925	0.643	10,234.609	0.743	10,331.294	0.843	10,427.979	0.943	10,524.663
0.044	9,655.468	0.144	9,752.153	0.244	9,848.838	0.344	9,945.522	0.444	10,042.207	0.544	10,138.891	0.644	10,235.576	0.744	10,332.261	0.844	10,428.945	0.944	10,525.630
0.045	9,656.435	0.145	9,753.120	0.245	9,849.804	0.345	9,946.489	0.445	10,043.174	0.545	10,139.858	0.645	10,236.543	0.745	10,333.228	0.845	10,429.912	0.945	10,526.597
0.046	9,657.402	0.146	9,754.087	0.246	9,850.771	0.346	9,947.456	0.446	10,044.140	0.546	10,140.825	0.646	10,237.510	0.746	10,334.194	0.846	10,430.879	0.946	10,527.564
0.047	9,658.369	0.147	9,755.053	0.247	9,851.738	0.347	9,948.423	0.447	10,045.107	0.547	10,141.792	0.647	10,238.477	0.747	10,335.161	0.847	10,431.846	0.947	10,528.531
0.048	9,659.336	0.148	9,756.020	0.248	9,852.705	0.348	9,949.390	0.448	10,046.074	0.548	10,142.759	0.648	10,239.443	0.748	10,336.128	0.848	10,432.813	0.948	10,529.497
0.049	9,660.302	0.149	9,756.987	0.249	9,853.672	0.349	9,950.356	0.449	10,047.041	0.549	10,143.726	0.649	10,240.410	0.749	10,337.095	0.849	10,433.780	0.949	10,530.464
0.050	9,661.269	0.150	9,757.954	0.250	9,854.639	0.350	9,951.323	0.450	10,048.008	0.550	10,144.693	0.650	10,241.377	0.750	10,338.062	0.850	10,434.746	0.950	10,531.431
0.051	9,662.236	0.151	9,758.921	0.251	9,855.605	0.351	9,952.290	0.451	10,048.975	0.551	10,145.659	0.651	10,242.344	0.751	10,339.029	0.851	10,435.713	0.951	10,532.398
0.052	9,663.203	0.152	9,759.888	0.252	9,856.572	0.352	9,953.257	0.452	10,049.942	0.552	10,146.626	0.652	10,243.311	0.752	10,339.996	0.852	10,436.680	0.952	10,533.365
0.053	9,664.170	0.153	9,760.854	0.253	9,857.539	0.353	9,954.224	0.453	10,050.908	0.553	10,147.593	0.653	10,244.278	0.753	10,340.962	0.853	10,437.647	0.953	10,534.332
0.054	9,665.137	0.154	9,761.821	0.254	9,858.506	0.354	9,955.191	0.454	10,051.875	0.554	10,148.560	0.654	10,245.245	0.754	10,341.929	0.854	10,438.614	0.954	10,535.298
0.055	9,666.104	0.155	9,762.788	0.255	9,859.473	0.355	9,956.157	0.455	10,052.842	0.555	10,149.527	0.655	10,246.211	0.755	10,342.896	0.855	10,439.581	0.955	10,536.265
0.056	9,667.070	0.156	9,763.755	0.256	9,860.440	0.356	9,957.124	0.456	10,053.809	0.556	10,150.494	0.656	10,247.178	0.756	10,343.863	0.856	10,440.548	0.956	10,537.232
0.057	9,668.037	0.157	9,764.722	0.257	9,861.407	0.357	9,958.091	0.457	10,054.776	0.557	10,151.460	0.657	10,248.145	0.757	10,344.830	0.857	10,441.514	0.957	10,538.199
0.058	9,669.004	0.158	9,765.689	0.258	9,862.373	0.358	9,959.058	0.458	10,055.743	0.558	10,152.427	0.658	10,249.112	0.758	10,345.797	0.858	10,442.481	0.958	10,539.166
0.059	9,669.971	0.159	9,766.656	0.259	9,863.340	0.359	9,960.025	0.459	10,056.709	0.559	10,153.394	0.659	10,250.079	0.759	10,346.763	0.859	10,443.448	0.959	10,540.133
0.060	9,670.938	0.160	9,767.622	0.260	9,864.307	0.360	9,960.992	0.460	10,057.676	0.560	10,154.361	0.660	10,251.046	0.760	10,347.730	0.860	10,444.415	0.960	10,541.100
0.061	9,671.905	0.161	9,768.589	0.261	9,865.274	0.361	9,961.959	0.461	10,058.643	0.561	10,155.328	0.661	10,252.012	0.761	10,348.697	0.861	10,445.382	0.961	10,542.066
0.062	9,672.871	0.162	9,769.556	0.262	9,866.241	0.362	9,962.925	0.462	10,059.610	0.562	10,156.295	0.662	10,252.979	0.762	10,349.664	0.862	10,446.349	0.962	10,543.033
0.063	9,673.838	0.163	9,770.523	0.263	9,867.208	0.363	9,963.892	0.463	10,060.577	0.563	10,157.262	0.663	10,253.946	0.763	10,350.631	0.863	10,447.315	0.963	10,544.000
0.064	9,674.805	0.164	9,771.490	0.264	9,868.174	0.364	9,964.859	0.464	10,061.544	0.564	10,158.228	0.664	10,254.913	0.764	10,351.598	0.864	10,448.282	0.964	10,544.967
0.065	9,675.772	0.165	9,772.457	0.265	9,869.141	0.365	9,965.826	0.465	10,062.511	0.565	10,159.195	0.665	10,255.880	0.765	10,352.565	0.865	10,449.249	0.965	10,545.934
0.066	9,676.739	0.166	9,773.423	0.266	9,870.108	0.366	9,966.793	0.466	10,063.477	0.566	10,160.162	0.666	10,256.847	0.766	10,353.531	0.866	10,450.216	0.966	10,546.901
0.067	9,677.706	0.167	9,774.390	0.267	9,871.075	0.367	9,967.760	0.467	10,064.444	0.567	10,161.129	0.667	10,257.814	0.767	10,354.498	0.867	10,451.183	0.967	10,547.867
0.068	9,678.673	0.168	9,775.357	0.268	9,872.042	0.368	9,968.726	0.468	10,065.411	0.568	10,162.096	0.668	10,258.780	0.768	10,355.465	0.868	10,452.150	0.968	10,548.834
0.069	9,679.639	0.169	9,776.324	0.269	9,873.009	0.369	9,969.693	0.469	10,066.378	0.569	10,163.063	0.669	10,259.747	0.769	10,356.432	0.869	10,453.117	0.969	10,549.801
0.070	9,680.606	0.170	9,777.291	0.270	9,873.976	0.370	9,970.660	0.470	10,067.345	0.570	10,164.029	0.670	10,260.714	0.770	10,357.399	0.870	10,454.083	0.970	10,550.768
0.071	9,681.573	0.171	9,778.258	0.271	9,874.942	0.371	9,971.627	0.471	10,068.312	0.571	10,164.996	0.671	10,261.681	0.771	10,358.366	0.871	10,455.050	0.971	10,551.735
0.072	9,682.540	0.172	9,779.225	0.272	9,875.909	0.372	9,972.594	0.472	10,069.278	0.572	10,165.963	0.672	10,262.648	0.772	10,359.332	0.872	10,456.017	0.972	10,552.702
0.073	9,683.507	0.173	9,780.191	0.273	9,876.876	0.373	9,973.561	0.473	10,070.245	0.573	10,166.930	0.673	10,263.615	0.773	10,360.299	0.873	10,456.984	0.973	10,553.669
0.074	9,684.474	0.174	9,781.158	0.274	9,877.843	0.374	9,974.528	0.474	10,071.212	0.574	10,167.897	0.674	10,264.581	0.774	10,361.266	0.874	10,457.951	0.974	10,554.635
0.075	9,685.440	0.175	9,782.125	0.275	9,878.810	0.375	9,975.494	0.475	10,072.179	0.575	10,168.864	0.675	10,265.548	0.775	10,362.233	0.875	10,458.918	0.975	10,555.602
0.076	9,686.407	0.176	9,783.092	0.276	9,879.777	0.376	9,976.461	0.476	10,073.146	0.576	10,169.831	0.676	10,266.515	0.776	10,363.200	0.876	10,459.884	0.976	10,556.569
0.077	9,687.374	0.177	9,784.059	0.277	9,880.743	0.377	9,977.428	0.477	10,074.113	0.577	10,170.797	0.677	10,267.482	0.777	10,364.167	0.877	10,460.851	0.977	10,557.536
0.078	9,688.341	0.178	9,785.026	0.278	9,881.710	0.378	9,978.395	0.478	10,075.080	0.578	10,171.764	0.678	10,268.449	0.778	10,365.134	0.878	10,461.818	0.978	10,558.503
0.079	9,689.308	0.179	9,785.992	0.279	9,882.677	0.379	9,979.362	0.479	10,076.046	0.579	10,172.731	0.679	10,269.416	0.779	10,366.100	0.879	10,462.785	0.979	10,559.470
0.080	9,690.275	0.180	9,786.959	0.280	9,883.644	0.380	9,980.329	0.480	10,077.013	0.580	10,173.698	0.680	10,270.383	0.780	10,367.067	0.880	10,463.752	0.980	10,560.437
0.081	9,691.242	0.181	9,787.926	0.281	9,884.611	0.381	9,981.295	0.481	10,077.980	0.581	10,174.665	0.681	10,271.349	0.781	10,368.034	0.881	10,464.719	0.981	10,561.403
0.082	9,692.208	0.182	9,788.893	0.282	9,885.578	0.382	9,982.262	0.482	10,078.947	0.582	10,175.632	0.682	10,272.316	0.782	10,369.001	0.882	10,465.686	0.982	10,562.370
0.083	9,693.175	0.183	9,789.860	0.283	9,886.545	0.383	9,983.229	0.483	10,079.914	0.583	10,176.598	0.683	10,273.283	0.783	10,369.968	0.883	10,466.652	0.983	10,563.337
0.084	9,694.142	0.184	9,790.827	0.284	9,887.511	0.384	9,984.196	0.484	10,080.881	0.584	10,177.565	0.684	10,274.250	0.784	10,370.935	0.884	10,467.619	0.984	10,564.304
0.085	9,695.109	0.185	9,791.794	0.285	9,888.478	0.385	9,985.163	0.485	10,081.848	0.585	10,178.532	0.685	10,275.217	0.785	10,371.901	0.885	10,468.586	0.985	10,565.271
0.086	9,696.076	0.186	9,792.760	0.286	9,889.445	0.386	9,986.130	0.486	10,082.814	0.586	10,179.499	0.686	10,276.184	0.786	10,372.868	0.886	10,469.553	0.986	10,566.238
0.087	9,697.043	0.187	9,793.727	0.287	9,890.412	0.387	9,987.097	0.487	10,083.781	0.587	10,180.466	0.687	10,277.150	0.787	10,373.835	0.887	10,470.520	0.987	10,567.204
0.088	9,698.009	0.188	9,794.694	0.288	9,891.379	0.388	9,988.063	0.488	10,084.748	0.588	10,181.433	0.688	10,278.117	0.788	10,374.802	0.888	10,471.487	0.988	10,568.171
0.089	9,698.976	0.189	9,795.661	0.289	9,892.346	0.389	9,989.030	0.489	10,085.715	0.589	10,182.400	0.689	10,279.084	0.789	10,375.769	0.889	10,472.453	0.989	10,569.138
0.090	9,699.943	0.190	9,796.628	0.290	9,893.312	0.390	9,989.997	0.490	10,086.682	0.590	10,183.366	0.690	10,280.051	0.790	10,376.736	0.890	10,473.420	0.990	10,570.105
0.091	9,700.910	0.191	9,797.595	0.291	9,894.279	0.391	9,990.964	0.491	10,087.649	0.591	10,184.333	0.691	10,281.018	0.791	10,377.703	0.891	10,474.387	0.991	10,571.072
0.092	9,701.877	0.192	9,798.561	0.292	9,895.246	0.392	9,991.931	0.492	10,088.615	0.592	10,185.300	0.692	10,281.985	0.792	10,378.669	0.892	10,475.354	0.992	10,572.039
0.093	9,702.844	0.193	9,799.528	0.293	9,896.213	0.393	9,992.898	0.493	10,089.582	0.593	10,186.267	0.693	10,282.952	0.793	10,379.636	0.893	10,476.321	0.993	10,573.006
0.094	9,703.811	0.194	9,800.495	0.294	9,897.180	0.394	9,993.864	0.494	10,090.549	0.594	10,187.234	0.694	10,283.918	0.794	10,380.603	0.894	10,477.288	0.994	10,573.972
0.095	9,704.777	0.195	9,801.462	0.295	9,898.147	0.395	9,994.831	0.495	10,091.516	0.595	10,188.201	0.695	10,284.885	0.795	10,381.570	0.895	10,478.255	0.995	10,574.939
0.096	9,705.744	0.196	9,802.429	0.296	9,899.114	0.396	9,995.798	0.496	10,092.483	0.596	10,189.167	0.696	10,285.852	0.796	10,382.537	0.896	10,479.221	0.996	10,575.906
0.097	9,706.711	0.197	9,803.396	0.297	9,900.080	0.397	9,996.765	0.497	10,093.450	0.597	10,190.134	0.697	10,286.819	0.797	10,383.504	0.897	10,480.188	0.997	10,576.873
0.098	9,707.678	0.198	9,804.363	0.298	9,901.047	0.398	9,997.732	0.498	10,094.417	0.598	10,191.101	0.698	10,287.786	0.798	10,384.470	0.898	10,481.155	0.998	10,577.840
0.099	9,708.645	0.199	9,805.329	0.299	9,902.014	0.399	9,998.699	0.499	10,095.383	0.599	10,192.068	0.699	10,288.753	0.799	10,385.437	0.899	10,482.122	0.999	10,578.807

DATE STRAPPED: 09/19/17 BY: RJ
DATE COMPUTED: 09/26/17 BY: WLH
DATE ISSUED: 09/26/17

AMSPEC

Meliadine
Rankin Inlet

Tank No. 2
INNAGE TABLE

Calibration@AmSpecGroup.com

Item 20 - Final - Data Sheet (Innage)

CAPACITIES GIVEN IN CUBIC METERS

GAUGE HEIGHT: 14.269 M

mm	11 M	mm	11 M	mm	11 M	mm	11 M	mm	11 M	mm	11 M	mm	11 M	mm	11 M	mm	11 M	mm	11 M
0.000	10,579.773	0.100	10,676.458	0.200	10,773.158	0.300	10,869.878	0.400	10,966.597	0.500	11,063.316	0.600	11,160.035	0.700	11,256.754	0.800	11,353.474	0.900	11,450.193
0.001	10,580.740	0.101	10,677.425	0.201	10,774.126	0.301	10,870.845	0.401	10,967.564	0.501	11,064.283	0.601	11,161.002	0.701	11,257.722	0.801	11,354.441	0.901	11,451.160
0.002	10,581.707	0.102	10,678.392	0.202	10,775.093	0.302	10,871.812	0.402	10,968.531	0.502	11,065.250	0.602	11,161.970	0.702	11,258.689	0.802	11,355.408	0.902	11,452.127
0.003	10,582.674	0.103	10,679.359	0.203	10,776.060	0.303	10,872.779	0.403	10,969.498	0.503	11,066.218	0.603	11,162.937	0.703	11,259.656	0.803	11,356.375	0.903	11,453.094
0.004	10,583.641	0.104	10,680.325	0.204	10,777.027	0.304	10,873.746	0.404	10,970.466	0.504	11,067.185	0.604	11,163.904	0.704	11,260.623	0.804	11,357.342	0.904	11,454.062
0.005	10,584.608	0.105	10,681.292	0.205	10,777.994	0.305	10,874.714	0.405	10,971.433	0.505	11,068.152	0.605	11,164.871	0.705	11,261.590	0.805	11,358.310	0.905	11,455.029
0.006	10,585.575	0.106	10,682.259	0.206	10,778.962	0.306	10,875.681	0.406	10,972.400	0.506	11,069.119	0.606	11,165.838	0.706	11,262.558	0.806	11,359.277	0.906	11,455.996
0.007	10,586.541	0.107	10,683.226	0.207	10,779.929	0.307	10,876.648	0.407	10,973.367	0.507	11,070.086	0.607	11,166.806	0.707	11,263.525	0.807	11,360.244	0.907	11,456.963
0.008	10,587.508	0.108	10,684.193	0.208	10,780.896	0.308	10,877.615	0.408	10,974.334	0.508	11,071.054	0.608	11,167.773	0.708	11,264.492	0.808	11,361.211	0.908	11,457.930
0.009	10,588.475	0.109	10,685.160	0.209	10,781.863	0.309	10,878.582	0.409	10,975.302	0.509	11,072.021	0.609	11,168.740	0.709	11,265.459	0.809	11,362.178	0.909	11,458.898
0.010	10,589.442	0.110	10,686.127	0.210	10,782.830	0.310	10,879.550	0.410	10,976.269	0.510	11,072.988	0.610	11,169.707	0.710	11,266.426	0.810	11,363.146	0.910	11,459.865
0.011	10,590.409	0.111	10,687.093	0.211	10,783.798	0.311	10,880.517	0.411	10,977.236	0.511	11,073.955	0.611	11,170.674	0.711	11,267.394	0.811	11,364.113	0.911	11,460.832
0.012	10,591.376	0.112	10,688.060	0.212	10,784.765	0.312	10,881.484	0.412	10,978.203	0.512	11,074.922	0.612	11,171.642	0.712	11,268.361	0.812	11,365.080	0.912	11,461.799
0.013	10,592.342	0.113	10,689.027	0.213	10,785.732	0.313	10,882.451	0.413	10,979.170	0.513	11,075.890	0.613	11,172.609	0.713	11,269.328	0.813	11,366.047	0.913	11,462.766
0.014	10,593.309	0.114	10,689.994	0.214	10,786.699	0.314	10,883.418	0.414	10,980.138	0.514	11,076.857	0.614	11,173.576	0.714	11,270.295	0.814	11,367.014	0.914	11,463.734
0.015	10,594.276	0.115	10,690.961	0.215	10,787.666	0.315	10,884.386	0.415	10,981.105	0.515	11,077.824	0.615	11,174.543	0.715	11,271.262	0.815	11,367.982	0.915	11,464.701
0.016	10,595.243	0.116	10,691.928	0.216	10,788.634	0.316	10,885.353	0.416	10,982.072	0.516	11,078.791	0.616	11,175.510	0.716	11,272.230	0.816	11,368.949	0.916	11,465.668
0.017	10,596.210	0.117	10,692.894	0.217	10,789.601	0.317	10,886.320	0.417	10,983.039	0.517	11,079.758	0.617	11,176.478	0.717	11,273.197	0.817	11,369.916	0.917	11,466.635
0.018	10,597.177	0.118	10,693.861	0.218	10,790.568	0.318	10,887.287	0.418	10,984.006	0.518	11,080.725	0.618	11,177.445	0.718	11,274.164	0.818	11,370.883	0.918	11,467.602
0.019	10,598.144	0.119	10,694.828	0.219	10,791.535	0.319	10,888.254	0.419	10,984.973	0.519	11,081.693	0.619	11,178.412	0.719	11,275.131	0.819	11,371.850	0.919	11,468.569
0.020	10,599.110	0.120	10,695.795	0.220	10,792.502	0.320	10,889.221	0.420	10,985.941	0.520	11,082.660	0.620	11,179.379	0.720	11,276.098	0.820	11,372.817	0.920	11,469.537
0.021	10,600.077	0.121	10,696.762	0.221	10,793.469	0.321	10,890.189	0.421	10,986.908	0.521	11,083.627	0.621	11,180.346	0.721	11,277.065	0.821	11,373.785	0.921	11,470.504
0.022	10,601.044	0.122	10,697.729	0.222	10,794.437	0.322	10,891.156	0.422	10,987.875	0.522	11,084.594	0.622	11,181.313	0.722	11,278.033	0.822	11,374.752	0.922	11,471.471
0.023	10,602.011	0.123	10,698.696	0.223	10,795.404	0.323	10,892.123	0.423	10,988.842	0.523	11,085.561	0.623	11,182.281	0.723	11,279.000	0.823	11,375.719	0.923	11,472.438
0.024	10,602.978	0.124	10,699.662	0.224	10,796.371	0.324	10,893.090	0.424	10,989.809	0.524	11,086.529	0.624	11,183.248	0.724	11,279.967	0.824	11,376.686	0.924	11,473.405
0.025	10,603.945	0.125	10,700.629	0.225	10,797.338	0.325	10,894.057	0.425	10,990.777	0.525	11,087.496	0.625	11,184.215	0.725	11,280.934	0.825	11,377.653	0.925	11,474.373
0.026	10,604.911	0.126	10,701.596	0.226	10,798.305	0.326	10,895.025	0.426	10,991.744	0.526	11,088.463	0.626	11,185.182	0.726	11,281.901	0.826	11,378.621	0.926	11,475.340
0.027	10,605.878	0.127	10,702.563	0.227	10,799.273	0.327	10,895.992	0.427	10,992.711	0.527	11,089.430	0.627	11,186.149	0.727	11,282.869	0.827	11,379.588	0.927	11,476.307
0.028	10,606.845	0.128	10,703.530	0.228	10,800.240	0.328	10,896.959	0.428	10,993.678	0.528	11,090.397	0.628	11,187.117	0.728	11,283.836	0.828	11,380.555	0.928	11,477.274
0.029	10,607.812	0.129	10,704.497	0.229	10,801.207	0.329	10,897.926	0.429	10,994.645	0.529	11,091.365	0.629	11,188.084	0.729	11,284.803	0.829	11,381.522	0.929	11,478.241
0.030	10,608.779	0.130	10,705.463	0.230	10,802.174	0.330	10,898.893	0.430	10,995.613	0.530	11,092.332	0.630	11,189.051	0.730	11,285.770	0.830	11,382.489	0.930	11,479.209
0.031	10,609.746	0.131	10,706.430	0.231	10,803.141	0.331	10,899.861	0.431	10,996.580	0.531	11,093.299	0.631	11,190.018	0.731	11,286.737	0.831	11,383.457	0.931	11,480.176
0.032	10,610.713	0.132	10,707.397	0.232	10,804.109	0.332	10,900.828	0.432	10,997.547	0.532	11,094.266	0.632	11,190.985	0.732	11,287.705	0.832	11,384.424	0.932	11,481.143
0.033	10,611.679	0.133	10,708.364	0.233	10,805.076	0.333	10,901.795	0.433	10,998.514	0.533	11,095.233	0.633	11,191.953	0.733	11,288.672	0.833	11,385.391	0.933	11,482.110
0.034	10,612.646	0.134	10,709.331	0.234	10,806.043	0.334	10,902.762	0.434	10,999.481	0.534	11,096.201	0.634	11,192.920	0.734	11,289.639	0.834	11,386.358	0.934	11,483.077
0.035	10,613.613	0.135	10,710.298	0.235	10,807.010	0.335	10,903.729	0.435	11,000.449	0.535	11,097.168	0.635	11,193.887	0.735	11,290.606	0.835	11,387.325	0.935	11,484.045
0.036	10,614.580	0.136	10,711.265	0.236	10,807.977	0.336	10,904.697	0.436	11,001.416	0.536	11,098.135	0.636	11,194.854	0.736	11,291.573	0.836	11,388.293	0.936	11,485.012
0.037	10,615.547	0.137	10,712.231	0.237	10,808.945	0.337	10,905.664	0.437	11,002.383	0.537	11,099.102	0.637	11,195.821	0.737	11,292.541	0.837	11,389.260	0.937	11,485.979
0.038	10,616.514	0.1380	10,713.198	0.238	10,809.912	0.338	10,906.631	0.438	11,003.350	0.538	11,100.069	0.638	11,196.789	0.738	11,293.508	0.838	11,390.227	0.938	11,486.946
0.039	10,617.480	0.139	10,714.165	0.239	10,810.879	0.339	10,907.598	0.439	11,004.317	0.539	11,101.037	0.639	11,197.756	0.739	11,294.475	0.839	11,391.194	0.939	11,487.913
0.040	10,618.447	0.140	10,715.132	0.240	10,811.846	0.340	10,908.565	0.440	11,005.285	0.540	11,102.004	0.640	11,198.723	0.740	11,295.442	0.840	11,392.161	0.940	11,488.881
0.041	10,619.414	0.141	10,716.099	0.241	10,812.813	0.341	10,909.533	0.441	11,006.252	0.541	11,102.971	0.641	11,199.690	0.741	11,296.409	0.841	11,393.129	0.941	11,489.848
0.042	10,620.381	0.142	10,717.066	0.242	10,813.781	0.342	10,910.500	0.442	11,007.219	0.542	11,103.938	0.642	11,200.657	0.742	11,297.377	0.842	11,394.096	0.942	11,490.815
0.043	10,621.348	0.143	10,718.033	0.243	10,814.748	0.343	10,911.467	0.443	11,008.186	0.543	11,104.905	0.643	11,201.624	0.743	11,298.344	0.843	11,395.063	0.943	11,491.782
0.044	10,622.315	0.144	10,719.000	0.244	10,815.715	0.344	10,912.434	0.444	11,009.153	0.544	11,105.872	0.644	11,202.592	0.744	11,299.311	0.844	11,396.030	0.944	11,492.749
0.045	10,623.282	0.145	10,719.967	0.245	10,816.682	0.345	10,913.401	0.445	11,010.120	0.545	11,106.840	0.645	11,203.559	0.745	11,300.278	0.845	11,396.997	0.945	11,493.716
0.046	10,624.248	0.146	10,720.934	0.246	10,817.649	0.346	10,914.368	0.446	11,011.088	0.546	11,107.807	0.646	11,204.526	0.746	11,301.245	0.846	11,397.964	0.946	11,494.684
0.047	10,625.215	0.147	10,721.901	0.247	10,818.616	0.347	10,915.336	0.447	11,012.055	0.547	11,108.774	0.647	11,205.493	0.747	11,302.212	0.847	11,398.932	0.947	11,495.651
0.048	10,626.182	0.148	10,722.868	0.248	10,819.584	0.348	10,916.303	0.448	11,013.022	0.548	11,109.741	0.648	11,206.460	0.748	11,303.180	0.848	11,399.899	0.948	11,496.618
0.049	10,627.149	0.149	10,723.835	0.249	10,820.551	0.349	10,917.270	0.449	11,013.989	0.549	11,110.708	0.649	11,207.428	0.749	11,304.147	0.849	11,400.866	0.949	11,497.585
0.050	10,628.116	0.150	10,724.802	0.250	10,821.518	0.350	10,918.237	0.450	11,014.956	0.550	11,111.676	0.650	11,208.395	0.750	11,305.114	0.850	11,401.833	0.950	11,498.552
0.051	10,629.083	0.151	10,725.769	0.251	10,822.485	0.351	10,919.204	0.451	11,015.924	0.551	11,112.643	0.651	11,209.362	0.751	11,306.081	0.851	11,402.800	0.951	11,499.520
0.052	10,630.049	0.152	10,726.736	0.252	10,823.452	0.352	10,920.172	0.452	11,016.891	0.552	11,113.610	0.652	11,210.329	0.752	11,307.048	0.852	11,403.768	0.952	11,500.487
0.053	10,631.016	0.153	10,727.703	0.253	10,824.420	0.353	10,921.139	0.453	11,017.858	0.553	11,114.577	0.653	11,211.296	0.753	11,308.016	0.853	11,404.735	0.953	11,501.454
0.054	10,631.983	0.154	10,728.670	0.254	10,825.387	0.354	10,922.106	0.454	11,018.825	0.554	11,115.544	0.654	11,212.264	0.754	11,308.983	0.854	11,405.702	0.954	11,502.421
0.055	10,632.950	0.155	10,729.637	0.255	10,826.354	0.355	10,923.073	0.455	11,019.792	0.555	11,116.512	0.655	11,213.231	0.755	11,309.950	0.855	11,406.669	0.955	11,503.388
0.056	10,633.917	0.156	10,730.604	0.256	10,827.321	0.356	10,924.040	0.456	11,020.760	0.556	11,117.479	0.656	11,214.198	0.756	11,310.917	0.856	11,407.636	0.956	11,504.356
0.057	10,634.884	0.157	10,731.571	0.257	10,828.288	0.357	10,925.008	0.457	11,021.727	0.557	11,118.446	0.657	11,215.165	0.757	11,311.884	0.857	11,408.604	0.957	11,505.323
0.058	10,635.851	0.158	10,732.538	0.258	10,829.256	0.358	10,925.975	0.458	11,022.694	0.558	11,119.413	0.658	11,216.132	0.758	11,312.852	0.858	11,409.571	0.958	11,506.290
0.059	10,636.817	0.159	10,733.505	0.259	10,830.223	0.359	10,926.942	0.459	11,023.661	0.559	11,120.380	0.659	11,217.100	0.759	11,313.819	0.859	11,410.538	0.959	11,507.257
0.060	10,637.784	0.160	10,734.472	0.260	10,831.190	0.360	10,927.909	0.460	11,024.628	0.560	11,121.348	0.660	11,218.067	0.760	11,314.786	0.860	11,411.505	0.960	11,508.224
0.061	10,638.751	0.161	10,735.439	0.261	10,832.157	0.361	10,928.876	0.461	11,025.596	0.561	11,122.315	0.661	11,219.034	0.761	11,315.753	0.861	11,412.472	0.961	11,509.192
0.062	10,639.718	0.162	10,736.406	0.262	10,833.124	0.362	10,929.844	0.462	11,026.563	0.562	11,123.282	0.662	11,220.001	0.762	11,316.720	0.862	11,413.440	0.962	11,510.159
0.063	10,640.685	0.163	10,737.373	0.263	10,834.092	0.363	10,930.811	0.463	11,027.530	0.563	11,124.249	0.663	11,220.968	0.763	11,317.688	0.863	11,414.407	0.963	11,511.126
0.064	10,641.652	0.164	10,738.340	0.264	10,835.059	0.364	10,931.778	0.464	11,028.497	0.564	11,125.216	0.664	11,221.936	0.764	11,318.655	0.864	11,415.374	0.964	11,512.093
0.065	10,642.618	0.165	10,739.307	0.265	10,836.026	0.365	10,932.745	0.465	11,029.464	0.565	11,126.184	0.665	11,222.903	0.765	11,319.622	0.865	11,416.341	0.965	11,513.060
0.066	10,643.585	0.166	10,740.274	0.266	10,836.993	0.366	10,933.712	0.466	11,030.432	0.566	11,127.151	0.666	11,223.870	0.766	11,320.589	0.866	11,417.308	0.966	11,514.028
0.067	10,644.552	0.167	10,741.241	0.267	10,837.960	0.367	10,934.680	0.467	11,031.399	0.567	11,128.118	0.667	11,224.837	0.767	11,321.556	0.867	11,418.276	0.967	11,514.995
0.068	10,645.519	0.168	10,742.208	0.268	10,838.928	0.368	10,935.647	0.468	11,032.366	0.568	11,129.085	0.668	11,225.804	0.768	11,322.523	0.868	11,419.243	0.968	11,515.962
0.069	10,646.486	0.169	10,743.175	0.269	10,839.895	0.369	10,936.614	0.469	11,033.333	0.569	11,130.052	0.669	11,226.771	0.769	11,323.491	0.869	11,420.210	0.969	11,516.929
0.070	10,647.453	0.170	10,744.143	0.270	10,840.862	0.370	10,937.581	0.470	11,034.300	0.570	11,131.019	0.670	11,227.739	0.770	11,324.458	0.870	11,421.177	0.970	11,517.896
0.071	10,648.420	0.171	10,745.110	0.271	10,841.829	0.371	10,938.548	0.471	11,035.267	0.571	11,131.987	0.671	11,228.706	0.771	11,325.425	0.871	11,422.144	0.971	11,518.863
0.072	10,649.386	0.172	10,746.077	0.272	10,842.796	0.372	10,939.515	0.472	11,036.235	0.572	11,132.954	0.672	11,229.673	0.772	11,326.392	0.872	11,423.111	0.972	11,519.831
0.073	10,650.353	0.173	10,747.044	0.273	10,843.763	0.373	10,940.483	0.473	11,037.202	0.573	11,133.921	0.673	11,230.640	0.773	11,327.359	0.873	11,424.079	0.973	11,520.798
0.074	10,651.320	0.174	10,748.011	0.274	10,844.731	0.374	10,941.450	0.474	11,038.169	0.574	11,134.888	0.674	11,231.607	0.774	11,328.327	0.874	11,425.046	0.974	11,521.765
0.075	10,652.287	0.175	10,748.979	0.275	10,845.698	0.375	10,942.417	0.475	11,039.136	0.575	11,135.855	0.675	11,232.575	0.775	11,329.294	0.875	11,426.013	0.975	11,522.732
0.076	10,653.254	0.176	10,749.946	0.276	10,846.665	0.376	10,943.384	0.476	11,040.103	0.576	11,136.823	0.676	11,233.542	0.776	11,330.261	0.876	11,426.980	0.976	11,523.699
0.077	10,654.221	0.177	10,750.913	0.277	10,847.632	0.377	10,944.351	0.477	11,041.071	0.577	11,137.790	0.677	11,234.509	0.777	11,331.228	0.877	11,427.947	0.977	11,524.667
0.078	10,655.187	0.178	10,751.880	0.278	10,848.599	0.378	10,945.319	0.478	11,042.038	0.578	11,138.757	0.678	11,235.476	0.778	11,332.195	0.878	11,428.915	0.978	11,525.634
0.079	10,656.154	0.179	10,752.847	0.279	10,849.567	0.379	10,946.286	0.479	11,043.005	0.579	11,139.724	0.679	11,236.443	0.779	11,333.163	0.879	11,429.882	0.979	11,526.601
0.080	10,657.121	0.180	10,753.815	0.280	10,850.534	0.380	10,947.253	0.480	11,043.972	0.580	11,140.691	0.680	11,237.411	0.780	11,334.130	0.880	11,430.849	0.980	11,527.568
0.081	10,658.088	0.181	10,754.782	0.281	10,851.501	0.381	10,948.220	0.481	11,044.939	0.581	11,141.659	0.681	11,238.378	0.781	11,335.097	0.881	11,431.816	0.981	11,528.535
0.082	10,659.055	0.182	10,755.749	0.282	10,852.468	0.382	10,949.187	0.482	11,045.907	0.582	11,142.626	0.682	11,239.345	0.782	11,336.064	0.882	11,432.783	0.982	11,529.503
0.083	10,660.022	0.183	10,756.716	0.283	10,853.435	0.383	10,950.155	0.483	11,046.874	0.583	11,143.593	0.683	11,240.312	0.783	11,337.031	0.883	11,433.751	0.983	11,530.470
0.084	10,660.989	0.184	10,757.683	0.284	10,854.403	0.384	10,951.122	0.484	11,047.841	0.584	11,144.560	0.684	11,241.279	0.784	11,337.999	0.884	11,434.718	0.984	11,531.437
0.085	10,661.955	0.185	10,758.651	0.285	10,855.370	0.385	10,952.089	0.485	11,048.808	0.585	11,145.527	0.685	11,242.247	0.785	11,338.966	0.885	11,435.685	0.985	11,532.404
0.086	10,662.922	0.186	10,759.618	0.286	10,856.337	0.386	10,953.056	0.486	11,049.775	0.586	11,146.495	0.686	11,243.214	0.786	11,339.933	0.886	11,436.652	0.986	11,533.371
0.087	10,663.889	0.187	10,760.585	0.287	10,857.304	0.387	10,954.023	0.487	11,050.743	0.587	11,147.462	0.687	11,244.181	0.787	11,340.900	0.887	11,437.619	0.987	11,534.339
0.088	10,664.856	0.188	10,761.552	0.288	10,858.271	0.388	10,954.991	0.488	11,051.710	0.588	11,148.429	0.688	11,245.148	0.788	11,341.867	0.888	11,438.587	0.988	11,535.306
0.089	10,665.823	0.189	10,762.519	0.289	10,859.239	0.389	10,955.958	0.489	11,052.677	0.589	11,149.396	0.689	11,246.115	0.789	11,342.835	0.889	11,439.554	0.989	11,536.273
0.090	10,666.790	0.190	10,763.487	0.290	10,860.206	0.390	10,956.925	0.490	11,053.644	0.590	11,150.363	0.690	11,247.083	0.790	11,343.802	0.890	11,440.521	0.990	11,537.240
0.091	10,667.756	0.191	10,764.454	0.291	10,861.173	0.391	10,957.892	0.491	11,054.611	0.591	11,151.331	0.691	11,248.050	0.791	11,344.769	0.891	11,441.488	0.991	11,538.207
0.092	10,668.723	0.192	10,765.421	0.292	10,862.140	0.392	10,958.859	0.492	11,055.579	0.592	11,152.298	0.692	11,249.017	0.792	11,345.736	0.892	11,442.455	0.992	11,539.175
0.093	10,669.690	0.193	10,766.388	0.293	10,863.107	0.393	10,959.827	0.493	11,056.546	0.593	11,153.265	0.693	11,249.984	0.793	11,346.703	0.893	11,443.422	0.993	11,540.142
0.094	10,670.657	0.194	10,767.355	0.294	10,864.074	0.394	10,960.794	0.494	11,057.513	0.594	11,154.232	0.694	11,250.951	0.794	11,347.670	0.894	11,444.390	0.994	11,541.109
0.095	10,671.624	0.195	10,768.322	0.295	10,865.042	0.395	10,961.761	0.495	11,058.480	0.595	11,155.199	0.695	11,251.918	0.795	11,348.638	0.895	11,445.357	0.995	11,542.076
0.096	10,672.591	0.196	10,769.290	0.296	10,866.009	0.396	10,962.728	0.496	11,059.447	0.596	11,156.166	0.696	11,252.886	0.796	11,349.605	0.896	11,446.324	0.996	11,543.043
0.097	10,673.558	0.197	10,770.257	0.297	10,866.976	0.397	10,963.695	0.497	11,060.414	0.597	11,157.134	0.697	11,253.853	0.797	11,350.572	0.897	11,447.291	0.997	11,544.010
0.098	10,674.524	0.198	10,771.224	0.298	10,867.943	0.398	10,964.662	0.498	11,061.382	0.598	11,158.101	0.698	11,254.820	0.798	11,351.539	0.898	11,448.258	0.998	11,544.978
0.099	10,675.491	0.199	10,772.191	0.299	10,868.910	0.399	10,965.630	0.499	11,062.349	0.599	11,159.068	0.699	11,255.787	0.799	11,352.506	0.899	11,449.226	0.999	11,545.945

DATE STRAPPED: 09/19/17 BY: RJ
DATE COMPUTED: 09/26/17 BY: WLH
DATE ISSUED: 09/26/17

AMSPEC

Meliadine
Rankin Inlet
Item 20 - Final - Data Sheet (Innage)

Tank No. 2
INNAGE TABLE

Calibration@AmSpecGroup.com

CAPACITIES GIVEN IN CUBIC METERS

GAUGE HEIGHT: 14.269 M

mm	12 M	mm	12 M	mm	12 M	mm	12 M	mm	12 M	mm	12 M	mm	12 M	mm	12 M	mm	12 M	mm	12 M
0.000	11,546.912	0.100	11,643.631	0.200	11,740.350	0.300	11,837.070	0.400	11,933.789	0.500	12,030.508	0.600	12,127.227	0.700	12,223.946	0.800	12,320.666	0.900	12,417.385
0.001	11,547.879	0.101	11,644.598	0.201	11,741.318	0.301	11,838.037	0.401	11,934.756	0.501	12,031.475	0.601	12,128.194	0.701	12,224.914	0.801	12,321.633	0.901	12,418.352
0.002	11,548.846	0.102	11,645.566	0.202	11,742.285	0.302	11,839.004	0.402	11,935.723	0.502	12,032.442	0.602	12,129.162	0.702	12,225.881	0.802	12,322.600	0.902	12,419.319
0.003	11,549.814	0.103	11,646.533	0.203	11,743.252	0.303	11,839.971	0.403	11,936.690	0.503	12,033.410	0.603	12,130.129	0.703	12,226.848	0.803	12,323.567	0.903	12,420.286
0.004	11,550.781	0.104	11,647.500	0.204	11,744.219	0.304	11,840.938	0.404	11,937.658	0.504	12,034.377	0.604	12,131.096	0.704	12,227.815	0.804	12,324.534	0.904	12,421.254
0.005	11,551.748	0.105	11,648.467	0.205	11,745.186	0.305	11,841.906	0.405	11,938.625	0.505	12,035.344	0.605	12,132.063	0.705	12,228.782	0.805	12,325.502	0.905	12,422.221
0.006	11,552.715	0.106	11,649.434	0.206	11,746.154	0.306	11,842.873	0.406	11,939.592	0.506	12,036.311	0.606	12,133.030	0.706	12,229.750	0.806	12,326.469	0.906	12,423.188
0.007	11,553.682	0.107	11,650.402	0.207	11,747.121	0.307	11,843.840	0.407	11,940.559	0.507	12,037.278	0.607	12,133.998	0.707	12,230.717	0.807	12,327.436	0.907	12,424.155
0.008	11,554.650	0.108	11,651.369	0.208	11,748.088	0.308	11,844.807	0.408	11,941.526	0.508	12,038.246	0.608	12,134.965	0.708	12,231.684	0.808	12,328.403	0.908	12,425.122
0.009	11,555.617	0.109	11,652.336	0.209	11,749.055	0.309	11,845.774	0.409	11,942.494	0.509	12,039.213	0.609	12,135.932	0.709	12,232.651	0.809	12,329.370	0.909	12,426.090
0.010	11,556.584	0.110	11,653.303	0.210	11,750.022	0.310	11,846.742	0.410	11,943.461	0.510	12,040.180	0.610	12,136.899	0.710	12,233.618	0.810	12,330.338	0.910	12,427.057
0.011	11,557.551	0.111	11,654.270	0.211	11,750.990	0.311	11,847.709	0.411	11,944.428	0.511	12,041.147	0.611	12,137.866	0.711	12,234.586	0.811	12,331.305	0.911	12,428.024
0.012	11,558.518	0.112	11,655.238	0.212	11,751.957	0.312	11,848.676	0.412	11,945.395	0.512	12,042.114	0.612	12,138.834	0.712	12,235.553	0.812	12,332.272	0.912	12,428.991
0.013	11,559.486	0.113	11,656.205	0.213	11,752.924	0.313	11,849.643	0.413	11,946.362	0.513	12,043.082	0.613	12,139.801	0.713	12,236.520	0.813	12,333.239	0.913	12,429.958
0.014	11,560.453	0.114	11,657.172	0.214	11,753.891	0.314	11,850.610	0.414	11,947.330	0.514	12,044.049	0.614	12,140.768	0.714	12,237.487	0.814	12,334.206	0.914	12,430.926
0.015	11,561.420	0.115	11,658.139	0.215	11,754.858	0.315	11,851.578	0.415	11,948.297	0.515	12,045.016	0.615	12,141.735	0.715	12,238.454	0.815	12,335.174	0.915	12,431.893
0.016	11,562.387	0.116	11,659.106	0.216	11,755.826	0.316	11,852.545	0.416	11,949.264	0.516	12,045.983	0.616	12,142.702	0.716	12,239.422	0.816	12,336.141	0.916	12,432.860
0.017	11,563.354	0.117	11,660.074	0.217	11,756.793	0.317	11,853.512	0.417	11,950.231	0.517	12,046.950	0.617	12,143.669	0.717	12,240.389	0.817	12,337.108	0.917	12,433.827
0.018	11,564.321	0.118	11,661.041	0.218	11,757.760	0.318	11,854.479	0.418	11,951.198	0.518	12,047.917	0.618	12,144.637	0.718	12,241.356	0.818	12,338.075	0.918	12,434.794
0.019	11,565.289	0.119	11,662.008	0.219	11,758.727	0.319	11,855.446	0.419	11,952.165	0.519	12,048.885	0.619	12,145.604	0.719	12,242.323	0.819	12,339.042	0.919	12,435.761
0.020	11,566.256	0.120	11,662.975	0.220	11,759.694	0.320	11,856.413	0.420	11,953.133	0.520	12,049.852	0.620	12,146.571	0.720	12,243.290	0.820	12,340.009	0.920	12,436.729
0.021	11,567.223	0.121	11,663.942	0.221	11,760.661	0.321	11,857.381	0.421	11,954.100	0.521	12,050.819	0.621	12,147.538	0.721	12,244.257	0.821	12,340.977	0.921	12,437.696
0.022	11,568.190	0.122	11,664.909	0.222	11,761.629	0.322	11,858.348	0.422	11,955.067	0.522	12,051.786	0.622	12,148.505	0.722	12,245.225	0.822	12,341.944	0.922	12,438.663
0.023	11,569.157	0.123	11,665.877	0.223	11,762.596	0.323	11,859.315	0.423	11,956.034	0.523	12,052.753	0.623	12,149.473	0.723	12,246.192	0.823	12,342.911	0.923	12,439.630
0.024	11,570.125	0.124	11,666.844	0.224	11,763.563	0.324	11,860.282	0.424	11,957.001	0.524	12,053.721	0.624	12,150.440	0.724	12,247.159	0.824	12,343.878	0.924	12,440.597
0.025	11,571.092	0.125	11,667.811	0.225	11,764.530	0.325	11,861.249	0.425	11,957.969	0.525	12,054.688	0.625	12,151.407	0.725	12,248.126	0.825	12,344.845	0.925	12,441.565
0.026	11,572.059	0.126	11,668.778	0.226	11,765.497	0.326	11,862.217	0.426	11,958.936	0.526	12,055.655	0.626	12,152.374	0.726	12,249.093	0.826	12,345.813	0.926	12,442.532
0.027	11,573.026	0.127	11,669.745	0.227	11,766.465	0.327	11,863.184	0.427	11,959.903	0.527	12,056.622	0.627	12,153.341	0.727	12,250.061	0.827	12,346.780	0.927	12,443.499
0.028	11,573.993	0.128	11,670.713	0.228	11,767.432	0.328	11,864.151	0.428	11,960.870	0.528	12,057.589	0.628	12,154.309	0.728	12,251.028	0.828	12,347.747	0.928	12,444.466
0.029	11,574.961	0.129	11,671.680	0.229	11,768.399	0.329	11,865.118	0.429	11,961.837	0.529	12,058.557	0.629	12,155.276	0.729	12,251.995	0.829	12,348.714	0.929	12,445.433
0.030	11,575.928	0.130	11,672.647	0.230	11,769.366	0.330	11,866.085	0.430	11,962.805	0.530	12,059.524	0.630	12,156.243	0.730	12,252.962	0.830	12,349.681	0.930	12,446.401
0.031	11,576.895	0.131	11,673.614	0.231	11,770.333	0.331	11,867.053	0.431	11,963.772	0.531	12,060.491	0.631	12,157.210	0.731	12,253.929	0.831	12,350.649	0.931	12,447.368
0.032	11,577.862	0.132	11,674.581	0.232	11,771.301	0.332	11,868.020	0.432	11,964.739	0.532	12,061.458	0.632	12,158.177	0.732	12,254.897	0.832	12,351.616	0.932	12,448.335
0.033	11,578.829	0.133	11,675.549	0.233	11,772.268	0.333	11,868.987	0.433	11,965.706	0.533	12,062.425	0.633	12,159.145	0.733	12,255.864	0.833	12,352.583	0.933	12,449.302
0.034	11,579.797	0.134	11,676.516	0.234	11,773.235	0.334	11,869.954	0.434	11,966.673	0.534	12,063.393	0.634	12,160.112	0.734	12,256.831	0.834	12,353.550	0.934	12,450.269
0.035	11,580.764	0.135	11,677.483	0.235	11,774.202	0.335	11,870.921	0.435	11,967.641	0.535	12,064.360	0.635	12,161.079	0.735	12,257.798	0.835	12,354.517	0.935	12,451.237
0.036	11,581.731	0.136	11,678.450	0.236	11,775.169	0.336	11,871.889	0.436	11,968.608	0.536	12,065.327	0.636	12,162.046	0.736	12,258.765	0.836	12,355.485	0.936	12,452.204
0.037	11,582.698	0.137	11,679.417	0.237	11,776.137	0.337	11,872.856	0.437	11,969.575	0.537	12,066.294	0.637	12,163.013	0.737	12,259.733	0.837	12,356.452	0.937	12,453.171
0.038	11,583.665	0.1380	11,680.385	0.238	11,777.104	0.338	11,873.823	0.438	11,970.542	0.538	12,067.261	0.638	12,163.981	0.738	12,260.700	0.838	12,357.419	0.938	12,454.138
0.039	11,584.633	0.139	11,681.352	0.239	11,778.071	0.339	11,874.790	0.439	11,971.509	0.539	12,068.229	0.639	12,164.948	0.739	12,261.667	0.839	12,358.386	0.939	12,455.105
0.040	11,585.600	0.140	11,682.319	0.240	11,779.038	0.340	11,875.757	0.440	11,972.477	0.540	12,069.196	0.640	12,165.915	0.740	12,262.634	0.840	12,359.353	0.940	12,456.073
0.041	11,586.567	0.141	11,683.286	0.241	11,780.005	0.341	11,876.725	0.441	11,973.444	0.541	12,070.163	0.641	12,166.882	0.741	12,263.601	0.841	12,360.320	0.941	12,457.040
0.042	11,587.534	0.142	11,684.253	0.242	11,780.972	0.342	11,877.692	0.442	11,974.411	0.542	12,071.130	0.642	12,167.849	0.742	12,264.568	0.842	12,361.288	0.942	12,458.007
0.043	11,588.501	0.143	11,685.220	0.243	11,781.940	0.343	11,878.659	0.443	11,975.378	0.543	12,072.097	0.643	12,168.816	0.743	12,265.536	0.843	12,362.255	0.943	12,458.974
0.044	11,589.468	0.144	11,686.188	0.244	11,782.907	0.344	11,879.626	0.444	11,976.345	0.544	12,073.064	0.644	12,169.784	0.744	12,266.503	0.844	12,363.222	0.944	12,459.941
0.045	11,590.436	0.145	11,687.155	0.245	11,783.874	0.345	11,880.593	0.445	11,977.312	0.545	12,074.032	0.645	12,170.751	0.745	12,267.470	0.845	12,364.189	0.945	12,460.908
0.046	11,591.403	0.146	11,688.122	0.246	11,784.841	0.346	11,881.560	0.446	11,978.280	0.546	12,074.999	0.646	12,171.718	0.746	12,268.437	0.846	12,365.156	0.946	12,461.876
0.047	11,592.370	0.147	11,689.089	0.247	11,785.808	0.347	11,882.528	0.447	11,979.247	0.547	12,075.966	0.647	12,172.685	0.747	12,269.404	0.847	12,366.124	0.947	12,462.843
0.048	11,593.337	0.148	11,690.056	0.248	11,786.776	0.348	11,883.495	0.448	11,980.214	0.548	12,076.933	0.648	12,173.652	0.748	12,270.372	0.848	12,367.091	0.948	12,463.810
0.049	11,594.304	0.149	11,691.024	0.249	11,787.743	0.349	11,884.462	0.449	11,981.181	0.549	12,077.900	0.649	12,174.620	0.749	12,271.339	0.849	12,368.058	0.949	12,464.777
0.050	11,595.272	0.150	11,691.991	0.250	11,788.710	0.350	11,885.429	0.450	11,982.148	0.550	12,078.868	0.650	12,175.587	0.750	12,272.306	0.850	12,369.025	0.950	12,465.744
0.051	11,596.239	0.151	11,692.958	0.251	11,789.677	0.351	11,886.396	0.451	11,983.116	0.551	12,079.835	0.651	12,176.554	0.751	12,273.273	0.851	12,369.992	0.951	12,466.712
0.052	11,597.206	0.152	11,693.925	0.252	11,790.644	0.352	11,887.364	0.452	11,984.083	0.552	12,080.802	0.652	12,177.521	0.752	12,274.240	0.852	12,370.960	0.952	12,467.679
0.053	11,598.173	0.153	11,694.892	0.253	11,791.612	0.353	11,888.331	0.453	11,985.050	0.553	12,081.769	0.653	12,178.488	0.753	12,275.208	0.853	12,371.927	0.953	12,468.646
0.054	11,599.140	0.154	11,695.860	0.254	11,792.579	0.354	11,889.298	0.454	11,986.017	0.554	12,082.736	0.654	12,179.456	0.754	12,276.175	0.854	12,372.894	0.954	12,469.613
0.055	11,600.108	0.155	11,696.827	0.255	11,793.546	0.355	11,890.265	0.455	11,986.984	0.555	12,083.704	0.655	12,180.423	0.755	12,277.142	0.855	12,373.861	0.955	12,470.580
0.056	11,601.075	0.156	11,697.794	0.256	11,794.513	0.356	11,891.232	0.456	11,987.952	0.556	12,084.671	0.656	12,181.390	0.756	12,278.109	0.856	12,374.828	0.956	12,471.548
0.057	11,602.042	0.157	11,698.761	0.257	11,795.480	0.357	11,892.200	0.457	11,988.919	0.557	12,085.638	0.657	12,182.357	0.757	12,279.076	0.857	12,375.796	0.957	12,472.515
0.058	11,603.009	0.158	11,699.728	0.258	11,796.448	0.358	11,893.167	0.458	11,989.886	0.558	12,086.605	0.658	12,183.324	0.758	12,280.044	0.858	12,376.763	0.958	12,473.482
0.059	11,603.976	0.159	11,700.696	0.259	11,797.415	0.359	11,894.134	0.459	11,990.853	0.559	12,087.572	0.659	12,184.292	0.759	12,281.011	0.859	12,377.730	0.959	12,474.449
0.060	11,604.944	0.160	11,701.663	0.260	11,798.382	0.360	11,895.101	0.460	11,991.820	0.560	12,088.540	0.660	12,185.259	0.760	12,281.978	0.860	12,378.697	0.960	12,475.416
0.061	11,605.911	0.161	11,702.630	0.261	11,799.349	0.361	11,896.068	0.461	11,992.788	0.561	12,089.507	0.661	12,186.226	0.761	12,282.945	0.861	12,379.664	0.961	12,476.384
0.062	11,606.878	0.162	11,703.597	0.262	11,800.316	0.362	11,897.036	0.462	11,993.755	0.562	12,090.474	0.662	12,187.193	0.762	12,283.912	0.862	12,380.632	0.962	12,477.351
0.063	11,607.845	0.163	11,704.564	0.263	11,801.284	0.363	11,898.003	0.463	11,994.722	0.563	12,091.441	0.663	12,188.160	0.763	12,284.880	0.863	12,381.599	0.963	12,478.318
0.064	11,608.812	0.164	11,705.532	0.264	11,802.251	0.364	11,898.970	0.464	11,995.689	0.564	12,092.408	0.664	12,189.128	0.764	12,285.847	0.864	12,382.566	0.964	12,479.285
0.065	11,609.780	0.165	11,706.499	0.265	11,803.218	0.365	11,899.937	0.465	11,996.656	0.565	12,093.376	0.665	12,190.095	0.765	12,286.814	0.865	12,383.533	0.965	12,480.252
0.066	11,610.747	0.166	11,707.466	0.266	11,804.185	0.366	11,900.904	0.466	11,997.624	0.566	12,094.343	0.666	12,191.062	0.766	12,287.781	0.866	12,384.500	0.966	12,481.219
0.067	11,611.714	0.167	11,708.433	0.267	11,805.152	0.367	11,901.871	0.467	11,998.591	0.567	12,095.310	0.667	12,192.029	0.767	12,288.748	0.867	12,385.467	0.967	12,482.187
0.068	11,612.681	0.168	11,709.400	0.268	11,806.119	0.368	11,902.839	0.468	11,999.558	0.568	12,096.277	0.668	12,192.996	0.768	12,289.715	0.868	12,386.435	0.968	12,483.154
0.069	11,613.648	0.169	11,710.367	0.269	11,807.087	0.369	11,903.806	0.469	12,000.525	0.569	12,097.244	0.669	12,193.963	0.769	12,290.683	0.869	12,387.402	0.969	12,484.121
0.070	11,614.615	0.170	11,711.335	0.270	11,808.054	0.370	11,904.773	0.470	12,001.492	0.570	12,098.211	0.670	12,194.931	0.770	12,291.650	0.870	12,388.369	0.970	12,485.088
0.071	11,615.583	0.171	11,712.302	0.271	11,809.021	0.371	11,905.740	0.471	12,002.459	0.571	12,099.179	0.671	12,195.898	0.771	12,292.617	0.871	12,389.336	0.971	12,486.055
0.072	11,616.550	0.172	11,713.269	0.272	11,809.988	0.372	11,906.707	0.472	12,003.427	0.572	12,100.146	0.672	12,196.865	0.772	12,293.584	0.872	12,390.303	0.972	12,487.023
0.073	11,617.517	0.173	11,714.236	0.273	11,810.955	0.373	11,907.675	0.473	12,004.394	0.573	12,101.113	0.673	12,197.832	0.773	12,294.551	0.873	12,391.271	0.973	12,487.990
0.074	11,618.484	0.174	11,715.203	0.274	11,811.923	0.374	11,908.642	0.474	12,005.361	0.574	12,102.080	0.674	12,198.799	0.774	12,295.519	0.874	12,392.238	0.974	12,488.957
0.075	11,619.451	0.175	11,716.171	0.275	11,812.890	0.375	11,909.609	0.475	12,006.328	0.575	12,103.047	0.675	12,199.767	0.775	12,296.486	0.875	12,393.205	0.975	12,489.924
0.076	11,620.419	0.176	11,717.138	0.276	11,813.857	0.376	11,910.576	0.476	12,007.295	0.576	12,104.015	0.676	12,200.734	0.776	12,297.453	0.876	12,394.172	0.976	12,490.891
0.077	11,621.386	0.177	11,718.105	0.277	11,814.824	0.377	11,911.543	0.477	12,008.263	0.577	12,104.982	0.677	12,201.701	0.777	12,298.420	0.877	12,395.139	0.977	12,491.859
0.078	11,622.353	0.178	11,719.072	0.278	11,815.791	0.378	11,912.511	0.478	12,009.230	0.578	12,105.949	0.678	12,202.668	0.778	12,299.387	0.878	12,396.107	0.978	12,492.826
0.079	11,623.320	0.179	11,720.039	0.279	11,816.759	0.379	11,913.478	0.479	12,010.197	0.579	12,106.916	0.679	12,203.635	0.779	12,300.355	0.879	12,397.074	0.979	12,493.793
0.080	11,624.287	0.180	11,721.007	0.280	11,817.726	0.380	11,914.445	0.480	12,011.164	0.580	12,107.883	0.680	12,204.603	0.780	12,301.322	0.880	12,398.041	0.980	12,494.760
0.081	11,625.255	0.181	11,721.974	0.281	11,818.693	0.381	11,915.412	0.481	12,012.131	0.581	12,108.851	0.681	12,205.570	0.781	12,302.289	0.881	12,399.008	0.981	12,495.727
0.082	11,626.222	0.182	11,722.941	0.282	11,819.660	0.382	11,916.379	0.482	12,013.099	0.582	12,109.818	0.682	12,206.537	0.782	12,303.256	0.882	12,399.975	0.982	12,496.695
0.083	11,627.189	0.183	11,723.908	0.283	11,820.627	0.383	11,917.347	0.483	12,014.066	0.583	12,110.785	0.683	12,207.504	0.783	12,304.223	0.883	12,400.943	0.983	12,497.662
0.084	11,628.156	0.184	11,724.875	0.284	11,821.595	0.384	11,918.314	0.484	12,015.033	0.584	12,111.752	0.684	12,208.471	0.784	12,305.191	0.884	12,401.910	0.984	12,498.629
0.085	11,629.123	0.185	11,725.843	0.285	11,822.562	0.385	11,919.281	0.485	12,016.000	0.585	12,112.719	0.685	12,209.439	0.785	12,306.158	0.885	12,402.877	0.985	12,499.596
0.086	11,630.091	0.186	11,726.810	0.286	11,823.529	0.386	11,920.248	0.486	12,016.967	0.586	12,113.687	0.686	12,210.406	0.786	12,307.125	0.886	12,403.844	0.986	12,500.563
0.087	11,631.058	0.187	11,727.777	0.287	11,824.496	0.387	11,921.215	0.487	12,017.935	0.587	12,114.654	0.687	12,211.373	0.787	12,308.092	0.887	12,404.811	0.987	12,501.531
0.088	11,632.025	0.188	11,728.744	0.288	11,825.463	0.388	11,922.183	0.488	12,018.902	0.588	12,115.621	0.688	12,212.340	0.788	12,309.059	0.888	12,405.779	0.988	12,502.498
0.089	11,632.992	0.189	11,729.711	0.289	11,826.431	0.389	11,923.150	0.489	12,019.869	0.589	12,116.588	0.689	12,213.307	0.789	12,310.027	0.889	12,406.746	0.989	12,503.465
0.090	11,633.959	0.190	11,730.679	0.290	11,827.398	0.390	11,924.117	0.490	12,020.836	0.590	12,117.555	0.690	12,214.275	0.790	12,310.994	0.890	12,407.713	0.990	12,504.432
0.091	11,634.927	0.191	11,731.646	0.291	11,828.365	0.391	11,925.084	0.491	12,021.803	0.591	12,118.523	0.691	12,215.242	0.791	12,311.961	0.891	12,408.680	0.991	12,505.399
0.092	11,635.894	0.192	11,732.613	0.292	11,829.332	0.392	11,926.051	0.492	12,022.770	0.592	12,119.490	0.692	12,216.209	0.792	12,312.928	0.892	12,409.647	0.992	12,506.366
0.093	11,636.861	0.193	11,733.580	0.293	11,830.299	0.393	11,927.018	0.493	12,023.738	0.593	12,120.457	0.693	12,217.176	0.793	12,313.895	0.893	12,410.614	0.993	12,507.334
0.094	11,637.828	0.194	11,734.547	0.294	11,831.266	0.394	11,927.986	0.494	12,024.705	0.594	12,121.424	0.694	12,218.143	0.794	12,314.862	0.894	12,411.582	0.994	12,508.301
0.095	11,638.795	0.195	11,735.514	0.295	11,832.234	0.395	11,928.953	0.495	12,025.672	0.595	12,122.391	0.695	12,219.110	0.795	12,315.830	0.895	12,412.549	0.995	12,509.268
0.096	11,639.762	0.196	11,736.482	0.296	11,833.201	0.396	11,929.920	0.496	12,026.639	0.596	12,123.358	0.696	12,220.078	0.796	12,316.797	0.896	12,413.516	0.996	12,510.235
0.097	11,640.730	0.197	11,737.449	0.297	11,834.168	0.397	11,930.887	0.497	12,027.606	0.597	12,124.326	0.697	12,221.045	0.797	12,317.764	0.897	12,414.483	0.997	12,511.202
0.098	11,641.697	0.198	11,738.416	0.298	11,835.135	0.398	11,931.854	0.498	12,028.574	0.598	12,125.293	0.698	12,222.012	0.798	12,318.731	0.898	12,415.450	0.998	12,512.170
0.099	11,642.664	0.199	11,739.383	0.299	11,836.102	0.399	11,932.822	0.499	12,029.541	0.599	12,126.260	0.699	12,222.979	0.799	12,319.698	0.899	12,416.418	0.999	12,513.137

DATE STRAPPED: 09/19/17 BY: RJ
DATE COMPUTED: 09/26/17 BY: WLH
DATE ISSUED: 09/26/17

AMSPEC

Meliadine
Rankin Inlet
Item 20 - Final - Data Sheet (Innage)

Tank No. 2
INNAGE TABLE

Calibration@AmSpecGroup.com

CAPACITIES GIVEN IN CUBIC METERS

GAUGE HEIGHT: 14.269 M

mm	13 M	mm	13 M	mm	13 M	mm	13 M	mm	13 M	mm	13 M	mm	13 M	mm	13 M	mm	13 M	mm	13 M
0.000	12,514.104	0.100	12,610.823	0.200	12,707.542	0.300	12,804.262	0.400	12,900.981	0.500	12,997.700	0.600	13,094.419	0.700	13,191.138	0.800	13,287.858	0.900	13,384.577
0.001	12,515.071	0.101	12,611.790	0.201	12,708.510	0.301	12,805.229	0.401	12,901.948	0.501	12,998.667	0.601	13,095.386	0.701	13,192.106	0.801	13,288.825	0.901	13,385.544
0.002	12,516.038	0.102	12,612.758	0.202	12,709.477	0.302	12,806.196	0.402	12,902.915	0.502	12,999.634	0.602	13,096.354	0.702	13,193.073	0.802	13,289.792	0.902	13,386.511
0.003	12,517.006	0.103	12,613.725	0.203	12,710.444	0.303	12,807.163	0.403	12,903.882	0.503	13,000.602	0.603	13,097.321	0.703	13,194.040	0.803	13,290.759	0.903	13,387.478
0.004	12,517.973	0.104	12,614.692	0.204	12,711.411	0.304	12,808.130	0.404	12,904.850	0.504	13,001.569	0.604	13,098.288	0.704	13,195.007	0.804	13,291.726	0.904	13,388.446
0.005	12,518.940	0.105	12,615.659	0.205	12,712.378	0.305	12,809.098	0.405	12,905.817	0.505	13,002.536	0.605	13,099.255	0.705	13,195.974	0.805	13,292.694	0.905	13,389.413
0.006	12,519.907	0.106	12,616.626	0.206	12,713.346	0.306	12,810.065	0.406	12,906.784	0.506	13,003.503	0.606	13,100.222	0.706	13,196.942	0.806	13,293.661	0.906	13,390.380
0.007	12,520.874	0.107	12,617.594	0.207	12,714.313	0.307	12,811.032	0.407	12,907.751	0.507	13,004.470	0.607	13,101.190	0.707	13,197.909	0.807	13,294.628	0.907	13,391.347
0.008	12,521.842	0.108	12,618.561	0.208	12,715.280	0.308	12,811.999	0.408	12,908.718	0.508	13,005.438	0.608	13,102.157	0.708	13,198.876	0.808	13,295.595	0.908	13,392.314
0.009	12,522.809	0.109	12,619.528	0.209	12,716.247	0.309	12,812.966	0.409	12,909.686	0.509	13,006.405	0.609	13,103.124	0.709	13,199.843	0.809	13,296.562	0.909	13,393.282
0.010	12,523.776	0.110	12,620.495	0.210	12,717.214	0.310	12,813.934	0.410	12,910.653	0.510	13,007.372	0.610	13,104.091	0.710	13,200.810	0.810	13,297.530	0.910	13,394.249
0.011	12,524.743	0.111	12,621.462	0.211	12,718.182	0.311	12,814.901	0.411	12,911.620	0.511	13,008.339	0.611	13,105.058	0.711	13,201.778	0.811	13,298.497	0.911	13,395.216
0.012	12,525.710	0.112	12,622.430	0.212	12,719.149	0.312	12,815.868	0.412	12,912.587	0.512	13,009.306	0.612	13,106.026	0.712	13,202.745	0.812	13,299.464	0.912	13,396.183
0.013	12,526.678	0.113	12,623.397	0.213	12,720.116	0.313	12,816.835	0.413	12,913.554	0.513	13,010.274	0.613	13,106.993	0.713	13,203.712	0.813	13,300.431	0.913	13,397.150
0.014	12,527.645	0.114	12,624.364	0.214	12,721.083	0.314	12,817.802	0.414	12,914.522	0.514	13,011.241	0.614	13,107.960	0.714	13,204.679	0.814	13,301.398	0.914	13,398.118
0.015	12,528.612	0.115	12,625.331	0.215	12,722.050	0.315	12,818.770	0.415	12,915.489	0.515	13,012.208	0.615	13,108.927	0.715	13,205.646	0.815	13,302.365	0.915	13,399.085
0.016	12,529.579	0.116	12,626.298	0.216	12,723.017	0.316	12,819.737	0.416	12,916.456	0.516	13,013.175	0.616	13,109.894	0.716	13,206.613	0.816	13,303.333	0.916	13,400.052
0.017	12,530.546	0.117	12,627.265	0.217	12,723.985	0.317	12,820.704	0.417	12,917.423	0.517	13,014.142	0.617	13,110.861	0.717	13,207.581	0.817	13,304.300	0.917	13,401.019
0.018	12,531.513	0.118	12,628.233	0.218	12,724.952	0.318	12,821.671	0.418	12,918.390	0.518	13,015.109	0.618	13,111.829	0.718	13,208.548	0.818	13,305.267	0.918	13,401.986
0.019	12,532.481	0.119	12,629.200	0.219	12,725.919	0.319	12,822.638	0.419	12,919.357	0.519	13,016.077	0.619	13,112.796	0.719	13,209.515	0.819	13,306.234	0.919	13,402.953
0.020	12,533.448	0.120	12,630.167	0.220	12,726.886	0.320	12,823.605	0.420	12,920.325	0.520	13,017.044	0.620	13,113.763	0.720	13,210.482	0.820	13,307.201	0.920	13,403.921
0.021	12,534.415	0.121	12,631.134	0.221	12,727.853	0.321	12,824.573	0.421	12,921.292	0.521	13,018.011	0.621	13,114.730	0.721	13,211.449	0.821	13,308.169	0.921	13,404.888
0.022	12,535.382	0.122	12,632.101	0.222	12,728.821	0.322	12,825.540	0.422	12,922.259	0.522	13,018.978	0.622	13,115.697	0.722	13,212.417	0.822	13,309.136	0.922	13,405.855
0.023	12,536.349	0.123	12,633.069	0.223	12,729.788	0.323	12,826.507	0.423	12,923.226	0.523	13,019.945	0.623	13,116.665	0.723	13,213.384	0.823	13,310.103	0.923	13,406.822
0.024	12,537.317	0.124	12,634.036	0.224	12,730.755	0.324	12,827.474	0.424	12,924.193	0.524	13,020.913	0.624	13,117.632	0.724	13,214.351	0.824	13,311.070	0.924	13,407.789
0.025	12,538.284	0.125	12,635.003	0.225	12,731.722	0.325	12,828.441	0.425	12,925.161	0.525	13,021.880	0.625	13,118.599	0.725	13,215.318	0.825	13,312.037	0.925	13,408.757
0.026	12,539.251	0.126	12,635.970	0.226	12,732.689	0.326	12,829.409	0.426	12,926.128	0.526	13,022.847	0.626	13,119.566	0.726	13,216.285	0.826	13,313.005	0.926	13,409.724
0.027	12,540.218	0.127	12,636.937	0.227	12,733.657	0.327	12,830.376	0.427	12,927.095	0.527	13,023.814	0.627	13,120.533	0.727	13,217.253	0.827	13,313.972	0.927	13,410.691
0.028	12,541.185	0.128	12,637.905	0.228	12,734.624	0.328	12,831.343	0.428	12,928.062	0.528	13,024.781	0.628	13,121.501	0.728	13,218.220	0.828	13,314.939	0.928	13,411.658
0.029	12,542.153	0.129	12,638.872	0.229	12,735.591	0.329	12,832.310	0.429	12,929.029	0.529	13,025.749	0.629	13,122.468	0.729	13,219.187	0.829	13,315.906	0.929	13,412.625
0.030	12,543.120	0.130	12,639.839	0.230	12,736.558	0.330	12,833.277	0.430	12,929.997	0.530	13,026.716	0.630	13,123.435	0.730	13,220.154	0.830	13,316.873	0.930	13,413.593
0.031	12,544.087	0.131	12,640.806	0.231	12,737.525	0.331	12,834.245	0.431	12,930.964	0.531	13,027.683	0.631	13,124.402	0.731	13,221.121	0.831	13,317.841	0.931	13,414.560
0.032	12,545.054	0.132	12,641.773	0.232	12,738.493	0.332	12,835.212	0.432	12,931.931	0.532	13,028.650	0.632	13,125.369	0.732	13,222.089	0.832	13,318.808	0.932	13,415.527
0.033	12,546.021	0.133	12,642.741	0.233	12,739.460	0.333	12,836.179	0.433	12,932.898	0.533	13,029.617	0.633	13,126.337	0.733	13,223.056	0.833	13,319.775	0.933	13,416.494
0.034	12,546.989	0.134	12,643.708	0.234	12,740.427	0.334	12,837.146	0.434	12,933.865	0.534	13,030.585	0.634	13,127.304	0.734	13,224.023	0.834	13,320.742	0.934	13,417.461
0.035	12,547.956	0.135	12,644.675	0.235	12,741.394	0.335	12,838.113	0.435	12,934.833	0.535	13,031.552	0.635	13,128.271	0.735	13,224.990	0.835	13,321.709	0.935	13,418.429
0.036	12,548.923	0.136	12,645.642	0.236	12,742.361	0.336	12,839.081	0.436	12,935.800	0.536	13,032.519	0.636	13,129.238	0.736	13,225.957	0.836	13,322.677	0.936	13,419.396
0.037	12,549.890	0.137	12,646.609	0.237	12,743.329	0.337	12,840.048	0.437	12,936.767	0.537	13,033.486	0.637	13,130.205	0.737	13,226.925	0.837	13,323.644	0.937	13,420.363
0.038	12,550.857	0.1380	12,647.577	0.238	12,744.296	0.338	12,841.015	0.438	12,937.734	0.538	13,034.453	0.638	13,131.173	0.738	13,227.892	0.838	13,324.611	0.938	13,421.330
0.039	12,551.825	0.139	12,648.544	0.239	12,745.263	0.339	12,841.982	0.439	12,938.701	0.539	13,035.421	0.639	13,132.140	0.739	13,228.859	0.839	13,325.578	0.939	13,422.297
0.040	12,552.792	0.140	12,649.511	0.240	12,746.230	0.340	12,842.949	0.440	12,939.668	0.540	13,036.388	0.640	13,133.107	0.740	13,229.826	0.840	13,326.545	0.940	13,423.264
0.041	12,553.759	0.141	12,650.478	0.241	12,747.197	0.341	12,843.916	0.441	12,940.636	0.541	13,037.355	0.641	13,134.074	0.741	13,230.793	0.841	13,327.512	0.941	13,424.232
0.042	12,554.726	0.142	12,651.445	0.242	12,748.164	0.342	12,844.884	0.442	12,941.603	0.542	13,038.322	0.642	13,135.041	0.742	13,231.760	0.842	13,328.480	0.942	13,425.199
0.043	12,555.693	0.143	12,652.412	0.243	12,749.132	0.343	12,845.851	0.443	12,942.570	0.543	13,039.289	0.643	13,136.008	0.743	13,232.728	0.843	13,329.447	0.943	13,426.166
0.044	12,556.660	0.144	12,653.380	0.244	12,750.099	0.344	12,846.818	0.444	12,943.537	0.544	13,040.256	0.644	13,136.976	0.744	13,233.695	0.844	13,330.414	0.944	13,427.133
0.045	12,557.628	0.145	12,654.347	0.245	12,751.066	0.345	12,847.785	0.445	12,944.504	0.545	13,041.224	0.645	13,137.943	0.745	13,234.662	0.845	13,331.381	0.945	13,428.100
0.046	12,558.595	0.146	12,655.314	0.246	12,752.033	0.346	12,848.752	0.446	12,945.472	0.546	13,042.191	0.646	13,138.910	0.746	13,235.629	0.846	13,332.348	0.946	13,429.068
0.047	12,559.562	0.147	12,656.281	0.247	12,753.000	0.347	12,849.720	0.447	12,946.439	0.547	13,043.158	0.647	13,139.877	0.747	13,236.596	0.847	13,333.316	0.947	13,430.035
0.048	12,560.529	0.148	12,657.248	0.248	12,753.968	0.348	12,850.687	0.448	12,947.406	0.548	13,044.125	0.648	13,140.844	0.748	13,237.564	0.848	13,334.283	0.948	13,431.002
0.049	12,561.496	0.149	12,658.216	0.249	12,754.935	0.349	12,851.654	0.449	12,948.373	0.549	13,045.092	0.649	13,141.812	0.749	13,238.531	0.849	13,335.250	0.949	13,431.969
0.050	12,562.464	0.150	12,659.183	0.250	12,755.902	0.350	12,852.621	0.450	12,949.340	0.550	13,046.060	0.650	13,142.779	0.750	13,239.498	0.850	13,336.217	0.950	13,432.936
0.051	12,563.431	0.151	12,660.150	0.251	12,756.869	0.351	12,853.588	0.451	12,950.308	0.551	13,047.027	0.651	13,143.746	0.751	13,240.465	0.851	13,337.184	0.951	13,433.904
0.052	12,564.398	0.152	12,661.117	0.252	12,757.836	0.352	12,854.556	0.452	12,951.275	0.552	13,047.994	0.652	13,144.713	0.752	13,241.432	0.852	13,338.152	0.952	13,434.871
0.053	12,565.365	0.153	12,662.084	0.253	12,758.804	0.353	12,855.523	0.453	12,952.242	0.553	13,048.961	0.653	13,145.680	0.753	13,242.400	0.853	13,339.119	0.953	13,435.838
0.054	12,566.332	0.154	12,663.052	0.254	12,759.771	0.354	12,856.490	0.454	12,953.209	0.554	13,049.928	0.654	13,146.648	0.754	13,243.367	0.854	13,340.086	0.954	13,436.805
0.055	12,567.300	0.155	12,664.019	0.255	12,760.738	0.355	12,857.457	0.455	12,954.176	0.555	13,050.896	0.655	13,147.615	0.755	13,244.334	0.855	13,341.053	0.955	13,437.772
0.056	12,568.267	0.156	12,664.986	0.256	12,761.705	0.356	12,858.424	0.456	12,955.144	0.556	13,051.863	0.656	13,148.582	0.756	13,245.301	0.856	13,342.020	0.956	13,438.740
0.057	12,569.234	0.157	12,665.953	0.257	12,762.672	0.357	12,859.392	0.457	12,956.111	0.557	13,052.830	0.657	13,149.549	0.757	13,246.268	0.857	13,342.988	0.957	13,439.156
0.058	12,570.201	0.158	12,666.920	0.258	12,763.640	0.358	12,860.359	0.458	12,957.078	0.558	13,053.797	0.658	13,150.516	0.758	13,247.236	0.858	13,343.955	0.958	
0.059	12,571.168	0.159	12,667.888	0.259	12,764.607	0.359	12,861.326	0.459	12,958.045	0.559	13,054.764	0.659	13,151.484	0.759	13,248.203	0.859	13,344.922	0.959	
0.060	12,572.136	0.160	12,668.855	0.260	12,765.574	0.360	12,862.293	0.460	12,959.012	0.560	13,055.732	0.660	13,152.451	0.760	13,249.170	0.860	13,345.889	0.960	
0.061	12,573.103	0.161	12,669.822	0.261	12,766.541	0.361	12,863.260	0.461	12,959.980	0.561	13,056.699	0.661	13,153.418	0.761	13,250.137	0.861	13,346.856	0.961	
0.062	12,574.070	0.162	12,670.789	0.262	12,767.508	0.362	12,864.228	0.462	12,960.947	0.562	13,057.666	0.662	13,154.385	0.762	13,251.104	0.862	13,347.824	0.962	
0.063	12,575.037	0.163	12,671.756	0.263	12,768.476	0.363	12,865.195	0.463	12,961.914	0.563	13,058.633	0.663	13,155.352	0.763	13,252.072	0.863	13,348.791	0.963	
0.064	12,576.004	0.164	12,672.724	0.264	12,769.443	0.364	12,866.162	0.464	12,962.881	0.564	13,059.600	0.664	13,156.320	0.764	13,253.039	0.864	13,349.758	0.964	
0.065	12,576.972	0.165	12,673.691	0.265	12,770.410	0.365	12,867.129	0.465	12,963.848	0.565	13,060.567	0.665	13,157.287	0.765	13,254.006	0.865	13,350.725	0.965	
0.066	12,577.939	0.166	12,674.658	0.266	12,771.377	0.366	12,868.096	0.466	12,964.815	0.566	13,061.535	0.666	13,158.254	0.766	13,254.973	0.866	13,351.692	0.966	
0.067	12,578.906	0.167	12,675.625	0.267	12,772.344	0.367	12,869.063	0.467	12,965.783	0.567	13,062.502	0.667	13,159.221	0.767	13,255.940	0.867	13,352.659	0.967	
0.068	12,579.873	0.168	12,676.592	0.268	12,773.311	0.368	12,870.031	0.468	12,966.750	0.568	13,063.469	0.668	13,160.188	0.768	13,256.907	0.868	13,353.627	0.968	
0.069	12,580.840	0.169	12,677.559	0.269	12,774.279	0.369	12,870.998	0.469	12,967.717	0.569	13,064.436	0.669	13,161.155	0.769	13,257.875	0.869	13,354.594	0.969	
0.070	12,581.807	0.170	12,678.527	0.270	12,775.246	0.370	12,871.965	0.470	12,968.684	0.570	13,065.403	0.670	13,162.123	0.770	13,258.842	0.870	13,355.561	0.970	
0.071	12,582.775	0.171	12,679.494	0.271	12,776.213	0.371	12,872.932	0.471	12,969.651	0.571	13,066.371	0.671	13,163.090	0.771	13,259.809	0.871	13,356.528	0.971	
0.072	12,583.742	0.172	12,680.461	0.272	12,777.180	0.372	12,873.899	0.472	12,970.619	0.572	13,067.338	0.672	13,164.057	0.772	13,260.776	0.872	13,357.495	0.972	
0.073	12,584.709	0.173	12,681.428	0.273	12,778.147	0.373	12,874.867	0.473	12,971.586	0.573	13,068.305	0.673	13,165.024	0.773	13,261.743	0.873	13,358.463	0.973	
0.074	12,585.676	0.174	12,682.395	0.274	12,779.115	0.374	12,875.834	0.474	12,972.553	0.574	13,069.272	0.674	13,165.991	0.774	13,262.711	0.874	13,359.430	0.974	
0.075	12,586.643	0.175	12,683.363	0.275	12,780.082	0.375	12,876.801	0.475	12,973.520	0.575	13,070.239	0.675	13,166.959	0.775	13,263.678	0.875	13,360.397	0.975	
0.076	12,587.611	0.176	12,684.330	0.276	12,781.049	0.376	12,877.768	0.476	12,974.487	0.576	13,071.207	0.676	13,167.926	0.776	13,264.645	0.876	13,361.364	0.976	
0.077	12,588.578	0.177	12,685.297	0.277	12,782.016	0.377	12,878.735	0.477	12,975.455	0.577	13,072.174	0.677	13,168.893	0.777	13,265.612	0.877	13,362.331	0.977	
0.078	12,589.545	0.178	12,686.264	0.278	12,782.983	0.378	12,879.703	0.478	12,976.422	0.578	13,073.141	0.678	13,169.860	0.778	13,266.579	0.878	13,363.299	0.978	
0.079	12,590.512	0.179	12,687.231	0.279	12,783.951	0.379	12,880.670	0.479	12,977.389	0.579	13,074.108	0.679	13,170.827	0.779	13,267.547	0.879	13,364.266	0.979	
0.080	12,591.479	0.180	12,688.199	0.280	12,784.918	0.380	12,881.637	0.480	12,978.356	0.580	13,075.075	0.680	13,171.795	0.780	13,268.514	0.880	13,365.233	0.980	
0.081	12,592.447	0.181	12,689.166	0.281	12,785.885	0.381	12,882.604	0.481	12,979.323	0.581	13,076.043	0.681	13,172.762	0.781	13,269.481	0.881	13,366.200	0.981	
0.082	12,593.414	0.182	12,690.133	0.282	12,786.852	0.382	12,883.571	0.482	12,980.291	0.582	13,077.010	0.682	13,173.729	0.782	13,270.448	0.882	13,367.167	0.982	
0.083	12,594.381	0.183	12,691.100	0.283	12,787.819	0.383	12,884.539	0.483	12,981.258	0.583	13,077.977	0.683	13,174.696	0.783	13,271.415	0.883	13,368.135	0.983	
0.084	12,595.348	0.184	12,692.067	0.284	12,788.787	0.384	12,885.506	0.484	12,982.225	0.584	13,078.944	0.684	13,175.663	0.784	13,272.383	0.884	13,369.102	0.984	
0.085	12,596.315	0.185	12,693.035	0.285	12,789.754	0.385	12,886.473	0.485	12,983.192	0.585	13,079.911	0.685	13,176.631	0.785	13,273.350	0.885	13,370.069	0.985	
0.086	12,597.283	0.186	12,694.002	0.286	12,790.721	0.386	12,887.440	0.486	12,984.159	0.586	13,080.879	0.686	13,177.598	0.786	13,274.317	0.886	13,371.036	0.986	
0.087	12,598.250	0.187	12,694.969	0.287	12,791.688	0.387	12,888.407	0.487	12,985.127	0.587	13,081.846	0.687	13,178.565	0.787	13,275.284	0.887	13,372.003	0.987	
0.088	12,599.217	0.188	12,695.936	0.288	12,792.655	0.388	12,889.375	0.488	12,986.094	0.588	13,082.813	0.688	13,179.532	0.788	13,276.251	0.888	13,372.971	0.988	
0.089	12,600.184	0.189	12,696.903	0.289	12,793.623	0.389	12,890.342	0.489	12,987.061	0.589	13,083.780	0.689	13,180.499	0.789	13,277.219	0.889	13,373.938	0.989	
0.090	12,601.151	0.190	12,697.871	0.290	12,794.590	0.390	12,891.309	0.490	12,988.028	0.590	13,084.747	0.690	13,181.466	0.790	13,278.186	0.890	13,374.905	0.990	
0.091	12,602.118	0.191	12,698.838	0.291	12,795.557	0.391	12,892.276	0.491	12,988.995	0.591	13,085.714	0.691	13,182.434	0.791	13,279.153	0.891	13,375.872	0.991	
0.092	12,603.086	0.192	12,699.805	0.292	12,796.524	0.392	12,893.243	0.492	12,989.962	0.592	13,086.682	0.692	13,183.401	0.792	13,280.120	0.892	13,376.839	0.992	
0.093	12,604.053	0.193	12,700.772	0.293	12,797.491	0.393	12,894.210	0.493	12,990.930	0.593	13,087.649	0.693	13,184.368	0.793	13,281.087	0.893	13,377.806	0.993	
0.094	12,605.020	0.194	12,701.739	0.294	12,798.458	0.394	12,895.178	0.494	12,991.897	0.594	13,088.616	0.694	13,185.335	0.794	13,282.054	0.894	13,378.774	0.994	
0.095	12,605.987	0.195	12,702.706	0.295	12,799.426	0.395	12,896.145	0.495	12,992.864	0.595	13,089.583	0.695	13,186.302	0.795	13,283.022	0.895	13,379.741	0.995	
0.096	12,606.954	0.196	12,703.674	0.296	12,800.393	0.396	12,897.112	0.496	12,993.831	0.596	13,090.550	0.696	13,187.270	0.796	13,283.989	0.896	13,380.708	0.996	
0.097	12,607.922	0.197	12,704.641	0.297	12,801.360	0.397	12,898.079	0.497	12,994.798	0.597	13,091.518	0.697	13,188.237	0.797	13,284.956	0.897	13,381.675	0.997	
0.098	12,608.889	0.198	12,705.608	0.298	12,802.327	0.398	12,899.046	0.498	12,995.766	0.598	13,092.485	0.698	13,189.204	0.798	13,285.923	0.898	13,382.642	0.998	
0.099	12,609.856	0.199	12,706.575	0.299	12,803.294	0.399	12,900.014	0.499	12,996.733	0.599	13,093.452	0.699	13,190.171	0.799	13,286.890	0.899	13,383.610	0.999	

DATE STRAPPED: 09/19/17 BY: RJ
DATE COMPUTED: 09/26/17 BY: WLH
DATE ISSUED: 09/26/17

AMSPEC

APPENDIX J

Inspection Report – Rankin Inlet Offsite and Onsite Fabrication

TETRA TECH

AGNICO EAGLE

Vendor Document Status

1 ☐	Proceed to next submission and status.
2 ☐	Proceed with exceptions as noted to next submission and status.
3 ☐	Do not proceed. Revise as noted and resubmit next submission and status.
4 ☐	Complete, no further submission required.

By: Date:

Review and authorization to fabricate are only for general conformance with the design concept of the Project as expressed in the Contract Documents. Sole responsibility for the accuracy and completeness of this document, including but not limited to dimensions and quantities, remains with the Supplier/Contractor. Agnico Eagle does not warrant the accuracy or completeness of any of the information contained herein, nor does Agnico Eagle authorize or approve any construction means, methods, techniques, sequences or any safety precautions or procedures.

Agnico Eagle No. 6515-C-270-007-141-QCR-0001 R: Sub003

DOCUMENT FOR INFORMATION

AGNICO EAGLE MINE

Contract No. 6515-C-270-007

NUQSANA PROMEC MINING SERVICES INC.

AGNICO EAGLE

C-22466T

Rankin Inlet

OffSite and OnSite Fabrication

Quality Control Documents

TABLE OF CONTENT

SECTION 1 – INSPECTION AND TEST PLAN

SECTION 1.1 – ITP-001- PUMPING STATION & ITP-002 - FUEL FARM – RANKIN INLET #
SECTION 1.2 – PROCEDURES SUBMITTED AND APPROVED #
SECTION 1.3 – DRAWINGS INDEX (IFC) LATEST REVISION #

SECTION 2 – ITP-001 & ITP-002 SPECIFIC

SECTION 2.1 – NON-CONFORMANCE REPORT & LOG – AEM-GE-ITR-002 / AEM-GE-LOG-002 #
SECTION 2.2 – WELD PROCEDURES SUBMITTED AND APPROVED SPECIFICATION/PROCEDURE #
SECTION 2.3 – WELDERS QUALIFICATION APPROVED #
SECTION 2.4 – INSPECTION DEFICIENCY REPORT & LOG – AEM-GE-ITR-005 / AEM-GE-LOG-004 #

SECTION 3 – ITP-001 PREPARATION ELECTRICAL & PUMPIPNG STATION (OFFSITE)

SECTION 3.1 – DIMENSION OF THE CONTAINER VERIFICATION – AIRMP REPORT #
SECTION 3.2 – INSULATION AND CLADDING VERIFICATION – AIRMP REPORT #
SECTION 3.3 – DOORS VERIFICATION – AIRMP REPORT #
SECTION 3.4 – EXTERIOR PAINT VERIFICATION – AIRMP REPORT #

SECTION 4 – ITP-002 FABRICATION (OFFSITE)

SECTION 4.1 – CATWALK #

SECTION 5 – ITP-001 & ITP-002 MECHANICAL & PIPING (OFFSITE)

SECTION 5.1 – FABRICATION OF PIPING SPOOLS – AEM-WE-ITR-001 / AEM-GE-LOG-005 #
SECTION 5.2 – PAINTING OF PIPING SPOOLS – AEM-PI-ITR-002 / UNIES-FAB REPORT #
SECTION 5.3 – PUMP INSTALLATION – AEM-ME-ITR-001 #
SECTION 5.4 – PIPING INSTALLATION – AEM-PI-ITR-002 #
SECTION 5.5 – SUPPORT FABRICATION AND INSTALLATION – AEM-PI-ITR-002 #
SECTION 5.6 – PERFORM ALL NON DESTRUCTIVE EXAMINATION – AEM-GE-LOG-005 / MISTRAS #
SECTION 5.7 – INSPECTION RELEASE PRIOR TO SHIPMENT #

SECTION 6 – ITP-001 & ITP-002 MECHANICAL & PIPING (ONSITE)

SECTION 6.1 – PIPING INSTALLATION – AEM-PI-ITR-002 #
SECTION 6.2 – PERFORM ALL NON DESTRUCTIVE EXAMINATION – AEM-GE-LOG-005 / MISTRAS #
SECTION 6.3 – PIPING TESTING AND CLEANING – AEM-PI-ITR-001 #
SECTION 6.4 – IDENTIFICATION OF PIPING – AEM-PI-ITR-002 #
SECTION 6.5 – INSTALL CONNECTING PIPING – AEM-PI-ITR-002 #
SECTION 6.6 – FIRE PROTECTION - VIKING #

SECTION 7 – ITP-001 & ITP-002 FINAL TURNOVER

SECTION 7.1 – CONSTRUCTION COMPLETION – AEM-GE-ITR-003 #
SECTION 7.2 – FINAL ACCEPTANCE OF TURNOVER PACKAGE #
SECTION 7.3 – DECLARATION OF COMPLETION – AEM-GE-ITR-004 #
SECTION 7.4 – AS-BUILT DRAWINGS #
SECTION 7.5 – WELD MAP #

AGNICO EAGLE

Vendor Document Status

1 ☐ Proceed to next submission and status.

2 ☐ Proceed with exceptions as noted to next submission and status.

3 ☐ Do not proceed.
Revise as noted and resubmit next submission and status.

4 ☑ Complete, no further submission required.

By: JEAN-FRANCOIS TREMBLAY Date: 2017-06-09

Review and authorization to fabricate are only for general conformance with the design concept of the Project as expressed in the Contract Documents. Sole responsibility for the accuracy and completeness of this document, including but not limited to dimensions and quantities, remains with the Supplier/Contractor. Agnico Eagle does not warrant the accuracy or completeness of any of the information contained herein, nor does Agnico Eagle authorize or approve any construction means, methods, techniques, sequences or any safety precautions or procedures.

Agnico Eagle No. 6515-C-270-007-141-TES-0031 R: Sub002

DOCUMENT FOR INFORMATION

Inspection and Testing Plan

NUQSANA PROMEC MINING

AGNICO EAGLE

Contract title:	Meliadine Fuel Tanks Piping Supply and Installation	ITP #	AEM-ITP-001
Contract number:	6515-C-270-007	Area	Rankin Inlet
Promec Ref.:	C22466T	System	Pumping container
Approved on :		Discipline	Mechanical Piping Structure
Approved by:			

Approval Signature

Updated on: 2017-06-06

Legend

H - Hold
W - Witness
I - Inspect
R - Review

Activity No. and CDRL Code	Activity Description (Per Scope of Work)	Responsibility Contractor and/or Sub	Acceptance Criteria (Specifications, Drawings, Industry Code, Regulatory Authority, Manufacturers O&M manual, Controlling Procedure, Quality/Engineering Bulletins, Other/ Site Quality Plan, Contractor Quality Manuals, etc.)	Verification Point: Contractor H W I R	Verification Point: Contractor Initials & Date	Verification Point: Client H W I R	Verification Point: Client Initials & Date	Verification Document(s) 1. List ONLY the Form(s) applicable to installation. 2. ▲ Commissioning Required Document
1.0	**GENERAL**							
1.1	Inspection and Test Plan	Promec / CLIENT		H/R		R		Approved ITP
1.2	Document review (Acquire and review all applicable documentation)	Promec / CLIENT	Quality Plan	H/R		R		
1.3	Procedures Submitted and Approved (Hydrostatic/Pneumatic Testing, Pre-Commissioning, etc.)	Promec / CLIENT	Quality Plan	H/R		R		All Applicable Approved Procedures
1.4	Drawing Index (IFC) to Latest Revision	Promec	Quality Plan	I/R				
2.0	**ITP SPECIFIC**							
2.1	Non-Conformance Report & Log (Both CLIENT & Contractor Issued)	Promec / CLIENT	Quality Plan	H/R		R		AEM-GE-ITR-002 (Non-Conformance Report) ▲ AEM-GE-LOG-002 (Non-Conformance Log)
2.2	Weld Procedures Submitted and Approved Specification/Procedure (WPS)	Promec / CLIENT	Quality Plan	H/R		R		Approved Procedure
2.3	Welders Qualification Approved	Promec / CLIENT	Quality Plan	H/R		R		Welders qualifications records
2.4	Inspect Material/Equipment for Damages or Deficiencies	Promec	Quality Plan	I/R		R		AEM-GE-ITR-005 (Inspection Deficiency Report) ▲ AEM-GE-LOG-004 (Inspection Deficiency Log)

Inspection and Testing Plan

NUQSANA PROMEC MINING

AGNICO EAGLE

Contract title: Meliadine Fuel Tanks Piping Supply and Installation
Contract number: 6515-C-270-007
Promec Ref.: C22466T

Approved on : _____
Approved by: _____

Approval Signature

ITP # AEM-ITP-001
Area Rankin Inlet
System Pumping container
Discipline Mechanical, Piping, Structure

Updated on: 2017-06-06

Legend
H - Hold
W - Witness
I - Inspect
R - Review

Activity No. and CDRL Code	Activity Description (Per Scope of Work)	Responsibility Contractor and/or Sub	Acceptance Criteria (Specifications, Drawings, Industry Code, Regulatory Authority, Manufacturers O&M manual, Controlling Procedure, Quality/Engineering Bulletins, Other/ Site Quality Plan, Contractor Quality Manuals, etc.)	Verification Point: Contractor H W I R	Verification Point: Contractor Initials & Date	Verification Point: Client H W I R	Verification Point: Client Initials & Date	Verification Document(s) 1. List ONLY the Form(s) applicable to installation. 2. ▲ Commissioning Required Document
3.0	**Preparation of the electrical and pumping station containers (Offsite)**							
3.1	Dimensions of the container verification	Promec / CLIENT / Third-Party	IFC Drawings	I/R		I		AirMP Report
3.2	Insulation and cladding verification	Promec / CLIENT / Third-Party	IFC Drawings	I/R		I		AirMP Report
3.3	Doors verification	Promec / CLIENT / Third-Party	6515-C-270-007-SPT-001_R3 (Technical Specifications)	I/R		I		AirMP Report
3.4	Exterior paint verification	Promec / CLIENT / Third-Party	AirMP specifications	I/R		I		AirMP Report
4.0	**Preparation of the DEF containers (Offsite)**							
4,1	Fabrication of the DEF containers	Promec / CLIENT / Third-Party	P.D.McLaren specifications	I/R		I		P.D.McLaren Report

Inspection and Testing Plan

NUQSANA PROMEC MINING

AGNICO EAGLE

Contract title: Meliadine Fuel Tanks Piping Supply and Installation
Contract number: 6515-C-270-007
Promec Ref.: C22466T

Approved on : _____
Approved by: _____

Approval Signature

ITP # AEM-ITP-001
Area Rankin Inlet
System Pumping container

Discipline Mechanical, Piping, Structure

Updated on: 2017-06-06

Legend
H - Hold
W - Witness
I - Inspect
R - Review

Activity No. and CDRL Code	Activity Description (Per Scope of Work)	Responsibility Contractor and/or Sub	Acceptance Criteria (Specifications, Drawings, Industry Code, Regulatory Authority, Manufacturers O&M manual, Controlling Procedure, Quality/Engineering Bulletins, Other/ Site Quality Plan, Contractor Quality Manuals, etc.)	Verification Point: Contractor H W I R	Verification Point: Contractor Initials & Date	Verification Point: Client H W I R	Verification Point: Client Initials & Date	Verification Document(s) 1. List ONLY the Form(s) applicable to installation. 2. ▲ Commissioning Required Document
5.0	**Mechanical & Piping (Offsite)**							
5,1	Fabrication of piping spools	Promec / CLIENT	AEM-PI-PRO-003 (Piping Erection Procedure) AEM-WE-PRO-001 (Welding Control Procedure)	W/R		W/R		AEM-WE-ITR-001 (Daily Weld Report) AEM-GE-LOG-005 (Weld Log)
5,2	Painting of the piping spools (Safety Orange)	Promec / CLIENT / Third-Party	6515-GGD-022_R0 (Project Standard paint specifications) AEM-PI-PRO-003 (Piping Erection Procedure)	I/R		I/R		Third-Party Report AEM-PI-ITR-002 (Check List for Pipe Systems)
5,3	Pump Installation	Promec / CLIENT	AEM-ME-PRO-001 (Pump Installation Procedure)	H/R		H/R		AEM-ME-ITR-001 (Pump Alignment Report)
5,4	Piping installation	Promec / CLIENT	AEM-PI-PRO-003 (Piping Erection Procedure) AEM-WE-PRO-001 (Welding Control Procedure) CODES / STANDARDS B31,3	I/R		I/R		AEM-PI-ITR-002 (Check List for Pipe Systems)
5,5	Support fabrication and installation	Promec / CLIENT / Third-Party	IFC Drawings AEM-PI-PRO-003 (Piping Erection Procedure)	W/R		W/R		Third-Party Report AEM-PI-ITR-002 (Check List for Pipe Systems)
5,6	Perform all non-destructive examination required (NDE)	Promec / CLIENT / Third-Party	AEM-WE-PRO-002 (Non-Destructive Exam. Procedure) 5%, by ultrasound or penetrating liquid	W/R		W/R		Third-Party Report AEM-GE-LOG-005 (Weld Log)
5,7	Inspection Release prior to shipment	Promec / CLIENT	7.01_R0_Packing_Shipping_Instruct (Shipping requirements for AEM)	H/R				Partial History Docket

Inspection and Testing Plan

NUQSANA PROMEC MINING

AGNICO EAGLE

Contract title:	Meliadine Fuel Tanks Piping Supply and Installation	ITP #	AEM-ITP-001
Contract number:	6515-C-270-007	Area	Rankin Inlet
Promec Ref.:	C22466T	System	Pumping container
Approved on :	_____	Discipline	Mechanical Piping Structure
Approved by:	_____		

Approval Signature

Updated on: 2017-06-06

Legend
H - Hold
W - Witness
I - Inspect
R - Review

Activity No. and CDRL Code	Activity Description (Per Scope of Work)	Responsibility Contractor and/or Sub	Acceptance Criteria (Specifications, Drawings, Industry Code, Regulatory Authority, Manufacturers O&M manual, Controlling Procedure, Quality/Engineering Bulletins, Other/ Site Quality Plan, Contractor Quality Manuals, etc.)	Verification Point				Verification Document(s) 1. List ONLY the Form(s) applicable to Installation. 2. ▲ Commissioning Required Document
				Contractor		Client		
				H W I R	Initials & Date	H W I R	Initials & Date	
6.0	Mechanical & Piping (Onsite)							
6,1	Piping installation	Promec / CLIENT	AEM-PI-PRO-003 (Piping Erection Procedure) AEM-WE-PRO-001 (Welding Control Procedure) CODES / STANDARDS B31,3	I/R		I/R		AEM-PI-ITR-002 (Check List for Pipe Systems)
6,2	Perform all non-destructive examination required (NDE)	Promec / CLIENT / Third-Party	AEM-WE-PRO-002 (Non-Destructive Exam. Procedure) 5%, by ultrasound or penetrating liquid	W/R		W/R		Third-Party Report AEM-GE-LOG-005 (Weld Log)
6,3	Piping Testing & Cleaning	Promec / CLIENT	AEM-PI-PRO-001 (Hydrostatic/Pneumatic Test Procedure)	H/R		H/R		▲ AEM-PI-ITR-001 (Pressure Test Report)
6,4	Identification of piping (tagging)	Promec / CLIENT	6515-C-270-007-SPT-001_R3 (Technical Specifications)	I/R		I/R		AEM-PI-ITR-002 (Check List for Pipe Systems)
6,5	Install connecting piping	Promec / CLIENT	AEM-PI-PRO-003 (Piping Erection Procedure) AEM-WE-PRO-001 (Welding Control Procedure)	W/R		W/R		AEM-PI-ITR-002 (Check List for Pipe Systems)

Inspection and Testing Plan

NUQSANA PROMEC MINING

AGNICO EAGLE

Contract title: Meliadine Fuel Tanks Piping Supply and Installation
Contract number: 6515-C-270-007
Promec Ref.: C22466T

Approved on : _____
Approved by: _____

Approval Signature

ITP #	**AEM-ITP-001**
Area	**Rankin Inlet**
System	**Pumping container**
Discipline	**Mechanical** **Piping** **Structure**

Updated on: 2017-06-06

Legend
H - Hold
W - Witness
I - Inspect
R - Review

Activity No. and CDRL Code	Activity Description (Per Scope of Work)	Responsibility Contractor and/or Sub	Acceptance Criteria (Specifications, Drawings, Industry Code, Regulatory Authority, Manufacturers O&M manual, Controlling Procedure, Quality/Engineering Bulletins, Other/ Site Quality Plan, Contractor Quality Manuals, etc.)	Verification Point				Verification Document(s) 1. List ONLY the Form(s) applicable to installation. 2. ▲ Commissioning Required Document
				Contractor		Client		
				H W I R	Initials & Date	H W I R	Initials & Date	
7.0	**FINAL TURNOVER**							
7,1	Construction Completion (Contractor Punchlist & Joint Walkdown Punchlist)	Promec / CLIENT	Quality Plan AEM-PI-PRO-002 (Pre-Commissioning Piping Procedure)	H/R		H/R		▲ AEM-GE-ITR-003 (Punchlist)
7,2	Final Acceptance of Turnover Package	Promec / CLIENT	Quality Plan	H/R		H/R		Signed ITP History Docket
7,3	Declaration of Completion	Promec	Quality Plan	H/R		H/R		AEM-GE-ITR-004 (Notice of Final Completion)
7,4	As-Built Drawings	Promec	Quality Plan	H/R		H/R		All Required As-Built Drawings
7,5	Weld Map	Promec	Quality Plan	H/R		H/R		All Required Weld Maps

PROMEC's Representatives			CLIENT's Representative	
QA/QC	Project Manager			
Name	Name		Name	
Signature	Signature	Date	Signature	Date

AGNICO EAGLE

Vendor Document Status

1 ☐ Proceed to next submission and status.

2 ☐ Proceed with exceptions as noted to next submission and status.

3 ☐ Do not proceed.
Revise as noted and resubmit next submission and status.

4 ☑ Complete, no further submission required.

By: JEAN-FRANCOIS TREMBLAY Date: 2017-06-09

Review and authorization to fabricate are only for general conformance with the design concept of the Project as expressed in the Contract Documents. Sole responsibility for the accuracy and completeness of this document, including but not limited to dimensions and quantities, remains with the Supplier/Contractor. Agnico Eagle does not warrant the accuracy or completeness of any of the information contained herein, nor does Agnico Eagle authorize or approve any construction means, methods, techniques, sequences or any safety precautions or procedures.

Agnico Eagle No. 6515-C-270-007-141-TES-0032 R: Sub002

DOCUMENT FOR INFORMATION

Inspection and Testing Plan

NUQSANA PROMEC MINING

AGNICO EAGLE

Contract title:	Meliadine Fuel Tanks Piping Supply and Installation	ITP #	AEM-ITP-002
Contract number:	6515-C-270-007	Area	Rankin Inlet
Promec Ref.:	C22466T	System	Fuel farm
Approved on :		Discipline	Mechanical Piping Structure
Approved by:			

Approval Signature

Updated on: 2017-06-06

Legend

H - Hold
W - Witness
I - Inspect
R - Review

Activity No. and CDRL Code	Activity Description (Per Scope of Work)	Responsibility Contractor and/or Sub	Acceptance Criteria (Specifications, Drawings, Industry Code, Regulatory Authority, Manufacturers O&M manual, Controlling Procedure, Quality/Engineering Bulletins, Other/ Site Quality Plan, Contractor Quality Manuals, etc.)	Verification Point: Contractor: H W I R	Contractor: Initials & Date	Client: H W I R	Client: Initials & Date	Verification Document(s) 1. List ONLY the Form(s) applicable to Installation. 2. ▲ Commissioning Required Document
1.0	**GENERAL**							
1.1	Inspection and Test Plan	Promec / CLIENT		H/R		R		Approved ITP
1.2	Document review (Acquire and review all applicable documentation)	Promec / CLIENT	Quality Plan	H/R		R		
1.3	Procedures Submitted and Approved (Hydrostatic/Pneumatic Testing, Pre-Commissioning, etc.)	Promec / CLIENT	Quality Plan	H/R		R		All Applicable Approved Procedures
1.4	Drawing Index (IFC) to Latest Revision	Promec	Quality Plan	I/R		R		VDRL
2.0	**ITP SPECIFIC**							
2.1	Non-Conformance Report & Log (Both CLIENT & Contractor Issued)	Promec / CLIENT	Quality Plan	H/R		H/R		AEM-GE-ITR-002 (Non-Conformance Report) ▲ AEM-GE-LOG-002 (Non-Conformance Log)
2.2	Weld Procedures Submitted and Approved Specification/Procedure (WPS)	Promec / CLIENT	Quality Plan	H/R		R		Approved Procedure
2.3	Welders Qualification Approved	Promec / CLIENT	Quality Plan	H/R		R		Welders Qualifications Records
2.4	Inspect Material/Equipment for Damages or Deficiencies	Promec	Quality Plan	I/R		R		AEM-GE-ITR-005 (Inspection Deficiency Report) ▲ AEM-GE-LOG-004 (Inspection Deficiency Log)
3.0	**Fabrication (Offsite)**							
3.1	Catwalks	Promec / CLIENT / Third-Party	IFC Drawings	W/R		W/R		Third-party-report
3.2	Steel fuel tanks	Promec / CLIENT / Third-Party	6515-C-270-007-SPT-001_R3 (Technical Specifications)	W/R		W/R		Third-party-report

Inspection and Testing Plan

NUQSANA PROMEC MINING

AGNICO EAGLE

Contract title: Meliadine Fuel Tanks Piping Supply and Installation
Contract number: 6515-C-270-007
Promec Ref.: C22466T

Approved on : _____
Approved by: _____

Approval Signature

ITP # AEM-ITP-002
Area Rankin Inlet
System Fuel farm
Discipline Mechanical, Piping, Structure

Updated on: 2017-06-06

Legend
H - Hold
W - Witness
I - Inspect
R - Review

Activity No. and CDRL Code	Activity Description (Per Scope of Work)	Responsibility Contractor and/or Sub	Acceptance Criteria (Specifications, Drawings, Industry Code, Regulatory Authority, Manufacturers O&M manual, Controlling Procedure, Quality/Engineering Bulletins, Other/ Site Quality Plan, Contractor Quality Manuals, etc.)	Verification Point: Contractor (H W I R)	Verification Point: Contractor (Initials & Date)	Verification Point: Client (H W I R)	Verification Point: Client (Initials & Date)	Verification Document(s) 1. List ONLY the Form(s) applicable to installation. 2. ▲ Commissioning Required Document
4.0	**Mechanical & Piping (Offsite)**							
4,1	Fabrication of piping spools	Promec / CLIENT	AEM-PI-PRO-003 (Piping Erection Procedure) AEM-WE-PRO-001 (Welding Control Procedure) CODES / STANDARDS B31,3	W/R		W/R		AEM-WE-ITR-001 (Daily Weld Report) AEM-GE-LOG-005 (Weld Log)
4,2	Painting of the piping spools (Safety Orange)	Promec / CLIENT / Third-Party	6515-GGD-022_R0 (Project Standard paint specifications) AEM-PI-PRO-003 (Piping Erection Procedure)	I/R		H/R		Third-Party Report AEM-PI-ITR-002 (Check List for Pipe Systems)
4,3	Support fabrication	Promec / CLIENT / Third-Party	IFC Drawings AEM-PI-PRO-003 (Piping Erection Procedure)	W/R		W/R		Third-Party Report AEM-PI-ITR-002 (Check List for Pipe Systems)
4,4	Perform all non-destructive examination required (NDE)	Promec / CLIENT / Third-Party	AEM-WE-PRO-002 (Non-Destructive Exam. Procedure) 5%, by ultrasound or penetrating liquid	W/R		W/R		Third-Party Report AEM-GE-LOG-005 (Weld Log)
4,5	Inspection Release prior to shipment	Promec / CLIENT	7.01_R0_Packing_Shipping_Instruct (Shipping requirements for AEM)	H/R		H/R		Partial History Docket

Inspection and Testing Plan

NUQSANA PROMEC MINING

AGNICO EAGLE

Contract title: Meliadine Fuel Tanks Piping Supply and Installation
Contract number: 6515-C-270-007
Promec Ref.: C22466T

Approved on : _____
Approved by: _____

Approval Signature

ITP # AEM-ITP-002
Area Rankin Inlet
System Fuel farm

Discipline Mechanical / Piping / Structure

Updated on: 2017-06-06

Legend
H - Hold
W - Witness
I - Inspect
R - Review

Activity No. and CDRL Code	Activity Description (Per Scope of Work)	Responsibility Contractor and/or Sub	Acceptance Criteria (Specifications, Drawings, Industry Code, Regulatory Authority, Manufacturers O&M manual, Controlling Procedure, Quality/Engineering Bulletins, Other/ Site Quality Plan, Contractor Quality Manuals, etc.)	Verification Point: Contractor: H W I R	Contractor: Initials & Date	Client: H W I R	Client: Initials & Date	Verification Document(s) 1. List ONLY the Form(s) applicable to installation. 2. ▲ Commissioning Required Document
5.0	Mechanical & Piping (Onsite)							
5.1	Installation of the tanks	Promec / CLIENT	AEM-ME-PRO-002 (Fuel Tank Installation Procedure)	W/R		W/R		AEM-ME-ITR-003 (Fuel Tank Checklist)
5.2	Installation of the catwalks	Promec / CLIENT	AEM-PI-PRO-003 (Piping Erection Procedure)	I/R		I/R		AEM-ME-ITR-004 Catwalks & Stairways Checklist
5.3	Support fabrication and installation	Promec / CLIENT	AEM-PI-PRO-003 (Piping Erection Procedure)	W/R		I		AEM-PI-ITR-002 (Check List for Pipe Systems)
5.4	Piping installation	Promec / CLIENT	AEM-PI-PRO-003 (Piping Erection Procedure) AEM-WE-PRO-001 (Welding Control Procedure) CODES / STANDARDS B31,3	I/R		I/R		AEM-PI-ITR-002 (Check List for Pipe Systems)
5.5	Perform all non-destructive examination required (NDE)	Promec / CLIENT / Third-Party	AEM-WE-PRO-002 (Non-Destructive Exam. Procedure) 5%, by ultrasound or penetrating liquid	W/R		W/R		Third-Party Report AEM-GE-LOG-005 (Weld Log)
5.6	Piping Testing & Cleaning	Promec / CLIENT	AEM-PI-PRO-001 (Hydrostatic/Pneumatic Test Procedure)	H/R		H/R		▲ AEM-PI-ITR-001 (Pressure Test Report)
5.7	Identification of piping (tagging)	Promec / CLIENT	6515-C-270-007-SPT-001_R3 (Technical Specifications)	I/R		I		AEM-PI-ITR-002 (Check List for Pipe Systems)

Inspection and Testing Plan

NUQSANA PROMEC MINING

AGNICO EAGLE

Contract title:	Meliadine Fuel Tanks Piping Supply and Installation	ITP #	AEM-ITP-002
Contract number:	6515-C-270-007	Area	Rankin Inlet
Promec Ref.:	C22466T	System	Fuel farm
Approved on :		Discipline	Mechanical Piping Structure
Approved by:			

Approval Signature

Updated on: 2017-06-06

Legend

H - Hold
W - Witness
I - Inspect
R - Review

Activity No. and CDRL Code	Activity Description (Per Scope of Work)	Responsibility Contractor and/or Sub	Acceptance Criteria (Specifications, Drawings, Industry Code, Regulatory Authority, Manufacturers O&M manual, Controlling Procedure, Quality/Engineering Bulletins, Other/ Site Quality Plan, Contractor Quality Manuals, etc.)	Verification Point				Verification Document(s) 1. List ONLY the Form(s) applicable to installation. 2. ▲ Commissioning Required Document
				Contractor		Client		
				H W I R	Initials & Date	H W I R	Initials & Date	
6.0	FINAL TURNOVER							
6.1	Construction Completion (Contractor Punchlist & Joint Walkdown Punchlist)	Promec / CLIENT	Quality Plan AEM-PI-PRO-002 (Pre-Commissioning Piping Procedure)	H/R		H/R		▲ AEM-GE-ITR-003 (Punchlist)
6.2	Final Acceptance of Turnover Package	Promec / CLIENT	Quality Plan	H/R		H/R		Signed ITP History Docket
6.3	Declaration of Completion	Promec	Quality Plan	H/R		H/R		AEM-GE-ITR-004 (Notice of Final Completion)
6.4	As-Built Drawings	Promec	Quality Plan	H/R		H/R		All Required As-Built Drawings
6.5	Weld Map	Promec	Quality Plan	H/R		H/R		All Required Weld Maps

PROMEC's Representatives			CLIENT's Representative	
QA/QC	Project Manager			
Name	Name		Name	
Signature	Signature	Date	Signature	Date

AGNICO EAGLE

Vendor Document Status

1 ☐ Proceed to next submission and status.

2 ☐ Proceed with exceptions as noted to next submission and status.

3 ☐ Do not proceed.
Revise as noted and resubmit next submission and status.

4 ☑ Complete, no further submission required.

By: JEAN-FRANCOIS TREMBLAY Date: 2017-05-08

Review and authorization to fabricate are only for general conformance with the design concept of the Project as expressed in the Contract Documents. Sole responsibility for the accuracy and completeness of this document, including but not limited to dimensions and quantities, remains with the Supplier/Contractor. Agnico Eagle does not warrant the accuracy or completeness of any of the information contained herein, nor does Agnico Eagle authorize or approve any construction means, methods, techniques, sequences or any safety precautions or procedures.

Agnico Eagle No. 6515-C-270-007-141-TES-0035 R: Sub001

DOCUMENT FOR INFORMATION

Agnico-Eagle Mines Ltd.

Contract no. 6515-C-270-007

Hydrostatic / Pneumatic Test Procedure for Piping

AEM-PI-PRO-001

Area No.: All

System No.: All

PROMEC Approvals

Prepared by:	Stéphane Doré	**Signature:**		**Date:**	2017-04-26
Verified by:	Jérémy Duval	**Signature:**		**Date:**	2017-04-26
Approved by:	Éric Poulin	**Signature:**		**Date:**	2017-04-26

CLIENT Approvals

Verified by:	Rene Fillion	**Signature:**		**Date:**	2017-05-07
Approved by:		**Signature:**		**Date:**	

Table of Contents

Page

1. PURPOSE 3
2. CODES AND STANDARDS 3
3. SAFETY AND ENVIRONMENT MEASURES 3
   - 3.1 SAFETY MEASURES DURING THE PREPARATION OF THE TEST 3
   - 3.2 DISPOSAL OF TEST MEDIUM 3
   - *3.2.1 Glycols Diluted with Water* *4*
   - *3.2.2 Test Water Release Authorization* *4*
   - *3.2.3 Liquid Disposal Documents* *4*
4. GENERAL 5
   - 4.1 INTRODUCTION 5
   - 4.2 APPLIED REGULATIONS AND STANDARDS 6
   - 4.3 HYDROSTATIC/PNEUMATIC TEST PACKAGE 6
5. PREPARATION FOR THE PRESSURE TEST 6
   - 5.1 SPRING SUPPORTS 6
   - 5.2 WIRELESS COMMUNICATION 6
6. HYDROSTATIC/PNEUMATIC TEST PROCEDURE 6
   - 6.1 SYSTEM INSPECTION 6
   - 6.2 SYSTEM WATER FILLING, AIR VENTING, DRAINING AND FLUSHING 7
   - 6.3 WATER REQUIREMENTS 7
   - 6.4 INSPECTION OF THE PRESSURIZED SYSTEM 7
   - 6.5 ACCEPTABILITY STANDARD 7
   - 6.6 HYDROSTATIC/PNEUMATIC TEST PROCEDURE COMPLETION 8
7. WATER RELEASE COMPLETION 8
8. RESPONSIBILITIES 8
   - 8.1 RESPONSIBILITIES AND DUTIES OF CONTRACTORS 8
   - 8.2 SUPERVISOR OF THE HYDROSTATIC TEST PROCEDURE (CLIENT) 8
9. PNEUMATIC TEST 9

APPENDIX C – STATUS OF INSTRUMENTS DURING PRESSURE TEST

APPENDIX D – ALL APPLICABLE ITRs & LOGs

1. PURPOSE

This procedure provides the requirements for hydrostatic & Pneumatic pressing testing of piping system.

2. CODES AND STANDARDS

- ASME B31.1
- ASME B31.3 (CSA B 51-03)

3. SAFETY AND ENVIRONMENT MEASURES

Promec will set the organisation and implement the safety measures with the help of CLIENT's staff.

Moving proper containments, for the disposal of spilled hydrostatic fluids and any contaminated soil that results hydrostatic fluids.

All activities must be fully documented and provided to R&E.

3.1 Safety Measures during the Preparation of the Test

- Define a specific area for each pressure test.
- Make a list of authorized personnel that will have access to the area during the test.
- Advise other sub-contractors of the terms of tests and the forbidden works to be performed in the area of the test.
- Inspect temporary installations and equipment before conducting the tests to comply with current safety measures.
- Inspect and check temporary scaffolding and lights for inspection, if required.
- List all equipment that will be handled during filling, pressurizing and drainage of the system.
- Check gauge calibration list for measurement and control equipment. (Pressure test gauges shall be calibrated once every six months).
- Ensure that all the test fluids shall be stored and/or disposed of in a safe and acceptable manner.

3.2 Disposal of Test Medium

The release of hydrostatic test water in an amount of 1,000 m³, or more, requires a registration number from AENV as proof of authorization to release hydrostatic test water. Contact R&E at least one month prior to beginning testing so applications can be completed and a registration number received the following information is required for applications:

- Name, address, fax and phone numbers of the person responsible for the testing.
- Type of pipeline, storage tank or vessel.
- Legal land descriptions for the beginning and end of the pipeline section(s), storage tank or vessel to be tested.

- Total length of pipeline to be tested.
- Inside diameter of the pipeline (mm) to be tested.
- Total volume of hydrostatic test water to be used (m^3).
- Source of the hydrostatic test water: groundwater, surface water, municipal, or other.
- Origin or name of source water.
- Anticipated date of withdrawal of source water.
- Location of release of test water (legal land description).
- Start and end dates for release.
- Volume of release (m^3).
- Approximate rate of release(s) (m^3/hr).
- Name and location of receptor: land, surface water, injection well, other.
- Additives used (MSDS sheet(s) must be included).
- A description of the treatment and mitigative methods used prior to and during release.
- A map, diagram, or air photo of the release area showing release location, receiving land, direction of receiving water flow (if applicable) and sampling locations (soil and water).

If there are any changes to the registration information after submission, R&E must be notified immediately. The application must be signed by the person responsible for the pipeline/ storage tank indicating that the testing will be done in accordance with AENV's Code of Practice.

3.2.1 Glycols Diluted with Water

Glycols diluted with water may be used for hydrostatic testing, but must be properly managed so as not to spill, contaminate soils, or contaminate ground or surface waters and must be disposed off site in an environmentally safe manner. All activities must be fully documented.

3.2.2 Test Water Release Authorization

Upon completion of testing and prior to release, a representative grab sample of the hydrostatic test water must be obtained from the testing pipes and analyzed as specified in Appendix A – "Monitoring Requirements and Limits for Release to Land" and Appendix B – "Monitoring Requirements and Limits for Release to Receiving Water". Hydrostatic test water must not be released before to obtain R&E approval.

3.2.3 Liquid Disposal Documents

The testing crew supervisor must compile the following information for each hydrostatic test:

- A schematic diagram and details of the monitoring and release operations, including monitoring points, holding system, conveyance system, hydrostatic test water release flow rate and area of receiving water.

- Where the release is to receiving water, the name of the receiving water, the estimated rate of flow of the receiving water at the time of the release and photographs taken before, during and after release at the point of release and downstream of a distance of at least 100 meters from the point of release for flowing water.
- Photographs of the sampling points, holding system and conveyance system.
- Where released to land, photographs of the land taken 7 days after the release is complete.
- All analytical results obtained for the hydrostatic testing.
- All information must be retained for a minimum of 5 years after completion of the hydrostatic testing.

4. GENERAL

4.1 Introduction

As the line designation total this procedure describes the pressure tests that have to be achieved on the following systems:

CH: Chemicals

CRW: Cold Recycle Waters

CWR: Cooling water return

CWS: Cooling water supply

DW: Drinking water

FW: Fire water

IWR: Inhibited water return

HC: High pressure condensate

HRW: Hot recycle water

HS: High pressure steam

IWS: Inhibited water supply

LC: Low pressure condensate

LS: Low pressure steam

IA: Instrument Air

LLS: Low low pressure steam

MS: Medium pressure steam

UA: Utility air

UW: Utility water

WRW: Warn recycle water

DR: Drain

EQT: Equipment trim

PA: Plant air

4.2 Applied Regulations and Standards

The pressure tests will be conducted according to standard ASME B 31.1, Article 137, and ASME B 31.3 (CSA B 51-03) - Pressure Test.

4.3 Hydrostatic/Pneumatic Test Package

The Pressure Test Package consists of:

- Piping Pressure Test Record.
- Copy of the Line Designation Table.
- A copy of the P & ID showing the lines involved.
- Isometrics drawings.
- Copy of the drawings gauges calibration sheet.
- All NDE approved.

The Pressure Test Package will be submitted to CLIENT's for review and approval to proceed prior to testing.

5. PREPARATION FOR THE PRESSURE TEST

5.1 Spring Supports

If necessary, the spring supports must be blocked before filling.

Promec will check that all pipe supports are entirely installed according to the drawings.

5.2 Wireless Communication

To ensure at all times that communications are constant between the operator of the pressurizing pump and the workers monitoring the control gauge on the highest location of the piping system installation, two ways radio communication shall be used.

6. HYDROSTATIC/PNEUMATIC TEST PROCEDURE

6.1 System Inspection

- Promec shall check pipe loop with all approved documentation:
  - NDT/PWHT.
  - Check that all specified bolts and gaskets are installed.
  - Check that all vents and drains are installed.
  - Check that all pressure connections are installed correctly.
  - Check for direction of flow through filters and strainers, traps, check valve, etc.
  - Check that all temporary pipe supports have been removed.
  - Check that all in-one valves installed are completely open and protected (secured against unauthorized closing.
  - Check that temporary spools have been installed.
  - Check test medium for conformity to requirement
  - Check pressure gauge calibration.

6.2 System Water Filling, Air Venting, Draining and Flushing

Considering that the water filling for the pressure test is done for the first time, it is necessary to flush the piping system by filling and draining. For this purpose, water from the fire hydrant will be used. If fire hydrants are not available, water shall be trucked in and pumped into the system.

Promec shall ensure that the water that flows out in the period of drainage does not contain any hazardous contaminant for the environment so it can be directly poured into the sewer. One complete fillings and flushes should be enough.

Air venting is accomplished with valves installed for this purpose on the highest locations of the tested systems.

Air venting is completed when water is flowing from the air venting valves in a continuous flow free of air bubbles.

Speckable, blind, blinds flanges, temporary pipe plug or caps will be installed at locations indicated on isometrics and/ or P &ID's drawings.

Place of nozzles for connection on pressurised pump, gauges and air venting valve are shown on schematics, which will be attached for each hydrostatic testing system. The form to be used will be developed with CLIENT.

6.3 Water Requirements

For hydrostatic test, the test fluid shall be clean filtered water that will not corrode or damage the system being tested.

Approval must be obtained from CLIENT if the test fluid is anything other than clean water.

6.4 Inspection of the Pressurized System

The hydrostatic test must be performed during at least 10 minutes.

Visual inspection is mandatory. In the case of a leakage, the inspector will visibly mark the area with paint marker.

6.5 Acceptability Standard

The pressure test procedure is considered successfully conducted when:

- The test pressure is reached and kept constant.
- No trace of cracks, leaks and changes in the shape of parts of the system have been observed during inspection.
- The verification of the written report is noted and approved by all participants witnessing the pressure test.

6.6 Hydrostatic/Pneumatic Test Procedure Completion

A test record shall be prepared for each piping system tested and shall include the following:

- Date of test
- Identification of piping system tested
- Test fluid
- Test pressure
- Duration of test
- Test fluid temperature
- Ambiant temperature
- Pressure gauge number
- Certification of results by examiner with name and signature.
- Approval by CLIENT

N.B.: For testing an austenitic stainless steel piping, checked that the chlorine is under than 50 ppm.

7. WATER RELEASE COMPLETION

When the hydrostatic test is completed, the water stay in the pipe or in a holding vessel until Promec obtains the authorization for releasing the testing fluid. After, we use a truck to transport the water to the release area or, if possible, a water disposal ditch is used.

8. RESPONSIBILITIES

8.1 Responsibilities and Duties of Contractors

Promec's working team shall be responsible for the quality of work and for the compliance of the test procedure. Complete activities shall be registered in the hydrostatic test procedures log book. During the hydrostatic test, Promec shall provide a working team to cover the following activities:

- Water filling and air venting of system under test.
- Pressurizing of system.
- Control of pressure at highest point of system.
- Drainage of system after testing.

8.2 Supervisor of the Hydrostatic Test Procedure (CLIENT)

The hydrostatic test supervisor shall be nominated by CLIENT and coordinate the work with all other participants.

9. PNEUMATIC TEST

Wherever a hydrostatic test cannot be performed, a pneumatic test should be carried out upon CLIENT's approval.

Appendix C

STATUS OF INSTRUMENTS DURING PRESSURE TEST

STATUS OF INSTRUMENTS DURING PRESSURE TEST

Remove:

- Control Valves
- FlowInstruments-Rotameters (Do not force reverse flow)
- Flow Meters-positive displacement type
- Flow Switches-van type
- Orifice Plates (Install after hydrotesting and line flushing)
- Pressure Regulators
- PSV's, TSV's- 3/4" & 1 " screwed

Block and Vents:

- Analyzers
- Flow Instruments-D/P cell & bellow types
- FlowMeters – turbine type
- Flow Indicating Switches-bellows type
- Level Instruments-C/P cell & bellows type
- Pressure Gauges
- Pressure Instruments-all types
- Pressure Switches

Blind Off:

- PSV's (Test gauge may be used if one is furnished; Blinds not required on PSV outlets discharging into a system being tested at 103kPa (15 PSI) or less.)

Include in Test:

- Gauge glasses
- Level Instruments-displacer type (Do not overpressure. If in doubt, block and drain instead.)
- Level Switches-float type (Do not overpressure. If in doubt, block and drain instead.)

To avoid damage due to freezing, all instruments shall be protected. As a good practice it is recommended that instruments be drained and process lead lines blown out with air or nitrogen in preparation for cold weather and during cold weather.

Appendix D

ALL APPLICABLE ITRs & LOGs

AGNICO EAGLE

Vendor Document Status

1 ☐ Proceed to next submission and status.

2 ☐ Proceed with exceptions as noted to next submission and status.

3 ☐ Do not proceed.
Revise as noted and resubmit next submission and status.

4 ☑ Complete, no further submission required.

By: JEAN-FRANCOIS TREMBLAY JG Date: 2017-05-16

Review and authorization to fabricate are only for general conformance with the design concept of the Project as expressed in the Contract Documents. Sole responsibility for the accuracy and completeness of this document, including but not limited to dimensions and quantities, remains with the Supplier/Contractor. Agnico Eagle does not warrant the accuracy or completeness of any of the information contained herein, nor does Agnico Eagle authorize or approve any construction means, methods, techniques, sequences or any safety precautions or procedures.

Agnico Eagle No. 6515-C-270-007-141-TES-0036 R: Sub001

DOCUMENT FOR INFORMATION

Agnico-Eagle Mines Ltd.

Contract no. 6515-C-270-007

Pre-Commissioning Piping Procedure

AEM-PI-PRO-002

Area No.: All

System No.: All

PROMEC Approvals

Prepared by:	Stéphane Doré	**Signature:**		**Date:**	2017-04-26
Verified by:	Jérémy Duval	**Signature:**		**Date:**	2017-04-26
Approved by:	Éric Poulin	**Signature:**		**Date:**	2017-04-26

CLIENT Approvals

Verified by:		**Signature:**		**Date:**	
Approved by:		**Signature:**		**Date:**	

Table of Contents

Page

1. **SCOPE** 3
2. **"SYSTEMS" METHODOLOGY** 3
   - 2.1 SYSTEM DEFINITION 3
3. **PRE-COMMISSIONING** 3
   - 3.1 MECHANICAL COMPLETION (MC) 3
     - *3.1.1 Conformity Check* 3
     - *3.1.2 Energized tests* 3
     - *3.1.3 Flushing and cleaning* 4
4. **PUNCH LIST** 4
5. **RESPONSIBILITY MATRIX** 4

APPENDIX A – RESPONSIBILITY MATRIX

1. SCOPE

This procedure summarizes Promec activities to achieve a "Ready for Pre-commissioning" status.

2. "SYSTEMS" METHODOLOGY

The basic principle of the plant completion scheduling will be to define, prepare, carry out and report all pre-commissioning by system.

2.1 System Definition

The partition of the plant into systems is a key preparation activity that has a major impact on all aspects of completion operation: the system must be defined so as to be independent as possible, not too small, but of the manageable size and exactly adapted to the start-up sequence.

The partition takes place as early as possible in accordance with precise system boundaries, system sequences and system numbering defined by the client and reported on marked-up P & ID's Single Line Diagrams as support documents.

3. PRE-COMMISSIONING

3.1 Mechanical Completion (MC)

A walk-down and punch list will be completed by the client and Promec on each system as early as practical before the end of the MC.

If both parties are satisfied that the system is mechanically completed enough to go into the commissioning phase, all outstanding deficiencies are noted on the punch list, and handover documents are completed and signed.

3.1.1 CONFORMITY CHECK

Carried out on each item of equipment or component, such as pressure gauges, valves, vents and drains, safety vales, etc. to verify the condition of the equipment, the quality of the installation, the compliance with project drawings and specifications, manufacturer's instruction, safety rules, codes, standards and good practice. These activities are generally carried out in an "un-energized" state, like no pressure in the pipe.

3.1.2 ENERGIZED TESTS

These "energized" tests concern the pressure testing of piping. This pressure testing will need to be done using the approved Promec's Procedure.

3.1.3 FLUSHING AND CLEANING

Piping systems must be flushed or air blown to remove construction debris. Under special circumstances, the client's approval is required to combine the hydrostatic/pneumatic test with the flushing activities.

4. PUNCH LIST

While the construction checks and tests are being performed, all discrepancies, damaged or missing equipment, malfunctions, missing documents, etc. are recorded in the punch list, if the situation was not able to be corrected immediately.

5. RESPONSIBILITY MATRIX

The Completion Activities are now further defined in the following Appendix A - "Responsibility Matrix".

This matrix provides a useful list of the piping completion activities and it establishes to which category they belong pre-commissioning (de-energized) and pre-commissioning (under-pres).

Appendix A

RESPONSIBILITY MATRIX

Responsibility Matrix	Contractor Responsibility	CLIENT Responsibility
LEGEND X = Contractor responsibility	X	
O = CLIENT responsibility		0
A = CLIENT approval hold point		A
W = CLIENT witness notification		W
R = CLIENT documentation review		R

CLIENT's APPROVAL HOLD POINT (A)

When Promec is ready to pre-commission any part of any system, which is identified as requiring CLIENT's approval, Promec shall duly notify CLIENT's representative, with 4 days written notification. Timely Review Meetings shall also be conducted between Promec's Pre-commissioning Manager and CLIENT's Commissioning Representative for the purpose of advising CLIENT on the specific Status/ Timing of all Pre-Commissioning Activities Requiring CLIENT's approval.

CLIENT WITNESS POINT (W)

When Promec is ready to pre-commission any part of any system, which is identified as requiring CLIENT witness, Promec shall duly notify CLIENT's Representative, with two days written notification. Timely review meetings shall also be conducted between Promec's QA/QC and CLIENT's Commissioning Representative for the purpose of advising CLIENT on the specific status/ timing of all pre-commissioning activities requiring CLIENT witness.

CLIENT DOCUMENTATION REVIEW (R)

When Promec has drafted the pre-commissioning procedures, descriptive and operating manuals, maintenance manuals, system schedules, and/or related final documentation etc. pertaining to pre-commissioning of any system, Promec shall formally issue via transmittal to CLIENT's Representative, for review & comment purposes. These documents must be received by CLIENT 14 days in advance of final issue.

NOTES:

CLIENT Signatures on Pre-commissioning Documentation

CLIENT's Representative in attendance will personally sign only for the relevant Pre-commissioning Documentation for which he/she approves, witnesses or reviews.

Functional Test Certificates & CLIENT Signatures

Upon completion of a functional test and proven that it has been successful when referring to the Contract requirements, CLIENT and Promec representatives will sign the test certificate.

Ready for Commissioning Standard					
	PIPING	Pre-Com De-energized	Pre-Com Energized	Comm.	Start-Up
1)	Issue Piping Flushing & Cleaning Procedures	XR			
2)	Complete Vendor Package Piping Punch Lists	XA			
3)	Maintain As-Built/ Red Line Mark-Ups of P&IDS	XA			
4)	Remove all In-Line Instruments prior to Hydro-Testing/Flushing & Cleaning including CA/s, Check & Safety Valves	X			
5)	Remove all temporary supports, protections, bracings, sea fastening stops that were installed to prevent equipment damage during shipping, storage and erection	X			
6)	Install temporary spool pieces	X			
7)	Check conditions of equipment, quality of installation, compliance with Project Drawings, Manufacturers instructions, safety rules, specifications, structural supports, and good practice prior to hydrotest	XA			
8)	Hydrostatic test / Pneumatic test		X		
9)	Set or check pipe anchors, guides, spring hangers and supports after hydrotest. Provide cold and hot setting data	XR			
10)	Define, provide, install and remove all temporary blanks and flushing connections.	X			
11)	Execute & Perform Piping Flushing & Cleaning/ Pickling/ Air Blows and Draining as per the Approved Procedures (Except Steam Blows)		XA		
12)	Execute & Perform Critical Body & Seat Testing TSO Valves at Site of All ESD, BDV		XA		
13)	Carry out piping water or air flushing operations		XA		
14)	Drain all lines including low points	XA			
15)	Provide and Install all Permanent Blinds, Spacers, & Spades as per P&ID's in open/closed position as specified by CLIENT	XW			
16)	Disposal of Test Medium following Hydro-Testing/ Flushing & Cleaning	XW			
17)	Remove as necessary and transport all safety valves to and from test facilities	XW			

Ready for Commissioning Standard				
PIPING	Pre-Com De-energized	Pre-Com Energized	Comm.	Start-Up
18) Test, set and tag all safety valves, then carry out safety valves final installation		XW		
19) Perform all Gross Leak Tests Tightness & Service Tests (above & under ground)		X		
20) Remove all Temporary Blinds	X			
21) Supply/ Install & Issue As-Installed Blind List	XR			
22) Compile & Issue RFC Handover Package per System	XR			
23) Alleviate any excess piping stresses that may be imposed on pipes, compressors or pump flanges	XA			
24) Check packing and packing materials and lubrication of valves; repack and lubricate if necessary	XW			
25) Install corrosion probes	XA			
26) Prepare Punch List	XR			

AGNICO EAGLE

Vendor Document Status

1 ☐ Proceed to next submission and status.

2 ☐ Proceed with exceptions as noted to next submission and status.

3 ☐ Do not proceed.
Revise as noted and resubmit next submission and status.

4 ☑ Complete, no further submission required.

By: JEAN-FRANCOIS TREMBLAY Date: 2017-06-09

Review and authorization to fabricate are only for general conformance with the design concept of the Project as expressed in the Contract Documents. Sole responsibility for the accuracy and completeness of this document, including but not limited to dimensions and quantities, remains with the Supplier/Contractor. Agnico Eagle does not warrant the accuracy or completeness of any of the information contained herein, nor does Agnico Eagle authorize or approve any construction means, methods, techniques, sequences or any safety precautions or procedures.

Agnico Eagle No. 6515-C-270-007-141-TES-0037 R: Sub002

DOCUMENT FOR INFORMATION

Agnico-Eagle Mines Ltd.

Contract no. 6515-C-270-007

Piping Erection Procedure

AEM-PI-PRO-003

Area No.: All

System No.: All

PROMEC Approvals

Prepared by:	Stéphane Doré	**Signature:**		**Date:**	2017-04-26
Verified by:	Jérémy Duval	**Signature:**		**Date:**	2017-04-26
Approved by:	Éric Poulin	**Signature:**		**Date:**	2017-04-26

CLIENT Approvals

Verified by:		**Signature:**		**Date:**	
Approved by:		**Signature:**		**Date:**	

Table of Contents

Page

1. **PURPOSE** 3
2. **PREREQUISITE** 3
3. **CODES AND STANDARDS** 3
4. **FIELD FABRICATION** 3
   - 4.1 PIPING 3
   - 4.2 INTERNAL MISALIGNMENT 4
   - 4.3 FLANGES AND FITTINGS 4
   - 4.4 REINFORCING PADS 4
   - 4.5 PIPING VERIFIED AGAINST THE ISOMETRIC DRAWINGS 5
   - 4.6 FABRICATION TOLERANCES 5
5. **ERECTION AND INSTALLATION** 5
   - 5.1 ERECTION 5
   - 5.2 INSTALLATION 5
     - *5.2.1 General* 5
     - *5.2.2 Flange Bolting* 5
     - *5.2.3 Supports* 6
     - *5.2.4 Branch Connections* 6
     - *5.2.5 Cleanliness of Piping* 6
     - *5.2.6 Field Pressure Testing* 6

APPENDIX A – ALL APPLICABLE ITRs & LOGs

1. PURPOSE

The purpose of this procedure is to specify the requirements for erection, joining and installation of shop fabricated spools. It will ensure that the right piece of pipe is installed at the right location and complies with the codes, standards, and isometric drawings.

2. PREREQUISITE

The following measures shall be taken before starting works:

- All technical documents are available (latest version):
  - Isometric drawings.
  - Line lists.
  - General Arrangement drawings.
- No other work is achieved on the same place of work.
- Piping spools and piping equipment have been identified and inspected.
- Transportation equipment and lifting equipment are available.
- Tools, lifting equipment, levelling equipment, etc. are available and have been inspected.

3. CODES AND STANDARDS

n/a

4. FIELD FABRICATION

4.1 Piping

Fabricator shall shape or bevel the joints to be field welded.

Adjacent sections of longitudinal welded pipe that are joined by butt welding shall have the longitudinal weld seams positioned so that they are at least 30 degrees apart and above the horizontal centerline.

Wherever possible, Promec shall not position the longitudinal weld seam on the top or bottom of the line so that branch connections such as couplings and stub-ons are located on the seam.

4.2 Internal Misalignment

Internal misalignment criteria shall be governed by the following:

- Pipe-to-pipe or pipe-to-fitting NPS (Nominal Pipe Size) 24 and smaller: ±1/16 of an inch deviation.
- Pipe-to-pipe or pipe-to-fitting NPS 26 and larger: ±1/8 of an inch deviation.
- If the deviation factors are exceeded, one of the following procedures shall be used:
  - Rotate the pipe or fittings to reduce misalignment to the acceptable tolerances (before attempting any of the following methods).
  - Use spreaders or internal or external lineup clamps to correct moderate out-of round condition.
  - Backweld the root pass.
  - Taper the wall of the component internally, after obtaining approval from the client, to ensure wall thickness is not reduced below the minimum required by the code.

4.3 Flanges and Fittings

Flange bolt holes are to be oriented as follows, unless otherwise indicated on the piping drawings:

- Flange face vertical: bolt holes to straddle vertical centerline.
- Flange face horizontal: bolt holes to straddle north-south centerline.
- Orifice flanges shall be fabricated with the taps in the exact orientation shown on the piping drawings. The up and down stream sections of pipe to which the orifice flanges are attached may be standard mill run pipe, but each piece shall be a choice hand-selected piece, and the interior of the pipe shall be round, smooth, and free from blisters and scale; welds shall be grounded flush. Field welds shall be kept at a maximum distance from the face of the orifice.
- Where line taps and 'olets are required, first attach the connection fitting then, the hole for each line tap shall be drilled square to the axial centerline, clean, sharp, and free from burrs, wire edges, or other irregularities.
- Slip-on flanges shall be welded inside and outside. Refer to Figure 328.5.2B of ASME B31.3. The weld shall be applied so that the flange face shall be free of weld spatter and does not require refacing.

4.4 Reinforcing Pads

Reinforcing pads shall be installed only where called for on the piping drawing. Pad material shall be the same as the pipe material, unless otherwise authorized by the client. Drawing will specify size and pad thickness.

4.5 Piping verified against the isometric drawings

Check that the position of the piping satisfied the isometric drawings informations: level, horizontal and vertical measurement, etc.

4.6 Fabrication Tolerances

The fabrication tolerances for fabricated piping shall be in accordance with client's specifications and standards.

5. ERECTION AND INSTALLATION

5.1 Erection

The following equipment will be used at different steps during pipe erection works: slings, shackles, mechanical or hydraulic jacks, come-along, measuring tapes, laser tool, temporary supports, boom trucks, etc.

5.2 Installation

5.2.1 GENERAL

Except where shown otherwise on the drawings, piping shall conform to the following:

- Be run level and plumb.
- Be run on North-South and East-West axis.

Evaluation of piping installation works sequence:

- Preparation of pipe to be welded: bevels, cleanliness, etc.
- Mounting of spools at ground level.
- Evaluation of how to handle the spools.
- Lifting of spools to their final location.
- Welding or assembling of spools.
- Identification of the welds.
- Installation of temporary supports.
- Etc.

Interior cleaning of piping:

- Marine Line, cleaning will be perform by pigging.
- Diesel Line (fuel farm and pumping station), cleaning will be perform by air blowing.

5.2.2 FLANGE BOLTING

Use a logical sequence of bolt tightening to ensure even gasket compression, as indicated in ASME B16.5

Unless specified otherwise, provide a bolt stress of 30,000 psi minimum or 45,000 psi maximum using a lubricant on the bolt threads (Refer to AEM-PI-PRO-004 Flanges Bolting Procedure).

Prior to bolt-up, examine flange faces. Flange faces shall be in as-new condition, and shall be wiped clean of any debris, excess oil, grease, and dirt. Restore damaged flange faces to as-new condition. Do not perform weld repairs on flange faces or flanges.

Do not use washers or spacers to make up bolt length. Bolt lengths are specified to prevent oversizing.

5.2.3 SUPPORTS

Install supports as indicated on the drawings.

Install spring supports in compliance with Manufacturer's instructions; keep them blocked until after line closure and hydrotest. Adjust them in the installed position and check them when operating conditions are reached.

Install all required temporary supports for hydrostatic testing.

Welding of supports shall be as indicated on the drawings.

5.2.4 BRANCH CONNECTIONS

Take care in shaping the ends of branch nozzles, as well as holes burned into the pipe for branch connections, to ensure fit with suitable provision for weld metal and so that the branch connections do not project inside the pipes.

5.2.5 CLEANLINESS OF PIPING

Open-end and flange protection shall be used throughout installation. Protect open pipes at times when work on them is not actually taking place.

Inspect individual pipe sections, prefabricated spools, and pipeline items internally during installation, and remove any foreign matter before final welding or bolting.

Piping contiguous with special equipment, which requires cleaning to the equipment Manufacturer's procedure, shall be inspected by and have cleaning supervised by the Manufacturer's representative.

5.2.6 FIELD PRESSURE TESTING

Testing of installed piping systems shall be in accordance with the previously referenced standards. (Refer to AEM-PI-PRO-001 Hydrostatic-Pneumatic Test Procedure for Piping).

Appendix A

ALL APPLICABLE ITRs & LOGs

AGNICO EAGLE

Vendor Document Status

1 ☐ Proceed to next submission and status.

2 ☐ Proceed with exceptions as noted to next submission and status.

3 ☐ Do not proceed.
Revise as noted and resubmit next submission and status.

4 ☑ Complete, no further submission required.

By: JEAN-FRANCOIS TREMBLAY Date: 2017-06-22

Review and authorization to fabricate are only for general conformance with the design concept of the Project as expressed in the Contract Documents. Sole responsibility for the accuracy and completeness of this document, including but not limited to dimensions and quantities, remains with the Supplier/Contractor. Agnico Eagle does not warrant the accuracy or completeness of any of the information contained herein, nor does Agnico Eagle authorize or approve any construction means, methods, techniques, sequences or any safety precautions or procedures.

Agnico Eagle No. 6515-C-270-007-141-TES-0033 R: Sub002

DOCUMENT FOR INFORMATION

Agnico-Eagle Mines Ltd.

Contract no. 6515-C-270-007

Pump Installation Procedure

AEM-ME-PRO-001

Area No.: All

System No.: All

PROMEC Approvals

Prepared by:	Stéphane Doré	**Signature:**		**Date:**	2017-04-26
Verified by:	Jérémy Duval	**Signature:**		**Date:**	2017-04-26
Approved by:	Éric Poulin	**Signature:**		**Date:**	2017-04-26

CLIENT Approvals

Verified by:		**Signature:**		**Date:**	
Approved by:		**Signature:**		**Date:**	

Table of Contents

Page

1. SCOPE 3
2. PREREQUISITE 3
3. VISUAL INSPECTION AND PREPARATION 3
4. LEVELLING AND FIXING 3
5. PUMP AUXILIARIES INSTALLATION 4
6. PIPING INSTALLATION 4
7. PRE-COMMISSIONING 4
8. FINAL ACCEPTANCE 4

APPENDIX A – ALL APPLICABLE ITRs & LOG

1. SCOPE

This procedure provides primary inspection and installation requirements pertaining to the pumps installation.

2. PREREQUISITE

- Relevant isometric drawings are up-to-date.
- Shop drawings, vendor manuals and technical specs up-to-date.
- Preservation and storage plan in place.
- Relevant team mobilized and ready.
- Pump Installation Procedure prepared and approved.
- Materials and tools available with calibration certificates and calibration log entries.

3. VISUAL INSPECTION AND PREPARATION

- Check equipment skid for any sign of damage prior to installation.
- Begin preservation program.
- Verify elevation and centerlines are correct and are clearly marked on foundation.
- Pump installation includes foundation preparation, confirmation of center lines and elevations, preliminary alignment, machinery distortion to be checked at piping bolt up, soft foot check, final alignment, flushing and recharging of lubricants (pump, gear-box, drivers and lube oil tanks) in accordance with the manufacturer's recommendations.
- Mark appropriately on the foundation the jacking screw pads and anchor bolts locations.
- Jack-up equipment skid with external jacks to allow jacking screws pads installation and secure it with temporary supports.
- Circular jackscrew leveling plate shall be made of 2-inche diameter, 12 mm thick, CSA grade 300 Structural Steel Plate, or equivalent type round stock material. The plate shall be clean and free of all scale and oil will be readjusted.

4. LEVELLING AND FIXING

- Install the jacking bolts in their respective screw location. Use the installed jacking bolts to bring the skid to the designed elevation. Ensure that pump nozzles are in proper orientation on the centerlines.
- Level the skid properly with an accurate leveling instrument using the equipment base machined faces. Align and adjust the pumps inlet and outlet flanges with the relevant pipe centerlines.
- After base plate leveling first alignment shall be performed. Soft-foot tolerance and coupling gaps shall be checked while the alignment is being confirmed. Coupling gap to be confirmed.

5. PUMP AUXILIARIES INSTALLATION

- Lube oil console is brought to design elevation and centerlines by the use of stainless steel shims and external lifting.
- Lube oil piping is loosely installed to verify best position.
- Electrical and instrumentation will be done by those disciplines using the relevant ITP's and procedures.

6. PIPING INSTALLATION

- Piping will be cleaned and installed by the piping discipline.
- Interconnecting lube oil piping, cooling water, suction / discharge and steam piping will be subject to fit up measurements. Pipe strain measurements and adjustment shall be carried out.
- Seal flushing lines to be cleaned and connected.
- Distortion due to piping stress: If distortion exceeds allowances, piping alignment shall be re-worked and re-checked.
- All piping that is attached to the equipment for the purpose of field welding will be electrically isolated from the equipment by use of isolating kits.
- A final pipe strain check will be performed and recorded.

7. PRE-COMMISSIONING, (AEM STD TO APPLY, TO BE DETAILED BY AEM)

- If applicable, vendor presence requirements shall be requested prior to final work.
- Lube oil pipe strain to witnessed
- Lube oil system to be flushed.
- Steam pipe blowing to be done by piping discipline.
- Running oil to be installed in lube oil console and pump bearing sumps.
- Motor bump test (uncoupled) to verify rotation will be performed on electric motor drive units.
- Final alignments with cold offsets to be witnessed.
- Pipe strain checks of steam lines and pump suction / discharge lines to be witnessed.
- All couplings and guards to be in place.
- Touch up painting will be completed.
- Mark in red on isometric drawing copy all final dimensions for as-built drawing preparation.

8. FINAL ACCEPTANCE, (AEM STD TO APPLY, TO BE DETAILED BY AEM)

- All inspection test records along with preservation records will be verified for handover to the turnover coordinator, along with relevant RFI's, NCR's and field trouble reports.
- A final punchlist will be cleared with no outstanding NCR's.
- Upon completion of work, final acceptance shall be obtained from CLIENT.

Appendix A

ALL APPLICABLE ITRs & LOGs

AGNICO EAGLE

Vendor Document Status

1 ☐ Proceed to next submission and status.

2 ☐ Proceed with exceptions as noted to next submission and status.

3 ☐ Do not proceed.
Revise as noted and resubmit next submission and status.

4 ☑ Complete, no further submission required.

By: JEAN-FRANCOIS TREMBLAY Date: 2017-05-02

Review and authorization to fabricate are only for general conformance with the design concept of the Project as expressed in the Contract Documents. Sole responsibility for the accuracy and completeness of this document, including but not limited to dimensions and quantities, remains with the Supplier/Contractor. Agnico Eagle does not warrant the accuracy or completeness of any of the information contained herein, nor does Agnico Eagle authorize or approve any construction means, methods, techniques, sequences or any safety precautions or procedures.

Agnico Eagle No. 6515-C-270-007-141-TES-0034 R: Sub001

DOCUMENT FOR INFORMATION

Agnico-Eagle Mines Ltd.

Contract no. 6515-C-270-007

Fuel Tank Installation Procedure

AEM-ME-PRO-002

Area No.: All

System No.: All

PROMEC Approvals

Prepared by:	Stéphane Doré	**Signature:**		**Date:**	2017-04-26
Verified by:	Jérémy Duval	**Signature:**		**Date:**	2017-04-26
Approved by:	Éric Poulin	**Signature:**		**Date:**	2017-04-26

CLIENT Approvals

Verified by:		**Signature:**		**Date:**	
Approved by:		**Signature:**		**Date:**	

Table of Contents

Page

1. SCOPE 3
2. PREREQUISITE 3
3. VISUAL INSPECTION AND PREPARATION 3
4. LEVELING AND FIXING 3
5. AUXILIARIES INSTALLATIONS & INSPECTION 3
6. PRE-COMMISSIONING 3
7. TOUCH-UP PAINTING 4
8. FINAL ACCEPTANCE 4

APPENDIX A – ALL APPLICABLE ITRs & LOGs

1. SCOPE

- This procedure provides inspection steps and requirements pertaining to a fuel tank.
- Each package is composed of a single unit.

2. PREREQUISITE

- Relevant isometric drawings are up-to-date.
- Shop drawings, vendor's manual and technical specs up-to-date.
- Relevant team mobilized and ready.
- Pertaining material and tools are prepared and ready.

3. VISUAL INSPECTION AND PREPARATION

- Check equipment for any sign of damage prior to installation.
- Mark on the foundation center lines and elevation references.
- If required, clean the foundation and skid exposed surfaces using compressed air.

4. LEVELING AND FIXING

- Jack up the equipment skid using external jacks keeping the skid level up to design elevation and center lines.
- Level the skid properly with an accurate leveling instrument. Align and adjust vessels inlet and outlet flanges with the relevant pipe axes (see relevant isometric drawing).
- Leveling shims shall to be installed on both sides of each anchor bolt. Wherever the distance between adjacent anchor bolts exceed 800 mm, additional leveling pads shall be installed midway between the anchor bolts.

5. AUXILIARIES INSTALLATIONS & INSPECTION

- External-Interconnecting pipes to be installed. Promec piping ITP to be followed for piping gaskets, studs and flange bolt-up.
- Internal inspection and cleaning to be performed if required.
- Instrumentation installation and verification to be performed by Promec instrumentation team.
- Complete equipment closing record form.

6. PRE-COMMISSIONING

- Follow vendor's operation manual procedure.

7. TOUCH-UP PAINTING

- Touch up painting shall be carried out on surfaces that have scratches or scrapes or other damages that have occurred during transportation and installation (paint is supplied by equipment vendor).

8. FINAL ACCEPTANCE

- All inspection and test records to be reviewed for completeness and securely filed for hand-over to turnover coordinator.
- Upon completion of works, final acceptance shall be obtained from the client.

Appendix A

ALL APPLICABLE ITRs & LOGs

AGNICO EAGLE

Vendor Document Status

1 ☐ Proceed to next submission and status.

2 ☐ Proceed with exceptions as noted to next submission and status.

3 ☐ Do not proceed.
Revise as noted and resubmit next submission and status.

4 ☑ Complete, no further submission required.

By: JEAN-FRANCOIS TREMBLAY Date: 2017-05-02

Review and authorization to fabricate are only for general conformance with the design concept of the Project as expressed in the Contract Documents. Sole responsibility for the accuracy and completeness of this document, including but not limited to dimensions and quantities, remains with the Supplier/Contractor. Agnico Eagle does not warrant the accuracy or completeness of any of the information contained herein, nor does Agnico Eagle authorize or approve any construction means, methods, techniques, sequences or any safety precautions or procedures.

Agnico Eagle No. 6515-C-270-007-141-TES-0038 R: Sub001

DOCUMENT FOR INFORMATION

Agnico-Eagle Mines Ltd.

Contract no. 6515-C-270-007

Welding Control Procedure

AEM-WE-PRO-001

Area No.: All

System No.: All

PROMEC Approvals

Prepared by:	Stéphane Doré	**Signature:**		**Date:**	2017-04-26
Verified by:	Jérémy Duval	**Signature:**		**Date:**	2017-04-26
Approved by:	Éric Poulin	**Signature:**		**Date:**	2017-04-26

CLIENT Approvals

Verified by:		**Signature:**		**Date:**	
Approved by:		**Signature:**		**Date:**	

TABLE OF CONTENTS

		Page
1.	SCOPE	3
2.	REFERENCES	3
3.	WELDING PROCEDURES	3
4.	WELDER PERFORMANCE QUALIFICATION	3
5.	WELDING MATERIAL CONTROL	4
6.	FIT-UP AND WELDING	4
7.	RADIOGRAPHIC INSPECTION	5

APPENDIX A – ALL APPLICABLE ITRs & LOGs

1. Scope

- This procedure describes the system for maintaining control of all production welding to the requirements of the applicable engineering specifications, codes and standards.

2. References

- ASME, Section IX - Welding and Brazing Qualifications
- ANSI, B-31.3 - Petroleum Refinery Piping
- ANSI, B-31.1 - Power Piping
- AWS, American Welding Society

3. Welding Procedures

- All welding performed on site will comply with applicable qualified welding procedures as specified in the Standard S40 05 13.
- Prime contractor's welders will be qualified to weld procedures in accordance with contract specifications. Prime contractor is responsible for certifying their own welders.
- Copies of the qualified welding procedures approved for that project shall be maintained on site by the Welding Foreman and Site Q/C Representative for reference and permanent retention.

4. Welder Performance Qualification

- It is the responsibility of the Site Q/C Representative to conduct or supervise the Welder Performance Qualification tests. At the discretion of the Corporate Quality Control Manager, a Welding Foreman or other qualified site supervisor may conduct these tests.
- Records attesting to the Welder Performance Qualification tests shall be generated and maintained by the Site Q/C Representative and the Welding Foreman.
- The Site Q/C Representative and the Welding Foreman shall maintain a complete listing of welders and welding operators employed. The form, Welder Qualification Log, is to be updated and reissued on a monthly basis and is to be distributed as required.

5. Welding Material Control

- The Site Q/C Representative and Welding Foreman shall make certain that the welding material used conforms to that of the welding procedure. No substitutions for the specified material will be made without written approval from the client.

6. Fit-Up and Welding

- Visual surveillance shall be performed to establish compliance to welding procedures. The inspection parameters listed below are recommended as guidelines
  - ✓ Inspect end preparation and joint configuration as established by applicable weld procedures and engineering specifications.
  - ✓ Inspect internal alignment and root opening prior to welding.
  - ✓ Check tack welds that are to be incorporated into the final weld, and be assured of proper blend grinding and absence of visual defects.
  - ✓ Check for proper welding materials and other essential variables of applicable weld procedures.
  - ✓ Check visually root pass for cracks, porosity, slag, fusion lines and quality workmanship (if required use LP).
  - ✓ Inspect completed welds for proper reinforcement. All welds should blend smoothly into the base metal and be free of cold lap or fusion at the toe.
  - ✓ Inspect weld for surface discontinuities such as undercut. Surface porosity is to be considered as an injurious defect and shall be repaired.
  - ✓ All repairs are to be made in accordance with approved procedures.
  - ✓ Each welder shall be responsible for stamping his assigned symbol immediately after completion of the weld. A smooth, flat spot shall be ground or filed on the reinforcement cap. The welder shall stamp his/hers identifying mark upon this spot.
- For ferrous material less than 1/4" (1/2" for nonferrous), the welder's symbol shall be recorded on the base metal by use of a halogen-free paint marker, or recorded on isometric drawings by the welding supervisor which shall be available to the Quality Control Inspector.

7. Radiographic Inspection

- The Site Q/C Representative or Welding Foreman will schedule radiographic inspections.
- Radiographic requirements shall be determined by the client standard to assure compliance to contract Codes and specifications.
- Welds requiring radiography will be flagged by a suitable means which will be consistent through contract completion.
- The Site Q/C Representative will complete the Radiographic Inspection Status Record, to indicate status of radio graphically-inspected welds. This form will be forwarded to appropriate supervision for distribution.
- In addition to the records generated under this procedure, marked-up isometric and orthographic drawings will be used as weld maps to indicate completion of radiographic inspection. This will allow a progressive record and give system status.

Appendix A

ALL APPLICABLE ITRs & LOGs

AGNICO EAGLE

Vendor Document Status

1 ☐ Proceed to next submission and status.

2 ☐ Proceed with exceptions as noted to next submission and status.

3 ☐ Do not proceed.
Revise as noted and resubmit next submission and status.

4 ☑ Complete, no further submission required.

By: JEAN-FRANCOIS TREMBLAY Date: 2017-05-02

Review and authorization to fabricate are only for general conformance with the design concept of the Project as expressed in the Contract Documents. Sole responsibility for the accuracy and completeness of this document, including but not limited to dimensions and quantities, remains with the Supplier/Contractor. Agnico Eagle does not warrant the accuracy or completeness of any of the information contained herein, nor does Agnico Eagle authorize or approve any construction means, methods, techniques, sequences or any safety precautions or procedures.

Agnico Eagle No. 6515-C-270-007-141-TES-0039 R: Sub001

DOCUMENT FOR INFORMATION

Agnico-Eagle Mines Ltd.

Contract no. 6515-C-270-007

Non-Destructive Examination Procedure

AEM-WE-PRO-002

Area No.: All

System No.: All

PROMEC Approvals

Prepared by:	Stéphane Doré	**Signature:**		**Date:**	2017-04-26
Verified by:	Jérémy Duval	**Signature:**		**Date:**	2017-04-26
Approved by:	Éric Poulin	**Signature:**		**Date:**	2017-04-26

CLIENT Approvals

Verified by:		**Signature:**		**Date:**	
Approved by:		**Signature:**		**Date:**	

TABLE OF CONTENTS

Page

1. Qualified Individual 3
2. Qualified Firm 3
3. NDE Purchasing Language 4

The Authorized Company for carrying out NDT and its personnel engaged in non-destructive examinations should be familiar with Promec's examination methods and the methods prescribed by the applicable drawings, specifications, codes and standards. The following list outlines the most commonly used examination methods on a Promec project:

- VT - Visual Testing
- LT - Leak Testing
- PT - Liquid Penetrant Testing
- RT - Radiographic Testing (X-ray)
- MT - Magnetic Particle Testing
- UT - Ultrasonic Testing

These methods as well as other methods may or may not, in whole or in part be sub-contracted to "qualified individuals" or firms to perform. The size and scope of the project dictates these conditions as well as the contract.

1. Qualified Individual

- The term "qualified individual" refers to the assigned person responsible for performing or reviewing the nondestructive examinations. All conflicts between the "qualified individual" and any other party will be resolved through the Project Manager and/or the Site Q/C Representative.

2. Qualified Firm

- The term "qualified firm" refers to a licensed NDE organization that performs NDE testing by subcontract for Promec. The qualified firms' contract must be governed by the contract between Promec and its client.
  - ✓ The selection of the NDE firm will be confirmed by the Corporate Quality Control Manager prior to awarding a contract.
  - ✓ The NDE firm will conduct its work in support of Promec.
  - ✓ All work performed by the NDE firm will meet the codes and specifications, quality and integrity.
  - ✓ The productivity and efficiency of the NDE firm shall be monitored to ensure that GSI and its client are receiving maximum value.

3. NDE Purchasing Language

- The following NDE Language shall be added to all Field PO's or subcontracts issued to a NDE firm. The following notes are to be used as a guide and the particular methods, codes and standards shall be verified prior to insertion into the P.O.

  - ✓ All work will be performed in accordance with ASME Section 5, Article 2 Radiographic Standards or ASME requirements.
  - ✓ All radiographic personnel shall be certified in accordance with CAN/CGSB-48.9712-2005 Latest Adopted Edition.
  - ✓ Prior to commencing any radiographic services, one copy of the following must be submitted to the Promec Quality Control Manager.
    - a) Liability Insurance Certificate. Retain copy and forward the original to the Site Project Manager.
    - b) State, Provincial and Federal Radiation Licenses (If Applicable).
    - c) All anticipated personnel certifications (For methods outlined in the contract).
    - d) Each radiographic technique procedure to be used (within the scope of the project).
  - ✓ Each crew shall have one (1) certified Level II Technician on site when working.
  - ✓ All subcontractor radiography shall be interpreted by the subcontractor for film quality and defects prior to surrendering the film and record sheets to the Promec Representative.
  - ✓ All record sheets shall be filled out completely, listing all weldment defects seen on film, whether the defects are acceptable or rejectable to codes or specifications, and shall be signed by the Subcontractor's Level II Technician.

TO BE VALIDATED

AT A LATER DATE

DRAWINGS INDEX (IFC) LATEST REVISION

DWG No.	Rev. No.	TITLE
65-116-205-200	2	116 - Fuel Tank Farm - 205 P&ID - Fuel Distribution - Flow Diagram
65-116-210-200	0	116 - Fuel Tank Farm - 210 General Arrangement - Fuel Distribution - Plan View
65-116-245-200	0	116 - Fuel Tank Farm - 245 - Structural Steel - Fuel Distribution - Modification & Additions at the Containers
65-116-245-201	0	116 - Fuel Tank Farm - 245 - Structural Steel - Fuel Distribution - Dike, Pipe & Containers Catwalks
65-116-260-200	0	116 - Fuel Tank Farm - 260 - Platework - Tank #1 - 20 000 000 liters Ø43m x 14m H - General Arrangement
65-116-260-201	0	116 - Fuel Tank Farm - 260 - Platework - Tank #2 - 13 500 000 liters Ø35.1m x 14m H - General Arrangement
65-116-260-202	0	116 - Fuel Tank Farm - 260 - Platework - Tank #1 @ #6 - Details
65-116-270-200	0	116 - Fuel Tank Farm - 270 - Piping - Fuel Distribution - Details
65-116-270-201	0	116 - Fuel Tank Farm - 270 - Piping - Fuel Distribution - Details
65-ULT-116-MP-001	2	116 - Fuel Tank Farm - Fuel Distribution - General Arrangement - Plan View
65-ULT-116-MP-002	2	116 - Fuel Tank Farm - Fuel Distribution - General Arrangement - Plan View
65-ULT-116-MP-003	2	116 - Fuel Tank Farm - Fuel Distribution - General Arrangement - Plan View
116-100-PDI-CC10-0020_1 de 2	3	116 - Fuel Tank Farm - Ranklin Inlet - Fabrication Isometric - Diesel from POD11601B to bottom Loading Arm 65EQM11601
116-100-PDI-CC10-0020_2 de 2	2	116 - Fuel Tank Farm - Ranklin Inlet - Fabrication Isometric - Diesel from POD11601B to bottom Loading Arm 65EQM11601
116-100-PDI-CC10-0023_1 de 4	2	116 - Fuel Tank Farm - Ranklin Inlet - Fabrication Isometric - Diesel from POD11601A to bottom Loading Arm 65EQM11601
116-100-PDI-CC10-0023_2 de 4	3	116 - Fuel Tank Farm - Ranklin Inlet - Fabrication Isometric - Diesel from POD11601A to bottom Loading Arm 65EQM11601
116-100-PDI-CC10-0023_3 de 4	2	116 - Fuel Tank Farm - Ranklin Inlet - Fabrication Isometric - Diesel from POD11601A to bottom Loading Arm 65EQM11601
116-100-PDI-CC10-0023_4 de 4	3	116 - Fuel Tank Farm - Ranklin Inlet - Fabrication Isometric - Diesel from POD11601A to bottom Loading Arm 65EQM11601
116-150-PDI-CC10-0001_1 de 13	3	116 - Fuel Tank Farm - Ranklin Inlet - Fabrication Isometric - Marine Line to 65TNK11601 & 65TNK11602
116-150-PDI-CC10-0001_2 de 13	2	116 - Fuel Tank Farm - Ranklin Inlet - Fabrication Isometric - Marine Line to 65TNK11601 & 65TNK11602
116-150-PDI-CC10-0001_3 de 13	2	116 - Fuel Tank Farm - Ranklin Inlet - Fabrication Isometric - Marine Line to 65TNK11601 & 65TNK11602
116-150-PDI-CC10-0001_4 de 13	2	116 - Fuel Tank Farm - Ranklin Inlet - Fabrication Isometric - Marine Line to 65TNK11601 & 65TNK11602
116-150-PDI-CC10-0001_5 de 13	2	116 - Fuel Tank Farm - Ranklin Inlet - Fabrication Isometric - Marine Line to 65TNK11601 & 65TNK11602
116-150-PDI-CC10-0001_6 de 13	2	116 - Fuel Tank Farm - Ranklin Inlet - Fabrication Isometric - Marine Line to 65TNK11601 & 65TNK11602
116-150-PDI-CC10-0001_7 de 13	2	116 - Fuel Tank Farm - Ranklin Inlet - Fabrication Isometric - Marine Line to 65TNK11601 & 65TNK11602
116-150-PDI-CC10-0001_8 de 13	2	116 - Fuel Tank Farm - Ranklin Inlet - Fabrication Isometric - Marine Line to 65TNK11601 & 65TNK11602
116-150-PDI-CC10-0001_9 de 13	2	116 - Fuel Tank Farm - Ranklin Inlet - Fabrication Isometric - Marine Line to 65TNK11601 & 65TNK11602
116-150-PDI-CC10-0001_10 de 13	2	116 - Fuel Tank Farm - Ranklin Inlet - Fabrication Isometric - Marine Line to 65TNK11601 & 65TNK11602
116-150-PDI-CC10-0001_11 de 13	2	116 - Fuel Tank Farm - Ranklin Inlet - Fabrication Isometric - Marine Line to 65TNK11601 & 65TNK11602
116-150-PDI-CC10-0001_12 de 13	2	116 - Fuel Tank Farm - Ranklin Inlet - Fabrication Isometric - Marine Line to 65TNK11601 & 65TNK11602
116-150-PDI-CC10-0001_13 de 13	2	116 - Fuel Tank Farm - Ranklin Inlet - Fabrication Isometric - Marine Line to 65TNK11601 & 65TNK11602
116-150-PDI-CC10-0004_1 de 3	2	116 - Fuel Tank Farm - Ranklin Inlet - Fabrication Isometric - Marine Line to 65TNK11602
116-150-PDI-CC10-0004_2 de 3	2	116 - Fuel Tank Farm - Ranklin Inlet - Fabrication Isometric - Marine Line to 65TNK11602
116-150-PDI-CC10-0004_3 de 3	2	116 - Fuel Tank Farm - Ranklin Inlet - Fabrication Isometric - Marine Line to 65TNK11602
116-150-PDI-CC10-0006_1 de 12	2	116 - Fuel Tank Farm - Ranklin Inlet - Fabrication Isometric - Diesel from 65TNK11601 & 65TNK11602 to Pumping Station
116-150-PDI-CC10-0006_2 de 12	2	116 - Fuel Tank Farm - Ranklin Inlet - Fabrication Isometric - Diesel from 65TNK11601 & 65TNK11602 to Pumping Station
116-150-PDI-CC10-0006_3 de 12	2	116 - Fuel Tank Farm - Ranklin Inlet - Fabrication Isometric - Diesel from 65TNK11601 & 65TNK11602 to Pumping Station

DRAWINGS INDEX (IFC) LATEST REVISION

DWG No.	Rev. No.	TITLE
116-150-PDI-CC10-0006_4 de 12	2	116 - Fuel Tank Farm - Ranklin Inlet - Fabrication Isometric - Diesel from 65TNK11601 & 65TNK11602 to Pumping Station
116-150-PDI-CC10-0006_5 de 12	2	116 - Fuel Tank Farm - Ranklin Inlet - Fabrication Isometric - Diesel from 65TNK11601 & 65TNK11602 to Pumping Station
116-150-PDI-CC10-0006_6 de 12	2	116 - Fuel Tank Farm - Ranklin Inlet - Fabrication Isometric - Diesel from 65TNK11601 & 65TNK11602 to Pumping Station
116-150-PDI-CC10-0006_7 de 12	2	116 - Fuel Tank Farm - Ranklin Inlet - Fabrication Isometric - Diesel from 65TNK11601 & 65TNK11602 to Pumping Station
116-150-PDI-CC10-0006_8 de 12	2	116 - Fuel Tank Farm - Ranklin Inlet - Fabrication Isometric - Diesel from 65TNK11601 & 65TNK11602 to Pumping Station
116-150-PDI-CC10-0006_9de 12	2	116 - Fuel Tank Farm - Ranklin Inlet - Fabrication Isometric - Diesel from 65TNK11601 & 65TNK11602 to Pumping Station
116-150-PDI-CC10-0006_10 de12	2	116 - Fuel Tank Farm - Ranklin Inlet - Fabrication Isometric - Diesel from 65TNK11601 & 65TNK11602 to Pumping Station
116-150-PDI-CC10-0006_11 de 12	2	116 - Fuel Tank Farm - Ranklin Inlet - Fabrication Isometric - Diesel from 65TNK11601 & 65TNK11602 to Pumping Station
116-150-PDI-CC10-0006_12 de 12	2	116 - Fuel Tank Farm - Ranklin Inlet - Fabrication Isometric - Diesel from 65TNK11601 & 65TNK11602 to Pumping Station
116-150-PDI-CC10-0007	2	116 - Fuel Tank Farm - Ranklin Inlet - Fabrication Isometric - Diesel from 65TNK11602 to Pumping Station
116-150-PDI-CC10-0011_1 de 5	2	116 - Fuel Tank Farm - Ranklin Inlet - Fabrication Isometric - Diesel from 65TNK11601 to Pumping Station
116-150-PDI-CC10-0011_2 de 5	2	116 - Fuel Tank Farm - Ranklin Inlet - Fabrication Isometric - Diesel from 65TNK11601 to Pumping Station
116-150-PDI-CC10-0011_3 de 5	2	116 - Fuel Tank Farm - Ranklin Inlet - Fabrication Isometric - Diesel from 65TNK11601 to Pumping Station
116-150-PDI-CC10-0011_4 de 5	2	116 - Fuel Tank Farm - Ranklin Inlet - Fabrication Isometric - Diesel from 65TNK11601 to Pumping Station
116-150-PDI-CC10-0011_5 de 5	2	116 - Fuel Tank Farm - Ranklin Inlet - Fabrication Isometric - Diesel from 65TNK11601 to Pumping Station
116-150-PDI-CC10-0012	2	116 - Fuel Tank Farm - Ranklin Inlet - Fabrication Isometric - Diesel from 65TNK11601 to Pumping Station
116-150-PDI-CC10-0018_1 de 2	3	116 - Fuel Tank Farm - Ranklin Inlet - Fabrication Isometric - Diesel from 65TNK11601 & 65TNK11602 to 65POD11601A
116-150-PDI-CC10-0018_2 de 2	2	116 - Fuel Tank Farm - Ranklin Inlet - Fabrication Isometric - Diesel from 65TNK11601 & 65TNK11602 to 65POD11601A

NO. DESSIN (drawing no) 65-116-205-200_R2.dwg

FORMAT ARCHO

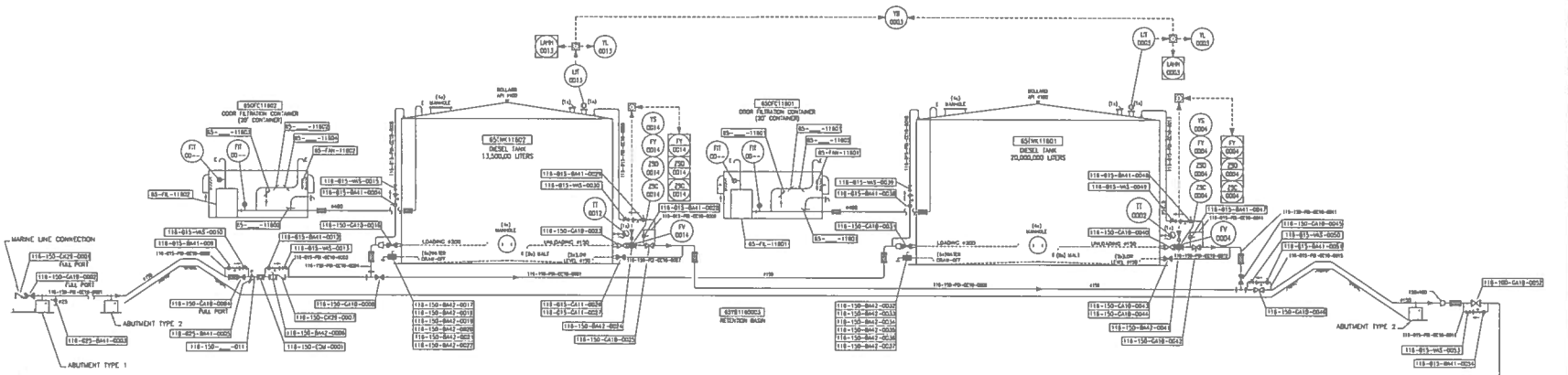

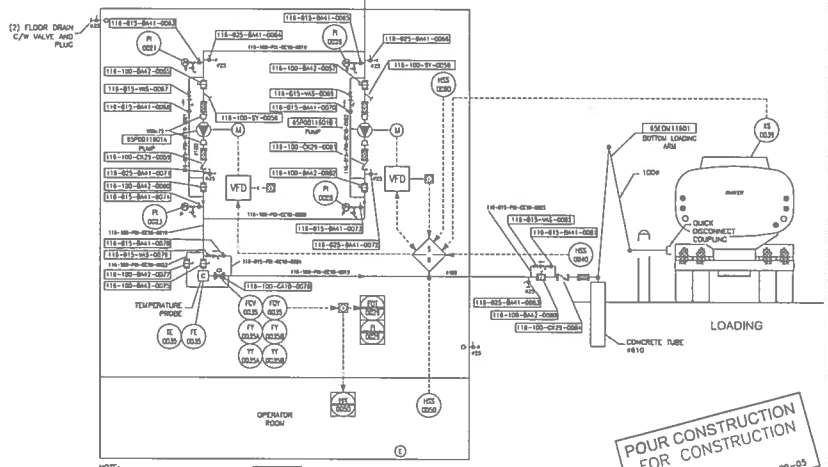

NOTE:
INSTALL DRAIN VALVE #25 WITH PLUG AT LOW POINTS.

65PST11801
PUMPING STATION (20' CONTAINER)

LEGEND

PIPING

FLANGED	THREADED	
		BALL VALVE
		GATE VALVE
		PRESSURE RELIEF VALVE
		CONTROL VALVE
		MOTORIZED BALL VALVE
		CHECK VALVE
		STRAINER
		FLEXIBLE
		REDUCER
		UNION
		FLANGES
		BLANK FLANGE
		CAP
		CONNECTION
		PIG EATCHER
		FLOW INDICATOR "VISI-FLOW"
		METER c/w STRAINER & BLEEDER
		VALVE-NORMALLY OPEN
		VALVE-NORMALLY CLOSED
		PIPE DOWN
		PIPE UP
		PUMP
		PRESSURE RELIEF VALVE KT; PIPING #12.5 SCH. 80, PRESSURE RELIEF VALVE (AJUSTED TO 3 PSI UNLESS OTHERWISE SPECIFIED), UNION, F WITH PLUG & BALL VALVE
		PRESSURE GAGE TO VACUM OF POMPE (VACUUM)
		PRESSURE GAGE TO DISHARGE OF PUMP (POSITIVE PRESSURE)
		TEMPERATURE PROBE

VERTICAL TANK

- OUTLET
- GAGE HATCH
- RADAR GAGE
- TEMPERATURE SENSOR (OUTLET #19)
- VENT

VENTILATION

- AIR BALANCING KEY
- AIR PRESSURE RELIEF OR BACK-DRAFT DAMPER
- MANUEL FLAP
- AIR FLOW SWITCH

GENERAL

- EXTINGUISHER 20 BC

PAID

SEE DWG 65-500-205-207

POUR CONSTRUCTION
FOR CONSTRUCTION
AGNICO EAGLE DATE : 2017-09-05

EN PROGRÈS
IN PROGRESS
AGNICO EAGLE DATE : 2017-09-05

WSP
1075, 3e AVENUE O
VALDOR (QUÉBEC) CANADA J9P 1W1
TÉL.: 1-819-825-5111 | TÉLÉC.: 1-819-825-7115 | WWW.WSPGROUP.COM
Ref. 151-05548-00

NOTES GÉNÉRALES / GENERAL NOTES

1. REPLACE DRAWING : 65-103-205-200

DESSINS EN RÉFÉRENCE / REFERENCE DRAWINGS

NUM. / FILE	

AGNICO EAGLE

REVISIONS

NO.	DATE	DESCRIPTION	PAR / BY	VÉRIF. / CHK
2	2017-09-06	MODIFICATION AT EQUIPMENT	J.G.	D.T.
1	2017-07-18	INFORMATION ADDED	F.H.G.	L.S.
0	2017-03-14	ISSUED FOR CONSTRUCTION	J.G.	D.T.

NOM / TITLE
AGNICO EAGLE – MELIADINE DIVISION
118 – FUEL TANK FARM
205 – P&ID
FUEL DISTRIBUTION
FLOW DIAGRAM

DESSINÉ PAR drawn by	DANIELLE CORMIER, tech.	DATE 2017-03-28
VÉRIFIÉ PAR checked by	JOEL MORLIÈRE, tech.	2017-03-28
APPROUVÉ PAR approved by	DENIS THIBODEAU, P. Eng.	2017-03-28

ÉCHELLE SCALE	NONE	DATE 2017-03-28
NO. DESSIN drawing no.	65-116-205-200	
NO. PROJET PROJECT NO. 6515	REVISION 2	FEUILLE / SHT 1 / 1

FILE NO.

NO. DESSIN DRAWING NO. 65-116-210-200

FORMAT ARCHD

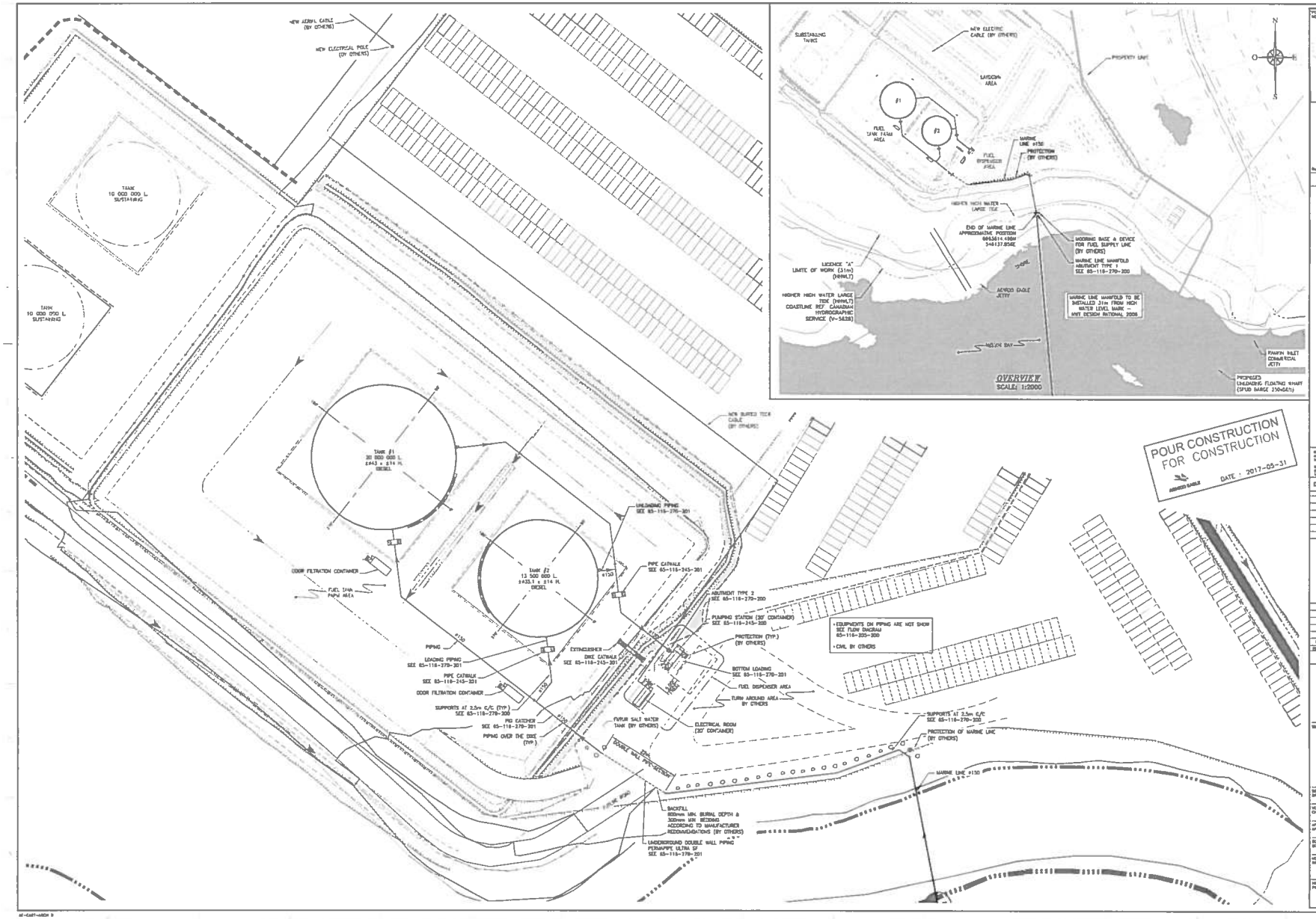

WSP

1075, 3e AVENUE EST
VAL-D'OR (QUÉBEC) CANADA J9P 0J1
TÉL.: (819) 825-4214 | TÉLÉC.: (819) 824-1514 | WWW.WSPGROUP.COM

Ref. 151-00040-00

NOTES GÉNÉRALES / GENERAL NOTES

1. TANK DIMENSIONS ADJUSTED ACCORDING TO INFORMATION PROVIDED BY CONTRACTOR
2. REPLACE DRAWING : 65-103-210-200

DESSINS EN RÉFÉRENCE / REFERENCE DRAWINGS

FICHE / FILE	# DWG

AGNICO EAGLE

REV.	DATE	DESCRIPTION	PAR/BY	APP.	CLIENT
0	2017-05-31	ISSUED FOR CONSTRUCTION	J.M.	D.T.	

REVISIONS

TITRE / TITLE
AGNICO EAGLE – MELIADINE DIVISION
116 – FUEL TANK FARM
210 – GENERAL ARRANGEMENT
FUEL DISTRIBUTION
PLAN VIEWS

DESSINÉ PAR DRAWN BY	G. CORMAUT	DATE 2017-05-29
VERIFIÉ PAR CHECKED BY	J. MORLIERE, tech.	2017-05-29
APPROUVÉ PAR APPROVED BY	G. THIBODEAU, P. Eng.	2017-05-29
ÉCHELLE SCALE	INDICATED	DATE 2017-05-29

NO. DESSIN DRAWING NO. 65-116-210-200

NO. PROJET PROJECT NO.	REVISION	FEUILLE / SHT
6515	0	1 / 1

FILE NO. 65-116-210-200_00.dwg

NO. DESSIN DRAWING NO. 65-116-245-200

FORMAT ARCH D

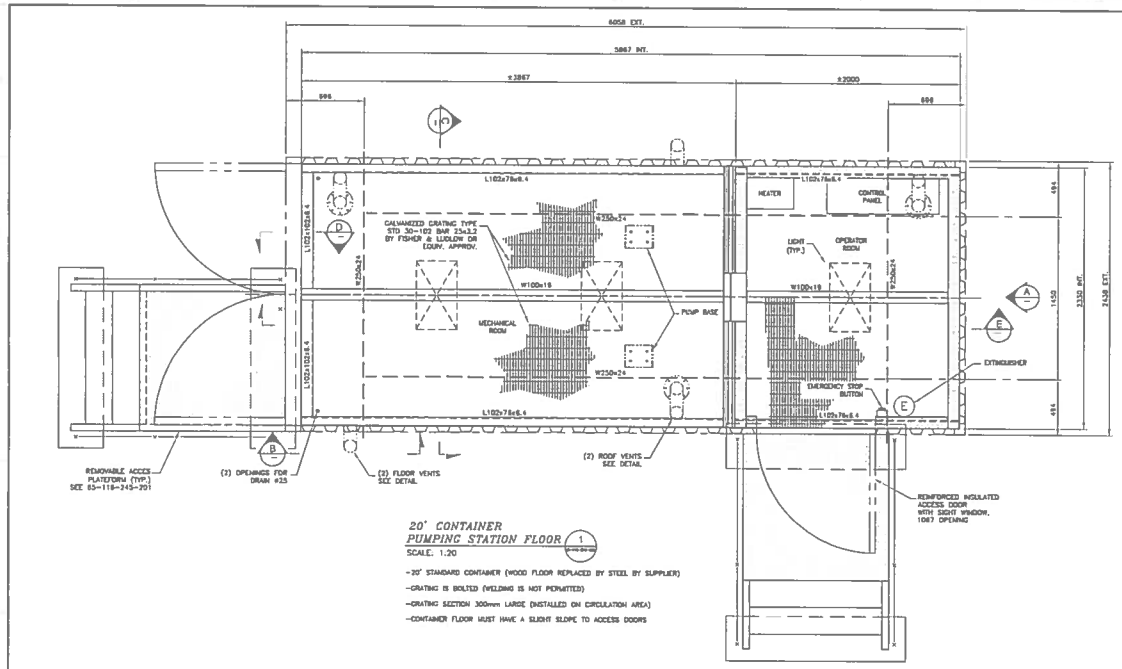

20' CONTAINER PUMPING STATION FLOOR (1)

SCALE: 1:20

- 20' STANDARD CONTAINER (WOOD FLOOR REPLACED BY STEEL BY SUPPLIER)
- GRATING IS BOLTED (WELDING IS NOT PERMITTED)
- GRATING SECTION 300mm LARGE (INSTALLED ON CIRCULATION AREA)
- CONTAINER FLOOR MUST HAVE A SLIGHT SLOPE TO ACCESS DOORS

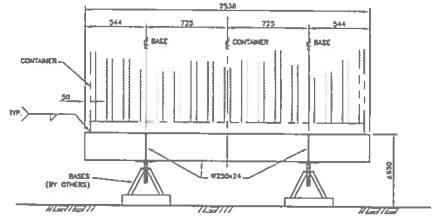

ELEVATION (A)

SCALE: 1:20

(1) ARRANGEMENT PUMPING STATION

POUR CONSTRUCTION FOR CONSTRUCTION
AGNICO EAGLE
DATE : 2017-05-31

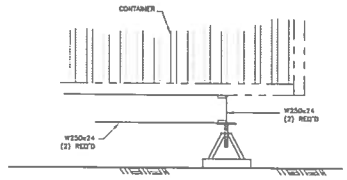

ELEVATION (B)

SCALE: 1:20

(1) ARRANGEMENT PUMPING STATION

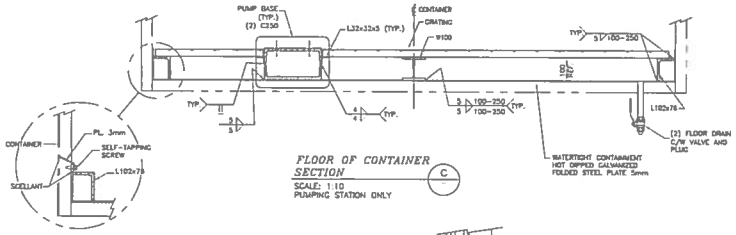

FLOOR OF CONTAINER SECTION (C)

SCALE: 1:10

PUMPING STATION ONLY

WATERTIGHT CONTAINMENT

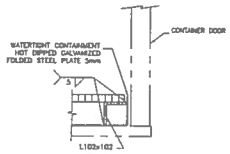

SECTION (D)

SCALE: 1:10

PUMPING STATION ONLY

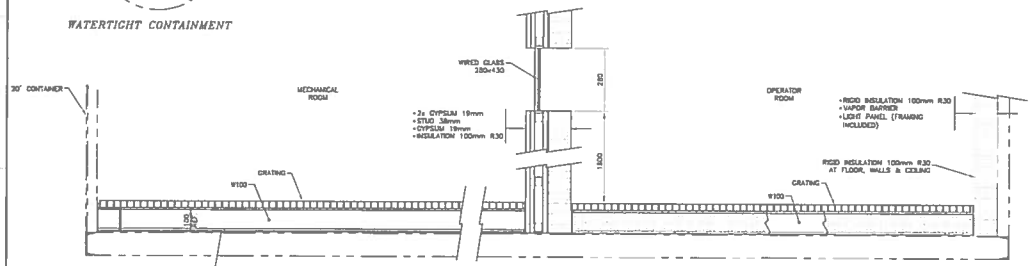

FLOOR OF CONTAINER SECTION (E)

SCALE: 1:10

PUMPING STATION ONLY

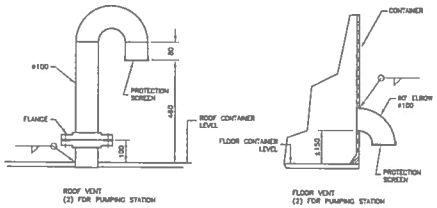

ROOF VENT (2) FOR PUMPING STATION

FLOOR VENT (2) FOR PUMPING STATION

VENT FOR CONTAINER (J)

SCALE: 1:10

PUMPING STATION ONLY

WSP

NOTES GENERALES / GENERAL NOTES

1. REPLACE DRAWING : 65-103-245-200

DESIGNS EN REFERENCE / REFERENCE DRAWINGS

TYPE / TITLE	# DWG

AGNICO EAGLE

REV.	DATE	DESCRIPTION	DES.	DR.	APP.	CHKD
0	2017-05-31	ISSUED FOR CONSTRUCTION	J.M.	G.T.		

REVISIONS

TITRE / TITLE
AGNICO EAGLE – MELIADINE DIVISION
116 – FUEL TANK FARM
245 – STRUCTURAL STEEL
FUEL DISTRIBUTION
MODIFICATIONS & ADDITIONS AT THE CONTAINERS

DESSINE PAR DRAWN BY	G. CORMUT	DATE 2017-05-29
VERIFIE PAR CHECKED BY	J. MORIERE, Ingin.	2017-05-29
APPROUVE PAR APPROVED BY	D. THIBODEAU, P. Eng.	2017-05-29
ECHELLE SCALE	INDICATED	DATE 2017-05-29
NO. DESSIN DRAWING NO.	65-116-245-200	
NO. PROJET PROJECT NO.	6515	REVISION 0 / FEUILLE / SHT 1 / 1

AE-CART-ARCH B

FILE NO. 65-116-245-200_REV.dwg

NO. DESIGN DRAWING NO. 65-116-245-201

FORMAT ARCH0

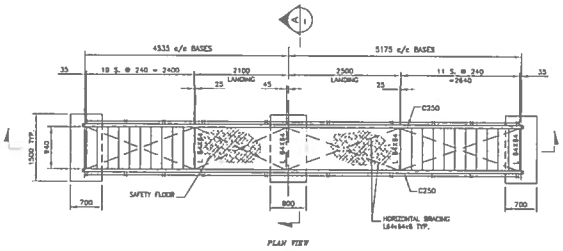

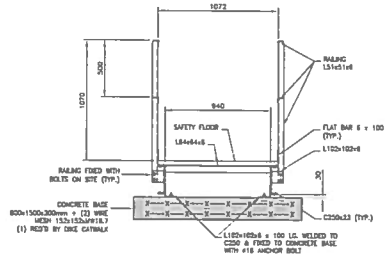

SECTION A
SCALE: 1:20

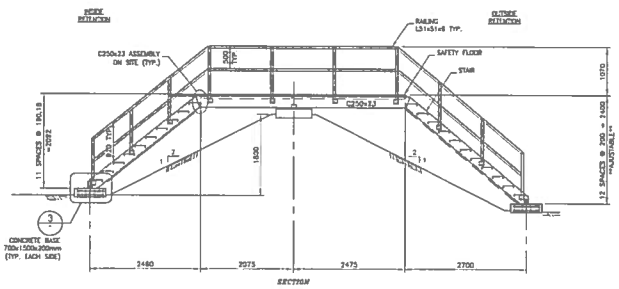

DIKE CATWALK 1
SCALE: 1:50
QTY: 1

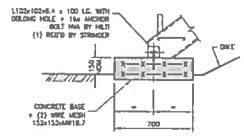

DETAIL 3
SCALE: 1:20

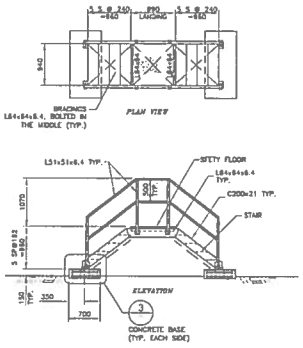

PIPE CATWALK 2
SCALE: 1:50
QTY: 3

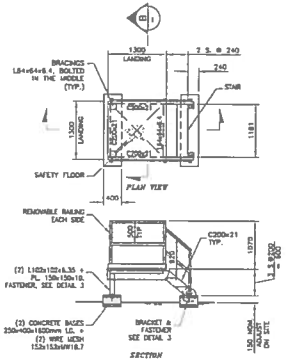

CONTAINER CATWALK 2
SCALE: 1:50
(2) PUMPING STATION

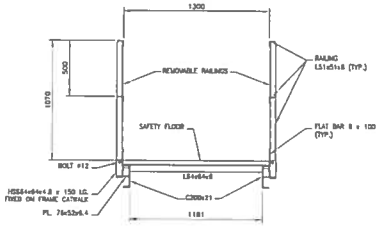

SECTION B
SCALE: 1.20

NOTES:

CATWALK, RAILINGS AND STAIRS ARE ASSEMBLED AND BOLTED ON SITE.

DEAD LOAD = 0.5 kpa
LIVE LOAD = 4.8 kpa
MAXIMUM ARROW = L/300

MATERIAL

GRATING OF LANDING

GRIP SPAN SAFETY GRATING, GALVANIZED STEEL, (D-51215-G, 5 DIAMONDS, Ga 2.7mm, 38.1mm DEEP) BY FISHER LUDLOW OR APPROVED EQUIVALENT, MAX. 308mm WIDTH EXCEPT WHEN INDICATED DIFFERENTLY.

STAIR

GRIP SPAN SAFETY GRATING, GALVANIZED STEEL, (D-41215-G, 4 DIAMONDS, Ga 2.7mm, 38.1mm DEEP) BY FISHER LUDLOW OR APPROVED EQUIVALENT, MAX. 241mm WIDTH EXCEPT WHEN INDICATED DIFFERENTLY.

POUR CONSTRUCTION
FOR CONSTRUCTION
AGNICO EAGLE
DATE : 2017-05-31

WSP
1075, 3e AVENUE EST
VAL D'OR (QUÉBEC) CANADA J9P 1J7
TEL.: 819 825-4274 | TELEC.: 819 824-1554 | www.wspgroup.com
Ref. 151-054-00

NOTES GENERALES / GENERAL NOTES

SEE SPECIFICATIONS
1. REPLACE DRAWING : 65-103-245-201

DESIGNS EN REFERENCE / REFERENCE DRAWINGS

TITRE / TITLE	# DWG

AGNICO EAGLE

NO.	DATE	DESCRIPTION	PAR / BY	APP.	TYPE
0	2017-05-31	ISSUED FOR CONSTRUCTION	J.M.	G.T.	

REVISIONS

TITRE / TITLE
AGNICO EAGLE – MELIADINE DIVISION
116 – FUEL TANK FARM
245 – STRUCTURAL STEEL
FUEL DISTRIBUTION
DIKE, PIPE & CONTAINERS CATWALKS

DESSINE PAR / DRAWN BY	C. CORMUT	DATE 2017-05-29
VERIFIE PAR / CHECKED BY	J. MORLIERE, tech.	2017-05-29
APPROUVE PAR / APPROVED BY	D. THIBODEAU, P. Eng.	2017-05-29
ECHELLE / SCALE	INDICATED	DATE 2017-05-29

NO. DESSIN / DRAWING NO. 65-116-245-201

NO. PROJET / PROJECT NO.	REVISION	FEUILLE / SHEET
6515	0	1 / 1

FILE NO. 65-116-245-201_R0.dwg

NO. DESSIN
Drawing NO. 65-116-260-200

FORMAT ARCHD

NEW TANK #1 - DIESEL

SPECIFICATIONS:
NOMINAL DIAMETER (METERS) ø43m
ORIGINAL NOMINALE HEIGHT (METERS): ø14m
NOMINAL CAPACITY: 20,000,000 liters

No.	QTY	DESCRIPTION	REMARKS
1	4	ø600 ROOF MANHOLE	TO API 650 STANDARDS
2	4	ø600 SHELL MANHOLE	TO API 650 STANDARDS
3	1	ø100 PAINTER SCAFFOLD CABLE SUPPORT	TO API 650 STANDARDS
4	4	SHELL NOZZLE – INLET/OUTLET	TO API 650 STANDARDS
5	–	VENT OPENING	TO API 2000 & 650 STANDARDS, DIAMETER & QTY TO BE DETERMINE BY THE MANUFACTURER, SEE DETAIL
6	6	WATER DRAIN-OFF	TO API 650 STANDARDS, SEE DETAIL
7	2	ROOF PRESSURE RELIEF LINE CONNECTION, HALF COUPLING ø25 (THREADED)	TO API 650 STANDARDS & MBC
8	1	ROOF ø150 GAUGE HATCH	TO API 650 STANDARDS, SEE DETAIL
9	1	FIRED PIPE – TANK LOADING ø200 x 14.3m LG.	TO API 650 STANDARDS
10			
11			
12	2	SHELL BRACKET FOR PIPING & CONDUIT	SEE DETAIL
13			
14	1	ROOF INSPECTION FRAME	TO API 650 STANDARDS
15	1	ROOF GUARDRAIL	TO API 650 STANDARDS & MBC
16	1	SPIRAL STAIRWAY, GUARDRAIL & HANDRAIL	TO API 650 STANDARDS & MBC
17	1	FIRED PIPE – TANK UNLOADING ø150 x 14.3m LG.	TO API 650 STANDARDS
18	2	PUMPING LOW LEVEL ø150	TO API 650 STANDARDS, SEE DETAIL
19	8	GROUNDING LUG	TO API 650 STANDARDS, SEE DETAIL
20	1	ROOF NOZZLE ø200 FOR OVERFILL PROTECTION	TO API 650 STANDARDS, SEE DETAIL

NOTE:

1. APPROXIMATIVE STAIRWAY LOCATION: CONTRACTOR HAVE TO ENSURE A MINIMUM CLEARANCE OF 1000mm IN ELEVATION BETWEEN STAIRS AND ANY SHELL CONNECTION

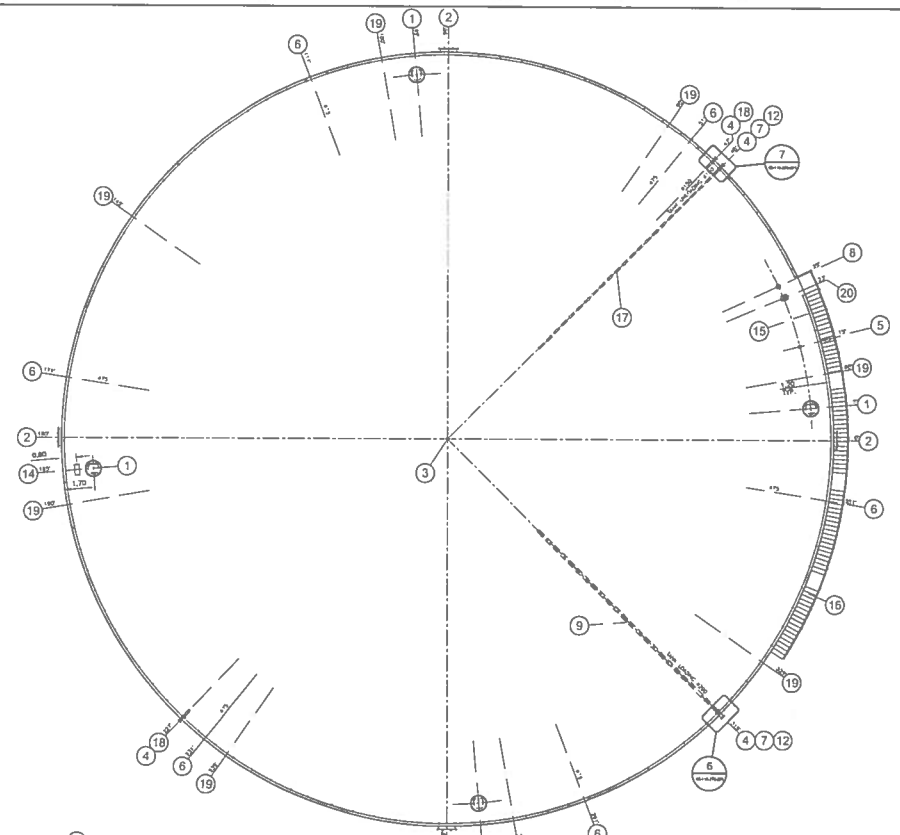

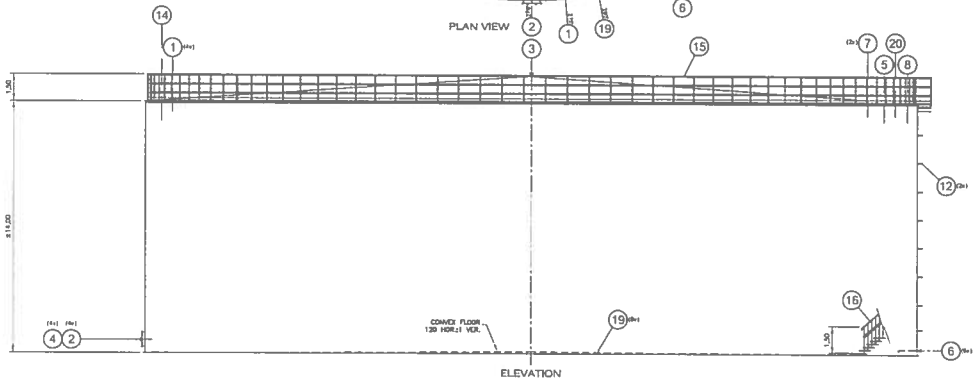

POUR CONSTRUCTION
FOR CONSTRUCTION
AGNICO EAGLE DATE : 2017-05-31

WSP
1075 3e AVENUE EST
VAL D'OR (QUÉBEC) CANADA J9P 1J7
TÉL.: 819 825-4214 | TÉLÉC.: 819 824-1414 | WWW.WSPGROUP.COM
Ref. 181-05440-00

NOTES GÉNÉRALES / GENERAL NOTES

1. TANK DIMENSIONS ADJUSTED ACCORDING TO INFORMATION PROVIDED BY CONTRACTOR
2. REPLACE DRAWING : 65-103-260-200

DESSINS EN RÉFÉRENCE / REFERENCE DRAWINGS

TITRE / TITLE	# DWG

AGNICO EAGLE

REV.	DATE	DESCRIPTION	PREP. PAR	APP.	APP.
0	2017-05-31	ISSUED FOR CONSTRUCTION	J.G.	G.T.	

REVISIONS

TITRE / TITLE
AGNICO EAGLE – MELIADINE DIVISION
116 – FUEL TANK FARM
260 – PLATEWORK
TANK #1 – 20,000,000 liters
ø43m x 14m H.
GENERAL ARRANGEMENT

DESSINÉ PAR Drawn BY	GHISLAINE CORMUT	DATE 2017-05-29
VERIFIÉ PAR CHECKED BY	JOËL MORLIÈRE, tech.	2017-05-29
APPROUVÉ PAR APPROVED BY	DENIS THÉODEAU, Ing.	2017-05-29
ÉCHELLE SCALE	1:125	DATE 2017-05-29

NO. DESSIN Drawing NO. 65-116-260-200

NO. PROJET PROJECT NO.	REVISION	FEUILLE / SHT
5515	0	1 / 1

M-CAMT-MECH 0

\\CAMTL\DATA01\projets\181\P\181-05440-00\Dessin Manique\Dwg\65-116-260-200-RE.dwg-2017-05-19 14:03:26

FILE NO. 65-116-260-200-RE.dwg

NO. DESIGN DRAWING NO. 65-116-250-201

FORMAT ARCHD

NEW TANK #2 - DIESEL

SPECIFICATIONS:
NOMINAL DIAMETER (METERS) ±35.1m
ORIGINAL NOMINALE HEIGHT (METERS): ±14m
NOMINAL CAPACITY: 13,500,000 liters

No.	QTY	DESCRIPTION	REMARKS
1	4	ø600 ROOF MANHOLE	TO API 650 STANDARDS
2	4	ø900 SHELL MANHOLE	TO API 650 STANDARDS
3	1	ø100 PAINTER SCAFFOLD CABLE SUPPORT	TO API 650 STANDARDS
4	4	SHELL NOZZLE – INLET/OUTLET	TO API 650 STANDARDS
5		VENT OPENING	TO API 2000 & 650 STANDARDS. DIAMETER & QTY TO BE DETERMINE BY THE MANUFACTURER, SEE DETAIL
6	6	WATER DRAIN-OFF	TO API 650 STANDARDS, SEE DETAIL
7	2	ROOF PRESSURE RELIEF LINE CONNECTION, HALF COUPLING #25 (THREADED)	TO API 650 STANDARDS & NBC
8	1	ROOF #150 GAUGE HATCH	TO API 650 STANDARDS, SEE DETAIL
9	1	FIXED PIPE – TANK LOADING #200 x 11.7m LG.	TO API 650 STANDARDS
10			
11			
12	2	SHELL BRACKET FOR PIPING & CONDUIT	SEE DETAIL
13			
14	1	ROOF INSPECTION FRAME	TO API 650 STANDARDS
15	1	ROOF GUARDRAIL	TO API 650 STANDARDS & NBC
16	1	SPIRAL STAIRWAY, GUARDRAIL & HANDRAIL	TO API 650 STANDARDS & NBC
17	1	FIXED PIPE – TANK UNLOADING #150 x 11.7m LG.	TO API 650 STANDARDS
18	2	PUMPING LOW LEVEL #150	TO API 650 STANDARDS, SEE DETAIL
19	8	GROUNDING LUG	TO API 650 STANDARDS, SEE DETAIL
20	1	ROOF NOZZLE #200 FOR OVERFILL PROTECTION	TO API 650 STANDARDS, SEE DETAIL

NOTE:

1. APPROXIMATIVE STAIRWAY LOCATION: CONTRACTOR HAVE TO ENSURE A MINIMUM CLEARANCE OF 1000mm IN ELEVATION BETWEEN STAIRS AND ANY SHELL CONNECTION

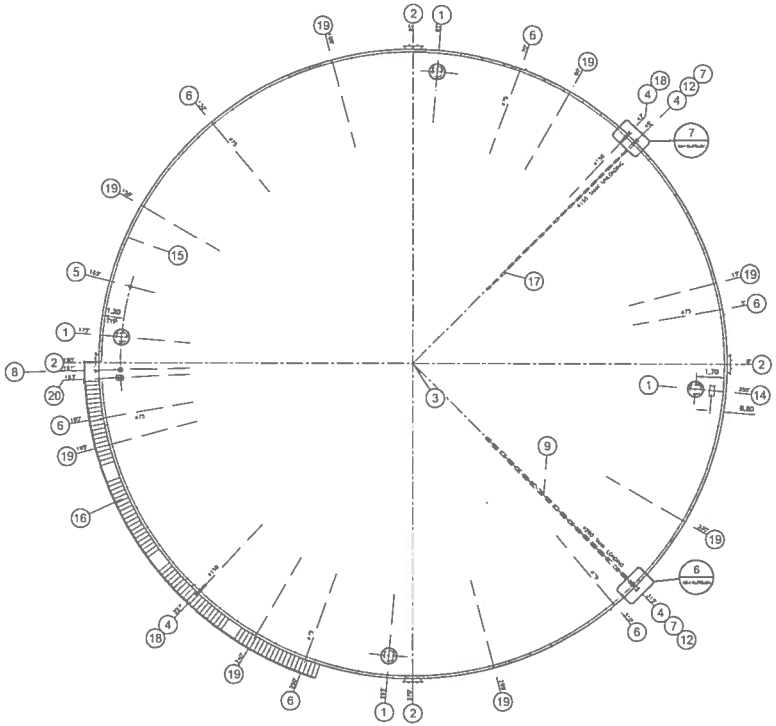

PLAN VIEW

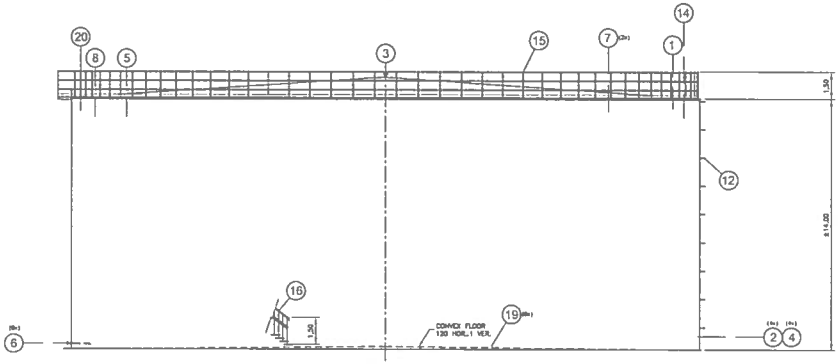

ELEVATION

POUR CONSTRUCTION
FOR CONSTRUCTION
AGNICO EAGLE
DATE : 2017-05-31

WSP
1275, 3e AVENUE EST
VAL-D'OR (QUÉBEC) CANADA J9P 6J7
TÉL.: (819) 824-4214 | TÉLÉC.: (819) 824-1944 | WWW.WSPGROUP.COM
Ref. 151-00640-00

NOTES GÉNÉRALES / GENERAL NOTES

1. TANK DIMENSIONS ADJUSTED ACCORDING TO INFORMATION PROVIDED BY CONTRACTOR
2. REPLACE DRAWING : 65-163-250-201

DESSINS EN RÉFÉRENCE / REFERENCE DRAWINGS

NUMÉRO / TITLE	# DWG.

AGNICO EAGLE

REV.	DATE	DESCRIPTION	PREP. BY	APP.	CLIENT
0	2017-05-31	ISSUED FOR CONSTRUCTION	J.N.	G.T.	

REVISIONS

TITRE / TITLE
AGNICO EAGLE – WELJADINE DIVISION
116 – FUEL TANK FARM
250 – PLATEWORK
TANK #2 – 13 500 000 liters
ø35.1m x 14m H.
GENERAL ARRANGEMENT

DESSINÉ PAR drawn BY	GHISLAINE CORMAUT	DATE 2017-05-29
VERIFIÉ PAR CHECKED BY	JOËL MORLIERE, tech.	2017-05-29
APPROUVÉ PAR APPROVED BY	DENIS THEODEAU, ing.	2017-05-29
ÉCHELLE SCALE	INDICATED	DATE 2017-05-29

NO. DESSIN DRAWING NO. 65-116-250-201

NO. PROJET PROJECT NO.	REVISION	FEUILLE / SHEET
6515	0	1/1

AF-CART-ARCH B

\\Lavalfil1\Data\Projets\2012\1\121-00640-00\Dessin Nombreux\Dwg\65-116-250-201-R0.dwg=2013-02-19 14:03:28

FILE NO. 65-116-250-201-R0.dwg

NO. DESSIN
DRAWING NO. 65-116-260-202

FORMAT ARCH D

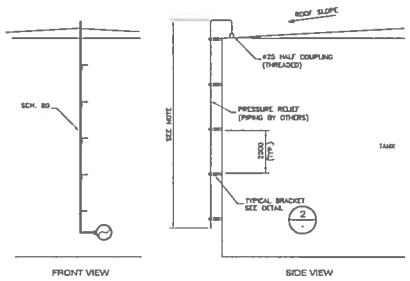

NOTE:
WELDED JOINTS & TESTED ON THIS SECTION (NOT THREADED JOINTS)

1 - PRESSURE RELIEF LINE
Detail NTS

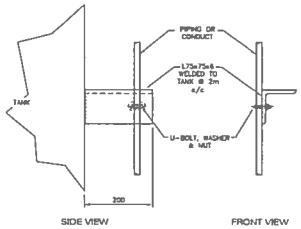

NOTE: FOR ITEMS 8 & 13

2 - BRACKET FOR PIPING OR ELECTRICAL CONDUIT TO THE SHELL TANK
Detail scale 1:5

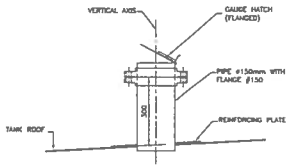

3 - GAUGE HATCH
Detail scale 1:10

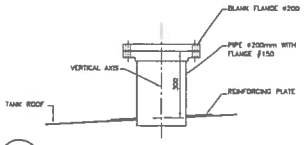

4 - NOZZLE Ø200
Detail scale 1:10

POUR CONSTRUCTION
FOR CONSTRUCTION
AGNICO EAGLE
DATE : 2017-05-31

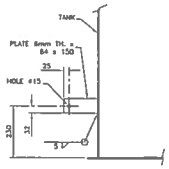

6 - GROUNDING LUG
Detail scale 1:10

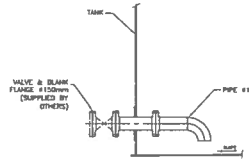

7 - PUMPING LOW LEVEL
Detail scale 1:20

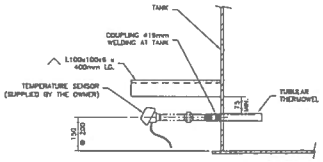

8 - TEMPERATURE SENSOR ON SHELL TANK
Detail scale 1:10

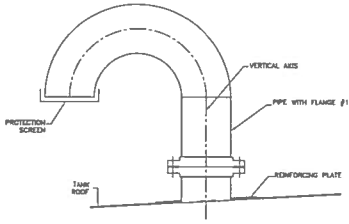

5 - VENT
Typical detail scale 1:10

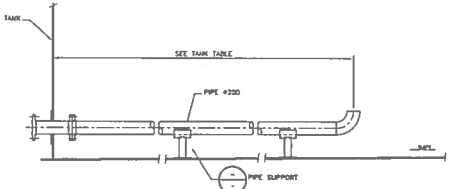

11 - FIXED PIPE - TANK LOADING
Detail scale 1:20

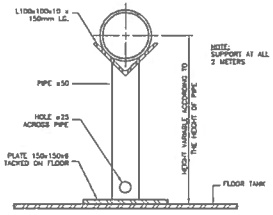

9 - PIPE SUPPORT
Detail scale 1:5

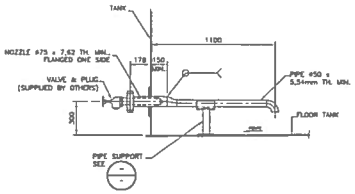

10 - WATER DRAW-OFF
Detail scale 1:20

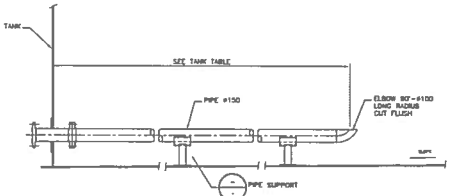

12 - FIXED PIPE - TANK UNLOADING
Detail scale 1:20

WSP
1275, 3e AVENUE EST
x-ALSPOR (QUEBEC) CANADA J4P 0L7
TEL.: 819 623-2274 | FILLE.: 819 624-1544 | WWW.WSPGROUP.COM
Ref. 181-05449-00

NOTES GÉNÉRALES / GENERAL NOTES

1. REPLACE DRAWING : 65-103-260-202

DESSINS EN RÉFÉRENCE / REFERENCE DRAWINGS

TITRE / TITLE	# DWG

AGNICO EAGLE

NO.	DATE	DESCRIPTION	PRÉP./DR.	APP.	CHARGÉ
0	2017-05-31	ISSUED FOR CONSTRUCTION	J.M.	S.T.	

REVISIONS

QUÉBEC
J. MORLIÈRE
INGÉNIEUR
2017-05-29

TITRE / TITLE
AGNICO EAGLE – WELLADINE DIVISION
116 – FUEL TANK FARM
260 – PLATEWORK
TANK #1 & #6
DETAILS

DESSINÉ PAR / DRAWN BY	GHISLAINE CORMIER	DATE 2017-05-29
VÉRIFIÉ PAR / CHECKED BY	JOEL MORLIERE, Ingénieur	2017-05-29
APPROUVÉ PAR / APPROVED BY	DENIS THIBODEAU, Ing.	2017-05-29
ÉCHELLE / SCALE	INDICATED	DATE 2017-05-29

NO. DESSIN / DRAWING NO.
65-116-260-202

NO. PROJET / PROJECT NO.	REVISION	FEUILLE / SHEET
6515	0	1/1

AE-CARF-ARCH B

FILE NO. 65-116-260-202-RO.dwg

NO. DESSIN / DRAWING NO. 65-116-270-200

FORMAT ARCHO

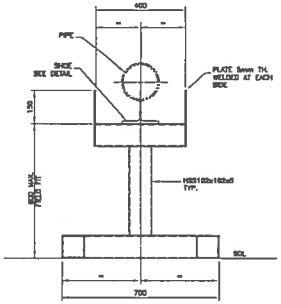

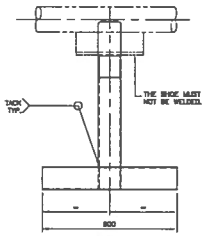

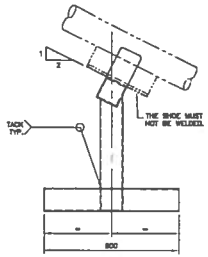

NOTE:
1. GROUND FOR THE SUPPORT TO BE FLAT AND STABLE. PAD WITH NATURAL GRANULAR BACKFILL IF NEEDED.

PIPING SUPPORT 1
SCALE: 1:10

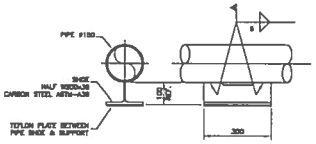

PIPE SHOE 2
SCALE: 1:10

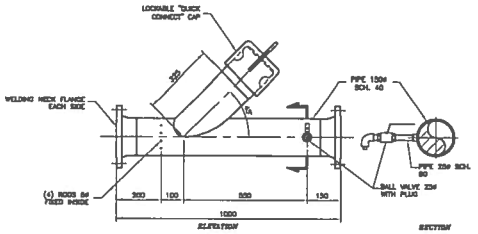

PIG CATCHER 8
SCALE: 1:10

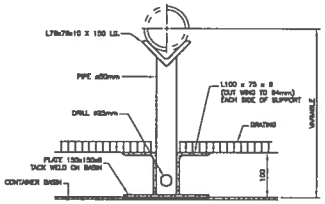

NOTE:
GRATING CUT ON SITE AROUND SUPPORT

SUPPORT INSIDE PUMPING STATION 9
SCALE: 1:3

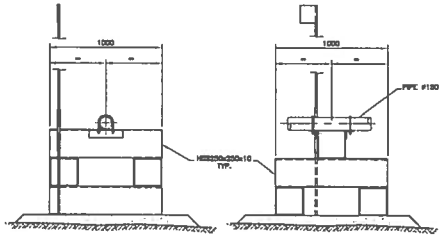

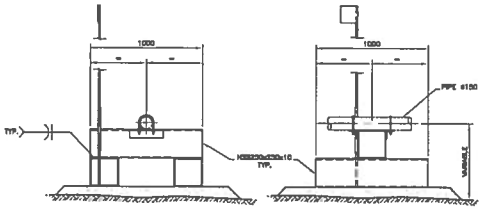

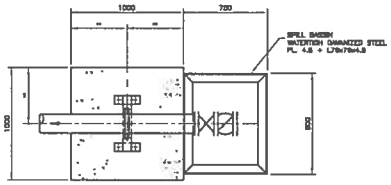

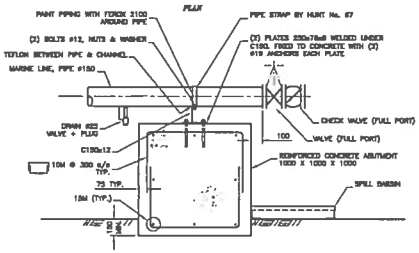

MARINE LINE MANIFOLD ABUTMENT-TYPE 1 4
SCALE: 1:20
QTY: 1

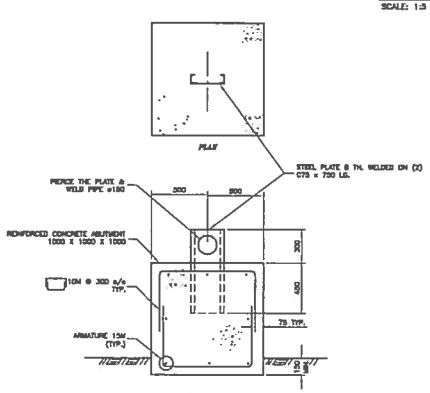

ABUTMENT-TYPE 2 5
SCALE: 1:20
QTY: 1

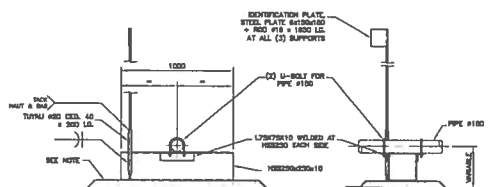

NOTE:
1. GROUND FOR THE SUPPORT TO BE FLAT AND STABLE. PAD WITH NATURAL GRANULAR BACKFILL IF NEEDED.

MARINE LINE SUPPORT 3
SCALE: 1:20

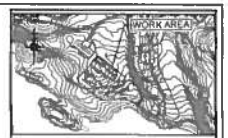

WSP
1671 3e AVENUE EST
VAL-D'OR (QUÉBEC) CANADA J9P 5J7
TEL.: 819 824-2174 | TÉLÉC.: 819 824-1541 | WWW.WSPGROUP.CA
Réf. 191-00040-00

NOTES GENERALES / GENERAL NOTES

1. REPLACE DRAWING : 65-103-270-300

POUR CONSTRUCTION
FOR CONSTRUCTION
DATE : 2017-05-31

DESSINS EN REFERENCE / REFERENCE DRAWINGS

TITRE / TITLE	# DWG

AGNICO EAGLE

0	2017-05-31	ISSUED FOR CONSTRUCTION	JJL	G.C.
REV.	DATE	DESCRIPTION	VÉRIF. / CHK.	APP. / APPR.

REVISIONS

TITRE / TITLE
AGNICO EAGLE – MELADINE DIVISION
116 – FUEL TANK FARM
270 – PIPING
FUEL DISTRIBUTION
DETAILS

DESSINÉ PAR / DRAWN BY	G. CORNUT	DATE 2017-05-29
VÉRIFIÉ PAR / CHECKED BY	J. MORIJÈRE, Ingénieur	2017-05-29
APPROUVÉ PAR / APPROVED BY	D. THIBODEAU P. Eng.	2017-05-29
ÉCHELLE / SCALE	INDICATED	DATE 2017-05-29

NO. DESSIN / DRAWING NO.
65-116-270-200

NO. PROJET / PROJECT NO.	REVISION	FEUILLE / SHEET
8515	0	1/1

FILE NO. 65-116-270-200_R0.dwg

NO. DESSIN
DRAWING NO. 65-116-270-201

FORMAT ARCHD

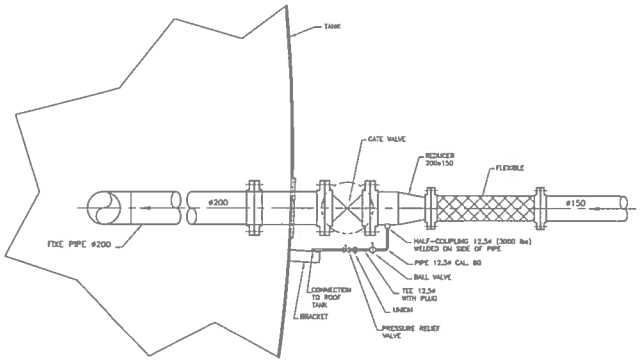

LOADING TANK PIPING (6)
SCALE: 1:15

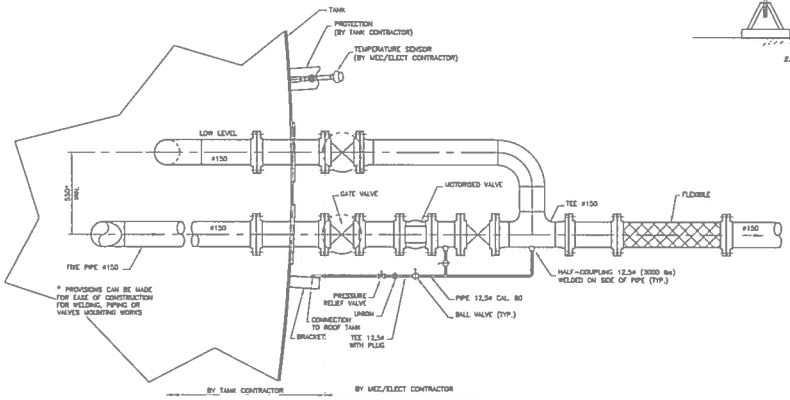

UNLOADING TANK PIPING (7)
SCALE: 1:15

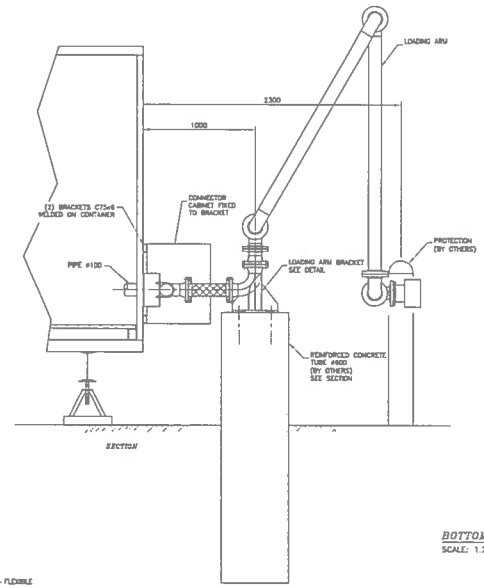

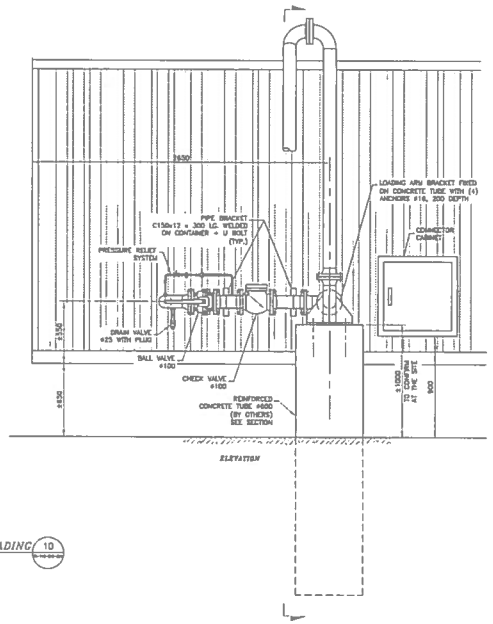

BOTTOM LOADING (10)
SCALE: 1:20

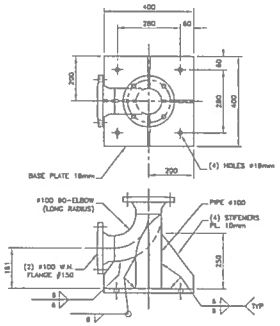

LOADING ARM BRACKET (11)
SCALE: 1:10

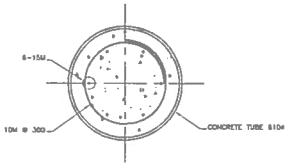

CONCRETE TUBE SECTION (12)
SCALE: 1:10

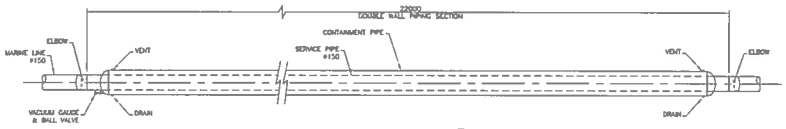

UNDERGROUND PIPING (13)
SCALE: 1:25

WSP
1075, 3e AVENUE EST
VAL D'OR (QUEBEC) CANADA J9P 5J7
TEL.: 819 825-4274 | FILE.: 819 824-1241 | WWW.WSPGROUP.COM
Ref. 151-00440-40

NOTES GENERALES / GENERAL NOTES

1. REPLACE DRAWING : 65-103-270-201

POUR CONSTRUCTION
FOR CONSTRUCTION
AGNICO EAGLE
DATE : 2017-05-31

DESSINS EN REFERENCE / REFERENCE DRAWINGS

FOR / POUR	# DWG

AGNICO EAGLE

REV	DATE	DESCRIPTION	PREP/DR	APP.	CLIENT
0	2017-05-31	ISSUED FOR CONSTRUCTION	J.M.	G.C.	

REVISIONS

TITLE / TITRE
AGNICO EAGLE – MELIADINE DIVISION
116 – FUEL TANK FARM
270 – PIPING
FUEL DISTRIBUTION
DETAILS

DESSINE PAR DRAWN BY	G. CORMUT	DATE 2017-05-25
VERIFIE PAR CHECKED BY	J. MORLIERE, tech.	2017-05-25
APPROUVE PAR APPROVED BY	D. THIBODEAU, P. Eng.	2017-05-25
ECHELLE SCALE	INDICATED	DATE 2017-05-25

NO. DESSIN DRAWING NO. 65-116-270-201

NO. PROJET PROJECT NO.	REVISION	FEUILLE / SHEET
6515	0	1 / 1

AF-CADT-ARCH B

\\CAMFILSERV01\projets\2015\P\131-06440-40\Dons techniques\Dwg\65-116-270-201_R0.dwg

FILE NO. 65-116-270-201_R0.dwg

65-ULT-116-WP-001

FORMAT ARCHD

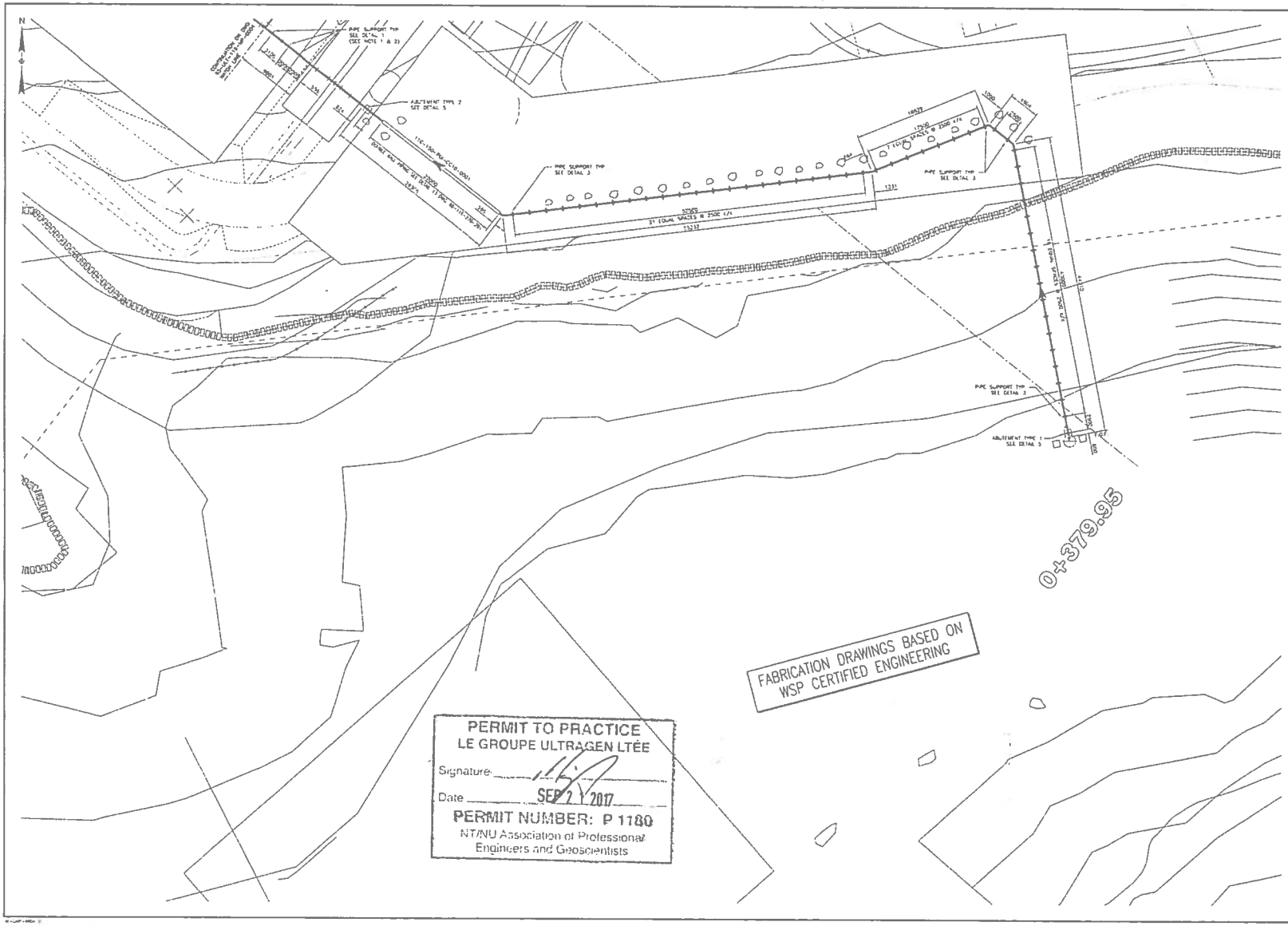

PERMIT TO PRACTICE
LE GROUPE ULTRAGEN LTÉE
Signature
Date SEP 2 1 2017
PERMIT NUMBER: P 1180
NT/NU Association of Professional Engineers and Geoscientists

NOTES GENERALES / GENERAL NOTES

1. Guides shall be placed at least 40 to 50 mm from expansion joints or changes in direction.
2. In general, guides are to be on 100 mm and supports are on 150 mm centers. "Guide Support" and on 150 mm and larger at 1st "Guide Support".

REGISTERED PROFESSIONAL ENGINEER
D TRUONG
LICENSEE
NT/NU
2017/09/21

DESSINS EN REFERENCE / REFERENCE DRAWINGS

TITRE / TITLE	# DWG
GENERAL ARRANGEMENT – PLAN VIEW	65-ULT-116-WP-000
GENERAL ARRANGEMENT – PLAN VIEW	65-ULT-116-WP-001
FUEL DISTRIBUTION – PLAN DIAGRAM	65-116-201-240
PIPING & PIPE SUPPORT DETAILS	65-116-210-250
PIPING DETAILS	65-116-210-251

AGNICO EAGLE

2	2017-09-21	PROJECT FILE REVISED	
1	2017-09-19	LINE NUMBERING REVISED	
0	2017-05-19	ISSUED FOR CONSTRUCTION	
REV.	DATE	DESCRIPTION	PROJ. ENGINEER

REVISIONS

NOT FOR CONSTRUCTION
NON-CONSTRUCTION

ultragen

NO. PROJET / PROJECT NO. 591700

TITRE / TITLE
AGNICO EAGLE – MELIADINE DIVISION
116 – FUEL TANK FARM
FUEL DISTRIBUTION
GENERAL ARRANGEMENT
PLAN VIEW

DESSINÉ PAR / DRAWN BY: A. HUBERT — DATE: 2017-03-10
VÉRIFIÉ PAR / CHECKED BY: -
APPROUVÉ PAR / APPROVED BY: -
ÉCHELLE / SCALE: 1 = 200 — DATE: 2017-04-28

NO. DESSIN / DRAWING NO.: 65-ULT-116-WP-001

NO. PROJET / PROJECT NO.: 6515 — REVISION: 2 — FEUILLE / SHEET: 1 / 1

FILE NO 65-ULT-116-WP-001.dwg

65-ULT-116-WP-002

FORMAT ARCH D

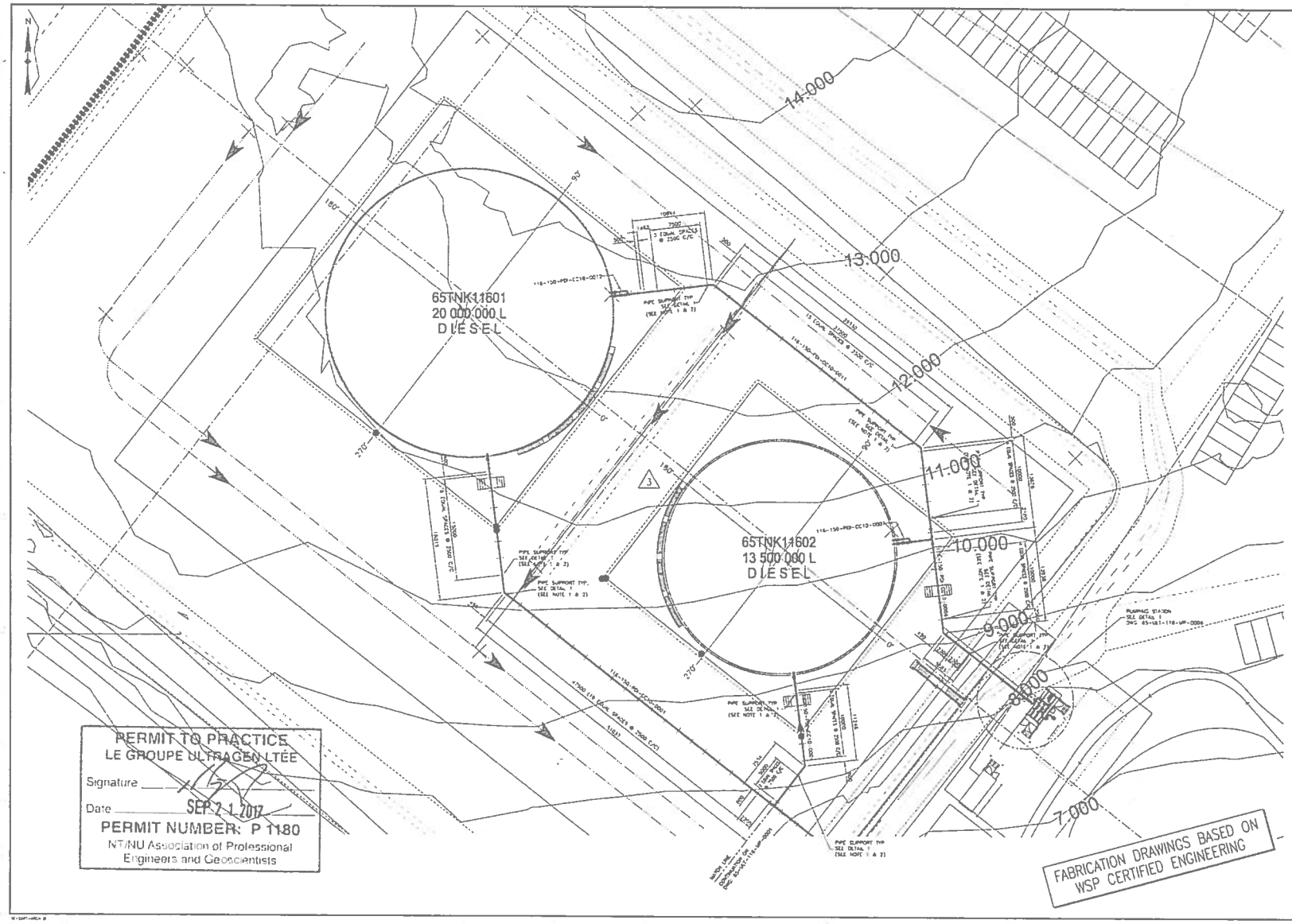

PERMIT TO PRACTICE
LE GROUPE ULTRAGEN LTÉE
Signature
Date SEP 21 2017
PERMIT NUMBER: P 1180
NT/NU Association of Professional Engineers and Geoscientists

FABRICATION DRAWINGS BASED ON WSP CERTIFIED ENGINEERING

NOTES GENERALES / GENERAL NOTES

1. GUIDES SHALL BE PLACED AT LEAST 45 TO 60 PIPE DIAMETERS AWAY FROM PIPE EXPANSION LOOPS OR ELBOWS IN OPERATION.
2. IN GENERAL, SHOES USED ON LINES ON TOP AND SADDLES ON LINES AT EACH OTHER PIPE SUPPORT AND ON LINES ON THE SIDE LENGTH OF EACH PIPE SUPPORT

REGISTERED PROFESSIONAL ENGINEER
D TRUONG
LICENSEE
NT/NU
2017/09/21

DESSINS EN REFERENCE / REFERENCE DRAWINGS

DWG / DWG	TITRE / TITLE
GENERAL ARRANGEMENT - PLAN VIEWS	65-ULT-116-WP-001
GENERAL ARRANGEMENT - PLAN VIEWS	65-ULT-116-WP-002
FUEL DISTRIBUTION - FLOW DIAGRAM	65-116-PID-001
SHOES & PIPE SUPPORT DETAILS	65-116-PID-002
PIPING DETAILS	65-116-PID-003
STUMP & ANCHORAGE OF THE DISTRIBUTION	65-116-PID-004

AGNICO EAGLE

2	2017-09-21	PROJECT CALL REVISED	DMV	
1	2017-09-15	LINE NUMBERS REVISED	TMG	
0	2017-09-07	ISSUED FOR CONSTRUCTION	DMV	
REV.	DATE	DESCRIPTION	PROJECT MGR.	CHECKED

REVISIONS

ultragen

NO. PROJET / PROJECT NO. 591700

TITRE / TITLE
AGNICO EAGLE - MELIADINE DIVISION
116 - FUEL TANK FARM
FUEL DISTRIBUTION
GENERAL ARRANGEMENT
PLAN VIEWS

DESSINÉ PAR DRAWN BY	A. HEBERT	DATE 2017-09-18
VÉRIFIÉ PAR CHECKED BY	-	
APPROUVÉ PAR APPROVED BY		
ÉCHELLE SCALE	1 = 250	DATE 2017-04-28

NO. DE DESSIN DRAWING NO. 65-ULT-116-WP-002

NO. PROJET PROJECT NO. 6515

REVISION 2 FEUILLE / SHEET 1 / 1

FILE NO 65-ULT-116-WP-002.dwg

NO. DRAWING 65-ULT-116-MP-003

FORMAT ARCHD

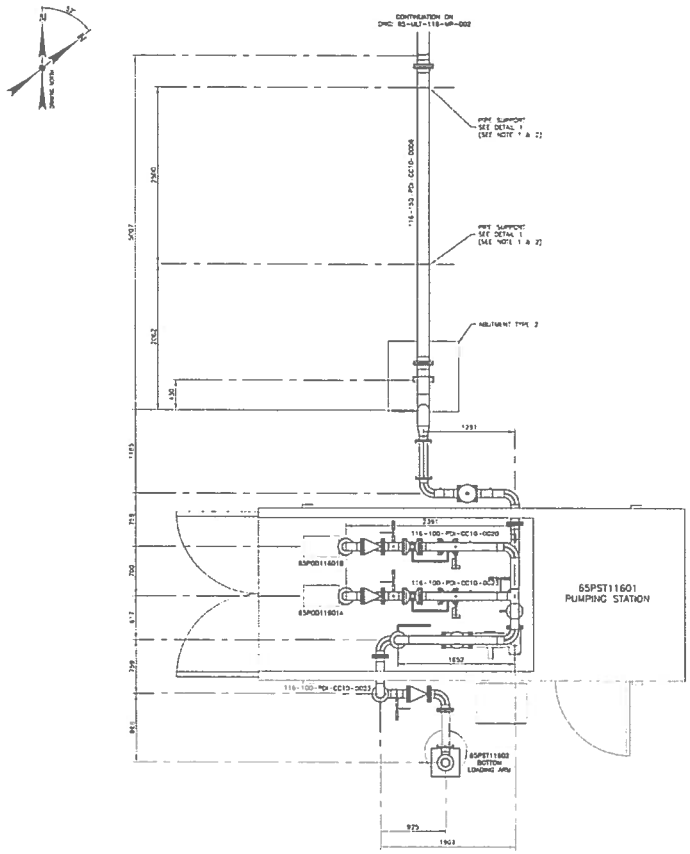

PUMPING STATION – DETAIL 1
SCALE 1=30

NOTES GENERALES / GENERAL NOTES

1. GUIDES SHALL BE PLACED AT LEAST 45 TO 90 PIPE DIAMETERS AWAY FROM PIPE EXPANSION JOINTS OR CHANGES IN DIRECTION.
2. IN GENERAL, PLACE GUIDE ON LINE IN THE AND SHALLOW AS INDICATED AT 1/2 OF SPACE PIPE SUPPORT AND ON LINE ON THE AND WITHIN 1/4 OF PIPE THRU SUPPORT.

REGISTERED PROFESSIONAL ENGINEER
D. TRUONG
LICENSEE
NT/NU
2017/09/21

DESSINS EN REFERENCE / REFERENCE DRAWINGS

FR / FRA	/ ENG
GENERAL ARRANGEMENT – FUEL VENTS	65-ULT-116-MP-001
GENERAL ARRANGEMENT – FUEL VENTS	65-ULT-116-MP-002
FUEL DISTRIBUTION – FLOW DIAGRAM	65-116-PID-001
PIPING & PIPE SUPPORT DETAILS	65-116-170-200
PIPING DETAILS	65-116-270-201
HOW A DISTANCE OF PIPE CONTRACTS	65-116-315-300

AGNICO EAGLE

2	2017-09-21	PROJECT TITLE REVISED	DPW	
1	2017-09-11	LINE NUMBERS REVISED	DPW	
0	2017-05-29	ISSUED FOR CONSTRUCTION	DPW	
REV.	DATE	DESCRIPTION	PREPARED	APPD.

REVISIONS

PERMIT TO PRACTICE
LE GROUPE ULTRAGEN LTÉE
Signature
Date SEP 21 2017
PERMIT NUMBER: P 1180
NT/NU Association of Professional Engineers and Geoscientists

FABRICATION DRAWINGS BASED ON WSP CERTIFIED ENGINEERING

ultragen

NO. PROJET / PROJECT NO. 581700

TITRE / TITLE
AGNICO EAGLE – MELIADINE DIVISION
116 – FUEL TANK FARM
FUEL DISTRIBUTION
GENERAL ARRANGEMENT
DETAILS

DESSINE PAR / DRAWN BY	A. HELBERT	DATE 2017-09-13
VERIFIE PAR / CHECKED BY	–	–
APPROUVE PAR / APPROVED BY	–	–
ECHELLE / SCALE	1 = 30	DATE 2017-05-18

NO. DESSIN / DRAWING NO. 65-ULT-116-MP-003

NO. PROJET / PROJECT NO. 6515

REVISION 2 FEUILLE / SHEET 1 / 1

NE - SAM ARCH D

FILE NO 65-ULT-116-MP-003.dwg

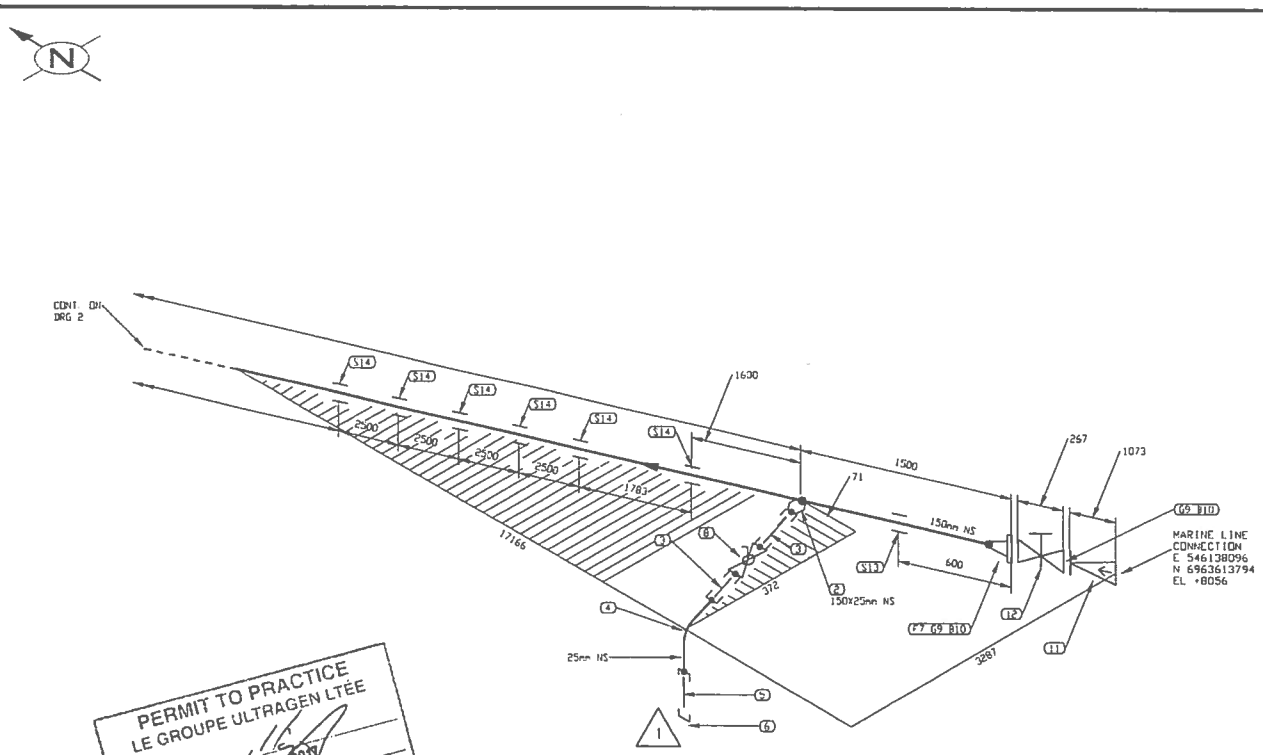

PERMIT TO PRACTICE
LE GROUPE ULTRAGEN LTÉE
Signature
Date SEP 21 2017
PERMIT NUMBER: P 1180
NT/NU Association of Professional Engineers and Geoscientists

FABRICATION DRAWINGS BASED ON WSP CERTIFIED ENGINEERING

LISTE DE MATERIEL

No	QTE	DIA	MATERIEL/CATALOGUE	DESCRIPTION
1	16045 MM	150	A 333 Gr. 6	SCH STD, SMLS PIPE
2	1	150X25	A 350 Gr. LF2	CL 3000, SOCKOLET
3	2	25	A 333 Gr. 6	SCH 80, NIPPLE x 75mm LG PBE
4	1	25	A 350 Gr. LF2	CL 3000, SW 90 DEG ELBOW
5	1	25	A 333 Gr. 6	SCH 80, NIPPLE x 75mm LG POE x TOE
6	1	25	A 350 Gr. LF2	CL 3000, THRD CAP
7	1	150	A 350 Gr. LF2	CL 150, SCH STD, RF, WN FLANGE
8	1	25	BA-25	CL 600, SW, BALL VALVE
9	2	150	ASME B16.20	CL 150, GARLOCK 5500, RING TYPE GASKET 1/8" THK
10	16	19	A 193 B7/A 194 2H	CL 150, 8 - 19.05 X 100 STUD BOLTS c/w TWO HEAVY HEX NUTS
11	1	150	CK-29	CL 150, RF, SWING CHECK VALVE
12	1	150	GA-10	CL 150, RF, GATE VALVE
13		150		PIPE GUIDE AS PER DETAIL 4, DWG 65-116-270-200
14	6	150		PIPE SUPPORT AS PER DETAIL 3, DWG 65-116-270-200

No.	DATE	REVISION	PAR / APP.
3	2017/09/21	PROJECT TITLE REVISED	KHV
2	2017/09/11	LINE NUMBERS REVISED	OVN
1	2017/06/30	DRAIN REVISED AS PER CLIENT COMMENTS	OVN
0	2017/05/15	ISSUED FOR CONSTRUCTION	KHV

CLIENT:

AGNICO EAGLE

NUOSANA-PROMEC MINING

ultragen

CONSULTANT PROJECT NO. 591700

NO. DE CONDUITE		SPECIFICATION	PRODUIT	SYSTEME REVETEMENT	CODE DE COULEUR	ISOLATION ET TRACAGE	EPAISS. D'ISOLATION		
116-150-PDI-CC10-0001		CC10	PDI					65-116-270-200	PIPE SUPPORT DETAILS
PRESSION D'OPERATION	TEMPERATURE D'OPERATION	PRESSION DE CONCEPTION	TEMPERATURE DE CONCEPTION	PRESSION D'ESSAI	CLASSE D'INSPECTION	CODE DE SERVICE	TRAITEMENT THERMIQUE	65-116-205-200	P&ID
PSIG	°F	PSIG	°F	PSIG				No. DESSIN	DESSINS DE REFERENCE

REGISTERED PROFESSIONAL ENGINEER
D. TRUONG
LICENSEE
NT/NU
2017/09/21

CONC.: KHV
DATE: 2017/04/25
DESSINÉ PAR: KVC
DATE: 2017/04/25
VER. PAR: -
DATE: -
APP.: -
DATE: -
ÉCHELLE: AUCUNE

PROJET: AGNICO EAGLE - MELIADINE DIVISION
116 - FUEL TANK FARM

TITRE: RANKIN INLET
FABRICATION ISOMETRIC
MARINE LINE TO 65TNK11601 & 65TNK11602

No PROJET	No DESSIN	PAGES	REV.
6515	116-150-PDI-CC10-0001	1/13	3

116-MH-01, TEMP-01

FICHIER: N:\Agnico Eagle\Meliadine\591700 (Fuel Farm Design)\05. General\02. Isometrics\02. Isometrics\01 Marine Line\116-150-PDI-CC10-0001.DWG

MARDI LE: Sep 20, 2017, 2:43pm

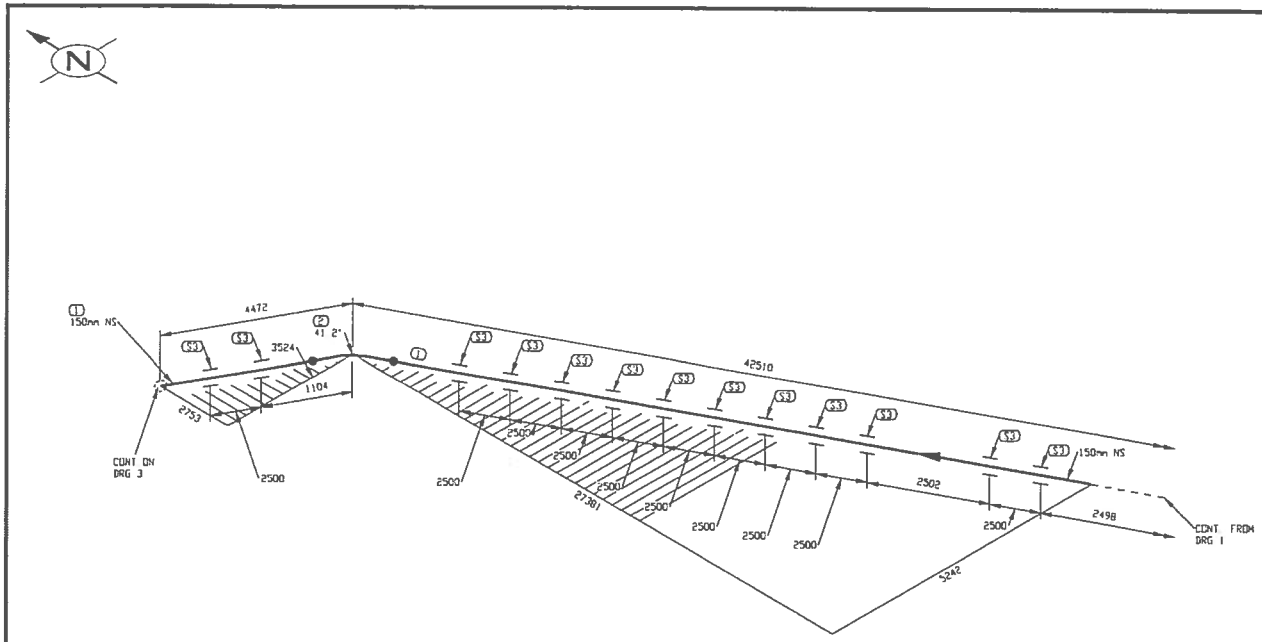

PERMIT TO PRACTICE
LE GROUPE ULTRAGEN LTÉE
Signature
Date SEP 2 1 2017
PERMIT NUMBER: P 1180
NT/NU Association of Professional Engineers and Geoscientists

FABRICATION DRAWINGS BASED ON WSP CERTIFIED ENGINEERING

LISTE DE MATERIEL

No	QTE	DIA	MATERIEL/CATALOGUE	DESCRIPTION
1	32178 MM	150	A 333 Gr. 6	SCH STD. SMLS PIPE
2	1	150	A 420 Gr. WPL6	SCH STD. BW LR 45 DEG ELBOW TRIM TO 41.16
3	13	150		PIPE SUPPORT AS PER DETAIL 3, DWG. 65-116-270-200

No.	DATE	REVISION	PAR / APP.
2	2017/09/21	PROJECT TITLE REVISED	KHV
1	2017/09/11	LINE NUMBERS REVISED	KHV
0	2017/05/15	ISSUED FOR CONSTRUCTION	KHV

CLIENT: AGNICO EAGLE

NUQSANA-PROMEC MINING

ultragen

CONSULTANT PROJECT NO. 591700

NO. DE CONDUITE		SPECIFICATION	PRODUIT	SYSTEME REVETEMENT	CODE DE COULEUR	ISOLATION ET TRACAGE	EPAISS. D'ISOLATION		
116-150-PDI-CC10-0001		CC10	PDI		-			65-116-270-200	PIPE SUPPORT DETAILS
PRESSION D'OPERATION	TEMPERATURE D'OPERATION	PRESSION DE CONCEPTION	TEMPERATURE DE CONCEPTION	PRESSION D'ESSAI	CLASSE D'INSPECTION	CODE DE SERVICE	TRAITEMENT THERMIQUE	65-116-205-200	P&ID
PSIG	°F	PSIG	°F	PSIG				No. DESSIN	DESSINS DE REFERENCE

REGISTERED PROFESSIONAL ENGINEER
D. TRUONG
LICENSEE
NT/NU
2017/09/21

CONC.: KHV
DATE: 2017/04/25
DESSINÉ PAR: KVE
DATE: 2017/04/25
VER. PAR: -
DATE: -
APP.: -
DATE: -
ÉCHELLE: AUCUNE

PROJET: AGNICO EAGLE - MELIADINE DIVISION
116 - FUEL TANK FARM

TITRE: RANKIN INLET
FABRICATION ISOMETRIC
MARINE LINE TO 65TNK11601 & 65TNK11602

No PROJET	No DESSIN	PAGES	REV.
6515	116-150-PDI-CC10-0001	2/13	2

116-MN-01

ISOVIS: e:\Agnico Eagle\Meadow\591700 (Fuel Distributor)\05. Dwgs\02. Isometrics\01. Rankin Inlet\116-150-PDI-CC10-0001-2.DWG

AUTOCAD LE. Sep 23, 2017, 2:43pm

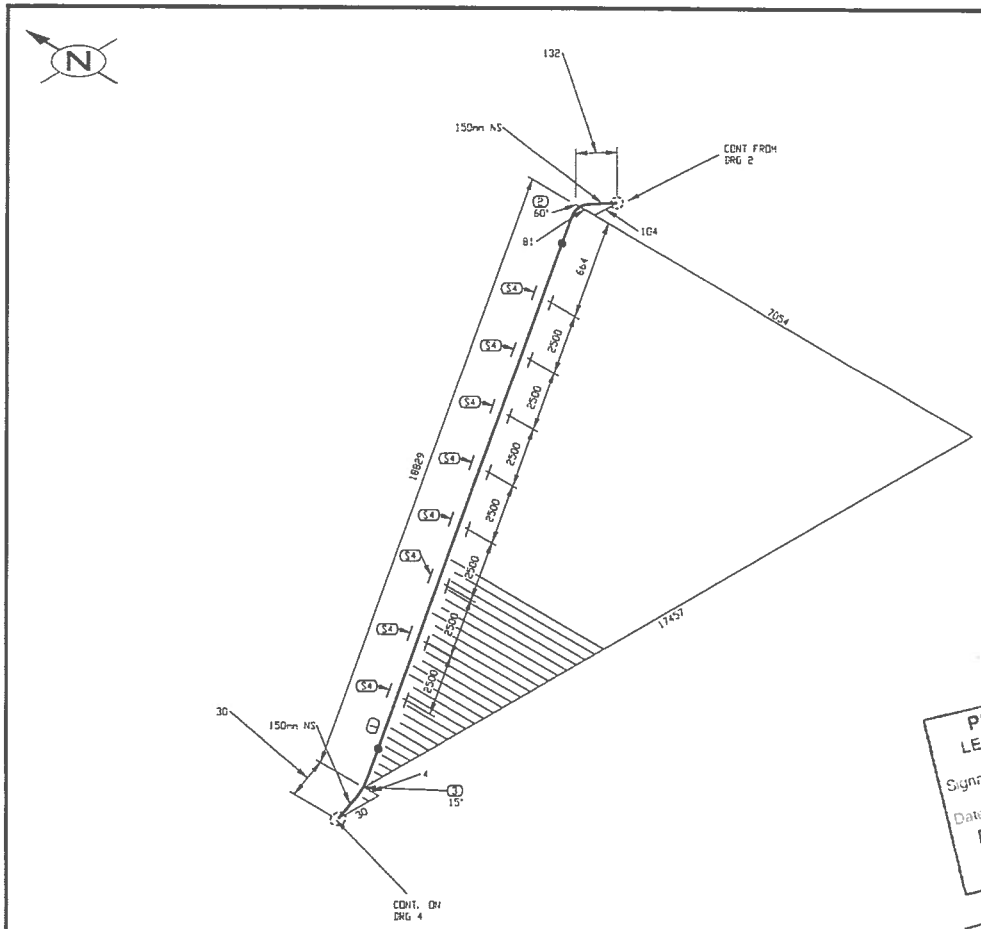

PERMIT TO PRACTICE
LE GROUPE ULTRAGEN LTÉE
Signature
Date SEP 21 2017
PERMIT NUMBER: P 1180
NT/NU Association of Professional Engineers and Geoscientists

FABRICATION DRAWINGS BASED ON WSP CERTIFIED ENGINEERING

LISTE DE MATERIEL

No	QTE	DIA	MATERIEL/CATALOGUE	DESCRIPTION
1	18667 MM	150	A 333 Gr 6	SCH STD, SMLS PIPE
2	1	150	A 420 Gr WPL6	SCH STD, BW LR 90 DEG ELBOW TRIM TO 60.00
3	1	150	A 420 Gr WPL6	SCH STD, BW LR 90 DEG ELBOW TRIM TO 15.00
4	8	150		PIPE SUPPORT AS PER DETAIL 3, DWG# 65-116-270-200

No.	DATE	REVISION	PAR / APP
2	2017/09/21	PROJECT TITLE REVISED	KHV
1	2017/09/11	LINE NUMBERS REVISED	KHV
0	2017/05/15	ISSUED FOR CONSTRUCTION	KHV

CLIENT: AGNICO EAGLE

NUQSANA-PROMEC MINING

ultragen

CONSULTANT PROJECT NO. 591700

NO. DE CONDUITE		SPECIFICATION	PRODUIT	SYSTEME REVETEMENT	CODE DE COULEUR	ISOLATION ET TRACAGE	EPAISS. D'ISOLATION		
116-150-PDI-CC10-0001		CC10	PDI		-			65-116-270-200	PIPE SUPPORT DETAILS
PRESSION D'OPERATION	TEMPERATURE D'OPERATION	PRESSION DE CONCEPTION	TEMPERATURE DE CONCEPTION	PRESSION D'ESSAI	CLASSE D'INSPECTION	CODE DE SERVICE	TRAITEMENT THERMIQUE	65-116-205-200	P&ID
PSIG	°F	PSIG	°F	PSIG				No. DESSIN	DESSINS DE REFERENCE

REGISTERED PROFESSIONAL ENGINEER
D TRUONG
LICENSEE
NT/NU
2017/09/21

CONC.: KHV
DATE: 2017/04/25
DESSINÉ PAR: KVE
DATE: 2017/04/25
VÉR. PAR: -
DATE: -
APP.: -
DATE: -
ÉCHELLE: AUCUNE

PROJET: AGNICO EAGLE - MELIADINE DIVISION
116 - FUEL TANK FARM

TITRE: RANKIN INLET
FABRICATION ISOMETRIC
MARINE LINE TO 65TNK11601 & 65TNK11602

No PROJET	No DESSIN	PAGES	REV.
6515	116-150-PDI-CC10-0001	3/13	2

116-MN-01

ICONS # Vance Fox\Vidoco\591720 (Fuel Distribution)\05 Design\02 Isometrics\01. Rankin Inet\116-150-PDI-CC10-0001-1.DWG

SUPRME LE. Sep 20, 2017, 2:44pm

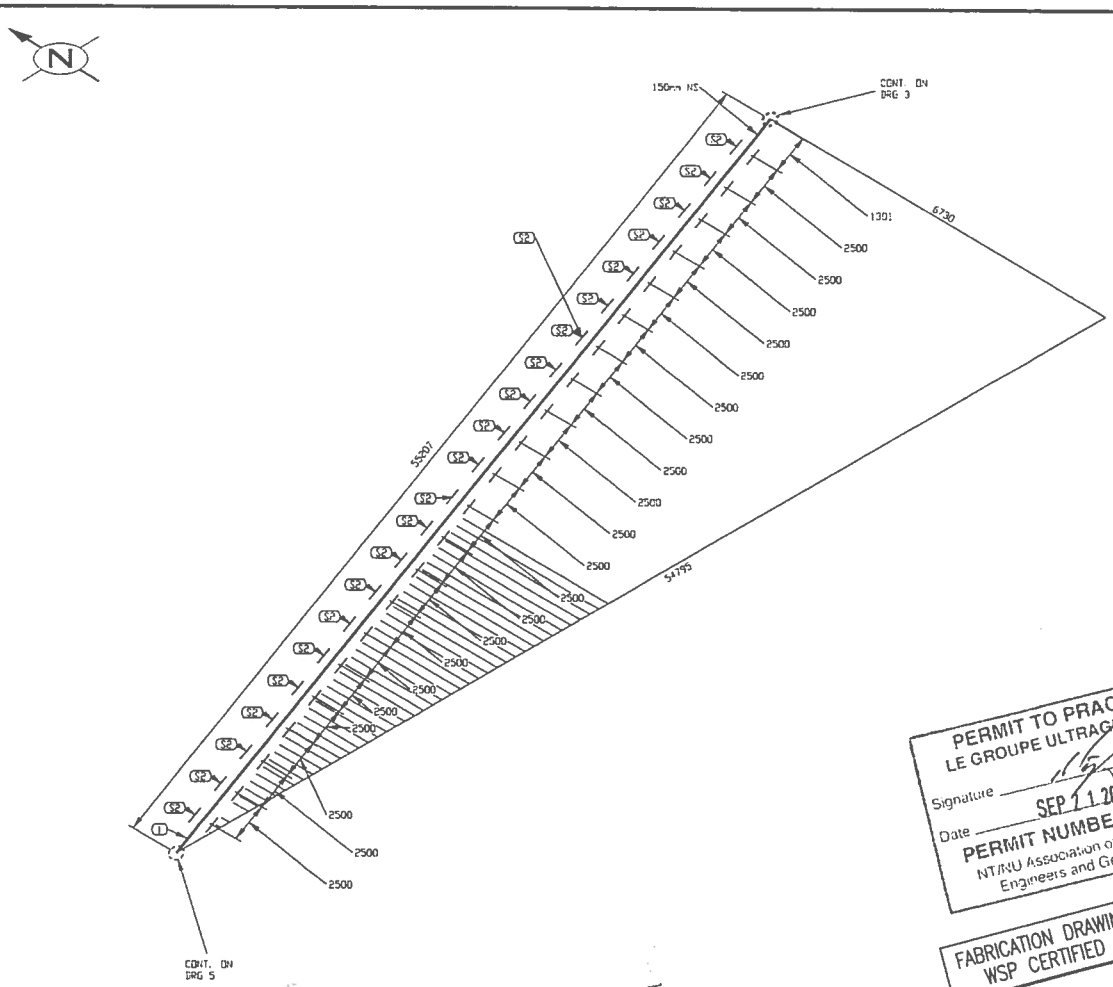

PERMIT TO PRACTICE
LE GROUPE ULTRAGEN LTÉE
Signature
Date SEP 11 2017
PERMIT NUMBER: P 1180
NT/NU Association of Professional Engineers and Geoscientists

FABRICATION DRAWINGS BASED ON WSP CERTIFIED ENGINEERING

LISTE DE MATERIEL

No	QTE	DIA	MATERIEL/CATALOGUE	DESCRIPTION
1	55207 MM	150	A 333 Gr. 6	SCH STD, SMLS PIPE
2	23	150		PIPE SUPPORT AS PER DETAIL 3, DWG 65-116-270-200

No.	DATE	REVISION	PAR / APP.
2	2017/09/21	PROJECT TITLE REVISED	KHV
1	2017/09/11	LINE NUMBERS REVISED	KHV
0	2017/05/15	ISSUED FOR CONSTRUCTION	KHV

CLIENT:

AGNICO EAGLE

NUQSANA-PROMEC MINING

ultragen

CONSULTANT PROJECT NO. 591700

NO. DE CONDUITE		SPECIFICATION	PRODUIT	SYSTEME REVETEMENT	CODE DE COULEUR	ISOLATION ET TRACAGE	EPAISS. D'ISOLATION		
116-150-PDI-CC10-0001		CC10	PDI		–			65-116-270-200	PIPE SUPPORT DETAILS
PRESSION D'OPERATION	TEMPERATURE D'OPERATION	PRESSION DE CONCEPTION	TEMPERATURE DE CONCEPTION	PRESSION D'ESSAI	CLASSE D'INSPECTION	CODE DE SERVICE	TRAITEMENT THERMIQUE	65-116-205-200	P&ID
PSIG	°F	PSIG	°F	PSIG				No. DESSIN	DESSINS DE REFERENCE

SCEAU PROFESSIONNEL
REGISTERED PROFESSIONAL ENGINEER
D TRUONG
LICENSEE
NT/NU
2017/09/21

CONC.: KHV
DATE: 2017/04/25
DESSINE PAR: KVE
DATE: 2017/04/25
VER. PAR: -
DATE: -
APP.: -
DATE: -
ÉCHELLE: AUCUNE

PROJET:
AGNICO EAGLE - MELIADINE DIVISION
116 - FUEL TANK FARM

TITRE:
RANKIN INLET
FABRICATION ISOMETRIC
MARINE LINE TO 65TNK11601 & 65TNK11602

No PROJET	No DESSIN	PAGES	REV.
6515	116-150-PDI-CC10-0001	4/13	2

116-MN-01

FICHIER: W:\Agnico Eagle\Meliadine\116-MN\Dwg\Dessins\Dessins\02. Isometriques\01. Marine Line\116-150-PDI-CC10-0001-1.DWG

WRONE LE: Sep 20, 2017, 2:44pm

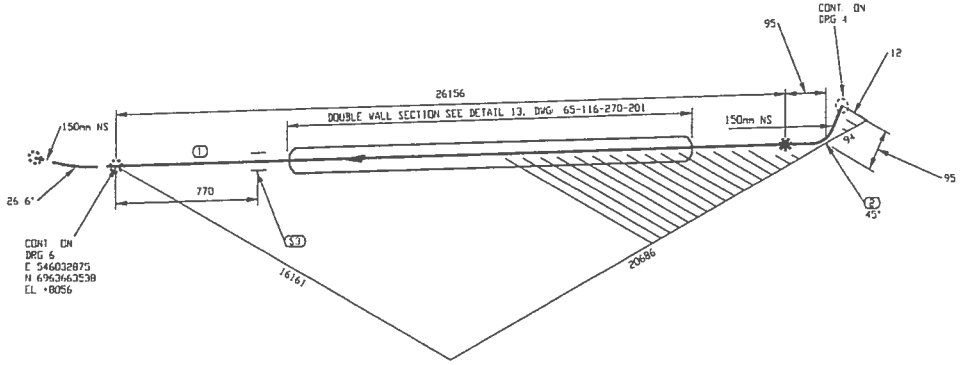

LISTE DE MATERIEL

No	QTE	DIA	MATERIEL/CATALOGUE	DESCRIPTION
1	26156 MM	150	A 333 Gr. 6	SCH STD, SMLS PIPE
2	1	150	A 420 Gr. WPL6	SCH STD, BV LR 45 DEG ELBOW
3	1	150		ABUTEMENT TYPE 2 AS PER DETAIL 5, DWG: 65-116-270-200

No.	DATE	REVISION	PAR / APP.
2	2017/09/21	PROJECT TITLE REVISED	KHV
1	2017/09/11	LINE NUMBERS REVISED	KHV
0	2017/05/15	ISSUED FOR CONSTRUCTION	KHV

PERMIT TO PRACTICE
LE GROUPE ULTRAGEN LTÉE
Signature
Date SEP 21 2017
PERMIT NUMBER: P 1180
NT/NU Association of Professional Engineers and Geoscientists

FABRICATION DRAWINGS BASED ON WSP CERTIFIED ENGINEERING

CLIENT: AGNICO EAGLE

NUOSANA-PROMEC MINING

ultragen

CONSULTANT PROJECT NO. 591700

SCEAU PROFESSIONNEL
REGISTERED PROFESSIONAL ENGINEER
D TRUONG
LICENSEE
NT/NU
2017/09/21

CONC.: KHV
DATE: 2017/04/25
DESSINE PAR: KVE
DATE: 2017/04/25
VER. PAR: -
DATE: -
APP.: -
DATE: -
ECHELLE: AUCUNE

PROJET: AGNICO EAGLE - MELIADINE DIVISION
116 - FUEL TANK FARM

TITRE: RANKIN INLET
FABRICATION ISOMETRIC
MARINE LINE TO 65TNK11601 & 65TNK11602

No PROJET	No DESSIN	PAGES	REV.
6515	116-150-PDI-CC10-0001	5/13	2

NO. DE CONDUITE		SPECIFICATION	PRODUIT	SYSTEME REVETEMENT	CODE DE COULEUR	ISOLATION ET TRACAGE	EPAISS. D'ISOLATION		
116-150-PDI-CC10-0001		CC10	PDI		-			65-116-270-200	PIPE SUPPORT DETAILS
PRESSION D'OPERATION	TEMPERATURE D'OPERATION	PRESSION DE CONCEPTION	TEMPERATURE DE CONCEPTION	PRESSION D'ESSAI	CLASSE D'INSPECTION	CODE DE SERVICE	TRAITEMENT THERMIQUE	65-116-205-200	P&ID
PSIG	°F	PSIG	°F	PSIG				No. DESSIN	DESSINS DE REFERENCE

116-MN-01

FICHIER: R:\Agnico Eagle\Meliadine\591720 (Fuel Distribution)\05 Drawing\02 Isometrics\01 Rankin Inlet\116-150-PDI-CC10-0001-5.DWG

IMPRIMÉ LE: Sep 20, 2017, 2:44pm

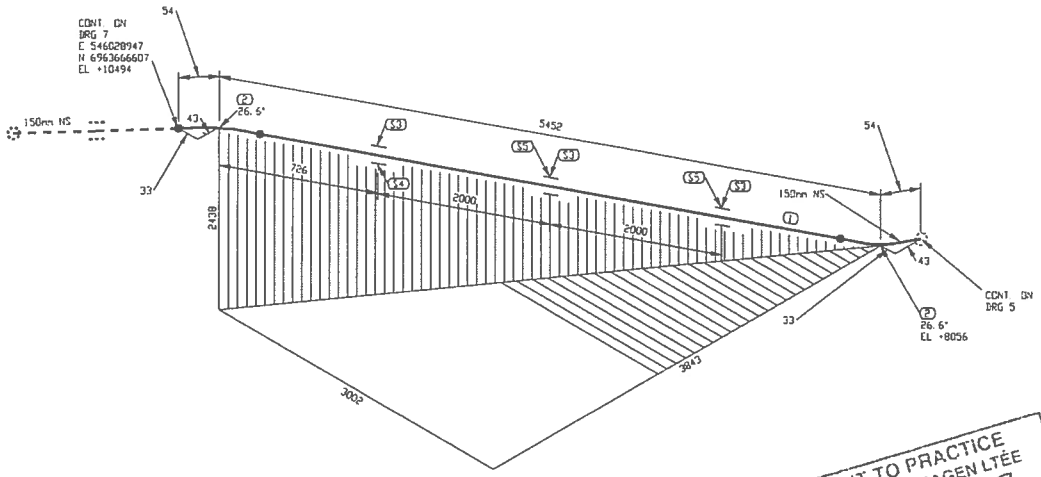

PERMIT TO PRACTICE
LE GROUPE ULTRAGEN LTÉE
Signature
Date SEP 21 2017
PERMIT NUMBER: P 1180
NT/NU Association of Professional Engineers and Geoscientists

FABRICATION DRAWINGS BASED ON WSP CERTIFIED ENGINEERING

LISTE DE MATERIEL

No	QTE	DIA	MATERIEL/CATALOGUE	DESCRIPTION
1	5344 MM	150	A 333 Gr. 6	SCH STD, SMLS PIPE
2	2	150	A 420 Gr. WPL6	SCH STD, BV LR 45 DEG ELBOW TRIM TO 26.57
3	3	150		PIPE SUPPORT AS DETAIL 1, DWG 65-116-270-200
4	1	150		PIPE SHOE AS PER DETAIL 2, DWG 65-116-270-200
5	2	150		PIPE SHOE AS PER DETAIL 2, DWG 65-116-270-200

No.	DATE	REVISION	PAR / APP
2	2017/09/21	PROJECT TITLE REVISED	KHV
1	2017/09/11	LINE NUMBERS REVISED	KHV
0	2017/05/15	ISSUED FOR CONSTRUCTION	KHV

CLIENT:

AGNICO EAGLE

NUQSANA-PROMEC MINING

ultragen

CONSULTANT PROJECT NO. 591700

NO. DE CONDUITE		SPECIFICATION	PRODUIT	SYSTEME REVETEMENT	CODE DE COULEUR	ISOLATION ET TRACAGE	EPAISS. D'ISOLATION		
116-150-PDI-CC10-0001		CC10	PDI		–			65-116-270-200	PIPE SUPPORT DETAILS
PRESSION D'OPERATION	TEMPERATURE D'OPERATION	PRESSION DE CONCEPTION	TEMPERATURE DE CONCEPTION	PRESSION D'ESSAI	CLASSE D'INSPECTION	CODE DE SERVICE	TRAITEMENT THERMIQUE	65-116-205-200	P&ID
PSIG	°F	PSIG	°F	PSIG				No. DESSIN	DESSINS DE REFERENCE

SCEAU PROFESSIONNEL
REGISTERED PROFESSIONAL ENGINEER
D. TRUONG
LICENSEE
NT/NU
2017/09/21

CONC.: KHV
DATE: 2017/04/25
DESSINE PAR: KVE
DATE: 2017/04/25
VER. PAR: -
DATE: -
APP.: -
DATE: -
ECHELLE: AUCUNE

PROJET:
AGNICO EAGLE - MELIADINE DIVISION
116 - FUEL TANK FARM

TITRE:
RANKIN INLET
FABRICATION ISOMETRIC
MARINE LINE TO 65TNK11601 & 65TNK11602

No PROJET	No DESSIN	PAGES	REV.
6515	116-150-PDI-CC10-0001	6/13	2

116-MN-01

ICONES: W:\Agnico Eagle\V4-Gabriel\591700 (Fuel Distribution)\05 Design\02 Isometrics\01 Fabrication\116-150-PDI-CC10-0001-6.DWG

MARCHE LE: Sep 20, 2017, 2:44pm

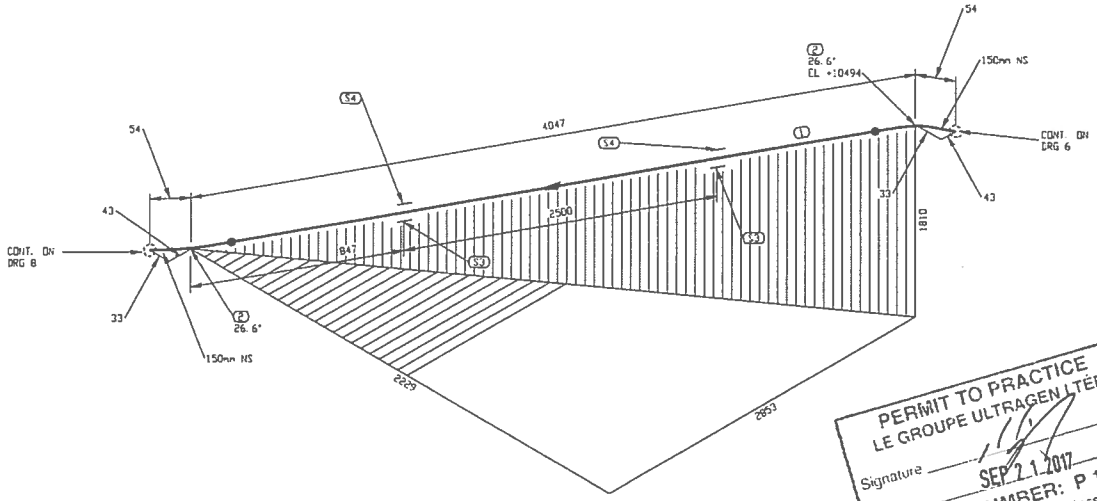

PERMIT TO PRACTICE
LE GROUPE ULTRAGEN LTÉE
Signature
Date SEP 21 2017
PERMIT NUMBER: P 1180
NT/NU Association of Professional Engineers and Geoscientists

FABRICATION DRAWINGS BASED ON WSP CERTIFIED ENGINEERING

LISTE DE MATERIEL

No	QTE	DIA	MATERIEL/CATALOGUE	DESCRIPTION
1	3939 MM	150	A 333 Gr. 6	SCH STD, SMLS PIPE
2	2	150	A 420 Gr WPL6	SCH STD, BV LR 45 DEG ELBOW TRIM TO 26.57
3	2	150		PIPE SUPPORT AS PER DETAIL 1, DWG 65-116-270-200
4	2	150		PIPE SHOE AS PER DETAIL 2, DWG 65-116-270-200

No.	DATE	REVISION	PAR / APP.
2	2017/09/21	PROJECT TITLE REVISED	KHV
1	2017/09/11	LINE NUMBERS REVISED	KHV
0	2017/05/15	ISSUED FOR CONSTRUCTION	KHV

CLIENT: AGNICO EAGLE

NUQSANA-PROMEC MINING

ultragen

CONSULTANT PROJECT NO. 591700

NO. DE CONDUITE		SPECIFICATION	PRODUIT	SYSTEME REVETEMENT	CODE DE COULEUR	ISOLATION ET TRACAGE	EPAISS. D'ISOLATION		
116-150-PDI-CC10-0001		CC10	PDI		-			65-116-270-200	PIPE SUPPORT DETAILS
PRESSION D'OPERATION	TEMPERATURE D'OPERATION	PRESSION DE CONCEPTION	TEMPERATURE DE CONCEPTION	PRESSION D'ESSAI	CLASSE D'INSPECTION	CODE DE SERVICE	TRAITEMENT THERMIQUE	65-116-205-200	P&ID
PSIG	°F	PSIG	°F	PSIG				No. DESSIN	DESSINS DE REFERENCE

REGISTERED PROFESSIONAL ENGINEER D TRUONG LICENSEE N.T/NU 2017/09/21

CONC.: KHV DATE: 2017/04/25
DESSINÉ PAR: KVC DATE: 2017/04/25
VER. PAR: - DATE: -
APP.: - DATE: -
ÉCHELLE: AUCUNE

PROJET: AGNICO EAGLE - MELIADINE DIVISION
116 - FUEL TANK FARM

TITRE: RANKIN INLET
FABRICATION ISOMETRIC
MARINE LINE TO 65TNK11601 & 65TNK11602

No PROJET	No DESSIN	PAGES	REV.
6515	116-150-PDI-CC10-0001	7/13	2

116-MN-01

FICHIER: W:\Agnico Eagle\Meliadine\591700 (Fuel Distribution)\05 Devis\102. Ingénierie\02. Isométriques\01 Rankin Inlet\116-150-PDI-CC10-0001-7.DWG

MARDI 12 Sep 20, 2017, 2:44pm

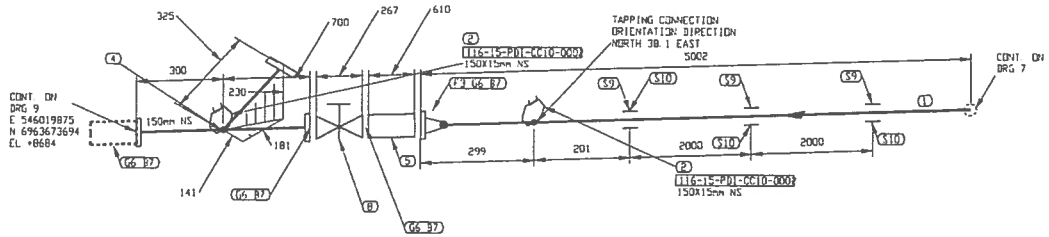

LISTE DE MATERIEL

No	QTE	DIA	MATERIEL/CATALOGUE	DESCRIPTION
1	4914 MM	150	A 333 Gr 6	SCH STD, SMLS PIPE
2	2	150X15	A 350 Gr LF2	CL 3000, THREDOLET
3	1	150	A 350 Gr LF2	CL 150, SCH STD, RF, WN FLANGE
4	1	150X150		CL 150, PIG CATCHER AS PER DETAIL B, DWG: 65-116-270-200
5	1	150		CL 150, SINGLE BRAIDED HOSE ASSEMBLY
6	4	150	ASME B16 20	CL 150, GARLOCK 5500, RING TYPE GASKET 1/8" THK
7	32	19	A 193 B7/A 194 2H	CL 150, 8 - 19 05 X 100 STUD BOLTS c/w TWO HEAVY HEX NUTS
8	1	150	GA-10	CL 150, RF, CS, FULL PORT GATE VALVE
9	3	150		PIPE SUPPORT AS PER DETAIL 1, DWG: 65-116-270-200
10	3	150		PIPE SHOE AS PER DETAIL 2, DWG: 65-116-270-200

No.	DATE	REVISION	PAR / APP.
2	2017/09/21	PROJECT TITLE REVISED	KHV
1	2017/09/11	LINE NUMBERS REVISED	KHV
0	2017/05/15	ISSUED FOR CONSTRUCTION	KHV

PERMIT TO PRACTICE
LE GROUPE ULTRAGEN LTÉE
Signature
Date SEP 21 2017
PERMIT NUMBER: P 1180
NT/NU Association of Professional Engineers and Geoscientists

FABRICATION DRAWINGS BASED ON WSP CERTIFIED ENGINEERING

CLIENT:

AGNICO EAGLE

NUOSANA-PROHEC MINING

ultragen

CONSULTANT PROJECT NO. 591700

REGISTERED PROFESSIONAL ENGINEER
D TRUONG
LICENSEE
NT/NU
2017/09/21

CONC.: KHV	
DATE: 2017/04/25	
DESSINE PAR: KVE	
DATE: 2017/04/25	
VER. PAR: -	
DATE: -	
APP.: -	
DATE: -	
ECHELLE: AUCUNE	

PROJET: AGNICO EAGLE - MELIADINE DIVISION
116 - FUEL TANK FARM

TITRE: RANKIN INLET
FABRICATION ISOMETRIC
MARINE LINE TO 65TNK11601 & 65TNK11602

No PROJET	No DESSIN	PAGES	REV.
6515	116-150-PDI-CC10-0001	8/13	2

NO. DE CONDUITE		SPECIFICATION	PRODUIT	SYSTEME REVETEMENT	CODE DE COULEUR	ISOLATION ET TRACAGE	EPAISS. D'ISOLATION		
116-150-PDI-CC10-0001		CC10	PDI		-			65-116-270-200	PIPE SUPPORT DETAILS
PRESSION D'OPERATION	TEMPERATURE D'OPERATION	PRESSION DE CONCEPTION	TEMPERATURE DE CONCEPTION	PRESSION D'ESSAI	CLASSE D'INSPECTION	CODE DE SERVICE	TRAITEMENT THERMIQUE	65-116-205-200	P&ID
		PSIG	°F	PSIG				No. DESSIN	DESSINS DE REFERENCE

116-MN-01

ICONES: W:\Agnico Eagle\Meliadine\591700 (Fuel Distribution)\03. Dessins\02. Isometriques\01. Rankin Inlet\116-150-PDI-CC10-0001-B.DWG

RAPPORT LT: Sep 20, 2017, 2:44pm

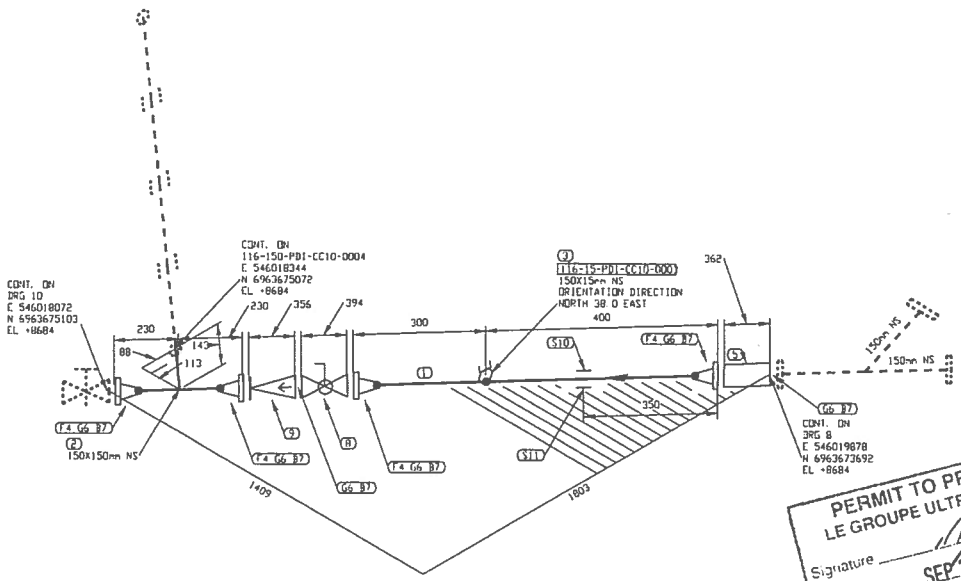

PERMIT TO PRACTICE
LE GROUPE ULTRAGEN LTEE
Signature
Date SEP 21 2017
PERMIT NUMBER: P 1180
NT/NU Association of Professional Engineers and Geoscientists

FABRICATION DRAWINGS BASED ON WSP CERTIFIED ENGINEERING

LISTE DE MATERIEL

No	QTE	DIA	MATERIEL/CATALOGUE	DESCRIPTION
1	525 MM	150	A 333 Gr. 6	SCH STD, SMLS PIPE
2	1	150X150	A 420 Gr. WPL6	SCH STD, BW STRAIGHT TEE
3	1	150X15	A 350 Gr. LF2	CL 3000, THREDOLET
4	4	150	A 350 Gr. LF2	CL 150, SCH STD, RF, WN FLANGE
5	1	150		CL 150, IFLOW INDICATOR "VISI-FLO"
6	6	150	ASME B16.20	CL 150, GARLOCK 3500, RING TYPE GASKET 1/8" THK
7	48	19	A 193 B7/A 194 2H	CL 150, 8 - 19.05 X 100 STUD BOLTS c/w TWO HEAVY HEX NUTS
8	1	150	BA-31	CL 150, RF, BALL VALVE
9	1	150	CK-29	CL 150, RF, SWING CHECK VALVE
10	1	150		PIPE SUPPORT AS PER DETAIL 1, DWG 65-116-270-200
11	1	150		PIPE SHOE AS PER DETAIL 2, DWG 65-116-270-200

No.	DATE	REVISION	PAR / APP
2	2017/09/21	PROJECT TITLE REVISED	KHV
1	2017/09/11	LINE NUMBERS REVISED	KHV
0	2017/05/15	ISSUED FOR CONSTRUCTION	KHV

CLIENT: AGNICO EAGLE

NUQSANA-PROMEC MINING

ultragen

CONSULTANT PROJECT NO. 591700

NO. DE CONDUITE		SPECIFICATION	PRODUIT	SYSTEME REVETEMENT	CODE DE COULEUR	ISOLATION ET TRACAGE	EPAISS. D'ISOLATION		
116-150-PDI-CC10-0001		CC10	PDI		-			65-116-270-200	PIPE SUPPORT DETAILS
PRESSION D'OPERATION	TEMPERATURE D'OPERATION	PRESSION DE CONCEPTION	TEMPERATURE DE CONCEPTION	PRESSION D'ESSAI	CLASSE D'INSPECTION	CODE DE SERVICE	TRAITEMENT THERMIQUE	65-116-205-200	P&ID
PSIG	°F	PSIG	°F	PSIG				No. DESSIN	DESSINS DE REFERENCE

SCEAU PROFESSIONNEL
REGISTERED PROFESSIONAL ENGINEER
D. TRUONG
LICENSEE
2017/09/21

CONC.: KHV
DATE: 2017/04/25
DESSINE PAR: KVC
DATE: 2017/04/25
VER. PAR: -
DATE: -
APP.: -
DATE: -
ECHELLE: AUCUNE

PROJET: AGNICO EAGLE - MELIADINE DIVISION
116 - FUEL TANK FARM

TITRE: RANKIN INLET
FABRICATION ISOMETRIC
MARINE LINE TO 65TNK11601 & 65TNK11602

No PROJET	No DESSIN	PAGES	REV.
6515	116-150-PDI-CC10-0001	9/13	2

116-MN-01

TC4D W:\Agnico Eagle\Meadow\591700 Fuel Distribution\05 Drawings\03 Isometrics\01 Rankin Inlet\116-150-PDI-CC10-0001-R.DWG

IMPRIMÉ LE: Sep 20, 2017, 2:44pm

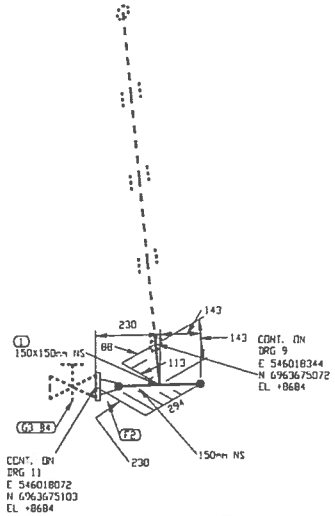

PERMIT TO PRACTICE
LE GROUPE ULTRAGEN LTÉE
Signature
Date SEP 21 2017
PERMIT NUMBER: P 1180
NT/NU Association of Professional Engineers and Geoscientists

FABRICATION DRAWINGS BASED ON WSP CERTIFIED ENGINEERING

LISTE DE MATERIEL

No	Q'TE	DIA	MATERIEL/CATALOGUE	DESCRIPTION
1	1	150X150	A 420 Gr. WPL6	SCH STD, BW STRAIGHT TEE
2	1	150	A 350 Gr. LF2	CL 150, SCH STD, RF, WN FLANGE
3	1	150	ASME B16.20	CL 150, GARLOCK 5500, RING TYPE GASKET 1/8" THK
4	8	19	A 193 B7/A 194 2H	CL 150, 8 - 19.05 X 100 STUD BOLTS c/w TWO HEAVY HEX NUTS

No.	DATE	REVISION	PAR / APP
2	2017/09/21	PROJECT TITLE REVISED	KHV
1	2017/09/11	LINE NUMBERS REVISED	KHV
0	2017/05/15	ISSUED FOR CONSTRUCTION	KHV

CLIENT: AGNICO EAGLE

NUQSANA-PROMEC MINING

ultragen

CONSULTANT PROJECT NO. 591700

NO. DE CONDUITE		SPECIFICATION	PRODUIT	SYSTEME REVETEMENT	CODE DE COULEUR	ISOLATION ET TRACAGE	EPAISS. D'ISOLATION		
116-150-PDI-CC10-0001		CC10	PDI		-			65-116-270-200	PIPE SUPPORT DETAILS
PRESSION D'OPERATION	TEMPERATURE D'OPERATION	PRESSION DE CONCEPTION	TEMPERATURE DE CONCEPTION	PRESSION D'ESSAI	CLASSE D'INSPECTION	CODE DE SERVICE	TRAITEMENT THERMIQUE	65-116-205-200	P&ID
PSIG	°F	PSIG	°F	PSIG				No. DESSIN	DESSINS DE REFERENCE

REGISTERED PROFESSIONAL ENGINEER
D TRUONG
LICENSEE
NT/NU
2017/09/21

CONC.: KHV
DATE: 2017/04/25
DESSINE PAR: KVE
DATE: 2017/04/25
VER. PAR: -
DATE: -
APP.: -
DATE: -
ECHELLE: AUCUNE

PROJET: AGNICO EAGLE - MELIADINE DIVISION
116 - FUEL TANK FARM

TITRE: RANKIN INLET
FABRICATION ISOMETRIC
MARINE LINE TO 65TNK11601 & 65TNK11602

No PROJET	No DESSIN	PAGES	REV.
6515	116-150-PDI-CC10-0001	10/13	2

116-MN-01

FICHIER: H:\Agnico Eagle\Meliadine\591700 (Fuel Pipelines)\05 Design\03 Isometrics\01 Rankin Inlet\116-150-PDI-CC10-0001-10.DWG

AVRIL 11 Sep 20, 2017 2:44pm

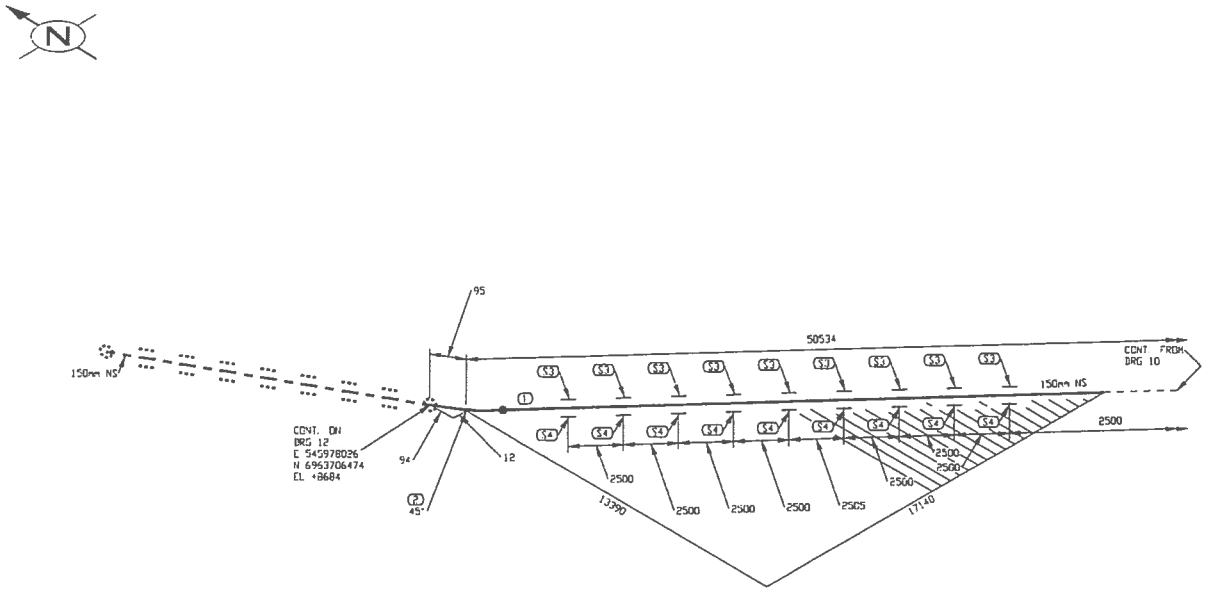

PERMIT TO PRACTICE
LE GROUPE ULTRAGEN LTÉE
Signature
Date SEP 21 2017
PERMIT NUMBER: P 1180
NT/NU Association of Professional Engineers and Geoscientists

FABRICATION DRAWINGS BASED ON WSP CERTIFIED ENGINEERING

LISTE DE MATERIEL

No	QTE	DIA	MATERIEL/CATALOGUE	DESCRIPTION
1	21655 MM	150	A 333 Gr 6	SCH STD, SMLS PIPE
2	1	150	A 420 Gr WPL6	SCH STD, BV LR 45 DEG ELBOW
3	9	150		PIPE SUPPORT AS PER DETAIL 1, DWG 65-116-270-200
4	9	150		PIPE SHOE AS PER DETAIL 2, DWG 65-116-270-200

No.	DATE	REVISION	PAR / APP.
2	2017/09/21	PROJECT TITLE REVISED	KHV
1	2017/09/11	LINE NUMBERS REVISED	KHV
0	2017/05/15	ISSUED FOR CONSTRUCTION	KHV

CLIENT: AGNICO EAGLE

NUOSANA-PROMEC MINING

ultragen

CONSULTANT PROJECT NO. 591700

NO. DE CONDUITE		SPECIFICATION	PRODUIT	SYSTEME REVETEMENT	CODE DE COULEUR	ISOLATION ET TRACAGE	EPAISS. D'ISOLATION		
116-150-PDI-CC10-0001		CC10	PDI		-			65-116-270-200	PIPE SUPPORT DETAILS
PRESSION D'OPERATION	TEMPERATURE D'OPERATION	PRESSION DE CONCEPTION	TEMPERATURE DE CONCEPTION	PRESSION D'ESSAI	CLASSE D'INSPECTION	CODE DE SERVICE	TRAITEMENT THERMIQUE	65-116-205-200	P&ID
PSIG	°F	PSIG	°F	PSIG				No. DESSIN	DESSINS DE REFERENCE

SCEAU PROFESSIONNEL
REGISTERED PROFESSIONAL ENGINEER
D. TRUONG
LICENSEE
NT/NU
2017/09/21

CONC.: KHV
DATE: 2017/04/23
DESSINE PAR: KVE
DATE: 2017/04/23
VER. PAR: -
DATE: -
APP.: -
DATE: -
ECHELLE: AUCUNE

PROJET: AGNICO EAGLE - MELIADINE DIVISION
116 - FUEL TANK FARM

TITRE: RANKIN INLET
FABRICATION ISOMETRIC
MARINE LINE TO 65TNK11601 & 65TNK11602

No PROJET	No DESSIN	PAGES	REV.
6515	116-150-PDI-CC10-0001	11/13	2

116-MN-01

FICHIER: H:\Agnico Eagle\Meliadine\591700 (Fuel Distribution)\05. Dessins\02. Tuyauterie\02. Isometriques\01. Rankin Inet\116-150-PDI-CC10-0001-11.DWG

IMPRIMÉ LE: Sep 20, 2017, 2:44pm

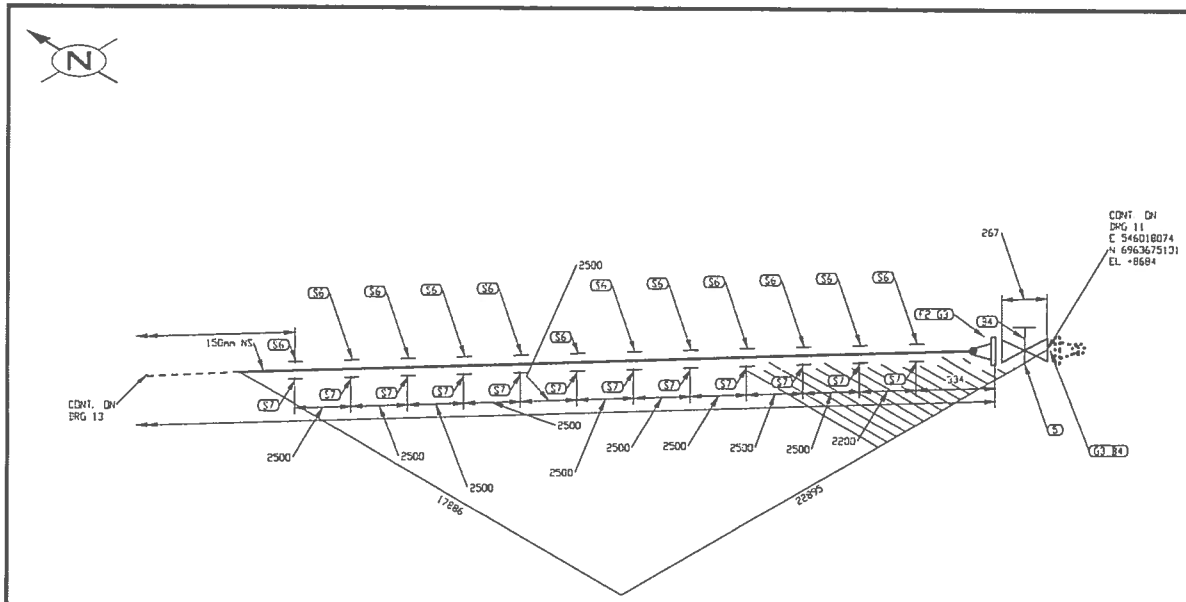

PERMIT TO PRACTICE
LE GROUPE ULTRAGEN LTÉE
Signature
Date SEP 21 2017
PERMIT NUMBER: P 1180
NT/NU Association of Professional Engineers and Geoscientists

FABRICATION DRAWINGS BASED ON WSP CERTIFIED ENGINEERING

LISTE DE MATERIEL

No	QTE	DIA	MATERIEL/CATALOGUE	DESCRIPTION
1	28696 MM	150	A 333 Gr 6	SCH STD, SMLS PIPE
2	1	150	A 350 Gr LF2	CL 150, SCH STD, RF, WN FLANGE
3	2	150	ASME B16.20	CL 150, GARLOCK 5500, RING TYPE GASKET 1/8" THK
4	16	19	A 193 B7/A 194 2H	CL 150, 8 - 19.05 X 100 STUD BOLTS c/w TWO HEAVY HEX NUTS
5	1	150	GA-10	CL 150, RF, CS, GATE VALVE
6	12	150		PIPE SUPPORT AS PER DETAIL 1, DWG 65-116-270-200
7	12	150		PIPE SHOE AS PER DETAIL 2, DWG 65-116-270-200

No.	DATE	REVISION	PAR / APP.
2	2017/09/21	PROJECT TITLE REVISED	KHV
1	2017/09/11	LINE NUMBERS REVISED	KHV
0	2017/05/15	ISSUED FOR CONSTRUCTION	KHV

CLIENT:

AGNICO EAGLE

NUQSANA-PROMEC MINING

ultragen

CONSULTANT PROJECT NO. 591700

NO. DE CONDUITE		SPECIFICATION	PRODUIT	SYSTEME REVETEMENT	CODE DE COULEUR	ISOLATION ET TRACAGE	EPAISS. D'ISOLATION		
116-150-PDI-CC10-0001		CC10	PDI		-			65-116-270-200	PIPE SUPPORT DETAILS
PRESSION D'OPERATION	TEMPERATURE D'OPERATION	PRESSION DE CONCEPTION	TEMPERATURE DE CONCEPTION	PRESSION D'ESSAI	CLASSE D'INSPECTION	CODE DE SERVICE	TRAITEMENT THERMIQUE	65-116-205-200	P&ID
PSIG	°F	PSIG	°F	PSIG				No. DESSIN	DESSINS DE REFERENCE

SCEAU PROFESSIONNEL
REGISTERED PROFESSIONAL ENGINEER
D. TRUONG
LICENSEE
NT/NU
2017/09/21

CONC.: KHV
DATE: 2017/04/25
DESSINÉ PAR: KVE
DATE: 2017/04/25
VER. PAR: -
DATE: -
APP.: -
DATE: -
ÉCHELLE: AUCUNE

PROJET: AGNICO EAGLE - MELIADINE DIVISION
116 - FUEL TANK FARM

TITRE: RANKIN INLET
FABRICATION ISOMETRIC
MARINE LINE TO 65TNK11601 & 65TNK11602

No PROJET	No DESSIN	PAGES	REV.
6515	116-150-PDI-CC10-0001	12/13	2

116-MN-01

FICHIER: W:\Agnico Eagle\Meliadine\591700 (Fuel Distribution)\05. Dessins\02. Isometriques\01. Rankin Inlet\116-150-PDI-CC10-0001-12.DWG

APPRIME LE Sep 20, 2017, 2:44pm

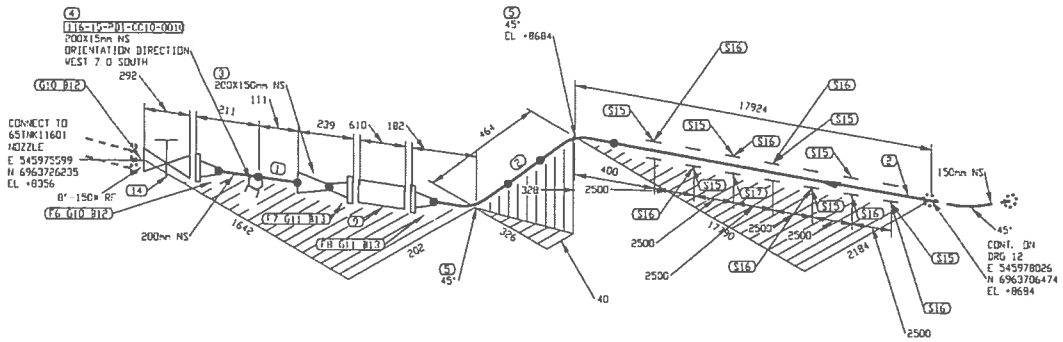

LISTE DE MATERIEL

No	QTE	DIA	MATERIEL/CATALOGUE	DESCRIPTION
1	222 MM	200	A 333 Gr 6	SCH STD, SMLS PIPE
2	18103 MM	150	A 333 Gr 6	SCH STD, SMLS PIPE
3	1	200X150	A 420 Gr WPL6	SCH STD, BW CONC RED
4	1	200X15	A 350 Gr LF2	CL 3000, THREDOLET
5	2	150	A 420 Gr WPL6	SCH STD, BW LR 45 DEG ELBOW
6	1	200	A 350 Gr LF2	CL 150, SCH STD, RF, WN FLANGE
7	1	150	A 350 Gr LF2	CL 150, SCH STD, RF, WN FLANGE
8	1	150	A 350 Gr LF2	CL 150, SCH STD, RF, WN FLANGE
9	1	150		CL 150, SINGLE BRAIDED HOSE ASSEMBLY
10	2	200	ASME B16.20	CL 150, GARLOCK 5500, RING TYPE GASKET 1/8" THK
11	2	150	ASME B16.20	CL 150, GARLOCK 5500, RING TYPE GASKET 1/8" THK
12	16	19	A 193 B7/A 194 2H	CL 150, 8 - 19.05 X 110 STUD BOLTS c/w TWO HEAVY HEX NUTS
13	16	19	A 193 B7/A 194 2H	CL 150, 8 - 19.05 X 100 STUD BOLTS c/w TWO HEAVY HEX NUTS
14	1	200	GA-10	CL 150, RF, CS, FULL PORT GATE VALVE
15	7	150		PIPE SUPPORT AS PER DETAIL 1, DWG 65-116-270-2C0
16	7	150		PIPE SHOE AS PER DETAIL 2, DWG 65-116-270-2C0
17	1	150		PIPE SHOE AS PER DETAIL 2, DWG 65-116-270-2C0

PERMIT TO PRACTICE
LE GROUPE ULTRAGEN LTÉE
Signature
Date SEP 21 2017
PERMIT NUMBER: P 1180
NT/NU Association of Professional Engineers and Geoscientists

FABRICATION DRAWINGS BASED ON WSP CERTIFIED ENGINEERING

No.	DATE	REVISION	PAR / APP.
2	2017/09/21	PROJECT TITLE REVISED	KHV
1	2017/09/11	LINE NUMBERS REVISED	KHV
0	2017/05/15	ISSUED FOR CONSTRUCTION	KHV

CLIENT: AGNICO EAGLE

NUQSANA-PROMEC MINING

ultragen

CONSULTANT PROJECT NO. 591700

NO. DE CONDUITE		SPECIFICATION	PRODUIT	SYSTEME REVETEMENT	CODE DE COULEUR	ISOLATION ET TRACAGE	EPAISS. D'ISOLATION		
116-150-PDI-CC10-0001		CC10	PDI		-			65-116-270-200	PIPE SUPPORT DETAILS
PRESSION D'OPERATION	TEMPERATURE D'OPERATION	PRESSION DE CONCEPTION	TEMPERATURE DE CONCEPTION	PRESSION D'ESSAI	CLASSE D'INSPECTION	CODE DE SERVICE	TRAITEMENT THERMIQUE	65-116-205-200	P&ID
PSIG	°F	PSIG	°F	PSIG				No. DESSIN	DESSINS DE REFERENCE

SCEAU PROFESSIONNEL
REGISTERED PROFESSIONAL ENGINEER
D TRUONG
LICENSEE
NT/NU
2017/09/21

CONC.: KHV
DATE: 2017/04/25
DESSINE PAR: KVE
DATE: 2017/04/25
VER. PAR: -
DATE: -
APP.: -
DATE: -
ECHELLE: AUCUNE

PROJET: AGNICO EAGLE - MELIADINE DIVISION
116 - FUEL TANK FARM

TITRE: RANKIN INLET
FABRICATION ISOMETRIC
MARINE LINE TO 65TNK11601 & 65TNK11602

No PROJET	No DESSIN	PAGES	REV.
6515	116-150-PDI-CC10-0001	13/13	2

116-MN-01

FCADER: W:\Agnico Eagle\Meliadine\591700 (Fuel Distribution)\05 Design\C2 Tank\Fuel\02 Isometrique\01 Rankin Inlet\116-150-PDI-CC10-0001-13.DWG

WRENNE LE Sep 20, 2017, 2:44pm

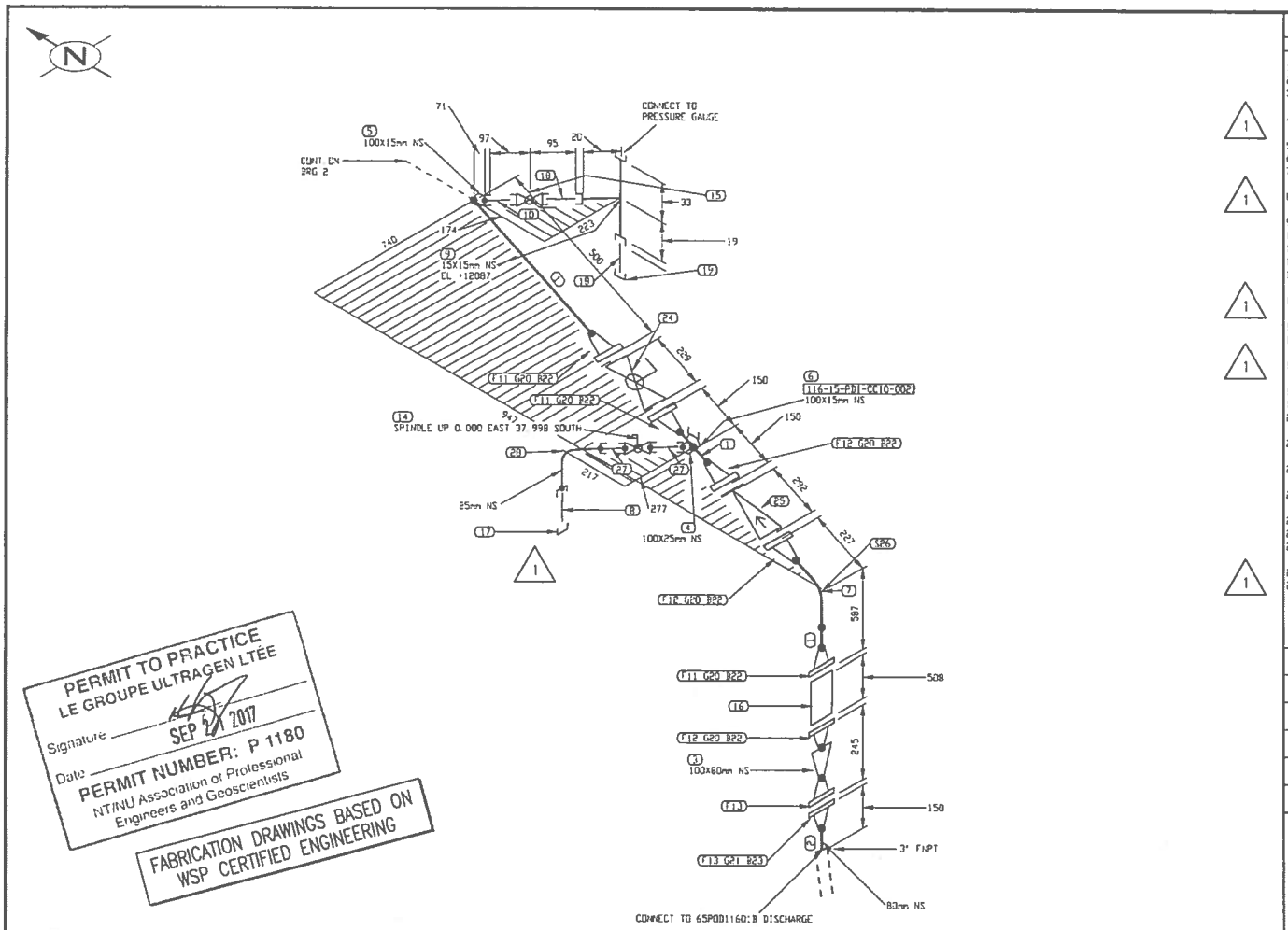

LISTE DE MATERIEL

No	QTE	DIA	MATERIEL/CATALOGUE	DESCRIPTION
1	577 MM	100	A 333 Gr 6	SCH STD, SMLS PIPE
2	82 MM	80	A 333 Gr 6	SCH STD, SMLS PIPE PDE×TDE
3	1	100X80	A 420 Gr WPL6	SCH STD, BW CONC RED
4	1	100X25	A 350 Gr LF2	CL 3000, SOCKOLET
5	1	100X15	A 350 Gr LF2	CL 3000, SOCKOLET
6	1	100X15	A 350 Gr LF2	CL 3000, THREDOLET
7	1	100	A 420 Gr WPL6	SCH STD, BW LR 90 DEG ELBOW
8	1	25	A 333 Gr 6	SCH 80, NIPPLE × 75mm LG PDE×TDE
9	1	15X15	A 350 Gr LF2	CL 3000, THRD STRAIGHT TEE
10	1	15	A 333 Gr 6	SCH 80, NIPPLE × 75mm LG PDE×TDE
11	3	100	A 350 Gr LF2	CL 150, SCH STD, RF, WN FLANGE
12	3	100	A 350 Gr LF2	CL 150, SCH STD, RF, WN FLANGE
13	2	80	A 350 Gr LF2	CL 150, SCH STD, RF, WN FLANGE
14	1	25	BA-29	CL 600,WS BALL VALVE
15	1	15	BA-32	CL 600, THRD, BALL VALVE
16	1	100		CL 150, SINGLE BRAIDED HOSE ASSEMBLY
17	1	25	A 350 Gr LF2	CL 3000, THRD CAP
18	2	15	A 333 Gr 6	SCH 80, NIPPLE × 75mm LG TBE
19	1	15	A 350 Gr LF2	CL 150, GARLOCK 5500, RING TYPE GASKET 1/8"
20	6	100	ASME B16.20	CUK150, GARLOCK 5500, RING TYPE GASKET 1/8"
21	1	80	ASME B16.20	CUK150, 8 - 15.875 x 90 STUD BOLTS c/w TWO
22	48	16	A 193 B7/A 194 2H	BEARSONEX NUTS.875 x 90 STUD BOLTS c/w TWO
23	4	16	A 193 B7/A 194 2H	HEAVY HEX NUTS
24	1	100	BA-31	CL 150, RF, BALL VALVE
25	1	100	CK-29	CL 150, RF, SWING CHECK VALVE
26	1	100		PIPE SUPPORT BY CONTRACTOR
27	2	25	A 333 Gr 6	SCH 80, NIPPLE × 75mm LG PBE
28	1	25	A 350 Gr LF2	CL 3000, SW 90 DEG ELBOW

No.	DATE	REVISION	PAR / APP.
3	2017/09/21	PROJECT TITLE REVISED	INQ
2	2017/09/11	LINE NUMBERS REVISED	KHV
1	2017/06/30	DRAIN REVISED AS PER CLIENT COMMENTS	OVN
0	2017/05/15	ISSUED FOR CONSTRUCTION	KHV

PERMIT TO PRACTICE
LE GROUPE ULTRAGEN LTÉE
Signature
Date SEP 21 2017
PERMIT NUMBER: P 1180
NT/NU Association of Professional Engineers and Geoscientists

FABRICATION DRAWINGS BASED ON WSP CERTIFIED ENGINEERING

CLIENT: AGNICO EAGLE

NUQSANA-PROMEC MINING

ultragen

CONSULTANT PROJECT NO. 591700

SCEAU PROFESSIONNEL: REGISTERED PROFESSIONAL ENGINEER D TRUONG LICENSEE 2017/09/21

CONC.: KHV
DATE: 2017/04/25
DESSINÉ PAR: KVE
DATE: 2017/04/25
VER. PAR: -
DATE: -
APP.: -
DATE: -
ÉCHELLE: AUCUNE

PROJET: AGNICO EAGLE - MELIADINE DIVISION
116 - FUEL TANK FARM

TITRE: RANKIN INLET
FABRICATION ISOMETRIC
DIESEL FROM 65PDD11601B TO BOTTOM LOADING ARM 65EQM11601

No PROJET	No DESSIN	PAGES	REV.
6515	116-100-PDI-CC10-0020	1/2	3

116-MN-01

NO. DE CONDUITE		SPECIFICATION	PRODUIT	SYSTEME REVETEMENT	CODE DE COULEUR	ISOLATION ET TRACAGE	EPAISS. D'ISOLATION		
116-100-PDI-CC10-0020		CC10	PDI					65-116-270-200	PIPE SUPPORT DETAILS
PRESSION D'OPERATION	TEMPERATURE D'OPERATION	PRESSION DE CONCEPTION	TEMPERATURE DE CONCEPTION	PRESSION D'ESSAI	CLASSE D'INSPECTION	CODE DE SERVICE	TRAITEMENT THERMIQUE	65-116-205-200	P&ID
PSIG	°F	PSIG	°F	PSIG				No. DESSIN	DESSINS DE REFERENCE

FICHIER: M:\Active Copy\Meadow\591700 (Fuel Delivery)\05 Design\02 Isometrics\01 Rankin Inlet\116-100-PDI-CC10-0023-1.DWG

IMPRIMÉ LE: Sep 29, 2017, 2:43pm

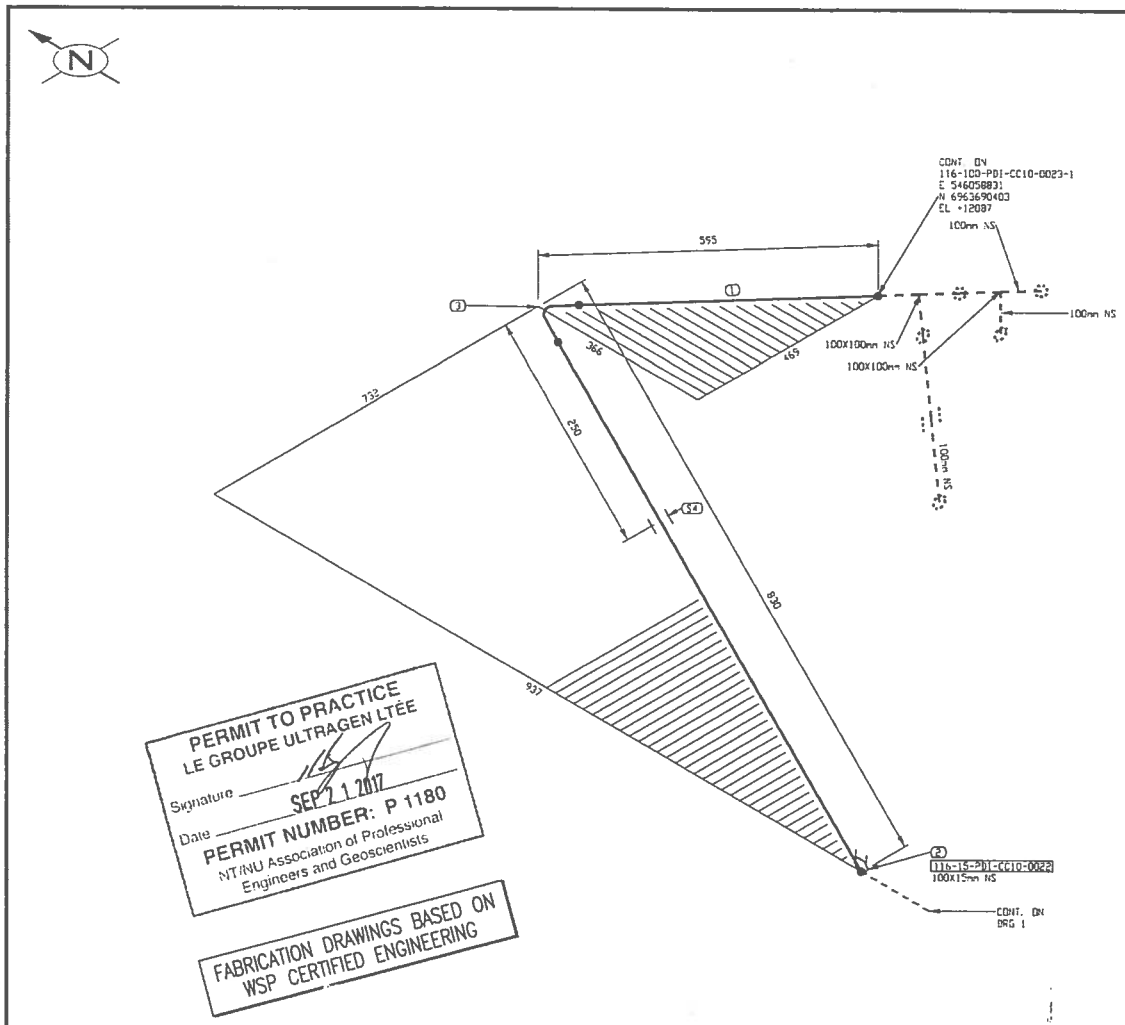

PERMIT TO PRACTICE
LE GROUPE ULTRAGEN LTÉE
Signature
Date SEP 2 1 2017
PERMIT NUMBER: P 1180
NT/NU Association of Professional Engineers and Geoscientists

FABRICATION DRAWINGS BASED ON WSP CERTIFIED ENGINEERING

LISTE DE MATERIEL

No	QTE	DIA	MATERIEL/CATALOGUE	DESCRIPTION
1	1480 MM	100	A 333 Gr 6	SCH STD, SMLS PIPE
2	1	100X15	A 350 Gr LF2	CL 3000, THREDOLET
3	1	100	A 420 Gr WPL6	SCH STD, BV LR 90 DEG ELBOW
4	1	100		PIPE SUPPORT BY CONTRACTOR

No.	DATE	REVISION	PAR / APP.
2	2017/09/21	PROJECT TITLE REVISED	KHV
1	2017/09/11	LINE NUMBERS REVISED	KHV
0	2017/05/15	ISSUED FOR CONSTRUCTION	KHV

CLIENT: AGNICO EAGLE

NUOSANG-PROMEC MINING

ultragen

CONSULTANT PROJECT NO. 591700

NO. DE CONDUITE		SPECIFICATION	PRODUIT	SYSTEME REVETEMENT	CODE DE COULEUR	ISOLATION ET TRACAGE	EPAISS. D'ISOLATION		
116-100-PDI-CC10-0020		CC10	PDI					65-116-270-200	PIPE SUPPORT DETAILS
PRESSION D'OPERATION	TEMPERATURE D'OPERATION	PRESSION DE CONCEPTION	TEMPERATURE DE CONCEPTION	PRESSION D'ESSAI	CLASSE D'INSPECTION	CODE DE SERVICE	TRAITEMENT THERMIQUE	65-116-205-200	P&ID
PSIG	°F	PSIG	°F	PSIG				No. DESSIN	DESSINS DE REFERENCE

SCEAU PROFESSIONNEL
REGISTERED PROFESSIONAL ENGINEER
D TRUONG
LICENSEE
2017/09/21

CONC.: KHV
DATE: 2017/04/25
DESSINÉ PAR: KVE
DATE: 2017/04/25
VER. PAR: -
DATE: -
APP.: -
DATE: -
ÉCHELLE: AUCUNE

PROJET: AGNICO EAGLE - MELIADINE DIVISION
116 - FUEL TANK FARM

TITRE: RANKIN INLET
FABRICATION ISOMETRIC
DIESEL FROM 6SPDD11601B TO BOTTOM LOADING ARM 6SEQM11601

No PROJET	No DESSIN	PAGES	REV.
6515	116-100-PDI-CC10-0020	2/2	2

116-MN-01

FICHIER: W:\Agnico Eagle\Meliadine\591700 (Fuel Distribution)\05 Dessins\02 Isometrics\01 Rankin Inlet\116-100-PDI-CC10-0020-2.DWG

IMPRIMÉ LE: Sep 22, 2017, 2:43pm

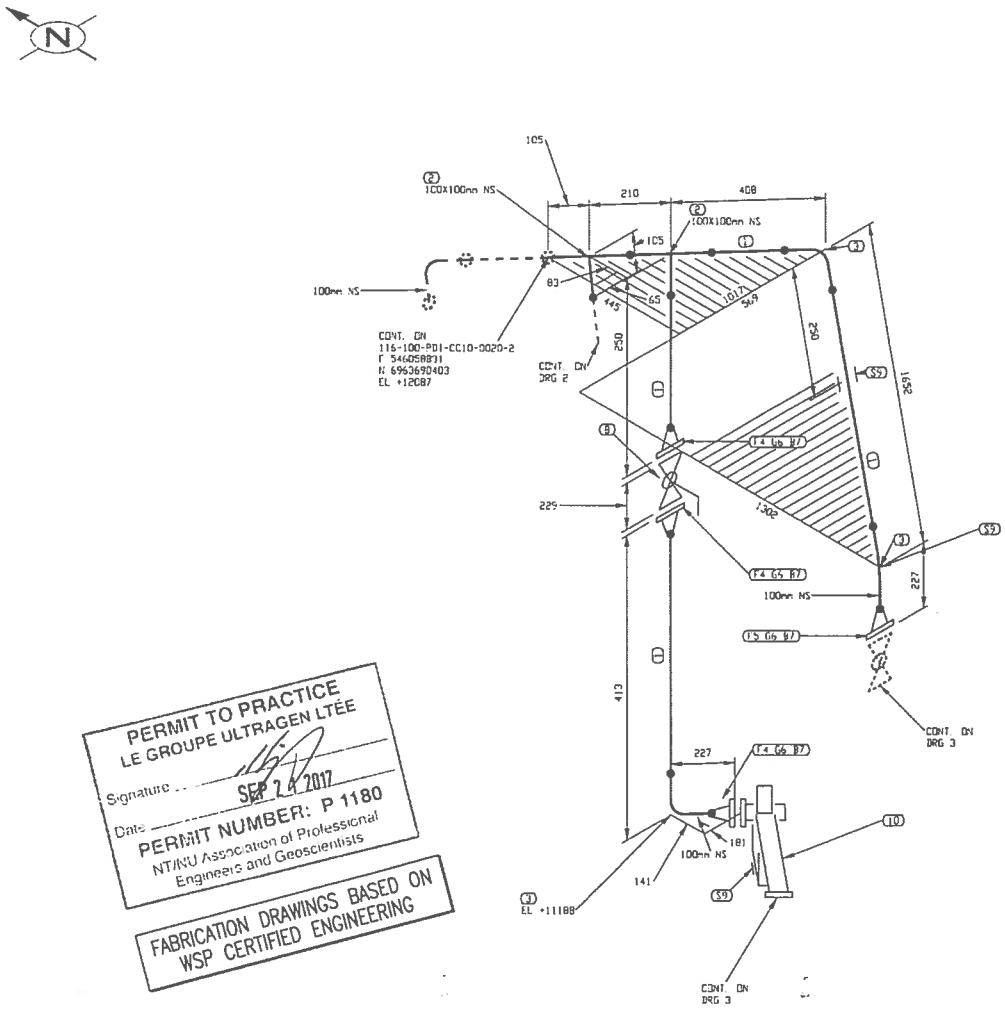

PERMIT TO PRACTICE
LE GROUPE ULTRAGEN LTÉE
Signature
Date SEP 2 4 2017
PERMIT NUMBER: P 1180
NT/NU Association of Professional Engineers and Geoscientists

FABRICATION DRAWINGS BASED ON WSP CERTIFIED ENGINEERING

LISTE DE MATERIEL

No	QTE	DIA	MATERIEL/CATALOGUE	DESCRIPTION
1	1755 MM	100	A 333 Gr. 6	SCH STD, SMLS PIPE
2	2	100X100	A 420 Gr. WPL6	SCH STD, BW STRAIGHT TEE
3	3	100	A 420 Gr. WPL6	SCH STD, BW LR 90 DEG ELBOW
4	3	100	A 350 Gr. LF2	CL 150, SCH STD, RF, WN FLANGE
5	1	100	A 350 Gr. LF2	CL 150, SCH STD, RF, WN FLANGE
6	4	100	ASME B16.20	CL 150, GARLOCK 5500, RING TYPE GASKET 1/8" THK
7	32	16	A 193 B7/A 194 2H	CL 150, A - 15 875 x 90 STUD BOLTS c/w TWO HEAVY HEX NUTS
8	1	100	BA-31	CL 150, RF, BALL VALVE
9	3	100		PIPE SUPPORT BY CONTRACTOR
10	1	100		TCS METER UNIT

No.	DATE	REVISION	PAR / APP
2	2017/09/21	PROJECT TITLE REVISED	KHV
1	2017/09/11	LINE NUMBERS REVISED	KHV
0	2017/05/15	ISSUED FOR CONSTRUCTION	KHV

CLIENT:

AGNICO EAGLE

NUOSANA PROMEC MINING

ultragen

CONSULTANT PROJECT NO. 591700

NO. DE CONDUITE		SPECIFICATION	PRODUIT	SYSTEME REVETEMENT	CODE DE COULEUR	ISOLATION ET TRACAGE	EPAISS. D'ISOLATION		
116-100-PDI-CC10-0023		CC10	PDI		-			65-116-270-200	PIPE SUPPORT DETAILS
PRESSION D'OPERATION	TEMPERATURE D'OPERATION	PRESSION DE CONCEPTION	TEMPERATURE DE CONCEPTION	PRESSION D'ESSAI	CLASSE D'INSPECTION	CODE DE SERVICE	TRAITEMENT THERMIQUE	65-116-205-200	P&ID
PSIG	°F	PSIG	°F	PSIG				No. DESSIN	DESSINS DE REFERENCE

SCEAU PROFESSIONNEL
REGISTERED PROFESSIONAL ENGINEER
D. TRUONG
LICENSEE
2017/09/21

CONC.: KHV
DATE: 2017/04/25
DESSINE PAR: KVE
DATE: 2017/04/25
VER. PAR: -
DATE: -
APP.: -
DATE: -
ECHELLE: AUCUNE

PROJET:
AGNICO EAGLE - MELIADINE DIVISION
116 - FUEL TANK FARM

TITRE:
RANKIN INLET
FABRICATION ISOMETRIC
DIESEL FROM 65PDD11601A TO BOTTOM LOADING ARM 65EQM11601

No PROJET	No DESSIN	PAGES	REV.
6515	116-100-PDI-CC10-0023	1/4	2

116-MN-01

ICHER: K:\Agnico Eagle\Meadow\30-100 (Fuel Distribution)\05. Design\07. Isometric\02. Isometrics\116-100-PDI-CC10-0023-1.DWG

IMPRIMÉ LE: Sep 20, 2017, 2:43pm

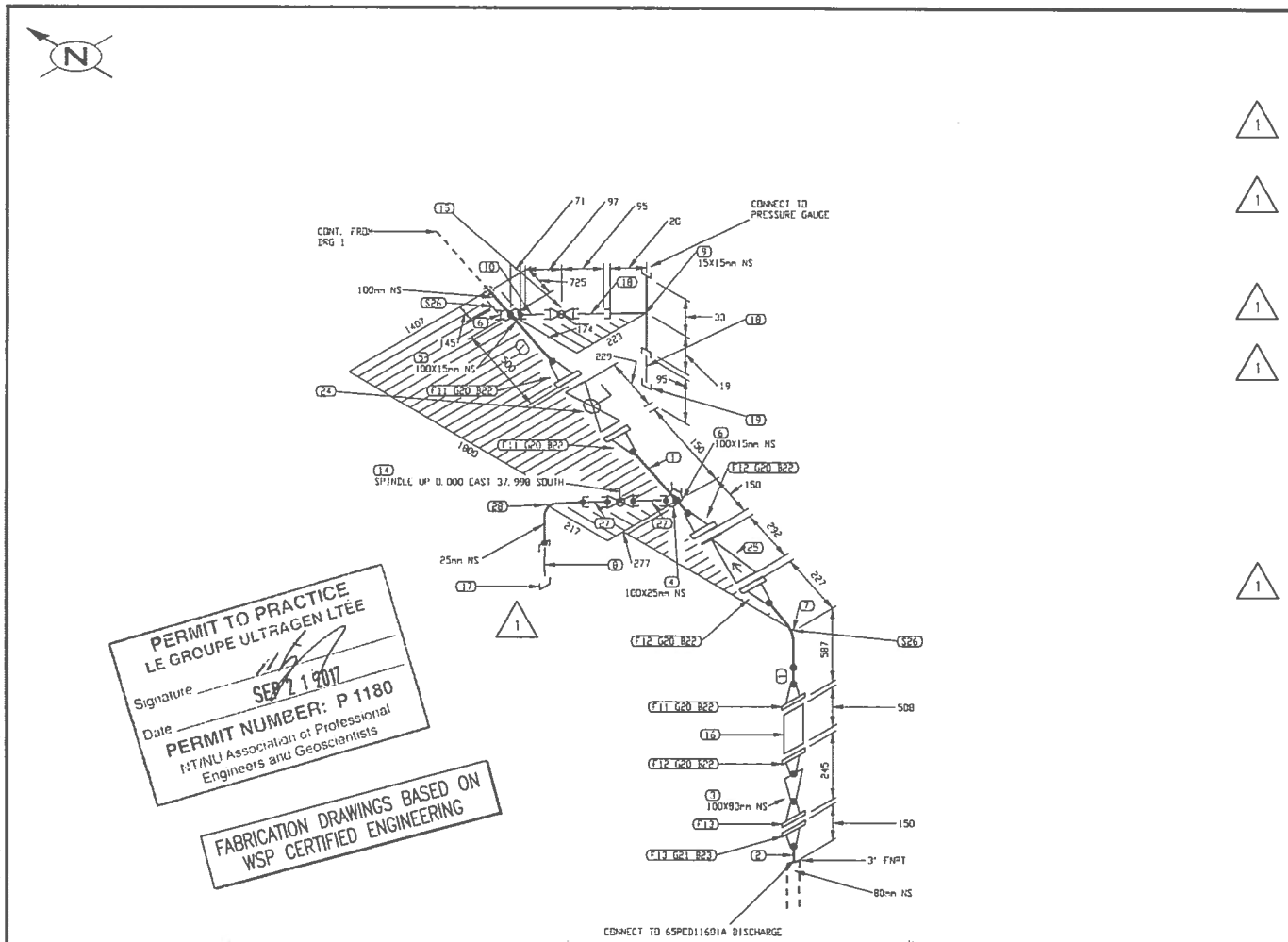

PERMIT TO PRACTICE
LE GROUPE ULTRAGEN LTEE
Signature
Date SEP 21 2017
PERMIT NUMBER: P 1180
NT/NU Association of Professional Engineers and Geoscientists

FABRICATION DRAWINGS BASED ON WSP CERTIFIED ENGINEERING

LISTE DE MATERIEL

No	QTE	DIA	MATERIEL/CATALOGUE	DESCRIPTION
1	1660 MM	100	A 333 Gr. 6	SCH STD, SMLS PIPE
2	82 MM	80	A 333 Gr. 6	SCH STD, SMLS PIPE PDE×TDE
3	1	100X80	A 420 Gr. WPL6	SCH STD, BW CONC RED
4	1	100X25	A 350 Gr. LF2	CL 3000, SOCKOLET
5	1	100X15	A 350 Gr. LF2	CL 3000, SOCKOLET
6	2	100X15	A 350 Gr. LF2	CL 3000, THREDOLET
7	1	100	A 420 Gr. WPL6	SCH STD, BW LR 90 DEG ELBOW
8	1	25	A 333 Gr. 6	SCH 80, NIPPLE × 75mm LG PDE×TDE
9	1	15X15	A 350 Gr. LF2	CL 3000, THRD STRAIGHT TEE
10	1	15	A 333 Gr. 6	SCH 80, NIPPLE × 75mm LG PDE×TDE
11	3	100	A 350 Gr. LF2	CL 150, SCH STD, RF, WN FLANGE
12	3	100	A 350 Gr. LF2	CL 150, SCH STD, RF, WN FLANGE
13	2	80	A 350 Gr. LF2	CL 150, SCH STD, RF, WN FLANGE
14	1	25	BA-29	CL 600, SW BALL VALVE
15	1	15	BA-32	CL 600, THRD, BALL VALVE
16	1	100		CL 150, SINGLE BRAIDED HOSE ASSEMBLY
17	1	25	A 350 Gr. LF2	CL 3000, THRD CAP
18	2	15	A 333 Gr. 6	SCH 80, NIPPLE × 75mm LG TBE
19	1	15	A 350 Gr. LF2	CL 150, GARLOCK 3500, RING TYPE GASKET 1/8"
20	6	100	ASME B16.20	CUK150, GARLOCK 3500, RING TYPE GASKET 1/8"
21	1	80	ASME B16.20	CUK150, 8 - 15.875 X 90 STUD BOLTS c/w TWO
22	48	16	A 193 B7/A 194 2H	HEAVY HEX NUTS 15.875 x 90 STUD BOLTS c/w TWO
23	4	16	A 193 B7/A 194 2H	HEAVY HEX NUTS
24	1	100	BA-31	CL 150, RF, BALL VALVE
25	1	100	CK-29	CL 150, RF, SWING CHECK VALVE
26	2	100		PIPE SUPPORT BY CONTRACTOR
27	2	25	A 333 Gr. 6	SCH 80, NIPPLE × 75mm LG PBE
28	1	25	A 350 Gr. LF2	CL 3000, SW 90 DEG ELBOW

No.	DATE	REVISION	PAR / APP.
3	2017/09/21	PROJECT TITLE REVISED	KHV
2	2017/09/11	LINE NUMBERS REVISED	KHV
1	2017/06/30	DRAIN REVISED AS PER CLIENT COMMENTS	OVN
0	2017/05/15	ISSUED FOR CONSTRUCTION	KHV

CLIENT: AGNICO EAGLE

NUOSANA-PROMEC MINING

ultragen

CONSULTANT PROJECT NO. 591700

MO. DE CONDUITE		SPECIFICATION	PRODUIT	SYSTEME REVETEMENT	CODE DE COULEUR	ISOLATION ET TRACAGE	EPAISS. D'ISOLATION		
116-100-PDI-CC10-0023		CC10	PDI					65-116-270-200	PIPE SUPPORT DETAILS
PRESSION D'OPERATION	TEMPERATURE D'OPERATION	PRESSION DE CONCEPTION	TEMPERATURE DE CONCEPTION	PRESSION D'ESSAI	CLASSE D'INSPECTION	CODE DE SERVICE	TRAITEMENT THERMIQUE	65-116-205-200	P&ID
PSIG	°F	PSIG	°F	PSIG				No. DESSIN	DESSINS DE REFERENCE

SCEAU PROFESSIONNEL
REGISTERED PROFESSIONAL ENGINEER
D TRUONG
LICENSEE
2017/09/21

CONC.: KHV
DATE: 2017/04/25
DESSINE PAR: KVE
DATE: 2017/04/25
VER. PAR: -
DATE: -
APP.: -
DATE: -
ECHELLE: AUCUNE

PROJET: AGNICO EAGLE - MELIADINE DIVISION
116 - FUEL TANK FARM

TITRE: RANKIN INLET
FABRICATION ISOMETRIC
DIESEL FROM 65PCD11601A TO BOTTOM LOADING ARM 65EQM11601

No PROJET	No DESSIN	PAGES	REV.
6515	116-100-PDI-CC10-0023	2/4	3

116-MN-01

FICHIER = V:\Agnico Eagle\Meliadine\31700 (Fuel Distribution)\05. Design\02. Isometrics\01. Rankin Inst\116-100-PDI-CC10-0023-3.DWG

IMPRIMÉ LE Sep 20, 2017, 2:43pm

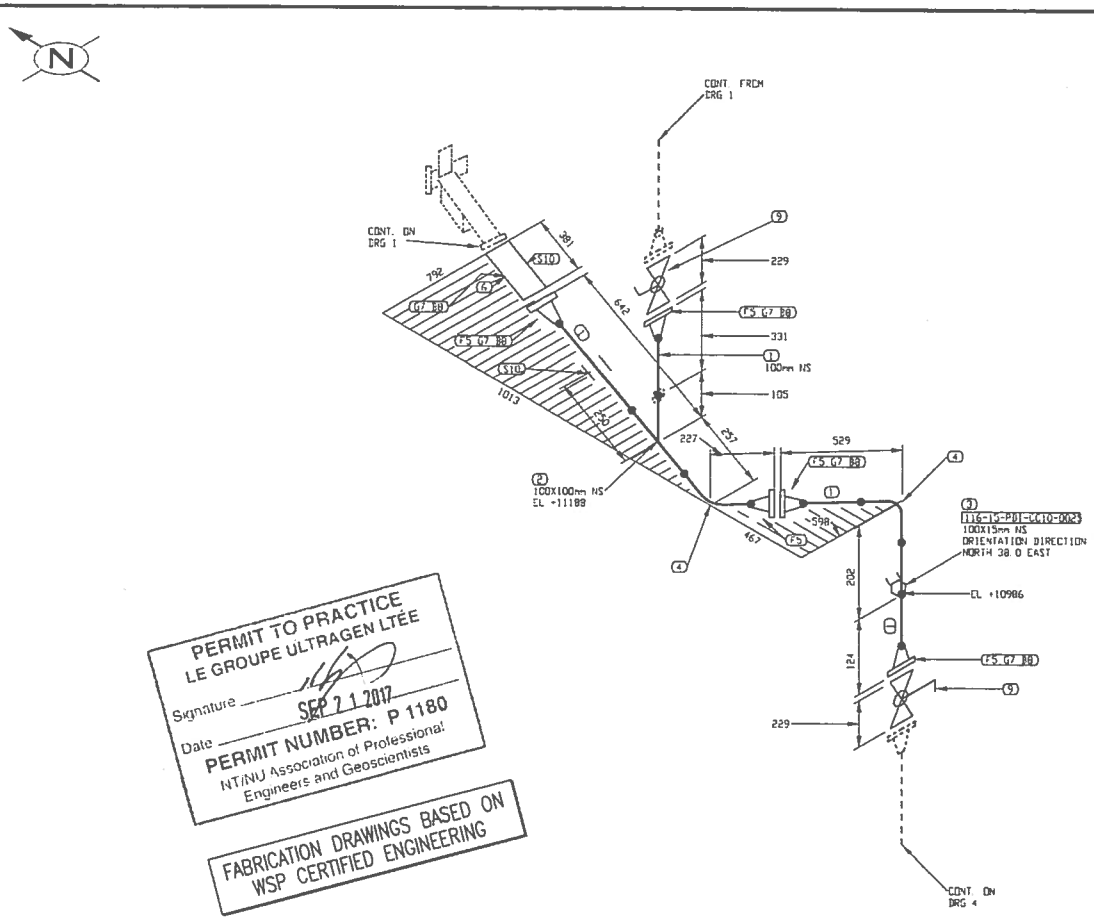

PERMIT TO PRACTICE
LE GROUPE ULTRAGEN LTÉE
Signature
Date SEP 21 2017
PERMIT NUMBER: P 1180
NT/NU Association of Professional Engineers and Geoscientists

FABRICATION DRAWINGS BASED ON WSP CERTIFIED ENGINEERING

LISTE DE MATERIEL

No	QTT	DIA	MATERIEL/CATALOGUE	DESCRIPTION
1	1120 MM	100	A 333 Gr 6	SCH STD, SMLS PIPE
2	1	100X100	A 420 Gr WPL6	SCH STD, BW STRAIGHT TEE
3	1	100X15	A 350 Gr LF2	CL 3000, THREDOLET
4	2	100	A 420 Gr WPL6	SCH STD, BW LR 90 DEG ELBOW
5	5	100	A 350 Gr LF2	CL 150, SCH STD, RF, WN FLANGE
6	1	100	DCV #115-3	CL 150, FLOW CONTROL VALVE
7	5	100	ASME B16.20	CL 150, GARLOCK 5500, RING TYPE GASKET 1/8" THK
8	40	16	A 193 B7/A 194 2H	CL 150, 8 - 15.875 X 90 STUD BOLTS c/w TWO HEAVY HEX NUTS
9	2	100	BA-31	CL 150, RF, BALL VALVE
10	2	100		PIPE SUPPORT AS PER DETAIL 9, DWG: 65-116-270-200

No.	DATE	REVISION	PAR / APP.
2	2017/09/21	PROJECT TITLE REVISED	KHV
1	2017/09/11	LINE NUMBERS REVISED	KHV
0	2017/05/15	ISSUED FOR CONSTRUCTION	KHV

CLIENT: AGNICO EAGLE

NUOSANA PROMEC MINING

ultragen

CONSULTANT PROJECT NO. 591700

NO. DE CONDUITE		SPECIFICATION	PRODUIT	SYSTEME REVETEMENT	CODE DE COULEUR	ISOLATION ET TRACAGE	EPAISS. D'ISOLATION		
116-100-PDI-CC10-0023		CC10	PDI					65-116-270-200	PIPE SUPPORT DETAILS
PRESSION D'OPERATION	TEMPERATURE D'OPERATION	PRESSION DE CONCEPTION	TEMPERATURE DE CONCEPTION	PRESSION D'ESSAI	CLASSE D'INSPECTION	CODE DE SERVICE	TRAITEMENT THERMIQUE	65-116-205-200	P&ID
PSIG	°F	PSIG	°F	PSIG				No. DESSIN	DESSINS DE REFERENCE

SCEAU PROFESSIONNEL
REGISTERED PROFESSIONAL ENGINEER
D TRUONG
LICENSEE
NT/NU
2017/09/21

CONC.: KHV
DATE: 2017/04/25
DESSINE PAR: KVE
DATE: 2017/04/25
VER. PAR: -
DATE: -
APP.: -
DATE: -
ÉCHELLE: AUCUNE

PROJET: AGNICO EAGLE - MELIADINE DIVISION
116 - FUEL TANK FARM

TITRE: RANKIN INLET
FABRICATION ISOMETRIC
DIESEL FROM 65POD11601A TO BOTTOM LOADING ARM 65EQM11601

No PROJET	No DESSIN	PAGES	REV.
6515	116-100-PDI-CC10-0023	3/4	2

116-MN-01

APPROUVE LE: Sep 20, 2017, 2:43pm

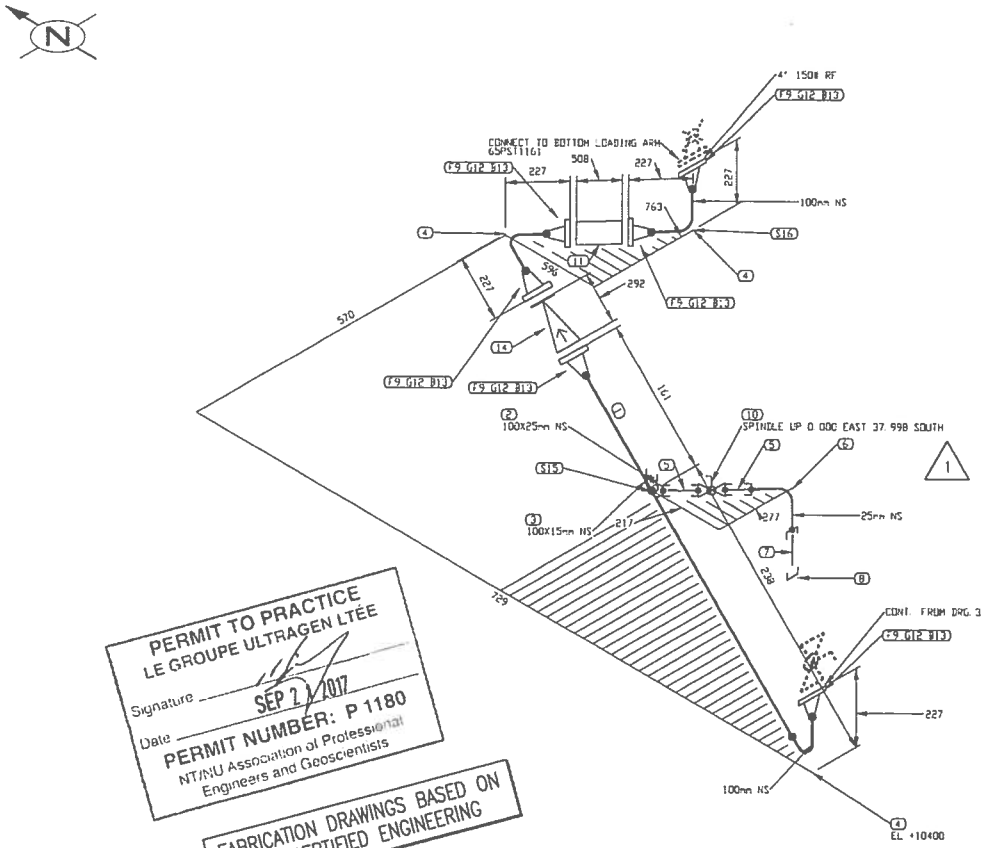

PERMIT TO PRACTICE
LE GROUPE ULTRAGEN LTÉE
Signature
Date SEP 21 2017
PERMIT NUMBER: P 1180
NT/NU Association of Professional Engineers and Geoscientists

FABRICATION DRAWINGS BASED ON WSP CERTIFIED ENGINEERING

LISTE DE MATERIEL

No	QTE	DIA	MATERIEL/CATALOGUE	DESCRIPTION
1	172 MM	100	A 333 Gr. 6	SCH STD, SMLS PIPE
2	1	100X25	A 350 Gr. LF2	CL 3000, SOCKOLET
3	1	100X15	A 350 Gr. LF2	CL 3000, SOCKOLET
4	3	100	A 420 Gr. WPL6	SCH STD, BW LR 90 DEG ELBOW
5	2	25	A 333 Gr. 6	SCH 80, NIPPLE x 75mm LG PBE
6	1	25	A 350 Gr. LF2	CL 3000, SW 90 DEG ELBOW
7	1	25	A 333 Gr. 6	SCH 80, NIPPLE x 75mm LG PDExTCE
8	1	25	A 350 Gr. LF2	CL 3000, THRD CAP
9	6	100	A 350 Gr. LF2	CL 150, SCH STD, RF, WN FLANGE
10	1	25	3A-29	CL 600, SW, BALL VALVE
11	1	100		CL 150, FLEXIBLE (FLEXONICS)
12	6	100	ASME B16.20	CL 150, GARLOCK 5500, RING TYPE GASKET 1/8" THK
13	48	16	A 193 B7/A 194 2H	CL 150, 8 - 15.875 X 90 STUD BOLTS c/w 2VD HEAVY HEX NUTS
14	1	100	CK-29	CL 150, RF, SWING CHECK VALVE
15	1	100		PIPE BRACKET C150x12x300 WELDED TO CONTAINER C/W U-BOLT
16	1	100		LOADING ARM BRACKET AS PER DETAIL 11, DWG 65-116-270-201

No.	DATE	REVISION	PAR / APP.
3	2017/09/21	PROJECT TITLE REVISED	KHV
2	2017/09/11	LINE NUMBERS REVISED	KHV
1	2017/06/30	DRAIN REVISED AS PER CLIENT COMMENTS	OVN
0	2017/05/15	ISSUED FOR CONSTRUCTION	KHV

CLIENT: AGNICO EAGLE

NUQSANA-PROMEC MINING

ultragen

CONSULTANT PROJECT NO. 591700

NO. DE CONDUITE		SPECIFICATION	PRODUIT	SYSTEME REVETEMENT	CODE DE COULEUR	ISOLATION ET TRACAGE	EPASS. D'ISOLATION		
116-100-PDI-CC10-0023		CC10	PDI					65-116-270-200	PIPE SUPPORT DETAILS
PRESSION D'OPERATION	TEMPERATURE D'OPERATION	PRESSION DE CONCEPTION	TEMPERATURE DE CONCEPTION	PRESSION D'ESSAI	CLASSE D'INSPECTION	CODE DE SERVICE	TRAITEMENT THERMIQUE	65-116-205-200	P&ID
PSIG	°F	PSIG	°F	PSIG				No. DESSIN	DESSINS DE REFERENCE

SCEAU PROFESSIONNEL
REGISTERED PROFESSIONAL ENGINEER
D. TRUONG
LICENSEE
NT/NU
2017/09/21

CONC.: KHV
DATE: 2017/04/25
DESSINE PAR: KVE
DATE: 2017/04/25
VER. PAR: -
DATE: -
APP.: -
DATE: -
ÉCHELLE: AUCUNE

PROJET: AGNICO EAGLE - MELIADINE DIVISION
116 - FUEL TANK FARM

TITRE: RANKIN INLET
FABRICATION ISOMETRIC
DIESEL FROM 65POD11601A TO BOTTOM LOADING ARM 65EQM11601

No PROJET	No DESSIN	PAGES	REV.
6515	116-100-PDI-CC10-0023	4/4	3

116-MN-01

FICHIER: #:\Agnico Eagle\Meliadine\591700 (Fuel Distribution)\05. Design\07. Tuyauterie\02 isometriques\01 Rankin Inlet\116-100-PDI-CC10-0023.1.DWG

IMPRIMÉ LE: Sep 13, 2017, 2:43pm

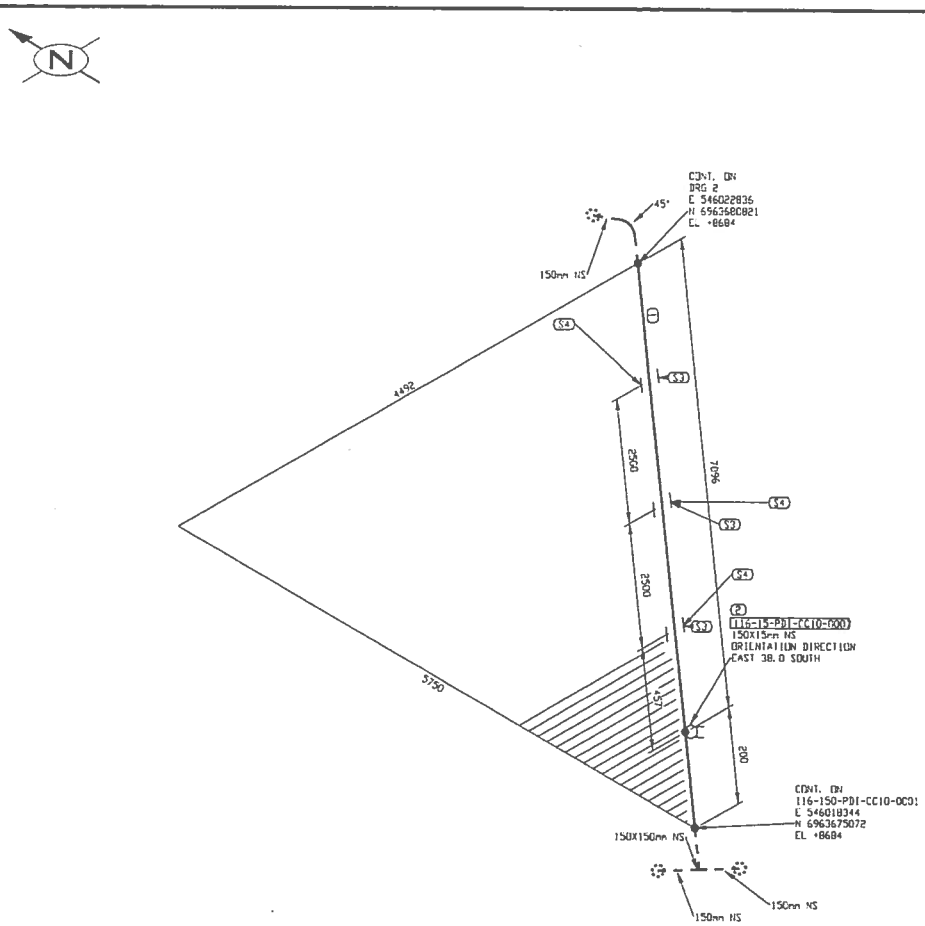

LISTE DE MATERIEL

No	QTE	DIA	MATERIEL/CATALOGUE	DESCRIPTION
1	7296 MM	150	A 333 Gr. 6	SCH STD, SMLS PIPE
2	1	150X15	A 350 Gr. LF2	CL 3000, THREDOLET
3	3	150		PIPE SUPPORT AS PER DETAIL 1, DWG 65-116-270-200
4	3	150		PIPE SHOE AS PER DETAIL 2, DWG 65-116-270-200

No.	DATE	REVISION	PAR / APP.
2	2017/09/21	PROJECT TITLE REVISED	KHV
1	2017/09/11	LINE NUMBERS REVISED	KHV
0	2017/05/15	ISSUED FOR CONSTRUCTION	KHV

PERMIT TO PRACTICE
LE GROUPE ULTRAGEN LTÉE
Signature
Date SEP 21 2017
PERMIT NUMBER: P 1180
NT/NU Association of Professional Engineers and Geoscientists

FABRICATION DRAWINGS BASED ON WSP CERTIFIED ENGINEERING

CLIENT:

AGNICO EAGLE

NUQSANA-PROMEC MINING

ultragen

CONSULTANT PROJECT NO. 591700

SCEAU PROFESSIONNEL
REGISTERED PROFESSIONAL ENGINEER
D. TRUONG
LICENSED
2017/09/21

CONC.: KHV
DATE: 2017/04/25
DESSINE PAR: KVE
DATE: 2017/04/25
VER. PAR: -
DATE: -
APP.: -
DATE: -
ÉCHELLE: AUCUNE

PROJET: AGNICO EAGLE - MELIADINE DIVISION
116 - FUEL TANK FARM

TITRE: RANKIN INLET
FABRICATION ISOMETRIC
MARINE LINE TO 65TNK11602

No PROJET	No DESSIN	PAGES	REV.
6515	116-150-PDI-CC10-0004	1/3	2

NO. DE CONDUITE		SPECIFICATION	PRODUIT	SYSTEME REVETEMENT	CODE DE COULEUR	ISOLATION ET TRACAGE	EPAISS. D'ISOLATION		
116-150-PDI-CC10-0004		CC10	PDI		-			65-116-270-200	PIPE SUPPORT DETAILS
PRESSION D'OPERATION	TEMPERATURE D'OPERATION	PRESSION DE CONCEPTION	TEMPERATURE DE CONCEPTION	PRESSION D'ESSAI	CLASSE D'INSPECTION	CODE DE SERVICE	TRAITEMENT THERMIQUE	65-116-205-200	P&ID
		PSIG	°F	PSIG				No. DESSIN	DESSINS DE REFERENCE

116-VN-01

ICACER W:\Agnico Eagle\Meliadine\AV1200 Plan Distribution\03 Drawings\02. Isometrics\01. Rankin Inlet\116-150-PDI-CC10-0004-1.DWG

SAFDWG LE Sep 20, 2017, 2:44pm

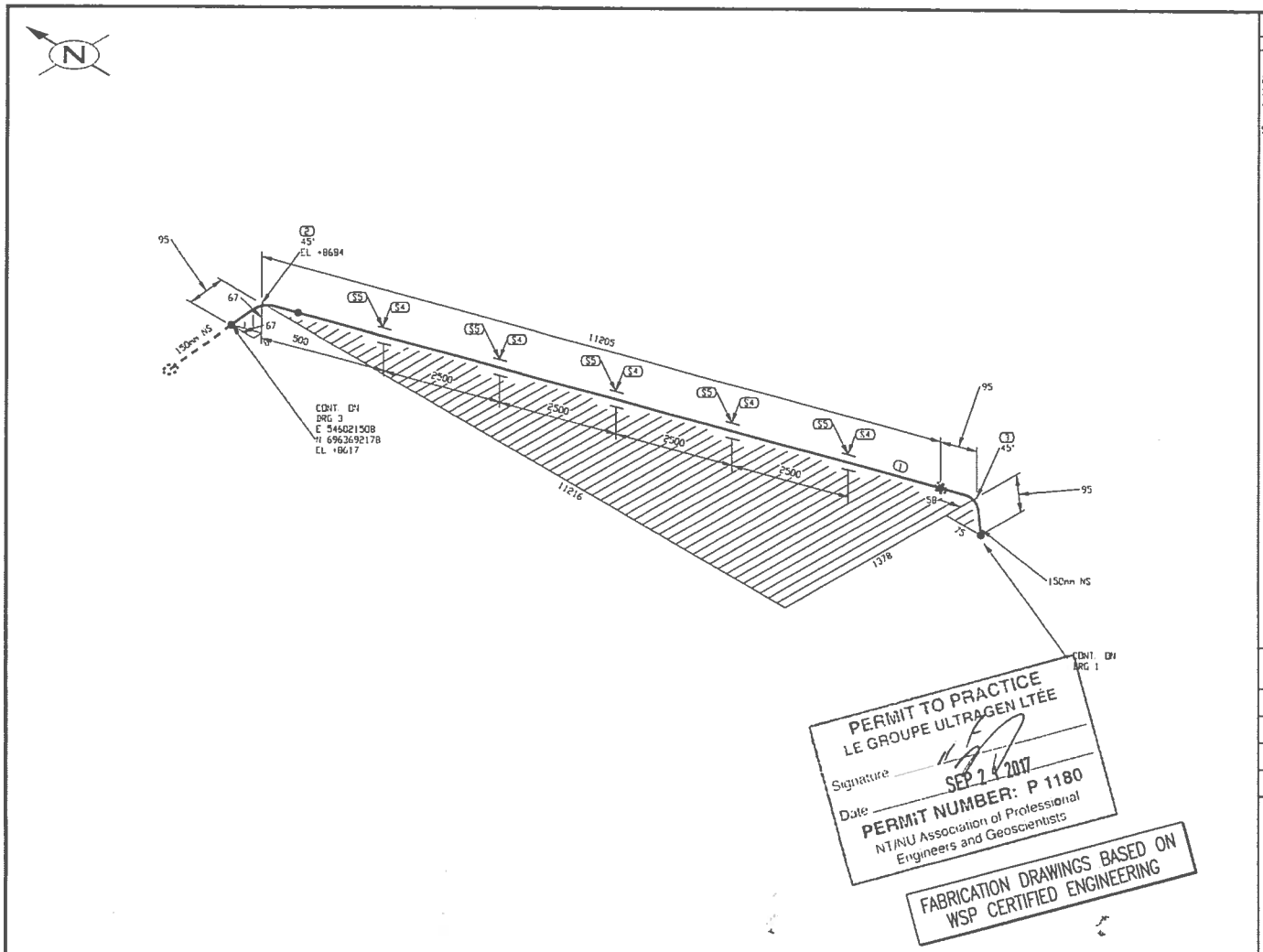

PERMIT TO PRACTICE
LE GROUPE ULTRAGEN LTÉE
Signature
Date SEP 2 4 2017
PERMIT NUMBER: P 1180
NT/NU Association of Professional Engineers and Geoscientists

FABRICATION DRAWINGS BASED ON WSP CERTIFIED ENGINEERING

LISTE DE MATERIEL

No	QTE	DIA	MATERIEL/CATALOGUE	DESCRIPTION
1	11110 MM	150	A 333 Gr. 6	SCH STD, SMLS PIPE
2	1	150	A 420 Gr. WPL6	SCH STD, BV LR 45 DEG ELBOW
3	1	150	A 420 Gr. WPL6	SCH STD, BV LR 90 DEG ELBOW TRIM TO 45.00
4	5	150		PIPE SUPPORT AS PER DETAIL 1, DWG: 65-116-270-200
5	5	150		PIPE SHOE AS PER DETAIL 2, DWG 65-116-270-200

No.	DATE	REVISION	PAR / APP.
2	2017/09/21	PROJECT TITLE REVISED	KHV
1	2017/09/11	LINE NUMBERS REVISED	KHV
0	2017/05/15	ISSUED FOR CONSTRUCTION	KHV

CLIENT: AGNICO EAGLE

NUQSANA PROMEC MINING

ultragen

CONSULTANT PROJECT NO. 591700

NO. DE CONDUITE		SPECIFICATION	PRODUIT	SYSTEME REVETEMENT	CODE DE COULEUR	ISOLATION ET TRACAGE	EPAISS. D'ISOLATION		
116-150-PDI-CC10-0004		CC10	PDI		-			65-116-270-200	PIPE SUPPORT DETAILS
PRESSION D'OPERATION	TEMPERATURE D'OPERATION	PRESSION DE CONCEPTION	TEMPERATURE DE CONCEPTION	PRESSION D'ESSAI	CLASSE D'INSPECTION	CODE DE SERVICE	TRAITEMENT THERMIQUE	65-116-205-200	P&ID
PSIG	°F	PSIG	°F	PSIG				No. DESSIN	DESSINS DE REFERENCE

SCEAU PROFESSIONNEL
REGISTERED PROFESSIONAL ENGINEER
D TRUONG
LICENSE
NT/NU
2017/09/21

CONC.: KHV
DATE: 2017/04/25
DESSINÉ PAR: KVE
DATE: 2017/04/25
VER. PAR: -
DATE: -
APP.: -
DATE: -
ÉCHELLE: AUCUNE

PROJET: AGNICO EAGLE - MELIADINE DIVISION
116 - FUEL TANK FARM

TITRE: RANKIN INLET
FABRICATION ISOMETRIC
MARINE LINE TO 65TNK11602

No PROJET	No DESSIN	PAGES	REV.
6515	116-150-PDI-CC10-0004	2/3	2

116-MN-01

FICHIER: N:\Agnico Eagle\Meliadine\591700 Fuel Tank Farm\05 Drafting\02 Isometrics\116-150-PDI-CC10-0004-2.DWG

IMPRIMÉ LE: Sep 20, 2017, 2:45pm

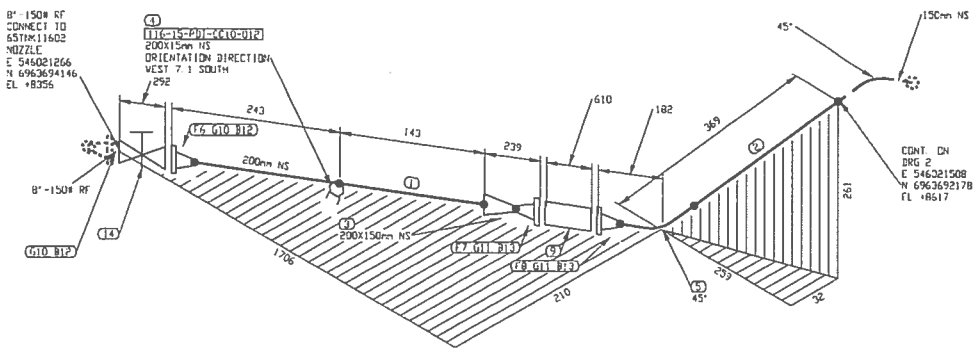

LISTE DE MATERIEL

No	QTE	DIA	MATERIEL/CATALOGUE	DESCRIPTION
1	286 MM	200	A 333 Gr. 6	SCH STD, SMLS PIPE
2	274 MM	150	A 333 Gr. 6	SCH STD, SMLS PIPE
3	1	200X150	A 420 Gr. WPL6	SCH STD, BW CONC RED
4	1	200X15	A 350 Gr. LF2	CL 3000, THREDOLET
5	1	150	A 420 Gr. WPL6	SCH STD, BW LR 45 DEG ELBOW
6	1	200	A 350 Gr. LF2	CL 150, SCH STD, RF, WN FLANGE
7	1	150	A 350 Gr. LF2	CL 150, SCH STD, RF, WN FLANGE
8	1	150	A 350 Gr. LF2	CL 150, SCH STD, RF, WN FLANGE
9	1	150		CL 150, SINGLE BRAIDED HOSE ASSEMBLY
10	2	200	ASME B16.20	CL 150, GARLOCK 5500, RING TYPE GASKET 1/8" THK
11	2	150	ASME B16.20	CL 150, GARLOCK 5500, RING TYPE GASKET 1/8" THK
12	16	19	A 193 B7/A 194 2H	CL 150, 8 - 19.05 X 110 STUD BOLTS c/w TWO HEAVY HEX NUTS
13	16	19	A 193 B7/A 194 2H	CL 150, 8 - 19.05 X 100 STUD BOLTS c/w TWO HEAVY HEX NUTS
14	1	200	GA-10	CL 150, RF, GATE VALVE

PERMIT TO PRACTICE
LE GROUPE ULTRAGEN LTEE
Signature
Date SEP 2 X 2017
PERMIT NUMBER: P 1180
NT/NU Association of Professional Engineers and Geoscientists

FABRICATION DRAWINGS BASED ON WSP CERTIFIED ENGINEERING

No.	DATE	REVISION	PAR / APP.
2	2017/09/21	PROJECT TITLE REVISED	KHV
1	2017/09/11	LINE NUMBERS REVISED	KHV
0	2017/05/15	ISSUED FOR CONSTRUCTION	KHV

CLIENT:

AGNICO EAGLE

NUOSANA-PROMEC MINING

ultragen

CONSULTANT PROJECT NO. 591700

NO. DE CONDUITE		SPECIFICATION	PRODUIT	SYSTEME REVETEMENT	CODE DE COULEUR	ISOLATION ET TRACAGE	EPAISS. D'ISOLATION		
116-150-PDI-CC10-0004		CC10	PDI		-			65-116-270-200	PIPE SUPPORT DETAILS
PRESSION D'OPERATION	TEMPERATURE D'OPERATION	PRESSION DE CONCEPTION	TEMPERATURE DE CONCEPTION	PRESSION D'ESSAI	CLASSE D'INSPECTION	CODE DE SERVICE	TRAITEMENT THERMIQUE	65-116-205-200	P&ID
PSIG	°F	PSIG	°F	PSIG				No. DESSIN	DESSINS DE REFERENCE

SCEAU PROFESSIONNEL
REGISTERED PROFESSIONAL ENGINEER
D TRUONG
LICENSEE
2017/09/21

CONC.: KHV
DATE: 2017/04/25
DESSINÉ PAR: KVE
DATE: 2017/04/25
VÉR. PAR: -
DATE: -
APP.: -
DATE: -
ÉCHELLE: AUCUNE

PROJET: AGNICO EAGLE - MELIADINE DIVISION
116 - FUEL TANK FARM

TITRE: RANKIN INLET
FABRICATION ISOMETRIC
MARINE LINE TO 65TNK11602

No PROJET	No DESSIN	PAGES	REV.
6515	116-150-PDI-CC10-0004	3/3	2

116-MN-01

MARINE LE. Sep 20, 2017, 2:45pm

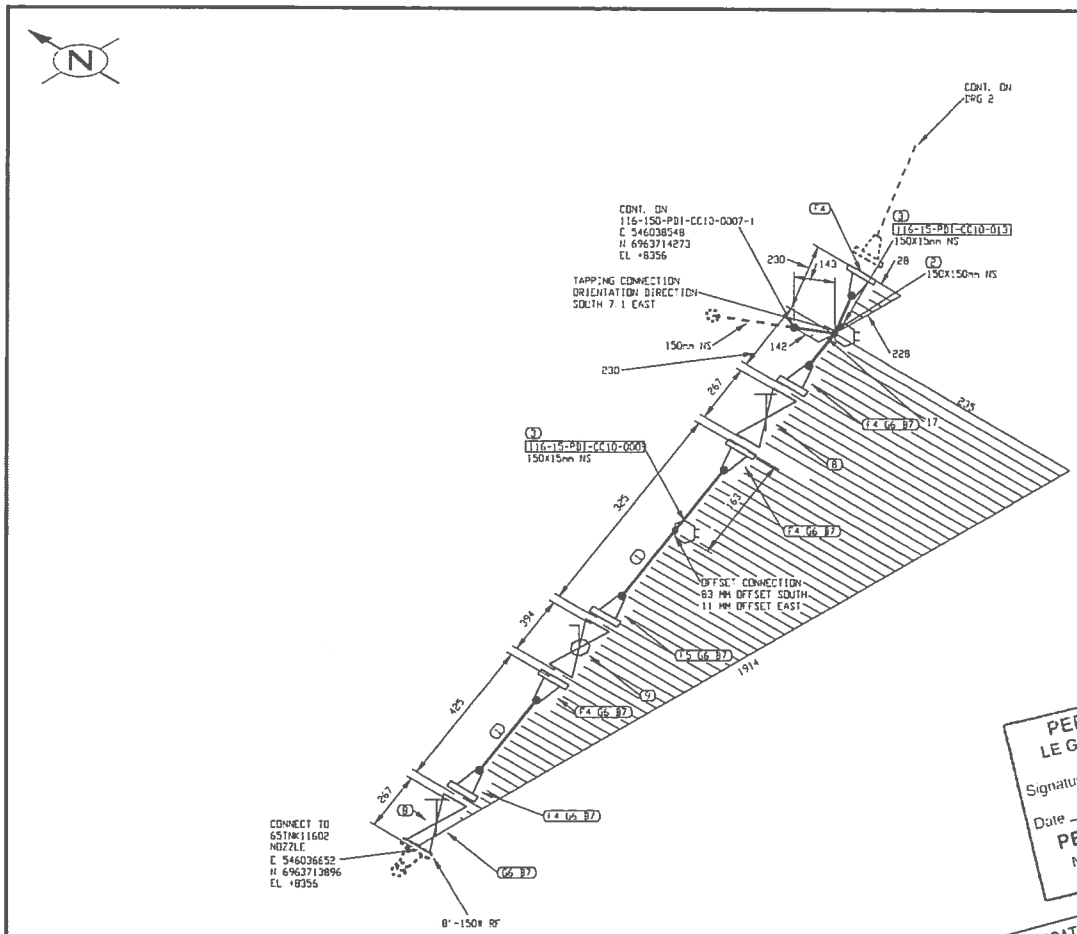

PERMIT TO PRACTICE
LE GROUPE ULTRAGEN LTÉE
Signature
Date SEP 21 2017
PERMIT NUMBER: P 1180
NT/NU Association of Professional Engineers and Geoscientists

FABRICATION DRAWINGS BASED ON WSP CERTIFIED ENGINEERING

LISTE DE MATERIEL

No	QTE	DIA	MATERIEL/CATALOGUE	DESCRIPTION
1	402 MM	150	A 333 Gr. 6	SCH STD, SMLS PIPE
2	1	150X150	A 420 Gr. WPL6	SCH STD, BW STRAIGHT TEE
3	2	150X15	A 350 Gr. LF2	CL 3000, THREDOLET
4	5	150	A 350 Gr. LF2	CL 150, SCH STD, RF, WN FLANGE
5	1	150	A 350 Gr. LF2	CL 150, SCH STD, RF, WN FLANGE
6	6	150	ASME B16.20	CL 150, GARLOCK 3500, RING TYPE GASKET 1/8" THK
7	48	19	A 193 B7/A 194 2H	CL 150, 8 - 19.05 X 100 STUD BOLTS c/w TWO HEAVY HEX NUTS
8	2	150	GA-10	CL 150, RF, GATE VALVE
9	1	150	BA-31	CL 150, RF, BALL VALVE

No.	DATE	REVISION	PAR / APP.
2	2017/09/21	PROJECT TITLE REVISED	KHV
1	2017/09/11	LINE NUMBERS REVISED	KHV
0	2017/05/15	ISSUED FOR CONSTRUCTION	KHV

CLIENT:

AGNICO EAGLE

NUQSANA PROMEC MINING

ultragen

CONSULTANT PROJECT NO. 591700

NO. DE CONDUITE		SPECIFICATION	PRODUIT	SYSTEME REVETEMENT	CODE DE COULEUR	ISOLATION ET TRACAGE	EPAISS. D'ISOLATION		
116-150-PDI-CC10-0006		CC10	PDI		–			65-116-270-200	PIPE SUPPORT DETAILS
PRESSION D'OPERATION	TEMPERATURE D'OPERATION	PRESSION DE CONCEPTION	TEMPERATURE DE CONCEPTION	PRESSION D'ESSAI	CLASSE D'INSPECTION	CODE DE SERVICE	TRAITEMENT THERMIQUE	65-116-205-200	P&ID
PSIG	°F	PSIG	°F	PSIG				No. DESSIN	DESSINS DE REFERENCE

SCEAU PROFESSIONNEL
REGISTERED PROFESSIONAL ENGINEER
D. TRUONG
LICENSEE
NT/NU
2017/09/21

CONC.: KHV
DATE: 2017/04/25
DESSINE PAR: KVE
DATE: 2017/04/25
VÉR. PAR: –
DATE: –
APP.: –
DATE: –
ÉCHELLE: AUCUNE

PROJET:
AGNICO EAGLE - MELIADINE DIVISION
116 - FUEL TANK FARM

TITRE:
RANKIN INLET
FABRICATION ISOMETRIC
DIESEL FROM 65TNK11601 & 65TNK11602 TO PUMPING STATION

No PROJET	No DESSIN	PAGES	REV.
6515	116-150-PDI-CC10-0006	1/12	2

116-MN-01

FICHIER: N:\Agnico Eagle\Meliadine\591700 Fuel Distribution\NDS Drawings\02. Layouts\02. Isometrics\01. Rankin Inlet\116-150-PDI-CC10-0006-1.DWG

IMPRIMÉ LE: Sep 20, 2017, 2:45pm

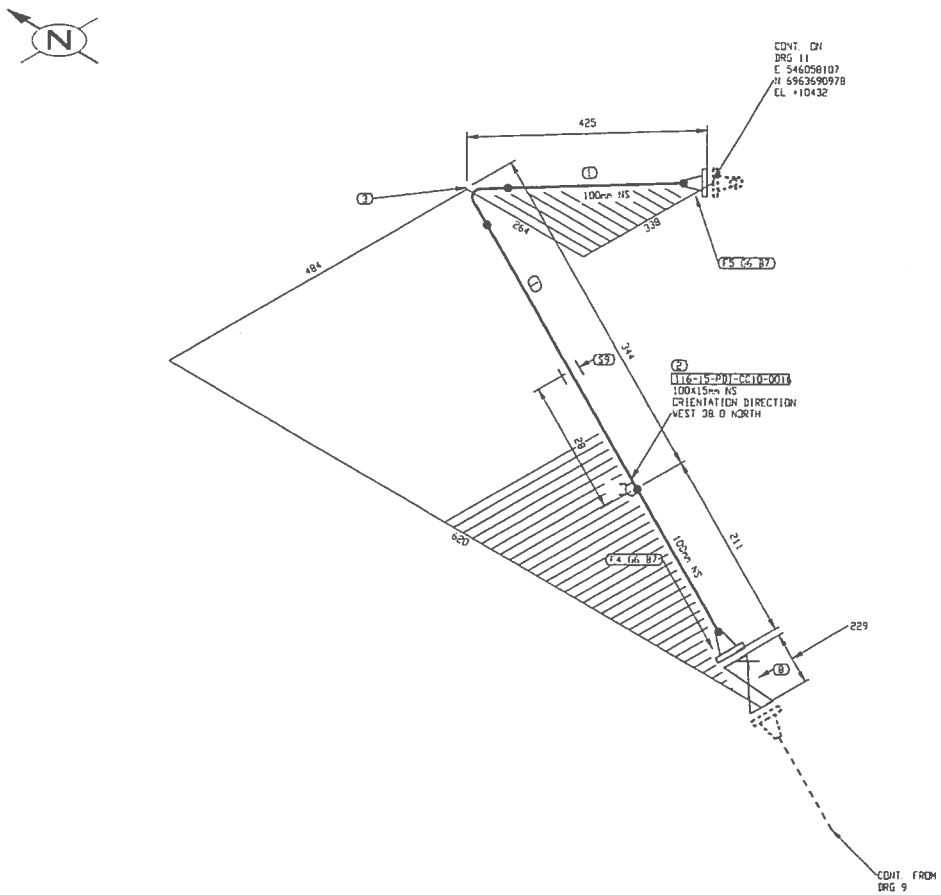

PERMIT TO PRACTICE
LE GROUPE ULTRAGEN LTÉE
Signature
Date SEP 2 2 2017
PERMIT NUMBER: P 1180
NT/NU Association of Professional Engineers and Geoscientists

FABRICATION DRAWINGS BASED ON WSP CERTIFIED ENGINEERING

LISTE DE MATERIEL

No	QTE	DN	MATERIEL/CATALOGUE	DESCRIPTION
1	527 MM	100	A 333 Gr. 6	SCH STD, SMLS PIPE
2	1	100X15	A 350 Gr. LF2	CL 3000, THREDOLET
3	1	100	A 420 Gr. WPL6	SCH STD, BW LR 90 DEG ELBOW
4	1	100	A 350 Gr. LF2	CL 150, SCH STD, RF, WN FLANGE
5	1	100	A 350 Gr. LF2	CL 150, SCH STD, RF, WN FLANGE
6	2	100	ASME B16.20	CL 150, GARLOCK 5500, RING TYPE GASKET 1/8" THK
7	16	16	A 193 B7/A 194 2H	CL 150, 8 - 15.875 X 90 STUD BOLTS c/w TWO HEAVY HEX NUTS
8	1	100	GA-10	CL 150, RF, GATE VALVE
9	1	100		PIPE BRACKET C150x12x300 WELDED TO CONTAINER C/W U-BOLT

No.	DATE	REVISION	PAR / APP
2	2017/09/21	PROJECT TITLE REVISED	KHV
1	2017/09/11	LINE NUMBERS REVISED	KHV
0	2017/05/15	ISSUED FOR CONSTRUCTION	KHV

CLIENT:

AGNICO EAGLE

NUQSANA PROJEC MINING

ultragen

CONSULTANT PROJECT NO. 591700

NO. DE CONDUITE		SPECIFICATION	PRODUIT	SYSTEME REVETEMENT	CODE DE COULEUR	ISOLATION ET TRACAGE	EPAISS. D'ISOLATION		
116-150-PDI-CC10-0006		CC10	PDI					65-116-270-200	PIPE SUPPORT DETAILS
PRESSION D'OPERATION	TEMPERATURE D'OPERATION	PRESSION DE CONCEPTION	TEMPERATURE DE CONCEPTION	PRESSION D'ESSAI	CLASSE D'INSPECTION	CODE DE SERVICE	TRAITEMENT THERMIQUE	65-116-205-200	P&ID
PSIG	°F	PSIG	°F	PSIG				No. DESSIN	DESSINS DE REFERENCE

SCEAU PROFESSIONNEL
REGISTERED PROFESSIONAL ENGINEER
D. TRUONG
LICENSEE
NT/NU
2017/09/21

CONC.: KHV
DATE: 2017/04/25
DESSINE PAR: KVE
DATE: 2017/04/25
VÉR. PAR: -
DATE: -
APP.: -
DATE: -
ÉCHELLE: AUCUNE

PROJET:
AGNICO EAGLE - MELIADINE DIVISION
116 - FUEL TANK FARM

TITRE:
RANKIN INLET
FABRICATION ISOMETRIC
DIESEL FROM 65TNK11601 & 65TNK11602 TO PUMPING STATION

No PROJET	No DESSIN	PAGES	REV.
6515	116-150-PDI-CC10-0006	10/12	2

116-KN-01

FICHIER W:\Agnico Eagle\Meliadine\591700 (Fuel Distribution)\05. Dessin\07. Isometrique\02. Isometriques\01. Rankin Inst\116-150-PDI-CC10-0006-10.DWG

IMPRIMÉ LE: Sep 22, 2017, 2:45pm

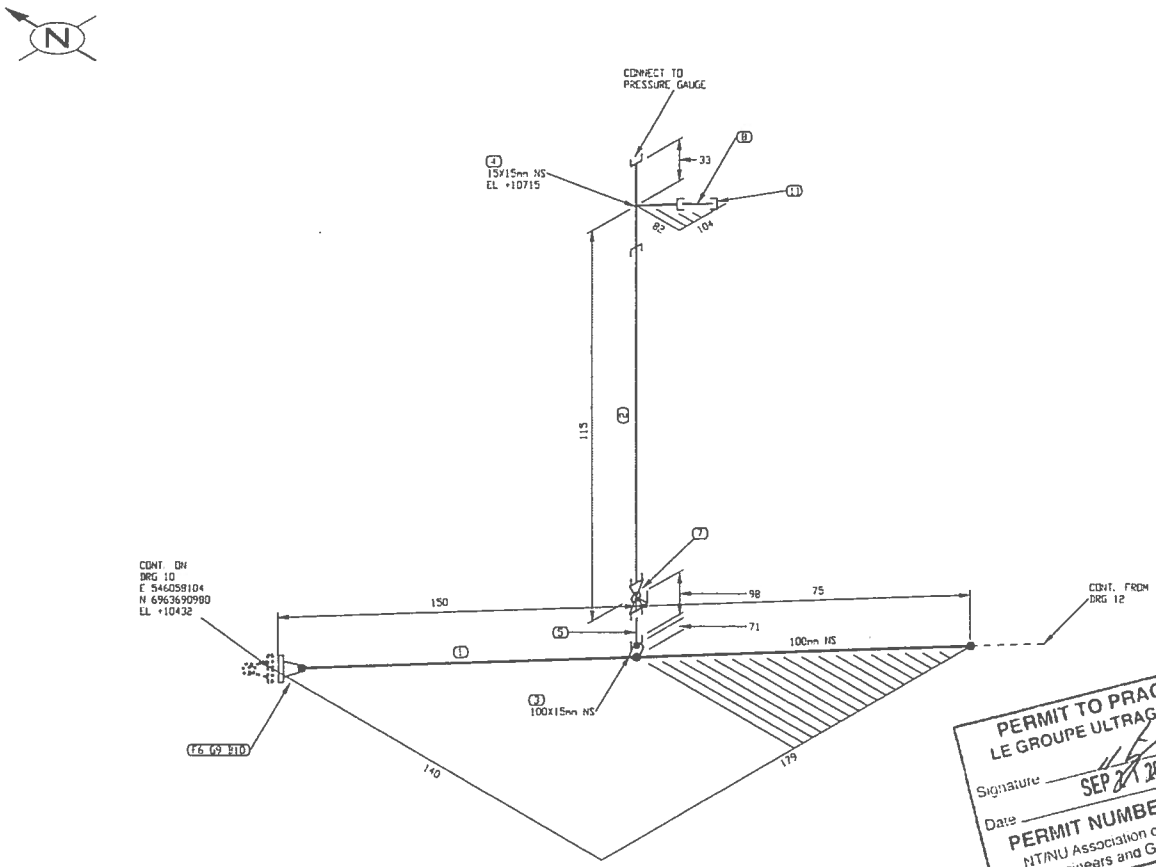

PERMIT TO PRACTICE
LE GROUPE ULTRAGEN LTÉE
Signature
Date SEP 21 2017
PERMIT NUMBER: P 1180
NT/NU Association of Professional Engineers and Geoscientists

FABRICATION DRAWINGS BASED ON WSP CERTIFIED ENGINEERING

LISTE DE MATERIEL

No	QTE	DA	MATERIEL/CATALOGUE	DESCRIPTION
1	150 MM	100	A 333 Gr. 6	SCH STD, SMLS PIPE
2	74 MM	15	A 333 Gr. 6	SCH 80, SMLS PIPE
3	1	100X15	A 350 Gr. LF2	CL 3000, SOCKOLET
4	1	15X15	A 350 Gr. LF2	CL 3000, THRD STRAIGHT TEE
5	1	15	A 333 Gr. 6	SCH 80, NIPPLE x 75mm LG POE*TOE
6	1	100	A 350 Gr. LF2	CL 150, SCH STD, RF, WN FLANGE
7	1	15	BA-32	CL 600, THRD, BALL VALVE
8	1	15	A 333 Gr. 6	SCH 80, NIPPLE x 75mm LG TBE
9	1	100	ASME B16.20	CL 150, GARLOCK 5500, RING TYPE GASKET 1/8' THK
10	8	16	A 193 B7/A 194 2H	CL 150, 8 - 15.875 X 90 STUD BOLTS c/w TWO HEAVY HEX NUTS
11	1	15	A 350 Gr. LF2	CL 3000, THRD CAP

No.	DATE	REVISION	PAR / APP.
2	2017/09/21	PROJECT TITLE REVISED	KHV
1	2017/09/11	LINE NUMBERS REVISED	KHV
0	2017/05/15	ISSUED FOR CONSTRUCTION	KHV

CLIENT:

AGNICO EAGLE

NUQSANA PROMEC MINING

ultragen.

CONSULTANT PROJECT NO. 591700

SCEAU PROFESSIONNEL
REGISTERED PROFESSIONAL ENGINEER
D. TRUONG
LICENSEE
2017/09/21

CONC.: KHV
DATE: 2017/04/25
DESSINÉ PAR: KVE
DATE: 2017/04/25
VÉR. PAR: -
DATE: -
APP.: -
DATE: -
ÉCHELLE: AUCUNE

PROJET: AGNICO EAGLE - MELIADINE DIVISION
116 - FUEL TANK FARM

TITRE: RANKIN INLET
FABRICATION ISOMETRIC
DIESEL FROM 65TNK11601 & 65TNK11602 TO PUMPING STATION

No PROJET	No DESSIN	PAGES	REV.
6515	116-150-PDI-CC10-0006	11/12	2

NO. DE CONDUITE		SPECIFICATION	PRODUIT	SYSTEME REVETEMENT	CODE DE COULEUR	ISOLATION ET TRACAGE	EPAISS. D'ISOLATION		
116-150-PDI-CC10-0006		CC10	PDI		-			65-116-270-200	PIPE SUPPORT DETAILS
PRESSION D'OPERATION	TEMPERATURE D'OPERATION	PRESSION DE CONCEPTION	TEMPERATURE DE CONCEPTION	PRESSION D'ESSAI	CLASSE D'INSPECTION	CODE DE SERVICE	TRAITEMENT THERMIQUE	65-116-205-200	P&ID
PSIG	°F	PSIG	°F	PSIG				No. DESSIN	DESSINS DE REFERENCE

116-MN-01

FICHIER: W:\Agnico Eagle\Work-Order\591700 (Fuel Distribution)\05. Dessins\02. Tuyauterie\02. Isometriques\01. Rankin Inlet\116-150-PDI-CC10-0006-11.DWG

IMPRIMÉ LE: Sep 20, 2017, 2:44pm

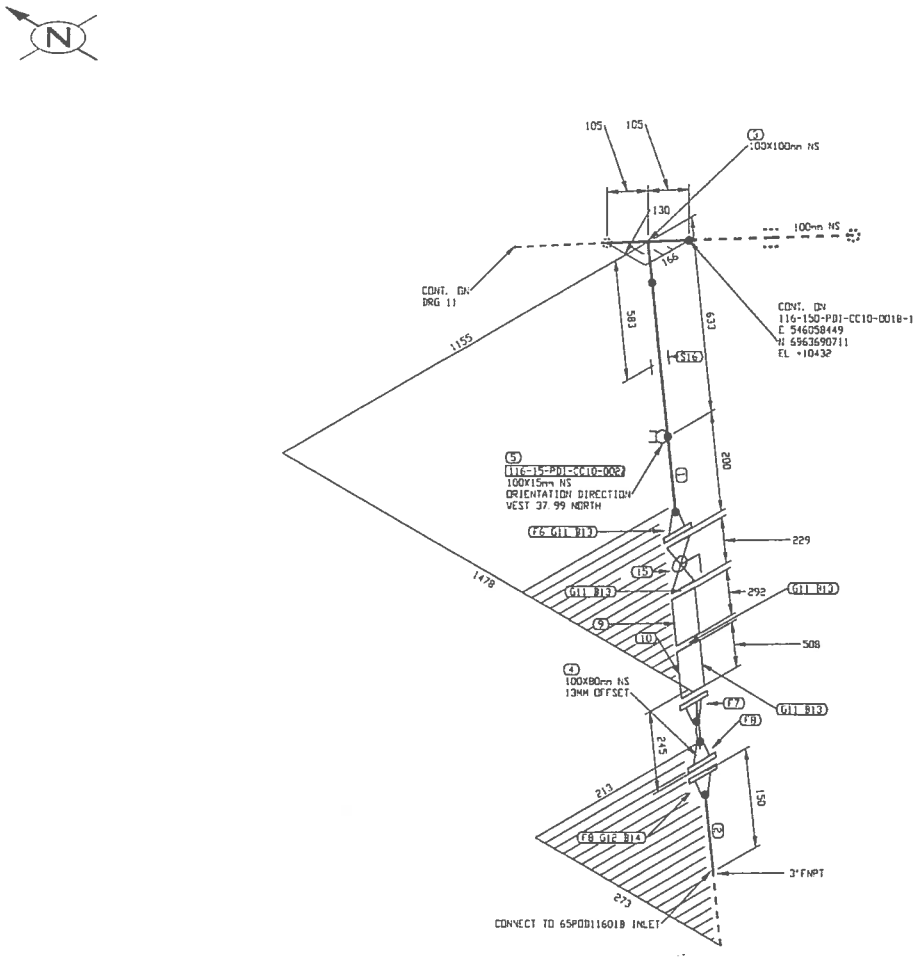

PERMIT TO PRACTICE
LE GROUPE ULTRAGEN LTÉE
Signature
Date SEP 21 2017
PERMIT NUMBER: P 1180
N.T./NU Association of Professional Engineers and Geoscientists

FABRICATION DRAWINGS BASED ON WSP CERTIFIED ENGINEERING

LISTE DE MATERIEL

No	QTE	DA	MATERIEL/CATALOGUE	DESCRIPTION
1	653 MM	100	A 333 Gr. 6	SCH STD, SMLS PIPE
2	81 MM	80	A 333 Gr. 6	SCH STD, SMLS PIPE POE×TOE
3	1	100X100	A 420 Gr. WPL6	SCH STD, BW STRAIGHT TEE
4	1	100X80	A 420 Gr. WPL6	SCH STD, BW ECC RED
5	1	100X15	A 350 Gr. LF2	CL 3000, THREDOLET
6	1	100	A 350 Gr. LF2	CL 150, SCH STD, RF, WN FLANGE
7	1	100	A 350 Gr. LF2	CL 150, SCH STD, RF, WN FLANGE
8	2	80	A 350 Gr. LF2	CL 150, SCH STD, RF, WN FLANGE
9	1	100		CL 150, BASKET STRAINER
10	1	100		CL 150, SINGLE BRAIDED HOSE ASSEMBLY
11	4	100	ASME B16.20	CL 150, GARLOCK 5500, RING TYPE GASKET 1/8" THK
12	1	80	ASME B16.20	CL 150, GARLOCK 5500, RING TYPE GASKET 1/8" THK
13	32	16	A 193 B7/A 194 2H	CL 150, 8 - 15.875 X 90 STUD BOLTS c/w TWO HEAVY HEX NUTS
14	4	16	A 193 B7/A 194 2H	CL 150, 4 - 15.875 X 90 STUD BOLTS c/w TWO HEAVY HEX NUTS
15	1	100	BA-31	CL 150, M, BALL VALVE
16	1	100		PIPE SUPPORT AS PER DETAIL 9, DWG 65-116-270-200

No.	DATE	REVISION	PAR / APP.
2	2017/09/21	PROJECT TITLE REVISED	KHV
1	2017/09/11	LINE NUMBERS REVISED	KHV
0	2017/05/15	ISSUED FOR CONSTRUCTION	KHV

CLIENT:

AGNICO EAGLE

NUQSANA-PROMEC MINING

ultragen

CONSULTANT PROJECT NO. 591700

NO. DE CONDUITE		SPECIFICATION	PRODUIT	SYSTEME REVETEMENT	CODE DE COULEUR	ISOLATION ET TRACAGE	EPAISS. D'ISOLATION		
116-150-PDI-CC10-0006		CC10	PDI		-			65-116-270-200	PIPE SUPPORT DETAILS
PRESSION D'OPERATION	TEMPERATURE D'OPERATION	PRESSION DE CONCEPTION	TEMPERATURE DE CONCEPTION	PRESSION D'ESSAI	CLASSE D'INSPECTION	CODE DE SERVICE	TRAITEMENT THERMIQUE	65-116-205-200	P&ID
PSIG	°F	PSIG	°F	PSIG				No. DESSIN	DESSINS DE REFERENCE

SCEAU PROFESSIONNEL
REGISTERED PROFESSIONAL ENGINEER
D TRUONG
LICENSEE
2017/09/21

CONC.: KHV
DATE: 2017/04/25
DESSINE PAR: KVE
DATE: 2017/04/25
VER. PAR: -
DATE: -
APP.: -
DATE: -
ÉCHELLE: AUCUNE

PROJET: AGNICO EAGLE - MELIADINE DIVISION
116 - FUEL TANK FARM

TITRE: RANKIN INLET
FABRICATION ISOMETRIC
DIESEL FROM 65TNK11601 & 65TNK11602 TO PUMPING STATION

No PROJET	No DESSIN	PAGES	REV.
6515	116-150-PDI-CC10-0006	12/12	2

116 A4 911

FORM: N:\Agnico Eagle\Meliadine\591700 (Fuel Decanter)\02. Dessins\01. Tuyauterie\02. Isométriques\01 Rankin Inc\116-150-PDI-CC10-0006-12.DWG

AMPRIAC LE. Sep 20, 2017, 2:41pm

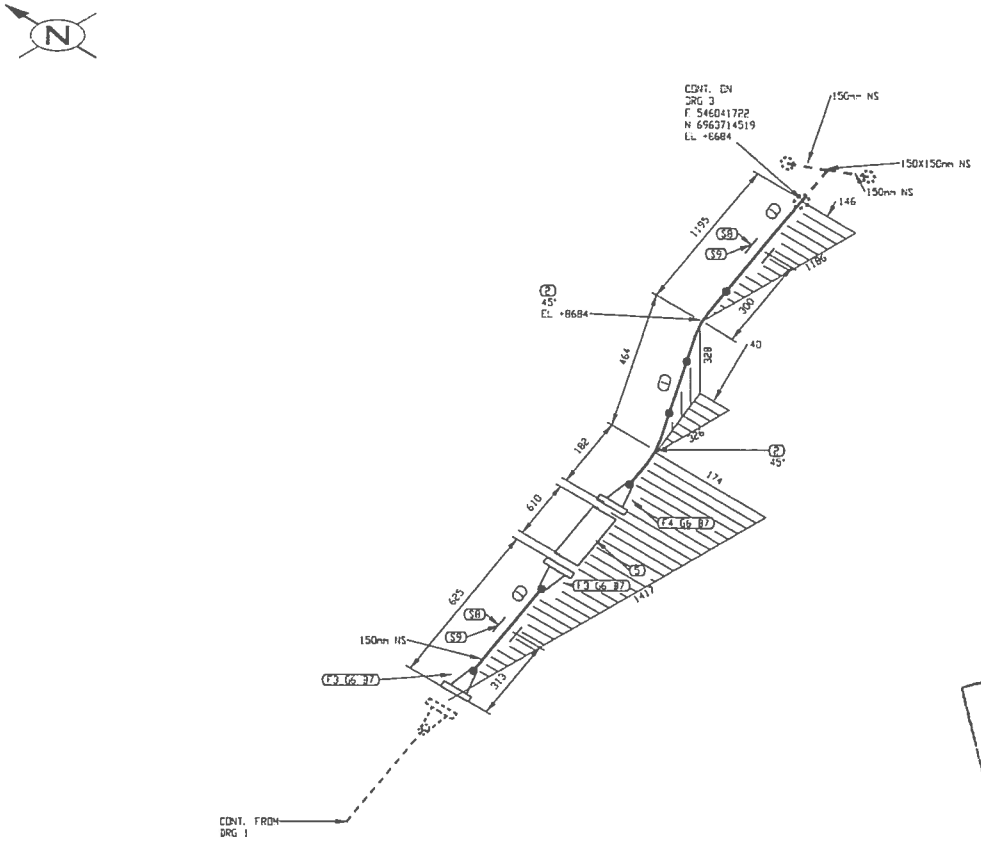

PERMIT TO PRACTICE
LE GROUPE ULTRAGEN LTÉE
Signature
Date SEP 21 2017
PERMIT NUMBER: P 1180
NT/NU Association of Professional Engineers and Geoscientists

FABRICATION DRAWINGS BASED ON WSP CERTIFIED ENGINEERING

LISTE DE MATERIEL

No	QTE	DIA	MATERIEL/CATALOGUE	DESCRIPTION
1	1825 MM	150	A 333 Gr. 6	SCH STD, SMLS PIPE
2	2	150	A 420 Gr. WPL6	SCH STD, BW LR 45 DEG ELBOW
3	2	150	A 350 Gr. LF2	CL 150, SCH STD, RF, WN FLANGE
4	1	150	A 350 Gr. LF2	CL 150, SCH STD, RF, WN FLANGE
5	1	150		CL 150, SINGLE BRAIDED HOSE ASSEMBLY
6	3	150	ASME B16.20	CL 150, GARLOCK 9500, RING TYPE GASKET 1/8" THK
7	24	19	A 193 B7/A 194 2H	CL 150, 8 - 19.05 X 100 STUD BOLTS c/w TWO HEAVY HEX NUTS
8	2	150		PIPE SUPPORT AS PER DETAIL 1, DWG: 65-116-270-200
9	2	150		PIPE SHOE AS PER DETAIL 2, DWG: 65-116-270-200

No.	DATE	REVISION	PAR / APP.
2	2017/09/21	PROJECT TITLE REVISED	KHV
1	2017/09/11	LINE NUMBERS REVISED	KHV
0	2017/05/15	ISSUED FOR CONSTRUCTION	KHV

CLIENT:

AGNICO EAGLE

NUOSANA PROMEC MINING

ultragen

CONSULTANT PROJECT NO. 591700

NO. DE CONDUITE		SPECIFICATION	PRODUIT	SYSTEME REVETEMENT	CODE DE COULEUR	ISOLATION ET TRACAGE	EPAISS. D'ISOLATION		
116-150-PDI-CC10-0006		CC10	PDI		-			65-116-270-200	PIPE SUPPORT DETAILS
PRESSION D'OPERATION	TEMPERATURE D'OPERATION	PRESSION DE CONCEPTION	TEMPERATURE DE CONCEPTION	PRESSION D'ESSAI	CLASSE D'INSPECTION	CODE DE SERVICE	TRAITEMENT THERMIQUE	65-116-205-200	P&ID
PSIG	°F	PSIG	°F	PSIG				No. DESSIN	DESSINS DE REFERENCE

SCEAU PROFESSIONNEL
REGISTERED PROFESSIONAL ENGINEER
D. TRUONG
LICENSEE

CONC.: KHV
DATE: 2017/04/25
DESSINE PAR: KVE
DATE: 2017/04/25
VER. PAR: -
DATE: -
APP.: -
DATE: -
ÉCHELLE: AUCUNE

PROJET:
AGNICO EAGLE - MELIADINE DIVISION
116 - FUEL TANK FARM

TITRE:
RANKIN INLET
FABRICATION ISOMETRIC
DIESEL FROM 65TNK11601 & 65TNK11602 TO PUMPING STATION

No PROJET	No DESSIN	PAGES	REV.
6515	116-150-PDI-CC10-0006	2/12	2

116-MN-01

ICHER N:\Agnico Eagle\Meliadine\591700 (Fuel Distribution)\05. Fronts\02. Topsides\07. Isometrics\01. Rankin Inlet\116-150-PDI-CC10-0006-2.DWG

IMPRIMÉ LE: Sep 20, 2017, 2:45pm

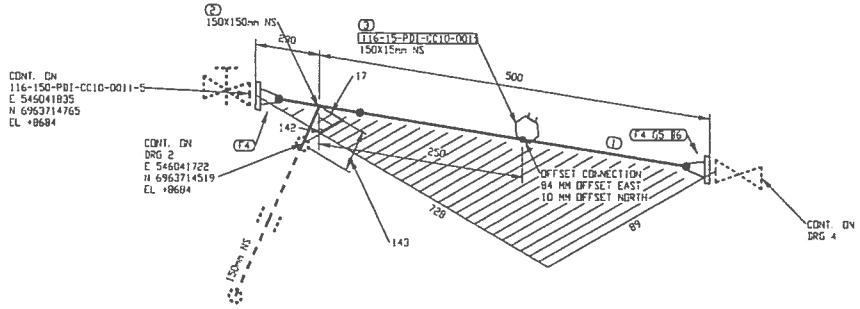

LISTE DE MATERIEL

No	QTE	DIA	MATERIEL/CATALOGUE	DESCRIPTION
1	270 MM	150	A 333 Gr. 6	SCH STD, SMLS PIPE
2	1	150X150	A 420 Gr. WPL6	SCH STD, BW STRAIGHT TEE
3	1	150X15	A 350 Gr. LF2	CL 3000, THREDOLET
4	2	150	A 350 Gr. LF2	CL 150, SCH STD, RF, WN FLANGE
5	1	150	ASME B16.20	CI 150, GARLOCK 5500, RING TYPE GASKET 1/8" THK
6	8	19	A 193 B7/A 194 2H	CL 150, 8 - 19.05 X 100 STUD BOLTS c/w TWO HEAVY HEX NUTS

No.	DATE	REVISION	PAR / APP
2	2017/09/21	PROJECT TITLE REVISED	KHV
1	2017/09/11	LINE NUMBERS REVISED	KHV
0	2017/05/15	ISSUED FOR CONSTRUCTION	KHV

PERMIT TO PRACTICE
LE GROUPE ULTRAGEN LTÉE
Signature
Date SEP 21 2017
PERMIT NUMBER: P 1180
NT/NU Association of Professional Engineers and Geoscientists

FABRICATION DRAWINGS BASED ON WSP CERTIFIED ENGINEERING

CLIENT:

AGNICO EAGLE

NUQSANA-PROMEC MINING

ultragen

CONSULTANT PROJECT NO. 591700

NO. DE CONDUITE		SPECIFICATION	PRODUIT	SYSTEME REVETEMENT	CODE DE COULEUR	ISOLATION ET TRACAGE	EPAISS. D'ISOLATION		
116-150-PDI-CC10-0006		CC10	PDI		-			65-116-270-200	PIPE SUPPORT DETAILS
PRESSION D'OPERATION	TEMPERATURE D'OPERATION	PRESSION DE CONCEPTION	TEMPERATURE DE CONCEPTION	PRESSION D'ESSAI	CLASSE D'INSPECTION	CODE DE SERVICE	TRAITEMENT THERMIQUE	65-116-205-200	P&ID
PSIG	°F	PSIG	°F	PSIG				No. DESSIN	DESSINS DE REFERENCE

SCEAU PROFESSIONNEL
REGISTERED PROFESSIONAL ENGINEER
D. TRUONG
LICENSEE
NT/NU
2017/09/21

CONC.: KHV	
DATE: 2017/04/25	
DESSINÉ PAR: KVE	
DATE: 2017/04/25	
VÉR. PAR: -	
DATE: -	
APP.: -	
DATE: -	
ÉCHELLE: AUCUNE	

PROJET: AGNICO EAGLE - MELIADINE DIVISION
116 - FUEL TANK FARM

TITRE: RANKIN INLET
FABRICATION ISOMETRIC
DIESEL FROM 65TNK11601 & 65TNK11602 TO PUMPING STATION

No PROJET	No DESSIN	PAGES	REV.
6515	116-150-PDI-CC10-0006	3/12	2

116-MN-01

APPROF LE: Sep 20, 2017, 2:45pm

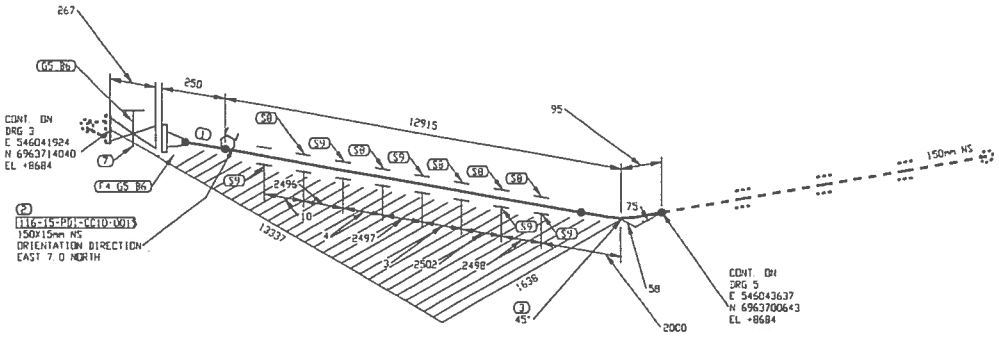

LISTE DE MATERIEL

No	QTE	DN	MATERIEL/CATALOGUE	DESCRIPTION
1	12983 MM	150	A 333 Gr 6	SCH STD, SMLS PIPE
2	1	150X15	A 350 Gr LF2	CL 3000, THREDOLET
3	1	150	A 420 Gr WPL6	SCH STD, BW LR 45 DEG ELBOW
4	1	150	A 350 Gr LF2	CL 150, SCH STD, RF, WN FLANGE
5	2	150	ASME B16.20	CL 150, GARLOCK 5500, RING TYPE GASKET 1/8" THK
6	16	19	A 193 B7/A 194 2H	CL 150, 8 - 19.05 x 100 STUD BOLTS c/w TWO HEAVY HEX NUTS
7	1	150	GA-10	CL 150, RF, GATE VALVE
8	5	150		PIPE SUPPORT AS PER DETAIL 1, DWG 65-116-270-200
9	5	150		PIPE SHOE AS PER DETAIL 2, DWG 65-116-270-200

PERMIT TO PRACTICE
LE GROUPE ULTRAGEN LTÉE
Signature
Date SEP 21 2017
PERMIT NUMBER: P 1180
NT/NU Association of Professional Engineers and Geoscientists

FABRICATION DRAWINGS BASED ON WSP CERTIFIED ENGINEERING

No.	DATE	REVISION	PAR / APP.
2	2017/09/21	PROJECT TITLE REVISED	KHV
1	2017/09/11	LINE NUMBERS REVISED	KHV
0	2017/05/15	ISSUED FOR CONSTRUCTION	KHV

CLIENT:

AGNICO EAGLE

NUQSANA PROMEC MINING

ultragen

CONSULTANT PROJECT NO. 591700

NO. DE CONDUITE		SPECIFICATION	PRODUIT	SYSTEME REVETEMENT	CODE DE COULEUR	ISOLATION ET TRACAGE	EPAISS. D'ISOLATION		
116-150-PDI-CC10-0006		CC10	PDI		–			65-116-270-200	PIPE SUPPORT DETAILS
PRESSION D'OPERATION	TEMPERATURE D'OPERATION	PRESSION DE CONCEPTION	TEMPERATURE DE CONCEPTION	PRESSION D'ESSAI	CLASSE D'INSPECTION	CODE DE SERVICE	TRAITEMENT THERMIQUE	65-116-205-200	P&ID
PSIG	°F	PSIG	°F	PSIG				No. DESSIN	DESSINS DE REFERENCE

SCEAU PROFESSIONNEL
REGISTERED PROFESSIONAL ENGINEER
D. TRUONG
LICENSED
NT/NU
2017-09-21

CONC.: KHV
DATE: 2017/04/25
DESSINE PAR: KVE
DATE: 2017/04/25
VER. PAR: –
DATE: –
APP.: –
DATE: –
ÉCHELLE: AUCUNE

PROJET:
AGNICO EAGLE - MELIADINE DIVISION
116 - FUEL TANK FARM

TITRE:
RANKIN INLET
FABRICATION ISOMETRIC
DIESEL FROM 65TNK11601 & 65TNK11602 TO PUMPING STATION

No PROJET	No DESSIN	PAGES	REV.
6515	116-150-PDI-CC10-0006	4/12	2

116-MN-01

FICHIER: N:\Agnico Eagle\Meliadine\591700 (Fuel Distribution)\05. Dessins\02. Isometriques\116-150-PDI-CC10-0006-4.DWG

IMPRIME LE: Sep 20, 2017, 2:41pm

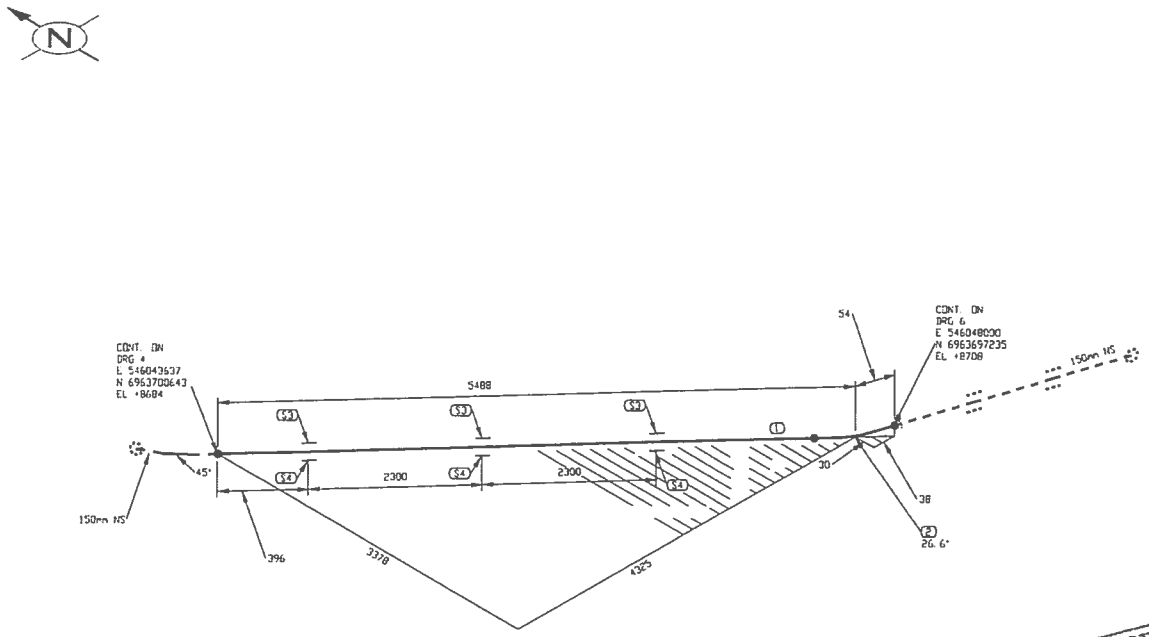

PERMIT TO PRACTICE
LE GROUPE ULTRAGEN LTÉE
Signature
Date SEP 21 2017
PERMIT NUMBER: P 1180
NT/NU Association of Professional Engineers and Geoscientists

FABRICATION DRAWINGS BASED ON WSP CERTIFIED ENGINEERING

LISTE DE MATERIEL

No	QTE	DIA	MATERIEL/CATALOGUE	DESCRIPTION
1	5434 MM	150	A 333 Gr. 6	SCH STD, SMLS PIPE
2	1	150	A 420 Gr. WPL6	SCH STD, BV LR 90 DEG ELBOW TRIM TO 26 57
3	3	150		PIPE SUPPORT AS PER DETAIL 1, DWG: 65-116-270-200
4	3	150		PIPE SHOE AS PER DETAIL 2, DWG: 65-116-270-200

No.	DATE	REVISION	PAR / APP
2	2017/09/21	PROJECT TITLE REVISED	KHV
1	2017/09/11	LINE NUMBERS REVISED	KHV
0	2017/05/15	ISSUED FOR CONSTRUCTION	KHV

CLIENT:

AGNICO EAGLE

NUQSANA PROMEC MINING

ultragen

CONSULTANT PROJECT NO. 591700

NO. DE CONDUITE		SPECIFICATION	PRODUIT	SYSTEME REVETEMENT	CODE DE COULEUR	ISOLATION ET TRACAGE	EPAISS. D'ISOLATION		
116-150-PDI-CC10-0006		CC10	PDI		-			65-116-270-200	PIPE SUPPORT DETAILS
PRESSION D'OPERATION	TEMPERATURE D'OPERATION	PRESSION DE CONCEPTION	TEMPERATURE DE CONCEPTION	PRESSION D'ESSAI	CLASSE D'INSPECTION	CODE DE SERVICE	TRAITEMENT THERMIQUE	65-116-205-200	P&ID
PSIG	°F	PSIG	°F	PSIG				No. DESSIN	DESSINS DE REFERENCE

SCEAU PROFESSIONNEL
REGISTERED PROFESSIONAL ENGINEER
D. TRUONG
LICENSEE
NT/NU
2017/09/21

CONC.: KHV
DATE: 2017/04/25
DESSINÉ PAR: KVE
DATE: 2017/04/25
VER. PAR: -
DATE: -
APP.: -
DATE: -
ECHELLE: AUCUNE

PROJET:
AGNICO EAGLE - MELIADINE DIVISION
116 - FUEL TANK FARM

TITRE:
RANKIN INLET
FABRICATION ISOMETRIC
DIESEL FROM 65TNK11601 & 65TNK11602 TO PUMPING STATION

No PROJET	No DESSIN	PAGES	REV.
6515	116-150-PDI-CC10-0006	5/12	2

116-PM-01

FICHIER: W:\Agnico Eagle\Meadow\591700 (Fuel Distribution)\05. Design\01. Isometrics\01 Rankin Inlet\116-150-PDI-CC10-0006-5.DWG

IMPRIMÉ LE: Sep 20, 2017, 2:45pm

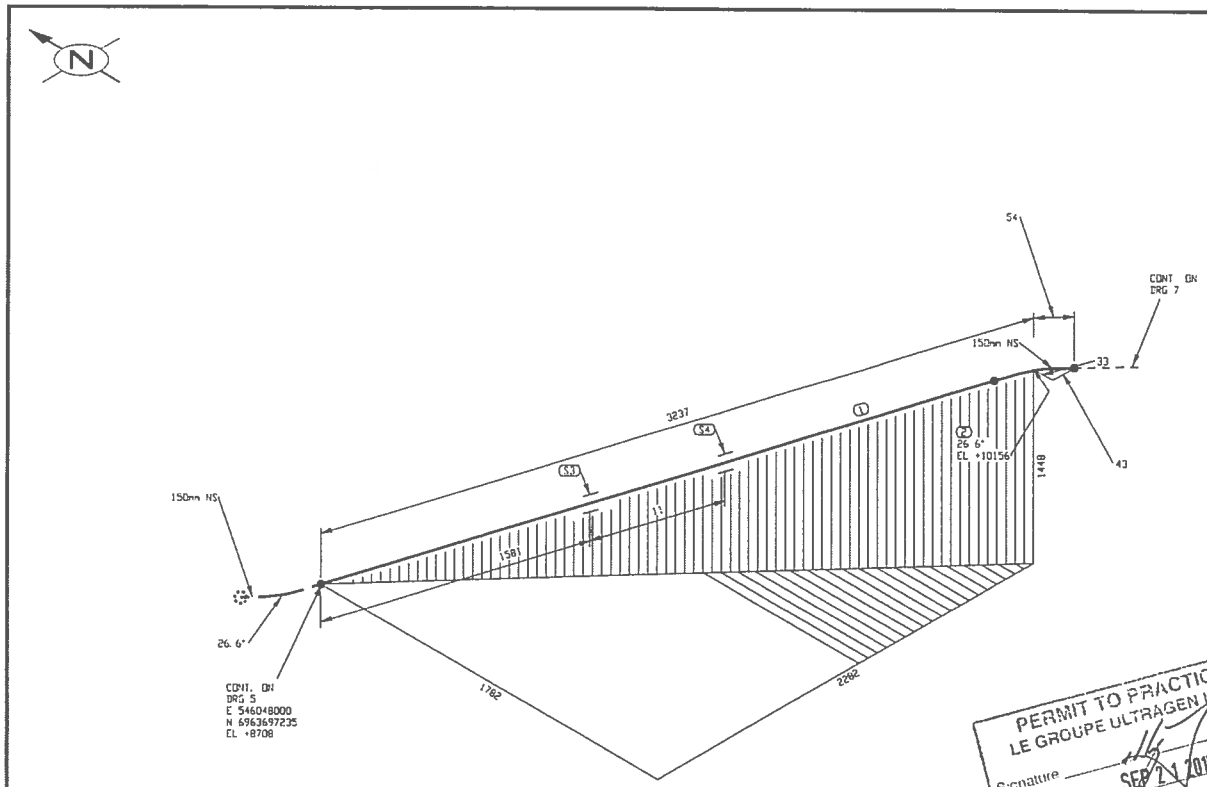

PERMIT TO PRACTICE
LE GROUPE ULTRAGEN LTÉE
Signature
Date SEP 21 2017
PERMIT NUMBER: P 1180
NT/NU Association of Professional Engineers and Geoscientists

FABRICATION DRAWINGS BASED ON WSP CERTIFIED ENGINEERING

LISTE DE MATERIEL

No	QTE	DIA	MATERIEL/CATALOGUE	DESCRIPTION
1	3183 MM	150	A 333 Gr. 6	SCH STD, SMLS PIPE
2	1	150	A 420 Gr WPL6	SCH STD, BW LR 90 DEG ELBOW TRIM TO 26 57
3	1	150		PIPE SUPPORT AS PER DETAIL 1, DWG: 65-116-270-200
4	1	150		PIPE SHOE AS PER DETAIL 2, DWG: 65-116-270-200

No.	DATE	REVISION	PAR. / APP.
2	2017/09/21	PROJECT TITLE REVISED	KHV
1	2017/09/11	LINE NUMBERS REVISED	KHV
0	2017/05/15	ISSUED FOR CONSTRUCTION	KHV

CLIENT:

AGNICO EAGLE

NUQSANA PROMEC MINING

ultragen

CONSULTANT PROJECT NO. 591700

NO. DE CONDUITE		SPECIFICATION	PRODUIT	SYSTEME REVETEMENT	CODE DE COULEUR	ISOLATION ET TRACAGE	EPAISS. D'ISOLATION		
116-150-PDI-CC10-0006		CC10	PDI		-			65-116-270-200	PIPE SUPPORT DETAILS
PRESSION D'OPERATION	TEMPERATURE D'OPERATION	PRESSION DE CONCEPTION	TEMPERATURE DE CONCEPTION	PRESSION D'ESSAI	CLASSE D'INSPECTION	CODE DE SERVICE	TRAITEMENT THERMIQUE	65-116-205-200	P&ID
PSIG	°F	PSIG	°F	PSIG				No. DESSIN	DESSINS DE REFERENCE

SCEAU PROFESSIONNEL
REGISTERED PROFESSIONAL ENGINEER
D TRUONG
LICENSEE
2017/09/21

CONC.: KHV
DATE: 2017/04/25
DESSINÉ PAR: KVE
DATE: 2017/04/25
VER. PAR: -
DATE: -
APP.: -
DATE: -
ÉCHELLE: AUCUNE

PROJET: AGNICO EAGLE - MELIADINE DIVISION
116 - FUEL TANK FARM

TITRE: RANKIN INLET
FABRICATION ISOMETRIC
DIESEL FROM 65TNK11601 & 65TNK11602 TO PUMPING STATION

No PROJET	No DESSIN	PAGES	REV.
6515	116-150-PDI-CC10-0006	6/12	2

116-MN-01

FICHIER W:\Agnico Eagle\Meliadine\591700 (Fuel Distribution)\06. Dessins\01. Tuyauterie\02. Isometriques\01. Rankin Inlet\116-150-PDI-CC10-0006-6.DWG

IMPRIMÉ LE: Sep 20, 2017, 2:43pm

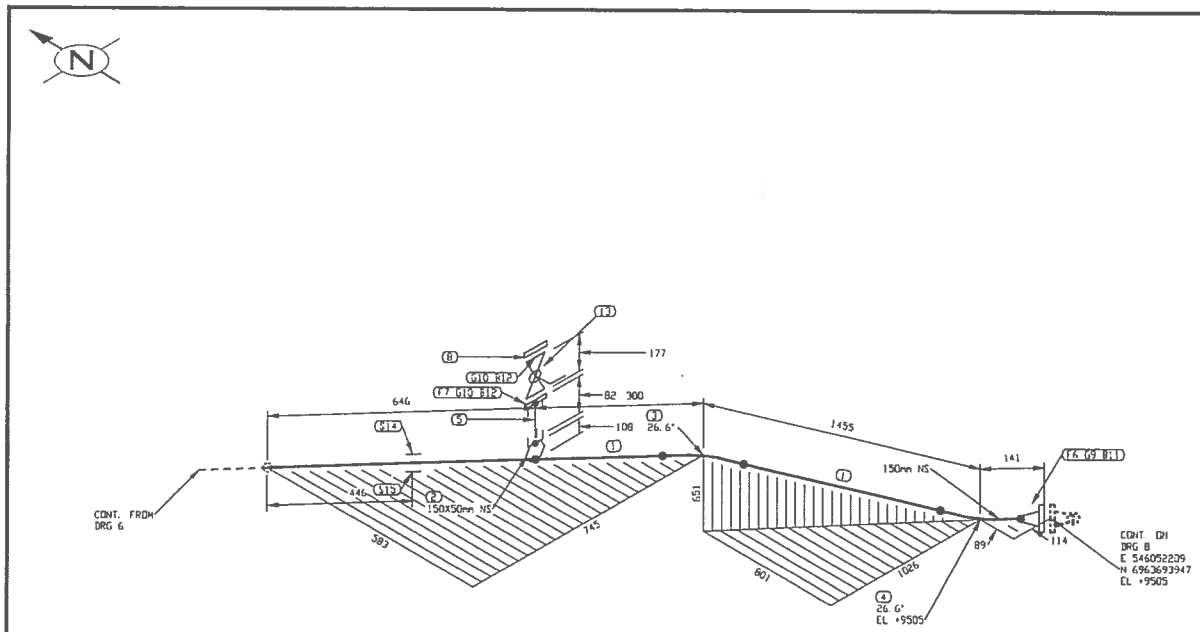

PERMIT TO PRACTICE
LE GROUPE ULTRAGEN LTÉE
Signature
Date SEP 21 2017
PERMIT NUMBER: P 1180
NT/NU Association of Professional Engineers and Geoscientists

FABRICATION DRAWINGS BASED ON WSP CERTIFIED ENGINEERING

LISTE DE MATERIEL

No	QTE	DIA	MATERIEL/CATALOGUE	DESCRIPTION
1	2239 MM	150	A 333 Gr 6	SCH STD, SMLS PIPE
2	1	150x50	A 350 Gr LF2	CL 3000, SOCKOLET
3	1	150	A 420 Gr WPL6	SCH STD, BW LR 45 DEG ELBOW TRIM TO 26.57
4	1	150	A 420 Gr WPL6	SCH STD, BW LR 90 DEG ELBOW TRIM TO 26.57
5	1	50	A 333 Gr 6	SCH 80, NIPPLE x 75mm LG PBE
6	1	150	A 350 Gr LF2	CL 150, SCH STD, RF, WN FLANGE
7	1	50	A 350 Gr LF2	CL 150, SCH 80, RF, SW FLANGE
8	1	50	A 350 Gr LF2	CL 150, RF, BLIND FLANGE
9	1	150	ASME B16.20	CL 150, GARLOCK 5500, RING TYPE GASKET 1/8" THK
10	2	50	ASME B16.20	CL 150, GARLOCK 5500, RING TYPE GASKET 1/8" THK
11	8	19	A 193 B7/A 194 2H	CL 150, 8 - 19.05 X 100 STUD BOLTS c/w TWO HEAVY HEX NUTS
12	8	16	A 193 B7/A 194 2H	CL 150, 4 - 15.875 X 85 STUD BOLTS c/w TWO HEAVY HEX NUTS
13	1	50	BA-30	CL 150, RF, BALL VALVE
14	1	150		PIPE SUPPORT AS PER DETAIL 1, DWG: 65-116-270-200
15	1	150		PIPE SHOE AS PER DETAIL 2, DWG: 65-116-270-200

No.	DATE	REVISION	PAR / APP
2	2017/09/21	PROJECT TITLE REVISED	KHV
1	2017/09/11	LINE NUMBERS REVISED	KHV
0	2017/05/15	ISSUED FOR CONSTRUCTION	KHV

CLIENT: AGNICO EAGLE

NUQSANA PROJEC MINING

ultragen

CONSULTANT PROJECT NO 591700

NO. DE CONDUITE		SPECIFICATION	PRODUIT	SYSTEME REVETEMENT	CODE DE COULEUR	ISOLATION ET TRACAGE	EPAISS. D'ISOLATION		
116-150-PDI-CC10-0006		CC10	PDI		–			65-116-270-200	PIPE SUPPORT DETAILS
PRESSION D'OPERATION	TEMPERATURE D'OPERATION	PRESSION DE CONCEPTION	TEMPERATURE DE CONCEPTION	PRESSION D'ESSAI	CLASSE D'INSPECTION	CODE DE SERVICE	TRAITEMENT THERMIQUE	65-116-205-200	P&ID
PSIG	°F	PSIG	°F	PSIG				No. DESSIN	DESSINS DE REFERENCE

SCEAU PROFESSIONNEL
REGISTERED PROFESSIONAL ENGINEER
D TRUONG
LICENSEE
NT/NU
2017/09/21

CONC.: KHV
DATE: 2017/04/23
DESSINE PAR: KVE
DATE: 2017/04/23
VER. PAR: –
DATE: –
APP.: –
DATE: –
ÉCHELLE: AUCUNE

PROJET: AGNICO EAGLE - MELIADINE DIVISION
116 - FUEL TANK FARM

TITRE: RANKIN INLET
FABRICATION ISOMETRIC
DIESEL FROM 65TNK11601 & 65TNK11602 TO PUMPING STATION

No PROJET	No DESSIN	PAGES	REV.
6515	116-150-PDI-CC10-0006	7/12	2

116-MN-01

ICEBERG W:\Agnico Eagle\Meliadine\591700 (Fuel Farm)\Acad\Dwgs\Iso\116-150-PDI-CC10-0006-7.DWG

SAMEDI LE Sep 20, 2017, 2:45pm

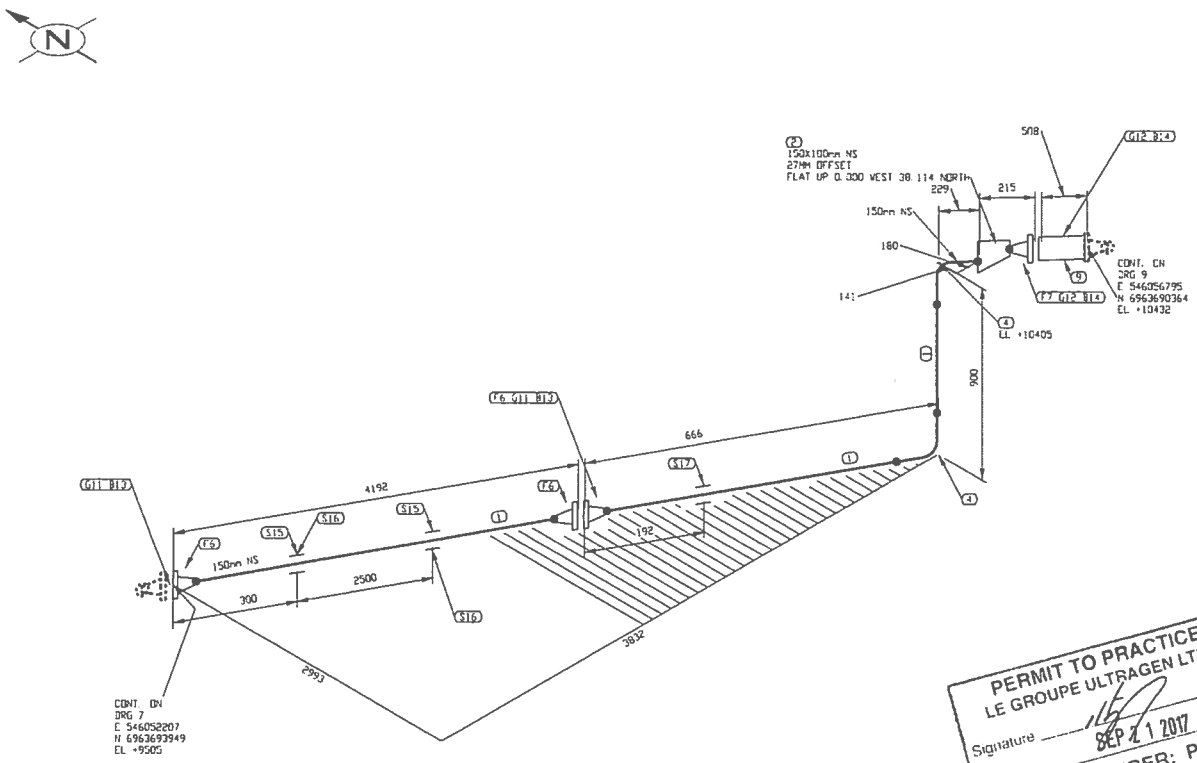

PERMIT TO PRACTICE
LE GROUPE ULTRAGEN LTÉE
Signature
Date SEP 21 2017
PERMIT NUMBER: P 1180
NT/NU Association of Professional Engineers and Geoscientists

FABRICATION DRAWINGS BASED ON WSP CERTIFIED ENGINEERING

LISTE DE MATERIEL

No	QTE	DIA	MATERIEL/CATALOGUE	DESCRIPTION
1	4810 MM	150	A 333 Gr. 6	SCH STD, SMLS PIPE
2	1	150X100	A 420 Gr. WPL6	SCH STD, BW CCC RED
3				
4	2	150	A 420 Gr. WPL6	SCH STD, BW LR 90 DEG ELBOW
5				
6	3	150	A 350 Gr. LF2	CL 150, SCH STD, RF, WN FLANGE
7	1	100	A 350 Gr. LF2	CL 150, SCH STD, RF, WN FLANGE
8				
9	1	100		TCS METER UNIT
10				
11	2	150	ASME B16.20	CL 150, GARLOCK 5500, RING TYPE GASKET 1/8" THK
12	2	100	ASME B16.20	CL 150, GARLOCK 5500, RING TYPE GASKET 1/8" THK
13	16	19	A 193 B7/A 194 2H	CL 150, 8 - 19.05 X 100 STUD BOLTS c/w TWO HEAVY HEX NUTS
14	16	16	A 193 B7/A 194 2H	CL 150, 8 - 15.875 X 90 STUD BOLTS c/w TWO HEAVY HEX NUTS
15	2	150		PIPE SHOE AS PER DETAIL 2, DWG: 65-116-270-200
16	2	150		PIPE SUPPORT AS PER DETAIL 1, DWG: 65-116-270-200
17	1	150		ABUTEMENT TYPE 2 AS PER DETAIL 5, DWG: 65-116-270-200

No.	DATE	REVISION	PAR / APP.
2	2017/09/21	PROJECT TITLE REVISED	KHV
1	2017/09/11	LINE NUMBERS REVISED	KHV
0	2017/05/15	ISSUED FOR CONSTRUCTION	KHV

CLIENT:

AGNICO EAGLE

NUQSANA PROMEC MINING

ultragen

CONSULTANT PROJECT NO. 591700

NO. DE CONDUITE		SPECIFICATION	PRODUIT	SYSTEME REVETEMENT	CODE DE COULEUR	ISOLATION ET TRACAGE	EPAISS. D'ISOLATION		
116-150-PDI-CC10-0006		CC10	PDI		-			65-116-270-200	PIPE SUPPORT DETAILS
PRESSION D'OPERATION	TEMPERATURE D'OPERATION	PRESSION DE CONCEPTION	TEMPERATURE DE CONCEPTION	PRESSION D'ESSAI	CLASSE D'INSPECTION	CODE DE SERVICE	TRAITEMENT THERMIQUE	65-116-205-200	P&ID
PSIG	°F	PSIG	°F	PSIG				No. DESSIN	DESSINS DE REFERENCE

SCEAU PROFESSIONNEL
REGISTERED PROFESSIONAL ENGINEER
D TRUONG
LICENSED
NT/NU
2017/09/21

CONC.: KHV
DATE: 2017/04/25
DESSINÉ PAR: KVE
DATE: 2017/04/25
VER. PAR: -
DATE: -
APP.: -
DATE: -
ÉCHELLE: AUCUNE

PROJET: AGNICO EAGLE - MELIADINE DIVISION
116 - FUEL TANK FARM

TITRE: RANKIN INLET
FABRICATION ISOMETRIC
DIESEL FROM 65TNK11601 & 65TNK11602 TO PUMPING STATION

No PROJET	No DESSIN	PAGES	REV.
6515	116-150-PDI-CC10-0006	8/12	2

116-MN-01

ICONE W:\Lynx Eagle\Modeling\591700 Fuel Distribution\DG Design\02 Isometrics\01 Rankin Inlet\116-150-PDI-CC10-0006-B.DWG

IMPRIMÉ LE: Sep 20, 2017, 2:41pm

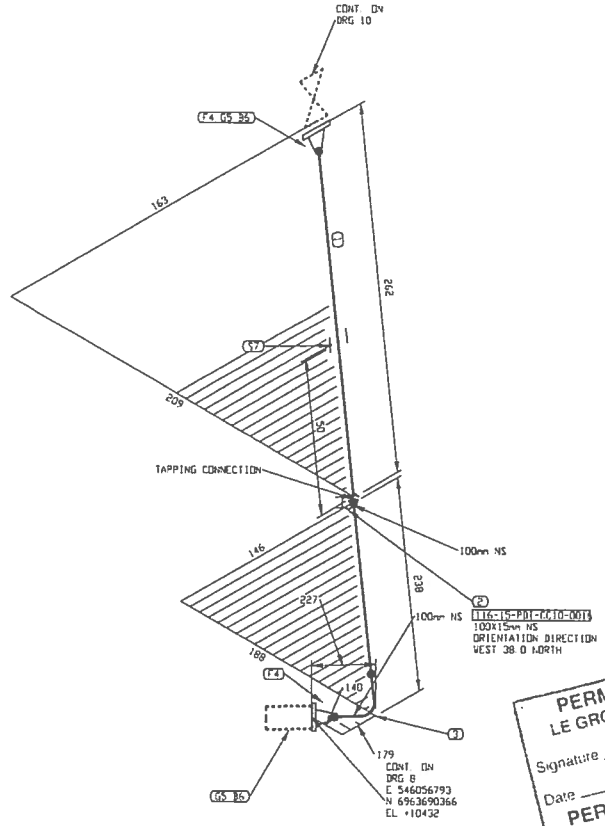

PERMIT TO PRACTICE
LE GROUPE ULTRAGEN LTÉE
Signature
Date SEP 21 2017
PERMIT NUMBER: P 1180
NT/NU Association of Professional Engineers and Geoscientists

FABRICATION DRAWINGS BASED ON WSP CERTIFIED ENGINEERING

LISTE DE MATERIEL

No	QTE	DIA	MATERIEL/CATALOGUE	DESCRIPTION
1	272 MM	100	A 333 Gr. 6	SCH STD, SMLS PIPE
2	1	100X15	A 350 Gr LF2	CL 3000, THREDOLET
3	1	100	A 420 Gr WPL6	SCH STD, BW LR 90 DEG ELBOW
4	2	100	A 350 Gr LF2	CL 150, SCH STD, RF, WN FLANGE
5	2	100	ASME B16.20	CL 150, GARLOCK 5500, RING TYPE GASKET 1/8' THK
6	16	16	A 193 B7/A 194 2H	CL 150, B - 15.875 X 90 STUD BOLTS c/w TWO HEAVY HEX NUTS
7	1	100		PIPE BRACKET C150x12x300 WELDED TO CONTAINER C/W U-BOLT

No.	DATE	REVISION	PAR APP.
2	2017/09/21	PROJECT TITLE REVISED	KHV
1	2017/09/11	LINE NUMBERS REVISED	KHV
0	2017/05/15	ISSUED FOR CONSTRUCTION	KHV

CLIENT:

AGNICO EAGLE

NUQSANA-PROMEC MINING

ultragen

CONSULTANT PROJECT NO. 591700

NO. DE CONDUITE		SPECIFICATION	PRODUIT	SYSTEME REVETEMENT	CODE DE COULEUR	ISOLATION ET TRACAGE	EPAISS. D'ISOLATION		
116-150-PDI-CC10-0006		CC10	PDI		-			65-116-270-200	PIPE SUPPORT DETAILS
PRESSION D'OPERATION	TEMPERATURE D'OPERATION	PRESSION DE CONCEPTION	TEMPERATURE DE CONCEPTION	PRESSION D'ESSAI	CLASSE D'INSPECTION	CODE DE SERVICE	TRAITEMENT THERMIQUE	65-116-205-200	P&ID
PSIG	°F	PSIG	°F	PSIG				No. DESSIN	DESSINS DE REFERENCE

SCEAU PROFESSIONNEL
REGISTERED PROFESSIONAL ENGINEER
D TRUONG
LICENSEE
2017/09/21

CONC.: KHV
DATE: 2017/04/25
DESSINE PAR: KVE
DATE: 2017/04/25
VER. PAR: -
DATE: -
APP.: -
DATE: -
ECHELLE: AUCUNE

PROJET: AGNICO EAGLE - MELIADINE DIVISION
116 - FUEL TANK FARM

TITRE: RANKIN INLET
FABRICATION ISOMETRIC
DIESEL FROM 65TNK11601 & 65TNK11602 TO PUMPING STATION

No PROJET	No DESSIN	PAGES	REV.
6515	116-150-PDI-CC10-0006	9/12	2

116-MN-01

FICHIER: N:\Agnico Eagle\Meliadine\131100 Fuel Distribution\DCS Drawings\02 Isometrics\01 Rankin Inlet\116-150-PD-CC10-0006-3.DWG

IMPRIME LE: Sep 20, 2017, 2:45pm

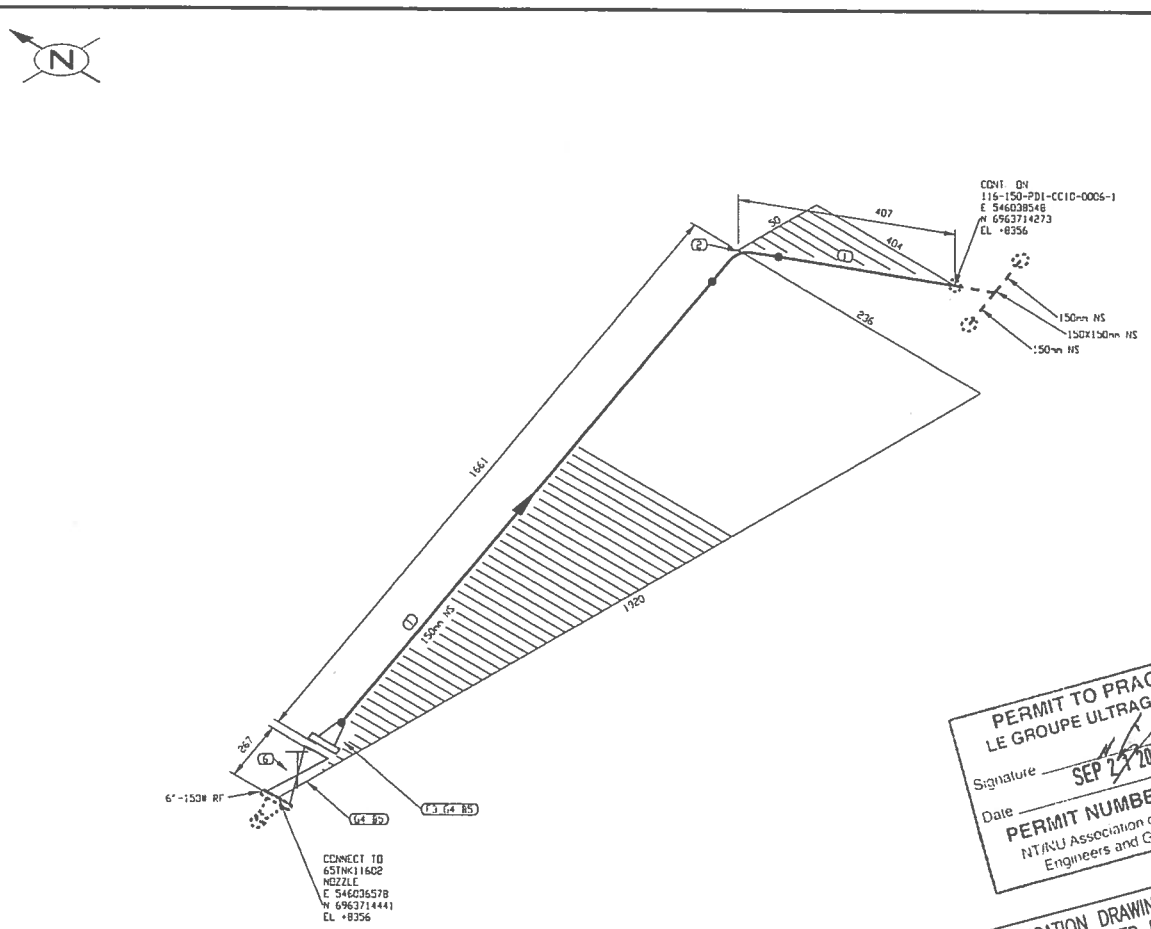

PERMIT TO PRACTICE
LE GROUPE ULTRAGEN LTÉE
Signature
Date SEP 21 2017
PERMIT NUMBER: P 1180
NT/NU Association of Professional Engineers and Geoscientists

FABRICATION DRAWINGS BASED ON WSP CERTIFIED ENGINEERING

LISTE DE MATERIEL

No.	QTÉ	DIA	MATERIEL/CATALOGUE	DESCRIPTION
1	1523 MM	150	A 333 Gr 6	SCH STD, SMLS PIPE
2	1	150	A 420 Gr WPL6	SCH STD, BW LR 90 DEG ELBOW
3	1	150	A 350 Gr LF2	CL 150, SCH STD, RF, WN FLANGE
4	2	150	ASME B16.20	CL 150, GARLOCK 5500, RING TYPE GASKET 1/8" THK
5	16	19	A 193 B7/A 194 2H	CL 150, 8 - 19 OS X 100 STUD BOLTS c/w TWO HEAVY HEX NUTS
6	1	150	GA-10	CL 150, RF, GATE VALVE

No.	DATE	REVISION	PAR	APP.
2	2017/09/21	PROJECT TITLE REVISED	KHV	
1	2017/09/11	LINE NUMBERS REVISED	KHV	
0	2017/05/15	ISSUED FOR CONSTRUCTION	KHV	

CLIENT: AGNICO EAGLE

NUQSANA-PROMEC MINING

ultragen

CONSULTANT PROJECT NO. 591700

NO. DE CONDUITE		SPECIFICATION	PRODUIT	SYSTEME REVETEMENT	CODE DE COULEUR	ISOLATION ET TRACAGE	EPAISS. D'ISOLATION		
116-150-PDI-CC10-0007		CC10	PDI					65-116-270-200	PIPE SUPPORT DETAILS
PRESSION D'OPERATION	TEMPERATURE D'OPERATION	PRESSION DE CONCEPTION	TEMPERATURE DE CONCEPTION	PRESSION D'ESSAI	CLASSE D'INSPECTION	CODE DE SERVICE	TRAITEMENT THERMIQUE	65-116-205-200	P&ID
PSIG	°F	PSIG	°F	PSIG				No. DESSIN	DESSINS DE REFERENCE

SCEAU PROFESSIONNEL
REGISTERED PROFESSIONAL ENGINEER
D. TRUONG
LICENSEE
2017/09/21

CONC.: KHV
DATE: 2017/04/25
DESSINE PAR: KVE
DATE: 2017/04/25
VER. PAR: -
DATE: -
APP.: -
DATE: -
ÉCHELLE: AUCUNE

PROJET: AGNICO EAGLE - MELIADINE DIVISION
116 - FUEL TANK FARM

TITRE: RANKIN INLET
FABRICATION ISOMETRIC
DIESEL FROM 65TNK11602 TO PUMPING STATION

No PROJET	No DESSIN	PAGES	REV.
6515	116-150-PDI-CC10-0007	1/1	2

116-MN-01

FICHIER N:\Agnico Eagle\Meliadine\591700 (Fuel Distribution)\05. Design\03. Tank\Rev03\01. Rankin Inn\116-150-PDI-CC10-0007-1.DWG

APPROVE LE: Sep 22, 2017, 2:46pm

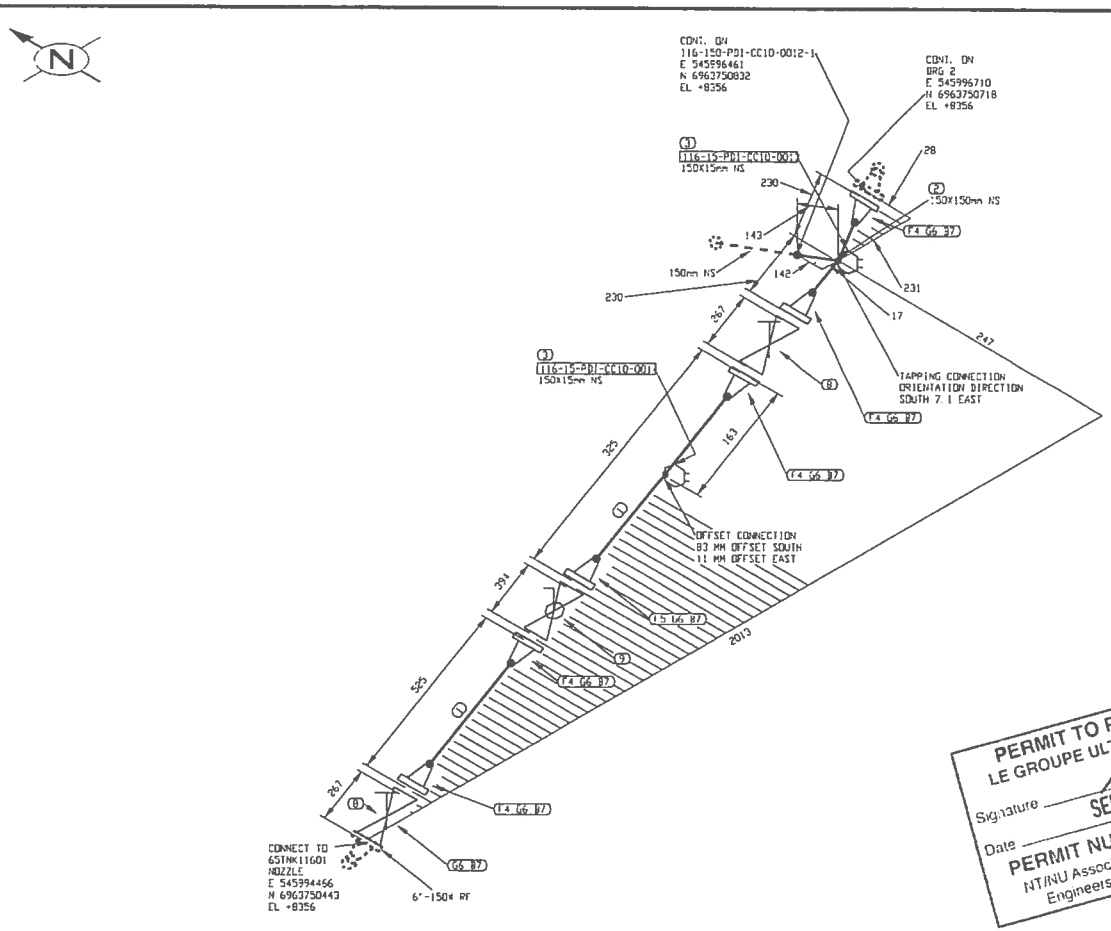

PERMIT TO PRACTICE
LE GROUPE ULTRAGEN LTEE
Signature
Date SEP 21 2017
PERMIT NUMBER: P 1180
NT/NU Association of Professional Engineers and Geoscientists

FABRICATION DRAWINGS BASED ON WSP CERTIFIED ENGINEERING

LISTE DE MATERIEL

No	QTE	DIA	MATERIEL/CATALOGUE	DESCRIPTION
1	502 MM	150	A 333 Gr. 6	SCH STD, SMLS PIPE
2	1	150X150	A 420 Gr. WPL6	SCH STD, BW STRAIGHT TEE
3	2	150X15	A 350 Gr. LF2	CL 3000, THREDOLET
4	5	150	A 350 Gr. LF2	CL 150, SCH STD, RF, WN FLANGE
5	1	150	A 350 Gr. LF2	CL 150, SCH STD, RF, WN FLANGE
6	7	150	ASME B16.20	CL 150, GARLOCK 5500, RING TYPE GASKET 1/8" THK
7	56	19	A 193 B7/A 194 2H	CL 150, 8 - 19.05 x 100 STUD BOLTS c/w TWO HEAVY HEX NUTS
8	2	150	GA-10	CL 150, RF, GATE VALVE
9	1	150	BA-31	CL 150, RF, BALL VALVE

No.	DATE	REVISION	PAR / APP.
2	2017/09/21	PROJECT TITLE REVISED	KHV
1	2017/09/11	LINE NUMBERS REVISED	KHV
0	2017/05/15	ISSUED FOR CONSTRUCTION	KHV

CLIENT:

AGNICO EAGLE

NUQSANA-PROJEC MINING

ultragen

CONSULTANT PROJECT NO. 591700

SCEAU PROFESSIONNEL
REGISTERED PROFESSIONAL ENGINEER
D. TRUONG
LICENSEE

CONC.: KHV
DATE: 2017/04/25
DESSINÉ PAR: KVE
DATE: 2017/04/25
VÉR. PAR: -
DATE: -
APP.: -
DATE: -
ÉCHELLE: AUCUNE

PROJET:
AGNICO EAGLE - MELIADINE DIVISION
116 - FUEL TANK FARM

TITRE:
RANKIN INLET
FABRICATION ISOMETRIC
DIESEL FROM 65TNK11601 TO PUMPING STATION

No PROJET	No DESSIN	PAGES	REV.
6515	116-150-PDI-CC10-0011	1/5	2

NO. DE CONDUITE		SPECIFICATION	PRODUIT	SYSTEME REVETEMENT	CODE DE COULEUR	ISOLATION ET TRACAGE	EPAISS. D'ISOLATION		
116-150-PDI-CC10-0011		CC10	PDI		-			65-116-270-200	PIPE SUPPORT DETAILS
PRESSION D'OPERATION	TEMPERATURE D'OPERATION	PRESSION DE CONCEPTION	TEMPERATURE DE CONCEPTION	PRESSION D'ESSAI	CLASSE D'INSPECTION	CODE DE SERVICE	TRAITEMENT THERMIQUE	65-116-205-200	P&ID
PSIG	°F	PSIG	°F	PSIG				No. DESSIN	DESSINS DE REFERENCE

116-MN-01

FICHIER: P:\Agnico Eagle\Meliadine\591700 (Fuel Distribution)\05. Design\CD. Tuyauterie\02. Isométriques\01. Rankin Inlet\116-150-PDI-CC10-0011-1.DWG
AUTOCAD LT Sep 20, 2017, 2:46pm

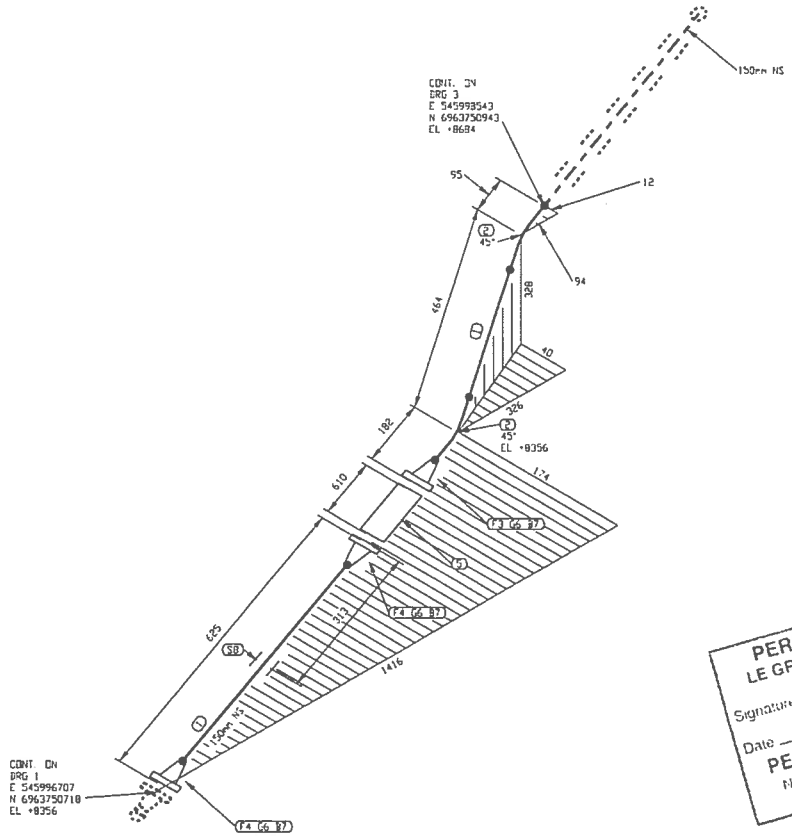

PERMIT TO PRACTICE
LE GROUPE ULTRAGEN LTÉE
Signature
Date SEP 1 1 2017
PERMIT NUMBER: P 1180
NT/NU Association of Professional Engineers and Geoscientists

FABRICATION DRAWINGS BASED ON WSP CERTIFIED ENGINEERING

LISTE DE MATERIEL

No	QTE	DIA	MATERIEL/CATALOGUE	DESCRIPTION
1	725 MM	150	A 333 Gr. 6	SCH STD, SMLS PIPE
2	2	150	A 420 Gr. WPL6	SCH STD, BW LR 45 DEG ELBOW
3	1	150	A 350 Gr. LF2	CL 150, SCH STD, RF, WN FLANGE
4	2	150	A 350 Gr. LF2	CL 150, SCH STD, RF, WN FLANGE
5	1	150		CL 150, SINGLE BRAIDED HOSE ASSEMBLY
6	3	150	ASME B16.20	CL 150, GARLOCK 5500, RING TYPE GASKET 1/8" THK
7	24	19	A 193 B7/A 194 2H	CL 150, 8 - 19 OS X 100 STUD BOLTS c/w 1WD HEAVY HEX NUTS
8	1	150		PIPE SHOE AS PER DETAIL 2, DWG 65-116-270-200

No.	DATE	REVISION	PAR / APP
2	2017/09/21	PROJECT TITLE REVISED	KHV
1	2017/09/11	LINE NUMBERS REVISED	KHV
0	2017/05/15	ISSUED FOR CONSTRUCTION	KHV

CLIENT: AGNICO EAGLE

NUOSANA PROMEC MINING

ultragen

CONSULTANT PROJECT NO. 591700

NO. DE CONDUITE		SPECIFICATION	PRODUIT	SYSTEME REVETEMENT	CODE DE COULEUR	ISOLATION ET TRACAGE	EPAISS. D'ISOLATION		
116-150-PDI-CC10-0011		CC10	PDI		-			65-116-270-200	PIPE SUPPORT DETAILS
PRESSION D'OPERATION	TEMPERATURE D'OPERATION	PRESSION DE CONCEPTION	TEMPERATURE DE CONCEPTION	PRESSION D'ESSAI	CLASSE D'INSPECTION	CODE DE SERVICE	TRAITEMENT THERMIQUE	65-116-205-200	P&ID
PSIG	°F	PSIG	°F	PSIG				No. DESSIN	DESSINS DE REFERENCE

SCEAU PROFESSIONNEL
REGISTERED PROFESSIONAL ENGINEER
D TRUONG
LICENSEE
NT/NU
2017/09/21

CONC.: KHV
DATE: 2017/04/25
DESSINÉ PAR: KVE
DATE: 2017/04/25
VER. PAR: -
DATE: -
APP.: -
DATE: -
ÉCHELLE: AUCUNE

PROJET: AGNICO EAGLE - MELIADINE DIVISION
116 - FUEL TANK FARM

TITRE: RANKIN INLET
FABRICATION ISOMETRIC
DIESEL FROM 65TNK11601 TO PUMPING STATION

No PROJET	No DESSIN	PAGES	REV.
6515	116-150-PDI-CC10-0011	2/5	2

116-MN-01

FICHIER: H:\Agnico Eagle\Meliadine\591700 (Fuel Distribution)\05. Design\02 Isometrics\02 Isometriques\01 Parts Nest\116-150-PDI-CC10-0011-2.DWG

IMPRIMÉ LE: Sep 20, 2017, 2:46pm

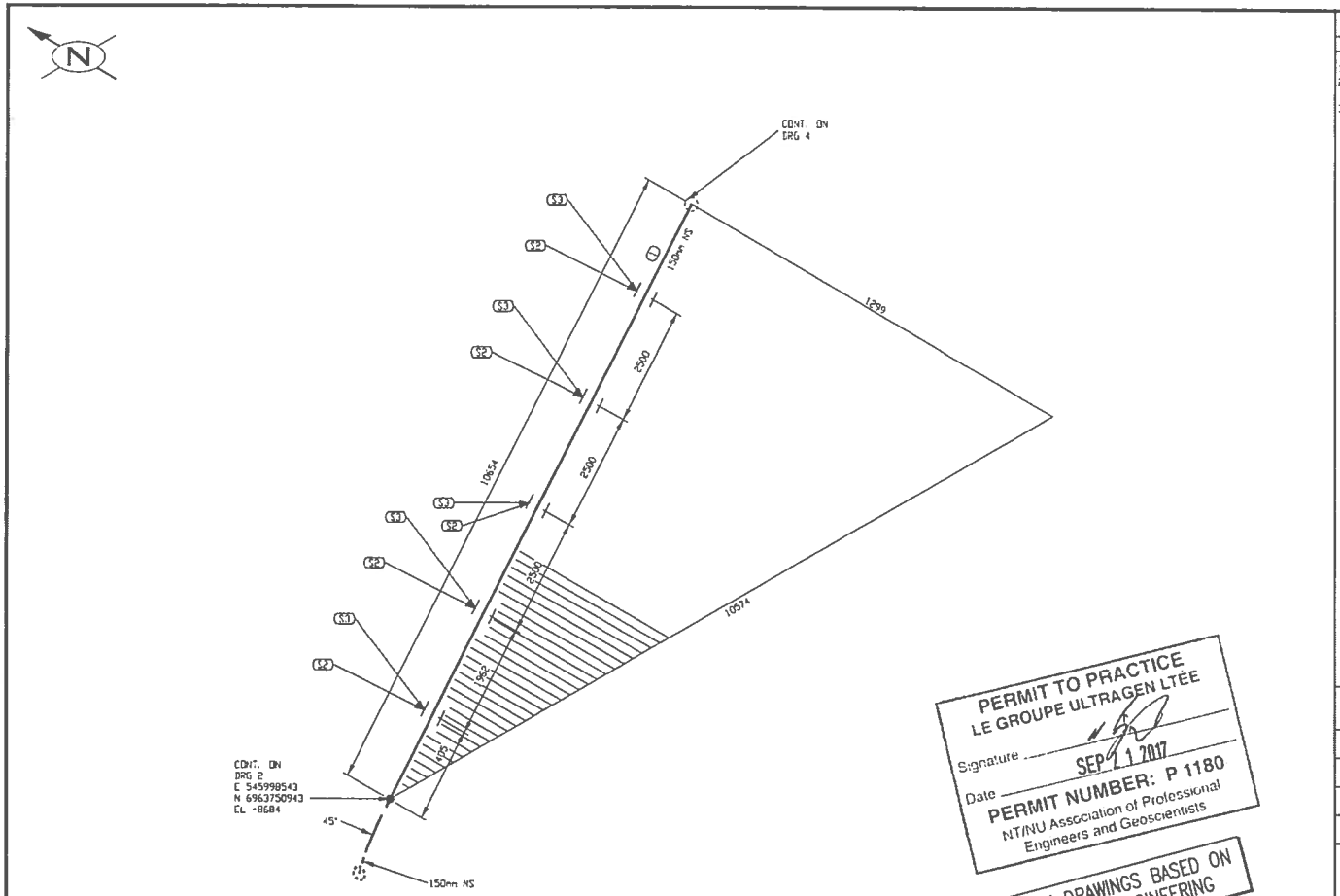

PERMIT TO PRACTICE
LE GROUPE ULTRAGEN LTÉE
Signature
Date SEP 21 2017
PERMIT NUMBER: P 1180
NT/NU Association of Professional Engineers and Geoscientists

FABRICATION DRAWINGS BASED ON WSP CERTIFIED ENGINEERING

LISTE DE MATERIEL

No	QTE	DIA	MATERIEL/CATALOGUE	DESCRIPTION
1	10654 MM	150	A 333 Gr. 6	SCH STD, SMLS PIPE
2	5	150		PIPE SUPPORT AS PER DETAIL 1, DWG 65-116-270-200
3	5	150		PIPE SHOE AS PER DETAIL 2, DWG 65-116-270-200

No.	DATE	REVISION	PAR / APP.
2	2017/09/21	PROJECT TITLE REVISED	KHV
1	2017/09/11	LINE NUMBERS REVISED	KHV
0	2017/05/15	ISSUED FOR CONSTRUCTION	KHV

CLIENT: AGNICO EAGLE

NUOSANA PROJECT MINING

ultragen

CONSULTANT PROJECT NO. 591700

NO. DE CONDUITE		SPECIFICATION	PRODUIT	SYSTEME REVETEMENT	CODE DE COULEUR	ISOLATION ET TRACAGE	EPAISS. D'ISOLATION		
116-150-PDI-CC10-0011		CC10	PDI		—			65-116-270-200	PIPE SUPPORT DETAILS
PRESSION D'OPERATION	TEMPERATURE D'OPERATION	PRESSION DE CONCEPTION	TEMPERATURE DE CONCEPTION	PRESSION D'ESSAI	CLASSE D'INSPECTION	CODE DE SERVICE	TRAITEMENT THERMIQUE	65-116-205-200	P&ID
PSIG	°F	PSIG	°F	PSIG				No. DESSIN	DESSINS DE REFERENCE

SCEAU PROFESSIONNEL
REGISTERED PROFESSIONAL ENGINEER
D TRUONG
LICENSEE

CONC.: KHV
DATE: 2017/04/25
DESSINÉ PAR: KVE
DATE: 2017/04/25
VOL. PAR: -
DATE: -
APP.: -
DATE: -
ÉCHELLE: AUCUNE

PROJET: AGNICO EAGLE - MELIADINE DIVISION
116 - FUEL TANK FARM

TITRE: RANKIN INLET
FABRICATION ISOMETRIC
DIESEL FROM 65TNK11601 TO PUMPING STATION

No PROJET	No DESSIN	PAGES	REV.
6515	116-150-PDI-CC10-0011	3/5	2

116-MN-01

FICHIER N:\Projets Eagle\Meliadine\591700 (Fuel Distribution)\02. Contrib\02. Tuyauterie\02. Isometrique\01. Rankin Inlet\116-150-PDI-CC10-0011-3.DWG

MEMBRE LE: Sep 20, 2017 2:46pm

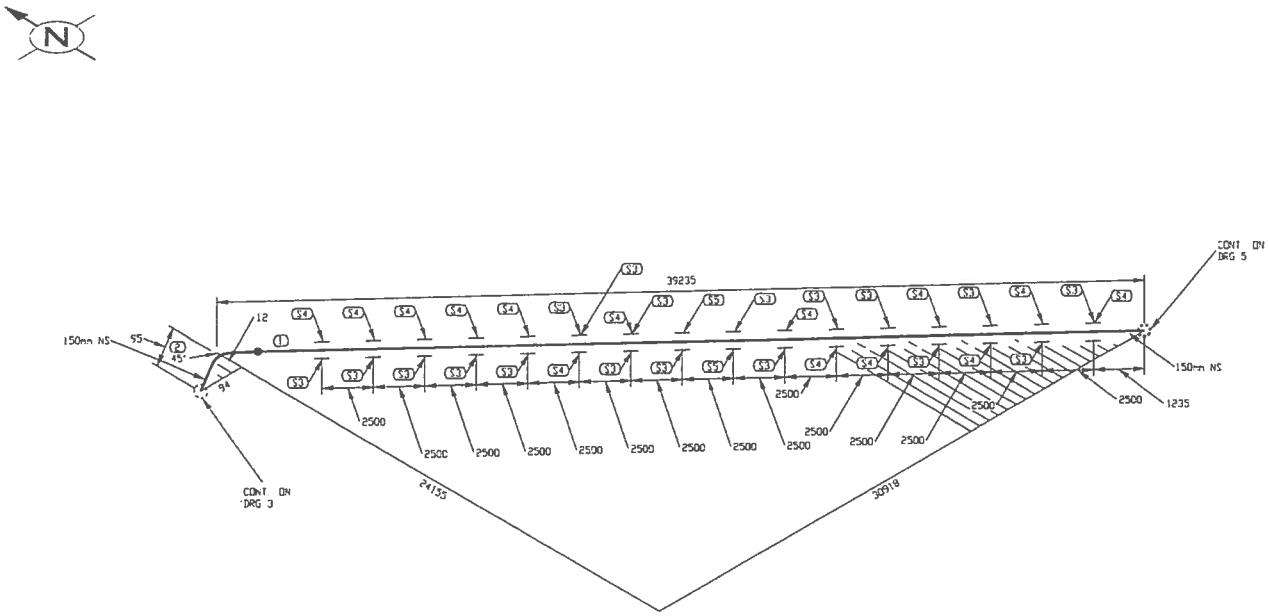

LISTE DE MATERIEL

No	QTE	DIA	MATERIEL/CATALOGUE	DESCRIPTION
1	39140 MM	150	A 333 Gr 6	SCH STD, SMLS PIPE
2	1	150	A 420 Gr WPL6	SCH STD, BV LR 45 DEG ELBOW
3	18	150		PIPE SHOE AS PER DETAIL 2, DWG 65-116-270-200
4	14	150		PIPE SUPPORT AS PER DETAIL 1, DWG 65-116-270-200
5	2	150		PIPE SUPPORT AS PER DETAIL 3, DWG 65-116-270-200

No.	DATE	REVISION	PAR / APP.
2	2017/09/21	PROJECT TITLE REVISED	KHV
1	2017/09/11	LINE NUMBERS REVISED	KHV
0	2017/05/15	ISSUED FOR CONSTRUCTION	KHV

PERMIT TO PRACTICE
LE GROUPE ULTRAGEN LTÉE
Signature
Date SEP 21 2017
PERMIT NUMBER: P 1180
NT/NU Association of Professional Engineers and Geoscientists

FABRICATION DRAWINGS BASED ON WSP CERTIFIED ENGINEERING

CLIENT:

AGNICO EAGLE

NUQSANA-PROMEC MINING

ultragen

CONSULTANT PROJECT NO. 591700

SCEAU PROFESSIONNEL
REGISTERED PROFESSIONAL ENGINEER
D. TRUONG
LICENSEE
NT/NU
2017/09/21

CONC.: KHV
DATE: 2017/04/25
DESSINÉ PAR: KVE
DATE: 2017/04/25
VER. PAR: -
DATE: -
APP.: -
DATE: -
ÉCHELLE: AUCUNE

PROJET: AGNICO EAGLE - MELIADINE DIVISION
116 - FUEL TANK FARM

TITRE: RANKIN INLET
FABRICATION ISOMETRIC
DIESEL FROM 65TNK11601 TO PUMPING STATION

No PROJET	No DESSIN	PAGES	REV.
6515	116-150-PDI-CC10-0011	4/5	2

NO. DE CONDUITE		SPECIFICATION	PRODUIT	SYSTEME REVETEMENT	CODE DE COULEUR	ISOLATION ET TRACAGE	EPAISS. D'ISOLATION		
116-150-PDI-CC10-0011		CC10	PDI		-			65-116-270-200	PIPE SUPPORT DETAILS
PRESSION D'OPERATION	TEMPERATURE D'OPERATION	PRESSION DE CONCEPTION	TEMPERATURE DE CONCEPTION	PRESSION D'ESSAI	CLASSE D'INSPECTION	CODE DE SERVICE	TRAITEMENT THERMIQUE	65-116-205-200	P&ID
PSIG	°F	PSIG	°F	PSIG				No. DESSIN	DESSINS DE REFERENCE

TEMPLATE: N:\Agnico Eagle\Meliadine\591700 Fuel Distribution\05. Devices\07. Isometrics\02. Manufacture\01. Rankin Inst\116-150-PDI-CC10-0011-1.DWG

IMPRIMÉ LE: Sep 20, 2017, 2:48pm

116-MN-01

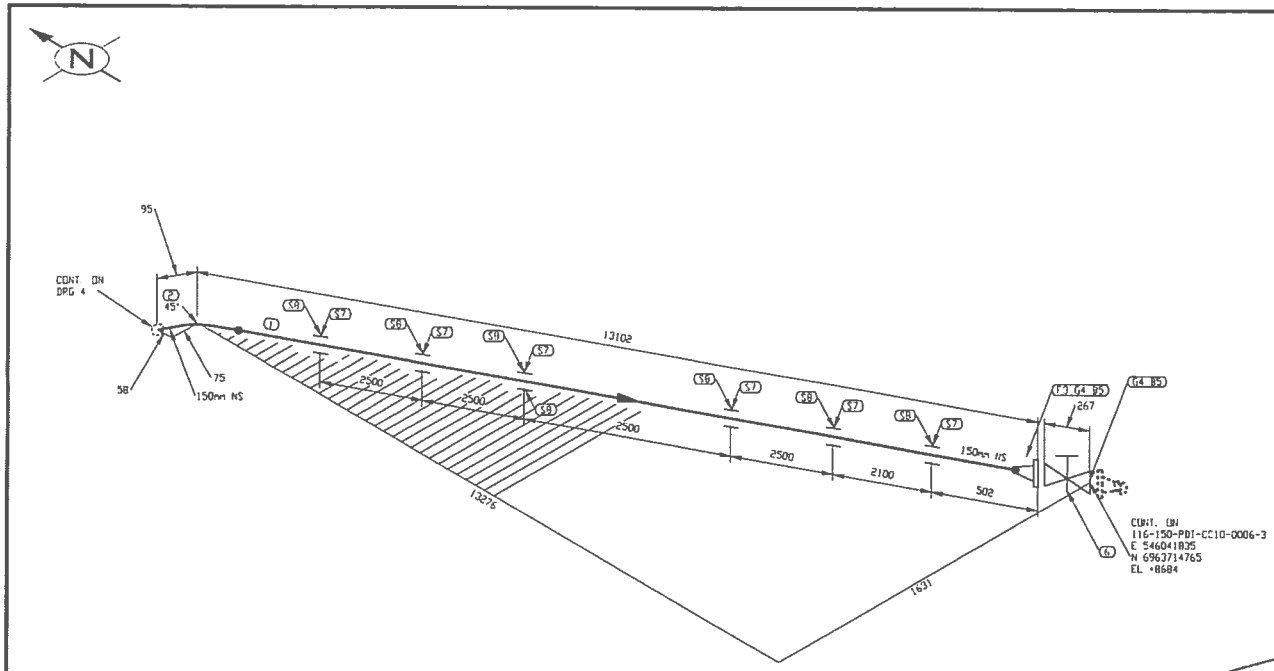

PERMIT TO PRACTICE
LE GROUPE ULTRAGEN LTÉE
Signature
Date SEP 21 2017
PERMIT NUMBER: P 1180
NT/NU Association of Professional Engineers and Geoscientists

FABRICATION DRAWINGS BASED ON WSP CERTIFIED ENGINEERING

LISTE DE MATERIEL

No	QTE	DIA	MATERIEL/CATALOGUE	DESCRIPTION
1	12919 MM	150	A 333 Gr. 6	SCH STD, SMLS PIPE
2	1	150	A 420 Gr. WPL6	SCH STD, BW LR 45 DEG ELBOW
3	1	150	A 350 Gr. LF2	CL 150, SCH STD, RF, WN FLANGE
4	2	150	ASME B16.20	CL 150, GARLOCK 5500, RING TYPE GASKET 1/8" THK
5	16	19	A 193 B7/A 194 2H	CL 150, 8 - 19.05 X 100 STUD BOLTS c/w TWO HEAVY HEX NUTS
6	1	150	GA-10	CL 150, RF, GATE VALVE
7	6	150		PIPE SUPPORT AS PER DETAIL 1, DWG 65-116-270-200
8	7	150		PIPE SHOE AS PER DETAIL 2, DWG 65-116-270-200

No.	DATE	REVISION	PAR APP.
2	2017/09/21	PROJECT TITLE REVISED	KHV
1	2017/09/11	LINE NUMBERS REVISED	KHV
0	2017/05/15	ISSUED FOR CONSTRUCTION	KHV

CLIENT:

AGNICO EAGLE

NUQSANA PROMEC MINING

ultragen

CONSULTANT PROJECT NO. 591700

NO. DE CONDUITE		SPECIFICATION	PRODUIT	SYSTEME REVETEMENT	CODE DE COULEUR	ISOLATION ET TRACAGE	EPAISS. D'ISOLATION		
116-150-PDI-CC10-0011		CC10	PDI		-			65-116-270-200	PIPE SUPPORT DETAILS
PRESSION D'OPERATION	TEMPERATURE D'OPERATION	PRESSION DE CONCEPTION	TEMPERATURE DE CONCEPTION	PRESSION D'ESSAI	CLASSE D'INSPECTION	CODE DE SERVICE	TRAITEMENT THERMIQUE	65-116-205-200	P&ID
PSIG	°F	PSIG	°F	PSIG				No. DESSIN	DESSINS DE REFERENCE

SCEAU PROFESSIONNEL
REGISTERED PROFESSIONAL ENGINEER
D. TRUONG
LICENSEE
2017/09/21

CONC.: KHV
DATE: 2017/04/25
DESSINÉ PAR: KVE
DATE: 2017/04/25
VER. PAR: -
DATE: -
APP.: -
DATE: -
ECHELLE: AUCUNE

PROJET: AGNICO EAGLE - MELIADINE DIVISION
116 - FUEL TANK FARM

TITRE: RANKIN INLET
FABRICATION ISOMETRIC
DIESEL FROM 65TNK11601 TO PUMPING STATION

No PROJET	No DESSIN	PAGES	REV.
6515	116-150-PDI-CC10-0011	5/5	2

116-MN-01

FICHIER: W:\Agnico Eagle\Meliadine\591700 (Fuel Dispensing)\03 Dessin\02 Tuyauterie\03 Isometriques\01 Rankin Inst\116-150-PDI-CC10-0011-5.DWG

IMPRIMÉ LE: Sep 20, 2017, 2:46pm

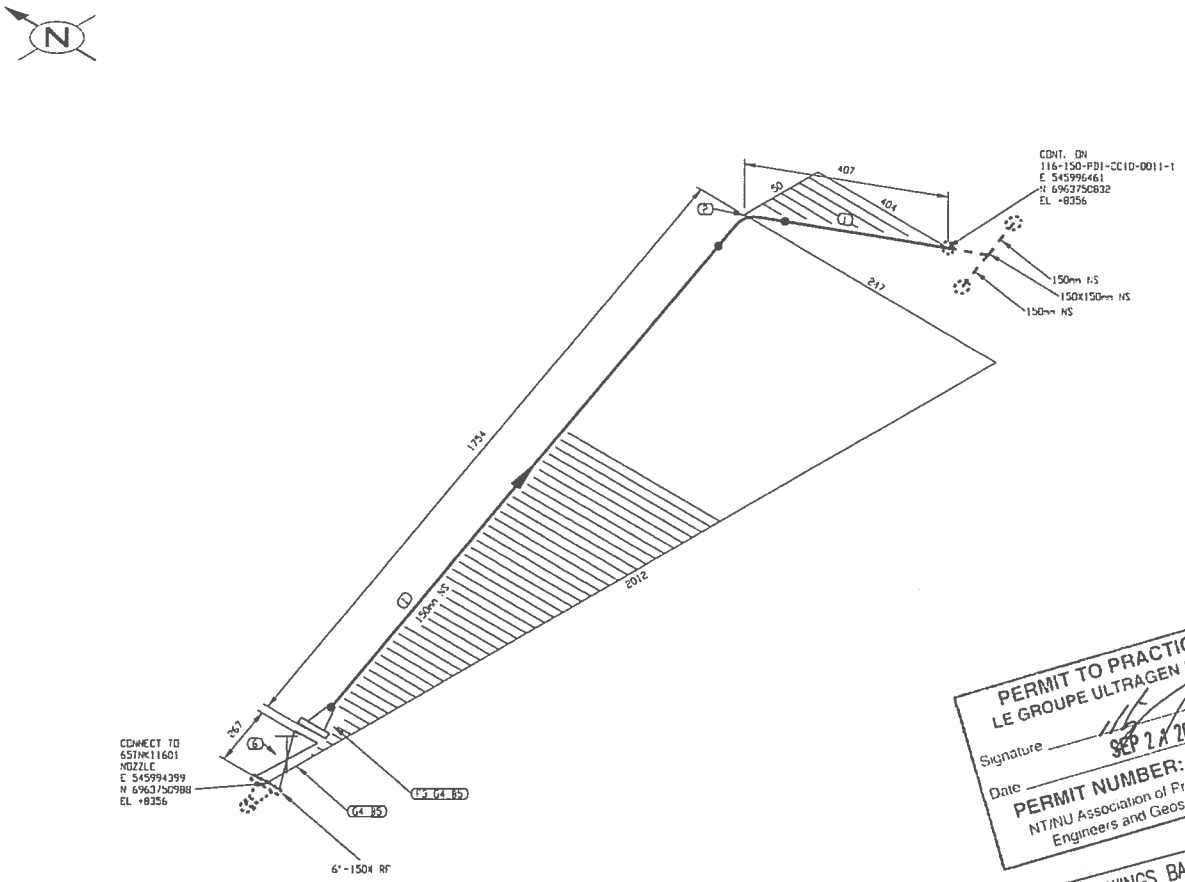

PERMIT TO PRACTICE
LE GROUPE ULTRAGEN LTÉE
Signature
Date SEP 2 7 2017
PERMIT NUMBER: P 1180
NT/NU Association of Professional Engineers and Geoscientists

FABRICATION DRAWINGS BASED ON WSP CERTIFIED ENGINEERING

LISTE DE MATERIEL

No	Q'T	DIA	MATERIEL/CATALOGUE	DESCRIPTION
1	1616 MM	150	A 333 Gr. 6	SCH STD, SMLS PIPE
2	1	150	A 420 Gr. WPL6	SCH STD, BV LR 90 DEG ELBOW
3	1	150	A 350 Gr. LF2	CL 150, SCH STD, RF, WN FLANGE
4	2	150	ASME B16.20	CL 150, GARLOCK 5500, RING TYPE GASKET 1/8" THK
5	16	19	A 193 B7/A 194 2H	CL 150, 8 - 19.05 X 100 STUD BOLTS c/w TWO HEAVY HEX NUTS
6	1	150	GA-10	CL 150, RF, GATE VALVE

No.	DATE	REVISION	PAR / APP
2	2017/09/21	PROJECT TITLE REVISED	KHV
1	2017/09/11	LINE NUMBERS REVISED	KHV
0	2017/05/15	ISSUED FOR CONSTRUCTION	KHV

CLIENT: AGNICO EAGLE

NUQSANA-PROMEC MINING

ultragen

CONSULTANT PROJECT NO. 591700

NO. DE CONDUITE		SPECIFICATION	PRODUIT	SYSTEME REVETEMENT	CODE DE COULEUR	ISOLATION ET TRACAGE	EPAISS. D'ISOLATION		
116-150-PDI-CC10-0012		CC10	PDI		-			65-116-270-200	PIPE SUPPORT DETAILS
PRESSION D'OPERATION	TEMPERATURE D'OPERATION	PRESSION DE CONCEPTION	TEMPERATURE DE CONCEPTION	PRESSION D'ESSAI	CLASSE D'INSPECTION	CODE DE SERVICE	TRAITEMENT THERMIQUE	65-116-205-200	P&ID
PSIG	°F	PSIG	°F	PSIG				No. DESSIN	DESSINS DE REFERENCE

SCEAU PROFESSIONNEL
REGISTERED PROFESSIONAL ENGINEER
D TRUONG
LICENSEE
2017/09/21

CONC.: KHV
DATE: 2017/04/25
DESSINE PAR: KVE
DATE: 2017/04/25
VER. PAR: -
DATE: -
APP.: -
DATE: -
ÉCHELLE: AUCUNE

PROJET: AGNICO EAGLE - MELIADINE DIVISION
116 - FUEL TANK FARM

TITRE: RANKIN INLET
FABRICATION ISOMETRIC
DIESEL FROM 65TNK11601 TO PUMPING STATION

No PROJET	No DESSIN	PAGES	REV.
6515	116-150-PDI-CC10-0012	1/1	2

116-MN-01

FICHIER: W:\Agnico Eagle\Meliadine\591700 (Fuel Distribution)\03. Design\02. Isometrics\01 Rankin Inlet\116-150-PDI-CC10-0012-1.DWG

SUPPORT LE: Sep 20, 2017, 2:44pm

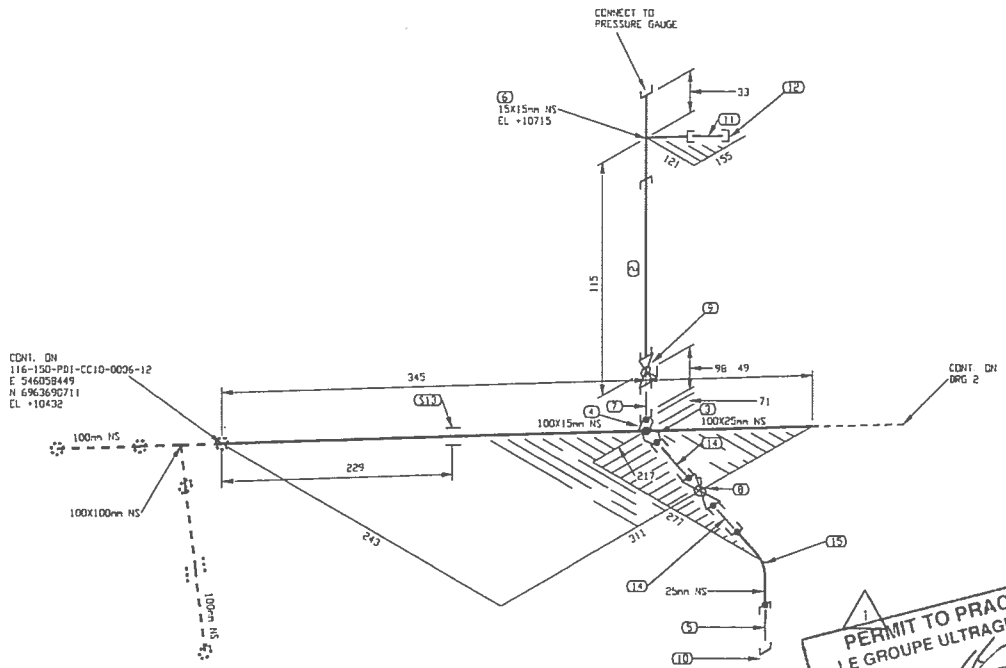

PERMIT TO PRACTICE
LE GROUPE ULTRAGEN LTÉE
Signature
Date SEP 21 2017
PERMIT NUMBER: P 1180
NT/NU Association of Professional Engineers and Geoscientists

FABRICATION DRAWINGS BASED ON WSP CERTIFIED ENGINEERING

LISTE DE MATERIEL

No	QTE	DIA	MATERIEL/CATALOGUE	DESCRIPTION
1	394 MM	100	A 333 Gr. 6	SCH STD, SMLS PIPE
2	73 MM	15	A 333 Gr. 6	SCH 80, SMLS PIPE
3	1	100x25	A 350 Gr. LF2	CL 3000, SOCKOLET
4	1	100X15	A 350 Gr. LF2	CL 3000, SOCKOLET
5	1	25	A 333 Gr. 6	SCH 80, NIPPLE x 75mm LG PDExTCE
6	1	15X15	A 350 Gr. LF2	CL 3000, THRD STRAIGHT TEE
7	1	15	A 333 Gr. 6	SCH 80, NIPPLE x 75mm LG PDExTCE
8	1	25	BA-29	CL 600, SV, BALL VALVE
9	1	15	BA-32	CL 600, THRD, BALL VALVE
10	1	25	A 350 Gr. LF2	CL 3000, THRD CAP
11	1	15	A 333 Gr. 6	SCH 80, NIPPLE x 75mm LG TBE
12	1	15	A 350 Gr. LF2	CL 3000, THRD CAP
13	1	100		PIPE SUPPORT AS PER DETAIL 9, DWG 65-116-270-200
14	2	25	A 333 Gr. 6	SCH 80, NIPPLE x 75mm LG PBE
15	1	25	A 350 Gr. LF2	CL 3000, SW 90 DEG ELBOW

No	DATE	REVISION	PAR / APP.
3	2017/09/21	PROJECT TITLE REVISED	KHV
2	2017/09/11	LINE NUMBERS REVISED	KHV
1	2017/06/30	DRAIN REVISED AS PER CLIENT COMMENTS	QVN
0	2017/05/15	ISSUED FOR CONSTRUCTION	KHV

CLIENT: AGNICO EAGLE

NUQSANA PROMEC MINING

ultragen

CONSULTANT PROJECT NO 591700

NO. DE CONDUITE		SPECIFICATION	PRODUIT	SYSTEME REVETEMENT	CODE DE COULEUR	ISOLATION ET TRACAGE	EPAISS. D'ISOLATION		
116-150-PDI-CC10-0018		CC10	PDI					65-116-270-200	PIPE SUPPORT DETAILS
PRESSION D'OPERATION	TEMPERATURE D'OPERATION	PRESSION DE CONCEPTION	TEMPERATURE DE CONCEPTION	PRESSION D'ESSAI	CLASSE D'INSPECTION	CODE DE SERVICE	TRAITEMENT THERMIQUE	65-116-205-200	P&ID
PSIG	°F	PSIG	°F	PSIG				No DESSIN	DESSINS DE REFERENCE

SCEAU PROFESSIONNEL
REGISTERED PROFESSIONAL ENGINEER
D TRUONG
LICENSEE
2017/09/21
NT/NU

CONC.: KHV
DATE: 2017/04/25
DESSINÉ PAR: KVE
DATE: 2017/04/25
VER. PAR: -
DATE: -
APP.: -
DATE: -
ÉCHELLE: AUCUNE

PROJET: AGNICO EAGLE - MELIADINE DIVISION
116 - FUEL TANK FARM

TITRE: RANKIN INLET
FABRICATION ISOMETRIC
DIESEL FROM 65TNK11601 & 65TNK11602 TO 65POD11601A

No PROJET	No DESSIN	PAGES	REV.
6515	116-150-PDI-CC10-0018	1/2	3

116-MN-01

F:\CAD\ A\Agnico Eagle\Meliadine\591700 Fuel Distribution\05. Dessin\02 Isometrique\02. Isometriques\01 Menuisier Inox\116 150 PDI-CC10-0018-1.DWG

IMPRIME LE: Sep 22, 2017 2:46pm

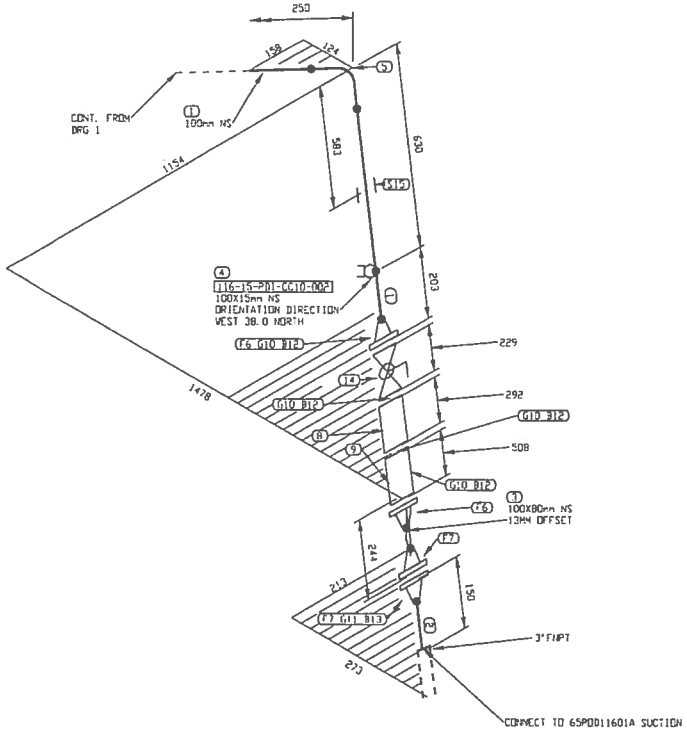

PERMIT TO PRACTICE
LE GROUPE ULTRAGEN LTÉE
Signature
Date SEP 21 2017
PERMIT NUMBER: P 1180
NT/NU Association of Professional Engineers and Geoscientists

FABRICATION DRAWINGS BASED ON WSP CERTIFIED ENGINEERING

LISTE DE MATERIEL

No	QTE	DIA	MATERIEL/CATALOGUE	DESCRIPTION
1	655 MM	100	A 333 Gr. 6	SCH STD, SMLS PIPE
2	81 MM	80	A 333 Gr. 6	SCH STD, SMLS PIPE POE x TOE
3	1	100X80	A 420 Gr. WPL6	SCH STD, BW ECC RED
4	1	100X15	A 350 Gr. LF2	CL 3000, THREDOLET
5	1	100	A 420 Gr. WPL6	SCH STD, BW LR 90 DEG ELBOW
6	2	100	A 350 Gr. LF2	CL 150, SCH STD, RF, WN FLANGE
7	2	80	A 350 Gr. LF2	CL 150, SCH STD, RF, WN FLANGE
8	1	100		CL 150, BASKET STRAINER
9	1	100		CL 150, SINGLE BRAIDED HOSE ASSEMBLY
10	4	100	ASME B16.20	CL 150, GARLOCK 3500, RING TYPE GASKET 1/8" THK
11	1	80	ASME B16.20	CL 150, GARLOCK 3500, RING TYPE GASKET 1/8" THK
12	32	16	A 193 B7/A 194 2H	CL 150, 8 - 15.875 X 90 STUD BOLTS c/w TWO HEAVY HEX NUTS
13	4	16	A 193 B7/A 194 2H	CL 150, 4 - 15.875 X 90 STUD BOLTS c/w TWO HEAVY HEX NUTS
14	1	100	BA-31	CL 150, RF, BALL VALVE
15	1	100		PIPE SUPPORT AS PER DETAIL 9, DWG: 65-116-270-200

No.	DATE	REVISION	PAR / APP.
2	2017/09/21	PROJECT TITLE REVISED	KHV
1	2017/09/11	LINE NUMBERS REVISED	KHV
0	2017/05/15	ISSUED FOR CONSTRUCTION	KHV

CLIENT: AGNICO EAGLE

NUOSANG JV PROMEC MINING

ultragen

CONSULTANT PROJECT NO. 591700

NO. DE CONDUITE		SPECIFICATION	PRODUIT	SYSTEME REVETEMENT	CODE DE COULEUR	ISOLATION ET TRACAGE	EPAISS. D'ISOLATION		
116-150-PDI-CC10-0018		CC10	PDI		-			65-116-270-200	PIPE SUPPORT DETAILS
PRESSION D'OPERATION	TEMPERATURE D'OPERATION	PRESSION DE CONCEPTION	TEMPERATURE DE CONCEPTION	PRESSION D'ESSAI	CLASSE D'INSPECTION	CODE DE SERVICE	TRAITEMENT THERMIQUE	65-116-205-200	P&ID
PSIG	°F	PSIG	°F	PSIG				No DESSIN	DESSINS DE REFERENCE

SCEAU PROFESSIONNEL
REGISTERED PROFESSIONAL ENGINEER
D TRUONG
LICENSEE
2017/09/21

CONC.: KHV
DATE: 2017/04/25
DESSINÉ PAR: KVE
DATE: 2017/04/25
VER. PAR: -
DATE: -
APP.: -
DATE: -
ÉCHELLE: AUCUNE

PROJET: AGNICO EAGLE - MELIADINE DIVISION
116 - FUEL TANK FARM

TITRE: RANKIN INLET
FABRICATION ISOMETRIC
DIESEL FROM 65TNK11601 & 65TNK11602 TO 65PDD11601A

No PROJET	No DESSIN	PAGES	REV.
6515	116-150-PDI-CC10-0018	2/2	2

116-MN-01

FICHIER: H:\Agnico Eagle\Modèles\591720 (Fuel Distribution)\05 Bases\02 Tuyauterie\02. Isométriques\01 Rankin Inlet\116 150 PDI-CC10-0018 2.DWG

MATRIX LL: Sep 23, 2017, 2:43pm

AGNICO EAGLE

Vendor Document Status

1 ☐ Proceed to next submission and status.

2 ☐ Proceed with exceptions as noted to next submission and status.

3 ☐ Do not proceed.
Revise as noted and resubmit next submission and status.

4 ☑ Complete, no further submission required.

By: Jean-Francois Tremblay Date: 2017-05-02

Review and authorization to fabricate are only for general conformance with the design concept of the Project as expressed in the Contract Documents. Sole responsibility for the accuracy and completeness of this document, including but not limited to dimensions and quantities, remains with the Supplier/Contractor. Agnico Eagle does not warrant the accuracy or completeness of any of the information contained herein, nor does Agnico Eagle authorize or approve any construction means, methods, techniques, sequences or any safety precautions or procedures.

Agnico Eagle No. 6515-C-270-007-141-TES-0014 R: Sub001

DOCUMENT FOR INFORMATION

NUQSANA-PROMEC MINING

Agnico-Eagle Mines Ltd.
Non-Conformance Report

ITR Number : AEM-GE-ITR-002
Contract no. : C22466T / C22498E

AGNICO EAGLE

PART 1 – To be completed by Originator

ITR no. :	Supplier/Vendor/Manufacturer/Contractor :	Originator :	Date:

Equipment Identification:	Equipment Tag No.:

Disposition Requested:	NCR Classification:
☐ 48 Hours ☐ Other	☐ Supplier ☐ Fabrication ☐ Engineering ☐ Construction ☐

Current Status:	Potential Impact (Check appropriate box and give estimate):
☐ Work Already Done ☐ Partially Done ☐ Other _____	☐ Cost ☐ Schedule ☐ Other

Detailed Description of Non-Conformance (attach sketch, pictures, etc) :

Describe Deviation to Drawings, Specifications, Standard, Code or other Reference:

PART 2 - Disposition

* CONTRACTOR Proposed Disposition / Resolution:	Concession Request No. (if applicable):	Contractors NCR No. (if applicable):
☐ Use As Is ☐ Repair ☐ Rework ☐ Reject/Scrap		

Details of Contractor Corrective Actions Proposed / Concession Request:

* Disposition:	Dispositioning Party:	Signature:
☐ Use as Is ☐ Repair ☐ Rework ☐ Reject/Scrap		

Recommended Resolution / Actions:

PART 3 - Confirmation

Corrective Actions Completed By:	Corrective Actions Accepted by Dispositioning Party:
Name:	Name:
Date:	Date:
Signature:	Signature:
Corrective Actions Accepted by Originator:	**NCR Closed Out By (Area QA Coordinator)**
Name:	Name:
Date:	Date:
Signature:	Signature:

** Note:* Dispositions are not to be construed as a change to any Contracts which may be affected. Prior to initiating any work which will impact the Contract terms, the Contractors must forward to AMEC written notice of all impacts, including but not limited to cost and schedule. Any work completed without a written instruction to proceed, if required, will be at the Contractor's risk.

6515-C-270-007

Fuel Tanks Piping Supply and Installation

Non-Conformance Log

Document Number : AEM-GE-LOG-002
Contract Number : C22466T / C22498E

Number	Company	Description	Initiator	Date Opened	Date Closed	Progress Status
NCR-001						N/A
NCR-002						N/A
NCR-003						N/A
NCR-004						N/A
NCR-005						N/A
NCR-006						N/A
NCR-007						N/A
NCR-008						N/A
NCR-009						N/A
NCR-010						N/A
NCR-011						N/A
NCR-012						N/A
NCR-013						N/A
NCR-014						N/A
NCR-015						N/A
NCR-016						N/A
NCR-017						N/A
NCR-018						N/A
NCR-019						N/A
NCR-020						N/A
NCR-021						N/A
NCR-022						N/A
NCR-023						N/A
NCR-024						N/A
NCR-025						N/A
NCR-026						N/A
NCR-027						N/A
NCR-028						N/A
NCR-029						N/A
NCR-030						N/A
NCR-031						N/A
NCR-032						N/A
NCR-033						N/A
NCR-034						N/A
NCR-035						N/A
NCR-036						N/A
NCR-037						N/A
NCR-038						N/A
NCR-039						N/A
NCR-040						N/A

AGNICO EAGLE

Vendor Document Status

1 ☐ Proceed to next submission and status.

2 ☐ Proceed with exceptions as noted to next submission and status.

3 ☐ Do not proceed.
Revise as noted and resubmit next submission and status.

4 ☑ Complete, no further submission required.

By: Jean-Francois Tremblay Date: 2017-05-02

Review and authorization to fabricate are only for general conformance with the design concept of the Project as expressed in the Contract Documents. Sole responsibility for the accuracy and completeness of this document, including but not limited to dimensions and quantities, remains with the Supplier/Contractor. Agnico Eagle does not warrant the accuracy or completeness of any of the information contained herein, nor does Agnico Eagle authorize or approve any construction means, methods, techniques, sequences or any safety precautions or procedures.

Agnico Eagle No. 6515-C-270-007-141-TES-0019 R: Sub001

DOCUMENT FOR INFORMATION

AGNICO EAGLE

Vendor Document Status

1 ☐ Proceed to next submission and status.

2 ☐ Proceed with exceptions as noted to next submission and status.

3 ☐ Do not proceed.
Revise as noted and resubmit next submission and status.

4 ☑ Complete, no further submission required.

By: JEAN-FRANCOIS TREMBLAY Date: 2017-05-02

Review and authorization to fabricate are only for general conformance with the design concept of the Project as expressed in the Contract Documents. Sole responsibility for the accuracy and completeness of this document, including but not limited to dimensions and quantities, remains with the Supplier/Contractor. Agnico Eagle does not warrant the accuracy or completeness of any of the information contained herein, nor does Agnico Eagle authorize or approve any construction means, methods, techniques, sequences or any safety precautions or procedures.

Agnico Eagle No. 6515-C-270-007-141-TES-0038 R: Sub001

DOCUMENT FOR INFORMATION

Agnico-Eagle Mines Ltd.

Contract no. 6515-C-270-007

Welding Control Procedure

AEM-WE-PRO-001

Area No.: All

System No.: All

PROMEC Approvals

Prepared by:	Stéphane Doré	**Signature:**		**Date:**	2017-04-26
Verified by:	Jérémy Duval	**Signature:**		**Date:**	2017-04-26
Approved by:	Éric Poulin	**Signature:**		**Date:**	2017-04-26

CLIENT Approvals

Verified by:		**Signature:**		**Date:**	
Approved by:		**Signature:**		**Date:**	

TABLE OF CONTENTS

Page

1. SCOPE 3
2. REFERENCES 3
3. WELDING PROCEDURES 3
4. WELDER PERFORMANCE QUALIFICATION 3
5. WELDING MATERIAL CONTROL 4
6. FIT-UP AND WELDING 4
7. RADIOGRAPHIC INSPECTION 5

APPENDIX A – ALL APPLICABLE ITRs & LOGs

1. Scope

- This procedure describes the system for maintaining control of all production welding to the requirements of the applicable engineering specifications, codes and standards.

2. References

- ASME, Section IX - Welding and Brazing Qualifications
- ANSI, B-31.3 - Petroleum Refinery Piping
- ANSI, B-31.1 - Power Piping
- AWS, American Welding Society

3. Welding Procedures

- All welding performed on site will comply with applicable qualified welding procedures as specified in the Standard S40 05 13.
- Prime contractor's welders will be qualified to weld procedures in accordance with contract specifications. Prime contractor is responsible for certifying their own welders.
- Copies of the qualified welding procedures approved for that project shall be maintained on site by the Welding Foreman and Site Q/C Representative for reference and permanent retention.

4. Welder Performance Qualification

- It is the responsibility of the Site Q/C Representative to conduct or supervise the Welder Performance Qualification tests. At the discretion of the Corporate Quality Control Manager, a Welding Foreman or other qualified site supervisor may conduct these tests.
- Records attesting to the Welder Performance Qualification tests shall be generated and maintained by the Site Q/C Representative and the Welding Foreman.
- The Site Q/C Representative and the Welding Foreman shall maintain a complete listing of welders and welding operators employed. The form, Welder Qualification Log, is to be updated and reissued on a monthly basis and is to be distributed as required.

5. Welding Material Control

- The Site Q/C Representative and Welding Foreman shall make certain that the welding material used conforms to that of the welding procedure. No substitutions for the specified material will be made without written approval from the client.

6. Fit-Up and Welding

- Visual surveillance shall be performed to establish compliance to welding procedures. The inspection parameters listed below are recommended as guidelines
  - ✓ Inspect end preparation and joint configuration as established by applicable weld procedures and engineering specifications.
  - ✓ Inspect internal alignment and root opening prior to welding.
  - ✓ Check tack welds that are to be incorporated into the final weld, and be assured of proper blend grinding and absence of visual defects.
  - ✓ Check for proper welding materials and other essential variables of applicable weld procedures.
  - ✓ Check visually root pass for cracks, porosity, slag, fusion lines and quality workmanship (if required use LP).
  - ✓ Inspect completed welds for proper reinforcement. All welds should blend smoothly into the base metal and be free of cold lap or fusion at the toe.
  - ✓ Inspect weld for surface discontinuities such as undercut. Surface porosity is to be considered as an injurious defect and shall be repaired.
  - ✓ All repairs are to be made in accordance with approved procedures.
  - ✓ Each welder shall be responsible for stamping his assigned symbol immediately after completion of the weld. A smooth, flat spot shall be ground or filed on the reinforcement cap. The welder shall stamp his/hers identifying mark upon this spot.
- For ferrous material less than 1/4" (1/2" for nonferrous), the welder's symbol shall be recorded on the base metal by use of a halogen-free paint marker, or recorded on isometric drawings by the welding supervisor which shall be available to the Quality Control Inspector.

7. Radiographic Inspection

- The Site Q/C Representative or Welding Foreman will schedule radiographic inspections.
- Radiographic requirements shall be determined by the client standard to assure compliance to contract Codes and specifications.
- Welds requiring radiography will be flagged by a suitable means which will be consistent through contract completion.
- The Site Q/C Representative will complete the Radiographic Inspection Status Record, to indicate status of radio graphically-inspected welds. This form will be forwarded to appropriate supervision for distribution.
- In addition to the records generated under this procedure, marked-up isometric and orthographic drawings will be used as weld maps to indicate completion of radiographic inspection. This will allow a progressive record and give system status.

PREMIÈRE PASSE E-6011 , 3/32
SMAW
REMPLISSAGE E-7018 , 1/8-5/32
SMAW
<u>ACIER AU CARBONE</u>
Procédure : P-1 , PR-1

et de la Protection du consommateur
Inspection des installations de tuyauterie
Division des appareils sous pression

DE SOUDAGE (DMS)
ding Procedure Specification (WPS)

Note: les titres désignent également les hommes et les femmes.

(2) Enregistrement provincial / *Provincial Registration*	MS / WP 8814.6

(1) Entreprise/*Company*

Nom: Construction Promec

Adresse/*Address*: 369 rue Murdoch

Rouyn-Noranda (Québec)

(819) 797-3456 — Code postal: J 9 X 1 G 4

(3) Désignation de la méthode/*Procedure Identification*

DMS N° / *WPS No.*: P1 — Révision N° / *Revision No.*: 0

RMS N° / *PQR No.*: PR1

Section du code / *Code section*:

(4) Procédé(s) de soudage / *Welding Process(es)*

1	SMAW	Manuel/*Manual* [X]	Semi-auto. [ ]	Auto. [ ]
2		Manuel/*Manual* [ ]	Semi-auto. [ ]	Auto. [ ]
3		Manuel/*Manual* [ ]	Semi-auto. [ ]	Auto. [ ]

(5) Joints/*Joints* (QW-402)

Genre/*Design*: VW Fillet — Chan Frein Simple — ~~Chan Frein Double~~

Soulien / *Backing*: Oui / *Yes* [X] — Non / *No* [X]

Matériau de soulien / *Backing material*: P1 ou soudure

Autre / *Other*:

Croquis/*Sketch*

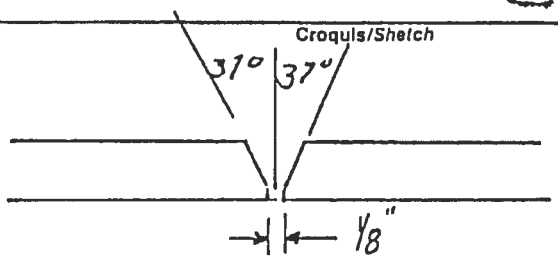

(6) Métaux de base/*Base Metals* (QW-403)

P N°/*No.*: P1 — Gr N°/*No.*: — à/*to* P N°/*No.*: P1 — Gr N°/*No.*:

ou Spécifications type et grade / *or Specifications type and grade*: à/*to*

Anal. chimique et prop. méc. / *Chemical Analysis and Mech. Prop.*: F3 à/*to* F4

Gamme des épaisseurs qualifiées / *Thickness Range Qualified*: Total 3/16" à 1½" — 1 ¼" — 2 1¼" — 3

Autre / *Other*:

(7) Métaux d'apport/*Filler Metals* (QW-404)

AWS N°/*No.*	E6011	SFA	5.1	*F-No.*	3	*A-No.*	1	Dia. 3/32-1/8-5/32
AWS N°/*No.*	E7018	SFA	5.1	*F-No.*	4	*A-No.*	1	Dia. 3/32-1/8-5/32
AWS N°/*No.*		SFA		*F-No.*		*A-No.*		Dia.

Marque de commerce du flux / *Flux Tradename*: — Classification du flux-électrode / *Electrode-Flux Classification*:

Pièce insérée consumable / *Consumable Insert*: — Autre / *Other*:

(8) Positions/*Positions* (QW-405)

Position(s) du chanfrein / *Position(s) of Groove*: Toute position

Progression du soudage / *Welding Progression*: Montant / *Up* [X] — Descendant / *Down* [X]

Position(s) de l'angle / *Position(s) of Fillet*: Toute position

Autre / *Other*:

(9) Préchauffage/*Preheat* (QW-406)

Température de préchauffage / *Preheat Temperature*: Min. 60°F

Température de l'interpasse / *Interpass Temperature*:

Maintien du préchauffage / *Preheat Maintenance*:

Autre / *Other*:

(10) Traitement thermique postsoudage/ *Postweld Heat Treatment* (QW-407)

Gamme de températures / *Temperature Range*: Aucun

Gamme de durée / *Time Range*:

Autre / *Other*:

(11) Gaz/*Gas* (QW-408)

Composition du gaz de protection / *Shielding Gas Composition*:

Débit du gaz / *Gas Flow Rate*:

Composition du gaz de soutien / *Shielding Gas Composition*:

Débit du gaz / *Gas Flow Rate*:

Composition du gaz de protection traînant / *Trailing Shielding Gas Composition*:

Caractéristiques électriques et t[illegible]niques/Electrical Characteristics and Tec[illegible]ue (QW-409) + (QW-410)

[illegible]ucho(s) de soudure [illegible]ver(s)	Procédé Process	Métal d'apport Filler Metal		Courant Current				Gamme de vitesse Travel Speed Range
		Classification Classification	Diamètre Diameter	Type Type	Polarité Polarity	Gamme d'ampérage Amp Range	Gamme de voltage Volt Range	
[illegible]è	SHAW	E6011	1/8" à 5/32"	DC	Inversé	75 - 85	26-30	--
[illegible]tres	SHAW	E7018	1/8" à 5/32"	DC	Inversé	105 -110	26-30	--

[illegible]sseur et type d'électrode de tungstène
[illegible]gsten Electrode Size and Type --

[illegible]e de transfert du métal pour GMAW
[illegible]e of Metal Transfer for GMAW --

[illegible]ion droit ou oscillant
[illegible]g or Weave Bead Droit et oscillant

[illegible]édé de gougeage arrière
[illegible]od of Back Gouging Arc Air

[illegible]oyage initial et entre les passes (brossage, meulage, etc.)
[illegible]l and Interpass Cleaning (Brushing, Grinding, etc.) Brossage ou meulage

[illegible]ètre de la tuyère à gaz
[illegible]e or Gas Cup Size --

[illegible]llation Largeur
[illegible]llation Width -- Fréquence Frequency

[illegible]nce entre tuyère & pièce
[illegible] to Work Distance --

[illegible] ou multiple (par côté)
[illegible] Single Pass (per Side) --

[illegible]rode unique ou multiple
[illegible]ple or Single Electrode --

[illegible]me de vitesse d'alimentation de l'électrode
[illegible]rode Wire feed speed range --

Pas de martelage

Autres commentaires/Supplementary Comments

[illegible]gnature du représentant de l'entreprise
[illegible]mpany Representative's Signature

Date
Date 15 janv. 88

16

QC MINISTÈRE DU TRAVAIL ET DE LA MAIN-D'OEUVRE
APPROUVÉ
SELON LA LOI [illegible] APPAREILS SOUS PRESSION [illegible]
VÉRIFIÉ PAR .....
DATE 88 01 25

[illegible]

Réservé au ministère/Department use only

[illegible]par
Date: [illegible] / 20
N° [illegible]

Gouvernement du Québec
Ministère de l'Habitation
et de la Protection du consommateur
Division des appareils sous pression

RÉSULTAT DE LA MÉTHODE DE SOUDAGE (RMS)
Procedure Qualification Record (PQR)

Titres désignent également les hommes et les femmes.

(Référence: ASME Section IX)

1 Entreprise/Company

Nom/Name: Construction Promec

Adresse/Address: 369 rue Murdoch

Rouyn-Noranda (Québec)

819-797-3456 — Code postal: J 9 X 1 G 4

2 Enregistrement provincial / Provincial Registration — MS / WP 88/4.6

3 Désignation du résultat/Record Identification

RMS N° / PQR No.: PR-1

DMS N° / WPS No.: P -1

4 Procédé(s) de soudage/Welding Process(es)

SMAW — Type: Manuel

Type:

Type:

5

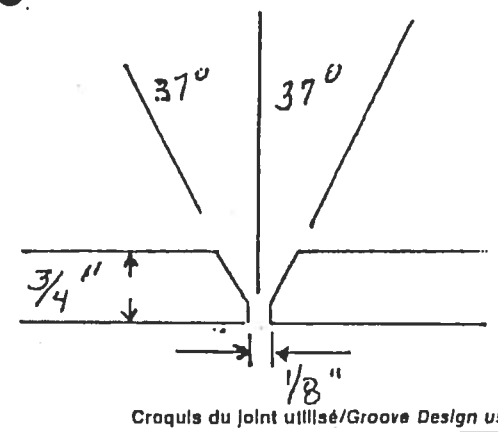

Croquis du joint utilisé/Groove Design used

6 Métaux de base/Base Metals (QW-403)

No. 1 — Gr No. — à/to — P No. 1 — Gr No.

Spécification/Specification: SA - 516 - 70 — Tension/Tensile: 70 000

Épaisseur/Thickness: 3/4" — Diamètre/Diameter

Autre/Other

7 Métaux d'apport/Filler Metals (QW-404)

Classification (AWS)	SFA - No.	F - No.	A - No.
E-6011	5.1	3	1
E-7018	5.1	4	1

Autre/Other

8 Positions/Positions (QW-405)

Position(s) du joint / Position(s) of Groove: 1 - G

Progression du soudage / Welding Progression: Montant / Up ☐ Descendant / Down ☐

Autre/Other

9 Préchauffage/Preheat (QW-406)

Température de préchauffage / Preheat Temperature: 60°F

Température de l'interpasse / Interpass Temperature

Autre/Other

10 Traitement thermique postsoudage/Postweld Heat Treatment (QW-407)

Température / Temperature: aucun

Durée / Time

Autre / Other

11 Gaz/Gas (QW-408)

Composition du gaz de protection / Shielding Gas Composition: --

Débit du gaz / Gas Flow Rate

Composition du gaz de soutien / Backing Gas Composition

Débit du gaz / Gas Flow Rate

Autre / Other

12 Technique/Technique (QW-410)

Cordon droit ou oscillant / String or Weave Bead: droit

Oscillation / Oscillation

Passe unique ou multiple (par côté) / Multipass or Single Pass (Per Side): multiple

Électrode unique ou multiple / Single or Multiple Electrode: unique

Autre / Other

13 Caractéristiques électriques et techniques/Electrical Characteristics and Technique (QW-409) + (QW-410)

Couche(s) de fusion / Weld Layer(s)	Procédé / Process	Métal d'apport / Filler Metal: Classification / Classification	Métal d'apport: Diamètre / Diameter	Courant / Current: Type / Type	Courant: Polarité / Polarity	Courant: Ampérage / Amp	Courant: Voltage / Volt	Vitesse / Travel Speed
Première	SMAW	E-6011	1/8	DC	Inversé	85	26-30	-
Autres	SMAW	E-7018	1/8	DC	Inversé	105	26-30	-

(15) Essais à la traction/Tensile Tests

Éprouvette Specimen	Dimensions Dimensions Largeur Width	Épaisseur Thickness	Surface Area	Charge limite Ultimate Total Load	Traînte limite Ultimate Unit Stress	Nature et endroit de la rupture Character and Location of Failure
(i) G-1	.781	.810	.6326	51800	81,884	matériel
G-6	.785	.829	.6508	54300	83,436	matériel

(16) Essais de pliage guidé/Guided Bend Tests

Référence:

Éprouvette Specimen	Face Face	Racine Root	Côté Side	Résultat Result	Éprouvette Specimen	Face Face	Racine Root	Côté Side	Résultat Result
(i) G-2		X		Accepté	(i) G-3	X			Accepté
(i) G-4		X		Accepté	(i) G-5	X			Accepté

(17) Essais de résilience/Toughness Tests

Référence:

Éprouvette Specimen	Endroit de l'entaille Notch Location	Forme de l'entaille Notch Type	Température de l'éprouvette Specimen Temperature	Énergie de rupture Impact Value	Expansion latérale Lateral Expansion % cisaillement/shear	Millièmes Mills	Essai en chute libre Drop Weight Cassé Break	Non cassé No Break

(18) Essai de soudure d'angle/Fillet Weld Test

Référence:

Résultat satisfaisant Result-Satisfactory: Oui Yes ☐ Non No ☐

Pénétration dans métal adjacent Penetration into Parent Metal: Oui Yes ☐ Non No ☐

Résultats Macroscopiques Micro-Results

(18) Autres essais/Other Tests

Référence:

Reviewed and accepted by Construction Promec Inc. QC Manager
Date: March 29, 2007 Signed: Jean-Guy Bisson
Jean-Guy Bisson, ing.

(19) Nom du soudeur Welder's Name: Serge Gagné

Symbole Stamp No.: G

Essais effectués par Tests conducted by: Megualtech

Essai de laboratoire No. Laboratory Test No.: 88-078

Nous certifions que les renseignements concernant ce résultat sont exacts et que les essais de soudage ont été préparés, soudés et exécutés conformément aux exigences de la section IX du Code ASME.

We certify that the statements in this record are correct and that the test welds were prepared, welded and tested in accordance with the requirements of section IX of the ASME Code.

(20) Signature du représentant de l'entreprise Company Representative's Signature: [signature] Date Date: 15 janvier 1988

QC MINISTÈRE DU TRAVAIL ET DE LA MAIN-D'ŒUVRE APPROUVÉ SELON LA LOI SUR LES APPAREILS SOUS PRESSION R.L.R.Q. VÉRIFIÉ PAR ... DATE ... 01 01 05

Réservé au Ministère/Department Use Only 8814.6

Pièces soudées le Specimen Welded on	14 janvier 88	Inspecteur Inspector	Yvon Viau
Résultats vérifiés le Record Verified on	880/25	Inspecteur Inspector	[signature]

Caractéristiques électriques et techniques/Electrical Characteristics and Technique (QW-409) + (QW-410)

Couche(s) de soudure / Weld Layer(s)	Procédé / Process	Métal d'apport / Filler Metal: Classification / Classification	Métal d'apport / Filler Metal: Diamètre / Diameter	Courant / Current: Type / Type	Courant / Current: Polarité / Polarity	Courant / Current: Gamme d'ampérage / Amp Range	Courant / Current: Gamme de voltage / Volt Range	Gamme de vitesse / Travel Speed Range
.e	SHAW	E6011	1/8" à 5/32"	DC	Inversé	75 - 85	26-30	--
tres	SHAW	E7018	1/8" à 5/32"	DC	Inversé	105 -110	26-30	--

sseur et type d'électrode de tungstène / gsten Electrode Size and Type	--
le de transfert du métal pour GMAW / le of Metal Transfer for GMAW	--
ion droit ou oscillant / g or Weave Bead	Droit et oscillant
édé de gougeage arrière / nod of Back Gouging	Arc Air
oyage initial et entre les passes (brossage, meulage, etc.) / l and Interpass Cleaning (Brushing, Grinding, etc.)	Brossage ou meulage
nètre de la tuyère à gaz / ce or Gas Cup Size	--
illation / llation — Largeur / Width	-- — Fréquence / Frequency
ance entre tuyère & pièce / to Work Distance	--
s ou multiple (par côté) / tiple Single Pass (per Side)	--
trode unique ou multiple / iple or Single Electrode	--
nme de vitesse d'alimentation de l'électrode / trode Wire feed speed range	--
e / er	Pas de martelage

Autres commentaires/Supplementary Comments

INGÉNIEUR - ENGINEER
Jean-Guy Bisson
111343
QUÉBEC

Reviewed and accepted by Construction Promec Inc. QC Manage
Date: March 29, 2007 Signed: Jean-Guy Bisson
Jean-Guy Bisson, eng

Signature du représentant de l'entreprise / Company Representative's Signature: [signature]

Date / Date: 15 janv. 88

(16)
QC MINISTÈRE DU TRAVAIL ET DE LA MAIN-D'OEUVRE
APPROUVÉ
SELON LA LOI SUR LES APPAREILS SOUS PRESSION L.R.Q.
VÉRIFIÉ PAR .....
DATE 88 01 25

Réservé au ministère/Department use only

...é par [signature] Date: 88 01 22

...ro N°

Appendix A

ALL APPLICABLE ITRs & LOGs

Appendix A

ALL APPLICABLE ITRs & LOGs

Date de qualification	Qualification
2017-05-06	Soudage sur appareils sous pression Classe A Tuyaux 50 mm, catégorie 160-P1-6G, F3-F4

Emploi Québec

Certificat de qualification

Nom de famille
MASSICOTTE-ROY

Prenom
ALEXANDRE

Numéro de dossier
0000000176159

Délivré en vertu de la Loi sur la formation et la qualification professionnelles de la main-d'oeuvre (L.R.Q., chapitre F-5).

Délivré le
2017-05-06

Expire le
2019-05-06

X

Signature

Ministère du Travail, de l'Emploi et de la Solidarité sociale

001386104

1-1016 (04-2015)

ıte de qualification	Qualification
2015-11-18	Soudage sur appareils sous pression Classe A Tuyaux 50 mm, catégorie 160-P1-6G, F3-F4

Emploi Québec

Certificat de qualification

Nom de famille	
FAUBERT	
Prénom	Numéro de dossier
STEVEN	0000000125746

Délivré en vertu de la Loi sur la formation et la qualification professionnelles de la main-d'oeuvre (L.R.Q., chapitre F-5).

Délivré le 2015-11-18

Expire le 2017-11-18

X Signature

Ministère du Travail, de l'Emploi et de la Solidarité sociale 001139657

034 (07-2009) Plier ici Détacher sur le pointillé Plier ici

Objet : Délivrance de votre certificat de qualification

Date de qualification	Qualification
2015-05-28	Soudage sur appareils sous pression Classe A Tuyaux 50 mm, catégorie 160-P1-6G, F3-F4

Emploi Québec

Certificat de qualification

Nom de famille	
MARTEL	
Prénom	Numéro de dossier
SYLVAIN	0000000046942

Délivré en vertu de la Loi sur la formation et la qualification professionnelles de la main-d'oeuvre (L.R.Q., chapitre F-5).

Délivré le 2015-05-28

Expire le 2017-05-28

x Sylvain Martel

Signature

Ministère de l'Emploi et de la Solidarité sociale

001055843

Date de qualification	Qualification
2017-05-06	Soudage sur appareils sous pression Classe A Tuyaux 50 mm, catégorie 160-P1-6G, F3-F4

Détacher sur la pointillé

Emploi Québec

Certificat de qualification

Nom de famille
LEROUX

Prénom
STEPHANE

Numéro de dossier
0000000102229

Délivré en vertu de la Loi sur la formation et la qualification professionnelles de la main-d'oeuvre (L.R.Q., chapitre F-5).

Délivré le
2017-05-06

Expire le
2019-05-06

X Stéphane Leroux
Signature

Ministère du Travail, de l'Emploi et de la Solidarité sociale 001386103

Alberta
Municipal Affairs
and Housing

ABSA
the pressure equipment safety authority

21396

Grade "B" Pressure Welder's Certificate of Competency

This is to certify that **Marylene Paul**
having complied with provisions of the Safety Codes Act, is authorized to engage in pressure welding in accordance with the prescribed Regulations.

Dated at Edmonton
October 04, 2007

W-26448
File no.

Chief Inspector and Administrator

Keyano COLLEGE

Welder Performance Qualification Card

AOQP No. 7121

MARYLENE PAUL — W-26448

Name — File No.

This card is issued pursuant to the Safety Codes Act and the Pressure Welders Regulation. The performance qualification is in accordance with Section IX of the ASME Code and subject to the limitations on the reverse side.

MARCH 17-2016 — Marylene Paul

Date of Test — Welder's Signature

Louis Boutin

Welding Examiner (Print/type)

CARD No. 8816