CONSTRUCTION SUMMARY (AS-BUILT) REPORT FOR MINE SITE FUEL STORAGE AND CONTAINMENT FACILITIES MELIADINE PROJECT, NUNAVUT



PRESENTED TO
Agnico Eagle Mines Ltd.

APRIL 2018
ISSUED FOR COMMENTS
MELIADINE PROJECT, NU | TETRA TECH PROJECT NUMBER: 28920
AGNICO EAGLE DOCUMENT NUMBER: 6515-E-132-005-132-REP-016

Tetra Tech
5100, Sherbrooke street east, suite 400
Montreal, QC H1V 3R9, CANADA
Tel 514.257.1112 Fax 514.257.0717

EXECUTIVE SUMMARY

Tetra Tech was retained by Agnico Eagle Mines Limited (Agnico Eagle) to prepare a construction summary (as-built) report for the Mine Site Fuel Storage and Containment Facilities at the Meliadine Gold Project, Nunavut. Tetra Tech and WSP Canada Inc. previously prepared the construction drawings and specifications as well as the design report for the Fuel Storage and Containment Facilities for the Project (AEM No 6515-E-132-004-132-REP-003). The facilities include two (2) main fuel storage tanks located at Rankin Inlet Itivia site and four (4) fuel storage tanks located at the Meliadine site.

This report presents the work executed at Meliadine site where the construction of the Mine Site Fuel Storage secondary containment and the commissioning of the field erected fuel storage Tank #3 (3ML) and Tank #5 (250kL) was completed in October 2017.

Tetra Tech was not involved in the construction of the Fuel Farm Facilities. The information presented in this report was provided by Agnico Eagle.

The construction monitoring and quality assurance was managed by Agnico Eagle.

1.0 INTRODUCTION 2

2.0 SUMMARY OF THE CONSTRUCTION 3

2.1 Site Location Plan 3
2.2 Construction Schedule 4
2.3 As-built Drawings and Photographs 4

3.0 CODES AND STANDARDS 5

3.1 Compliance for Field Erected Fuel Tanks 5
3.2 Compliance for Secondary Containment 6
3.3 Distance Restrictions As-built 7

4.0 FIELD DECISIONS FOR THE FIELD ERECTED FUEL TANK #3 AND TANK #5 AND SURROUNDING FACILITIES (STRUCTURAL, MECHANICAL, AND ELECTRICAL) 8

4.1 Documentation on Field Decisions that Deviate from Original Plans 8
4.1.1 Structural 8
4.1.2 Mechanical 8
4.1.3 Electrical 8
4.2 Maintenance, Inspection, Construction Monitoring, and Inspection Reports 9

5.0 FIELD DECISIONS FOR THE SECONDARY CONTAINMENT FACILITY 11

5.1 Documentation on Field Decisions that Deviate from Original Plans 11
5.1.1 Tank Foundation As-built 11
5.1.2 Dike and Secondary Containment 11
5.1.3 Fence 11
5.2 Inspection, Construction Monitoring, and Inspection Reports 13

6.0 EARTHWORKS 13

7.0 ERRATA 14

8.0 LIMITATIONS OF REPORT 15

9.0 CLOSURE 15

APPENDICES

Appendix A	As-built Drawings of Mine Site Fuel Storage and Containment Facilities
Appendix B	Survey Drawing of Mine Site Fuel Storage and Containment Facilities
Appendix C	Photographs of Mine Site Fuel Storage and Containment Facilities
Appendix D	Construction Summary of Meliadine Mine Site Tank Farm Area
Appendix E	Inspection Report – Portal #1 Offsite and Onsite Fabrication
Appendix F	Inspection Report – Portal #1 Fuel Modules
Appendix G	Inspection Report – Inspection Test Plan
Appendix H	Inspection Report – Handover Package for Tank #3
Appendix I	Inspection Report – Handover Package for Tank #5
Appendix J	Construction Summary of Mine Site Fuel Storage and Containment Facilities
Appendix K	Particle Size Summary – 30 mm minus Run of Mine
Appendix L	Particle Size Summary – 30 mm minus Esker
Appendix M	Inspection Report – Quality Control Final Report for Geomembrane Installation

ACRONYMS & ABBREVIATIONS

ACRONYMS	
API	American Petroleum Institute
CCME	Canadian Council of Ministers of the Environment
CEC	Canadian Electrical Code
CL	Centerline
CSA	Canadian Standards Association
HDPE	High-Density Polyethylene
ITP	Inspection Test Plan
NAD83	North American Datum of 1983
NBCC	National Building Code of Canada
NFCC	National Fire Code of Canada
NFPA	National Fire Protection Association
NWT	Northwest Territories
PLC	Programmable Logic Controller
RRNWT	Revised Regulations of the Northwest Territories
RTD	Resistance Temperature Detector
UTM	Universal Transverse Mercator
V:H	Vertical : Horizontal
VSD	Variable Speed Drive

UNITS	
km	Kilometer
m	Meter
cm	Centimeter
mm	Millimeter
ft	Feet
in	Inches
ML	Megaliter
kL	Kiloliter
s	Second
V	Volt
mA	Milliamp

1.0 INTRODUCTION

Agnico Eagle Mines Limited (Agnico Eagle) retained the services of Tetra Tech and WSP Canada Inc. to carry out the design works associated with the surface infrastructures for the Meliadine project, a gold mine located approximately 25 km north from Rankin Inlet, and 80 km southwest from Chesterfield Inlet in the Kivalliq Region of Nunavut. These works include the fuel storage and containment facilities at the Rankin Inlet Itivia site and Meliadine site.

Tetra Tech and WSP Canada Inc. previously prepared the design report and drawings for construction related to the Fuel Storage and Containment Facilities for the Project including one fuel storage facilities at the Rankin Inlet Itivia site and two at the Meliadine site.

Tetra Tech was retained by Agnico Eagle to prepare a construction summary (as-built) report for the Mine Site Fuel Storage and Containment Facilities. Reports detailing the other fuel storage facilities will be covered under different reports.

The 250 kL tank number was changed from Tank #6 to Tank #5 after the submittal of the design report at the Mine Site Fuel Storage and Containment Facilities.

As required by the Water Licence A (No. 2AM-MEL1631), this report summarizes the construction work of the Mine Site Fuel Storage and Containment Facilities, including the secondary containment for the fuel farm, pumping station and ancillaries, field erection, and commissioning of Tank #3 (3 ML) and Tank #5 (250 kL). Included in this report is:

- A summary of the characteristics of the Mine Site Fuel Storage and Containment Facilities;
- Documentation on field decisions that deviate from original plans;
- As-built drawings;
- Survey drawings conducted during and after the construction of the Mine Site Fuel Storage and Containment Facilities;
- Photographs of the Mine Site Fuel Storage and Containment Facilities;
- Inspection Reports and Quality Control Documents for the Portal#1 Offsite and Onsite Fabrication and Fuel Modules;
- Inspection reports for the Inspection Test Plan (ITP), and Handover Package of Tank #3 and Tank #5;
- Inspection reports for the Quality Control for Geomembrane Installation;
- Particle Size Summary of 30 mm minus material;

2.0 SUMMARY OF THE CONSTRUCTION

2.1 Site Location Plan

The figure below presents the site location plan for the Mine Site Fuel Storage and Containment Facilities and pumping station located northeast of Portal #1 around a UTM (NAD83, Zone 15) coordinate of 539,335E and 6,989,096N.

Figure 2.1: Site Location Plan

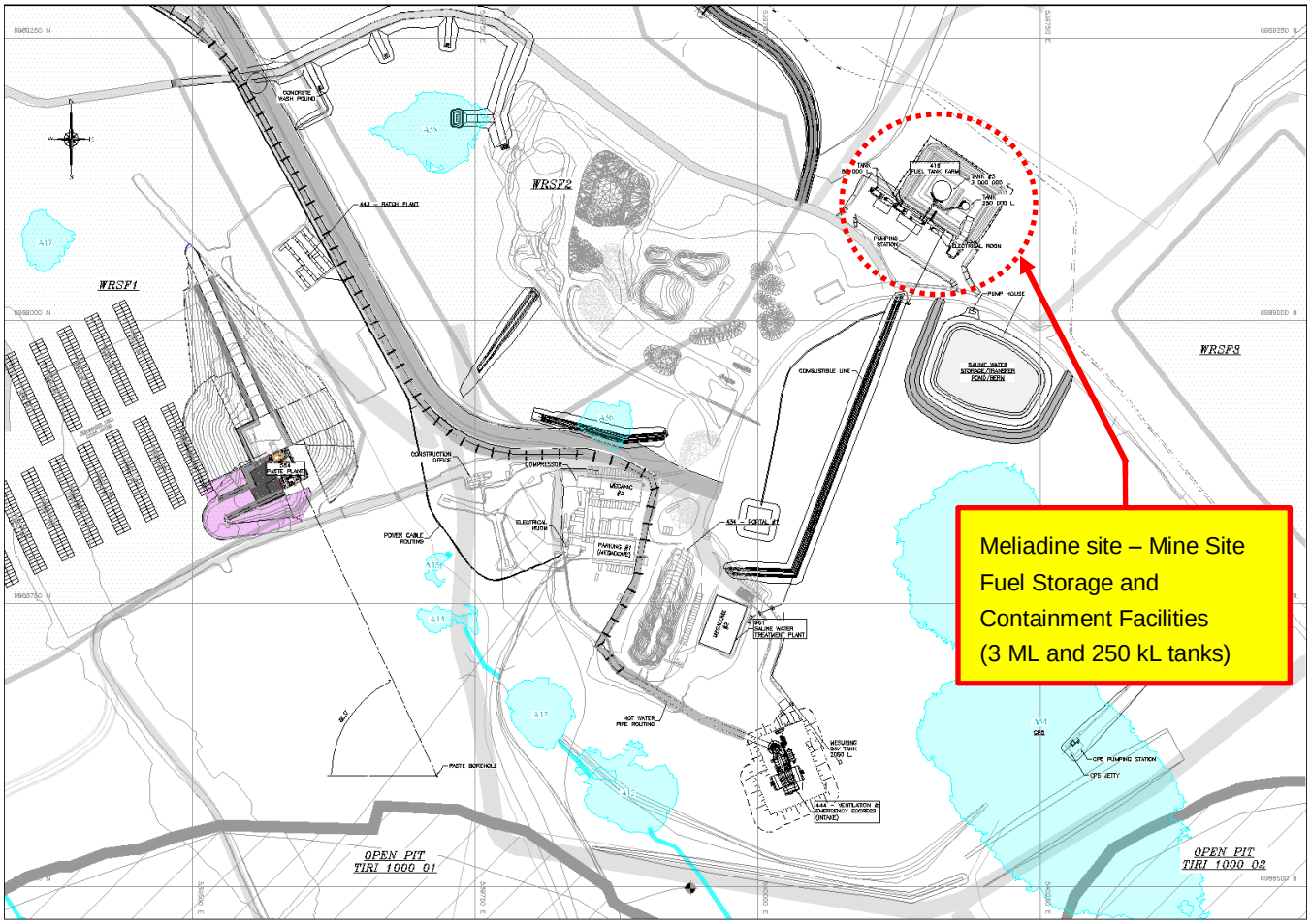

2.2 Construction Schedule

Construction activities at the Mine Site Fuel Storage and Containment Facilities for the commissioning of Tank #3 and Tank #5 were conducted between June and December 2017. Construction was completed according to the milestone dates shown in Table 2.1.

Table 2.1: Mine Site Construction Milestone Dates

Item	Date
Site Preparation	June 2017
Under Liner Material Placement	June 5th, 2017 to July 17th, 2017
Containment Berm	September 13th, 2017 to October 12th, 2017
Liner System Installation	July 18th, 2017 to October 12th, 2017
Tank #3 Erection	July 31st, 2017 to September 13th, 2017
Tank #5 Erection	August 29th, 2017 to September 13th, 2017
Overliner Material Placement	July 19th, 2017 to October 18th, 2017
Mine Site Facility Testing	November 15th, 2017 to December 6th, 2017
Commissioning of Tank #3 and Tank #5	September 23rd, 2017
Pumping Station Installation	September 16th, 2017 to December 6th, 2017
Piping Interrelated to Pumping Station	September 16th, 2017 to October 7th, 2017
Electrical Construction	September 16th, 2017 to December 6th, 2017
System Operational for Tank #3 and Tank #5	December 6th, 2017

2.3 As-built Drawings and Photographs

As-built drawings are presented in Appendix A.

Survey drawings conducted during and after the construction of the Mine Site Fuel Storage and Containment Facilities can be found in Appendix B.

Photographs of the Mine Site Fuel Storage and Containment Facilities during and after construction are shown in Appendix C.

3.0 CODES AND STANDARDS

3.1 Compliance for Field Erected Fuel Tanks

The systems comply with all codes and standards related to the project (Federal, Territorial, Municipal, NBCC, NFCC, CEC, CSA, NFPA, and API) as well as the directives of the authorities having jurisdiction over the project., including specific codes such as R-125-95 NWT, Mine Health and Safety Act and RRNWT 1990, C F-12 Fire Prevention Regulations. See Table 3.1 below.

Table 3.1: Mine Site Field Erected Fuel Tanks As-built Compliance

Fuel Farm Description	Mine Site Fuel Storage Containment Facilities Compliance	
	Tank #3	Tank #5
Comply with CCME	Yes	Yes
Equipped with Overfill Protection	Yes	Yes
Underground Piping Double Wall	Yes	Yes
Underground Piping Installed to Collect Leak into an Accessible Sump	Yes	Yes
Connections for Filling/Emptying Storage Tanks Kept Close	Yes	Yes
Material	G40.21M-260WT	G40.21M-260WT
Product	Diesel	Diesel
Volume	3 ML	250 kL
Diameter	18.6 m	8.2 m
Height	11.2 m	4.7 m

3.2 Compliance for Secondary Containment

The secondary containment for aboverground storage tanks complies to NFCC standards. The base and walls of the containment basin were constructed to withstand a full hydrostatic head and has a permeability of 1_E^{-13} cm/s while the required permeability is 1_E^{-6} cm/s. The tanks are located entirely within the diked area, with an impermeable membrane covered with a non-combustible material.

Table 3.2: Mine Site Secondary Containment As-built Compliance

Parameters	Description		Compliance
Enclosed Tanks	Tank #3	Tank #5	-
Volume	3 ML	250 kL	-
Secondary Containment Requirement / Actual Containment Capacity (for both tanks)	3 300 m^3 / 3 928 m^3		Yes
Base and Wall Membrane to Withstand Hydrostatic Head	HDPE		Yes
Permeability (1_E^{-6} cm/s min.)	1_E^{-13} cm/s		Yes
Tanks Located Entirely Within the Diked Area	-		Yes

As shown in Table 3.2 above, the actual volume capacity of 3 928 m^3 complies with the legal requirement which states that the minimum required capacity is 110% of the volume of the larger tank for the operation of the fuel farm. The actual versus designed capacity was reduced by 182 m^3 but the actual volume capacity is still greater than the required capacity of 3 300 m^3.

3.3 Distance Restrictions As-built

The minimum clearances that were required or recommended by the Design Rationale for Fuel Storage and Distribution Facility by Public Works and Services of the Government of the Northwest Territories and NFPA-30 were met and are listed on Table 3.3 below:

Table 3.3: Distance Restrictions

Item	Required	Tank #3	Tank #5
Distance Between Tanks	¼ (D3 + D5) = 6.7 m D3=18.6 m, D5=8.2 m	11.17 m	
Distance Between Tank and Toe of the Dike	1.50 m Min.	9.81 m	9.14 m
Distance Between Tank and CL of the Dike	½ (Height of Tank) = 5.6 m / 2.35m H3=11.2 m, H5=4.7 m	13.90 m	12.98 m
Distance Between Property Limit (that can be built upon) and Tank	Tanks with less than 3 000 000 gallons: 165 ft. = 50.29 m	> 985 m	> 1 000 m
Distance Between Property Limit and Exterior Toe of the Dike	3.0 m Min.	> 950 m	
Distance Between Tank and Public Roads	55 ft. = 16.76 m	≈ 30 km	≈ 30 km

4.0 FIELD DECISIONS FOR THE FIELD ERECTED FUEL TANK #3 AND TANK #5 AND SURROUNDING FACILITIES (STRUCTURAL, MECHANICAL, AND ELECTRICAL)

4.1 Documentation on Field Decisions that Deviate from Original Plans

This section documents variations from original design which were approved by the designer and/or the field engineer on site for the field erected fuel tanks and piping systems. The designed intent of the structure was not compromised with the changes to the original design.

A construction summary was prepared for the Meliadine Mine Site Tank Farm Area and is located in Appendix D.

The construction work led to slight variations from the original design in the structural, mechanical, and electrical aspects of Tank #3 and Tank #5 of the Mine Site Fuel Farm.

4.1.1 Structural

- The inspection test for leaks in Tank #3 and Tank #5 was a liquid penetrating test which complies with the API standard 650. Additional equipment including a 12 inch pressure vacuum, shell brackets, and vents were installed.
- The handrails were changed to steel angle of 55 mm x 55 mm x 6 mm instead of a pipe handrail.
- All manholes will be painted with Thermarust paint to prevent rust damage. Painting for both tanks will be done in summer 2018.
- The pumping station container was changed from a 20 feet to a 40 feet container.

4.1.2 Mechanical

- Vent valves were installed at the top of the dike section in the pipeline for Tank #3 and Tank #5.
- The loading arm manufacturer was changed from Emco to OPW due to time constraints of the delivery.

4.1.3 Electrical

- One switch per variable speed drive (VSD) was installed per pump. The 600 V power junction boxes were removed, and control cables were installed between cabinets and the VSD.
- Additional lighting and fixtures were installed. One emergency lighting fixture and one 120 V receptacle in each operator room.
- Installation of one strobe light on Tank #3.
- To avoid adding a resistance temperature detector (RTD) card to the programmable logic controller (PLC), a 4-20 mA signal from the RTD temperature sensor was added.
- A temperature sensor was installed on Tank #3 and Tank#5.
- An Ethernet cable network between the Microload PLC will replace the BMXEAE0300 and MBXFTB2000.

4.2 Maintenance, Inspection, Construction Monitoring, and Inspection Reports

The construction monitoring was managed by Agnico Eagle. Several activities were conducted during construction to ensure the quality of the work. Here is a description of the reports prepared to summarize the quality control, monitoring, or inspection performed during the construction of key activities.

- Portal #1 Offsite and Onsite Fabrication Quality Control Documents dated June 9th, 2017 prepared by Nuqsana Promec Mining, see Appendix E. Quality control was done throughout the construction and fabrication the project, including but not limited to, the catwalk, piping, and mechanical fixtures.
- Fuel Module Quality Control Documents dated July 10th, 2017 prepared by Nuqsana Promec Mining, see Appendix F. Documentation for inspection and test plan for mechanical, piping, and also red line are included in this document.
- Civil Earthworks Inspection Test Plan (ITP) dated October 20th, 2017 prepared by MTKSL, see Appendix G.
- Handover Package of Tank #3 dated October 20th, 2017 prepared by Inukshuk Construction Limited, see Appendix H. Testing and Inspection Test Plans (ITP) were done throughout the erection of Tank #3 and the installation of the mechanical and electrical systems and are included in this document.
- Handover Package of Tank #5 dated November 15th, 2017 prepared by Inukshuk Construction Limited, see Appendix I. Testing and Inspection Test Plans (ITP) were done throughout the erection of Tank #5 and the installation of the mechanical and electrical systems and are included in this document.

All of the inspections done during and after the construction of Tank #3 and Tank #5 at the Mine Site Storage Containment Facilities were shown to comply with API standard 650. No leaks were found using diesel and liquid penetration tests, and all welds were deemed acceptable under multiple tests. Table 4.1 below shows some of the inspections that were done during the fabrication and erection of the tanks as provided in the Handover Packages.

Table 4.1: Mine Site Tank As-built Inspections

Description	Test Method	Tank #3 Result	Tank #5 Result
Tank Pedestal Foundation	Measurement	Acceptable	Acceptable
Floor Weld	Visual	Acceptable	Acceptable
Floor Weld	Vacuum Test	Acceptable	Acceptable
Shell to Floor Weld	Visual	Acceptable	Acceptable
Shell to Floor Weld	Diesel Test	Acceptable	Acceptable
Horizontal Welds	Visual	Acceptable	Acceptable
Vertical Welds	Visual	Acceptable	Acceptable
Vertical Plumbness	Measurement	Acceptable	Acceptable
Shell Plate	Diesel Test	Acceptable	Acceptable
Horizontal and Vertical Welds	Diesel Test	Acceptable	Acceptable
Compression Ring Weld	Visual	Acceptable	Acceptable
Roof Weld	Visual	Acceptable	Acceptable
Roof Weld	Vacuum Test	Acceptable	Acceptable
Column Plumbness	Measurement	Acceptable	Acceptable
Shell Nozzle Weld	Visual	Acceptable	Acceptable
Tank Leak	Air Test	Acceptable	Acceptable
Shell Manway Welds	Visual	Acceptable	Acceptable
Roof Manway Welds	Visual	Acceptable	Acceptable
Shell Neck Welds	Diesel Test	Acceptable	Acceptable
Stairs and Platforms	Visual	Acceptable	Acceptable

5.0 FIELD DECISIONS FOR THE SECONDARY CONTAINMENT FACILITY

5.1 Documentation on Field Decisions that Deviate from Original Plans

This section documents variations from original design which were approved by the designer and/or the field engineer on site. The designed intent of the structure was not compromised with the changes to the original design.

A construction summary was prepared for the Mine Site Fuel Storage and Containment Facilities by the Agnico Eagle construction team. This summary is available in Appendix J.

The construction work led to slight variations from the original design in the geometry of the Mine Site Fuel Farm. The Mine Site Fuel Storage Containment Facilities geometry and characteristics were adjusted to site conditions. Table 5.1 below presents the changes between the proposed and final works.

5.1.1 Tank Foundation As-built

- A slope of 1V:120H was required under the tanks, sloping from the center of the tank to the edge of the tank foundation pad.
- Adjustments were done on the sloping of the floor of the secondary containment to improve the flow directions towards the sump.

5.1.2 Dike and Secondary Containment

- The dimensions of the dike centerline (CL) to centerline (CL) are greater by 0.2 m length and 0.5 m width.
- The average top width of the dike crest is 1.0 m which is an increase of 0.4 m from the original 0.6 m design.
- The containment height was reduced by 0.12 m to a height of 1.53 m.
- The depth of fill placed over the liner was increased by 0.1 m to a depth of 0.4 m.
- The average height of the dike crest decreased by 0.13 m to an average of 1.67 m.
- A detail for the sump area was provided by the designer.
- The rip-rap was removed from the ditch. The geometry of the ditch was changed due to constructability issues and approved by the field engineer. The overall water management of the containment facility was unaffected, sloping toward the sump area where the clean water will be pumped out of the fuel farm.

5.1.3 Fence

- It was decided to not install the fence surrounding the Mine Site Fuel Storage and Containment Facility as originally planned because access to the site is already restricted to authorized personnel only.

Table 5.1: Mine Site Fuel Storage and Containment Facilities Geometry and Characteristics

Item	Proposed		Actual		Difference
	Tank #3	Tank #5	Tank #3	Tank #5	
Secondary Containment Permeability (max.)	1_E^{-6} cm/s		1_E^{-13} cm/s		- 9.9_E^{-7} cm/s
Dike: length, width (CL to CL) (avg.)	64.6 m x 46.2 m		64.8 m x 46.7 m		+ 0.2 m / + 0.5 m
Dike height (avg.)	1.8 m		1.67 m		- 0.13 m
Containment Height (avg.)	1.65 m		1.53 m		- 0.12 m
Dike flat top width (avg.)	0.6 m		1.0 m		+ 0.4 m
Dike embankment slope (avg.)	1V:2H		1V:2H		-
Impervious area	3 055 m^2		3 478 m^2		+ 423 m^2
Tank Foundation Pad (avg.)	21 m x 21 m	11 m x 11 m	21 m x 21 m	11 m x 11 m	-
Tank Foundation Thickness (min.)	900 mm	900 mm	900 mm	900 mm	-
Tank Foundation Shoulder (min.)	1.2 m	1.2 m	1.2 m	1.2 m	-
Tank Foundation Pad Embankment Slope (avg.)	1V:2H	1V:2H	1V:2H	1V:2H	-
Tank Foundation Pad Slope (avg.)	1V:120H	1V:120H	1V:120H	1V:120H	-
Tank foundation pad thickness, above surrounding ground (avg.)	0.4 m	0.4 m	0.4 m	0.4 m	-
Depth of Liner Under Fill (avg.)	0.3 m		0.4 m		+ 0.1 m
Containment Capacity	4 110 m^3		3 928 m^3		- 182 m^3

5.2 Inspection, Construction Monitoring, and Inspection Reports

The construction monitoring was managed by Agnico Eagle. Several activities were conducted during construction to ensure the quality of the work. Here is a description of the reports prepared to summarize the quality control, monitoring, or inspections performed during the construction of key activities.

- Several particle size analyses were conducted for the 30 mm minus produced from Run of Mine and Esker material to be used for the liner system. It was approved by the field engineer and the results and summaries can be found in Appendix K and Appendix L, respectively.
- Civil Earthworks Inspection Test Plan (ITP) dated October 20th, 2017 prepared by MTKSL, see Appendix G.
- Quality Control Final Report prepared by Texel Geosol for Nuna Kivalliq Earthworks Inc, see Appendix M. Testing, both non-destructive and destructive, was performed to ensure the quality of the installation of the geosynthetic materials, including welding. Texel Geosol certified that all materials were installed according to the project plans and specifications.

6.0 EARTHWORKS

A shortage of granular material led to slight changes in the materials:

- The layer of 200 mm minus granular material that was specified was replaced with Class A Borrow Pit or 600 mm minus granular fill graded to a particle size of ≤ 200 mm for the Mine Site Fuel Storage Containment Facility.
- The fill thickness of the 30 mm minus granular fill over and under the liner system was changed to 300 mm and 200 mm respectively, approved by the designer. This change was to allow the heavy equipment required for construction to access the site. This change did not affect the total material quantities.

Due to the location of the Tank Farm being outside the CP1 containment area, rockfill for all material underneath the liner and the service area was sourced from “clean” sources:

- 600 mm minus granular material (within the tank containment area) was obtained from the remnants of the Temporary Water Treatment Pad and access road (previously placed in 2016 and therefore subject to multiple flushings) and Portal #2 drill/blast operations for the initial surface open cut.
- 600 mm minus granular material (for the service area) was obtained from the Meliadine Esker.
- 200 mm minus granular material was sourced from material crushed during winter 2016 (and therefore subject to multiple flushings).
- 30 mm minus granular material placed underneath the liner was sourced from processed esker material (Meliadine Esker).

The as-built material quantities for the Mine Site Fuel Storage Containment are presented in Table 6.1 below.

Table 6.1: Earthworks As-built Material Quantities

Item*	Proposed*	Actual	Difference
Sand	50 m^3	35 m^3	- 15 m^3
Riprap (50-300 mm)	30 m^3	-	- 30 m^3
30 mm minus	1 752 m^3	2 606 m^3	+ 854 m^3
50 mm minus	1 229 m^3	920 m^3	- 309 m^3
Borrow Pit CL-A or Granular Fill (Graded to < 200 mm)	3 114 m^3	937 m^3	- 2 177 m^3
Borrow Pit CL-A or Granular Fill (600 mm minus)	15 617 m^3	17 844 m^3	+ 2 227 m^3
Total of fill	**21 792 m^3**	**22 342 m^3**	**+ 550 m^3**
540 g/m^2 Non-woven geotextile	10 180 m^2	7 190 m^2	- 2 990 m^2
HDPE Geomembrane	5 090 m^2	3 595 m^2	- 1 495 m^2

* The proposed item names and values in the table have been taken from the latest drawing that was issued for construction, 65-000-230-225 revision 1.

7.0 ERRATA

In the inspection and testing plan forms, part of the Portal #1 Offsite and Onsite Fabrication Quality Control Documents (Appendix E), the area is shown as Rankin Inlet while it should be Mine Site Fuel Farm.

8.0 LIMITATIONS OF REPORT

This report and its contents are intended for the sole use of Agnico Eagle Mines Ltd. and their agents. Tetra Tech does not accept any responsibility for the accuracy of any of the data, the analysis, or the recommendations contained or referenced in the report when the report is used or relied upon by any Party other than Agnico Eagle Mines Ltd., or for any Project other than the proposed development at the subject site. Any such unauthorized use of this report is at the sole risk of the user. Use of this report is subject to the terms and conditions stated in Tetra Tech's Services Agreement.

9.0 CLOSURE

We trust this report meets your present requirements. If you have any questions or comments, please contact the undersigned.

Respectfully submitted,
Tetra Tech

Prepared by:
Christopher Morin, Jr. Eng.
Direct Line: 514.257.2427 x3240
Christopher.Morin@tetratech.com

Reviewed by:
Josée Alarie, P.Eng.
Direct Line: 514.257.2427 x3323
Josee.Alarie@tetratech.com

APPENDIX A

As-built Drawings of Mine Site Fuel Storage and Containment Facilities

NO. DESSIN
DRAWING NO. 65-000-230-225T0227_R3

FORMAT ARCHD

QUANTITY CONSTRUCTION CHART			
	TANK FARM (AREA : 5090m²)	SERVICE PAD (AREA : 5210m²)	TOTAL
Aggregate material	placed (m³)	placed (m³)	placed (m³)
Sand	35	0	35
30mm MINUS	2606	0	2606
50mm MINUS	0	920	920
200mm MINUS	937	0	937
ROM or CL. A	15661	2183	17844
TOTAL	19239	3103	22342

DIKE CONTAINMENT AREA:
1. DIKE CONTAINMENT VOLUME REQUIRED: 3 300m³
2. DIKE CONTAINMENT CACULATED CAPACITY: 3 894m³

TEL QUE CONSTRUIT
AS BUILT
AGNICO EAGLE DATE : 2018-03-31

LIMIT OF FUEL FARM AND SERVICE PAD 2017 CIVIL WORK

FUEL TANK FARM AREA FOOTPRINT: 5090m²

REFUELING SERVICE PAD AREA FOOTPRINT: 4385m²

TK #3 3 M L

TK #5 250 000 L

TANK PAD

TANK PAD SEE DETAIL ON DRAWING 65-000-230-227

DITCH L: 28m @ S:0.6% SEE DRAWING 65-000-230-227 FOR DETAILS

L:27m @ S:0.38%

L:30m @ S:1.7%

L:7m @ S:0.7%

PIPING AND EQUIPEMENT (BY OTHERS)

DIKE SEE DETAIL ON DRAWING 65-000-230-227

ACCESS RAMP SEE DRAWING 65-000-230-227 FOR DETAILS

ACCESS RAMP

CATWALK (BY OTHERS)

SUMP AREA BOTTOM ELEV.: 66.49 (SEE NOTE 6)

PUMPING STATION (BY OTHERS)

ELECTRICAL ROOM (BY OTHERS)

50000L TANK FOR LIGHT VEHICLE (BY OTHERS)

AREA BETWEEN THE TOE OF THE REFUELING SERVICE PAD AND THE EXISTING ROAD TO BE BACKFILLED WHEN RUN OF MINE MATERIAL IS AVAILABLE

SEE DRAWING 65-000-230-227 FOR PAD STRUCTURE DETAIL

CONNECTION TO GENTLY MERGE

CONNECTION TO GENTLY MERGE WITH EXISTING ROAD

EXISTING ROAD

AREA = ±1395 m²

F.G.: 68,38 E: 540157.512 N: 6989141.628
F.G.: 69,91
F.G.: 69,86
F.G.: 68,52 E: 540205.034 N: 6989110.380
F.G.: 68,11
F.G.: 68,08
F.G.: 67,67
F.G.: 68,21
F.G.: 68,45
F.G.: 68,56
F.G.: 68,19
F.G.: 67,60
F.G.: 67,51
F.G.: 68,02
F.G.: 67,47
F.G.: 68,32 E: 540136.411 N: 6989109.537
F.G.: 69,93
F.G.: 67,33 E: 540101.712 N: 6989124.997
F.G.: 70,00
F.G.: 66,36 E: 540190.356 N: 6989064.731
F.G.: 67,35 E: 540121.712 N: 6989109.867
F.G.: 66,96 E: 540128.617 N: 6989105.325
F.G.: 68,08 E: 540144.049 N: 6989095.180
F.G.: 66,96 E: 540182.479 N: 6989052.354
F.G.: 67,18 E: 540087.321 N: 6989109.782
F.G.: 68,03 E: 540133.629 N: 6989079.333
F.G.: 67,53 E: 540088.457 N: 6989090.125
F.G.: 67,26 E: 540172.263 N: 6989037.215
F.G.: 67,35 E: 540079.648 N: 6989098.112
F.G.: 67,48 E: 540077.443 N: 6989088.052
F.G.: 67,52 E: 540085.878 N: 6989081.962
F.G.: 67,48 E: 540125.956 N: 6989067.664
F.G.: 67,26 E: 540176.954 N: 6989027.330
F.G.: 67,02 E: 540192.927 N: 6989023.518

0+100 0+000 0+120

A 000-230-227

B 000-230-227

56.8 107.0 33.0 11.5 37.8 21.0 11.0 9.0

1V: 2H

-0.72% -1.61% -0.50% -0.88% -1.91% -1.63% -1.84% -4.13% -5.27% -10.82% -1.61% -0.84%

65.00 66.00 67.00

PLAN CLÉ
KEY PLAN

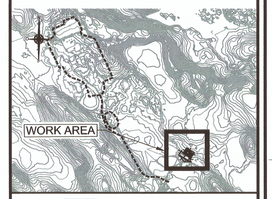

TETRA TECH

NOTES GÉNÉRALES / GENERAL NOTES

1. EXISTING GROUND DTM PROVIDED BY AEM.
2. ALL UNITS ARE IN METERS.
3. ELEVATIONS IN DRAWING PROVIDE FINISHED GRADE ELEVATIONS AT THE TOP OF THE SURFACE GRAVEL LAYER.
4. TYPICAL FILL SLOPES TO BE 1V: 3H EXCEPT FOR TANK FARM DIKE 1V: 2H. FILL SLOPES TO BE CONFIRMED IN THE FIELD BY THE GEOTECHNICAL ENGINEER.
5. TANK DIAMETERS AND LOCATIONS ACCORDING TO THE LATEST REVISION OF DRAWING 65-000-210-000.
6. SUMP AREA MADE FROM THE BOTTOM PART OF A 205L STEEL DRUM OR EQUIVALENT.
7. THE CONTRACTOR SHALL BE RESPONSIBLE FOR THE SAFETY SECURITY AND SLOPES OF ALL EXCAVATIONS, BACKFILL AND SHALL ABIDE BY ALL RELEVANT STANDARDS AND REGULATIONS. THE STABILITY, DEWATERING AND MAINTENANCE OF ALL EXCAVATIONS OR BACKFILL SHALL BE THE CONTRACTOR'S RESPONSIBILITY.
8. THE CONTRACTOR MUST COORDINATE WITH THE MECHANICAL CONTRACTOR RESPONSIBLE FOR THE FUEL TANKS, PIPES, ETC. BEFORE FINALIZING THE CIVIL WORKS.
9. GRANULAR MATERIAL SHALL BE PLACED IN LIFTS NOT EXCEEDING 300mm AND COMPACTED TO A MINIMUM OF 95% OF STANDARD PROCTOR MAXIMUM DRY DENSITY UNLESS OTHERWISE SPECIFIED IN THE DRAWINGS AND SPECIFICATIONS. BORROW PIT MATERIAL, GRANULAR FILL MATERIAL 0-600mm, OR OVERBURDEN MATERIAL SHALL BE PLACED IN LIFTS NOT EXCEEDING 600mm AND COMPACTED TO A MINIMUM OR 90% STANDARD PROCTOR MAXIMUM DRY DENSITY UNLESS OTHERWISE SPECIFIED IN THE DRAWINGS AND SPECIFICATIONS. MOISTURE CONDITIONING MAY BE REQUIRED.
10. AN AS-BUILT DRAWING SHALL BE PROVIDED AFTER CONSTRUCTION.

DESSINS EN RÉFÉRENCE / REFERENCE DRAWINGS

TITRE / TITLE	# DWG
–	–
–	–
–	–
–	–
–	–
GA–IND. SITE – NORTH SECTION	65-000-210-200

AGNICO EAGLE

REV.	DATE	DESCRIPTION	PAR/BY	APP.	CLIENT
3	2018-03-31	ISSUED AS-BUILT	C.M.	J.A.	
2	2017-11-03	ISSUED AS-BUILT	C.M.	J.A.	

REVISIONS

PERMIT TO PRACTICE
TETRA TECH INDUSTRIES, INC.
D/A TETRA TECH
Signature
Date 2018-04-05
PERMIT NUMBER: P 1029
NT/NU Association of Professional Engineers and Geoscientists

REGISTERED PROFESSIONAL ENGINEER
J.M.I.F. ALARIE
LICENSEE

2018-04-05

TITRE / TITLE
AGNICO–EAGLE – MELIADINE DIVISION
000–SITE PREP
230–GENERAL EARTH WORKS
PLAN VIEW
MINE SITE FUEL TANK FARM
FINISHED GRADE ELEVATION

DESSINÉ PAR DRAWN BY	DANIEL ROSALES	DATE 2017-03-28
VÉRIFIÉ PAR CHECKED BY	RENÉ PANAZAN	2017-03-28
APPROUVÉ PAR APPROVED BY	JOSÉE ALARIE	2017-03-28
ÉCHELLE SCALE	1:250	DATE 2016-12-19
NO. DESSIN DRAWING NO.	65-000-230-225	
NO. PROJET PROJECT NO.	6515/28920	REVISION 3
		FEUILLE / SHT 1 / 1

AE–CART–ARCH D

C:\Users\christopher.morin\Desktop\65-000-230-225to227_R3.dwg

NO. DESSIN DRAWING NO. 65-000-230-225T0227_R3

FORMAT ARCHD

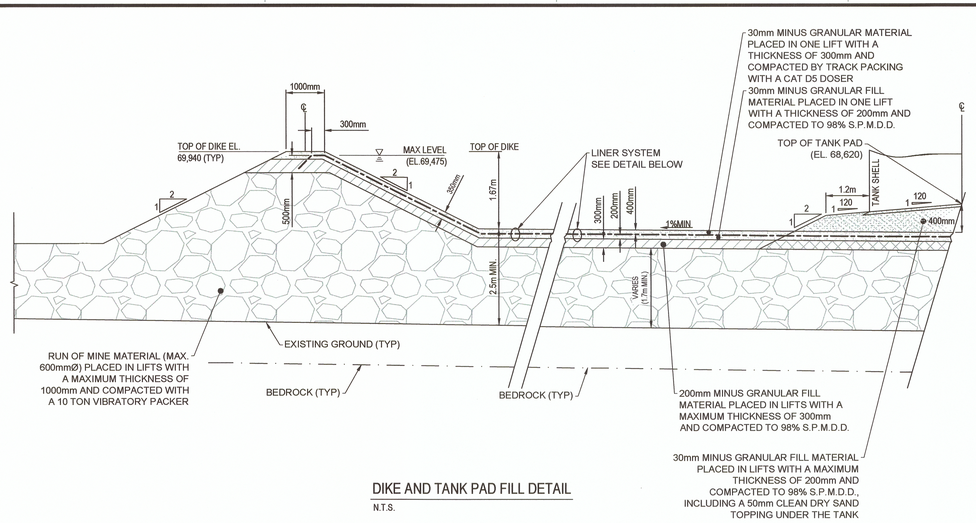

DIKE AND TANK PAD FILL DETAIL

N.T.S.

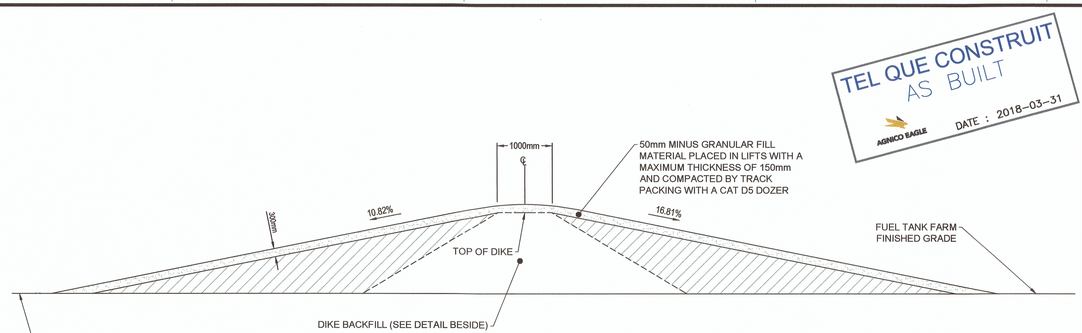

TYPICAL ACCESS RAMP FILL DETAIL

N.T.S.

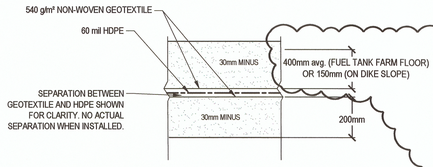

TYPICAL LINER SYSTEM DETAIL

N.T.S.

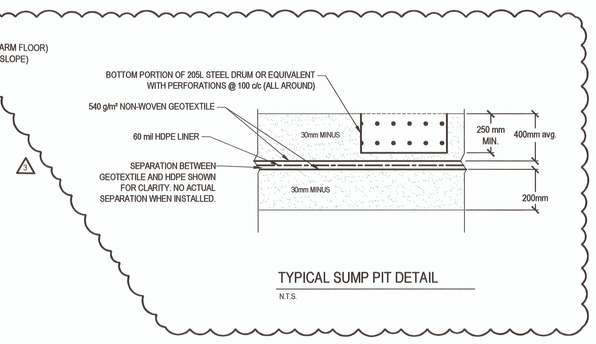

TYPICAL SUMP PIT DETAIL

N.T.S.

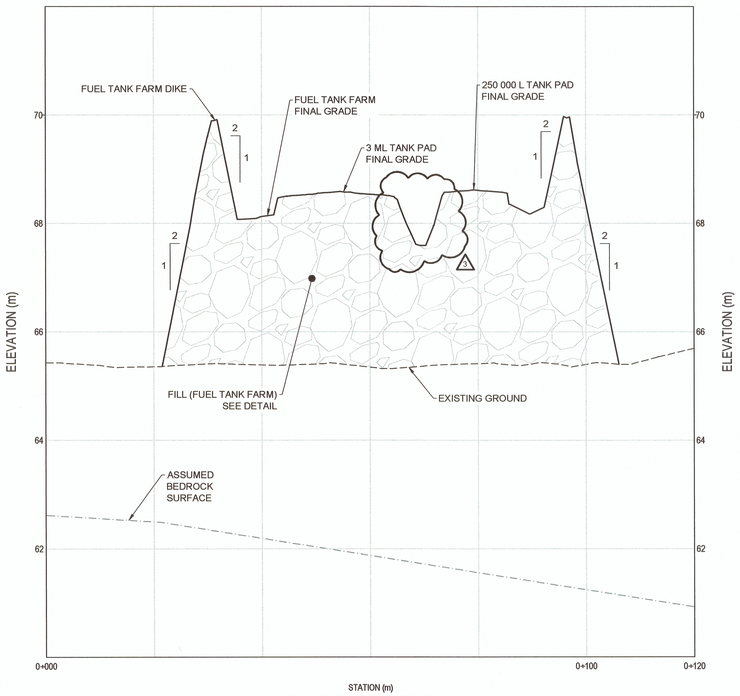

CROSS-SECTION A

SCALE H:1:500 V:1:50

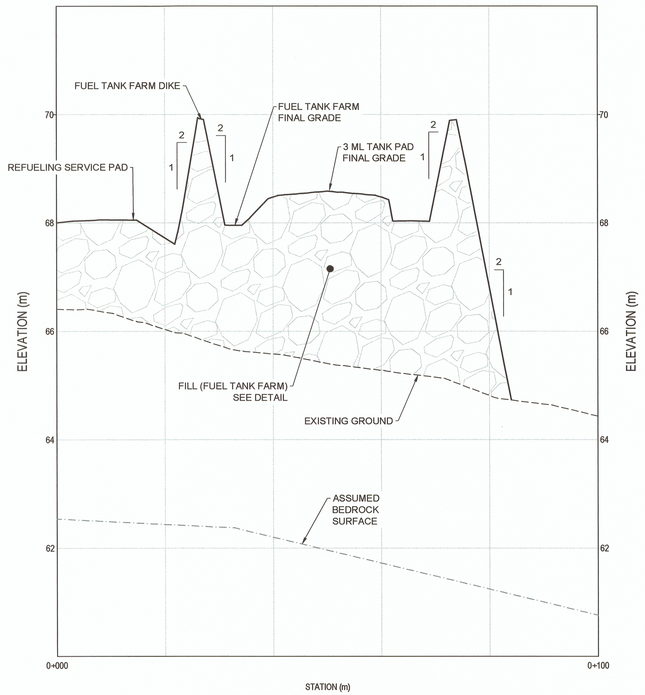

CROSS-SECTION B

SCALE H:1:500 V:1:50

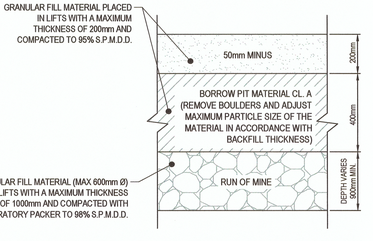

TYPICAL REFUELING SERVICE PAD AREA DETAIL

N.T.S.

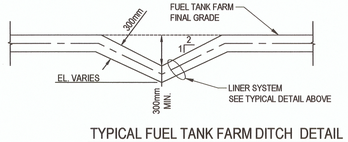

TYPICAL FUEL TANK FARM DITCH DETAIL

N.T.S.

TEL QUE CONSTRUIT AS BUILT
AGNICO EAGLE DATE : 2018-03-31

PLAN CLÉ KEY PLAN

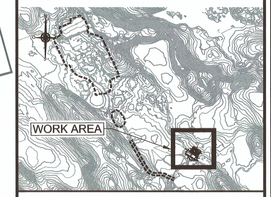

TETRA TECH

NOTES GÉNÉRALES / GENERAL NOTES

1. EXISTING GROUND DTM PROVIDED BY AEM.
2. ALL UNITS ARE IN METERS.
3. ELEVATIONS IN DRAWING PROVIDE FINISHED GRADE ELEVATIONS AT THE TOP OF THE SURFACE GRAVEL LAYER.
4. TYPICAL FILL SLOPES TO BE 1V: 3H EXCEPT FOR TANK FARM DIKE 1V: 2H. FILL SLOPES TO BE CONFIRMED IN THE FIELD BY THE GEOTECHNICAL ENGINEER.
5. TANK DIAMETERS AND LOCATIONS ACCORDING TO THE LATEST REVISION OF DRAWING 65-000-210-000.
6. SUMP AREA MADE FROM THE BOTTOM PART OF A 205L STEEL DRUM OR EQUIVALENT.
7. THE CONTRACTOR SHALL BE RESPONSIBLE FOR THE SAFETY SECURITY AND SLOPES OF ALL EXCAVATIONS, BACKFILL AND SHALL ABIDE BY ALL RELEVANT STANDARDS AND REGULATIONS. THE STABILITY, DEWATERING AND MAINTENANCE OF ALL EXCAVATIONS OR BACKFILL SHALL BE THE CONTRACTOR'S RESPONSIBILITY.
8. THE CONTRACTOR MUST COORDINATE WITH THE MECHANICAL CONTRACTOR RESPONSIBLE FOR THE FUEL TANKS, PIPES, ETC. BEFORE FINALIZING THE CIVIL WORKS.
9. GRANULAR MATERIAL SHALL BE PLACED IN LIFTS NOT EXCEEDING 300mm AND COMPACTED TO A MINIMUM OF 95% OF STANDARD PROCTOR MAXIMUM DRY DENSITY UNLESS OTHERWISE SPECIFIED IN THE DRAWINGS AND SPECIFICATIONS. BORROW PIT MATERIAL, GRANULAR FILL MATERIAL 0-600mm, OR OVERBURDEN MATERIAL SHALL BE PLACED IN LIFTS NOT EXCEEDING 600mm AND COMPACTED TO A MINIMUM OR 90% STANDARD PROCTOR MAXIMUM DRY DENSITY UNLESS OTHERWISE SPECIFIED IN THE DRAWINGS AND SPECIFICATIONS. MOISTURE CONDITIONING MAY BE REQUIRED.
10. AN AS-BUILT DRAWING SHALL BE PROVIDED AFTER CONSTRUCTION.

L'INFORMATION CI-CONTENUE EST LA PROPRIÉTÉ DE AGNICO-EAGLE LTÉE ET DOIT ÊTRE RETOURNÉE SUR DEMANDE. SANS AUTORISATION ÉCRITE PRÉALABLE, TOUTE TRANSMISSION OU COPIE(S) À AUTRUI ET TOUTE UTILISATION AUTRE QUE CELLE POUR LAQUELLE L'INFORMATION EST PRÊTÉE SONT INTERDITES. © AGNICO-EAGLE LTÉE.

THE INFORMATION HERE ON IS THE PROPERTY OF AGNICO-EAGLE LTD. AND MUST BE RETURNED UPON REQUEST, WITHOUT WRITTEN PERMISSION, ANY COPY(IES) TRANSMITTAL TO OTHERS AND ANY USE EXCEPT THAT FOR WHICH IT IS LOANED ARE PROHIBITED. © AGNICO-EAGLE LTD.

DESSINS EN RÉFÉRENCE / REFERENCE DRAWINGS

TITRE / TITLE	# DWG
–	–
–	–
–	–
–	–
–	–
GA-IND. SITE – NORTH SECTION	65-000-210-200

AGNICO EAGLE

REV.	DATE	DESCRIPTION	PAR/BY	APP.	CLIENT
3	2018-03-31	ISSUED AS-BUILT	C.M.	J.A.	
2	2017-11-03	ISSUED AS-BUILT	C.M.	J.A.	
1	2017-04-24	ISSUED FOR CONSTRUCTION	D.R.	J.A.	
0	2017-03-28	ISSUED FOR CONSTRUCTION	D.R.	J.A.	
B	2017-02-28	ISSUED FOR TENDER	D.R.	J.A.	
A	2017-01-25	ISSUED FOR COMMENTS	D.R.	J.A.	

REVISIONS

PERMIT TO PRACTICE
TETRATECH INDUSTRIES, INC.
O/A TETRA TECH
Signature
Date 2018-04-05
PERMIT NUMBER: P 1029
NT/NU Association of Professional Engineers and Geoscientists

REGISTERED PROFESSIONAL ENGINEER
J.M.F. ALARIE
LICENSEE
2018-04-05

TITRE / TITLE

AGNICO-EAGLE – MELIADINE DIVISION
000-SITE PREP
230-GENERAL EARTH WORKS
MINE SITE FUEL TANK FARM
CROSS SECTIONS AND DETAILS

DESSINÉ PAR DRAWN BY	DANIEL ROSALES	DATE 2017-03-28
VERIFIÉ PAR CHECKED BY	RENÉ PANAZAN	2017-03-28
APPROUVÉ PAR APPROVED BY	JOSÉE ALARIE	2017-03-28
ÉCHELLE SCALE	AS SHOWN	DATE 2016-12-19

NO. DESSIN DRAWING NO. 65-000-230-227

NO. PROJET PROJECT NO.	REVISION	FEUILLE / SHT
6515/28920	3	1 / 1

AE-CART-ARCH D

C:\Users\christopher.morin\Desktop\65-000-230-225to227_R3.dwg

PARTS LIST			
ITEM	QTY	DESCRIPTION	MATERIAL
F3A	7	PL 6.35 X 3048 X 6096	G40.21M-260WT
F3B	2	PL 6.35 X 3048 X 5625	G40.21M-260WT
F3C	4	PL 6.35 X 3048 X 788	G40.21M-260WT
F3D	4	PL 6.35 X 3048 X 3227	G40.21M-260WT
F3E	4	PL 6.35 X 3048 X5227	G40.21M-260WT
F3F	4	PL 6.35 X 1878 X 5652	G40.21M-260WT

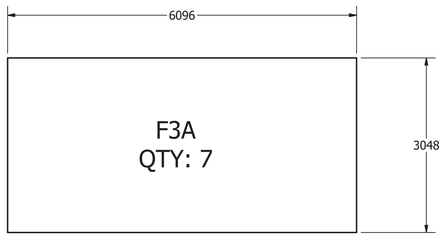

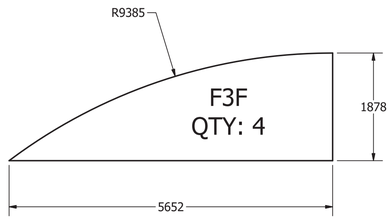

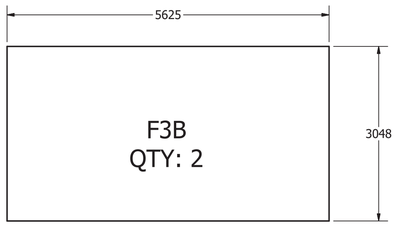

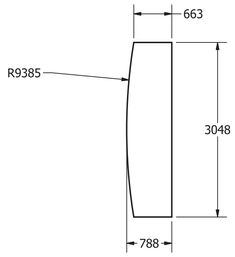

F3C
QTY: 2

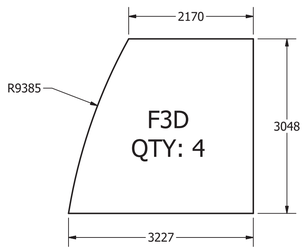

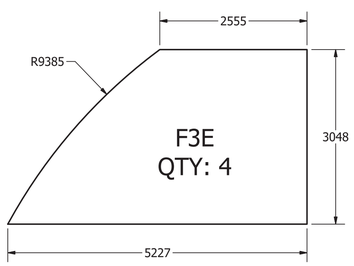

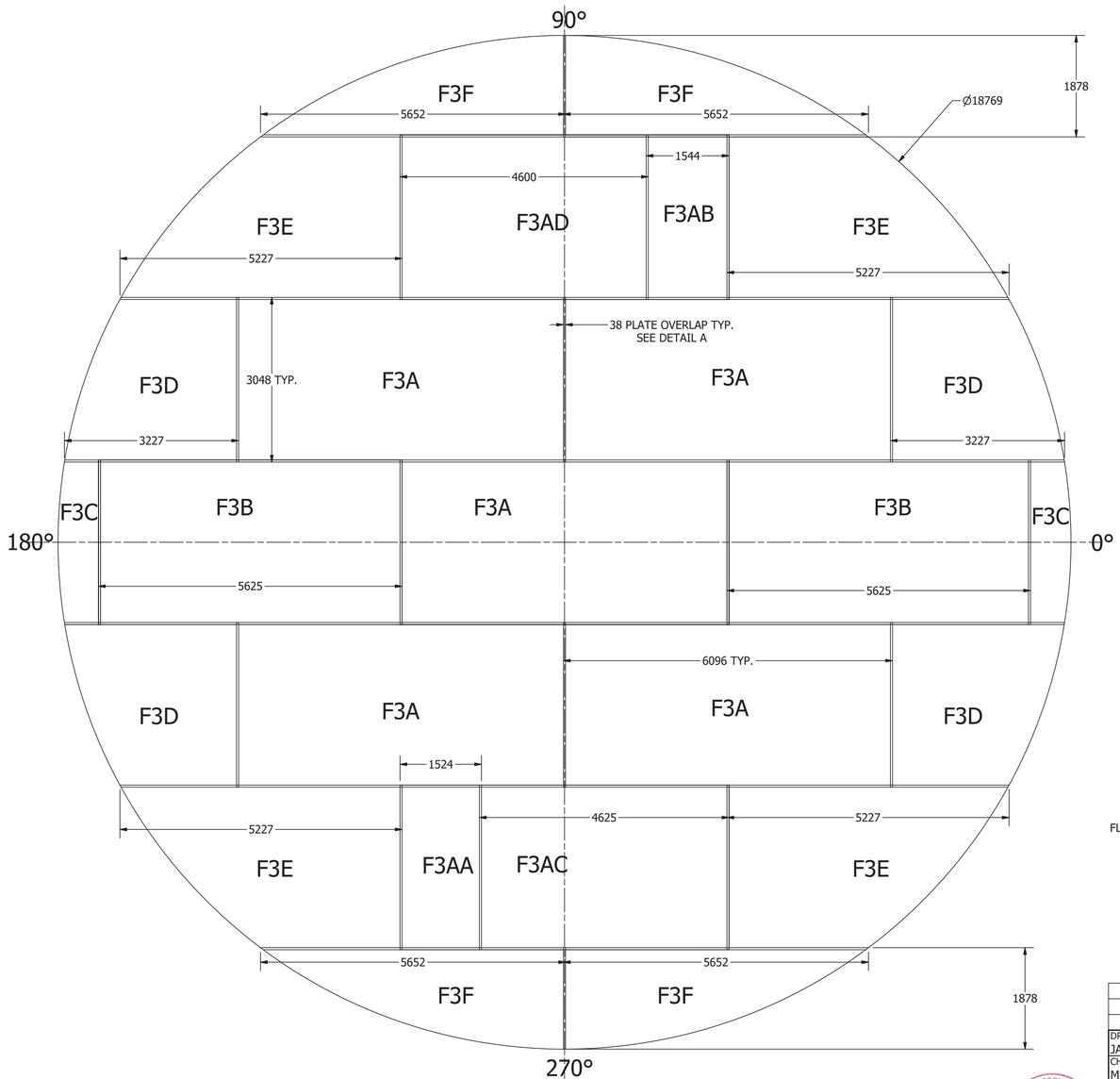

TANK 3 (3ML) FLOOR LAYOUT
SCALE 1 / 50

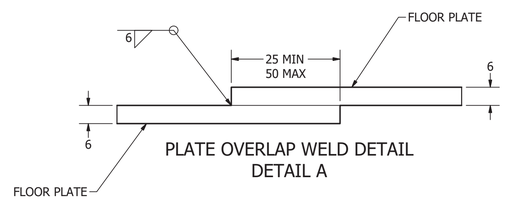

PLATE OVERLAP WELD DETAIL
DETAIL A

AS-BUILT
BY Inukshuk Construction Ltd. DATE 2017/10/02

10-Oct-2017

Permit Number: P471

REVISION HISTORY		
REV	DESCRIPTION	DATE
2	INCORPORATE FIELD MODIFICATION	10/2/2017

DRAWN JACOB SAUNDERS	1/10/2017	TK 3 (3ML) - FLOOR LAYOUT
CHECKED MARC LOSIER	3/14/2017	TITLE MELIADINE FIELD ERECTED TANKS - TANK #3 (3ML) FLOOR AND ROOF LAYOUT
QA		
MFG		
APPROVED		

SIZE	DWG NO	REV
A1	295-M3	2

SCALE 1 / 50 SHEET 1 OF 2

PARTS LIST			
ITEM	QTY	DESCRIPTION	MATERIAL
R3A	8	PL 6.35 X 3048 X 6096	G40.21M-260WT
R3B	2	PL 6.35 X 3048 X 3615	G40.21M-260WT
R3C	2	PL 6.35 X 3048 X 2505	G40.21M-260WT
R3D	2	PL 6.35 X 3048 X 2505	G40.21M-260WT
R3E	2	PL 6.35 X 3048 X 3123	G40.21M-260WT
R3F	2	PL 6.35 X 1381 x 1434	G40.21M-260WT
R3G	2	PL 6.35 X 816 x 857	G40.21M-260WT
R3H	2	PL 6.35 X 3048 X 6096	G40.21M-260WT
R3I	2	PL 6.35 X 2748 x 6096	G40.21M-260WT
R3J	2	PL 6.35 X 628 x 3711	G40.21M-260WT
R3K	2	PL 6.35 X 629 x 3093	G40.21M-260WT

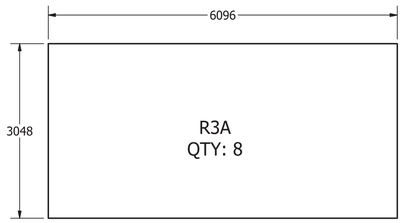

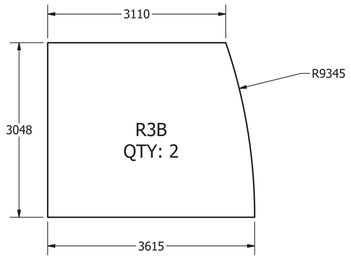

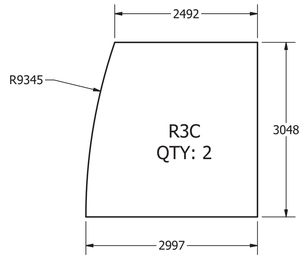

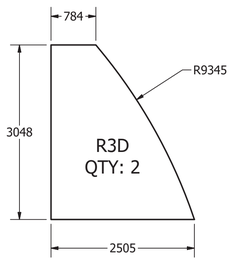

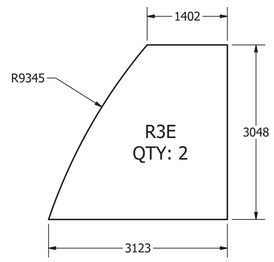

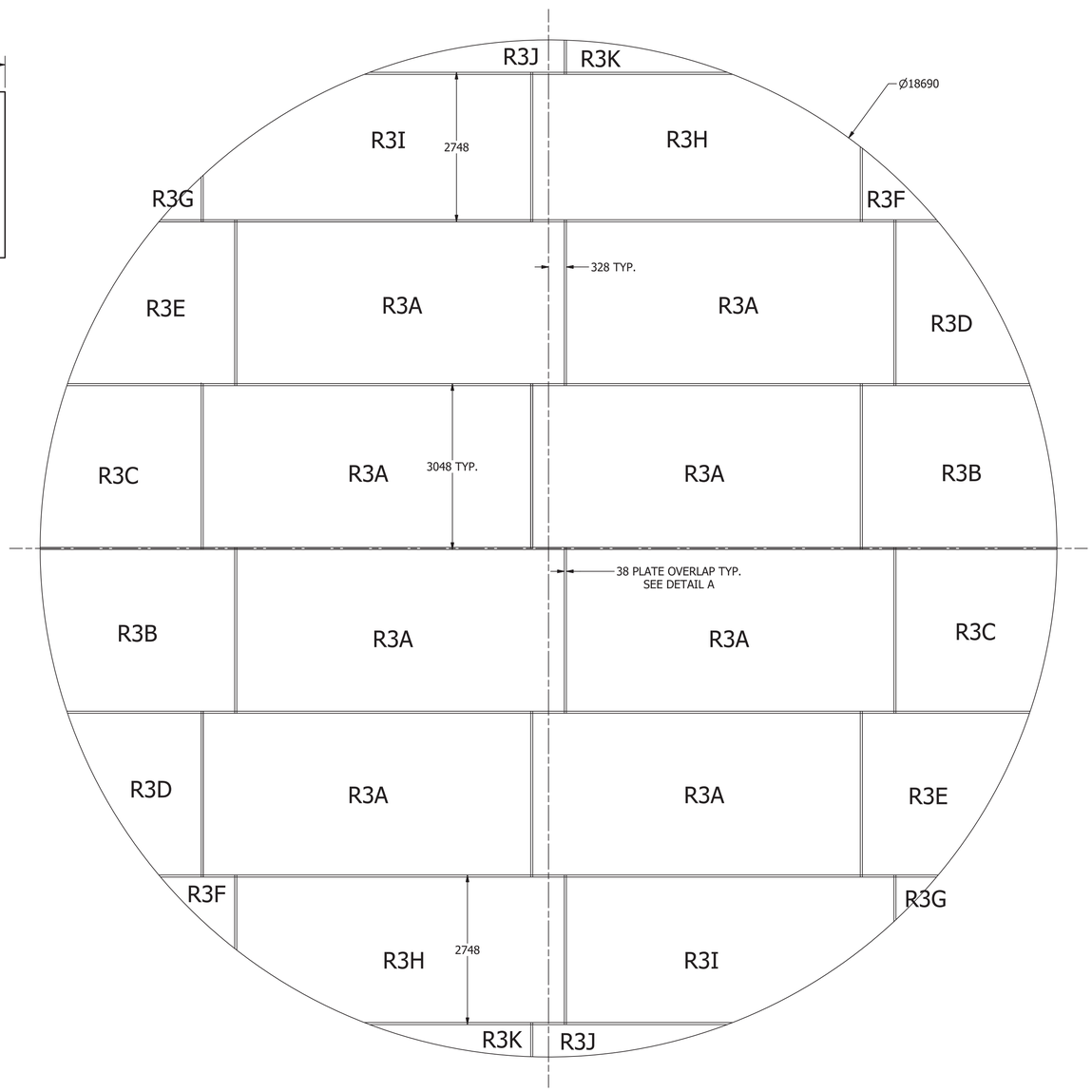

TANK 3 (3ML) ROOF LAYOUT
SCALE 1 / 50

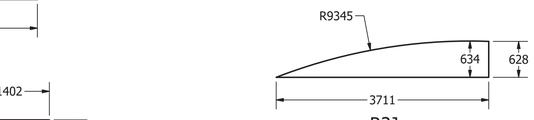

R3J
QTY: 2

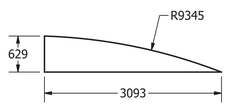

R3K
QTY: 2

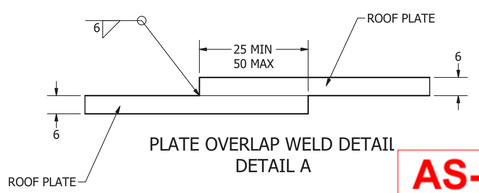

PLATE OVERLAP WELD DETAIL
DETAIL A

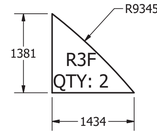

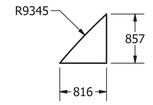

R3G
QTY: 2

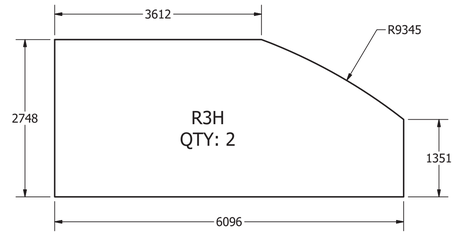

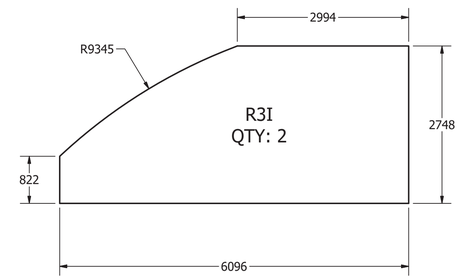

AS-BUILT
BY Inukshuk Construction Ltd. DATE 2017/10/02

Permit Number: P471

10-Oct-2017

REVISION HISTORY		
REV	DESCRIPTION	DATE
2	INCORPORATE FIELD MODIFICATION	10/2/2017

DRAWN	JACOB SAUNDERS	1/10/2017
CHECKED	MARC LOSIER	3/14/2017
QA		
MFG		
APPROVED		

TK #3 (3ML) ROOF LAYOUT

TITLE
MELIADINE FIELD ERECTED TANKS - TANK #3 (3ML) FLOOR AND ROOF LAYOUT

SIZE	DWG NO	REV
A1	295-M3	2

SCALE 1 / 50 SHEET 2 OF 2

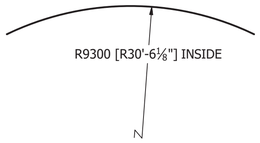

PLAN VIEW ROLLED SHELL PLATES
SCALE 1/100

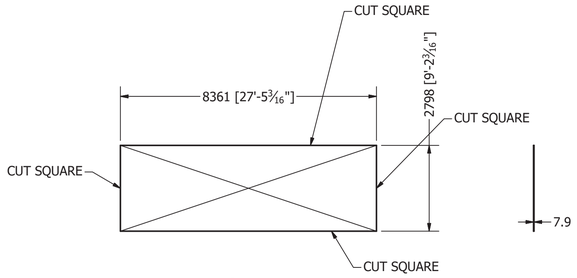

DEVELOPED VIEW
COURSE NO. 1 TO 4
7.9mm THK (5/16")
CUT FROM PLATE 2874mm x 8427mm
QTY: 28
MARK 7301

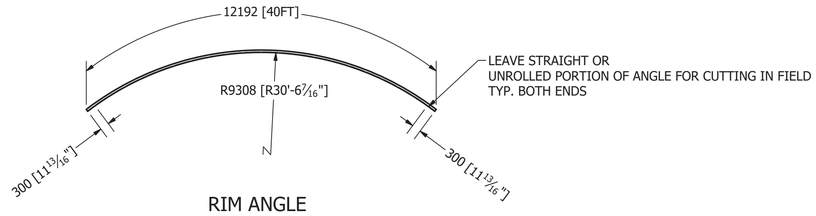

RIM ANGLE
76.2 X 76.2 X 9.5 x 12192 LONG
(3" X 3" X 3/8" x 40')
STEEL CSA G40.21M 350W
ROLLED TOE OUT
QTY: 6
MARK 7302

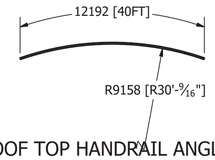

ROOF TOP HANDRAIL ANGLE
50.8 X 50.8 X 6.4 X 12192MM LONG
(2" X 2" X 1/4" X 40')
STEEL CSA G40.21M 350W
ROLLED TOE OUT
QTY: 6
MARK 7303

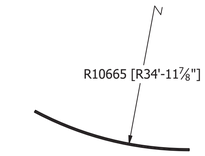

TOP VIEW



FRONT VIEW
SCALE 1/100



SIDE VIEW

STAIRWAY HANDRAIL ANGLE
50.8 X 50.8 X 6.4 X 6096MM
(2" X 2" X 1/4" X 20' LONG)
STEEL CSA G40.21M 350W
QTY: 4
MARK 7304

NOTES:

SHELL PLATES TO BE CHECKED
CORNER TO CORNER FOR SQUARENESS

STEEL PLATES: 38WT SUPPLIED BY MEL
STEEL SHAPES: 350W SUPPLIED BY FORMATECH

AS-BUILT
BY Inukshuk Construction Ltd. DATE 2017/10/02

Permit Number: P471

DRAWN	Marc Losier	2/2/2017	TANK NO. 3 - 3,000 CUM
CHECKED	Jacob Saunders	2/2/2017	TITLE: MELIADINE FIELD ERECTED TANKS - SHELL PLATES AND ANGLES ROLLING DETAILS
QA			
MFG			
APPROVED			

SIZE	DWG NO	REV
A1	295-M7	4

SCALE | SHEET 3 OF 6

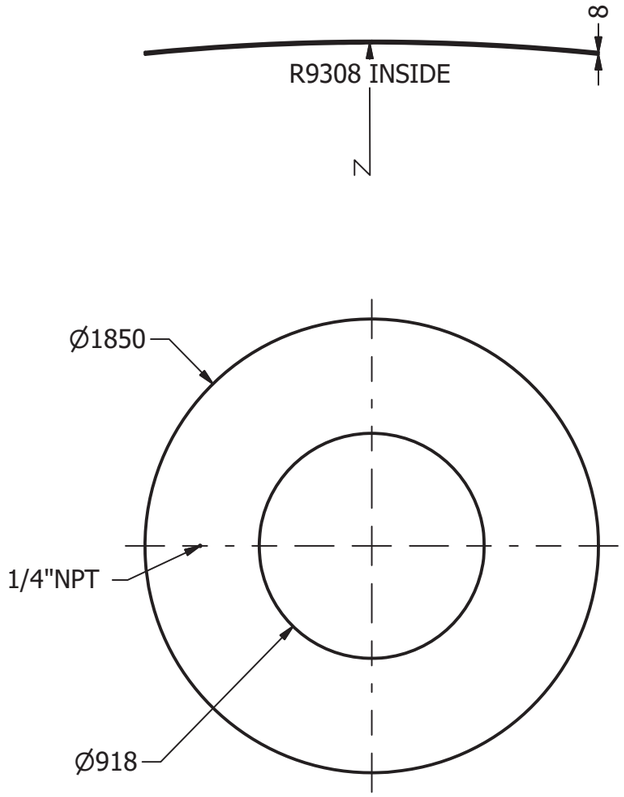

REINFORCING PLATE
SHELL MANHOLE 900MM (36")
TANK NO. 3 - 3ML
MARK: 8301
QTY: 4

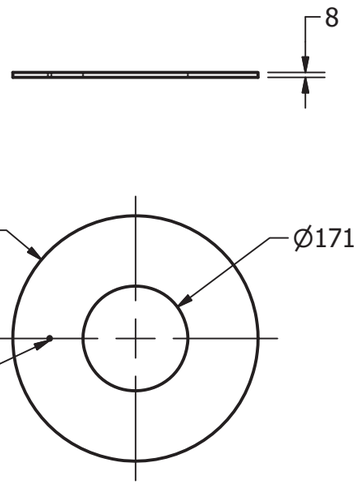

REINFORCING PLATE
SHELL NOZZLE LOADING/UNLOADING 150MM (6")
TANK NO. 3 - 3ML
MARK: 8302
QTY: 5

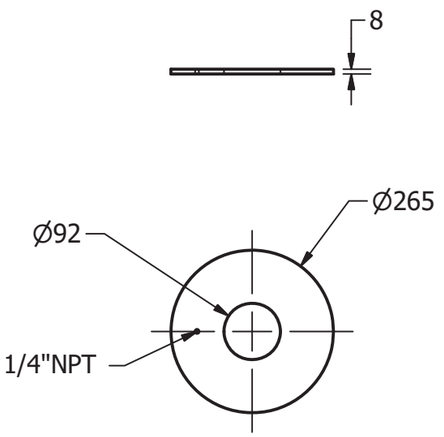

REINFORCING PLATE
SHELL WATER DRAW OFF 75MM (3")
TANK NO. 3 - 3ML
MARK: 8303
QTY: 6

MATERIAL:
STEEL CSA G40.21-38WT
NORMALIZED
TRANSVERSE CHARPY: TCVN 13FT/LBS@-45F
LONGITUDINAL CHARPY: LCVN 15FT/LBS@-45F

AS-BUILT
BY Inukshuk Construction Ltd. DATE 2017/10/02



Permit Number: P471

DRAWN Jacob Saunders	2/2/2017	TANK NO. 3 (3ML) SHELL
CHECKED Marc Losier	3/16/2017	TITLE: REINFORCING PLATE DETAILS
QA		
MFG		
APPROVED		

SIZE	DWG NO	REV
A3	295-M8	3

SCALE 1/25 SHEET 5 OF 12

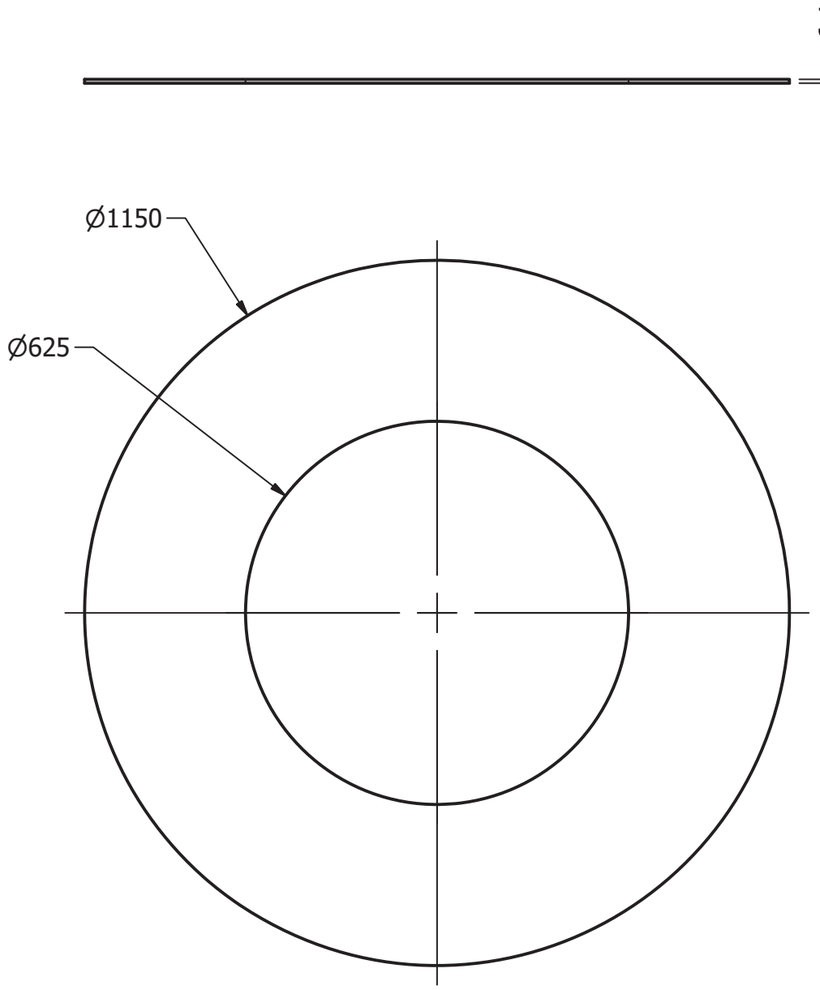

REINFORCING PLATE
ROOF MANHOLE 600MM
TANK NO. 3 - 3ML
MARK: 8304
QTY: 4

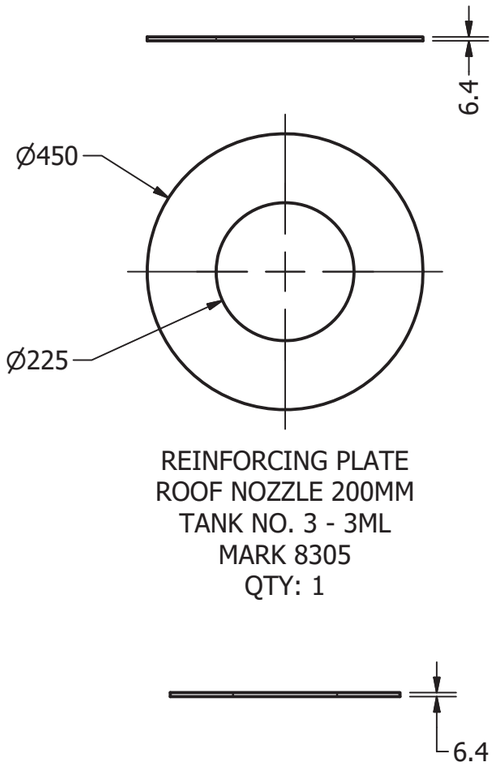

REINFORCING PLATE
ROOF NOZZLE 200MM
TANK NO. 3 - 3ML
MARK 8305
QTY: 1

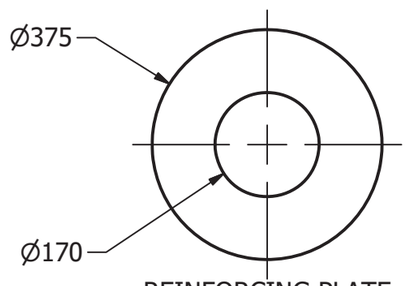

REINFORCING PLATE
ROOF GAUGE HATCH 150MM
TANK NO. 3 - 3ML
MARK: 8306
QTY: 1

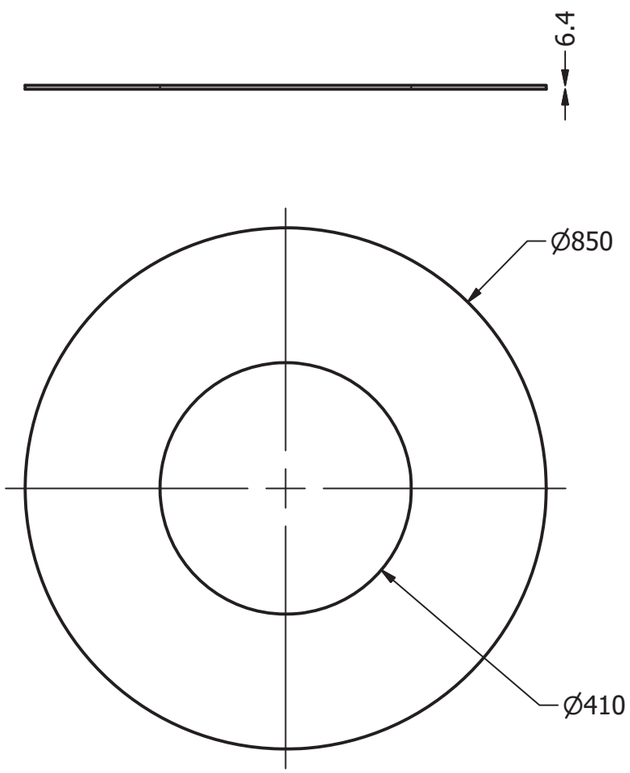

REINFORCING PLATE
ROOF VENT 400MM
TANK NO. 3 - 3ML
MARK: 8307
QTY: 1

AS-BUILT
BY Inukshuk Construction Ltd. DATE 2017/10/02

MATERIAL:
STEEL CSA G40.21-38WT
NORMALIZED
TRANSVERSE CHARPY: TCVN 13FT/LBS@-45F
LONGITUDINAL CHARPY: LCVN 15FT/LBS@-45F

REGISTERED PROFESSIONAL ENGINEER
S. BROWN
LICENSEE
NT/NU
24-Jul-2017
Permit Number: P471

DRAWN	Jacob Saunders	2/2/2017
CHECKED	Marc Losier	3/16/2017
QA		
MFG		
APPROVED		

TANK NO. 3 (3ML) ROOF

TITLE

REINFORCING PLATE DETAILS

SIZE	DWG NO	REV
A3	295-M8	3

SCALE 1/10 SHEET 6 OF 12

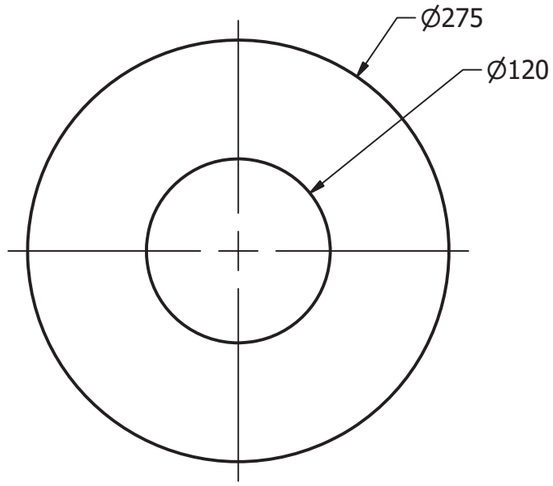

M81201 QTY	
Tank No.	QTY
1	1
2	1
3	1
4	1
5	1
6	1
TOTAL	6

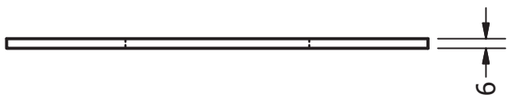

REINFORCING PLATE
100NS ROOF NOZZLE
QTY: 6
1 PER TANK
MARK 81201
SCALE 1/4

MATERIAL:
STEEL CSA G40.21-300W

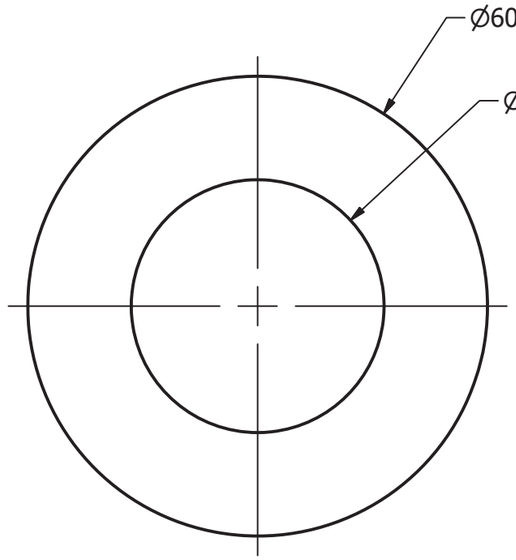

M81202 QTY	
Tank No.	QTY
1	2
2	1
3	0
4	0
5	0
6	0
TOTAL	10



REINFORCING PLATE
300NS ROOF NOZZLE FOR PV VENT
QTY: 10
MARK 81202
SCALE 1/8

AS-BUILT
BY Inukshuk Construction Ltd. DATE 2017/10/02

24-Jul-2017

Permit Number: P471

REVISION HISTORY		
REV	DESCRIPTION	DATE
4	THIS SHEET ADDED	7/7/2017

DRAWN	Jacob Saunders	2/2/2017
CHECKED	Marc Losier	3/16/2017
QA		
MFG		
APPROVED		

REINFORCING PAD FOR ECN-001

TITLE

REINFORCING PLATE DETAILS

SIZE		DWG NO	REV
A3		295-M8	4

SCALE 1/4 SHEET 13 OF 13

PARTS LIST				
ITEM	ITEM QTY	PART NUMBER	DESCRIPTION	MATERIAL
3M11101	1	T3 Floor	FLOOR PLATE 6 [1/4"]THK - SEE DRG 295-M3	
3M11102	28	C1 Shell Plate	SHELL PLATE 7.94 [5/16"]THK SHELL - SEE DRG 295-M7	
3M11103	5	Rim Angle 3ML	RIM ANGLE L76X76X10 [3"X3"X3/8"]- SEE DRG 295-M7	G40.21M 350W
3M11104	1	T3 Centre Column	CENTRE COLUMN - SEE SHT 2	
3M11105	30	T3 Shell Clip	SHELL CLIP 10 [3/8"]THK X 152 [6"]WD X 189 [7 1/2"]LG	G40.21M 300W
3M11106	30	AISC - W 8x18 - 336.52181	RAFTER W200X27 [W8"X18#'] X 8548 [28'-1/2"]LG	G40.21M 350W
3M11107	1	T3 ROOF	ROOF PLATE 6 [1/4"]THK - SEE DRG 295-M3	
3M11108	120	ANSI B18.2.2 - 5/8 - 11	Hex Nuts (Inch Series) Heavy Hex Nut	A325
3M11109	60	ANSI B18.2.1 - 5/8-11 UNC - 2.5	Heavy Hex Bolt ASTM STRUCTURAL	A325
3M11110	60	ANSI B18.2.1 - 5/8-11 UNC - 2	Heavy Hex Bolt ASTM STRUCTURAL	A325
11	120	ANSI B18.22.1 - 9/16 - Regular - Type B	Plain Washer (Inch)Type A and B	Steel, Mild

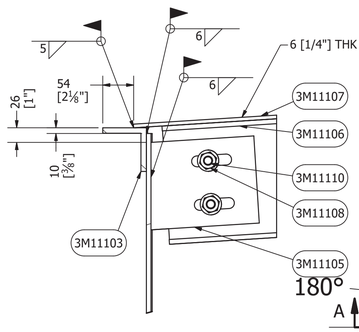

PART SECTION B-B
SHELL CLIP FITTING DETAIL
SCALE 1/5

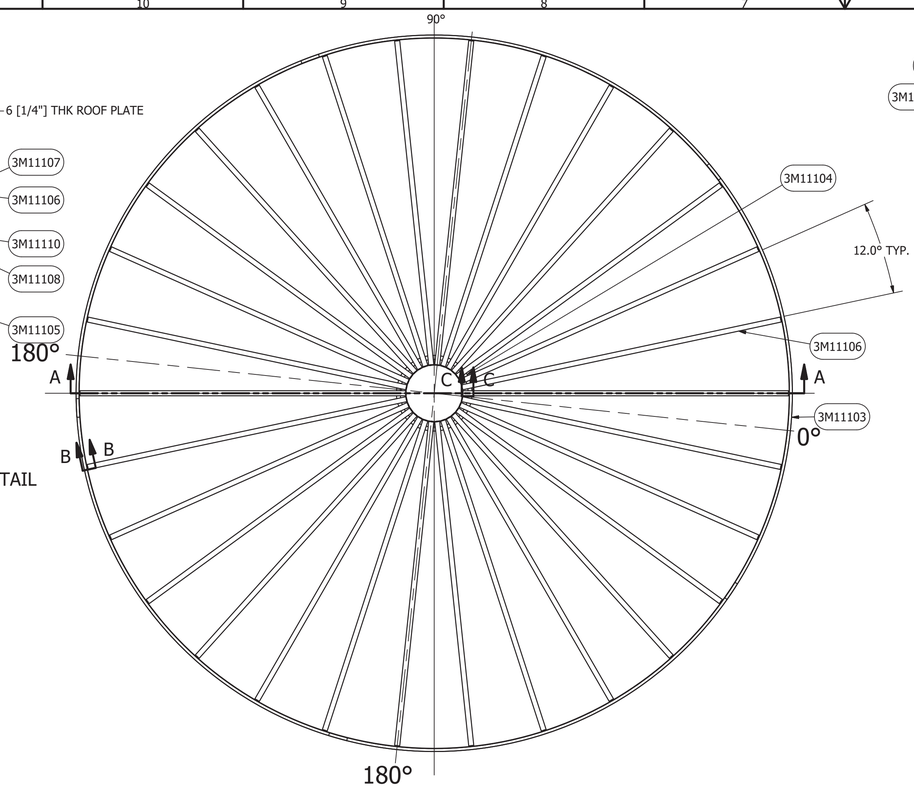

PLAN VIEW
ROOF NOT SHOWN FOR CLARITY
SCALE 1/75

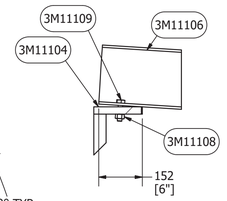

PART SECTION C-C
SCALE 1/10

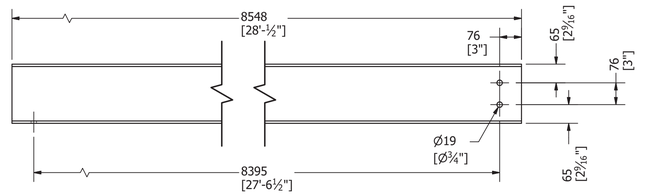

SIDE VIEW
SCALE 1/10

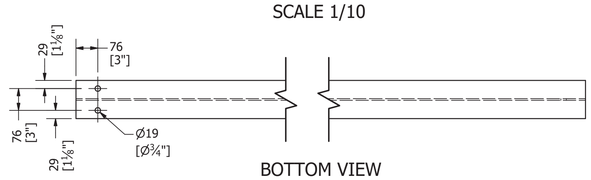

BOTTOM VIEW

Pc 3M11106 DETAIL
RAFTER
SCALE 1/10

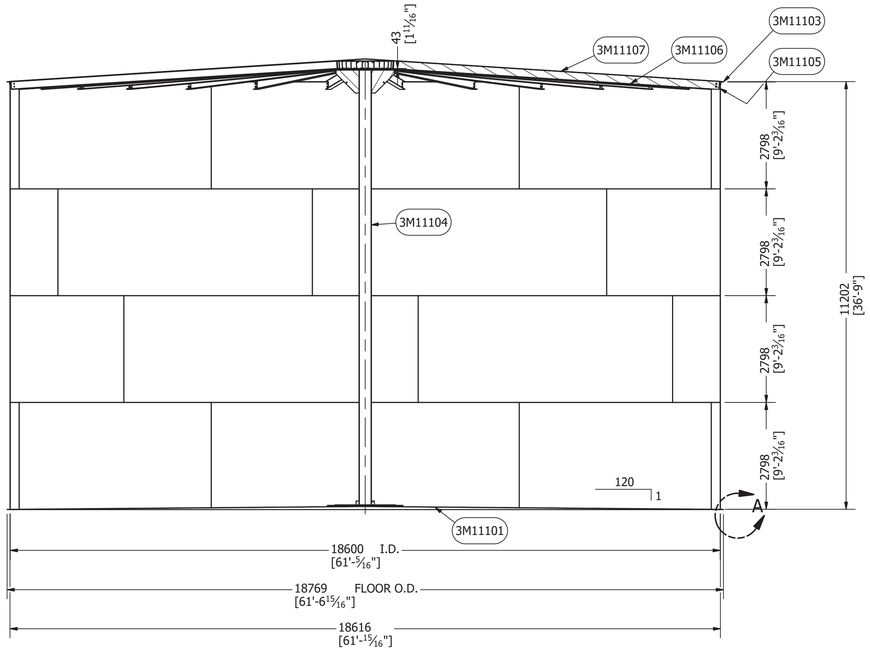

SECTION A-A
SCALE 1/75

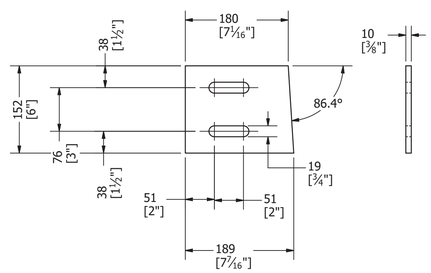

PC. 3M11105 DETAIL
SHELL CLIP
SCALE 1/5

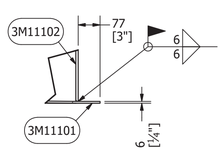

DETAIL A
SCALE 1/10

AS-BUILT
BY Inukshuk Construction Ltd. DATE 2017/10/02

REVISION HISTORY		
REV	DESCRIPTION	DATE
5	INCOPORATE FIELD MODIFICATIONS	10/2/2017

DRAWN	MARC LOSIER	3/31/2017
CHECKED		
QA		
MFG		
APPROVED		

RAFTER AND COLUMN LAYOUT

TITLE: AGNICO EAGLE -MELIADINE GOLD MINE - TK #3 - 3,000CUM TANK 18.6M DIA X 11.2M H

SIZE	DWG NO	REV
A1	295-M11	5

SCALE

SHEET 1 OF 6

10-Oct-2017

Permit Number: P471

PARTS LIST					
ITEM	ITEM QTY	PART NUMBER	DESCRIPTION	MATERIAL	MASS
3M11201	1	T3 Cap Plate	25 [1"]THK X 1778 [5'-10"]DIA	G40.21M - 300W	479.833 kg
3M11202	1	Column Base Plate 1	25 [1"]THK X 1981 [6'-6"]DIA	G40.21M - 300W	614.681 kg
3M11203	1	Column Base Plate 2	13 [1/2"]THK X 1588 [5' - 2 1/2"]DIA	G40.21M - 300W	197.329 kg
3M11204	8	Gusset Plate, Center Column T3	10 [3/8"]THK X 600 [1'-11 5/8"] X 600 [1'-11 5/8"]	G40.21M - 300W	17.522 kg
3M11205	1	ANSI - 12 x 0.375 - 448.34252	HSS325 [12 3/4"]O.D. X 10 [3/8"]WALL X 11388 [37'-4 3/8"]	ASTM A500-13 GR B&C	1861.198 lbmass
3M11206	4	AISC - 3x1/4 - 4	6 [1/4"] THK X 76 [3"] WD X 102 [4"] LG	G40.21M - 300W	0.851 lbmass

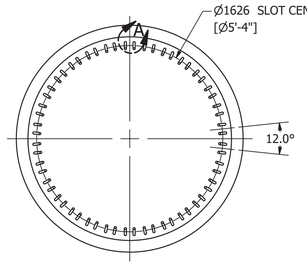

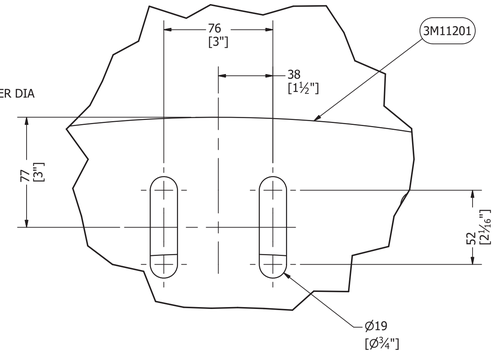

DETAIL A
TYPICAL 30 LOCATIONS EQ. SPACED
SCALE 1/2

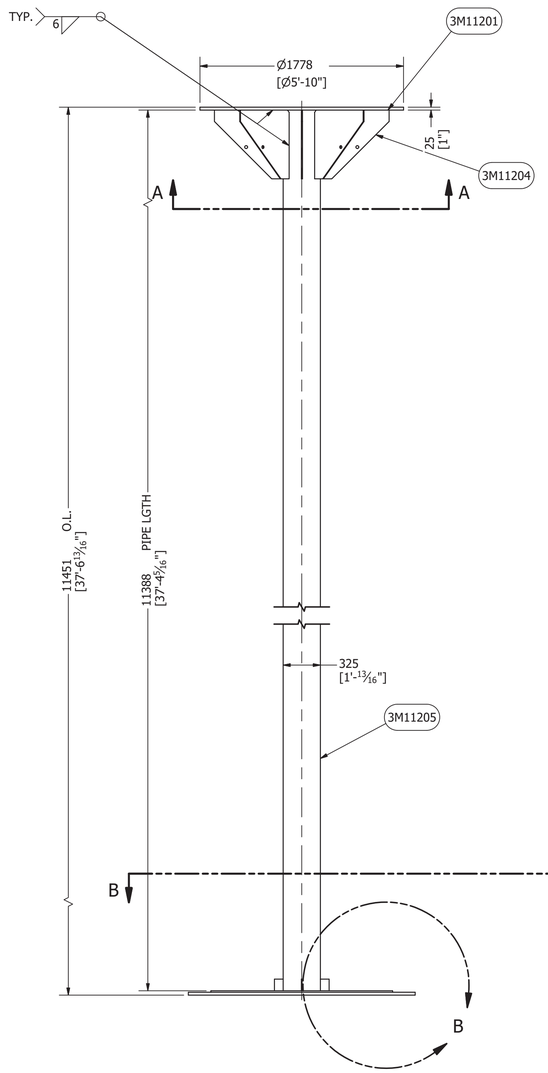

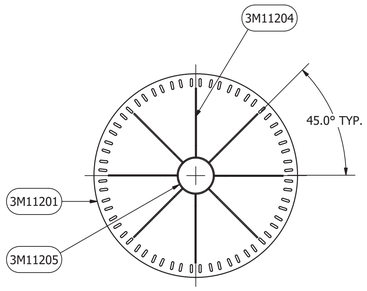

SECTION A-A
SCALE 1/25

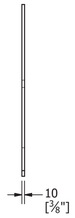

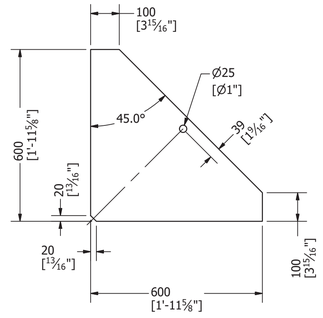

Pc 3M11204 DETAIL
SCALE 1/10

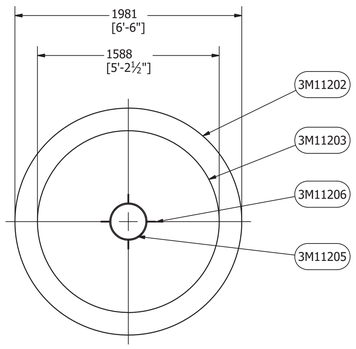

SECTION B-B
SCALE 1/25

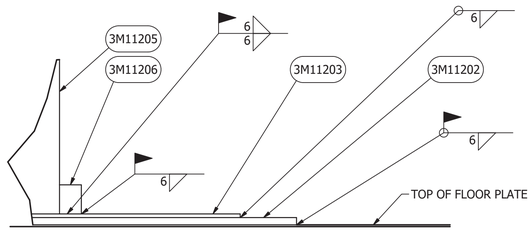

DETAIL B
SCALE 1/10

AS-BUILT
BY Inukshuk Construction Ltd. DATE 2017/10/02

10-Oct-2017
Permit Number: P471

DRAWN MARC LOSIER	3/31/2017	CENTER COLUMN DETAIL	
CHECKED		TITLE AGNICO EAGLE -MELIADINE GOLD MINE - TK #3 - 3,000CUM TANK 18.6M DIA X 11.2M H	
QA			
MFG			
APPROVED			
		SIZE A1	DWG NO 295-M11 / REV 5
		SCALE	SHEET 2 OF 6

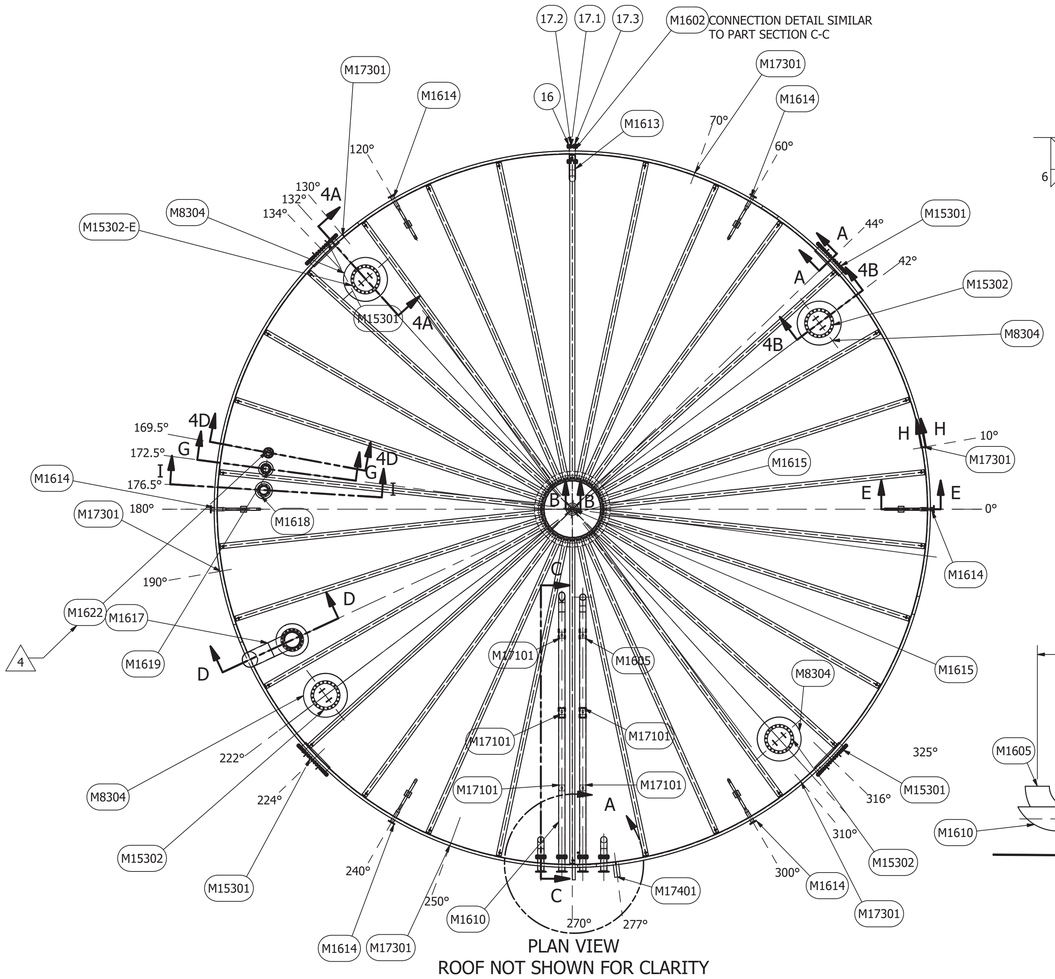

PLAN VIEW
ROOF NOT SHOWN FOR CLARITY
SCALE 1 / 75

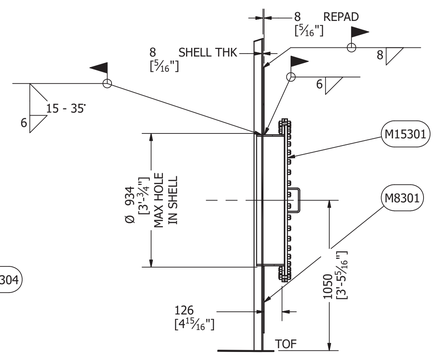

PART SECTION A-A
900NS MANHOLE
TYP. 4 PLACES: 44°, 134°, 224°, 316°
SCALE 1/20

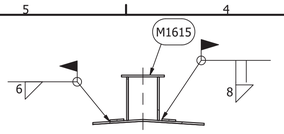

PART SECTION B-B
PAINTERS POST
SCALE 1/10

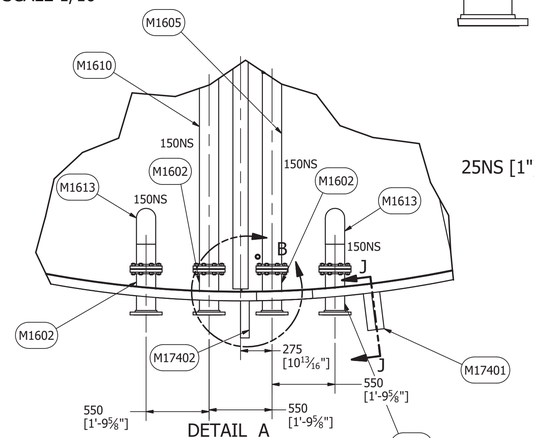

DETAIL A
ROOF NOT SHOWN FOR CLARITY
SCALE 1/25

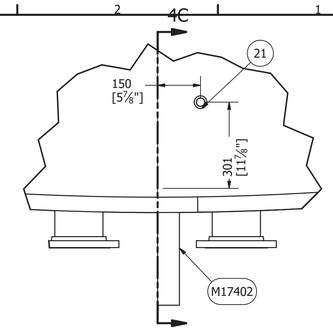

DETAIL B
25NS [1"] ROOF COUPLING FOR PRV
ROOF SHOWN
SCALE 1/10

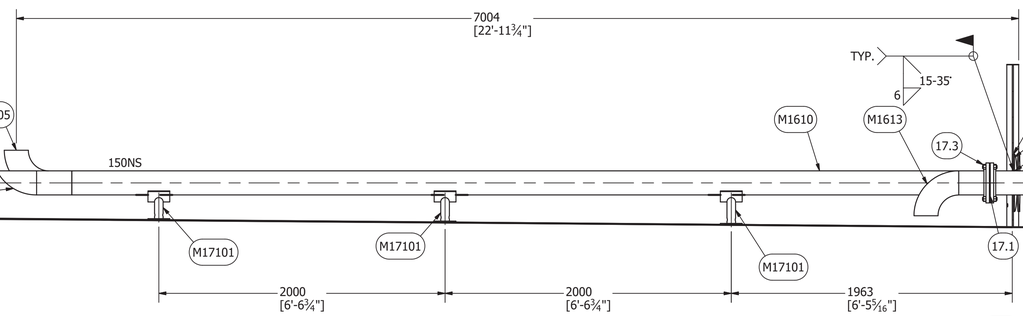

PART SECTION C-C
150NS IN/OUT
SCALE 1 / 20

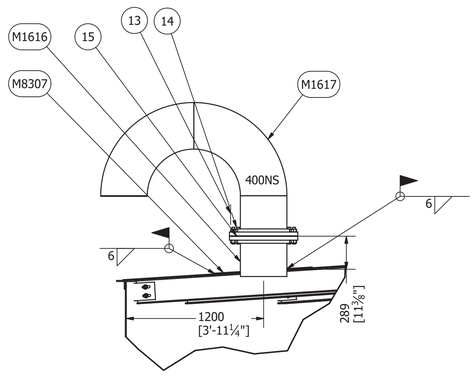

PART SECTION D-D
400NS VENT
SCALE 1/25

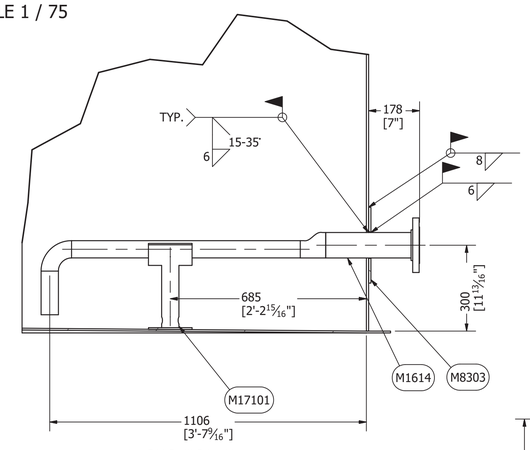

PART SECTION E-E
75MM [3"] WATER DRAWOFF
6 PLACES: 60°, 120°, 180°, 240°, 300°, 360°
SCALE 1/10

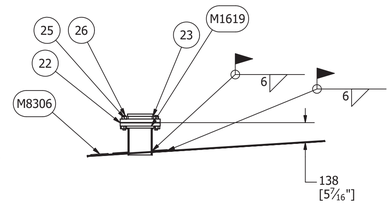

PART SECTION G-G
150NS [6"] GAUGE HATCH
SCALE 1/20

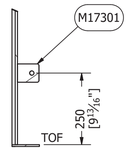

PART SECTION H-H
GROUNDING LUG
6 PLACES: 10°, 70°, 130°, 190°, 250°, 310°
SCALE 1/10

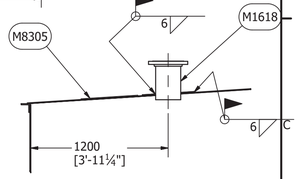

PART SECTION I-I
200NS [8"] ROOF NOZZLE FOR
OVERFILL PROTECTION
SCALE 1/25

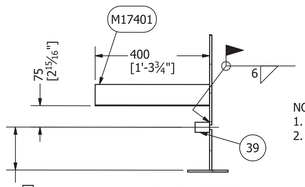

PART SECTION J-J
TEMPERATURE SENSOR CONNECTION
SCALE 1/10

NOTES:
1. ALL DIMENSIONS ARE IN MM UNLESS OTHERWISE NOTED.
2. TOF DENOTES TOP OF FLOOR

AS-BUILT
BY Inukshuk Construction Ltd. DATE 2017/10/02

Permit Number: P471

REVISION HISTORY		
REV	DESCRIPTION	DATE
2	THIS SHEET ADDED	6/1/2017
4	WATER DRAWOFF RELOCATED, SHELL NOZZLE RELOCATED, GROUNDING LUGS RELOCATED	6/28/2017
4	100NS ROOF NOZZLE ADDED AS PER ECN-001	7/10/2017
5	INCORPORATE FIELD MODIFICATIONS	10/2/2017

DRAWN	MARC LOSIER	3/31/2017
CHECKED		
QA		
MFG		
APPROVED		

TITLE: AGNICO EAGLE -MELIADINE GOLD MINE - TK #3 - 3,000CUM TANK 18.6M DIA X 11.2M H

SIZE	DWG NO	REV
A1	295-M11	5

SCALE

SHEET 3 OF 6

PARTS LIST

ITEM	ITEM QTY	DESCRIPTION	FAB. DRG. NO.	MATERIAL
13	32	1"UNC HEAVY HEX NUT		A194 GR4
14	16	1"UNC X 5 3/4" LONG STUD		A320 L7
15	1	400NS [16"] GASKET 1.6 [1/16"]THK		DURLON 8500
16	1	150NS [6"] BLIND FLANGE		A105
17	6	150NS [6"] FLANGE CONNECTION JOINT COMPRISING:		
17.1	1	150NS [6"] X 3.2 [1/8"] THK, GASKET, RING, 150#		DURLON 8500
17.2	8	3/4"UNC X 4" LG STUD		L7
17.3	16	3/4"UNC NUTS		A194 GR. 4
21	1	25NS [1"] NPT COUPLING, 3000#, PRV PIPING CONNECION		A350 LF2
22	1	150NS [6"] X 1.6 [1/16"] GASKET, 150#, FULL FACE		DURLON 8500
23	1	1500NS [6"} GAUGE HATCH, SHANG AND JURS MODEL NO. 95010-02-00		ALUMINUM
25	16	3/4"UNC NUTS		A194 GR. 4
26	8	3/4"UNC X 4" LG STUD		L7
39	1	20NS [3/4"] NPT COUPLING, 3000#, (TEMPERATURE SENSOR)		A350 LF2
43	1	100NS [4"] JOINT COMPRISING:		
43.1	1	100NS [4"] GASKET, RING, 1.6 [1/16"] THK		DURLON 8500
43.2	8	5/8"X 3 1/2"UNC STUD		L7
43.3	16	5/8"UNC NUT, HEAVY HEX		A194 GR.4
44	1	100NS [4"] BLIND FLANGE, RF, 150#		A320 LF2
M1602	5	150NS DOUBLE FLANGE SHELL NOZZLE	M16	
M1605	1	150NS [6"] FIXED LOADING PIPE	M16	
M1610	1	150NS [6"] FIXED UNLOADING PIPE	M16	
M1613	3	150NS [6"] PUMPING LOW LEVEL	M16	
M1614	6	75NS [3"] WATER DRAWOFF VALVE SPOOL	M16	
M1615	1	100NS PAINTERS POST	M16	
M1616	1	400NS [16"] ROOF NOZZLE FOR VENT	M16	
M1617	1	400NS [16"] VENT RETURN BEND PIPE	M16	
M1618	1	200NS [8"] ROOF NOZZLE FOR OVERFILL PROTECTION	M16	
M1619	1	150NS [6"] ROOF NOZZLE FOR GAUGE HATCH	M16	
M1622	1	100NS ROOF NOZZLE	M16	
M8301	4	900NS SHELL MANHOLE REINFORCING PAD	M8	
M8302	5	150NS [6"] SHELL NOZZLE REINFORCING PLATE FOR LOADING AND UNLOADING PIPE	M8	Steel
M8303	6	75NS [3"] SHELL NOZZLE REINFORCING PLATE FOR WATER DRAWOFF VALVE	M8	Steel
M8304	4	600NS ROOF MANHOLE REINFORCING PAD	M8	
M8305	1	200NS [8"] ROOF NOZZLE REINFORCING PLATE FOR OVERFILL PROTECTION	M8	Steel
M8306	1	150NS [6"] ROOF NOZZLE REINFORCING PLATE FOR GAUGE HATCH	M8	
M8307	1	400NS [16"] ROOF NOZZLE REINFORCING PLATE FOR VENT	M8	Steel
M15301	4	900NS SHELL MANHOLE	M15	
M15302	3	600NS ROOF MANHOLE	M15	
M17101	2	PIPE SUPPORT	M17	
M17101	2	PIPE SUPPORT	M17	
M17101	2	PIPE SUPPORT	M17	
M17101	6	PIPE SUPPORT M17	M17	
M17301	6	GROUNDING LUG	M17	Stainless Steel, Austenitic
M17401	1	L100X100X6 [L4"X4"X1/4"] 400 [15 3/4"] LG (TEMPERATURE SENSOR)	M17	G40.21M 350W
M17402	5	L75X75X6 [L3"X3"X1/4"] 400 [15 3/4"] BRACKET FOR PIPING OR ELECTRICAL CONDUIT	M17	G40.21M 350W
M81201	1	100NS [4"] REINFORCING PAD	M8	
M15302-E	1	600NS ROOF MANHOLE/EMERGENCY VENT	M15	

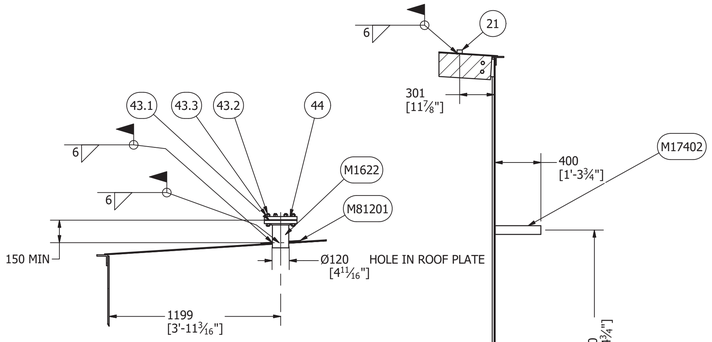

PART SECTION 4D-4D
100NS ROOF NOZZLE
AS PER ECN-001
SCALE 1/20

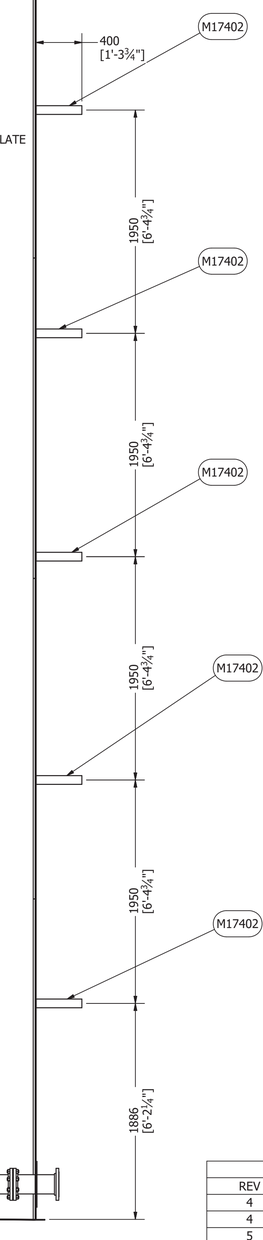

SECTION 4C-4C
SHELL BRACKET FOR PRV PIPING
SCALE 1/25

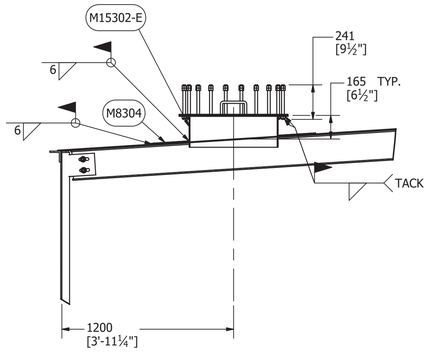

PART SECTION 4A-4A
600NS MANHOLE/EMERGENCY VENT
1 PLACE AT 132°
SCALE 1/20

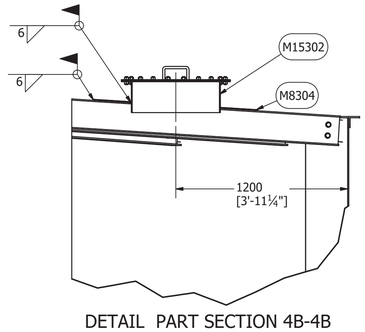

DETAIL PART SECTION 4B-4B
600NS [24"] ROOF MANHOLE
3 PLACES AT 42°, 222°, 312°
SCALE 1/20

AS-BUILT
BY Inukshuk Construction Ltd. DATE 2017/10/02

10-Oct-2017
Permit Number: P471

REVISION HISTORY		
REV	DESCRIPTION	DATE
4	100NS ROOF NOZZLE ADDED AS PER ECN-001	7/10/2017
4	THIS SHEET ADDED	6/1/2017
5	INCORPORATE FIELD MODIFICATIONS	10/2/2017

DRAWN	MARC LOSIER	3/31/2017
CHECKED		
QA		
MFG		
APPROVED		

TITLE
AGNICO EAGLE -MELIADINE GOLD MINE - TK #3 - 3,000CUM TANK 18.6M DIA X 11.2M H

SIZE	DWG NO	REV
A1	295-M11	5

SCALE

SHEET 4 OF 6

PARTS LIST				
ITEM	ITEM QTY	DESCRIPTION	MATERIAL	MASS
3M11501	9	PREFABRICATED ROOF TOP HANDRAIL SECTION SEE DETAIL 3M11501		122.315 kg
3M11502	1	PREFABRICATED ROOF TOP HANDRAIL SECTION TRIMMED AT SITE		103.115 kg
4	1	L50X50X6 [L2"X2"X1/4"] 38 [1 1/2"] LG	G40.21 350W	0.402 lbmass
5	1			1440.934 kg

PARTS LIST FOR ONE SECTION ONLY TOTAL TEN (10) REQUIRED					
ITEM	ITEM QTY	CUT (MM)	DESCRIPTION	PRE-FAB DRG #	MATERIAL
M17201	4	1479	HANDRAIL POST - L75X75X6 [L3"X3"X1/4"]I	M17	
M7303	1	5791	L50X50X6[L2"X2"X6] ROOF HANDRAIL ROLLED ANGLE	M7	
3	2	5791	FB50X6 [FB2"X1/4"] 5791 [19'-0"] LG		G40.21M 300W
4	1	5791	FB100X5 [FB4"X3/16"] 7591 [19'-0"]LG		G40.21M 300W

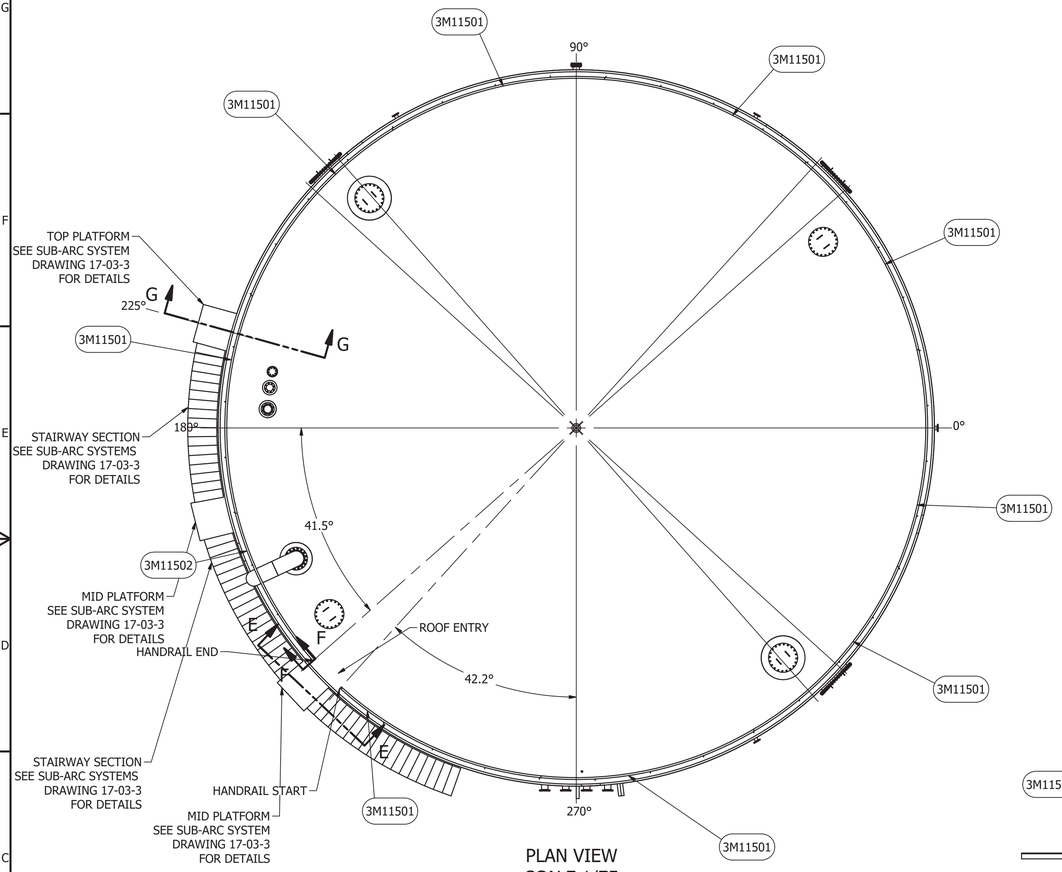

PLAN VIEW
SCALE 1/75

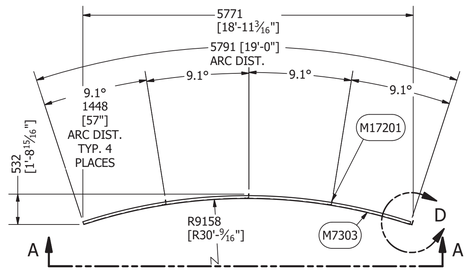

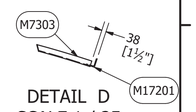

DETAIL D
SCALE 1 / 25

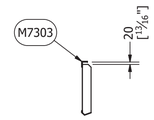

DETAIL C
SCALE 1 / 25

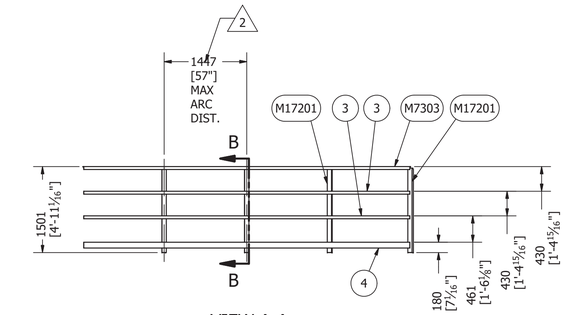

VIEW A-A
SCALE 1/50

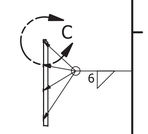

SECTION B-B
SCALE 1/50

Pc 3M11501
PREFABRICATED ROOF TOP HANDRAIL SECTION
QTY: 10
SCALE 1/50

FINISH:
SSPC SURFACE PREPERATION FOR PAINTING: SP6 COMMERCIAL SANDBLASTING
ONE COAT OF POLYVAL 390

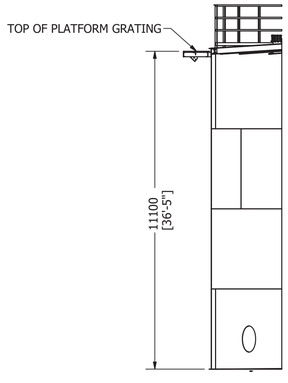

SECTION G-G
SCALE 1/100

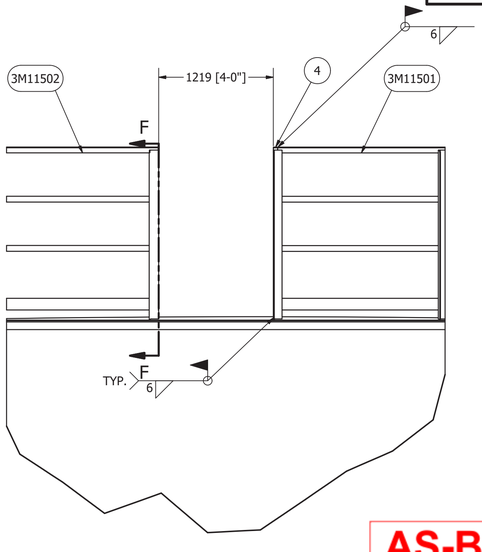

PART VIEW E-E
SCALE 1/25

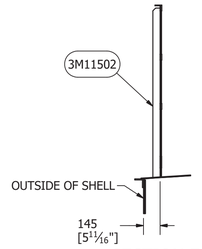

SECTION F-F
SCALE 1/25

AS-BUILT
BY Inukshuk Construction Ltd. DATE 2017/10/02

10-Oct-2017

Permit Number: P471

REVISION HISTORY			
ZONE	REV	DESCRIPTION	DATE
	1	THIS SHEET ADDED	4/26/2017
12C, 4F	2	ROOF ENTRY LOCATION ADDED, MAX. DIST. BTW POST ADDED,	5/3/2017
	3	PLATORMS AND STAIRWAY ADDED	6/28/2017
	5	INCORPORATE FIELD MODIFICATIONS	10/2/2017

DRAWN	MARC LOSIER	3/31/2017
CHECKED		
QA		
MFG		
APPROVED		

ROOF TOP HANDRAIL

TITLE
AGNICO EAGLE -MELIADINE GOLD MINE - TK #3 - 3,000CUM TANK 18.6M DIA X 11.2M H

SIZE	DWG NO	REV
A1	295-M11	5

SCALE

SHEET 5 OF 6

PARTS LIST		
ITEM	ITEM QTY	PART NUMBER
1	24	SHELL PLATE 8 X 2798 X 8361
2	4	LAST SHELL PLATE AT END OF COURSE 8 X 2798 X 8317
3	4	900NS SHELL MANHOLE
5	6	75NS WATER DRAWOFF VALVE
7	6	Grounding Lug
8	4	150NS SHELL NOZZLE
10	1	20NS TEMPERATURE SENSOR CONNECTION
11	1	AISC - L 4 x 4 x 1/4 - 15.748031 - TEMPERATURE SENSOR PROTECTION
12	5	AISC - L 3 x 3 x 1/4 - 15.748031 PRV PIPE BRACKETS
13	3	PLATFORM
15	54	STEPS

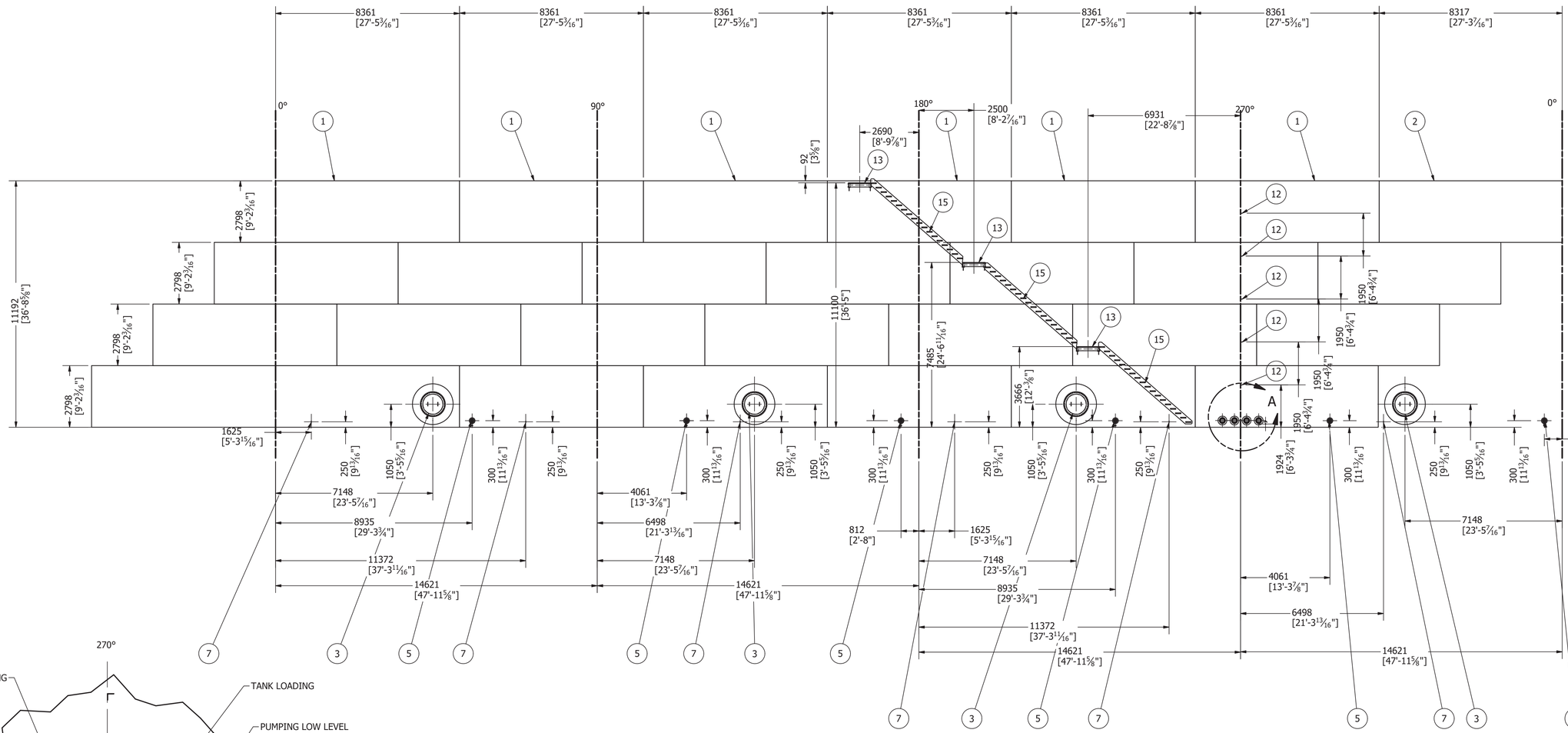

SHELL DEVELOP VIEW
SCALE 1 / 100

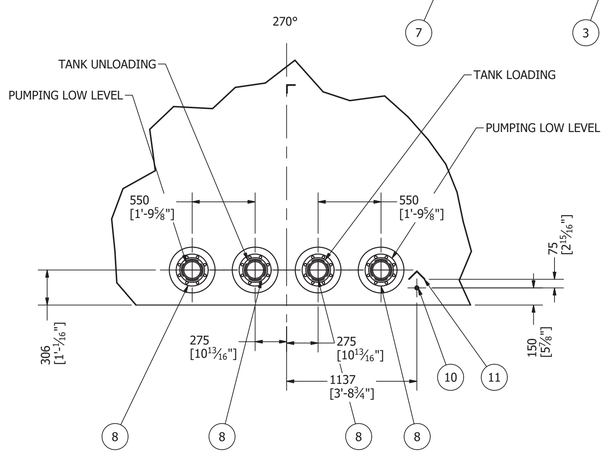

DETAIL A
SCALE 1/25

AS-BUILT
BY Inukshuk Construction Ltd. DATE 2017/10/02

PROFESSIONAL ENGINEER — BROWN — LICENSEE — NT/NU
10-Oct-2017

Permit Number: P471

REVISION HISTORY		
REV	DESCRIPTION	DATE
4	THIS SHEET ADDED	7/12/2017
5	INCORPORATE FIELD MODIFICATION	10/2/2017

DRAWN	MARC LOSIER	3/31/2017
CHECKED		
QA		
MFG		
APPROVED		

DEVELOP VIEW

TITLE
AGNICO EAGLE -MELIADINE GOLD MINE - TK #3 - 3,000CUM TANK 18.6M DIA X 11.2M H

SIZE	DWG NO	REV
A1	295-M11	5

SCALE

SHEET 6 OF 6

PARTS LIST					
ITEM	ITEM QTY	PART NUMBER	DESCRIPTION	MATERIAL	MASS
1	1	T3 SHELL NECK	10 [3/8"] THK X 194 [7 5/8"] WD. X 2842 [9'-3 7/8"] LG.	G40.21M - 350WT CAT. 4	40.783 kg
2	1	T3 SHELL BOLTING FLANGE	19 [3/4"] x 1137 [3'-8 3/4"] O.D. x 914 [3'-0"] I.D.	G40.21M - 350WT CAT. 4	42.129 kg
3	1	T3 SHELL GASKET	3 [1/8"] THK X 1051 [3' 5 3/8"] O.D. X 914 [3'-0"] I.D.	DURLON 8500	0.622 kg
4	1	T3 SHELL COVER PLATE	22 [7/8"] THK X 1137 [3'-8 3/4"] O.D.	G40.21M - 350WT CAT. 4	149.306 kg
5	2	T1-6 HANDLE ROD	10 [3/8"] DIA X 314 [12 3/8"] LG.	G40.21M - 350WT CAT. 4	0.175 kg
6	42	STUDS	STUD, 3/4" X 82 [3 1/4"] LG. NC	A320 L7	0.185 kg
7	84	NUTS	NUT, HEX HEAVY, 3/4" NC	A194A GR4	0.096 kg

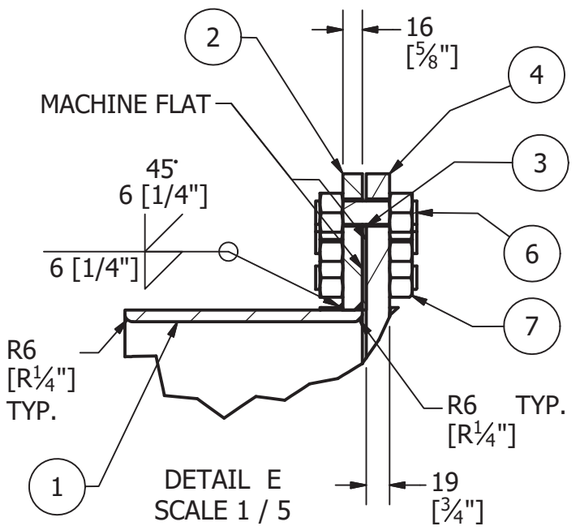

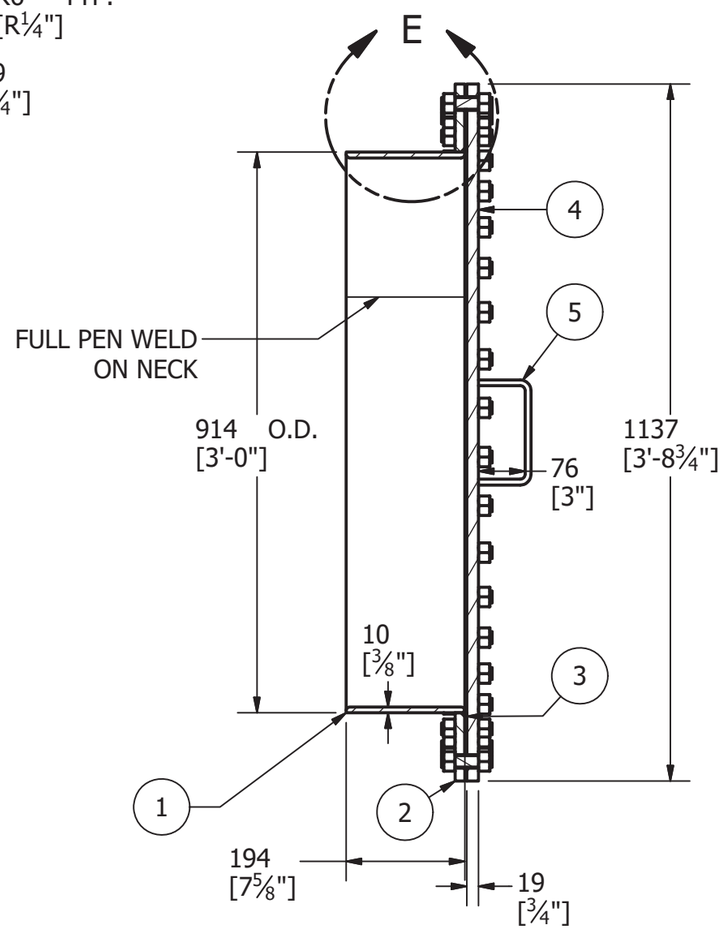

SECTION K-K
SCALE 1/10

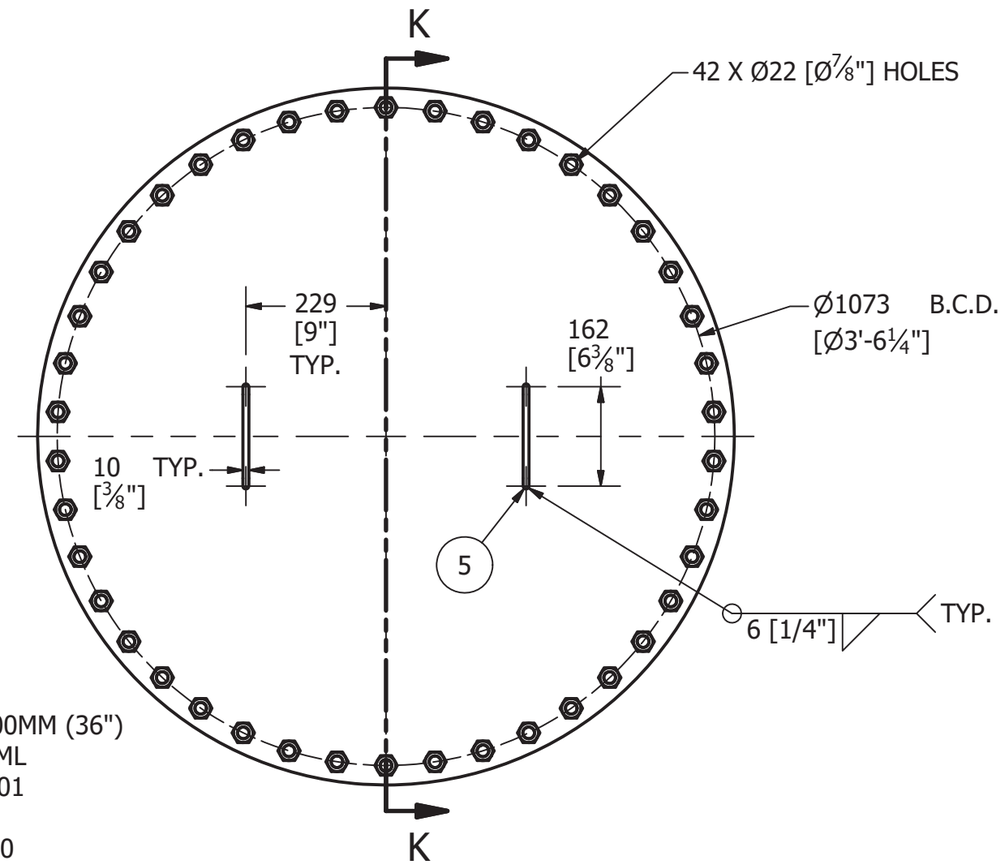

SHELL MANHOLE 900MM (36")
TANK 3 - 3ML
MARK: 15301
QTY: 4
SCALE 1/10

AS-BUILT
BY Inukshuk Construction Ltd. DATE 2017/10/02

Permit Number: P471

ALTERNATE MATERIAL: ALL 350WT STEEL MAY BE SUBSTITUTED WITH 260WT IF EASIER TO SOURCE

DRAWN	Jacob Saunders	3/22/2017
CHECKED	Marc Losier	3/27/2017
QA		
MFG		
APPROVED		

T3 (3ML) SHELL MANHOLE

TITLE

MELIADINE FIELD ERECTED TANK - MANHOLES

SIZE	DWG NO	REV
A3	295-M15	3

SCALE

SHEET 5 OF 12

PARTS LIST					
ITEM	ITEM QTY	PART NUMBER	DESCRIPTION	MATERIAL	MASS
1	1	ROOF NECK	6 [1/4"] THK X 216 [8 1/2"] WD X 1935 [6' - 4 3/16"] LG	G40.21M 300W	20.825 kg
2	1	ROOF BOLTING FLANGE	6 [1/4"] THK X 762 [2'-6"] O.D. X 622 [2'-1/2"] I.D.	G40.21M 300W	7.287 kg
4	1	ROOF COVER PLATE	6 [1/4"] THK X 762 [2'-6"] DIA	G40.21M 300W	22.448 kg
5	2	ROOF HANDLE ROD	16 [5/8"] DIA X 314 [12 3/8"] LG.	Steel, MILD	0.506 kg
6	20	STUDS	STUD, 5/8" X 57 [2 1/4"] LG. NC	A320 L7	0.089 kg
7	40	NUTS	NUT, HEX HEAVY, 5/8"	A194A GR4	0.059 kg
8	1	295-P1 Gasket 24in (600mm)		Rubber	0.216 kg

SECTION L-L
SCALE 1/10

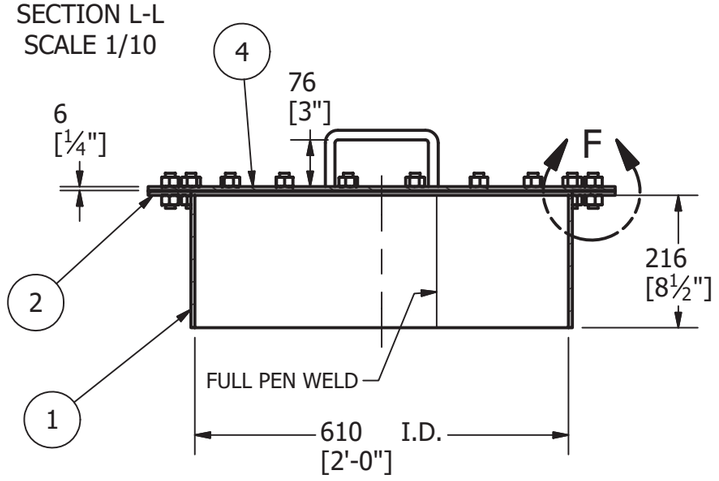

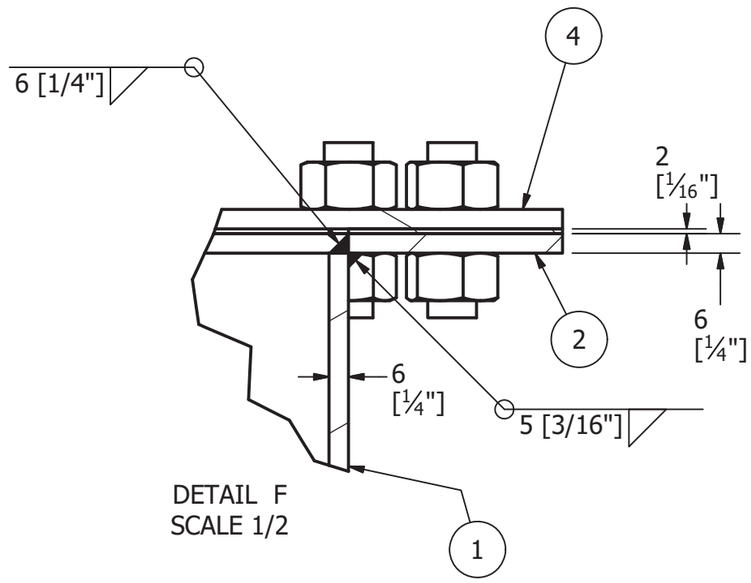

DETAIL F
SCALE 1/2

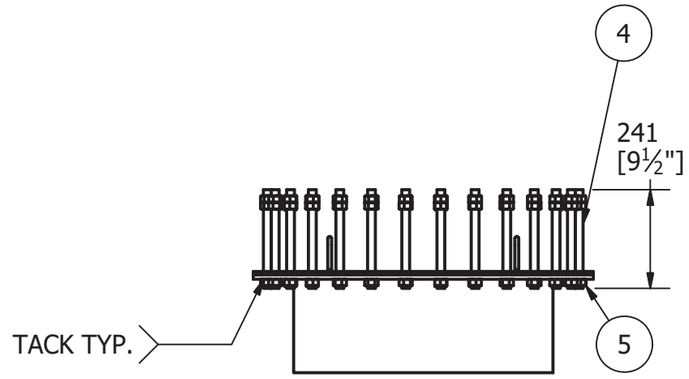

EMERGENCY VENT/MANHOLE
SCALE 1/15
QTY: 1
ALL MATERIAL SAME AS ROOF MANHOLE
EXCEPT BOLTS LENGTH

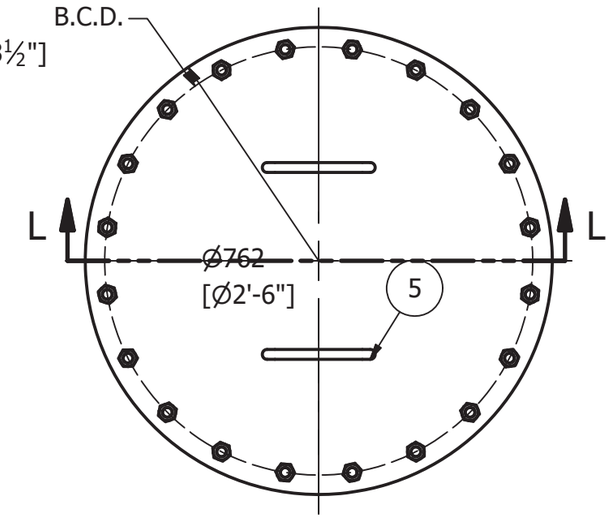

ROOF MANHOLE 600MM (24")
TANK 3 - 3ML
MARK: 15302
QTY: 4
SCALE 1/10

ALTERNATE MATERIAL: ALL 350WT STEEL MAY BE SUBSTITUTED WITH 260WT IF EASIER TO SOURCE

AS-BUILT
BY Inukshuk Construction Ltd. DATE 2017/10/02



Permit Number: P471

REVISION HISTORY			
ZONE	REV	DESCRIPTION	DATE
	2	EMERGENCY VENT/MANHOLE DETAIL ADDED	4/13/2017

DRAWN	Jacob Saunders	3/22/2017
CHECKED	Marc Losier	3/27/2017
QA		
MFG		
APPROVED		

T3 (3ML) ROOF MANHOLE

TITLE
MELIADINE FIELD ERECTED TANK - MANHOLES

SIZE		DWG NO	REV
A3		295-M15	3

SCALE

SHEET 6 OF 12

Parts List				
ITEM	ITEM QTY	CUT (MM)	PART NUMBER	MATERIAL
1	2		ASME B16.5 Flange Slip-On Welding - Class 150 6	A350 LF2
2	1	375	Pipe 6 - Schedule 80 - 14.76378	A333 GR. 6

Ø150 NS DOUBLE FLANGE SHELL LOADING/UNLOADING
MARK: M1602
QTY: 26

WEIGHT/SPOOL: 30.8KG

M1602 QTY	
Tank No.	QTY
1	3
2	3
3	5
4	5
5	5
6	5
TOTAL	26

NOTES:
1. ALL DIMENSIONS ARE IN MM UNLESS OTHERWISE NOTED
2. FINISH: SANDBLAST TO SSP-6

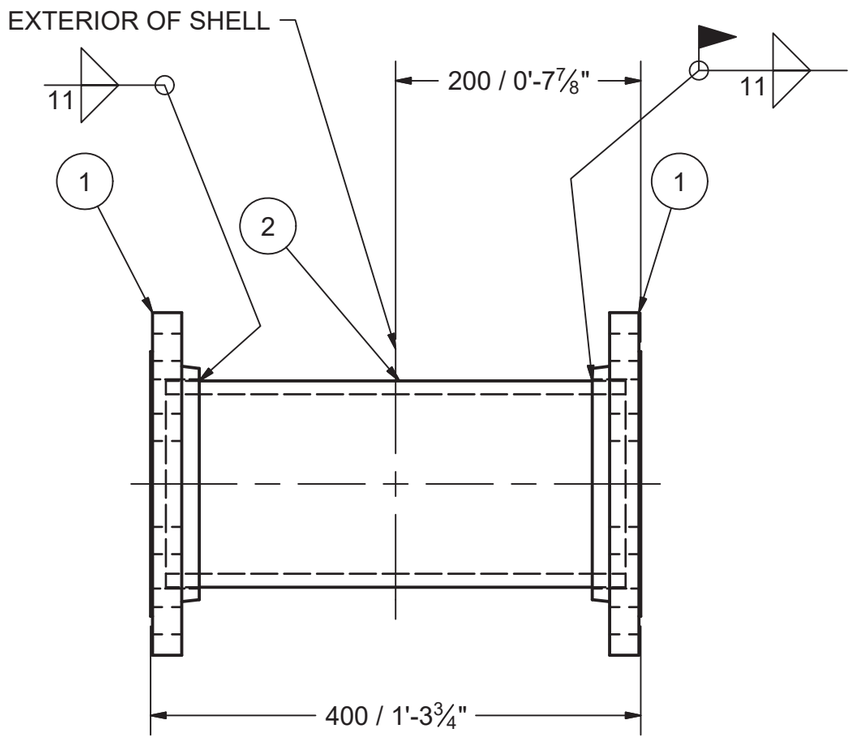

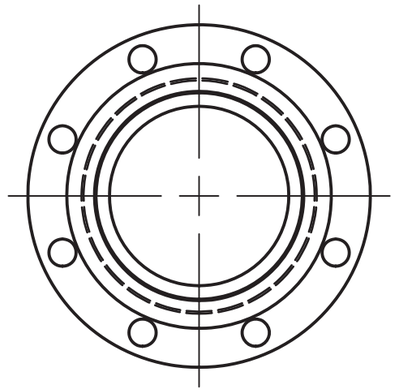

AS-BUILT
BY Inukshuk Construction Ltd. DATE 2017/10/02

REGISTERED PROFESSIONAL ENGINEER
K.G. BROWN
LICENSEE
NT/NU
16-Jul-2017

Permit Number: P471

DRAWN Jacob Saunders	4/13/2017	AEM Meliadine Fuel Storage Tanks	
CHECKED			
QA		TITLE M1602 - 150NS DOUBLE FLG. SHELL	
MFG			
APPROVED			
		SIZE A3	DWG NO 295-M16 / REV 3
		SCALE	SHEET 2 OF 22

Parts List				
ITEM	ITEM QTY	CUT (MM)	PART NUMBER	MATERIAL
1	1		ASME B16.5 Flange Slip-On Welding - Class 150 6	A350 LF2
2	1		ASME B16.9 Long Radius 90 Deg Elbow (Inch) 6 x 0.28 SCH40	A420 WPL6
3	1	6401	Pipe 6 - Schedule 40 - 258.27	A333 GR. 6
4	1	159	ASTM A 53/A 53M Pipe 6 - Schedule 40 - 6.27	Steel

Ø150 NS FIXED PIPE LOADING
TANK 3 (3ML)
MARK: M1605
QTY: 1

WEIGHT/SPOOL: 203 KG

M1605 QTY	
Tank No.	QTY
1	0
2	0
3	1
4	0
5	0
6	0
TOTAL	1

NOTES:
1. ALL DIMENSIONS ARE IN MM UNLESS OTHERWISE NOTED
2. FINISH: BARE

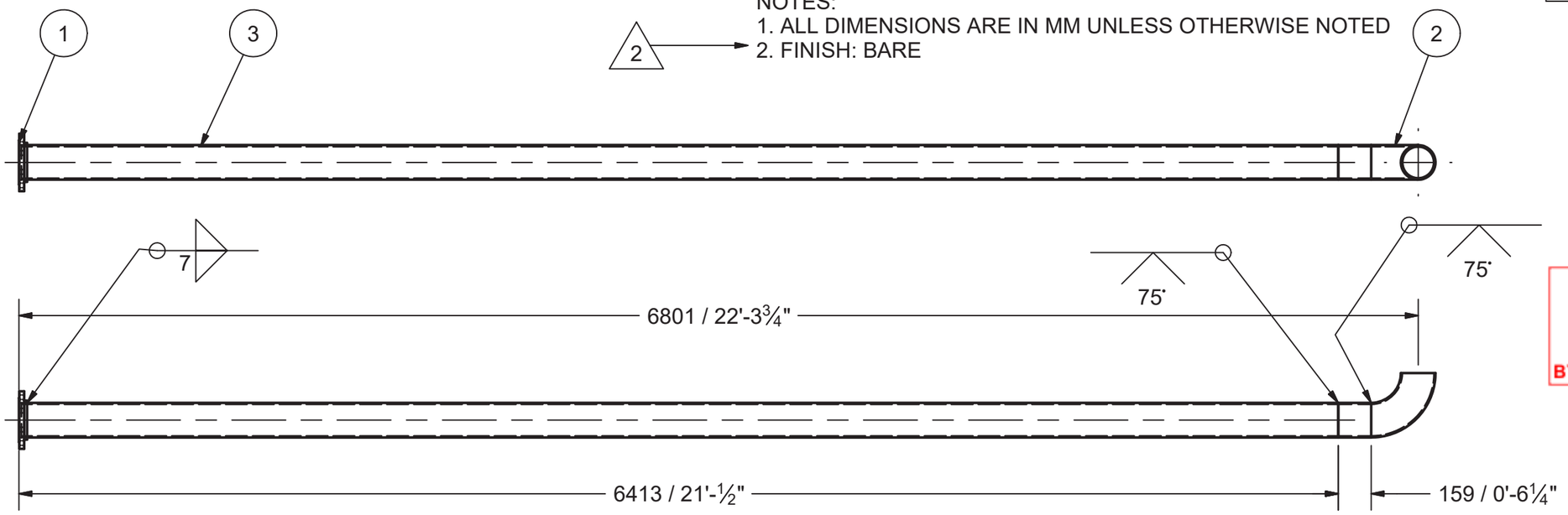

SCALE 1/25

AS-BUILT
BY Inukshuk Construction Ltd. DATE 2017/10/02

LICENSED PROFESSIONAL ENGINEER
G. BROWN
LICENSEE
NT/NU
16-Jul-2017

Permit Number: P471

REVISION HISTORY		
REV	DESCRIPTION	DATE
2	NOTE 2 CHANGED, PIPE BROKEN IN SECTIONS	5/11/2017

DRAWN Jacob Saunders	4/13/2017	AEM Meliadine Fuel Storage Tanks
CHECKED		
QA		TITLE
MFG		M1605 - 150NS FIXED PIPE LOADING
APPROVED		
		SIZE A3 / DWG NO 295-M16 / REV 3
		SCALE / SHEET 5 OF 22

Parts List				
ITEM	ITEM QTY	CUT (MM)	PART NUMBER	MATERIAL
1	1		ASME B16.5 Flange Slip-On Welding - Class 150 6	A350 LF2
2	1		ASME B16.9 Long Radius 90 Deg Elbow (Inch) 6 x 0.28 SCH40	A420 WPL6
3	1	6401	Pipe 6 - Schedule 40 - 261.69	A333 GR. 6
4	1	246	Pipe 6 - Schedule 40 - 9.69	A333 GR. 6I

Ø150 NS FIXED PIPE UNLOADING
TANK 3 (3ML)
MARK: M1610
QTY: 1

WEIGHT/SPOOL: 201KG

M1610 QTY	
Tank No.	QTY
1	0
2	0
3	1
4	0
5	0
6	0
TOTAL	1

NOTES:
1. ALL DIMENSIONS ARE IN MM UNLESS OTHERWISE NOTED
2. FINISH: BARE

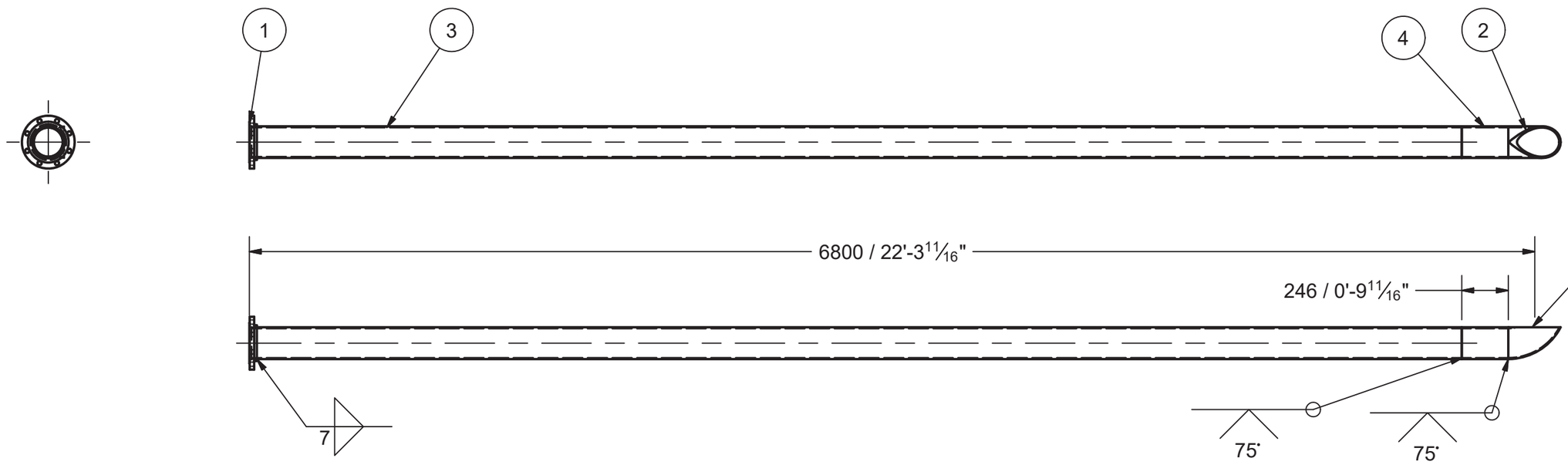

AS-BUILT
BY Inukshuk Construction Ltd. DATE 2017/10/02

PROFESSIONAL ENGINEER K.C. BROWN LICENSEE NT/NU
16-Jul-2017
Permit Number: P471

REVISION HISTORY		
REV	DESCRIPTION	DATE
2	NOTE 2 CHANGED, PIPE BROKEN IN SECTIONS	5/11/2017

DRAWN Jacob Saunders	4/13/2017	AEM Meliadine Fuel Storage Tanks
CHECKED		
QA		TITLE
MFG		M1610 - 150NS FIXED PIPE UNLOADING
APPROVED		

SIZE A3 | DWG NO 295-M16 | REV 3
SCALE
SHEET 10 OF 22

Parts List				
ITEM	ITEM QTY	CUT (MM)	PART NUMBER	MATERIAL
1	1		ASME B16.5 Flange Slip-On Welding - Class 150 6	A350 LF2
2	1	203	Pipe 6 - Schedule 40 - 8	A333 GR. 6
3	1		ASME B16.9 Long Radius 90 Deg Elbow - 6 SCH40	A420 WPL6

Ø150 NS PIPING LOW LEVEL
MARK: M1613
QTY: 16

WEIGHT/SPOOL: 23.3KG

M1613 QTY	
Tank No.	QTY
1	2
2	2
3	3
4	3
5	3
6	3
TOTAL	16

NOTES:
1. ALL DIMENSIONS ARE IN MM UNLESS OTHERWISE NOTED
2. FINISH: BARE

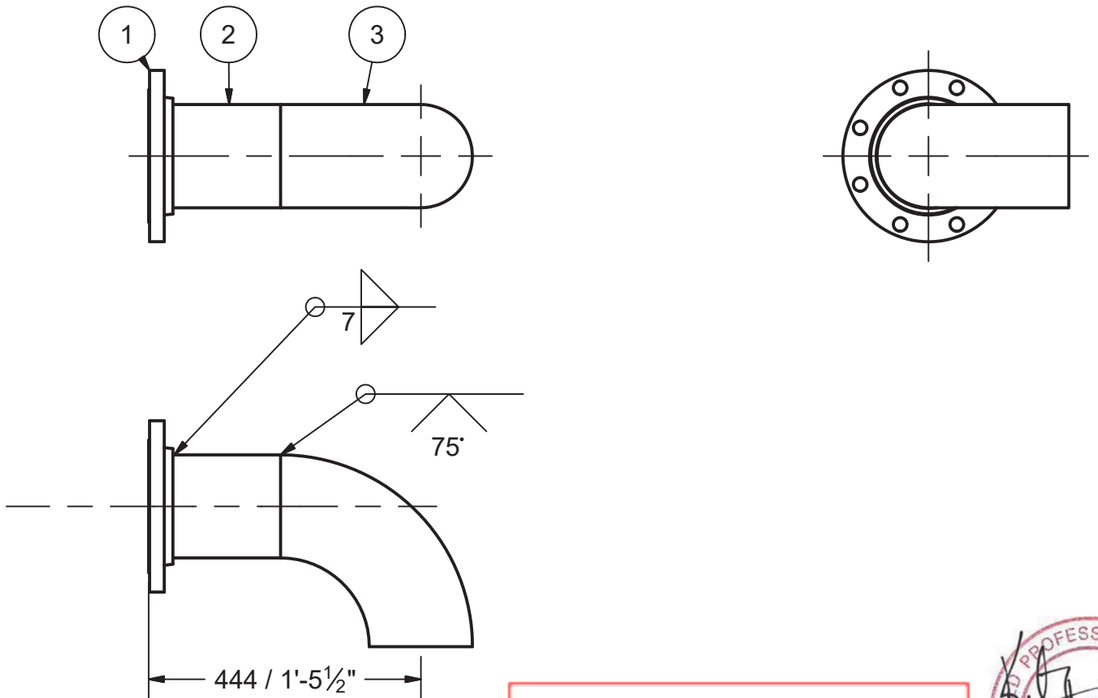

AS-BUILT
BY Inukshuk Construction Ltd. DATE 2017/10/02

REGISTERED PROFESSIONAL ENGINEER
R.G. BROWN
LICENSEE
NT/NU
16-Jul-2017

Permit Number: P471

REVISION HISTORY		
REV	DESCRIPTION	DATE
2	NOTE 2 CHANGED	5/11/2017

DRAWN Jacob Saunders	4/13/2017	AEM Meliadine Fuel Storage Tanks	
CHECKED			
QA		TITLE	
MFG		M1613 - 150NS PIPING LOW LEVEL	
APPROVED			
		SIZE A3	DWG NO 295-M16 / REV 3
		SCALE	SHEET 13 OF 22

Ø75 NS WATER DRAW OFF
MARK: M1614
QTY: 32

WEIGHT/SPOOL: 16.6KG

Parts List				
ITEM	ITEM QTY	CUT (MM)	PART NUMBER	MATERIAL
1	1		ASME B16.5 Flange Slip-On Welding - Class 150 3	A350 LF2
2	1	316	Pipe 3 - Schedule 80 - 12.440945	A333 GR. 6
3	1		ASME B16.9 Long Radius 90 Deg Elbow (Inch) 2 x 0.218 SCH80	A420
4	1		ASME B16.9 Eccentric Reducer 3 x 2 - Schedule 80	A420
5	1	799	Pipe 2 - Schedule 80 - 31.456693	A333 GR. 6
6	1	152	ASTM A 53/A 53M Pipe 2 - Schedule 40 - 6	Steel

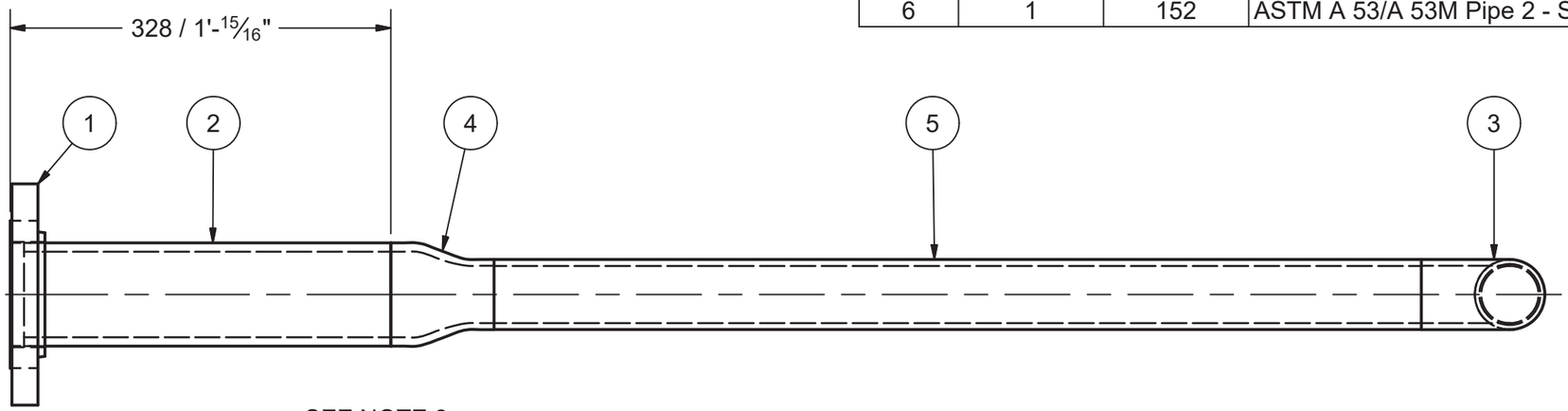

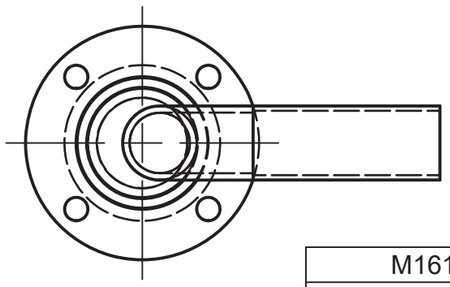

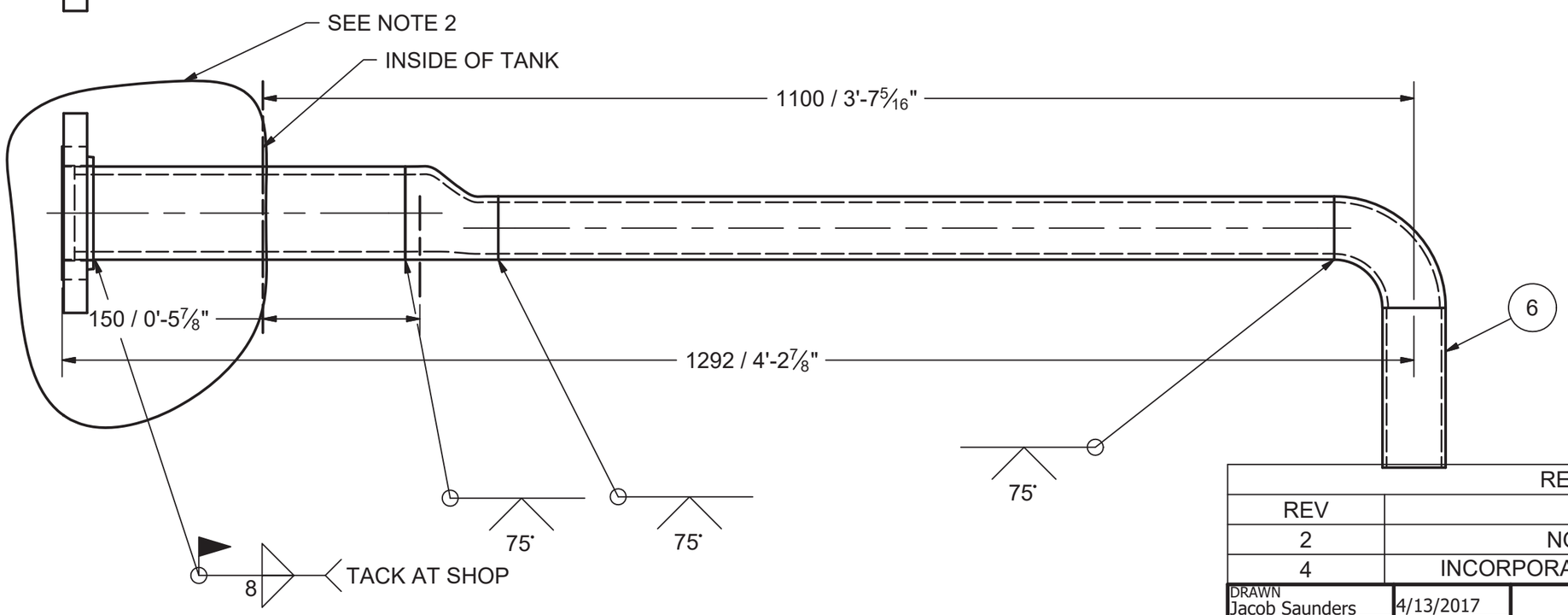

M1614 QTY	
Tank No.	QTY
1	6
2	6
3	6
4	6
5	4
6	4
TOTAL	32

REGISTERED PROFESSIONAL ENGINEER
K.G. BROWN
LICENSEE
NT/NU
30-Sep-2017

Permit Number: P471

AS-BUILT
BY Inukshuk Construction Ltd. DATE 2017/10/02

REVISION HISTORY		
REV	DESCRIPTION	DATE
2	NOTE 2 CHANGED	5/11/2017
4	INCORPORATE FIELD MODIFICATION	9/27/2017

NOTES:
1. ALL DIMENSIONS ARE IN MM UNLESS OTHERWISE NOTED
2. FINISH: SANDBLAST TO SSP-6 AREA THAT WOULD BE LOCATED OUTSIDE THE TANK AS INDICATED.

DRAWN Jacob Saunders	4/13/2017	AEM Meliadine Fuel Storage Tanks
CHECKED		TITLE: M1614 - 75NS WATER DRAW OFF
QA		
MFG		
APPROVED		

SIZE A3 | DWG NO 295-M16 | REV 4

SCALE | SHEET 14 OF 22

Parts List					
ITEM	ITEM QTY	CUT (MM)	PART NUMBER	DESCRIPTION	MATERIAL
1	1		Plate, 1/4" Thick x 152 Dia	Steel, Mild	G40.21M 300W
2	1	152	PIPE SCH40 ANSI - 4 x .237 - 6	Pipe	A53
3	1		Painters Post Reinforcing Plate	Plate, Mild Steel, 3/8" thk x 133 I.D. x 229 O.D.	G40.21M 300W

Ø100 NS PAINTERS SCAFFOLD CABLE SUPPORT
MARK: M1615
QTY: 6

WEIGHT/SPOOL: 3.4KG

M1615 QTY	
Tank No.	QTY
1	1
2	1
3	1
4	1
5	1
6	1
TOTAL	6

NOTES:
1. ALL DIMENSIONS ARE IN MM UNLESS OTHERWISE NOTED
2. FINISH: SANDBLAST TO SSP-6

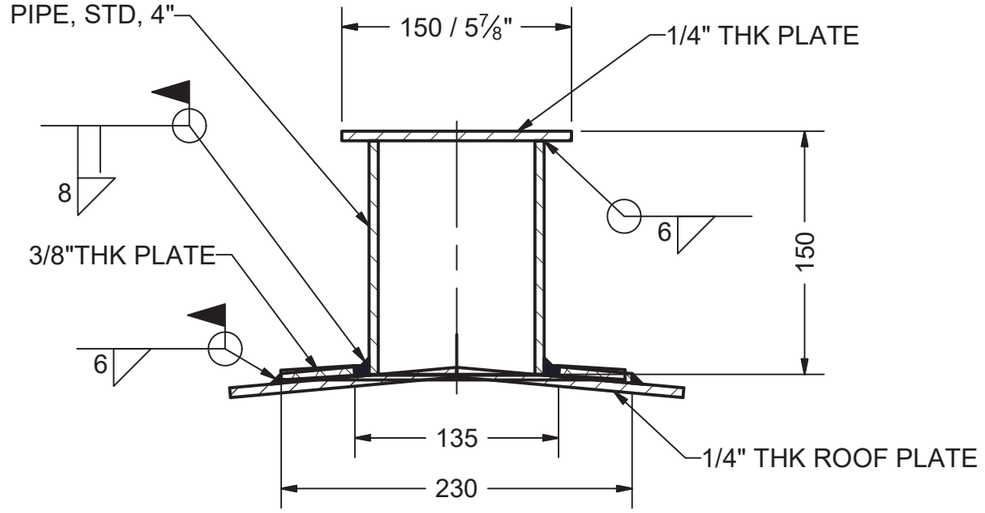

AS-BUILT
BY Inukshuk Construction Ltd. DATE 2017/10/02

REGISTERED PROFESSIONAL ENGINEER
K.S. BROWN
LICENSEE
NT/NU
16-Jul-2017
Permit Number: P471

MOSHER ENGINEERING LIMITED
-GRAVEL CRUSHING
-EARTHWORK
-PROCESS PIPE WELDING
-INDUSTRIAL CONTRACTING

1358 QUEEN ST
HALIFAX, NS
B3J 2H5
PH: (902) 429-0272
FAX: (902) 429-7762

DRAWN	Jacob Saunders	4/13/2017
CHECKED		
QA		
MFG		
APPROVED		

AEM Meliadine Fuel Storage Tanks

TITLE

M1615 - PAINTERS SCAFFOLD CABLE SUPPORT

SIZE	DWG NO	REV
A3	295-M16	3

SCALE

SHEET 15 OF 22

Parts List				
ITEM	ITEM QTY	CUT (MM)	PART NUMBER	MATERIAL
1	1		ASME B16.5 Flange Slip-On Welding - Class 150 16	A350 LF2
2	1	330	Pipe 16 - Schedule 30, 3/8" wall - 13"LG	A106

Ø400 NS ROOF NOZZLE
MARK: M1616
QTY: 6

WEIGHT/SPOOL: 83.5KG

M1616 QTY	
Tank No.	QTY
1	1
2	1
3	1
4	1
5	1
6	1
TOTAL	6

NOTES:
1. ALL DIMENSIONS ARE IN MM UNLESS OTHERWISE NOTED
2. FINISH: SANDBLAST TO SSP-6

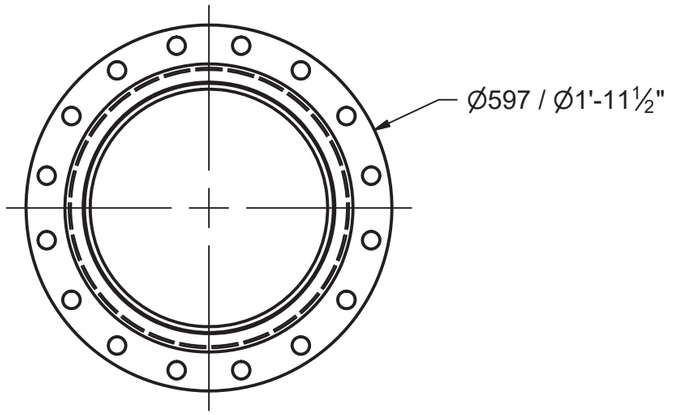

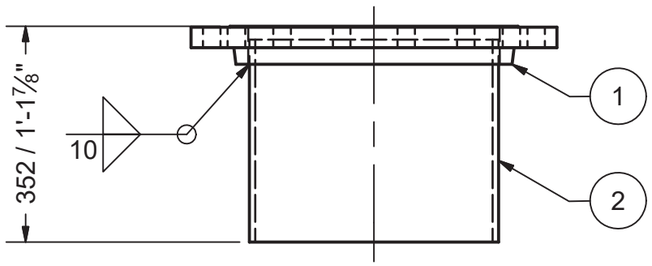

AS-BUILT
BY Inukshuk Construction Ltd. DATE 2017/10/02



Permit Number: P471

DRAWN Jacob Saunders	4/13/2017	AEM Meliadine Fuel Storage Tanks
CHECKED		TITLE: M1616 - Ø400 NS ROOF NOZZLE
QA		
MFG		
APPROVED		

SIZE		DWG NO	REV
A3		295-M16	3

SCALE

SHEET 16 OF 22

Parts List				
ITEM	ITEM QTY	CUT (MM)	PART NUMBER	MATERIAL
1	1		ASME B16.5 Flange Slip-On Welding - Class 150 16	A350 LF2
2	1	330	Pipe 16 - Schedule 30 - std .375" WALL	A106
4	1		Bird Screen 1/2" in Hole Opening	MILD STEEL
6	2	1	ASME B16.9 Long Radius 90 Deg Elbow (Metric) 16 x 9.5 [.375"] WALL S30 STD	A234

Ø400 NS VENT (RETURN BEND)
MARK: M1617
QTY: 4 △3

WEIGHT/SPOOL: 320.5KG

M1617 QTY	
Tank No.	QTY
1	0
2	0
3	1
4	1
5	1
6	1
TOTAL	4

△3

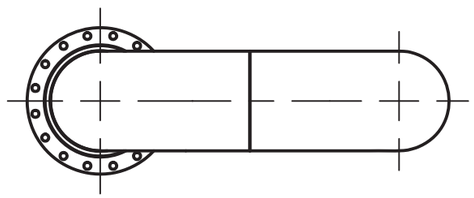

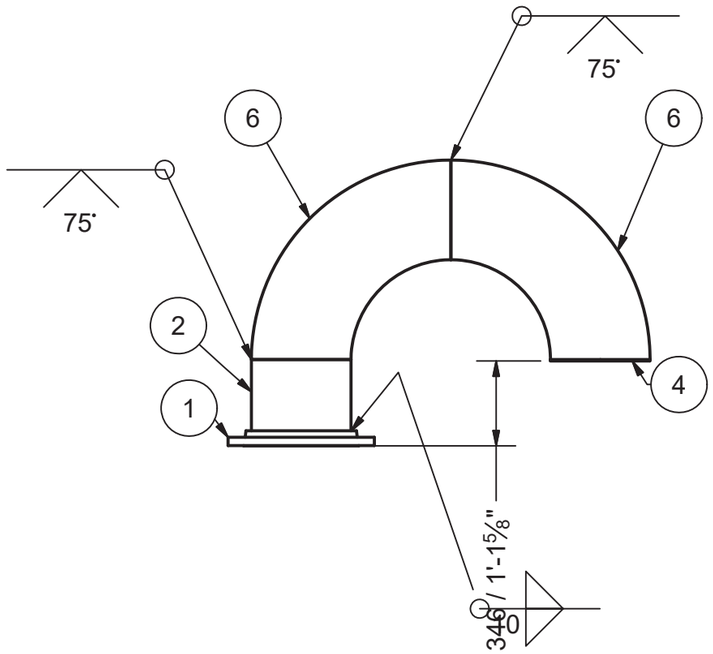

NOTES:
1. ALL DIMENSIONS ARE IN MM UNLESS OTHERWISE NOTED
2. FINISH: SANDBLAST TO SSP-6

AS-BUILT
BY Inukshuk Construction Ltd. DATE 2017/10/02

PROFESSIONAL ENGINEER
J. G. BROWN
LICENSEE
NT/NU
16-Jul-2017

Permit Number: P471

REVISION HISTORY		
REV	DESCRIPTION	DATE
3	QTY CHANGE FROM 6 TO 2	7/9/2017

DRAWN Jacob Saunders	4/13/2017	AEM Meliadine Fuel Storage Tanks
CHECKED		
QA		TITLE M1617 - 400NS VENT (RETURN BEND)
MFG		
APPROVED		SIZE A3 / DWG NO 295-M16 / REV 3
		SCALE / SHEET 17 OF 22

Parts List				
ITEM	ITEM QTY	CUT (MM)	PART NUMBER	MATERIAL
1	1		ASME B16.5 Flange Slip-On Welding - Class 150 8	A350 LF2
2	1	325	Pipe 8 - Schedule 40 - 12.795276	A333 GR. 6

Ø200 NS ROOF NOZZLE FOR OVERFILL PROT.
MARK: M1618
QTY: 6

WEIGHT/SPOOL: 25.8KG

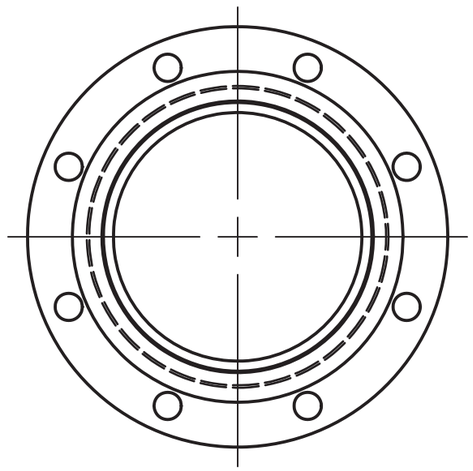

NOTES:
1. ALL DIMENSIONS ARE IN MM UNLESS OTHERWISE NOTED
2. FINISH: SANDBLAST TO SSP-6

M1618 QTY	
Tank No.	QTY
1	1
2	1
3	1
4	1
5	1
6	1
TOTAL	6

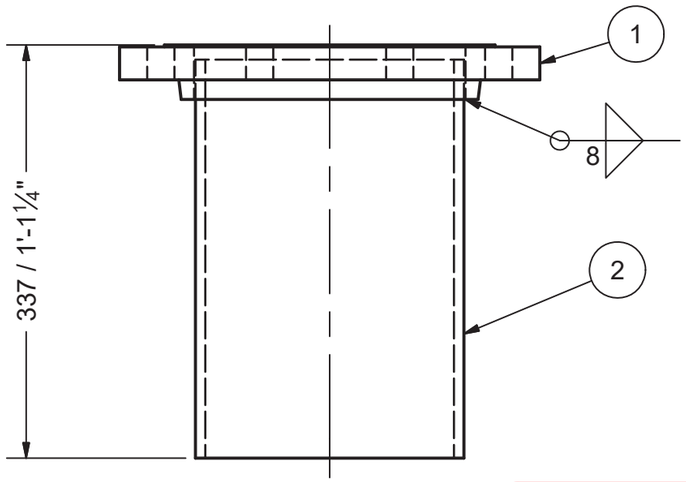

AS-BUILT
BY Inukshuk Construction Ltd. DATE 2017/10/02

16-Jul-2017
Permit Number: P471

DRAWN Jacob Saunders	4/13/2017	AEM Meliadine Fuel Storage Tanks
CHECKED		
QA		TITLE M1618 - 200NS ROOF NOZZLE FOR OVERFILL PROT.
MFG		
APPROVED		SIZE A3 · DWG NO 295-M16 · REV 3
		SCALE · SHEET 18 OF 22

Parts List				
ITEM	ITEM QTY	CUT (MM)	PART NUMBER	MATERIAL
1	1		Flange 6in Flat Face, Slip On 150#, A105	A350 LF2
2	1	216	PIPE ANSI - 6 x .280" WALL SCH40	A333 GR. 6

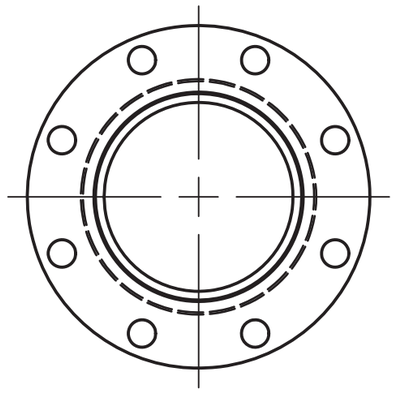

Ø150 NS ROOF NOZZLE FOR GAUGE HATCH
MARK: M1619
QTY: 6

WEIGHT/SPOOL: 13.3KG

NOTES:
1. ALL DIMENSIONS ARE IN MM UNLESS OTHERWISE NOTED
2. FINISH: SANDBLAST TO SSP-6

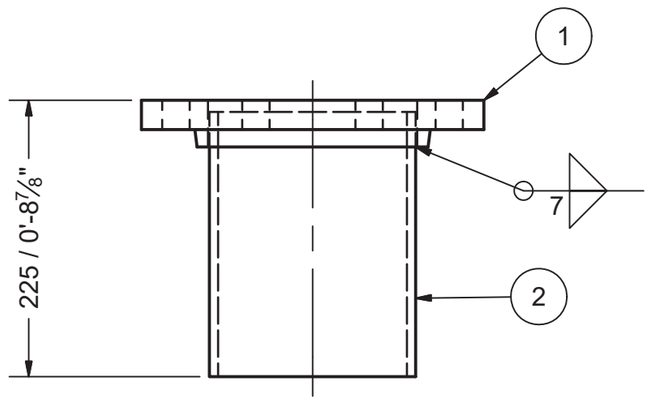

M1619 QTY	
Tank No.	QTY
1	1
2	1
3	1
4	1
5	1
6	1
TOTAL	6

AS-BUILT
BY Inukshuk Construction Ltd. DATE 2017/10/02

16-Jul-2017
Permit Number: P471

DRAWN Jacob Saunders	4/13/2017	AEM Meliadine Fuel Storage Tanks
CHECKED		TITLE M1619 - 150 NS ROOF NOZZLE FOR GAUGE HATCH
QA		
MFG		
APPROVED		
		SIZE A3 / DWG NO 295-M16 / REV 3
		SCALE / SHEET 19 OF 22

Parts List

ITEM	ITEM QTY	CUT (MM)	PART NUMBER	DESCRIPTION	STOCK NUMBER	MATERIAL
1	1		ASME B16.5 Flange Slip-On Welding - Class 150 4	FLANGE, R.F., SLIP ON, 150#, 100NS [4"]		A350 LF2
2	1	184	ASTM A 53/A 53M Pipe 4 - Schedule 40 - 7.2440945	PIPE, STD, 100NS [4"]	ASTM A 53/A 53M Pipe 4 - Schedule 40	A53

Ø100 NS ROOF NOZZLE
AS PER ECN NO. 1

MARK: M1621
QTY: 6

WEIGHT/SPOOL: 9 KG

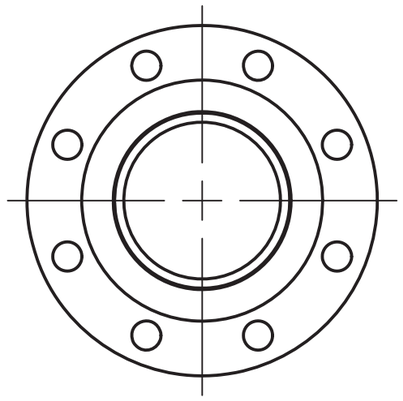

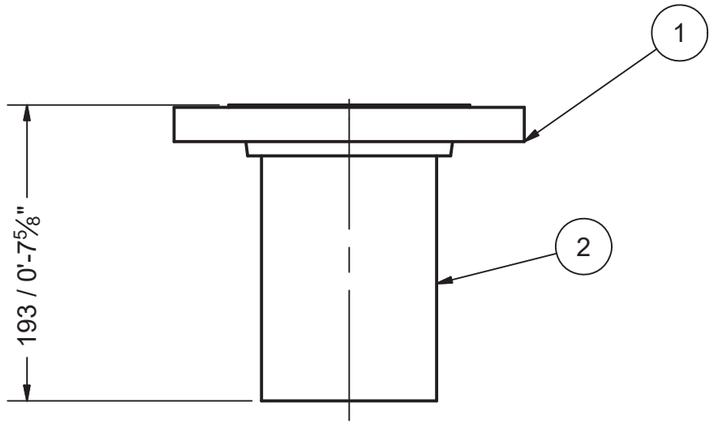

M1621 QTY	
Tank No.	QTY
1	1
2	1
3	1
4	1
5	1
6	1
TOTAL	6

AS-BUILT

BY Inukshuk Construction Ltd. DATE 2017/10/02

ASSESSED PROFESSIONAL ENGINEER C.C. BROWN LICENSEE NT/NU

16-Jul-2017

Permit Number: P471

REVISION HISTORY		
REV	DESCRIPTION	DATE
3	THIS SHEET ADDED AS PER ECN-001	7/7/2017

DRAWN Jacob Saunders	4/13/2017	AEM Meliadine Fuel Storage Tanks
CHECKED		
QA		TITLE M1621 - 100NS ROOF NOZZLE
MFG		
APPROVED		SIZE A3 | DWG NO 295-M16 | REV 3
		SCALE | SHEET 21 OF 22

Parts List				
ITEM	ITEM QTY	CUT (MM)	DESCRIPTION	MATERIAL
1	1	152	L100X100X10 [4"X4"X3/8"]	G40.21M 350W
2	1	152	FB150X6 [6"X1/4"]	G40.21M 300W
3	1	305	50NS [2"] PIPE SCH. 40	A53 ERW

PIPE SUPPORT TYPE 1
MARK: M17101
QTY: 72

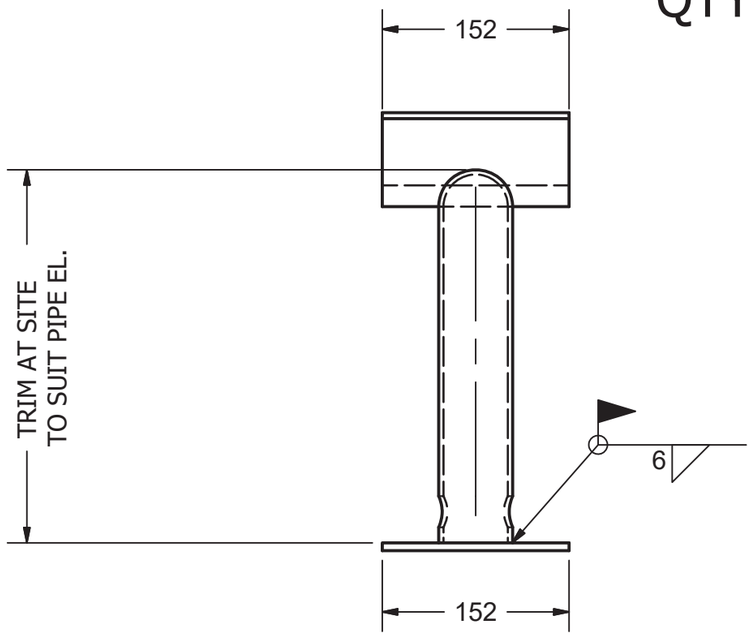

PIPE SUPPORT
SCALE 1/5

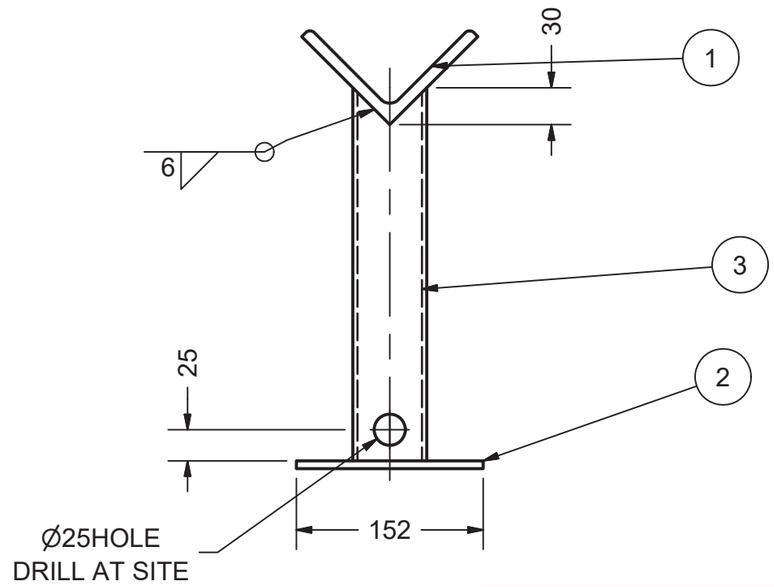

QTY PER TANK	
Tank No.	QTY
1	20
2	16
3	12
4	12
5	6
6	6
TOTAL	72

AS-BUILT
BY Inukshuk Construction Ltd. DATE 2017/10/02



Permit Number: P471

NOTE:
ALL DIMENSIONS ARE IN MM UNLESS OTHERWISE NOTED

DRAWN Jacob Saunders	4/13/2017	PIPE SUPPORT	
CHECKED		TITLE MISC. SUPPORTS AND BRACKETS	
QA			
MFG			
APPROVED		SIZE A3	DWG NO 295-M17
		SCALE	REV 2
		SHEET 1 OF 5	

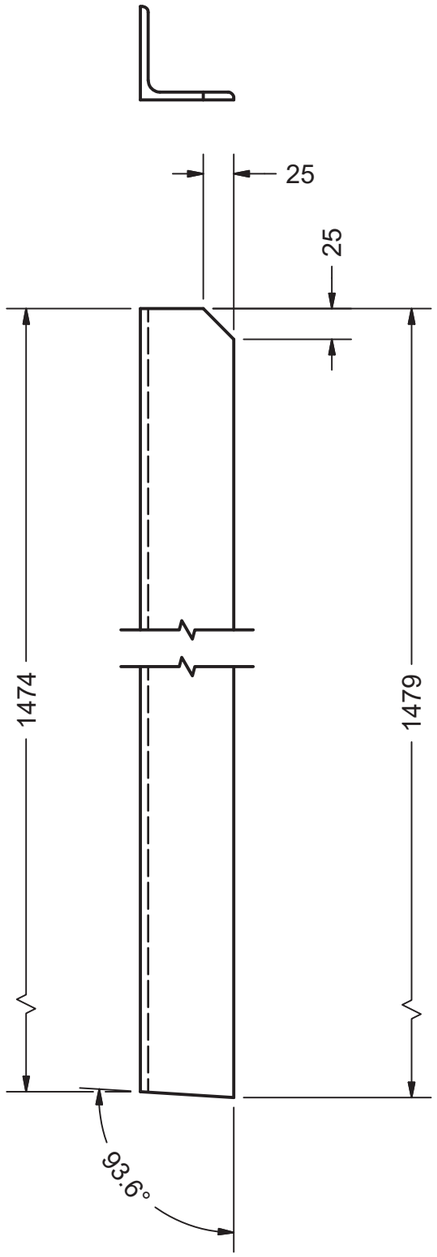

QTY PER TANK	
Tank No.	QTY
1	93
2	77
3	41
4	53
5	21
6	21
TOTAL	306

ROOF HANDRAIL POST
MARK M17201
QTY: 310
L76x76X6 [L3"X3"X1/4"] G40.21M 350W
SCALE 1/5

1

AS-BUILT
BY Inukshuk Construction Ltd. DATE 2017/10/02

REGISTERED PROFESSIONAL ENGINEER
K.G. BROWN
LICENSEE
NT/NU
16-Jul-2017
Permit Number: P471

REVISION HISTORY		
REV	DESCRIPTION	DATE
1	ANGLE SIZE CHG TO 76X76X6 (3"X3"X1/4")	4/27/2017

DRAWN Jacob Saunders	4/13/2017	ROOF TOP HANDRAIL POST
CHECKED		
QA		TITLE
MFG		MISC. SUPPORTS AND BRACKETS
APPROVED		
		SIZE A3 / DWG NO 295-M17 / REV 2
		SCALE / SHEET 2 OF 5

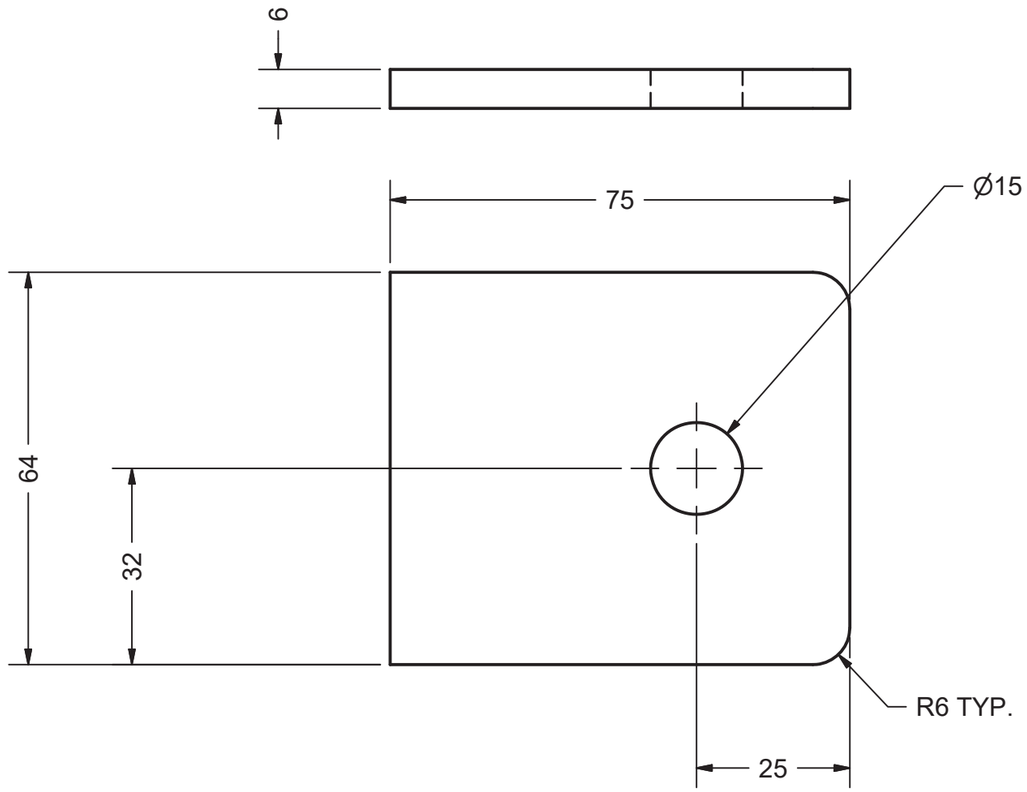

QTY PER TANK	
Tank No.	QTY
1	8
2	8
3	6
4	6
5	4
6	4
TOTAL	36

GROUNDING LUG
MARK M17301
QTY: 36
FB 75X6 [3"X1/4"]
STAINLESS STEEL 316
SCALE 1 : 1

AS-BUILT

BY Inukshuk Construction Ltd. DATE 2017/10/02



Permit Number: P471

DRAWN Jacob Saunders	4/13/2017	GROUNDING LUG	
CHECKED			
QA		TITLE	
MFG		MISC. SUPPORTS AND BRACKETS	
APPROVED			
		SIZE A3	DWG NO 295-M17 / REV 2
		SCALE	SHEET 3 OF 5

CUT LIST					UNIT QTY PER TANK					
MARK	QTY	CUT MM	DESCRIPTION	MATERIAL	TK #1	TK #2	TK #3	TK #4	TK #5	TK #6
M17401	6	400	L100X100X6 [L4"X4"X1/4"] TEMPERATOR SENSOR	G40.21M 350W	1	1	1	1	1	1
M17402	45	400	L75X75X6 [L3"X3"X1/4"] PIPING & ELECTRICAL BRACKET	G40.21M 350W	14	14	6	7	2	2

AS-BUILT

BY Inukshuk Construction Ltd. DATE 2017/10/02

REGISTERED PROFESSIONAL ENGINEER K. G. BROWN LICENSEE NT/NU

16-Jul-2017

Permit Number: P471

DRAWN Jacob Saunders	4/13/2017	MISC BRACKETS	
CHECKED			
QA			
MFG		TITLE MISC. SUPPORTS AND BRACKETS	
APPROVED			
		SIZE A3	DWG NO 295-M17 / REV 2
		SCALE	SHEET 4 OF 5

PARTS LIST FOR ONE (1) ASSY, SIXTEEN (16) REQUIRED				
ITEM	ITEM QTY	CUT (MM)	DESCRIPTION	MATERIAL
M18101	1	341	5/8"THK X 66 WIDE PLATE, SEE DETAIL	G40.21M 300W
M18102	1	373	2 1/2" STD PIPE	A53
M18103	1		DAVIT ARM, SEE DETAIL	
M18104	1	198	16 [5/8"] DIA LG SEE DETAIL	Steel
M18105	1		EYE-BOLT 5/8"DIA X 12" LG CROSBY G291	FORGED STEEL
M18106	2		5/8"-11UNC Hex Nuts (Inch Series) Heavy Hex Nut	A194 GR4

PARTS LIST FOR ONE (1) DAVIT ARM, SIXTEEN (16) REQ'D				
ITEM	ITEM QTY	CUT (MM)	DESCRIPTION	MATERIAL
M18108	1	645	2"NS XXH PIPE	A53
M18109	1	25	2 1/2"NS STD PIPE	A53
M18110	1		2"NS XXH ELBOW BW 90DEG L.R.	A234
M18111	1	890	2"NS XXH PIPE	A53
M18112	1	520	FB10X50 [3/8"X2"]	G40.21M 300W

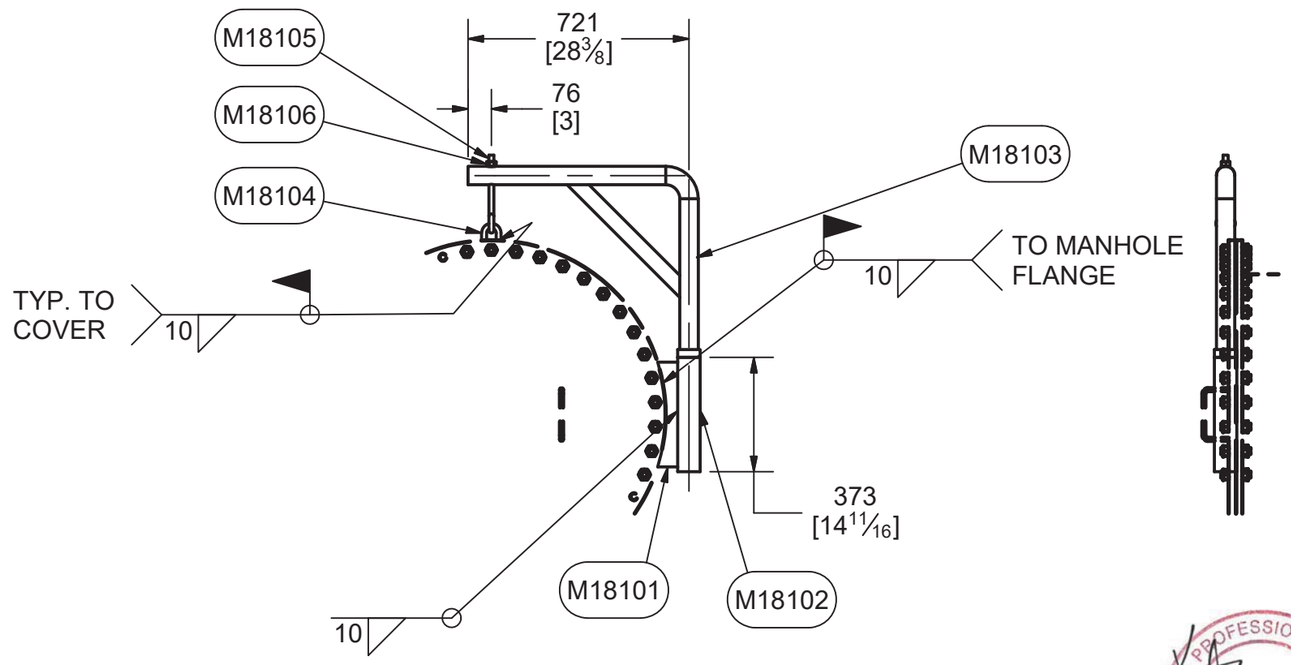

DAVIT ASSEMBLY
QTY: 16
SCALE 1/20

AS-BUILT
BY Inukshuk Construction Ltd. DATE 2017/10/02

REGISTERED PROFESSIONAL ENGINEER
R.G. BROWN
LICENSEE
NT/NU
04-May-2017

Permit Number: P471

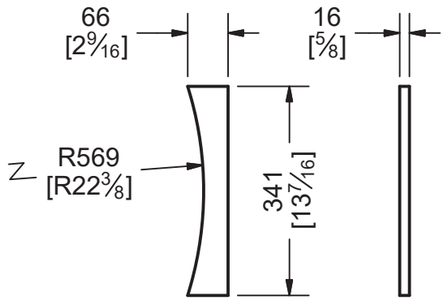

Pc M18101 DETAIL
SCALE 1/10

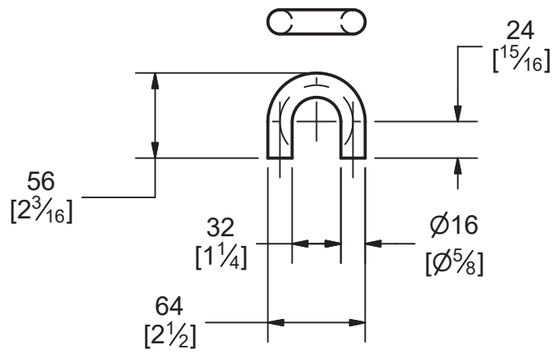

Pc M18104 DETAIL
SCALE 1/4

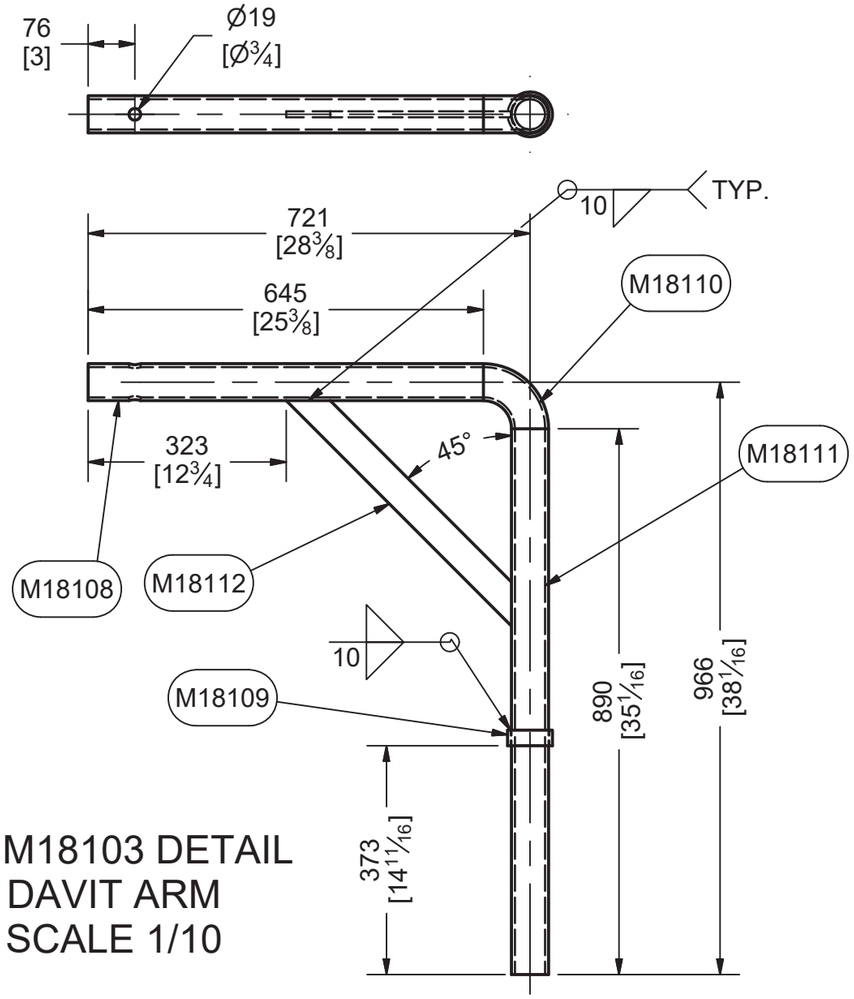

Pc. M18103 DETAIL
DAVIT ARM
SCALE 1/10

DRAWN MARC LOSIER	4/13/2017	900MM [36"] NS FOR TK1, 2, 3, 4	
CHECKED			
QA		TITLE	
MFG		MANHOLE COVER DAVIT	
APPROVED			
		SIZE A3	DWG NO 295-M18 REV
		SCALE	SHEET 1 OF 1

BILL OF MATERIALS

MARK	QTY.	DESCRIPTION	MATERIAL	MTR	WT #'s
1	1	C6ø10.5# x 3'-4" LG (CBE)	G40.21-300W	C	–
2	2	C6ø10.5# x 3'-1 15/16" LG (COE/POE)	G40.21-300W	C	–
3	1	C6ø10.5# x 3'-0 1/32" LG (CBE)	G40.21-300W	C	–
4	1	3/8" x 3" x 3" ANGLE x 3'-1 9/16" LG (CBE)	G40.21-300W	C	–
5	2	3/8" THK x 3" x 5"	G40.21-260W	C	–
6	4	1/4" THK x 6" x 10" c/w 2" RADIUS CORNERS	G40.21-260W	C	–
7	16	5/8"ø x 1 3/4" LG HEX HD BOLT c/w (1) NUT &	A325 GALV	C	–
		LOCK WASHER AND (2) FLAT WASHERS			
8	2	3/8" x 3" x 3" ANGLE x 3'-9 1/8" LG (CBE)	G40.21-300W	C	–
9	2	1/4" THK x 5" x 5 3/4" SEE DETAIL	G40.21-260W	C	–
10	4	1/4" THK x 6" x 6"	G40.21-260W	C	–

BILLING FOR ONE TANK SHOWN, TWO (2) REQUIRED

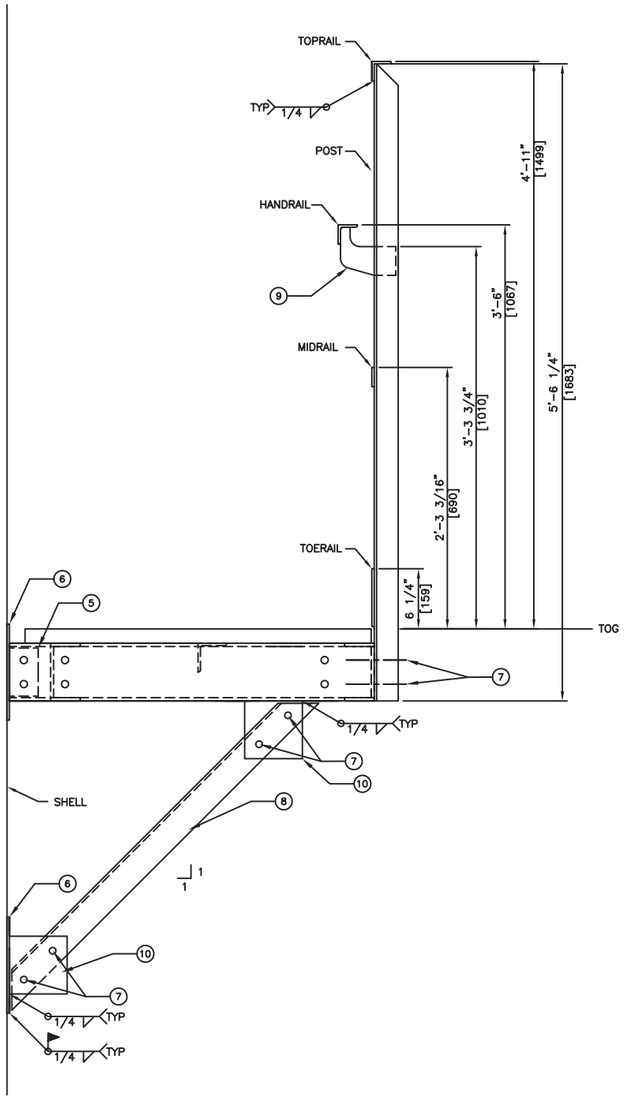

PLATFORM ELEVATION DETAIL

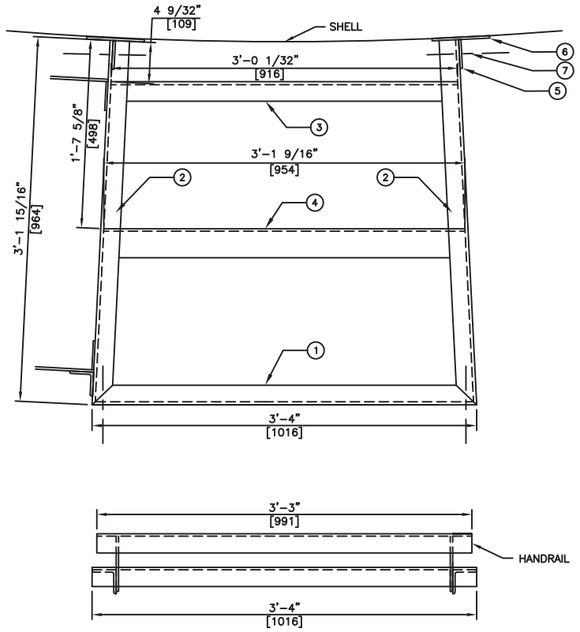

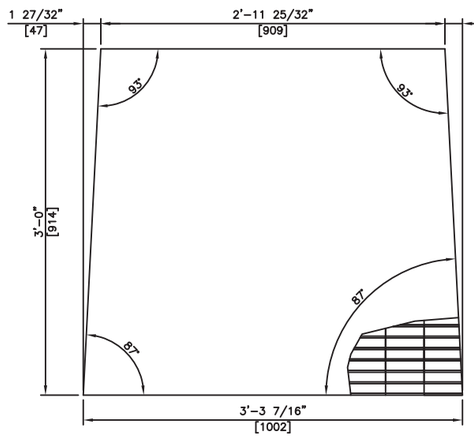

GRATING DETAIL

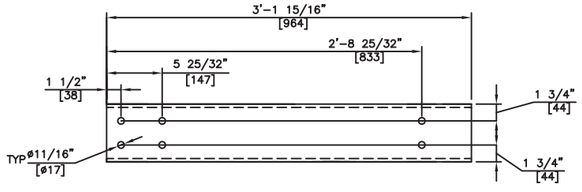

MARK 2 – RIGHT HAND SHOWN
LEFT HAND OPPOSITE

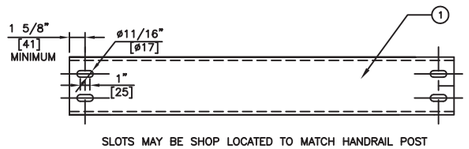

SLOTS MAY BE SHOP LOCATED TO MATCH HANDRAIL POST

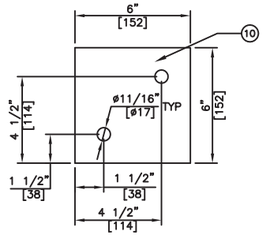

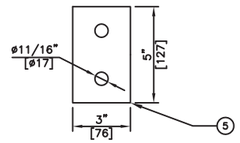

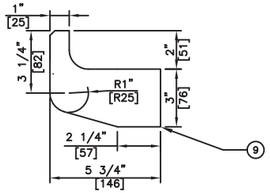

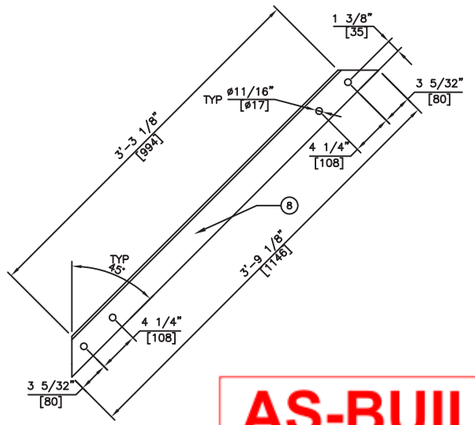

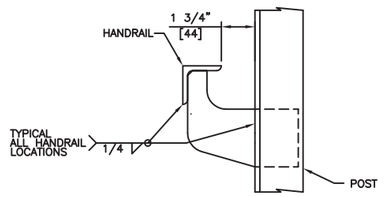

TYPICAL HANDRAIL/POST DETAIL

TYPICAL HANDRAIL DETAIL

TOPRAIL – 1/4" x 2" x 2" ANGLE
HANDRAIL – 1/4" x 2" x 2" ANGLE
MIDRAIL – 1/4" x 2" FLATBAR
TOERAIL – 1/4" x 6" FLATBAR
POST – 1/4" x 2 1/2" x 2 1/2" ANGLE
GRATING – 19-W-4 1 1/2" DEEP x 3/16"
GALVANIZED SERRATED BAR GRATING

**HANDRAIL LOCATED ON OUTSIDE ONLY – BOLTED TO PLATFORM

**ALL GRATING TO BE SECURED TO PLATFORM FRAME USING SADDLE CLIPS (BOLTED).

PLATFORM IS CAPABLE OF SUPPORTING A MOVING CONCENTRATED LOAD OF 1000LBS, AND HANDRAIL LOAD OF 200LBS IN ANY DIRECTION.

AS-BUILT
BY Inukshuk Construction Ltd. DATE 2017/10/02



REV.	DATE	DRWN.	APP'D.	DESCRIPTION
0	5-MAY-17	ME	KB	ISSUED FOR CONSTRUCTION
A	17-APR-17	ME	KB	ISSUED FOR APPROVAL

REVISIONS

SUB-ARC SYSTEMS INC.

CUSTOMER: AGNICO EAGLE MINES LIMITED – MELIADINE PROJECT
TITLE: MID PLATFORM DETAIL
PROJECT NO.: 6515
LOCATION: RANKIN INLET, NUNAVUT
TANK NO.: TANK TAG: TK #3
SCALE: 3/4" = 1'-0"
W.O.: 17-03
DRWG. No.: 17-03-3-001
Rev.: 0
DATE: 17-APR-17

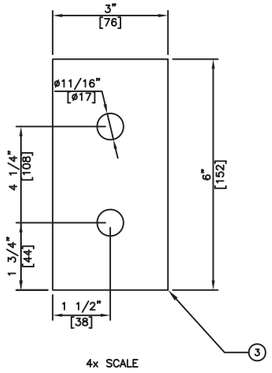

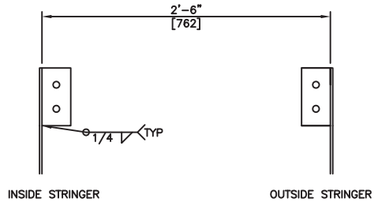

STRINGER CLIP TO PLATFORM

BILL OF MATERIALS

MARK	QTY.	DESCRIPTION	MATERIAL	MTR	WT #'s
1	1	1/4" THK x 12" x 19'-1 7/8" LG SEE DETAIL	G40.21-260W	C	–
2	2	1/4" THK x 12" x 18'-8 1/16" LG SEE DETAIL	G40.21-260W	C	–
3	10	1/4" THK x 3" x 6"	G40.21-260W	C	–
4	20	5/8"ø x 1 3/4" LG HEX HD BOLT c/w (1) NUT &	A325 GALV	C	–
		LOCK WASHER AND (2) FLAT WASHERS			

BILLING FOR ONE TANK SHOWN, ONE REQUIRED

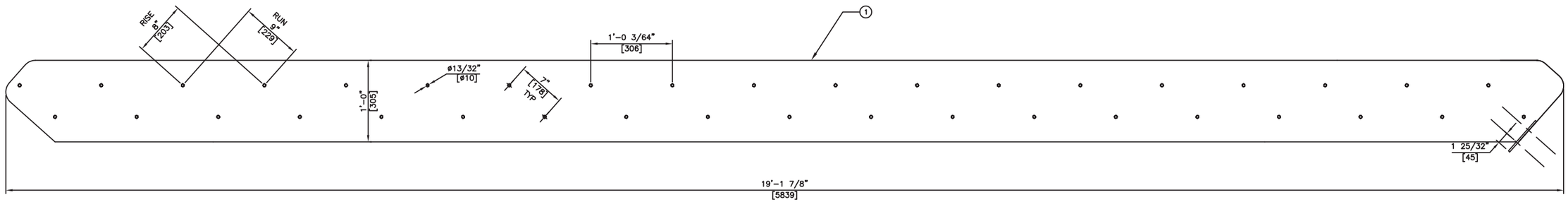

INSIDE BOTTOM STRINGER

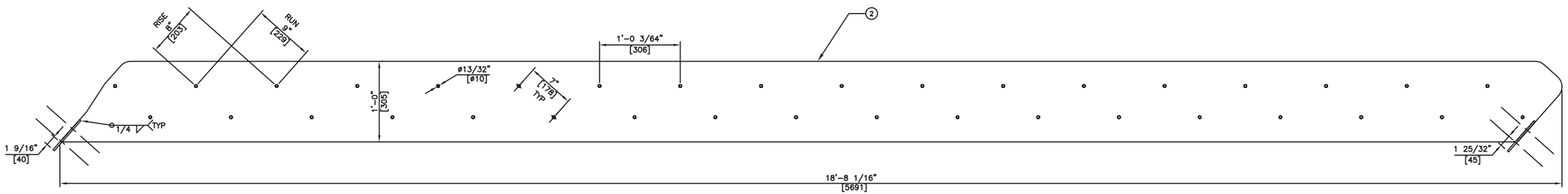

INSIDE STRINGER – TWO SECTIONS REQUIRED

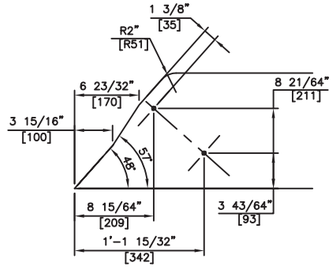

BOTTOM @ PLATFORM

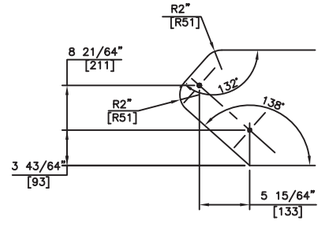

BOTTOM

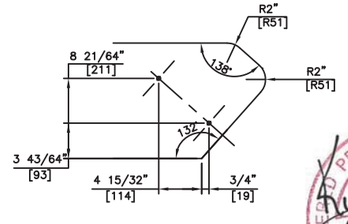

TOP

AS-BUILT

BY Inukshuk Construction Ltd. DATE 2017/10/02

NOTE: MARK 3 IS PLACED SAME SIDE AS STAIR.

REGISTERED PROFESSIONAL ENGINEER
K. G. BROWN
LICENSEE
NT/NU
24-Jul-2017

REV.	DATE	DRWN.	APP'D.	DESCRIPTION
0	5-MAY-17	ME	KB	ISSUED FOR CONSTRUCTION
A	17-APR-17	ME	KB	ISSUED FOR APPROVAL

REVISIONS

SUB-ARC SYSTEMS INC.

CUSTOMER: AGNICO EAGLE MINES LIMITED – MELIADINE PROJECT

TITLE: INSIDE STRINGER DETAIL

PROJECT NO.: 6515

LOCATION: RANKIN INLET, NUNAVUT

TANK NO.: TANK TAG: TK #3

SCALE: 3/4" = 1'-0"

W.O.: 17-03

DATE: 17-APR-17

DRWG. No.: 17-03-3-002

Rev.: 0

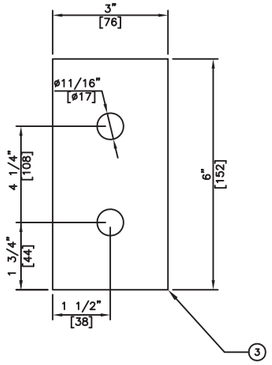

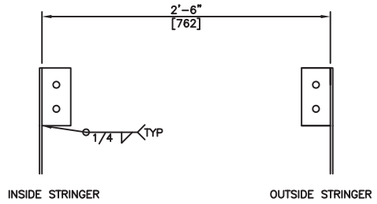

STRINGER CLIP TO PLATFORM

BILL OF MATERIALS

MARK	QTY.	DESCRIPTION	MATERIAL	MTR	WT #'s
1	1	1/4" THK x 12" x 19'-11 27/32" LG SEE DETAIL	G40.21-260W	C	–
2	2	1/4" THK x 12" x 19'-5 1/32" LG SEE DETAIL	G40.21-260W	C	–
3	10	1/4" THK x 3" x 6"	G40.21-260W	C	–
4	20	5/8"ø x 1 3/4" LG HEX HD BOLT c/w (1) NUT &	A325 GALV	C	–
		SERRATED BAR GRATING c/w CHECKER PLATE NOSE			
5	55	STAIR TREAD 9 3/4" WIDE x 30" LG x 1 1/2" x 3/16"	G40.21-260W	C	–
		SERRATED c/w CHECKER PLATE NOSE			
6	220	3/8"ø x 1 1/2" LG HEX HD BOLT c/w (1) NUT &	A325 GALV	C	–
		LOCK WASHER AND (2) FLAT WASHERS			

BILLING FOR ONE TANK SHOWN, ONE REQUIRED

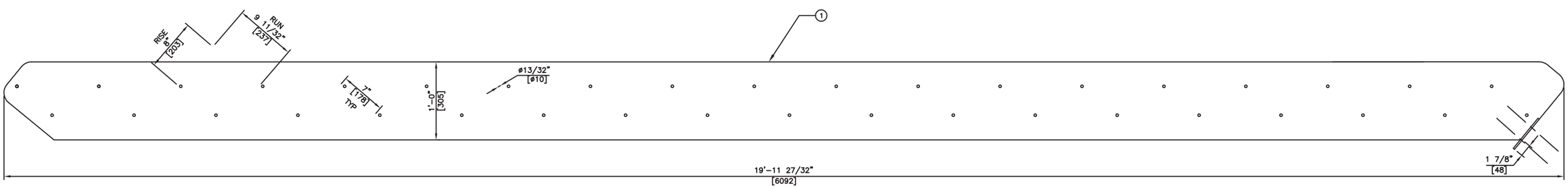

OUTSIDE BOTTOM STRINGER

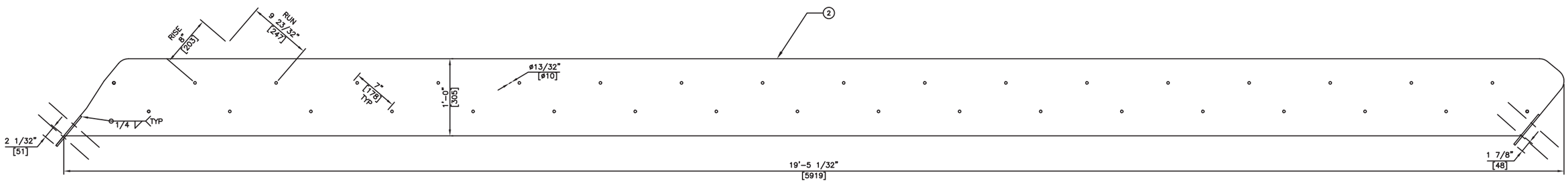

OUTSIDE STRINGER – TWO SECTIONS REQUIRED

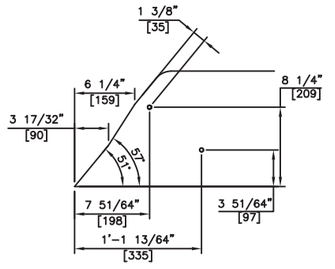

BOTTOM @ PLATFORM

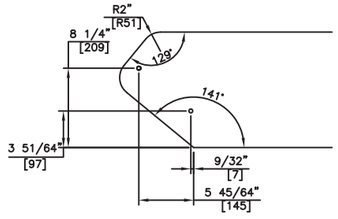

BOTTOM

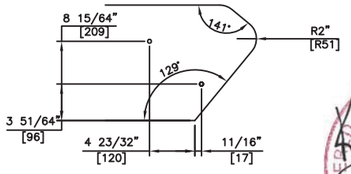

TOP

AS-BUILT

BY Inukshuk Construction Ltd. DATE 2017/10/02

NOTE: MARK 3 IS PLACED SAME SIDE AS STAIR.



REV.	DATE	DRWN.	APP'D.	DESCRIPTION
0	5-MAY-17	ME	KB	ISSUED FOR CONSTRUCTION
A	17-APR-17	ME	KB	ISSUED FOR APPROVAL

REVISIONS

SUB-ARC SYSTEMS INC.

CUSTOMER: AGNICO EAGLE MINES LIMITED – MELIADINE PROJECT

TITLE: OUTSIDE STRINGER DETAIL

PROJECT NO.: 6515

LOCATION: RANKIN INLET, NUNAVUT

TANK NO.: TANK TAG: TK #3

SCALE: 3/4" = 1'-0"

W.O.: 17-03

DATE: 17-APR-17

DRWG. No.: 17-03-3-003

Rev.: 0

BILL OF MATERIALS

MARK	QTY.	DESCRIPTION	MATERIAL	MTR	WT #'s
1	6	3/8" x 3" x 3" ANGLE x 3'–3" LG (PBE)	G40.21–300W	C	–
2	14	1/4" THK x 2 5/8" x 7" LG	G40.21–260W	C	–
3	6	3/8" x 3" x 3" ANGLE x 3'–9 1/8" LG	G40.21–300W	C	–
4	38	5/8"ø x 1 3/4" LG HEX HD BOLT c/w (1) NUT &	A325 GALV	C	–
		LOCK WASHER AND (2) FLAT WASHERS			
5	13	1/4" THK x 6" x 10" c/w 2" RADIUS CORNERS	G40.21–260W	C	–
6	1	C6⊕10.5# x 2'–11" LG	G40.21–300W	C	–
7	12	1/4" THK x 6" x 6"	G40.21–260W	C	–

BILLING FOR ONE TANK SHOWN, ONE REQUIRED

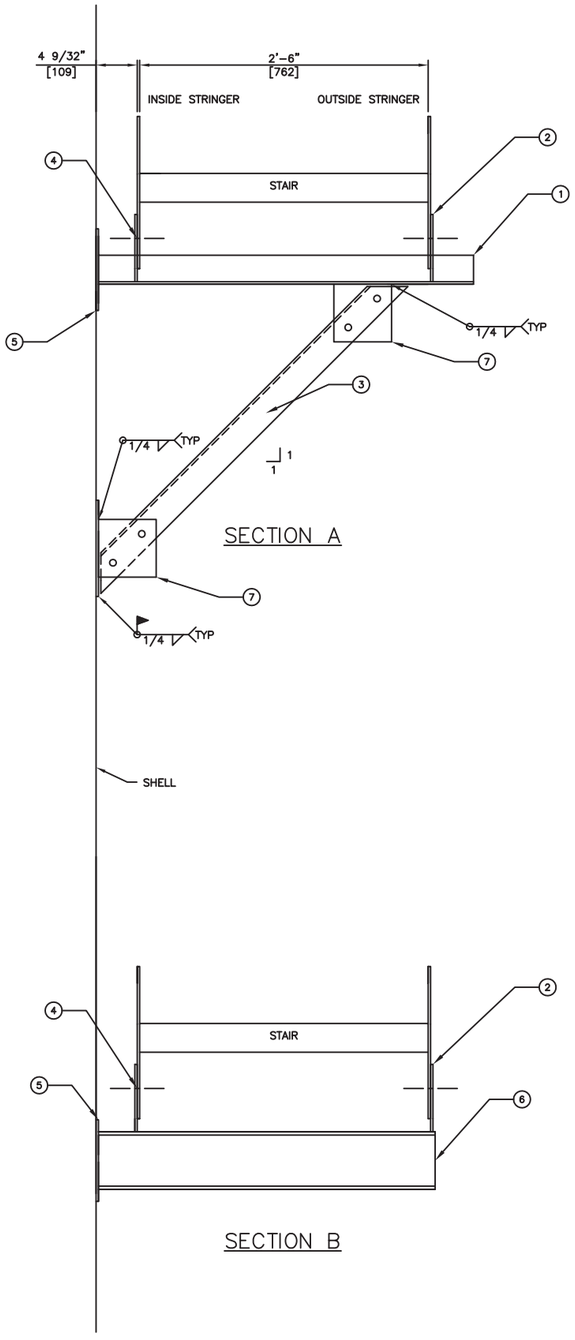

SECTION A

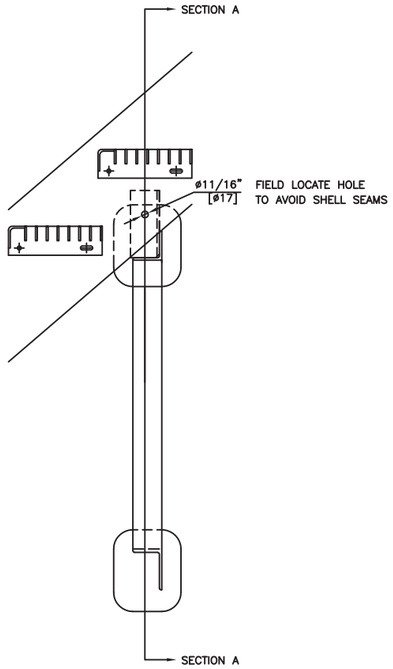

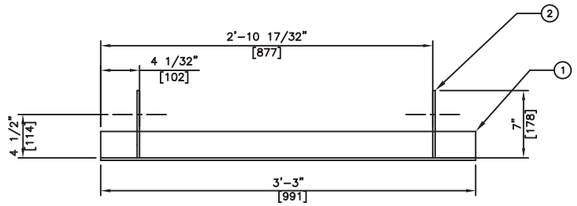

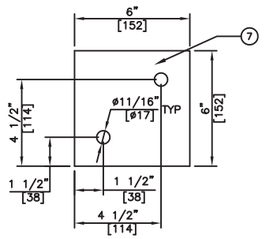

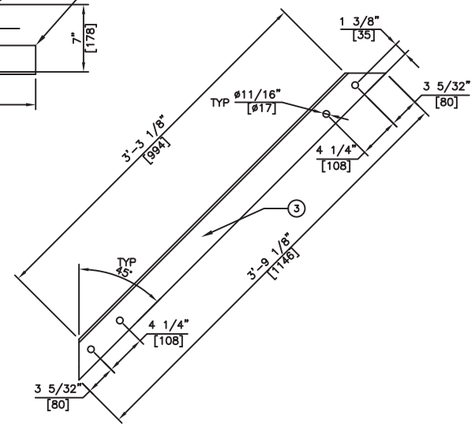

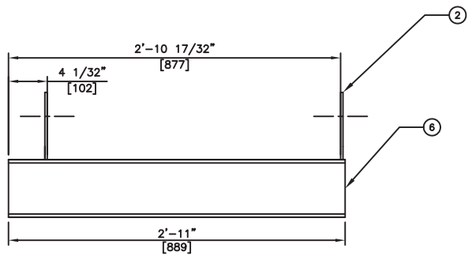

SECTION B

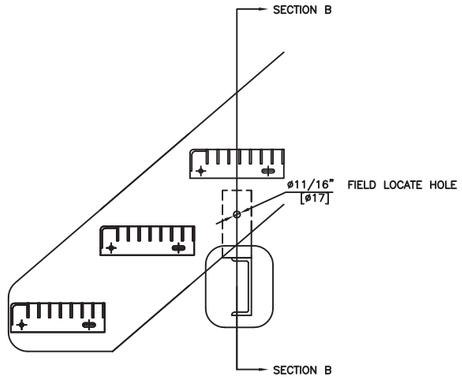

CHANNEL SUPPORT IS FOR BOTTOM OF STAIRS ONLY.

AS-BUILT

BY Inukshuk Construction Ltd. DATE 2017/10/02

NOTE: MAXIMUM SUPPORT SPACING IS EVERY 7 STAIRS.



REV.	DATE	DRWN.	APP'D.	DESCRIPTION
0	5–MAY–17	ME	KB	ISSUED FOR CONSTRUCTION
A	17–APR–17	ME	KB	ISSUED FOR APPROVAL

REVISIONS

SUB–ARC SYSTEMS INC.

CUSTOMER: AGNICO EAGLE MINES LIMITED – MELIADINE PROJECT

TITLE: STAIR STRINGER SUPPORTS

PROJECT NO.: 6515

LOCATION: RANKIN INLET, NUNAVUT

TANK NO.: TANK TAG: TK #3

SCALE: 3/4" = 1'–0"

DATE: 17–APR–17

W.O.: 17–03

DRWG. No.: 17–03–3–004

Rev.: 0

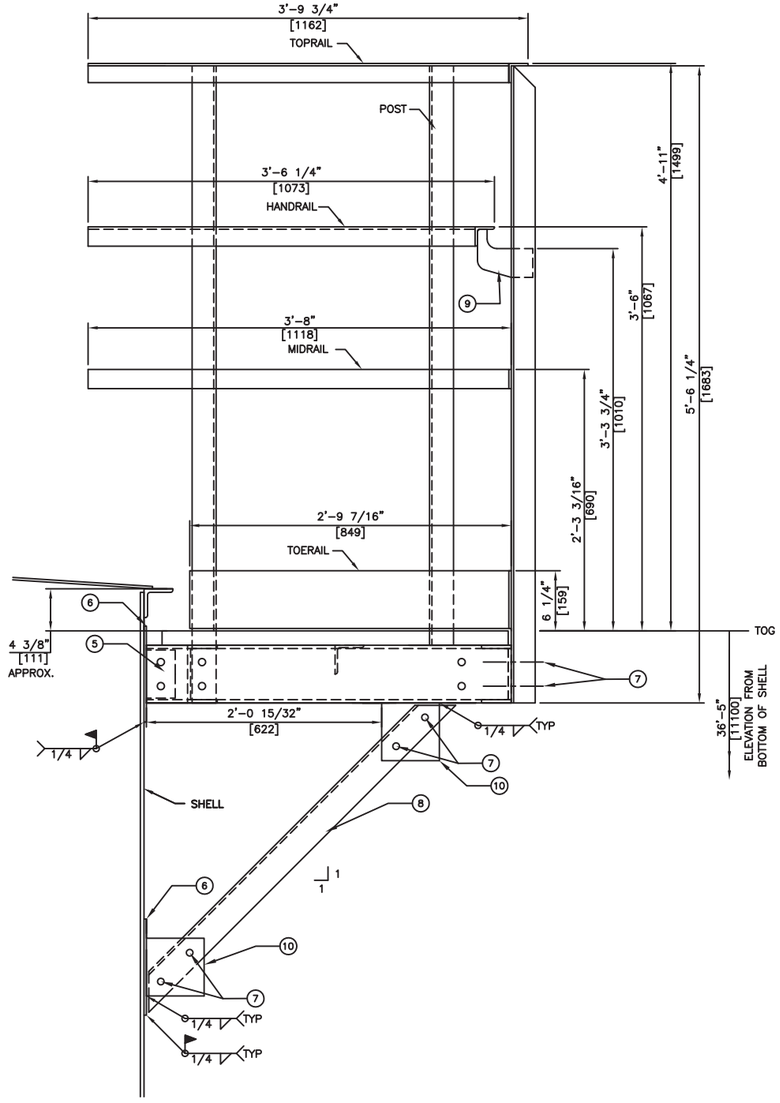

PLATFORM ELEVATION DETAIL

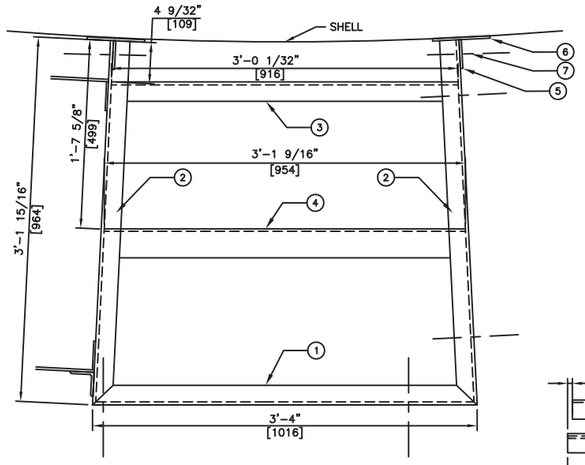

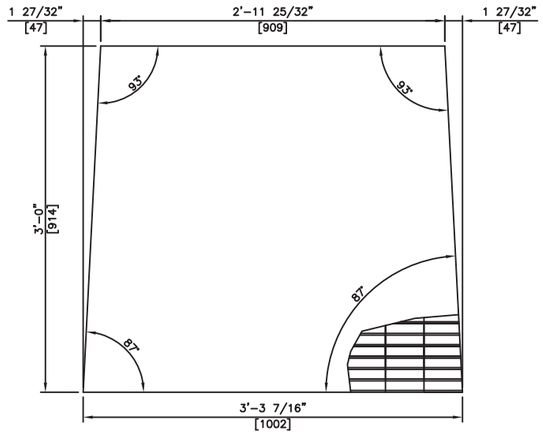

GRATING DETAIL

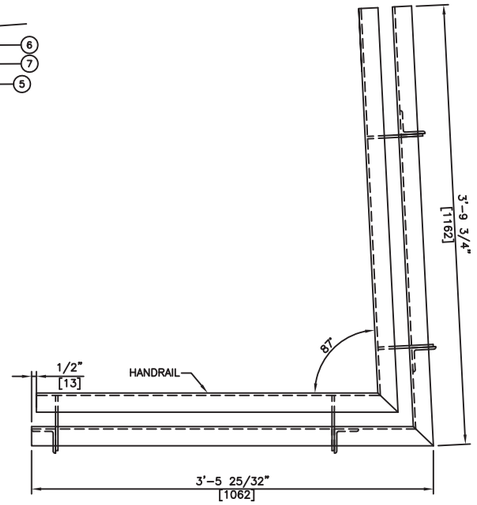

BILL OF MATERIALS

MARK	QTY.	DESCRIPTION	MATERIAL	MTR	WT #'s
1	1	C6⓪10.5# x 3'-4" LG (CBE)	G40.21-300W	C	–
2	2	C6⓪10.5# x 3'-1 15/16" LG (COE/POE)	G40.21-300W	C	–
3	1	C6⓪10.5# x 3'-0 1/32" LG (CBE)	G40.21-300W	C	–
4	1	3/8" x 3" x 3" ANGLE x 3'-1 9/16" LG (CBE)	G40.21-300W	C	–
5	2	3/8" THK x 3" x 5"	G40.21-260W	C	–
6	4	1/4" THK x 6" x 10" c/w 2" RADIUS CORNERS	G40.21-260W	C	–
7	20	5/8"⓪ x 1 3/4" LG HEX HD BOLT c/w (1) NUT & LOCK WASHER AND (2) FLAT WASHERS	A325 GALV	C	–
8	2	3/8" x 3" x 3" ANGLE x 3'-9 1/8" LG (CBE)	G40.21-300W	C	–
9	4	1/4" THK x 5" x 5 3/4" SEE DETAIL	G40.21-260W	C	–

BILLING FOR ONE TANK SHOWN, ONE (1) REQUIRED

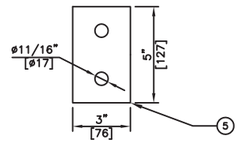

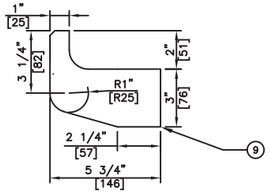

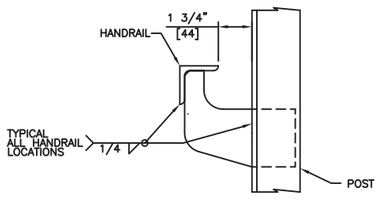

TYPICAL HANDRAIL/POST DETAIL

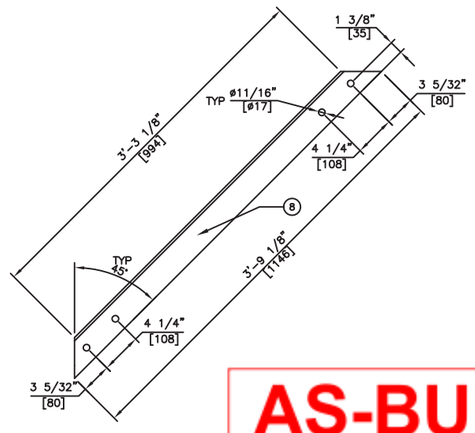

TYPICAL HANDRAIL DETAIL

TOPRAIL – 1/4" x 2" x 2" ANGLE
HANDRAIL – 1/4" x 2" x 2" ANGLE
MIDRAIL – 1/4" x 2" FLATBAR
TOERAIL – 1/4" x 6" FLATBAR
POST – 1/4" x 2 1/2" x 2 1/2" ANGLE
GRATING – 19-W-4 1 1/2" DEEP x 3/16" GALVANIZED SERRATED BAR GRATING

**HANDRAIL LOCATED ON OUTSIDE ONLY – BOLTED TO PLATFORM

**ALL GRATING TO BE SECURED TO PLATFORM FRAME USING SADDLE CLIPS (BOLTED).

FIELD TO TRIM HANDRAIL OVER TANK ROOF TO MATE WITH PERIMETER HANDRAIL

PLATFORM IS CAPABLE OF SUPPORTING A MOVING CONCENTRATED LOAD OF 1000LBS, AND HANDRAIL LOAD OF 200LBS IN ANY DIRECTION.

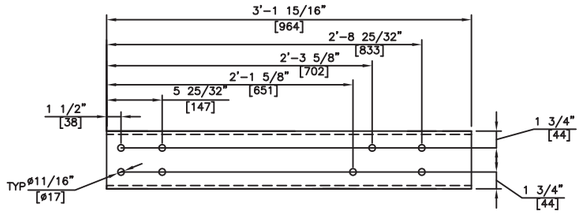

MARK 2 – RIGHT HAND SHOWN
LEFT HAND OPPOSITE

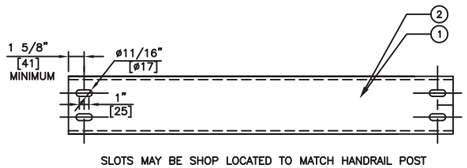

SLOTS MAY BE SHOP LOCATED TO MATCH HANDRAIL POST

AS-BUILT
BY Inukshuk Construction Ltd. DATE 2017/10/02

REGISTERED PROFESSIONAL ENGINEER
K.G. BROWN
LICENSEE
NT/NU
24-Jul-2017

REV.	DATE	DRWN.	APP'D.	DESCRIPTION
0	5-MAY-17	ME	KB	ISSUED FOR CONSTRUCTION
A	17-APR-17	ME	KB	ISSUED FOR APPROVAL

REVISIONS

SUB-ARC SYSTEMS INC.

CUSTOMER: AGNICO EAGLE MINES LIMITED – MEL1ADINE PROJECT
TITLE: TOP PLATFORM DETAIL
PROJECT NO.: 6515
LOCATION: RANKIN INLET, NUNAVUT
TANK NO.: TANK TAG: TK #3
SCALE: 3/4" = 1'-0"
W.O.: 17-03
DRWG. No.: 17-03-3-005
Rev.: 0
DATE: 17-APR-17

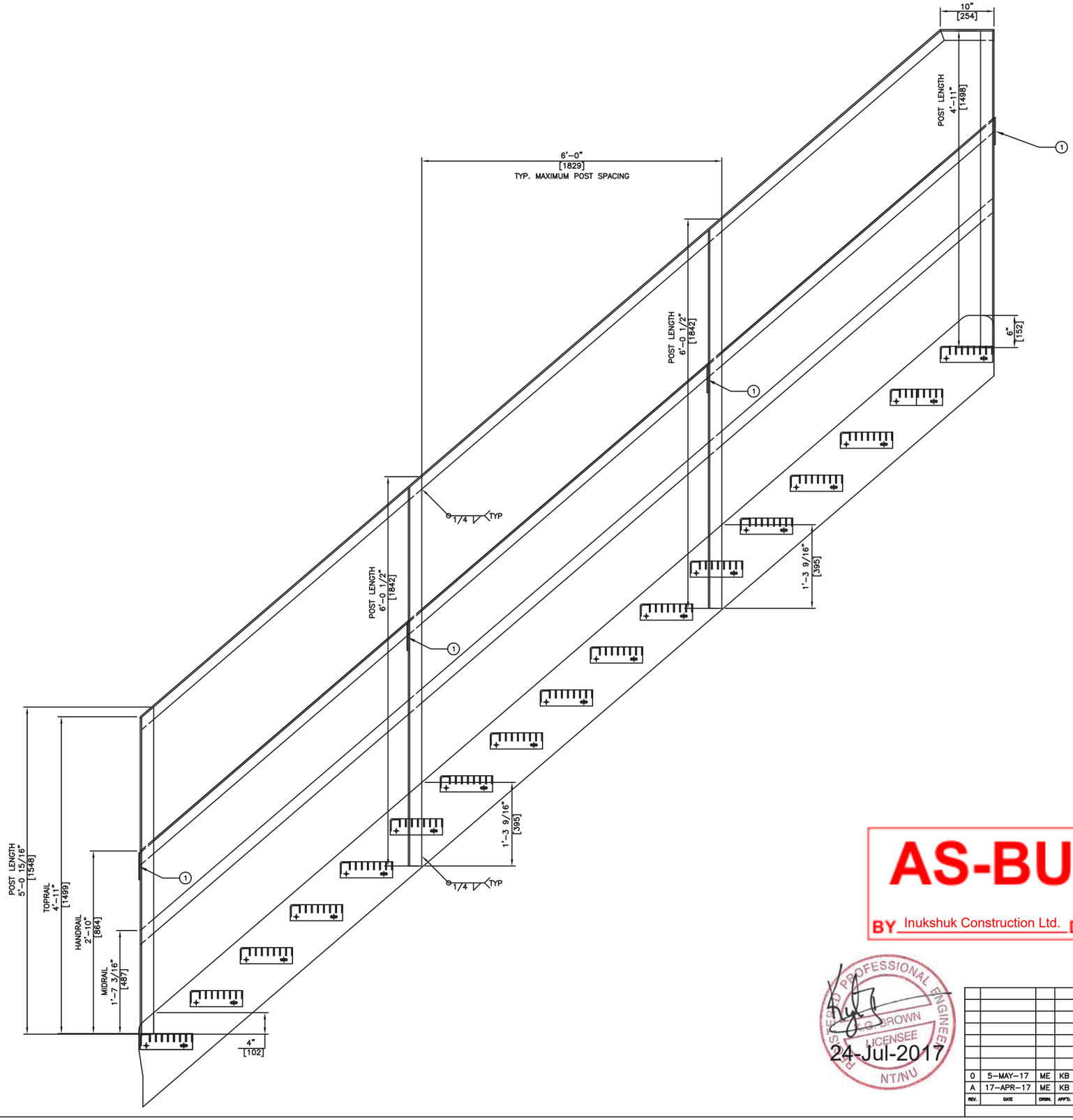

BILL OF MATERIALS

MARK	QTY.	DESCRIPTION	MATERIAL	MTR	WT #'s
1	4	1/4" THK x 5" x 5 3/4" SEE DETAIL	G40.21-260W	C	–

BILLING FOR ONE TANK SHOWN, FOUR (4) REQUIRED

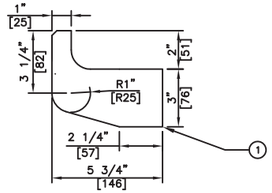

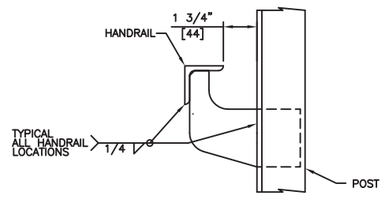

TYPICAL HANDRAIL/POST DETAIL

TYPICAL HANDRAIL DETAIL

TOPRAIL – 1/4" x 2" x 2" ANGLE
HANDRAIL – 1/4" x 2" x 2" ANGLE
MIDRAIL – 1/4" x 2" FLATBAR

POST – 1/4" x 2 1/2" x 2 1/2" ANGLE
POST SHALL BE SQUARE TO THE STAIR HOLES
1 POST AT EACH END, 2 POSTS EQUAL SPACE ON STRINGER

**HANDRAIL LOCATED ON OUTSIDE ONLY

QUANTITY OF STAIRS IS FOR DEMONSTRATION ONLY.

STAIRS ARE CAPABLE OF SUPPORTING A MOVING CONCENTRATED LOAD OF 1000LBS, AND HANDRAIL LOAD OF 200LBS IN ANY DIRECTION.

AS-BUILT

BY Inukshuk Construction Ltd. DATE 2017/10/02

REV.	DATE	DRWN.	APP'D.	DESCRIPTION
0	5-MAY-17	ME	KB	ISSUED FOR CONSTRUCTION
A	17-APR-17	ME	KB	ISSUED FOR APPROVAL

REVISIONS

SUB-ARC SYSTEMS INC.

CUSTOMER: AGNICO EAGLE MINES LIMITED – MELIADINE PROJECT

TITLE: STAIR HANDRAIL DETAIL

PROJECT NO.: 6515

LOCATION: RANKIN INLET, NUNAVUT

TANK NO.: TANK TAG: TK #3

SCALE: 3/4" = 1'-0"

W.O.: 17-03

DATE: 17-APR-17

DRWG. No.: 17-03-3-006

Rev.: 0

PARTS LIST			
ITEM	QTY	DESCRIPTION	MATERIAL
F5A	1	PL 6.35 X 2438 x 6096	G40.21M-260WT
F5B	2	PL 6.35 X 2438 x 1175	G40.21M-260WT
F5C	4	PL 6.35 X 2038 x 4033	G40.21M-260WT
F5D	2	PL 6.35 X 604 x 4330	G40.21M-260WT

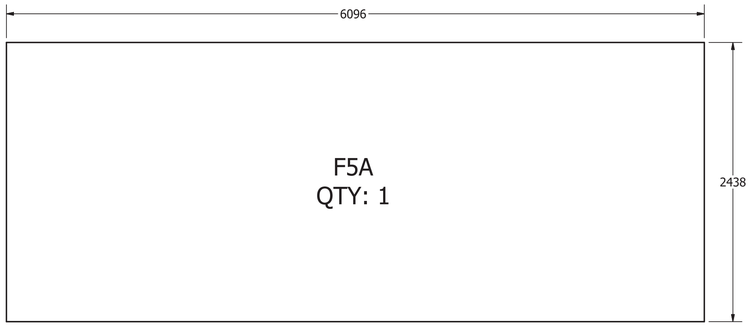

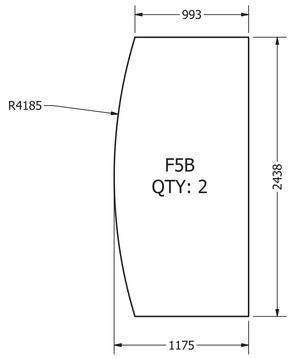

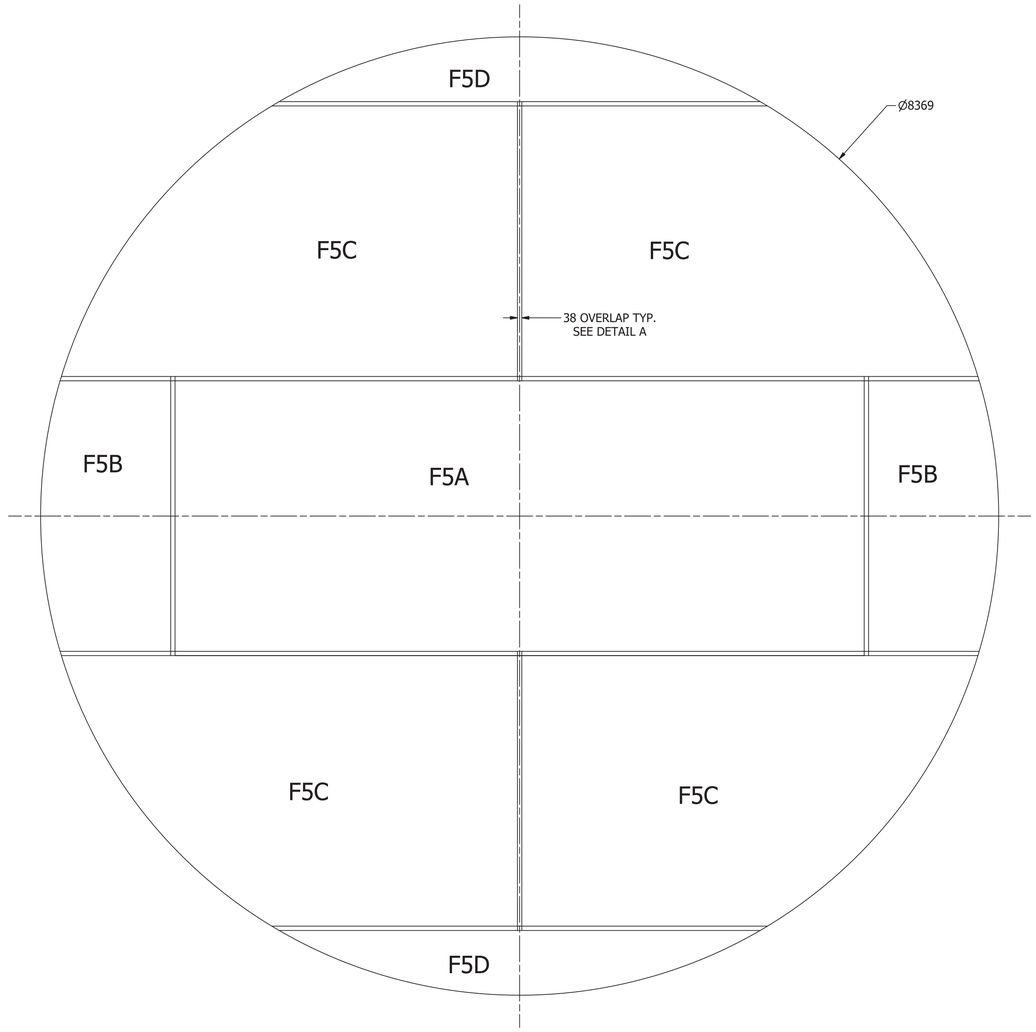

TK 5 (250KL) FLOOR LAYOUT
SCALE 1 / 25

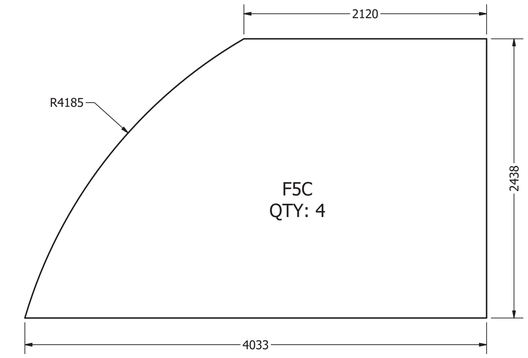

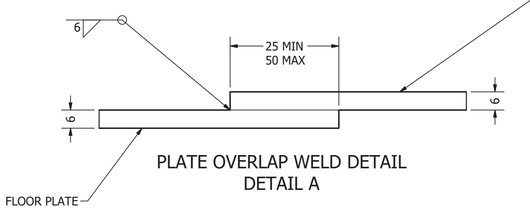

PLATE OVERLAP WELD DETAIL
DETAIL A

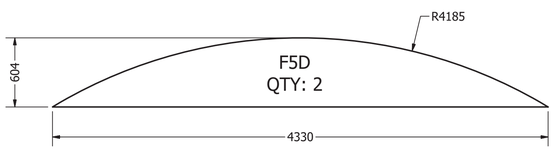

NOTE - PER API-650 5.1.5.4 - BOTTOM PLATES UNDER THE SHELL SHALL HAVE THE OUTER ENDS OF THE JOINTS FITTED AND LAP-WELDED TO FORM A SMOOTH BEARING SURFACE.

AS-BUILT
BY Inukshuk Construction Ltd. DATE 2017/10/02

PROFESSIONAL ENGINEER
LICENSEE
NT/NU
19-Jul-2017
Permit Number: P471

DRAWN	Jacob Saunders	1/10/2017	TK #5 (250KL) FLOOR LAYOUT
CHECKED	Marc Losier	3/15/2017	TITLE
QA			MELIADINE FIELD ERECTED TANK - TANK #5 (250KL) FLOOR AND ROOF LAYOUT
MFG			
APPROVED			

SIZE	DWG NO	REV
A1	295-M5	1

SCALE 1 / 25 SHEET 1 OF 2

PARTS LIST			
ITEM	QTY	DESCRIPTION	MATERIAL
R5A	2	PL 6.35 X 2038 X 4474	G40.21M-260WT
R5B	2	PL 6.35 X 2438 x 3856	G40.21M-260WT
R5C	2	PL 6.35 X 1752 x 3722	G40.21M-260WT
R5D	2	PL 6.35 X 1755 x 3104	G40.21M-260WT

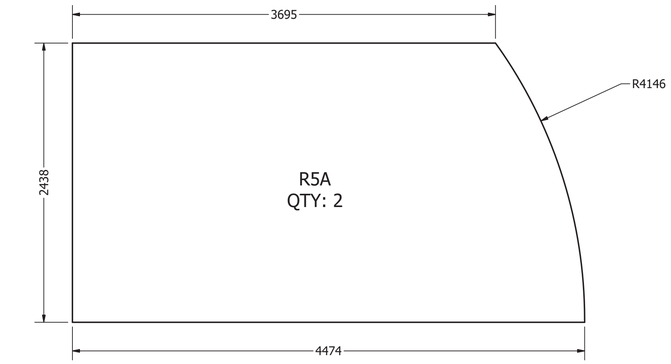

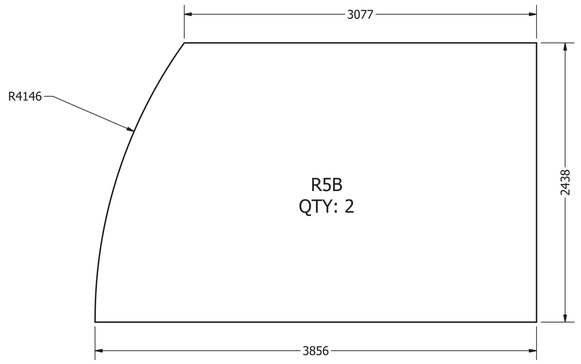

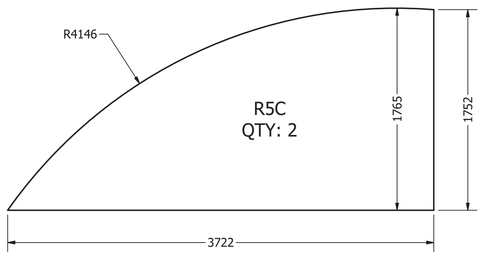

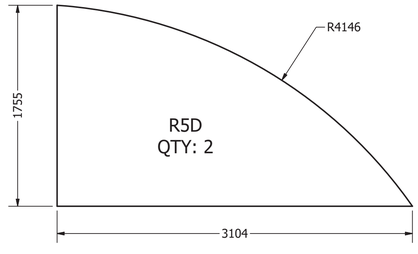

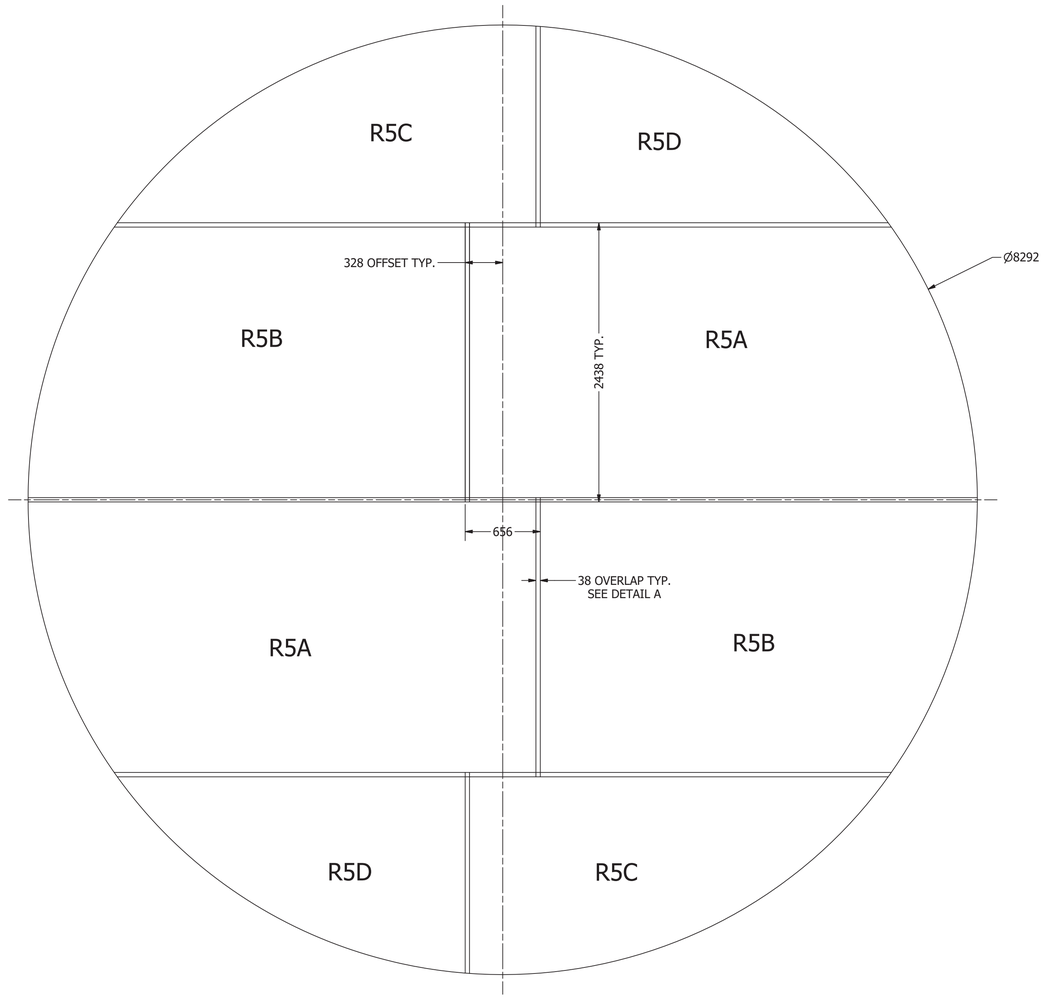

TK 5 (250KL) ROOF LAYOUT
SCALE 1 / 25

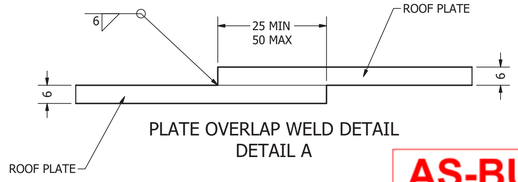

PLATE OVERLAP WELD DETAIL
DETAIL A

AS-BUILT
BY Inukshuk Construction Ltd. DATE 2017/10/02

PROFESSIONAL ENGINEER
BROWN
LICENSEE
NT/NU
19-Jul-2017
Permit Number: P471

DRAWN	Jacob Saunders	1/10/2017
CHECKED	Marc Losier	3/15/2017
QA		
MFG		
APPROVED		

TK #5 (250KL) ROOF LAYOUT

TITLE
MELIADINE FIELD ERECTED TANK - TANK #5 (250KL) FLOOR AND ROOF LAYOUT

SIZE	DWG NO	REV
A1	295-M5	1

SCALE 1 / 25 SHEET 2 OF 2

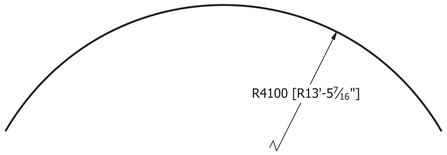

PLAN VIEW ROLLED SHELL PLATES
SCALE 1/50

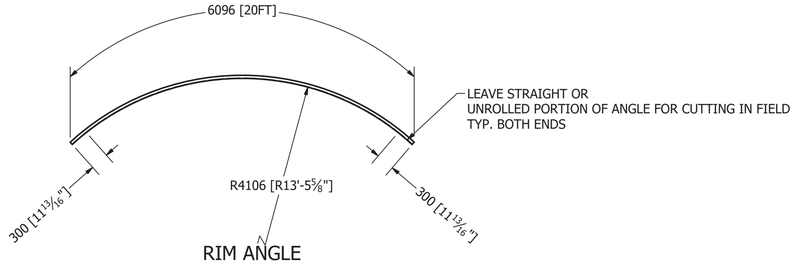

RIM ANGLE
50.8 X 50.9 X 6.4 x 6096 LONG
(2" X 2" X 1/4" x 20')
STEEL CSA G40.21M 350W
ROLLED TOE OUT
QTY: 5
MARK 7502

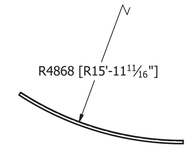

PLAN VIEW
SCALE 1/50

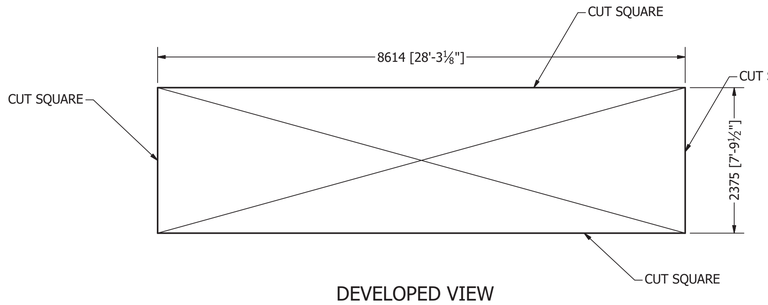

DEVELOPED VIEW
COURSE NO. 1 TO 2
6.4mm THK (1/4")
CUT FROM PLATE 2451mm x 8670mm
QTY: 6
MARK 7501

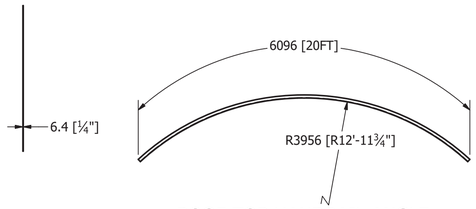

ROOF TOP HANDRAIL ANGLE
50.8 X 50.8 X 6.4 X 6096MM LONG
(2" X 2" X 1/4" X 20')
STEEL CSA G40.21M 350W
ROLLED TOE OUT
QTY: 5
MARK 7503



FRONT VIEW
SCALE 1/50

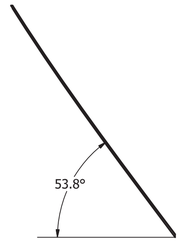

SIDE VIEW
SCALE 1/50

STAIRWAY HANDRAIL ANGLE
50.8 X 50.8 X 6.4 X 6096MM
(2" X 2" X 1/4" X 20' LONG)
STEEL CSA G40.21M 350W
QTY: 2
MARK 7504

NOTES:

SHELL PLATES TO BE CHECKED
CORNER TO CORNER FOR SQUARENESS

PLATE ENDS TO BE BROKEN IN PRESS BREAK BEFORE ROLLING
'DO NOT OVEROLL'

STEEL PLATES: 38WT SUPPLIED BY MEL
STEEL SHAPES: 350W SUPPLIED BY FORMATECH

AS-BUILT
BY Inukshuk Construction Ltd. DATE 2017/10/02

24-Jul-2017
Permit Number: P471

DRAWN Marc Losier	2/2/2017	TANK NO. 5 - 250 CUM
CHECKED Jacob Saunders	2/2/2017	TITLE
QA		MELIADINE FIELD ERECTED TANKS - SHELL PLATES AND ANGLES ROLLING DETAILS
MFG		
APPROVED		SIZE A1 · DWG NO 295-M7 · REV 4
		SCALE · SHEET 5 OF 6

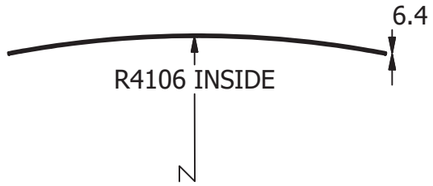



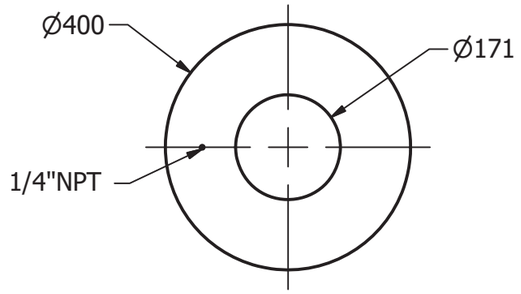

REINFORCING PLATE
SHELL NOZZLE LOADING/UNLOADING 150MM (6")
TANK NO. 5 - 250KL
MARK: 8502
QTY: 5
SCALE: 1/10



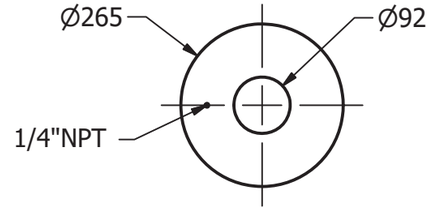

REINFORCING PLATE
SHELL WATER DRAW OFF 75MM (3")
TANK NO. 5 - 250KL
MARK: 8503
QTY: 4
SCALE: 1/10

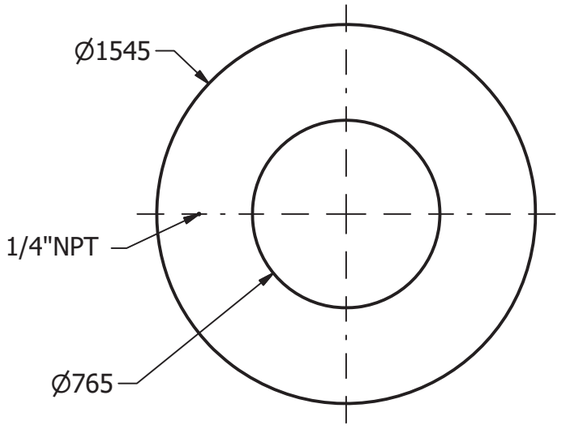

REINFORCING PLATE
SHELL MANHOLE 760 (30")
TANK NO. 5 - 250KL
MARK: 8501
QTY: 2
SCALE: 1/25

AS-BUILT

BY Inukshuk Construction Ltd. DATE 2017/10/02

MATERIAL:
STEEL CSA G40.21-38WT
NORMALIZED
TRANSVERSE CHARPY: TCVN 13FT/LBS@-45F
LONGITUDINAL CHARPY: LCVN 15FT/LBS@-45F



Permit Number: P471

DRAWN	Jacob Saunders	2/2/2017
CHECKED	Marc Losier	3/16/2017
QA		
MFG		
APPROVED		

TANK NO. 5 (250KL) SHELL

TITLE

REINFORCING PLATE DETAILS

SIZE	DWG NO	REV
A3	295-M8	4

SCALE 1/25 SHEET 9 OF 12

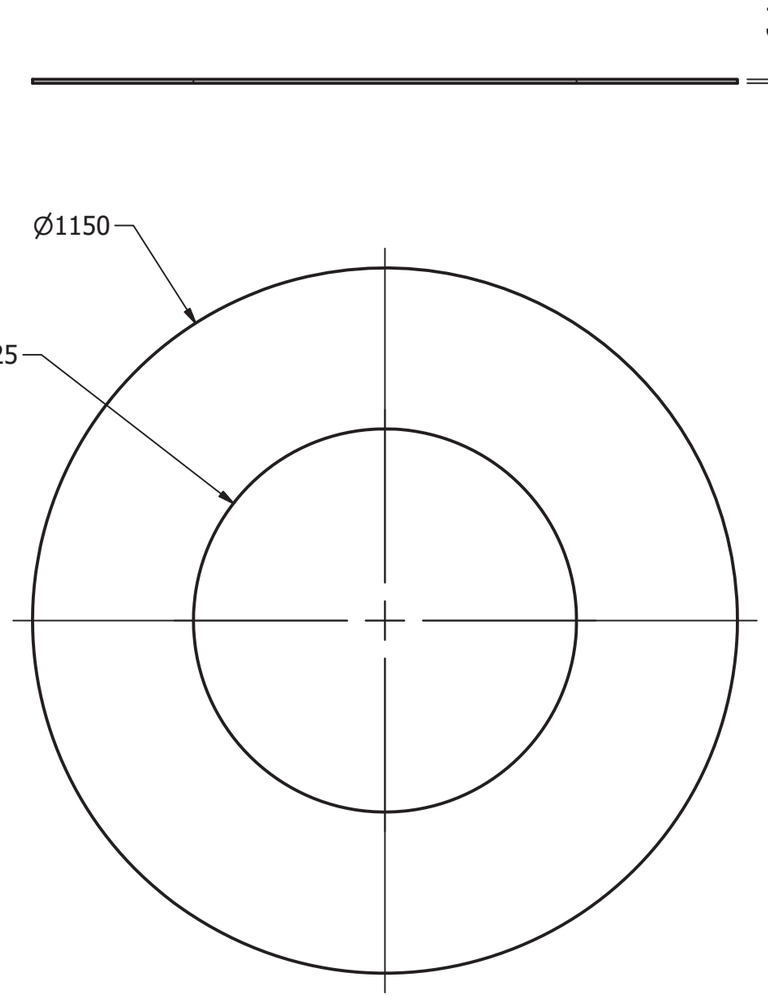

REINFORCING PLATE
ROOF MANHOLE 600MM
TANK NO. 5 - 250KL
MARK: 8504
QTY: 2

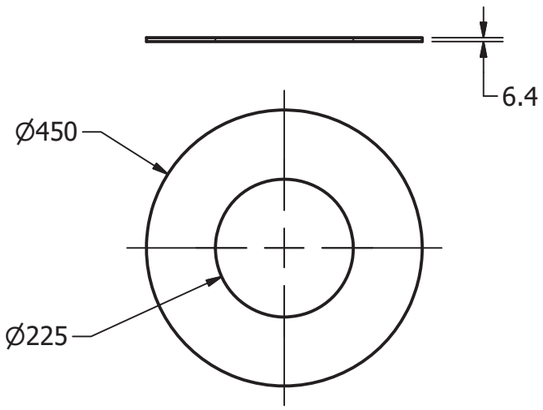

REINFORCING PLATE
ROOF NOZZLE 200MM
TANK NO. 5 - 250KL
MARK 8505
QTY: 1

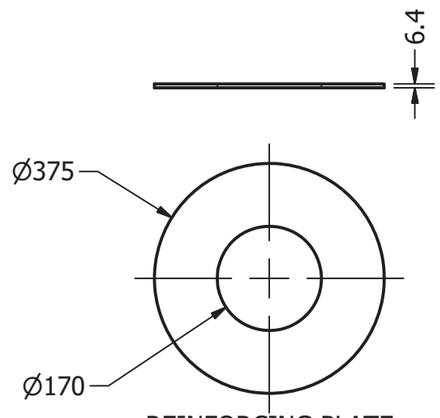

REINFORCING PLATE
ROOF GAUGE HATCH 150MM
TANK NO. 5 - 250KL
MARK: 8506
QTY: 1

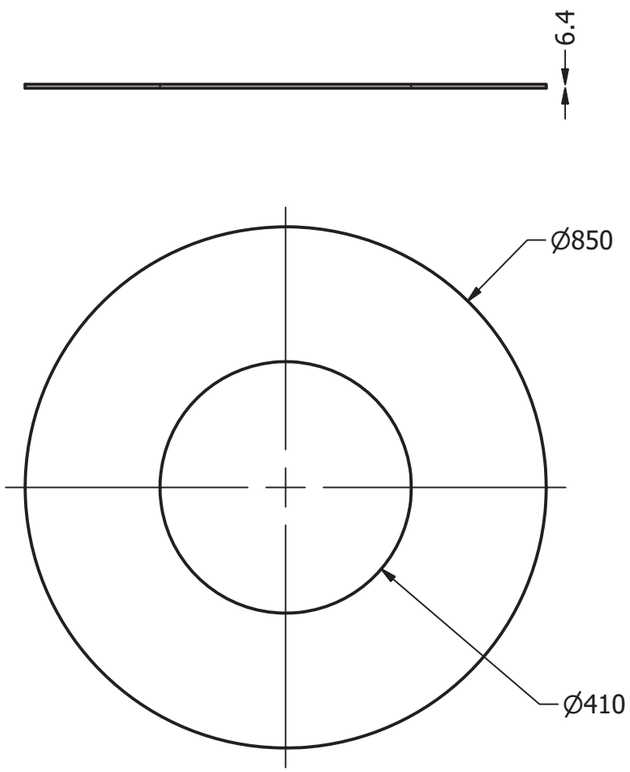

REINFORCING PLATE
ROOF VENT 400MM
TANK NO. 5 - 250KL
MARK: 8507
QTY: 1

AS-BUILT
BY Inukshuk Construction Ltd. DATE 2017/10/02

R.S. BROWN LICENSEE NT/NU PROFESSIONAL ENGINEER
24-Jul-2017

Permit Number: P471

MATERIAL:
STEEL CSA G40.21-38WT
NORMALIZED
TRANSVERSE CHARPY: TCVN 13FT/LBS@-45F
LONGITUDINAL CHARPY: LCVN 15FT/LBS@-45F

DRAWN	Jacob Saunders	2/2/2017
CHECKED	Marc Losier	3/16/2017
QA		
MFG		
APPROVED		

TANK NO. 5 (250KL) ROOF

TITLE

REINFORCING PLATE DETAILS

SIZE	DWG NO	REV
A3	295-M8	4

SCALE 1/10 SHEET 10 OF 12

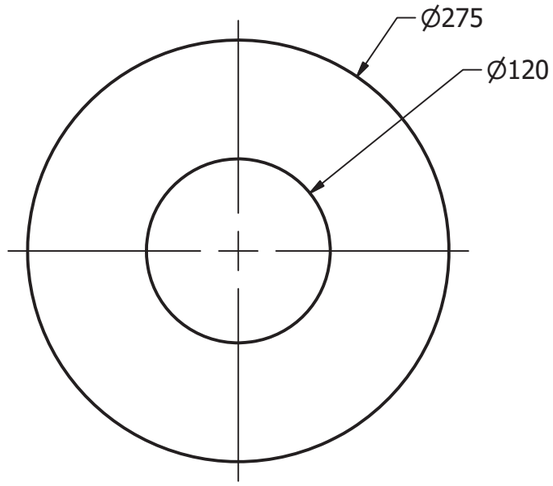

M81201 QTY	
Tank No.	QTY
1	1
2	1
3	1
4	1
5	1
6	1
TOTAL	6

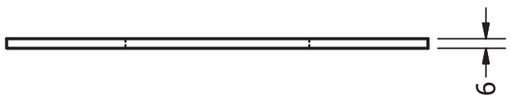

REINFORCING PLATE
100NS ROOF NOZZLE
QTY: 6
1 PER TANK
MARK 81201
SCALE 1/4

MATERIAL:
STEEL CSA G40.21-300W

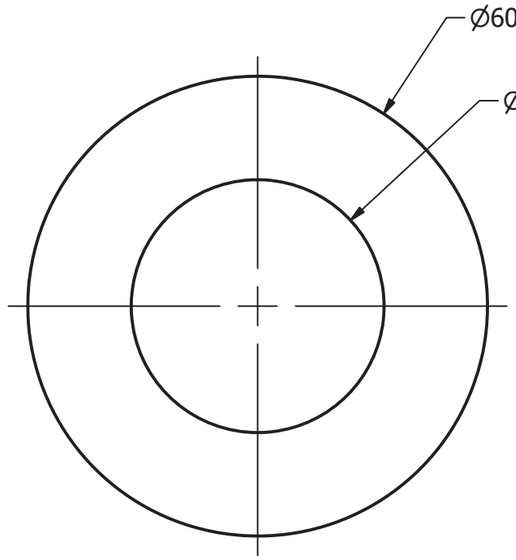

M81202 QTY	
Tank No.	QTY
1	2
2	1
3	0
4	0
5	0
6	0
TOTAL	10



REINFORCING PLATE
300NS ROOF NOZZLE FOR PV VENT
QTY: 10
MARK 81202
SCALE 1/8

AS-BUILT
BY Inukshuk Construction Ltd. DATE 2017/10/02

REGISTERED PROFESSIONAL ENGINEER
J.C. BROWN
LICENSEE
NT/NU
24-Jul-2017

Permit Number: P471

REVISION HISTORY		
REV	DESCRIPTION	DATE
4	THIS SHEET ADDED	7/7/2017

DRAWN	Jacob Saunders	2/2/2017
CHECKED	Marc Losier	3/16/2017
QA		
MFG		
APPROVED		

REINFORCING PAD FOR ECN-001

TITLE

REINFORCING PLATE DETAILS

SIZE		DWG NO	REV
A3		295-M8	4

SCALE 1/4 SHEET 13 OF 13

PARTS LIST					
ITEM	ITEM QTY	PART NUMBER	DESCRIPTION	MATERIAL	MASS
5M13101	1	T5&6 Floor	FLOOR PLATE 6 [1/4"]THK - SEE DRG 295-M5		2742.082 kg
5M13102	6	C1 Shell Plate - 250KL	SHELL PLATE 6.35 [1/4"]THK - SEE DRG 295-M7		1017.386 kg
5M13103	1	T5&6 Center Column	CENTER COLUMN - SEE SHT. 2		429.047 kg
5M13104	5	Rim Angle 250KL	RIM ANGLE L51X51X6 [2"X2"X1/4"] - SEE DRG 295-M7		29.028 kg
5M13105	1	T5&6 Roof	ROOF PLATE 6 [1/4"]THK - SEE DRG 295-M5		2664.141 kg
5M13106	13	T5&6 Shell Clip	SHELL CLIP 10 [3/8"]THK X 152 [6"]WD X 189 [7 1/2"]LG		1.916 kg
5M13107	13	AISC - W 8x10 - 148.26299	RAFTER W200X15 [W8"X10#] X 3766 [12'-4 1/4"]LG	G40.21M 350W	124.545 lbmass
5M13108	26	ANSI B18.2.6 - 5/8-11 UNC - 1.5	Heavy Hex Structural Bolt - UNC (Regular Thread - Inch)	A325	0.237 lbmass
5M13109	52	ANSI B18.2.2 - 5/8 - 11	Hex Nuts (Inch Series) Heavy Hex Nut	A325	0.130 lbmass
5M13110	26	ANSI B18.2.6 - 5/8-11 UNC - 2.75	Heavy Hex Structural Bolt - UNC (Regular Thread - Inch)	A325	0.346 lbmass
11	1	ANSI B18.22.1 - 5/8 - wide - Type A	Plain Washer (Inch)Type A and B	Steel, Mild	0.077 lbmass

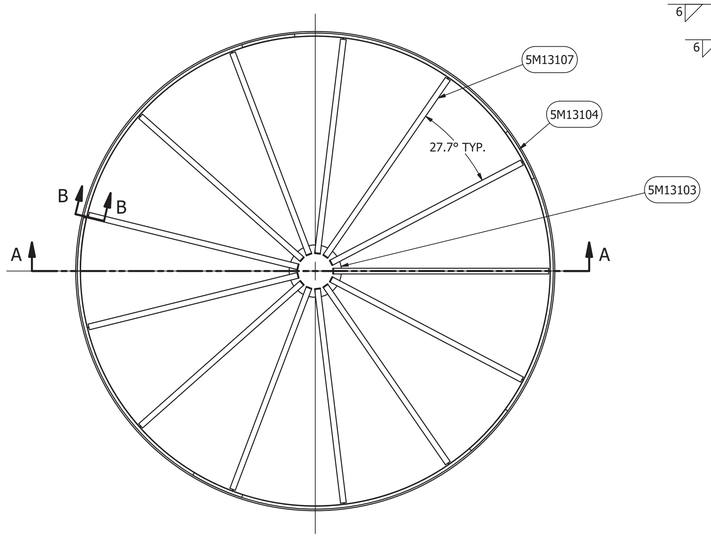

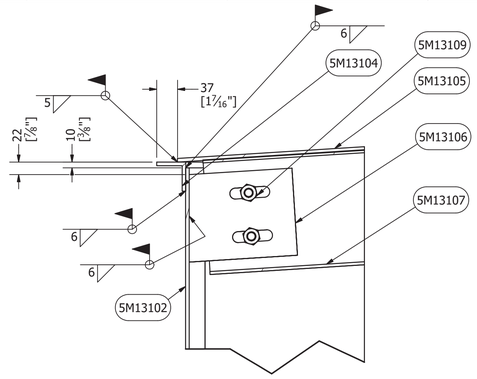

PART SECTION B-B
RAFTER TO SHELL CLIP CONNECTION
SCALE 1/5

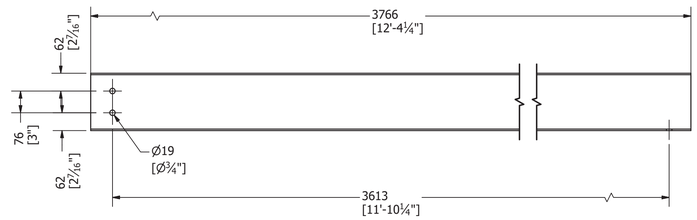

SIDE VIEW
SCALE 1/10

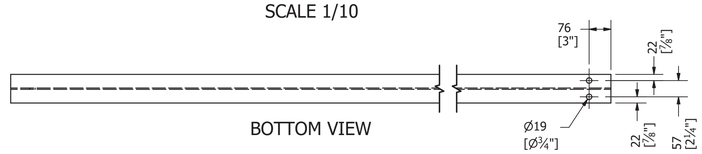

BOTTOM VIEW

Pc 5M13107 DETAIL
RAFTER
SCALE 1/10

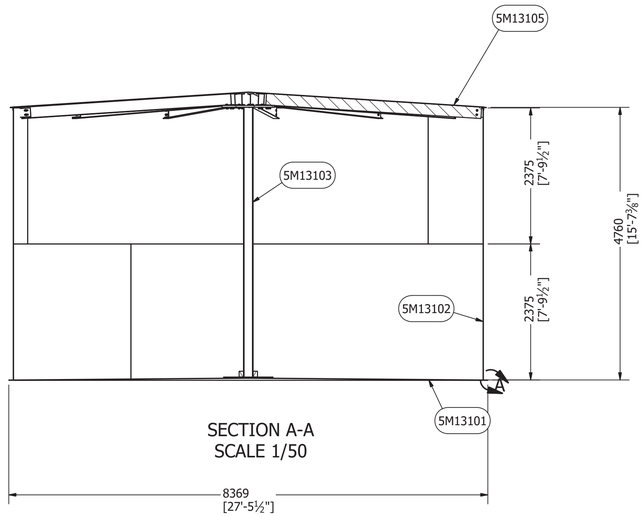

SECTION A-A
SCALE 1/50

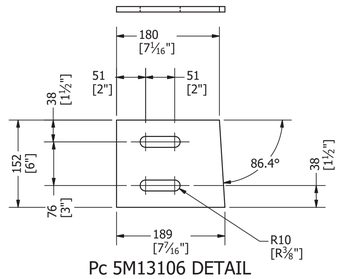

Pc 5M13106 DETAIL
SHELL CLIP
SCALE 1/5

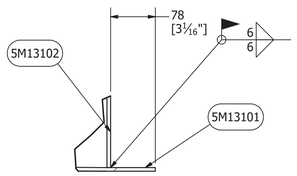

DETAIL A
SCALE 1/5

AS-BUILT
BY Inukshuk Construction Ltd. DATE 2017/10/02

10-Oct-2017
Permit Number: P471

DRAWN	MARC LOSIER	4/5/2017	RAFTER AND COLUMN LAYOUT
CHECKED			TITLE
QA			AGNICO EAGLE -MELIADINE GOLD MINE - TK #5 - 250CUM TANK 8.2M DIA X 4.75M H
MFG			
APPROVED			
			SIZE A1 | DWG NO 295-M13 | REV 4
			SCALE | SHEET 1 OF 6

PARTS LIST					
ITEM	ITEM QTY	PART NUMBER	DESCRIPTION	MATERIAL	MASS
5M13201	1	T5&6 Cap Plate	DOLLAR PLATE - 32 [1 1/4"]THK X 914 [3'-0"] DIA	G40.21M 300W	153.842 kg
5M13202	1	T5&6 Center Column Base Plate	BASE PLATE - 16 [5/8"]THK X 864 [2'-10"]DIA	G40.21M 300W	72.996 kg
5M13203	4	AISC - 3x1/4 - 4	FI6 [1/4"]GHK X 76[3"]WD X 102[4"]LG	G40.21M 300W	0.851 lbmass
5M13204	1	ANSI/AISC Rolled Steel - 6-185.44523	PIPE 168 [6 5/8"]O.D. X 10.9 [7/16"]WALL X 4710[15'-5 1/2"]LG	A53 ERW	442.3906 lbmass

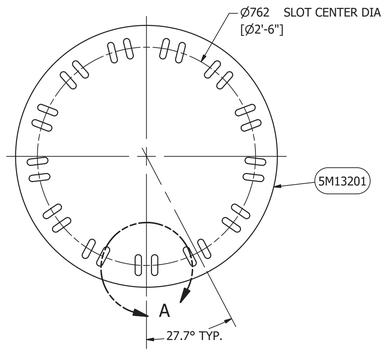

PLAN VIEW
SCALE 1/10

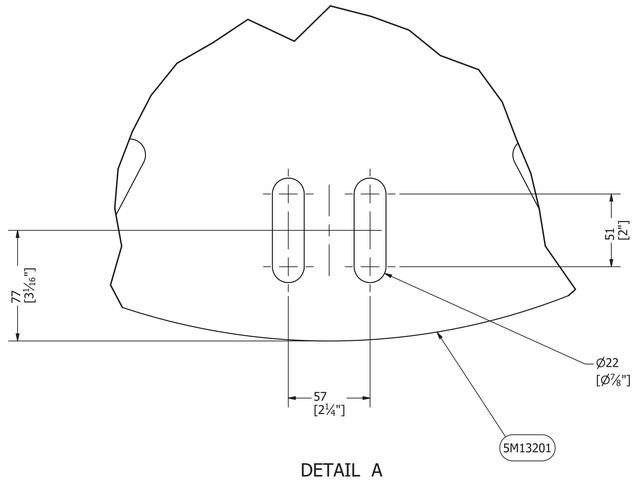

DETAIL A
TYPICAL 13 LOCATIONS EQ. SPACED
SCALE 1/2

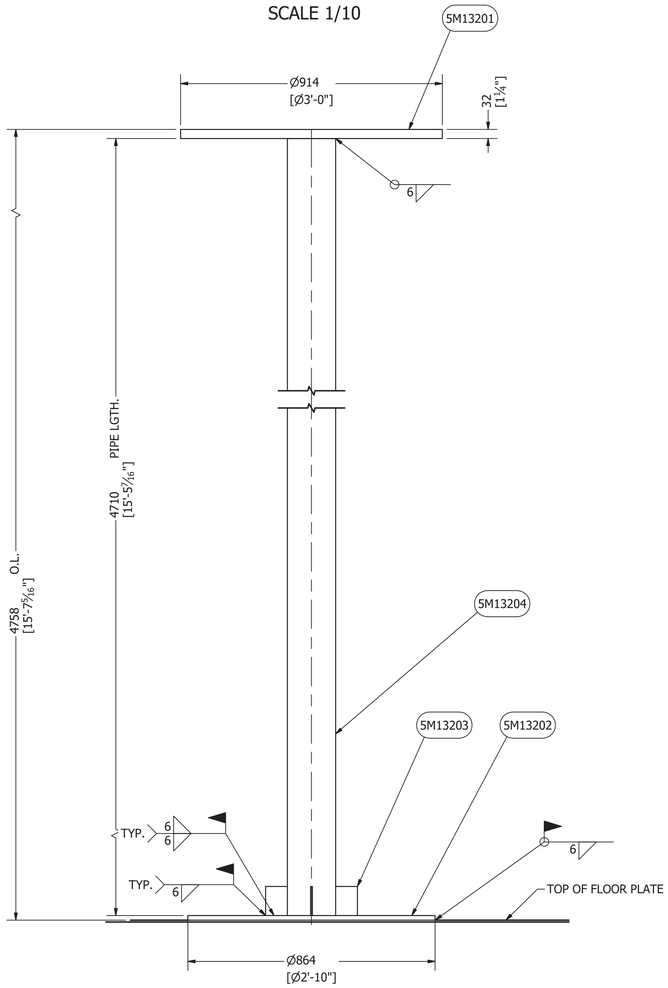

CENTER COLUMN
SCALE 1/10

AS-BUILT
BY Inukshuk Construction Ltd. DATE 2017/10/02

Permit Number: P471

10-Oct-2017

DRAWN MARC LOSIER	4/5/2017	CENTER COLUMN DETAIL
CHECKED		TITLE
QA		AGNICO EAGLE -MELIADINE GOLD MINE - TK #5 - 250CUM TANK 8.2M DIA X 4.75M H
MFG		
APPROVED		SIZE A1 / DWG NO 295-M13 / REV 4
		SCALE / SHEET 2 OF 6

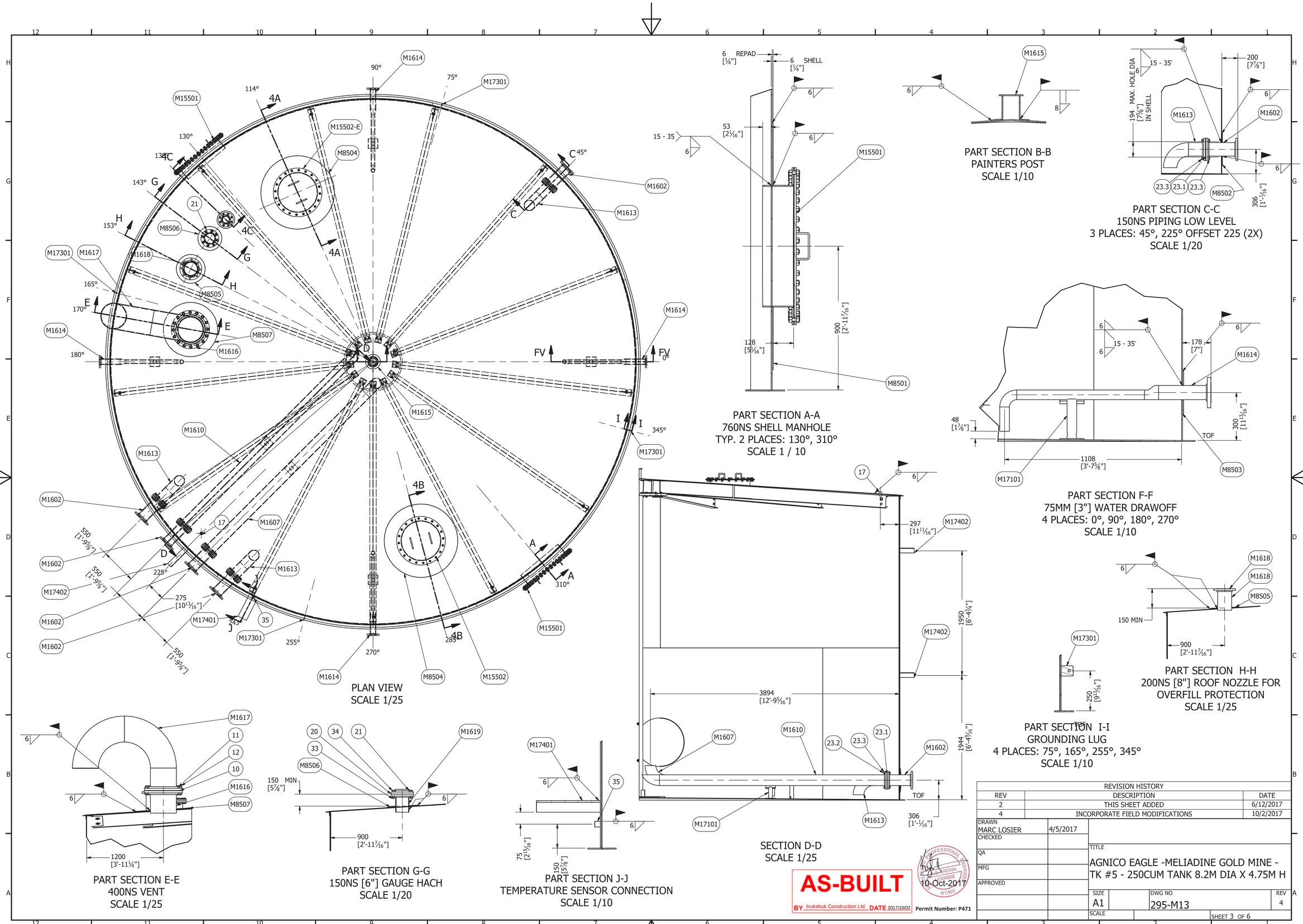

REVISION HISTORY		
REV	DESCRIPTION	DATE
2	THIS SHEET ADDED	6/12/2017
4	INCORPORATE FIELD MODIFICATIONS	10/2/2017

DRAWN	MARC LOSIER	4/5/2017
CHECKED		
QA		
MFG		
APPROVED		

TITLE: AGNICO EAGLE -MELIADINE GOLD MINE - TK #5 - 250CUM TANK 8.2M DIA X 4.75M H

SIZE	DWG NO	REV
A1	295-M13	4

SCALE

SHEET 3 OF 6

PARTS LIST

ITEM	ITEM QTY	DESCRIPTION	FAB. DRG. NO.	MATERIAL
10	1	400NS [16"] GASKET 1.6 [1/16"]THK, RING		DURLON 8500
11	32	1"UNC HEAVY HEX NUT		A194 GR4
12	16	1"UNC X 5 3/4" LONG STUD		A320 L7
17	1	25NS [1"] NPT COUPLING, 3000#, PRV PIPING CONNECTION		A350 LF2
20	1	150NS [6"] X 1.6 [1/16"] GASKET, 150#, FULL FACE		DURLON 8500
21	1	1500NS [6"} GAUGE HATCH, SHANG AND JURS MODEL NO. 95010-02-00		ALUMINUM
23	5	JOINT MATERIAL FOR 6" 150# FLANGE CONNECTION COMPRISIN:		
23.1	1	150NS [6"] X 3.2 [1/8"] THK, GASKET, RING, 150#		DURLON 8500
23.2	8	3/4"UNC X 4" LG STUD		L7
23.3	16	3/4"UNC HEAVY HEX NUT		A194 GR. 4
33	8	3/4"UNC X 4 1/4"LG STUD		L7
34	16	3/4"UNC HEAVY HEX NUT		A194 GR. 4
35	1	20NS [3/4"] NPT COUPLING, 3000#, (TEMPERATURE SENSOR)		A350 LF2
M17401	1	L100X100X6 [L4"X4"X1/4"] 400 [15 3/4"] LG (TEMPERATURE SENSOR)	M17	
M1602	5	150NS DOUBLE FLANGE SHELL NOZZLE	M16	
M1607	1	150NS [6"] FIXED LOADING PIPE 3.9M LG	M16	
M1610	1	150NS [6"] FIXED UNLOADING PIPE X 3.9M LG	M16	
M1613	3	150NS [6"] PUMPING LOW LEVEL	M16	
M1614	4	75NS [3"] WATER DRAWOFF VALVE SPOOL	M16	
M1615	1	100NS PAINTERS POST	M16	
M1616	1	400NS [16"] ROOF NOZZLE FOR VENT	M16	
M1617	1	400NS [16"] VENT RETURN BEND PIPE	M16	
M1618	1	200NS [8"] ROOF NOZZLE FOR OVERFILL PROTECTION	M16	
M1619	1	150NS [6"] ROOF NOZZLE FOR GAUGE HATCH	M16	
M8501	2	760NS [32"] SHELL MANHOLE REINFORCING PAD	M8	
M8502	5	150NS [6"] SHELL NOZZLE REINFORCING PLATE FOR LOADING AND UNLOADING PIPE	M8	
M8503	4	75NS [3"] SHELL NOZZLE REINFORCING PLATE FOR WATER DRAWOFF VALVE	M8	
M8504	2	600NS ROOF MANHOLE REINFORCING PAD	M8	
M8505	1	200NS [8"] ROOF NOZZLE REINFORCING PLATE FOR OVERFILL PROTECTION	M8	
M8506	1	150NS [6"] ROOF NOZZLE REINFORCING PLATE FOR GAUGE HATCH	M8	
M8507	1	400NS [16"] ROOF NOZZLE REINFORCING PLATE FOR VENT	M8	
M15501	2	760NS [32"] SHELL MANHOLE	M15	
M15502	1	600NS [24"] ROOF MANHOLE	M15	
M17101	2	PIPE SUPPORT	M17	
M17101	4	PIPE SUPPORT	M17	
M17301	4	GROUNDING LUG	M17	
M17402	2	L75X75X6 [L3"X3"X1/4"] 400 [15 3/4"] BRACKET FOR PIPING OR ELECTRICAL CONDUIT	M17	
M15502-E	1	600NS [24"] ROOF MANHOLE/EMERGENCY VENT	M15	
M1621	1	100NS [4"] ROOF NOZZLE	M16	
M81201	1	100NS [4"] REINFORCING PAD	M8	Steel, Mild
39	1	100NS [4"] PIPE JOINT MATERIAL COMPRISING:		
39.1	1	100NS [4"] GASKET, RING, 1.6 [1/16"] THK		DURLON 8500
39.2	8	5/8" X 3 1/2" UNC STUD		L7
39.3	16	5/8" UNC HEAVY HEX		A194 GR4
40	1	Pipe Flanges - Flange Blind - Class 150.Inch		Steel

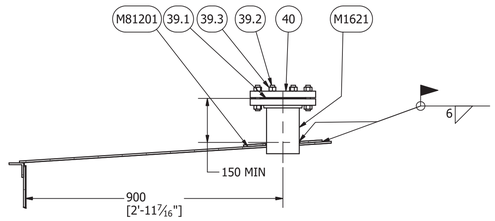

DETAIL 3C
100NS [4"] ROOF NOZZLE
AS PER ECN-001
SCALE 1/10

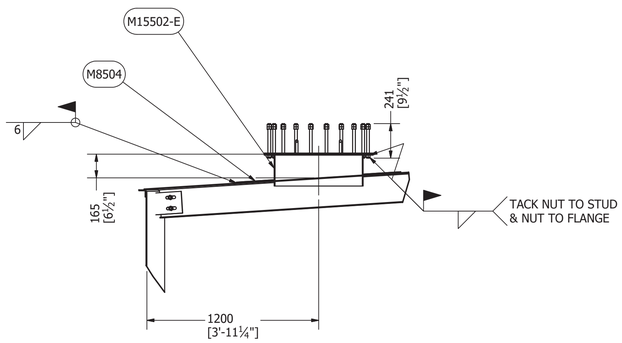

DETAIL PART SECTIN 4A-4A
600NS MANHOLD/EMERGENCY VENT
1 PLACE AT 114°
SCALE 1/20

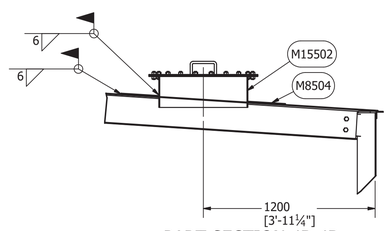

PART SECTION 4B-4B
SCALE 1/20

AS-BUILT
BY Inukshuk Construction Ltd. DATE 2017/10/02

10-Oct-2017

Permit Number: P471

REVISION HISTORY		
REV	DESCRIPTION	DATE
2	THIS SHEET ADDED	6/12/2017

DRAWN MARC LOSIER	4/5/2017	
CHECKED		TITLE
QA		AGNICO EAGLE -MELIADINE GOLD MINE - TK #5 - 250CUM TANK 8.2M DIA X 4.75M H
MFG		
APPROVED		SIZE A1 / DWG NO 295-M13 / REV 4
		SCALE / SHEET 4 OF 6

PARTS LIST

ITEM	ITEM QTY	DESCRIPTION	MASS
5M13501	4	PREFABRICATED ROOF TOP HANDRAIL SECTION SEE DETAIL 5M13501	118.244 kg
5M13502	1	PREFABRICATED ROOF TOP HANDRAIL SECTION TRIMMED AT SITE	44.187 kg
M17201	1	HANDRAIL POST = L75X75X6 [L3"X3"X1/4"] X 1479 [4'-10 1/4"]	23.905 lbmass
5	1	L50X50X6 [L2"X2"X1/4"] 38 [1 1/2"] LG	0.402 lbmass

PARTS LIST

ITEM	PART NUMBER	ITEM QTY	BASE QTY	DESCRIPTION	PRE-FAB DRG #	MASS
M17201	AISC - L 3 x 3 x 1/4 - 58.228346	4	1479	HANDRAIL POST = L75X75X6 [L3"X3"X1/4"] X 1479 [4'-10 1/4"]		23.905 lbmass
M7503	T5&6 Roof Top Angle (2)	1	5486	ROOF HANDRAIL ROLLED ANGLE L50X50X6[L2"X2"X1/4"] x 5486 [18'-0"]		26.148 kg
3	T5&6 Roof Top FB 50X6Angle (2)	2	5486	FB50X6 [FB2"X1/4"] 5486 [18'-0"] LG		13.904 kg
4	T5&6 Roof Kick Plate FB 150X5Angle (2)	1	5486	FB100X5 [FB4"X3/16"] 7591 [19'-0"]LG		20.916 kg

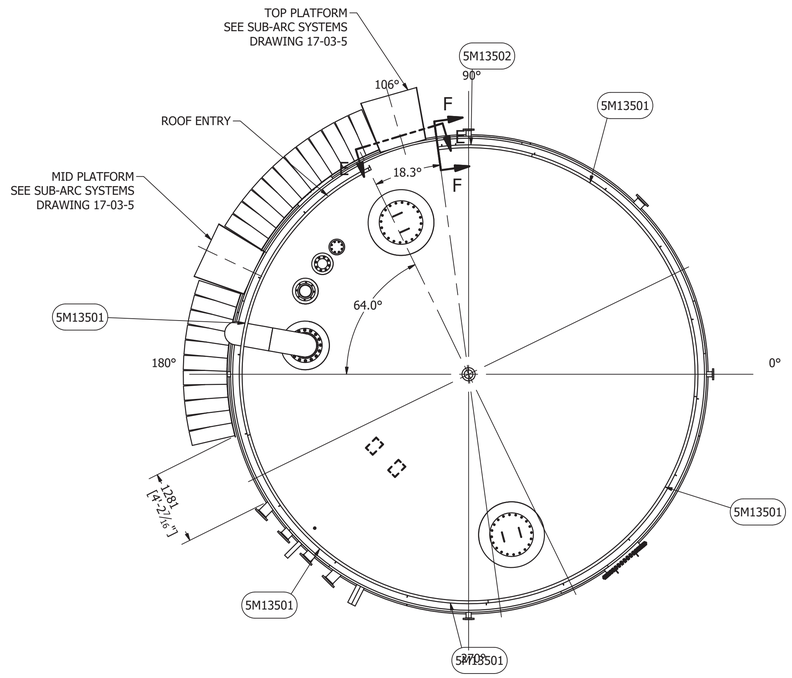

SCALE 1/50

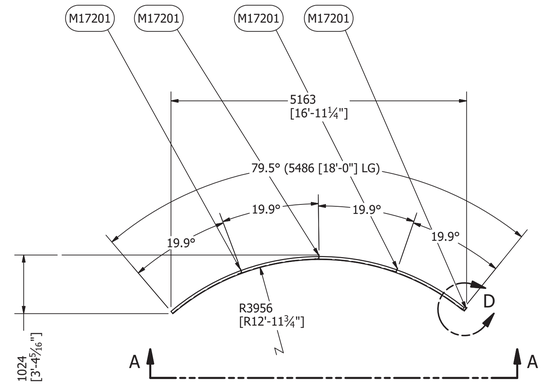

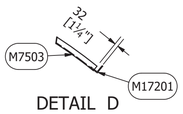

DETAIL D
SCALE 1 / 25

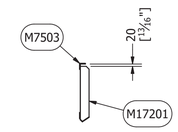

DETAIL C
SCALE 1 / 25

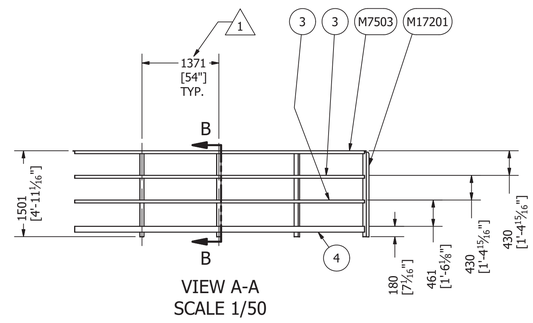

VIEW A-A
SCALE 1/50

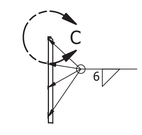

SECTION B-B
SCALE 1/50

Pc 5M13501
PREFABRICATED ROOF TOP HANDRAIL SECTION
QTY: 5
SCALE 1/50

FINISH:
SSPC SURFACE PREPERATION FOR PAINTING: SP6 COMMERCIAL SANDBLASTING
ONE COAT OF POLYVAL 390

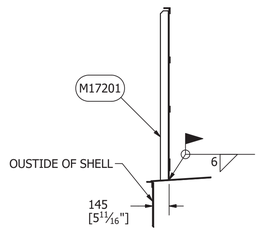

PART SECTION F-F
SCALE 1 / 25

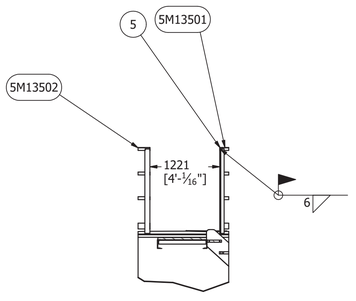

PART VIEW E-E
SCALE 1/50

AS-BUILT
BY Inukshuk Construction Ltd. DATE 2017/10/02

10-Oct-2017
Permit Number: P471

REVISION HISTORY

ZONE	REV	DESCRIPTION	DATE
12G, 4E	2	ROOF ENTRY LOCATION ADDED, MAX. DIST. BTW POST ADDED,	5/3/2017
	1	THIS SHEET ADDED	4/26/2017
12G	3	PLATFORM AND STAIRWAY ADDED	6/28/2017

DRAWN MARC LOSIER	4/5/2017	ROOF TOP HANDRAIL
CHECKED		TITLE
QA		AGNICO EAGLE -MELIADINE GOLD MINE - TK #5 - 250CUM TANK 8.2M DIA X 4.75M H
MFG		
APPROVED		SIZE A1 · DWG NO 295-M13 · REV 4
		SCALE · SHEET 5 OF 6

PARTS LIST		
ITEM	ITEM QTY	PART NUMBER
1	6	SHELL PLATES 6 X 2375 X 8614
2	2	762NS SHELL MANHOLE
4	4	75NS WATER DRAWOFF VALVE NOZZLE
6	4	GROUNDING LUG
7	5	150NS SHELL NOZZLE
9	2	AISC - L 3 x 3 x 1/4 - 15.748031- PRV PIPE BRACKETS
10	1	20NS TEMPERATURE SENSOR CONNECTION
11	1	AISC - L 4 x 4 x 1/4 - 15.748031 TEMPERATURE SENSOR PROTECTION
12	2	PLATFORM
14	23	STEP

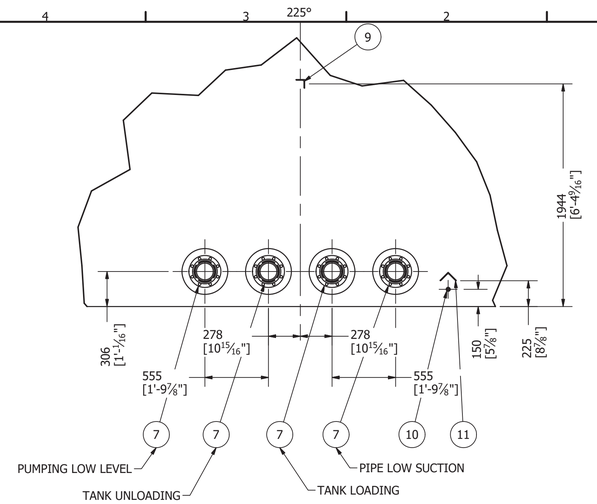

ALL 4 X 150NS NOZZLES (ITEM 7) ARE INSTALLED PARALLEL ON EITHER SIDE OF GRID 225°. SEE SHT 3

DETAIL A
SCALE 1 / 25

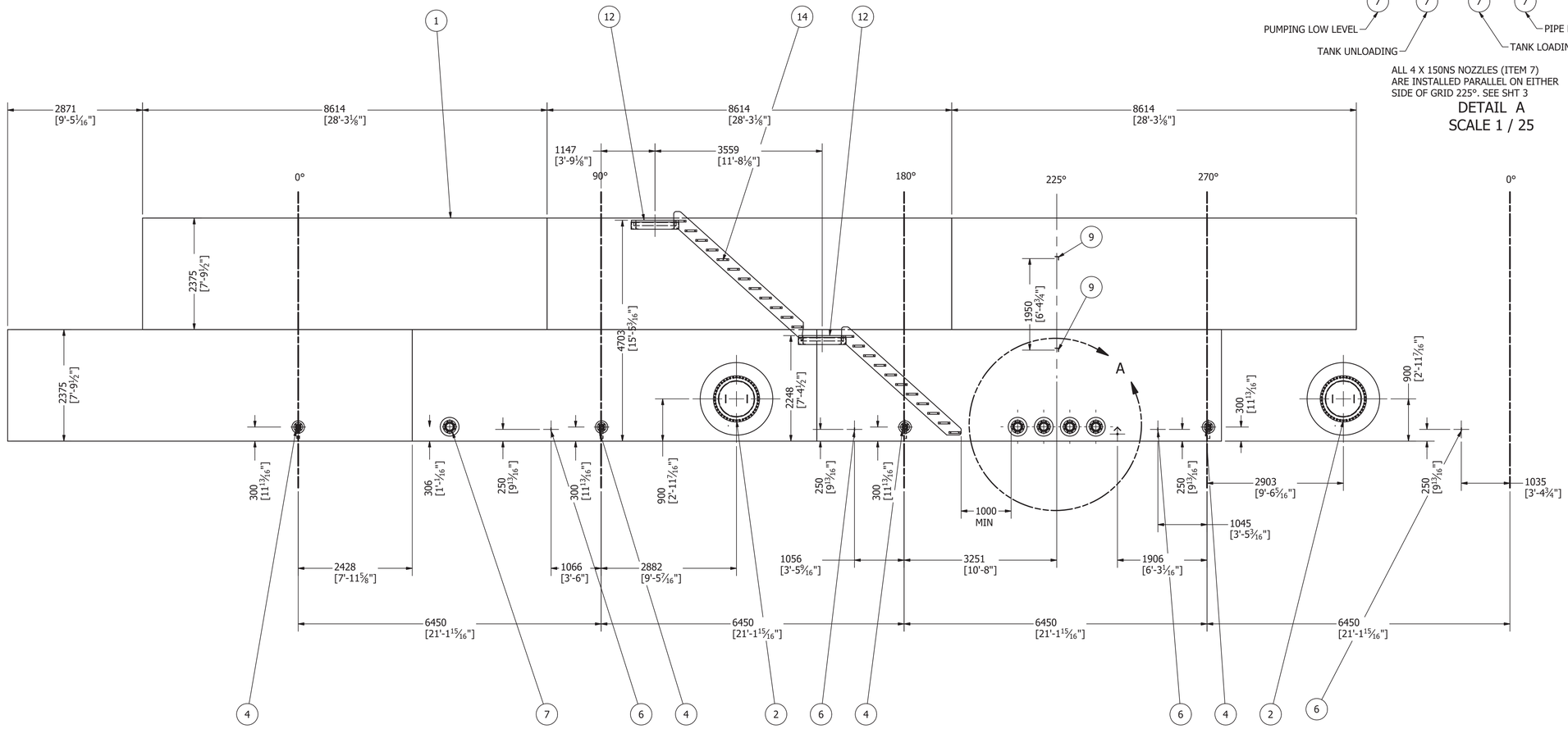

DEVELOP VIEW
SCALE 1/50

AS-BUILT
BY Inukshuk Construction Ltd. DATE 2017/10/02

10-Oct-2017
Permit Number: P471

REVISION HISTORY		
REV	DESCRIPTION	DATE
3	THIS SHEET ADDED	7/20/2017
4	INCORPORATE FIELD MODIFICATIONS	10/2/2017

DRAWN	MARC LOSIER	4/5/2017
CHECKED		
QA		
MFG		
APPROVED		

DEVELOP VIEW

TITLE
AGNICO EAGLE -MELIADINE GOLD MINE - TK #5 - 250CUM TANK 8.2M DIA X 4.75M H

SIZE	DWG NO	REV
A1	295-M13	4

SCALE

SHEET 6 OF 6

PARTS LIST					
ITEM	ITEM QTY	PART NUMBER	DESCRIPTION	MATERIAL	MASS
1	1	T5-6 SHELL NECK	6 [1/4"] THK X 194 [7 5/8"] WD X 2374 [7'-9 1/2"] LG.	G40.21M - 350WT CAT. 4	22.598 kg
2	1	T5-6 SHELL BOLTING FLANGE	13 [1/2"] THK X 984 [3'-2 3/4"] O.D. X 762 [2'-6"] I.D.	G40.21M - 350WT CAT. 4	21.192 kg
3	1	T5-6 SHELL GASKET	3 [1/8"] THK X 899 [2'-11 3/8"] O.D. X 762 [30"] I.D.	DURLON 8500	0.526 kg
4	1	T5-6 SHELL COVER PLATE	16 [5/8"] THK X 984 [3'-2 3/4"] O.D.	G40.21M - 350WT CAT. 4	74.229 kg
5	2	T1-6 SHELL HANDLE ROD	10 [3/8"] DIA X 314 [12 3/8"] LG.	G40.21M - 350WT CAT. 4	0.175 kg
6	42	STUDS	STUD, 3/4" X 70 [2 3/4"] LG. NC	A320 L7	0.156 kg
7	84	NUTS	NUT, HEX HEAVY, 3/4" NC	A194A GR4	0.096 kg

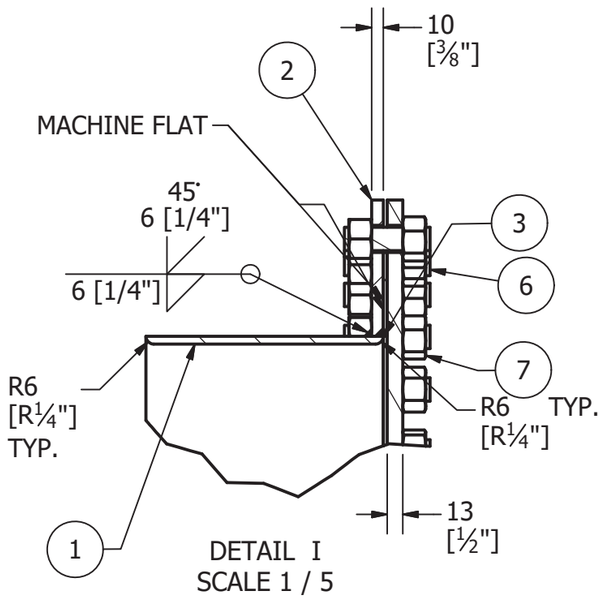

DETAIL I
SCALE 1 / 5

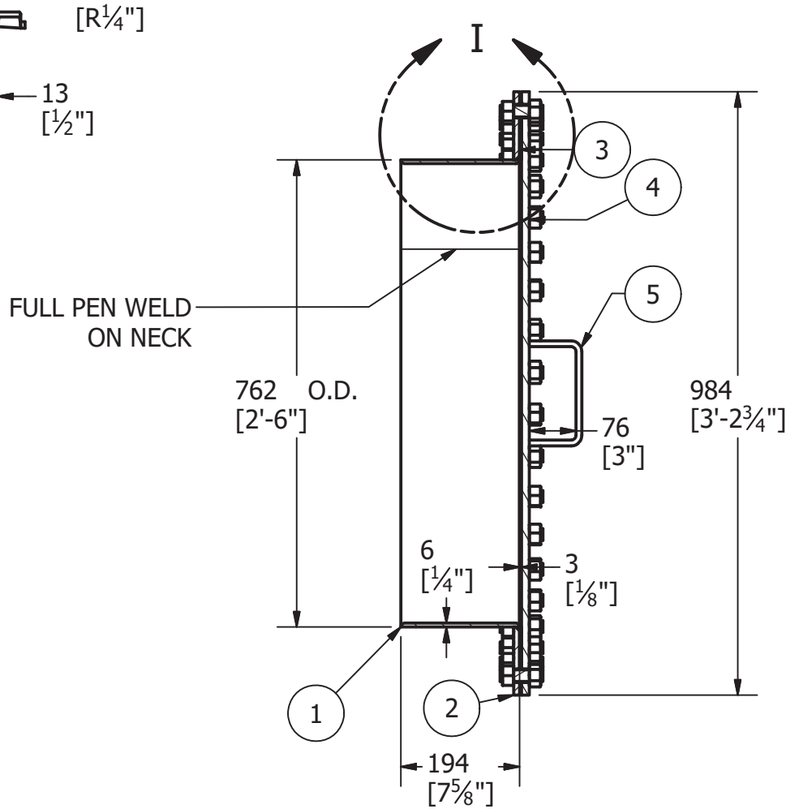

SECTION O-O
SCALE 1/10

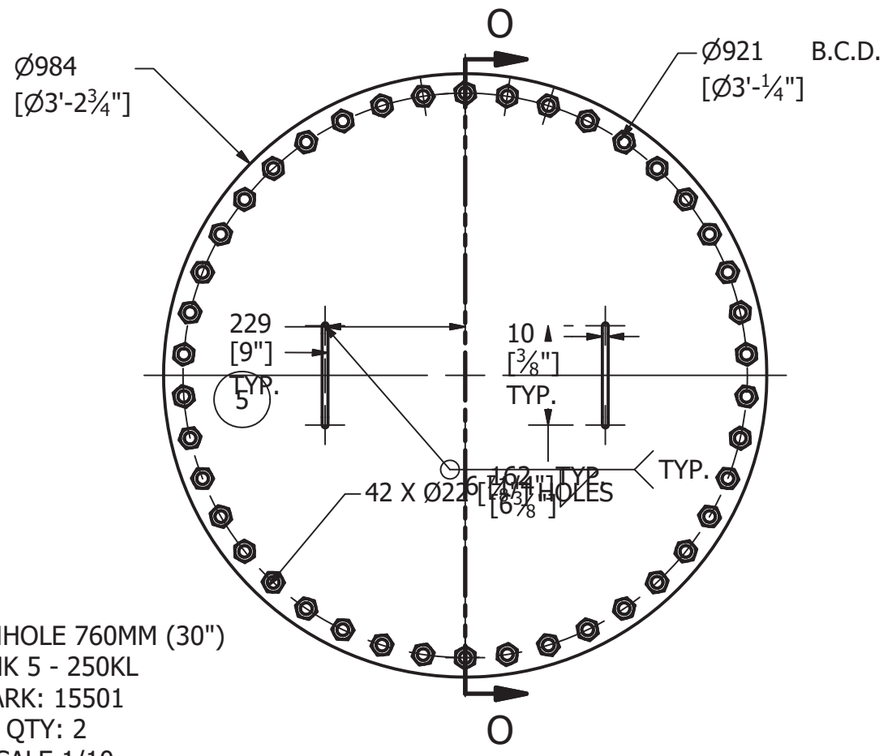

SHELL MANHOLE 760MM (30")
TANK 5 - 250KL
MARK: 15501
QTY: 2
SCALE 1/10

AS-BUILT
BY Inukshuk Construction Ltd. DATE 2017/10/02

REGISTERED PROFESSIONAL ENGINEER
K.G. BROWN
LICENSEE
NT/NU
24-Jul-2017

Permit Number: P471

ALTERNATE MATERIAL: ALL 350WT STEEL MAY BE SUBSTITUTED WITH 260WT IF EASIER TO SOURCE

DRAWN Jacob Saunders	3/22/2017	T5 (250KL) SHELL MANHOLE
CHECKED Marc Losier	3/27/2017	TITLE MELIADINE FIELD ERECTED TANK - MANHOLES
QA		
MFG		
APPROVED		SIZE A3 · DWG NO 295-M15 · REV 3
		SCALE · SHEET 9 OF 12

PARTS LIST					
ITEM	ITEM QTY	PART NUMBER	DESCRIPTION	MATERIAL	MASS
1	1	ROOF NECK	6 [1/4""] THK X 216 [8 1/2"] WD X 1935 [6' - 4 3/16"] LG	G40.21M 300W	20.825 kg
2	1	ROOF BOLTING FLANGE	6 [1/4"] THK X 762 [2'-6"] O.D. X 622 [2'-1/2"] I.D.	G40.21M 300W	7.287 kg
4	1	ROOF COVER PLATE	6 [1/4"] THK X 762 [2'-6"] DIA	G40.21M 300W	22.448 kg
5	2	ROOF HANDLE ROD	16 [5/8"] DIA X 314 [12 3/8"] LG.	Steel, MILD	0.506 kg
7	40	NUTS	NUT, HEX HEAVY, 5/8"	A194A GR4	0.059 kg
6	20	STUDS	STUD, 5/8" X 57 [2 1/4"] LG. NC	A320 L7	0.089 kg
8	1	295-P1 Gasket 24in (600mm)		Rubber	0.216 kg

SECTION P-P
SCALE 1/10

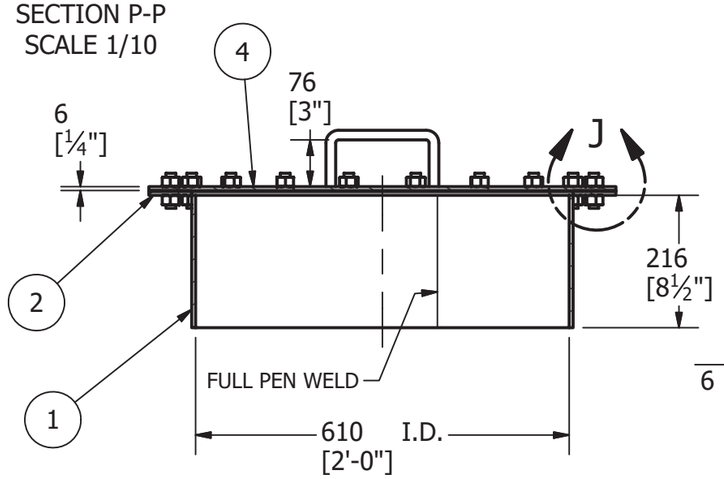

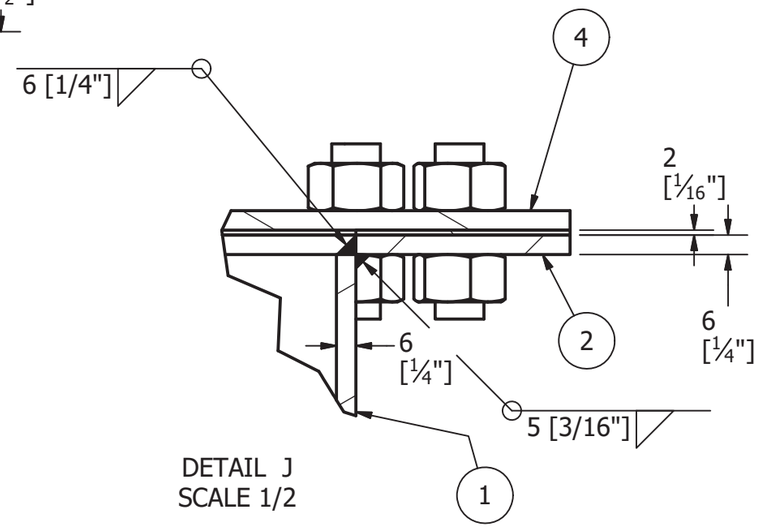

DETAIL J
SCALE 1/2

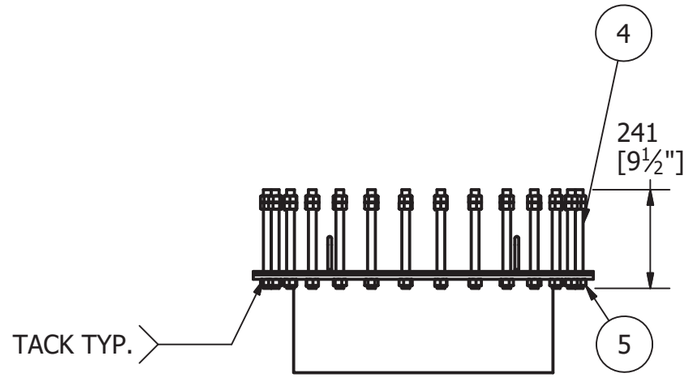

EMERGENCY VENT/MANHOLE
SCALE 1/15
QTY: 1
ALL MATERIAL SAME AS ROOF MANHOLE
EXCEPT BOLTS LENGTH

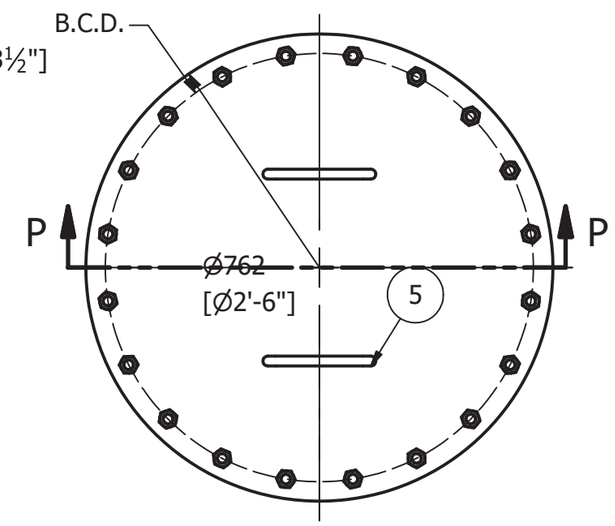

ROOF MANHOLE 600MM (24")
TANK 5 - 250KL
MARK: 15502
QTY: 2
SCALE 1/10

ALTERNATE MATERIAL: ALL 350WT STEEL MAY BE SUBSTITUTED WITH 260WT IF EASIER TO SOURCE

REVISION HISTORY			
ZONE	REV	DESCRIPTION	DATE
	2	EMERGENCY VENT/MANHOLE DETAIL ADDED	4/13/2017

AS-BUILT
BY Inukshuk Construction Ltd. DATE 2017/10/02

Permit Number: P471

DRAWN	Jacob Saunders	3/22/2017
CHECKED	Marc Losier	3/27/2017
QA		
MFG		
APPROVED		

T5 (250KL) ROOF MANHOLE

TITLE

MELIADINE FIELD ERECTED TANK - MANHOLES

SIZE		DWG NO	REV
A3		295-M15	3

SCALE

SHEET 10 OF 12

Parts List				
ITEM	ITEM QTY	CUT (MM)	PART NUMBER	MATERIAL
1	2		ASME B16.5 Flange Slip-On Welding - Class 150 6	A350 LF2
2	1	375	Pipe 6 - Schedule 80 - 14.76378	A333 GR. 6

Ø150 NS DOUBLE FLANGE SHELL LOADING/UNLOADING
MARK: M1602
QTY: 26

WEIGHT/SPOOL: 30.8KG

M1602 QTY	
Tank No.	QTY
1	3
2	3
3	5
4	5
5	5
6	5
TOTAL	26

NOTES:
1. ALL DIMENSIONS ARE IN MM UNLESS OTHERWISE NOTED
2. FINISH: SANDBLAST TO SSP-6

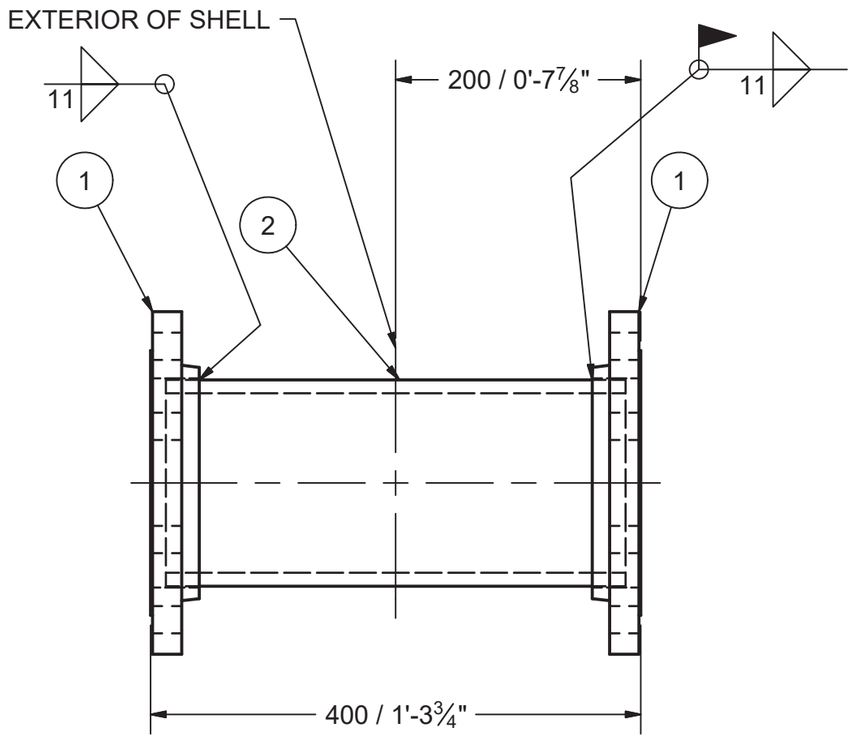

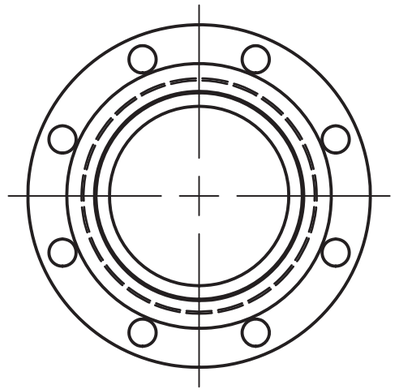

AS-BUILT
BY Inukshuk Construction Ltd. DATE 2017/10/02

REGISTERED PROFESSIONAL ENGINEER
R. G. BROWN
LICENSEE
NT/NU
16-Jul-2017

Permit Number: P471

DRAWN Jacob Saunders	4/13/2017	AEM Meliadine Fuel Storage Tanks	
CHECKED			
QA		TITLE M1602 - 150NS DOUBLE FLG. SHELL	
MFG			
APPROVED			
		SIZE A3	DWG NO 295-M16 / REV 3
		SCALE	SHEET 2 OF 22

Parts List				
ITEM	ITEM QTY	CUT (MM)	PART NUMBER	MATERIAL
1	1		ASME B16.9 Long Radius 90 Deg Elbow (Inch) 6 x 0.28 SCH40	A420 WPL6
2	1		ASME B16.5 Flange Slip-On Welding - Class 150 6	A350 LF2
3	1	3460	Pipe 6 - Schedule 40 - 136.22	A333 GR. 6

Ø150 NS FIXED PIPE LOADING
TANKS 5 & 6 (250KL)
MARK: M1607
QTY: 2

WEIGHT/SPOOL: 508.5KG

NOTES:
1. ALL DIMENSIONS ARE IN MM UNLESS OTHERWISE NOTED
2. FINISH: BARE

M1607 QTY	
Tank No.	QTY
1	0
2	0
3	0
4	0
5	1
6	1
TOTAL	2

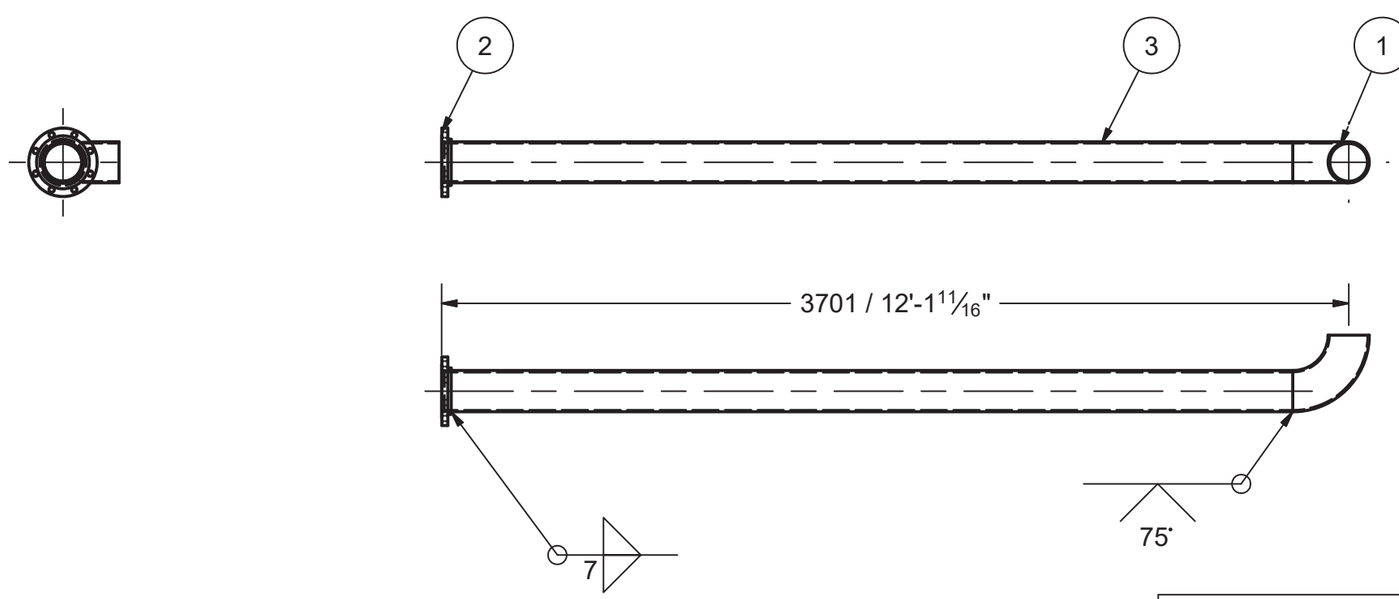

AS-BUILT
BY Inukshuk Construction Ltd. DATE 2017/10/02

REGISTERED PROFESSIONAL ENGINEER
G.C. BROWN
LICENSEE
NT/NU
16-Jul-2017

Permit Number: P471

REVISION HISTORY		
REV	DESCRIPTION	DATE
2	NOTE 2 CHANGED, PIPE BROKEN IN SECTIONS	5/11/2017

DRAWN Jacob Saunders	4/13/2017	AEM Meliadine Fuel Storage Tanks
CHECKED		
QA		TITLE
MFG		M1607 - 150NS FIXED PIPE LOADING
APPROVED		
		SIZE A3 / DWG NO 295-M16 / REV 3
		SCALE / SHEET 7 OF 22

Parts List				
ITEM	ITEM QTY	CUT (MM)	PART NUMBER	MATERIAL
1	1		ASME B16.5 Flange Slip-On Welding - Class 150 6	A350 LF2
2	1		ASME B16.9 Long Radius 90 Deg Elbow (Inch) 6 x 0.28 SCH40	A420 WPL6
3	1	3547	Pipe 6 - Schedule 40 - 139.64512	A333 GR. 6

Ø150 NS FIXED PIPE UNLOADING
TANKS 5 & 6 (250KL)
MARK: M1612
QTY: 2

WEIGHT/SPOOL: 113KG

NOTES:
1. ALL DIMENSIONS ARE IN MM UNLESS OTHERWISE NOTED
2. FINISH: BARE

M1612 QTY	
Tank No.	QTY
1	0
2	0
3	0
4	0
5	1
6	1
TOTAL	2

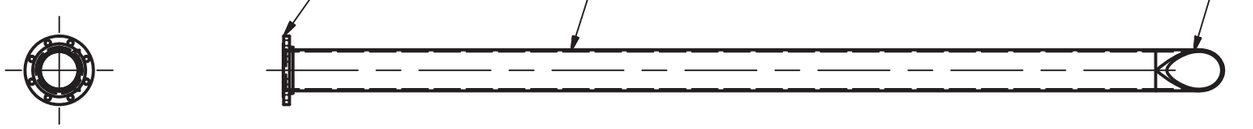

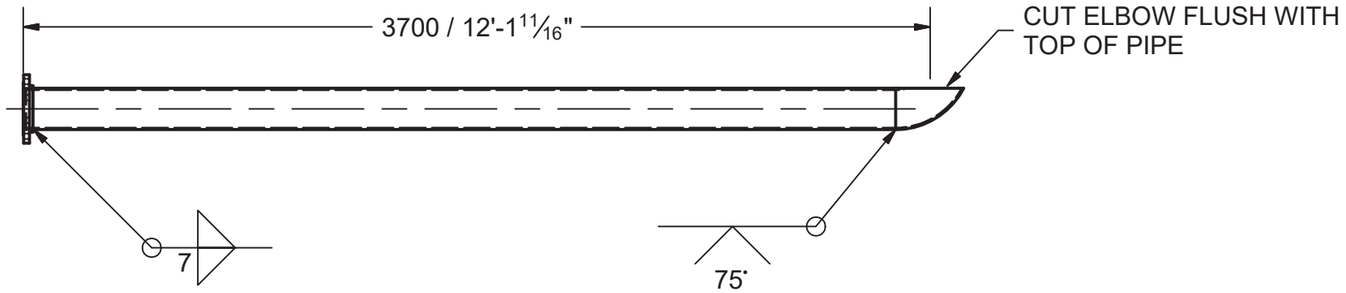

AS-BUILT

BY Inukshuk Construction Ltd. DATE 2017/10/02

PROFESSIONAL ENGINEERS NORTHWEST TERRITORIES AND NUNAVUT K.G. BROWN LICENSEE NT/NU
16-Jul-2017

Permit Number: P471

REVISION HISTORY		
REV	DESCRIPTION	DATE
2	NOTE 2 CHANGED	5/11/2017

DRAWN Jacob Saunders	4/13/2017	AEM Meliadine Fuel Storage Tanks
CHECKED		TITLE M1612 - 150NS FIXED PIPE UNLOADING
QA		
MFG		
APPROVED		

SIZE A3 | DWG NO 295-M16 | REV 3

SCALE | SHEET 12 OF 22

Parts List				
ITEM	ITEM QTY	CUT (MM)	PART NUMBER	MATERIAL
1	1		ASME B16.5 Flange Slip-On Welding - Class 150 6	A350 LF2
2	1	203	Pipe 6 - Schedule 40 - 8	A333 GR. 6
3	1		ASME B16.9 Long Radius 90 Deg Elbow - 6 SCH40	A420 WPL6

Ø150 NS PIPING LOW LEVEL
MARK: M1613
QTY: 16

WEIGHT/SPOOL: 23.3KG

M1613 QTY	
Tank No.	QTY
1	2
2	2
3	3
4	3
5	3
6	3
TOTAL	16

NOTES:
1. ALL DIMENSIONS ARE IN MM UNLESS OTHERWISE NOTED
2. FINISH: BARE

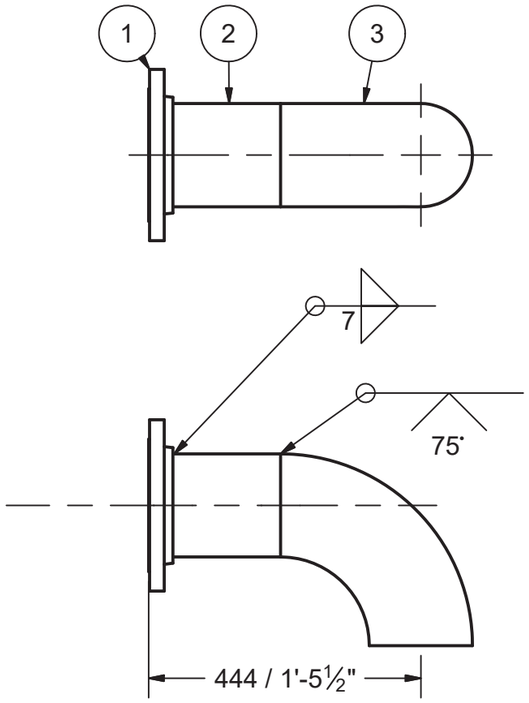

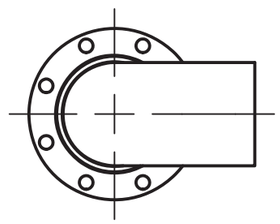

AS-BUILT
BY Inukshuk Construction Ltd. DATE 2017/10/02

REGISTERED PROFESSIONAL ENGINEER
K.G. BROWN
LICENSEE
NT/NU
16-Jul-2017
Permit Number: P471

REVISION HISTORY		
REV	DESCRIPTION	DATE
2	NOTE 2 CHANGED	5/11/2017

DRAWN Jacob Saunders	4/13/2017	AEM Meliadine Fuel Storage Tanks
CHECKED		
QA		TITLE M1613 - 150NS PIPING LOW LEVEL
MFG		
APPROVED		
		SIZE A3 / DWG NO 295-M16 / REV 3
		SCALE / SHEET 13 OF 22

Ø75 NS WATER DRAW OFF
MARK: M1614
QTY: 32

WEIGHT/SPOOL: 16.6KG

Parts List				
ITEM	ITEM QTY	CUT (MM)	PART NUMBER	MATERIAL
1	1		ASME B16.5 Flange Slip-On Welding - Class 150 3	A350 LF2
2	1	316	Pipe 3 - Schedule 80 - 12.440945	A333 GR. 6
3	1		ASME B16.9 Long Radius 90 Deg Elbow (Inch) 2 x 0.218 SCH80	A420
4	1		ASME B16.9 Eccentric Reducer 3 x 2 - Schedule 80	A420
5	1	799	Pipe 2 - Schedule 80 - 31.456693	A333 GR. 6
6	1	152	ASTM A 53/A 53M Pipe 2 - Schedule 40 - 6	Steel

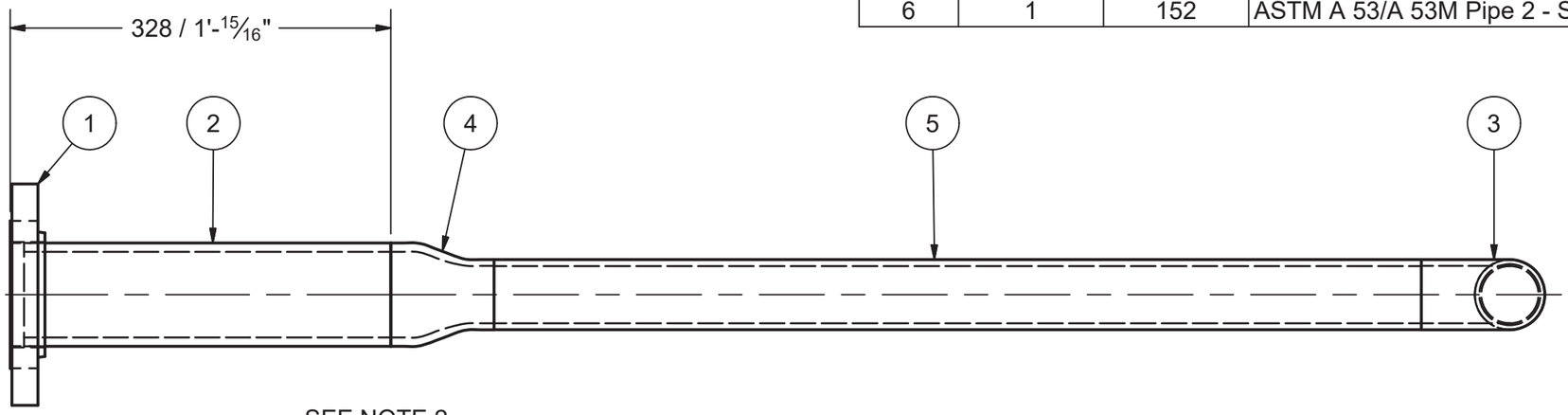

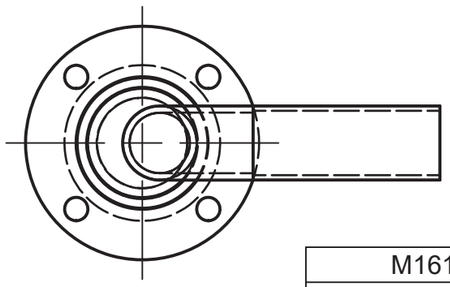

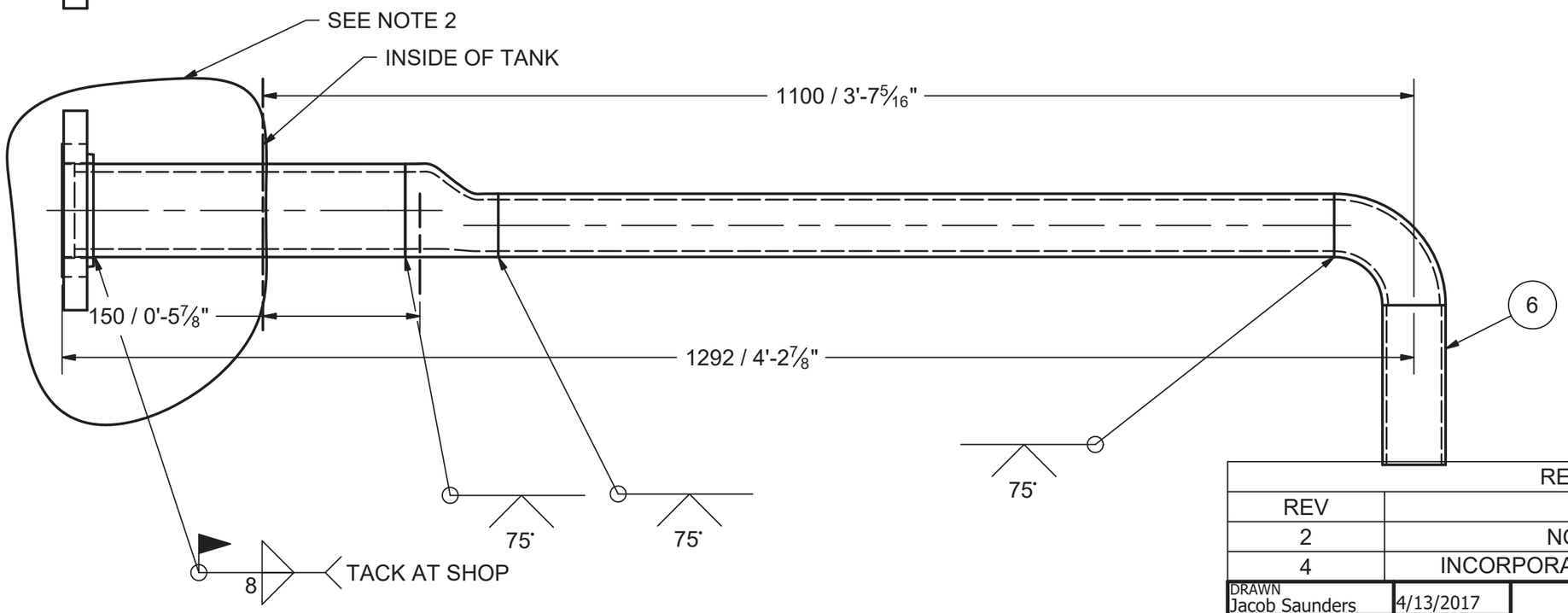

M1614 QTY	
Tank No.	QTY
1	6
2	6
3	6
4	6
5	4
6	4
TOTAL	32



Permit Number: P471

AS-BUILT

BY Inukshuk Construction Ltd. DATE 2017/10/02

REVISION HISTORY		
REV	DESCRIPTION	DATE
2	NOTE 2 CHANGED	5/11/2017
4	INCORPORATE FIELD MODIFICATION	9/27/2017

NOTES:
1. ALL DIMENSIONS ARE IN MM UNLESS OTHERWISE NOTED
2. FINISH: SANDBLAST TO SSP-6 AREA THAT WOULD BE LOCATED OUTSIDE THE TANK AS INDICATED.

DRAWN Jacob Saunders	4/13/2017	AEM Meliadine Fuel Storage Tanks
CHECKED		TITLE: M1614 - 75NS WATER DRAW OFF
QA		
MFG		
APPROVED		

SIZE A3 | DWG NO 295-M16 | REV 4

SCALE | SHEET 14 OF 22

Parts List					
ITEM	ITEM QTY	CUT (MM)	PART NUMBER	DESCRIPTION	MATERIAL
1	1		Plate, 1/4" Thick x 152 Dia	Steel, Mild	G40.21M 300W
2	1	152	PIPE SCH40 ANSI - 4 x .237 - 6	Pipe	A53
3	1		Painters Post Reinforcing Plate	Plate, Mild Steel, 3/8" thk x 133 I.D. x 229 O.D.	G40.21M 300W

Ø100 NS PAINTERS SCAFFOLD CABLE SUPPORT
MARK: M1615
QTY: 6

WEIGHT/SPOOL: 3.4KG

M1615 QTY	
Tank No.	QTY
1	1
2	1
3	1
4	1
5	1
6	1
TOTAL	6

NOTES:
1. ALL DIMENSIONS ARE IN MM UNLESS OTHERWISE NOTED
2. FINISH: SANDBLAST TO SSP-6

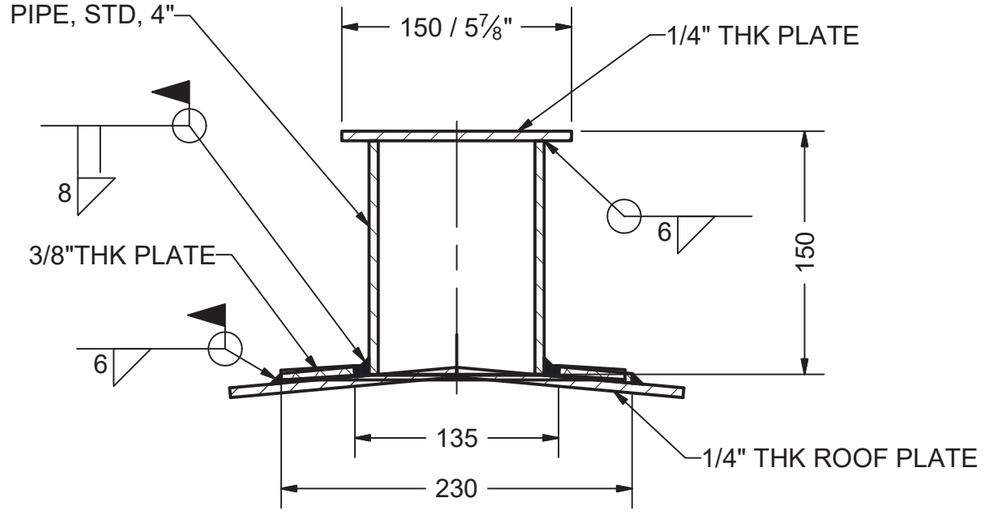

AS-BUILT
BY Inukshuk Construction Ltd. DATE 2017/10/02

REGISTERED PROFESSIONAL ENGINEER
K.S. BROWN
LICENSEE
NT/NU
16-Jul-2017
Permit Number: P471

MOSHER ENGINEERING LIMITED
-GRAVEL CRUSHING
-EARTHWORK
-PROCESS PIPE WELDING
-INDUSTRIAL CONTRACTING

1358 QUEEN ST
HALIFAX, NS
B3J 2H5
PH: (902) 429-0272
FAX: (902) 429-7762

DRAWN	Jacob Saunders	4/13/2017
CHECKED		
QA		
MFG		
APPROVED		

AEM Meliadine Fuel Storage Tanks

TITLE
M1615 - PAINTERS SCAFFOLD CABLE SUPPORT

SIZE	DWG NO	REV
A3	295-M16	3

SCALE

SHEET 15 OF 22

Parts List				
ITEM	ITEM QTY	CUT (MM)	PART NUMBER	MATERIAL
1	1		ASME B16.5 Flange Slip-On Welding - Class 150 16	A350 LF2
2	1	330	Pipe 16 - Schedule 30, 3/8" wall - 13"LG	A106

Ø400 NS ROOF NOZZLE
MARK: M1616
QTY: 6

WEIGHT/SPOOL: 83.5KG

M1616 QTY	
Tank No.	QTY
1	1
2	1
3	1
4	1
5	1
6	1
TOTAL	6

NOTES:
1. ALL DIMENSIONS ARE IN MM UNLESS OTHERWISE NOTED
2. FINISH: SANDBLAST TO SSP-6

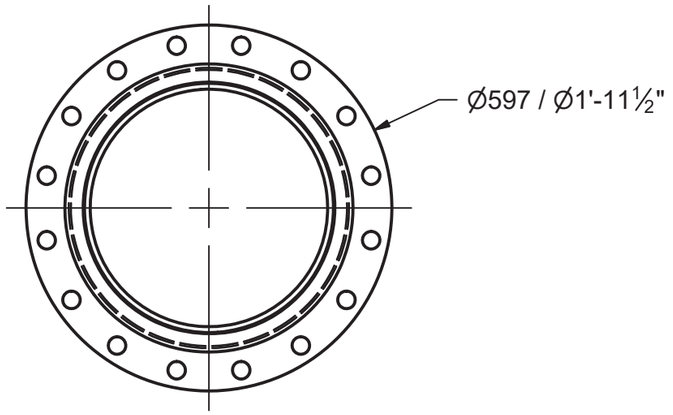

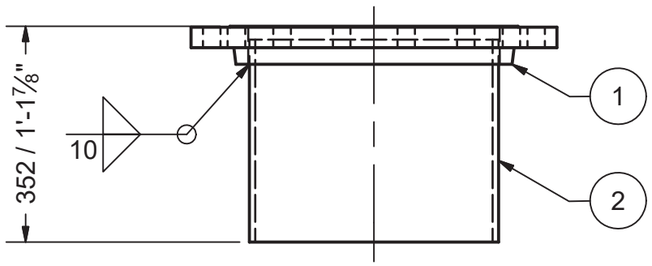

AS-BUILT
BY Inukshuk Construction Ltd. DATE 2017/10/02

PROFESSIONAL ENGINEER
G. BROWN
LICENSEE
NT/NU
16-Jul-2017
Permit Number: P471

DRAWN Jacob Saunders	4/13/2017	AEM Meliadine Fuel Storage Tanks
CHECKED		
QA		TITLE M1616 - Ø400 NS ROOF NOZZLE
MFG		
APPROVED		SIZE A3 / DWG NO 295-M16 / REV 3
		SCALE / SHEET 16 OF 22

Parts List				
ITEM	ITEM QTY	CUT (MM)	PART NUMBER	MATERIAL
1	1		ASME B16.5 Flange Slip-On Welding - Class 150 16	A350 LF2
2	1	330	Pipe 16 - Schedule 30 - std .375" WALL	A106
4	1		Bird Screen 1/2" in Hole Opening	MILD STEEL
6	2	1	ASME B16.9 Long Radius 90 Deg Elbow (Metric) 16 x 9.5 [.375"] WALL S30 STD	A234

Ø400 NS VENT (RETURN BEND)
MARK: M1617
QTY: 2 △3

WEIGHT/SPOOL: 320.5KG

M1617 QTY	
Tank No.	QTY
1	0
2	0
3	1
4	1
5	1
6	1
TOTAL	4

△3

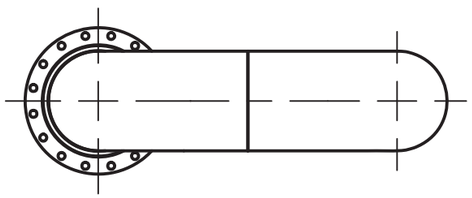

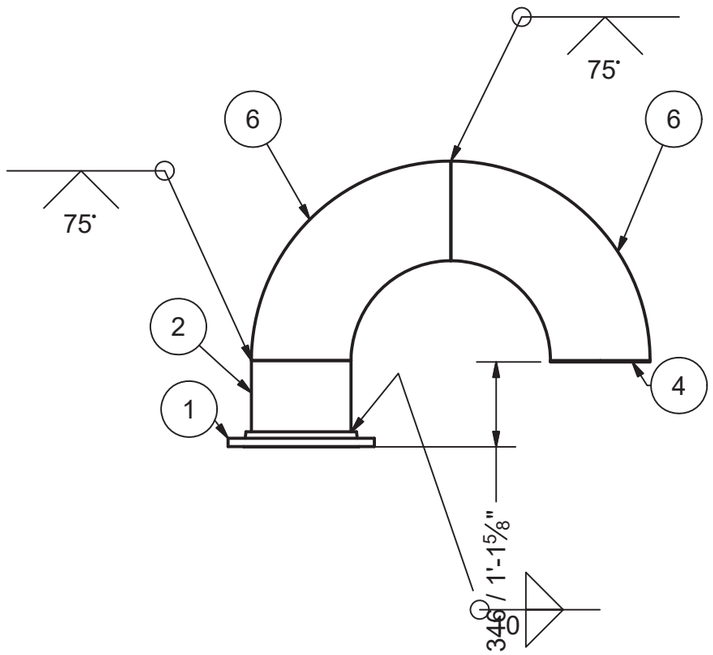

NOTES:
1. ALL DIMENSIONS ARE IN MM UNLESS OTHERWISE NOTED
2. FINISH: SANDBLAST TO SSP-6

AS-BUILT
BY Inukshuk Construction Ltd. DATE 2017/10/02

PROFESSIONAL ENGINEER
K. G. BROWN
LICENSEE
NT/NU
16-Jul-2017
Permit Number: P471

REVISION HISTORY		
REV	DESCRIPTION	DATE
3	QTY CHANGE FROM 6 TO 2	7/9/2017

DRAWN Jacob Saunders	4/13/2017	AEM Meliadine Fuel Storage Tanks
CHECKED		
QA		TITLE
MFG		M1617 - 400NS VENT (RETURN BEND)
APPROVED		
		SIZE A3 / DWG NO 295-M16 / REV 3
		SCALE / SHEET 17 OF 22

Parts List				
ITEM	ITEM QTY	CUT (MM)	PART NUMBER	MATERIAL
1	1		ASME B16.5 Flange Slip-On Welding - Class 150 8	A350 LF2
2	1	325	Pipe 8 - Schedule 40 - 12.795276	A333 GR. 6

Ø200 NS ROOF NOZZLE FOR OVERFILL PROT.
MARK: M1618
QTY: 6

WEIGHT/SPOOL: 25.8KG

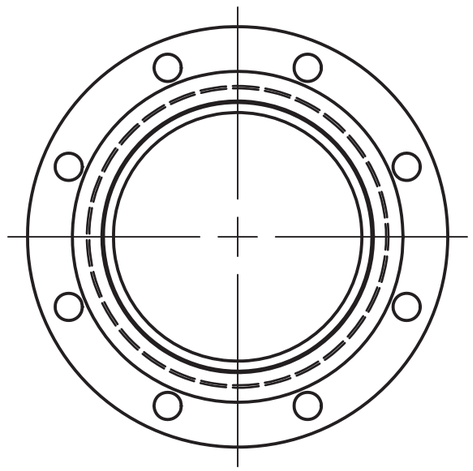

NOTES:
1. ALL DIMENSIONS ARE IN MM UNLESS OTHERWISE NOTED
2. FINISH: SANDBLAST TO SSP-6

M1618 QTY	
Tank No.	QTY
1	1
2	1
3	1
4	1
5	1
6	1
TOTAL	6

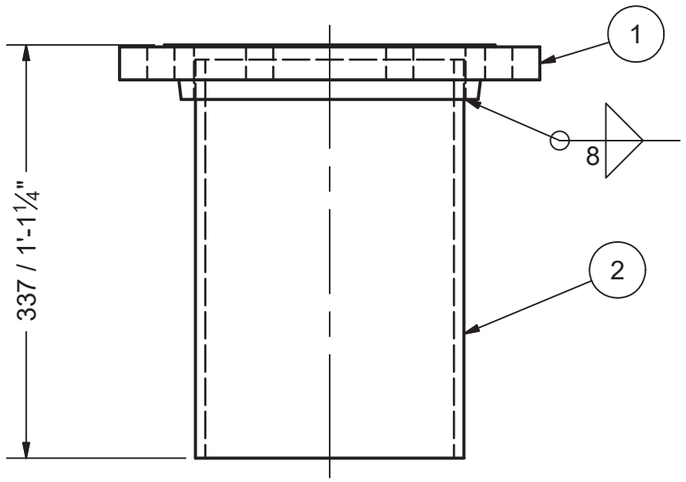

AS-BUILT
BY Inukshuk Construction Ltd. DATE 2017/10/02

APPROVED PROFESSIONAL ENGINEER K.O. BROWN LICENSEE NT/NU
16-Jul-2017
Permit Number: P471

DRAWN Jacob Saunders	4/13/2017	AEM Meliadine Fuel Storage Tanks
CHECKED		TITLE M1618 - 200NS ROOF NOZZLE FOR OVERFILL PROT.
QA		
MFG		
APPROVED		SIZE A3 / DWG NO 295-M16 / REV 3
		SCALE / SHEET 18 OF 22

Parts List				
ITEM	ITEM QTY	CUT (MM)	PART NUMBER	MATERIAL
1	1		Flange 6in Flat Face, Slip On 150#, A105	A350 LF2
2	1	216	PIPE ANSI - 6 x .280" WALL SCH40	A333 GR. 6

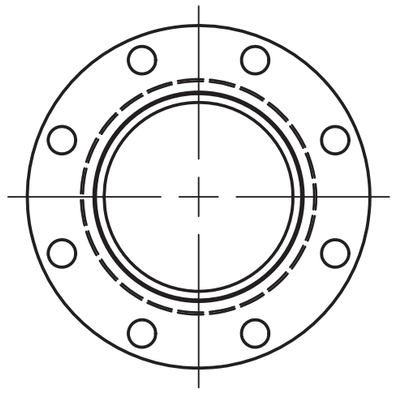

Ø150 NS ROOF NOZZLE FOR GAUGE HATCH
MARK: M1619
QTY: 6

WEIGHT/SPOOL: 13.3KG

NOTES:
1. ALL DIMENSIONS ARE IN MM UNLESS OTHERWISE NOTED
2. FINISH: SANDBLAST TO SSP-6

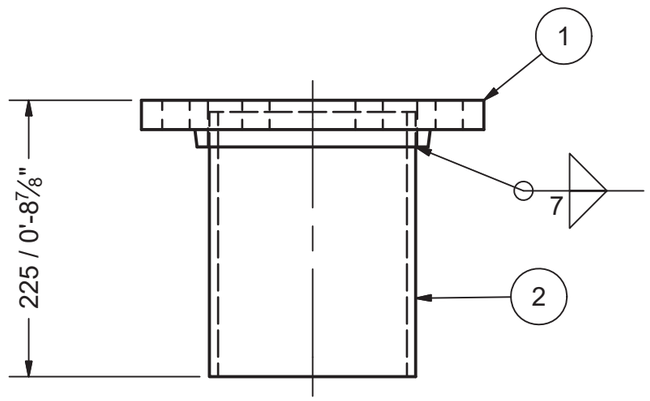

M1619 QTY	
Tank No.	QTY
1	1
2	1
3	1
4	1
5	1
6	1
TOTAL	6

AS-BUILT
BY Inukshuk Construction Ltd. DATE 2017/10/02

ASSOCIATION OF PROFESSIONAL ENGINEERS G.G. BROWN LICENSEE NT/NU
16-Jul-2017
Permit Number: P471

DRAWN Jacob Saunders	4/13/2017	AEM Meliadine Fuel Storage Tanks
CHECKED		TITLE M1619 - 150 NS ROOF NOZZLE FOR GAUGE HATCH
QA		
MFG		
APPROVED		
		SIZE A3 / DWG NO 295-M16 / REV 3
		SCALE / SHEET 19 OF 22

Parts List

ITEM	ITEM QTY	CUT (MM)	PART NUMBER	DESCRIPTION	STOCK NUMBER	MATERIAL
1	1		ASME B16.5 Flange Slip-On Welding - Class 150 4	FLANGE, R.F., SLIP ON, 150#, 100NS [4"]		A350 LF2
2	1	184	ASTM A 53/A 53M Pipe 4 - Schedule 40 - 7.2440945	PIPE, STD, 100NS [4"]	ASTM A 53/A 53M Pipe 4 - Schedule 40	A53

Ø100 NS ROOF NOZZLE
AS PER ECN NO. 1

MARK: M1621
QTY: 6
WEIGHT/SPOOL: 9 KG

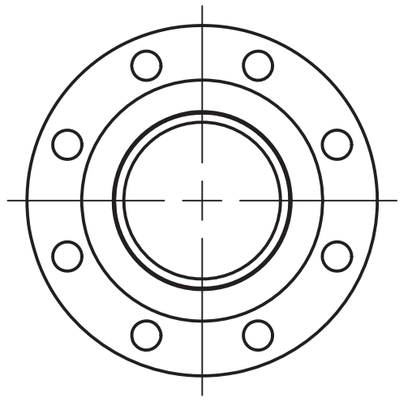

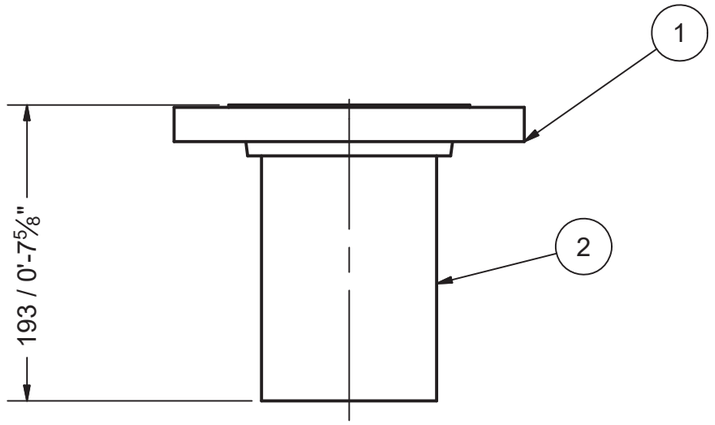

M1621 QTY	
Tank No.	QTY
1	1
2	1
3	1
4	1
5	1
6	1
TOTAL	6

AS-BUILT
BY Inukshuk Construction Ltd. DATE 2017/10/02

PROFESSIONAL ENGINEER
J.C. BROWN
LICENSEE
NT/NU
16-Jul-2017
Permit Number: P471

REVISION HISTORY		
REV	DESCRIPTION	DATE
3	THIS SHEET ADDED AS PER ECN-001	7/7/2017

DRAWN Jacob Saunders	4/13/2017	AEM Meliadine Fuel Storage Tanks
CHECKED		
QA		TITLE M1621 - 100NS ROOF NOZZLE
MFG		
APPROVED		

SIZE A3 | DWG NO 295-M16 | REV 3
SCALE | SHEET 21 OF 22

Parts List				
ITEM	ITEM QTY	CUT (MM)	DESCRIPTION	MATERIAL
1	1	152	L100X100X10 [4"X4"X3/8"]	G40.21M 350W
2	1	152	FB150X6 [6"X1/4"]	G40.21M 300W
3	1	305	50NS [2"] PIPE SCH. 40	A53 ERW

PIPE SUPPORT TYPE 1
MARK: M17101
QTY: 72

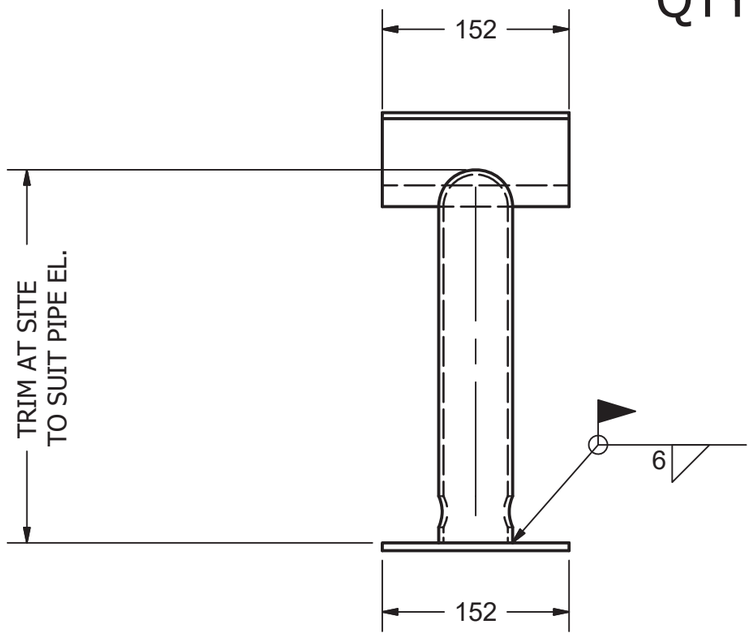

PIPE SUPPORT
SCALE 1/5

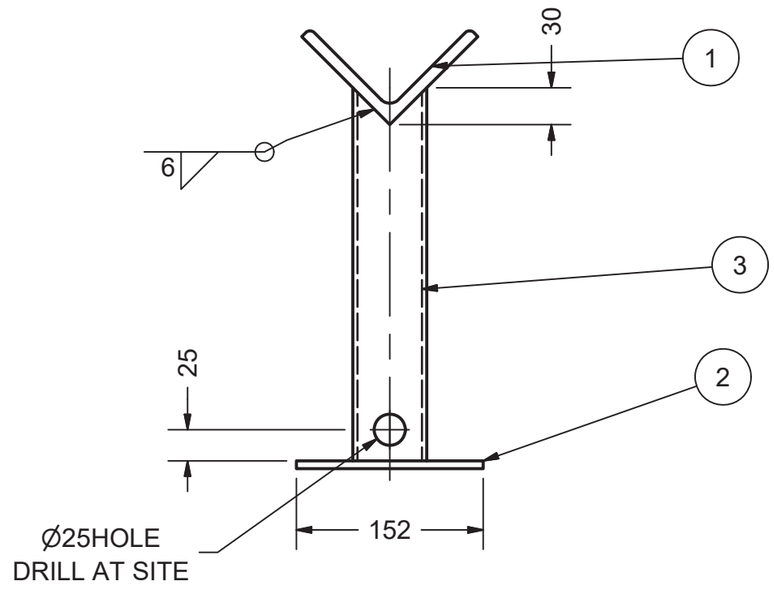

QTY PER TANK	
Tank No.	QTY
1	20
2	16
3	12
4	12
5	6
6	6
TOTAL	72

AS-BUILT
BY Inukshuk Construction Ltd. DATE 2017/10/02

REGISTERED PROFESSIONAL ENGINEER
G.G. BROWN
LICENSEE
NT/NU
16-Jul-2017
Permit Number: P471

NOTE:
ALL DIMENSIONS ARE IN MM UNLESS OTHERWISE NOTED

DRAWN Jacob Saunders	4/13/2017	PIPE SUPPORT
CHECKED		TITLE: MISC. SUPPORTS AND BRACKETS
QA		
MFG		
APPROVED		
SIZE A3	DWG NO 295-M17	REV 2
SCALE	SHEET 1 OF 5	

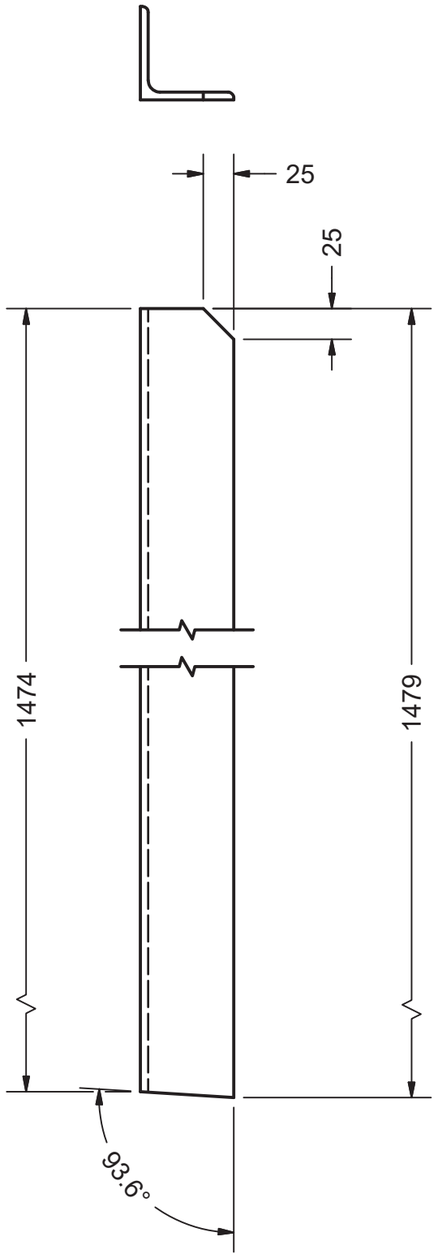

QTY PER TANK	
Tank No.	QTY
1	93
2	77
3	41
4	53
5	21
6	21
TOTAL	306

ROOF HANDRAIL POST
MARK M17201
QTY: 310
L76x76X6 [L3"X3"X1/4"] G40.21M 350W
SCALE 1/5

1

AS-BUILT
BY Inukshuk Construction Ltd. DATE 2017/10/02



16-Jul-2017

Permit Number: P471

REVISION HISTORY		
REV	DESCRIPTION	DATE
1	ANGLE SIZE CHG TO 76X76X6 (3"X3"X1/4")	4/27/2017

DRAWN Jacob Saunders	4/13/2017	ROOF TOP HANDRAIL POST
CHECKED		
QA		TITLE
MFG		MISC. SUPPORTS AND BRACKETS
APPROVED		
		SIZE A3 / DWG NO 295-M17 / REV 2
		SCALE / SHEET 2 OF 5

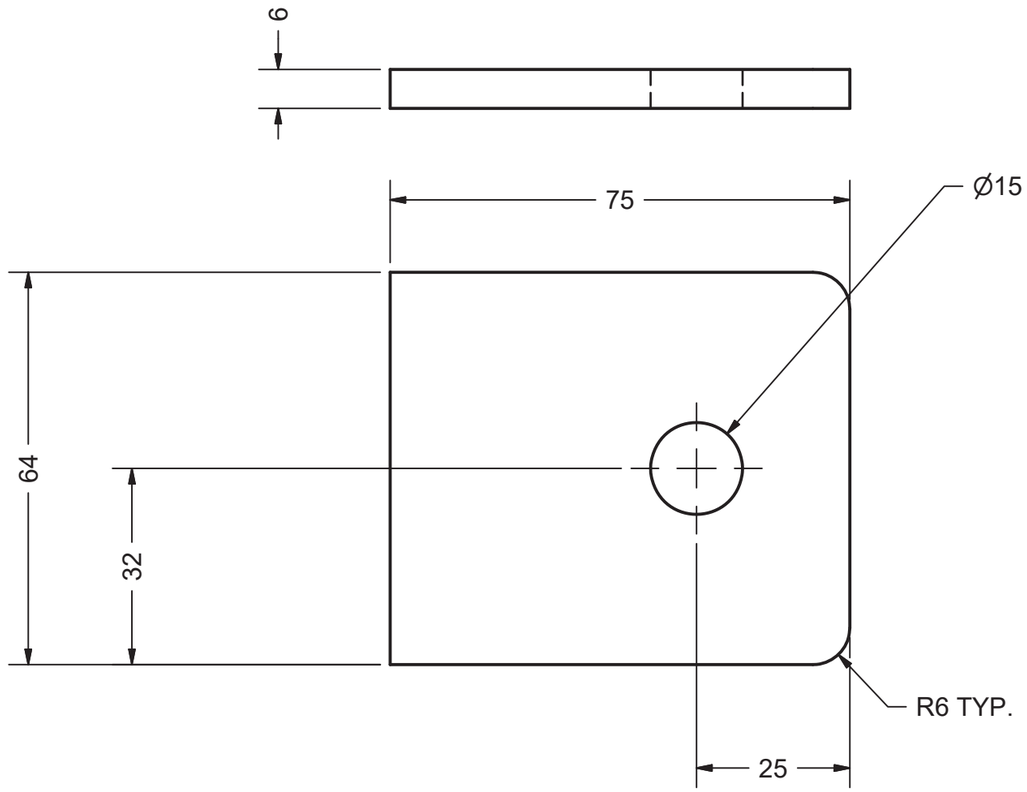

QTY PER TANK	
Tank No.	QTY
1	8
2	8
3	6
4	6
5	4
6	4
TOTAL	36

GROUNDING LUG
MARK M17301
QTY: 36
FB 75X6 [3"X1/4"]
STAINLESS STEEL 316
SCALE 1 : 1

AS-BUILT
BY Inukshuk Construction Ltd. DATE 2017/10/02



Permit Number: P471

DRAWN Jacob Saunders	4/13/2017	GROUNDING LUG		
CHECKED				
QA		TITLE		
MFG		MISC. SUPPORTS AND BRACKETS		
APPROVED				
		SIZE A3	DWG NO 295-M17	REV 2
		SCALE	SHEET 3 OF 5	

CUT LIST					UNIT QTY PER TANK					
MARK	QTY	CUT MM	DESCRIPTION	MATERIAL	TK #1	TK #2	TK #3	TK #4	TK #5	TK #6
M17401	6	400	L100X100X6 [L4"X4"X1/4"] TEMPERATOR SENSOR	G40.21M 350W	1	1	1	1	1	1
M17402	45	400	L75X75X6 [L3"X3"X1/4"] PIPING & ELECTRICAL BRACKET	G40.21M 350W	14	14	6	7	2	2

AS-BUILT

BY Inukshuk Construction Ltd. DATE 2017/10/02

PROFESSIONAL ENGINEER
K. G. BROWN
LICENSEE
NT/NU
16-Jul-2017

Permit Number: P471

DRAWN Jacob Saunders	4/13/2017	MISC BRACKETS		
CHECKED		TITLE		
QA		MISC. SUPPORTS AND BRACKETS		
MFG		SIZE A3	DWG NO 295-M17	REV 2
APPROVED		SCALE	SHEET 4 OF 5	

PARTS LIST FOR ONE (1) ASSY, TWO (2) PER TANK, FOUR (4) REQUIRED				
ITEM	ITEM QTY	CUT (MM)	DESCRIPTION	MATERIAL
M18201	1	295	3/8"THK X 62 WIDE PLATE, SEE DETAIL	G40.21M 300W
M18202	1	373	2 1/2" STD PIPE	A53
M18203	1		DAVIT ARM, SEE DETAIL	
M18204	1	198	10 [3/8"] DIA LG SEE DETAIL	Steel
M18205	1		EYE-BOLT 3/8"DIA X 8" LG Crosby G-291	FORGED STEEL
M18206	2		3/8"-16UNC Hex Nuts (Inch Series) Heavy Hex Nut	A194 GR4

PARTS LIST FOR ONE (1) DAVIT ARM, 2 PER TANK, FOUR (4) REQ'D				
ITEM	ITEM QTY	CUT (MM)	DESCRIPTION	MATERIAL
M18208	1	569	2"NS XH PIPE	A53
M18209	1	25	2 1/2"NS STD PIPE	A53
M18210	1		2"NS XH ELBOW BW 90DEG L.R.	A234
M18211	1	787	2"NS XH PIPE	A53
M18212	1	520	FB10X50 [3/8"X2"]	G40.21M 300W

FINISH: SANDBLAST TO SSPC-6

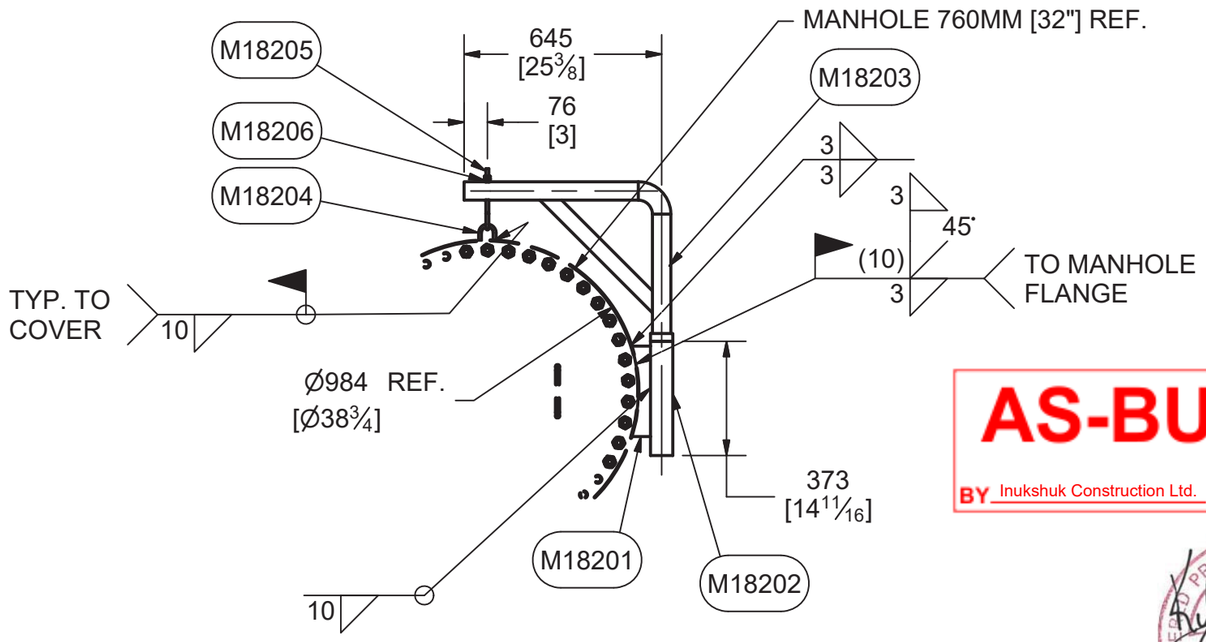

DAVIT ASSEMBLY
QTY: 4
MARK M18200
SCALE 1/20

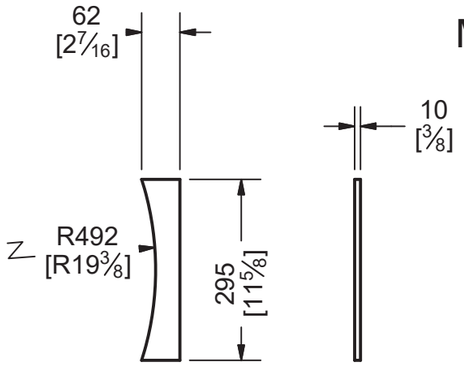

Pc M18201 DETAIL
QTY: 4
SCALE 1/10

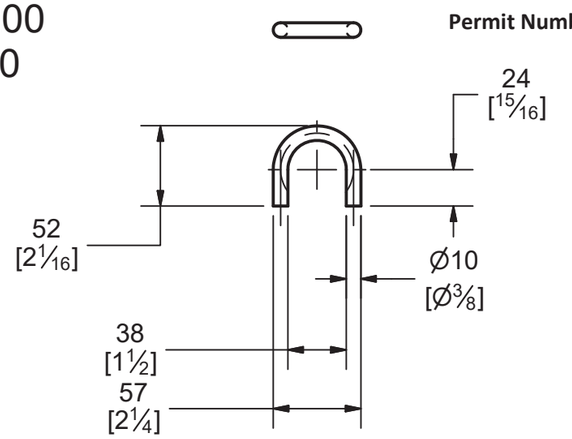

Pc M18104 DETAIL
SCALE 1/4

AS-BUILT
BY Inukshuk Construction Ltd. DATE 2017/10/02

PROFESSIONAL ENGINEER
G.G. BROWN
LICENSEE
NT/NU
24-Jul-2017

Permit Number: P471

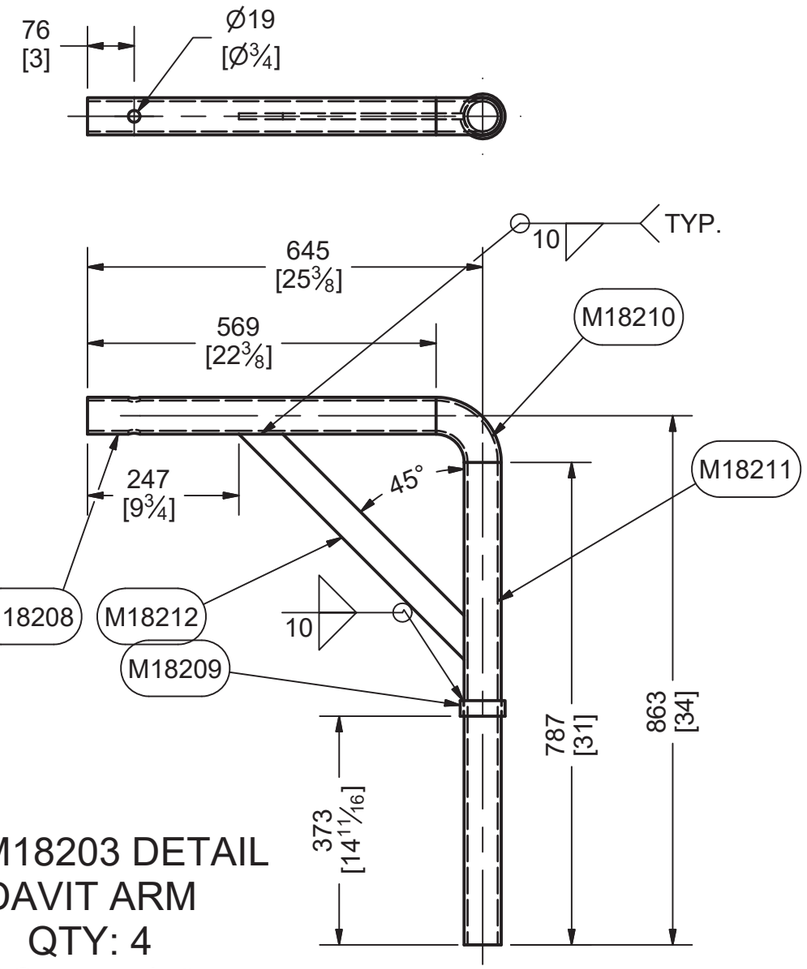

Pc. M18203 DETAIL
DAVIT ARM
QTY: 4
SCALE 1/10

DRAWN MARC LOSIER	4/13/2017	760MM [32"] NS FOR TK 5&6	
CHECKED			
QA		TITLE	
MFG		MANHOLE COVER DAVIT	
APPROVED			
		SIZE A3	DWG NO 295-M18 / REV
		SCALE	SHEET 2 OF 2

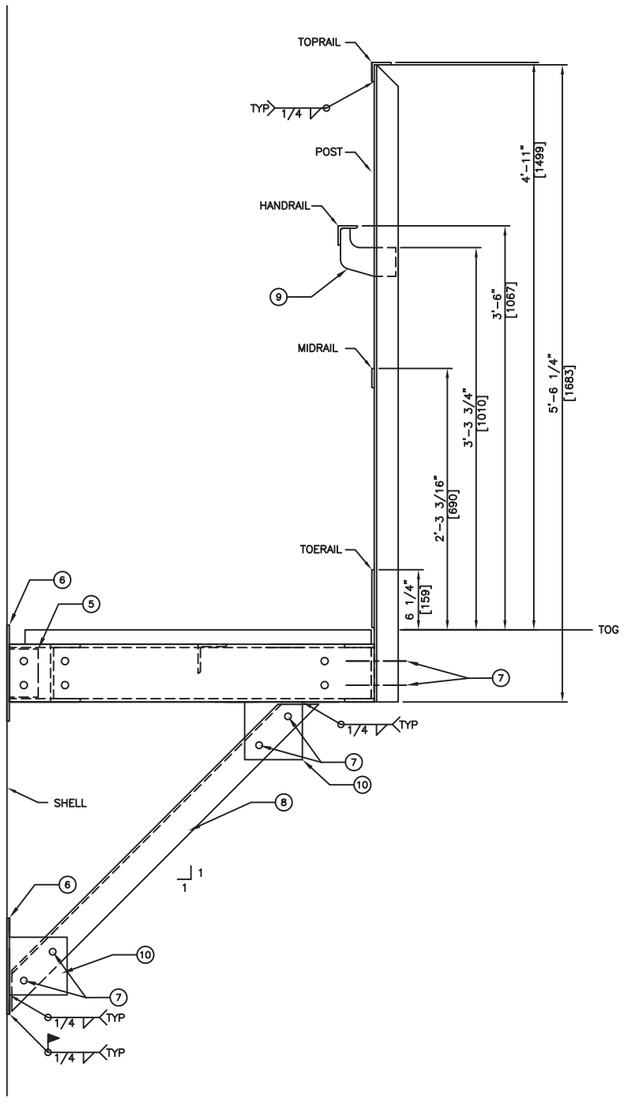

PLATFORM ELEVATION DETAIL

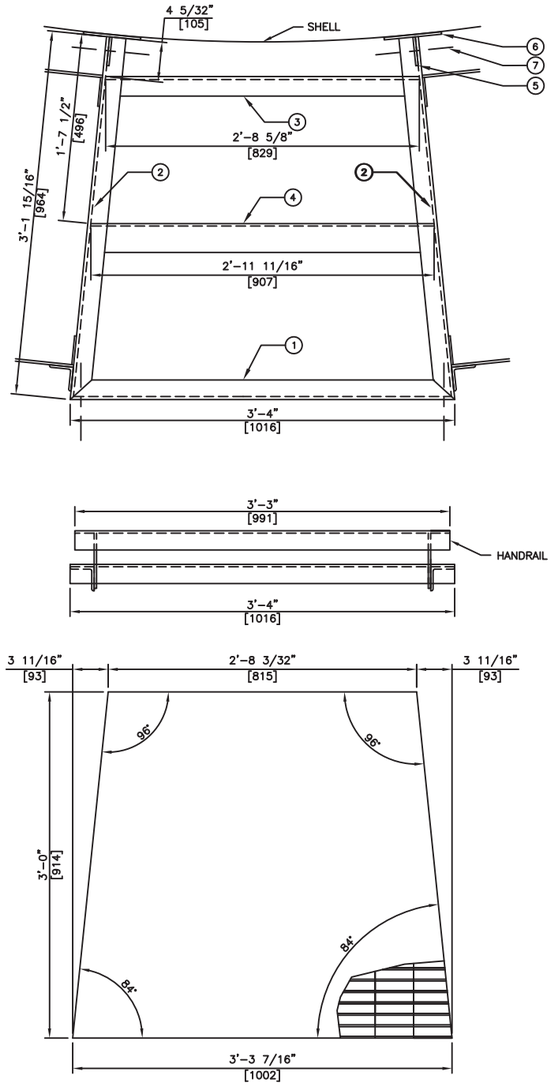

GRADING DETAIL

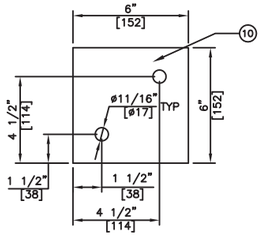

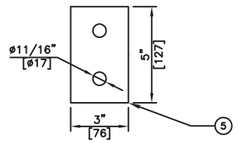

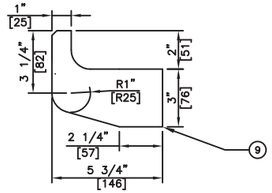

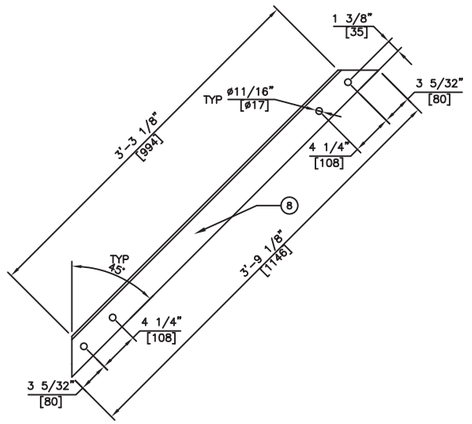

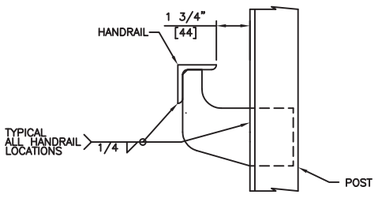

BILL OF MATERIALS

MARK	QTY.	DESCRIPTION	MATERIAL	MTR	WT #'s
1	1	C6ⓐ10.5# x 3'-4" LG (CBE)	G40.21-300W	C	–
2	2	C6ⓐ10.5# x 3'-1 15/16" LG (COE/POE)	G40.21-300W	C	–
3	1	C6ⓐ10.5# x 2'-8 5/8" LG (CBE)	G40.21-300W	C	–
4	1	3/8" x 3" x 3" ANGLE x 2'-11 11/16" LG (CBE)	G40.21-300W	C	–
5	2	3/8" THK x 3" x 5"	G40.21-260W	C	–
6	4	1/4" THK x 6" x 10" c/w 2" RADIUS CORNERS	G40.21-260W	C	–
7	16	5/8"ø x 1 3/4" LG HEX HD BOLT c/w (1) NUT &	A325 GALV	C	–
		LOCK WASHER AND (2) FLAT WASHERS			
8	2	3/8" x 3" x 3" ANGLE x 3'-9 1/8" LG (CBE)	G40.21-300W	C	–
9	2	1/4" THK x 5" x 5 3/4" SEE DETAIL	G40.21-260W	C	–
10	4	1/4" THK x 6" x 6"	G40.21-260W	C	–

BILLING FOR ONE TANK SHOWN, TWO (2) REQUIRED

TYPICAL HANDRAIL/POST DETAIL

TYPICAL HANDRAIL DETAIL

TOPRAIL – 1/4" x 2" x 2" ANGLE
HANDRAIL – 1/4" x 2" x 2" ANGLE
MIDRAIL – 1/4" x 2" FLATBAR
TOERAIL – 1/4" x 6" FLATBAR
POST – 1/4" x 2 1/2" x 2 1/2" ANGLE
GRATING – 19-W-4 1 1/2" DEEP x 3/16"
GALVANIZED SERRATED BAR GRATING

**HANDRAIL LOCATED ON OUTSIDE ONLY – BOLTED TO PLATFORM

**ALL GRATING TO BE SECURED TO PLATFORM FRAME USING SADDLE CLIPS (BOLTED).

PLATFORM IS CAPABLE OF SUPPORTING A MOVING CONCENTRATED LOAD OF 1000LBS, AND HANDRAIL LOAD OF 200LBS IN ANY DIRECTION.

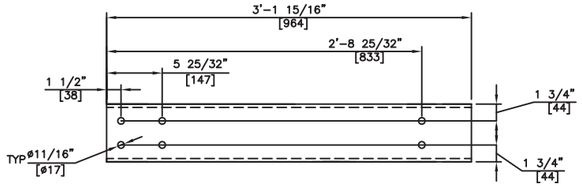

MARK 2 – RIGHT HAND SHOWN
LEFT HAND OPPOSITE

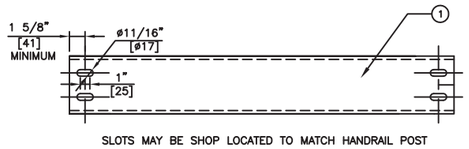

SLOTS MAY BE SHOP LOCATED TO MATCH HANDRAIL POST

AS-BUILT
BY Inukshuk Construction Ltd. DATE 2017/10/02

LICENSED PROFESSIONAL ENGINEER
G.C. BROWN
LICENSEE
24-Jul-2017
NT/NU

REV.	DATE	DRWN.	APP'D.	DESCRIPTION
0	5-MAY-17	ME	KB	ISSUED FOR CONSTRUCTION
A	17-APR-17	ME	KB	ISSUED FOR APPROVAL

REVISIONS

SUB-ARC SYSTEMS INC.

CUSTOMER: AGNICO EAGLE MINES LIMITED – MELIADINE PROJECT
TITLE: MID PLATFORM DETAIL
PROJECT NO.: 6515
LOCATION: RANKIN INLET, NUNAVUT
TANK NO.: TANK TAG: TK #5 & #6
SCALE: 3/4" = 1'-0"
W.O.: 17-03
DRWG. No.: 17-03-5-001
Rev.: 0
DATE: 17-APR-17

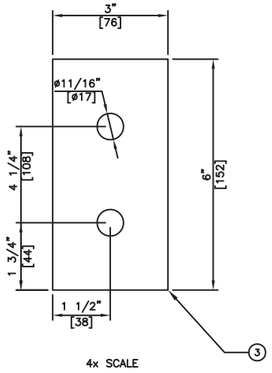

4x SCALE

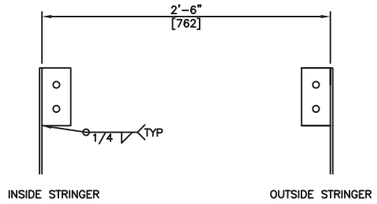

STRINGER CLIP TO PLATFORM

BILL OF MATERIALS

MARK	QTY.	DESCRIPTION	MATERIAL	MTR	WT #'s
1	1	1/4" THK x 12" x 11'-1 9/16" LG SEE DETAIL	G40.21-260W	C	–
2	1	1/4" THK x 12" x 12'-7 13/16" LG SEE DETAIL	G40.21-260W	C	–
3	6	1/4" THK x 3" x 6"	G40.21-260W	C	–
4	12	5/8"ø x 1 3/4" LG HEX HD BOLT c/w (1) NUT &	A325 GALV	C	–
		LOCK WASHER AND (2) FLAT WASHERS			

BILLING FOR ONE TANK SHOWN, TWO REQUIRED

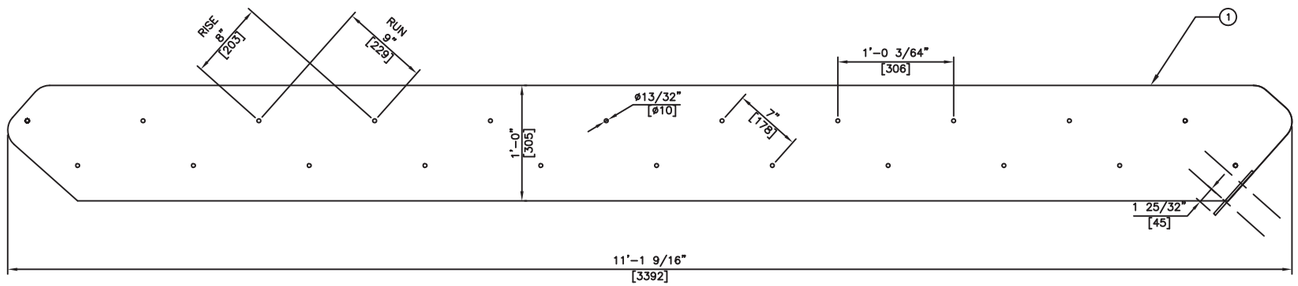

INSIDE BOTTOM STRINGER

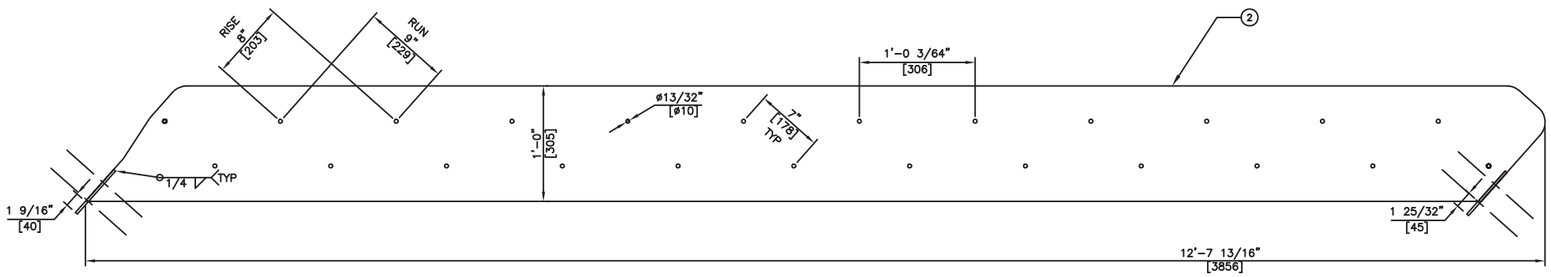

INSIDE STRINGER

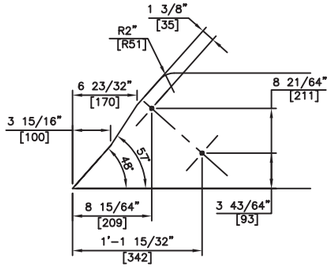

BOTTOM @ PLATFORM

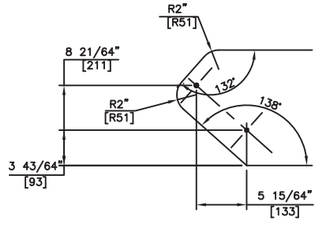

BOTTOM

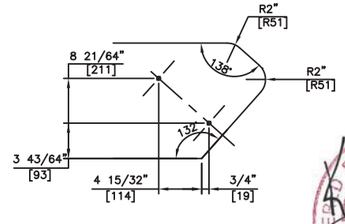

TOP

AS-BUILT

BY Inukshuk Construction Ltd. DATE 2017/10/02

NOTE: MARK 3 IS PLACED SAME SIDE AS STAIR.



REV.	DATE	DRWN.	APP'D.	DESCRIPTION
0	5-MAY-17	ME	KB	ISSUED FOR CONSTRUCTION
A	17-APR-17	ME	KB	ISSUED FOR APPROVAL

REVISIONS

SUB-ARC SYSTEMS INC.

CUSTOMER: AGNICO EAGLE MINES LIMITED – MELIADINE PROJECT

TITLE: INSIDE STRINGER DETAIL

PROJECT NO.: 6515

LOCATION: RANKIN INLET, NUNAVUT

TANK NO.: TANK TAG: TK #5 & #6

SCALE: 3/4" = 1'-0"

W.O.: 17-03

DRWG. No.: 17-03-5-002

Rev.: 0

DATE: 17-APR-17

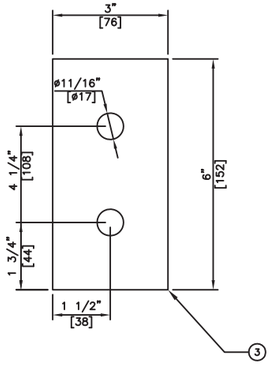

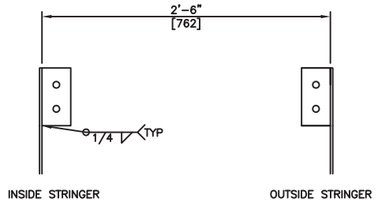

STRINGER CLIP TO PLATFORM

BILL OF MATERIALS

MARK	QTY.	DESCRIPTION	MATERIAL	MTR	WT #'s
1	1	1/4" THK x 12" x 12'-2 5/32" LG SEE DETAIL	G40.21-260W	C	–
2	1	1/4" THK x 12" x 13'-8 1/8" LG SEE DETAIL	G40.21-260W	C	–
3	6	1/4" THK x 3" x 6"	G40.21-260W	C	–
4	12	5/8"ø x 1 3/4" LG HEX HD BOLT c/w (1) NUT &	A325 GALV	C	–
		SERRATED BAR GRATING c/w CHECKER PLATE NOSE			
5	23	STAIR TREAD 9 3/4" WIDE x 30" LG x 1 1/2" x 3/16"	G40.21-260W	C	–
		SERRATED c/w CHECKER PLATE NOSE			
6	92	3/8"ø x 1 1/2" LG HEX HD BOLT c/w (1) NUT &	A325 GALV	C	–
		LOCK WASHER AND (2) FLAT WASHERS			

BILLING FOR ONE TANK SHOWN, TWO REQUIRED

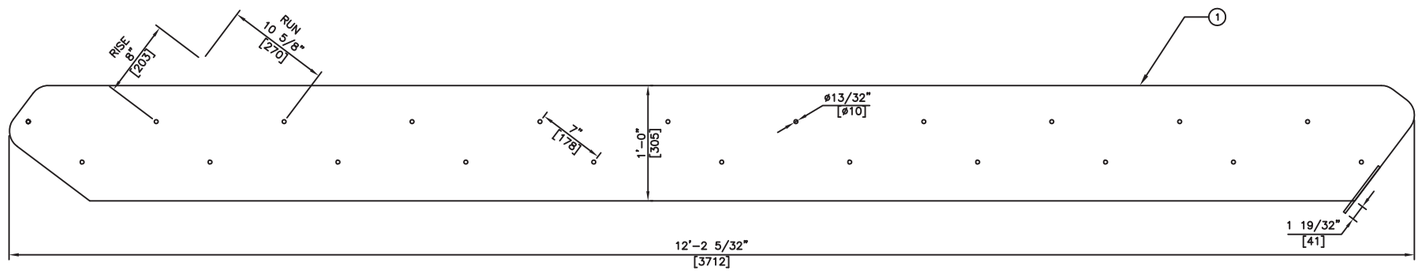

OUTSIDE BOTTOM STRINGER

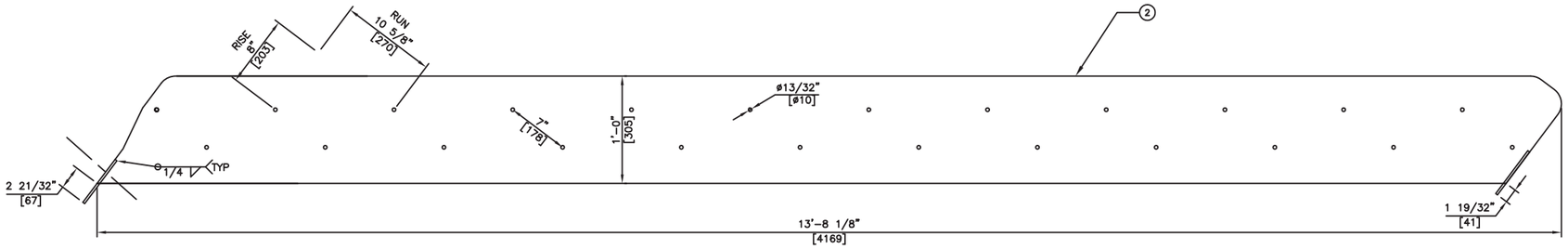

OUTSIDE STRINGER

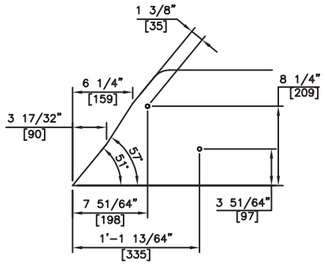

BOTTOM @ PLATFORM

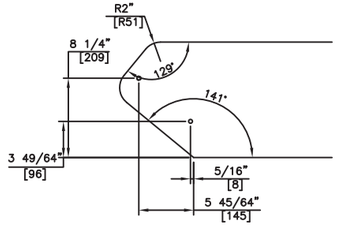

BOTTOM

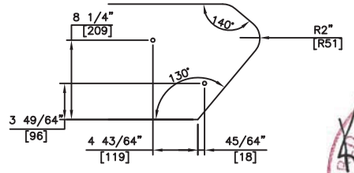

TOP

AS-BUILT

BY Inukshuk Construction Ltd. DATE 2017/10/02

NOTE: MARK 3 IS PLACED SAME SIDE AS STAIR.



REV.	DATE	DRWN.	APP'D.	DESCRIPTION
0	5-MAY-17	ME	KB	ISSUED FOR CONSTRUCTION
A	17-APR-17	ME	KB	ISSUED FOR APPROVAL

REVISIONS

SUB-ARC SYSTEMS INC.

CUSTOMER: AGNICO EAGLE MINES LIMITED – MELIADINE PROJECT

TITLE: OUTSIDE STRINGER DETAIL

PROJECT NO.: 6515

LOCATION: RANKIN INLET, NUNAVUT

TANK NO.: TANK TAG: TK #5 & #6

SCALE: 3/4" = 1'-0"

W.O.: 17-03

DATE: 17-APR-17

DRWG. No.: 17-03-5-003

Rev.: 0

BILL OF MATERIALS

MARK	QTY.	DESCRIPTION	MATERIAL	MTR	WT #'s
1	2	3/8" x 3" x 3" ANGLE x 3'-3" LG (PBE)	G40.21-300W	C	–
2	6	1/4" THK x 2 5/8" x 7" LG	G40.21-260W	C	–
3	2	3/8" x 3" x 3" ANGLE x 3'-9 1/8" LG	G40.21-300W	C	–
4	14	5/8"ø x 1 3/4" LG HEX HD BOLT c/w (1) NUT &	A325 GALV	C	–
		LOCK WASHER AND (2) FLAT WASHERS			
5	5	1/4" THK x 6" x 10" c/w 2" RADIUS CORNERS	G40.21-260W	C	–
6	1	C6⊕10.5# x 2'-11" LG	G40.21-300W	C	–
7	4	1/4" THK x 6" x 6"	G40.21-260W	C	–

BILLING FOR ONE TANK SHOWN, TWO REQUIRED

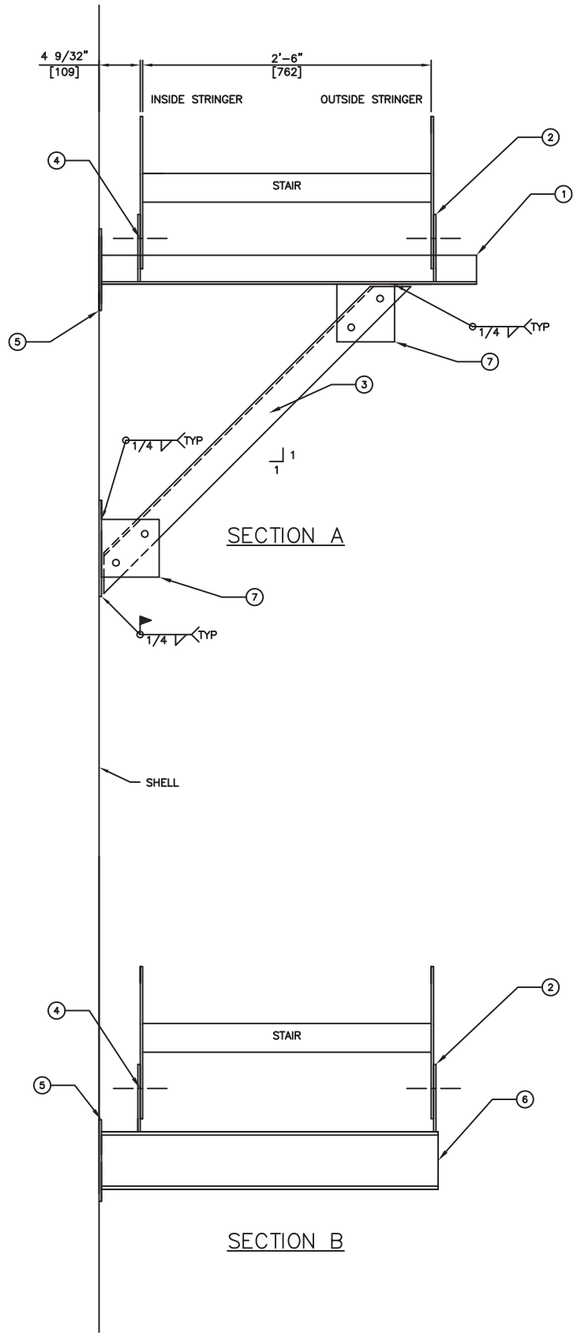

SECTION A

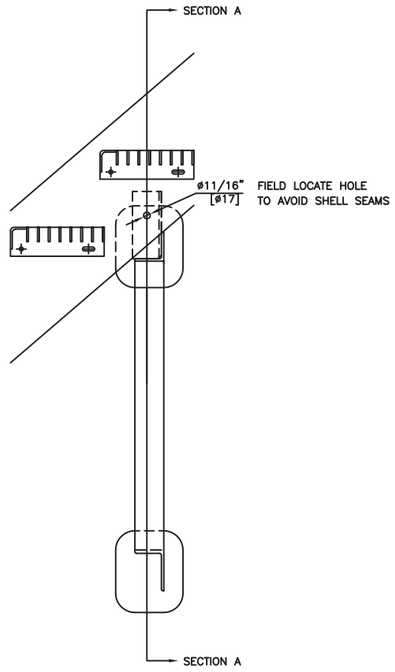

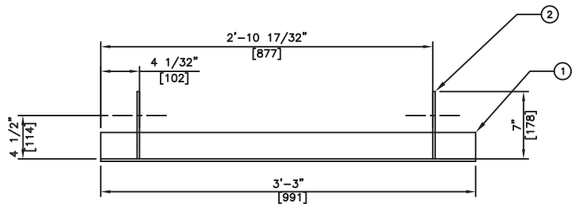

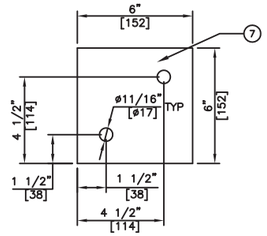

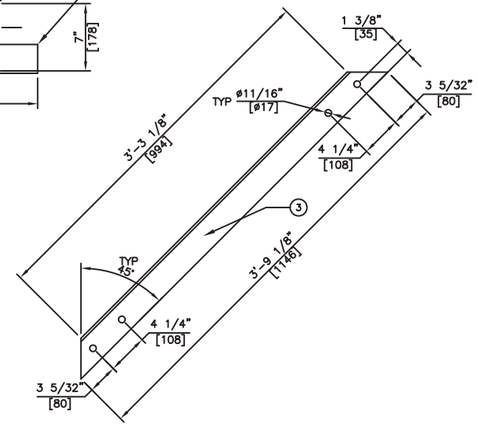

SECTION B

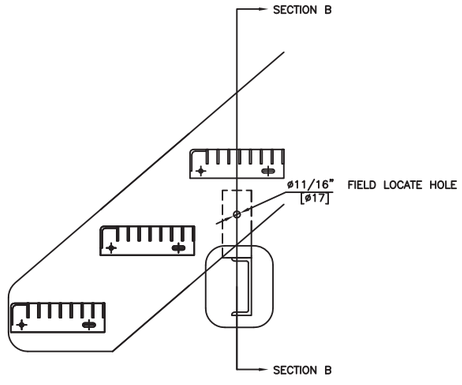

CHANNEL SUPPORT IS FOR BOTTOM OF STAIRS ONLY.

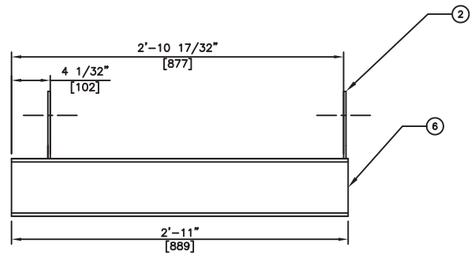

NOTE: MAXIMUM SUPPORT SPACING IS EVERY 7 STAIRS.

AS-BUILT

BY Inukshuk Construction Ltd. DATE 2017/10/02



REV.	DATE	DRWN.	APP'D.	DESCRIPTION
0	5-MAY-17	ME	KB	ISSUED FOR CONSTRUCTION
A	17-APR-17	ME	KB	ISSUED FOR APPROVAL

REVISIONS

SUB-ARC SYSTEMS INC.

CUSTOMER: AGNICO EAGLE MINES LIMITED – MELIADINE PROJECT

TITLE: STAIR STRINGER SUPPORTS

PROJECT NO.: 6515

LOCATION: RANKIN INLET, NUNAVUT

TANK NO.: TANK TAG: TK #5 & #6

SCALE: 3/4" = 1'-0"

W.O.: 17-03

DATE: 17-APR-17

DRWG. No.: 17-03-5-004

Rev.: 0

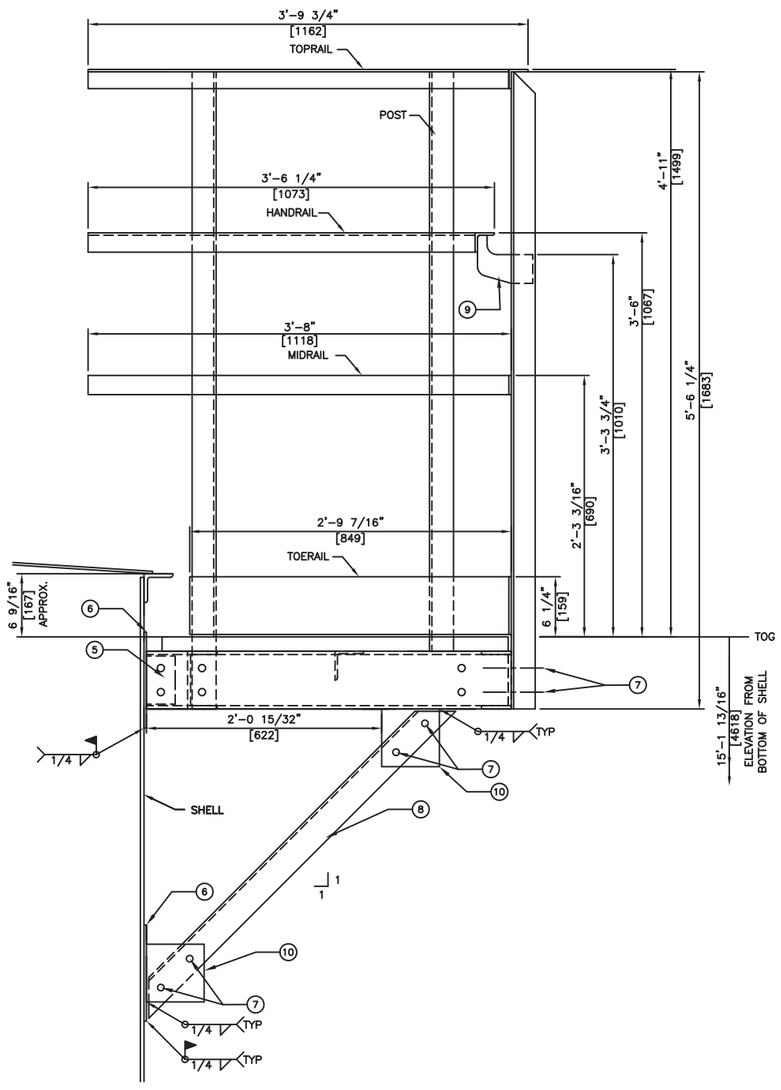

PLATFORM ELEVATION DETAIL

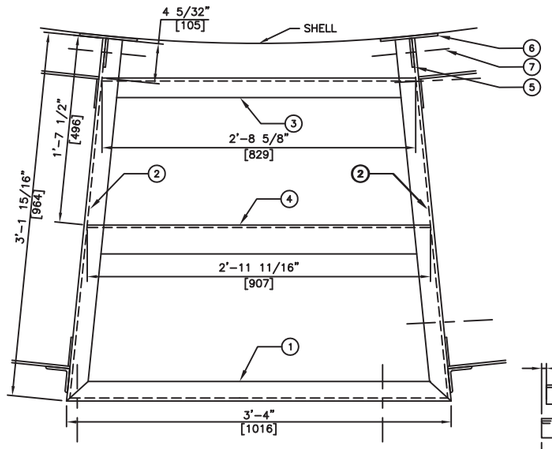

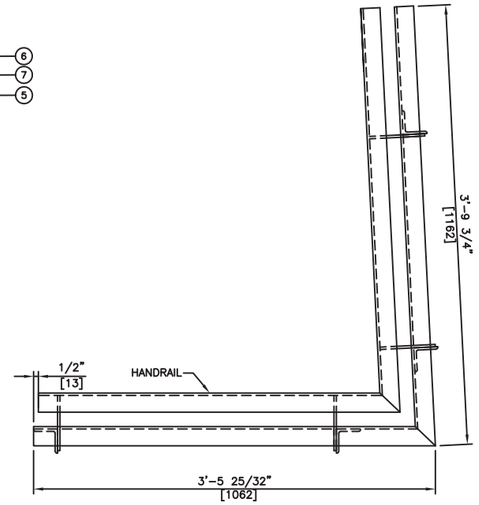

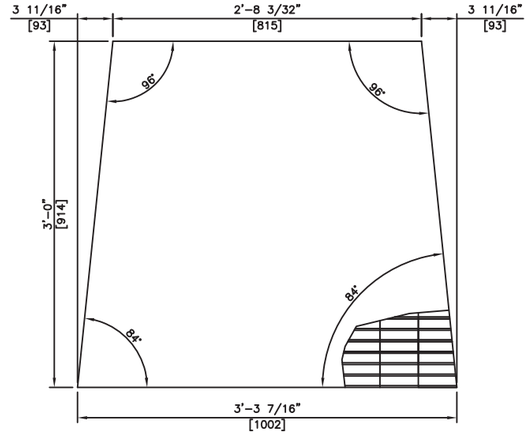

GRATING DETAIL

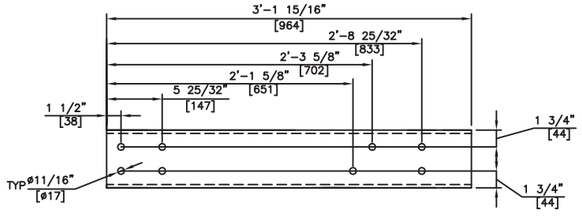

MARK 2 – RIGHT HAND SHOWN
LEFT HAND OPPOSITE

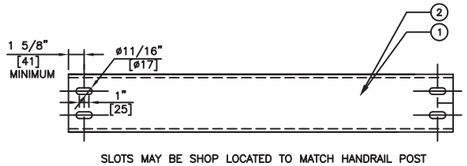

SLOTS MAY BE SHOP LOCATED TO MATCH HANDRAIL POST

BILL OF MATERIALS

MARK	QTY.	DESCRIPTION	MATERIAL	MTR	WT #'s
1	1	C6ⓐ10.5# x 3'-4" LG (CBE)	G40.21-300W	C	–
2	2	C6ⓐ10.5# x 3'-1 15/16" LG (COE/POE)	G40.21-300W	C	–
3	1	C6ⓐ10.5# x 2'-8 5/8" LG (CBE)	G40.21-300W	C	–
4	1	3/8" x 3" x 3" ANGLE x 2'-11 11/16" LG (CBE)	G40.21-300W	C	–
5	2	3/8" THK x 3" x 5"	G40.21-260W	C	–
6	4	1/4" THK x 6" x 10" c/w 2" RADIUS CORNERS	G40.21-260W	C	–
7	20	5/8"ø x 1 3/4" LG HEX HD BOLT c/w (1) NUT & LOCK WASHER AND (2) FLAT WASHERS	A325 GALV	C	–
8	2	3/8" x 3" x 3" ANGLE x 3" – 9 1/8" LG (CBE)	G40.21-300W	C	–
9	4	1/4" THK x 5" x 5 3/4" SEE DETAIL	G40.21-260W	C	–

BILLING FOR ONE TANK SHOWN, TWO (2) REQUIRED

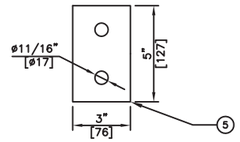

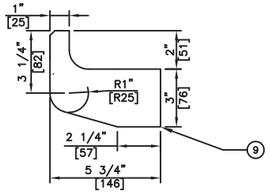

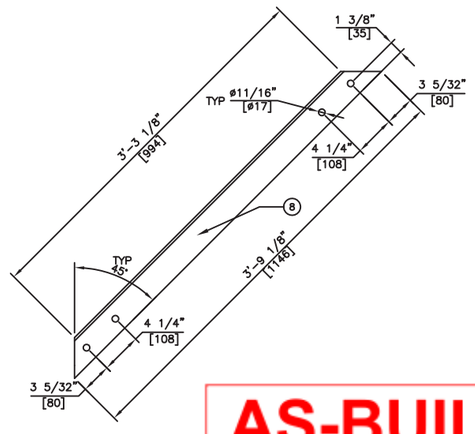

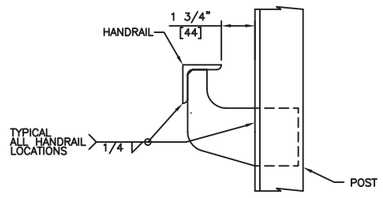

TYPICAL HANDRAIL/POST DETAIL

TYPICAL HANDRAIL DETAIL

TOPRAIL – 1/4" x 2" x 2" ANGLE
HANDRAIL – 1/4" x 2" x 2" ANGLE
MIDRAIL – 1/4" x 2" FLATBAR
TOERAIL – 1/4" x 6" FLATBAR
POST – 1/4" x 2 1/2" x 2 1/2" ANGLE
GRATING – 19-W-4 1 1/2" DEEP x 3/16"
GALVANIZED SERRATED BAR GRATING

**HANDRAIL LOCATED ON OUTSIDE ONLY – BOLTED TO PLATFORM

**ALL GRATING TO BE SECURED TO PLATFORM FRAME USING SADDLE CLIPS (BOLTED).

FIELD TO TRIM HANDRAIL OVER TANK ROOF TO MATE WITH PERIMETER HANDRAIL

FIELD TO TRIM HANDRAIL OVER TANK ROOF TO MATE WITH PERIMETER HANDRAIL

PLATFORM IS CAPABLE OF SUPPORTING A MOVING CONCENTRATED LOAD OF 1000LBS, AND HANDRAIL LOAD OF 200LBS IN ANY DIRECTION.

AS-BUILT

BY Inukshuk Construction Ltd. DATE 2017/10/02



REV.	DATE	DRWN.	APP'D.	DESCRIPTION
0	5-MAY-17	ME	KB	ISSUED FOR CONSTRUCTION
A	17-APR-17	ME	KB	ISSUED FOR APPROVAL

REVISIONS

SUB-ARC SYSTEMS INC.

CUSTOMER: AGNICO EAGLE MINES LIMITED – MELIADINE PROJECT

TITLE: TOP PLATFORM DETAIL

PROJECT NO.: 6515

LOCATION: RANKIN INLET, NUNAVUT

TANK NO.: TANK TAG: TK #5 & #6

SCALE: 3/4" = 1'-0"

W.O.: 17-03

DRWG. No.: 17-03-5-005

Rev.: 0

DATE: 17-APR-17

BILL OF MATERIALS

MARK	QTY.	DESCRIPTION	MATERIAL	MTR	WT #'s
1	4	1/4" THK x 5" x 5 3/4" SEE DETAIL	G40.21-260W	C	–

BILLING FOR ONE TANK SHOWN, FOUR (4) REQUIRED

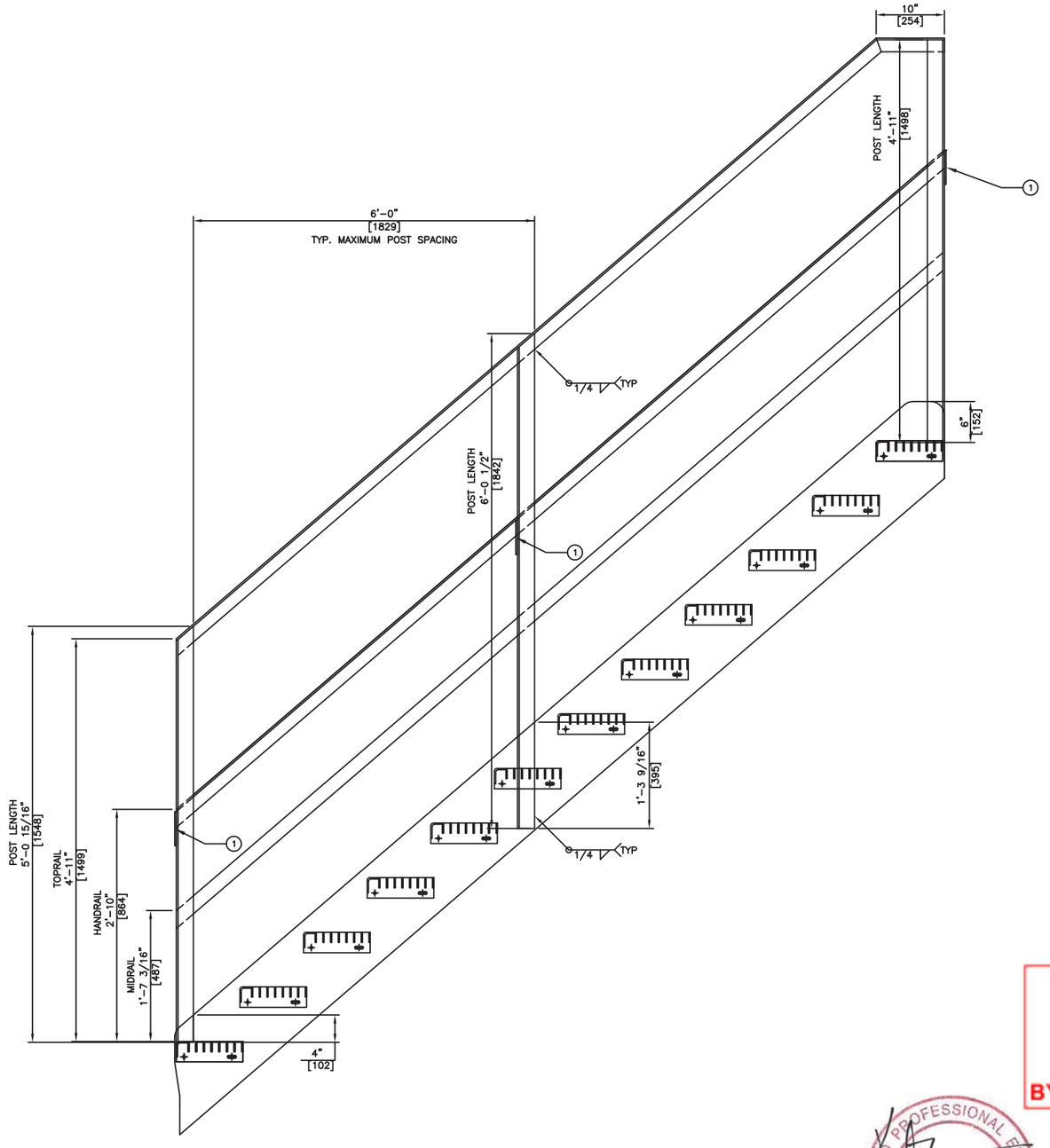

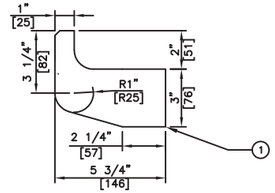

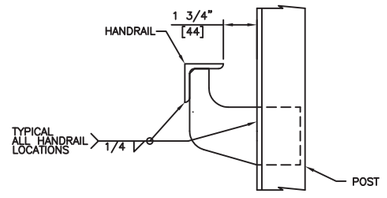

TYPICAL HANDRAIL/POST DETAIL

TYPICAL HANDRAIL DETAIL

TOPRAIL – 1/4" x 2" x 2" ANGLE
HANDRAIL – 1/4" x 2" x 2" ANGLE
MIDRAIL – 1/4" x 2" FLATBAR

POST – 1/4" x 2 1/2" x 2 1/2" ANGLE
POST SHALL BE SQUARE TO THE STAIR HOLES
1 POST AT EACH END, 2 POSTS EQUAL SPACE ON STRINGER

**HANDRAIL LOCATED ON OUTSIDE ONLY

QUANTITY OF STAIRS IS FOR DEMONSTRATION ONLY.

STAIRS ARE CAPABLE OF SUPPORTING A MOVING CONCENTRATED LOAD OF 1000LBS, AND HANDRAIL LOAD OF 200LBS IN ANY DIRECTION.

AS-BUILT

BY Inukshuk Construction Ltd. DATE 2017/10/02

REGISTERED PROFESSIONAL ENGINEER
K.C. BROWN
LICENSEE
NT/NU
24-Jul-2017

REV.	DATE	DRWN.	APP'D.	DESCRIPTION
0	5-MAY-17	ME	KB	ISSUED FOR CONSTRUCTION
A	17-APR-17	ME	KB	ISSUED FOR APPROVAL

REVISIONS

SUB-ARC SYSTEMS INC.

CUSTOMER: AGNICO EAGLE MINES LIMITED – MELIADINE PROJECT

TITLE: STAIR HANDRAIL DETAIL

PROJECT NO.: 6515

LOCATION: RANKIN INLET, NUNAVUT

TANK NO.: TANK TAG: TK #5 & #6

SCALE: 3/4" = 1'-0"

W.O.: 17-03

DATE: 17-APR-17

DRWG. No.: 17-03-5-006

Rev.: 0

APPENDIX B

Survey Drawings of Mine Site Fuel Storage and Containment Facilities

N

RUN OF MINE
15 661 M³

SAND
35 M³

0-30 MM
2 606 M³

CLASS A
2 183 M³

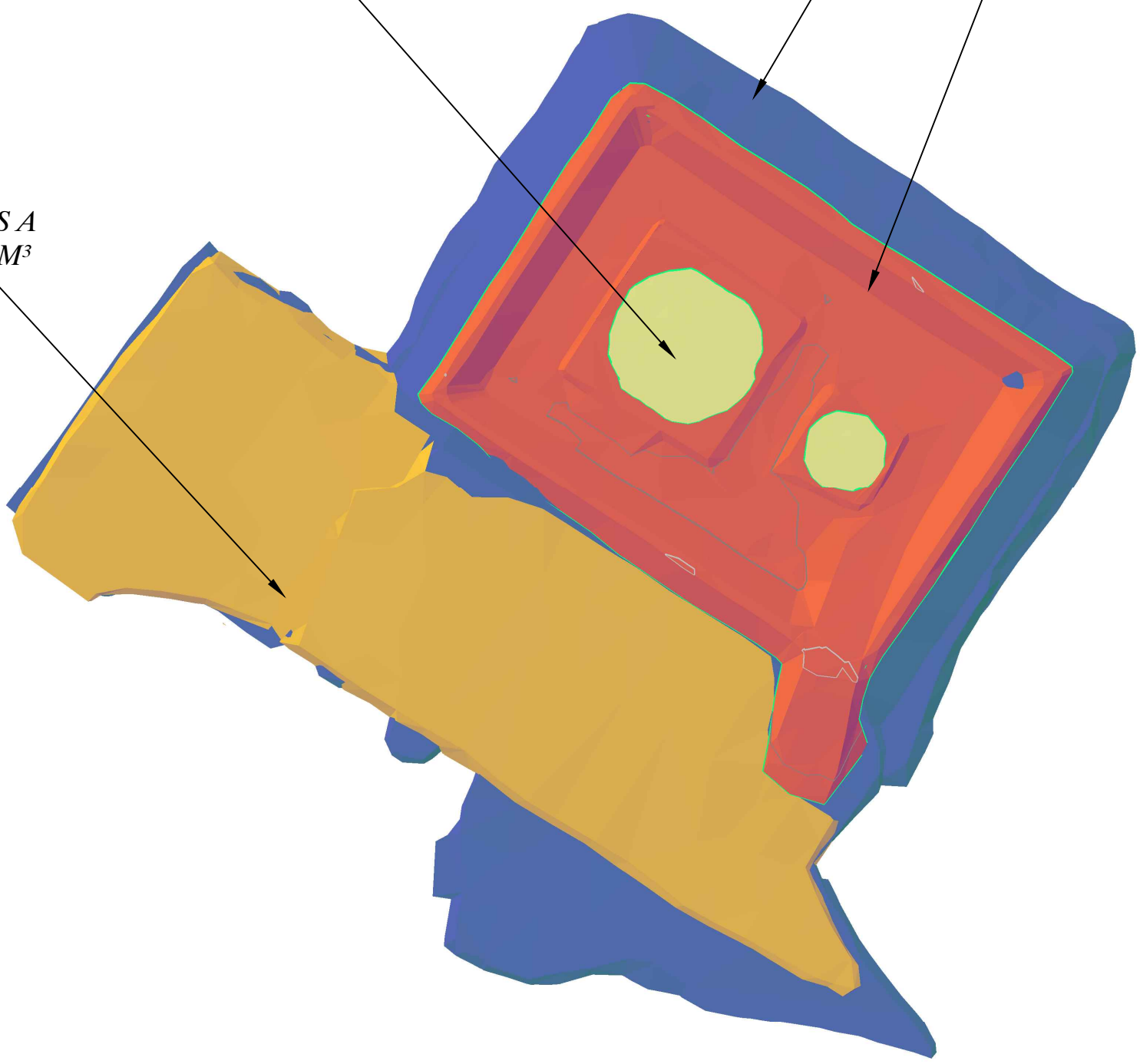

HAMELARPENTAGE

AGNICO EAGLE	WORK EXECUTION DATE : *2017-10-18*	EMISSION DATE : *2017-10-23*
COORD. SYSTEME: *UTM 15-NAD 83*	*AS BUILT FUEL TANK FARM*	DRAWN BY: *R.CLOUATRE*
SCALE: *1:500*	PLAN NO.: *403-QT-20171020-01*	APPROVED BY: *Hamel arpentage*

C:\Users\Utilisateur\Desktop\RANKIN INLET\SURVEY\DWG_MELIADINE\403-mine site-Tank farm\403-MSFF-C3D.dwg

N

RUN OF MINE,, CLASS A
15 661 M³

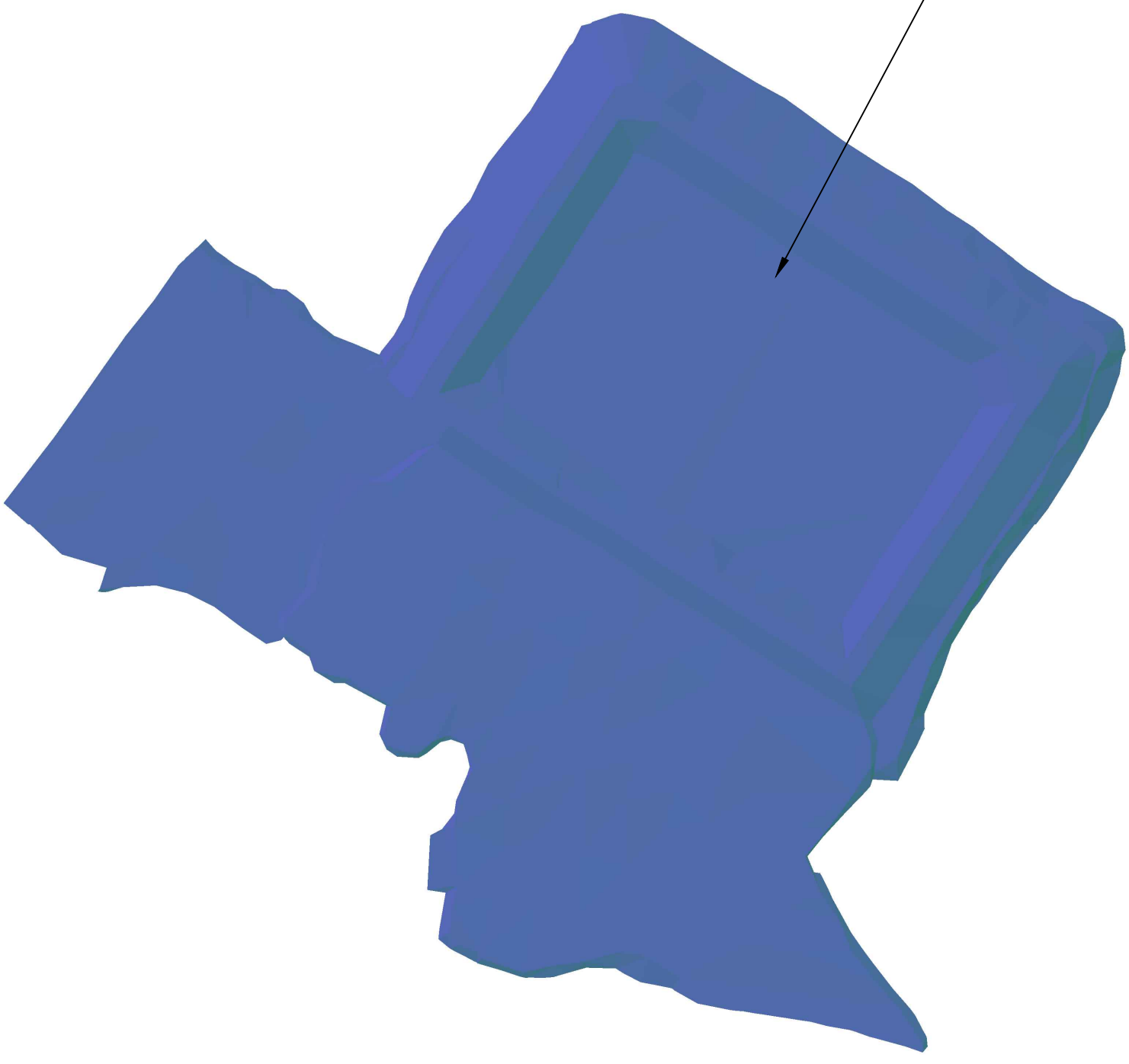

C:\Users\Utilisateur\Desktop\RANKIN INLET\SURVEY\DWG_MELIADINE\403-mine site-Tank20farm10AB2403-MSFF-C3D.dwg

HAMELARPENTAGE	AGNICO EAGLE	WORK EXECUTION DATE : 2017-10-18	EMISSION DATE : 2017-10-23
	COORD. SYSTEME: UTM 15-NAD 83	AS BUILT ROM FUEL TANK FARM	DRAWN BY: R.CLOUATRE
	SCALE: 1:500	PLAN NO.: 403-QT-20171020-02	APPROVED BY: Hamel arpentage

N

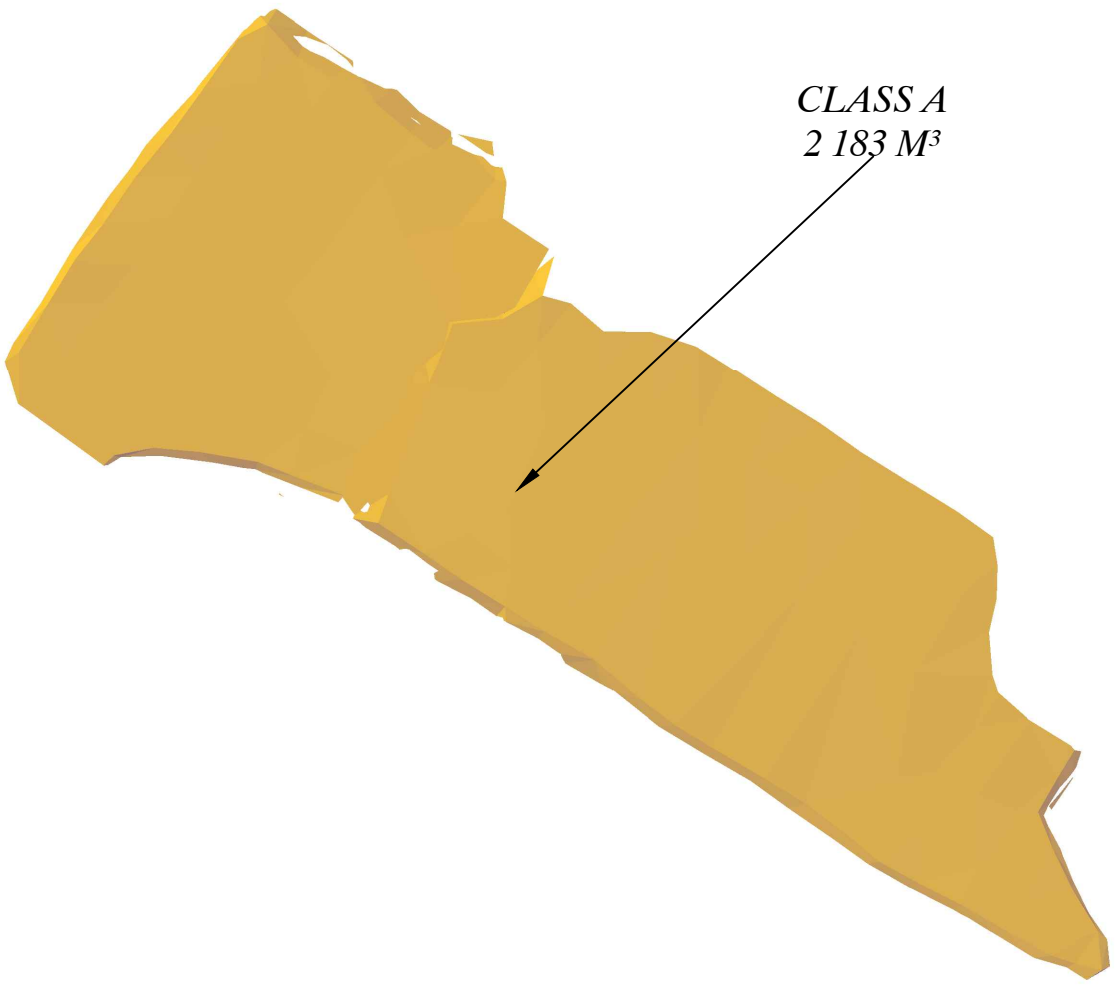

C:\Users\Utilisateur\Desktop\RANKIN INLET\SURVEY\DWG_MELIADINE\403-mine site-Tank20farm10AB2403-MSFF-C3D.dwg

HAMELARPENTAGE	AGNICO EAGLE	WORK EXECUTION DATE : 2017-10-18	EMISSION DATE : 2017-10-23
	COORD. SYSTEME: UTM 15-NAD 83	AS BUILT CLASS A FUEL TANK FARM	DRAWN BY: R.CLOUATRE
	SCALE: 1:500	PLAN NO.: 403-QT-20171020-03	APPROVED BY: Hamel arpentage

N

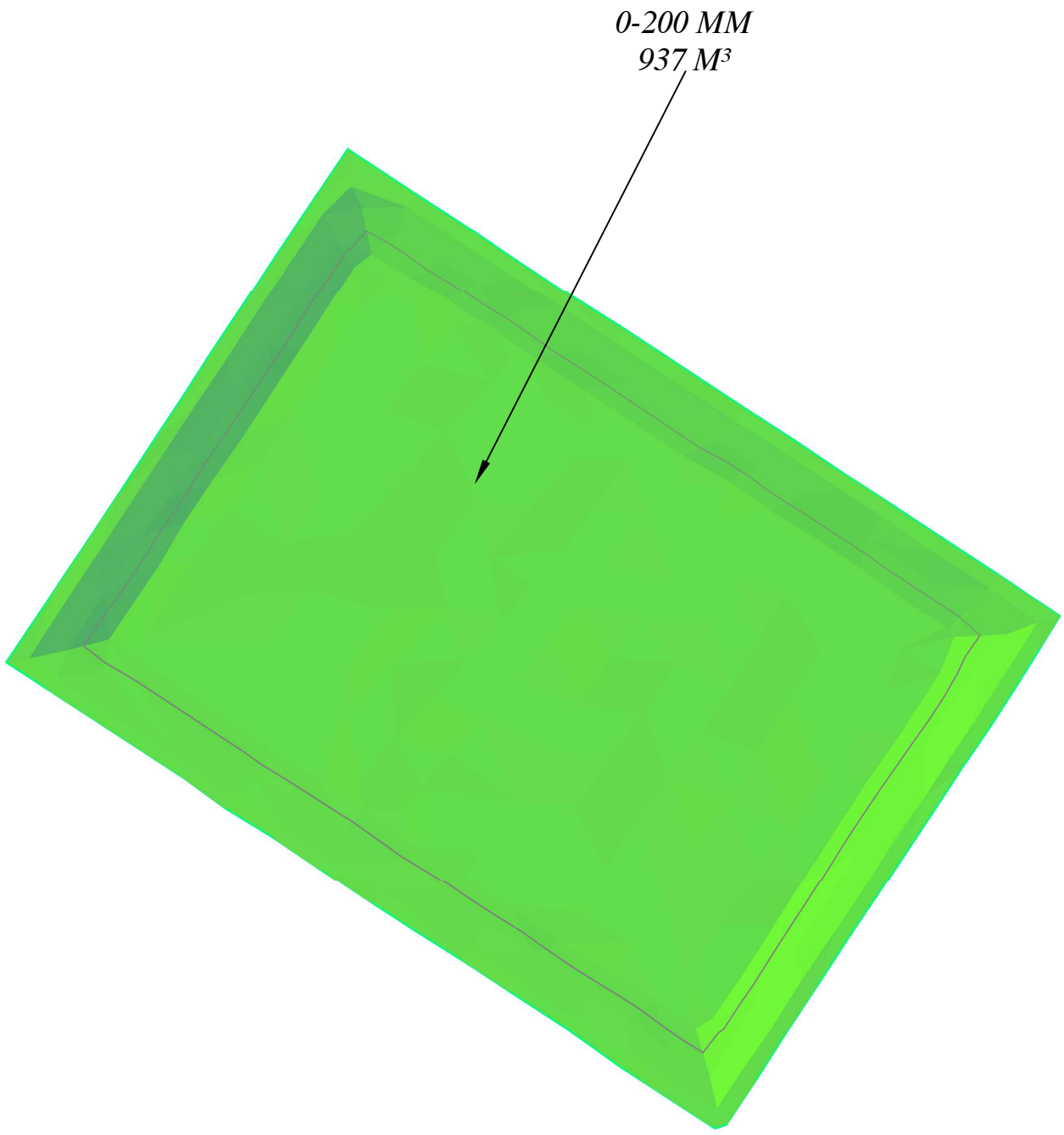

C:\Users\Utilisateur\Desktop\RANKIN INLET\SURVEY\DWG_MELIADINE\403-mine site-Tank20farm1QA22403-MSFF-C3D.dwg

HAMELARPENTAGE	AGNICO EAGLE	WORK EXECUTION DATE : 2017-10-18	EMISSION DATE : 2017-10-23
	COORD. SYSTEME: UTM 15-NAD 83	AS BUILT 0-200 MM FUEL TANK FARM	DRAWN BY: R.CLOUATRE
	SCALE: 1:500	PLAN NO.: 403-QT-20171020-04	APPROVED BY: Hamel arpentage

N

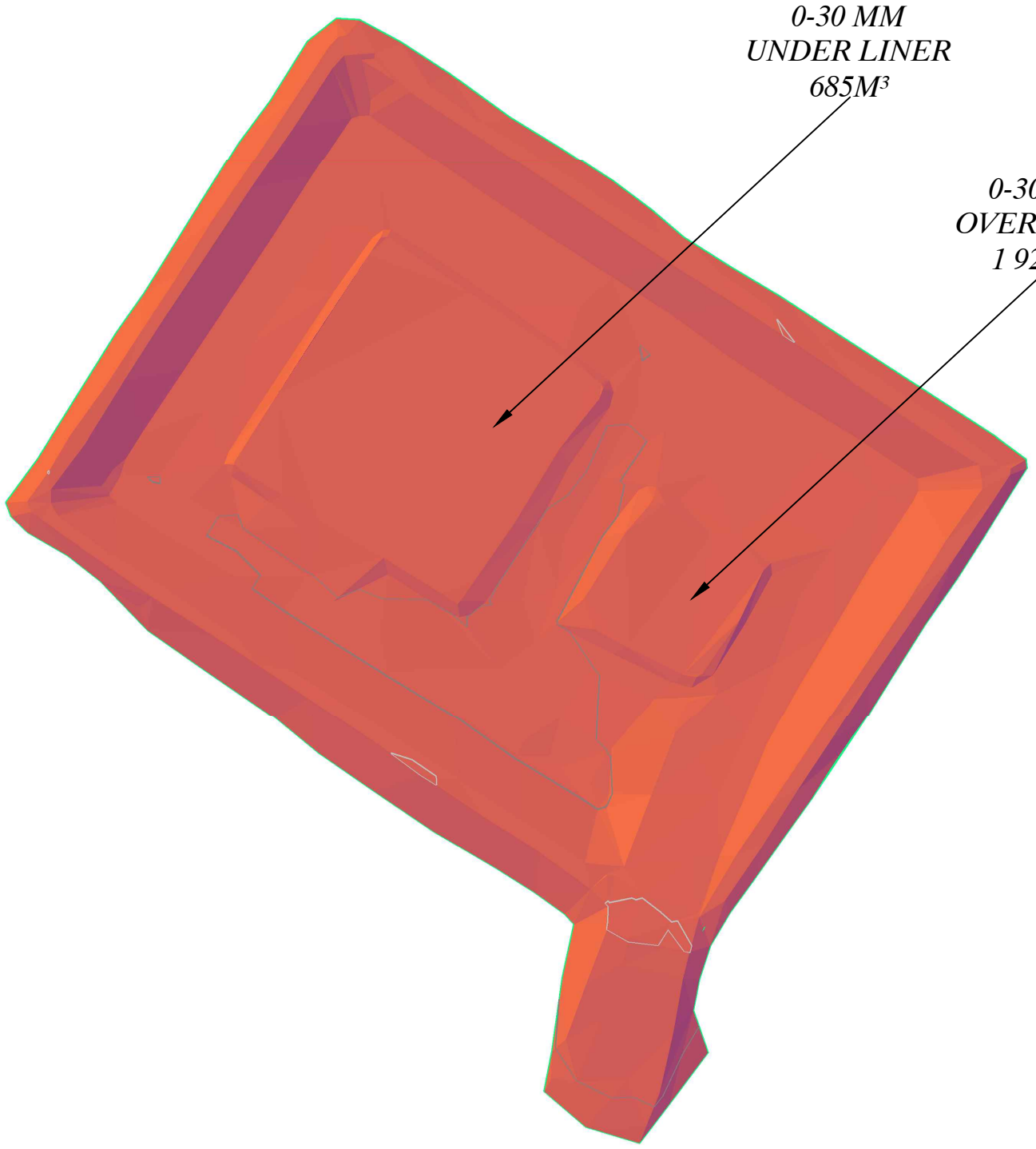

C:\Users\Utilisateur\Desktop\RANKIN INLET\SURVEY\DWG_MELIADINE\403-mine site-Tank20farm1QAB2403-MSFF-C3D.dwg

HAMELARPENTAGE	AGNICO EAGLE	WORK EXECUTION DATE : 2017-10-18	EMISSION DATE : 2017-10-23
	COORD. SYSTEME: UTM 15-NAD 83	AS BUILT 0-30 MM FUEL TANK FARM	DRAWN BY: R.CLOUATRE
	SCALE: 1:500	PLAN NO.: 403-QT-20171020-05	APPROVED BY: Hamel arpentage

N

LINER
3 595 M²

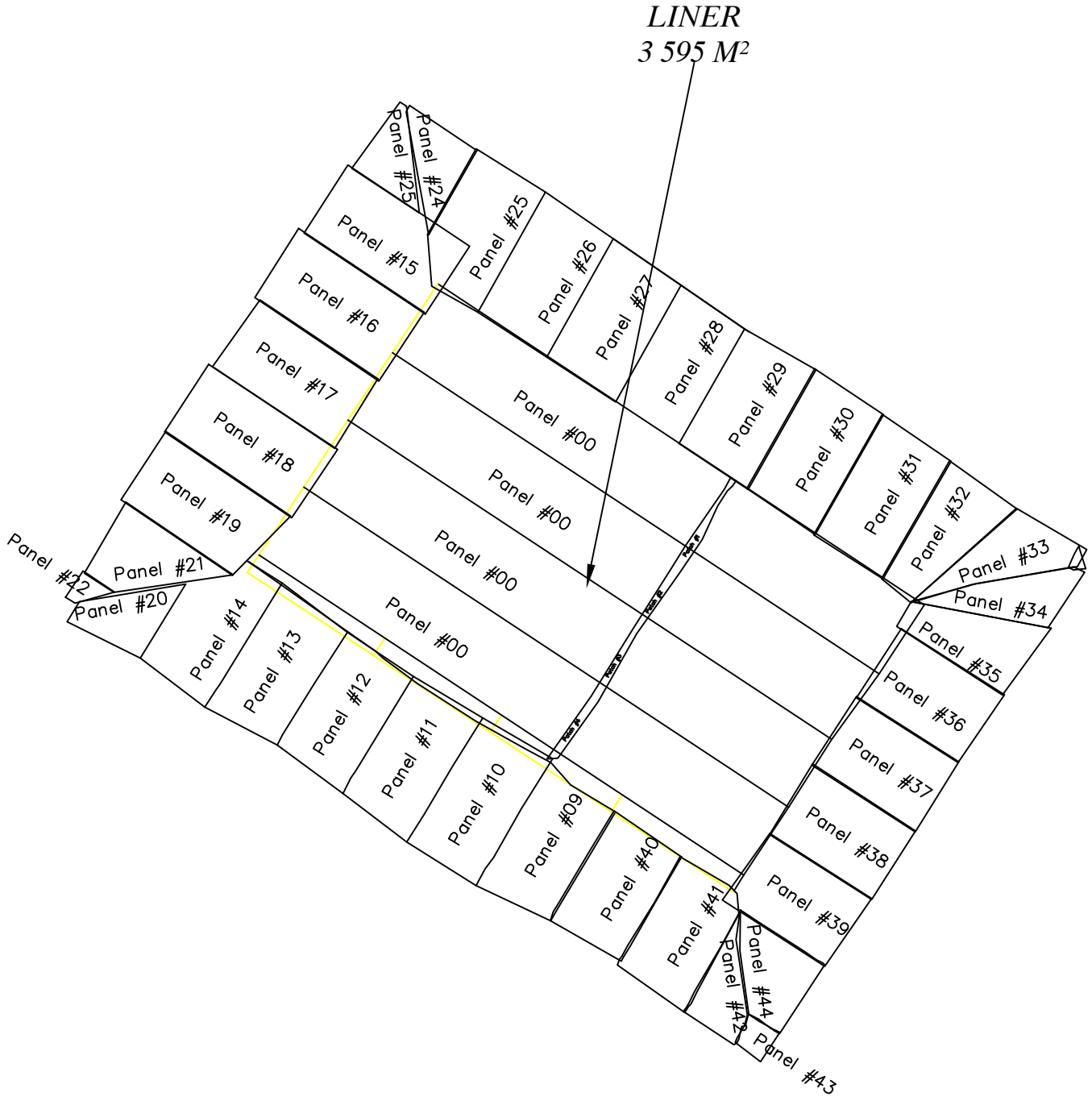

HAMELARPENTAGE	*AGNICO EAGLE*	WORK EXECUTION DATE : *2017-10-18*	EMISSION DATE : *2017-10-23*
	COORD. SYSTEME: *UTM 15-NAD 83*	*AS BUILT LINER FUEL TANK FARM*	DRAWN BY: *R.CLOUATRE*
	SCALE: *1:500*	PLAN NO.: *403-QT-20171020-06*	APPROVED BY: *Hamel arpentage*

C:\Users\Utilisateur\Desktop\RANKIN INLET\SURVEY\DWG_MELIADINE\403-mine site-Tank20farm10AB2403-MSFF-C3D.dwg

N

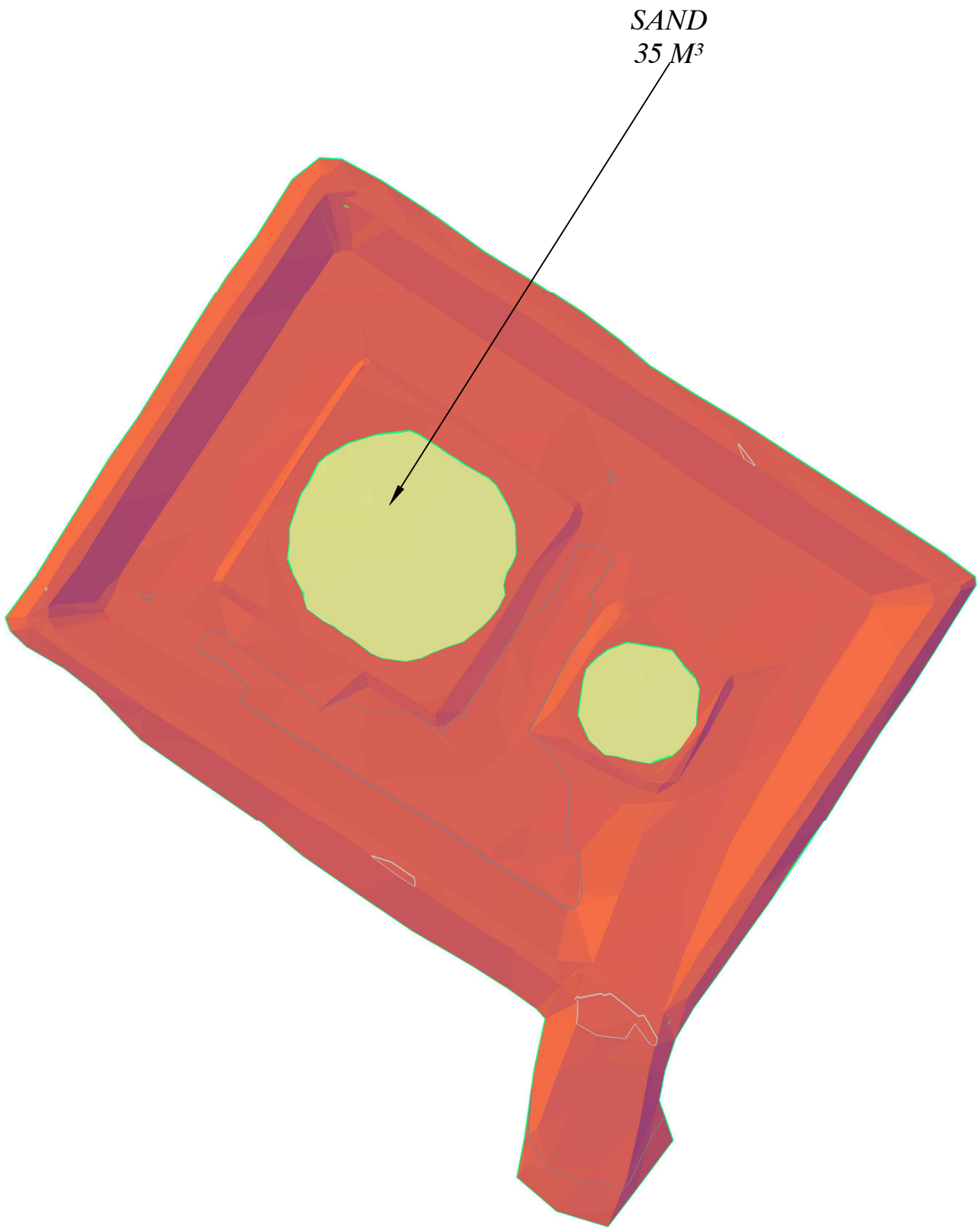

C:\Users\Utilisateur\Desktop\RANKIN INLET\SURVEY\DWG_MELIADINE\403-mine site-Tank20farm10AB2403-MSFF-C3D.dwg

HAMELARPENTAGE	AGNICO EAGLE	WORK EXECUTION DATE : 2017-10-18	EMISSION DATE : 2017-10-23
	COORD. SYSTEME: UTM 15-NAD 83	AS BUILT SAND FUEL TANK FARM	DRAWN BY: R.CLOUATRE
	SCALE: 1:500	PLAN NO.: 403-QT-20171020-07	APPROVED BY: Hamel arpentage

N



V:\ConstructionMeliadine\Z-Surveyors_Transit\Construction\JOB SECTEUR\4-Mine surface\10-403-Combustible\TQC\AB-403-MSFF-C3D.dwg

HAMELARPENTAGE

AGNICO EAGLE	WORK EXECUTION DATE 2017-10-18	EMISSION DATE : 2017-10-23	
COORD. SYSTEME: UTM 15-NAD 83	AS BUILT FUEL TANK FARM	DRAWN BY: R.CLOUATRE	
SCALE: 1:500	PLAN NO.: 403-QT-20171020-01	APPROVED BY: Hamel arpentage	

APPENDIX C

Photographs of Mine Site Fuel Storage and Containment Facilities

2017-06-13
Placement of 600 mm Minus Rockfill




2017-07-06
200 mm Minus on South Berm



2017-07-10
Placement of 30 mm Minus Under Liner



2017-07-11
Placement of 30 mm Minus Under Liner


2017-07-19
Tank Pedestal Liner


2017-07-20
Tank Pedestal Over Liner

2017-07-30
Placement of Sand Under Tanks





2017-08-19
Tank Erection

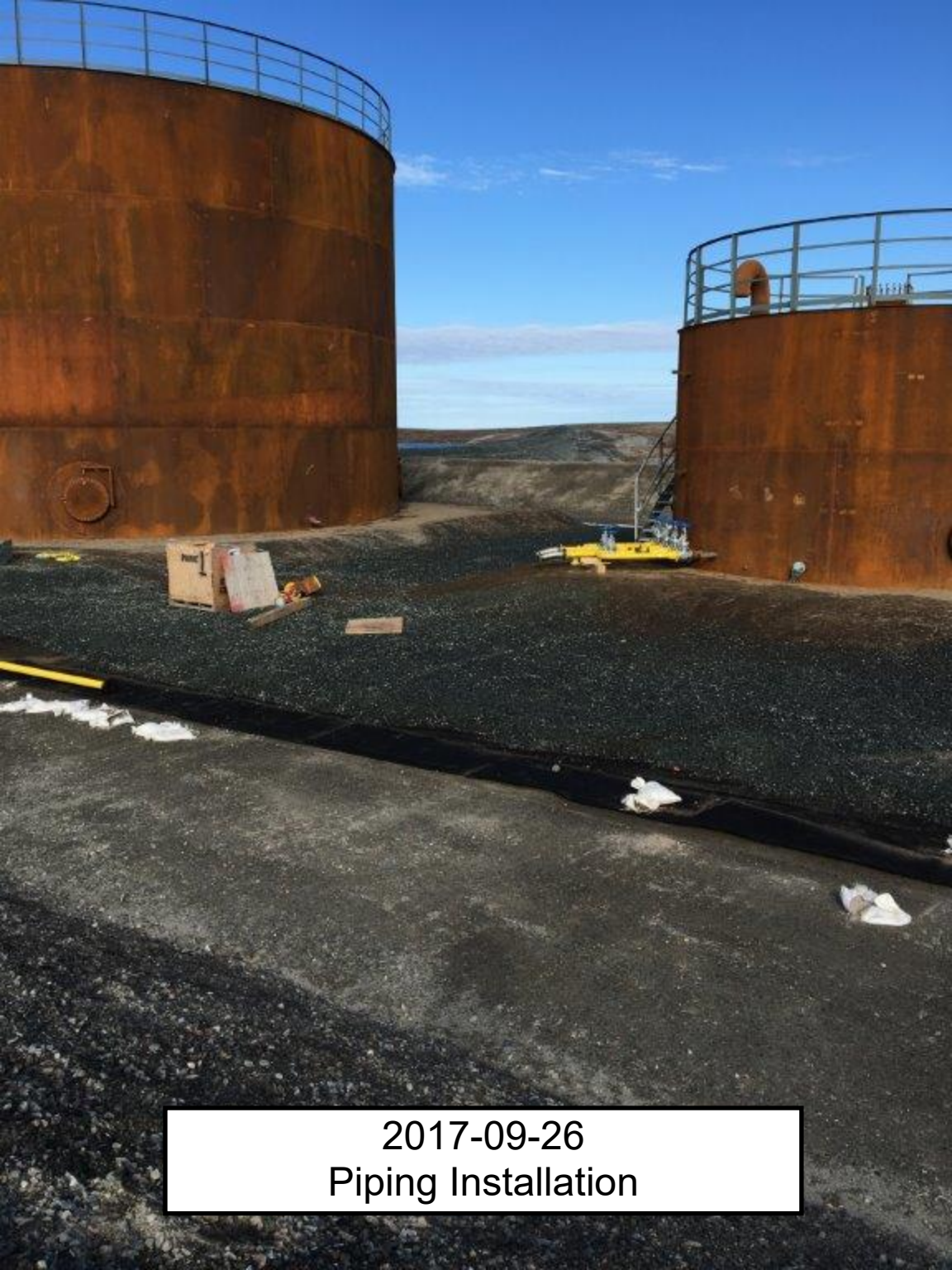

2017-09-26
Piping Installation



2017-09-30
Creation of Ditch Between Tanks


2017-09-30
Drainage Sump Excavation

2017-09-30
Removal of Over Liner Between Tanks for Ditch





2017-10-01
Containment Liner Installation

2017-10-01
Subgrade Preparation for Liner





2017-10-01
Over Liner Placement



2017-10-18
Completed Over Liner



2017-10-18
Mine Site Fuel Storage and Containment Facility



2017-03-15
Pumping Station and Electrical Room

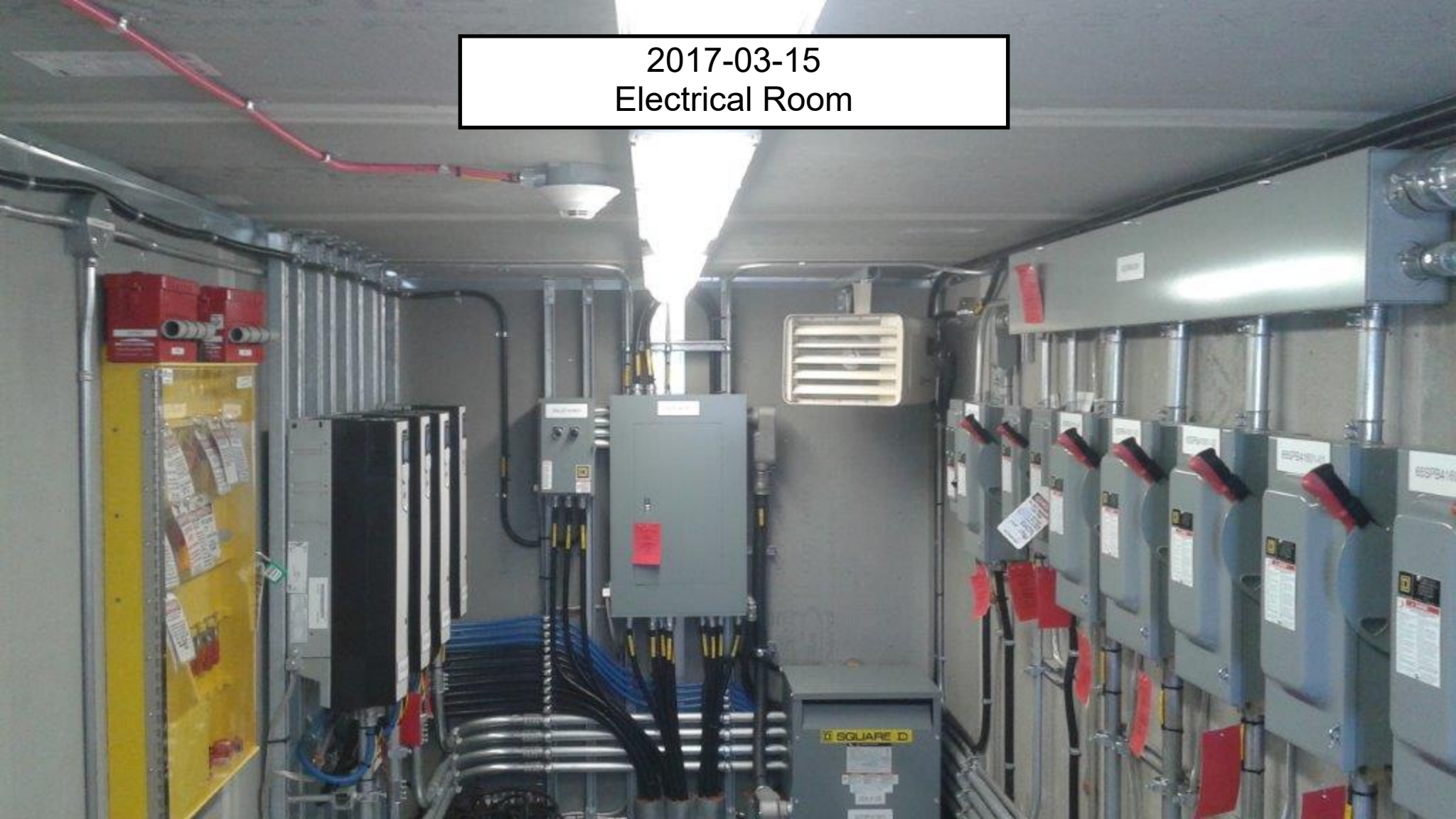
2017-03-15
Electrical Room



2017-03-15
Fire Suppression System


2017-03-15
Pumping Station

APPENDIX D

Construction Summary of Meliadine Mine Site Tank Farm Area

Construction Summary- Meliadine Mine Site Tank Farm Area

Construction and quality assurance performed by Agnico Eagle Construction

Contractor: Inukshuk Contacting Ltd (ICL)

All survey conducted by ICL

Design Variations

The tank #3 and #5 were built as per original design alignment (65-403-210-200)

Field modification

Adjustments were done on the sloping of the tanks surrounding to improve the flow direction towards the sump.

Site preparations

Civil crew had built the pad infrastructure; liner was installed in the limits of the tanks area. Contractor mobilized on site, set up all the material and equipment on their laydown. ICL unloaded plates ready to install outside the tank perimeter and located the tank on the footprint.

Tank #3 and #5 erection

First phase of the construction started with the installation of floor plates and welding. Vacuum test were performed to assure that all welds were sealed. Then proceeded with the second phase, which consisted to set up, weld and test all the different courses until design height is obtained, 4 courses for tank #3 and 2 courses for the tank #5. Third phase of the construction consisted of erecting the interior structure columns, the rafters and roof plates with the nozzles. The fourth and final phases consisted of placing and install the Miscellaneous steel components such as manholes, vent openings, piping support, stairways and guardrail. All tests and final inspection were completed once both tanks were completed.

Equipment use

765-E Grove all terrain crane	Welding machine
65 ft JLG	267B skid steer
45 ft JLG	Automatic welder

Additional information:

Tank #3 construction started on July 31st and Tank #5 on Aug 29th. Both tanks were built in the same period and were completed on Sept 13th. Once the tanks were completed, the civil crew came back to line the berms and the collection sump.

APPENDIX E

Inspection Report – Portal #1 Offsite and Onsite Fabrication Quality Control Documents

AGNICO EAGLE

Vendor Document Status

1 ☐	Proceed to next submission and status.
2 ☐	Proceed with exceptions as noted to next submission and status.
3 ☐	Do not proceed. Revise as noted and resubmit next submission and status.
4 ☐	Complete, no further submission required.

By: **Date:**

Review and authorization to fabricate are only for general conformance with the design concept of the Project as expressed in the Contract Documents. Sole responsibility for the accuracy and completeness of this document, including but not limited to dimensions and quantities, remains with the Supplier/Contractor. Agnico Eagle does not warrant the accuracy or completeness of any of the information contained herein, nor does Agnico Eagle authorize or approve any construction means, methods, techniques, sequences or any safety precautions or procedures.

Agnico Eagle No. 6515-C-270-007-141-QCR-0003 **R:** Sub001

DOCUMENT FOR INFORMATION

AGNICO EAGLE MINE

Contract No. 6515-C-270-007

C-22466T

PORTAL #1

OffSite and OnSite Fabrication

Quality Control Documents

TABLE OF CONTENT

SECTION 1 – INSPECTION AND TEST PLAN

SECTION 1.1 – ITP-001- PUMPING STATION & ITP-002 - FUEL FARM – RANKIN INLET #
SECTION 1.2 – PROCEDURES SUBMITTED AND APPROVED #
SECTION 1.3 – DRAWINGS INDEX (IFC) LATEST REVISION #

SECTION 2 – ITP-001 & ITP-002 SPECIFIC

SECTION 2.1 – NON-CONFORMANCE REPORT & LOG – AEM-GE-ITR-002 / AEM-GE-LOG-002 #
SECTION 2.2 – WELD PROCEDURES SUBMITTED AND APPROVED SPECIFICATION/PROCEDURE #
SECTION 2.3 – WELDERS QUALIFICATION APPROVED #
SECTION 2.4 – INSPECTION DEFICIENCY REPORT & LOG – AEM-GE-ITR-005 / AEM-GE-LOG-004 #

SECTION 3 – ITP-001 PREPARATION ELECTRICAL & PUMPIPNG STATION (OFFSITE)

SECTION 3.1 – DIMENSION OF THE CONTAINER VERIFICATION – AIRMP REPORT #
SECTION 3.2 – INSULATION AND CLADDING VERIFICATION – AIRMP REPORT #
SECTION 3.3 – DOORS VERIFICATION – AIRMP REPORT #
SECTION 3.4 – EXTERIOR PAINT VERIFICATION – AIRMP REPORT #

SECTION 4 – ITP-002 FABRICATION (OFFSITE)

SECTION 4.1 – CATWALK #

SECTION 5 – ITP-001 & ITP-002 MECHANICAL & PIPING (OFFSITE)

SECTION 5.1 – FABRICATION OF PIPING SPOOLS – AEM-WE-ITR-001 / AEM-GE-LOG-005 #
SECTION 5.2 – PAINTING OF PIPING SPOOLS – AEM-PI-ITR-002 / UNIES-FAB REPORT #
SECTION 5.3 – PUMP INSTALLATION – AEM-ME-ITR-001 #
SECTION 5.4 – PIPING INSTALLATION – AEM-PI-ITR-002 #
SECTION 5.5 – SUPPORT FABRICATION AND INSTALLATION – AEM-PI-ITR-002 #
SECTION 5.6 – PERFORM ALL NON DESTRUCTIVE EXAMINATION – AEM-GE-LOG-005 / MISTRAS #
SECTION 5.7 – INSPECTION RELEASE PRIOR TO SHIPMENT #

SECTION 6 – ITP-001 & ITP-002 MECHANICAL & PIPING (ONSITE)

SECTION 6.1 – PIPING INSTALLATION – AEM-PI-ITR-002 #
SECTION 6.2 – PERFORM ALL NON DESTRUCTIVE EXAMINATION – AEM-GE-LOG-005 / MISTRAS #
SECTION 6.3 – PIPING TESTING AND CLEANING – AEM-PI-ITR-001 #
SECTION 6.4 – IDENTIFICATION OF PIPING – AEM-PI-ITR-002 #
SECTION 6.5 – INSTALL CONNECTING PIPING – AEM-PI-ITR-002 #
SECTION 6.6 – FIRE PROTECTION - VIKING #

SECTION 7 – ITP-001 & ITP-002 FINAL TURNOVER

SECTION 7.1 – CONSTRUCTION COMPLETION – AEM-GE-ITR-003 #
SECTION 7.2 – FINAL ACCEPTANCE OF TURNOVER PACKAGE #
SECTION 7.3 – DECLARATION OF COMPLETION – AEM-GE-ITR-004 #
SECTION 7.4 – AS-BUILT DRAWINGS #
SECTION 7.5 – WELD MAP #

AGNICO EAGLE

Vendor Document Status

1 ☐ Proceed to next submission and status.

2 ☐ Proceed with exceptions as noted to next submission and status.

3 ☐ Do not proceed.
Revise as noted and resubmit next submission and status.

4 ☑ Complete, no further submission required.

By: JEAN-FRANCOIS TREMBLAY Date: 2017-06-09

Review and authorization to fabricate are only for general conformance with the design concept of the Project as expressed in the Contract Documents. Sole responsibility for the accuracy and completeness of this document, including but not limited to dimensions and quantities, remains with the Supplier/Contractor. Agnico Eagle does not warrant the accuracy or completeness of any of the information contained herein, nor does Agnico Eagle authorize or approve any construction means, methods, techniques, sequences or any safety precautions or procedures.

Agnico Eagle No. 6515-C-270-007-141-TES-0031 R: Sub002

DOCUMENT FOR INFORMATION

Inspection and Testing Plan

NUQSANA PROMEC MINING

AGNICO EAGLE

Contract title: Meliadine Fuel Tanks Piping Supply and Installation
Contract number: 6515-C-270-007
Promec Ref.: C22466T

Approved on : _____
Approved by: _____

Approval Signature

ITP # AEM-ITP-001
Area Rankin Inlet
System Pumping container

Discipline Mechanical / Piping / Structure

Updated on: 2017-06-06

Legend
H - Hold
W - Witness
I - Inspect
R - Review

Activity No. and CDRL Code	Activity Description (Per Scope of Work)	Responsibility Contractor and/or Sub	Acceptance Criteria (Specifications, Drawings, Industry Code, Regulatory Authority, Manufacturers O&M manual, Controlling Procedure, Quality/Engineering Bulletins, Other/ Site Quality Plan, Contractor Quality Manuals, etc.)	Verification Point				Verification Document(s) 1. List ONLY the Form(s) applicable to installation. 2. ▲ Commissioning Required Document
				Contractor		Client		
				H W I R	Initials & Date	H W I R	Initials & Date	
1.0	**GENERAL**							
1.1	Inspection and Test Plan	Promec / CLIENT		H/R		R		Approved ITP
1.2	Document review (Acquire and review all applicable documentation)	Promec / CLIENT	Quality Plan	H/R		R		
1.3	Procedures Submitted and Approved (Hydrostatic/Pneumatic Testing, Pre-Commissioning, etc.)	Promec / CLIENT	Quality Plan	H/R		R		All Applicable Approved Procedures
1.4	Drawing Index (IFC) to Latest Revision	Promec	Quality Plan	I/R				
2.0	**ITP SPECIFIC**							
2.1	Non-Conformance Report & Log (Both CLIENT & Contractor Issued)	Promec / CLIENT	Quality Plan	H/R		R		AEM-GE-ITR-002 (Non-Conformance Report) ▲ AEM-GE-LOG-002 (Non-Conformance Log)
2.2	Weld Procedures Submitted and Approved Specification/Procedure (WPS)	Promec / CLIENT	Quality Plan	H/R		R		Approved Procedure
2.3	Welders Qualification Approved	Promec / CLIENT	Quality Plan	H/R		R		Welders qualifications records
2.4	Inspect Material/Equipment for Damages or Deficiencies	Promec	Quality Plan	I/R		R		AEM-GE-ITR-005 (Inspection Deficiency Report) ▲ AEM-GE-LOG-004 (Inspection Deficiency Log)

Inspection and Testing Plan

NUQSANA PROMEC MINING

AGNICO EAGLE

Contract title:	Meliadine Fuel Tanks Piping Supply and Installation	**ITP #**	**AEM-ITP-001**
Contract number:	6515-C-270-007	**Area**	**Rankin Inlet**
Promec Ref.:	C22466T	**System**	**Pumping container**
Approved on :	_____	**Discipline**	**Mechanical** **Piping** **Structure**
Approved by:	_____	**Approval Signature**	

Updated on: 2017-06-06

Legend

H - Hold
W - Witness
I - Inspect
R - Review

Activity No. and CDRL Code	Activity Description (Per Scope of Work)	Responsibility Contractor and/or Sub	Acceptance Criteria (Specifications, Drawings, Industry Code, Regulatory Authority, Manufacturers O&M manual, Controlling Procedure, Quality/Engineering Bulletins, Other/ Site Quality Plan, Contractor Quality Manuals, etc.)	Verification Point				Verification Document(s) 1. List ONLY the Form(s) applicable to installation. 2. ▲ Commissioning Required Document
				Contractor		Client		
				H W I R	Initials & Date	H W I R	Initials & Date	
3.0	**Preparation of the electrical and pumping station containers (Offsite)**							
3.1	Dimensions of the container verification	Promec / CLIENT / Third-Party	IFC Drawings	I/R		I		AirMP Report
3.2	Insulation and cladding verification	Promec / CLIENT / Third-Party	IFC Drawings	I/R		I		AirMP Report
3.3	Doors verification	Promec / CLIENT / Third-Party	6515-C-270-007-SPT-001_R3 (Technical Specifications)	I/R		I		AirMP Report
3.4	Exterior paint verification	Promec / CLIENT / Third-Party	AirMP specifications	I/R		I		AirMP Report
4.0	**Preparation of the DEF containers (Offsite)**							
4,1	Fabrication of the DEF containers	Promec / CLIENT / Third-Party	P.D.McLaren specifications	I/R		I		P.D.McLaren Report

Inspection and Testing Plan

NUQSANA PROMEC MINING

AGNICO EAGLE

Contract title: Meliadine Fuel Tanks Piping Supply and Installation
Contract number: 6515-C-270-007
Promec Ref.: C22466T

Approved on : _____
Approved by: _____

Approval Signature

ITP # AEM-ITP-001
Area Rankin Inlet
System Pumping container
Discipline Mechanical, Piping, Structure

Updated on: 2017-06-06

Legend
H - Hold
W - Witness
I - Inspect
R - Review

Activity No. and CDRL Code	Activity Description (Per Scope of Work)	Responsibility Contractor and/or Sub	Acceptance Criteria (Specifications, Drawings, Industry Code, Regulatory Authority, Manufacturers O&M manual, Controlling Procedure, Quality/Engineering Bulletins, Other/ Site Quality Plan, Contractor Quality Manuals, etc.)	Verification Point				Verification Document(s) 1. List ONLY the Form(s) applicable to installation. 2. ▲ Commissioning Required Document
				Contractor		Client		
				H W I R	Initials & Date	H W I R	Initials & Date	
5.0	**Mechanical & Piping (Offsite)**							
5,1	Fabrication of piping spools	Promec / CLIENT	AEM-PI-PRO-003 (Piping Erection Procedure) AEM-WE-PRO-001 (Welding Control Procedure)	W/R		W/R		AEM-WE-ITR-001 (Daily Weld Report) AEM-GE-LOG-005 (Weld Log)
5,2	Painting of the piping spools (Safety Orange)	Promec / CLIENT / Third-Party	6515-GGD-022_R0 (Project Standard paint specifications) AEM-PI-PRO-003 (Piping Erection Procedure)	I/R		I/R		Third-Party Report AEM-PI-ITR-002 (Check List for Pipe Systems)
5,3	Pump Installation	Promec / CLIENT	AEM-ME-PRO-001 (Pump Installation Procedure)	H/R		H/R		AEM-ME-ITR-001 (Pump Alignment Report)
5,4	Piping installation	Promec / CLIENT	AEM-PI-PRO-003 (Piping Erection Procedure) AEM-WE-PRO-001 (Welding Control Procedure) CODES / STANDARDS B31,3	I/R		I/R		AEM-PI-ITR-002 (Check List for Pipe Systems)
5,5	Support fabrication and installation	Promec / CLIENT / Third-Party	IFC Drawings AEM-PI-PRO-003 (Piping Erection Procedure)	W/R		W/R		Third-Party Report AEM-PI-ITR-002 (Check List for Pipe Systems)
5,6	Perform all non-destructive examination required (NDE)	Promec / CLIENT / Third-Party	AEM-WE-PRO-002 (Non-Destructive Exam. Procedure) 5%, by ultrasound or penetrating liquid	W/R		W/R		Third-Party Report AEM-GE-LOG-005 (Weld Log)
5,7	Inspection Release prior to shipment	Promec / CLIENT	7.01_R0_Packing_Shipping_Instruct (Shipping requirements for AEM)	H/R				Partial History Docket

Inspection and Testing Plan

NUQSANA PROMEC MINING

AGNICO EAGLE

Contract title: Meliadine Fuel Tanks Piping Supply and Installation
Contract number: 6515-C-270-007
Promec Ref.: C22466T

Approved on : _____
Approved by: _____

Approval Signature

ITP # AEM-ITP-001
Area Rankin Inlet
System Pumping container

Discipline: Mechanical, Piping, Structure

Updated on: 2017-06-06

Legend
H - Hold
W - Witness
I - Inspect
R - Review

Activity No. and CDRL Code	Activity Description (Per Scope of Work)	Responsibility Contractor and/or Sub	Acceptance Criteria (Specifications, Drawings, Industry Code, Regulatory Authority, Manufacturers O&M manual, Controlling Procedure, Quality/Engineering Bulletins, Other/ Site Quality Plan, Contractor Quality Manuals, etc.)	Verification Point				Verification Document(s) 1. List ONLY the Form(s) applicable to Installation. 2. ▲ Commissioning Required Document
				Contractor		Client		
				H W I R	Initials & Date	H W I R	Initials & Date	
6.0	**Mechanical & Piping (Onsite)**							
6,1	Piping installation	Promec / CLIENT	AEM-PI-PRO-003 (Piping Erection Procedure) AEM-WE-PRO-001 (Welding Control Procedure) CODES / STANDARDS B31,3	I/R		I/R		AEM-PI-ITR-002 (Check List for Pipe Systems)
6,2	Perform all non-destructive examination required (NDE)	Promec / CLIENT / Third-Party	AEM-WE-PRO-002 (Non-Destructive Exam. Procedure) 5%, by ultrasound or penetrating liquid	W/R		W/R		Third-Party Report AEM-GE-LOG-005 (Weld Log)
6,3	Piping Testing & Cleaning	Promec / CLIENT	AEM-PI-PRO-001 (Hydrostatic/Pneumatic Test Procedure)	H/R		H/R		▲ AEM-PI-ITR-001 (Pressure Test Report)
6,4	Identification of piping (tagging)	Promec / CLIENT	6515-C-270-007-SPT-001_R3 (Technical Specifications)	I/R		I/R		AEM-PI-ITR-002 (Check List for Pipe Systems)
6,5	Install connecting piping	Promec / CLIENT	AEM-PI-PRO-003 (Piping Erection Procedure) AEM-WE-PRO-001 (Welding Control Procedure)	W/R		W/R		AEM-PI-ITR-002 (Check List for Pipe Systems)

Inspection and Testing Plan

NUQSANA PROMEC MINING

AGNICO EAGLE

Contract title:	Meliadine Fuel Tanks Piping Supply and Installation	**ITP #**	**AEM-ITP-001**
Contract number:	6515-C-270-007	**Area**	**Rankin Inlet**
Promec Ref.:	C22466T	**System**	**Pumping container**
		Discipline	**Mechanical**
			Piping
			Structure

Approval Signature

Approved on : _____

Approved by: _____

Updated on: 2017-06-06

Legend

H - Hold
W - Witness
I - Inspect
R - Review

Activity No. and CDRL Code	Activity Description (Per Scope of Work)	Responsibility Contractor and/or Sub	Acceptance Criteria (Specifications, Drawings, Industry Code, Regulatory Authority, Manufacturers O&M manual, Controlling Procedure, Quality/Engineering Bulletins, Other/ Site Quality Plan, Contractor Quality Manuals, etc.)	Verification Point				Verification Document(s) 1. List ONLY the Form(s) applicable to installation. 2. ▲ Commissioning Required Document
				Contractor		Client		
				H W I R	Initials & Date	H W I R	Initials & Date	
7.0	**FINAL TURNOVER**							
7,1	Construction Completion (Contractor Punchlist & Joint Walkdown Punchlist)	Promec / CLIENT	Quality Plan AEM-PI-PRO-002 (Pre-Commissioning Piping Procedure)	H/R		H/R		▲ AEM-GE-ITR-003 (Punchlist)
7,2	Final Acceptance of Turnover Package	Promec / CLIENT	Quality Plan	H/R		H/R		Signed ITP History Docket
7,3	Declaration of Completion	Promec	Quality Plan	H/R		H/R		AEM-GE-ITR-004 (Notice of Final Completion)
7,4	As-Built Drawings	Promec	Quality Plan	H/R		H/R		All Required As-Built Drawings
7,5	Weld Map	Promec	Quality Plan	H/R		H/R		All Required Weld Maps

PROMEC's Representatives			CLIENT's Representative	
QA/QC	Project Manager			
Name	Name		Name	
Signature	Signature	Date	Signature	Date

AGNICO EAGLE

Vendor Document Status

1 ☐ Proceed to next submission and status.

2 ☐ Proceed with exceptions as noted to next submission and status.

3 ☐ Do not proceed.
Revise as noted and resubmit next submission and status.

4 ☑ Complete, no further submission required.

By: JEAN-FRANCOIS TREMBLAY Date: 2017-06-09

Review and authorization to fabricate are only for general conformance with the design concept of the Project as expressed in the Contract Documents. Sole responsibility for the accuracy and completeness of this document, including but not limited to dimensions and quantities, remains with the Supplier/Contractor. Agnico Eagle does not warrant the accuracy or completeness of any of the information contained herein, nor does Agnico Eagle authorize or approve any construction means, methods, techniques, sequences or any safety precautions or procedures.

Agnico Eagle No. 6515-C-270-007-141-TES-0032 R: Sub002

DOCUMENT FOR INFORMATION

Inspection and Testing Plan

NUQSANA PROMEC MINING

AGNICO EAGLE

Contract title: Meliadine Fuel Tanks Piping Supply and Installation
Contract number: 6515-C-270-007
Promec Ref.: C22466T

Approved on : _____
Approved by: _____

Approval Signature

ITP # AEM-ITP-002
Area Rankin Inlet
System Fuel farm

Discipline: Mechanical, Piping, Structure

Updated on: 2017-06-06

Legend
H - Hold
W - Witness
I - Inspect
R - Review

Activity No. and CDRL Code	Activity Description (Per Scope of Work)	Responsibility Contractor and/or Sub	Acceptance Criteria (Specifications, Drawings, Industry Code, Regulatory Authority, Manufacturers O&M manual, Controlling Procedure, Quality/Engineering Bulletins, Other/ Site Quality Plan, Contractor Quality Manuals, etc.)	Verification Point				Verification Document(s) 1. List ONLY the Form(s) applicable to Installation. 2. ▲ Commissioning Required Document
				Contractor		Client		
				H W I R	Initials & Date	H W I R	Initials & Date	
1.0	**GENERAL**							
1.1	Inspection and Test Plan	Promec / CLIENT		H/R		R		Approved ITP
1.2	Document review (Acquire and review all applicable documentation)	Promec / CLIENT	Quality Plan	H/R		R		
1.3	Procedures Submitted and Approved (Hydrostatic/Pneumatic Testing, Pre-Commissioning, etc.)	Promec / CLIENT	Quality Plan	H/R		R		All Applicable Approved Procedures
1.4	Drawing Index (IFC) to Latest Revision	Promec	Quality Plan	I/R		R		VDRL
2.0	**ITP SPECIFIC**							
2.1	Non-Conformance Report & Log (Both CLIENT & Contractor Issued)	Promec / CLIENT	Quality Plan	H/R		H/R		AEM-GE-ITR-002 (Non-Conformance Report) ▲ AEM-GE-LOG-002 (Non-Conformance Log)
2.2	Weld Procedures Submitted and Approved Specification/Procedure (WPS)	Promec / CLIENT	Quality Plan	H/R		R		Approved Procedure
2.3	Welders Qualification Approved	Promec / CLIENT	Quality Plan	H/R		R		Welders Qualifications Records
2.4	Inspect Material/Equipment for Damages or Deficiencies	Promec	Quality Plan	I/R		R		AEM-GE-ITR-005 (Inspection Deficiency Report) ▲ AEM-GE-LOG-004 (Inspection Deficiency Log)
3.0	**Fabrication (Offsite)**							
3.1	Catwalks	Promec / CLIENT / Third-Party	IFC Drawings	W/R		W/R		Third-party-report
3.2	Steel fuel tanks	Promec / CLIENT / Third-Party	6515-C-270-007-SPT-001_R3 (Technical Specifications)	W/R		W/R		Third-party-report

Inspection and Testing Plan

NUQSANA PROMEC MINING

AGNICO EAGLE

Contract title: Meliadine Fuel Tanks Piping Supply and Installation
Contract number: 6515-C-270-007
Promec Ref.: C22466T

Approved on : _____
Approved by: _____

Approval Signature

ITP # AEM-ITP-002
Area Rankin Inlet
System Fuel farm
Discipline Mechanical / Piping / Structure

Updated on: 2017-06-06

Legend
H - Hold
W - Witness
I - Inspect
R - Review

Activity No. and CDRL Code	Activity Description (Per Scope of Work)	Responsibility Contractor and/or Sub	Acceptance Criteria (Specifications, Drawings, Industry Code, Regulatory Authority, Manufacturers O&M manual, Controlling Procedure, Quality/Engineering Bulletins, Other/ Site Quality Plan, Contractor Quality Manuals, etc.)	Verification Point				Verification Document(s) 1. List ONLY the Form(s) applicable to installation. 2. ▲ Commissioning Required Document
				Contractor		Client		
				H W I R	Initials & Date	H W I R	Initials & Date	
4.0	**Mechanical & Piping (Offsite)**							
4,1	Fabrication of piping spools	Promec / CLIENT	AEM-PI-PRO-003 (Piping Erection Procedure) AEM-WE-PRO-001 (Welding Control Procedure) CODES / STANDARDS B31,3	W/R		W/R		AEM-WE-ITR-001 (Daily Weld Report) AEM-GE-LOG-005 (Weld Log)
4,2	Painting of the piping spools (Safety Orange)	Promec / CLIENT / Third-Party	6515-GGD-022_R0 (Project Standard paint specifications) AEM-PI-PRO-003 (Piping Erection Procedure)	I/R		H/R		Third-Party Report AEM-PI-ITR-002 (Check List for Pipe Systems)
4,3	Support fabrication	Promec / CLIENT / Third-Party	IFC Drawings AEM-PI-PRO-003 (Piping Erection Procedure)	W/R		W/R		Third-Party Report AEM-PI-ITR-002 (Check List for Pipe Systems)
4,4	Perform all non-destructive examination required (NDE)	Promec / CLIENT / Third-Party	AEM-WE-PRO-002 (Non-Destructive Exam. Procedure) 5%, by ultrasound or penetrating liquid	W/R		W/R		Third-Party Report AEM-GE-LOG-005 (Weld Log)
4,5	Inspection Release prior to shipment	Promec / CLIENT	7.01_R0_Packing_Shipping_Instruct (Shipping requirements for AEM)	H/R		H/R		Partial History Docket

Inspection and Testing Plan

NUQSANA PROMEC MINING

AGNICO EAGLE

Contract title: Meliadine Fuel Tanks Piping Supply and Installation
Contract number: 6515-C-270-007
Promec Ref.: C22466T

Approved on : _____
Approved by: _____

Approval Signature

ITP # AEM-ITP-002
Area Rankin Inlet
System Fuel farm
Discipline Mechanical / Piping / Structure

Updated on: 2017-06-06

Legend
H - Hold
W - Witness
I - Inspect
R - Review

Activity No. and CDRL Code	Activity Description (Per Scope of Work)	Responsibility Contractor and/or Sub	Acceptance Criteria (Specifications, Drawings, Industry Code, Regulatory Authority, Manufacturers O&M manual, Controlling Procedure, Quality/Engineering Bulletins, Other/ Site Quality Plan, Contractor Quality Manuals, etc.)	Verification Point				Verification Document(s) 1. List ONLY the Form(s) applicable to installation. 2. ▲ Commissioning Required Document
				Contractor		Client		
				H W I R	Initials & Date	H W I R	Initials & Date	
5.0	**Mechanical & Piping (Onsite)**							
5.1	Installation of the tanks	Promec / CLIENT	AEM-ME-PRO-002 (Fuel Tank Installation Procedure)	W/R		W/R		AEM-ME-ITR-003 (Fuel Tank Checklist)
5.2	Installation of the catwalks	Promec / CLIENT	AEM-PI-PRO-003 (Piping Erection Procedure)	I/R		I/R		AEM-ME-ITR-004 Catwalks & Stairways Checklist
5.3	Support fabrication and installation	Promec / CLIENT	AEM-PI-PRO-003 (Piping Erection Procedure)	W/R		I		AEM-PI-ITR-002 (Check List for Pipe Systems)
5.4	Piping installation	Promec / CLIENT	AEM-PI-PRO-003 (Piping Erection Procedure) AEM-WE-PRO-001 (Welding Control Procedure) CODES / STANDARDS B31,3	I/R		I/R		AEM-PI-ITR-002 (Check List for Pipe Systems)
5.5	Perform all non-destructive examination required (NDE)	Promec / CLIENT / Third-Party	AEM-WE-PRO-002 (Non-Destructive Exam. Procedure) 5%, by ultrasound or penetrating liquid	W/R		W/R		Third-Party Report AEM-GE-LOG-005 (Weld Log)
5.6	Piping Testing & Cleaning	Promec / CLIENT	AEM-PI-PRO-001 (Hydrostatic/Pneumatic Test Procedure)	H/R		H/R		▲ AEM-PI-ITR-001 (Pressure Test Report)
5.7	Identification of piping (tagging)	Promec / CLIENT	6515-C-270-007-SPT-001_R3 (Technical Specifications)	I/R		I		AEM-PI-ITR-002 (Check List for Pipe Systems)

Inspection and Testing Plan

NUQSANA PROMEC MINING

AGNICO EAGLE

Contract title:	Meliadine Fuel Tanks Piping Supply and Installation	ITP #	AEM-ITP-002
Contract number:	6515-C-270-007	Area	Rankin Inlet
Promec Ref.:	C22466T	System	Fuel farm
Approved on :		Discipline	Mechanical Piping Structure
Approved by:		Approval Signature	

Updated on: 2017-06-06

Legend

H - Hold
W - Witness
I - Inspect
R - Review

Activity No. and CDRL Code	Activity Description (Per Scope of Work)	Responsibility Contractor and/or Sub	Acceptance Criteria (Specifications, Drawings, Industry Code, Regulatory Authority, Manufacturers O&M manual, Controlling Procedure, Quality/Engineering Bulletins, Other/ Site Quality Plan, Contractor Quality Manuals, etc.)	Verification Point				Verification Document(s) 1. List ONLY the Form(s) applicable to installation. 2. ▲ Commissioning Required Document
				Contractor		Client		
				H W I R	Initials & Date	H W I R	Initials & Date	
6.0	FINAL TURNOVER							
6.1	Construction Completion (Contractor Punchlist & Joint Walkdown Punchlist)	Promec / CLIENT	Quality Plan AEM-PI-PRO-002 (Pre-Commissioning Piping Procedure)	H/R		H/R		▲ AEM-GE-ITR-003 (Punchlist)
6.2	Final Acceptance of Turnover Package	Promec / CLIENT	Quality Plan	H/R		H/R		Signed ITP History Docket
6.3	Declaration of Completion	Promec	Quality Plan	H/R		H/R		AEM-GE-ITR-004 (Notice of Final Completion)
6.4	As-Built Drawings	Promec	Quality Plan	H/R		H/R		All Required As-Built Drawings
6.5	Weld Map	Promec	Quality Plan	H/R		H/R		All Required Weld Maps

PROMEC's Representatives			CLIENT's Representative	
QA/QC	Project Manager			
Name	Name		Name	
Signature	Signature	Date	Signature	Date

AGNICO EAGLE

Vendor Document Status

1 ☐ Proceed to next submission and status.

2 ☐ Proceed with exceptions as noted to next submission and status.

3 ☐ Do not proceed.
Revise as noted and resubmit next submission and status.

4 ☑ Complete, no further submission required.

By: JEAN-FRANCOIS TREMBLAY Date: 2017-05-08

Review and authorization to fabricate are only for general conformance with the design concept of the Project as expressed in the Contract Documents. Sole responsibility for the accuracy and completeness of this document, including but not limited to dimensions and quantities, remains with the Supplier/Contractor. Agnico Eagle does not warrant the accuracy or completeness of any of the information contained herein, nor does Agnico Eagle authorize or approve any construction means, methods, techniques, sequences or any safety precautions or procedures.

Agnico Eagle No. 6515-C-270-007-141-TES-0035 R: Sub001

DOCUMENT FOR INFORMATION

Agnico-Eagle Mines Ltd.

Contract no. 6515-C-270-007

Hydrostatic / Pneumatic Test Procedure for Piping

AEM-PI-PRO-001

Area No.: All

System No.: All

PROMEC Approvals

Prepared by:	Stéphane Doré	**Signature:**		**Date:**	2017-04-26
Verified by:	Jérémy Duval	**Signature:**		**Date:**	2017-04-26
Approved by:	Éric Poulin	**Signature:**		**Date:**	2017-04-26

CLIENT Approvals

Verified by:	Rene Fillion	**Signature:**		**Date:**	2017-05-07
Approved by:		**Signature:**		**Date:**	

Table of Contents

Page

1. PURPOSE 3
2. CODES AND STANDARDS 3
3. SAFETY AND ENVIRONMENT MEASURES 3
   - 3.1 Safety Measures during the Preparation of the Test 3
   - 3.2 Disposal of Test Medium 3
   - *3.2.1 Glycols Diluted with Water* 4
   - *3.2.2 Test Water Release Authorization* 4
   - *3.2.3 Liquid Disposal Documents* 4
4. GENERAL 5
   - 4.1 Introduction 5
   - 4.2 Applied Regulations and Standards 6
   - 4.3 Hydrostatic/Pneumatic Test Package 6
5. PREPARATION FOR THE PRESSURE TEST 6
   - 5.1 Spring Supports 6
   - 5.2 Wireless Communication 6
6. HYDROSTATIC/PNEUMATIC TEST PROCEDURE 6
   - 6.1 System Inspection 6
   - 6.2 System Water Filling, Air Venting, Draining and Flushing 7
   - 6.3 Water Requirements 7
   - 6.4 Inspection of the Pressurized System 7
   - 6.5 Acceptability Standard 7
   - 6.6 Hydrostatic/Pneumatic Test Procedure Completion 8
7. WATER RELEASE COMPLETION 8
8. RESPONSIBILITIES 8
   - 8.1 Responsibilities and Duties of Contractors 8
   - 8.2 Supervisor of the Hydrostatic Test Procedure (CLIENT) 8
9. PNEUMATIC TEST 9

APPENDIX C – STATUS OF INSTRUMENTS DURING PRESSURE TEST

APPENDIX D – ALL APPLICABLE ITRs & LOGs

1. PURPOSE

This procedure provides the requirements for hydrostatic & Pneumatic pressing testing of piping system.

2. CODES AND STANDARDS

- ASME B31.1
- ASME B31.3 (CSA B 51-03)

3. SAFETY AND ENVIRONMENT MEASURES

Promec will set the organisation and implement the safety measures with the help of CLIENT's staff.

Moving proper containments, for the disposal of spilled hydrostatic fluids and any contaminated soil that results hydrostatic fluids.

All activities must be fully documented and provided to R&E.

3.1 Safety Measures during the Preparation of the Test

- Define a specific area for each pressure test.
- Make a list of authorized personnel that will have access to the area during the test.
- Advise other sub-contractors of the terms of tests and the forbidden works to be performed in the area of the test.
- Inspect temporary installations and equipment before conducting the tests to comply with current safety measures.
- Inspect and check temporary scaffolding and lights for inspection, if required.
- List all equipment that will be handled during filling, pressurizing and drainage of the system.
- Check gauge calibration list for measurement and control equipment. (Pressure test gauges shall be calibrated once every six months).
- Ensure that all the test fluids shall be stored and/or disposed of in a safe and acceptable manner.

3.2 Disposal of Test Medium

The release of hydrostatic test water in an amount of 1,000 m^3, or more, requires a registration number from AENV as proof of authorization to release hydrostatic test water. Contact R&E at least one month prior to beginning testing so applications can be completed and a registration number received the following information is required for applications:

- Name, address, fax and phone numbers of the person responsible for the testing.
- Type of pipeline, storage tank or vessel.
- Legal land descriptions for the beginning and end of the pipeline section(s), storage tank or vessel to be tested.

- Total length of pipeline to be tested.
- Inside diameter of the pipeline (mm) to be tested.
- Total volume of hydrostatic test water to be used (m^3).
- Source of the hydrostatic test water: groundwater, surface water, municipal, or other.
- Origin or name of source water.
- Anticipated date of withdrawal of source water.
- Location of release of test water (legal land description).
- Start and end dates for release.
- Volume of release (m^3).
- Approximate rate of release(s) (m^3/hr).
- Name and location of receptor: land, surface water, injection well, other.
- Additives used (MSDS sheet(s) must be included).
- A description of the treatment and mitigative methods used prior to and during release.
- A map, diagram, or air photo of the release area showing release location, receiving land, direction of receiving water flow (if applicable) and sampling locations (soil and water).

If there are any changes to the registration information after submission, R&E must be notified immediately. The application must be signed by the person responsible for the pipeline/ storage tank indicating that the testing will be done in accordance with AENV's Code of Practice.

3.2.1 GLYCOLS DILUTED WITH WATER

Glycols diluted with water may be used for hydrostatic testing, but must be properly managed so as not to spill, contaminate soils, or contaminate ground or surface waters and must be disposed off site in an environmentally safe manner. All activities must be fully documented.

3.2.2 TEST WATER RELEASE AUTHORIZATION

Upon completion of testing and prior to release, a representative grab sample of the hydrostatic test water must be obtained from the testing pipes and analyzed as specified in Appendix A – "Monitoring Requirements and Limits for Release to Land" and Appendix B – "Monitoring Requirements and Limits for Release to Receiving Water". Hydrostatic test water must not be released before to obtain R&E approval.

3.2.3 LIQUID DISPOSAL DOCUMENTS

The testing crew supervisor must compile the following information for each hydrostatic test:

- A schematic diagram and details of the monitoring and release operations, including monitoring points, holding system, conveyance system, hydrostatic test water release flow rate and area of receiving water.

- Where the release is to receiving water, the name of the receiving water, the estimated rate of flow of the receiving water at the time of the release and photographs taken before, during and after release at the point of release and downstream of a distance of at least 100 meters from the point of release for flowing water.
- Photographs of the sampling points, holding system and conveyance system.
- Where released to land, photographs of the land taken 7 days after the release is complete.
- All analytical results obtained for the hydrostatic testing.
- All information must be retained for a minimum of 5 years after completion of the hydrostatic testing.

4. GENERAL

4.1 Introduction

As the line designation total this procedure describes the pressure tests that have to be achieved on the following systems:

CH: Chemicals
CRW: Cold Recycle Waters
CWR: Cooling water return
CWS: Cooling water supply
DW: Drinking water
FW: Fire water
IWR: Inhibited water return
HC: High pressure condensate
HRW: Hot recycle water
HS: High pressure steam
IWS: Inhibited water supply
LC: Low pressure condensate
LS: Low pressure steam
IA: Instrument Air
LLS: Low low pressure steam
MS: Medium pressure steam
UA: Utility air
UW: Utility water
WRW: Warn recycle water
DR: Drain
EQT: Equipment trim
PA: Plant air

4.2 Applied Regulations and Standards

The pressure tests will be conducted according to standard ASME B 31.1, Article 137, and ASME B 31.3 (CSA B 51-03) - Pressure Test.

4.3 Hydrostatic/Pneumatic Test Package

The Pressure Test Package consists of:

- Piping Pressure Test Record.
- Copy of the Line Designation Table.
- A copy of the P & ID showing the lines involved.
- Isometrics drawings.
- Copy of the drawings gauges calibration sheet.
- All NDE approved.

The Pressure Test Package will be submitted to CLIENT's for review and approval to proceed prior to testing.

5. PREPARATION FOR THE PRESSURE TEST

5.1 Spring Supports

If necessary, the spring supports must be blocked before filling.

Promec will check that all pipe supports are entirely installed according to the drawings.

5.2 Wireless Communication

To ensure at all times that communications are constant between the operator of the pressurizing pump and the workers monitoring the control gauge on the highest location of the piping system installation, two ways radio communication shall be used.

6. HYDROSTATIC/PNEUMATIC TEST PROCEDURE

6.1 System Inspection

- Promec shall check pipe loop with all approved documentation:
  - NDT/PWHT.
  - Check that all specified bolts and gaskets are installed.
  - Check that all vents and drains are installed.
  - Check that all pressure connections are installed correctly.
  - Check for direction of flow through filters and strainers, traps, check valve, etc.
  - Check that all temporary pipe supports have been removed.
  - Check that all in-one valves installed are completely open and protected (secured against unauthorized closing.
  - Check that temporary spools have been installed.
  - Check test medium for conformity to requirement
  - Check pressure gauge calibration.

6.2 System Water Filling, Air Venting, Draining and Flushing

Considering that the water filling for the pressure test is done for the first time, it is necessary to flush the piping system by filling and draining. For this purpose, water from the fire hydrant will be used. If fire hydrants are not available, water shall be trucked in and pumped into the system.

Promec shall ensure that the water that flows out in the period of drainage does not contain any hazardous contaminant for the environment so it can be directly poured into the sewer. One complete fillings and flushes should be enough.

Air venting is accomplished with valves installed for this purpose on the highest locations of the tested systems.

Air venting is completed when water is flowing from the air venting valves in a continuous flow free of air bubbles.

Speckable, blind, blinds flanges, temporary pipe plug or caps will be installed at locations indicated on isometrics and/ or P &ID's drawings.

Place of nozzles for connection on pressurised pump, gauges and air venting valve are shown on schematics, which will be attached for each hydrostatic testing system. The form to be used will be developed with CLIENT.

6.3 Water Requirements

For hydrostatic test, the test fluid shall be clean filtered water that will not corrode or damage the system being tested.

Approval must be obtained from CLIENT if the test fluid is anything other than clean water.

6.4 Inspection of the Pressurized System

The hydrostatic test must be performed during at least 10 minutes.

Visual inspection is mandatory. In the case of a leakage, the inspector will visibly mark the area with paint marker.

6.5 Acceptability Standard

The pressure test procedure is considered successfully conducted when:

- The test pressure is reached and kept constant.
- No trace of cracks, leaks and changes in the shape of parts of the system have been observed during inspection.
- The verification of the written report is noted and approved by all participants witnessing the pressure test.

6.6 Hydrostatic/Pneumatic Test Procedure Completion

A test record shall be prepared for each piping system tested and shall include the following:

- Date of test
- Identification of piping system tested
- Test fluid
- Test pressure
- Duration of test
- Test fluid temperature
- Ambiant temperature
- Pressure gauge number
- Certification of results by examiner with name and signature.
- Approval by CLIENT

N.B.: For testing an austenitic stainless steel piping, checked that the chlorine is under than 50 ppm.

7. WATER RELEASE COMPLETION

When the hydrostatic test is completed, the water stay in the pipe or in a holding vessel until Promec obtains the authorization for releasing the testing fluid. After, we use a truck to transport the water to the release area or, if possible, a water disposal ditch is used.

8. RESPONSIBILITIES

8.1 Responsibilities and Duties of Contractors

Promec's working team shall be responsible for the quality of work and for the compliance of the test procedure. Complete activities shall be registered in the hydrostatic test procedures log book. During the hydrostatic test, Promec shall provide a working team to cover the following activities:

- Water filling and air venting of system under test.
- Pressurizing of system.
- Control of pressure at highest point of system.
- Drainage of system after testing.

8.2 Supervisor of the Hydrostatic Test Procedure (CLIENT)

The hydrostatic test supervisor shall be nominated by CLIENT and coordinate the work with all other participants.

9. PNEUMATIC TEST

Wherever a hydrostatic test cannot be performed, a pneumatic test should be carried out upon CLIENT's approval.

Appendix C

STATUS OF INSTRUMENTS DURING PRESSURE TEST

STATUS OF INSTRUMENTS DURING PRESSURE TEST

Remove:

- Control Valves
- FlowInstruments-Rotameters (Do not force reverse flow)
- Flow Meters-positive displacement type
- Flow Switches-van type
- Orifice Plates (Install after hydrotesting and line flushing)
- Pressure Regulators
- PSV's, TSV's- 3/4" & 1 " screwed

Block and Vents:

- Analyzers
- Flow Instruments-D/P cell & bellow types
- FlowMeters – turbine type
- Flow Indicating Switches-bellows type
- Level Instruments-C/P cell & bellows type
- Pressure Gauges
- Pressure Instruments-all types
- Pressure Switches

Blind Off:

- PSV's (Test gauge may be used if one is furnished; Blinds not required on PSV outlets discharging into a system being tested at 103kPa (15 PSI) or less.)

Include in Test:

- Gauge glasses
- Level Instruments-displacer type (Do not overpressure. If in doubt, block and drain instead.)
- Level Switches-float type (Do not overpressure. If in doubt, block and drain instead.)

To avoid damage due to freezing, all instruments shall be protected. As a good practice it is recommended that instruments be drained and process lead lines blown out with air or nitrogen in preparation for cold weather and during cold weather.

Appendix D

ALL APPLICABLE ITRs & LOGs

AGNICO EAGLE

Vendor Document Status

1 ☐ Proceed to next submission and status.

2 ☐ Proceed with exceptions as noted to next submission and status.

3 ☐ Do not proceed.
Revise as noted and resubmit next submission and status.

4 ☑ Complete, no further submission required.

By: JEAN-FRANCOIS TREMBLAY JG Date: 2017-05-16

Review and authorization to fabricate are only for general conformance with the design concept of the Project as expressed in the Contract Documents. Sole responsibility for the accuracy and completeness of this document, including but not limited to dimensions and quantities, remains with the Supplier/Contractor. Agnico Eagle does not warrant the accuracy or completeness of any of the information contained herein, nor does Agnico Eagle authorize or approve any construction means, methods, techniques, sequences or any safety precautions or procedures.

Agnico Eagle No. 6515-C-270-007-141-TES-0036 R: Sub001

DOCUMENT FOR INFORMATION

Agnico-Eagle Mines Ltd.

Contract no. 6515-C-270-007

Pre-Commissioning Piping Procedure

AEM-PI-PRO-002

Area No.: All

System No.: All

PROMEC Approvals

Prepared by:	Stéphane Doré	**Signature:**		**Date:**	2017-04-26
Verified by:	Jérémy Duval	**Signature:**		**Date:**	2017-04-26
Approved by:	Éric Poulin	**Signature:**		**Date:**	2017-04-26

CLIENT Approvals

Verified by:		**Signature:**		**Date:**	
Approved by:		**Signature:**		**Date:**	

Table of Contents

Page

1. **SCOPE** 3
2. **"SYSTEMS" METHODOLOGY** 3
   - 2.1 SYSTEM DEFINITION 3
3. **PRE-COMMISSIONING** 3
   - 3.1 MECHANICAL COMPLETION (MC) 3
     - *3.1.1 Conformity Check* 3
     - *3.1.2 Energized tests* 3
     - *3.1.3 Flushing and cleaning* 4
4. **PUNCH LIST** 4
5. **RESPONSIBILITY MATRIX** 4

APPENDIX A – RESPONSIBILITY MATRIX

1. SCOPE

This procedure summarizes Promec activities to achieve a "Ready for Pre-commissioning" status.

2. "SYSTEMS" METHODOLOGY

The basic principle of the plant completion scheduling will be to define, prepare, carry out and report all pre-commissioning by system.

2.1 System Definition

The partition of the plant into systems is a key preparation activity that has a major impact on all aspects of completion operation: the system must be defined so as to be independent as possible, not too small, but of the manageable size and exactly adapted to the start-up sequence.

The partition takes place as early as possible in accordance with precise system boundaries, system sequences and system numbering defined by the client and reported on marked-up P & ID's Single Line Diagrams as support documents.

3. PRE-COMMISSIONING

3.1 Mechanical Completion (MC)

A walk-down and punch list will be completed by the client and Promec on each system as early as practical before the end of the MC.

If both parties are satisfied that the system is mechanically completed enough to go into the commissioning phase, all outstanding deficiencies are noted on the punch list, and handover documents are completed and signed.

3.1.1 CONFORMITY CHECK

Carried out on each item of equipment or component, such as pressure gauges, valves, vents and drains, safety vales, etc. to verify the condition of the equipment, the quality of the installation, the compliance with project drawings and specifications, manufacturer's instruction, safety rules, codes, standards and good practice. These activities are generally carried out in an "un-energized" state, like no pressure in the pipe.

3.1.2 ENERGIZED TESTS

These "energized" tests concern the pressure testing of piping. This pressure testing will need to be done using the approved Promec's Procedure.

3.1.3 FLUSHING AND CLEANING

Piping systems must be flushed or air blown to remove construction debris. Under special circumstances, the client's approval is required to combine the hydrostatic/pneumatic test with the flushing activities.

4. PUNCH LIST

While the construction checks and tests are being performed, all discrepancies, damaged or missing equipment, malfunctions, missing documents, etc. are recorded in the punch list, if the situation was not able to be corrected immediately.

5. RESPONSIBILITY MATRIX

The Completion Activities are now further defined in the following Appendix A - "Responsibility Matrix".

This matrix provides a useful list of the piping completion activities and it establishes to which category they belong pre-commissioning (de-energized) and pre-commissioning (under-pres).

Appendix A

RESPONSIBILITY MATRIX

Responsibility Matrix	Contractor Responsibility	CLIENT Responsibility
LEGEND X = Contractor responsibility	X	
O = CLIENT responsibility		O
A = CLIENT approval hold point		A
W = CLIENT witness notification		W
R = CLIENT documentation review		R

CLIENT's APPROVAL HOLD POINT (A)

When Promec is ready to pre-commission any part of any system, which is identified as requiring CLIENT's approval, Promec shall duly notify CLIENT's representative, with 4 days written notification. Timely Review Meetings shall also be conducted between Promec's Pre-commissioning Manager and CLIENT's Commissioning Representative for the purpose of advising CLIENT on the specific Status/ Timing of all Pre-Commissioning Activities Requiring CLIENT's approval.

CLIENT WITNESS POINT (W)

When Promec is ready to pre-commission any part of any system, which is identified as requiring CLIENT witness, Promec shall duly notify CLIENT's Representative, with two days written notification. Timely review meetings shall also be conducted between Promec's QA/QC and CLIENT's Commissioning Representative for the purpose of advising CLIENT on the specific status/ timing of all pre-commissioning activities requiring CLIENT witness.

CLIENT DOCUMENTATION REVIEW (R)

When Promec has drafted the pre-commissioning procedures, descriptive and operating manuals, maintenance manuals, system schedules, and/or related final documentation etc. pertaining to pre-commissioning of any system, Promec shall formally issue via transmittal to CLIENT's Representative, for review & comment purposes. These documents must be received by CLIENT 14 days in advance of final issue.

NOTES:

CLIENT Signatures on Pre-commissioning Documentation

CLIENT's Representative in attendance will personally sign only for the relevant Pre-commissioning Documentation for which he/she approves, witnesses or reviews.

Functional Test Certificates & CLIENT Signatures

Upon completion of a functional test and proven that it has been successful when referring to the Contract requirements, CLIENT and Promec representatives will sign the test certificate.

Ready for Commissioning Standard					
	PIPING	Pre-Com De-energized	Pre-Com Energized	Comm.	Start-Up
1)	Issue Piping Flushing & Cleaning Procedures	XR			
2)	Complete Vendor Package Piping Punch Lists	XA			
3)	Maintain As-Built/ Red Line Mark-Ups of P&IDS	XA			
4)	Remove all In-Line Instruments prior to Hydro-Testing/Flushing & Cleaning including CA/s, Check & Safety Valves	X			
5)	Remove all temporary supports, protections, bracings, sea fastening stops that were installed to prevent equipment damage during shipping, storage and erection	X			
6)	Install temporary spool pieces	X			
7)	Check conditions of equipment, quality of installation, compliance with Project Drawings, Manufacturers instructions, safety rules, specifications, structural supports, and good practice prior to hydrotest	XA			
8)	Hydrostatic test / Pneumatic test		X		
9)	Set or check pipe anchors, guides, spring hangers and supports after hydrotest. Provide cold and hot setting data	XR			
10)	Define, provide, install and remove all temporary blanks and flushing connections.	X			
11)	Execute & Perform Piping Flushing & Cleaning/ Pickling/ Air Blows and Draining as per the Approved Procedures (Except Steam Blows)		XA		
12)	Execute & Perform Critical Body & Seat Testing TSO Valves at Site of All ESD, BDV		XA		
13)	Carry out piping water or air flushing operations		XA		
14)	Drain all lines including low points	XA			
15)	Provide and Install all Permanent Blinds, Spacers, & Spades as per P&ID's in open/closed position as specified by CLIENT	XW			
16)	Disposal of Test Medium following Hydro-Testing/ Flushing & Cleaning	XW			
17)	Remove as necessary and transport all safety valves to and from test facilities	XW			

Ready for Commissioning Standard					
	PIPING	Pre-Com De-energized	Pre-Com Energized	Comm.	Start-Up
18)	Test, set and tag all safety valves, then carry out safety valves final installation		XW		
19)	Perform all Gross Leak Tests Tightness & Service Tests (above & under ground)		X		
20)	Remove all Temporary Blinds	X			
21)	Supply/ Install & Issue As-Installed Blind List	XR			
22)	Compile & Issue RFC Handover Package per System	XR			
23)	Alleviate any excess piping stresses that may be imposed on pipes, compressors or pump flanges	XA			
24)	Check packing and packing materials and lubrication of valves; repack and lubricate if necessary	XW			
25)	Install corrosion probes	XA			
26)	Prepare Punch List	XR			

AGNICO EAGLE

Vendor Document Status

1 ☐ Proceed to next submission and status.

2 ☐ Proceed with exceptions as noted to next submission and status.

3 ☐ Do not proceed.
Revise as noted and resubmit next submission and status.

4 ☑ Complete, no further submission required.

By: JEAN-FRANCOIS TREMBLAY Date: 2017-06-09

Review and authorization to fabricate are only for general conformance with the design concept of the Project as expressed in the Contract Documents. Sole responsibility for the accuracy and completeness of this document, including but not limited to dimensions and quantities, remains with the Supplier/Contractor. Agnico Eagle does not warrant the accuracy or completeness of any of the information contained herein, nor does Agnico Eagle authorize or approve any construction means, methods, techniques, sequences or any safety precautions or procedures.

Agnico Eagle No. 6515-C-270-007-141-TES-0037 R: Sub002

DOCUMENT FOR INFORMATION

Agnico-Eagle Mines Ltd.

Contract no. 6515-C-270-007

Piping Erection Procedure

AEM-PI-PRO-003

Area No.: All

System No.: All

PROMEC Approvals

Prepared by:	Stéphane Doré	**Signature:**		**Date:**	2017-04-26
Verified by:	Jérémy Duval	**Signature:**		**Date:**	2017-04-26
Approved by:	Éric Poulin	**Signature:**		**Date:**	2017-04-26

CLIENT Approvals

Verified by:		**Signature:**		**Date:**	
Approved by:		**Signature:**		**Date:**	

Table of Contents

Page

1. PURPOSE 3
2. PREREQUISITE 3
3. CODES AND STANDARDS 3
4. FIELD FABRICATION 3
   - 4.1 PIPING 3
   - 4.2 INTERNAL MISALIGNMENT 4
   - 4.3 FLANGES AND FITTINGS 4
   - 4.4 REINFORCING PADS 4
   - 4.5 PIPING VERIFIED AGAINST THE ISOMETRIC DRAWINGS 5
   - 4.6 FABRICATION TOLERANCES 5
5. ERECTION AND INSTALLATION 5
   - 5.1 ERECTION 5
   - 5.2 INSTALLATION 5
     - *5.2.1 General* 5
     - *5.2.2 Flange Bolting* 5
     - *5.2.3 Supports* 6
     - *5.2.4 Branch Connections* 6
     - *5.2.5 Cleanliness of Piping* 6
     - *5.2.6 Field Pressure Testing* 6

APPENDIX A – ALL APPLICABLE ITRs & LOGs

1. PURPOSE

The purpose of this procedure is to specify the requirements for erection, joining and installation of shop fabricated spools. It will ensure that the right piece of pipe is installed at the right location and complies with the codes, standards, and isometric drawings.

2. PREREQUISITE

The following measures shall be taken before starting works:

- All technical documents are available (latest version):
  - Isometric drawings.
  - Line lists.
  - General Arrangement drawings.
- No other work is achieved on the same place of work.
- Piping spools and piping equipment have been identified and inspected.
- Transportation equipment and lifting equipment are available.
- Tools, lifting equipment, levelling equipment, etc. are available and have been inspected.

3. CODES AND STANDARDS

n/a

4. FIELD FABRICATION

4.1 Piping

Fabricator shall shape or bevel the joints to be field welded.

Adjacent sections of longitudinal welded pipe that are joined by butt welding shall have the longitudinal weld seams positioned so that they are at least 30 degrees apart and above the horizontal centerline.

Wherever possible, Promec shall not position the longitudinal weld seam on the top or bottom of the line so that branch connections such as couplings and stub-ons are located on the seam.

4.2 Internal Misalignment

Internal misalignment criteria shall be governed by the following:

- Pipe-to-pipe or pipe-to-fitting NPS (Nominal Pipe Size) 24 and smaller: ±1/16 of an inch deviation.
- Pipe-to-pipe or pipe-to-fitting NPS 26 and larger: ±1/8 of an inch deviation.
- If the deviation factors are exceeded, one of the following procedures shall be used:
  - Rotate the pipe or fittings to reduce misalignment to the acceptable tolerances (before attempting any of the following methods).
  - Use spreaders or internal or external lineup clamps to correct moderate out-of round condition.
  - Backweld the root pass.
  - Taper the wall of the component internally, after obtaining approval from the client, to ensure wall thickness is not reduced below the minimum required by the code.

4.3 Flanges and Fittings

Flange bolt holes are to be oriented as follows, unless otherwise indicated on the piping drawings:

- Flange face vertical: bolt holes to straddle vertical centerline.
- Flange face horizontal: bolt holes to straddle north-south centerline.
- Orifice flanges shall be fabricated with the taps in the exact orientation shown on the piping drawings. The up and down stream sections of pipe to which the orifice flanges are attached may be standard mill run pipe, but each piece shall be a choice hand-selected piece, and the interior of the pipe shall be round, smooth, and free from blisters and scale; welds shall be grounded flush. Field welds shall be kept at a maximum distance from the face of the orifice.
- Where line taps and 'olets are required, first attach the connection fitting then, the hole for each line tap shall be drilled square to the axial centerline, clean, sharp, and free from burrs, wire edges, or other irregularities.
- Slip-on flanges shall be welded inside and outside. Refer to Figure 328.5.2B of ASME B31.3. The weld shall be applied so that the flange face shall be free of weld spatter and does not require refacing.

4.4 Reinforcing Pads

Reinforcing pads shall be installed only where called for on the piping drawing. Pad material shall be the same as the pipe material, unless otherwise authorized by the client. Drawing will specify size and pad thickness.

4.5 Piping verified against the isometric drawings

Check that the position of the piping satisfied the isometric drawings informations: level, horizontal and vertical measurement, etc.

4.6 Fabrication Tolerances

The fabrication tolerances for fabricated piping shall be in accordance with client's specifications and standards.

5. ERECTION AND INSTALLATION

5.1 Erection

The following equipment will be used at different steps during pipe erection works: slings, shackles, mechanical or hydraulic jacks, come-along, measuring tapes, laser tool, temporary supports, boom trucks, etc.

5.2 Installation

5.2.1 GENERAL

Except where shown otherwise on the drawings, piping shall conform to the following:

- Be run level and plumb.
- Be run on North-South and East-West axis.

Evaluation of piping installation works sequence:

- Preparation of pipe to be welded: bevels, cleanliness, etc.
- Mounting of spools at ground level.
- Evaluation of how to handle the spools.
- Lifting of spools to their final location.
- Welding or assembling of spools.
- Identification of the welds.
- Installation of temporary supports.
- Etc.

Interior cleaning of piping:

- Marine Line, cleaning will be perform by pigging.
- Diesel Line (fuel farm and pumping station), cleaning will be perform by air blowing.

5.2.2 FLANGE BOLTING

Use a logical sequence of bolt tightening to ensure even gasket compression, as indicated in ASME B16.5

Unless specified otherwise, provide a bolt stress of 30,000 psi minimum or 45,000 psi maximum using a lubricant on the bolt threads (Refer to AEM-PI-PRO-004 Flanges Bolting Procedure).

Prior to bolt-up, examine flange faces. Flange faces shall be in as-new condition, and shall be wiped clean of any debris, excess oil, grease, and dirt. Restore damaged flange faces to as-new condition. Do not perform weld repairs on flange faces or flanges.

Do not use washers or spacers to make up bolt length. Bolt lengths are specified to prevent oversizing.

5.2.3 SUPPORTS

Install supports as indicated on the drawings.

Install spring supports in compliance with Manufacturer's instructions; keep them blocked until after line closure and hydrotest. Adjust them in the installed position and check them when operating conditions are reached.

Install all required temporary supports for hydrostatic testing.

Welding of supports shall be as indicated on the drawings.

5.2.4 BRANCH CONNECTIONS

Take care in shaping the ends of branch nozzles, as well as holes burned into the pipe for branch connections, to ensure fit with suitable provision for weld metal and so that the branch connections do not project inside the pipes.

5.2.5 CLEANLINESS OF PIPING

Open-end and flange protection shall be used throughout installation. Protect open pipes at times when work on them is not actually taking place.

Inspect individual pipe sections, prefabricated spools, and pipeline items internally during installation, and remove any foreign matter before final welding or bolting.

Piping contiguous with special equipment, which requires cleaning to the equipment Manufacturer's procedure, shall be inspected by and have cleaning supervised by the Manufacturer's representative.

5.2.6 FIELD PRESSURE TESTING

Testing of installed piping systems shall be in accordance with the previously referenced standards. (Refer to AEM-PI-PRO-001 Hydrostatic-Pneumatic Test Procedure for Piping).

Appendix A

ALL APPLICABLE ITRs & LOGs

AGNICO EAGLE

Vendor Document Status

1 ☐ Proceed to next submission and status.

2 ☐ Proceed with exceptions as noted to next submission and status.

3 ☐ Do not proceed.
Revise as noted and resubmit next submission and status.

4 ☑ Complete, no further submission required.

By: JEAN-FRANCOIS TREMBLAY Date: 2017-06-22

Review and authorization to fabricate are only for general conformance with the design concept of the Project as expressed in the Contract Documents. Sole responsibility for the accuracy and completeness of this document, including but not limited to dimensions and quantities, remains with the Supplier/Contractor. Agnico Eagle does not warrant the accuracy or completeness of any of the information contained herein, nor does Agnico Eagle authorize or approve any construction means, methods, techniques, sequences or any safety precautions or procedures.

Agnico Eagle No. 6515-C-270-007-141-TES-0033 R: Sub002

DOCUMENT FOR INFORMATION

Agnico-Eagle Mines Ltd.

Contract no. 6515-C-270-007

Pump Installation Procedure

AEM-ME-PRO-001

Area No.: All

System No.: All

PROMEC Approvals

Prepared by:	Stéphane Doré	**Signature:**		**Date:**	2017-04-26
Verified by:	Jérémy Duval	**Signature:**		**Date:**	2017-04-26
Approved by:	Éric Poulin	**Signature:**		**Date:**	2017-04-26

CLIENT Approvals

Verified by:		**Signature:**		**Date:**	
Approved by:		**Signature:**		**Date:**	

Table of Contents

Page

1. SCOPE 3
2. PREREQUISITE 3
3. VISUAL INSPECTION AND PREPARATION 3
4. LEVELLING AND FIXING 3
5. PUMP AUXILIARIES INSTALLATION 4
6. PIPING INSTALLATION 4
7. PRE-COMMISSIONING 4
8. FINAL ACCEPTANCE 4

APPENDIX A – ALL APPLICABLE ITRs & LOG

1. SCOPE

This procedure provides primary inspection and installation requirements pertaining to the pumps installation.

2. PREREQUISITE

- Relevant isometric drawings are up-to-date.
- Shop drawings, vendor manuals and technical specs up-to-date.
- Preservation and storage plan in place.
- Relevant team mobilized and ready.
- Pump Installation Procedure prepared and approved.
- Materials and tools available with calibration certificates and calibration log entries.

3. VISUAL INSPECTION AND PREPARATION

- Check equipment skid for any sign of damage prior to installation.
- Begin preservation program.
- Verify elevation and centerlines are correct and are clearly marked on foundation.
- Pump installation includes foundation preparation, confirmation of center lines and elevations, preliminary alignment, machinery distortion to be checked at piping bolt up, soft foot check, final alignment, flushing and recharging of lubricants (pump, gear-box, drivers and lube oil tanks) in accordance with the manufacturer's recommendations.
- Mark appropriately on the foundation the jacking screw pads and anchor bolts locations.
- Jack-up equipment skid with external jacks to allow jacking screws pads installation and secure it with temporary supports.
- Circular jackscrew leveling plate shall be made of 2-inche diameter, 12 mm thick, CSA grade 300 Structural Steel Plate, or equivalent type round stock material. The plate shall be clean and free of all scale and oil will be readjusted.

4. LEVELLING AND FIXING

- Install the jacking bolts in their respective screw location. Use the installed jacking bolts to bring the skid to the designed elevation. Ensure that pump nozzles are in proper orientation on the centerlines.
- Level the skid properly with an accurate leveling instrument using the equipment base machined faces. Align and adjust the pumps inlet and outlet flanges with the relevant pipe centerlines.
- After base plate leveling first alignment shall be performed. Soft-foot tolerance and coupling gaps shall be checked while the alignment is being confirmed. Coupling gap to be confirmed.

5. PUMP AUXILIARIES INSTALLATION

- Lube oil console is brought to design elevation and centerlines by the use of stainless steel shims and external lifting.
- Lube oil piping is loosely installed to verify best position.
- Electrical and instrumentation will be done by those disciplines using the relevant ITP's and procedures.

6. PIPING INSTALLATION

- Piping will be cleaned and installed by the piping discipline.
- Interconnecting lube oil piping, cooling water, suction / discharge and steam piping will be subject to fit up measurements. Pipe strain measurements and adjustment shall be carried out.
- Seal flushing lines to be cleaned and connected.
- Distortion due to piping stress: If distortion exceeds allowances, piping alignment shall be re-worked and re-checked.
- All piping that is attached to the equipment for the purpose of field welding will be electrically isolated from the equipment by use of isolating kits.
- A final pipe strain check will be performed and recorded.

7. PRE-COMMISSIONING, (AEM STD TO APPLY, TO BE DETAILED BY AEM)

- If applicable, vendor presence requirements shall be requested prior to final work.
- Lube oil pipe strain to witnessed
- Lube oil system to be flushed.
- Steam pipe blowing to be done by piping discipline.
- Running oil to be installed in lube oil console and pump bearing sumps.
- Motor bump test (uncoupled) to verify rotation will be performed on electric motor drive units.
- Final alignments with cold offsets to be witnessed.
- Pipe strain checks of steam lines and pump suction / discharge lines to be witnessed.
- All couplings and guards to be in place.
- Touch up painting will be completed.
- Mark in red on isometric drawing copy all final dimensions for as-built drawing preparation.

8. FINAL ACCEPTANCE, (AEM STD TO APPLY, TO BE DETAILED BY AEM)

- All inspection test records along with preservation records will be verified for handover to the turnover coordinator, along with relevant RFI's, NCR's and field trouble reports.
- A final punchlist will be cleared with no outstanding NCR's.
- Upon completion of work, final acceptance shall be obtained from CLIENT.

Appendix A

ALL APPLICABLE ITRs & LOGs

AGNICO EAGLE

Vendor Document Status

1 ☐ Proceed to next submission and status.

2 ☐ Proceed with exceptions as noted to next submission and status.

3 ☐ Do not proceed.
Revise as noted and resubmit next submission and status.

4 ☑ Complete, no further submission required.

By: JEAN-FRANCOIS TREMBLAY Date: 2017-05-02

Review and authorization to fabricate are only for general conformance with the design concept of the Project as expressed in the Contract Documents. Sole responsibility for the accuracy and completeness of this document, including but not limited to dimensions and quantities, remains with the Supplier/Contractor. Agnico Eagle does not warrant the accuracy or completeness of any of the information contained herein, nor does Agnico Eagle authorize or approve any construction means, methods, techniques, sequences or any safety precautions or procedures.

Agnico Eagle No. 6515-C-270-007-141-TES-0034 R: Sub001

DOCUMENT FOR INFORMATION

Agnico-Eagle Mines Ltd.

Contract no. 6515-C-270-007

Fuel Tank Installation Procedure

AEM-ME-PRO-002

Area No.: All

System No.: All

PROMEC Approvals

Prepared by:	Stéphane Doré	**Signature:**		**Date:**	2017-04-26
Verified by:	Jérémy Duval	**Signature:**		**Date:**	2017-04-26
Approved by:	Éric Poulin	**Signature:**		**Date:**	2017-04-26

CLIENT Approvals

Verified by:		**Signature:**		**Date:**	
Approved by:		**Signature:**		**Date:**	

Table of Contents

Page

1. SCOPE 3
2. PREREQUISITE 3
3. VISUAL INSPECTION AND PREPARATION 3
4. LEVELING AND FIXING 3
5. AUXILIARIES INSTALLATIONS & INSPECTION 3
6. PRE-COMMISSIONING 3
7. TOUCH-UP PAINTING 4
8. FINAL ACCEPTANCE 4

APPENDIX A – ALL APPLICABLE ITRs & LOGs

1. SCOPE

- This procedure provides inspection steps and requirements pertaining to a fuel tank.
- Each package is composed of a single unit.

2. PREREQUISITE

- Relevant isometric drawings are up-to-date.
- Shop drawings, vendor's manual and technical specs up-to-date.
- Relevant team mobilized and ready.
- Pertaining material and tools are prepared and ready.

3. VISUAL INSPECTION AND PREPARATION

- Check equipment for any sign of damage prior to installation.
- Mark on the foundation center lines and elevation references.
- If required, clean the foundation and skid exposed surfaces using compressed air.

4. LEVELING AND FIXING

- Jack up the equipment skid using external jacks keeping the skid level up to design elevation and center lines.
- Level the skid properly with an accurate leveling instrument. Align and adjust vessels inlet and outlet flanges with the relevant pipe axes (see relevant isometric drawing).
- Leveling shims shall to be installed on both sides of each anchor bolt. Wherever the distance between adjacent anchor bolts exceed 800 mm, additional leveling pads shall be installed midway between the anchor bolts.

5. AUXILIARIES INSTALLATIONS & INSPECTION

- External-Interconnecting pipes to be installed. Promec piping ITP to be followed for piping gaskets, studs and flange bolt-up.
- Internal inspection and cleaning to be performed if required.
- Instrumentation installation and verification to be performed by Promec instrumentation team.
- Complete equipment closing record form.

6. PRE-COMMISSIONING

- Follow vendor's operation manual procedure.

7. TOUCH-UP PAINTING

- Touch up painting shall be carried out on surfaces that have scratches or scrapes or other damages that have occurred during transportation and installation (paint is supplied by equipment vendor).

8. FINAL ACCEPTANCE

- All inspection and test records to be reviewed for completeness and securely filed for hand-over to turnover coordinator.
- Upon completion of works, final acceptance shall be obtained from the client.

Appendix A

ALL APPLICABLE ITRs & LOGs

AGNICO EAGLE

Vendor Document Status

1 ☐ Proceed to next submission and status.

2 ☐ Proceed with exceptions as noted to next submission and status.

3 ☐ Do not proceed.
Revise as noted and resubmit next submission and status.

4 ☑ Complete, no further submission required.

By: JEAN-FRANCOIS TREMBLAY Date: 2017-05-02

Review and authorization to fabricate are only for general conformance with the design concept of the Project as expressed in the Contract Documents. Sole responsibility for the accuracy and completeness of this document, including but not limited to dimensions and quantities, remains with the Supplier/Contractor. Agnico Eagle does not warrant the accuracy or completeness of any of the information contained herein, nor does Agnico Eagle authorize or approve any construction means, methods, techniques, sequences or any safety precautions or procedures.

Agnico Eagle No. 6515-C-270-007-141-TES-0038 R: Sub001

DOCUMENT FOR INFORMATION

Agnico-Eagle Mines Ltd.

Contract no. 6515-C-270-007

Welding Control Procedure

AEM-WE-PRO-001

Area No.: All

System No.: All

PROMEC Approvals

Prepared by:	Stéphane Doré	**Signature:**		**Date:**	2017-04-26
Verified by:	Jérémy Duval	**Signature:**		**Date:**	2017-04-26
Approved by:	Éric Poulin	**Signature:**		**Date:**	2017-04-26

CLIENT Approvals

Verified by:		**Signature:**		**Date:**	
Approved by:		**Signature:**		**Date:**	

TABLE OF CONTENTS

Page

1. SCOPE 3
2. REFERENCES 3
3. WELDING PROCEDURES 3
4. WELDER PERFORMANCE QUALIFICATION 3
5. WELDING MATERIAL CONTROL 4
6. FIT-UP AND WELDING 4
7. RADIOGRAPHIC INSPECTION 5

APPENDIX A – ALL APPLICABLE ITRs & LOGs

1. Scope

- This procedure describes the system for maintaining control of all production welding to the requirements of the applicable engineering specifications, codes and standards.

2. References

- ASME, Section IX - Welding and Brazing Qualifications
- ANSI, B-31.3 - Petroleum Refinery Piping
- ANSI, B-31.1 - Power Piping
- AWS, American Welding Society

3. Welding Procedures

- All welding performed on site will comply with applicable qualified welding procedures as specified in the Standard S40 05 13.
- Prime contractor's welders will be qualified to weld procedures in accordance with contract specifications. Prime contractor is responsible for certifying their own welders.
- Copies of the qualified welding procedures approved for that project shall be maintained on site by the Welding Foreman and Site Q/C Representative for reference and permanent retention.

4. Welder Performance Qualification

- It is the responsibility of the Site Q/C Representative to conduct or supervise the Welder Performance Qualification tests. At the discretion of the Corporate Quality Control Manager, a Welding Foreman or other qualified site supervisor may conduct these tests.
- Records attesting to the Welder Performance Qualification tests shall be generated and maintained by the Site Q/C Representative and the Welding Foreman.
- The Site Q/C Representative and the Welding Foreman shall maintain a complete listing of welders and welding operators employed. The form, Welder Qualification Log, is to be updated and reissued on a monthly basis and is to be distributed as required.

5. Welding Material Control

- The Site Q/C Representative and Welding Foreman shall make certain that the welding material used conforms to that of the welding procedure. No substitutions for the specified material will be made without written approval from the client.

6. Fit-Up and Welding

- Visual surveillance shall be performed to establish compliance to welding procedures. The inspection parameters listed below are recommended as guidelines
  - ✓ Inspect end preparation and joint configuration as established by applicable weld procedures and engineering specifications.
  - ✓ Inspect internal alignment and root opening prior to welding.
  - ✓ Check tack welds that are to be incorporated into the final weld, and be assured of proper blend grinding and absence of visual defects.
  - ✓ Check for proper welding materials and other essential variables of applicable weld procedures.
  - ✓ Check visually root pass for cracks, porosity, slag, fusion lines and quality workmanship (if required use LP).
  - ✓ Inspect completed welds for proper reinforcement. All welds should blend smoothly into the base metal and be free of cold lap or fusion at the toe.
  - ✓ Inspect weld for surface discontinuities such as undercut. Surface porosity is to be considered as an injurious defect and shall be repaired.
  - ✓ All repairs are to be made in accordance with approved procedures.
  - ✓ Each welder shall be responsible for stamping his assigned symbol immediately after completion of the weld. A smooth, flat spot shall be ground or filed on the reinforcement cap. The welder shall stamp his/hers identifying mark upon this spot.
- For ferrous material less than 1/4" (1/2" for nonferrous), the welder's symbol shall be recorded on the base metal by use of a halogen-free paint marker, or recorded on isometric drawings by the welding supervisor which shall be available to the Quality Control Inspector.

7. Radiographic Inspection

- The Site Q/C Representative or Welding Foreman will schedule radiographic inspections.
- Radiographic requirements shall be determined by the client standard to assure compliance to contract Codes and specifications.
- Welds requiring radiography will be flagged by a suitable means which will be consistent through contract completion.
- The Site Q/C Representative will complete the Radiographic Inspection Status Record, to indicate status of radio graphically-inspected welds. This form will be forwarded to appropriate supervision for distribution.
- In addition to the records generated under this procedure, marked-up isometric and orthographic drawings will be used as weld maps to indicate completion of radiographic inspection. This will allow a progressive record and give system status.

Appendix A

ALL APPLICABLE ITRs & LOGs

AGNICO EAGLE

Vendor Document Status

1 ☐ Proceed to next submission and status.

2 ☐ Proceed with exceptions as noted to next submission and status.

3 ☐ Do not proceed.
Revise as noted and resubmit next submission and status.

4 ☑ Complete, no further submission required.

By: JEAN-FRANCOIS TREMBLAY Date: 2017-05-02

Review and authorization to fabricate are only for general conformance with the design concept of the Project as expressed in the Contract Documents. Sole responsibility for the accuracy and completeness of this document, including but not limited to dimensions and quantities, remains with the Supplier/Contractor. Agnico Eagle does not warrant the accuracy or completeness of any of the information contained herein, nor does Agnico Eagle authorize or approve any construction means, methods, techniques, sequences or any safety precautions or procedures.

Agnico Eagle No. 6515-C-270-007-141-TES-0039 R: Sub001

DOCUMENT FOR INFORMATION

Agnico-Eagle Mines Ltd.

Contract no. 6515-C-270-007

Non-Destructive Examination Procedure

AEM-WE-PRO-002

Area No.: All

System No.: All

PROMEC Approvals

Prepared by:	Stéphane Doré	**Signature:**		**Date:**	2017-04-26
Verified by:	Jérémy Duval	**Signature:**		**Date:**	2017-04-26
Approved by:	Éric Poulin	**Signature:**		**Date:**	2017-04-26

CLIENT Approvals

Verified by:		**Signature:**		**Date:**	
Approved by:		**Signature:**		**Date:**	

TABLE OF CONTENTS

Page

1. Qualified Individual 3
2. Qualified Firm 3
3. NDE Purchasing Language 4

The Authorized Company for carrying out NDT and its personnel engaged in non-destructive examinations should be familiar with Promec's examination methods and the methods prescribed by the applicable drawings, specifications, codes and standards. The following list outlines the most commonly used examination methods on a Promec project:

- VT - Visual Testing
- LT - Leak Testing
- PT - Liquid Penetrant Testing
- RT - Radiographic Testing (X-ray)
- MT - Magnetic Particle Testing
- UT - Ultrasonic Testing

These methods as well as other methods may or may not, in whole or in part be sub-contracted to "qualified individuals" or firms to perform. The size and scope of the project dictates these conditions as well as the contract.

1. Qualified Individual

- The term "qualified individual" refers to the assigned person responsible for performing or reviewing the nondestructive examinations. All conflicts between the "qualified individual" and any other party will be resolved through the Project Manager and/or the Site Q/C Representative.

2. Qualified Firm

- The term "qualified firm" refers to a licensed NDE organization that performs NDE testing by subcontract for Promec. The qualified firms' contract must be governed by the contract between Promec and its client.
  - ✓ The selection of the NDE firm will be confirmed by the Corporate Quality Control Manager prior to awarding a contract.
  - ✓ The NDE firm will conduct its work in support of Promec.
  - ✓ All work performed by the NDE firm will meet the codes and specifications, quality and integrity.
  - ✓ The productivity and efficiency of the NDE firm shall be monitored to ensure that GSI and its client are receiving maximum value.

3. NDE Purchasing Language

- The following NDE Language shall be added to all Field PO's or subcontracts issued to a NDE firm. The following notes are to be used as a guide and the particular methods, codes and standards shall be verified prior to insertion into the P.O.

  - ✓ All work will be performed in accordance with ASME Section 5, Article 2 Radiographic Standards or ASME requirements.
  - ✓ All radiographic personnel shall be certified in accordance with CAN/CGSB-48.9712-2005 Latest Adopted Edition.
  - ✓ Prior to commencing any radiographic services, one copy of the following must be submitted to the Promec Quality Control Manager.
    - a) Liability Insurance Certificate. Retain copy and forward the original to the Site Project Manager.
    - b) State, Provincial and Federal Radiation Licenses (If Applicable).
    - c) All anticipated personnel certifications (For methods outlined in the contract).
    - d) Each radiographic technique procedure to be used (within the scope of the project).
  - ✓ Each crew shall have one (1) certified Level II Technician on site when working.
  - ✓ All subcontractor radiography shall be interpreted by the subcontractor for film quality and defects prior to surrendering the film and record sheets to the Promec Representative.
  - ✓ All record sheets shall be filled out completely, listing all weldment defects seen on film, whether the defects are acceptable or rejectable to codes or specifications, and shall be signed by the Subcontractor's Level II Technician.

NO. DESSIN
DRAWING NO. 65-416-205-200_R2.dwg

FORMAT ARCHD

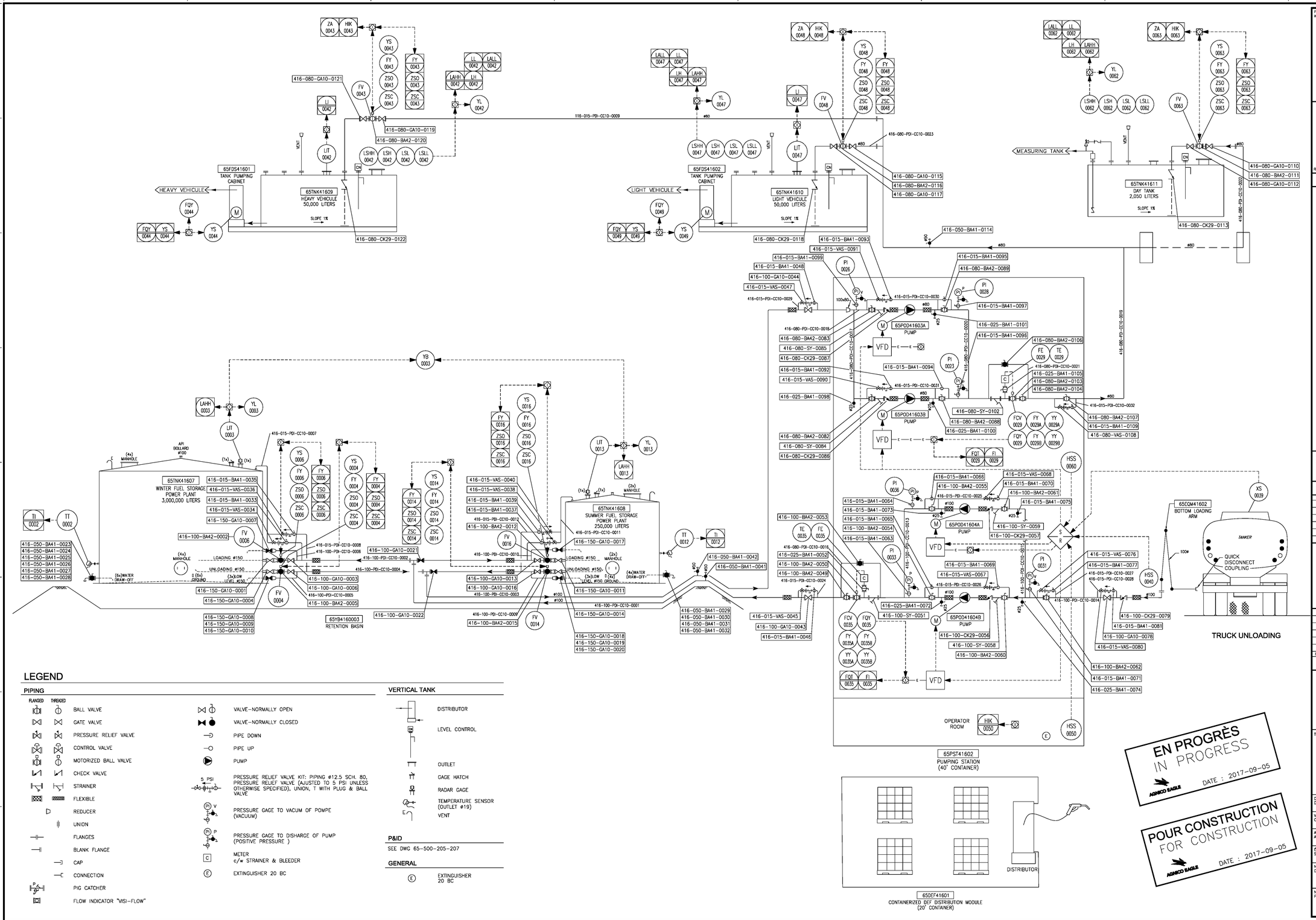

LEGEND

PIPING

FLANGED	THREADED	
		BALL VALVE
		GATE VALVE
		PRESSURE RELIEF VALVE
		CONTROL VALVE
		MOTORIZED BALL VALVE
		CHECK VALVE
		STRAINER
		FLEXIBLE
		REDUCER
		UNION
		FLANGES
		BLANK FLANGE
		CAP
		CONNECTION
		PIG CATCHER
		FLOW INDICATOR "VISI-FLOW"

- VALVE-NORMALLY OPEN
- VALVE-NORMALLY CLOSED
- PIPE DOWN
- PIPE UP
- PUMP
- PRESSURE RELIEF VALVE KIT: PIPING ø12.5 SCH. 80, PRESSURE RELIEF VALVE (AJUSTED TO 5 PSI UNLESS OTHERWISE SPECIFIED), UNION, T WITH PLUG & BALL VALVE.
- PRESSURE GAGE TO VACUM OF POMPE (VACUUM)
- PRESSURE GAGE TO DISHARGE OF PUMP (POSITIVE PRESSURE)
- METER c/w STRAINER & BLEEDER
- EXTINGUISHER 20 BC

VERTICAL TANK

- DISTRIBUTOR
- LEVEL CONTROL
- OUTLET
- GAGE HATCH
- RADAR GAGE
- TEMPERATURE SENSOR (OUTLET ø19)
- VENT

P&ID

SEE DWG 65-500-205-207

GENERAL

- EXTINGUISHER 20 BC

EN PROGRÈS
IN PROGRESS
AGNICO EAGLE DATE : 2017-09-05

POUR CONSTRUCTION
FOR CONSTRUCTION
AGNICO EAGLE DATE : 2017-09-05

PLAN CLÉ
KEY PLAN

WSP
1075, 3e AVENUE E
VAL-D'OR (QUÉBEC) CANADA J9P 6M1
TÉL. : 1-819-825-4711 | TÉLÉC. : 1-819-825-4715 | WWW.WSPGROUP.COM

Ref. 151-06440-40

NOTES GÉNÉRALES / GENERAL NOTES

1. REPLACE DRAWING : 65-403-205-200

L'INFORMATION CI-CONTENUE EST LA PROPRIÉTÉ DE AGNICO EAGLE LTÉE ET DOIT ÊTRE RETOURNÉE SUR DEMANDE, SANS AUTORISATION ÉCRITE PRÉALABLE, TOUTE REPRODUCTION OU EXPÉDITION À AUTRUI EN TOUTE UTILISATION AUTRE QUE CELLE POUR LAQUELLE L'INFORMATION EST PRÊTÉE SONT INTERDITES. © AGNICO EAGLE LTÉE.

THE INFORMATION HEREIN IS THE PROPERTY OF AGNICO EAGLE LTD, AND MUST BE RETURNED UPON REQUEST. WITHOUT WRITTEN PERMISSION, ANY COPYING, TRANSMITTAL TO OTHERS AND ANY USE EXCEPT THAT FOR WHICH IT IS LOANED ARE PROHIBITED. © AGNICO EAGLE LTÉE.

DESSINS EN RÉFÉRENCE / REFERENCE DRAWINGS

TITRE / TITLE	# DWG

AGNICO EAGLE

REV.	DATE	DESCRIPTION	PAR/BY	APP.	CLIENT
2	2017-09-05	EQUIPMENT NUMBERS ADDED	J.M.	D.T.	
1	2017-07-20	INSTRUMENTATION ADDED	F.M.G.	L.S.	
0	2017-05-31	ISSUED FOR CONSTRUCTION	J.M.	D.T.	

REVISIONS

TITRE / TITLE

AGNICO EAGLE – MELIADINE DIVISION
416 – FUEL TANK FARM
205 – P&ID
FUEL DISTRIBUTION (PORTAIL #1)
FLOW DIAGRAM

DESSINÉ PAR / DRAWN BY	G. CORNUT	DATE 2017-05-26
VÉRIFIÉ PAR / CHECKED BY	J. MORLIÈRE, tech.	2017-05-26
APPROUVÉ PAR / APPROVED BY	D. THIBODEAU, P. Eng.	2017-05-26
ÉCHELLE / SCALE	INDICATED	DATE 2017-05-26
NO. DESSIN / DRAWING NO.	65-416-205-200	
NO. PROJET / PROJECT NO.	6515	REVISION 2
		FEUILLE / SHT. 1 / 1

AE-CART-ARCH D

FILE NO.

NO. DESSIN DRAWING NO. 65-416-210-200

FORMAT ARCHD

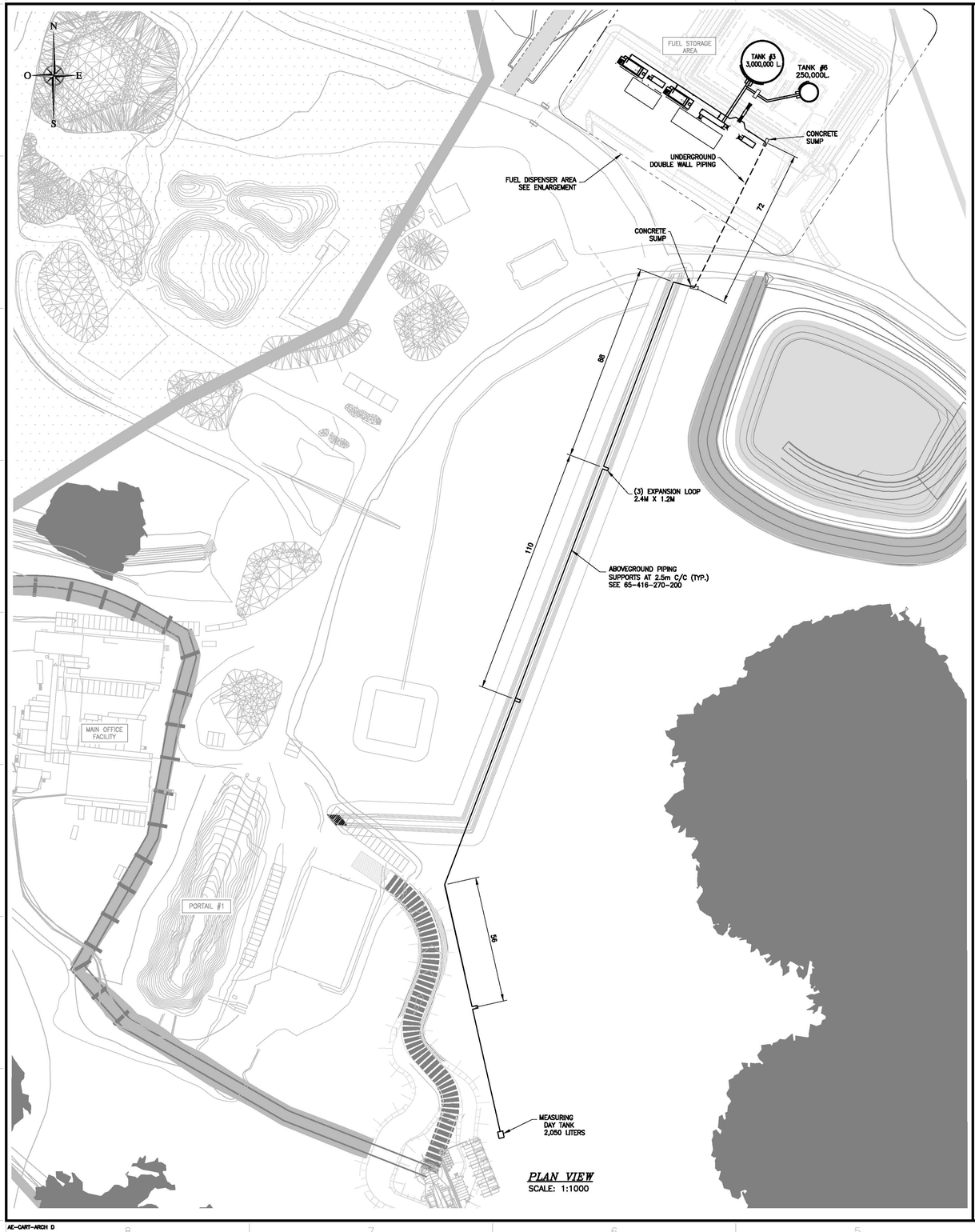

PLAN VIEW
SCALE: 1:1000

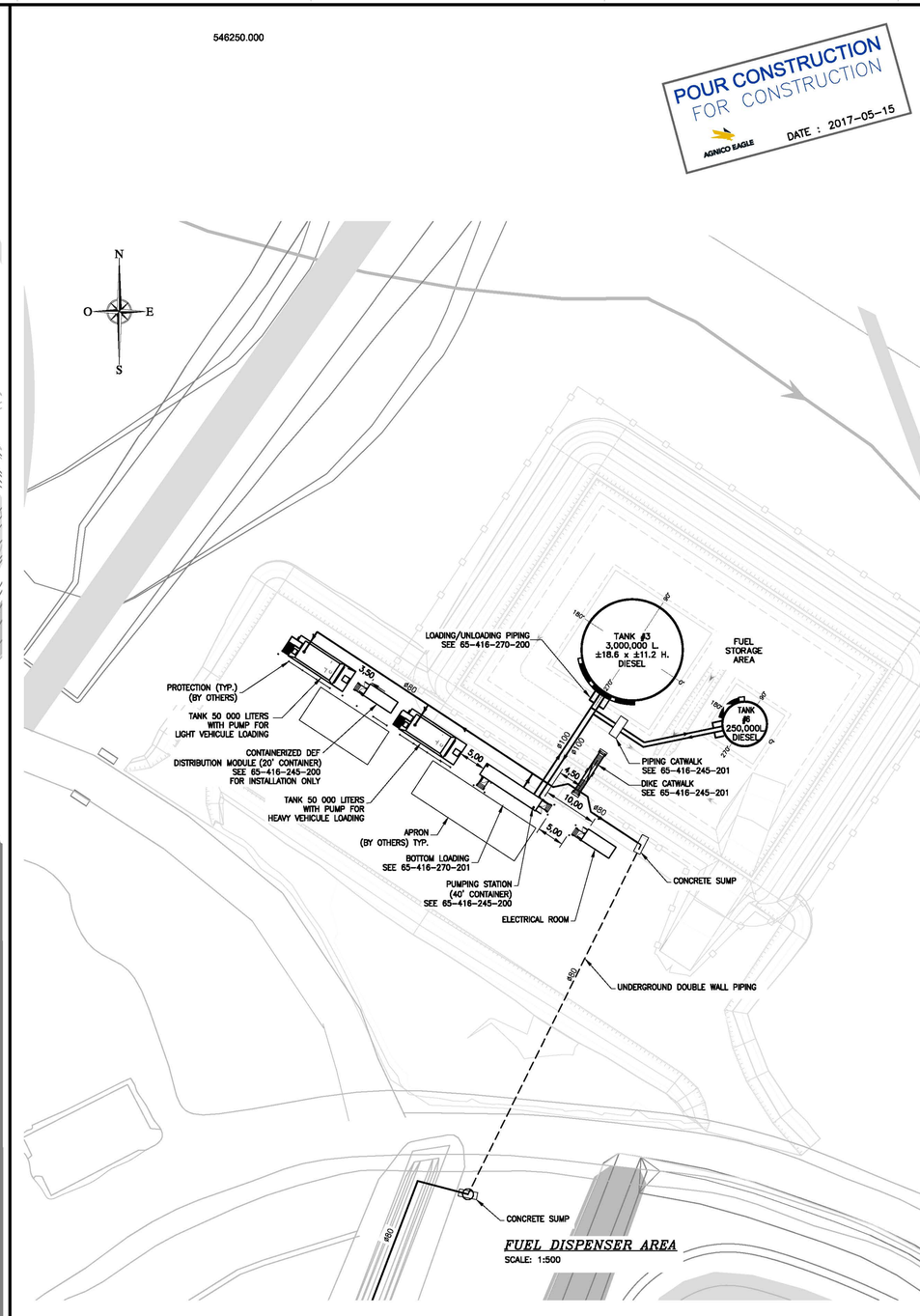

FUEL DISPENSER AREA
SCALE: 1:500

POUR CONSTRUCTION
FOR CONSTRUCTION
AGNICO EAGLE
DATE : 2017-05-15



WSP
1075, 3e AVENUE EST
VAL-D'OR (QUÉBEC) CANADA J9P 0J7
TÉL. : 819 825-4274 | TÉLÉC. : 819 824-1514 | WWW.WSPGROUP.COM
Ref. 151-06440-40

NOTES GÉNÉRALES / GENERAL NOTES

1. TANK DIMENSIONS ADJUSTED ACCORDING TO INFORMATION PROVIDED BY CONTRACTOR
2. REPLACE DRAWING 65-403-210-200

L'INFORMATION CI-CONTENUE EST LA PROPRIÉTÉ DE AGNICO EAGLE LTÉE ET NOT ÊTRE RETOURNÉE SUR DEMANDE. SANS AUTORISATION ÉCRITE PRÉALABLE, TOUTE TRANSMISSION DE COPIE(S) À AUTRUI ET TOUTE UTILISATION AUTRE QUE CELLE POUR LAQUELLE L'INFORMATION EST PRÊTÉE SONT INTERDITES. © AGNICO EAGLE LTÉE

THE INFORMATION HERE ON IS THE PROPERTY OF AGNICO EAGLE LTD. AND MUST BE RETURNED UPON REQUEST. WITHOUT WRITTEN PERMISSION, ANY COPYING TRANSMITTAL TO OTHERS AND ANY USE EXCEPT THAT FOR WHICH IT IS LOANED ARE PROHIBITED. © AGNICO EAGLE LTD.

DESSINS EN RÉFÉRENCE / REFERENCE DRAWINGS

TITRE / TITLE	# DWG

AGNICO EAGLE

REV.	DATE	DESCRIPTION	PAR/BY	APP.	CLIENT
0	2017-05-15	ISSUED FOR CONSTRUCTION	J.M.	D.T.	

REVISIONS

TITRE / TITLE
AGNICO EAGLE – MELIADINE DIVISION
416 – FUEL TANK FARM
210 – GENERAL ARRANGEMENT
FUEL FARM TANK (PORTAIL #1)
PLAN VIEWS

DESSINÉ PAR DRAWN BY	G. CORNUT	DATE 2017-05-12
VERIFIÉ PAR CHECKED BY	J. MORLIÈRE, tech.	2017-05-12
APPROUVÉ PAR APPROVED BY	D. THIBODEAU, P. Eng.	2017-05-12
ÉCHELLE SCALE	INDICATED	DATE 2017-05-12
NO. DESSIN DRAWING NO.	65-416-210-200	
NO. PROJET PROJECT NO.	6515	REVISION 0 / FEUILLE / SHT 1 / 1

AE-CART-ARCH D

\\CAMTL1DAT01\projets\2015\1\151-06440-40\Genie Nordique\Dao\65-416-210-200_R0.dwg-2013-02-19 14:03:29

FILE NO. 65-416-210-200_R0.dwg

NO. DESSIN
DRAWING NO. 65-416-245-200

FORMAT ARCHD

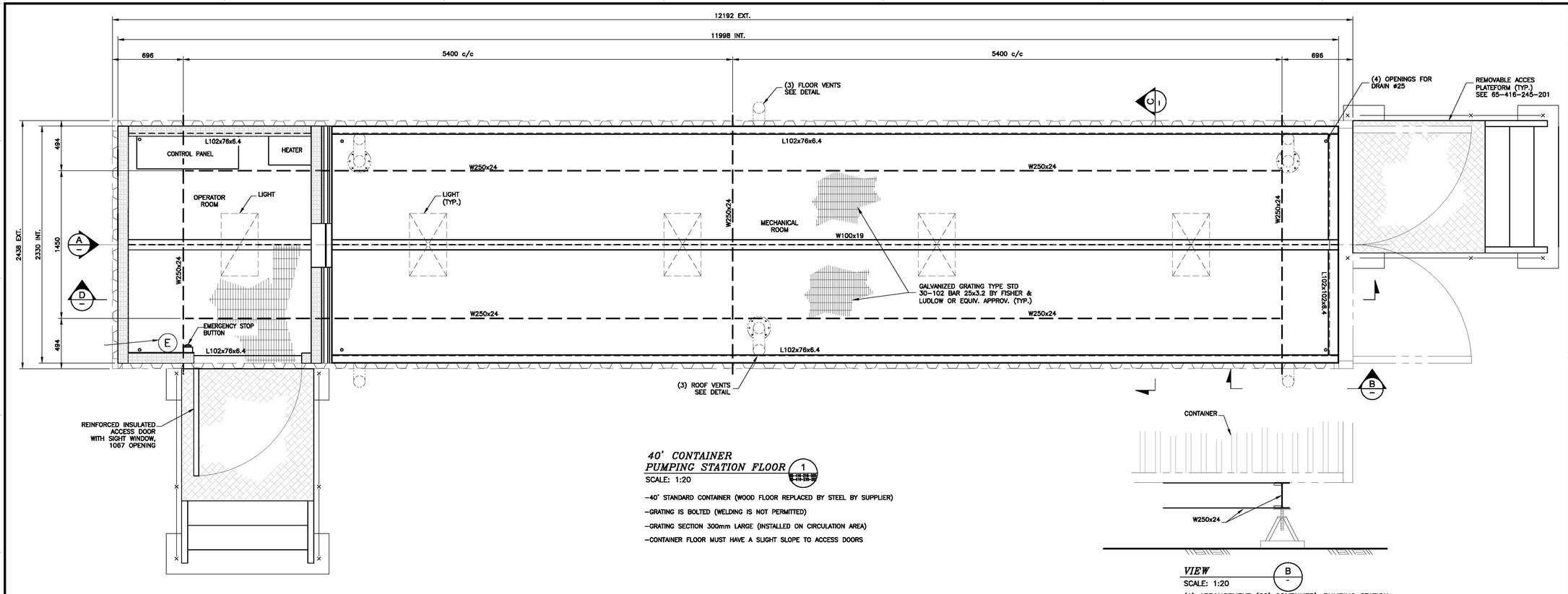

40' CONTAINER PUMPING STATION FLOOR (1)
SCALE: 1:20

- 40' STANDARD CONTAINER (WOOD FLOOR REPLACED BY STEEL BY SUPPLIER)
- GRATING IS BOLTED (WELDING IS NOT PERMITTED)
- GRATING SECTION 300mm LARGE (INSTALLED ON CIRCULATION AREA)
- CONTAINER FLOOR MUST HAVE A SLIGHT SLOPE TO ACCESS DOORS

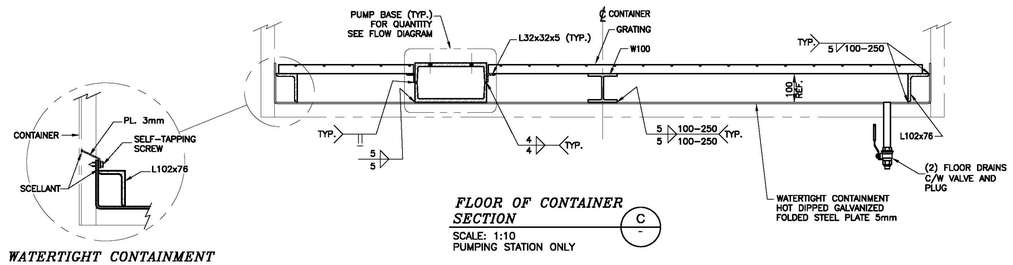

WATERTIGHT CONTAINMENT

FLOOR OF CONTAINER SECTION (C)
SCALE: 1:10
PUMPING STATION ONLY

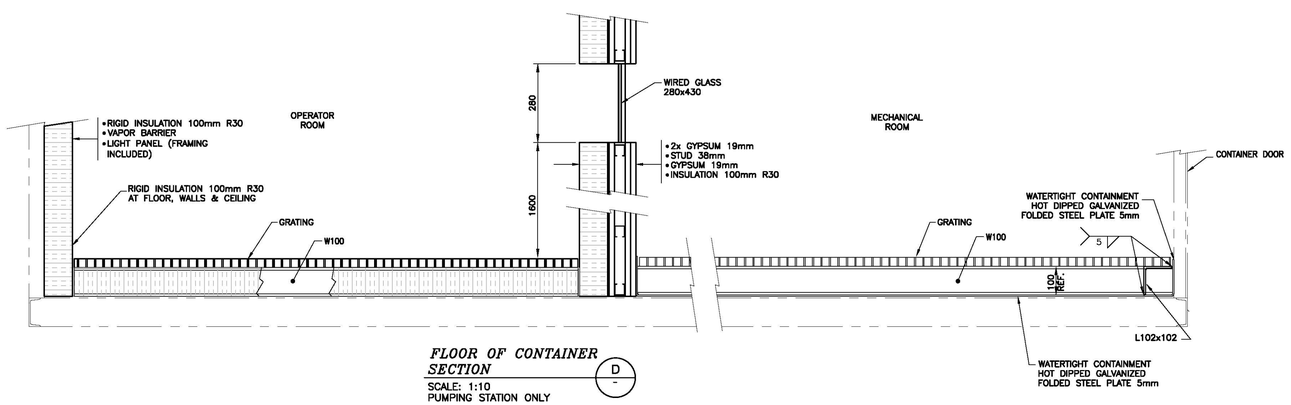

FLOOR OF CONTAINER SECTION (D)
SCALE: 1:10
PUMPING STATION ONLY

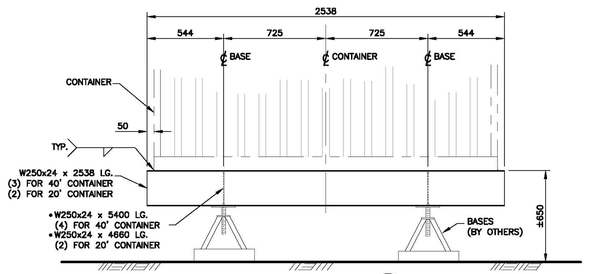

VIEW (A)
SCALE: 1:20
(1) ARRANGEMENT (20' CONTAINER)-PUMPING STATION
(1) ARRANGEMENT (40' CONTAINER)-DEF DISTRIBUTION CONTAINER

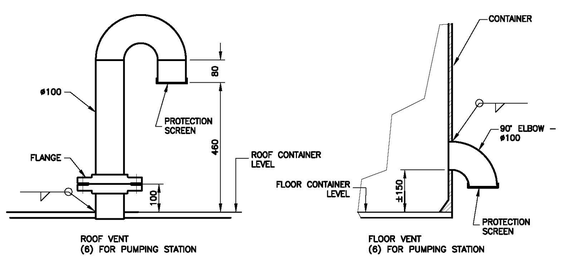

VENT FOR CONTAINER (3)
SCALE: 1:10
PUMPING STATION ONLY

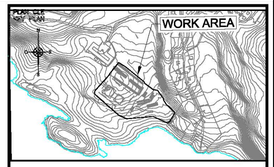

WSP
1075, 3e AVENUE EST
VAL-D'OR (QUEBEC) CANADA J9P 0J7
TEL. : 819 825-4274 | TELEC. : 819 824-1514 | WWW.WSPGROUP.COM
Ref. 151-06440-40

NOTES GENERALES / GENERAL NOTES

1. REPLACE DRAWING : 65-403-245-200

POUR CONSTRUCTION
FOR CONSTRUCTION
AGNICO EAGLE
DATE : 2017-05-31

L'INFORMATION CI-CONTENUE EST LA PROPRIETE DE AGNICO EAGLE LTEE ET DOIT ETRE RETOURNEE SUR DEMANDE, SOUS AUTORISATION ECRITE PREALABLE, TOUTE REPRODUCTION OU EXPOSE A AUTRUI EST STRICTEMENT INTERDIT, SAUF CELUI POUR LAQUELLE L'INFORMATION EST PRETEE. ©AGNICO EAGLE LTEE

THE INFORMATION HERE ON IS THE PROPERTY OF AGNICO EAGLE LTD, AND MUST BE RETURNED UPON REQUEST, WITHOUT WRITTEN PERMISSION, ANY COPYING TRANSMITTAL TO OTHERS AND ANY USE EXCEPT THAT FOR WHICH IT IS LOANED ARE PROHIBITED. ©AGNICO EAGLE LTD.

DESSINS EN REFERENCE / REFERENCE DRAWINGS

TITRE / TITLE	# DWG

AGNICO EAGLE

REV.	DATE	DESCRIPTION	PAR/BY	APP.	CLIENT
0	2017-05-31	ISSUED FOR CONSTRUCTION	J.M.	D.T.	

REVISIONS

TITRE / TITLE
AGNICO EAGLE - MELIADINE DIVISION
416 - FUEL TANK FARM
245 - STRUCTURAL STEEL
FUEL DISTRIBUTION
MODIFICATIONS & ADDITIONS AT THE CONTAINERS

DESSINE PAR / DRAWN BY	G. CORNUT	DATE 2017-05-29
VERIFIE PAR / CHECKED BY	J. MORLIÈRE, tech.	2017-05-29
APPROUVE PAR / APPROVED BY	D. THIBODEAU, P. Eng.	2017-05-29
ECHELLE / SCALE	INDICATED	DATE 2017-05-29
NO. DESSIN / DRAWING NO.	65-416-245-200	
NO. PROJET / PROJECT NO.	6515	REVISION 0 / FEUILLE / SHT 1 / 1

AE-CART-ARCH D

\\CAMTL1DATD1\projets\2015\1\151-06440-40\Genie Nordique\Dao\65-416-245-200_R0.dwg

FILE NO. 65-416-245-200_R0.dwg

NO. DESSIN
DRAWING NO. 65-416-245-201

FORMAT ARCHD

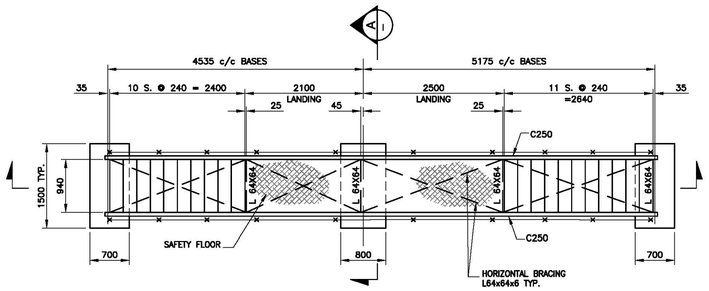

PLAN VIEW

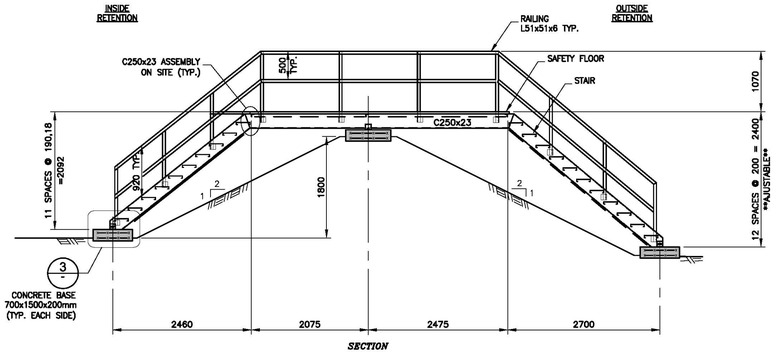

SECTION

DIKE CATWALK (1)
SCALE: 1:50
QTY: 2

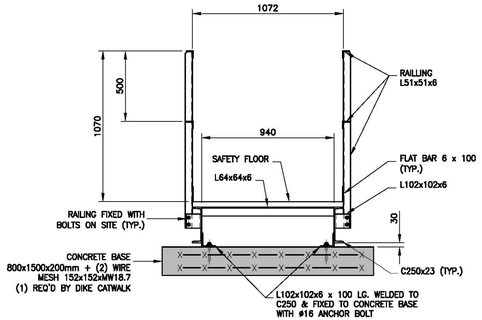

SECTION (A)
SCALE: 1:20

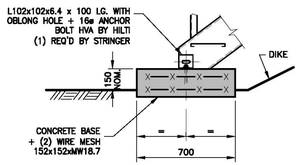

DETAIL (3)
SCALE: 1:20

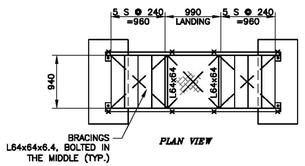

PLAN VIEW

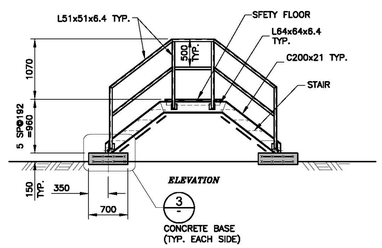

ELEVATION

PIPE CATWALK (2)
SCALE: 1:50
QTY: 2

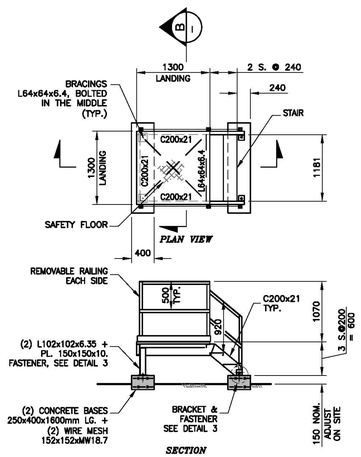

SECTION

CONTAINER CATWALK (2)
SCALE: 1:50
QTY: 6

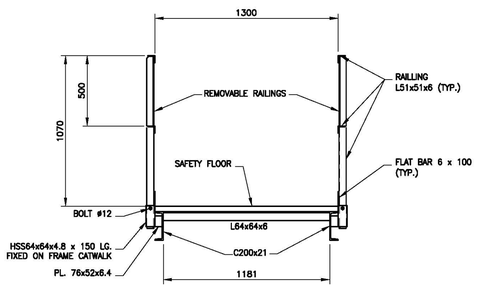

SECTION (B)
SCALE: 1:20

NOTES:

CATWALK, RAILINGS AND STAIRS ARE ASSEMBLED AND BOLTED ON SITE.

DEAD LOAD = 0.5 Kpa
LIVE LOAD = 4.8 Kpa
FLÈCHE MAXIMUM = L/300

MATERIAL

GRATING OF LANDING

GRIP SPAN SAFETY GRATING, GALVANIZED STEEL, (D-51215-G, 5 DIAMONDS, Ga 2,7mm, 38.1mm DEEP) BY FISHER LUDLOW OR APPROVED EQUIVALENT, MAX. 300mm WIDTH EXCEPT WHEN INDICATED DIFFERENTLY.

STAIR

GRIP SPAN SAFETY GRATING, GALVANIZED STEEL, (D-41215-G, 4 DIAMONDS, Ga 2,7mm, 38.1mm DEEP) BY FISHER LUDLOW OR APPROVED EQUIVALENT, MAX. 241mm WIDTH EXCEPT WHEN INDICATED DIFFERENTLY.

POUR CONSTRUCTION
FOR CONSTRUCTION
AGNICO EAGLE
DATE : 2017-05-31

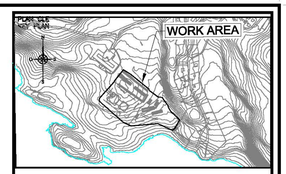

WSP
1075, 3e AVENUE EST
VAL-D'OR (QUÉBEC) CANADA J9P 0J7
TEL. : 819 825-4274 | TÉLÉC. : 819 824-1514 | WWW.WSPGROUP.COM

Ref. 151-06440-40

NOTES GENERALES / GENERAL NOTES

1. REPLACE DRAWING : 65-403-245-201

L'INFORMATION CI-CONTENUE EST LA PROPRIÉTÉ DE AGNICO EAGLE LTÉE ET NE PEUT ÊTRE REPRODUITE NI UTILISÉE, SOUS AUCUNE FORME QUE CE SOIT, SANS L'AUTORISATION ÉCRITE PRÉALABLE, SAUF DISPOSITIONS DE CONTRAT À L'EFFET CONTRAIRE. © AGNICO EAGLE LTÉE

THE INFORMATION HERE ON IS THE PROPERTY OF AGNICO EAGLE LTD, AND MAY BE REPRODUCED UPON REQUEST, WITHOUT WRITTEN PERMISSION, EXCEPTION TO CONTRARY. © AGNICO EAGLE LTD

DESSINS EN REFERENCE / REFERENCE DRAWINGS

TITRE / TITLE	# DWG

AGNICO EAGLE

REV.	DATE	DESCRIPTION	PAR/BY	APP.	CLIENT
0	2017-05-31	ISSUED FOR CONSTRUCTION	J.M.	D.T.	

REVISIONS

TITRE / TITLE
AGNICO EAGLE – MEL1ADINE DIVISION
416 – FUEL TANK FARM
245 – STRUCTURAL STEEL
FUEL DISTRIBUTION
DIKE, PIPE & CONTAINERS CATWALKS

DESSINÉ PAR / DRAWN BY	G. CORNUT	DATE 2017-05-29
VÉRIFIÉ PAR / CHECKED BY	J. MORLIÈRE, tech.	2017-05-29
APPROUVÉ PAR / APPROVED BY	D. THIBODEAU, P. Eng.	2017-05-29
ÉCHELLE / SCALE	INDICATED	DATE 2017-05-29

NO. DESSIN / DRAWING NO. 65-416-245-201

NO. PROJET / PROJECT NO.	REVISION	FEUILLE / SHT
6515	0	1 / 1

AE-CART-ARCH D

\\CAMTL1DATD1\projets\2015\1\151-06440-40\Génie Nordique\Dao\65-416-245-201_R0.dwg

FILE NO. 65-416-245-201_R0.dwg

NO. DESSIN
DRAWING NO. 65–416–260–200

FORMAT ARCHD

NEW TANK #3 - DIESEL

SPÉCIFICATIONS:
NOMINAL DIAMETER (METERS) ±18.6m
ORIGINAL NOMINALE HEIGHT (METERS): ±11.20m
NOMINAL CAPACITY: 3,000,000 liters

No.	QTY	DESCRIPTION	REMARKS
1	4	ø600 ROOF MANHOLE	TO API 650 STANDARDS
2	4	ø900 SHELL MANHOLE	TO API 650 STANDARDS
3	1	ø100 PAINTER SCAFFOLD CABLE SUPPORT	TO API 650 STANDARDS
4	5	SHELL NOZZLE – INLET/OUTLET	TO API 650 STANDARDS
5	–	VENT OPENING	TO API 2000 & 650 STANDARDS, DIAMETER & QTY TO BE DETERMINE BY THE MANUFACTURER, SEE DETAIL
6	6	WATER DRAW–OFF	TO API 650 STANDARDS, SEE DETAIL
7	1	ROOF PRESSURE RELIEF LINE CONNECTION, HALF COUPLING ø25 (THREADED)	TO API 650 STANDARDS & NBC
8	1	ROOF ø150 GAUGE HATCH	TO API 650 STANDARDS, SEE DETAIL
9	1	FIXED PIPE – TANK LOADING ø150 x 7.0m LG.	TO API 650 STANDARDS
10			
11			
12	1	SHELL BRACKET FOR PIPING & CONDUIT	SEE DETAIL
13			
14	1	ROOF INSPECTION FRAME	TO API 650 STANDARDS
15	1	ROOF GUARDRAIL	TO API 650 STANDARDS & NBC
16	1	SPIRAL STAIRWAY, GUARDRAIL & HANDRAIL	TO API 650 STANDARDS & NBC
17	1	FIXED PIPE – TANK UNLOADING ø150 x 7.0m LG.	TO API 650 STANDARDS
18	3	PUMPING LOW LEVEL ø150	TO API 650 STANDARDS, SEE DETAIL
19	6	GROUNDING LUG	TO API 650 STANDARDS, SEE DETAIL
20	1	ROOF NOZZLE ø200 FOR OVERFILL PROTECTION	TO API 650 STANDARDS, SEE DETAIL

NOTE:

1. APPROXIMATIVE STAIRWAY LOCATION: CONTRACTOR HAVE TO ENSURE A MINIMUM CLEARANCE OF 1000mm IN ELEVATION BETWEEN STAIRS AND ANY SHELL CONNECTION

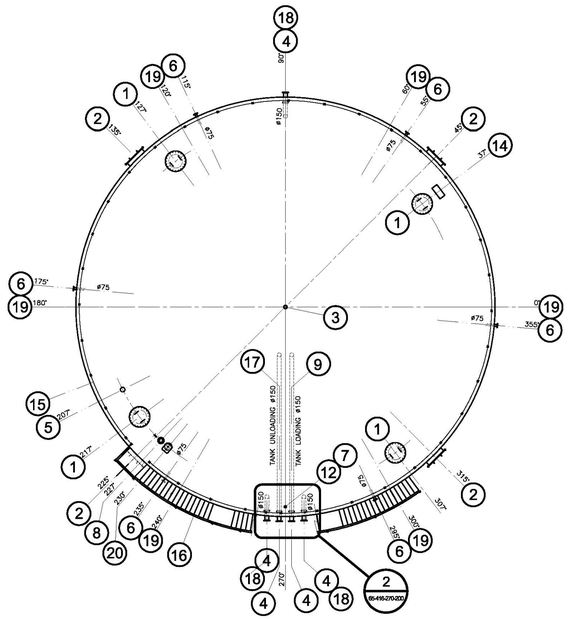

PLAN VIEW

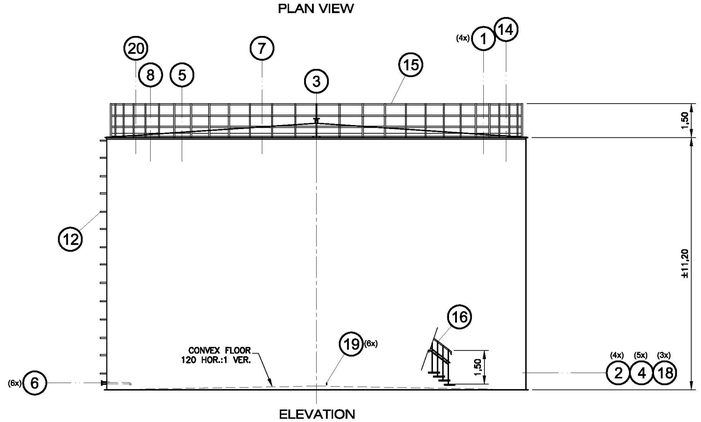

ELEVATION

POUR CONSTRUCTION
FOR CONSTRUCTION
AGNICO EAGLE
DATE : 2017–05–31

PLAN CLÉ
KEY PLAN

WSP
1075, 3e AVENUE EST
VAL-D'OR (QUÉBEC) CANADA J9P 0J7
TÉL. : 819 825-4274 | TÉLÉC. : 819 824-1514 | WWW.WSPGROUP.COM

Ref. 151–06440–40

NOTES GÉNÉRALES / GENERAL NOTES

1. TANK DIMENSIONS ADJUSTED ACCORDING TO INFORMATION PROVIDED BY CONTRACTOR
2. REPLACE DRAWING : 65–416–260–200 403

CETTE DESSIN © CONNU EST LA PROPRIÉTÉ DE AGNICO EAGLE LTÉE ET NE PEUT ÊTRE REPRODUIT SOUS QUELQUE FORME QUE CE SOIT SANS AUTORISATION ÉCRITE PRÉALABLE. TOUTE REPRODUCTION NE DONNERA À AUCUN DROIT À TOUTE UTILISATION AVEUE QUE CELLE POUR LAQUELLE L'APPROBATION EST PRÉVUE. TOUS DROITS RÉSERVÉS. © AGNICO EAGLE LTÉE

THE INFORMATION HERE ON IS THE PROPERTY OF AGNICO EAGLE LTD, AND MAY BE REPRODUCED UPON REQUEST. WITHOUT WRITTEN PERMISSION, ANY COPYING PROHIBITED, TO WHOM AND FOR WHICH IT IS GRANTED. ALL RIGHTS RESERVED. © AGNICO EAGLE LTD.

DESSINS EN RÉFÉRENCE / REFERENCE DRAWINGS

TITRE / TITLE	# DWG
–	–
–	–
–	–
–	–
–	–
–	–

AGNICO EAGLE

REV.	DATE	DESCRIPTION	PAR/BY	APP.	CLIENT
0	2017–05–31	ISSUED FOR CONSTRUCTION	J.M.	D.T.	

REVISIONS

TITRE / TITLE
AGNICO EAGLE – MELIADINE DIVISION
416 – FUEL TANK FARM
260 – PLATEWORK
FUEL FARM TANK (PORTAIL #1)
TANK #3 – 3,000,000 liters
ø18,6m x 11.2m H.

DESSINÉ PAR / DRAWN BY	GHISLAINE CORNUT	DATE 2017–05–29
VÉRIFIÉ PAR / CHECKED BY	JOËL MORLIÈRE, tech.	2017–05–29
APPROUVÉ PAR / APPROVED BY	DENIS THIBODEAU, ing.	2017–05–29
ÉCHELLE / SCALE	1:125	DATE 2017–05–29

NO. DESSIN / DRAWING NO. 65–416–260–200

NO. PROJET / PROJECT NO.	REVISION	FEUILLE / SHT
6515	0	1 / 1

AE–CART–ARCH D

\\CAMTL1DATD1\projets\2015\1\151–06440–40\Genie Nordique\Dao\65–416–260–200_R0.dwg–2013–02–19 14:03:29

FILE NO. 65–416–260–200_R0.dwg

NO. DESSIN
DRAWING NO. 65-416-260-202

FORMAT ARCHD

NEW TANKS #5 & #6 - SUMMER DIESEL

SPÉCIFICATIONS:
NOMINAL DIAMETER (METERS): ±8.2m
ORIGINAL NOMINALE HEIGHT (METERS): ±4.75m
NOMINAL CAPACITY: 250,000 liters

No.	QTY	DESCRIPTION	REMARKS
1	2	ø600 ROOF MANHOLE	TO API 650 STANDARDS
2	2	ø760 SHELL MANHOLE	TO API 650 STANDARDS
3	1	ø100 PAINTER SCAFFOLD CABLE SUPPORT	TO API 650 STANDARDS
4	5	SHELL NOZZLE – INLET/OUTLET	TO API 650 STANDARDS
5	–	VENT OPENING	TO API 2000 & 650 STANDARDS. DIAMETER & QTY TO BE DETERMINE BY THE MANUFACTURER, SEE DETAIL
6	4	WATER DRAW-OFF	TO API 650 STANDARDS, SEE DETAIL
7	1	ROOF PRESSURE RELIEF LINE CONNECTION, HALF COUPLING ø25 (THREADED)	TO API 650 STANDARDS & NBC
8	1	ROOF ø150 GAUGE HATCH	TO API 650 STANDARDS, SEE DETAIL
9	1	FIXED PIPE – TANK LOADING ø150 x 3m LG.	TO API 650 STANDARDS
10			
11			
12	1	SHELL BRACKET FOR PIPING & CONDUIT	SEE DETAIL
13			TO API 650 STANDARDS
14	1	ROOF INSPECTION FRAME	TO API 650 STANDARDS
15	1	ROOF GUARDRAIL	TO API 650 STANDARDS & NBC
16	1	SPIRAL STAIRWAY, GUARDRAIL & HANDRAIL	TO API 650 STANDARDS & NBC
17	1	FIXED PIPE – TANK UNLOADING ø150 x 3,9m LG.	TO API 650 STANDARDS
18	3	PUMPING LOW LEVEL ø150	TO API 650 STANDARDS, SEE DETAIL
19	4	GROUNDING LUG	TO API 650 STANDARDS, SEE DETAIL
20	1	ROOF NOZZLE ø200 FOR OVERFILL PROTECTION	TO API 650 STANDARDS, SEE DETAIL

(2) TANKS REQUIRED: TANK #5 AT INDUSTRIAL SITE
TANK #6 AT PORTAIL #1

NOTE:

1. APPROXIMATIVE STAIRWAY LOCATION: CONTRACTOR HAVE TO ENSURE A MINIMUM CLEARANCE OF 1000mm IN ELEVATION BETWEEN STAIRS AND ANY SHELL CONNECTION

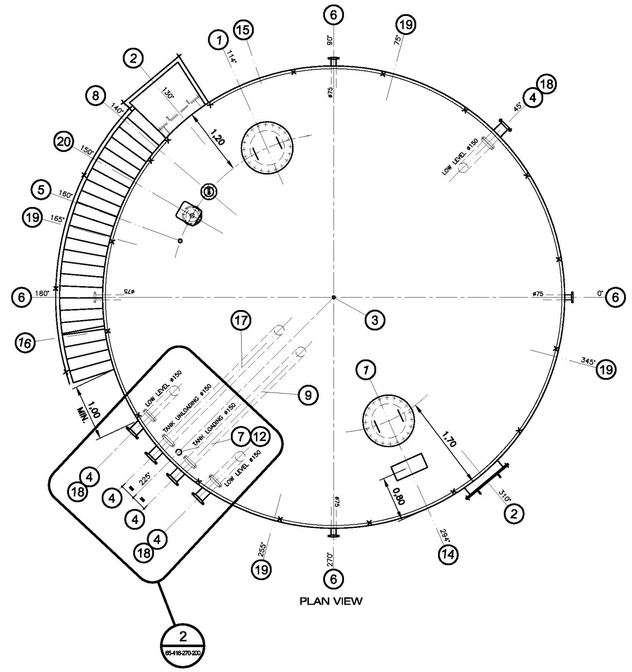

PLAN VIEW

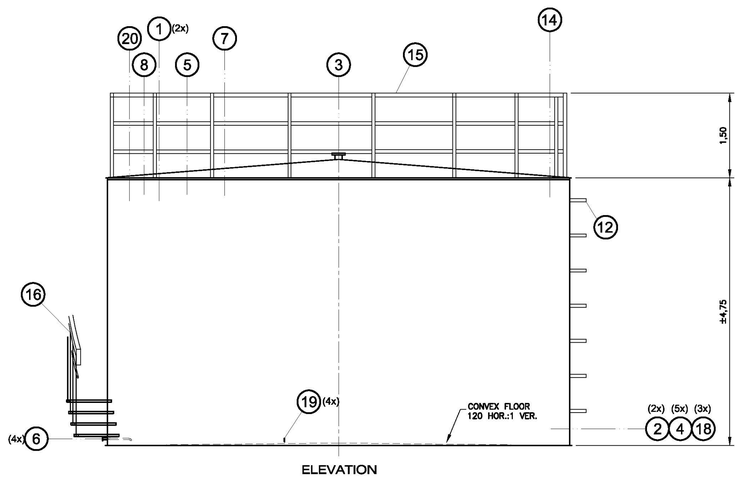

ELEVATION

POUR CONSTRUCTION
FOR CONSTRUCTION
AGNICO EAGLE
DATE : 2017-05-31

PLAN CLÉ
KEY PLAN

WSP
1075, 3e AVENUE EST
VAL-D'OR (QUÉBEC) CANADA J9P 0J7
TÉL. : 819 825-4274 | TÉLÉC. : 819 824-1514 | WWW.WSPGROUP.COM

Ref. 151-06440-40

NOTES GÉNÉRALES / GENERAL NOTES

1. TANK DIMENSIONS ADJUSTED ACCORDING TO INFORMATION PROVIDED BY CONTRACTOR
2. REPLACE DRAWING : 65-403-260-202

COPYRIGHT © AGNICO EAGLE LTD LA PROPRIÉTÉ DE AGNICO EAGLE LTÉE ET DOIT ÊTRE RETOURNÉE SUR DEMANDE. SANS AUTORISATION ÉCRITE PRÉALABLE, TOUTE REPRODUCTION DE CE DESSIN À AUTRES FINS QUE CELLE POUR LAQUELLE L'INFORMATION EST PRÊTÉE, SONT INTERDITES. © AGNICO EAGLE LTÉE

THE INFORMATION HERE ON IS THE PROPERTY OF AGNICO EAGLE LTD, AND MUST BE RETURNED UPON REQUEST. WITHOUT WRITTEN PERMISSION, ANY COPYING PROHIBITED, TO WHOEVER AND FOR ANY USE EXCEPT THAT FOR WHICH IT IS LOANED ARE PROHIBITED. © AGNICO EAGLE LTD.

DESSINS EN RÉFÉRENCE / REFERENCE DRAWINGS

TITRE / TITLE	# DWG

AGNICO EAGLE

REV.	DATE	DESCRIPTION	PAR/BY	APP.	CLIENT
0	2017-05-31	ISSUED FOR CONSTRUCTION	J.M.	D.T.	

REVISIONS

TITRE / TITLE
AGNICO EAGLE – MELIADINE DIVISION
416 – FUEL TANK FARM
260 – PLATEWORK
FUEL FARM TANK (INDUSTRIAL SITE & PORTAIL #1)
TANKS #5 & #6 – 250,000 liters
ø8,2m x 4,75m H.

DESSINÉ PAR / DRAWN BY	JESSICA LAGACÉ	DATE 2017-05-29
VÉRIFIÉ PAR / CHECKED BY	JOËL MORLIÈRE, tech.	2017-05-29
APPROUVÉ PAR / APPROVED BY	DENIS THIBODEAU, ing.	2017-05-29
ÉCHELLE / SCALE	1:50	DATE 2017-05-29
NO. DESSIN / DRAWING NO.	65-416-260-202	
NO. PROJET / PROJECT NO.	6515	REVISION 0
		FEUILLE / SHT 1 / 1

AE-CART-ARCH D

\\CAMTL1DATD1\projets\2015\1\151-06440-40\Genie Nordique\Dao\65-416-260-202_R0.dwg-2013-02-19 14:03:29

FILE NO. 65-416-260-202_R0.dwg

NO. DESSIN
DRAWING NO. 65-416-270-200

FORMAT ARCHD

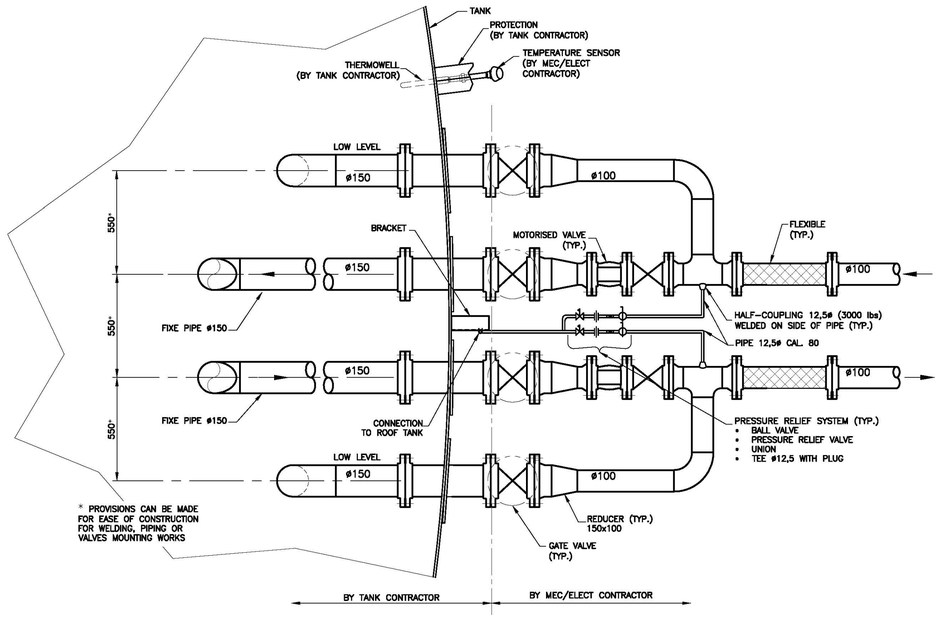

LOADING/UNLOADING TANK PIPING 2
SCALE: 1:15

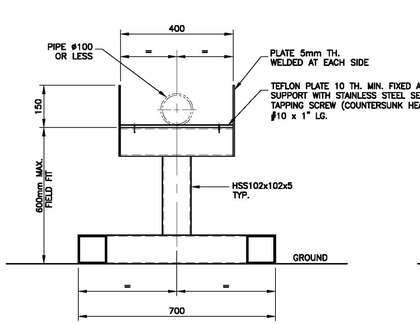

FRONT VIEW (2) PIPES

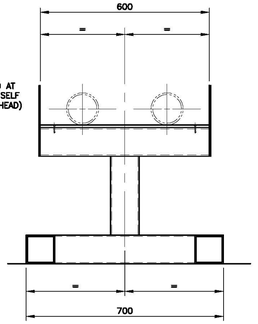

FRONT VIEW (2) PIPES

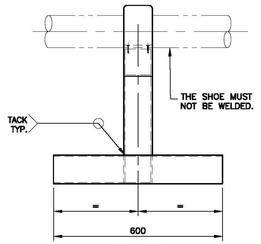

SIDE VIEW

NOTE:
1. GROUND FOR THE SUPPORT TO BE FLAT AND STABLE. PAD WITH NATURAL GRANULAR BACKILL IF NEEDED.

PIPING SUPPORT 3
SCALE: 1:10

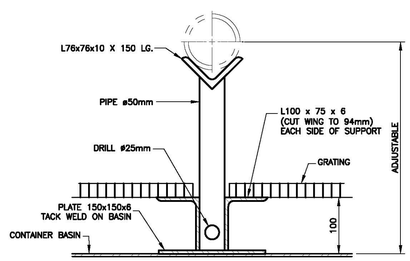

NOTE:
GRATING CUT ON SITE AROUND SUPPORT

SUPPORT INSIDE PUMPING STATION 4
SCALE: 1:5

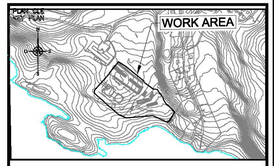

POUR CONSTRUCTION
FOR CONSTRUCTION
AGNICO EAGLE
DATE : 2017-05-31

WSP
1075, 3e AVENUE EST
VAL-D'OR (QUEBEC) CANADA J9P 0J7
TEL. : 819 825-4274 | TELEC. : 819 824-1514 | WWW.WSPGROUP.COM

Ref. 151-06440-40

NOTES GENERALES / GENERAL NOTES

1. REPLACE DRAWING : 65-403-270-200

CETTE DONNÉE G-CHARGE EST LA PROPRIÉTÉ DE AGNICO EAGLE LTÉE ET NE PEUT ÊTRE REPRODUITE NI UTILISÉE, SOUS QUELQUE FORME QUE CE SOIT, À DES FINS AUTRES QUE CELLES POUR LESQUELLES L'INFORMATION EST PRÊTÉE, SANS AUTORISATION ÉCRITE PRÉALABLE. © AGNICO EAGLE LTÉE

THE INFORMATION HERE ON IS THE PROPERTY OF AGNICO EAGLE LTD, AND MAY BE REPRODUCED UPON REQUEST, WITHOUT WRITTEN PERMISSION, NOT EXPRESS THEREFROM, TO ENGAGE AND ANY USE EXCEPT THAT FOR WHICH IT IS LOANED ARE PROHIBITED. © AGNICO EAGLE LTD.

DESSINS EN REFERENCE / REFERENCE DRAWINGS

TITRE / TITLE	# DWG

AGNICO EAGLE

REV.	DATE	DESCRIPTION	PAR/BY	APP.	CLIENT
0	2017-05-31	ISSUED FOR CONSTRUCTION	J.M.	D.T.	

REVISIONS

TITRE / TITLE
AGNICO EAGLE – MELIADINE DIVISION
416 – FUEL TANK FARM
270 – PIPING
FUEL DISTRIBUTION
DETAILS

DESSINE PAR / DRAWN BY	G. CORNUT	DATE 2017-05-29
VERIFIE PAR / CHECKED BY	J. MORLIÈRE, tech.	2017-05-29
APPROUVE PAR / APPROVED BY	D. THIBODEAU, P. Eng.	2017-05-29
ECHELLE / SCALE	INDICATED	DATE 2017-05-29

NO. DESSIN / DRAWING NO. 65-416-270-200

NO. PROJET / PROJECT NO.	REVISION	FEUILLE / SHT
6515	0	1 / 1

AE-CART-ARCH D

\\CAMTL1DATD1\projets\2015\1\151-06440-40\Genie Nordique\Dao\65-416-270-200_R0.dwg

FILE NO. 65-416-270-200_R0.dwg

NO. DESSIN DRAWING NO. 65-416-270-201

FORMAT ARCHD

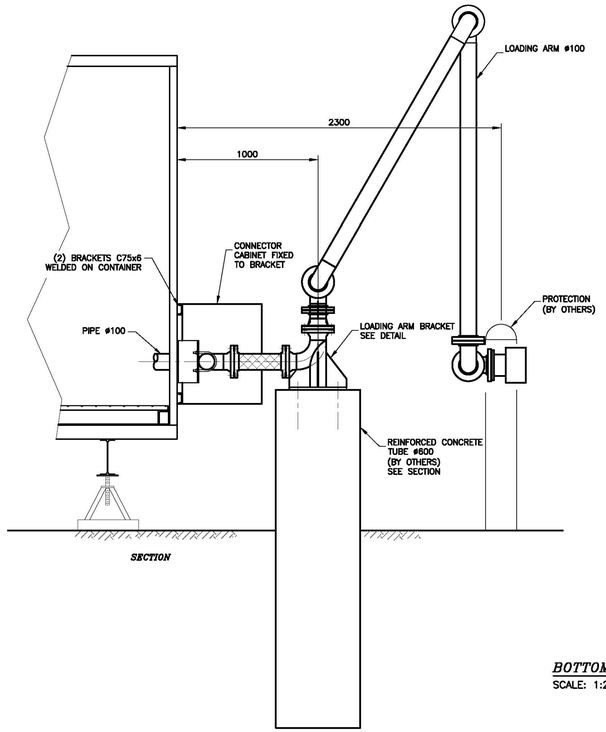

SECTION

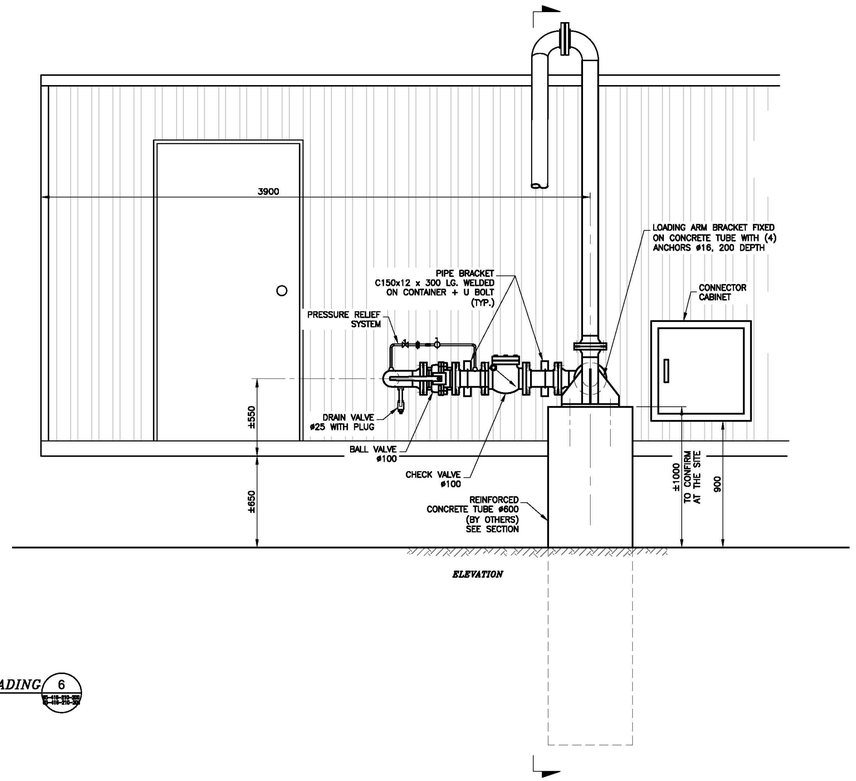

ELEVATION

BOTTOM LOADING 6
SCALE: 1:20

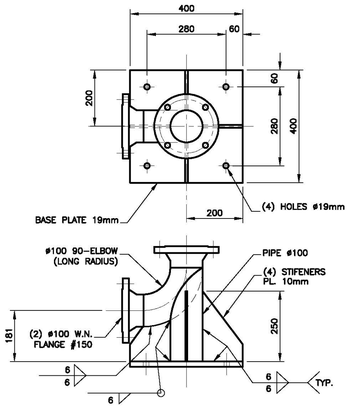

LOADING ARM BRACKET 7
SCALE: 1:10

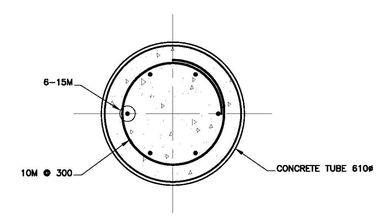

CONCRETE TUBE SECTION 8
SCALE: 1:10

Replaces drawing 65-403-270-201

POUR CONSTRUCTION
FOR CONSTRUCTION
AGNICO EAGLE
DATE : 2017-05-31

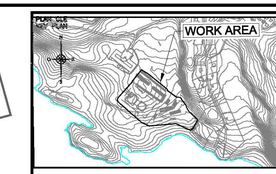

WSP
1075, 3e AVENUE EST
VAL-D'OR (QUEBEC) CANADA J9P 0J7
TEL. : 819 825-4274 | TELEC. : 819 824-1514 | WWW.WSPGROUP.COM
Ref. 151-06440-40

NOTES GENERALES / GENERAL NOTES

L'INFORMATION CI-CONTENUE EST LA PROPRIETE DE AGNICO EAGLE LTEE ET NOT ETRE DEVELOPEE SUR DEMANDE, SANS AUTORISATION ECRITE PRECALABLE, TOUTE TRANSMISSION DE COPIE(S) A AUTRUI ET TOUTE UTILISATION AUTRE QUE CELLE POUR LAQUELLE L'INFORMATION EST PRETEE SONT INTERDITES. © AGNICO EAGLE LTEE

THE INFORMATION HERE ON IS THE PROPERTY OF AGNICO EAGLE LTD. AND MUST BE RETURNED UPON REQUEST. WITHOUT WRITTEN PERMISSION, ANY COPYING TRANSMITTAL TO OTHERS AND ANY USE EXCEPT THAT FOR WHICH IT IS LOANED ARE PROHIBITED. © AGNICO EAGLE LTD.

DESSINS EN REFERENCE / REFERENCE DRAWINGS

TITRE / TITLE	# DWG

AGNICO EAGLE

REV.	DATE	DESCRIPTION	PAR/BY	APP.	CLIENT
0	2017-05-31	ISSUED FOR CONSTRUCTION	J.M.	D.T.	

REVISIONS

TITRE / TITLE
AGNICO EAGLE – MELIADINE DIVISION
416 – FUEL TANK FARM
270 – PIPING
FUEL DISTRIBUTION
DETAILS

DESSINE PAR DRAWN BY	G. CORNUT	DATE 2017-05-29
VERIFIE PAR CHECKED BY	J. MORLIÈRE, tech.	2017-05-29
APPROUVE PAR APPROVED BY	D. THIBODEAU, P. Eng.	2017-05-29
ECHELLE SCALE	INDICATED	DATE 2017-05-29
NO. DESSIN DRAWING NO.	65-416-270-201	
NO. PROJET PROJECT NO.	6515	REVISION 0 / FEUILLE / SHT 1/1

AE-CART-ARCH D

\\CAMTL1DAT01\projets\2015\1\151-06440-40\Genie Nordique\Dco\65-416-270-201_R0.dwg

FILE NO. 65-416-270-201_R0.dwg

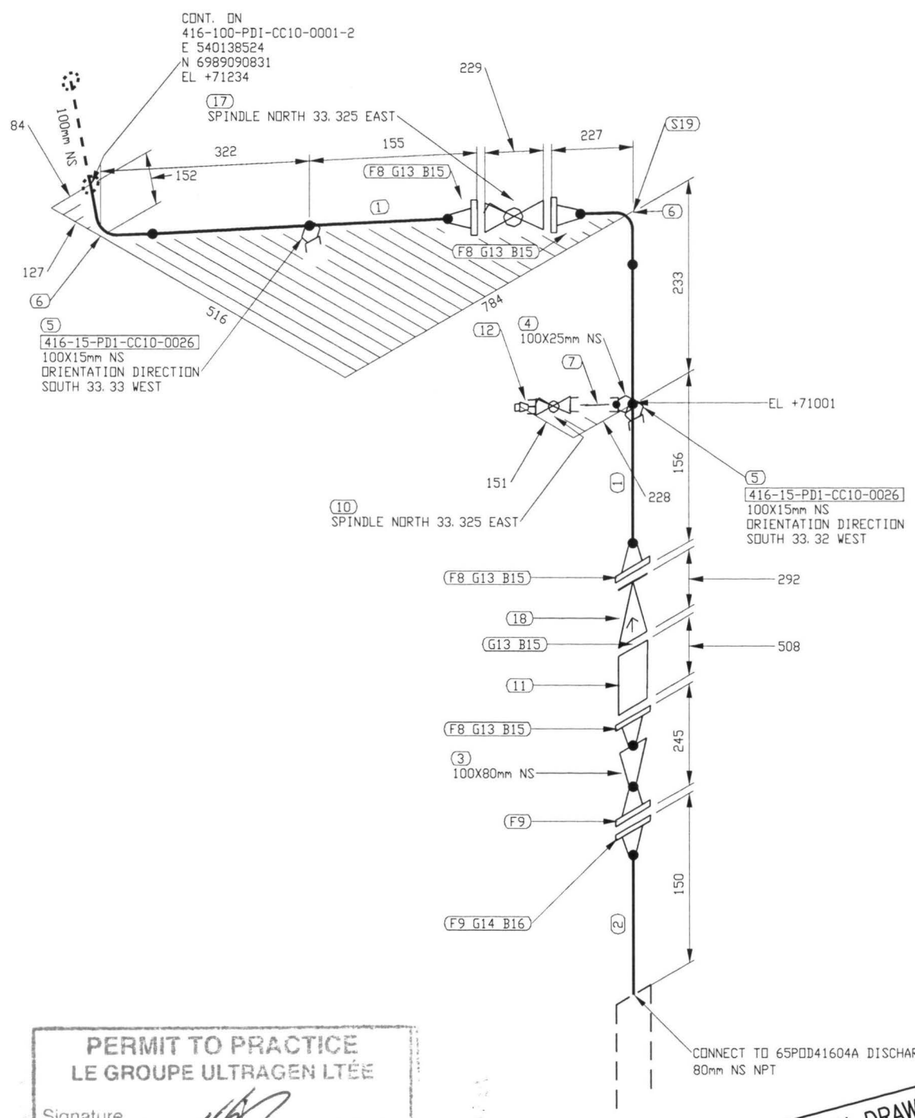

LISTE DE MATERIEL

No	QTE	DIA	MATERIEL/CATALOGUE	DESCRIPTION
1	413 MM	100	A 333 Gr. 6	SCH STD, SMLS PIPE
2	82 MM	80	A 333 Gr. 6	SCH STD, SMLS PIPE POExTOE
3	1	100X80	A 420 Gr. WPL6	SCH STD x 80, BW CONC RED
4	1	100X25	A 350 Gr. LF2	CL 3000, SOCKOLET
5	2	100X15	A 350 Gr. LF2	CL 3000, THREDOLET
6	2	100	A 420 Gr. WPL6	SCH STD, BW LR 90 DEG ELBOW
7	1	25	A 333 Gr. 6	SCH 80, NIPPLE x 75mm LG POExTOE
8	4	100	A 350 Gr. LF2	CL 150, SCH STD, RF, WN FLANGE
9	2	80	A 350 Gr. LF2	CL 150, SCH STD, RF, WN FLANGE
10	1	25	BA-32	CL 600, THRD, BALL VALVE
11	1	100		CL 150, SINGLE BRAIDED HOSE ASSEMBLY
12	1	25	A 350 Gr. LF2	MNPT SOLID STL BULL PLUG
13	5	100	ASME B16.20	CL 150, GARLOCK 5500, RING TYPE GASKET 1/8" THK
14	1	80	ASME B16.20	CL 150, GARLOCK 5500, RING TYPE GASKET 1/8" THK
15	40	16	A 193 B7/A 194 2H	CL 150, 8 - 15.875 X 90 STUD BOLTS c/w TWO HEAVY HEX NUTS
16	4	16	A 193 B7/A 194 2H	CL 150, 4 - 15.875 X 90 STUD BOLTS c/w TWO HEAVY HEX NUTS
17	1	100	BA-31	CL 150, RF, BALL VALVE
18	1	100	CK-29	CL 150, RF, SWING CHECK VALVE
19	1	100		PIPE SUPPORT BY CONTRACTOR

REGISTERED PROFESSIONAL ENGINEER
D. TRUONG
LICENSEE
NT/NU
2017/10/05

PERMIT TO PRACTICE
LE GROUPE ULTRAGEN LTÉE
Signature
Date OCT 04 2017
PERMIT NUMBER: P 1180
NT/NU Association of Professional Engineers and Geoscientists

FABRICATION DRAWINGS BASED ON WSP CERTIFIED ENGINEERING

No.	DATE	REVISION	PAR / APP.
1	2017/09/29	LINE NUMBERS REVISED	QVN
0	2017/06/30	ISSUED FOR CONSTRUCTION	QVN

CLIENT: AGNICO EAGLE

NUQSANA PROMEC MINING SERVICES INC.

ultragen Our expertise...Your success

CONSULTANT PROJECT NO. 591700

SCEAU PROFESSIONNEL

CONC.: KHV
DATE: 2017/05/29
DESSINÉ PAR: KVE
DATE: 2017/05/29
VÉR. PAR:
DATE:
APP.:
DATE:
ÉCHELLE: AUCUNE

PROJET: AGNICO EAGLE - MELIADINE DIVISION
416 - FUEL TANK FARM

TITRE: PORTAL #1
FABRICATION ISOMETRIC
FUEL FROM 65POD41604A/B TO 65TNK41607 & 65TNK41608

No PROJET	No DESSIN	PAGES	RÉV.
6515	416-100-PDI-CC10-0001	1/12	1

NO. DE CONDUITE		SPECIFICATION	PRODUIT	SYSTEME REVETEMENT	CODE DE COULEUR	ISOLATION ET TRACAGE	EPAISS. D'ISOLATION		
416-100-PDI-CC10-0001		CC10	PDI					65-416-270-200	PIPE SUPPORT DETAILS
PRESSION D'OPERATION	TEMPERATURE D'OPERATION	PRESSION DE CONCEPTION	TEMPERATURE DE CONCEPTION	PRESSION D'ESSAI	CLASSE D'INSPECTION	CODE DE SERVICE	TRAITEMENT THERMIQUE	65-416-205-200	P&ID
PSIG	°F	PSIG	°F	PSIG				No. DESSIN	DESSINS DE REFERENCE

FICHIER: \\ultragen.local\Ultragen-Dessin\Agnico Eagle\Meliadine\591700 (Fuel Distribution)\05. Dessins\02. Tuyauterie\02. Isométriques\02. 403P-100-PDI-CC10-0001-1.DWG

IMPRIMÉ LE: Sep 28, 2017, 1:36pm

416-MN-01, 416-MN-02

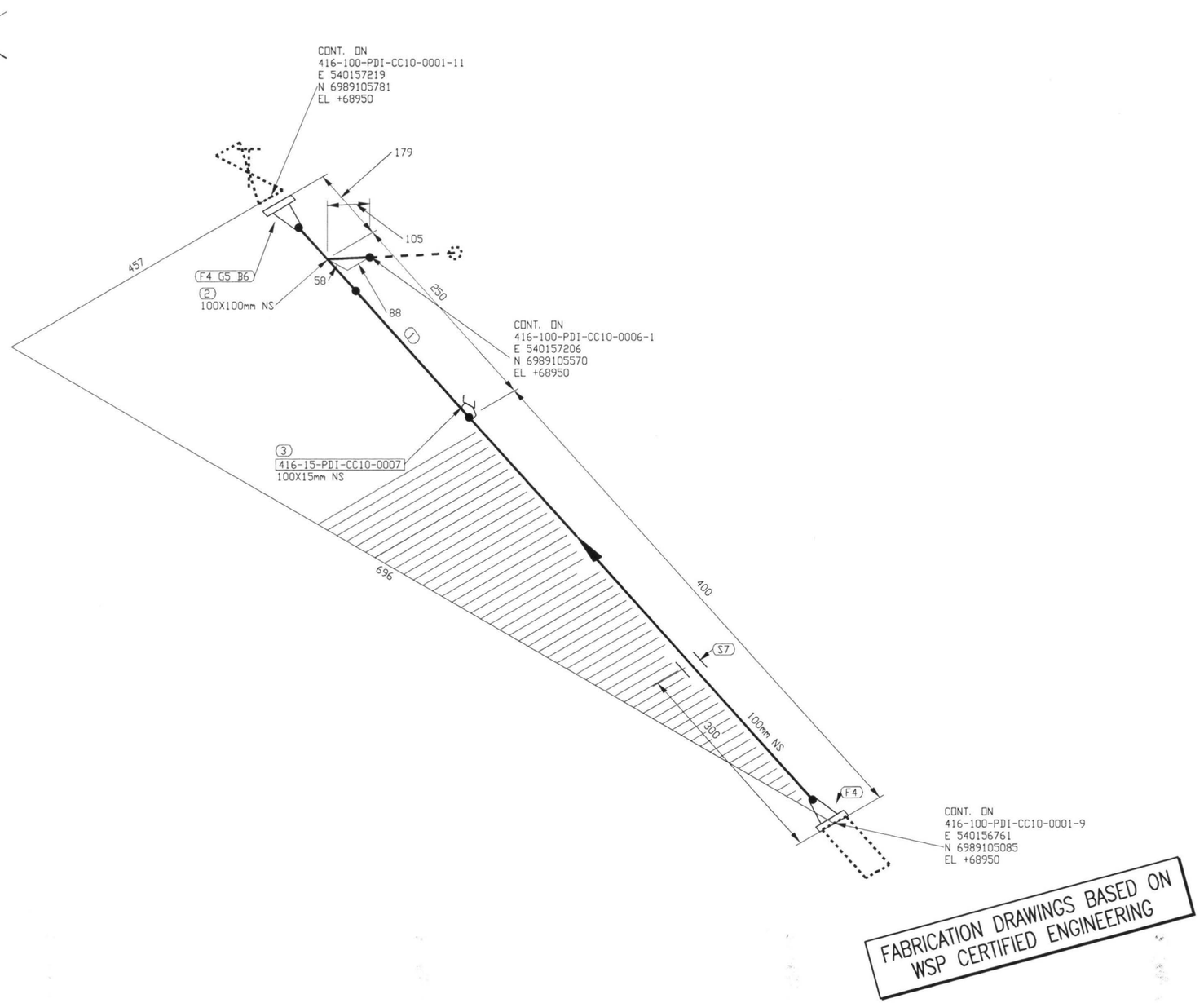

FABRICATION DRAWINGS BASED ON WSP CERTIFIED ENGINEERING

LISTE DE MATERIEL

No	QTE	DIA	MATERIEL/CATALOGUE	DESCRIPTION
1	470 MM	100	A 333 Gr. 6	SCH STD, SMLS PIPE
2	1	100X100	A 420 Gr. WPL6	SCH STD, BW STRAIGHT TEE
3	1	100X15	A 350 Gr. LF2	CL 3000, THREDOLET
4	2	100	A 350 Gr. LF2	CL 150, SCH STD, RF, WN FLANGE
5	1	100	ASME B16.20	CL 150, GARLOCK 5500, RING TYPE GASKET 1/8" THK
6	8	16	A 193 B7/A 194 2H	CL 150, 8 - 15.875 X 90 STUD BOLTS c/w TWO HEAVY HEX NUTS
7	1	100		PIPE SUPPORT AS PER DETAIL 3, DWG: 65-416-270-200

REGISTERED PROFESSIONAL ENGINEER
D. TRUONG
LICENSEE
NT/NU
2017/10/05

PERMIT TO PRACTICE
LE GROUPE ULTRAGEN LTÉE
Signature
Date OCT 04 2017
PERMIT NUMBER: P 1180
NT/NU Association of Professional Engineers and Geoscientists

No.	DATE	REVISION	APP.
1	2017/09/29	LINE NUMBERS REVISED	QVN
0	2017/06/30	ISSUED FOR CONSTRUCTION	QVN

CLIENT: AGNICO EAGLE

NUQSANA PROMEC MINING SERVICES INC.

ultragen

CONSULTANT PROJECT NO. 591700

SCEAU PROFESSIONNEL

CONC.: KHV
DATE: 2017/05/29
DESSINÉ PAR: KVE
DATE: 2017/05/29
VÉR. PAR:
DATE:
APP.:
DATE:
ÉCHELLE: AUCUNE

PROJET: AGNICO EAGLE - MELIADINE DIVISION
416 - FUEL TANK FARM

TITRE: PORTAL #1
FABRICATION ISOMETRIC
FUEL FROM 65POD41604A/B TO 65TNK41607 & 65TNK41608

No PROJET	No DESSIN	PAGES	RÉV.
6515	416-100-PDI-CC10-0001	10/12	1

NO. DE CONDUITE		SPECIFICATION	PRODUIT	SYSTEME REVETEMENT	CODE DE COULEUR	ISOLATION ET TRACAGE	EPAISS. D'ISOLATION		
416-100-PDI-CC10-0001		CC10	PDI					65-416-270-200	PIPE SUPPORT DETAILS
PRESSION D'OPERATION	TEMPERATURE D'OPERATION	PRESSION DE CONCEPTION	TEMPERATURE DE CONCEPTION	PRESSION D'ESSAI	CLASSE D'INSPECTION	CODE DE SERVICE	TRAITEMENT THERMIQUE	65-416-205-200	P&ID
PSIG	°F	PSIG	°F	PSIG				No. DESSIN	DESSINS DE REFERENCE

FICHIER: \\ultragen.local\Ultragen-Dessin\Agnico Eagle\Meliadine\591700 (Fuel Distribution)\05. Dessins\02. Tuyauterie\02. Isométriques\02. 403P-100-PDI-CC10-0001-10.DWG

IMPRIMÉ LE: Sep 28, 2017, 1:37pm

416-MN-01, 416-MN-02

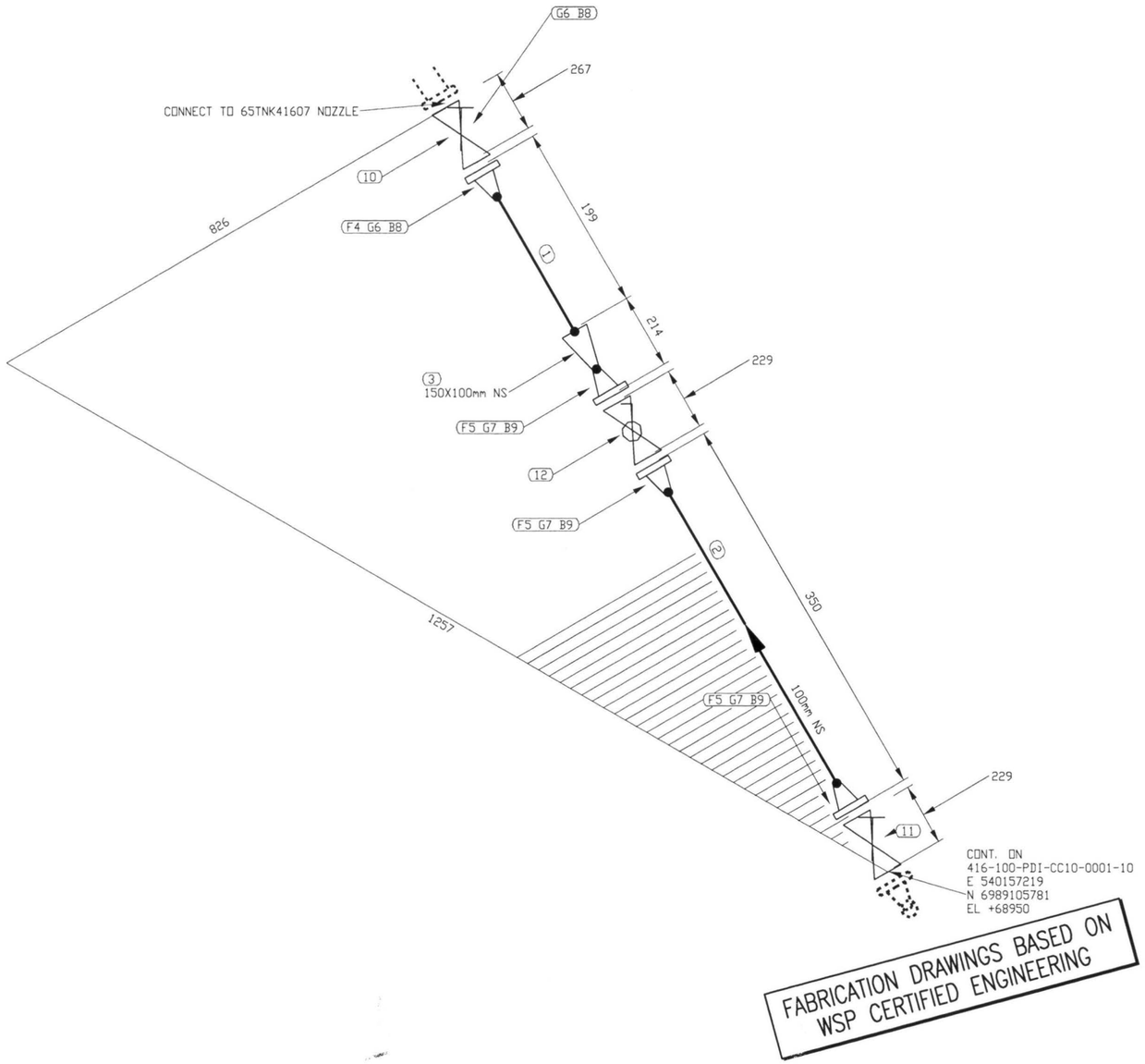

LISTE DE MATERIEL

No	QTE	DIA	MATERIEL/CATALOGUE	DESCRIPTION
1	111 MM	150	A 333 Gr. 6	SCH STD, SMLS PIPE
2	200 MM	100	A 333 Gr. 6	SCH STD, SMLS PIPE
3	1	150X100	A 420 Gr. WPL6	SCH STD, BW CONC RED
4	1	150	A 350 Gr. LF2	CL 150, SCH STD, RF, WN FLANGE
5	3	100	A 350 Gr. LF2	CL 150, SCH STD, RF, WN FLANGE
6	2	150	ASME B16.20	CL 150, GARLOCK 5500, RING TYPE GASKET 1/8" THK
7	3	100	ASME B16.20	CL 150, GARLOCK 5500, RING TYPE GASKET 1/8" THK
8	16	19	A 193 B7/A 194 2H	CL 150, 8 - 19.05 X 100 STUD BOLTS c/w TWO HEAVY HEX NUTS
9	24	16	A 193 B7/A 194 2H	CL 150, 8 - 15.875 X 90 STUD BOLTS c/w TWO HEAVY HEX NUTS
10	1	150	GA-10	CL 150, RF, GATE VALVE
11	1	100	GA-10	CL 150, RF, GATE VALVE
12	1	100	BA-31	CL 150, RF, BALL VALVE

REGISTERED PROFESSIONAL ENGINEER
D. TRUONG
LICENSEE
NT/NU
2017/10/05

PERMIT TO PRACTICE
LE GROUPE ULTRAGEN LTÉE
Signature
Date OCT 04 2017
PERMIT NUMBER: P 1180
NT/NU Association of Professional Engineers and Geoscientists

No.	DATE	REVISION	PAR / APP.
1	2017/09/29	LINE NUMBERS REVISED	QVN
0	2017/06/30	ISSUED FOR CONSTRUCTION	QVN

CLIENT: AGNICO EAGLE

NUQSANA PROMEC MINING SERVICES INC.

ultragen

CONSULTANT PROJECT NO. 591700

SCEAU PROFESSIONNEL

CONC.: KHV
DATE: 2017/05/29
DESSINÉ PAR: KVE
DATE: 2017/05/29
VÉR. PAR:
DATE:
APP.:
DATE:
ÉCHELLE: AUCUNE

PROJET: AGNICO EAGLE - MELIADINE DIVISION
416 - FUEL TANK FARM

TITRE: PORTAL #1
FABRICATION ISOMETRIC
FUEL FROM 65POD41604A/B TO 65TNK41607 & 65TNK41608

No PROJET	No DESSIN	PAGES	RÉV.
6515	416-100-PDI-CC10-0001	11/12	1

NO. DE CONDUITE		SPECIFICATION	PRODUIT	SYSTEME REVETEMENT	CODE DE COULEUR	ISOLATION ET TRACAGE	EPAISS. D'ISOLATION		
416-100-PDI-CC10-0001		CC10	PDI					65-416-270-200	PIPE SUPPORT DETAILS
PRESSION D'OPERATION	TEMPERATURE D'OPERATION	PRESSION DE CONCEPTION	TEMPERATURE DE CONCEPTION	PRESSION D'ESSAI	CLASSE D'INSPECTION	CODE DE SERVICE	TRAITEMENT THERMIQUE	65-416-205-200	P&ID
PSIG	°F	PSIG	°F	PSIG				No. DESSIN	DESSINS DE REFERENCE

FICHIER: \\ultragen.local\Ultragen-Dessin\Agnico Eagle\Meliadine\591700 (Fuel Distribution)\05. Dessins\02. Tuyauterie\02. 403P-100-PDI-CC10-0001-11.DWG

IMPRIMÉ LE: Sep 28, 2017, 1:37pm

416-MN-01, 416-MN-02

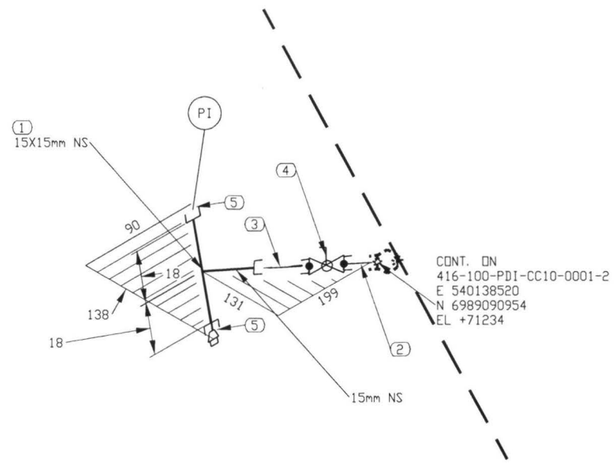

FABRICATION DRAWINGS BASED ON WSP CERTIFIED ENGINEERING

LISTE DE MATERIEL

No	QTE	DIA	MATERIEL/CATALOGUE	DESCRIPTION
1	1	15X15	A 350 Gr. LF2	CL 3000, THRD STRAIGHT TEE
2	1	15	A 333 Gr. 6	SCH 80, NIPPLE x 75mm LG PBE
3	1	15	A 333 Gr. 6	SCH 80, NIPPLE x 75mm LG PDExTDE
4	1	15	BA-29	CL 600, SW, BALL VALVE
5	2	15	A 350 Gr. LF2	MNPT SOLID STL BULL PLUG

REGISTERED PROFESSIONAL ENGINEER
D. TRUONG
LICENSEE
NT/NU
2017/10/05

PERMIT TO PRACTICE
LE GROUPE ULTRAGEN LTÉE
Signature
Date OCT 04 2017
PERMIT NUMBER: P 1180
NT/NU Association of Professional Engineers and Geoscientists

No.	DATE	REVISION	PAR / APP.
1	2017/09/29	LINE NUMBERS REVISED	QVN
0	2017/06/30	ISSUED FOR CONSTRUCTION	QVN

CLIENT: AGNICO EAGLE

NUQSANA PROMEC MINING SERVICES INC.

ultragen

CONSULTANT PROJECT NO. 591700

SCEAU PROFESSIONNEL

CONC.: KHV
DATE: 2017/05/29
DESSINÉ PAR: KVE
DATE: 2017/05/29
VÉR. PAR:
DATE:
APP.:
DATE:
ÉCHELLE: AUCUNE

PROJET: AGNICO EAGLE - MELIADINE DIVISION
416 - FUEL TANK FARM

TITRE: PORTAL #1
FABRICATION ISOMETRIC
FUEL FROM 65PDD41604A/B TO 65TNK41607 & 65TNK41608

No PROJET	No DESSIN	PAGES	RÉV.
6515	416-100-PDI-CC10-0001	12/12	1

NO. DE CONDUITE		SPECIFICATION	PRODUIT	SYSTEME REVETEMENT	CODE DE COULEUR	ISOLATION ET TRACAGE	EPAISS. D'ISOLATION		
416-100-PDI-CC10-0001		CC10	PDI					65-416-270-200	PIPE SUPPORT DETAILS
PRESSION D'OPERATION	TEMPERATURE D'OPERATION	PRESSION DE CONCEPTION	TEMPERATURE DE CONCEPTION	PRESSION D'ESSAI	CLASSE D'INSPECTION	CODE DE SERVICE	TRAITEMENT THERMIQUE	65-416-205-200	P&ID
PSIG	°F	PSIG	°F	PSIG				No. DESSIN	DESSINS DE REFERENCE

FICHIER: \\ultragen.local\Ultragen-Dessin\Agnico Eagle\Meliadine\591700 (Fuel Distribution)\05 Dessins\02 Tuyauterie\02 Isométriques\02 403P-100-PDI-CC10-0001-12.DWG

IMPRIMÉ LE: Sep 28, 2017, 1:37pm

416-MN-01, 416-MN-02

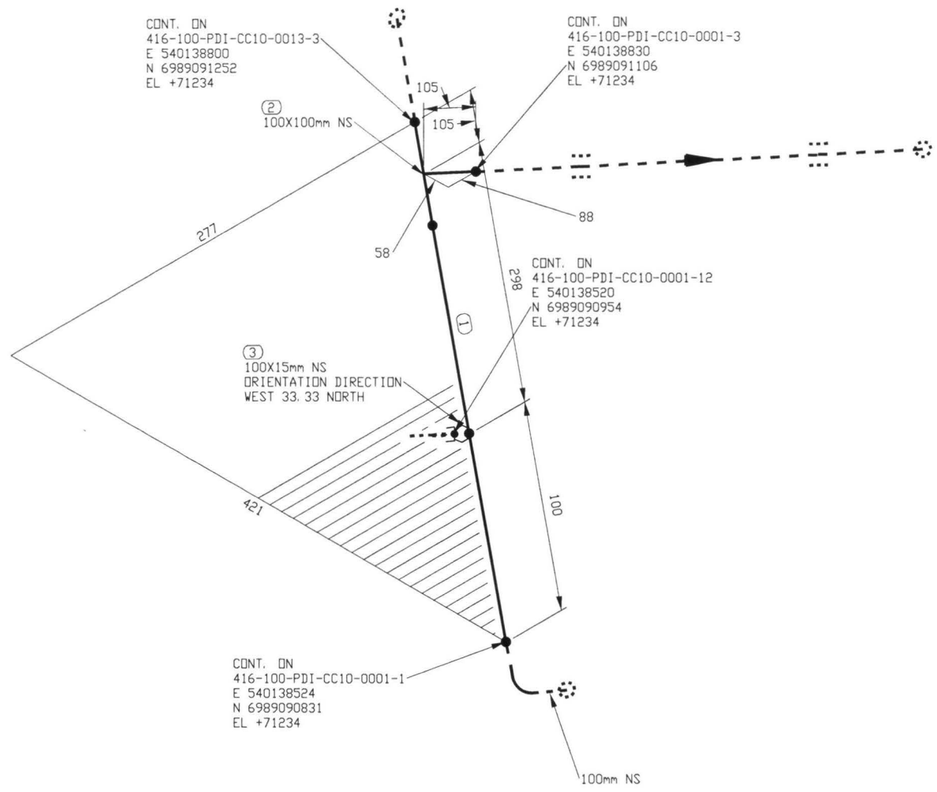

FABRICATION DRAWINGS BASED ON WSP CERTIFIED ENGINEERING

LISTE DE MATERIEL

No	QTE	DIA	MATERIEL/CATALOGUE	DESCRIPTION
1	293 MM	100	A 333 Gr. 6	SCH STD, SMLS PIPE
2	1	100X100	A 420 Gr. WPL6	SCH STD, BW STRAIGHT TEE
3	1	100X15	A 350 Gr. LF2	CL 3000, SOCKOLET

REGISTERED PROFESSIONAL ENGINEER
D. TRUONG
LICENSEE
NT/NU
2017/10/05

PERMIT TO PRACTICE
LE GROUPE ULTRAGEN LTÉE
Signature
Date OCT 04 2017
PERMIT NUMBER: P 1180
NT/NU Association of Professional Engineers and Geoscientists

No.	DATE	REVISION	PAR / APP.
1	2017/09/29	LINE NUMBERS REVISED	QVN
0	2017/06/30	ISSUED FOR CONSTRUCTION	QVN

CLIENT: AGNICO EAGLE

NUQSANA PROMEC MINING SERVICES INC.

ultragen

CONSULTANT PROJECT NO. 591700

NO. DE CONDUITE		SPECIFICATION	PRODUIT	SYSTEME REVETEMENT	CODE DE COULEUR	ISOLATION ET TRACAGE	EPAISS. D'ISOLATION		
416-100-PDI-CC10-0001		CC10	PDI					65-416-270-200	PIPE SUPPORT DETAILS
PRESSION D'OPERATION	TEMPERATURE D'OPERATION	PRESSION DE CONCEPTION	TEMPERATURE DE CONCEPTION	PRESSION D'ESSAI	CLASSE D'INSPECTION	CODE DE SERVICE	TRAITEMENT THERMIQUE	65-416-205-200	P&ID
PSIG	°F	PSIG	°F	PSIG				No. DESSIN	DESSINS DE REFERENCE

SCEAU PROFESSIONNEL

CONC.: KHV
DATE: 2017/05/29
DESSINÉ PAR: KVE
DATE: 2017/05/29
VÉR. PAR:
DATE:
APP.:
DATE:
ÉCHELLE: AUCUNE

PROJET: AGNICO EAGLE - MELIADINE DIVISION
416 - FUEL TANK FARM

TITRE: PORTAL #1
FABRICATION ISOMETRIC
FUEL FROM 65POD41604A/B TO 65TNK41607 & 65TNK41608

No PROJET	No DESSIN	PAGES	RÉV.
6515	416-100-PDI-CC10-0001	2/12	1

416-MN-01, 416-MN-02

FICHIER: \\ultragen.local\Ultragen-Dessin\Agnico Eagle\Meliadine\591700 (Fuel Distribution)\05. Dessins\02. Tuyauterie\02. Isométriques\02 403P-100-PDI-CC10-0001-2.DWG

IMPRIMÉ LE: Sep 28, 2017, 1:37pm

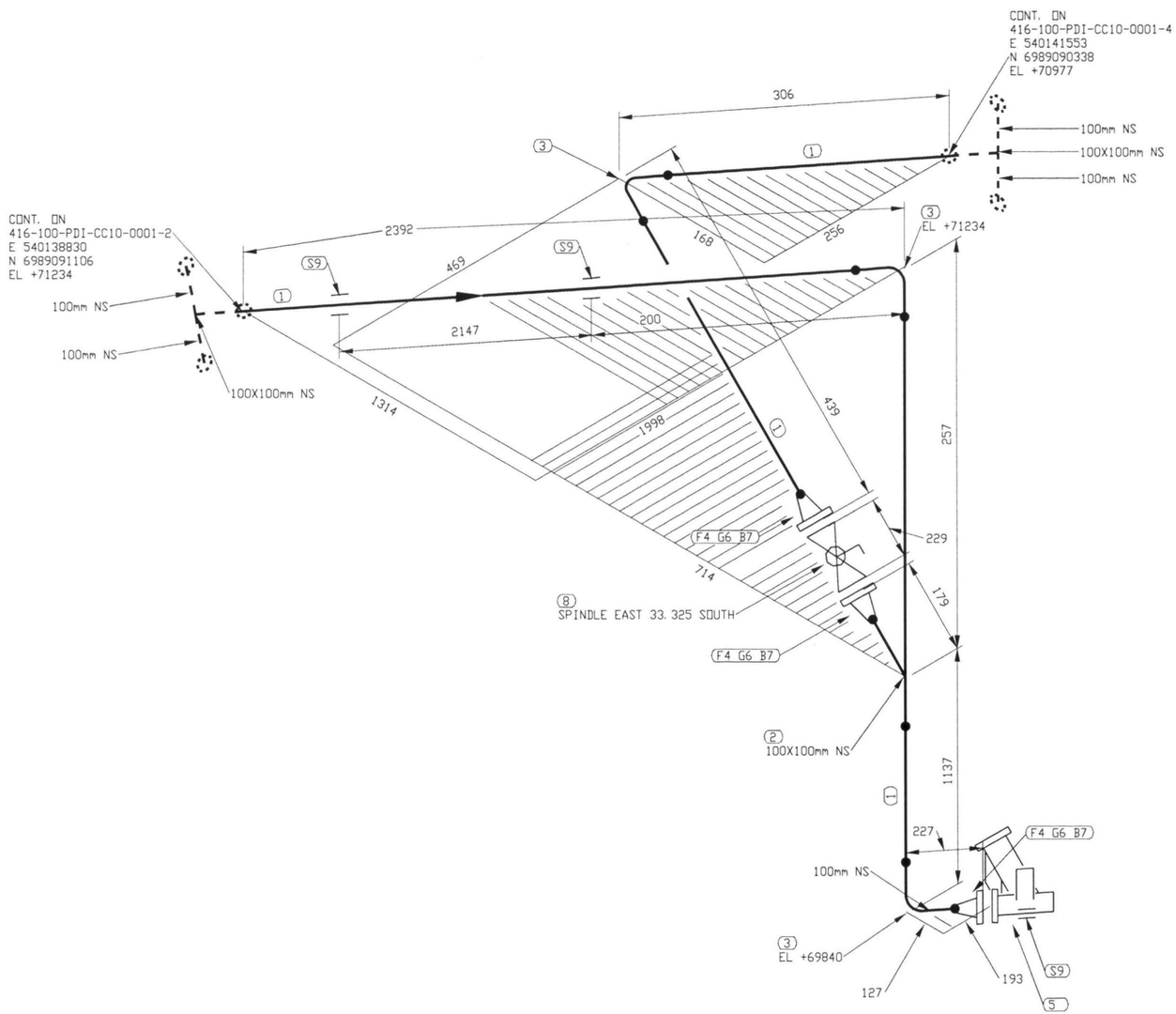

FABRICATION DRAWINGS BASED ON WSP CERTIFIED ENGINEERING

LISTE DE MATERIEL

No	QTE	DIA	MATERIEL/CATALOGUE	DESCRIPTION
1	3486 MM	100	A 333 Gr. 6	SCH STD, SMLS PIPE
2	1	100X100	A 420 Gr. WPL6	SCH STD, BW STRAIGHT TEE
3	3	100	A 420 Gr. WPL6	SCH STD, BW LR 90 DEG ELBOW
4	3	100	A 350 Gr. LF2	CL 150, SCH STD, RF, WN FLANGE
5	1	100	A 350 Gr. LF2	TCS METER UNIT
6	3	100	ASME B16.20	CL 150, GARLOCK 5500, RING TYPE GASKET 1/8" THK
7	24	16	A 193 B7/A 194 2H	CL 150, 8 - 15.875 X 90 STUD BOLTS c/w TWO HEAVY HEX NUTS
8	1	100	BA-31	CL 150, RF, BALL VALVE
9	3	100		PIPE SUPPORT BY CONTRACTOR

REGISTERED PROFESSIONAL ENGINEER
D. TRUONG
LICENSEE
NT/NU
2017/10/05

PERMIT TO PRACTICE
LE GROUPE ULTRAGEN LTÉE
Signature
Date OCT 04 2017
PERMIT NUMBER: P 1180
NT/NU Association of Professional Engineers and Geoscientists

No.	DATE	REVISION	
1	2017/09/29	LINE NUMBERS REVISED	QVN
0	2017/06/30	ISSUED FOR CONSTRUCTION	QVN

CLIENT: AGNICO EAGLE

NUQSANA PROMEC MINING SERVICES INC.

ultragen

CONSULTANT PROJECT NO. 591700

SCEAU PROFESSIONNEL

CONC.: KHV
DATE: 2017/05/29
DESSINÉ PAR: KVE
DATE: 2017/05/29
VÉR. PAR:
DATE:
APP.:
DATE:
ÉCHELLE: AUCUNE

PROJET: AGNICO EAGLE - MELIADINE DIVISION
416 - FUEL TANK FARM

TITRE: PORTAL #1
FABRICATION ISOMETRIC
FUEL FROM 65POD41604A/B TO 65TNK41607 & 65TNK41608

No PROJET	No DESSIN	PAGES	RÉV.
6515	416-100-PDI-CC10-0001	3/12	1

NO. DE CONDUITE		SPECIFICATION	PRODUIT	SYSTEME REVETEMENT	CODE DE COULEUR	ISOLATION ET TRACAGE	EPAISS. D'ISOLATION		
416-100-PDI-CC10-0001		CC10	PDI					65-416-270-200	PIPE SUPPORT DETAILS
PRESSION D'OPERATION	TEMPERATURE D'OPERATION	PRESSION DE CONCEPTION	TEMPERATURE DE CONCEPTION	PRESSION D'ESSAI	CLASSE D'INSPECTION	CODE DE SERVICE	TRAITEMENT THERMIQUE	65-416-205-200	P&ID
PSIG	°F	PSIG	°F	PSIG				No. DESSIN	DESSINS DE REFERENCE

FICHIER: \\ultragen.local\Ultragen-Dessin\Agnico Eagle\Meliadine\591700 (Fuel Distribution)\05. Dessins\02. Tuyauterie\02. Isométriques\02. 403P-100-PDI-CC10-0001-3.DWG

IMPRIMÉ LE: Sep 28, 2017, 1:37pm

416-MN-01, 416-MN-02

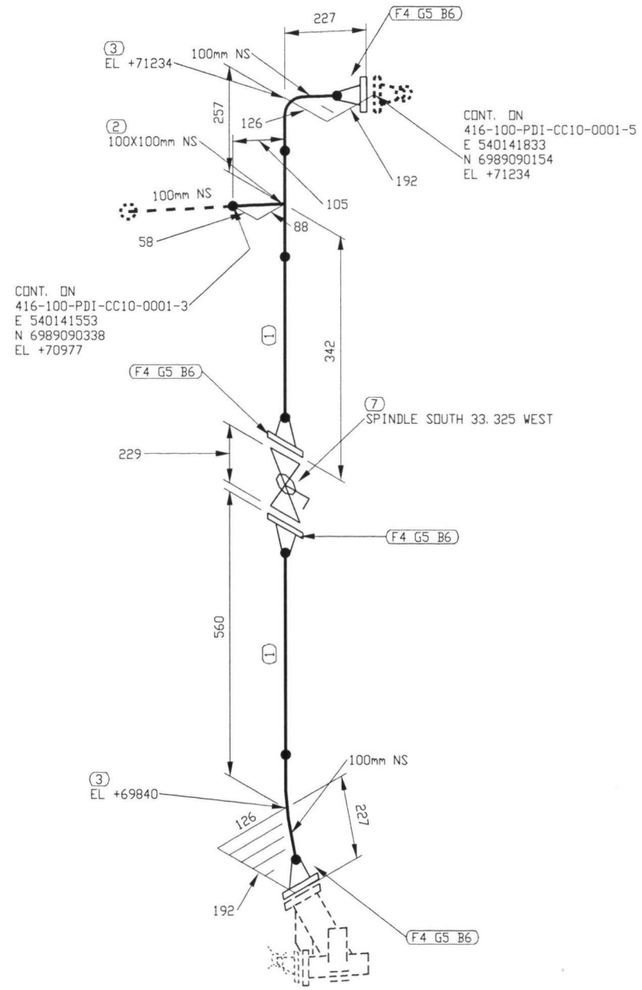

FABRICATION DRAWINGS BASED ON WSP CERTIFIED ENGINEERING

LISTE DE MATERIEL

No	QTE	DIA	MATERIEL/CATALOGUE	DESCRIPTION
1	495 MM	100	A 333 Gr. 6	SCH STD, SMLS PIPE
2	1	100X100	A 420 Gr. WPL6	SCH STD, BW STRAIGHT TEE
3	2	100	A 420 Gr. WPL6	SCH STD, BW LR 90 DEG ELBOW
4	4	100	A 350 Gr. LF2	CL 150, SCH STD, RF, WN FLANGE
5	4	100	ASME B16.20	CL 150, GARLOCK 5500, RING TYPE GASKET 1/8" THK
6	32	16	A 193 B7/A 194 2H	CL 150, 8 - 15.875 X 90 STUD BOLTS c/w TWO HEAVY HEX NUTS
7	1	100	BA-31	CL 150, RF, BALL VALVE

REGISTERED PROFESSIONAL ENGINEER
D. TRUONG
LICENSEE
NT/NU
2017/10/05

PERMIT TO PRACTICE
LE GROUPE ULTRAGEN LTÉE
Signature
Date OCT 04 2017
PERMIT NUMBER: P 1180
NT/NU Association of Professional Engineers and Geoscientists

No.	DATE	REVISION	PAR / APP.
1	2017/09/29	LINE NUMBERS REVISED	QVN
0	2017/06/30	ISSUED FOR CONSTRUCTION	QVN

CLIENT: AGNICO EAGLE

NUQSANA PROMEC MINING SERVICES INC.

ultragen

CONSULTANT PROJECT NO. 591700

SCEAU PROFESSIONNEL

CONC.: KHV
DATE: 2017/05/29
DESSINÉ PAR: KVE
DATE: 2017/05/29
VÉR. PAR:
DATE:
APP.:
DATE:
ÉCHELLE: AUCUNE

PROJET: AGNICO EAGLE - MELIADINE DIVISION
416 - FUEL TANK FARM

TITRE: PORTAL #1
FABRICATION ISOMETRIC
FUEL FROM 65POD41604A/B TO 65TNK41607 & 65TNK41608

No PROJET	No DESSIN	PAGES	RÉV.
6515	416-100-PDI-CC10-0001	4/12	1

NO. DE CONDUITE		SPECIFICATION	PRODUIT	SYSTEME REVETEMENT	CODE DE COULEUR	ISOLATION ET TRACAGE	EPAISS. D'ISOLATION		
416-100-PDI-CC10-0001		CC10	PDI					65-416-270-200	PIPE SUPPORT DETAILS
PRESSION D'OPERATION	TEMPERATURE D'OPERATION	PRESSION DE CONCEPTION	TEMPERATURE DE CONCEPTION	PRESSION D'ESSAI	CLASSE D'INSPECTION	CODE DE SERVICE	TRAITEMENT THERMIQUE	65-416-205-200	P&ID
PSIG	°F	PSIG	°F	PSIG				No. DESSIN	DESSINS DE REFERENCE

FICHIER: \\ultragen.local\Ultragen-Dessin\Agnico Eagle\Meliadine\591700 (Fuel Distribution)\05. Dessins\02. Tuyauterie\02. Isométriques\02. 403P-100-PDI-CC10-0001-4.DWG

IMPRIMÉ LE: Sep 28, 2017, 1:37pm

416-MN-01, 416-MN-02

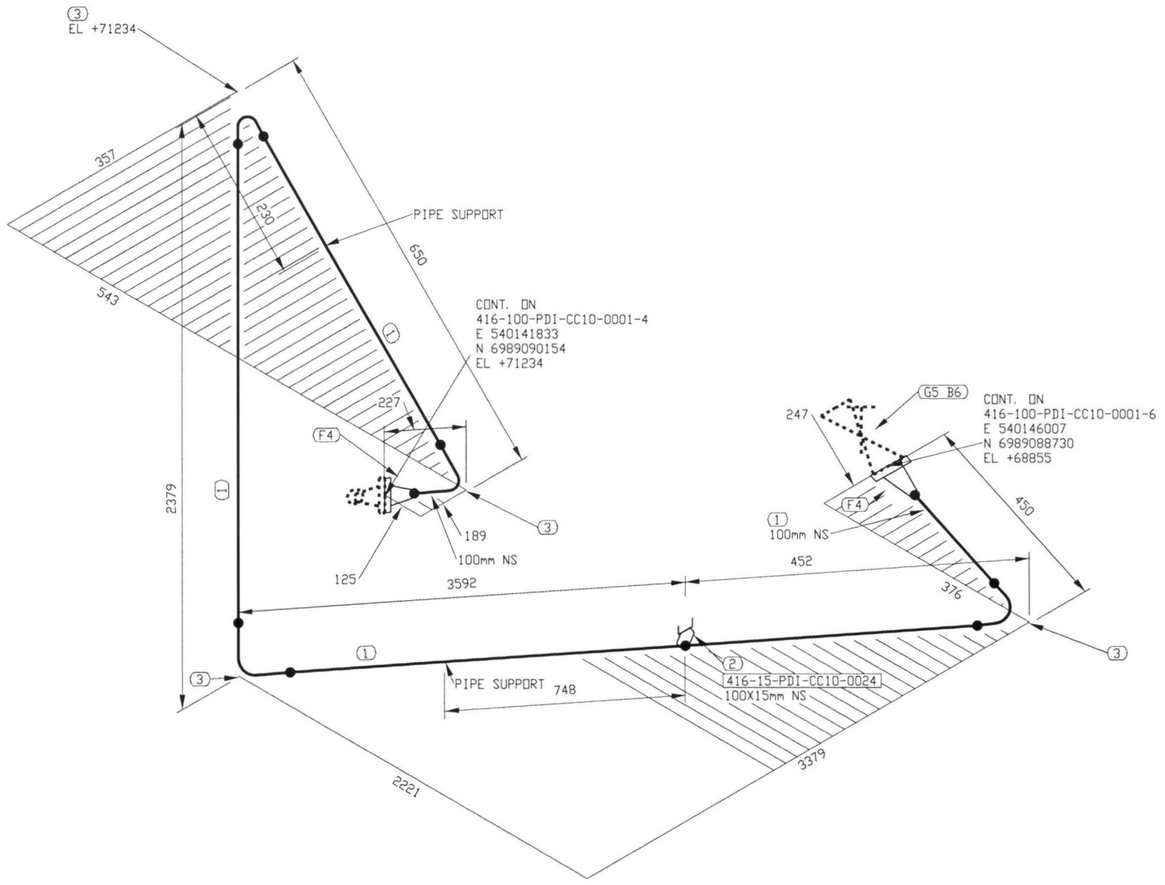

FABRICATION DRAWINGS BASED ON WSP CERTIFIED ENGINEERING

LISTE DE MATERIEL

No	QTE	DIA	MATERIEL/CATALOGUE	DESCRIPTION
1	6384 MM	100	A 333 Gr. 6	SCH STD, SMLS PIPE
2	1	100X15	A 350 Gr. LF2	CL 3000, THREDOLET
3	4	100	A 420 Gr. WPL6	SCH STD, BW LR 90 DEG ELBOW
4	2	100	A 350 Gr. LF2	CL 150, SCH STD, RF, WN FLANGE
5	1	100	ASME B16.20	CL 150, GARLOCK 5500, RING TYPE GASKET 1/8" THK
6	8	16	A 193 B7/A 194 2H	CL 150, 8 - 15.875 X 90 STUD BOLTS c/w TWO HEAVY HEX NUTS

REGISTERED PROFESSIONAL ENGINEER
D. TRUONG
LICENSEE
NT/NU
2017/10/05

PERMIT TO PRACTICE
LE GROUPE ULTRAGEN LTÉE
Signature
Date OCT 04 2017
PERMIT NUMBER: P 1189
NT/NU Association of Professional Engineers and Geoscientists

No.	DATE	REVISION	PAR / APP.
1	2017/09/29	LINE NUMBERS REVISED	QVN
0	2017/06/30	ISSUED FOR CONSTRUCTION	QVN

CLIENT: AGNICO EAGLE

NUQSANA PROMEC MINING SERVICES INC.

ultragen

CONSULTANT PROJECT NO. 591700

SCEAU PROFESSIONNEL

CONC.: KHV
DATE: 2017/05/29
DESSINÉ PAR: KVE
DATE: 2017/05/29
VÉR. PAR:
DATE:
APP.:
DATE:
ÉCHELLE: AUCUNE

PROJET: AGNICO EAGLE - MELIADINE DIVISION
416 - FUEL TANK FARM

TITRE: PORTAL #1
FABRICATION ISOMETRIC
FUEL FROM 65POD41604A/B TO 65TNK41607 & 65TNK41608

No PROJET	No DESSIN	PAGES	RÉV.
6515	416-100-PDI-CC10-0001	5/12	1

NO. DE CONDUITE		SPECIFICATION	PRODUIT	SYSTEME REVETEMENT	CODE DE COULEUR	ISOLATION ET TRACAGE	EPAISS. D'ISOLATION		
416-100-PDI-CC10-0001		CC10	PDI					65-416-270-200	PIPE SUPPORT DETAILS
PRESSION D'OPERATION	TEMPERATURE D'OPERATION	PRESSION DE CONCEPTION	TEMPERATURE DE CONCEPTION	PRESSION D'ESSAI	CLASSE D'INSPECTION	CODE DE SERVICE	TRAITEMENT THERMIQUE	65-416-205-200	P&ID
PSIG	°F	PSIG	°F	PSIG				No. DESSIN	DESSINS DE REFERENCE

FICHIER: \\ultragen.local\Ultragen-Dessin\Agnico Eagle\Meliadine\591700 (Fuel Distribution)\05. Dessins\02. Tuyauterie\02. Isométriques\02 403P-100-PDI-CC10-0001-5.DWG

IMPRIMÉ LE: Sep 28, 2017, 1:37pm

416-MN-01, 416-MN-02

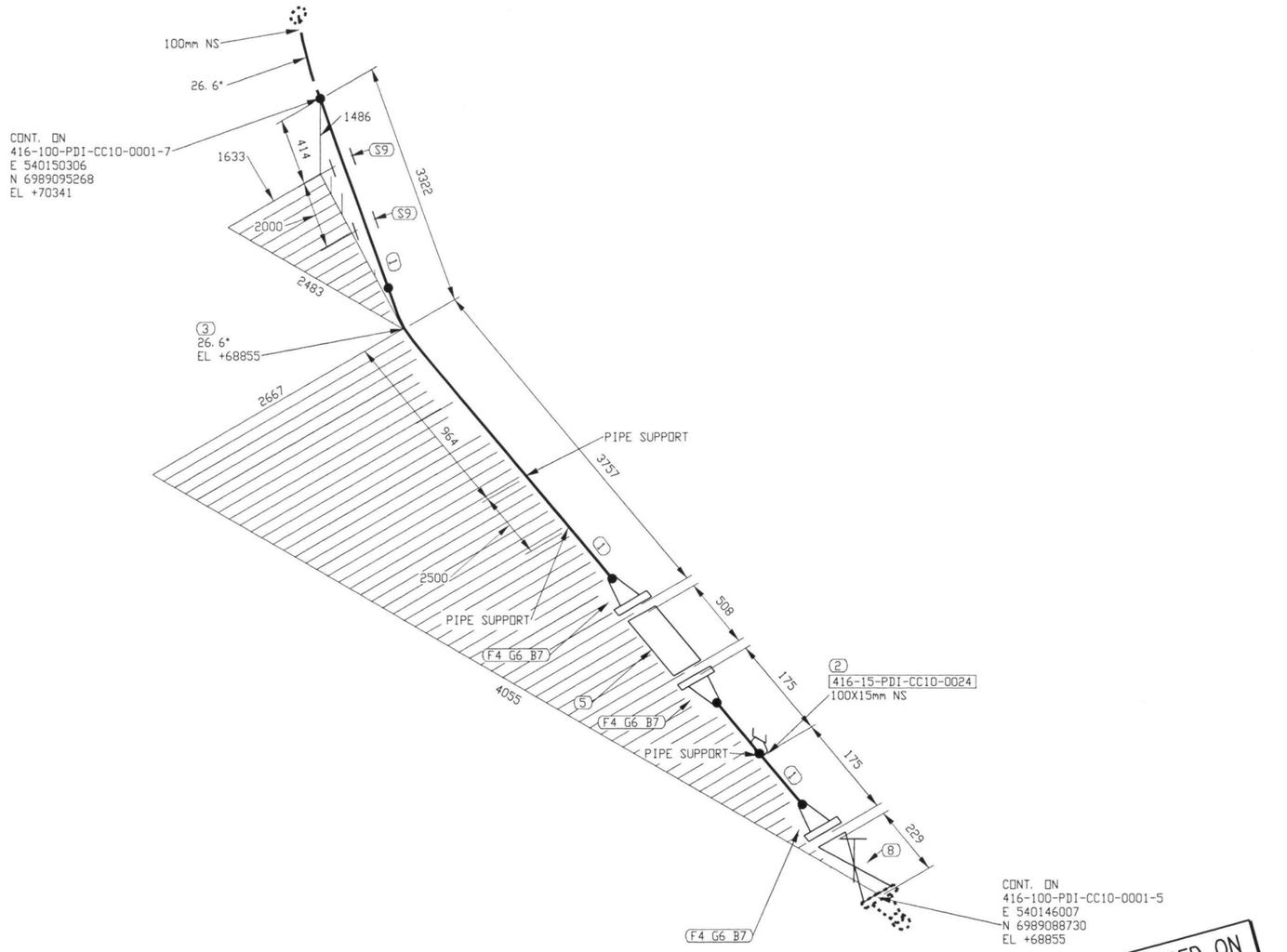

FABRICATION DRAWINGS BASED ON WSP CERTIFIED ENGINEERING

LISTE DE MATERIEL

No	QTE	DIA	MATERIEL/CATALOGUE	DESCRIPTION
1	6981 MM	100	A 333 Gr. 6	SCH STD, SMLS PIPE
2	1	100X15	A 350 Gr. LF2	CL 3000, THREDOLET
3	1	100	A 420 Gr. WPL6	SCH STD, BW LR 45 DEG ELBOW TRIM TO 26.57
4	3	100	A 350 Gr. LF2	CL 150, SCH STD, RF, WN FLANGE
5	1	100		CL 150, SINGLE BRAIDED HOSE ASSEMBLY
6	3	100	ASME B16.20	CL 150, GARLOCK 5500, RING TYPE GASKET 1/8" THK
7	24	16	A 193 B7/A 194 2H	CL 150, 8 - 15.875 X 90 STUD BOLTS c/w TWO HEAVY HEX NUTS
8	1	100	GA-10	CL 150, RF, GATE VALVE
9	2	100		PIPE SUPPORT AS PER DETAIL 3, DWG: 65-416-270-200

REGISTERED PROFESSIONAL ENGINEER
D. TRUONG
LICENSEE
NT/NU
2017/10/05

PERMIT TO PRACTICE
LE GROUPE ULTRAGEN LTÉE
Signature
Date OCT 04 2017
PERMIT NUMBER: P 1180
NT/NU Association of Professional Engineers and Geoscientists

No.	DATE	REVISION	APP.
1	2017/09/29	LINE NUMBERS REVISED	QVN
0	2017/06/30	ISSUED FOR CONSTRUCTION	QVN

CLIENT: AGNICO EAGLE

NUQSANA PROMEC MINING SERVICES INC.

ultragen

CONSULTANT PROJECT NO. 591700

SCEAU PROFESSIONNEL

CONC.: KHV	DATE: 2017/05/29
DESSINÉ PAR: KVE	DATE: 2017/05/29
VÉR. PAR:	DATE:
APP.:	DATE:
ÉCHELLE: AUCUNE	

PROJET: AGNICO EAGLE - MELIADINE DIVISION
416 - FUEL TANK FARM

TITRE: PORTAL #1
FABRICATION ISOMETRIC
FUEL FROM 65POD41604A/B TO 65TNK41607 & 65TNK41608

No PROJET	No DESSIN	PAGES	RÉV.
6515	416-100-PDI-CC10-0001	6/12	1

NO. DE CONDUITE		SPECIFICATION	PRODUIT	SYSTEME REVETEMENT	CODE DE COULEUR	ISOLATION ET TRACAGE	EPAISS. D'ISOLATION		
416-100-PDI-CC10-0001		CC10	PDI					65-416-270-200	PIPE SUPPORT DETAILS
PRESSION D'OPERATION	TEMPERATURE D'OPERATION	PRESSION DE CONCEPTION	TEMPERATURE DE CONCEPTION	PRESSION D'ESSAI	CLASSE D'INSPECTION	CODE DE SERVICE	TRAITEMENT THERMIQUE	65-416-205-200	P&ID
PSIG	°F	PSIG	°F	PSIG				No. DESSIN	DESSINS DE REFERENCE

FICHIER: \\ultragen.local\Ultragen-Dessin\Agnico Eagle\Meliadine\591700 (Fuel Distribution)\05. Dessins\02. Tuyauterie\02. Isométriques\02. 403P-100-PDI-CC10-0001-6.DWG

IMPRIMÉ LE: Sep 28, 2017, 1:37pm

416-MN-01, 416-MN-02

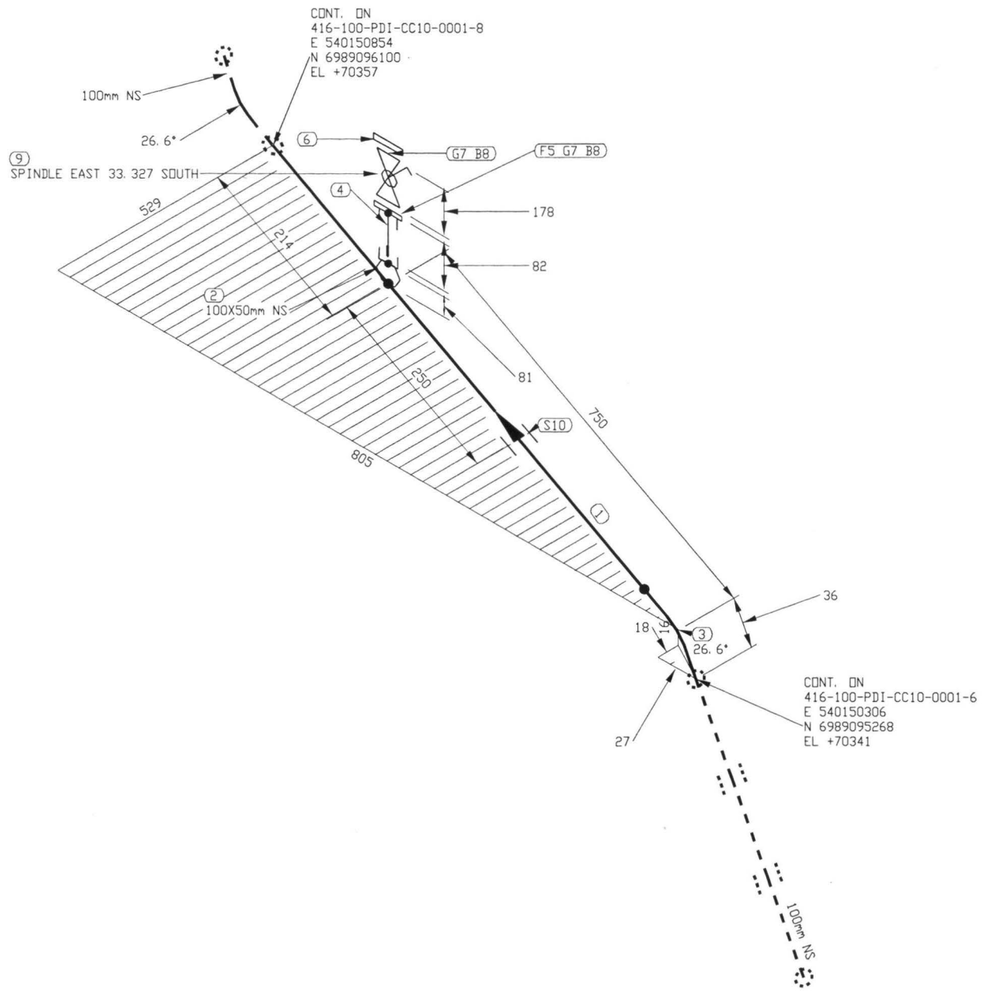

FABRICATION DRAWINGS BASED ON WSP CERTIFIED ENGINEERING

LISTE DE MATERIEL

No	QTE	DIA	MATERIEL/CATALOGUE	DESCRIPTION
1	928 MM	100	A 333 Gr. 6	SCH STD, SMLS PIPE
2	1	100X50	A 350 Gr. LF2	CL 3000, SOCKOLET
3	1	100	A 420 Gr. WPL6	SCH STD, BW LR 45 DEG ELBOW TRIM TO 26.57
4	1	50	A 333 Gr. 6	SCH 80, NIPPLE x 75mm LG PBE
5	1	50	A 350 Gr. LF2	CL 150, SCH 80, RF, SW FLANGE
6	1	50	A 350 Gr. LF2	CL 150, RF, BLIND FLANGE
7	2	50	ASME B16.20	CL 150, GARLOCK 5500, RING TYPE GASKET 1/8" THK
8	8	16	A 193 B7/A 194 2H	CL 150, 4 - 15.875 X 85 STUD BOLTS c/w TWO HEAVY HEX NUTS
9	1	50	BA-31	CL 150, RF, BALL VALVE
10	1	100		PIPE SUPPORT AS PER DETAIL 3, DWG: 65-416-270-200

REGISTERED PROFESSIONAL ENGINEER
D. TRUONG
LICENSEE
NT/NU
2017/10/05

PERMIT TO PRACTICE
LE GROUPE ULTRAGEN LTÉE
Signature
Date OCT 04 2017
PERMIT NUMBER: P 1180
NT/NU Association of Professional Engineers and Geoscientists

No.	DATE	REVISION	PAR / APP.
1	2017/09/29	LINE NUMBERS REVISED	QVN
0	2017/06/30	ISSUED FOR CONSTRUCTION	QVN

CLIENT:

AGNICO EAGLE

NUQSANA PROMEC MINING SERVICES INC.

ultragen

CONSULTANT PROJECT NO. 591700

NO. DE CONDUITE		SPECIFICATION	PRODUIT	SYSTEME REVETEMENT	CODE DE COULEUR	ISOLATION ET TRACAGE	EPAISS. D'ISOLATION		
416-100-PDI-CC10-0001		CC10	PDI					65-416-270-200	PIPE SUPPORT DETAILS
PRESSION D'OPERATION	TEMPERATURE D'OPERATION	PRESSION DE CONCEPTION	TEMPERATURE DE CONCEPTION	PRESSION D'ESSAI	CLASSE D'INSPECTION	CODE DE SERVICE	TRAITEMENT THERMIQUE	65-416-205-200	P&ID
PSIG	°F	PSIG	°F	PSIG				No. DESSIN	DESSINS DE REFERENCE

SCEAU PROFESSIONNEL

CONC.: KHV
DATE: 2017/05/29
DESSINÉ PAR: KVE
DATE: 2017/05/29
VÉR. PAR:
DATE:
APP.:
DATE:
ÉCHELLE: AUCUNE

PROJET: AGNICO EAGLE - MELIADINE DIVISION
416 - FUEL TANK FARM

TITRE: PORTAL #1
FABRICATION ISOMETRIC
FUEL FROM 65POD41604A/B TO 65TNK41607 & 65TNK41608

No PROJET	No DESSIN	PAGES	RÉV.
6515	416-100-PDI-CC10-0001	7/12	1

416-MN-01, 416-MN-02

FICHIER: \\ultragen.local\Ultragen-Dessin\Agnico Eagle\Meliadine\591700 (Fuel Distribution)\05. Dessins\02 Tuyauterie\02 Isométriques\02. 403P-100-PDI-CC10-0001-7.DWG

IMPRIMÉ LE: Sep 28, 2017, 1:37pm

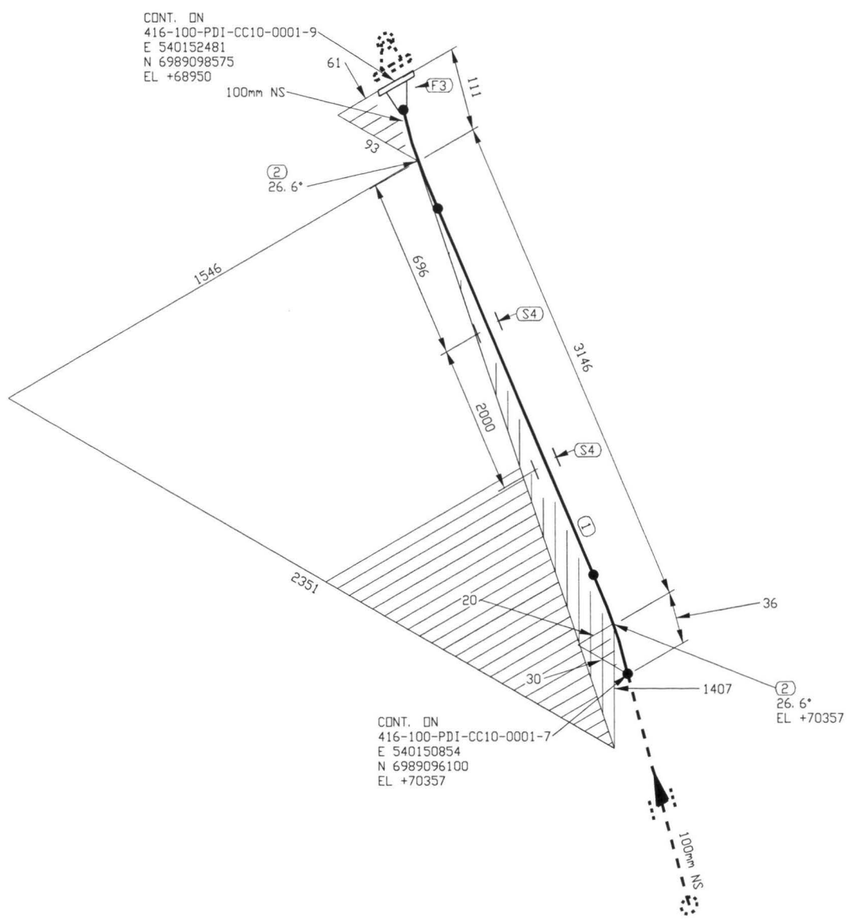

FABRICATION DRAWINGS BASED ON WSP CERTIFIED ENGINEERING

LISTE DE MATERIEL

No	QTE	DIA	MATERIEL/CATALOGUE	DESCRIPTION
1	3074 MM	100	A 333 Gr. 6	SCH STD, SMLS PIPE
2	2	100	A 420 Gr. WPL6	SCH STD, BW LR 45 DEG ELBOW TRIM TO 26.57
3	1	100	A 350 Gr. LF2	CL 150, SCH STD, RF, WN FLANGE
4	2	100		PIPE SUPPORT AS PER DETAIL 3, DWG: 65-416-270-200

REGISTERED PROFESSIONAL ENGINEER
D. TRUONG
LICENSEE
NT/NU
2017/10/05

PERMIT TO PRACTICE
LE GROUPE ULTRAGEN LTÉE
Signature
Date OCT 04 2017
PERMIT NUMBER: P 1180
NT/NU Association of Professional Engineers and Geoscientists

No.	DATE	REVISION	APP.
1	2017/09/29	LINE NUMBERS REVISED	QVN
0	2017/06/30	ISSUED FOR CONSTRUCTION	QVN

CLIENT: AGNICO EAGLE

NUQSANA PROMEC MINING SERVICES INC.

ultragen

CONSULTANT PROJECT NO. 591700

SCEAU PROFESSIONNEL

CONC.: KHV
DATE: 2017/05/29
DESSINÉ PAR: KVE
DATE: 2017/05/29
VÉR. PAR:
DATE:
APP.:
DATE:
ÉCHELLE: AUCUNE

PROJET: AGNICO EAGLE - MELIADINE DIVISION
416 - FUEL TANK FARM

TITRE: PORTAL #1
FABRICATION ISOMETRIC
FUEL FROM 65POD41604A/B TO 65TNK41607 & 65TNK41608

No PROJET	No DESSIN	PAGES	RÉV.
6515	416-100-PDI-CC10-0001	8/12	1

NO. DE CONDUITE		SPECIFICATION	PRODUIT	SYSTEME REVETEMENT	CODE DE COULEUR	ISOLATION ET TRACAGE	EPAISS. D'ISOLATION		
416-100-PDI-CC10-0001		CC10	PDI					65-416-270-200	PIPE SUPPORT DETAILS
PRESSION D'OPERATION	TEMPERATURE D'OPERATION	PRESSION DE CONCEPTION	TEMPERATURE DE CONCEPTION	PRESSION D'ESSAI	CLASSE D'INSPECTION	CODE DE SERVICE	TRAITEMENT THERMIQUE	65-416-205-200	P&ID
PSIG	°F	PSIG	°F	PSIG				No. DESSIN	DESSINS DE REFERENCE

416-MN-01, 416-MN-02

FICHIER: \\ultragen.local\Ultragen-Dessin\Agnico Eagle\Meliadine\591700 (Fuel Distribution)\05. Dessins\02. Tuyauterie\02. Isométriques\02. 403P-100-PDI-CC10-0001-R.DWG

IMPRIMÉ LE: Sep 28, 2017, 1:37pm

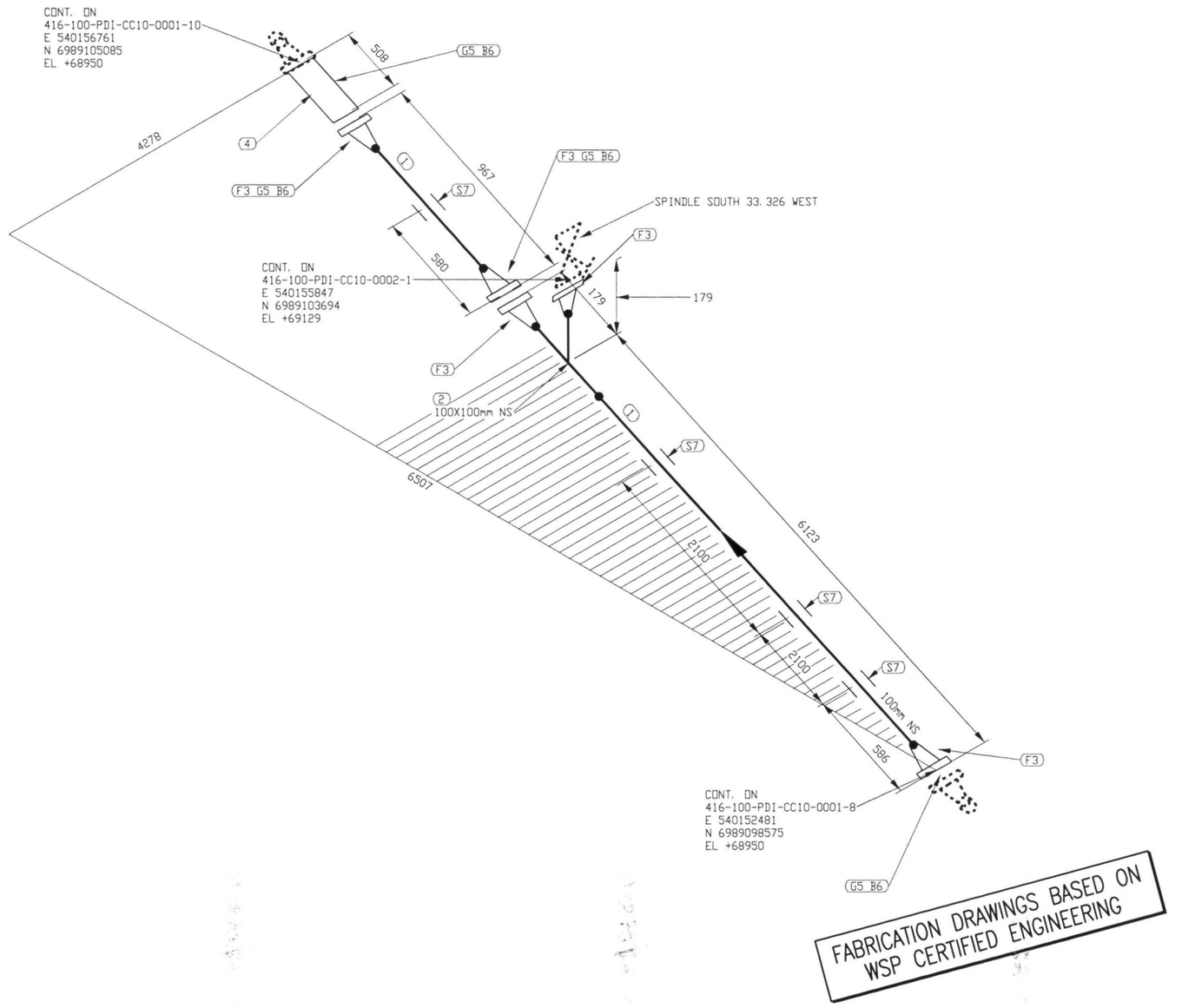

FABRICATION DRAWINGS BASED ON WSP CERTIFIED ENGINEERING

LISTE DE MATERIEL

No	QTE	DIA	MATERIEL/CATALOGUE	DESCRIPTION
1	6762 MM	100	A 333 Gr. 6	SCH STD, SMLS PIPE
2	1	100X100	A 420 Gr. WPL6	SCH STD, BW STRAIGHT TEE
3	5	100	A 350 Gr. LF2	CL 150, SCH STD, RF, WN FLANGE
4	1	100		CL 150, SINGLE BRAIDED HOSE ASSEMBLY
5	4	100	ASME B16.20	CL 150, GARLOCK 5500, RING TYPE GASKET 1/8" THK
6	32	16	A 193 B7/A 194 2H	CL 150, 8 - 15.875 X 90 STUD BOLTS c/w TWO HEAVY HEX NUTS
7	4	100		PIPE SUPPORT AS PER DETAIL 3, DWG: 65-416-270-200

REGISTERED PROFESSIONAL ENGINEER
D. TRUONG
LICENSEE
NT/NU
2017/10/05

PERMIT TO PRACTICE
LE GROUPE ULTRAGEN LTÉE
Signature
Date OCT 04 2017
PERMIT NUMBER: P 1180
NT/NU Association of Professional Engineers and Geoscientists

No.	DATE	REVISION	PAR / APP.
1	2017/09/29	LINE NUMBERS REVISED	QVN
0	2017/06/30	ISSUED FOR CONSTRUCTION	QVN

CLIENT: AGNICO EAGLE

NUQSANA PROMEC MINING SERVICES INC.

ultragen

CONSULTANT PROJECT NO. 591700

NO. DE CONDUITE		SPECIFICATION	PRODUIT	SYSTEME REVETEMENT	CODE DE COULEUR	ISOLATION ET TRACAGE	EPAISS. D'ISOLATION		
416-100-PDI-CC10-0001		CC10	PDI					65-416-270-200	PIPE SUPPORT DETAILS
PRESSION D'OPERATION	TEMPERATURE D'OPERATION	PRESSION DE CONCEPTION	TEMPERATURE DE CONCEPTION	PRESSION D'ESSAI	CLASSE D'INSPECTION	CODE DE SERVICE	TRAITEMENT THERMIQUE	65-416-205-200	P&ID
PSIG	°F	PSIG	°F	PSIG				No. DESSIN	DESSINS DE REFERENCE

SCEAU PROFESSIONNEL

CONC.: KHV
DATE: 2017/05/29
DESSINÉ PAR: KVE
DATE: 2017/05/29
VÉR. PAR:
DATE:
APP.:
DATE:
ÉCHELLE: AUCUNE

PROJET: AGNICO EAGLE - MELIADINE DIVISION
416 - FUEL TANK FARM

TITRE: PORTAL #1
FABRICATION ISOMETRIC
FUEL FROM 65POD41604A/B TO 65TNK41607 & 65TNK41608

No PROJET	No DESSIN	PAGES	RÉV.
6515	416-100-PDI-CC10-0001	9/12	1

416-MN-01, 416-MN-02

FICHIER: \\Ultragen.local\Ultragen-Dessin\Agnico Eagle\Meliadine\591700 (Fuel Distribution)\05. Dessins\02. Tuyauterie\02. Isométriques\02 403P-100-PDI-CC10-0001-9.DWG

IMPRIMÉ LE: Sep 28, 2017, 1:37pm

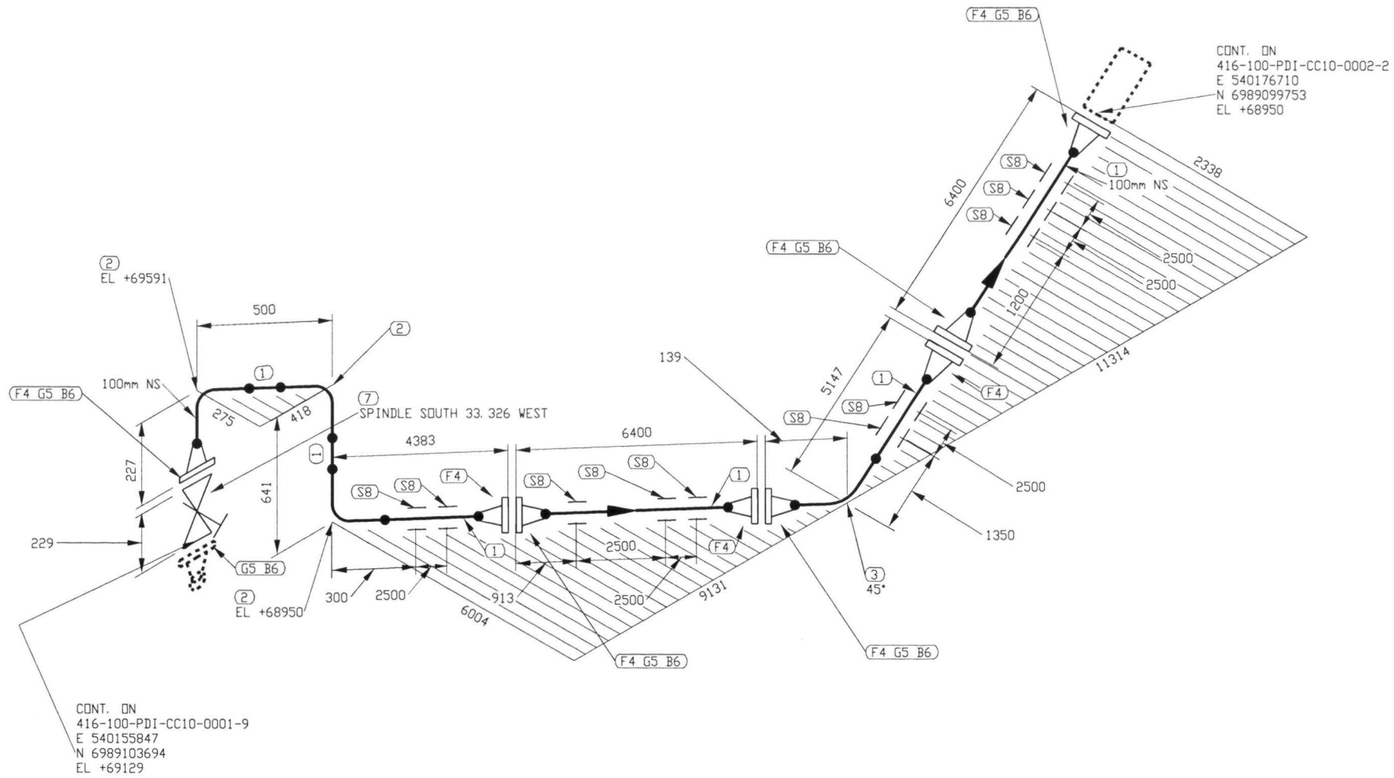

FABRICATION DRAWINGS BASED ON
WSP CERTIFIED ENGINEERING

LISTE DE MATERIEL

No	QTE	DIA	MATERIEL/CATALOGUE	DESCRIPTION
1	22199 MM	100	A 333 Gr. 6	SCH STD, SMLS PIPE
2	3	100	A 420 Gr. WPL6	SCH STD, BW LR 90 DEG ELBOW
3	1	100	A 420 Gr. WPL6	SCH STD, BW LR 45 DEG ELBOW
4	8	100	A 350 Gr. LF2	CL 150, SCH STD, RF, WN FLANGE
5	6	100	ASME B16.20	CL 150, GARLOCK 5500, RING TYPE GASKET 1/8" THK
6	48	16	A 193 B7/A 194 2H	CL 150, 8 - 15.875 X 90 STUD BOLTS c/w TWO HEAVY HEX NUTS
7	1	100	GA-10	CL 150, RF, GATE VALVE
8	10	100		PIPE SUPPORT AS PER DETAIL 3, DWG: 65-416-270-200

REGISTERED PROFESSIONAL ENGINEER
D. TRUONG
LICENSEE
NT/NU
2017/10/05

PERMIT TO PRACTICE
LE GROUPE ULTRAGEN LTÉE
Signature
Date OCT 04 2017
PERMIT NUMBER: P 1180
NT/NU Association of Professional Engineers and Geoscientists

No.	DATE	REVISION	PAR / APP.
1	2017/09/29	LINE NUMBERS REVISED	QVN
0	2017/06/30	ISSUED FOR CONSTRUCTION	QVN

CLIENT: AGNICO EAGLE

NUQSANA PROMEC MINING SERVICES INC.

ultragen

CONSULTANT PROJECT NO. 591700

SCEAU PROFESSIONNEL

CONC.: KHV
DATE: 2017/05/29
DESSINÉ PAR: KVE
DATE: 2017/05/29
VÉR. PAR:
DATE:
APP.:
DATE:
ÉCHELLE: AUCUNE

PROJET:
AGNICO EAGLE - MELIADINE DIVISION
416 - FUEL TANK FARM

TITRE:
PORTAL #1
FABRICATION ISOMETRIC
FUEL FROM 416-100-PDI-CC10-0001 TO 65TNK41608 LOADING NOZZLE

No PROJET	No DESSIN	PAGES	RÉV.
6515	416-100-PDI-CC10-0002	1/2	1

NO. DE CONDUITE		SPECIFICATION	PRODUIT	SYSTEME REVETEMENT	CODE DE COULEUR	ISOLATION ET TRACAGE	EPAISS. D'ISOLATION		
416-100-PDI-CC10-0002		CC10	PDI					65-416-270-200	PIPE SUPPORT DETAILS
PRESSION D'OPERATION	TEMPERATURE D'OPERATION	PRESSION DE CONCEPTION	TEMPERATURE DE CONCEPTION	PRESSION D'ESSAI	CLASSE D'INSPECTION	CODE DE SERVICE	TRAITEMENT THERMIQUE	65-416-205-200	P&ID
PSIG	°F	PSIG	°F	PSIG				No. DESSIN	DESSINS DE REFERENCE

FICHIER: \\Ultragen.local\Ultragen-Dessin\Agnico Eagle\Meliadine\591700 (Fuel Distribution)\05 Dessins\02 Tuyauterie\02 Isométriques\02 403P-100-PDI-CC10-0002-1.DWG

IMPRIMÉ LE: Sep 28, 2017, 1:37pm

416-MN-01

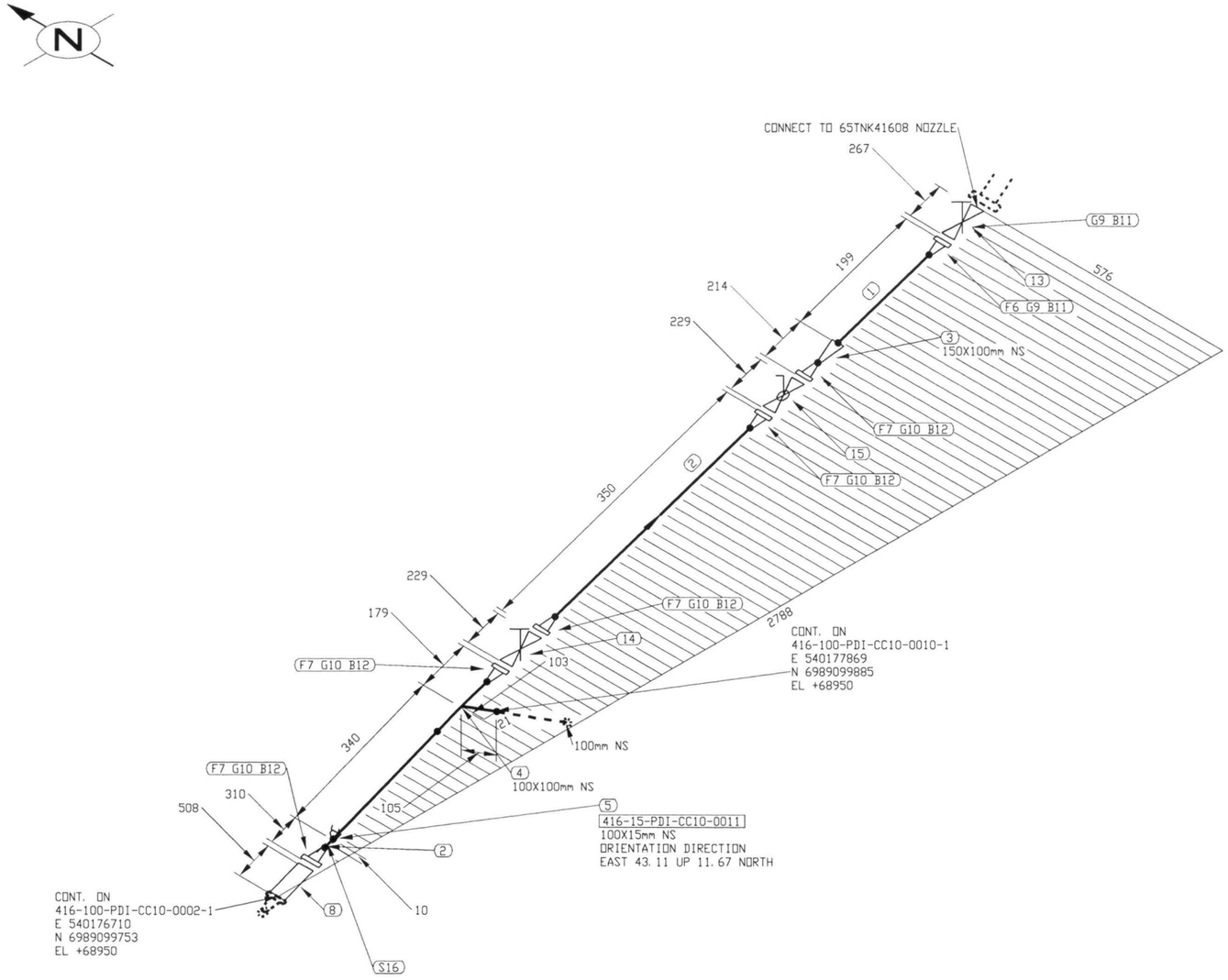

FABRICATION DRAWINGS BASED ON WSP CERTIFIED ENGINEERING

LISTE DE MATERIEL

No	QTE	DIA	MATERIEL/CATALOGUE	DESCRIPTION
1	112 MM	150	A 333 Gr. 6	SCH STD, SMLS PIPE
2	671 MM	100	A 333 Gr. 6	SCH STD, SMLS PIPE
3	1	150X100	A 420 Gr. WPL6	SCH STD, BW CONC RED
4	1	100X100	A 420 Gr. WPL6	SCH STD, BW STRAIGHT TEE
5	1	100X15	A 350 Gr. LF2	CL 3000, THREDOLET
6	1	150	A 350 Gr. LF2	CL 150, SCH STD, RF, WN FLANGE
7	5	100	A 350 Gr. LF2	CL 150, SCH STD, RF, WN FLANGE
8	1	100		CL 150, SINGLE BRAIDED HOSE ASSEMBLY
9	2	150	ASME B16.20	CL 150, GARLOCK 5500, RING TYPE GASKET 1/8" THK
10	5	100	ASME B16.20	CL 150, GARLOCK 5500, RING TYPE GASKET 1/8" THK
11	16	19	A 193 B7/A 194 2H	CL 150, 8 - 19.05 X 100 STUD BOLTS c/w TWO HEAVY HEX NUTS
12	40	16	A 193 B7/A 194 2H	CL 150, 8 - 15.875 X 90 STUD BOLTS c/w TWO HEAVY HEX NUTS
13	1	150	GA-10	CL 150, RF, GATE VALVE
14	1	100	GA-10	CL 150, RF, GATE VALVE
15	1	100	BA-31	CL 150, RF, BALL VALVE
16	1	100		PIPE SUPPORT AS PER DETAIL 3, DWG: 65-416-270-200

REGISTERED PROFESSIONAL ENGINEER
D. TRUONG
LICENSEE
NT/NU
2017/10/05

PERMIT TO PRACTICE
LE GROUPE ULTRAGEN LTÉE
Signature
Date OCT 04 2017
PERMIT NUMBER: P 1180
NT/NU Association of Professional Engineers and Geoscientists

No.	DATE	REVISION	APP.
1	2017/09/29	LINE NUMBERS REVISED	QVN
0	2017/06/30	ISSUED FOR CONSTRUCTION	QVN

CLIENT:

AGNICO EAGLE

NUQSANA PROMEC MINING SERVICES INC.

ultragen

CONSULTANT PROJECT NO. 591700

SCEAU PROFESSIONNEL

CONC.: KHV
DATE: 2017/05/29
DESSINÉ PAR: KVE
DATE: 2017/05/29
VÉR. PAR:
DATE:
APP.:
DATE:
ÉCHELLE: AUCUNE

PROJET:
AGNICO EAGLE - MELIADINE DIVISION
416 - FUEL TANK FARM

TITRE:
PORTAL #1
FABRICATION ISOMETRIC
FUEL FROM 416-100-PDI-CC10-0001 TO 65TNK41608 LOADING NOZZLE

No PROJET	No DESSIN	PAGES	RÉV.
6515	416-100-PDI-CC10-0002	2/2	1

NO. DE CONDUITE		SPECIFICATION	PRODUIT	SYSTEME REVETEMENT	CODE DE COULEUR	ISOLATION ET TRACAGE	EPAISS. D'ISOLATION		
416-100-PDI-CC10-0002		CC10	PDI					65-416-270-200	PIPE SUPPORT DETAILS
PRESSION D'OPERATION	TEMPERATURE D'OPERATION	PRESSION DE CONCEPTION	TEMPERATURE DE CONCEPTION	PRESSION D'ESSAI	CLASSE D'INSPECTION	CODE DE SERVICE	TRAITEMENT THERMIQUE	65-416-205-200	P&ID
PSIG	°F	PSIG	°F	PSIG				No. DESSIN	DESSINS DE REFERENCE

FICHIER: \\ultragen.local\Ultragen-Dessin\Agnico Eagle\Meliadine\591700 (Fuel Distribution)\05. Dessins\02. Tuyauterie\02 Isométriques\02 403P-100-PDI-CC10-0002-2.DWG

IMPRIMÉ LE: Sep 28, 2017, 1:38pm

416-MN-01

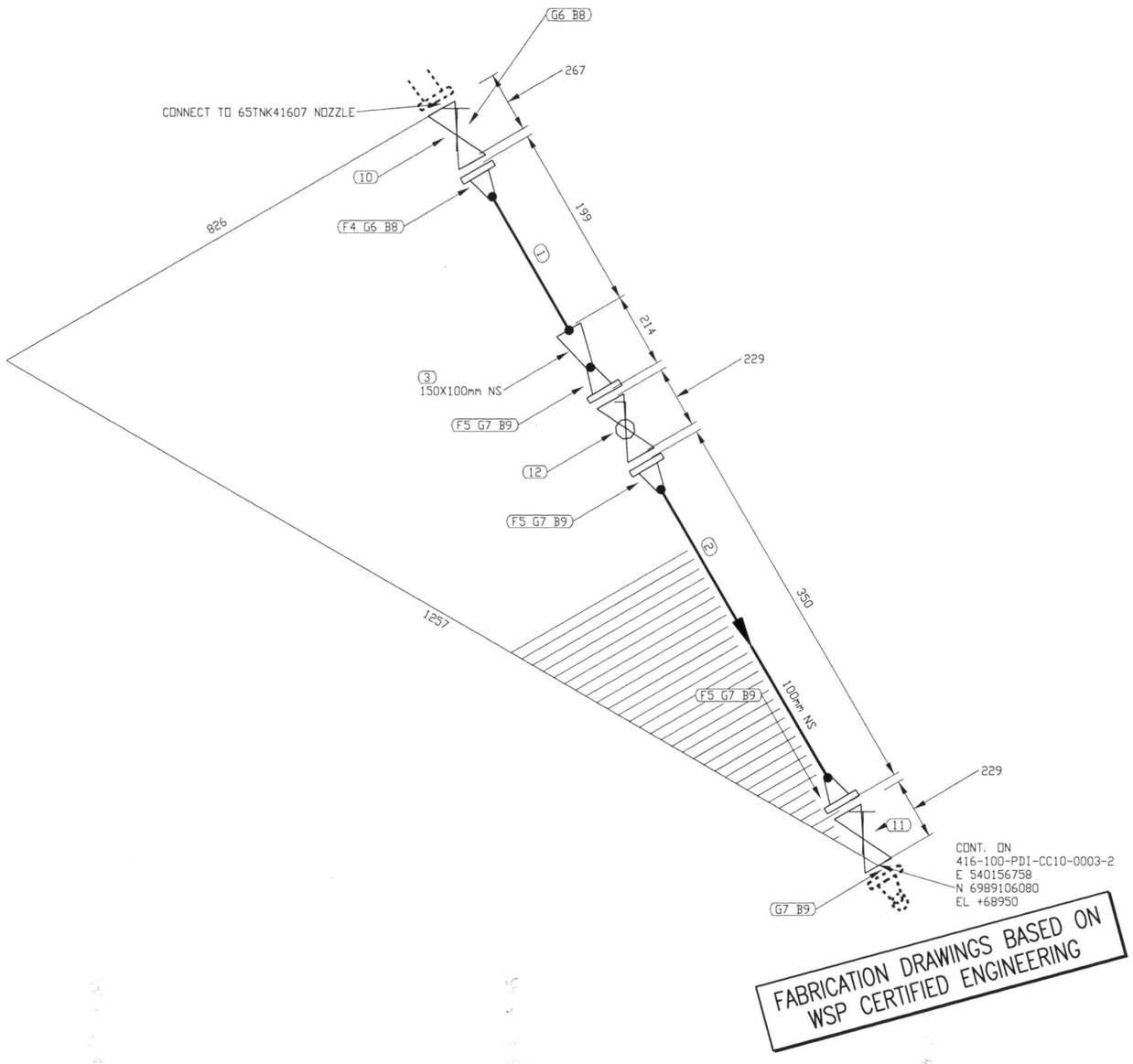

FABRICATION DRAWINGS BASED ON WSP CERTIFIED ENGINEERING

LISTE DE MATERIEL

No	QTE	DIA	MATERIEL/CATALOGUE	DESCRIPTION
1	111 MM	150	A 333 Gr. 6	SCH STD, SMLS PIPE
2	200 MM	100	A 333 Gr. 6	SCH STD, SMLS PIPE
3	1	150X100	A 420 Gr. WPL6	SCH STD, BW CONC RED
4	1	150	A 350 Gr. LF2	CL 150, SCH STD, RF, WN FLANGE
5	3	100	A 350 Gr. LF2	CL 150, SCH STD, RF, WN FLANGE
6	2	150	ASME B16.20	CL 150, GARLOCK 5500, RING TYPE GASKET 1/8" THK
7	4	100	ASME B16.20	CL 150, GARLOCK 5500, RING TYPE GASKET 1/8" THK
8	16	19	A 193 B7/A 194 2H	CL 150, 8 - 19.05 X 100 STUD BOLTS c/w TWO HEAVY HEX NUTS
9	32	16	A 193 B7/A 194 2H	CL 150, 8 - 15.875 X 90 STUD BOLTS c/w TWO HEAVY HEX NUTS
10	1	150	GA-10	CL 150, RF, GATE VALVE
11	1	100	GA-10	CL 150, RF, GATE VALVE
12	1	100	BA-31	CL 150, RF, BALL VALVE

REGISTERED PROFESSIONAL ENGINEER
D. TRUONG
LICENSEE
NT/NU
2017/10/05

PERMIT TO PRACTICE
LE GROUPE ULTRAGEN LTÉE
Signature
Date OCT 04 2017
PERMIT NUMBER: P 1180
NT/NU Association of Professional Engineers and Geoscientists

No.	DATE	REVISION	PAR / APP.
1	2017/09/29	LINE NUMBERS REVISED	QVN
0	2017/06/30	ISSUED FOR CONSTRUCTION	QVN

CLIENT: AGNICO EAGLE

NUQSANA PROMEC MINING SERVICES INC.

ultragen

CONSULTANT PROJECT NO. 591700

SCEAU PROFESSIONNEL

CONC.: KHV	
DATE: 2017/05/29	
DESSINÉ PAR: KVE	
DATE: 2017/05/29	
VÉR. PAR:	
DATE:	
APP.:	
DATE:	
ÉCHELLE: AUCUNE	

PROJET: AGNICO EAGLE - MELIADINE DIVISION
416 - FUEL TANK FARM

TITRE: PORTAL #1
FABRICATION ISOMETRIC
FUEL FROM 65TNK41607 UNLOADING NOZZLE TO 65POD41603B

No PROJET	No DESSIN	PAGES	RÉV.
6515	416-100-PDI-CC10-0003	1/10	1

NO. DE CONDUITE		SPECIFICATION	PRODUIT	SYSTEME REVETEMENT	CODE DE COULEUR	ISOLATION ET TRACAGE	EPAISS. D'ISOLATION		
416-100-PDI-CC10-0003		CC10	PDI					65-416-270-200	PIPE SUPPORT DETAILS
PRESSION D'OPERATION	TEMPERATURE D'OPERATION	PRESSION DE CONCEPTION	TEMPERATURE DE CONCEPTION	PRESSION D'ESSAI	CLASSE D'INSPECTION	CODE DE SERVICE	TRAITEMENT THERMIQUE	65-416-205-200	P&ID
PSIG	°F	PSIG	°F	PSIG				No. DESSIN	DESSINS DE REFERENCE

FICHIER: \\Ultragen.local\Ultragen-Dessin\Agnico Eagle\Meliadine\591700 (Fuel Distribution)\05. Dessins\02. Tuyauterie\02. Isométriques\02. 40JP-100-PDI-CC10-0003-1.DWG

IMPRIMÉ LE: Sep 28, 2017, 1:38pm

416-MN-01

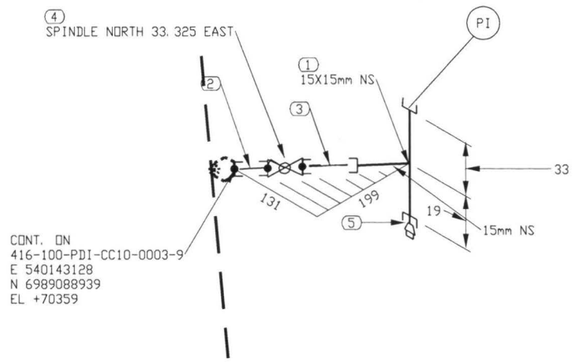

FABRICATION DRAWINGS BASED ON WSP CERTIFIED ENGINEERING

LISTE DE MATERIEL

No	QTE	DIA	MATERIEL/CATALOGUE	DESCRIPTION
1	1	15X15	A 350 Gr. LF2	CL 3000, THRD STRAIGHT TEE
2	1	15	A 333 Gr. 6	SCH 80, NIPPLE x 75mm LG PBE
3	1	15	A 333 Gr. 6	SCH 80, NIPPLE x 75mm LG PDExTDE
4	1	15	BA-29	CL 600, SW, BALL VALVE
5	1	15	A 350 Gr. LF2	MNPT SOLID STL BULL PLUG

REGISTERED PROFESSIONAL ENGINEER
D. TRUONG
LICENSEE
NT/NU
2017/10/05

PERMIT TO PRACTICE
LE GROUPE ULTRAGEN LTÉE
Signature
Date OCT 04 2017
PERMIT NUMBER: P 1180
NT/NU Association of Professional Engineers and Geoscientists

No.	DATE	REVISION	APP.
1	2017/09/29	LINE NUMBERS REVISED	QVN
0	2017/06/30	ISSUED FOR CONSTRUCTION	QVN

CLIENT:
AGNICO EAGLE

NUQSANA PROMEC MINING SERVICES INC.

ultragen
CONSULTANT PROJECT NO. 591700

NO. DE CONDUITE		SPECIFICATION	PRODUIT	SYSTEME REVETEMENT	CODE DE COULEUR	ISOLATION ET TRACAGE	EPAISS. D'ISOLATION		
416-100-PDI-CC10-0003		CC10	PDI					65-416-270-200	PIPE SUPPORT DETAILS
PRESSION D'OPERATION	TEMPERATURE D'OPERATION	PRESSION DE CONCEPTION	TEMPERATURE DE CONCEPTION	PRESSION D'ESSAI	CLASSE D'INSPECTION	CODE DE SERVICE	TRAITEMENT THERMIQUE	65-416-205-200	P&ID
PSIG	°F	PSIG	°F	PSIG				No. DESSIN	DESSINS DE REFERENCE

SCEAU PROFESSIONNEL

CONC.: KHV
DATE: 2017/05/29
DESSINÉ PAR: KVE
DATE: 2017/05/29
VÉR. PAR:
DATE:
APP.:
DATE:
ÉCHELLE: AUCUNE

PROJET:
AGNICO EAGLE - MELIADINE DIVISION
416 - FUEL TANK FARM

TITRE:
PORTAL #1
FABRICATION ISOMETRIC
FUEL FROM 65TNK41607 UNLOADING NOZZLE TO 65POD41603B

No PROJET	No DESSIN	PAGES	REV.
6515	416-100-PDI-CC10-0003	10/10	1

416-MN-01

FICHIER: \\ultragen.local\Ultragen-Data\Agnico Eagle\Meliadine\591700 (Fuel Distribution)\05. Dessins\02. Tuyauterie\02. Isométriques\02. 403P-100-PDI-CC10-0003-10.DWG

IMPRIMÉ LE: Sep 28, 2017, 1:38pm

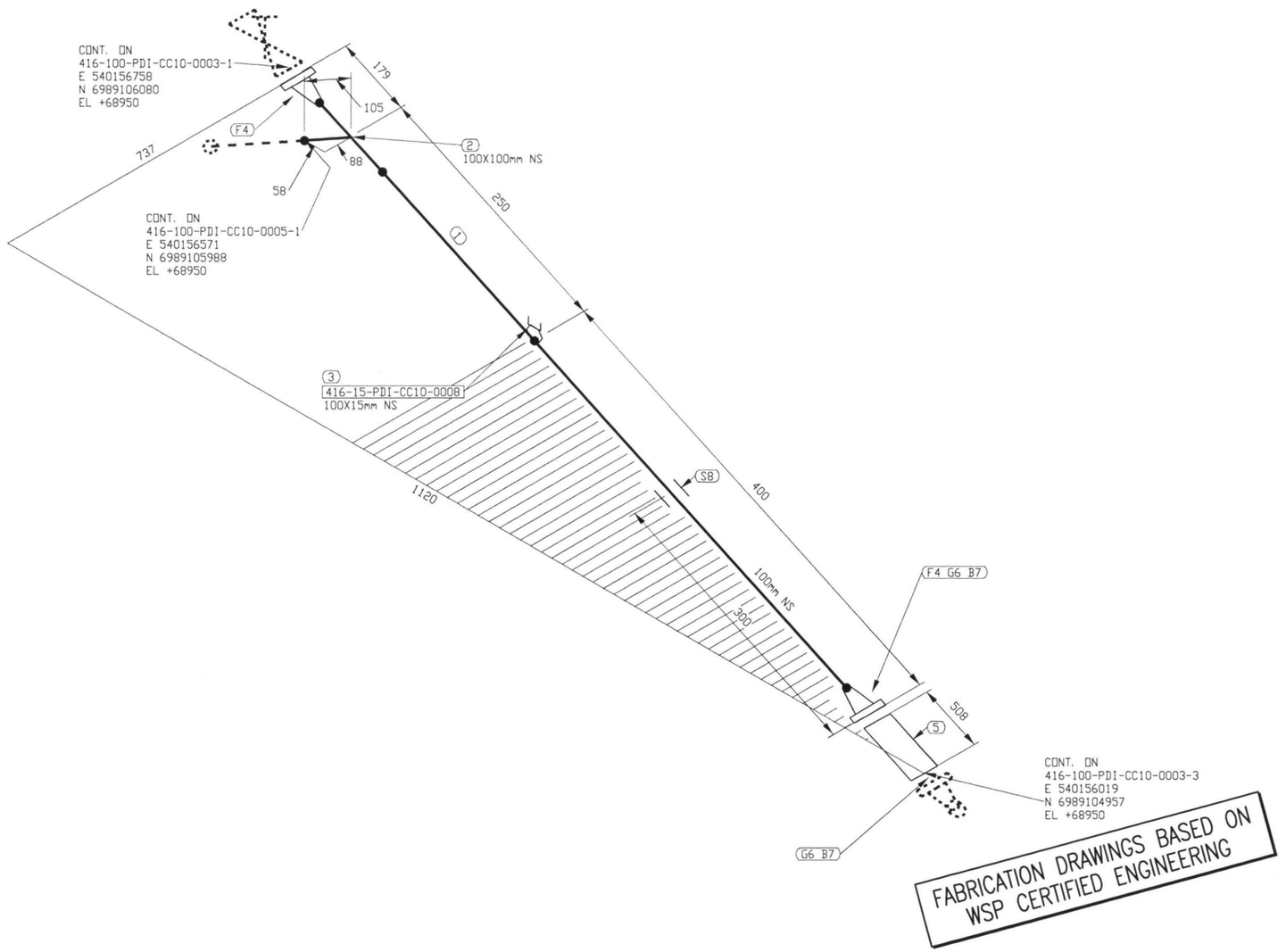

FABRICATION DRAWINGS BASED ON WSP CERTIFIED ENGINEERING

LISTE DE MATERIEL

No	QTE	DIA	MATERIEL/CATALOGUE	DESCRIPTION
1	470 MM	100	A 333 Gr. 6	SCH STD, SMLS PIPE
2	1	100X100	A 420 Gr. WPL6	SCH STD, BW STRAIGHT TEE
3	1	100X15	A 350 Gr. LF2	CL 3000, THREDOLET
4	2	100	A 350 Gr. LF2	CL 150, SCH STD, RF, WN FLANGE
5	1	100		CL 150, SINGLE BRAIDED HOSE ASSEMBLY
6	2	100	ASME B16.20	CL 150, GARLOCK 5500, RING TYPE GASKET 1/8" THK
7	16	16	A 193 B7/A 194 2H	CL 150, 8 - 15.875 X 90 STUD BOLTS c/w TWO HEAVY HEX NUTS
8	1	100		PIPE SUPPORT AS PER DETAIL 3, DWG: 65-416-270-200

REGISTERED PROFESSIONAL ENGINEER
D. TRUONG
LICENSEE
NT/NU
2017/10/05

PERMIT TO PRACTICE
LE GROUPE ULTRAGEN LTÉE
Signature
Date OCT 04 2017
PERMIT NUMBER: P 1180
NT/NU Association of Professional Engineers and Geoscientists

No.	DATE	REVISION	PAR / APP.
1	2017/09/29	LINE NUMBERS REVISED	QVN
0	2017/06/30	ISSUED FOR CONSTRUCTION	QVN

CLIENT: AGNICO EAGLE

NUQSANA PROMEC MINING SERVICES INC.

ultragen

CONSULTANT PROJECT NO. 591700

SCEAU PROFESSIONNEL

CONC.: KHV
DATE: 2017/05/29
DESSINÉ PAR: KVE
DATE: 2017/05/29
VÉR. PAR:
DATE:
APP.:
DATE:
ÉCHELLE: AUCUNE

PROJET: AGNICO EAGLE - MELIADINE DIVISION
416 - FUEL TANK FARM

TITRE: PORTAL #1
FABRICATION ISOMETRIC
FUEL FROM 65TNK41607 UNLOADING NOZZLE TO 65POD41603B

No PROJET	No DESSIN	PAGES	RÉV.
6515	416-100-PDI-CC10-0003	2/10	1

NO. DE CONDUITE		SPECIFICATION	PRODUIT	SYSTEME REVETEMENT	CODE DE COULEUR	ISOLATION ET TRACAGE	EPAISS. D'ISOLATION		
416-100-PDI-CC10-0003		CC10	PDI					65-416-270-200	PIPE SUPPORT DETAILS
PRESSION D'OPERATION	TEMPERATURE D'OPERATION	PRESSION DE CONCEPTION	TEMPERATURE DE CONCEPTION	PRESSION D'ESSAI	CLASSE D'INSPECTION	CODE DE SERVICE	TRAITEMENT THERMIQUE	65-416-205-200	P&ID
PSIG	°F	PSIG	°F	PSIG				No. DESSIN	DESSINS DE REFERENCE

FICHIER \\Ultragen-local\Ultragen-Dessin\Agnico Eagle\Meliadine\591700 (Fuel Distribution)\05 Dessins\02 Tuyauterie\02 Isométriques\02 403P-100-PDI-CC10-0003-2.DWG

IMPRIMÉ LE: Sep 28, 2017, 1:38pm

416-MN-01

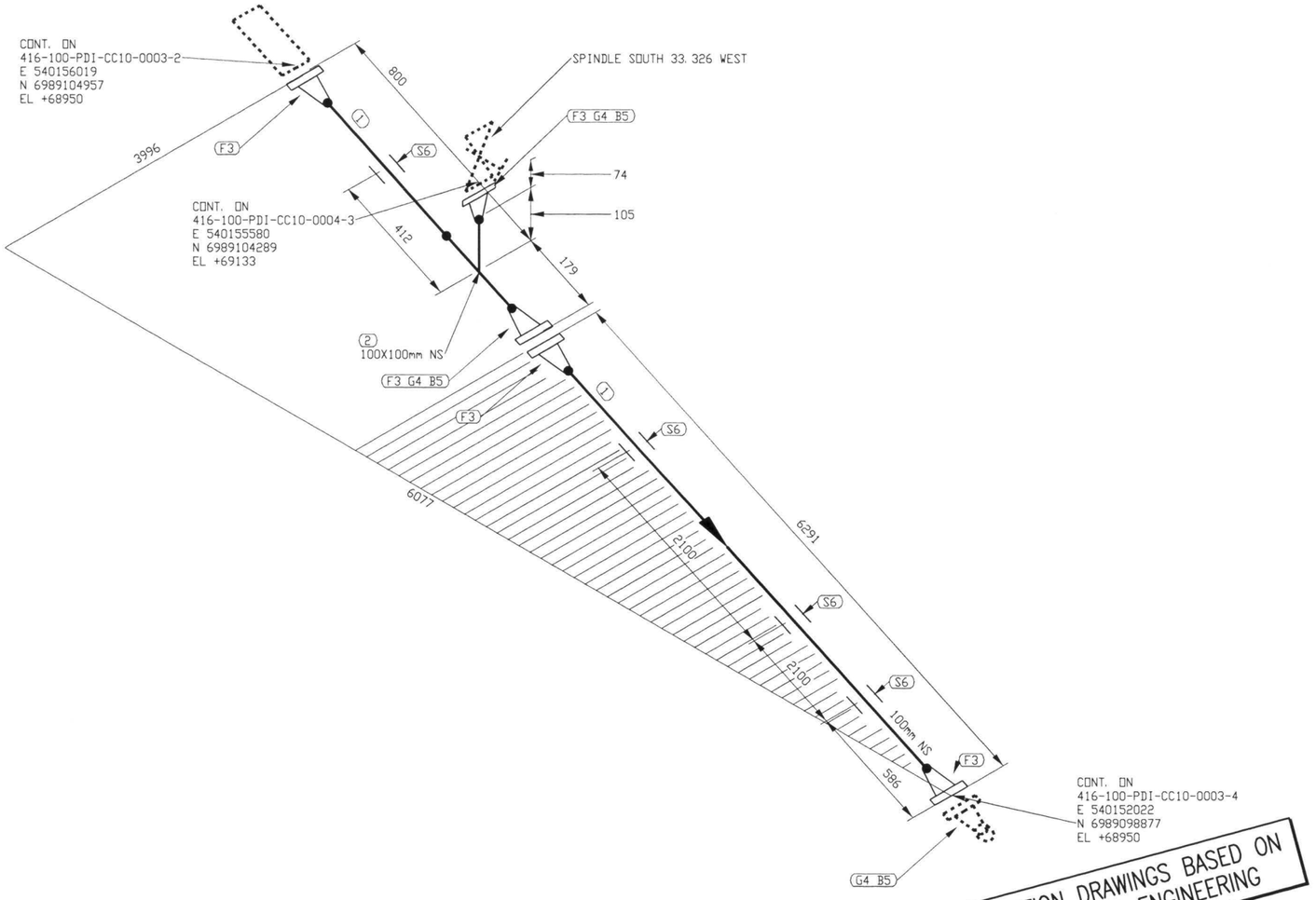

FABRICATION DRAWINGS BASED ON WSP CERTIFIED ENGINEERING

LISTE DE MATERIEL

No	QTE	DIA	MATERIEL/CATALOGUE	DESCRIPTION
1	6761 MM	100	A 333 Gr. 6	SCH STD, SMLS PIPE
2	1	100X100	A 420 Gr. WPL6	SCH STD, BW STRAIGHT TEE
3	5	100	A 350 Gr. LF2	CL 150, SCH STD, RF, WN FLANGE
4	3	100	ASME B16.20	CL 150, GARLOCK 5500, RING TYPE GASKET 1/8" THK
5	24	16	A 193 B7/A 194 2H	CL 150, 8 - 15.875 X 90 STUD BOLTS c/w TWO HEAVY HEX NUTS
6	4	100		PIPE SUPPORT AS PER DETAIL 3, DWG: 65-416-270-200

REGISTERED PROFESSIONAL ENGINEER
D. TRUONG
LICENSEE
NT/NU
2017/10/05

PERMIT TO PRACTICE
LE GROUPE ULTRAGEN LTEE
Signature
Date OCT 04 2017
PERMIT NUMBER: P 1180
NT/NU Association of Professional Engineers and Geoscientists

No.	DATE	REVISION	PAR / APP.
1	2017/09/29	LINE NUMBERS REVISED	QVN
0	2017/06/30	ISSUED FOR CONSTRUCTION	QVN

CLIENT: AGNICO EAGLE

NUQSANA-PROMEC MINING SERVICES INC.

ultragen

CONSULTANT PROJECT NO. 591700

SCEAU PROFESSIONNEL

CONC.: KHV
DATE: 2017/05/29
DESSINÉ PAR: KVE
DATE: 2017/05/29
VÉR. PAR:
DATE:
APP.:
DATE:
ÉCHELLE: AUCUNE

PROJET: AGNICO EAGLE - MELIADINE DIVISION
416 - FUEL TANK FARM

TITRE: PORTAL #1
FABRICATION ISOMETRIC
FUEL FROM 65TNK41607 UNLOADING NOZZLE TO 65POD41603B

No PROJET	No DESSIN	PAGES	RÉV.
6515	416-100-PDI-CC10-0003	3/10	1

NO. DE CONDUITE		SPECIFICATION	PRODUIT	SYSTEME REVETEMENT	CODE DE COULEUR	ISOLATION ET TRACAGE	EPAISS. D'ISOLATION		
416-100-PDI-CC10-0003		CC10	PDI					65-416-270-200	PIPE SUPPORT DETAILS
PRESSION D'OPERATION	TEMPERATURE D'OPERATION	PRESSION DE CONCEPTION	TEMPERATURE DE CONCEPTION	PRESSION D'ESSAI	CLASSE D'INSPECTION	CODE DE SERVICE	TRAITEMENT THERMIQUE	65-416-205-200	P&ID
PSIG	°F	PSIG	°F	PSIG				No. DESSIN	DESSINS DE REFERENCE

FICHIER: \\ultragen.local\Ultragen-Dessin\Agnico Eagle\Meliadine\591700 (Fuel Distribution)\05. Dessins\02. Tuyauterie\02. Isométriques\02. 403P-100-PDI-CC10-0003-3.DWG

IMPRIMÉ LE: Sep 28, 2017, 1:38pm

416-MN-01

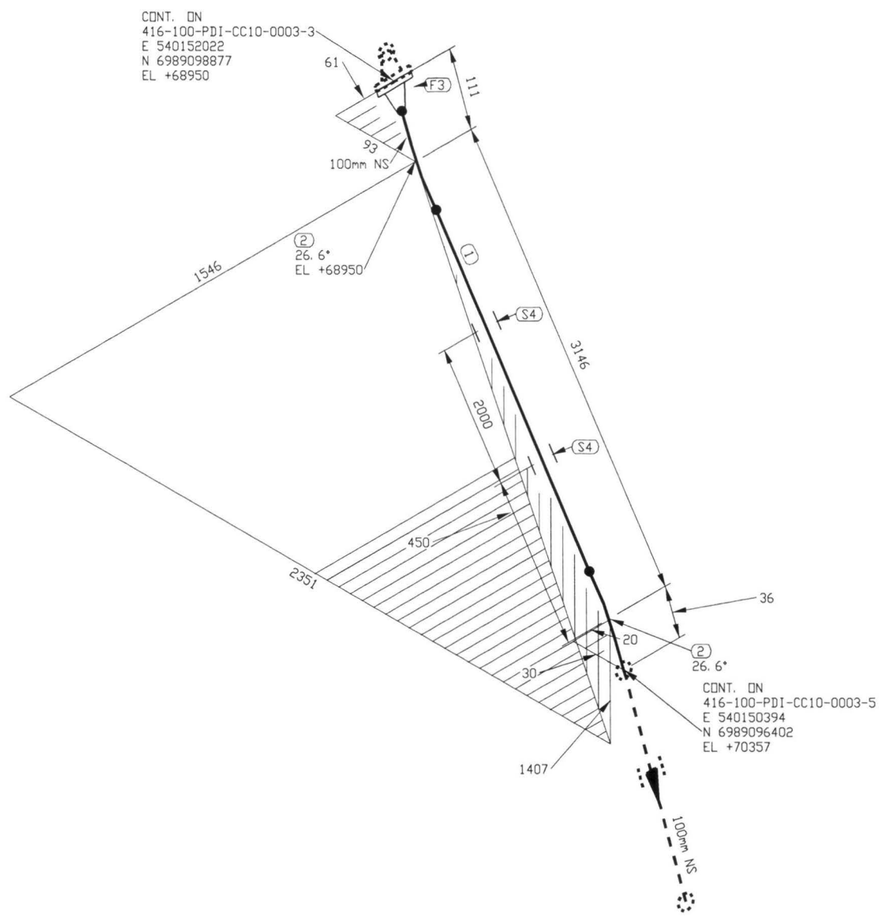

FABRICATION DRAWINGS BASED ON WSP CERTIFIED ENGINEERING

LISTE DE MATERIEL

No	QTE	DIA	MATERIEL/CATALOGUE	DESCRIPTION
1	3074 MM	100	A 333 Gr. 6	SCH STD, SMLS PIPE
2	2	100	A 420 Gr. WPL6	SCH STD, BW LR 45 DEG ELBOW TRIM TO 26.57
3	1	100	A 350 Gr. LF2	CL 150, SCH STD, RF, WN FLANGE
4	2	100		PIPE SUPPORT AS PER DETAIL 3, DWG: 65-416-270-200

REGISTERED PROFESSIONAL ENGINEER
D. TRUONG
LICENSEE
NT/NU
2017/10/05

PERMIT TO PRACTICE
LE GROUPE ULTRAGEN LTÉE
Signature
Date OCT 04 2017
PERMIT NUMBER: P 1180
NT/NU Association of Professional Engineers and Geoscientists

No.	DATE	REVISION	APP.
1	2017/09/29	LINE NUMBERS REVISED	QVN
0	2017/06/30	ISSUED FOR CONSTRUCTION	QVN

CLIENT: AGNICO EAGLE

NUQSANA PROMEC MINING SERVICES INC.

ultragen

CONSULTANT PROJECT NO. 591700

SCEAU PROFESSIONNEL

CONC.: KHV
DATE: 2017/05/29
DESSINÉ PAR: KVE
DATE: 2017/05/29
VÉR. PAR:
DATE:
APP.:
DATE:
ÉCHELLE: AUCUNE

PROJET: AGNICO EAGLE - MELIADINE DIVISION
416 - FUEL TANK FARM

TITRE: PORTAL #1
FABRICATION ISOMETRIC
FUEL FROM 65TNK41607 UNLOADING NOZZLE TO 65POD41603B

No PROJET	No DESSIN	PAGES	RÉV.
6515	416-100-PDI-CC10-0003	4/10	1

NO. DE CONDUITE		SPECIFICATION	PRODUIT	SYSTEME REVETEMENT	CODE DE COULEUR	ISOLATION ET TRACAGE	EPAISS. D'ISOLATION		
416-100-PDI-CC10-0003		CC10	PDI					65-416-270-200	PIPE SUPPORT DETAILS
PRESSION D'OPERATION	TEMPERATURE D'OPERATION	PRESSION DE CONCEPTION	TEMPERATURE DE CONCEPTION	PRESSION D'ESSAI	CLASSE D'INSPECTION	CODE DE SERVICE	TRAITEMENT THERMIQUE	65-416-205-200	P&ID
PSIG	°F	PSIG	°F	PSIG				No. DESSIN	DESSINS DE REFERENCE

FICHIER: \\ultragen.local\Ultragen-Dessin\Agnico Eagle\Meliadine\591700 (Fuel Distribution)\05. Dessins\02. Tuyauterie\02. Isométriques\02. 403P-100-PDI-CC10-0003-4.DWG

IMPRIMÉ LE: Sep 28, 2017, 1:38pm

416-MN-01

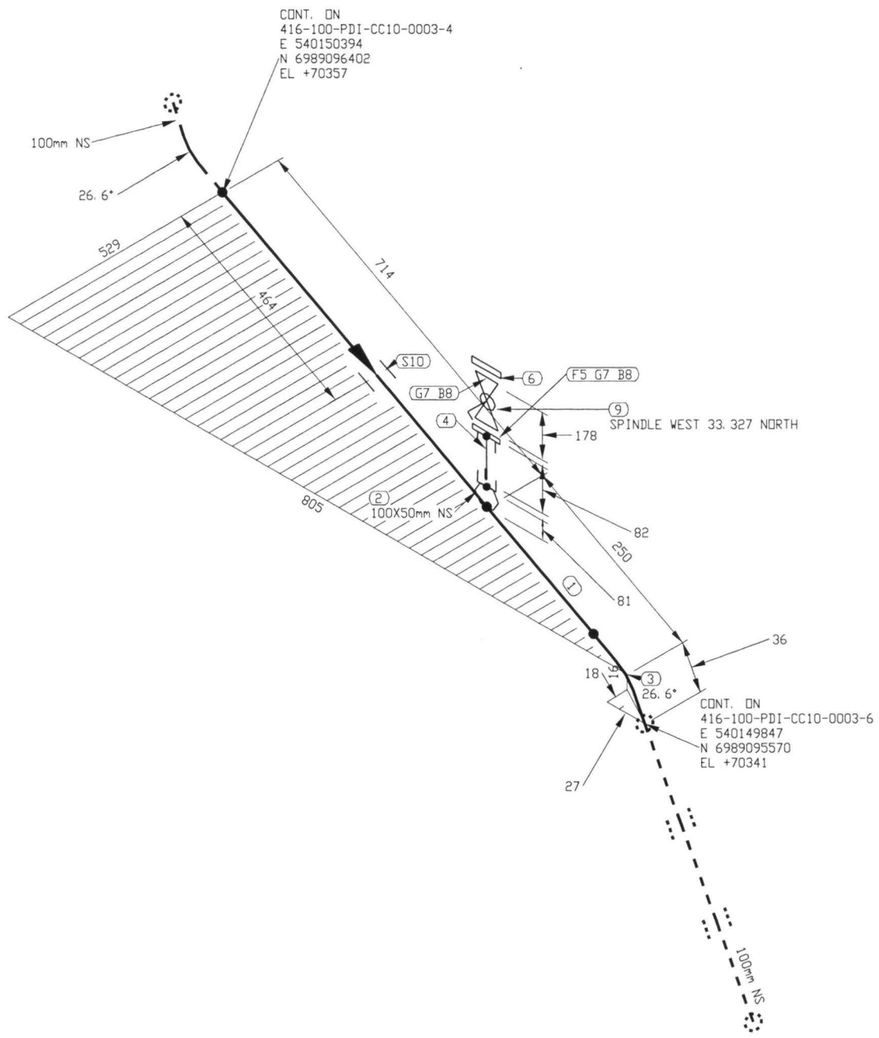

FABRICATION DRAWINGS BASED ON WSP CERTIFIED ENGINEERING

LISTE DE MATERIEL

No	QTE	DIA	MATERIEL/CATALOGUE	DESCRIPTION
1	928 MM	100	A 333 Gr. 6	SCH STD, SMLS PIPE
2	1	100X50	A 350 Gr. LF2	CL 3000, SOCKOLET
3	1	100	A 420 Gr. WPL6	SCH STD, BW LR 45 DEG ELBOW TRIM TO 26.57
4	1	50	A 333 Gr. 6	SCH 80, NIPPLE x 75mm LG PBE
5	1	50	A 350 Gr. LF2	CL 150, SCH 80, RF, SW FLANGE
6	1	50	A 350 Gr. LF2	CL 150, RF, BLIND FLANGE
7	2	50	ASME B16.20	CL 150, GARLOCK 5500, RING TYPE GASKET 1/8" THK
8	8	16	A 193 B7/A 194 2H	CL 150, 4 - 15.875 X 85 STUD BOLTS c/w TWO HEAVY HEX NUTS
9	1	50	BA-31	CL 150, RF, BALL VALVE
10	1	100		PIPE SUPPORT AS PER DETAIL 3, DWG: 65-416-270-200

REGISTERED PROFESSIONAL ENGINEER
D. TRUONG
LICENSEE
NT/NU
2017/10/05

PERMIT TO PRACTICE
LE GROUPE ULTRAGEN LTÉE
Signature
Date OCT 04 2017
PERMIT NUMBER: P 1180
NT/NU Association of Professional Engineers and Geoscientists

No.	DATE	REVISION	
1	2017/09/29	LINE NUMBERS REVISED	QVN
0	2017/06/30	ISSUED FOR CONSTRUCTION	QVN

PAR / APP.

CLIENT: AGNICO EAGLE

NUQSANA PROMEC MINING SERVICES INC.

ultragen

CONSULTANT PROJECT NO. 591700

SCEAU PROFESSIONNEL

CONC.: KHV
DATE: 2017/05/29
DESSINÉ PAR: KVE
DATE: 2017/05/29
VÉR. PAR:
DATE:
APP.:
DATE:
ÉCHELLE: AUCUNE

PROJET: AGNICO EAGLE - MELIADINE DIVISION
416 - FUEL TANK FARM

TITRE: PORTAL #1
FABRICATION ISOMETRIC
FUEL FROM 65TNK41607 UNLOADING NOZZLE TO 65POD41603B

No PROJET	No DESSIN	PAGES	RÉV.
6515	416-100-PDI-CC10-0003	5/10	1

NO. DE CONDUITE		SPECIFICATION	PRODUIT	SYSTEME REVETEMENT	CODE DE COULEUR	ISOLATION ET TRACAGE	EPAISS. D'ISOLATION		
416-100-PDI-CC10-0003		CC10	PDI					65-416-270-200	PIPE SUPPORT DETAILS
PRESSION D'OPERATION	TEMPERATURE D'OPERATION	PRESSION DE CONCEPTION	TEMPERATURE DE CONCEPTION	PRESSION D'ESSAI	CLASSE D'INSPECTION	CODE DE SERVICE	TRAITEMENT THERMIQUE	65-416-205-200	P&ID
PSIG	°F	PSIG	°F	PSIG				No. DESSIN	DESSINS DE REFERENCE

FICHIER: \\ultragen.local\Ultragen-Dessin\Agnico Eagle\Meliadine\591700 (Fuel Distribution)\05. Dessins\02. Tuyauterie\02. Isométriques\02. 403P-100-PDI-CC10-0003-5.DWG

IMPRIMÉ LE: Sep 28, 2017, 1:38pm

416-MN-01

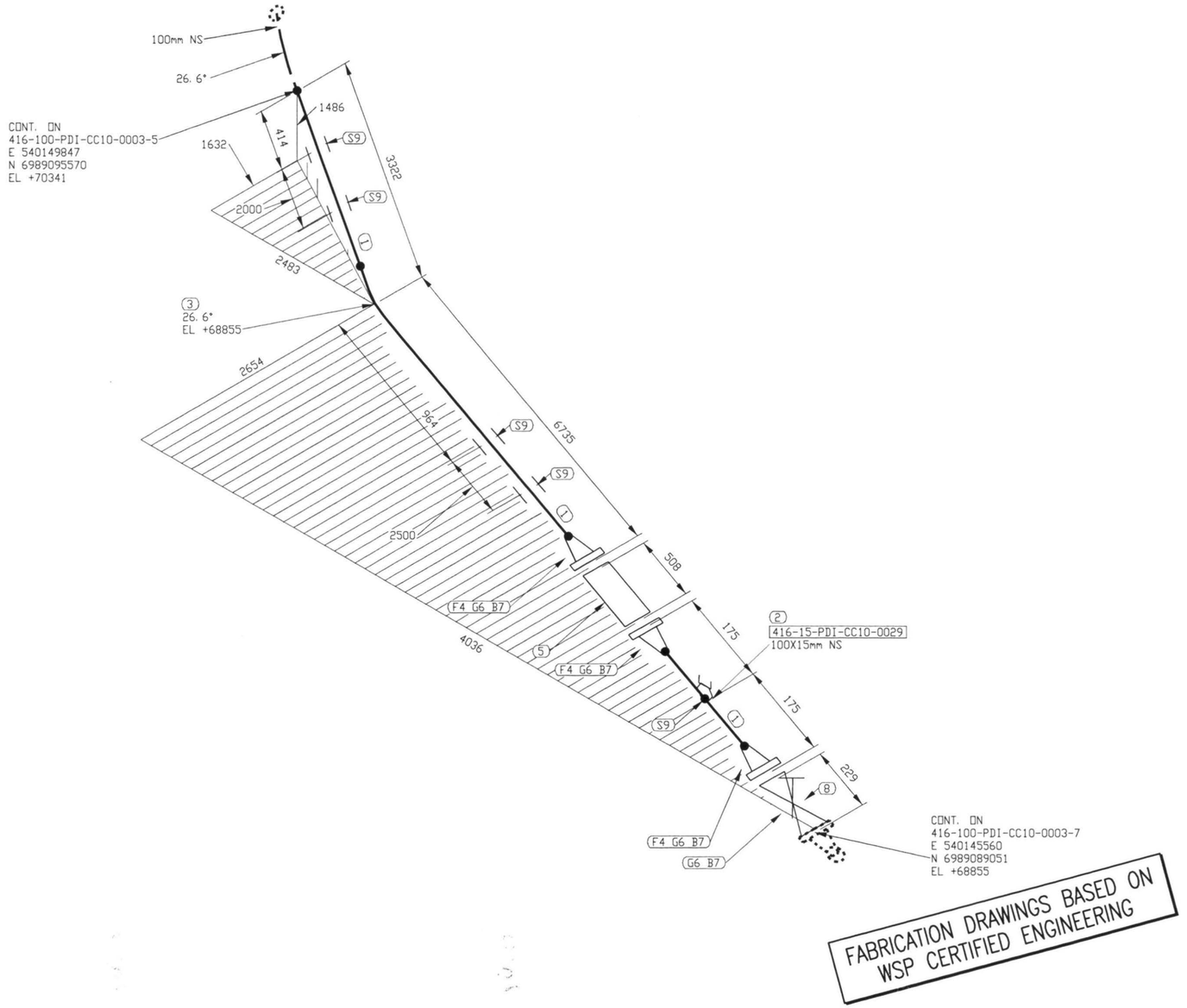

FABRICATION DRAWINGS BASED ON WSP CERTIFIED ENGINEERING

LISTE DE MATERIEL

No	QTE	DIA	MATERIEL/CATALOGUE	DESCRIPTION
1	6952 MM	100	A 333 Gr. 6	SCH STD, SMLS PIPE
2	1	100X15	A 350 Gr. LF2	CL 3000, THREDOLET
3	1	100	A 420 Gr. WPL6	SCH STD, BW LR 45 DEG ELBOW TRIM TO 26.57
4	3	100	A 350 Gr. LF2	CL 150, SCH STD, RF, WN FLANGE
5	1	100		CL 150, SINGLE BRAIDED HOSE ASSEMBLY
6	4	100	ASME B16.20	CL 150, GARLOCK 5500, RING TYPE GASKET 1/8" THK
7	32	16	A 193 B7/A 194 2H	CL 150, 8 - 15.875 X 90 STUD BOLTS c/w TWO HEAVY HEX NUTS
8	1	100	GA-10	CL 150, RF, GATE VALVE
9	5	100		PIPE SUPPORT AS PER DETAIL 3, DWG: 65-416-270-200

REGISTERED PROFESSIONAL ENGINEER
D. TRUONG
LICENSEE
NT/NU
2017/10/05

PERMIT TO PRACTICE
LE GROUPE ULTRAGEN LTÉE
Signature
Date OCT 04 2017
PERMIT NUMBER: P 1180
NT/NU Association of Professional Engineers and Geoscientists

No.	DATE	REVISION	PAR / APP.
1	2017/09/29	LINE NUMBERS REVISED	QVN
0	2017/06/30	ISSUED FOR CONSTRUCTION	QVN

CLIENT: AGNICO EAGLE

NUQSANA PROMEC MINING SERVICES INC.

ultragen

CONSULTANT PROJECT NO. 591700

SCEAU PROFESSIONNEL

CONC.: KHV
DATE: 2017/05/29
DESSINÉ PAR: KVE
DATE: 2017/05/29
VÉR. PAR:
DATE:
APP.:
DATE:
ÉCHELLE: AUCUNE

PROJET: AGNICO EAGLE - MELIADINE DIVISION
416 - FUEL TANK FARM

TITRE: PORTAL #1
FABRICATION ISOMETRIC
FUEL FROM 65TNK41607 UNLOADING NOZZLE TO 65POD41603B

No PROJET	No DESSIN	PAGES	RÉV.
6515	416-100-PDI-CC10-0003	6/10	1

NO. DE CONDUITE		SPECIFICATION	PRODUIT	SYSTEME REVETEMENT	CODE DE COULEUR	ISOLATION ET TRACAGE	EPAISS. D'ISOLATION		
416-100-PDI-CC10-0003		CC10	PDI					65-416-270-200	PIPE SUPPORT DETAILS
PRESSION D'OPERATION	TEMPERATURE D'OPERATION	PRESSION DE CONCEPTION	TEMPERATURE DE CONCEPTION	PRESSION D'ESSAI	CLASSE D'INSPECTION	CODE DE SERVICE	TRAITEMENT THERMIQUE	65-416-205-200	P&ID
PSIG	°F	PSIG	°F	PSIG				No. DESSIN	DESSINS DE REFERENCE

FICHIER: \\ultragen.local\Ultragen-Dessin\Agnico Eagle\Meliadine\591700 (Fuel Distribution)\05. Dessins\02. Tuyauterie\02. Isométriques\02. 4039-100-PDI-CC10-0003-6.DWG

IMPRIMÉ LE: Sep 28, 2017, 1:38pm

416-MN-01

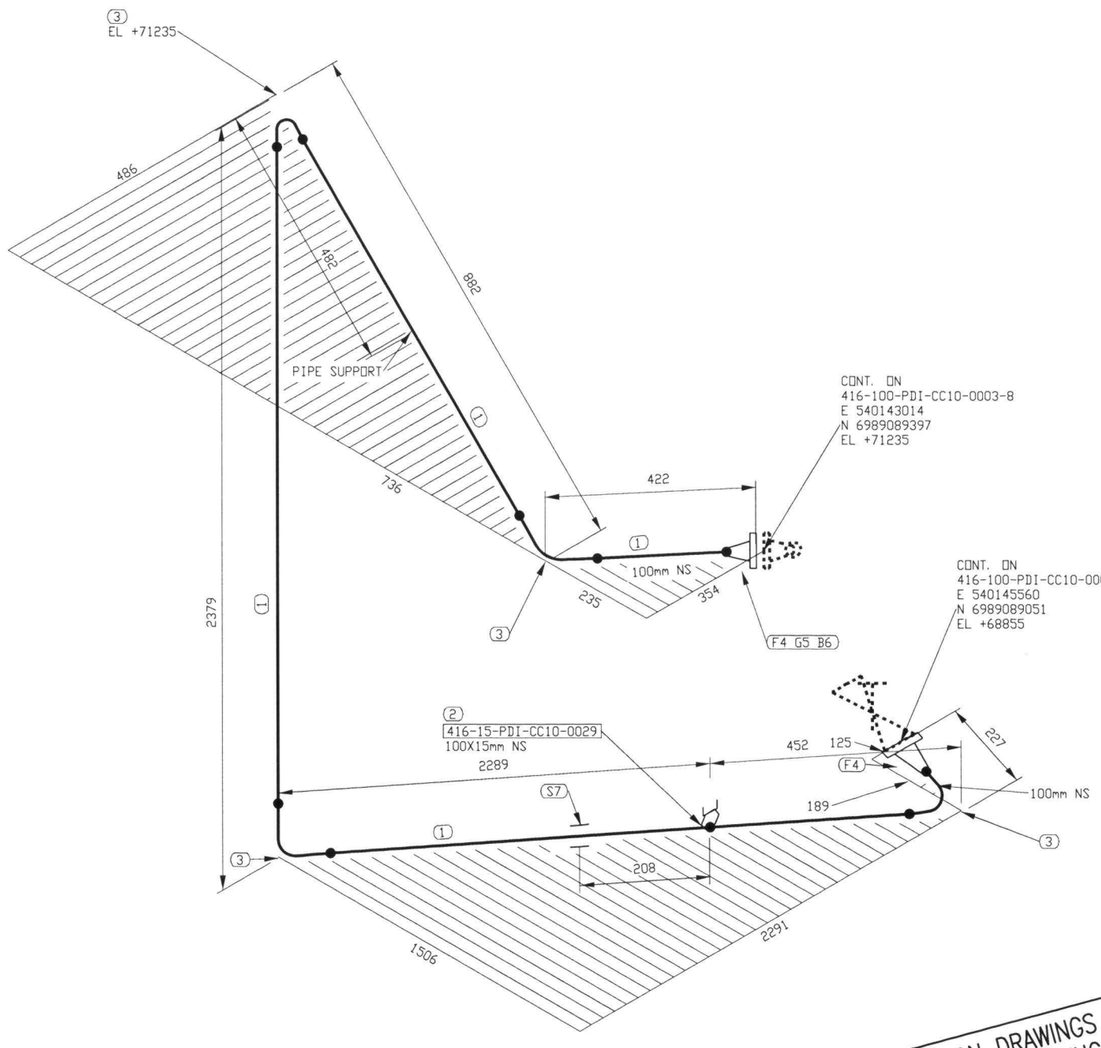

FABRICATION DRAWINGS BASED ON WSP CERTIFIED ENGINEERING

LISTE DE MATERIEL

No	QTE	DIA	MATERIEL/CATALOGUE	DESCRIPTION
1	5285 MM	100	A 333 Gr. 6	SCH STD, SMLS PIPE
2	1	100X15	A 350 Gr. LF2	CL 3000, THREDOLET
3	4	100	A 420 Gr. WPL6	SCH STD, BW LR 90 DEG ELBOW
4	2	100	A 350 Gr. LF2	CL 150, SCH STD, RF, WN FLANGE
5	1	100	ASME B16.20	CL 150, GARLOCK 5500, RING TYPE GASKET 1/8" THK
6	8	16	A 193 B7/A 194 2H	CL 150, 8 - 15.875 X 90 STUD BOLTS c/w TWO HEAVY HEX NUTS
7	1	100		PIPE SUPPORT AS PER DETAIL 3, DWG: 65-416-270-200

REGISTERED PROFESSIONAL ENGINEER
D. TRUONG
LICENSEE
NT/NU

2017/10/05

PERMIT TO PRACTICE
LE GROUPE ULTRAGEN LTÉE
Signature
Date OCT 04 2017
PERMIT NUMBER: P 1180
NT/NU Association of Professional Engineers and Geoscientists

No.	DATE	REVISION	APP.
1	2017/09/29	LINE NUMBERS REVISED	QVN
0	2017/06/30	ISSUED FOR CONSTRUCTION	QVN

CLIENT: AGNICO EAGLE

NUQSANA PROMEC MINING SERVICES INC.

ultragen

CONSULTANT PROJECT NO. 591700

SCEAU PROFESSIONNEL

CONC.: KHV
DATE: 2017/05/29
DESSINÉ PAR: KVE
DATE: 2017/05/29
VÉR. PAR:
DATE:
APP.:
DATE:
ÉCHELLE: AUCUNE

PROJET: AGNICO EAGLE - MELIADINE DIVISION
416 - FUEL TANK FARM

TITRE: PORTAL #1
FABRICATION ISOMETRIC
FUEL FROM 65TNK41607 UNLOADING NOZZLE TO 65POD41603B

No PROJET	No DESSIN	PAGES	RÉV.
6515	416-100-PDI-CC10-0003	7/10	1

NO. DE CONDUITE		SPECIFICATION	PRODUIT	SYSTEME REVETEMENT	CODE DE COULEUR	ISOLATION ET TRACAGE	EPAISS. D'ISOLATION		
416-100-PDI-CC10-0003		CC10	PDI					65-416-270-200	PIPE SUPPORT DETAILS
PRESSION D'OPERATION	TEMPERATURE D'OPERATION	PRESSION DE CONCEPTION	TEMPERATURE DE CONCEPTION	PRESSION D'ESSAI	CLASSE D'INSPECTION	CODE DE SERVICE	TRAITEMENT THERMIQUE	65-416-205-200	P&ID
PSIG	°F	PSIG	°F	PSIG				No. DESSIN	DESSINS DE REFERENCE

FICHIER \\ultragen.local\Ultragen-Dessin\Agnico Eagle\Meliadine\591700 (Fuel Distribution)\05. Dessins\02. Tuyauterie\02. isométriques\02. 403P-100-PDI-CC10-0003-7.DWG

IMPRIMÉ LE: Sep 28, 2017, 1:38pm

416-MN-01

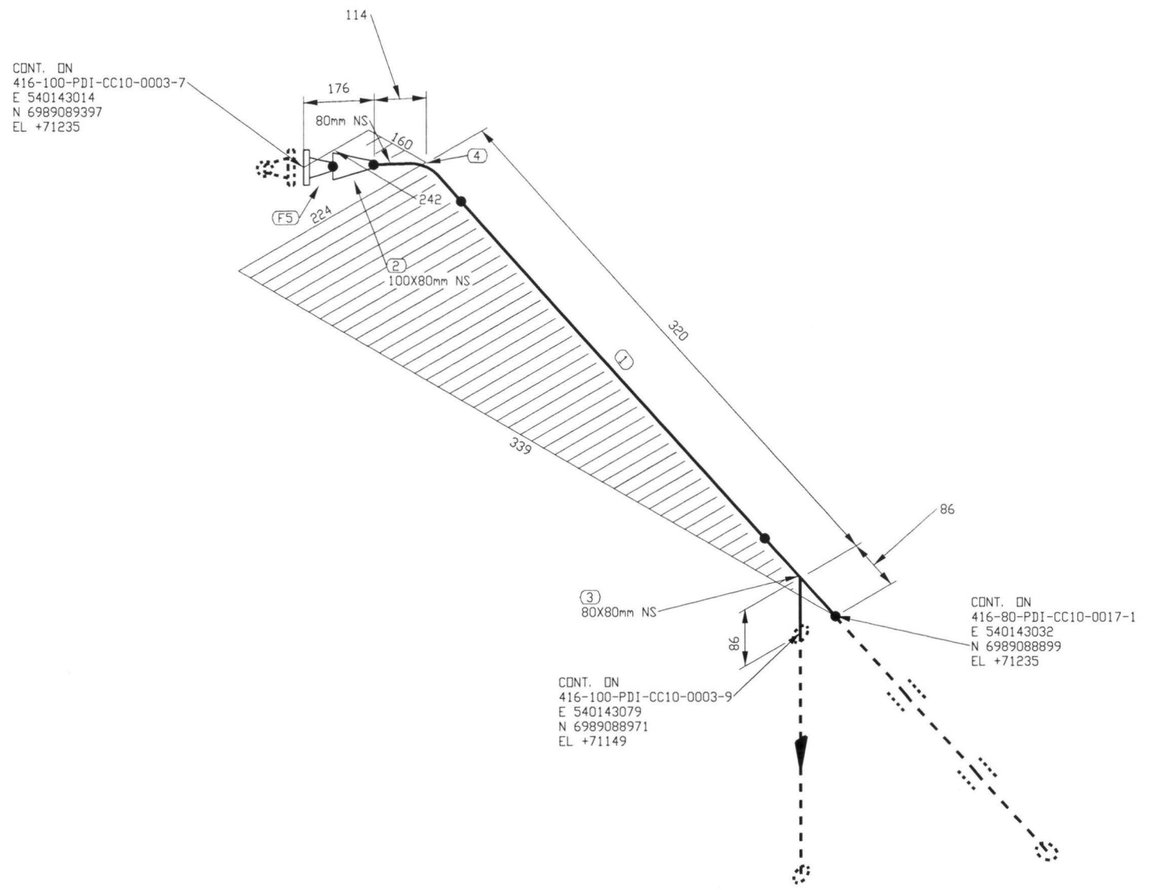

FABRICATION DRAWINGS BASED ON WSP CERTIFIED ENGINEERING

LISTE DE MATERIEL

No	QTE	DIA	MATERIEL/CATALOGUE	DESCRIPTION
1	120 MM	80	A 333 Gr. 6	SCH STD, SMLS PIPE
2	1	100X80	A 420 Gr. WPL6	SCH STD, BW CONC RED
3	1	80X80	A 420 Gr. WPL6	SCH STD, BW STRAIGHT TEE
4	1	80	A 420 Gr. WPL6	SCH STD, BW LR 90 DEG ELBOW
5	1	100	A 350 Gr. LF2	CL 150, SCH STD, RF, WN FLANGE

REGISTERED PROFESSIONAL ENGINEER
D. TRUONG
LICENSEE
NT/NU
2017/10/05

PERMIT TO PRACTICE
LE GROUPE ULTRAGEN LTÉE
Signature
Date OCT 04 2017
PERMIT NUMBER: P 1180
NT/NU Association of Professional Engineers and Geoscientists

No.	DATE	REVISION	PAR / APP.
1	2017/09/29	LINE NUMBERS REVISED	QVN
0	2017/06/30	ISSUED FOR CONSTRUCTION	QVN

CLIENT: AGNICO EAGLE

NUQSANA PROMEC MINING SERVICES INC.

ultragen

CONSULTANT PROJECT NO. 591700

SCEAU PROFESSIONNEL

CONC.: KHV
DATE: 2017/05/29
DESSINÉ PAR: KVE
DATE: 2017/05/29
VÉR. PAR:
DATE:
APP.:
DATE:
ÉCHELLE: AUCUNE

PROJET: AGNICO EAGLE - MELIADINE DIVISION
416 - FUEL TANK FARM

TITRE: PORTAL #1
FABRICATION ISOMETRIC
FUEL FROM 65TNK41607 UNLOADING NOZZLE TO 65POD41603B

No PROJET	No DESSIN	PAGES	RÉV.
6515	416-100-PDI-CC10-0003	8/10	1

NO. DE CONDUITE		SPECIFICATION	PRODUIT	SYSTEME REVETEMENT	CODE DE COULEUR	ISOLATION ET TRACAGE	EPAISS. D'ISOLATION		
416-100-PDI-CC10-0003		CC10	PDI					65-416-270-200	PIPE SUPPORT DETAILS
PRESSION D'OPERATION	TEMPERATURE D'OPERATION	PRESSION DE CONCEPTION	TEMPERATURE DE CONCEPTION	PRESSION D'ESSAI	CLASSE D'INSPECTION	CODE DE SERVICE	TRAITEMENT THERMIQUE	65-416-205-200	P&ID
PSIG	°F	PSIG	°F	PSIG				No. DESSIN	DESSINS DE REFERENCE

FICHIER: \\ultragen.local\Ultragen-Dessin\Agnico Eagle\Meliadine\591700 (Fuel Distribution)\05. Dessins\02. Tuyauterie\02. Isométriques\02. 403P-100-PDI-CC10-0003-8.DWG

IMPRIMÉ LE: Sep 28, 2017, 1:38pm

416-MN-01

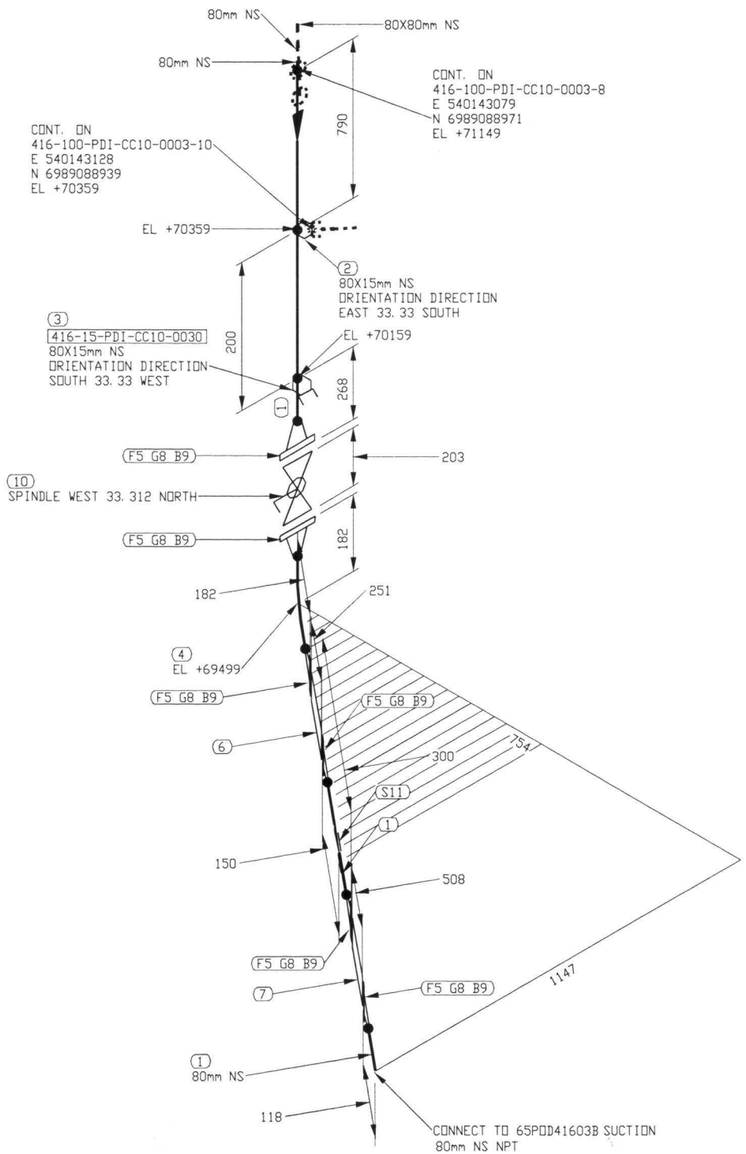

FABRICATION DRAWINGS BASED ON WSP CERTIFIED ENGINEERING

LISTE DE MATERIEL

No	QTE	DIA	MATERIEL/CATALOGUE	DESCRIPTION
1	1403 MM	80	A 333 Gr. 6	SCH STD, SMLS PIPE POExTOE
2	1	80X15	A 350 Gr. LF2	CL 3000, SOCKOLET
3	1	80X15	A 350 Gr. LF2	CL 3000, THREDOLET
4	1	80	A 420 Gr. WPL6	SCH STD, BW LR 90 DEG ELBOW
5	6	80	A 350 Gr. LF2	CL 150, SCH STD, RF, WN FLANGE
6	1	80		CL 150, BASKET STRAINER
7	1	80		CL 150, SINGLE BRAIDED HOSE ASSEMBLY
8	6	80	ASME B16.20	CL 150, GARLOCK 5500, RING TYPE GASKET 1/8" THK
9	24	16	A 193 B7/A 194 2H	CL 150, 4 - 15.875 X 90 STUD BOLTS c/w TWO HEAVY HEX NUTS
10	1	80	BA-31	CL 150, RF, BALL VALVE
11	1	80		PIPE SUPPORT AS PER DETAIL 4, DWG: 65-416-270-200

REGISTERED PROFESSIONAL ENGINEER
D. TRUONG
LICENSEE
NT/NU
2017/10/05

PERMIT TO PRACTICE
LE GROUPE ULTRAGEN LTÉE
Signature
Date OCT 04 2017
PERMIT NUMBER: P 1180
NT/NU Association of Professional Engineers and Geoscientists

No.	DATE	REVISION	PAR / APP.
1	2017/09/29	LINE NUMBERS REVISED	QVN
0	2017/06/30	ISSUED FOR CONSTRUCTION	QVN

CLIENT: AGNICO EAGLE

NUQSANA PROMEC MINING SERVICES INC.

ultragen

CONSULTANT PROJECT NO. 591700

NO. DE CONDUITE		SPECIFICATION	PRODUIT	SYSTEME REVETEMENT	CODE DE COULEUR	ISOLATION ET TRACAGE	EPAISS. D'ISOLATION		
416-100-PDI-CC10-0003		CC10	PDI					65-416-270-200	PIPE SUPPORT DETAILS
PRESSION D'OPERATION	TEMPERATURE D'OPERATION	PRESSION DE CONCEPTION	TEMPERATURE DE CONCEPTION	PRESSION D'ESSAI	CLASSE D'INSPECTION	CODE DE SERVICE	TRAITEMENT THERMIQUE	65-416-205-200	P&ID
PSIG	°F	PSIG	°F	PSIG				No. DESSIN	DESSINS DE REFERENCE

SCEAU PROFESSIONNEL

CONC.: KHV
DATE: 2017/05/29
DESSINÉ PAR: KVE
DATE: 2017/05/29
VÉR. PAR:
DATE:
APP.:
DATE:
ÉCHELLE: AUCUNE

PROJET: AGNICO EAGLE - MELIADINE DIVISION
416 - FUEL TANK FARM

TITRE: PORTAL #1
FABRICATION ISOMETRIC
FUEL FROM 65TNK41607 UNLOADING NOZZLE TO 65POD41603B

No PROJET	No DESSIN	PAGES	RÉV.
6515	416-100-PDI-CC10-0003	9/10	1

416-MN-01

FICHIER: \\Ultragen-local\Ultragen-Dessin\Agnico Eagle\Meliadine\591700 (Fuel Distribution)\05. Dessins\02. Tuyauterie\02. Isométriques\02. 403P-100-PDI-CC10-0003-9.DWG

IMPRIMÉ LE: Sep 28, 2017, 1:38pm

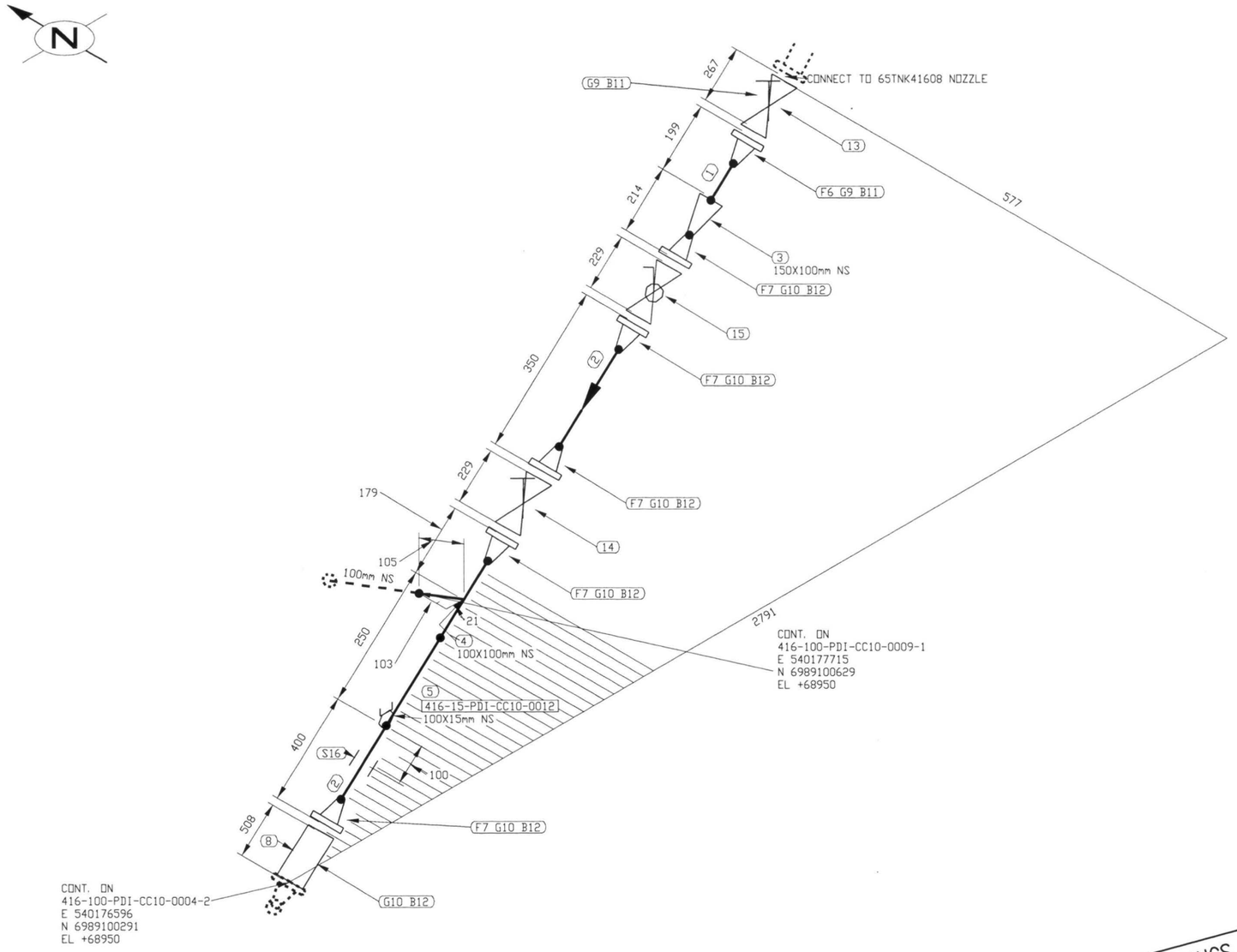

FABRICATION DRAWINGS BASED ON WSP CERTIFIED ENGINEERING

LISTE DE MATERIEL

No	QTE	DIA	MATERIEL/CATALOGUE	DESCRIPTION
1	112 MM	150	A 333 Gr. 6	SCH STD, SMLS PIPE
2	671 MM	100	A 333 Gr. 6	SCH STD, SMLS PIPE
3	1	150X100	A 420 Gr. WPL6	SCH STD, BW CONC RED
4	1	100X100	A 420 Gr. WPL6	SCH STD, BW STRAIGHT TEE
5	1	100X15	A 350 Gr. LF2	CL 3000, THREDOLET
6	1	150	A 350 Gr. LF2	CL 150, SCH STD, RF, WN FLANGE
7	5	100	A 350 Gr. LF2	CL 150, SCH STD, RF, WN FLANGE
8	1	100		CL 150, SINGLE BRAIDED HOSE ASSEMBLY
9	2	150	ASME B16.20	CL 150, GARLOCK 5500, RING TYPE GASKET 1/8" THK
10	6	100	ASME B16.20	CL 150, GARLOCK 5500, RING TYPE GASKET 1/8" THK
11	16	19	A 193 B7/A 194 2H	CL 150, 8 - 19.05 X 100 STUD BOLTS c/w TWO HEAVY HEX NUTS
12	48	16	A 193 B7/A 194 2H	CL 150, 8 - 15.875 X 90 STUD BOLTS c/w TWO HEAVY HEX NUTS
13	1	150	GA-10	CL 150, RF, GATE VALVE
14	1	100	GA-10	CL 150, RF, GATE VALVE
15	1	100	BA-31	CL 150, RF, BALL VALVE
16	1	100		PIPE SUPPORT AS PER DETAIL 3, DWG: 65-416-270-200

REGISTERED PROFESSIONAL ENGINEER
D. TRUONG
LICENSEE
NT/NU
2017/10/05

PERMIT TO PRACTICE
LE GROUPE ULTRAGEN LTÉE
Signature
Date OCT 04 2017
PERMIT NUMBER: P 1180
NT/NU Association of Professional Engineers and Geoscientists

No.	DATE	REVISION	APP.
1	2017/09/29	LINE NUMBERS REVISED	QVN
0	2017/06/30	ISSUED FOR CONSTRUCTION	QVN

CLIENT: AGNICO EAGLE

NUQSANA PROMEC MINING SERVICES INC.

ultragen

CONSULTANT PROJECT NO. 591700

SCEAU PROFESSIONNEL

CONC.: KHV
DATE: 2017/05/29
DESSINÉ PAR: KVE
DATE: 2017/05/29
VÉR. PAR:
DATE:
APP.:
DATE:
ÉCHELLE: AUCUNE

PROJET: AGNICO EAGLE - MELIADINE DIVISION
416 - FUEL TANK FARM

TITRE: PORTAL #1
FABRICATION ISOMETRIC
FUEL FROM 65TNK41608 UNLOADING NOZZLE TO 416-100-PDI-CC10-0003

No PROJET	No DESSIN	PAGES	RÉV.
6515	416-100-PDI-CC10-0004	1/3	1

NO. DE CONDUITE		SPECIFICATION	PRODUIT	SYSTEME REVETEMENT	CODE DE COULEUR	ISOLATION ET TRACAGE	EPAISS. D'ISOLATION		
416-100-PDI-CC10-0004		CC10	PDI					65-416-270-200	PIPE SUPPORT DETAILS
PRESSION D'OPERATION	TEMPERATURE D'OPERATION	PRESSION DE CONCEPTION	TEMPERATURE DE CONCEPTION	PRESSION D'ESSAI	CLASSE D'INSPECTION	CODE DE SERVICE	TRAITEMENT THERMIQUE	65-416-205-200	P&ID
PSIG	°F	PSIG	°F	PSIG				No. DESSIN	DESSINS DE REFERENCE

FICHIER: \\ultragen.local\Ultragen-Dessin\Agnico Eagle\Meliadine\591700 (Fuel Distribution)\05. Dessins\02. Tuyauterie\02. Isométriques\02. 403P-100-PDI-CC10-0004-1.DWG

IMPRIMÉ LE: Sep 28, 2017, 1:38pm

416-MN-01

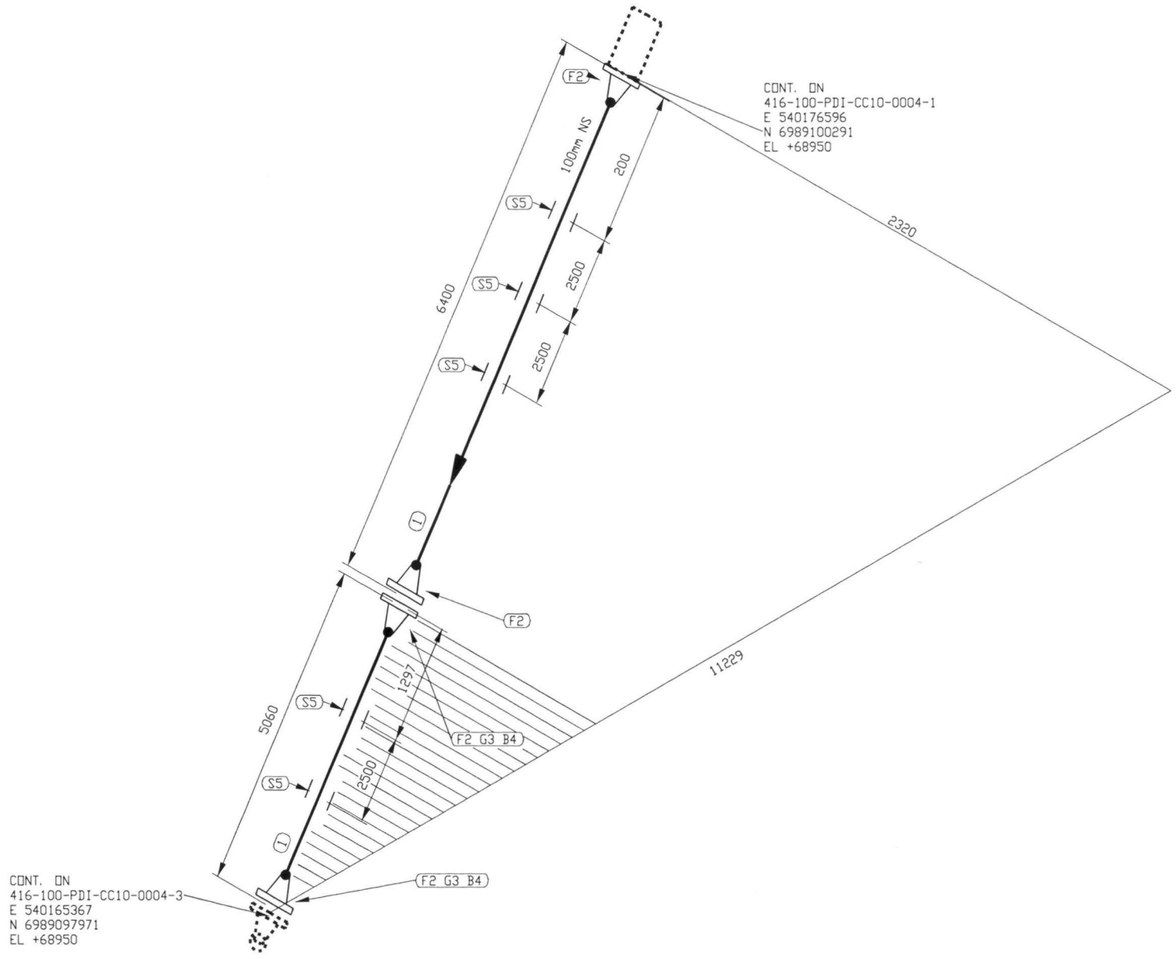

FABRICATION DRAWINGS BASED ON WSP CERTIFIED ENGINEERING

LISTE DE MATERIEL

No	QTE	DIA	MATERIEL/CATALOGUE	DESCRIPTION
1	11161 MM	100	A 333 Gr. 6	SCH STD, SMLS PIPE
2	4	100	A 350 Gr. LF2	CL 150, SCH STD, RF, WN FLANGE
3	2	100	ASME B16.20	CL 150, GARLOCK 5500, RING TYPE GASKET 1/8" THK
4	16	16	A 193 B7/A 194 2H	CL 150, 8 - 15.875 X 90 STUD BOLTS c/w TWO HEAVY HEX NUTS
5	5	100		PIPE SUPPORT AS PER DETAIL 3, DWG: 65-416-270-200

REGISTERED PROFESSIONAL ENGINEER
D. TRUONG
LICENSEE
NT/NU
2017/10/05

PERMIT TO PRACTICE
LE GROUPE ULTRAGEN LTÉE
Signature
Date OCT 04 2017
PERMIT NUMBER: P 1180
NT/NU Association of Professional Engineers and Geoscientists

No.	DATE	REVISION	
1	2017/09/29	LINE NUMBERS REVISED	QVN
0	2017/06/30	ISSUED FOR CONSTRUCTION	QVN

PAR / APP.

CLIENT: AGNICO EAGLE

NUQSANA PROMEC MINING SERVICES INC.

ultragen

CONSULTANT PROJECT NO. 591700

SCEAU PROFESSIONNEL

NO. DE CONDUITE		SPECIFICATION	PRODUIT	SYSTEME REVETEMENT	CODE DE COULEUR	ISOLATION ET TRACAGE	EPAISS. D'ISOLATION		
416-100-PDI-CC10-0004		CC10	PDI					65-416-270-200	PIPE SUPPORT DETAILS
PRESSION D'OPERATION	TEMPERATURE D'OPERATION	PRESSION DE CONCEPTION	TEMPERATURE DE CONCEPTION	PRESSION D'ESSAI	CLASSE D'INSPECTION	CODE DE SERVICE	TRAITEMENT THERMIQUE	65-416-205-200	P&ID
PSIG	°F	PSIG	°F	PSIG				No. DESSIN	DESSINS DE REFERENCE

CONC.: KHV
DATE: 2017/05/29
DESSINÉ PAR: KVE
DATE: 2017/05/29
VÉR. PAR:
DATE:
APP.:
DATE:
ÉCHELLE: AUCUNE

PROJET: AGNICO EAGLE - MELIADINE DIVISION
416 - FUEL TANK FARM

TITRE: PORTAL #1
FABRICATION ISOMETRIC
FUEL FROM 65TNK41608 UNLOADING NOZZLE TO 416-100-PDI-CC10-0003

No PROJET	No DESSIN	PAGES	RÉV.
6515	416-100-PDI-CC10-0004	2/3	1

416-MN-01

FICHIER: \\ultragen.local\Ultragen-Dessin\Agnico Eagle\Meliadine\591700 (Fuel Distribution)\05. Dessins\02. Tuyauterie\02. Isométriques\02. 403P-100-PDI-CC10-0004-2.DWG

IMPRIMÉ LE: Sep 28, 2017, 1:39pm

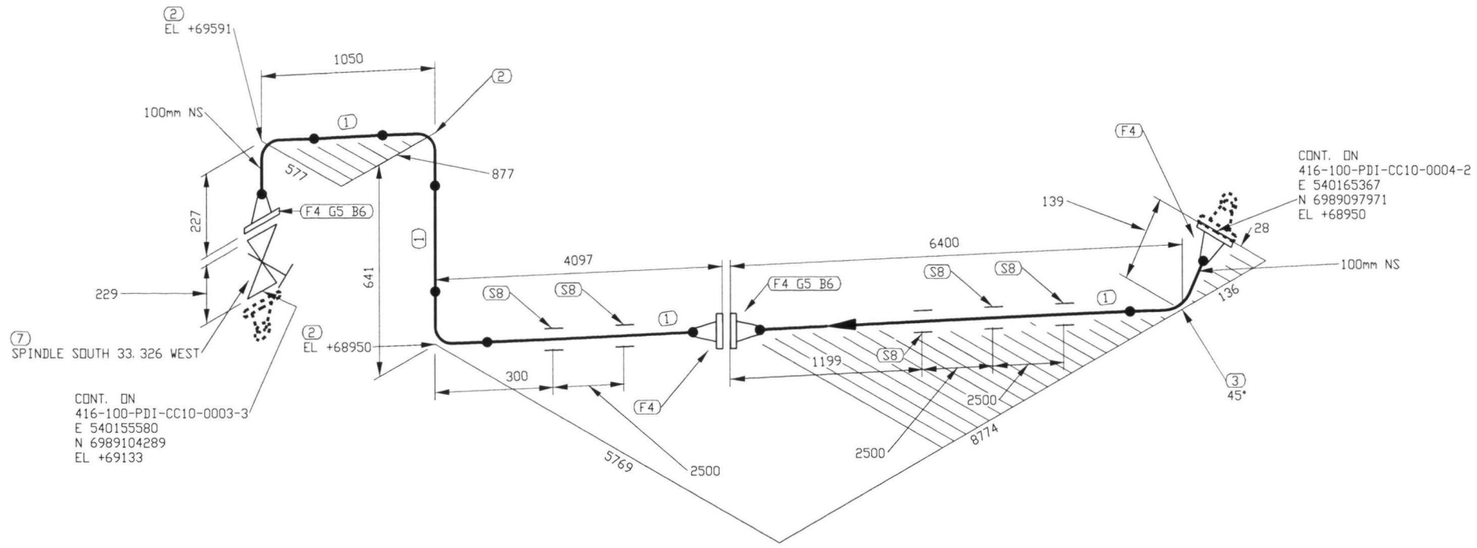

FABRICATION DRAWINGS BASED ON WSP CERTIFIED ENGINEERING

LISTE DE MATERIEL

No	QTE	DIA	MATERIEL/CATALOGUE	DESCRIPTION
1	11216 MM	100	A 333 Gr. 6	SCH STD, SMLS PIPE
2	3	100	A 420 Gr. WPL6	SCH STD, BW LR 90 DEG ELBOW
3	1	100	A 420 Gr. WPL6	SCH STD, BW LR 45 DEG ELBOW
4	4	100	A 350 Gr. LF2	CL 150, SCH STD, RF, WN FLANGE
5	2	100	ASME B16.20	CL 150, GARLOCK 5500, RING TYPE GASKET 1/8" THK
6	16	16	A 193 B7/A 194 2H	CL 150, 8 - 15.875 X 90 STUD BOLTS c/w TWO HEAVY HEX NUTS
7	1	100	GA-10	CL 150, RF, GATE VALVE
8	5	100		PIPE SUPPORT AS PER DETAIL 3, DWG: 65-416-270-200

REGISTERED PROFESSIONAL ENGINEER
D. TRUONG
LICENSEE
NT/NU
2017/10/05

PERMIT TO PRACTICE
LE GROUPE ULTRAGEN LTÉE
Signature
Date OCT 0 4 2017
PERMIT NUMBER: P 1180
NT/NU Association of Professional Engineers and Geoscientists

No.	DATE	REVISION	APP.
1	2017/09/29	LINE NUMBERS REVISED	QVN
0	2017/06/30	ISSUED FOR CONSTRUCTION	QVN

CLIENT:
AGNICO EAGLE

NUQSANA PROMEC MINING SERVICES INC.

ultragen

CONSULTANT PROJECT NO. 591700

SCEAU PROFESSIONNEL

CONC.: KHV
DATE: 2017/05/29
DESSINÉ PAR: KVE
DATE: 2017/05/29
VÉR. PAR:
DATE:
APP.:
DATE:
ÉCHELLE: AUCUNE

PROJET:
AGNICO EAGLE - MELIADINE DIVISION
416 - FUEL TANK FARM

TITRE:
PORTAL #1
FABRICATION ISOMETRIC
FUEL FROM 65TNK41608 UNLOADING NOZZLE TO 416-100-PDI-CC10-0003

No PROJET	No DESSIN	PAGES	RÉV.
6515	416-100-PDI-CC10-0004	3/3	1

NO. DE CONDUITE		SPECIFICATION	PRODUIT	SYSTEME REVETEMENT	CODE DE COULEUR	ISOLATION ET TRACAGE	EPAISS. D'ISOLATION		
416-100-PDI-CC10-0004		CC10	PDI					65-416-270-200	PIPE SUPPORT DETAILS
PRESSION D'OPERATION	TEMPERATURE D'OPERATION	PRESSION DE CONCEPTION	TEMPERATURE DE CONCEPTION	PRESSION D'ESSAI	CLASSE D'INSPECTION	CODE DE SERVICE	TRAITEMENT THERMIQUE	65-416-205-200	P&ID
PSIG	°F	PSIG	°F	PSIG				No. DESSIN	DESSINS DE REFERENCE

FICHIER: \\ultragen.local\Ultragen-Dessin\Agnico Eagle\Meliadine\591700 (Fuel Distribution)\05. Dessins\02. Tuyauterie\02. Isométriques\02. 403P-100-PDI-CC10-0004-3.DWG

IMPRIMÉ LE: Sep 28, 2017, 1:39pm

416-MN-01

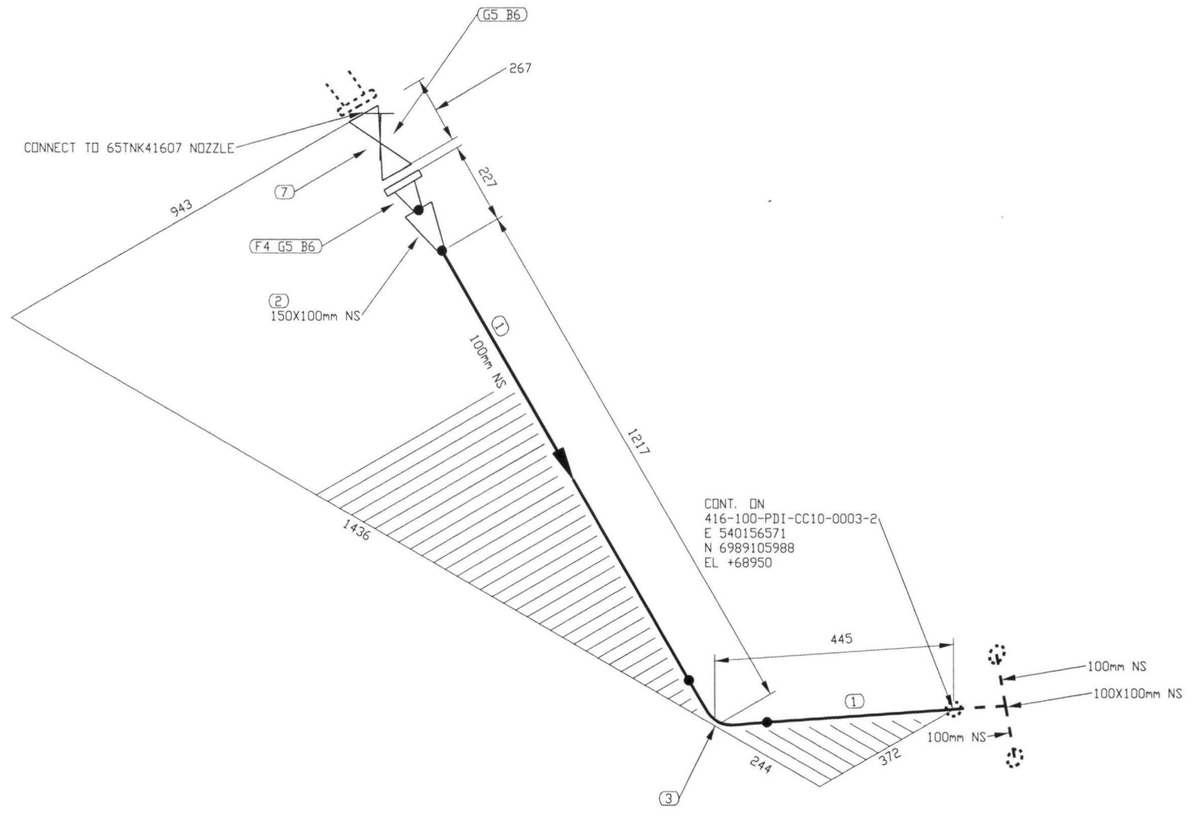

FABRICATION DRAWINGS BASED ON WSP CERTIFIED ENGINEERING

LISTE DE MATERIEL

No	QTE	DIA	MATERIEL/CATALOGUE	DESCRIPTION
1	1358 MM	100	A 333 Gr. 6	SCH STD, SMLS PIPE
2	1	150X100	A 420 Gr. WPL6	SCH STD, BW CONC RED
3	1	100	A 420 Gr. WPL6	SCH STD, BW LR 90 DEG ELBOW
4	1	150	A 350 Gr. LF2	CL 150, SCH STD, RF, WN FLANGE
5	2	150	ASME B16.20	CL 150, GARLOCK 5500, RING TYPE GASKET 1/8" THK
6	16	19	A 193 B7/A 194 2H	CL 150, 8 - 19.05 X 100 STUD BOLTS c/w TWO HEAVY HEX NUTS
7	1	150	GA-10	CL 150, RF, GATE VALVE

REGISTERED PROFESSIONAL ENGINEER
D. TRUONG
LICENSEE
NT/NU
2017/10/05

PERMIT TO PRACTICE
LE GROUPE ULTRAGEN LTÉE
Signature
Date OCT 04 2017
PERMIT NUMBER: P 1180
NT/NU Association of Professional Engineers and Geoscientists

No.	DATE	REVISION	PAR / APP.
1	2017/09/29	LINE NUMBERS REVISED	QVN
0	2017/06/30	ISSUED FOR CONSTRUCTION	QVN

CLIENT: AGNICO EAGLE

NUQSANA PROMEC MINING SERVICES INC.

ultragen

CONSULTANT PROJECT NO. 591700

SCEAU PROFESSIONNEL

CONC.: KHV
DATE: 2017/05/29
DESSINÉ PAR: KVE
DATE: 2017/05/29
VÉR. PAR:
DATE:
APP.:
DATE:
ÉCHELLE: AUCUNE

PROJET: AGNICO EAGLE - MELIADINE DIVISION
416 - FUEL TANK FARM

TITRE: PORTAL #1
FABRICATION ISOMETRIC
FUEL FROM 65TNK-41607 NOZZLE TO 416-100-PDI-CC10-0003

No PROJET	No DESSIN	PAGES	RÉV.
6515	416-100-PDI-CC10-0005	1/1	1

NO. DE CONDUITE		SPECIFICATION	PRODUIT	SYSTEME REVETEMENT	CODE DE COULEUR	ISOLATION ET TRACAGE	EPAISS. D'ISOLATION		
416-100-PDI-CC10-0005		CC10	PDI					65-416-270-200	PIPE SUPPORT DETAILS
PRESSION D'OPERATION	TEMPERATURE D'OPERATION	PRESSION DE CONCEPTION	TEMPERATURE DE CONCEPTION	PRESSION D'ESSAI	CLASSE D'INSPECTION	CODE DE SERVICE	TRAITEMENT THERMIQUE	65-416-205-200	P&ID
PSIG	°F	PSIG	°F	PSIG				No. DESSIN	DESSINS DE REFERENCE

FICHIER: \\ultragen.loca\Ultragen-Dessin\Agnico Eagle\Meliadine\591700 (Fuel Distribution)\05 Dessins\02 Tuyauterie\02 Isométriques\02 403P-100-PDI-CC10-0005-1.DWG

IMPRIMÉ LE: Sep 28, 2017, 1:39pm

416-MN-01

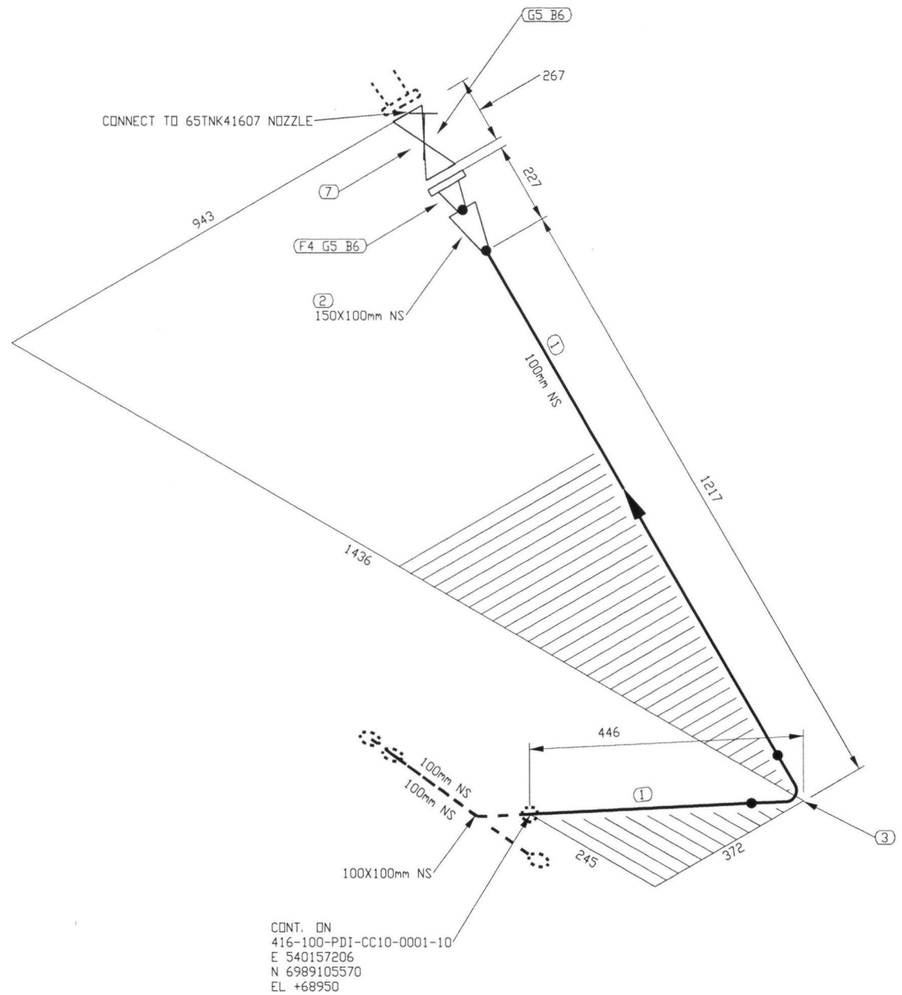

FABRICATION DRAWINGS BASED ON WSP CERTIFIED ENGINEERING

LISTE DE MATERIEL

No	QTE	DIA	MATERIEL/CATALOGUE	DESCRIPTION
1	1359 MM	100	A 333 Gr. 6	SCH STD, SMLS PIPE
2	1	150X100	A 420 Gr. WPL6	SCH STD, BW CONC RED
3	1	100	A 420 Gr. WPL6	SCH STD, BW LR 90 DEG ELBOW
4	1	150	A 350 Gr. LF2	CL 150, SCH STD, RF, WN FLANGE
5	2	150	ASME B16.20	CL 150, GARLOCK 5500, RING TYPE GASKET 1/8" THK
6	16	19	A 193 B7/A 194 2H	CL 150, 8 - 19.05 X 100 STUD BOLTS c/w TWO HEAVY HEX NUTS
7	1	150	GA-10	CL 150, RF, GATE VALVE

REGISTERED PROFESSIONAL ENGINEER
D. TRUONG
LICENSEE
NT/NU
2017/10/05

PERMIT TO PRACTICE
LE GROUPE ULTRAGEN LTÉE
Signature
Date OCT 04 2017
PERMIT NUMBER: P 1180
NT/NU Association of Professional Engineers and Geoscientists

No.	DATE	REVISION	PAR / APP.
1	2017/09/29	LINE NUMBERS REVISED	QVN
0	2017/06/30	ISSUED FOR CONSTRUCTION	QVN

CLIENT: AGNICO EAGLE

NUQSANA PROMEC MINING SERVICES INC.

ultragen

CONSULTANT PROJECT NO. 591700

SCEAU PROFESSIONNEL

NO. DE CONDUITE		SPECIFICATION	PRODUIT	SYSTEME REVETEMENT	CODE DE COULEUR	ISOLATION ET TRACAGE	EPAISS. D'ISOLATION		
416-100-PDI-CC10-0006		CC10	PDI					65-416-270-200	PIPE SUPPORT DETAILS
PRESSION D'OPERATION	TEMPERATURE D'OPERATION	PRESSION DE CONCEPTION	TEMPERATURE DE CONCEPTION	PRESSION D'ESSAI	CLASSE D'INSPECTION	CODE DE SERVICE	TRAITEMENT THERMIQUE	65-416-205-200	P&ID
PSIG	°F	PSIG	°F	PSIG				No. DESSIN	DESSINS DE REFERENCE

CONC.: KHV
DATE: 2017/05/29
DESSINÉ PAR: KVE
DATE: 2017/05/29
VÉR. PAR:
DATE:
APP.:
DATE:
ÉCHELLE: AUCUNE

PROJET: AGNICO EAGLE - MELIADINE DIVISION
416 - FUEL TANK FARM

TITRE: PORTAL #1
FABRICATION ISOMETRIC
FUEL FROM 65POD41607 TO LOADING NOZZLE

No PROJET	No DESSIN	PAGES	RÉV.
6515	416-100-PDI-CC10-0006	1/1	1

416-MN-01

FICHIER: \\ultragen.local\Ultragen-Dessin\Agnico Eagle\Meliadine\591700 (Fuel Distribution)\05. Dessins\02. Tuyauterie\02. Isométriques\02. 403P-100-PDI-CC10-0006-1.DWG

IMPRIMÉ LE: Sep 28, 2017, 1:39pm

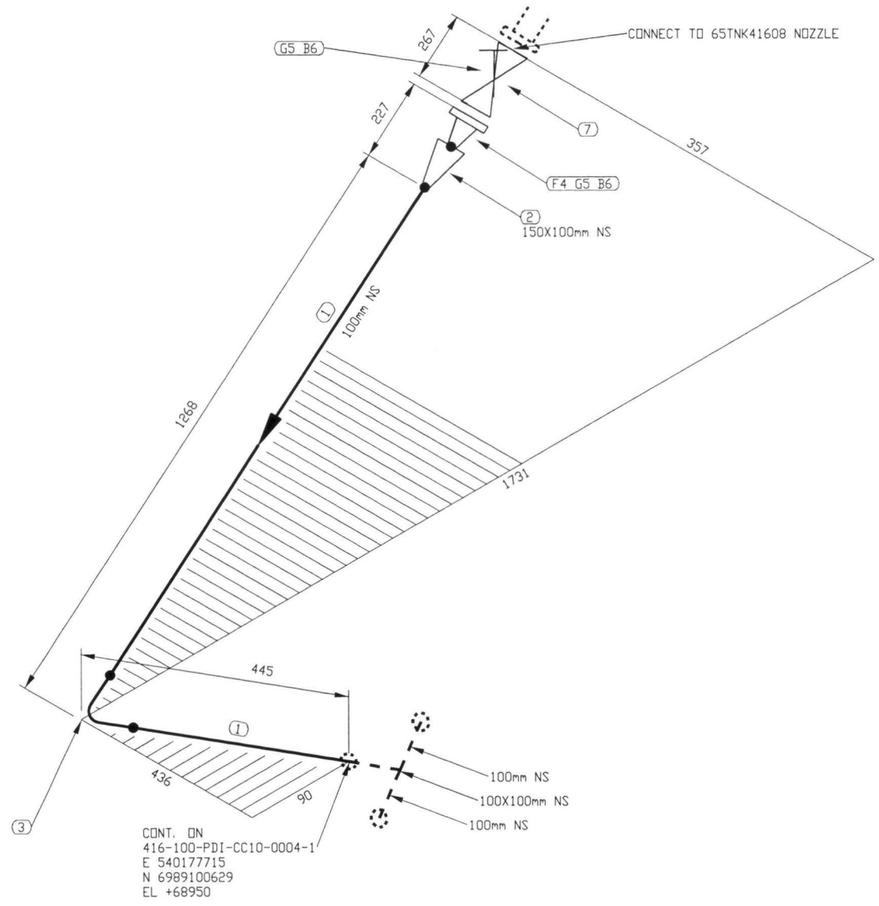

FABRICATION DRAWINGS BASED ON WSP CERTIFIED ENGINEERING

LISTE DE MATERIEL

No	QTE	DIA	MATERIEL/CATALOGUE	DESCRIPTION
1	1409 MM	100	A 333 Gr. 6	SCH STD, SMLS PIPE
2	1	150X100	A 420 Gr. WPL6	SCH STD, BW CONC RED
3	1	100	A 420 Gr. WPL6	SCH STD, BW LR 90 DEG ELBOW
4	1	150	A 350 Gr. LF2	CL 150, SCH STD, RF, WN FLANGE
5	2	150	ASME B16.20	CL 150, GARLOCK 5500, RING TYPE GASKET 1/8" THK
6	16	19	A 193 B7/A 194 2H	CL 150, 8 - 19.05 X 100 STUD BOLTS c/w TWO HEAVY HEX NUTS
7	1	150	GA-10	CL 150, RF, GATE VALVE

REGISTERED PROFESSIONAL ENGINEER
D. TRUONG
LICENSEE
NT/NU
2017/10/05

PERMIT TO PRACTICE
LE GROUPE ULTRAGEN LTÉE
Signature
Date OCT 04 2017
PERMIT NUMBER: P 1180
NT/NU Association of Professional Engineers and Geoscientists

No.	DATE	REVISION	PAR / APP.
1	2017/09/29	LINE NUMBERS REVISED	QVN
0	2017/06/30	ISSUED FOR CONSTRUCTION	QVN

CLIENT: AGNICO EAGLE

NUQSANA PROMEC MINING SERVICES INC.

ultragen

CONSULTANT PROJECT NO. 591700

SCEAU PROFESSIONNEL

CONC.: KHV
DATE: 2017/05/29
DESSINÉ PAR: KVE
DATE: 2017/05/29
VÉR. PAR:
DATE:
APP.:
DATE:
ÉCHELLE: AUCUNE

PROJET: AGNICO EAGLE - MELIADINE DIVISION
416 - FUEL TANK FARM

TITRE: PORTAL #1
FABRICATION ISOMETRIC
FUEL FROM 65TNK41608 TO 416-100-PDI-CC10-0004

No PROJET	No DESSIN	PAGES	RÉV.
6515	416-100-PDI-CC10-0009	1/1	1

NO. DE CONDUITE		SPECIFICATION	PRODUIT	SYSTEME REVETEMENT	CODE DE COULEUR	ISOLATION ET TRACAGE	EPAISS. D'ISOLATION		
416-100-PDI-CC10-0009		CC10	PDI					65-416-270-200	PIPE SUPPORT DETAILS
PRESSION D'OPERATION	TEMPERATURE D'OPERATION	PRESSION DE CONCEPTION	TEMPERATURE DE CONCEPTION	PRESSION D'ESSAI	CLASSE D'INSPECTION	CODE DE SERVICE	TRAITEMENT THERMIQUE	65-416-205-200	P&ID
PSIG	°F	PSIG	°F	PSIG				No. DESSIN	DESSINS DE REFERENCE

FICHIER: \\ultragen.local\Ultragen-Dessin\Agnico Eagle\Meliadine\591700 (Fuel Distribution)\05. Dessins\02. Tuyauterie\02. Isométriques\02. 403P-100-PDI-CC10-0009-1.DWG

IMPRIMÉ LE: Sep 28, 2017, 1:39pm

416-MN-01

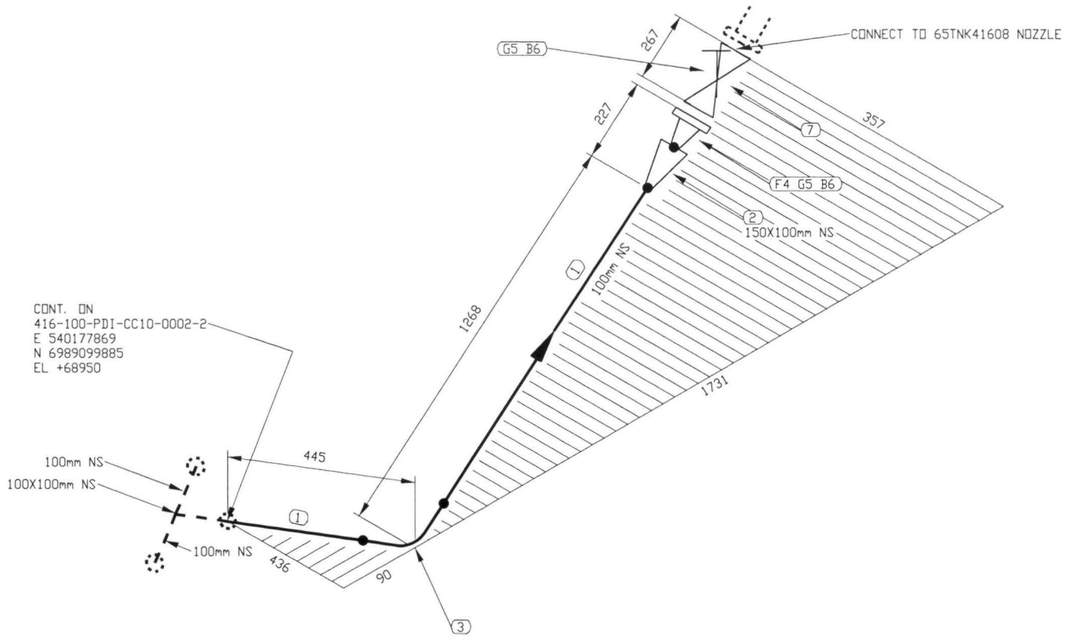

FABRICATION DRAWINGS BASED ON WSP CERTIFIED ENGINEERING

LISTE DE MATERIEL

No	QTE	DIA	MATERIEL/CATALOGUE	DESCRIPTION
1	1409 MM	100	A 333 Gr. 6	SCH STD, SMLS PIPE
2	1	150X100	A 420 Gr. WPL6	SCH STD, BW CONC RED
3	1	100	A 420 Gr. WPL6	SCH STD, BW LR 90 DEG ELBOW
4	1	150	A 350 Gr. LF2	CL 150, SCH STD, RF, WN FLANGE
5	2	150	ASME B16.20	CL 150, GARLOCK 5500, RING TYPE GASKET 1/8" THK
6	16	19	A 193 B7/A 194 2H	CL 150, 8 - 19.05 X 100 STUD BOLTS c/w TWO HEAVY HEX NUTS
7	1	150	GA-10	CL 150, RF, GATE VALVE

REGISTERED PROFESSIONAL ENGINEER
D. TRUONG
LICENSEE
NT/NU
2017/10/05

PERMIT TO PRACTICE
LE GROUPE ULTRAGEN LTÉE
Signature
Date OCT 04 2017
PERMIT NUMBER: P 1180
NT/NU Association of Professional Engineers and Geoscientists

No.	DATE	REVISION	PAR / APP.
1	2017/09/29	LINE NUMBERS REVISED	QVN
0	2017/06/30	ISSUED FOR CONSTRUCTION	QVN

CLIENT: AGNICO EAGLE

NUQSANA PROMEC MINING SERVICES INC.

ultragen

CONSULTANT PROJECT NO. 591700

SCEAU PROFESSIONNEL

CONC.: KHV
DATE: 2017/05/29
DESSINÉ PAR: KVE
DATE: 2017/05/29
VÉR. PAR:
DATE:
APP.:
DATE:
ÉCHELLE: AUCUNE

PROJET: AGNICO EAGLE - MELIADINE DIVISION
416 - FUEL TANK FARM

TITRE: PORTAL #1
FABRICATION ISOMETRIC
FUEL FROM 416-100-PDI-CC10-0002 TO 65TNK41608 LOADING NOZZLE

No PROJET	No DESSIN	PAGES	RÉV.
6515	416-100-PDI-CC10-0010	1/1	1

NO. DE CONDUITE		SPECIFICATION	PRODUIT	SYSTEME REVETEMENT	CODE DE COULEUR	ISOLATION ET TRACAGE	EPAISS. D'ISOLATION		
416-100-PDI-CC10-0010		CC10	PDI					65-416-270-200	PIPE SUPPORT DETAILS
PRESSION D'OPERATION	TEMPERATURE D'OPERATION	PRESSION DE CONCEPTION	TEMPERATURE DE CONCEPTION	PRESSION D'ESSAI	CLASSE D'INSPECTION	CODE DE SERVICE	TRAITEMENT THERMIQUE	65-416-205-200	P&ID
PSIG	°F	PSIG	°F	PSIG				No. DESSIN	DESSINS DE REFERENCE

FICHIER: \\ultragen.local\Ultragen-Dessin\Agnico Eagle\Meliadine\591700 (Fuel Distribution)\05. Dessins\02. Tuyauterie\02. Isométriques\02 403P-100-PDI-CC10-0010-1.DWG

IMPRIMÉ LE: Sep 28, 2017, 1:39pm

416-MN-01

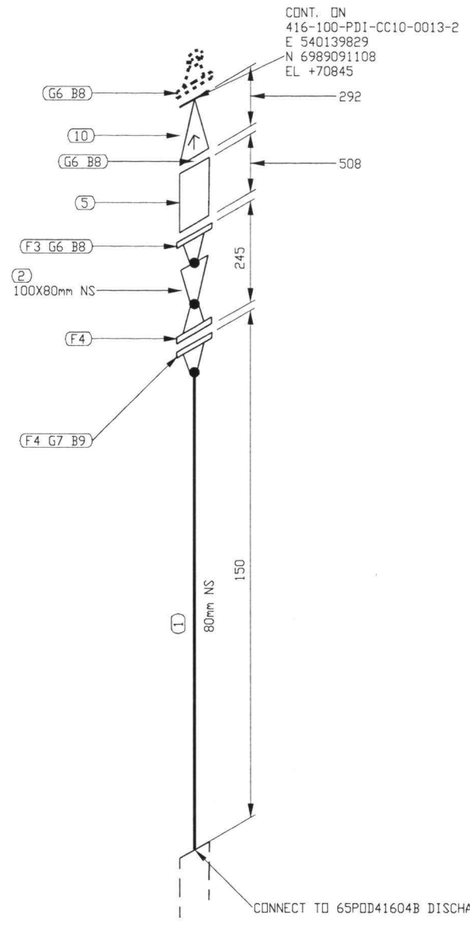

FABRICATION DRAWINGS BASED ON WSP CERTIFIED ENGINEERING

LISTE DE MATERIEL

No	QTE	DIA	MATERIEL/CATALOGUE	DESCRIPTION
1	82 MM	80	A 333 Gr. 6	SCH STD, SMLS PIPE PDExTDE
2	1	100X80	A 420 Gr. WPL6	SCH STD x 80, BW CONC RED
3	1	100	A 350 Gr. LF2	CL 150, SCH STD, RF, WN FLANGE
4	2	80	A 350 Gr. LF2	CL 150, SCH STD, RF, WN FLANGE
5	1	100		CL 150, SINGLE BRAIDED HOSE ASSEMBLY
6	3	100	ASME B16.20	CL 150, GARLOCK 5500, RING TYPE GASKET 1/8" THK
7	1	80	ASME B16.20	CL 150, GARLOCK 5500, RING TYPE GASKET 1/8" THK
8	24	16	A 193 B7/A 194 2H	CL 150, 8 - 15.875 X 90 STUD BOLTS c/w TWO HEAVY HEX NUTS
9	4	16	A 193 B7/A 194 2H	CL 150, 4 - 15.875 X 90 STUD BOLTS c/w TWO HEAVY HEX NUTS
10	1	100	CK-29	CL 150, RF, SWING CHECK VALVE

REGISTERED PROFESSIONAL ENGINEER
D. TRUONG
LICENSEE
NT/NU
2017/10/05

PERMIT TO PRACTICE
LE GROUPE ULTRAGEN LTÉE
Signature
Date OCT 04 2017
PERMIT NUMBER: P 1180
NT/NU Association of Professional Engineers and Geoscientists

No.	DATE	REVISION	PAR / APP.
1	2017/09/29	LINE NUMBERS REVISED	QVN /
0	2017/06/30	ISSUED FOR CONSTRUCTION	QVN /

CLIENT: AGNICO EAGLE

NUQSANA PROMEC MINING SERVICES INC.

ultragen

CONSULTANT PROJECT NO. 591700

SCEAU PROFESSIONNEL

CONC.: KHV
DATE: 2017/05/29
DESSINÉ PAR: KVE
DATE: 2017/05/29
VÉR. PAR:
DATE:
APP.:
DATE:
ÉCHELLE: AUCUNE

PROJET: AGNICO EAGLE - MELIADINE DIVISION
416 - FUEL TANK FARM

TITRE: PORTAL #1
FABRICATION ISOMETRIC
FUEL FROM 650POD41604B TO 416-100-PDI-CC10-0001

No PROJET	No DESSIN	PAGES	RÉV.
6515	416-100-PDI-CC10-0013	1/4	1

NO. DE CONDUITE		SPECIFICATION	PRODUIT	SYSTEME REVETEMENT	CODE DE COULEUR	ISOLATION ET TRACAGE	EPAISS. D'ISOLATION		
416-100-PDI-CC10-0013		CC10	PDI					65-416-270-200	PIPE SUPPORT DETAILS
PRESSION D'OPERATION	TEMPERATURE D'OPERATION	PRESSION DE CONCEPTION	TEMPERATURE DE CONCEPTION	PRESSION D'ESSAI	CLASSE D'INSPECTION	CODE DE SERVICE	TRAITEMENT THERMIQUE	65-416-205-200	P&ID
PSIG	°F	PSIG	°F	PSIG				No. DESSIN	DESSINS DE REFERENCE

FICHIER: W:\Agnico Eagle\Meliadine\591700 (Fuel Distribution)\05. Dessins\02. Tuyauterie\02. Isométriques\02. Portal 1\140JP-100-PDI-CC10-0013-1.DWG

IMPRIMÉ LE: Oct 02, 2017, 4:13pm

416-MN-01

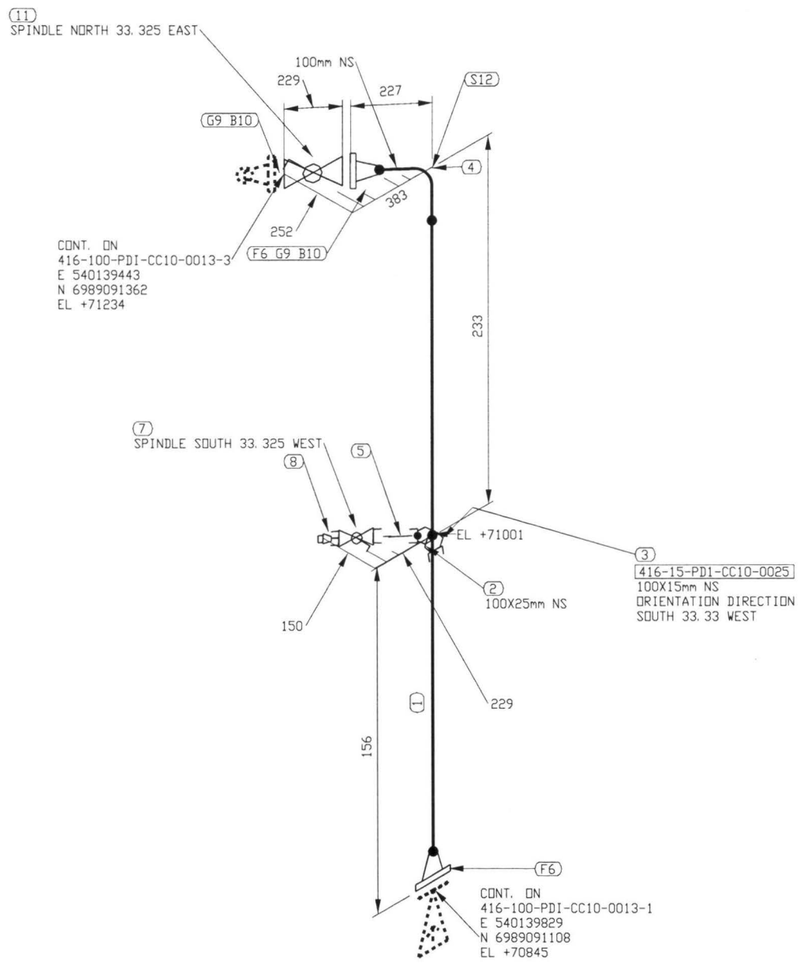

FABRICATION DRAWINGS BASED ON WSP CERTIFIED ENGINEERING

LISTE DE MATERIEL

No	QTE	DIA	MATERIEL/CATALOGUE	DESCRIPTION
1	163 MM	100	A 333 Gr. 6	SCH STD, SMLS PIPE
2	1	100X25	A 350 Gr. LF2	CL 3000, SOCKOLET
3	1	100X15	A 350 Gr. LF2	CL 3000, THREDOLET
4	1	100	A 420 Gr. WPL6	SCH STD, BW LR 90 DEG ELBOW
5	1	25	A 333 Gr. 6	SCH 80, NIPPLE x 75mm LG POExTOE
6	2	100	A 350 Gr. LF2	CL 150, SCH STD, RF, WN FLANGE
7	1	25	BA-32	CL 600, THRD, BALL VALVE
8	1	25	A 350 Gr. LF2	MNPT SOLID STL BULL PLUG
9	2	100	ASME B16.20	CL 150, GARLOCK 5500, RING TYPE GASKET 1/8" THK
10	16	16	A 193 B7/A 194 2H	CL 150, 8 - 15.875 X 90 STUD BOLTS c/w TWO HEAVY HEX NUTS
11	1	100	BA-31	CL 150, RF, BALL VALVE
12	1	100		PIPE SUPPORT BY CONTRACTOR

REGISTERED PROFESSIONAL ENGINEER
D. TRUONG
LICENSEE
NT/NU
2017/10/05

PERMIT TO PRACTICE
LE GROUPE ULTRAGEN LTÉE
Signature
Date OCT 04 2017
PERMIT NUMBER: P 1180
NT/NU Association of Professional Engineers and Geoscientists

No.	DATE	REVISION	PAR / APP.
1	2017/09/29	LINE NUMBERS REVISED	QVN
0	2017/06/30	ISSUED FOR CONSTRUCTION	QVN

CLIENT: AGNICO EAGLE

NUQSANA PROMEC MINING SERVICES INC.

ultragen

CONSULTANT PROJECT NO. 591700

SCEAU PROFESSIONNEL

CONC.: KHV
DATE: 2017/05/29
DESSINÉ PAR: KVE
DATE: 2017/05/29
VÉR. PAR:
DATE:
APP.:
DATE:
ÉCHELLE: AUCUNE

PROJET: AGNICO EAGLE - MELIADINE DIVISION
416 - FUEL TANK FARM

TITRE: PORTAL #1
FABRICATION ISOMETRIC
FUEL FROM 650PDD41604B TO 416-100-PDI-CC10-0001

No PROJET	No DESSIN	PAGES	RÉV.
6515	416-100-PDI-CC10-0013	2/4	1

NO. DE CONDUITE		SPECIFICATION	PRODUIT	SYSTEME REVETEMENT	CODE DE COULEUR	ISOLATION ET TRACAGE	EPAISS. D'ISOLATION		
416-100-PDI-CC10-0013		CC10	PDI					65-416-270-200	PIPE SUPPORT DETAILS
PRESSION D'OPERATION	TEMPERATURE D'OPERATION	PRESSION DE CONCEPTION	TEMPERATURE DE CONCEPTION	PRESSION D'ESSAI	CLASSE D'INSPECTION	CODE DE SERVICE	TRAITEMENT THERMIQUE	65-416-205-200	P&ID
PSIG	°F	PSIG	°F	PSIG				No. DESSIN	DESSINS DE REFERENCE

FICHIER: W:\Agnico Eagle\Meliadine\591700 (Fuel Distribution)\05. Dessins\02. Tuyauterie\02. Isométriques\02. Portail 1\403P-100-PDI-CC10-0013-2.DWG

IMPRIMÉ LE: Oct 02, 2017, 4:16pm

416-MN-01

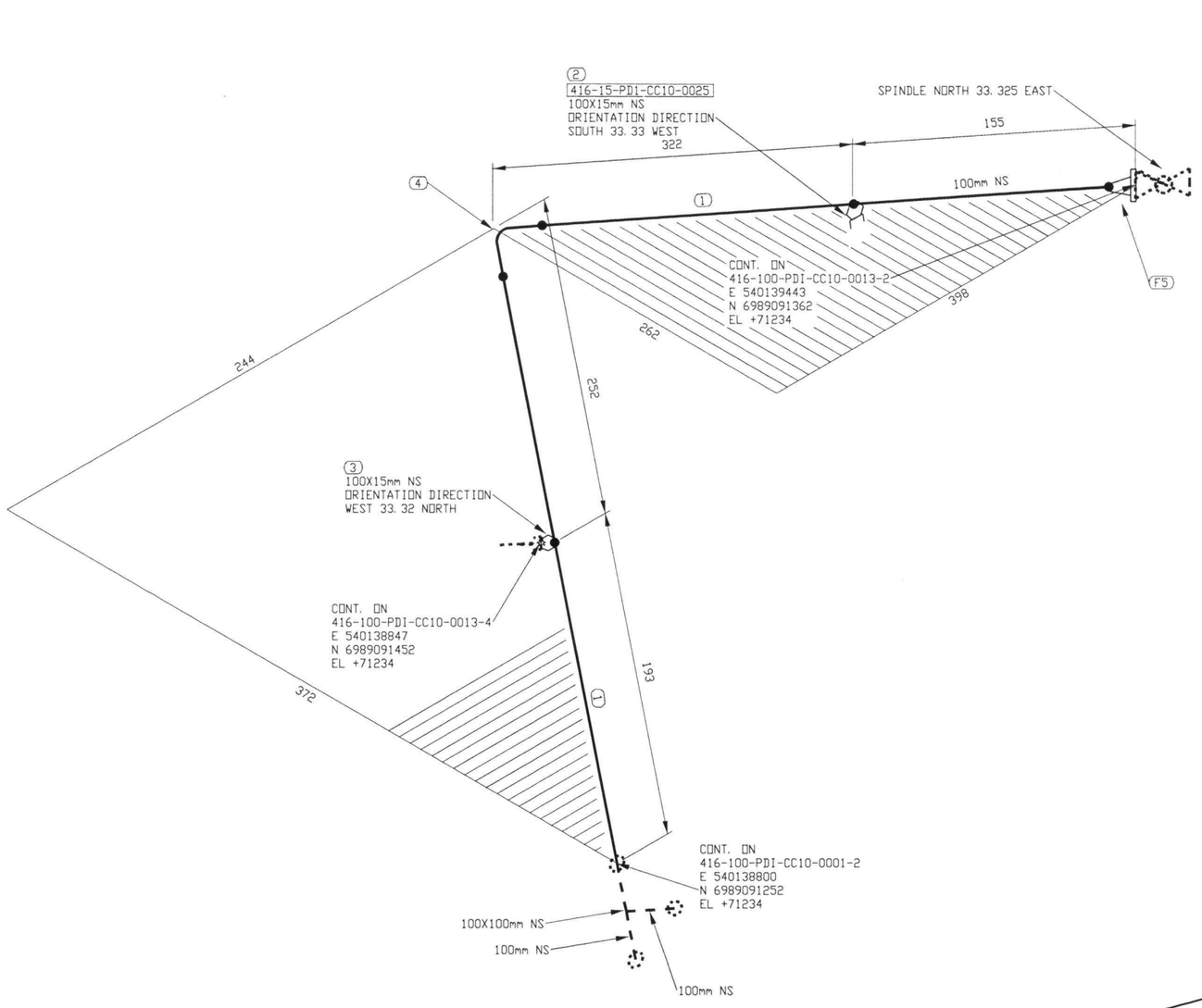

FABRICATION DRAWINGS BASED ON WSP CERTIFIED ENGINEERING

LISTE DE MATERIEL

No	QTE	DIA	MATERIEL/CATALOGUE	DESCRIPTION
1	543 MM	100	A 333 Gr. 6	SCH STD, SMLS PIPE
2	1	100X15	A 350 Gr. LF2	CL 3000, THREDOLET
3	1	100X15	A 350 Gr. LF2	CL 3000, SOCKOLET
4	1	100	A 420 Gr. WPL6	SCH STD, BW LR 90 DEG ELBOW
5	1	100	A 350 Gr. LF2	CL 150, SCH STD, RF, WN FLANGE

REGISTERED PROFESSIONAL ENGINEER
D. TRUONG
LICENSEE
NT/NU
2017/10/05

PERMIT TO PRACTICE
LE GROUPE ULTRAGEN LTÉE
Signature
Date OCT 04 2017
PERMIT NUMBER: P 1180
NT/NU Association of Professional Engineers and Geoscientists

No.	DATE	REVISION	PAR / APP.
1	2017/09/29	LINE NUMBERS REVISED	QVN
0	2017/06/30	ISSUED FOR CONSTRUCTION	QVN

CLIENT: AGNICO EAGLE

NUQSANA-PROMEC MINING SERVICES INC.

ultragen

CONSULTANT PROJECT NO. 591700

NO. DE CONDUITE		SPECIFICATION	PRODUIT	SYSTEME REVETEMENT	CODE DE COULEUR	ISOLATION ET TRACAGE	EPAISS. D'ISOLATION		
416-100-PDI-CC10-0013		CC10	PDI					65-416-270-200	PIPE SUPPORT DETAILS
PRESSION D'OPERATION	TEMPERATURE D'OPERATION	PRESSION DE CONCEPTION	TEMPERATURE DE CONCEPTION	PRESSION D'ESSAI	CLASSE D'INSPECTION	CODE DE SERVICE	TRAITEMENT THERMIQUE	65-416-205-200	P&ID
PSIG	°F	PSIG	°F	PSIG				No. DESSIN	DESSINS DE REFERENCE

SCEAU PROFESSIONNEL

CONC.: KHV
DATE: 2017/05/29
DESSINÉ PAR: KVE
DATE: 2017/05/29
VÉR. PAR:
DATE:
APP.:
DATE:
ÉCHELLE: AUCUNE

PROJET: AGNICO EAGLE - MELIADINE DIVISION
416 - FUEL TANK FARM

TITRE: PORTAL #1
FABRICATION ISOMETRIC
FUEL FROM 650P0D41604B TO 416-100-PDI-CC10-0001

No PROJET	No DESSIN	PAGES	RÉV.
6515	416-100-PDI-CC10-0013	3/4	1

416-MN-01

FICHIER: W:\Agnico Eagle\Meliadine\591700 (Fuel Distribution)\05. Dessins\02. Tuyauterie\02. Isométriques\02. Portail 1\403P-100-PDI-CC10-0013-3.DWG

IMPRIMÉ LE: Oct 02, 2017, 4:17pm

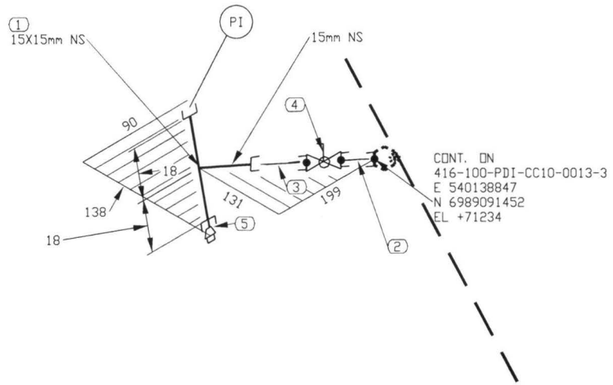

FABRICATION DRAWINGS BASED ON WSP CERTIFIED ENGINEERING

LISTE DE MATERIEL

No	QTE	DIA	MATERIEL/CATALOGUE	DESCRIPTION
1	1	15X15	A 350 Gr. LF2	CL 3000, THRD STRAIGHT TEE
2	1	15	A 333 Gr. 6	SCH 80, NIPPLE x 75mm LG PBE
3	1	15	A 333 Gr. 6	SCH 80, NIPPLE x 75mm LG PDExTDE
4	1	15	BA-29	CL 600, SW, BALL VALVE
5	1	15	A 350 Gr. LF2	MNPT SOLID STL BULL PLUG

REGISTERED PROFESSIONAL ENGINEER
D. TRUONG
LICENSEE
NT/NU
2017/10/05

PERMIT TO PRACTICE
LE GROUPE ULTRAGEN LTÉE
Signature
Date OCT 04 2017
PERMIT NUMBER: P 1180
NT/NU Association of Professional Engineers and Geoscientists

No.	DATE	REVISION	PAR / APP.
1	2017/09/29	LINE NUMBERS REVISED	QVN
0	2017/06/30	ISSUED FOR CONSTRUCTION	QVN

CLIENT: AGNICO EAGLE

NUQSANA PROMEC MINING SERVICES INC.

ultragen

CONSULTANT PROJECT NO. 591700

NO. DE CONDUITE		SPECIFICATION	PRODUIT	SYSTEME REVETEMENT	CODE DE COULEUR	ISOLATION ET TRACAGE	EPAISS. D'ISOLATION		
416-100-PDI-CC10-0013		CC10	PDI					65-416-270-200	PIPE SUPPORT DETAILS
PRESSION D'OPERATION	TEMPERATURE D'OPERATION	PRESSION DE CONCEPTION	TEMPERATURE DE CONCEPTION	PRESSION D'ESSAI	CLASSE D'INSPECTION	CODE DE SERVICE	TRAITEMENT THERMIQUE	65-416-205-200	P&ID
PSIG	°F	PSIG	°F	PSIG				No. DESSIN	DESSINS DE REFERENCE

SCEAU PROFESSIONNEL

CONC.: KHV
DATE: 2017/05/29
DESSINÉ PAR: KVE
DATE: 2017/05/29
VÉR. PAR:
DATE:
APP.:
DATE:
ÉCHELLE: AUCUNE

PROJET: AGNICO EAGLE - MELIADINE DIVISION
416 - FUEL TANK FARM

TITRE: PORTAL #1
FABRICATION ISOMETRIC
FUEL FROM 650POD41604B TO 416-100-PDI-CC10-0001

No PROJET	No DESSIN	PAGES	RÉV.
6515	416-100-PDI-CC10-0013	4/4	1

416-MN-01

FICHIER: W:\Agnico Eagle\Meliadine\591700 (Fuel Distribution)\05. Dessins\02. Tuyauterie\02. Isométriques\02. Portail 1\403P-100-PDI-CC10-0013-4.DWG

IMPRIMÉ LE: Oct 02, 2017, 4:17pm

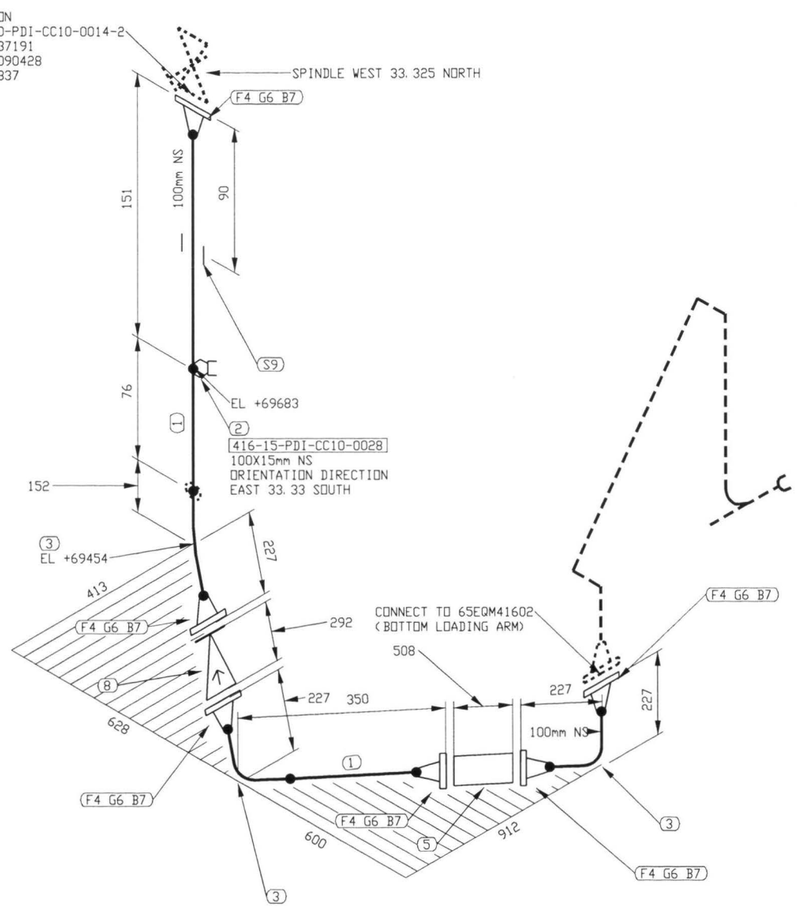

FABRICATION DRAWINGS BASED ON
WSP CERTIFIED ENGINEERING

LISTE DE MATERIEL

No	QTE	DIA	MATERIEL/CATALOGUE	DESCRIPTION
1	276 MM	100	A 333 Gr. 6	SCH STD, SMLS PIPE
2	1	100X15	A 350 Gr. LF2	CL 3000, THREDOLET
3	3	100	A 420 Gr. WPL6	SCH STD, BW LR 90 DEG ELBOW
4	6	100	A 350 Gr. LF2	CL 150, SCH STD, RF, WN FLANGE
5	1	100		CL 150, SINGLE BRAIDED HOSE ASSEMBLY
6	6	100	ASME B16.20	CL 150, GARLOCK 5500, RING TYPE GASKET 1/8" THK
7	48	16	A 193 B7/A 194 2H	CL 150, 8 - 15.875 X 90 STUD BOLTS c/w TWO HEAVY HEX NUTS
8	1	100	CK-29	CL 150, RF, SWING CHECK VALVE
9	1	100		PIPE SUPPORT BY CONTRACTOR

REGISTERED PROFESSIONAL ENGINEER
D. TRUONG
LICENSEE
NT/NU
2017/10/05

PERMIT TO PRACTICE
LE GROUPE ULTRAGEN LTÉE
Signature
Date OCT 04 2017
PERMIT NUMBER: P 1180
NT/NU Association of Professional Engineers and Geoscientists

No.	DATE	REVISION	
1	2017/09/29	LINE NUMBERS REVISED	QVN
0	2017/06/30	ISSUED FOR CONSTRUCTION	QVN

CLIENT: AGNICO EAGLE

NUQSANA PROMEC MINING SERVICES INC.

ultragen

CONSULTANT PROJECT NO. 591700

SCEAU PROFESSIONNEL

CONC.: KHV
DATE: 2017/05/29
DESSINÉ PAR: KVE
DATE: 2017/05/29
VÉR. PAR:
DATE:
APP.:
DATE:
ÉCHELLE: AUCUNE

PROJET: AGNICO EAGLE - MELIADINE DIVISION
416 - FUEL TANK FARM

TITRE: PORTAL #1
FABRICATION ISOMETRIC
FUEL FROM TRUCK UNLOADING TO 65POD41604A/B

No PROJET	No DESSIN	PAGES	RÉV.
6515	416-100-PDI-CC10-0014	1/6	1

NO. DE CONDUITE		SPECIFICATION	PRODUIT	SYSTEME REVETEMENT	CODE DE COULEUR	ISOLATION ET TRACAGE	EPAISS. D'ISOLATION		
416-100-PDI-CC10-0014		CC10	PDI					65-416-270-200	PIPE SUPPORT DETAILS
PRESSION D'OPERATION	TEMPERATURE D'OPERATION	PRESSION DE CONCEPTION	TEMPERATURE DE CONCEPTION	PRESSION D'ESSAI	CLASSE D'INSPECTION	CODE DE SERVICE	TRAITEMENT THERMIQUE	65-416-205-200	P&ID
PSIG	°F	PSIG	°F	PSIG				No. DESSIN	DESSINS DE REFERENCE

FICHIER: \\Ultragen-local\Ultragen-Dessin\Agnico Eagle\Meliadine\591700 (Fuel Distribution)\05. Dessins\02 Tuyauterie\02 Isométriques\02 403P-100-PDI-CC10-0014-1.DWG

IMPRIMÉ LE: Sep 28, 2017, 1:39pm

416-MN-01

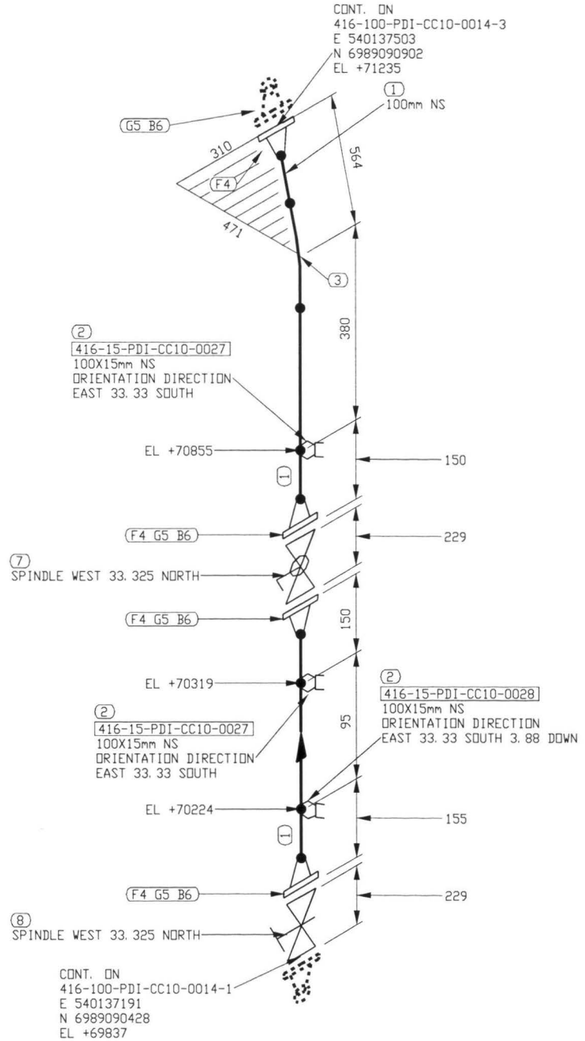

FABRICATION DRAWINGS BASED ON WSP CERTIFIED ENGINEERING

LISTE DE MATERIEL

No	QTE	DIA	MATERIEL/CATALOGUE	DESCRIPTION
1	891 MM	100	A 333 Gr. 6	SCH STD, SMLS PIPE
2	3	100X15	A 350 Gr. LF2	CL 3000, THREDOLET
3	1	100	A 420 Gr. WPL6	SCH STD, BW LR 90 DEG ELBOW
4	4	100	A 350 Gr. LF2	CL 150, SCH STD, RF, WN FLANGE
5	4	100	ASME B16.20	CL 150, GARLOCK 5500, RING TYPE GASKET 1/8" THK
6	32	16	A 193 B7/A 194 2H	CL 150, 8 - 15.875 X 90 STUD BOLTS c/w TWO HEAVY HEX NUTS
7	1	100	BA-31	CL 150, RF, BALL VALVE
8	1	100	GA-10	CL 150, RF, GATE VALVE

REGISTERED PROFESSIONAL ENGINEER
D. TRUONG
LICENSEE
NT/NU
2017/10/05

PERMIT TO PRACTICE
LE GROUPE ULTRAGEN LTÉE
Signature
Date OCT 04 2017
PERMIT NUMBER: P 1180
NT/NU Association of Professional Engineers and Geoscientists

No.	DATE	REVISION	PAR / APP.
1	2017/09/29	LINE NUMBERS REVISED	QVN
0	2017/06/30	ISSUED FOR CONSTRUCTION	QVN

CLIENT: AGNICO EAGLE

NUQSANA PROMEC MINING SERVICES INC.

ultragen

CONSULTANT PROJECT NO. 591700

SCEAU PROFESSIONNEL

CONC.: KHV
DATE: 2017/05/29
DESSINÉ PAR: KVE
DATE: 2017/05/29
VÉR. PAR:
DATE:
APP.:
DATE:
ÉCHELLE: AUCUNE

PROJET: AGNICO EAGLE - MELIADINE DIVISION
416 - FUEL TANK FARM

TITRE: PORTAL #1
FABRICATION ISOMETRIC
FUEL FROM TRUCK UNLOADING TO 65POD41604A/B

No PROJET	No DESSIN	PAGES	RÉV.
6515	416-100-PDI-CC10-0014	2/6	1

NO. DE CONDUITE		SPECIFICATION	PRODUIT	SYSTEME REVETEMENT	CODE DE COULEUR	ISOLATION ET TRACAGE	EPAISS. D'ISOLATION		
416-100-PDI-CC10-0014		CC10	PDI					65-416-270-200	PIPE SUPPORT DETAILS
PRESSION D'OPERATION	TEMPERATURE D'OPERATION	PRESSION DE CONCEPTION	TEMPERATURE DE CONCEPTION	PRESSION D'ESSAI	CLASSE D'INSPECTION	CODE DE SERVICE	TRAITEMENT THERMIQUE	65-416-205-200	P&ID
PSIG	°F	PSIG	°F	PSIG				No. DESSIN	DESSINS DE REFERENCE

FICHIER: \\ultragen.local\Ultragen-Dessin\Agnico Eagle\Meliadine\591700 (Fuel Distribution)\05. Dessins\02 Tuyauterie\02 Isométriques\02 403P-100-PDI-CC10-0014-2.DWG

IMPRIMÉ LE: Sep 28, 2017, 1:39pm

416-MN-01

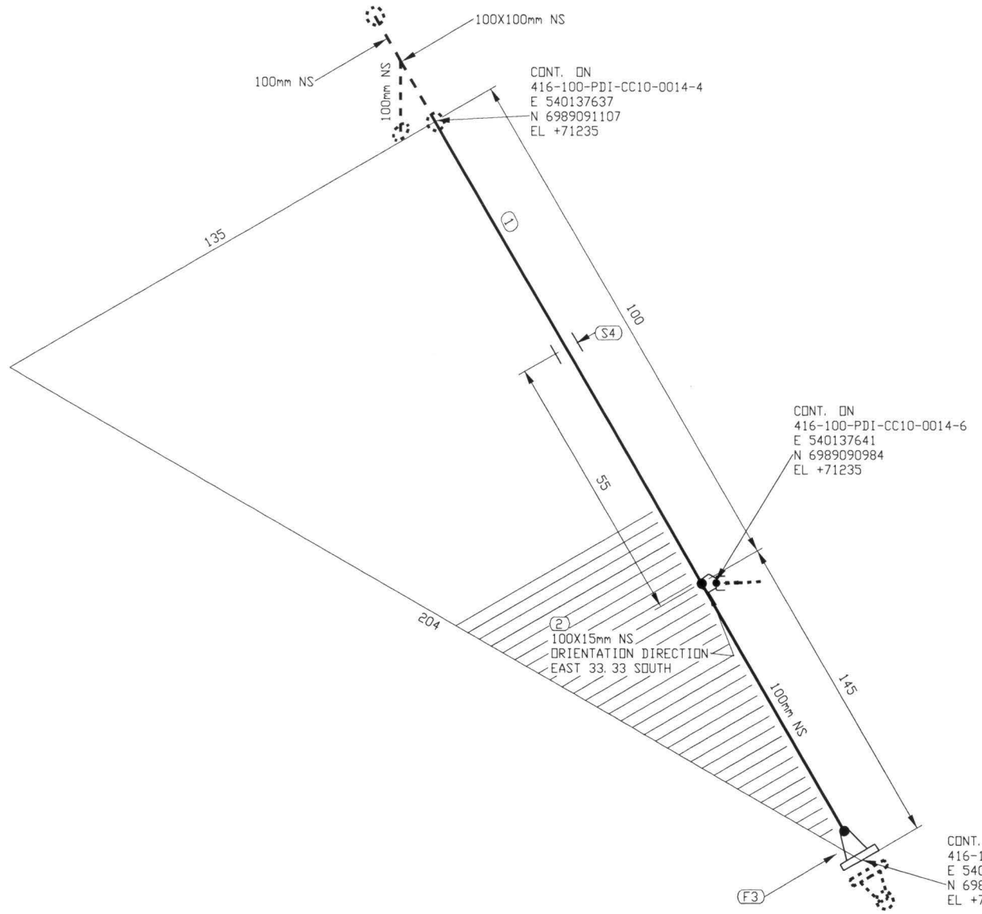

FABRICATION DRAWINGS BASED ON WSP CERTIFIED ENGINEERING

LISTE DE MATERIEL

No	QTE	DIA	MATERIEL/CATALOGUE	DESCRIPTION
1	170 MM	100	A 333 Gr. 6	SCH STD, SMLS PIPE
2	1	100X15	A 350 Gr. LF2	CL 3000, SOCKOLET
3	1	100	A 350 Gr. LF2	CL 150, SCH STD, RF, WN FLANGE
4	1	100		PIPE SUPPORT BY CONTRACTOR

REGISTERED PROFESSIONAL ENGINEER
D. TRUONG
LICENSEE
NT/NU
2017/10/05

PERMIT TO PRACTICE
LE GROUPE ULTRAGEN LTÉE
Signature
Date OCT 04 2017
PERMIT NUMBER: P 1180
NT/NU Association of Professional Engineers and Geoscientists

No.	DATE	REVISION	PAR / APP.
1	2017/09/29	LINE NUMBERS REVISED	QVN
0	2017/06/30	ISSUED FOR CONSTRUCTION	QVN

CLIENT: AGNICO EAGLE

NUQSANA PROMEC MINING SERVICES INC.

ultragen

CONSULTANT PROJECT NO. 591700

NO. DE CONDUITE		SPECIFICATION	PRODUIT	SYSTEME REVETEMENT	CODE DE COULEUR	ISOLATION ET TRACAGE	EPAISS. D'ISOLATION		
416-100-PDI-CC10-0014		CC10	PDI					65-416-270-200	PIPE SUPPORT DETAILS
PRESSION D'OPERATION	TEMPERATURE D'OPERATION	PRESSION DE CONCEPTION	TEMPERATURE DE CONCEPTION	PRESSION D'ESSAI	CLASSE D'INSPECTION	CODE DE SERVICE	TRAITEMENT THERMIQUE	65-416-205-200	P&ID
PSIG	°F	PSIG	°F	PSIG				No. DESSIN	DESSINS DE REFERENCE

SCEAU PROFESSIONNEL

CONC.: KHV
DATE: 2017/05/29
DESSINÉ PAR: KVE
DATE: 2017/05/29
VÉR. PAR:
DATE:
APP.:
DATE:
ÉCHELLE: AUCUNE

PROJET: AGNICO EAGLE - MELIADINE DIVISION
416 - FUEL TANK FARM

TITRE: PORTAL #1
FABRICATION ISOMETRIC
FUEL FROM TRUCK UNLOADING TO 65POD41604A/B

No PROJET	No DESSIN	PAGES	REV.
6515	416-100-PDI-CC10-0014	3/6	1

416-MN-01

FICHIER: \\ultragen.local\Ultragen-Dessin\Agnico Eagle\Meliadine\591700 (Fuel Distribution)\05. Dessins\02. Tuyauterie\02. isométriques\02. 40JP-100-PDI-CC10-0014-3.DWG

IMPRIMÉ LE: Sep 28, 2017, 1:40pm

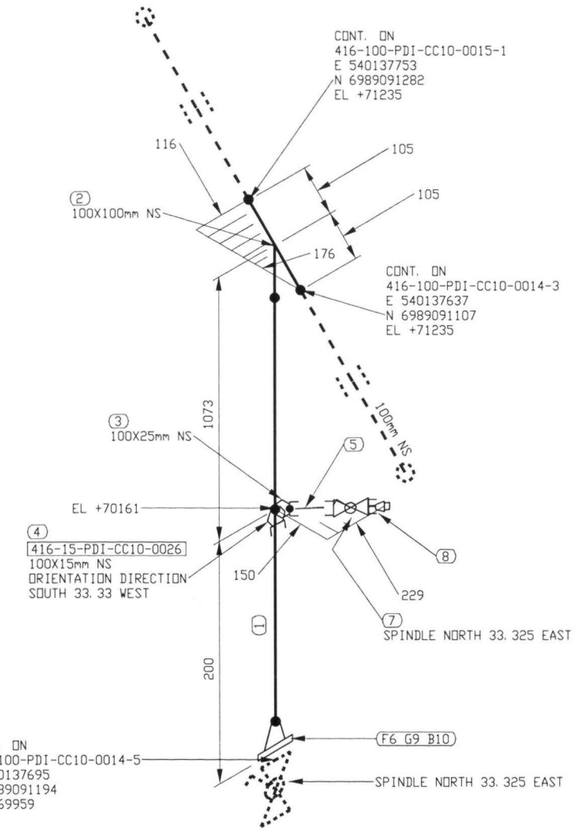

FABRICATION DRAWINGS BASED ON WSP CERTIFIED ENGINEERING

LISTE DE MATERIEL

No	QTE	DIA	MATERIEL/CATALOGUE	DESCRIPTION
1	1093 MM	100	A 333 Gr. 6	SCH STD, SMLS PIPE
2	1	100X100	A 420 Gr. WPL6	SCH STD, BW STRAIGHT TEE
3	1	100X25	A 350 Gr. LF2	CL 3000, SOCKOLET
4	1	100X15	A 350 Gr. LF2	CL 3000, THREDOLET
5	1	25	A 333 Gr. 6	SCH 80, NIPPLE x 75mm LG POExTOE
6	1	100	A 350 Gr. LF2	CL 150, SCH STD, RF, WN FLANGE
7	1	25	BA-32	CL 600, THRD, BALL VALVE
8	1	25	A 350 Gr. LF2	MNPT SOLID STL BULL PLUG
9	1	100	ASME B16.20	CL 150, GARLOCK 5500, RING TYPE GASKET 1/8" THK
10	8	16	A 193 B7/A 194 2H	CL 150, 8 - 15.875 X 90 STUD BOLTS c/w TWO HEAVY HEX NUTS

REGISTERED PROFESSIONAL ENGINEER
D. TRUONG
LICENSEE
NT/NU
2017/10/05

PERMIT TO PRACTICE
LE GROUPE ULTRAGEN LTÉE
Signature
Date OCT 04 2017
PERMIT NUMBER: P 1180
NT/NU Association of Professional Engineers and Geoscientists

No.	DATE	REVISION	APP.
1	2017/09/29	LINE NUMBERS REVISED	QVN
0	2017/06/30	ISSUED FOR CONSTRUCTION	QVN

CLIENT: AGNICO EAGLE

NUQSANA PROMEC MINING SERVICES INC.

ultragen

CONSULTANT PROJECT NO. 591700

SCEAU PROFESSIONNEL

CONC.: KHV
DATE: 2017/05/29
DESSINÉ PAR: KVE
DATE: 2017/05/29
VÉR. PAR:
DATE:
APP.:
DATE:
ÉCHELLE: AUCUNE

PROJET: AGNICO EAGLE - MELIADINE DIVISION
416 - FUEL TANK FARM

TITRE: PORTAL #1
FABRICATION ISOMETRIC
FUEL FROM TRUCK UNLOADING TO 65POD41604A/B

No PROJET	No DESSIN	PAGES	RÉV.
6515	416-100-PDI-CC10-0014	4/6	1

NO. DE CONDUITE		SPECIFICATION	PRODUIT	SYSTEME REVETEMENT	CODE DE COULEUR	ISOLATION ET TRACAGE	EPAISS. D'ISOLATION		
416-100-PDI-CC10-0014		CC10	PDI					65-416-270-200	PIPE SUPPORT DETAILS
PRESSION D'OPERATION	TEMPERATURE D'OPERATION	PRESSION DE CONCEPTION	TEMPERATURE DE CONCEPTION	PRESSION D'ESSAI	CLASSE D'INSPECTION	CODE DE SERVICE	TRAITEMENT THERMIQUE	65-416-205-200	P&ID
PSIG	°F	PSIG	°F	PSIG				No. DESSIN	DESSINS DE REFERENCE

FICHIER: \\ultragen.local\Ultragen-Dessin\Agnico Eagle\Meliadine\591700 (Fuel Distribution)\05. Dessins\02 Tuyauterie\02 Isométriques\02 403P-100-PDI-CC10-0014-4.DWG

IMPRIMÉ LE: Sep 28, 2017, 1:40pm

416-MN-01

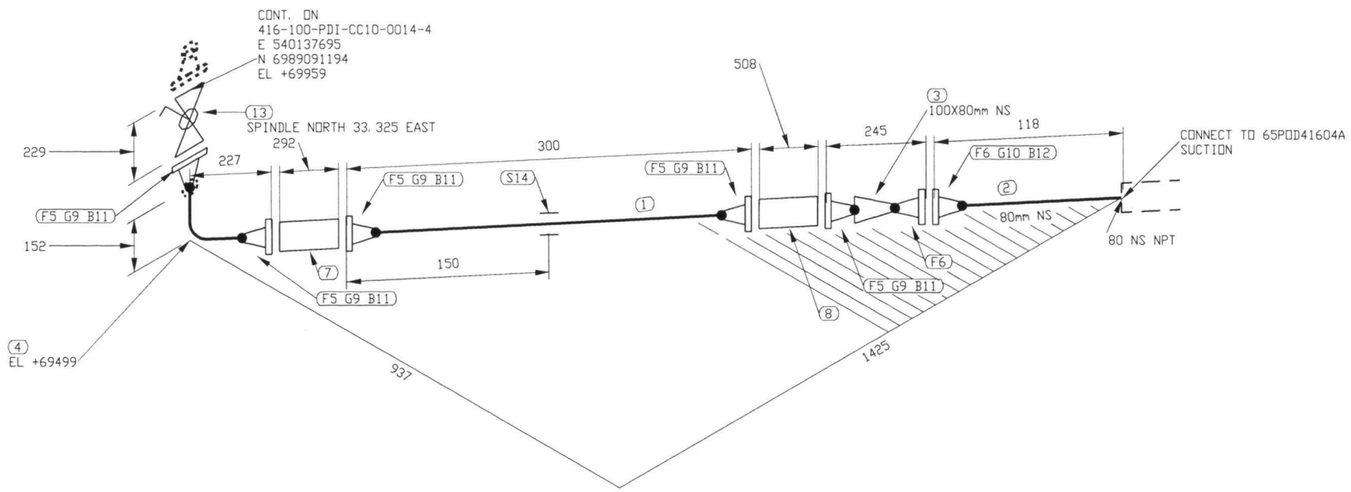

FABRICATION DRAWINGS BASED ON
WSP CERTIFIED ENGINEERING

LISTE DE MATERIEL

No	QTE	DIA	MATERIEL/CATALOGUE	DESCRIPTION
1	150 MM	100	A 333 Gr. 6	SCH STD, SMLS PIPE
2	50 MM	80	A 333 Gr. 6	SCH STD, SMLS PIPE PDExTDE
3	1	100X80	A 420 Gr. WPL6	SCH STD x 80, BW CONC RED
4	1	100	A 420 Gr. WPL6	SCH STD, BW LR 90 DEG ELBOW
5	5	100	A 350 Gr. LF2	CL 150, SCH STD, RF, WN FLANGE
6	2	80	A 350 Gr. LF2	CL 150, SCH STD, RF, WN FLANGE
7	1	100		CL 150, BASKET STRAINER
8	1	100		CL 150, SINGLE BRAIDED HOSE ASSEMBLY
9	5	100	ASME B16.20	CL 150, GARLOCK 5500, RING TYPE GASKET 1/8" THK
10	1	80	ASME B16.20	CL 150, GARLOCK 5500, RING TYPE GASKET 1/8" THK
11	40	16	A 193 B7/A 194 2H	CL 150, 8 - 15.875 X 90 STUD BOLTS c/w TWO HEAVY HEX NUTS
12	4	16	A 193 B7/A 194 2H	CL 150, 4 - 15.875 X 90 STUD BOLTS c/w TWO HEAVY HEX NUTS
13	1	100	BA-31	CL 150, RF, BALL VALVE
14	1	100		PIPE SUPPORT AS PER DETAIL 4, DWG: 65-416-270-200

REGISTERED PROFESSIONAL ENGINEER
D. TRUONG
LICENSEE
NT/NU
2017/10/05

PERMIT TO PRACTICE
LE GROUPE ULTRAGEN LTÉE
Signature
Date OCT 04 2017
PERMIT NUMBER: P 1160
NT/NU Association of Professional Engineers and Geoscientists

No.	DATE	REVISION	PAR / APP.
1	2017/09/29	LINE NUMBERS REVISED	QVN
0	2017/06/30	ISSUED FOR CONSTRUCTION	QVN

CLIENT: AGNICO EAGLE

NUQSANA PROMEC MINING SERVICES INC.

ultragen

CONSULTANT PROJECT NO. 591700

SCEAU PROFESSIONNEL

CONC.: KHV
DATE: 2017/05/29
DESSINÉ PAR: KVE
DATE: 2017/05/29
VÉR. PAR:
DATE:
APP.:
DATE:
ÉCHELLE: AUCUNE

PROJET: AGNICO EAGLE - MELIADINE DIVISION
416 - FUEL TANK FARM

TITRE: PORTAL #1
FABRICATION ISOMETRIC
FUEL FROM TRUCK UNLOADING TO 65POD41604A/B

No PROJET	No DESSIN	PAGES	RÉV.
6515	416-100-PDI-CC10-0014	5/6	1

NO. DE CONDUITE		SPECIFICATION	PRODUIT	SYSTEME REVETEMENT	CODE DE COULEUR	ISOLATION ET TRACAGE	EPAISS. D'ISOLATION		
416-100-PDI-CC10-0014		CC10	PDI					65-416-270-200	PIPE SUPPORT DETAILS
PRESSION D'OPERATION	TEMPERATURE D'OPERATION	PRESSION DE CONCEPTION	TEMPERATURE DE CONCEPTION	PRESSION D'ESSAI	CLASSE D'INSPECTION	CODE DE SERVICE	TRAITEMENT THERMIQUE	65-416-205-200	P&ID
PSIG	°F	PSIG	°F	PSIG				No. DESSIN	DESSINS DE REFERENCE

FICHIER: \\Ultragen.local\Ultragen-Dessin\Agnico Eagle\Meliadine\591700 (Fuel Distribution)\05. Dessins\02. Tuyauterie\02. Isométriques\02. 403P-100-PDI-CC10-0014-5.DWG

IMPRIMÉ LE: Sep 28, 2017, 1:40pm

416-MN-01

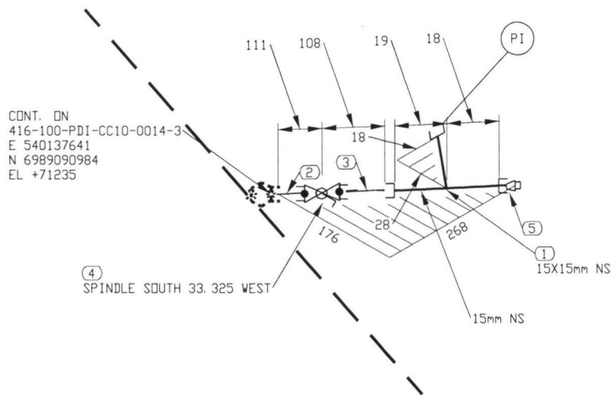

FABRICATION DRAWINGS BASED ON WSP CERTIFIED ENGINEERING

LISTE DE MATERIEL

No	QTE	DIA	MATERIEL/CATALOGUE	DESCRIPTION
1	1	15X15	A 350 Gr. LF2	CL 3000, THRD STRAIGHT TEE
2	1	15	A 333 Gr. 6	SCH 80, NIPPLE x 75mm LG PBE
3	1	15	A 333 Gr. 6	SCH 80, NIPPLE x 75mm LG PDExTDE
4	1	15	BA-29	CL 600, SW, BALL VALVE
5	1	15	A 350 Gr. LF2	MNPT SOLID STL BULL PLUG

REGISTERED PROFESSIONAL ENGINEER
D. TRUONG
LICENSEE
NT/NU
2017/10/05

PERMIT TO PRACTICE
LE GROUPE ULTRAGEN LTÉE
Signature
Date OCT 04 2017
PERMIT NUMBER: P 1180
NT/NU Association of Professional Engineers and Geoscientists

No.	DATE	REVISION	PAR / APP.
1	2017/09/29	LINE NUMBERS REVISED	QVN
0	2017/06/30	ISSUED FOR CONSTRUCTION	QVN

CLIENT: AGNICO EAGLE

NUQSANA PROMEC MINING SERVICES INC.

ultragen

CONSULTANT PROJECT NO. 591700

SCEAU PROFESSIONNEL

CONC.: KHV
DATE: 2017/05/29
DESSINÉ PAR: KVE
DATE: 2017/05/29
VÉR. PAR:
DATE:
APP.:
DATE:
ÉCHELLE: AUCUNE

PROJET: AGNICO EAGLE - MELIADINE DIVISION
416 - FUEL TANK FARM

TITRE: PORTAL #1
FABRICATION ISOMETRIC
FUEL FROM TRUCK UNLOADING TO 65POD41604A/B

No PROJET	No DESSIN	PAGES	RÉV.
6515	416-100-PDI-CC10-0014	6/6	1

NO. DE CONDUITE		SPECIFICATION	PRODUIT	SYSTEME REVETEMENT	CODE DE COULEUR	ISOLATION ET TRACAGE	EPAISS. D'ISOLATION		
416-100-PDI-CC10-0014		CC10	PDI					65-416-270-200	PIPE SUPPORT DETAILS
PRESSION D'OPERATION	TEMPERATURE D'OPERATION	PRESSION DE CONCEPTION	TEMPERATURE DE CONCEPTION	PRESSION D'ESSAI	CLASSE D'INSPECTION	CODE DE SERVICE	TRAITEMENT THERMIQUE	65-416-205-200	P&ID
PSIG	°F	PSIG	°F	PSIG				No. DESSIN	DESSINS DE REFERENCE

FICHIER: \\Ultragen.local\Ultragen-Dessin\Agnico Eagle\Méliadine\591700 (Fuel Distribution)\05. Dessins\02. Tuyauterie\02. Isométriques\02. 403P-100-PDI-CC10-0014-6.DWG

IMPRIMÉ LE: Sep 28, 2017, 1:40pm

416-MN-01

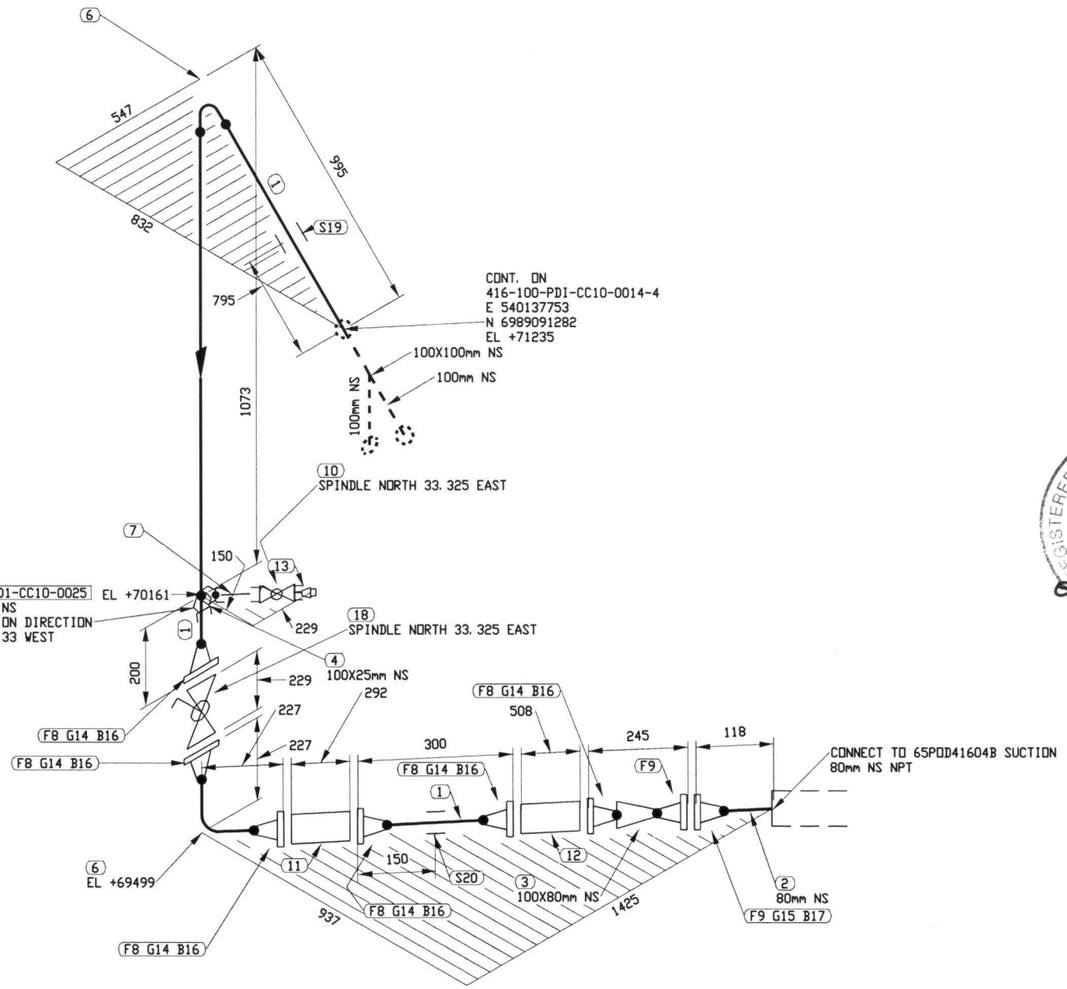

FABRICATION DRAWINGS BASED ON WSP CERTIFIED ENGINEERING

REGISTERED PROFESSIONAL ENGINEER
D. TRUONG
LICENSEE
NT/NU
2017/10/05

LISTE DE MATERIEL

No	QTE	DIA	MATERIEL/CATALOGUE	DESCRIPTION
1	2039 MM	100	A 333 Gr. 6	SCH STD, SMLS PIPE
2	50 MM	80	A 333 Gr. 6	SCH STD, SMLS PIPE PDExTDE
3	1	100X80	A 420 Gr. WPL6	SCH STD x 80, BW CONC RED
4	1	100X25	A 350 Gr. LF2	CL 3000, SOCKOLET
5	1	100X15	A 350 Gr. LF2	CL 3000, THREDOLET
6	2	100	A 420 Gr. WPL6	SCH STD, BW LR 90 DEG ELBOW
7	1	25	A 333 Gr. 6	SCH 80, NIPPLE x 75mm LG PDExTDE
8	6	100	A 350 Gr. LF2	CL 150, SCH STD, RF, WN FLANGE
9	2	80	A 350 Gr. LF2	CL 150, SCH STD, RF, WN FLANGE
10	1	25	BA-32	CL 600, THRD, BALL VALVE
11	1	100		CL 150, BASKET STRAINER
12	1	100		CL 150, SINGLE BRAIDED HOSE ASSEMBLY
13	1	25	A 350 Gr. LF2	MNPT SOLID STL BULL PLUG
14	6	100	ASME B16.20	CL 150, GARLOCK 5500, RING TYPE GASKET 1/8" THK
15	1	80	ASME B16.20	CL 150, GARLOCK 5500, RING TYPE GASKET 1/8" THK
16	48	16	A 193 B7/A 194 2H	CL 150, 8 - 15.875 X 90 STUD BOLTS c/w TWO HEAVY HEX NUTS
17	4	16	A 193 B7/A 194 2H	CL 150, 4 - 15.875 X 90 STUD BOLTS c/w TWO HEAVY HEX NUTS
18	1	100	BA-31	CL 150, RF, BALL VALVE
19	1	100		PIPE SUPPORT BY CONTRACTOR
20	1	100		PIPE SUPPORT AS PER DETAIL 4, DWG: 65-416-270-200

PERMIT TO PRACTICE
LE GROUPE ULTRAGEN LTÉE
Signature
Date OCT 0 6 2017
PERMIT NUMBER: P 1180
NT/NU Association of Professional Engineers and Geoscientists

No.	DATE	REVISION	PAR / APP.
1	2017/09/29	LINE NUMBERS REVISED	QVN
0	2017/06/30	ISSUED FOR CONSTRUCTION	QVN

CLIENT: AGNICO EAGLE

NUQSANA PROMEC MINING SERVICES INC.

ultragen Our expertise. Your success

CONSULTANT PROJECT NO. 591700

SCEAU PROFESSIONNEL

CONC.: KHV
DATE: 2017/05/29
DESSINÉ PAR: KVE
DATE: 2017/05/29
VÉR. PAR:
DATE:
APP.:
DATE:
ÉCHELLE: AUCUNE

PROJET: AGNICO EAGLE - MELIADINE DIVISION
416 - FUEL TANK FARM

TITRE: PORTAL #1
FABRICATION ISOMETRIC
FUEL FROM TRUCK UNLOADING TO 65POD41604B

No PROJET	No DESSIN	PAGES	RÉV.
6515	416-100-PDI-CC10-0015	1/1	1

NO. DE CONDUITE		SPECIFICATION	PRODUIT	SYSTEME REVETEMENT	CODE DE COULEUR	ISOLATION ET TRACAGE	EPAISS. D'ISOLATION		
416-100-PDI-CC10-0015		CC10	PDI					65-416-270-200	PIPE SUPPORT DETAILS
PRESSION D'OPERATION	TEMPERATURE D'OPERATION	PRESSION DE CONCEPTION	TEMPERATURE DE CONCEPTION	PRESSION D'ESSAI	CLASSE D'INSPECTION	CODE DE SERVICE	TRAITEMENT THERMIQUE	65-416-205-200	P&ID
PSIG	°F	PSIG	°F	PSIG				No. DESSIN	DESSINS DE REFERENCE

FICHIER: W:\Agnico Eagle\Meliadine\591700 (Fuel Distribution)\05. Dessins\02. Tuyauterie\02. Isométriques\02. Portail 1\403P-100-PDI-CC10-0015-1.DWG

IMPRIMÉ LE: Oct 02, 2017, 5:00pm

416-MN-01

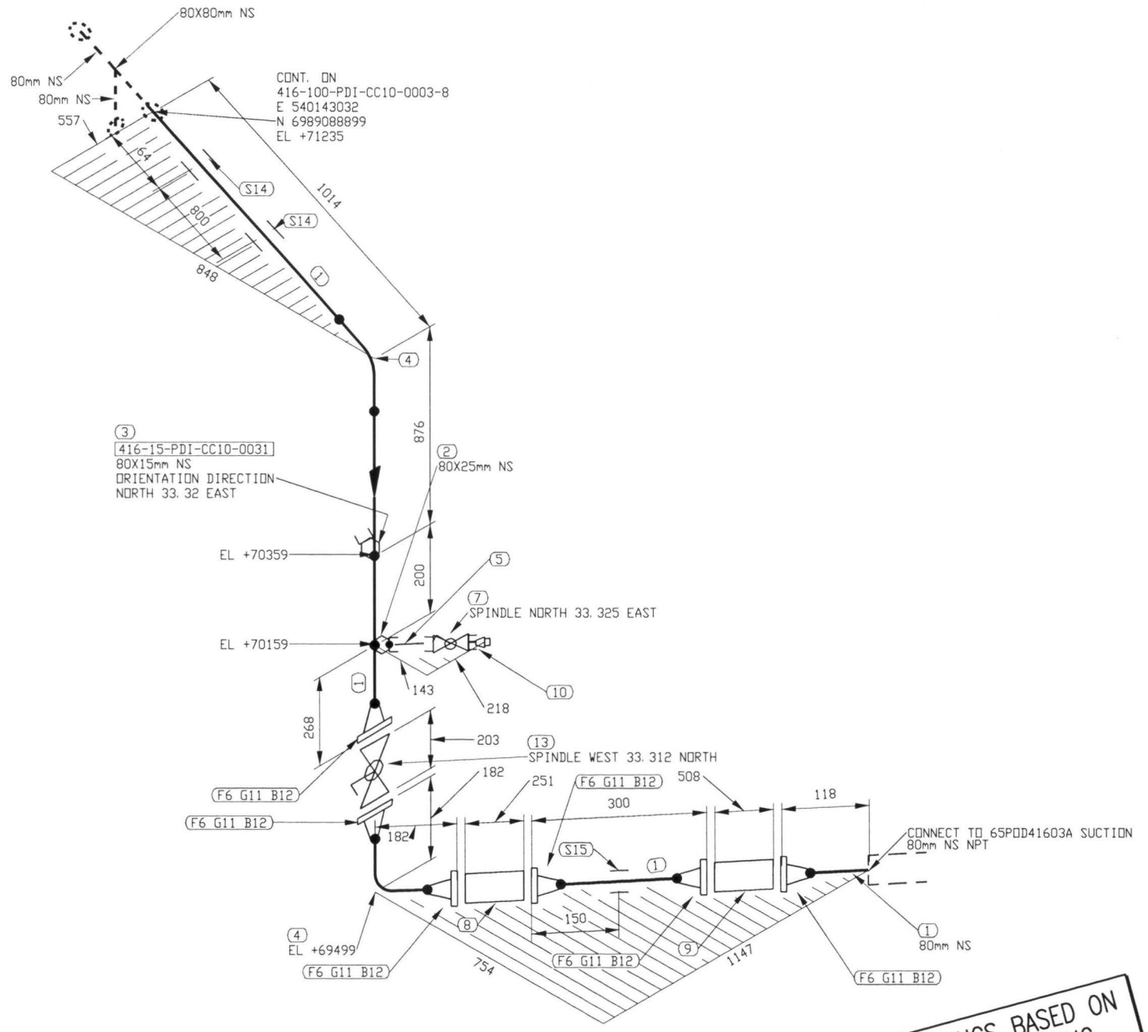

FABRICATION DRAWINGS BASED ON WSP CERTIFIED ENGINEERING

LISTE DE MATERIEL

No	QTE	DIA	MATERIEL/CATALOGUE	DESCRIPTION
1	2275 MM	80	A 333 Gr. 6	SCH STD, SMLS PIPE PDExTDE
2	1	80X25	A 350 Gr. LF2	CL 3000, SOCKOLET
3	1	80X15	A 350 Gr. LF2	CL 3000, THREDOLET
4	2	80	A 420 Gr. WPL6	SCH STD, BW LR 90 DEG ELBOW
5	1	25	A 333 Gr. 6	SCH 80, NIPPLE x 75mm LG PDExTDE
6	6	80	A 350 Gr. LF2	CL 150, SCH STD, RF, WN FLANGE
7	1	25	BA-32	CL 600, THRD, BALL VALVE
8	1	80		CL 150, BASKET STRAINER
9	1	80		CL 150, SINGLE BRAIDED HOSE ASSEMBLY
10	1	25	A 350 Gr. LF2	MNPT SOLID STL BULL PLUG
11	6	80	ASME B16.20	CL 150, GARLOCK 5500, RING TYPE GASKET 1/8" THK
12	24	16	A 193 B7/A 194 2H	CL 150, 4 - 15.875 X 90 STUD BOLTS c/w TWO HEAVY HEX NUTS
13	1	80	BA-31	CL 150, RF, BALL VALVE
14	2	80		PIPE SUPPORT BY CONTRACTOR
15	1	80		PIPE SUPPORT AS PER DETAIL 4, DWG: 65-416-270-200

REGISTERED PROFESSIONAL ENGINEER
D. TRUONG
LICENSEE
NT/NU
2017/10/05

PERMIT TO PRACTICE
LE GROUPE ULTRAGEN LTEE
Signature
Date OCT 04 2017
PERMIT NUMBER: P 1180
NT/NU Association of Professional Engineers and Geoscientists

No.	DATE	REVISION	APP.
1	2017/09/29	LINE NUMBERS REVISED	QVN
0	2017/06/30	ISSUED FOR CONSTRUCTION	QVN

CLIENT: AGNICO EAGLE

NUQSANA PROMEC MINING SERVICES INC.

ultragen

CONSULTANT PROJECT NO. 591700

SCEAU PROFESSIONNEL

CONC.: KHV
DATE: 2017/05/29
DESSINÉ PAR: KVE
DATE: 2017/05/29
VÉR. PAR:
DATE:
APP.:
DATE:
ÉCHELLE: AUCUNE

PROJET: AGNICO EAGLE - MELIADINE DIVISION
416 - FUEL TANK FARM

TITRE: PORTAL #1
FABRICATION ISOMETRIC
DIESEL FROM 416-100-PDI-CC10-0003 TO 65PDD41603A

No PROJET	No DESSIN	PAGES	RÉV.
6515	416-80-PDI-CC10-0017	1/1	1

NO. DE CONDUITE		SPECIFICATION	PRODUIT	SYSTEME REVETEMENT	CODE DE COULEUR	ISOLATION ET TRACAGE	EPAISS. D'ISOLATION		
416-80-PDI-CC10-0017		CC10	PDI					65-416-270-200	PIPE SUPPORT DETAILS
PRESSION D'OPERATION	TEMPERATURE D'OPERATION	PRESSION DE CONCEPTION	TEMPERATURE DE CONCEPTION	PRESSION D'ESSAI	CLASSE D'INSPECTION	CODE DE SERVICE	TRAITEMENT THERMIQUE	65-416-205-200	P&ID
PSIG	°F	PSIG	°F	PSIG				No. DESSIN	DESSINS DE REFERENCE

FICHIER: \\Ultragen.local\Ultragen-Dessin\Agnico Eagle\Meliadine\591700 (Fuel Distribution)\05 Dessins\02 Tuyauterie\02 Isométriques\02 403P-80-PDI-CC10-0017-1.DWG

IMPRIMÉ LE: Sep 28, 2017, 1:40pm

416-MN-01

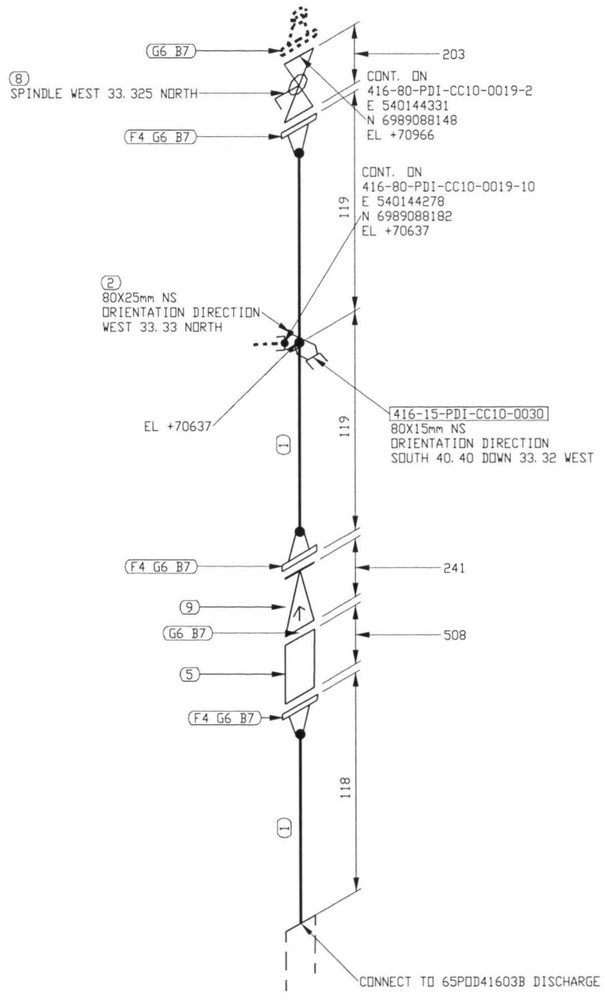

FABRICATION DRAWINGS BASED ON WSP CERTIFIED ENGINEERING

LISTE DE MATERIEL

No	QTE	DIA	MATERIEL/CATALOGUE	DESCRIPTION
1	152 MM	80	A 333 Gr. 6	SCH STD, SMLS PIPE PDExTDE
2	1	80X25	A 350 Gr. LF2	CL 3000, SOCKOLET
3	1	X15	A 350 Gr. LF2	CL 3000, THREDOLET
4	3	80	A 350 Gr. LF2	CL 150, SCH STD, RF, WN FLANGE
5	1	80		CL 150, SINGLE BRAIDED HOSE ASSEMBLY
6	5	80	ASME B16.20	CL 150, GARLOCK 5500, RING TYPE GASKET 1/8" THK
7	20	16	A 193 B7/A 194 2H	CL 150, 4 - 15.875 X 90 STUD BOLTS c/w TWO HEAVY HEX NUTS
8	1	80	BA-31	CL 150, RF, BALL VALVE
9	1	80	CK-29	CL 150, RF, SWING CHECK VALVE

REGISTERED PROFESSIONAL ENGINEER
D. TRUONG
LICENSEE
NT/NU
2017/10/05

PERMIT TO PRACTICE
LE GROUPE ULTRAGEN LTÉE
Signature
Date OCT 04 2017
PERMIT NUMBER: P 1180
NT/NU Association of Professional Engineers and Geoscientists

No.	DATE	REVISION	PAR / APP.
1	2017/09/29	LINE NUMBERS REVISED	QVN
0	2017/06/30	ISSUED FOR CONSTRUCTION	QVN

CLIENT: AGNICO EAGLE

NUQSANA PROMEC MINING SERVICES INC.

ultragen

CONSULTANT PROJECT NO. 591700

SCEAU PROFESSIONNEL

CONC.: KHV
DATE: 2017/05/29
DESSINÉ PAR: KVE
DATE: 2017/05/29
VÉR. PAR:
DATE:
APP.:
DATE:
ÉCHELLE: AUCUNE

PROJET: AGNICO EAGLE - MELIADINE DIVISION
416 - FUEL TANK FARM

TITRE: PORTAL #1
FABRICATION ISOMETRIC
FUEL FROM 65PDD41603A/B TO 65TNK41609/10/11

No PROJET	No DESSIN	PAGES	RÉV.
6515	416-80-PDI-CC10-0019	1/10	1

NO. DE CONDUITE		SPECIFICATION	PRODUIT	SYSTEME REVETEMENT	CODE DE COULEUR	ISOLATION ET TRACAGE	EPAISS. D'ISOLATION		
416-80-PDI-CC10-0019		CC10	PDI					65-416-270-200	PIPE SUPPORT DETAILS
PRESSION D'OPERATION	TEMPERATURE D'OPERATION	PRESSION DE CONCEPTION	TEMPERATURE DE CONCEPTION	PRESSION D'ESSAI	CLASSE D'INSPECTION	CODE DE SERVICE	TRAITEMENT THERMIQUE	65-416-205-200	P&ID
PSIG	°F	PSIG	°F	PSIG				No. DESSIN	DESSINS DE REFERENCE

FICHIER: \\ultragen.local\Ultragen-Dessin\Agnico Eagle\Meliadine\591700 (Fuel Distribution)\05. Dessins\02. Tuyauterie\02. Isométriques\02. 40JP-80-PDI-CC10-0019-1.DWG

IMPRIMÉ LE: Sep 28, 2017, 1:40pm

416-MN-01

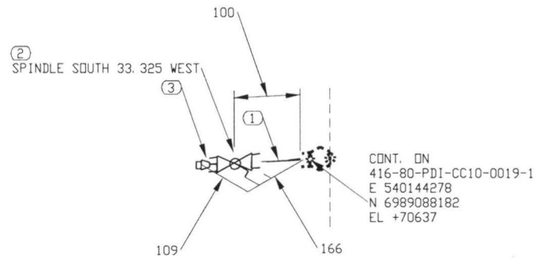

LISTE DE MATERIEL

No	QTE	DIA	MATERIEL/CATALOGUE	DESCRIPTION
1	1	25	A 333 Gr. 6	SCH 80, NIPPLE x 75mm LG PDExTDE
2	1	25	BA-32	CL 600, THRD, BALL VALVE
3	1	25	A 350 Gr. LF2	MNPT SOLID STL BULL PLUG

REGISTERED PROFESSIONAL ENGINEER
D. TRUONG
LICENSEE
NT/NU
2017/10/05

PERMIT TO PRACTICE
LE GROUPE ULTRAGEN LTEE
Signature
Date OCT 04 2017
PERMIT NUMBER: P 1180
NT/NU Association of Professional Engineers and Geoscientists

FABRICATION DRAWINGS BASED ON WSP CERTIFIED ENGINEERING

No.	DATE	REVISION	PAR / APP.
1	2017/09/29	LINE NUMBERS REVISED	QVN
0	2017/06/30	ISSUED FOR CONSTRUCTION	QVN

CLIENT: AGNICO EAGLE

NUQSANA-PROMEC MINING SERVICES INC.

ultragen

CONSULTANT PROJECT NO. 591700

SCEAU PROFESSIONNEL

CONC.: KHV
DATE: 2017/05/29
DESSINÉ PAR: KVE
DATE: 2017/05/29
VÉR. PAR:
DATE:
APP.:
DATE:
ÉCHELLE: AUCUNE

PROJET: AGNICO EAGLE - MELIADINE DIVISION
416 - FUEL TANK FARM

TITRE: PORTAL #1
FABRICATION ISOMETRIC
FUEL FROM 65POD41603A/B TO 65TNK41609/10/11

No PROJET	No DESSIN	PAGES	REV.
6515	416-80-PDI-CC10-0019	10/10	1

NO. DE CONDUITE		SPECIFICATION	PRODUIT	SYSTEME REVETEMENT	CODE DE COULEUR	ISOLATION ET TRACAGE	EPAISS. D'ISOLATION		
416-80-PDI-CC10-0019		CC10	PDI					65-416-270-200	PIPE SUPPORT DETAILS
PRESSION D'OPERATION	TEMPERATURE D'OPERATION	PRESSION DE CONCEPTION	TEMPERATURE DE CONCEPTION	PRESSION D'ESSAI	CLASSE D'INSPECTION	CODE DE SERVICE	TRAITEMENT THERMIQUE	65-416-205-200	P&ID
PSIG	°F	PSIG	°F	PSIG				No. DESSIN	DESSINS DE REFERENCE

FICHIER: \\ultragen.local\Ultragen-Dess\Agnico Eagle\Meliadine\591700 (Fuel Distribution)\05. Dessins\02. Tuyauterie\02. Isométriques\02. 40JP-80-PDI-CC10-0019-10.DWG

IMPRIMÉ LE: Sep 28, 2017, 1:40pm

416-MN-01

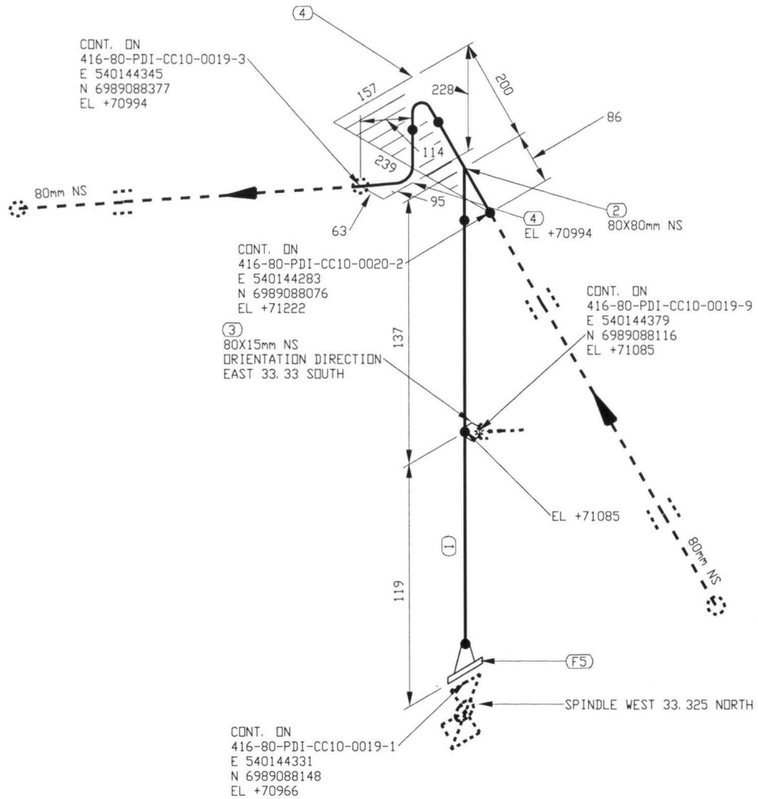

FABRICATION DRAWINGS BASED ON WSP CERTIFIED ENGINEERING

LISTE DE MATERIEL

No	QTE	DIA	MATERIEL/CATALOGUE	DESCRIPTION
1	102 MM	80	A 333 Gr. 6	SCH STD, SMLS PIPE
2	1	80X80	A 420 Gr. WPL6	SCH STD, BW STRAIGHT TEE
3	1	80X15	A 350 Gr. LF2	CL 3000, SOCKOLET
4	2	80	A 420 Gr. WPL6	SCH STD, BW LR 90 DEG ELBOW
5	1	80	A 350 Gr. LF2	CL 150, SCH STD, RF, WN FLANGE

REGISTERED PROFESSIONAL ENGINEER
D. TRUONG
LICENSEE
NT/NU
2017/10/05

PERMIT TO PRACTICE
LE GROUPE ULTRAGEN LTEE
Signature
Date OCT 04 2017
PERMIT NUMBER: P 1180
NT/NU Association of Professional Engineers and Geoscientists

No.	DATE	REVISION	PAR / APP.
1	2017/09/29	LINE NUMBERS REVISED	QVN
0	2017/06/30	ISSUED FOR CONSTRUCTION	QVN

CLIENT: AGNICO EAGLE

NUQSANA PROMEC MINING SERVICES INC.

ultragen

CONSULTANT PROJECT NO. 591700

NO. DE CONDUITE		SPECIFICATION	PRODUIT	SYSTEME REVETEMENT	CODE DE COULEUR	ISOLATION ET TRACAGE	EPAISS. D'ISOLATION		
416-80-PDI-CC10-0019		CC10	PDI					65-416-270-200	PIPE SUPPORT DETAILS
PRESSION D'OPERATION	TEMPERATURE D'OPERATION	PRESSION DE CONCEPTION	TEMPERATURE DE CONCEPTION	PRESSION D'ESSAI	CLASSE D'INSPECTION	CODE DE SERVICE	TRAITEMENT THERMIQUE	65-416-205-200	P&ID
PSIG	°F	PSIG	°F	PSIG				No. DESSIN	DESSINS DE REFERENCE

SCEAU PROFESSIONNEL

CONC.: KHV
DATE: 2017/05/29
DESSINÉ PAR: KVE
DATE: 2017/05/29
VÉR. PAR:
DATE:
APP.:
DATE:
ÉCHELLE: AUCUNE

PROJET: AGNICO EAGLE - MELIADINE DIVISION
416 - FUEL TANK FARM

TITRE: PORTAL #1
FABRICATION ISOMETRIC
FUEL FROM 65POD41603A/B TO 65TNK41609/10/11

No PROJET	No DESSIN	PAGES	RÉV.
6515	416-80-PDI-CC10-0019	2/10	1

416-MN-01

FICHIER: \\ultragen.local\Ultragen-Data\Agnico Eagle\Meliadine\591700 (Fuel Distribution)\05. Dessins\02. Tuyauterie\02. Isométriques\02. 403P-80-PDI-CC10-0019-2.DWG

IMPRIMÉ LE: Sep 28, 2017, 1:40pm

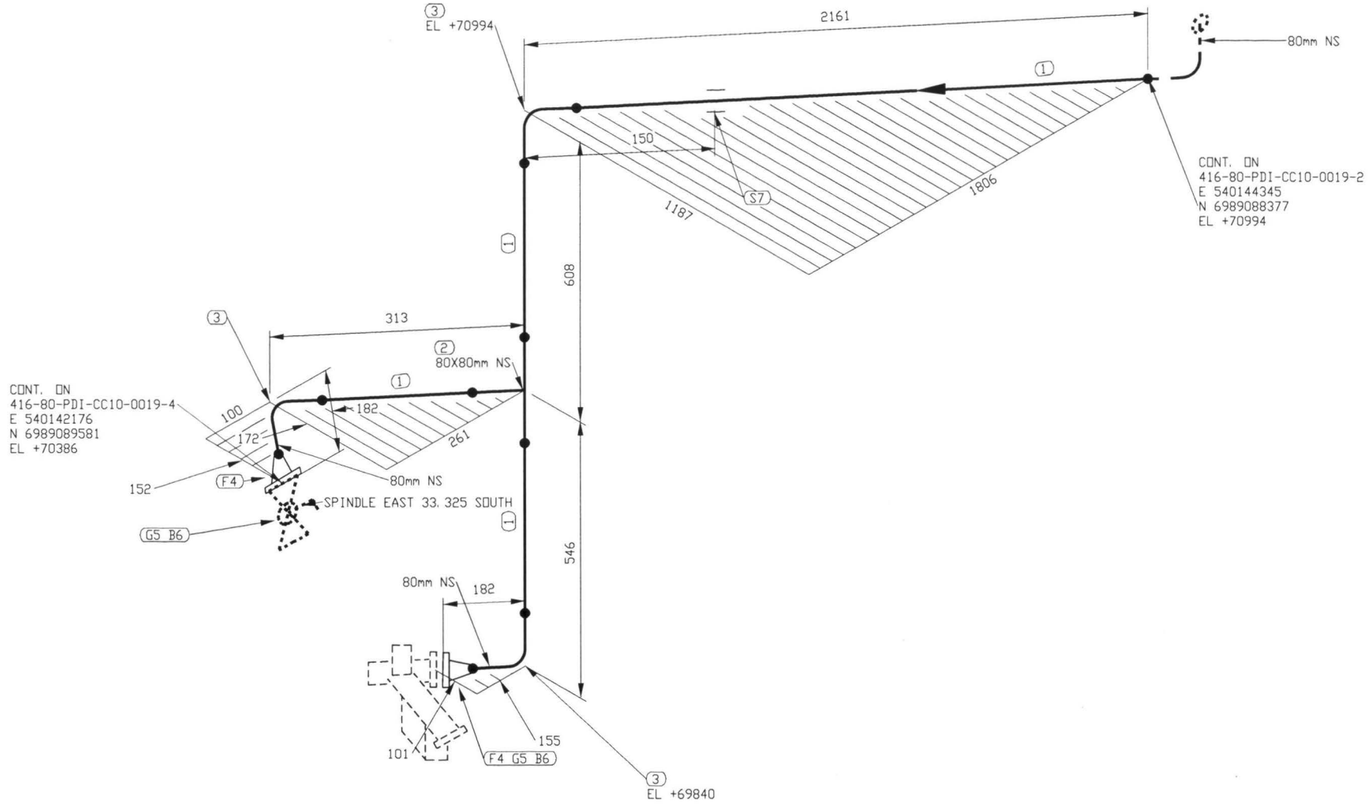

FABRICATION DRAWINGS BASED ON WSP CERTIFIED ENGINEERING

LISTE DE MATERIEL

No	QTE	DIA	MATERIEL/CATALOGUE	DESCRIPTION
1	2913 MM	80	A 333 Gr. 6	SCH STD, SMLS PIPE
2	1	80X80	A 420 Gr. WPL6	SCH STD, BW STRAIGHT TEE
3	3	80	A 420 Gr. WPL6	SCH STD, BW LR 90 DEG ELBOW
4	2	80	A 350 Gr. LF2	CL 150, SCH STD, RF, WN FLANGE
5	2	80	ASME B16.20	CL 150, GARLOCK 5500, RING TYPE GASKET 1/8" THK
6	8	16	A 193 B7/A 194 2H	CL 150, 4 - 15.875 X 90 STUD BOLTS c/w TWO HEAVY HEX NUTS
7	1	80		PIPE SUPPORT AS PER DETAIL 3, DWG: 65-416-270-200

REGISTERED PROFESSIONAL ENGINEER
D. TRUONG
LICENSEE
NT/NU
2017/10/05

PERMIT TO PRACTICE
LE GROUPE ULTRAGEN LTÉE
Signature
Date OCT 04 2017
PERMIT NUMBER: P 1180
NT/NU Association of Professional Engineers and Geoscientists

No.	DATE	REVISION	PAR / APP.
1	2017/09/29	LINE NUMBERS REVISED	QVN
0	2017/06/30	ISSUED FOR CONSTRUCTION	QVN

CLIENT: AGNICO EAGLE

NUQSANA PROMEC MINING SERVICES INC.

ultragen

CONSULTANT PROJECT NO. 591700

SCEAU PROFESSIONNEL

CONC.: KHV
DATE: 2017/05/29
DESSINÉ PAR: KVE
DATE: 2017/05/29
VÉR. PAR:
DATE:
APP.:
DATE:
ÉCHELLE: AUCUNE

PROJET: AGNICO EAGLE - MELIADINE DIVISION
416 - FUEL TANK FARM

TITRE: PORTAL #1
FABRICATION ISOMETRIC
FUEL FROM 65POD41603A/B TO 65TNK41609/10/11

No PROJET	No DESSIN	PAGES	RÉV.
6515	416-80-PDI-CC10-0019	3/10	1

NO. DE CONDUITE		SPECIFICATION	PRODUIT	SYSTEME REVETEMENT	CODE DE COULEUR	ISOLATION ET TRACAGE	EPAISS. D'ISOLATION		
416-80-PDI-CC10-0019		CC10	PDI					65-416-270-200	PIPE SUPPORT DETAILS
PRESSION D'OPERATION	TEMPERATURE D'OPERATION	PRESSION DE CONCEPTION	TEMPERATURE DE CONCEPTION	PRESSION D'ESSAI	CLASSE D'INSPECTION	CODE DE SERVICE	TRAITEMENT THERMIQUE	65-416-205-200	P&ID
PSIG	°F	PSIG	°F	PSIG				No. DESSIN	DESSINS DE REFERENCE

FICHIER: \\ultragen.local\Ultragen-Dessin\Agnico Eagle\Meliadine\591700 (Fuel Distribution)\05. Dessins\02. Tuyauterie\02. Isométriques\02. 403P-80-PDI-CC10-0019-3.DWG

IMPRIMÉ LE: Sep 28, 2017, 1:40pm

416-MN-01

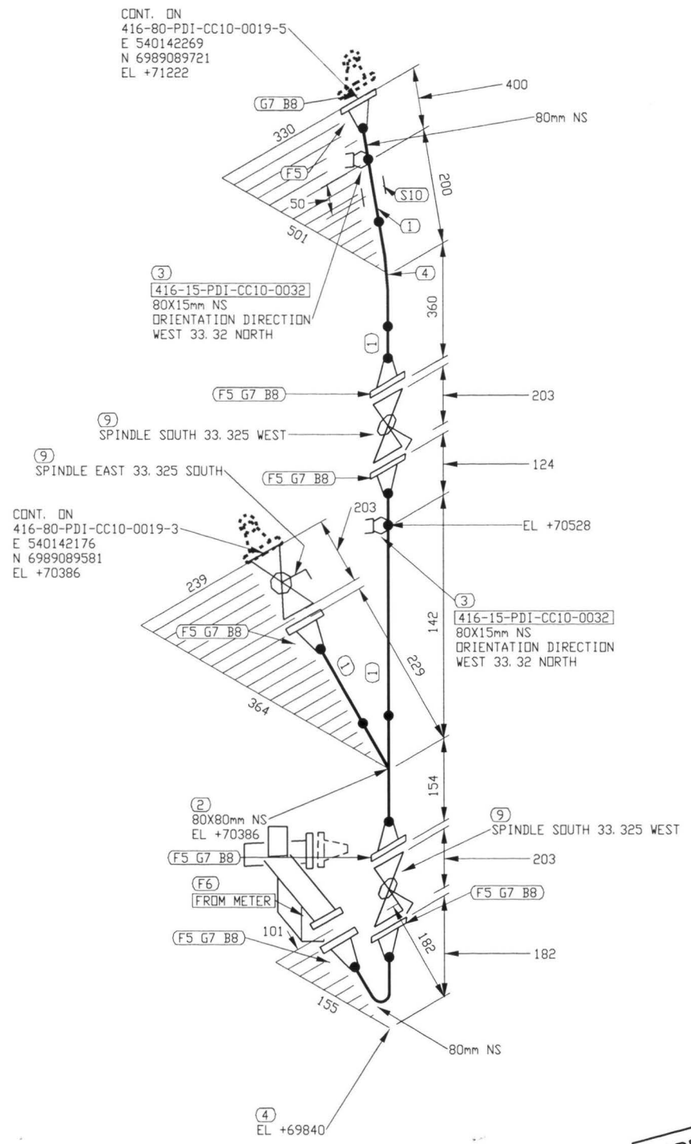

FABRICATION DRAWINGS BASED ON WSP CERTIFIED ENGINEERING

LISTE DE MATERIEL

No	QTE	DIA	MATERIEL/CATALOGUE	DESCRIPTION
1	783 MM	80	A 333 Gr. 6	SCH STD, SMLS PIPE
2	1	80X80	A 420 Gr. WPL6	SCH STD, BW STRAIGHT TEE
3	2	80X15	A 350 Gr. LF2	CL 3000, THREDOLET
4	2	80	A 420 Gr. WPL6	SCH STD, BW LR 90 DEG ELBOW
5	7	80	A 350 Gr. LF2	CL 150, SCH STD, RF, WN FLANGE
6	1	80	A 350 Gr. LF2	TCS METER UNIT
7	7	80	ASME B16.20	CL 150, GARLOCK 5500, RING TYPE GASKET 1/8" THK
8	28	16	A 193 B7/A 194 2H	CL 150, 4 - 15.875 X 90 STUD BOLTS c/w TWO HEAVY HEX NUTS
9	3	80	BA-31	CL 150, RF, BALL VALVE
10	1	80		PIPE SUPPORT BY CONTRACTOR

REGISTERED PROFESSIONAL ENGINEER
D. TRUONG
LICENSEE
NT/NU
2017/10/05

PERMIT TO PRACTICE
LE GROUPE ULTRAGEN LTÉE
Signature
Date OCT 04 2017
PERMIT NUMBER: P 1180
NT/NU Association of Professional Engineers and Geoscientists

No.	DATE	REVISION	APP.
1	2017/09/29	LINE NUMBERS REVISED	QVN
0	2017/06/30	ISSUED FOR CONSTRUCTION	QVN

CLIENT: AGNICO EAGLE

NUQSANA PROMEC MINING SERVICES INC.

ultragen

CONSULTANT PROJECT NO. 591700

SCEAU PROFESSIONNEL

CONC.: KHV
DATE: 2017/05/29
DESSINÉ PAR: KVE
DATE: 2017/05/29
VÉR. PAR:
DATE:
APP.:
DATE:
ÉCHELLE: AUCUNE

PROJET: AGNICO EAGLE - MELIADINE DIVISION
416 - FUEL TANK FARM

TITRE: PORTAL #1
FABRICATION ISOMETRIC
FUEL FROM 65POD41603A/B TO 65TNK41609/10/11

No PROJET	No DESSIN	PAGES	RÉV.
6515	416-80-PDI-CC10-0019	4/10	1

NO. DE CONDUITE		SPECIFICATION	PRODUIT	SYSTEME REVETEMENT	CODE DE COULEUR	ISOLATION ET TRACAGE	EPAISS. D'ISOLATION		
416-80-PDI-CC10-0019		CC10	PDI					65-416-270-200	PIPE SUPPORT DETAILS
PRESSION D'OPERATION	TEMPERATURE D'OPERATION	PRESSION DE CONCEPTION	TEMPERATURE DE CONCEPTION	PRESSION D'ESSAI	CLASSE D'INSPECTION	CODE DE SERVICE	TRAITEMENT THERMIQUE	65-416-205-200	P&ID
PSIG	°F	PSIG	°F	PSIG				No. DESSIN	DESSINS DE REFERENCE

FICHIER: \\ultragen.local\Ultragen-Dessin\Agnico Eagle\Meliadine\591700 (Fuel Distribution)\05. Dessins\02. Tuyauterie\02. Isométriques\02. 403P-80-PDI-CC10-0019-4.DWG

IMPRIMÉ LE: Sep 28, 2017, 1:40pm

416-MN-01

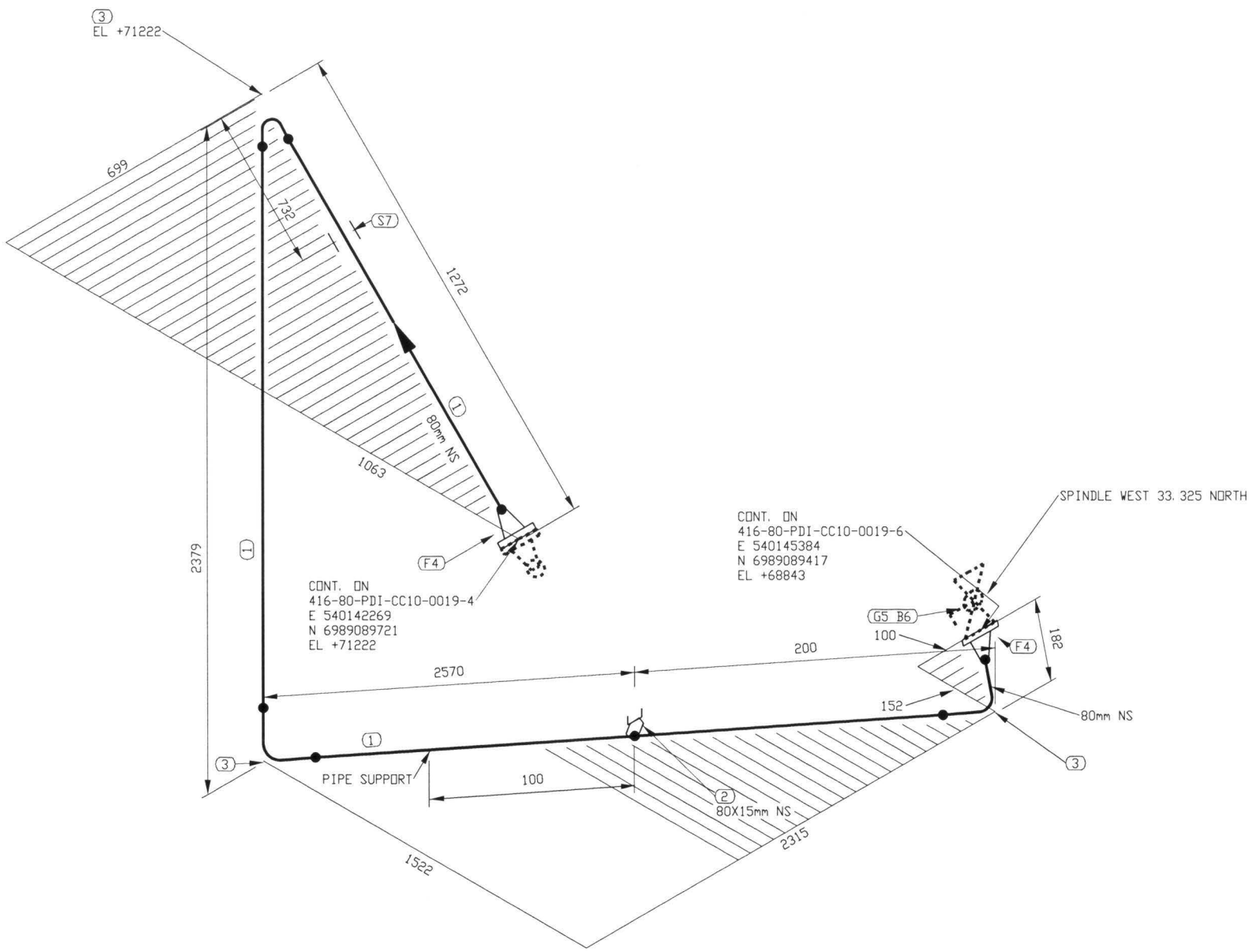

FABRICATION DRAWINGS BASED ON WSP CERTIFIED ENGINEERING

LISTE DE MATERIEL

No	QTE	DIA	MATERIEL/CATALOGUE	DESCRIPTION
1	5783 MM	80	A 333 Gr. 6	SCH STD, SMLS PIPE
2	1	80X15	A 350 Gr. LF2	CL 3000, THREDOLET
3	3	80	A 420 Gr. WPL6	SCH STD, BW LR 90 DEG ELBOW
4	2	80	A 350 Gr. LF2	CL 150, SCH STD, RF, WN FLANGE
5	1	80	ASME B16.20	CL 150, GARLOCK 5500, RING TYPE GASKET 1/8" THK
6	4	16	A 193 B7/A 194 2H	CL 150, 4 - 15.875 X 90 STUD BOLTS c/w TWO HEAVY HEX NUTS
7	1	80		PIPE SUPPORT AS PER DETAIL 3, DWG: 65-416-270-200

REGISTERED PROFESSIONAL ENGINEER
D. TRUONG
LICENSEE
NT/NU
2017/10/05

PERMIT TO PRACTICE
LE GROUPE ULTRAGEN LTÉE
Signature
Date OCT 04 2017
PERMIT NUMBER: P 1180
NT/NU Association of Professional Engineers and Geoscientists

No.	DATE	REVISION	PAR / APP.
1	2017/09/29	LINE NUMBERS REVISED	QVN
0	2017/06/30	ISSUED FOR CONSTRUCTION	QVN

CLIENT: AGNICO EAGLE

NUQSANA PROMEC MINING SERVICES INC.

ultragen

CONSULTANT PROJECT NO. 591700

SCEAU PROFESSIONNEL

CONC.: KHV
DATE: 2017/05/29
DESSINÉ PAR: KVE
DATE: 2017/05/29
VÉR. PAR:
DATE:
APP.:
DATE:
ÉCHELLE: AUCUNE

PROJET: AGNICO EAGLE - MELIADINE DIVISION
416 - FUEL TANK FARM

TITRE: PORTAL #1
FABRICATION ISOMETRIC
FUEL FROM 65POD41603A/B TO 65TNK41609/10/11

No PROJET	No DESSIN	PAGES	RÉV.
6515	416-80-PDI-CC10-0019	5/10	1

NO. DE CONDUITE		SPECIFICATION	PRODUIT	SYSTEME REVETEMENT	CODE DE COULEUR	ISOLATION ET TRACAGE	EPAISS. D'ISOLATION		
416-80-PDI-CC10-0019		CC10	PDI					65-416-270-200	PIPE SUPPORT DETAILS
PRESSION D'OPERATION	TEMPERATURE D'OPERATION	PRESSION DE CONCEPTION	TEMPERATURE DE CONCEPTION	PRESSION D'ESSAI	CLASSE D'INSPECTION	CODE DE SERVICE	TRAITEMENT THERMIQUE	65-416-205-200	P&ID
PSIG	°F	PSIG	°F	PSIG				No. DESSIN	DESSINS DE REFERENCE

FICHIER: \\ultragen.local\Ultragen-Dessin\Agnico_Eagle\Meliadine\591700 (Fuel Distribution)\05. Dessins\02. Tuyauterie\02. isométriques\02. 403P-80-PDI-CC10-0019-5.DWG

IMPRIMÉ LE: Sep 28, 2017, 1:40pm

416-MN-01

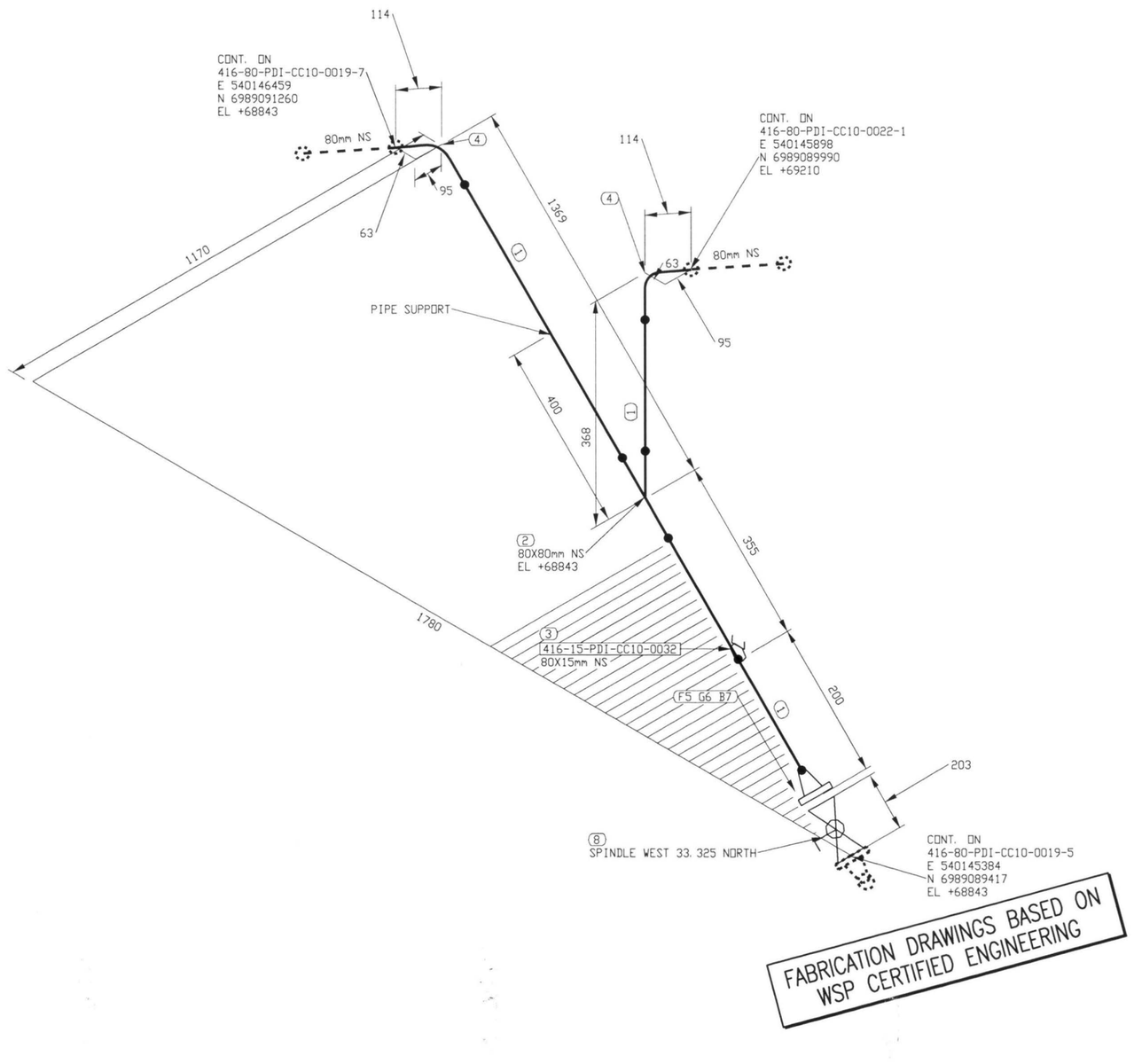

FABRICATION DRAWINGS BASED ON WSP CERTIFIED ENGINEERING

LISTE DE MATERIEL

No	QTE	DIA	MATERIEL/CATALOGUE	DESCRIPTION
1	1738 MM	80	A 333 Gr. 6	SCH STD, SMLS PIPE
2	1	80X80	A 420 Gr. WPL6	SCH STD, BW STRAIGHT TEE
3	1	80X15	A 350 Gr. LF2	CL 3000, THREDOLET
4	2	80	A 420 Gr. WPL6	SCH STD, BW LR 90 DEG ELBOW
5	1	80	A 350 Gr. LF2	CL 150, SCH STD, RF, WN FLANGE
6	1	80	ASME B16.20	CL 150, GARLOCK 5500, RING TYPE GASKET 1/8" THK
7	4	16	A 193 B7/A 194 2H	CL 150, 4 - 15.875 X 90 STUD BOLTS c/w TWO HEAVY HEX NUTS
8	1	80	BA-31	CL 150, RF, BALL VALVE

REGISTERED PROFESSIONAL ENGINEER
D. TRUONG
LICENSEE
NT/NU
2017/10/05

PERMIT TO PRACTICE
LE GROUPE ULTRAGEN LTÉE
Signature
Date OCT 04 2017
PERMIT NUMBER: P 1180
NT/NU Association of Professional Engineers and Geoscientists

No.	DATE	REVISION	APP.
1	2017/09/29	LINE NUMBERS REVISED	QVN
0	2017/06/30	ISSUED FOR CONSTRUCTION	QVN

CLIENT: AGNICO EAGLE

NUQSANA PROMEC MINING SERVICES INC.

ultragen

CONSULTANT PROJECT NO. 591700

SCEAU PROFESSIONNEL

CONC.: KHV
DATE: 2017/05/29
DESSINÉ PAR: KVE
DATE: 2017/05/29
VÉR. PAR:
DATE:
APP.:
DATE:
ÉCHELLE: AUCUNE

PROJET: AGNICO EAGLE - MELIADINE DIVISION
416 - FUEL TANK FARM

TITRE: PORTAL #1
FABRICATION ISOMETRIC
FUEL FROM 65POD41603A/B TO 65TNK41609/10/11

No PROJET	No DESSIN	PAGES	RÉV.
6515	416-80-PDI-CC10-0019	6/10	1

NO. DE CONDUITE		SPECIFICATION	PRODUIT	SYSTEME REVETEMENT	CODE DE COULEUR	ISOLATION ET TRACAGE	EPAISS. D'ISOLATION		
416-80-PDI-CC10-0019		CC10	PDI					65-416-270-200	PIPE SUPPORT DETAILS
PRESSION D'OPERATION	TEMPERATURE D'OPERATION	PRESSION DE CONCEPTION	TEMPERATURE DE CONCEPTION	PRESSION D'ESSAI	CLASSE D'INSPECTION	CODE DE SERVICE	TRAITEMENT THERMIQUE	65-416-205-200	P&ID
PSIG	°F	PSIG	°F	PSIG				No. DESSIN	DESSINS DE REFERENCE

FICHIER: \\ultragen.local\Ultragen-Dessin\Agnico Eagle\Meliadine\591700 (Fuel Distribution)\05 Dessins\02 Tuyauterie\02 Isométriques\02 403P-80-PDI-CC10-0019-6.DWG

IMPRIMÉ LE: Sep 28, 2017, 1:41pm

416-MN-01

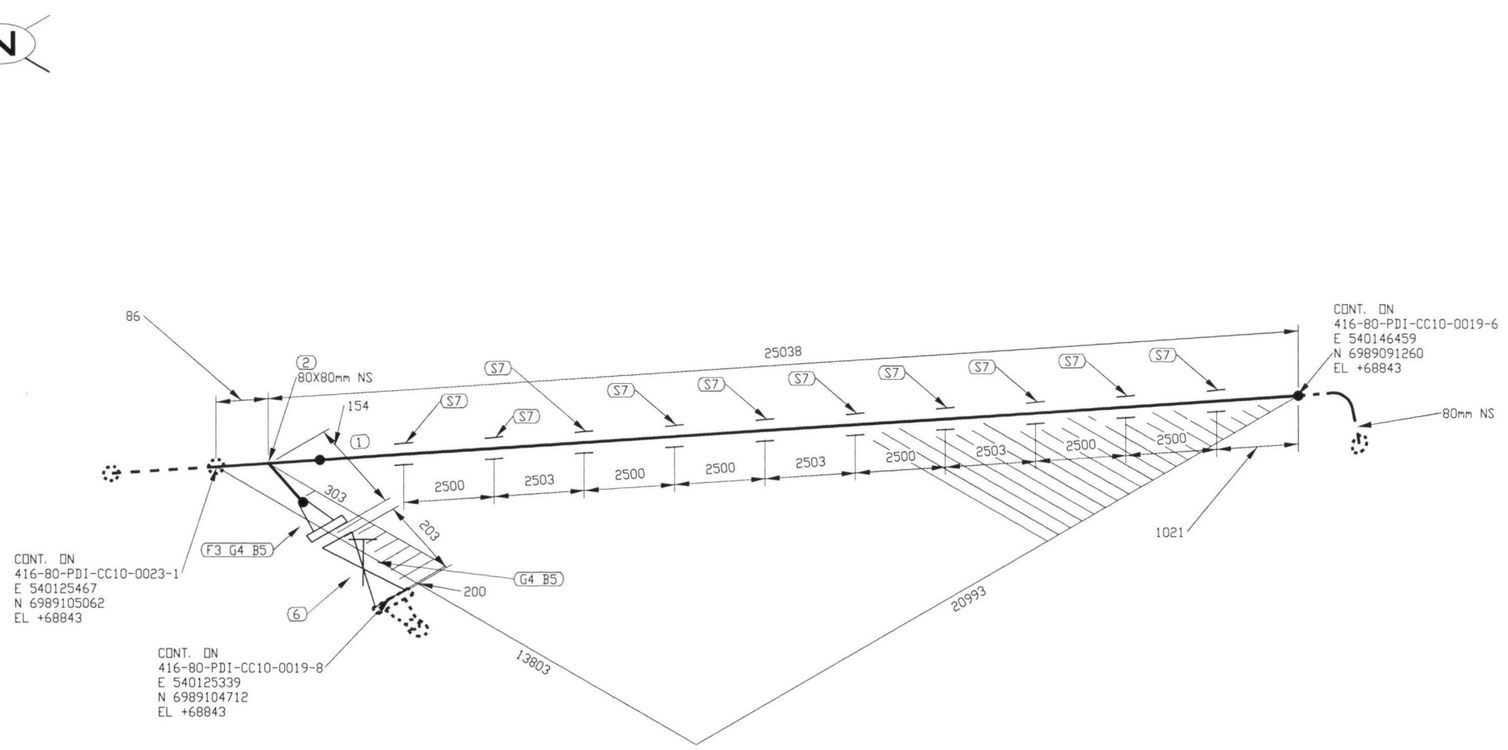

FABRICATION DRAWINGS BASED ON WSP CERTIFIED ENGINEERING

LISTE DE MATERIEL

No	QTE	DIA	MATERIEL/CATALOGUE	DESCRIPTION
1	24953 MM	80	A 333 Gr. 6	SCH STD, SMLS PIPE
2	1	80X80	A 420 Gr. WPL6	SCH STD, BW STRAIGHT TEE
3	1	80	A 350 Gr. LF2	CL 150, SCH STD, RF, WN FLANGE
4	2	80	ASME B16.20	CL 150, GARLOCK 5500, RING TYPE GASKET 1/8" THK
5	8	16	A 193 B7/A 194 2H	CL 150, 4 - 15.875 X 90 STUD BOLTS c/w TWO HEAVY HEX NUTS
6	1	80	GA-10	CL 150, RF, GATE VALVE
7	10	80		PIPE SUPPORT AS PER DETAIL 3, DWG: 65-416-270-200

REGISTERED PROFESSIONAL ENGINEER
D. TRUONG
LICENSEE
NT/NU
2017/10/05

PERMIT TO PRACTICE
LE GROUPE ULTRAGEN LTÉE
Signature
Date OCT 04 2017
PERMIT NUMBER: P 1180
NT/NU Association of Professional Engineers and Geoscientists

No.	DATE	REVISION	APP.
1	2017/09/29	LINE NUMBERS REVISED	QVN
0	2017/06/30	ISSUED FOR CONSTRUCTION	QVN

CLIENT: AGNICO EAGLE

NUQSANA PROMEC MINING SERVICES INC.

ultragen

CONSULTANT PROJECT NO. 591700

SCEAU PROFESSIONNEL

CONC.: KHV
DATE: 2017/05/29
DESSINÉ PAR: KVE
DATE: 2017/05/29
VÉR. PAR:
DATE:
APP.:
DATE:
ÉCHELLE: AUCUNE

PROJET: AGNICO EAGLE - MELIADINE DIVISION
416 - FUEL TANK FARM

TITRE: PORTAL #1
FABRICATION ISOMETRIC
FUEL FROM 65POD41603A/B TO 65TNK41609/10/11

No PROJET	No DESSIN	PAGES	RÉV.
6515	416-80-PDI-CC10-0019	7/10	1

NO. DE CONDUITE		SPECIFICATION	PRODUIT	SYSTEME REVETEMENT	CODE DE COULEUR	ISOLATION ET TRACAGE	EPAISS. D'ISOLATION		
416-80-PDI-CC10-0019		CC10	PDI					65-416-270-200	PIPE SUPPORT DETAILS
PRESSION D'OPERATION	TEMPERATURE D'OPERATION	PRESSION DE CONCEPTION	TEMPERATURE DE CONCEPTION	PRESSION D'ESSAI	CLASSE D'INSPECTION	CODE DE SERVICE	TRAITEMENT THERMIQUE	65-416-205-200	P&ID
PSIG	°F	PSIG	°F	PSIG				No. DESSIN	DESSINS DE REFERENCE

FICHIER: \\ultragen.local\Ultragen-Dessin\Agnico Eagle\Meliadine\591700 (Fuel Distribution)\05. Dessins\02. Tuyauterie\02. Isométriques\02. 403P-80-PDI-CC10-0019-7.DWG

IMPRIMÉ LE: Sep 28, 2017, 1:41pm

416-MN-01

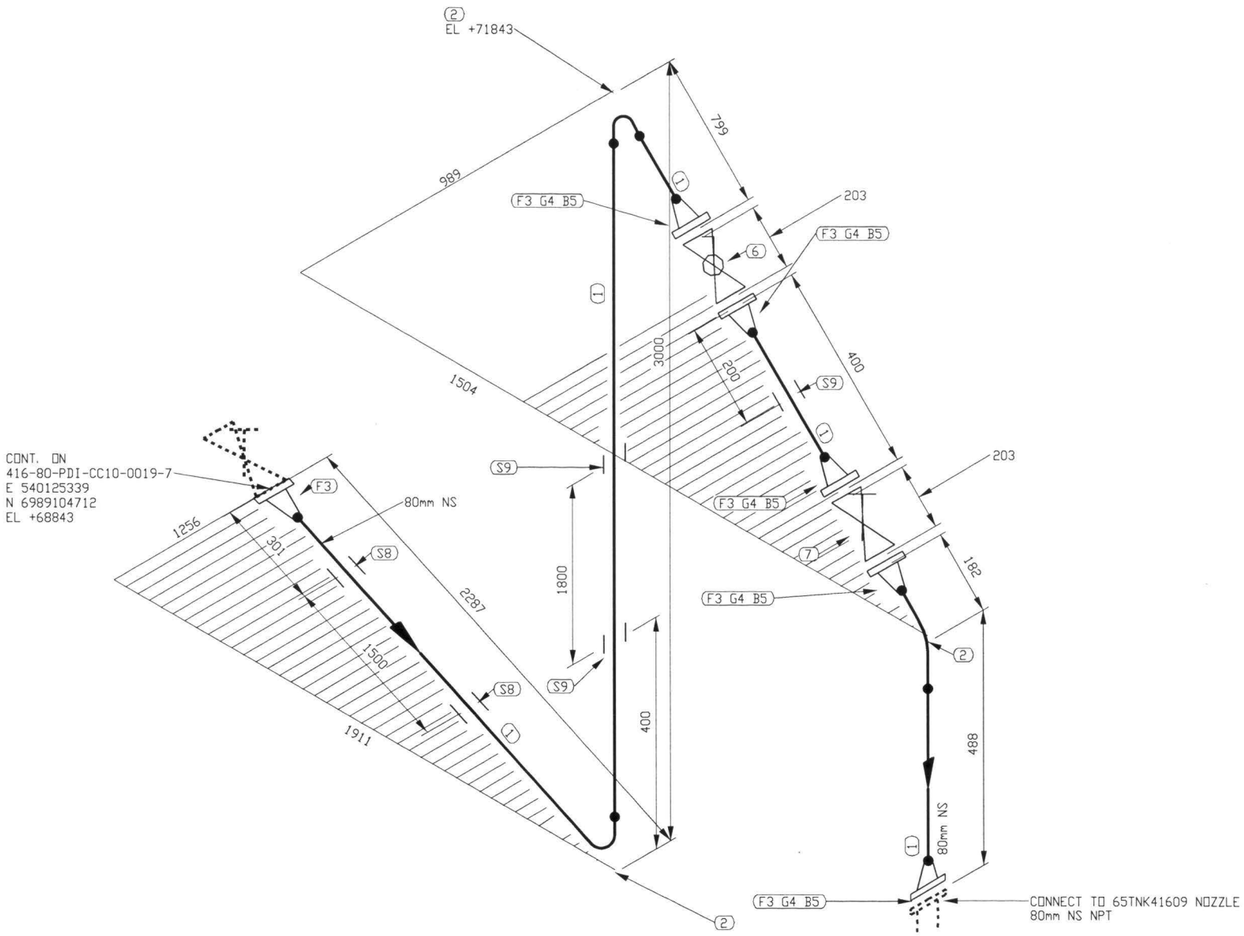

FABRICATION DRAWINGS BASED ON WSP CERTIFIED ENGINEERING

LISTE DE MATERIEL

No	QTE	DIA	MATERIEL/CATALOGUE	DESCRIPTION
1	5922 MM	80	A 333 Gr. 6	SCH STD, SMLS PIPE PDExTDE
2	3	80	A 420 Gr. WPL6	SCH STD, BW LR 90 DEG ELBOW
3	6	80	A 350 Gr. LF2	CL 150, SCH STD, RF, WN FLANGE
4	5	80	ASME B16.20	CL 150, GARLOCK 5500, RING TYPE GASKET 1/8" THK
5	20	16	A 193 B7/A 194 2H	CL 150, 4 - 15.875 X 90 STUD BOLTS c/w TWO HEAVY HEX NUTS
6	1	80	BA-31	CL 150, RF, BALL VALVE
7	1	80	GA-10	CL 150, RF, GATE VALVE
8	2	80		PIPE SUPPORT AS PER DETAIL 3, DWG 65-416-270-200
9	3	80		PIPE SUPPORT BY CONTRACTOR

REGISTERED PROFESSIONAL ENGINEER
D. TRUONG
LICENSEE
NT/NU
2017/10/05

PERMIT TO PRACTICE
LE GROUPE ULTRAGEN LTÉE
Signature
Date OCT 04 2017
PERMIT NUMBER: P 1180
NT/NU Association of Professional Engineers and Geoscientists

No.	DATE	REVISION	PAR / APP.
1	2017/09/29	LINE NUMBERS REVISED	QVN
0	2017/06/30	ISSUED FOR CONSTRUCTION	QVN

CLIENT: AGNICO EAGLE

NUQSANA PROMEC MINING SERVICES INC.

ultragen

CONSULTANT PROJECT NO. 591700

SCEAU PROFESSIONNEL

CONC.: KHV
DATE: 2017/05/29
DESSINÉ PAR: KVE
DATE: 2017/05/29
VÉR. PAR:
DATE:
APP.:
DATE:
ÉCHELLE: AUCUNE

PROJET: AGNICO EAGLE - MELIADINE DIVISION
416 - FUEL TANK FARM

TITRE: PORTAL #1
FABRICATION ISOMETRIC
FUEL FROM 65POD41603A/B TO 65TNK41609/10/11

No PROJET	No DESSIN	PAGES	RÉV.
6515	416-80-PDI-CC10-0019	8/10	1

NO. DE CONDUITE		SPECIFICATION	PRODUIT	SYSTEME REVETEMENT	CODE DE COULEUR	ISOLATION ET TRACAGE	EPAISS. D'ISOLATION		
416-80-PDI-CC10-0019		CC10	PDI					65-416-270-200	PIPE SUPPORT DETAILS
PRESSION D'OPERATION	TEMPERATURE D'OPERATION	PRESSION DE CONCEPTION	TEMPERATURE DE CONCEPTION	PRESSION D'ESSAI	CLASSE D'INSPECTION	CODE DE SERVICE	TRAITEMENT THERMIQUE	65-416-205-200	P&ID
PSIG	°F	PSIG	°F	PSIG				No. DESSIN	DESSINS DE REFERENCE

FICHIER: \\ultragen.local\Ultragen-Dessin\Agnico Eagle\Meliadine\591700 (Fuel Distribution)\05. Dessins\02. Tuyauterie\02. isométriques\02. 403P-80-PDI-CC10-0019-8.DWG

IMPRIMÉ LE: Sep 28, 2017, 1:41pm

416-MN-01

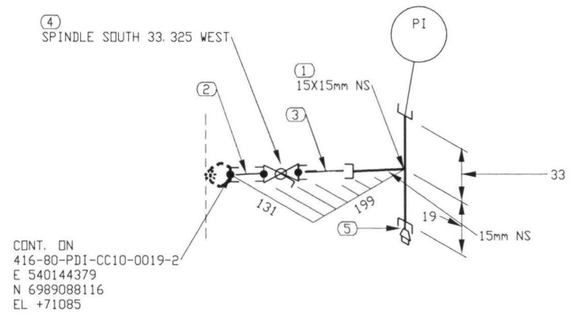

FABRICATION DRAWINGS BASED ON WSP CERTIFIED ENGINEERING

LISTE DE MATERIEL

No	QTE	DIA	MATERIEL/CATALOGUE	DESCRIPTION
1	1	15X15	A 350 Gr. LF2	CL 3000, THRD STRAIGHT TEE
2	1	15	A 333 Gr. 6	SCH 80, NIPPLE x 75mm LG PBE
3	1	15	A 333 Gr. 6	SCH 80, NIPPLE x 75mm LG PDExTDE
4	1	15	BA-29	CL 600, SW, BALL VALVE
5	1	15	A 350 Gr. LF2	MNPT SOLID STL BULL PLUG

REGISTERED PROFESSIONAL ENGINEER
D. TRUONG
LICENSEE
NT/NU
2017/10/05

PERMIT TO PRACTICE
LE GROUPE ULTRAGEN LTÉE
Signature
Date OCT 04 2017
PERMIT NUMBER: P 1180
NT/NU Association of Professional Engineers and Geoscientists

1	2017/09/29	LINE NUMBERS REVISED	QVN
0	2017/06/30	ISSUED FOR CONSTRUCTION	QVN
No.	DATE	REVISION	PAR / APP.

CLIENT: AGNICO EAGLE

NUQSANA PROMEC MINING SERVICES INC.

ultragen

CONSULTANT PROJECT NO. 591700

SCEAU PROFESSIONNEL

CONC.: KHV
DATE: 2017/05/29
DESSINÉ PAR: KVE
DATE: 2017/05/29
VÉR. PAR:
DATE:
APP.:
DATE:
ÉCHELLE: AUCUNE

PROJET: AGNICO EAGLE - MELIADINE DIVISION
416 - FUEL TANK FARM

TITRE: PORTAL #1
FABRICATION ISOMETRIC
FUEL FROM 65PDD41603A/B TO 65TNK41609/10/11

No PROJET	No DESSIN	PAGES	RÉV.
6515	416-80-PDI-CC10-0019	9/10	1

NO. DE CONDUITE		SPECIFICATION	PRODUIT	SYSTEME REVETEMENT	CODE DE COULEUR	ISOLATION ET TRACAGE	EPAISS. D'ISOLATION		
416-80-PDI-CC10-0019		CC10	PDI					65-416-270-200	PIPE SUPPORT DETAILS
PRESSION D'OPERATION	TEMPERATURE D'OPERATION	PRESSION DE CONCEPTION	TEMPERATURE DE CONCEPTION	PRESSION D'ESSAI	CLASSE D'INSPECTION	CODE DE SERVICE	TRAITEMENT THERMIQUE	65-416-205-200	P&ID
PSIG	°F	PSIG	°F	PSIG				No. DESSIN	DESSINS DE REFERENCE

FICHIER: \\ultragen.local\Ultragen--Dessin\Agnico Eagle\Meliadine\591700 (Fuel Distribution)\05. Dessins\02. Tuyauterie\02. Isométriques\02. 403P-80-PDI-CC10-0019-9.DWG

IMPRIMÉ LE: Sep 28, 2017, 1:41pm

416-MN-01

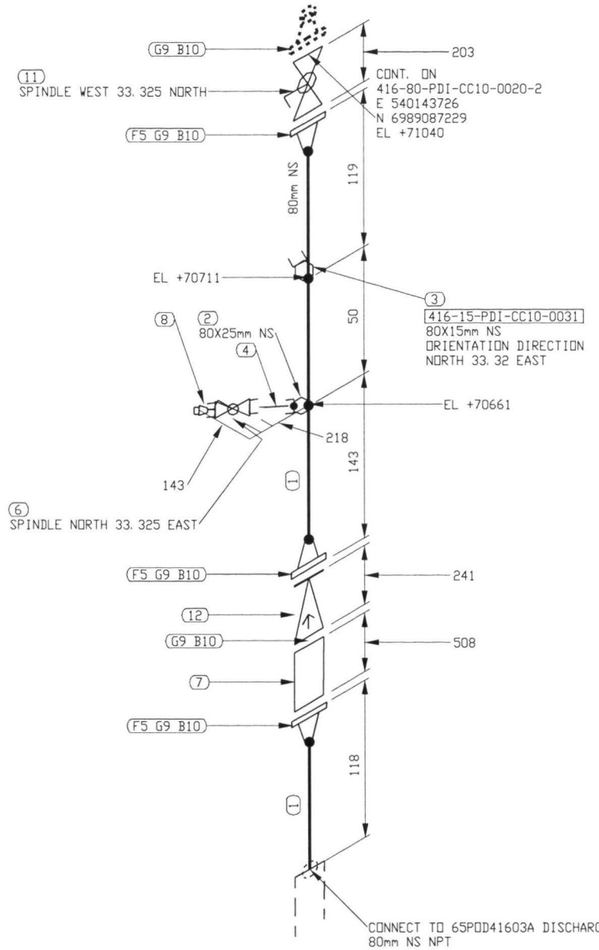

FABRICATION DRAWINGS BASED ON WSP CERTIFIED ENGINEERING

LISTE DE MATERIEL

No	QTE	DIA	MATERIEL/CATALOGUE	DESCRIPTION
1	226 MM	80	A 333 Gr. 6	SCH STD, SMLS PIPE PDExTDE
2	1	80X25	A 350 Gr. LF2	CL 3000, SOCKOLET
3	1	80X15	A 350 Gr. LF2	CL 3000, THREDOLET
4	1	25	A 333 Gr. 6	SCH 80, NIPPLE x 75mm LG PDExTDE
5	3	80	A 350 Gr. LF2	CL 150, SCH STD, RF, WN FLANGE
6	1	25	BA-32	CL 600, THRD, BALL VALVE
7	1	80		CL 150, SINGLE BRAIDED HOSE ASSEMBLY
8	1	25	A 350 Gr. LF2	MNPT SOLID STL BULL PLUG
9	5	80	ASME B16.20	CL 150, GARLOCK 5500, RING TYPE GASKET 1/8" THK
10	20	16	A 193 B7/A 194 2H	CL 150, 4 - 15.875 X 90 STUD BOLTS c/w TWO HEAVY HEX NUTS
11	1	80	BA-31	CL 150, RF, BALL VALVE
12	1	80	CK-29	CL 150, RF, SWING CHECK VALVE

REGISTERED PROFESSIONAL ENGINEER
D. TRUONG
LICENSEE
NT/NU
2017/10/05

PERMIT TO PRACTICE
LE GROUPE ULTRAGEN LTÉE
Signature
Date OCT 04 2017
PERMIT NUMBER: P 1180
NT/NU Association of Professional Engineers and Geoscientists

No.	DATE	REVISION	PAR / APP.
1	2017/09/29	LINE NUMBERS REVISED	QVN
0	2017/06/30	ISSUED FOR CONSTRUCTION	QVN

CLIENT: AGNICO EAGLE

NUQSANA PROMEC MINING SERVICES INC.

ultragen

CONSULTANT PROJECT NO. 591700

SCEAU PROFESSIONNEL

CONC.: KHV
DATE: 2017/05/29
DESSINÉ PAR: KVE
DATE: 2017/05/29
VÉR. PAR:
DATE:
APP.:
DATE:
ÉCHELLE: AUCUNE

PROJET: AGNICO EAGLE - MELIADINE DIVISION
416 - FUEL TANK FARM

TITRE: PORTAL #1
FABRICATION ISOMETRIC
FUEL FROM 65POD41603A TO 416-80-PDI-CC10-0019

No PROJET	No DESSIN	PAGES	RÉV.
6515	416-80-PDI-CC10-0020	1/3	1

NO. DE CONDUITE		SPECIFICATION	PRODUIT	SYSTEME REVETEMENT	CODE DE COULEUR	ISOLATION ET TRACAGE	EPAISS. D'ISOLATION		
416-80-PDI-CC10-0020		CC10	PDI					65-416-270-200	PIPE SUPPORT DETAILS
PRESSION D'OPERATION	TEMPERATURE D'OPERATION	PRESSION DE CONCEPTION	TEMPERATURE DE CONCEPTION	PRESSION D'ESSAI	CLASSE D'INSPECTION	CODE DE SERVICE	TRAITEMENT THERMIQUE	65-416-205-200	P&ID
PSIG	°F	PSIG	°F	PSIG				No. DESSIN	DESSINS DE REFERENCE

FICHIER: \\ultragen.local\Ultragen-Dessin\Agnico Eagle\Meliadine\591700 (Fuel Distribution)\05. Dessins\02. Tuyauterie\02. Isométriques\02. 403P-80-PDI-CC10-0020-1.DWG

IMPRIMÉ LE: Sep 28, 2017, 1:41pm

416-MN-01

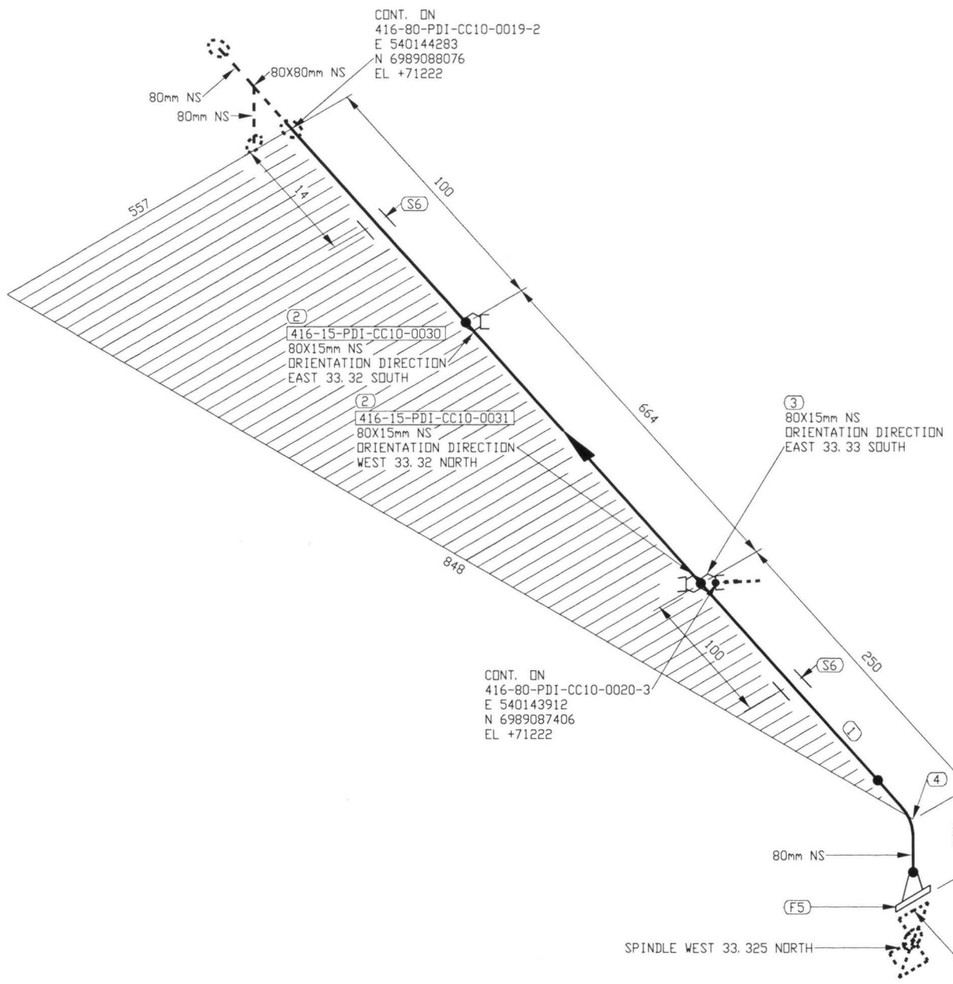

FABRICATION DRAWINGS BASED ON WSP CERTIFIED ENGINEERING

LISTE DE MATERIEL

No	QTE	DIA	MATERIEL/CATALOGUE	DESCRIPTION
1	900 MM	80	A 333 Gr. 6	SCH STD, SMLS PIPE
2	2	80X15	A 350 Gr. LF2	CL 3000, THREDOLET
3	1	80X15	A 350 Gr. LF2	CL 3000, SOCKOLET
4	1	80	A 420 Gr. WPL6	SCH STD, BW LR 90 DEG ELBOW
5	1	80	A 350 Gr. LF2	CL 150, SCH STD, RF, WN FLANGE
6	2	80		PIPE SUPPORT BY CONTRACTOR

REGISTERED PROFESSIONAL ENGINEER
D. TRUONG
LICENSEE
NT/NU
2017/10/05

PERMIT TO PRACTICE
LE GROUPE ULTRAGEN LTÉE
Signature
Date OCT 04 2017
PERMIT NUMBER: P 1180
NT/NU Association of Professional Engineers and Geoscientists

No.	DATE	REVISION	
1	2017/09/29	LINE NUMBERS REVISED	QVN
0	2017/06/30	ISSUED FOR CONSTRUCTION	QVN

CLIENT: AGNICO EAGLE

NUQSANA PROMEC MINING SERVICES INC.

ultragen

CONSULTANT PROJECT NO. 591700

SCEAU PROFESSIONNEL

CONC.: KHV
DATE: 2017/05/29
DESSINÉ PAR: KVE
DATE: 2017/05/29
VÉR. PAR:
DATE:
APP.:
DATE:
ÉCHELLE: AUCUNE

PROJET: AGNICO EAGLE - MELIADINE DIVISION
416 - FUEL TANK FARM

TITRE: PORTAL #1
FABRICATION ISOMETRIC
FUEL FROM 65POD41603A TO 416-80-PDI-CC10-0019

No PROJET	No DESSIN	PAGES	RÉV.
6515	416-80-PDI-CC10-0020	2/3	1

NO. DE CONDUITE		SPECIFICATION	PRODUIT	SYSTEME REVETEMENT	CODE DE COULEUR	ISOLATION ET TRACAGE	EPAISS. D'ISOLATION		
416-80-PDI-CC10-0020		CC10	PDI					65-416-270-200	PIPE SUPPORT DETAILS
PRESSION D'OPERATION	TEMPERATURE D'OPERATION	PRESSION DE CONCEPTION	TEMPERATURE DE CONCEPTION	PRESSION D'ESSAI	CLASSE D'INSPECTION	CODE DE SERVICE	TRAITEMENT THERMIQUE	65-416-205-200	P&ID
PSIG	°F	PSIG	°F	PSIG				No. DESSIN	DESSINS DE REFERENCE

FICHIER: \\ultragen.local\Ultragen-Dessin\Agnico Eagle\Meliadine\591700 (Fuel Distribution)\05. Dessins\02. Tuyauterie\02. Isométriques\02. 40JP-80-PDI-CC10-0020-2.DWG

IMPRIMÉ LE: Sep 28, 2017, 1:41pm

416-MN-01

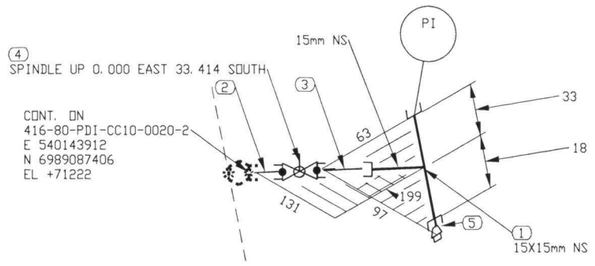

FABRICATION DRAWINGS BASED ON WSP CERTIFIED ENGINEERING

LISTE DE MATERIEL

No	QTE	DIA	MATERIEL/CATALOGUE	DESCRIPTION
1	1	15X15	A 350 Gr. LF2	CL 3000, THRD STRAIGHT TEE
2	1	15	A 333 Gr. 6	SCH 80, NIPPLE x 75mm LG PBE
3	1	15	A 333 Gr. 6	SCH 80, NIPPLE x 75mm LG POExTOE
4	1	15	BA-29	CL 600, SW, BALL VALVE
5	1	15	A 350 Gr. LF2	MNPT SOLID STL BULL PLUG

REGISTERED PROFESSIONAL ENGINEER
D. TRUONG
LICENSEE
NT/NU
2017/10/05

PERMIT TO PRACTICE
LE GROUPE ULTRAGEN LTÉE
Signature
Date OCT 04 2017
PERMIT NUMBER: P 1180
NT/NU Association of Professional Engineers and Geoscientists

No.	DATE	REVISION	PAR APP.
1	2017/09/29	LINE NUMBERS REVISED	QVN
0	2017/06/30	ISSUED FOR CONSTRUCTION	QVN

CLIENT: AGNICO EAGLE

NUQSANA PROMEC MINING SERVICES INC.

ultragen

CONSULTANT PROJECT NO. 591700

SCEAU PROFESSIONNEL

CONC.: KHV
DATE: 2017/05/29
DESSINÉ PAR: KVE
DATE: 2017/05/29
VÉR. PAR:
DATE:
APP.:
DATE:
ÉCHELLE: AUCUNE

PROJET: AGNICO EAGLE - MELIADINE DIVISION
416 - FUEL TANK FARM

TITRE: PORTAL #1
FABRICATION ISOMETRIC
FUEL FROM 65POD41603A TO 416-80-PDI-CC10-0019

No PROJET	No DESSIN	PAGES	RÉV.
6515	416-80-PDI-CC10-0020	3/3	1

NO. DE CONDUITE		SPECIFICATION	PRODUIT	SYSTEME REVETEMENT	CODE DE COULEUR	ISOLATION ET TRACAGE	EPAISS. D'ISOLATION		
416-80-PDI-CC10-0020		CC10	PDI					65-416-270-200	PIPE SUPPORT DETAILS
PRESSION D'OPERATION	TEMPERATURE D'OPERATION	PRESSION DE CONCEPTION	TEMPERATURE DE CONCEPTION	PRESSION D'ESSAI	CLASSE D'INSPECTION	CODE DE SERVICE	TRAITEMENT THERMIQUE	65-416-205-200	P&ID
PSIG	°F	PSIG	°F	PSIG				No. DESSIN	DESSINS DE REFERENCE

FICHIER: \\ultragen.local\Ultragen-Dessin\Agnico Eagle\Meliadine\591700 (Fuel Distribution)\05. Dessins\02. Tuyauterie\02. Isométriques\02. 403P-80-PDI-CC10-0020-1.DWG

IMPRIMÉ LE: Sep 28, 2017, 1:41pm

416-MN-01

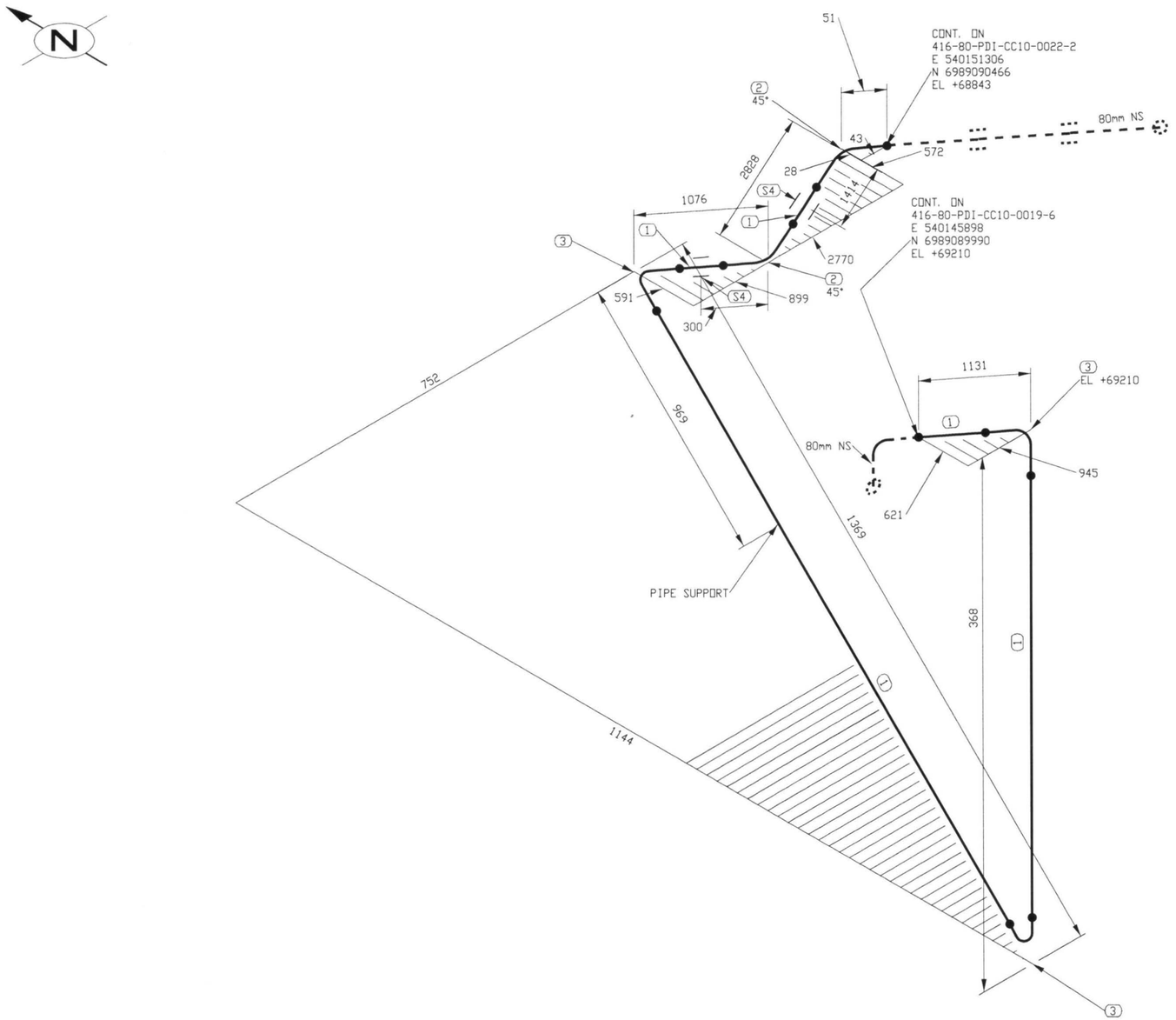

LISTE DE MATERIEL

No	QTE	DIA	MATERIEL/CATALOGUE	DESCRIPTION
1	5934 MM	80	A 333 Gr. 6	SCH STD, SMLS PIPE
2	2	80	A 420 Gr. WPL6	SCH STD, BW LR 45 DEG ELBOW
3	3	80	A 420 Gr. WPL6	SCH STD, BW LR 90 DEG ELBOW
4	2	80		PIPE SUPPORT AS PER DETAIL 3, DWG: 65-416-270-200

REGISTERED PROFESSIONAL ENGINEER
D. TRUONG
LICENSEE
NT/NU
2017/10/05

PERMIT TO PRACTICE
LE GROUPE ULTRAGEN LTÉE
Signature
Date OCT 04 2017
PERMIT NUMBER: P 1180
NT/NU Association of Professional Engineers and Geoscientists

No.	DATE	REVISION	PAR / APP.
1	2017/09/29	LINE NUMBERS REVISED	QVN
0	2017/06/30	ISSUED FOR CONSTRUCTION	QVN

CLIENT: AGNICO EAGLE

NUQSANA PROMEC MINING SERVICES INC.

ultragen

CONSULTANT PROJECT NO. 591700

SCEAU PROFESSIONNEL

CONC.: KHV
DATE: 2017/05/29
DESSINÉ PAR: KVE
DATE: 2017/05/29
VÉR. PAR:
DATE:
APP.:
DATE:
ÉCHELLE: AUCUNE

PROJET: AGNICO EAGLE - MELIADINE DIVISION
416 - FUEL TANK FARM

TITRE: PORTAL #1
FABRICATION ISOMETRIC
FUEL FROM 416-80-PDI-CC10-0023 TO 65TNK41611

No PROJET	No DESSIN	PAGES	REV.
6515	416-80-PDI-CC10-0022	1/19	1

NO. DE CONDUITE		SPECIFICATION	PRODUIT	SYSTEME REVETEMENT	CODE DE COULEUR	ISOLATION ET TRACAGE	EPAISS. D'ISOLATION		
416-80-PDI-CC10-0022		CC10	PDI					65-416-270-200	PIPE SUPPORT DETAILS
PRESSION D'OPERATION	TEMPERATURE D'OPERATION	PRESSION DE CONCEPTION	TEMPERATURE DE CONCEPTION	PRESSION D'ESSAI	CLASSE D'INSPECTION	CODE DE SERVICE	TRAITEMENT THERMIQUE	65-416-205-200	P&ID
PSIG	°F	PSIG	°F	PSIG				No. DESSIN	DESSINS DE REFERENCE

FICHIER: \\ultragen.local\Ultragen-Dessin\Agnico Eagle\Meliadine\591700 (Fuel Distribution)\05. Dessins\02. Tuyauterie\02. Isométriques\02. 403P-80-PDI-CC10-0022-1.DWG

IMPRIMÉ LE: Sep 28, 2017, 1:41pm

416-MN-01

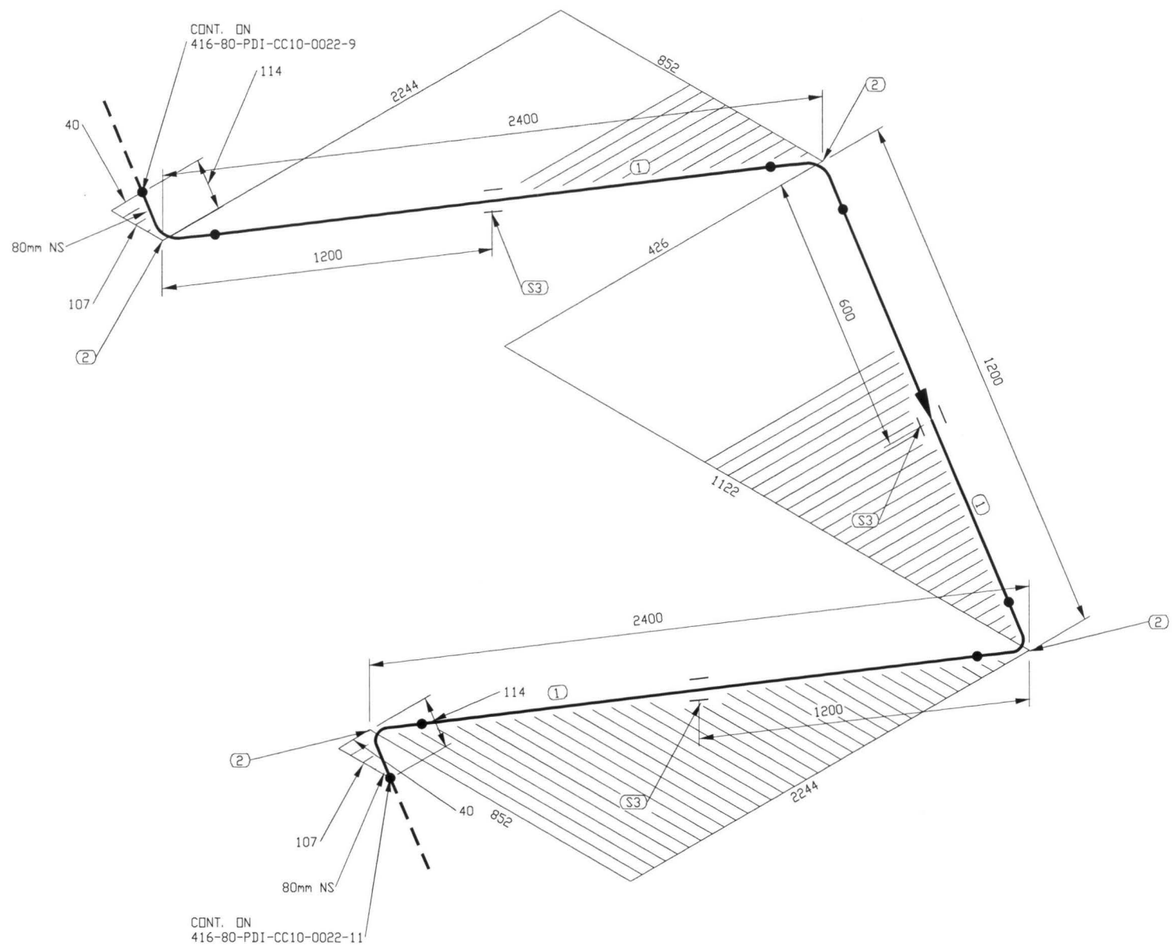

FABRICATION DRAWINGS BASED ON WSP CERTIFIED ENGINEERING

LISTE DE MATERIEL

No.	QTE	DIA	MATERIEL/CATALOGUE	DESCRIPTION
1	5316 MM	80	A 333 Gr. 6	SCH STD, SMLS PIPE
2	4	80	A 420 Gr. WPL6	SCH STD, BW LR 90 DEG ELBOW
3	3	80		PIPE SUPPORT AS PER DETAIL 3, DWG: 65-416-270-200

REGISTERED PROFESSIONAL ENGINEER
D. TRUONG
LICENSEE
NT/NU
2017/10/05

PERMIT TO PRACTICE
LE GROUPE ULTRAGEN LTÉE
Signature
Date OCT 04 2017
PERMIT NUMBER: P 1180
NT/NU Association of Professional Engineers and Geoscientists

No.	DATE	REVISION	APP.
1	2017/09/29	LINE NUMBERS REVISED	QVN
0	2017/06/30	ISSUED FOR CONSTRUCTION	QVN

CLIENT:

AGNICO EAGLE

NUQSANA PROMEC MINING SERVICES INC.

ultragen

CONSULTANT PROJECT NO. 591700

SCEAU PROFESSIONNEL

CONC.: KHV
DATE: 2017/05/29
DESSINÉ PAR: KVE
DATE: 2017/05/29
VÉR. PAR:
DATE:
APP.:
DATE:
ÉCHELLE: AUCUNE

PROJET: AGNICO EAGLE - MELIADINE DIVISION
416 - FUEL TANK FARM

TITRE: PORTAL #1
FABRICATION ISOMETRIC
FUEL FROM 416-80-PDI-CC10-0023 TO 65TNK41611

No PROJET	No DESSIN	PAGES	RÉV.
6515	416-80-PDI-CC10-0022	10/19	1

NO. DE CONDUITE		SPECIFICATION	PRODUIT	SYSTEME REVETEMENT	CODE DE COULEUR	ISOLATION ET TRACAGE	EPAISS. D'ISOLATION		
416-80-PDI-CC10-0022		CC10	PDI					65-416-270-200	PIPE SUPPORT DETAILS
PRESSION D'OPERATION	TEMPERATURE D'OPERATION	PRESSION DE CONCEPTION	TEMPERATURE DE CONCEPTION	PRESSION D'ESSAI	CLASSE D'INSPECTION	CODE DE SERVICE	TRAITEMENT THERMIQUE	65-416-205-200	P&ID
PSIG	°F	PSIG	°F	PSIG				No. DESSIN	DESSINS DE REFERENCE

FICHIER: \\ultragen.local\Ultragen-Dessin\Agnico Eagle\Meliadine\591700 (Fuel Distribution)\05. Dessins\02. Tuyauterie\02. Isométriques\02. 403P-80-PDI-CC10-0022-10.DWG

IMPRIMÉ LE: Sep 28, 2017, 1:41pm

416-MN-01

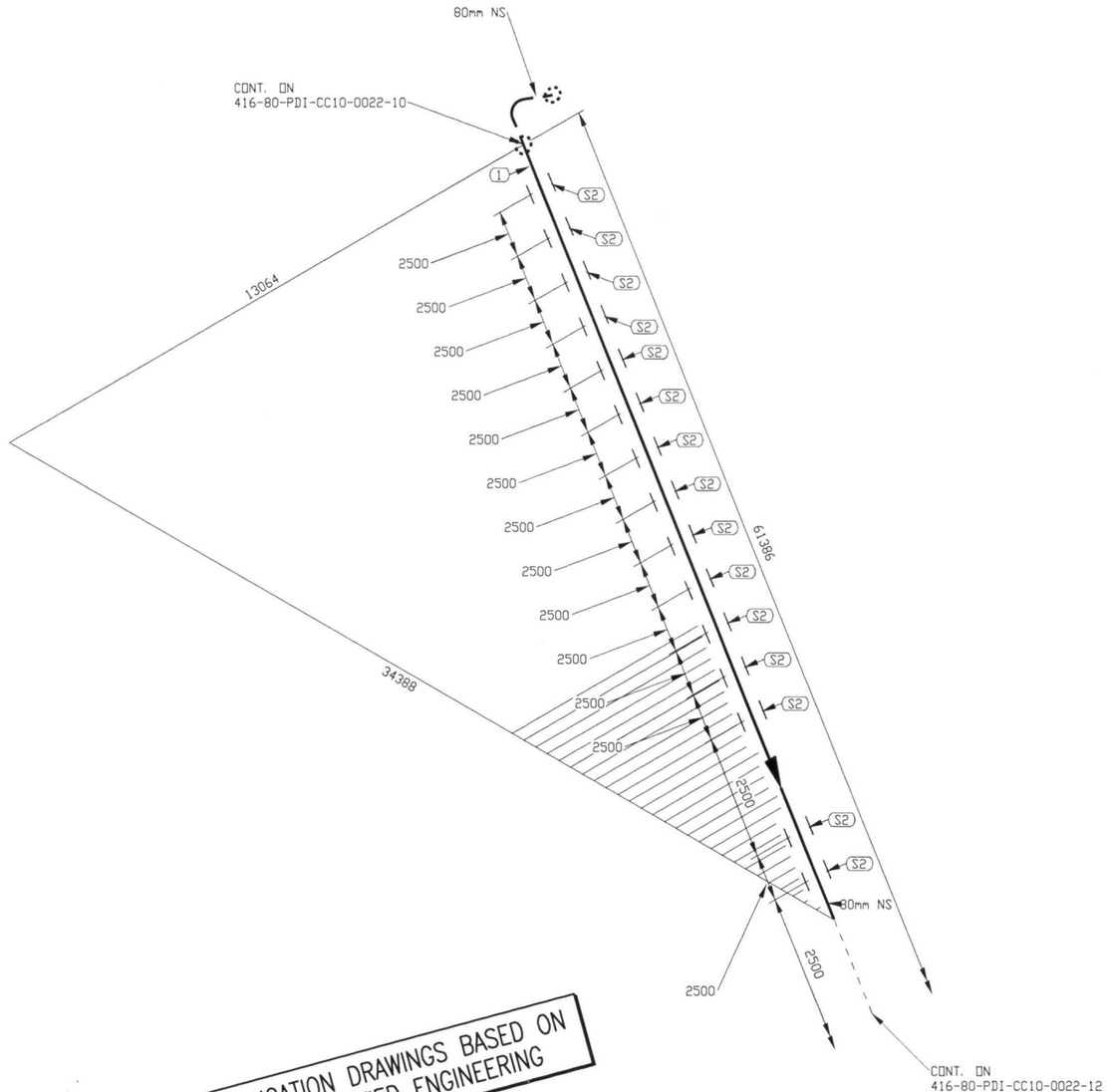

FABRICATION DRAWINGS BASED ON WSP CERTIFIED ENGINEERING

LISTE DE MATERIEL

No	QTE	DIA	MATERIEL/CATALOGUE	DESCRIPTION
1	36786 MM	80	A 333 Gr. 6	SCH STD, SMLS PIPE
2	15	80		PIPE SUPPORT AS PER DETAIL 3, DWG 65-416-270-200

REGISTERED PROFESSIONAL ENGINEER
D. TRUONG
LICENSEE
NT/NU
2017/10/05

PERMIT TO PRACTICE
LE GROUPE ULTRAGEN LTÉE
Signature
Date OCT 04 2017
PERMIT NUMBER: P 1180
NT/NU Association of Professional Engineers and Geoscientists

No.	DATE	REVISION	PAR / APP.
1	2017/09/29	LINE NUMBERS REVISED	QVN
0	2017/06/30	ISSUED FOR CONSTRUCTION	QVN

CLIENT: AGNICO EAGLE

NUQSANA PROMEC MINING SERVICES INC.

ultragen

CONSULTANT PROJECT NO. 591700

SCEAU PROFESSIONNEL

CONC.: KHV
DATE: 2017/05/29
DESSINÉ PAR: KVE
DATE: 2017/05/29
VÉR. PAR:
DATE:
APP.:
DATE:
ÉCHELLE: AUCUNE

PROJET: AGNICO EAGLE - MELIADINE DIVISION
416 - FUEL TANK FARM

TITRE: PORTAL #1
FABRICATION ISOMETRIC
FUEL FROM 416-80-PDI-CC10-0023 TO 65TNK41611

No PROJET	No DESSIN	PAGES	RÉV.
6515	416-80-PDI-CC10-0022	11/19	1

NO. DE CONDUITE		SPECIFICATION	PRODUIT	SYSTEME REVETEMENT	CODE DE COULEUR	ISOLATION ET TRACAGE	EPAISS. D'ISOLATION		
416-80-PDI-CC10-0022		CC10	PDI					65-416-270-200	PIPE SUPPORT DETAILS
PRESSION D'OPERATION	TEMPERATURE D'OPERATION	PRESSION DE CONCEPTION	TEMPERATURE DE CONCEPTION	PRESSION D'ESSAI	CLASSE D'INSPECTION	CODE DE SERVICE	TRAITEMENT THERMIQUE	65-416-205-200	P&ID
PSIG	°F	PSIG	°F	PSIG				No. DESSIN	DESSINS DE REFERENCE

FICHIER: \\ultragen.local\Ultragen-Dessin\Agnico Eagle\Meliadine\591700 (Fuel Distribution)\05. Dessins\02. Tuyauterie\02. Isométriques\02. 403P-80-PDI-CC10-0022-11.DWG

IMPRIMÉ LE: Sep 28, 2017, 1:41pm

416-MN-01

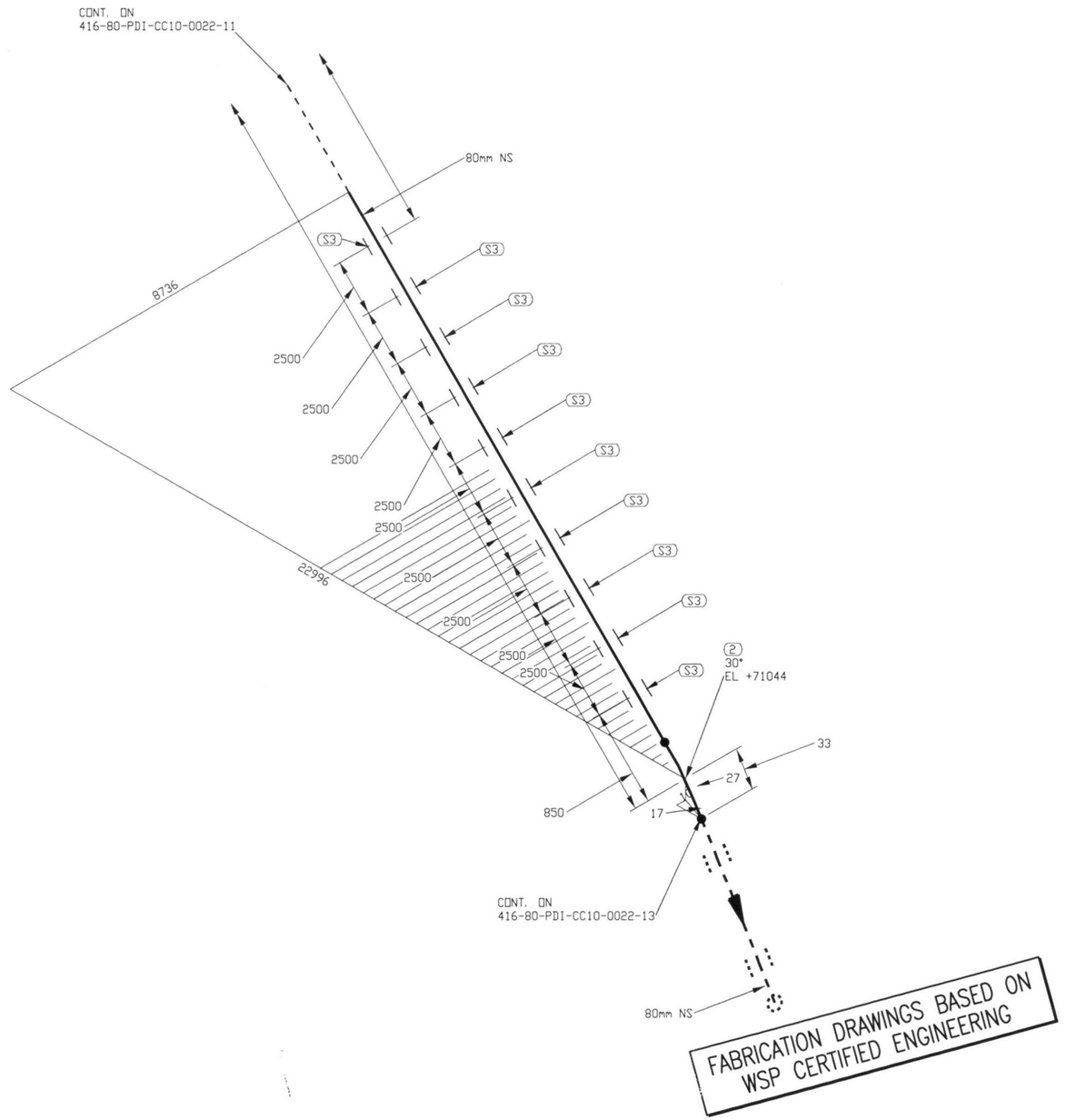

LISTE DE MATERIEL

No	QTE	DIA	MATERIEL/CATALOGUE	DESCRIPTION
1	24567 MM	80	A 333 Gr. 6	SCH STD, SMLS PIPE
2	1	80	A 420 Gr. WPL6	SCH STD, BW LR 45 DEG ELBOW TRIM TO 30.00
3	10	80		PIPE SUPPORT AS PER DETAIL 3, DWG: 65-416-270-200

REGISTERED PROFESSIONAL ENGINEER
D. TRUONG
LICENSEE
NT/NU
2017/10/05

PERMIT TO PRACTICE
LE GROUPE ULTRAGEN LTÉE
Signature
Date OCT 04 2017
PERMIT NUMBER: P 1180
NT/NU Association of Professional Engineers and Geoscientists

No.	DATE	REVISION	PAR / APP.
1	2017/09/29	LINE NUMBERS REVISED	QVN
0	2017/06/30	ISSUED FOR CONSTRUCTION	QVN

CLIENT:
AGNICO EAGLE

NUQSANA PROMEC MINING SERVICES INC.

ultragen

CONSULTANT PROJECT NO. 591700

SCEAU PROFESSIONNEL

CONC.: KHV
DATE: 2017/05/29
DESSINÉ PAR: KVE
DATE: 2017/05/29
VÉR. PAR:
DATE:
APP.:
DATE:
ÉCHELLE: AUCUNE

PROJET:
AGNICO EAGLE - MELIADINE DIVISION
416 - FUEL TANK FARM

TITRE:
PORTAL #1
FABRICATION ISOMETRIC
FUEL FROM 416-80-PDI-CC10-0023 TO 65TNK41611

No PROJET	No DESSIN	PAGES	RÉV.
6515	416-80-PDI-CC10-0022	12/19	1

NO. DE CONDUITE		SPECIFICATION	PRODUIT	SYSTEME REVETEMENT	CODE DE COULEUR	ISOLATION ET TRACAGE	EPAISS. D'ISOLATION		
416-80-PDI-CC10-0022		CC10	PDI					65-416-270-200	PIPE SUPPORT DETAILS
PRESSION D'OPERATION	TEMPERATURE D'OPERATION	PRESSION DE CONCEPTION	TEMPERATURE DE CONCEPTION	PRESSION D'ESSAI	CLASSE D'INSPECTION	CODE DE SERVICE	TRAITEMENT THERMIQUE	65-416-205-200	P&ID
PSIG	°F	PSIG	°F	PSIG				No. DESSIN	DESSINS DE REFERENCE

FICHIER: \\ultragen.local\Ultragen-Dessin\Agnico Eagle\Meliadine\591700 (Fuel Distribution)\05. Dessins\02. Tuyauterie\02. Isométriques\02. 40IP-80-PDI-CC10-0022-12.DWG

IMPRIMÉ LE: Sep 28, 2017, 1:41pm

416-MN-01

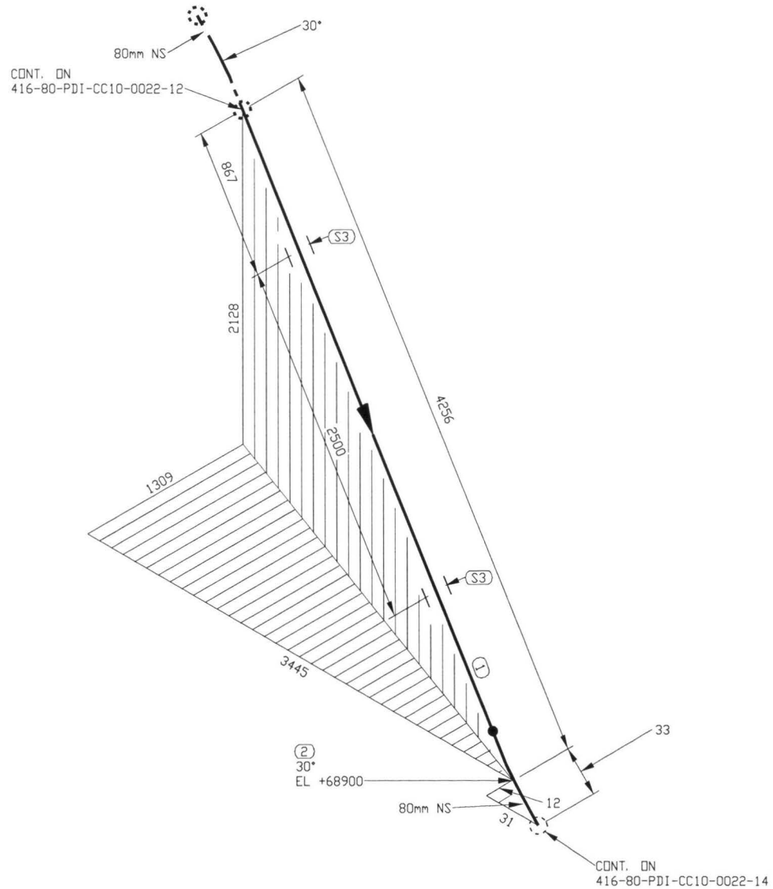

FABRICATION DRAWINGS BASED ON WSP CERTIFIED ENGINEERING

LISTE DE MATERIEL

No.	QTE	DIA	MATERIEL/CATALOGUE	DESCRIPTION
1	4223 MM	80	A 333 Gr. 6	SCH STD, SMLS PIPE
2	1	80	A 420 Gr. WPL6	SCH STD, BW LR 45 DEG ELBOW TRIM TO 30.00
3	2	80		PIPE SUPPORT AS PER DETAIL 3, DWG: 65-416-270-200

REGISTERED PROFESSIONAL ENGINEER
D. TRUONG
LICENSEE
NT/NU
2017/10/05

PERMIT TO PRACTICE
LE GROUPE ULTRAGEN LTÉE
Signature
Date OCT 04 2017
PERMIT NUMBER: P 1180
NT/NU Association of Professional Engineers and Geoscientists

No.	DATE	REVISION	PAR / APP.
1	2017/09/29	LINE NUMBERS REVISED	QVN
0	2017/06/30	ISSUED FOR CONSTRUCTION	QVN

CLIENT: AGNICO EAGLE

NUQSANA PROMEC MINING SERVICES INC.

ultragen

CONSULTANT PROJECT NO. 591700

SCEAU PROFESSIONNEL

CONC.: KHV
DATE: 2017/05/29
DESSINÉ PAR: KVE
DATE: 2017/05/29
VÉR. PAR:
DATE:
APP.:
DATE:
ÉCHELLE: AUCUNE

PROJET: AGNICO EAGLE - MELIADINE DIVISION
416 - FUEL TANK FARM

TITRE: PORTAL #1
FABRICATION ISOMETRIC
FUEL FROM 416-80-PDI-CC10-0023 TO 65TNK41611

No PROJET	No DESSIN	PAGES	RÉV.
6515	416-80-PDI-CC10-0022	13/19	1

NO. DE CONDUITE		SPECIFICATION	PRODUIT	SYSTEME REVETEMENT	CODE DE COULEUR	ISOLATION ET TRACAGE	EPAISS. D'ISOLATION		
416-80-PDI-CC10-0022		CC10	PDI					65-416-270-200	PIPE SUPPORT DETAILS
PRESSION D'OPERATION	TEMPERATURE D'OPERATION	PRESSION DE CONCEPTION	TEMPERATURE DE CONCEPTION	PRESSION D'ESSAI	CLASSE D'INSPECTION	CODE DE SERVICE	TRAITEMENT THERMIQUE	65-416-205-200	P&ID
PSIG	°F	PSIG	°F	PSIG				No. DESSIN	DESSINS DE REFERENCE

FICHIER: \\ultragen.local\Ultragen-Dessin\Agnico Eagle\Meliadine\591700 (Fuel Distribution)\05. Dessins\02. Tuyauterie\02. Isométriques\02. 403P-80-PDI-CC10-0022-13.DWG

IMPRIMÉ LE: Sep 28, 2017, 1:41pm

416-MN-01

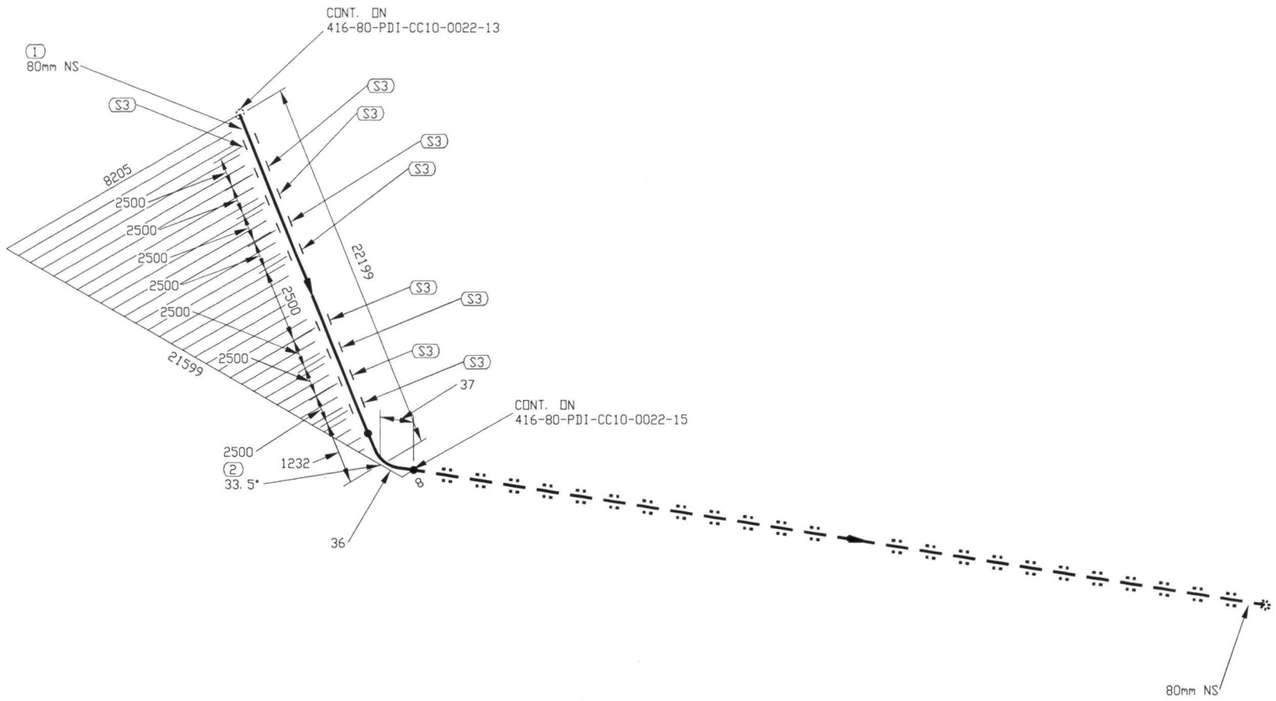

FABRICATION DRAWINGS BASED ON WSP CERTIFIED ENGINEERING

LISTE DE MATERIEL

No	QTE	DIA	MATERIEL/CATALOGUE	DESCRIPTION
1	22162 MM	80	A 333 Gr. 6	SCH STD, SMLS PIPE
2	1	80	A 420 Gr. WPL6	SCH STD, BW LR 45 DEG ELBOW TRIM TO 33.52
3	9	80		PIPE SUPPORT AS PER DETAIL 3, DWG: 65-416-270-200

REGISTERED PROFESSIONAL ENGINEER
D. TRUONG
LICENSEE
NT/NU
2017/10/05

PERMIT TO PRACTICE
LE GROUPE ULTRAGEN LTÉE
Signature
Date OCT 04 2017
PERMIT NUMBER: P 1180
NT/NU Association of Professional Engineers and Geoscientists

1	2017/09/29	LINE NUMBERS REVISED	QVN
0	2017/06/30	ISSUED FOR CONSTRUCTION	QVN
No.	DATE	REVISION	PAR / APP.

CLIENT:

AGNICO EAGLE

NUQSANA PROMEC MINING SERVICES INC.

ultragen

CONSULTANT PROJECT NO. 591700

NO. DE CONDUITE		SPECIFICATION	PRODUIT	SYSTEME REVETEMENT	CODE DE COULEUR	ISOLATION ET TRACAGE	EPAISS. D'ISOLATION		
416-80-PDI-CC10-0022		CC10	PDI					65-416-270-200	PIPE SUPPORT DETAILS
PRESSION D'OPERATION	TEMPERATURE D'OPERATION	PRESSION DE CONCEPTION	TEMPERATURE DE CONCEPTION	PRESSION D'ESSAI	CLASSE D'INSPECTION	CODE DE SERVICE	TRAITEMENT THERMIQUE	65-416-205-200	P&ID
PSIG	°F	PSIG	°F	PSIG				No. DESSIN	DESSINS DE REFERENCE

SCEAU PROFESSIONNEL

CONC.: KHV
DATE: 2017/05/29
DESSINÉ PAR: KVE
DATE: 2017/05/29
VÉR. PAR:
DATE:
APP.:
DATE:
ÉCHELLE: AUCUNE

PROJET:
AGNICO EAGLE - MELIADINE DIVISION
416 - FUEL TANK FARM

TITRE:
PORTAL #1
FABRICATION ISOMETRIC
FUEL FROM 416-80-PDI-CC10-0023 TO 65TNK41611

No PROJET	No DESSIN	PAGES	RÉV.
6515	416-80-PDI-CC10-0022	14/19	1

416-MN-01

FICHIER: \\ultragen-local\Ultragen-Dessin\Agnico Eagle\Meliadine\591700 (Fuel Distribution)\05. Dessins\02. Tuyauterie\02. Isométriques\02. 403P-80-PDI-CC10-0022-14.DWG

IMPRIMÉ LE: Sep 28, 2017, 1:42pm

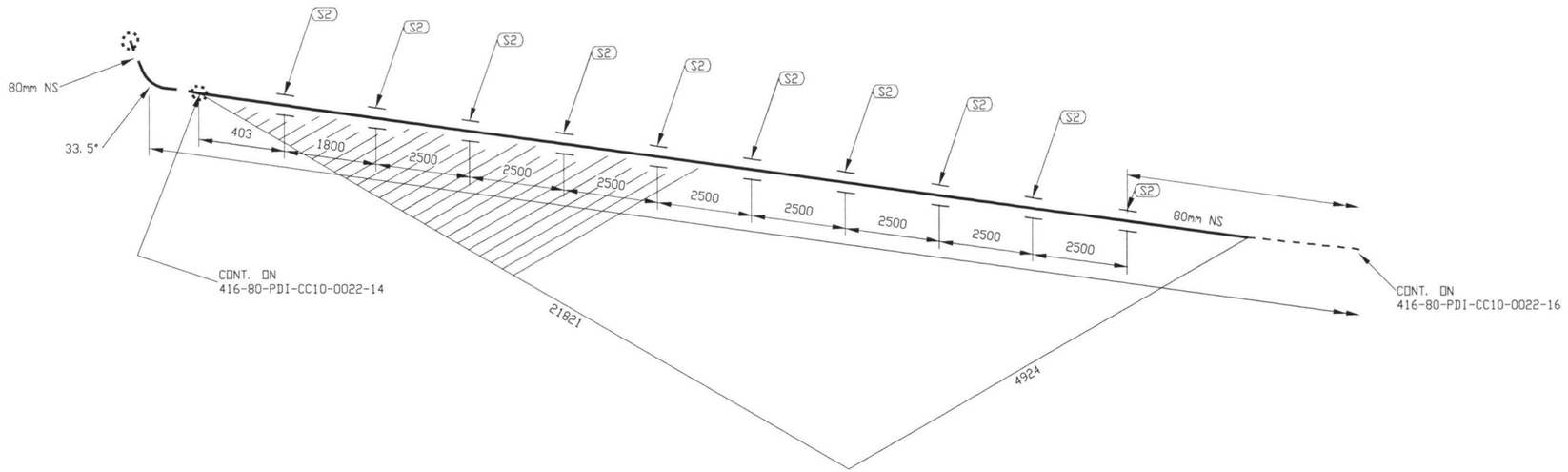

FABRICATION DRAWINGS BASED ON WSP CERTIFIED ENGINEERING

LISTE DE MATERIEL

No	QTE	DIA	MATERIEL/CATALOGUE	DESCRIPTION
1	23453 MM	80	A 333 Gr. 6	SCH STD, SMLS PIPE
2	10	80		PIPE SUPPORT AS PER DETAIL 3, DWG: 65-416-270-200

REGISTERED PROFESSIONAL ENGINEER
D. TRUONG
LICENSEE
NT/NU
2017/10/05

PERMIT TO PRACTICE
LE GROUPE ULTRAGEN LTÉE
Signature
Date OCT 04 2017
PERMIT NUMBER: P 1180
NT/NU Association of Professional Engineers and Geoscientists

No.	DATE	REVISION	PAR / APP.
1	2017/09/29	LINE NUMBERS REVISED	QVN
0	2017/06/30	ISSUED FOR CONSTRUCTION	QVN

CLIENT: AGNICO EAGLE

NUQSANA PROMEC MINING

ultragen

CONSULTANT PROJECT NO. 591700

NO. DE CONDUITE		SPECIFICATION	PRODUIT	SYSTEME REVETEMENT	CODE DE COULEUR	ISOLATION ET TRACAGE	EPAISS. D'ISOLATION		
416-80-PDI-CC10-0022		CC10	PDI					65-416-270-200	PIPE SUPPORT DETAILS
PRESSION D'OPERATION	TEMPERATURE D'OPERATION	PRESSION DE CONCEPTION	TEMPERATURE DE CONCEPTION	PRESSION D'ESSAI	CLASSE D'INSPECTION	CODE DE SERVICE	TRAITEMENT THERMIQUE	65-416-205-200	P&ID
PSIG	°F	PSIG	°F	PSIG				No. DESSIN	DESSINS DE REFERENCE

SCEAU PROFESSIONNEL

CONC.: KHV
DATE: 2017/05/29
DESSINÉ PAR: KVE
DATE: 2017/05/29
VÉR. PAR:
DATE:
APP.:
DATE:
ÉCHELLE: AUCUNE

PROJET: AGNICO EAGLE - MELIADINE DIVISION
416 - FUEL TANK FARM

TITRE: PORTAL #1
FABRICATION ISOMETRIC
FUEL FROM 416-80-PDI-CC10-0023 TO 65TNK41611

No PROJET	No DESSIN	PAGES	RÉV.
6515	416-80-PDI-CC10-0022	15/19	1

416-MN-01

FICHIER: \\ultragen.local\Ultragen-Dessin\Agnico Eagle\Meliadine\591700 (Fuel Distribution)\05 Dessins\02 Tuyauterie\02 Isométriques\02 4039-80-PDI-CC10-0022-15.DWG

IMPRIMÉ LE: Sep 28, 2017, 1:42pm

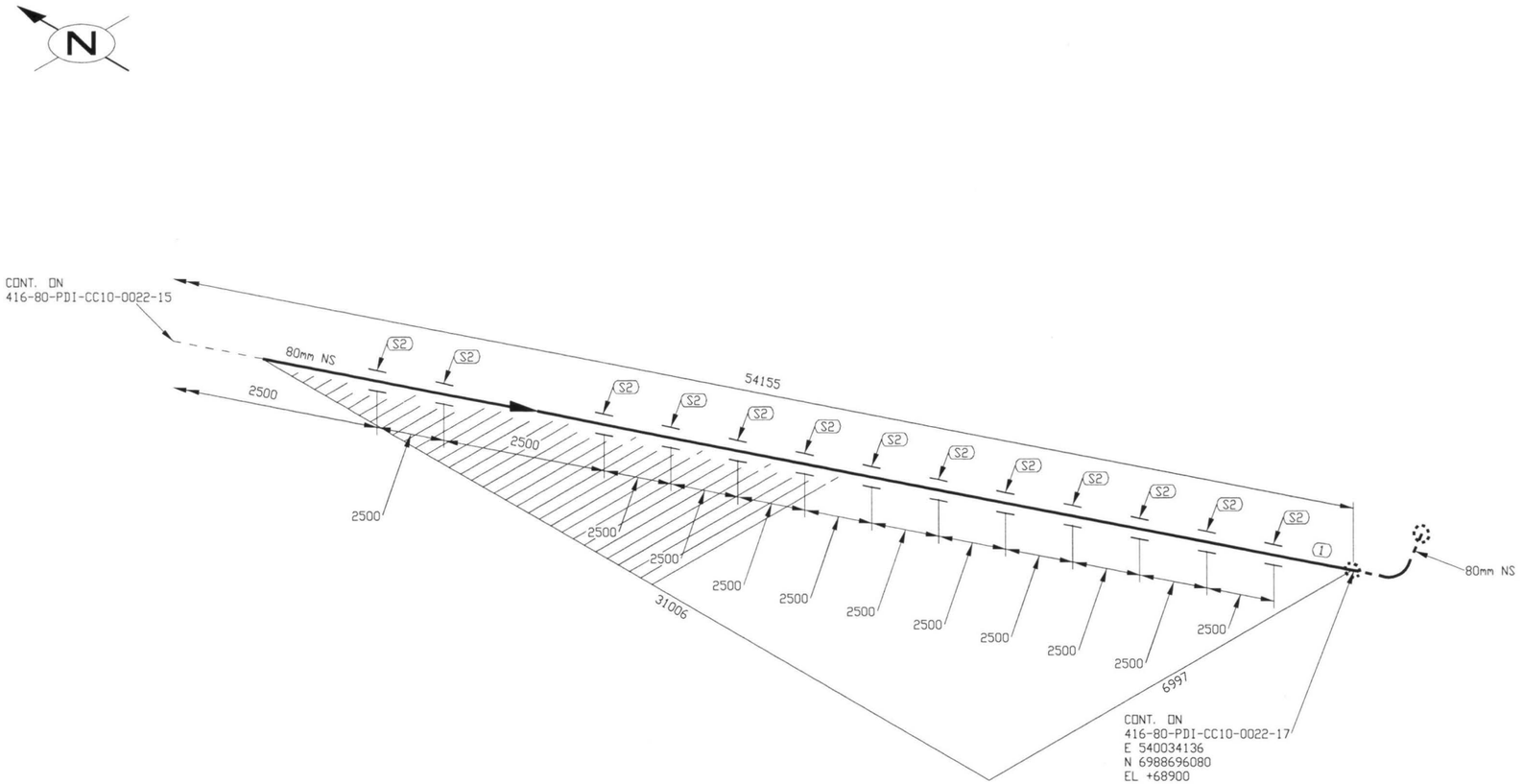

FABRICATION DRAWINGS BASED ON WSP CERTIFIED ENGINEERING

LISTE DE MATERIEL

No	QTE	DIA	MATERIEL/CATALOGUE	DESCRIPTION
1	31786 MM	80	A 333 Gr. 6	SCH STD, SMLS PIPE
2	13	80		PIPE SUPPORT AS PER DETAIL 3, DWG: 65-416-270-200

REGISTERED PROFESSIONAL ENGINEER
D. TRUONG
LICENSEE
NT/NU
2017/10/05

PERMIT TO PRACTICE
LE GROUPE ULTRAGEN LTÉE
Signature
Date OCT 04 2017
PERMIT NUMBER: P 1180
NT/NU Association of Professional Engineers and Geoscientists

No.	DATE	REVISION	PAR / APP.
1	2017/09/29	LINE NUMBERS REVISED	QVN
0	2017/06/30	ISSUED FOR CONSTRUCTION	QVN

CLIENT: AGNICO EAGLE

NUQSANA PROMEC MINING SERVICES INC.

ultragen

CONSULTANT PROJECT NO. 591700

SCEAU PROFESSIONNEL

CONC.: KHV
DATE: 2017/05/29
DESSINÉ PAR: KVE
DATE: 2017/05/29
VÉR. PAR:
DATE:
APP.:
DATE:
ÉCHELLE: AUCUNE

PROJET: AGNICO EAGLE - MELIADINE DIVISION
416 - FUEL TANK FARM

TITRE: PORTAL #1
FABRICATION ISOMETRIC
FUEL FROM 416-80-PDI-CC10-0023 TO 65TNK41611

No PROJET	No DESSIN	PAGES	RÉV.
6515	416-80-PDI-CC10-0022	16/19	1

NO. DE CONDUITE		SPECIFICATION	PRODUIT	SYSTEME REVETEMENT	CODE DE COULEUR	ISOLATION ET TRACAGE	EPAISS. D'ISOLATION		
416-80-PDI-CC10-0022		CC10	PDI					65-416-270-200	PIPE SUPPORT DETAILS
PRESSION D'OPERATION	TEMPERATURE D'OPERATION	PRESSION DE CONCEPTION	TEMPERATURE DE CONCEPTION	PRESSION D'ESSAI	CLASSE D'INSPECTION	CODE DE SERVICE	TRAITEMENT THERMIQUE	65-416-205-200	P&ID
PSIG	°F	PSIG	°F	PSIG				No. DESSIN	DESSINS DE REFERENCE

FICHIER: \\ultragen.local\Ultragen-Dessin\Agnico Eagle\Meliadine\591700 (Fuel Distribution)\05. Dessins\02. Tuyauterie\02. Isométriques\02. 403P-80-PDI-CC10-0022-16.DWG

IMPRIMÉ LE: Sep 28, 2017, 1:42pm

416-MN-01

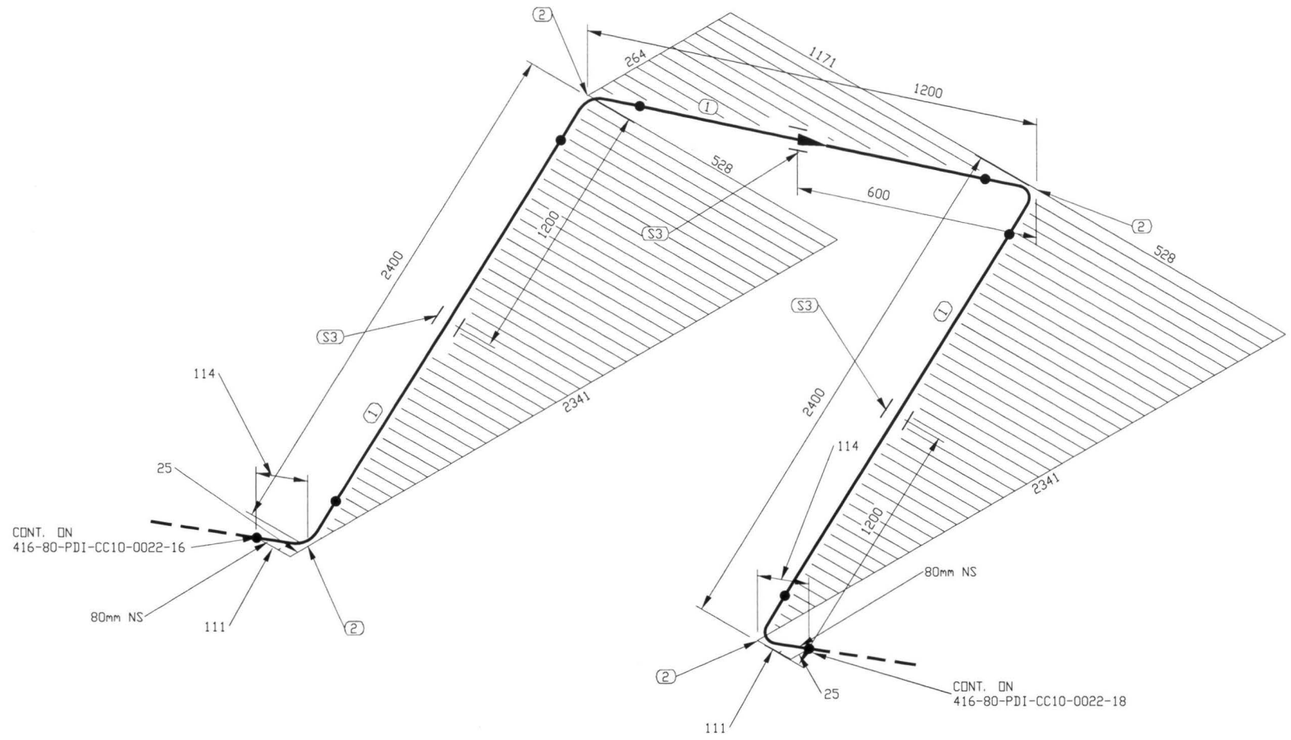

FABRICATION DRAWINGS BASED ON WSP CERTIFIED ENGINEERING

LISTE DE MATERIEL

No	QTE	DIA	MATERIEL/CATALOGUE	DESCRIPTION
1	5316 MM	80	A 333 Gr. 6	SCH STD, SMLS PIPE
2	4	80	A 420 Gr. WPL6	SCH STD, BW LR 90 DEG ELBOW
3	3	80		PIPE SUPPORT AS PER DETAIL 3, DWG: 65-416-270-200

REGISTERED PROFESSIONAL ENGINEER
D. TRUONG
LICENSEE
NT/NU
2017/10/05

PERMIT TO PRACTICE
LE GROUPE ULTRAGEN LTÉE
Signature
Date OCT 04 2017
PERMIT NUMBER: P 1180
NT/NU Association of Professional Engineers and Geoscientists

No.	DATE	REVISION	PAR / APP.
1	2017/09/29	LINE NUMBERS REVISED	QVN
0	2017/06/30	ISSUED FOR CONSTRUCTION	QVN

CLIENT: AGNICO EAGLE

NUQSANA PROMEC MINING SERVICES INC.

ultragen

CONSULTANT PROJECT NO. 591700

SCEAU PROFESSIONNEL

CONC.: KHV
DATE: 2017/05/29
DESSINÉ PAR: KVE
DATE: 2017/05/29
VÉR. PAR:
DATE:
APP.:
DATE:
ÉCHELLE: AUCUNE

PROJET: AGNICO EAGLE - MELIADINE DIVISION
416 - FUEL TANK FARM

TITRE: PORTAL #1
FABRICATION ISOMETRIC
FUEL FROM 416-80-PDI-CC10-0023 TO 65TNK41611

No PROJET	No DESSIN	PAGES	RÉV.
6515	416-80-PDI-CC10-0022	17/19	1

NO. DE CONDUITE		SPECIFICATION	PRODUIT	SYSTEME REVETEMENT	CODE DE COULEUR	ISOLATION ET TRACAGE	EPAISS. D'ISOLATION		
416-80-PDI-CC10-0022		CC10	PDI					65-416-270-200	PIPE SUPPORT DETAILS
PRESSION D'OPERATION	TEMPERATURE D'OPERATION	PRESSION DE CONCEPTION	TEMPERATURE DE CONCEPTION	PRESSION D'ESSAI	CLASSE D'INSPECTION	CODE DE SERVICE	TRAITEMENT THERMIQUE	65-416-205-200	P&ID
PSIG	°F	PSIG	°F	PSIG				No. DESSIN	DESSINS DE REFERENCE

FICHIER: \\ultragen.local\Ultragen-Dessin\Agnico Eagle\Meliadine\591700 (Fuel Distribution)\05. Dessins\02. Tuyauterie\02. Isométriques\02. 403P-80-PDI-CC10-0022-17.DWG

IMPRIMÉ LE: Sep 28, 2017, 1:42pm

416-MN-01

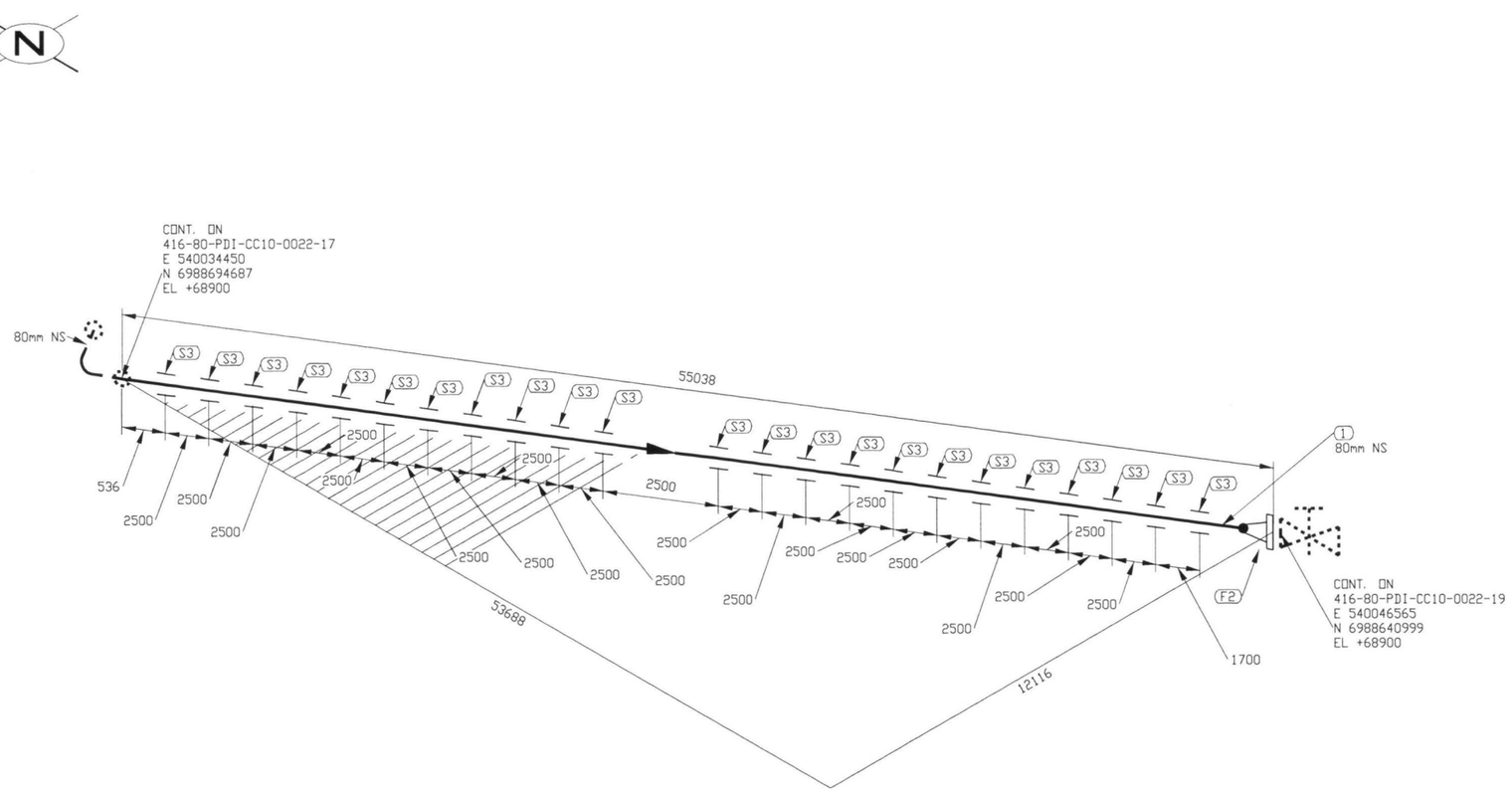

FABRICATION DRAWINGS BASED ON WSP CERTIFIED ENGINEERING

LISTE DE MATERIEL

No	QTE	DIA	MATERIEL/CATALOGUE	DESCRIPTION
1	54970 MM	80	A 333 Gr. 6	SCH STD, SMLS PIPE
2	1	80	A 350 Gr. LF2	CL 150, SCH STD, RF, WN FLANGE
3	23	80		PIPE SUPPORT AS PER DETAIL 3, DWG: 65-416-270-200

REGISTERED PROFESSIONAL ENGINEER
D. TRUONG
LICENSEE
NT/NU
2017/10/05

PERMIT TO PRACTICE
LE GROUPE ULTRAGEN LTÉE
Signature
Date OCT 04 2017
PERMIT NUMBER: P 1180
NT/NU Association of Professional Engineers and Geoscientists

No.	DATE	REVISION	PAR / APP.
1	2017/09/29	LINE NUMBERS REVISED	QVN
0	2017/06/30	ISSUED FOR CONSTRUCTION	QVN

CLIENT: AGNICO EAGLE

NUQSANA PROMEC MINING SERVICES INC.

ultragen

CONSULTANT PROJECT NO. 591700

SCEAU PROFESSIONNEL

CONC.: KHV
DATE: 2017/05/29
DESSINÉ PAR: KVE
DATE: 2017/05/29
VÉR. PAR:
DATE:
APP.:
DATE:
ÉCHELLE: AUCUNE

PROJET: AGNICO EAGLE - MELIADINE DIVISION
416 - FUEL TANK FARM

TITRE: PORTAL #1
FABRICATION ISOMETRIC
FUEL FROM 416-80-PDI-CC10-0023 TO 65TNK41611

No PROJET	No DESSIN	PAGES	RÉV.
6515	416-80-PDI-CC10-0022	18/19	1

NO. DE CONDUITE		SPECIFICATION	PRODUIT	SYSTEME REVETEMENT	CODE DE COULEUR	ISOLATION ET TRACAGE	EPAISS. D'ISOLATION		
416-80-PDI-CC10-0022		CC10	PDI					65-416-270-200	PIPE SUPPORT DETAILS
PRESSION D'OPERATION	TEMPERATURE D'OPERATION	PRESSION DE CONCEPTION	TEMPERATURE DE CONCEPTION	PRESSION D'ESSAI	CLASSE D'INSPECTION	CODE DE SERVICE	TRAITEMENT THERMIQUE	65-416-205-200	P&ID
PSIG	°F	PSIG	°F	PSIG				No. DESSIN	DESSINS DE REFERENCE

FICHIER \\ultragen.local\Ultragen-Dessin\Agnico Eagle\Meliadine\591700 (Fuel Distribution)\05. Dessins\02. Tuyauterie\02. Isométriques\02. 403P-80-PDI-CC10-0022-18.DWG

IMPRIMÉ LE: Sep 28, 2017, 1:42pm

416-MN-01

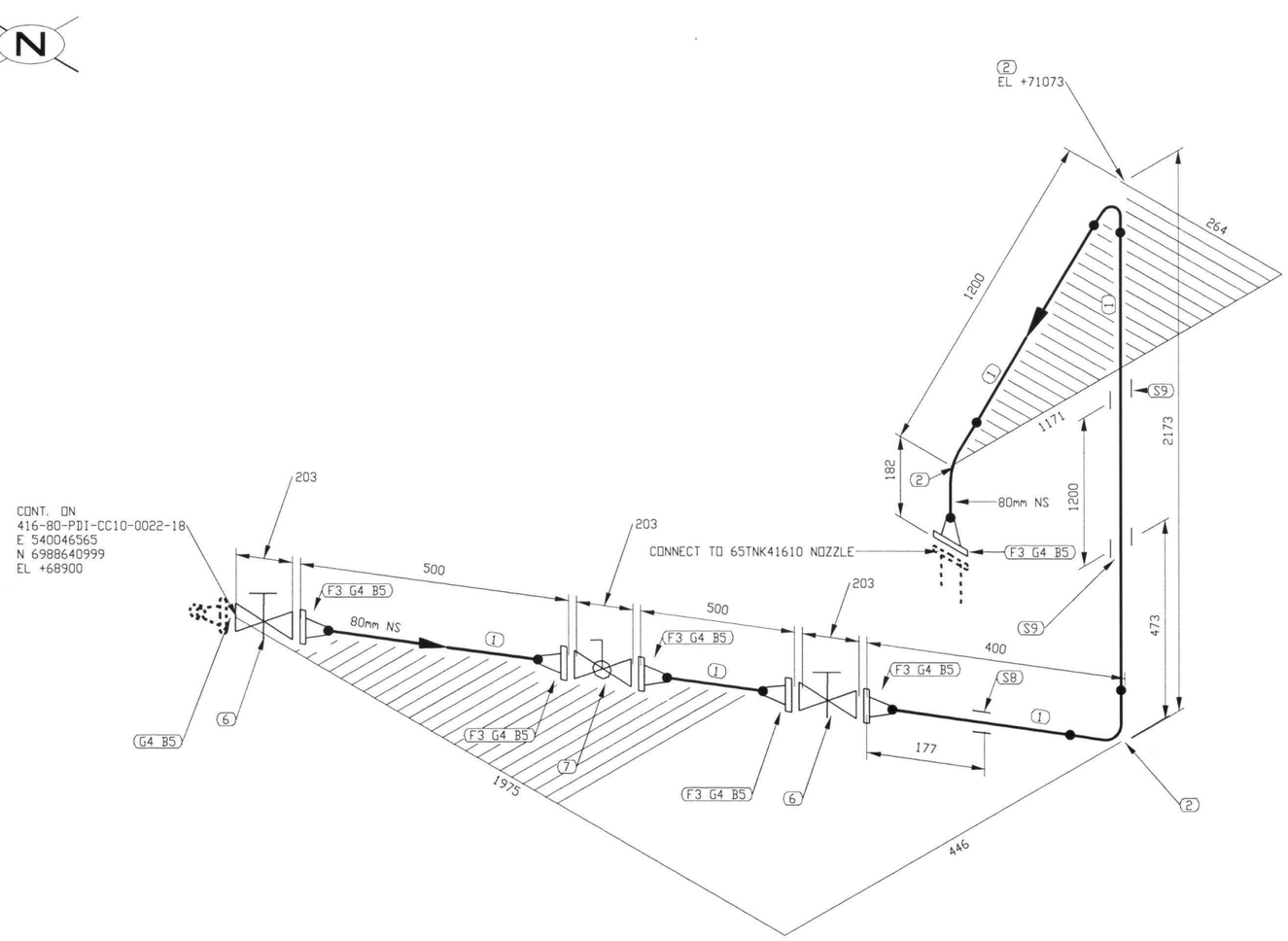

FABRICATION DRAWINGS BASED ON WSP CERTIFIED ENGINEERING

LISTE DE MATERIEL

No	QTE	DIA	MATERIEL/CATALOGUE	DESCRIPTION
1	3862 MM	80	A 333 Gr. 6	SCH STD, SMLS PIPE
2	3	80	A 420 Gr. WPL6	SCH STD, BW LR 90 DEG ELBOW
3	6	80	A 350 Gr. LF2	CL 150, SCH STD, RF, WN FLANGE
4	7	80	ASME B16.20	CL 150, GARLOCK 5500, RING TYPE GASKET 1/8" THK
5	28	16	A 193 B7/A 194 2H	CL 150, 4 - 15.875 X 90 STUD BOLTS c/w TWO HEAVY HEX NUTS
6	2	80	GA-10	CL 150, RF, GATE VALVE
7	1	80	BA-31	CL 150, RF, BALL VALVE
8	1	80		PIPE SUPPORT AS PER DETAIL 3, DWG: 65-416-270-200
9	2	80		PIPE SUPPORT BY CONTRACTOR

REGISTERED PROFESSIONAL ENGINEER
D. TRUONG
LICENSEE
NT/NU

2017/10/05

PERMIT TO PRACTICE
LE GROUPE ULTRAGEN LTÉE
Signature
Date OCT 04 2017
PERMIT NUMBER: P 1180
NT/NU Association of Professional Engineers and Geoscientists

No.	DATE	REVISION	
1	2017/09/29	LINE NUMBERS REVISED	QVN
0	2017/06/30	ISSUED FOR CONSTRUCTION	QVN

CLIENT:

AGNICO EAGLE

NUQSANA PROMEC MINING SERVICES INC.

ultragen

CONSULTANT PROJECT NO. 591700

SCEAU PROFESSIONNEL

CONC.: KHV
DATE: 2017/05/29
DESSINÉ PAR: KVE
DATE: 2017/05/29
VÉR. PAR:
DATE:
APP.:
DATE:
ÉCHELLE: AUCUNE

PROJET:
AGNICO EAGLE - MELIADINE DIVISION
416 - FUEL TANK FARM

TITRE:
PORTAL #1
FABRICATION ISOMETRIC
FUEL FROM 416-80-PDI-CC10-0023 TO 65TNK41611

No PROJET	No DESSIN	PAGES	RÉV.
6515	416-80-PDI-CC10-0022	19/19	1

NO. DE CONDUITE		SPECIFICATION	PRODUIT	SYSTEME REVETEMENT	CODE DE COULEUR	ISOLATION ET TRACAGE	EPAISS. D'ISOLATION		
416-80-PDI-CC10-0022		CC10	PDI					65-416-270-200	PIPE SUPPORT DETAILS
PRESSION D'OPERATION	TEMPERATURE D'OPERATION	PRESSION DE CONCEPTION	TEMPERATURE DE CONCEPTION	PRESSION D'ESSAI	CLASSE D'INSPECTION	CODE DE SERVICE	TRAITEMENT THERMIQUE	65-416-205-200	P&ID
PSIG	°F	PSIG	°F	PSIG				No. DESSIN	DESSINS DE REFERENCE

FICHIER: \\ultragen.local\Ultragen-Dessin\Agnico Eagle\Meliadine\591700 (Fuel Distribution)\05. Dessins\02. Tuyauterie\02. Isométriques\02. 403P-80-PDI-CC10-0022-19.DWG

IMPRIMÉ LE: Sep 28, 2017, 1:42pm

416-MN-01

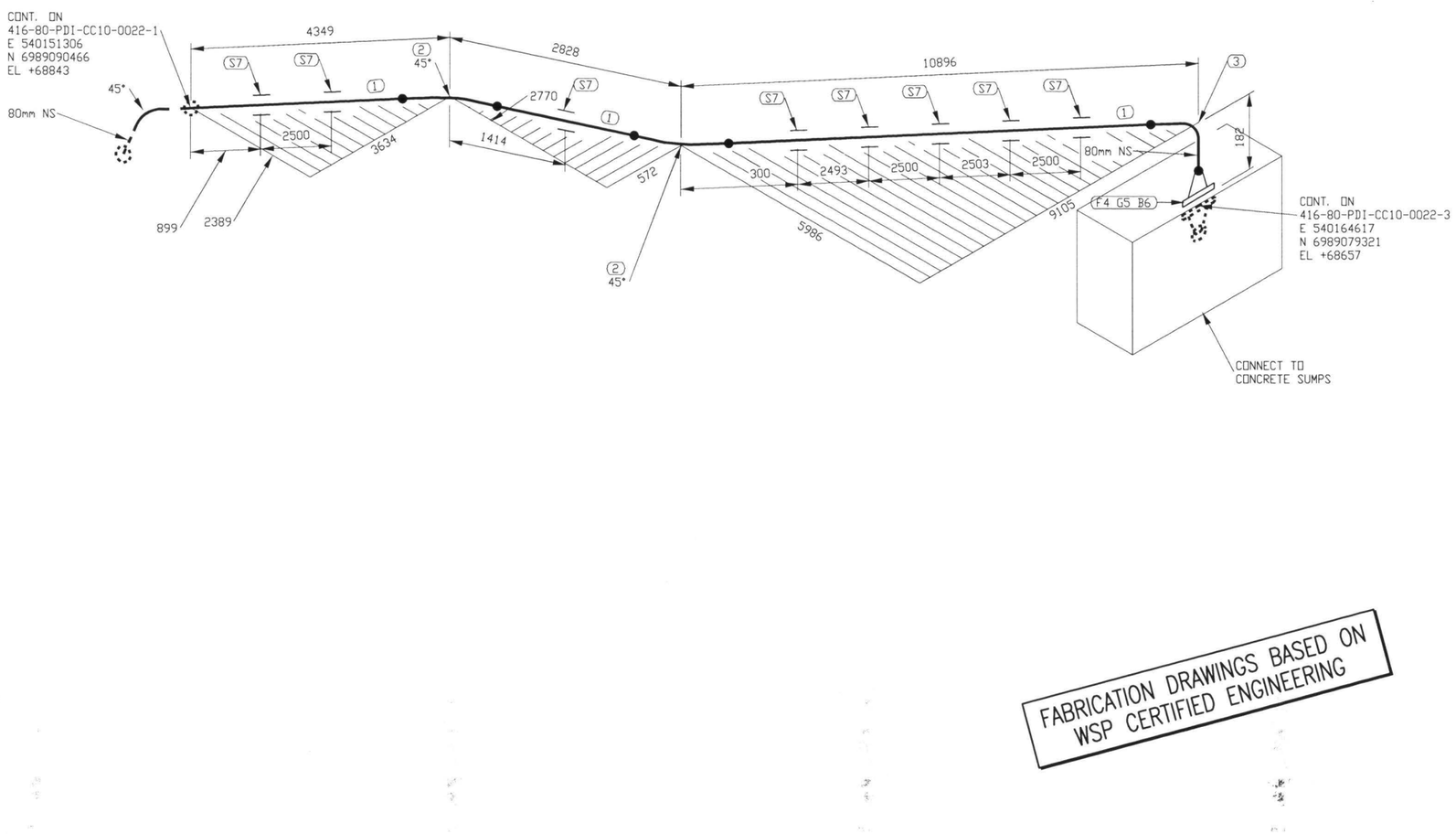

FABRICATION DRAWINGS BASED ON WSP CERTIFIED ENGINEERING

LISTE DE MATERIEL

No	QTE	DIA	MATERIEL/CATALOGUE	DESCRIPTION
1	17755 MM	80	A 333 Gr. 6	SCH STD, SMLS PIPE
2	2	80	A 420 Gr. WPL6	SCH STD, BW LR 45 DEG ELBOW
3	1	80	A 420 Gr. WPL6	SCH STD, BW LR 90 DEG ELBOW
4	1	80	A 350 Gr. LF2	CL 150, SCH STD, RF, WN FLANGE
5	1	80	ASME B16.20	CL 150, GARLOCK 5500, RING TYPE GASKET 1/8" THK
6	4	16	A 193 B7/A 194 2H	CL 150, 4 - 15.875 X 90 STUD BOLTS c/w TWO HEAVY HEX NUTS
7	8	80		PIPE SUPPORT AS PER DETAIL 3, DWG: 65-416-270-200

REGISTERED PROFESSIONAL ENGINEER
D. TRUONG
LICENSEE
NT/NU
2017/10/05

PERMIT TO PRACTICE
LE GROUPE ULTRAGEN LTÉE
Signature
Date OCT 04 2017
PERMIT NUMBER: P 1180
NT/NU Association of Professional Engineers and Geoscientists

No.	DATE	REVISION	PAR / APP.
1	2017/09/29	LINE NUMBERS REVISED	QVN
0	2017/06/30	ISSUED FOR CONSTRUCTION	QVN

CLIENT: AGNICO EAGLE

NUQSANA PROMEC MINING SERVICES INC.

ultragen

CONSULTANT PROJECT NO. 591700

SCEAU PROFESSIONNEL

NO. DE CONDUITE		SPECIFICATION	PRODUIT	SYSTEME REVETEMENT	CODE DE COULEUR	ISOLATION ET TRACAGE	EPAISS. D'ISOLATION		
416-80-PDI-CC10-0022		CC10	PDI					65-416-270-200	PIPE SUPPORT DETAILS
PRESSION D'OPERATION	TEMPERATURE D'OPERATION	PRESSION DE CONCEPTION	TEMPERATURE DE CONCEPTION	PRESSION D'ESSAI	CLASSE D'INSPECTION	CODE DE SERVICE	TRAITEMENT THERMIQUE	65-416-205-200	P&ID
PSIG	°F	PSIG	°F	PSIG				No. DESSIN	DESSINS DE REFERENCE

CONC.: KHV
DATE: 2017/05/29
DESSINÉ PAR: KVE
DATE: 2017/05/29
VÉR. PAR:
DATE:
APP.:
DATE:
ÉCHELLE: AUCUNE

PROJET: AGNICO EAGLE - MELIADINE DIVISION
416 - FUEL TANK FARM

TITRE: PORTAL #1
FABRICATION ISOMETRIC
FUEL FROM 416-80-PDI-CC10-0023 TO 65TNK41611

No PROJET	No DESSIN	PAGES	RÉV.
6515	416-80-PDI-CC10-0022	2/19	1

416-MN-01

FICHIER: \\ultragen.local\Ultragen-Dessin\Agnico Eagle\Meliadine\591700 (Fuel Distribution)\05 Dessins\02 Tuyauterie\02 Isométriques\02 403P-80-PDI-CC10-0022-2.DWG

IMPRIMÉ LE: Sep 28, 2017, 1:42pm

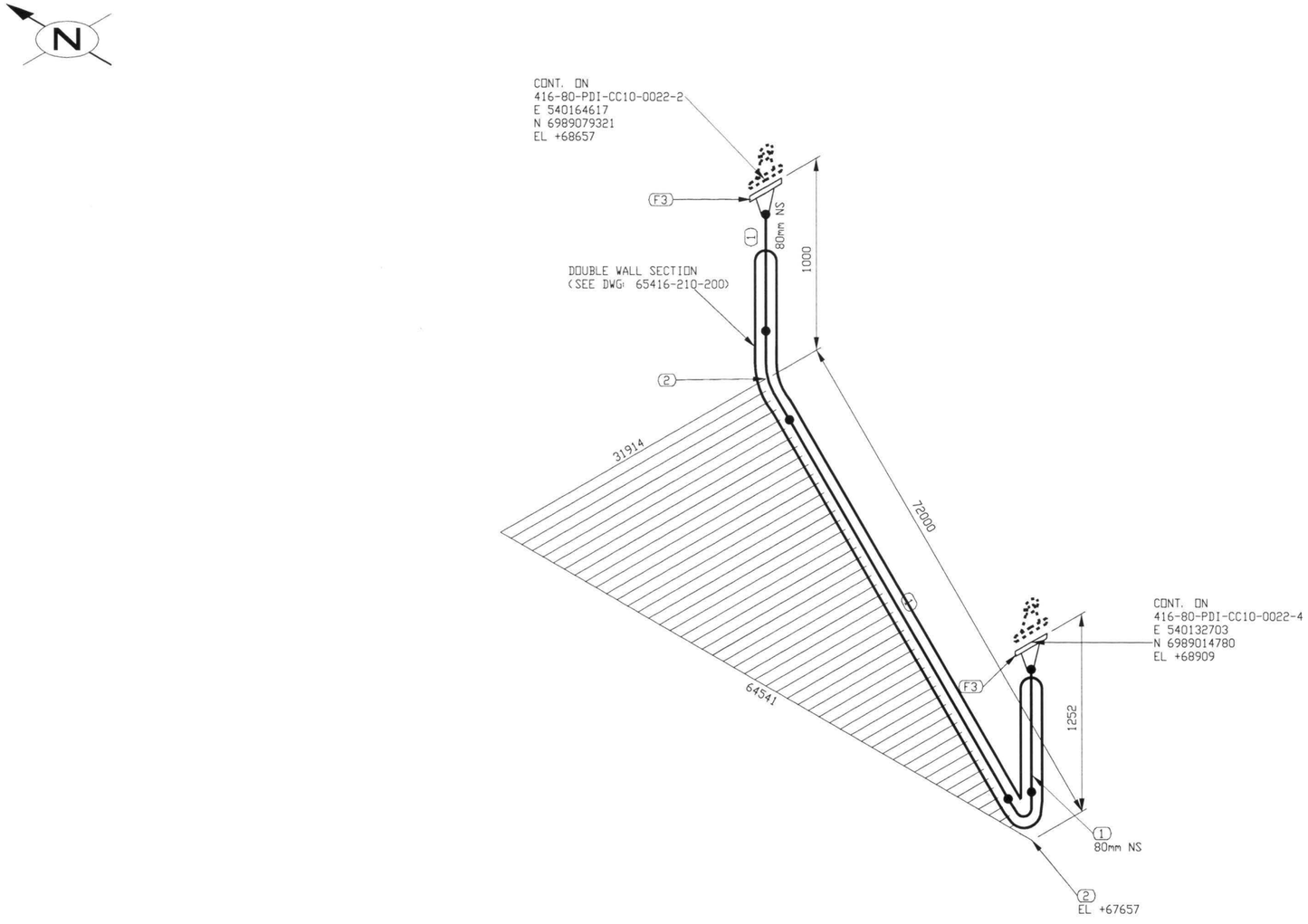

FABRICATION DRAWINGS BASED ON WSP CERTIFIED ENGINEERING

LISTE DE MATERIEL

No	QTE	DIA	MATERIEL/CATALOGUE	DESCRIPTION
1	73659 MM	80	A 333 Gr. 6	SCH STD, SMLS PIPE
2	2	80	A 420 Gr. WPL6	SCH STD, BW LR 90 DEG ELBOW
3	2	80	A 350 Gr. LF2	CL 150, SCH STD, RF, WN FLANGE

REGISTERED PROFESSIONAL ENGINEER
D. TRUONG
LICENSEE
NT/NU
2017/10/05

PERMIT TO PRACTICE
LE GROUPE ULTRAGEN LTÉE
Signature
Date OCT 04 2017
PERMIT NUMBER: P 1180
NT/NU Association of Professional Engineers and Geoscientists

No.	DATE	REVISION	PAR / APP.
1	2017/09/29	LINE NUMBERS REVISED	QVN
0	2017/06/30	ISSUED FOR CONSTRUCTION	QVN

CLIENT: AGNICO EAGLE

NUQSANA PROMEC MINING SERVICES INC.

ultragen

CONSULTANT PROJECT NO. 591700

NO. DE CONDUITE		SPECIFICATION	PRODUIT	SYSTEME REVETEMENT	CODE DE COULEUR	ISOLATION ET TRACAGE	EPAISS. D'ISOLATION		
416-80-PDI-CC10-0022		CC10	PDI					65-416-270-200	PIPE SUPPORT DETAILS
PRESSION D'OPERATION	TEMPERATURE D'OPERATION	PRESSION DE CONCEPTION	TEMPERATURE DE CONCEPTION	PRESSION D'ESSAI	CLASSE D'INSPECTION	CODE DE SERVICE	TRAITEMENT THERMIQUE	65-416-205-200	P&ID
PSIG	°F	PSIG	°F	PSIG				No. DESSIN	DESSINS DE REFERENCE

SCEAU PROFESSIONNEL

CONC.: KHV
DATE: 2017/05/29
DESSINÉ PAR: KVE
DATE: 2017/05/29
VÉR. PAR:
DATE:
APP.:
DATE:
ÉCHELLE: AUCUNE

PROJET: AGNICO EAGLE - MELIADINE DIVISION
416 - FUEL TANK FARM

TITRE: PORTAL #1
FABRICATION ISOMETRIC
FUEL FROM 416-80-PDI-CC10-0023 TO 65TNK41611

No PROJET	No DESSIN	PAGES	RÉV.
6515	416-80-PDI-CC10-0022	3/19	1

416-MN-01

FICHIER: \\ultragen.local\Ultragen-Dessin\Agnico Eagle\Meliadine\591700 (Fuel Distribution)\05. Dessins\02. Tuyauterie\02. Isométriques\02. 403P-80-PDI-CC10-0022-3.DWG

IMPRIMÉ LE: Sep 28, 2017, 1:42pm

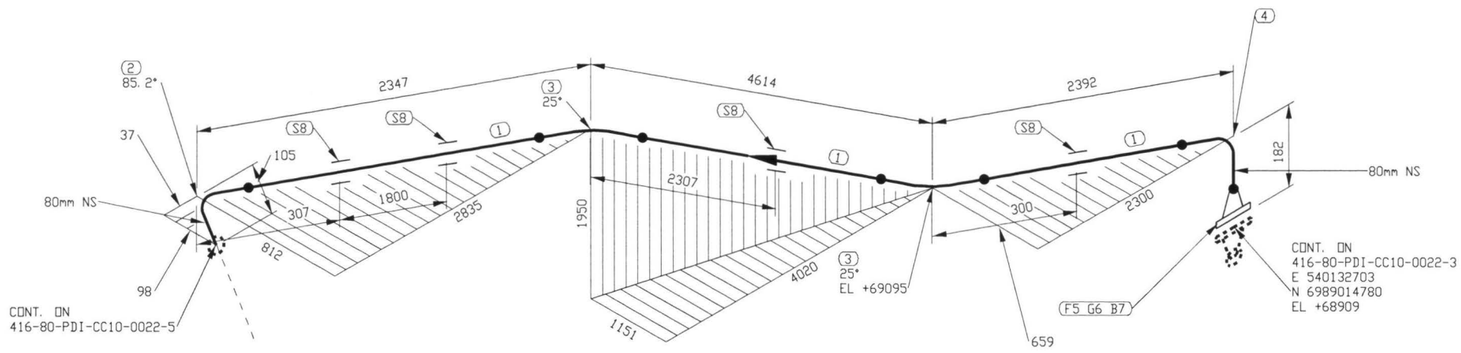

FABRICATION DRAWINGS BASED ON WSP CERTIFIED ENGINEERING

LISTE DE MATERIEL

No	QTE	DIA	MATERIEL/CATALOGUE	DESCRIPTION
1	9627 MM	80	A 333 Gr. 6	SCH STD, SMLS PIPE
2	1	80	A 420 Gr. WPL6	SCH STD, BW LR 90 DEG ELBOW TRIM TO 85.18
3	2	80	A 420 Gr. WPL6	SCH STD, BW LR 45 DEG ELBOW TRIM TO 25.00
4	1	80	A 420 Gr. WPL6	SCH STD, BW LR 90 DEG ELBOW
5	1	80	A 350 Gr. LF2	CL 150, SCH STD, RF, WN FLANGE
6	1	80	ASME B16.20	CL 150, GARLOCK 5500, RING TYPE GASKET 1/8" THK
7	4	16	A 193 B7/A 194 2H	CL 150, 4 - 15.875 X 90 STUD BOLTS c/w TWO HEAVY HEX NUTS
8	4	80		PIPE SUPPORT AS PER DETAIL 3, DWG: 65-416-270-200

REGISTERED PROFESSIONAL ENGINEER
D. TRUONG
LICENSEE
NT/NU
2017/10/05

PERMIT TO PRACTICE
LE GROUPE ULTRAGEN LTÉE
Signature
Date OCT 04 2017
PERMIT NUMBER: P 1180
NT/NU Association of Professional Engineers and Geoscientists

1	2017/09/29	LINE NUMBERS REVISED	QVN
0	2017/06/30	ISSUED FOR CONSTRUCTION	QVN
No.	DATE	REVISION	PAR / APP.

CLIENT:

AGNICO EAGLE

NUQSANA PROMEC MINING SERVICES INC.

ultragen

CONSULTANT PROJECT NO. 591700

SCEAU PROFESSIONNEL

CONC.: KHV
DATE: 2017/05/29
DESSINÉ PAR: KVE
DATE: 2017/05/29
VÉR. PAR:
DATE:
APP.:
DATE:
ÉCHELLE: AUCUNE

PROJET:
AGNICO EAGLE - MELIADINE DIVISION
416 - FUEL TANK FARM

TITRE:
PORTAL #1
FABRICATION ISOMETRIC
FUEL FROM 416-80-PDI-CC10-0023 TO 65TNK41611

No PROJET	No DESSIN	PAGES	RÉV.
6515	416-80-PDI-CC10-0022	4/19	1

NO. DE CONDUITE		SPECIFICATION	PRODUIT	SYSTEME REVETEMENT	CODE DE COULEUR	ISOLATION ET TRACAGE	EPAISS. D'ISOLATION		
416-80-PDI-CC10-0022		CC10	PDI					65-416-270-200	PIPE SUPPORT DETAILS
PRESSION D'OPERATION	TEMPERATURE D'OPERATION	PRESSION DE CONCEPTION	TEMPERATURE DE CONCEPTION	PRESSION D'ESSAI	CLASSE D'INSPECTION	CODE DE SERVICE	TRAITEMENT THERMIQUE	65-416-205-200	P&ID
PSIG	°F	PSIG	°F	PSIG				No. DESSIN	DESSINS DE REFERENCE

FICHIER: \\Ultragen local\Ultragen- Dessin\Agnico Eagle\Meliadine\591700 (Fuel Distribution)\05 Dessins\02 Tuyauterie\02 Isométriques\02 4019-80-PDI-CC10-0022-4.DWG

IMPRIMÉ LE: Sep 28, 2017, 1:42pm

416-MN-01

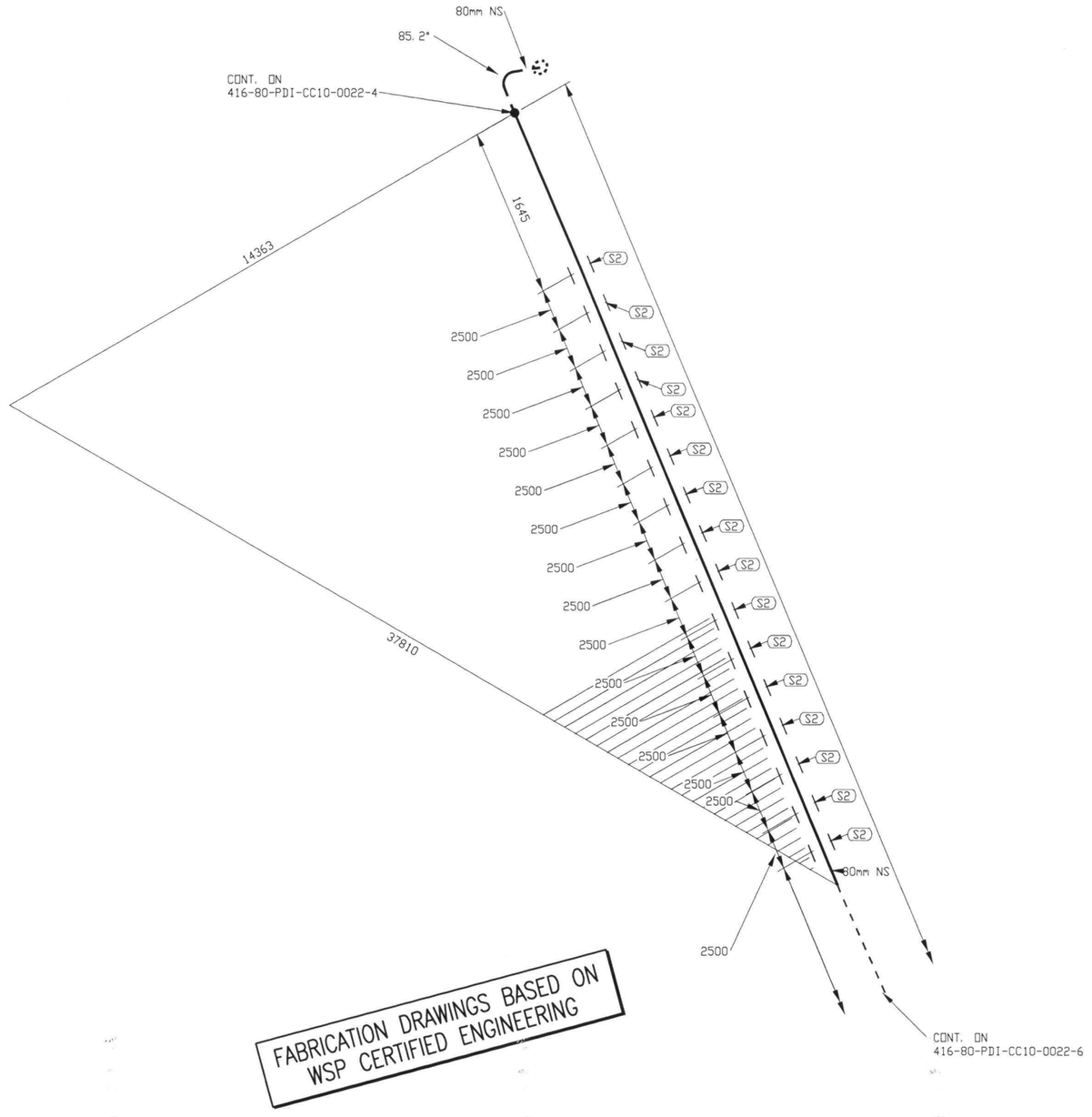

LISTE DE MATERIEL

No	QTE	DIA	MATERIEL/CATALOGUE	DESCRIPTION
1	40395 MM	80	A 333 Gr. 6	SCH STD, SMLS PIPE
2	16	80		PIPE SUPPORT AS PER DETAIL 3, DWG 65-416-270-200

REGISTERED PROFESSIONAL ENGINEER
D. TRUONG
LICENSEE
NT/NU
2017/10/05

PERMIT TO PRACTICE
LE GROUPE ULTRAGEN LTÉE
Signature
Date OCT 04 2017
PERMIT NUMBER: P 1180
NT/NU Association of Professional Engineers and Geoscientists

No.	DATE	REVISION	PAR / APP.
1	2017/09/29	LINE NUMBERS REVISED	QVN
0	2017/06/30	ISSUED FOR CONSTRUCTION	QVN

CLIENT: AGNICO EAGLE

NUQSANA PROMEC MINING SERVICES INC.

ultragen

CONSULTANT PROJECT NO. 591700

NO. DE CONDUITE		SPECIFICATION	PRODUIT	SYSTEME REVETEMENT	CODE DE COULEUR	ISOLATION ET TRACAGE	EPAISS. D'ISOLATION		
416-80-PDI-CC10-0022		CC10	PDI					65-416-270-200	PIPE SUPPORT DETAILS
PRESSION D'OPERATION	TEMPERATURE D'OPERATION	PRESSION DE CONCEPTION	TEMPERATURE DE CONCEPTION	PRESSION D'ESSAI	CLASSE D'INSPECTION	CODE DE SERVICE	TRAITEMENT THERMIQUE	65-416-205-200	P&ID
PSIG	°F	PSIG	°F	PSIG				No. DESSIN	DESSINS DE REFERENCE

SCEAU PROFESSIONNEL

CONC.: KHV
DATE: 2017/05/29
DESSINÉ PAR: KVE
DATE: 2017/05/29
VÉR. PAR:
DATE:
APP.:
DATE:
ÉCHELLE: AUCUNE

PROJET: AGNICO EAGLE - MELIADINE DIVISION
416 - FUEL TANK FARM

TITRE: PORTAL #1
FABRICATION ISOMETRIC
FUEL FROM 416-80-PDI-CC10-0023 TO 65TNK41611

No PROJET	No DESSIN	PAGES	RÉV.
6515	416-80-PDI-CC10-0022	5/19	1

416-MN-01

FICHIER: \\ultragen.local\Ultragen-Dessin\Agnico Eagle\Meliadine\591700 (Fuel Distribution)\05. Dessins\02. Tuyauterie\02. Isométriques\02. 403P-80-PDI-CC10-0022-5.DWG

IMPRIMÉ LE: Sep 28, 2017, 1:42pm

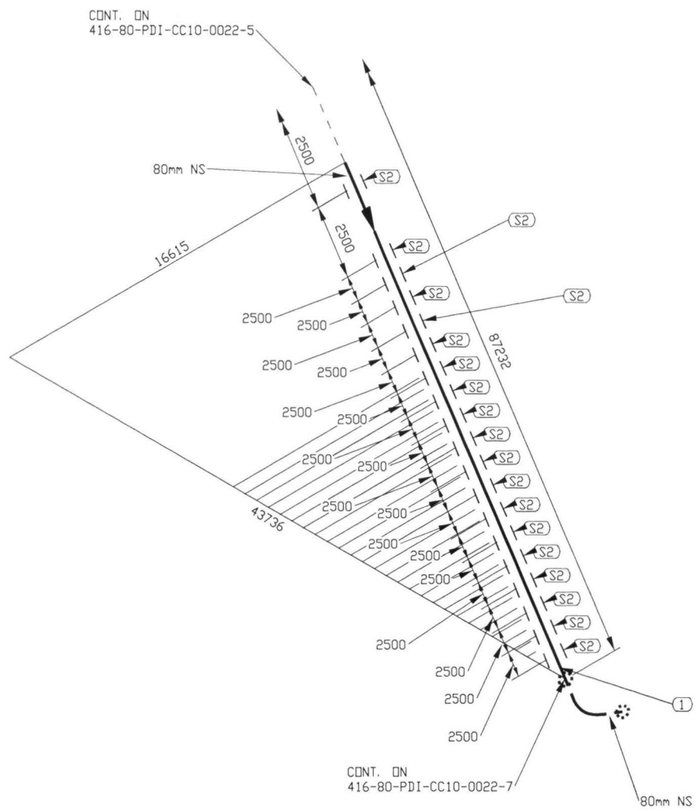

FABRICATION DRAWINGS BASED ON
WSP CERTIFIED ENGINEERING

LISTE DE MATERIEL

No	QTE	DIA	MATERIEL/CATALOGUE	DESCRIPTION
1	46786 MM	80	A 333 Gr. 6	SCH STD, SMLS PIPE
2	19	80		PIPE SUPPORT AS PER DETAIL 3, DWG: 65-416-270-200

REGISTERED PROFESSIONAL ENGINEER
D. TRUONG
LICENSEE
NT/NU
2017/10/05

PERMIT TO PRACTICE
LE GROUPE ULTRAGEN LTÉE
Signature
Date OCT 04 2017
PERMIT NUMBER: P 1180
NT/NU Association of Professional Engineers and Geoscientists

1	2017/09/29	LINE NUMBERS REVISED	QVN
0	2017/06/30	ISSUED FOR CONSTRUCTION	QVN
No.	DATE	REVISION	PAR / APP.

CLIENT:

AGNICO EAGLE

NUQSANA PROMEC MINING SERVICES INC.

ultragen

CONSULTANT PROJECT NO. 591700

SCEAU PROFESSIONNEL

NO. DE CONDUITE		SPECIFICATION	PRODUIT	SYSTEME REVETEMENT	CODE DE COULEUR	ISOLATION ET TRACAGE	EPAISS. D'ISOLATION		
416-80-PDI-CC10-0022		CC10	PDI					65-416-270-200	PIPE SUPPORT DETAILS
PRESSION D'OPERATION	TEMPERATURE D'OPERATION	PRESSION DE CONCEPTION	TEMPERATURE DE CONCEPTION	PRESSION D'ESSAI	CLASSE D'INSPECTION	CODE DE SERVICE	TRAITEMENT THERMIQUE	65-416-205-200	P&ID
PSIG	°F	PSIG	°F	PSIG				No. DESSIN	DESSINS DE REFERENCE

CONC.: KHV
DATE: 2017/05/29
DESSINÉ PAR: KVE
DATE: 2017/05/29
VÉR. PAR:
DATE:
APP.:
DATE:
ÉCHELLE: AUCUNE

PROJET: AGNICO EAGLE - MELIADINE DIVISION
416 - FUEL TANK FARM

TITRE: PORTAL #1
FABRICATION ISOMETRIC
FUEL FROM 416-80-PDI-CC10-0023 TO 65TNK41611

No PROJET	No DESSIN	PAGES	RÉV.
6515	416-80-PDI-CC10-0022	6/19	1

416-MN-01

FICHIER: \\ultragen.local\Ultragen-Dessin\Agnico Eagle\Meliadine\591700 (Fuel Distribution)\05 Dessins\02 Tuyauterie\02 Isométriques\02 40JP-80-PDI-CC10-0022-6.DWG

IMPRIMÉ LE: Sep 28, 2017, 1:42pm

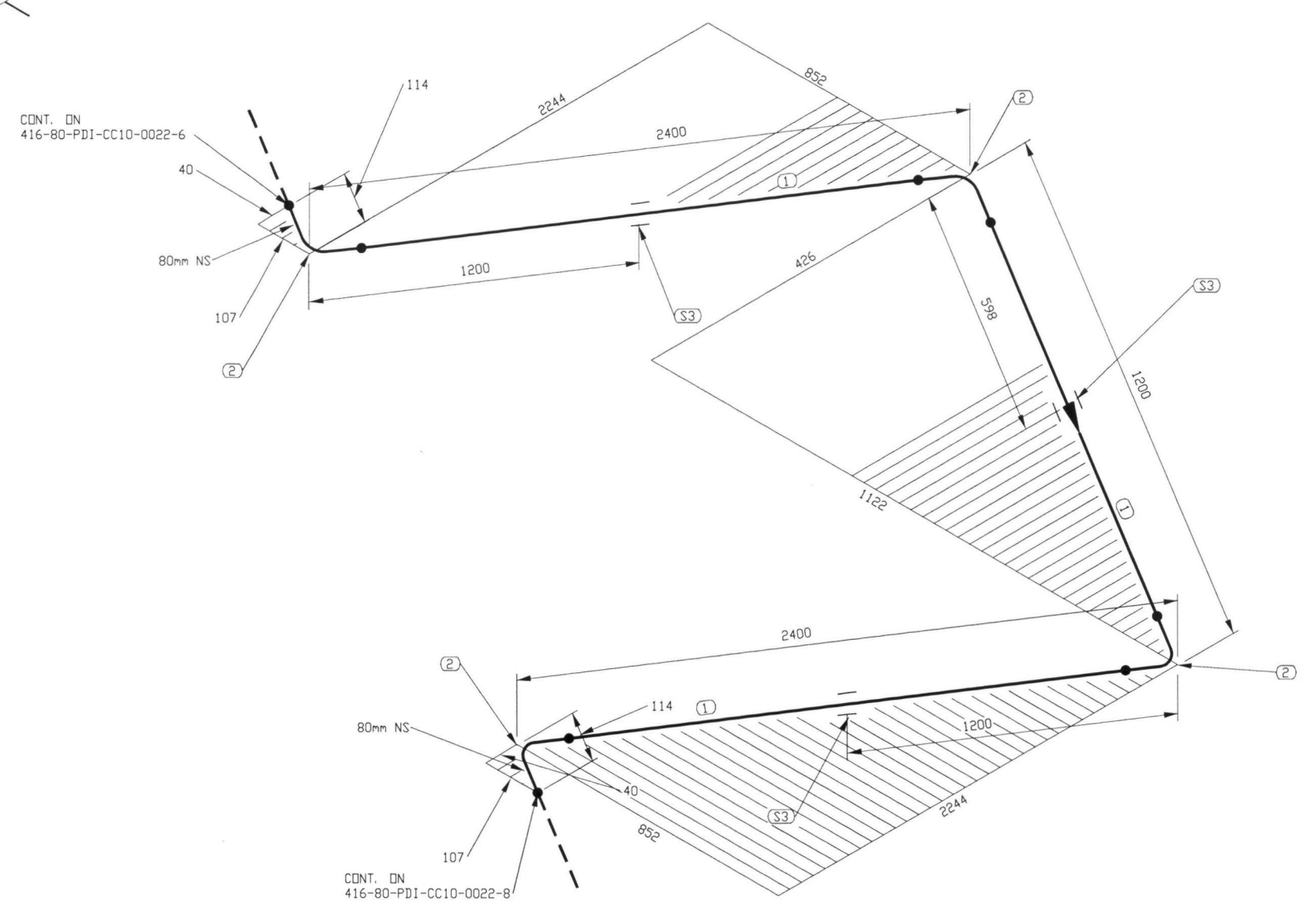

FABRICATION DRAWINGS BASED ON WSP CERTIFIED ENGINEERING

LISTE DE MATERIEL

No	QTE	DIA	MATERIEL/CATALOGUE	DESCRIPTION
1	5316 MM	80	A 333 Gr. 6	SCH STD, SMLS PIPE
2	4	80	A 420 Gr. WPL6	SCH STD, BW LR 90 DEG ELBOW
3	3	80		PIPE SUPPORT AS PER DETAIL 3, DWG: 65-416-270-200

REGISTERED PROFESSIONAL ENGINEER
D. TRUONG
LICENSEE
NT/NU
2017/10/05

PERMIT TO PRACTICE
LE GROUPE ULTRAGEN LTÉE
Signature
Date OCT 04 2017
PERMIT NUMBER: P 1180
NT/NU Association of Professional Engineers and Geoscientists

No.	DATE	REVISION	APP.
1	2017/09/29	LINE NUMBERS REVISED	QVN
0	2017/06/30	ISSUED FOR CONSTRUCTION	QVN

CLIENT: AGNICO EAGLE

NUQSANA PROMEC MINING SERVICES INC.

ultragen

CONSULTANT PROJECT NO. 591700

SCEAU PROFESSIONNEL

CONC.: KHV
DATE: 2017/05/29
DESSINÉ PAR: KVE
DATE: 2017/05/29
VÉR. PAR:
DATE:
APP.:
DATE:
ÉCHELLE: AUCUNE

PROJET: AGNICO EAGLE - MELIADINE DIVISION
416 - FUEL TANK FARM

TITRE: PORTAL #1
FABRICATION ISOMETRIC
FUEL FROM 416-80-PDI-CC10-0023 TO 65TNK41611

No PROJET	No DESSIN	PAGES	REV.
6515	416-80-PDI-CC10-0022	7/19	1

NO. DE CONDUITE		SPECIFICATION	PRODUIT	SYSTEME REVETEMENT	CODE DE COULEUR	ISOLATION ET TRACAGE	EPAISS. D'ISOLATION		
416-80-PDI-CC10-0022		CC10	PDI					65-416-270-200	PIPE SUPPORT DETAILS
PRESSION D'OPERATION	TEMPERATURE D'OPERATION	PRESSION DE CONCEPTION	TEMPERATURE DE CONCEPTION	PRESSION D'ESSAI	CLASSE D'INSPECTION	CODE DE SERVICE	TRAITEMENT THERMIQUE	65-416-205-200	P&ID
PSIG	°F	PSIG	°F	PSIG				No. DESSIN	DESSINS DE REFERENCE

FICHIER: \\Ultragen.local\Ultragen-Dessin\Agnico Eagle\Meliadine\591700 (Fuel Distribution)\05. Dessins\02. Tuyauterie\02. Isométriques\02. 403P-80-PDI-CC10-0022-7.DWG

IMPRIMÉ LE: Sep 28, 2017, 1:42pm

416-MN-01

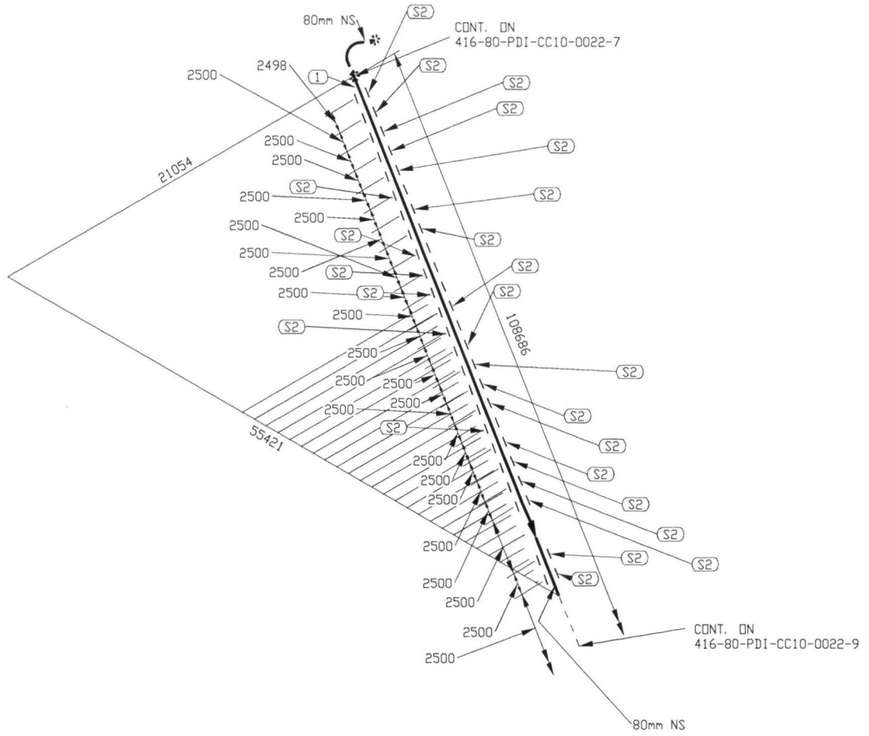

FABRICATION DRAWINGS BASED ON WSP CERTIFIED ENGINEERING

LISTE DE MATERIEL

No	QTE	DIA	MATERIEL/CATALOGUE	DESCRIPTION
1	59286 MM	80	A 333 Gr. 6	SCH STD, SMLS PIPE
2	24	80		PIPE SUPPORT AS PER DETAIL 3, DWG: 65-416-270-200

REGISTERED PROFESSIONAL ENGINEER
D. TRUONG
LICENSEE
NT/NU

2017/10/05

PERMIT TO PRACTICE
LE GROUPE ULTRAGEN LTÉE
Signature
Date OCT 04 2017
PERMIT NUMBER: P 1180
NT/NU Association of Professional Engineers and Geoscientists

No.	DATE	REVISION	APP.
1	2017/09/29	LINE NUMBERS REVISED	QVN
0	2017/06/30	ISSUED FOR CONSTRUCTION	QVN

CLIENT: AGNICO EAGLE

NUQSANA PROMEC MINING SERVICES INC.

ultragen

CONSULTANT PROJECT NO. 591700

SCEAU PROFESSIONNEL

CONC.: KHV
DATE: 2017/05/29
DESSINÉ PAR: KVE
DATE: 2017/05/29
VÉR. PAR:
DATE:
APP.:
DATE:
ÉCHELLE: AUCUNE

PROJET: AGNICO EAGLE - MELIADINE DIVISION
416 - FUEL TANK FARM

TITRE: PORTAL #1
FABRICATION ISOMETRIC
FUEL FROM 416-80-PDI-CC10-0023 TO 65TNK41611

No PROJET	No DESSIN	PAGES	RÉV.
6515	416-80-PDI-CC10-0022	8/19	1

NO. DE CONDUITE		SPECIFICATION	PRODUIT	SYSTEME REVETEMENT	CODE DE COULEUR	ISOLATION ET TRACAGE	EPAISS. D'ISOLATION		
416-80-PDI-CC10-0022		CC10	PDI					65-416-270-200	PIPE SUPPORT DETAILS
PRESSION D'OPERATION	TEMPERATURE D'OPERATION	PRESSION DE CONCEPTION	TEMPERATURE DE CONCEPTION	PRESSION D'ESSAI	CLASSE D'INSPECTION	CODE DE SERVICE	TRAITEMENT THERMIQUE	65-416-205-200	P&ID
PSIG	°F	PSIG	°F	PSIG				No. DESSIN	DESSINS DE REFERENCE

FICHIER: \\ultragen.local\Ultragen-Dessin\Agnico Eagle\Meliadine\591700 (Fuel Distribution)\05. Dessins\02. Tuyauterie\02. Isométriques\02. 403P-80-PDI-CC10-0022-8.DWG

IMPRIMÉ LE: Sep 28, 2017, 1:43pm

416-MN-01

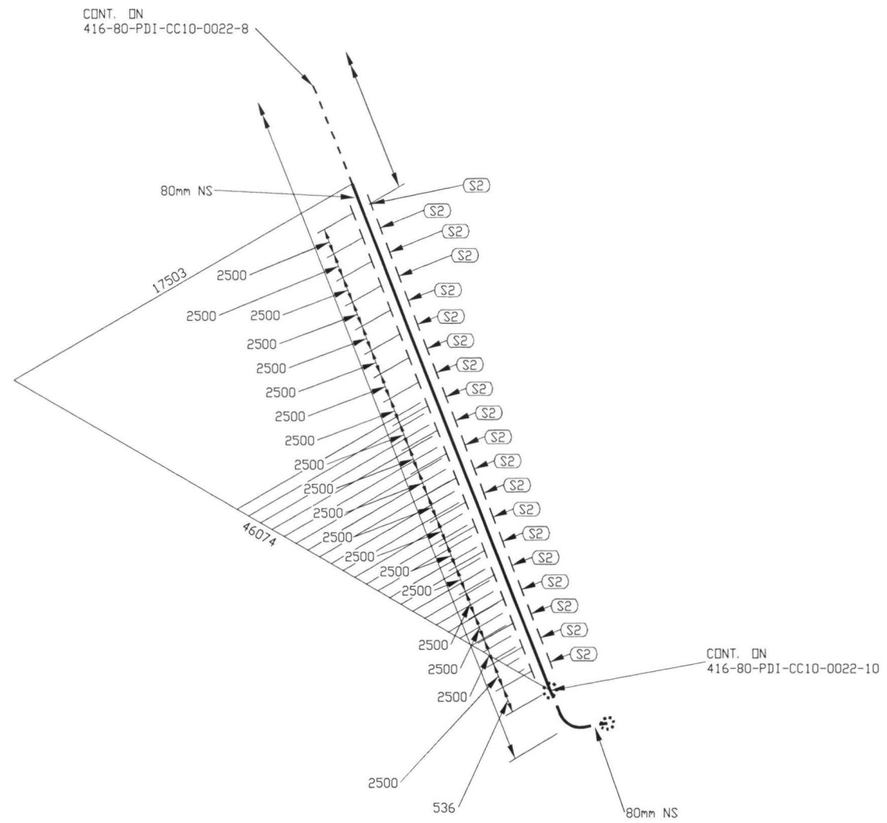

FABRICATION DRAWINGS BASED ON WSP CERTIFIED ENGINEERING

LISTE DE MATERIEL

No.	QTE	DIA	MATERIEL/CATALOGUE	DESCRIPTION
1	49286 MM	80	A 333 Gr. 6	SCH STD, SMLS PIPE
2	20	80		PIPE SUPPORT AS PER DETAIL 3, DWG: 65-416-270-200

REGISTERED PROFESSIONAL ENGINEER
D. TRUONG
LICENSEE
NT/NU
2017/10/05

PERMIT TO PRACTICE
LE GROUPE ULTRAGEN LTÉE
Signature
Date OCT 04 2017
PERMIT NUMBER: P 1180
NT/NU Association of Professional Engineers and Geoscientists

No.	DATE	REVISION	APP.
1	2017/09/29	LINE NUMBERS REVISED	QVN
0	2017/06/30	ISSUED FOR CONSTRUCTION	QVN

CLIENT:

AGNICO EAGLE

NUQSANA PROMEC MINING SERVICES INC.

ultragen

CONSULTANT PROJECT NO. 591700

SCEAU PROFESSIONNEL

CONC.: KHV
DATE: 2017/05/29
DESSINÉ PAR: KVE
DATE: 2017/05/29
VÉR. PAR:
DATE:
APP.:
DATE:
ÉCHELLE: AUCUNE

PROJET:
AGNICO EAGLE - MELIADINE DIVISION
416 - FUEL TANK FARM

TITRE:
PORTAL #1
FABRICATION ISOMETRIC
FUEL FROM 416-80-PDI-CC10-0023 TO 65TNK41611

No PROJET	No DESSIN	PAGES	RÉV.
6515	416-80-PDI-CC10-0022	9/19	1

NO. DE CONDUITE		SPECIFICATION	PRODUIT	SYSTEME REVETEMENT	CODE DE COULEUR	ISOLATION ET TRACAGE	EPAISS. D'ISOLATION		
416-80-PDI-CC10-0022		CC10	PDI					65-416-270-200	PIPE SUPPORT DETAILS
PRESSION D'OPERATION	TEMPERATURE D'OPERATION	PRESSION DE CONCEPTION	TEMPERATURE DE CONCEPTION	PRESSION D'ESSAI	CLASSE D'INSPECTION	CODE DE SERVICE	TRAITEMENT THERMIQUE	65-416-205-200	P&ID
PSIG	°F	PSIG	°F	PSIG				No. DESSIN	DESSINS DE REFERENCE

FICHIER: \\ultragen.local\Ultragen-Dessin\Agnico Eagle\Meliadine\591700 (Fuel Distribution)\05 Dessins\02 Tuyauterie\02 Isométriques\02 403P-80-PDI-CC10-0022-9.DWG

IMPRIMÉ LE: Sep 28, 2017, 1:43pm

416-MN-01

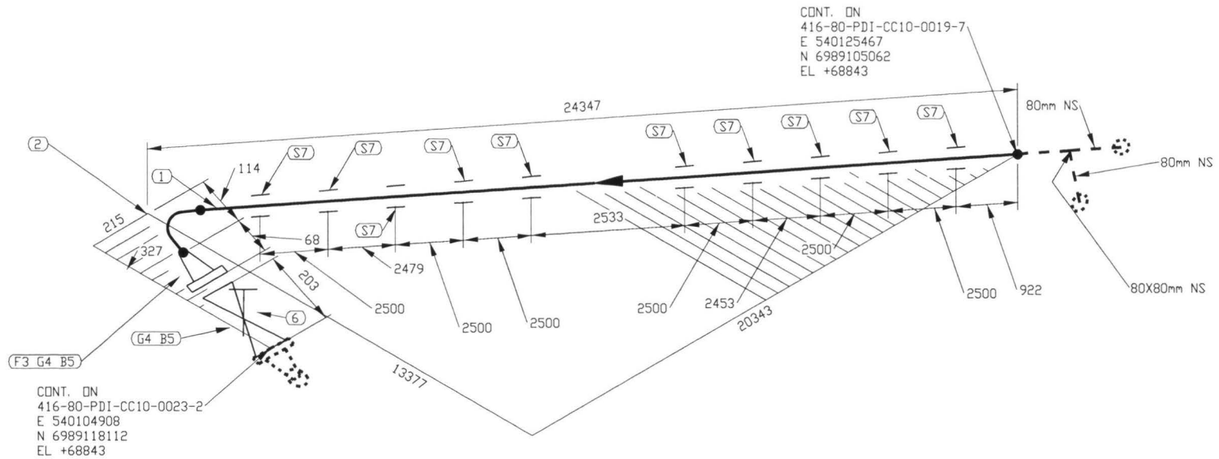

FABRICATION DRAWINGS BASED ON WSP CERTIFIED ENGINEERING

LISTE DE MATERIEL

No	QTE	DIA	MATERIEL/CATALOGUE	DESCRIPTION
1	24233 MM	80	A 333 Gr. 6	SCH STD, SMLS PIPE
2	1	80	A 420 Gr. WPL6	SCH STD, BW LR 90 DEG ELBOW
3	1	80	A 350 Gr. LF2	CL 150, SCH STD, RF, WN FLANGE
4	2	80	ASME B16.20	CL 150, GARLOCK 5500, RING TYPE GASKET 1/8" THK
5	8	16	A 193 B7/A 194 2H	CL 150, 4 - 15.875 X 90 STUD BOLTS c/w TWO HEAVY HEX NUTS
6	1	80	GA-10	CL 150, RF, GATE VALVE
7	10	80		PIPE SUPPORT AS PER DETAIL 3, DWG: 65-416-270-200

REGISTERED PROFESSIONAL ENGINEER
D. TRUONG
LICENSEE
NT/NU
2017/10/05

PERMIT TO PRACTICE
LE GROUPE ULTRAGEN LTÉE
Signature
Date OCT 04 2017
PERMIT NUMBER: P 1180
NT/NU Association of Professional Engineers and Geoscientists

No.	DATE	REVISION	PAR / APP.
1	2017/09/29	LINE NUMBERS REVISED	QVN
0	2017/06/30	ISSUED FOR CONSTRUCTION	QVN

CLIENT: AGNICO EAGLE

NUQSANA PROMEC MINING SERVICES INC.

ultragen

CONSULTANT PROJECT NO. 591700

SCEAU PROFESSIONNEL

CONC.: KHV
DATE: 2017/05/29
DESSINÉ PAR: KVE
DATE: 2017/05/29
VÉR. PAR:
DATE:
APP.:
DATE:
ÉCHELLE: AUCUNE

PROJET: AGNICO EAGLE - MELIADINE DIVISION
416 - FUEL TANK FARM

TITRE: PORTAL #1
FABRICATION ISOMETRIC
FUEL FROM 416-80-PDI-CC10-0019 TO 65TNK41610

No PROJET	No DESSIN	PAGES	RÉV.
6515	416-80-PDI-CC10-0023	1/2	1

NO. DE CONDUITE		SPECIFICATION	PRODUIT	SYSTEME REVETEMENT	CODE DE COULEUR	ISOLATION ET TRACAGE	EPAISS. D'ISOLATION		
416-80-PDI-CC10-0023		CC10	PDI					65-416-270-200	PIPE SUPPORT DETAILS
PRESSION D'OPERATION	TEMPERATURE D'OPERATION	PRESSION DE CONCEPTION	TEMPERATURE DE CONCEPTION	PRESSION D'ESSAI	CLASSE D'INSPECTION	CODE DE SERVICE	TRAITEMENT THERMIQUE	65-416-205-200	P&ID
PSIG	°F	PSIG	°F	PSIG				No. DESSIN	DESSINS DE REFERENCE

FICHIER: \\Ultragen.local\Ultragen-Dessin\Agnico Eagle\Meliadine\591700 (Fuel Distribution)\05 Dessins\02 Tuyauterie\02 Isométriques\02 403P-80-PDI-CC10-0023-1.DWG

IMPRIMÉ LE: Sep 28, 2017, 1:43pm

416-MN-01

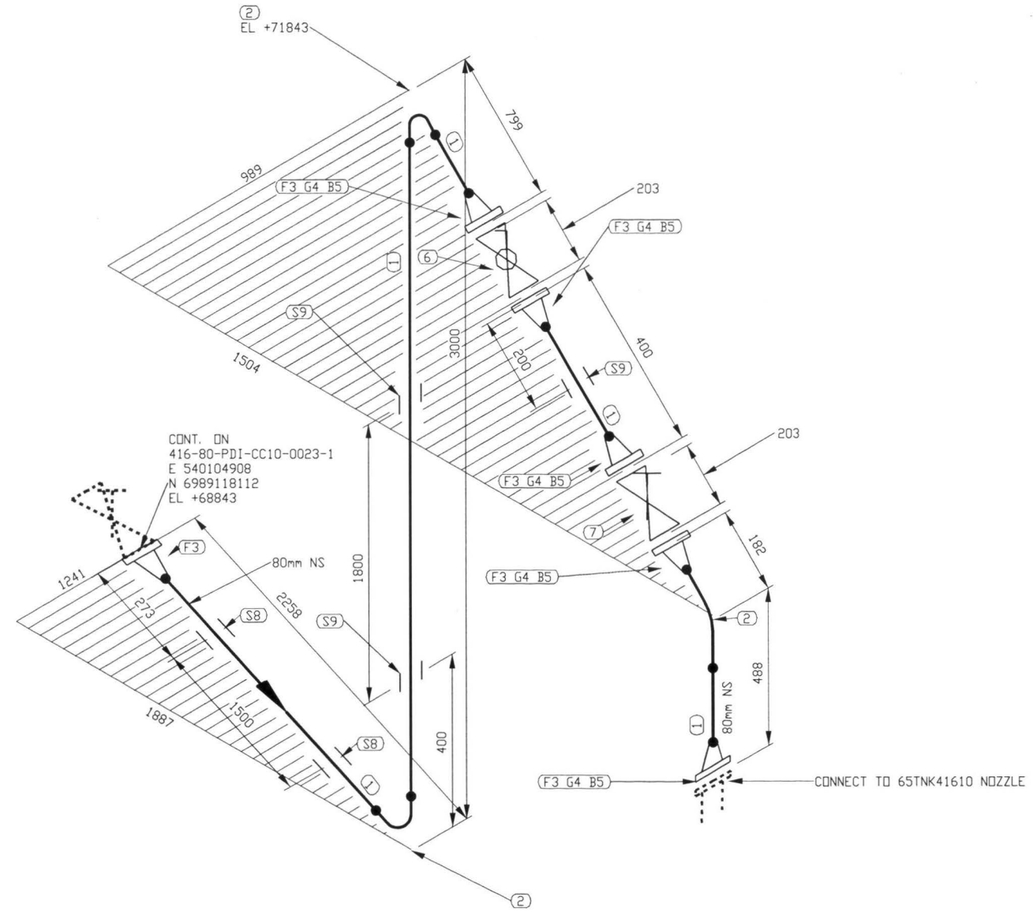

FABRICATION DRAWINGS BASED ON WSP CERTIFIED ENGINEERING

LISTE DE MATERIEL

No	QTE	DIA	MATERIEL/CATALOGUE	DESCRIPTION
1	6033 MM	80	A 333 Gr. 6	SCH STD, SMLS PIPE
2	3	80	A 420 Gr. WPL6	SCH STD, BW LR 90 DEG ELBOW
3	6	80	A 350 Gr. LF2	CL 150, SCH STD, RF, WN FLANGE
4	5	80	ASME B16.20	CL 150, GARLOCK 5500, RING TYPE GASKET 1/8" THK
5	20	16	A 193 B7/A 194 2H	CL 150, 4 - 15.875 X 90 STUD BOLTS c/w TWO HEAVY HEX NUTS
6	1	80	BA-31	CL 150, RF, BALL VALVE
7	1	80	GA-10	CL 150, RF, GATE VALVE
8	2	80		PIPE SUPPORT AS PER DETAIL 3, DWG: 65-416-270-200
9	3	80		PIPE SUPPORT BY CONTRACTOR

REGISTERED PROFESSIONAL ENGINEER
D. TRUONG
LICENSEE
NT/NU
2017/10/05

PERMIT TO PRACTICE
LE GROUPE ULTRAGEN LTÉE
Signature
Date OCT 04 2017
PERMIT NUMBER: P 1180
NT/NU Association of Professional Engineers and Geoscientists

No.	DATE	REVISION	PAR / APP.
1	2017/09/29	LINE NUMBERS REVISED	QVN
0	2017/06/30	ISSUED FOR CONSTRUCTION	QVN

CLIENT: AGNICO EAGLE

NUQSANA PROMEC MINING SERVICES INC.

ultragen

CONSULTANT PROJECT NO. 591700

SCEAU PROFESSIONNEL

CONC.: KHV
DATE: 2017/05/29
DESSINÉ PAR: KVE
DATE: 2017/05/29
VÉR. PAR:
DATE:
APP.:
DATE:
ÉCHELLE: AUCUNE

PROJET: AGNICO EAGLE - MELIADINE DIVISION
416 - FUEL TANK FARM

TITRE: PORTAL #1
FABRICATION ISOMETRIC
FUEL FROM 416-80-PDI-CC10-0019 TO 65TNK41610

No PROJET	No DESSIN	PAGES	RÉV.
6515	416-80-PDI-CC10-0023	2/2	1

NO. DE CONDUITE		SPECIFICATION	PRODUIT	SYSTEME REVETEMENT	CODE DE COULEUR	ISOLATION ET TRACAGE	EPAISS. D'ISOLATION		
416-80-PDI-CC10-0023		CC10	PDI					65-416-270-200	PIPE SUPPORT DETAILS
PRESSION D'OPERATION	TEMPERATURE D'OPERATION	PRESSION DE CONCEPTION	TEMPERATURE DE CONCEPTION	PRESSION D'ESSAI	CLASSE D'INSPECTION	CODE DE SERVICE	TRAITEMENT THERMIQUE	65-416-205-200	P&ID
PSIG	°F	PSIG	°F	PSIG				No. DESSIN	DESSINS DE REFERENCE

FICHIER: \\ultragen.local\Ultragen-Dessin\Agnico Eagle\Meliadine\591700 (Fuel Distribution)\05 Dessins\02 Tuyauterie\02 Isométriques\02 403P-80-PDI-CC10-0023-2.DWG

IMPRIMÉ LE: Sep 28, 2017, 1:43pm

416-MN-01

NO. DESSIN DRAWING NO. 65-ULT-416-MP-001

FORMAT ARCHD

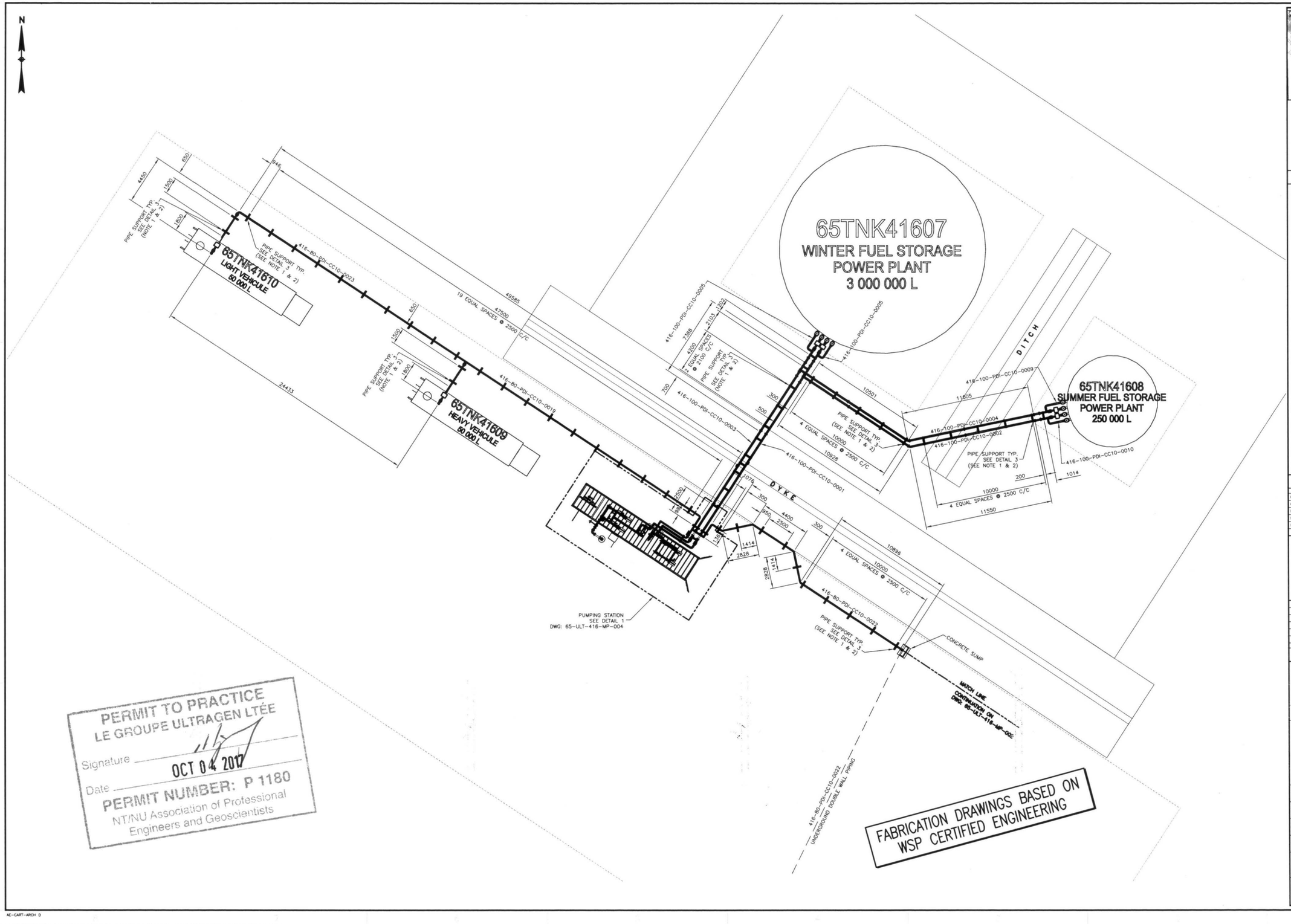

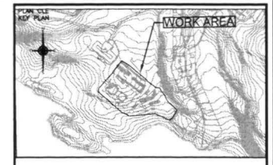

NOTES GENERALES / GENERAL NOTES

1. GUIDES SHALL BE PLACED AT LEAST 40 TO 60 PIPE DIAMETERS AWAY FROM PIPE EXPANSION LOOPS OR CHANGES IN DIRECTION.
2. IN GENERAL, GUIDES USED ON LINES DN 100 AND SMALLER ARE LOCATED AT EVERY OTHER PIPE SUPPORT AND ON LINES DN 150 AND LARGER AT EVERY THIRD SUPPORT.

REGISTERED PROFESSIONAL ENGINEER
D. TRUONG
LICENSEE
NT/NU
2017/10/05

DESSINS EN REFERENCE / REFERENCE DRAWINGS

TITRE / TITLE	# DWG
GENERAL ARRANGEMENT – PLAN VIEWS	65-ULT-416-MP-002/3
GENERAL ARRANGEMENT – DETAIL	65-ULT-416-MP-004
FUEL DISTRIBUTION – FLOW DIAGRAM	65-416-205-200
PIPING & PIPE SUPPORT DETAILS	65-416-270-200
PIPING DETAILS	65-416-270-201

AGNICO EAGLE

REV.	DATE	DESCRIPTION	PAR/BY	APP.	CLIENT
1	2017-09-29	LINE NUMBERS REVISED	Q.V.N.		
0	2017-06-30	ISSUED FOR CONSTRUCTION	Q.V.N.		

REVISIONS

NUOSANA PROMEC MINING

ultragen

NO. PROJET PROJECT NO. 591700

TITRE / TITLE
AGNICO EAGLE – MELIADINE DIVISION
416 – FUEL TANK FARM
FUEL DISTRIBUTION
GENERAL ARRANGEMENT
PLAN VIEW

DESSINE PAR DRAWN BY	KHV	DATE 2017-05-10
VERIFIE PAR CHECKED BY	–	–
APPROUVE PAR APPROVED BY	–	–
ECHELLE SCALE	1 = 150	DATE 2017-04-28

NO. DESSIN DRAWING NO. 65-ULT-416-MP-001

NO. PROJET PROJECT NO.	REVISION	FEUILLE / SHT
6515	1	1 / 1

PERMIT TO PRACTICE
LE GROUPE ULTRAGEN LTÉE
Signature
Date OCT 04 2017
PERMIT NUMBER: P 1180
NT/NU Association of Professional Engineers and Geoscientists

FABRICATION DRAWINGS BASED ON WSP CERTIFIED ENGINEERING

AE-CART-ARCH D

W:\Agnico Eagle\Meliadine\591700 (Fuel Distribution)\05. Dessins\02. Tuyauterie\01. Agencement Général\02. Portail 1\65-ULT-416-MP-001.dwg

FILE NO. 65-ULT-416-MP-001.dwg

NO. DESSIN
DRAWING NO. 65-ULT-416-MP-002

FORMAT ARCHD

N

PERMIT TO PRACTICE
LE GROUPE ULTRAGEN LTÉE
Signature
Date OCT 04 2017
PERMIT NUMBER: P 1180
NT/NU Association of Professional Engineers and Geoscientists

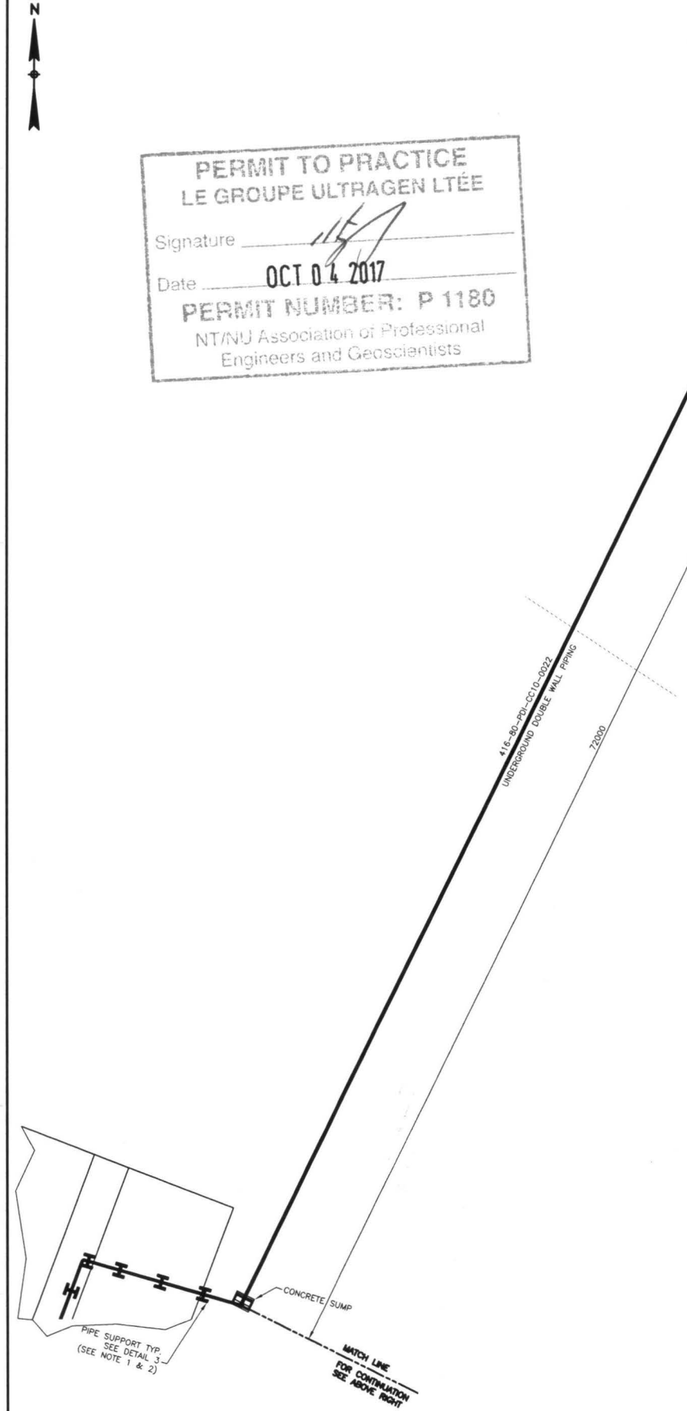

PLAN
SCALE: 1=150

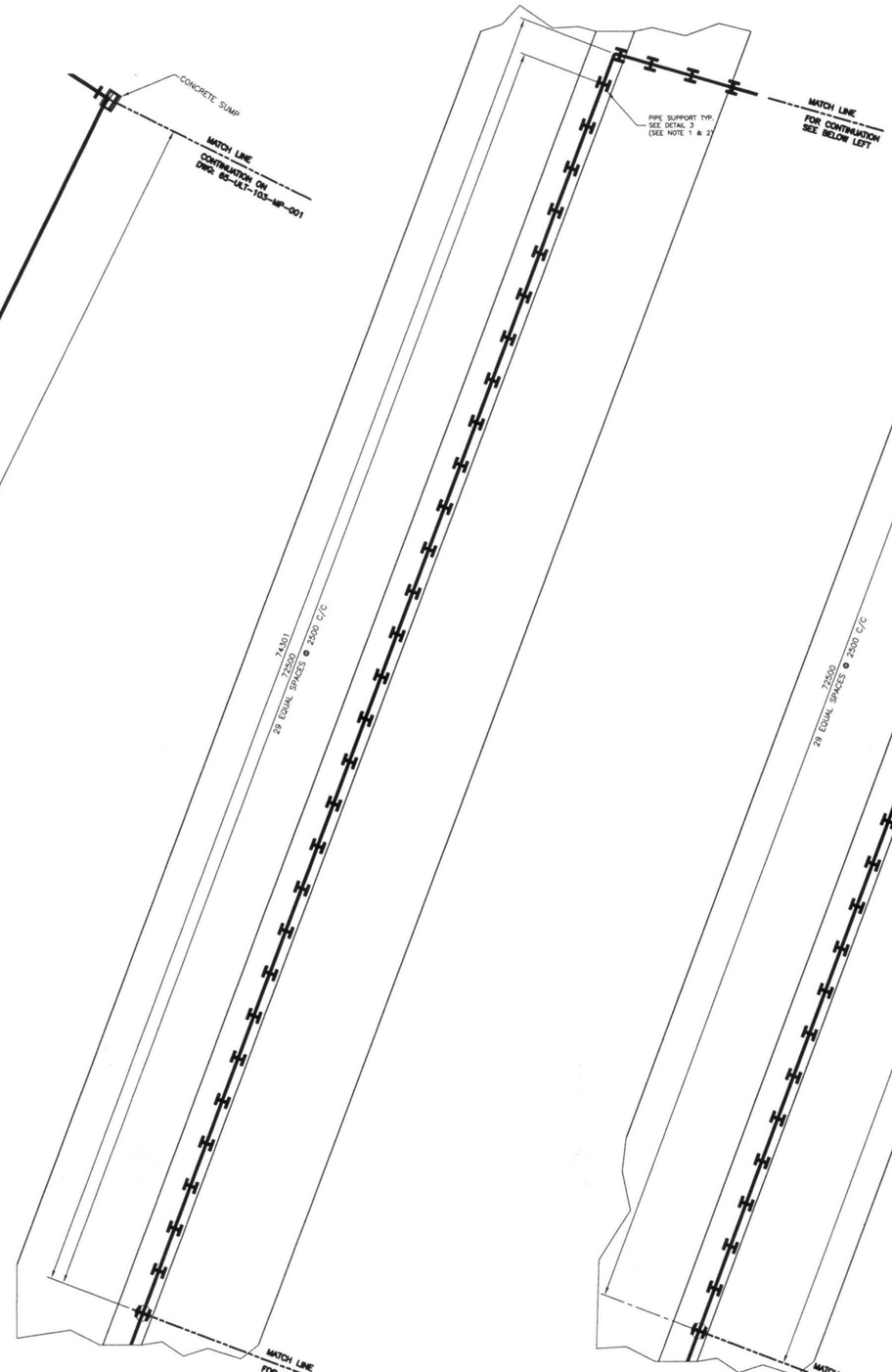

PLAN
SCALE: 1=150

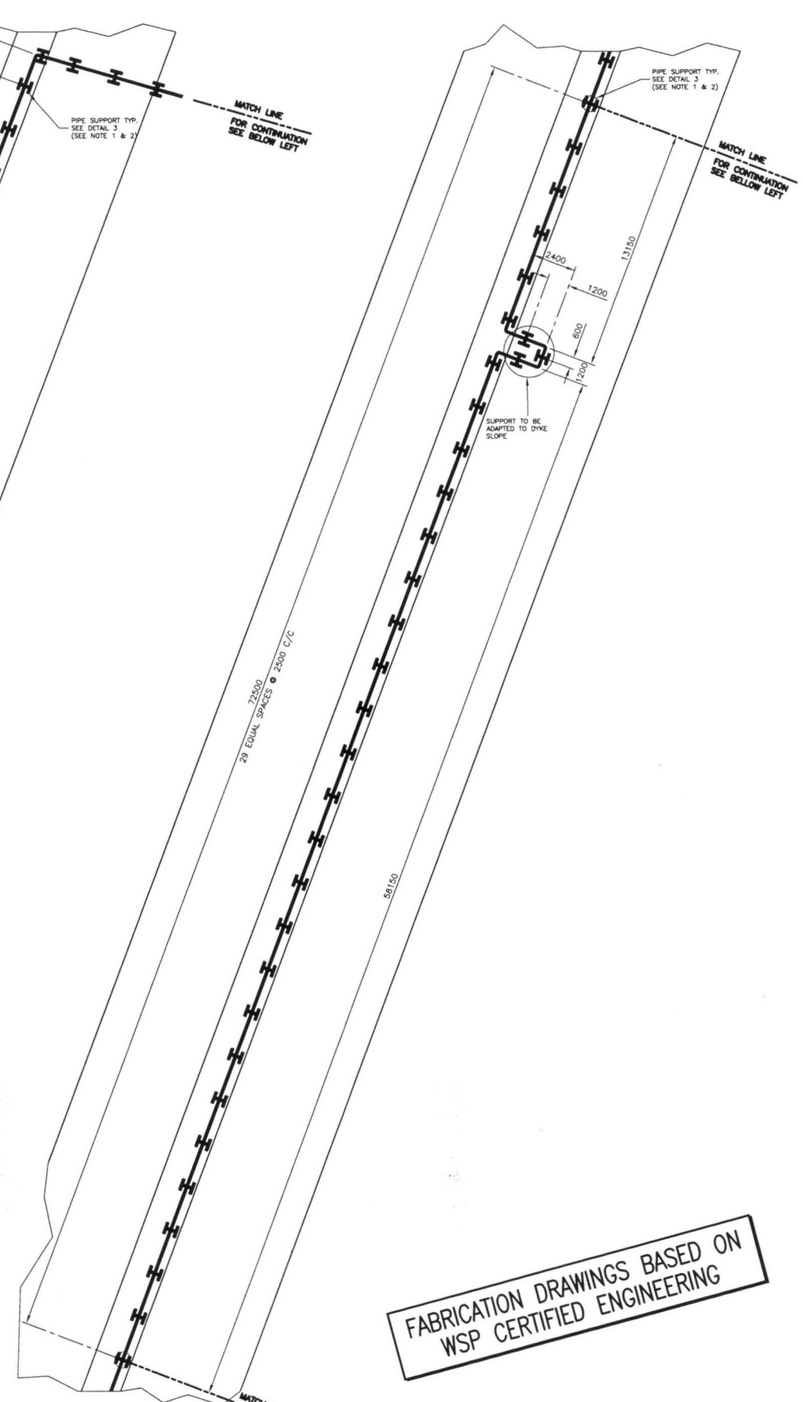

PLAN
SCALE: 1=150

FABRICATION DRAWINGS BASED ON
WSP CERTIFIED ENGINEERING

PLAN TILE KEY PLAN

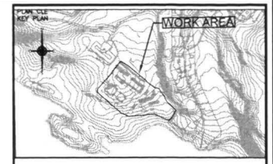

NOTES GENERALES / GENERAL NOTES

1. GUIDES SHALL BE PLACED AT LEAST 40 TO 60 PIPE DIAMETERS AWAY FROM PIPE EXPANSION LOOPS OR CHANGES IN DIRECTION.
2. IN GENERAL, GUIDES USED ON LINES ON 100 AND SMALLER ARE LOCATED AT EVERY OTHER PIPE SUPPORT AND ON LINES ON 150 AND LARGER AT EVERY THIRD SUPPORT.

REGISTERED PROFESSIONAL ENGINEER
D. TRUONG
LICENSEE
NT/NU
2017/10/05

DESSINS EN REFERENCE / REFERENCE DRAWINGS

TITRE / TITLE	# DWG
GENERAL ARRANGEMENT – PLAN VIEWS	65-ULT-416-MP-001/3
GENERAL ARRANGEMENT – DETAIL	65-ULT-416-MP-004
FUEL DISTRIBUTION – FLOW DIAGRAM	65-416-205-200
PIPING & PIPE SUPPORT DETAILS	65-416-270-200
PIPING DETAILS	65-416-270-201

AGNICO EAGLE

REV.	DATE	DESCRIPTION	PAR/BY	APP.	CLIENT
1	2017-09-29	LINE NUMBERS REVISED	Q.V.N.		
0	2017-06-30	ISSUED FOR CONSTRUCTION	Q.V.N.		

REVISIONS

NUQSANA PROMEC MINING

ultragen

NO. PROJET
PROJECT NO. 591700

TITRE / TITLE
AGNICO EAGLE – MEL1ADINE DIVISION
416 – FUEL TANK FARM
FUEL DISTRIBUTION
GENERAL ARRANGEMENT
PLAN VIEW

DESSINE PAR DRAWN BY	A. HEBERT	DATE 2017-05-10
VERIFIE PAR CHECKED BY	–	–
APPROUVE PAR APPROVED BY	–	–
ECHELLE SCALE	1 = 150	DATE 2017-04-28

NO. DESSIN
DRAWING NO. 65-ULT-416-MP-002

NO. PROJET PROJECT NO.	REVISION	FEUILLE / SHT
6515	1	1 / 1

AE-CART-ARCH D

W:\Agnico Eagle\Meliadine\591700 (Fuel Distribution)\05. Dessins\02. Tuyauterie\01. Agencement Général\02. Portail 1\65-ULT-416-MP-002.dwg

FILE NO. 65-ULT-416-MP-002.dwg

NO. DESSIN
DRAWING NO. 65-ULT-416-MP-003

FORMAT ARCHD

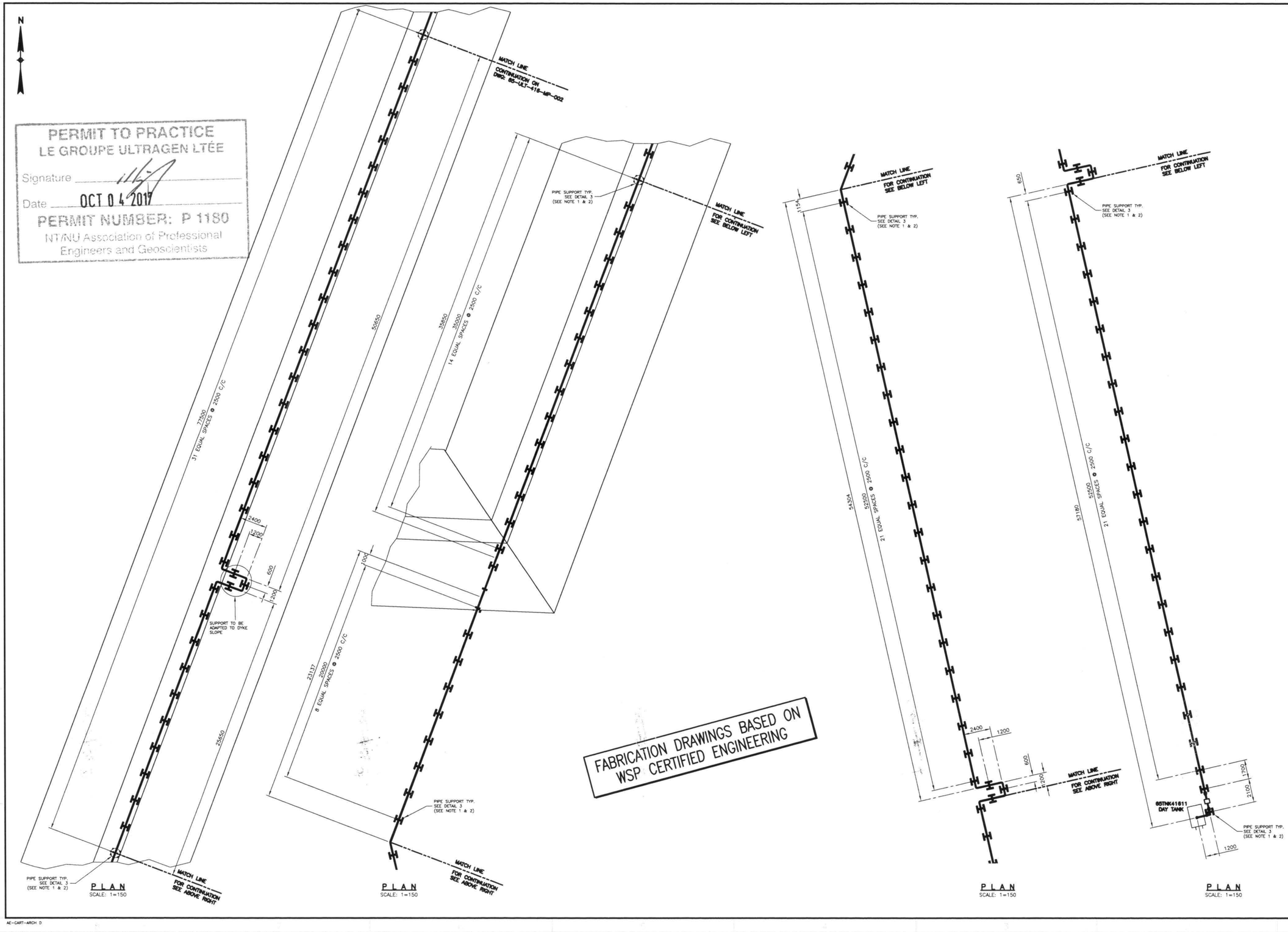

PERMIT TO PRACTICE
LE GROUPE ULTRAGEN LTÉE
Signature
Date OCT 04 2017
PERMIT NUMBER: P 1180
NT/NU Association of Professional Engineers and Geoscientists

FABRICATION DRAWINGS BASED ON WSP CERTIFIED ENGINEERING

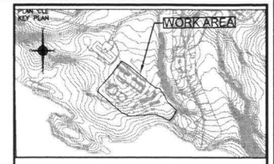

NOTES GENERALES / GENERAL NOTES

1. GUIDES SHALL BE PLACED AT LEAST 40 TO 60 PIPE DIAMETERS AWAY FROM PIPE EXPANSION LOOPS OR CHANGES IN DIRECTION.
2. IN GENERAL, GUIDES USED ON LINES ON 100 AND SMALLER ARE LOCATED AT EVERY OTHER PIPE SUPPORT AND ON LINES ON 150 AND LARGER AT EVERY THIRD SUPPORT.

REGISTERED PROFESSIONAL ENGINEER
D. TRUONG
LICENSEE
NT/NU
2017/10/05

DESSINS EN REFERENCE / REFERENCE DRAWINGS

TITRE / TITLE	# DWG
GENERAL ARRANGEMENT – PLAN VIEWS	65-ULT-416-MP-001/2
GENERAL ARRANGEMENT – DETAIL	65-ULT-416-MP-004
FUEL DISTRIBUTION – FLOW DIAGRAM	65-416-205-200
PIPING & PIPE SUPPORT DETAILS	65-416-270-200
PIPING DETAILS	65-416-270-201

AGNICO EAGLE

REV.	DATE	DESCRIPTION	PAR/BY	APP.	CLIENT
1	2017-09-29	LINE NUMBERS REVISED	Q.V.N.		
0	2017-06-30	ISSUED FOR CONSTRUCTION	Q.V.N.		

REVISIONS

NUQSANA PROMEC MINING

ultragen

NO. PROJET
PROJECT NO. 591700

TITRE / TITLE
AGNICO EAGLE – MELIADINE DIVISION
416 – FUEL TANK FARM
FUEL DISTRIBUTION
GENERAL ARRANGEMENT
PLAN VIEW

DESSINE PAR DRAWN BY	A. HEBERT	DATE 2017-05-10
VERIFIE PAR CHECKED BY	–	–
APPROUVE PAR APPROVED BY	–	–
ECHELLE SCALE	1 = 150	DATE 2017-04-28

NO. DESSIN
DRAWING NO. 65-ULT-416-MP-003

NO. PROJET PROJECT NO.	REVISION	FEUILLE / SHT
6515	1	1 / 1

AE-CART-ARCH D

W:\Agnico Eagle\Meliadine\591700 (Fuel Distribution)\05. Dessins\02. Tuyauterie\01. Agencement Général\02. Portail 1\65-ULT-416-MP-003.dwg

FILE NO. 65-ULT-416-MP-003.dwg

NO. DESSIN
DRAWING NO. 65-ULT-416-MP-004

FORMAT ARCHD

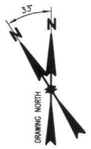

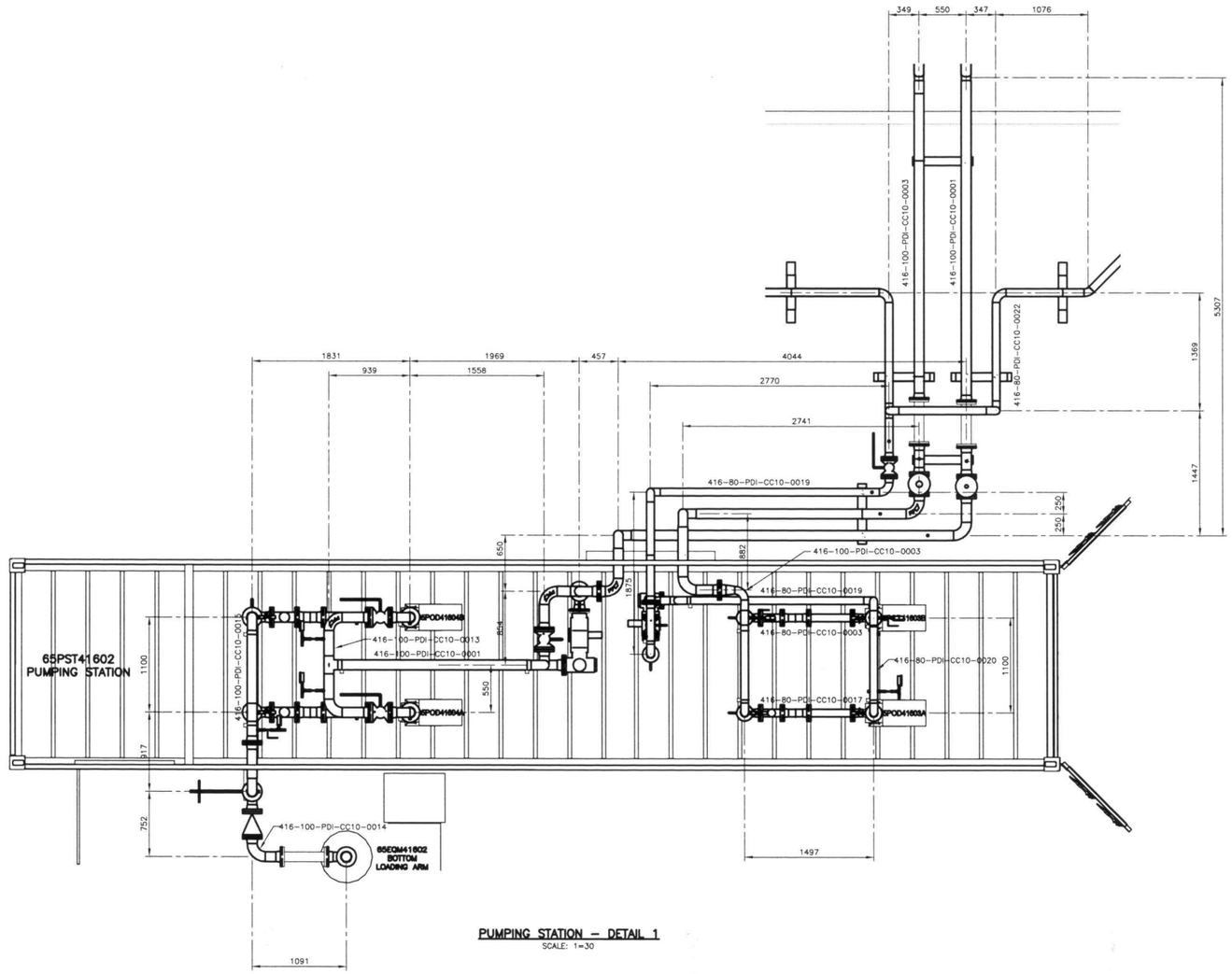

PUMPING STATION – DETAIL 1
SCALE: 1=30

PERMIT TO PRACTICE
LE GROUPE ULTRAGEN LTÉE
Signature
Date OCT 04 2017
PERMIT NUMBER: P 1180
NT/NU Association of Professional Engineers and Geoscientists

FABRICATION DRAWINGS BASED ON WSP CERTIFIED ENGINEERING

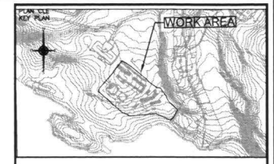

NOTES GENERALES / GENERAL NOTES

1. GUIDES SHALL BE PLACED AT LEAST 40 TO 60 PIPE DIAMETERS AWAY FROM PIPE EXPANSION LOOPS OR CHANGES IN DIRECTION.
2. IN GENERAL, GUIDES USED ON LINES DN 100 AND SMALLER ARE LOCATED AT EVERY OTHER PIPE SUPPORT AND ON LINES DN 150 AND LARGER AT EVERY THIRD SUPPORT.

REGISTERED PROFESSIONAL ENGINEER
D. TRUONG
LICENSEE
NT/NU
2017/10/05

DESSINS EN REFERENCE / REFERENCE DRAWINGS

TITRE / TITLE	# DWG
GENERAL ARRANGEMENT – PLAN VIEWS	65-ULT-416-MP-001/2/3
GENERAL ARRANGEMENT – DETAIL	65-ULT-416-MP-004
FUEL DISTRIBUTION – FLOW DIAGRAM	65-416-205-200
PIPING & PIPE SUPPORT DETAILS	65-416-270-200
PIPING DETAILS	65-416-270-201

AGNICO EAGLE

REV.	DATE	DESCRIPTION	PAR/BY	APP.	CLIENT
1	2017-09-29	LINE NUMBERS REVISED	Q.V.N.		
0	2017-06-30	ISSUED FOR CONSTRUCTION	Q.V.N.		

REVISIONS

NUOSANA PROMEC MINING
ultragen
NO. PROJET / PROJECT NO. 591700

TITRE / TITLE
AGNICO EAGLE – MEADIADINE DIVISION
416 – FUEL TANK FARM
FUEL DISTRIBUTION
GENERAL ARRANGEMENT
DETAIL

DESSINE PAR / DRAWN BY	KHV	DATE 2017-05-10
VERIFIE PAR / CHECKED BY	–	–
APPROUVE PAR / APPROVED BY	–	–
ECHELLE / SCALE	1 = 30	DATE 2017-04-28

NO. DESSIN / DRAWING NO. 65-ULT-416-MP-004

NO. PROJET / PROJECT NO.	REVISION	FEUILLE / SHT
6515	1	1 / 1

AE-CART-ARCH D

W:\Agnico Eagle\Meliadine\591700 (Fuel Distribution)\05. Dessins\02. Tuyauterie\01. Agencement Général\02. Portail 1\65-ULT-416-MP-004.dwg

FILE NO. 65-ULT-416-MP-004.dwg

AGNICO EAGLE

Vendor Document Status

1 ☐ Proceed to next submission and status.

2 ☐ Proceed with exceptions as noted to next submission and status.

3 ☐ Do not proceed.
Revise as noted and resubmit next submission and status.

4 ☑ Complete, no further submission required.

By: Jean-Francois Tremblay Date: 2017-05-02

Review and authorization to fabricate are only for general conformance with the design concept of the Project as expressed in the Contract Documents. Sole responsibility for the accuracy and completeness of this document, including but not limited to dimensions and quantities, remains with the Supplier/Contractor. Agnico Eagle does not warrant the accuracy or completeness of any of the information contained herein, nor does Agnico Eagle authorize or approve any construction means, methods, techniques, sequences or any safety precautions or procedures.

Agnico Eagle No. 6515-C-270-007-141-TES-0014 R: Sub001

DOCUMENT FOR INFORMATION

NUQSANA PROMEC MINING

Agnico-Eagle Mines Ltd.
Non-Conformance Report

ITR Number : AEM-GE-ITR-002
Contract no. : C22466T / C22498E

AGNICO EAGLE

PART 1 – To be completed by Originator

ITR no. :	Supplier/Vendor/Manufacturer/Contractor :	Originator :	Date:

Equipment Identification: | **Equipment Tag No.:**

Disposition Requested:
☐ 48 Hours ☐ Other

NCR Classification:
☐ Supplier ☐ Fabrication ☐ Engineering ☐ Construction ☐

Current Status:
☐ Work Already Done ☐ Partially Done ☐ Other ____

Potential Impact (Check appropriate box and give estimate):
☐ Cost ☐ Schedule ☐ Other

Detailed Description of Non-Conformance (attach sketch, pictures, etc) :

Describe Deviation to Drawings, Specifications, Standard, Code or other Reference:

PART 2 - Disposition

* CONTRACTOR Proposed Disposition / Resolution: ☐ Use As Is ☐ Repair ☐ Rework ☐ Reject/Scrap	Concession Request No. (if applicable):	Contractors NCR No. (if applicable):

Details of Contractor Corrective Actions Proposed / Concession Request:

* Disposition: ☐ Use as Is ☐ Repair ☐ Rework ☐ Reject/Scrap	Dispositioning Party:	Signature:

Recommended Resolution / Actions:

PART 3 - Confirmation

Corrective Actions Completed By: Name: Date: Signature:	Corrective Actions Accepted by Dispositioning Party: Name: Date: Signature:
Corrective Actions Accepted by Originator: Name: Date: Signature:	**NCR Closed Out By (Area QA Coordinator)** Name: Date: Signature:

** Note:* Dispositions are not to be construed as a change to any Contracts which may be affected. Prior to initiating any work which will impact the Contract terms, the Contractors must forward to AMEC written notice of all impacts, including but not limited to cost and schedule. Any work completed without a written instruction to proceed, if required, will be at the Contractor's risk.

6515-C-270-007

Fuel Tanks Piping Supply and Installation

Non-Conformance Log

Document Number : AEM-GE-LOG-002
Contract Number : C22466T / C22498E

AGNICO EAGLE

Number	Company	Description	Initiator	Date Opened	Date Closed	Progress Status
NCR-001						N/A
NCR-002						N/A
NCR-003						N/A
NCR-004						N/A
NCR-005						N/A
NCR-006						N/A
NCR-007						N/A
NCR-008						N/A
NCR-009						N/A
NCR-010						N/A
NCR-011						N/A
NCR-012						N/A
NCR-013						N/A
NCR-014						N/A
NCR-015						N/A
NCR-016						N/A
NCR-017						N/A
NCR-018						N/A
NCR-019						N/A
NCR-020						N/A
NCR-021						N/A
NCR-022						N/A
NCR-023						N/A
NCR-024						N/A
NCR-025						N/A
NCR-026						N/A
NCR-027						N/A
NCR-028						N/A
NCR-029						N/A
NCR-030						N/A
NCR-031						N/A
NCR-032						N/A
NCR-033						N/A
NCR-034						N/A
NCR-035						N/A
NCR-036						N/A
NCR-037						N/A
NCR-038						N/A
NCR-039						N/A
NCR-040						N/A

Vendor Document Status

AGNICO EAGLE

1 ☐ Proceed to next submission and status.

2 ☐ Proceed with exceptions as noted to next submission and status.

3 ☐ Do not proceed.
Revise as noted and resubmit next submission and status.

4 ☑ Complete, no further submission required.

By: Jean-Francois Tremblay Date: 2017-05-02

Review and authorization to fabricate are only for general conformance with the design concept of the Project as expressed in the Contract Documents. Sole responsibility for the accuracy and completeness of this document, including but not limited to dimensions and quantities, remains with the Supplier/Contractor. Agnico Eagle does not warrant the accuracy or completeness of any of the information contained herein, nor does Agnico Eagle authorize or approve any construction means, methods, techniques, sequences or any safety precautions or procedures.

Agnico Eagle No. 6515-C-270-007-141-TES-0019 R: Sub001

DOCUMENT FOR INFORMATION

AGNICO EAGLE

Vendor Document Status

1 ☐ Proceed to next submission and status.

2 ☐ Proceed with exceptions as noted to next submission and status.

3 ☐ Do not proceed.
Revise as noted and resubmit next submission and status.

4 ☑ Complete, no further submission required.

By: JEAN-FRANCOIS TREMBLAY Date: 2017-05-02

Review and authorization to fabricate are only for general conformance with the design concept of the Project as expressed in the Contract Documents. Sole responsibility for the accuracy and completeness of this document, including but not limited to dimensions and quantities, remains with the Supplier/Contractor. Agnico Eagle does not warrant the accuracy or completeness of any of the information contained herein, nor does Agnico Eagle authorize or approve any construction means, methods, techniques, sequences or any safety precautions or procedures.

Agnico Eagle No. 6515-C-270-007-141-TES-0038 R: Sub001

DOCUMENT FOR INFORMATION

Agnico-Eagle Mines Ltd.

Contract no. 6515-C-270-007

Welding Control Procedure

AEM-WE-PRO-001

Area No.: All

System No.: All

PROMEC Approvals

Prepared by:	Stéphane Doré	**Signature:**		**Date:**	2017-04-26
Verified by:	Jérémy Duval	**Signature:**		**Date:**	2017-04-26
Approved by:	Éric Poulin	**Signature:**		**Date:**	2017-04-26

CLIENT Approvals

Verified by:		**Signature:**		**Date:**	
Approved by:		**Signature:**		**Date:**	

TABLE OF CONTENTS

Page

1. SCOPE 3
2. REFERENCES 3
3. WELDING PROCEDURES 3
4. WELDER PERFORMANCE QUALIFICATION 3
5. WELDING MATERIAL CONTROL 4
6. FIT-UP AND WELDING 4
7. RADIOGRAPHIC INSPECTION 5

APPENDIX A – ALL APPLICABLE ITRs & LOGs

1. Scope

- This procedure describes the system for maintaining control of all production welding to the requirements of the applicable engineering specifications, codes and standards.

2. References

- ASME, Section IX - Welding and Brazing Qualifications
- ANSI, B-31.3 - Petroleum Refinery Piping
- ANSI, B-31.1 - Power Piping
- AWS, American Welding Society

3. Welding Procedures

- All welding performed on site will comply with applicable qualified welding procedures as specified in the Standard S40 05 13.
- Prime contractor's welders will be qualified to weld procedures in accordance with contract specifications. Prime contractor is responsible for certifying their own welders.
- Copies of the qualified welding procedures approved for that project shall be maintained on site by the Welding Foreman and Site Q/C Representative for reference and permanent retention.

4. Welder Performance Qualification

- It is the responsibility of the Site Q/C Representative to conduct or supervise the Welder Performance Qualification tests. At the discretion of the Corporate Quality Control Manager, a Welding Foreman or other qualified site supervisor may conduct these tests.
- Records attesting to the Welder Performance Qualification tests shall be generated and maintained by the Site Q/C Representative and the Welding Foreman.
- The Site Q/C Representative and the Welding Foreman shall maintain a complete listing of welders and welding operators employed. The form, Welder Qualification Log, is to be updated and reissued on a monthly basis and is to be distributed as required.

5. Welding Material Control

- The Site Q/C Representative and Welding Foreman shall make certain that the welding material used conforms to that of the welding procedure. No substitutions for the specified material will be made without written approval from the client.

6. Fit-Up and Welding

- Visual surveillance shall be performed to establish compliance to welding procedures. The inspection parameters listed below are recommended as guidelines
  - ✓ Inspect end preparation and joint configuration as established by applicable weld procedures and engineering specifications.
  - ✓ Inspect internal alignment and root opening prior to welding.
  - ✓ Check tack welds that are to be incorporated into the final weld, and be assured of proper blend grinding and absence of visual defects.
  - ✓ Check for proper welding materials and other essential variables of applicable weld procedures.
  - ✓ Check visually root pass for cracks, porosity, slag, fusion lines and quality workmanship (if required use LP).
  - ✓ Inspect completed welds for proper reinforcement. All welds should blend smoothly into the base metal and be free of cold lap or fusion at the toe.
  - ✓ Inspect weld for surface discontinuities such as undercut. Surface porosity is to be considered as an injurious defect and shall be repaired.
  - ✓ All repairs are to be made in accordance with approved procedures.
  - ✓ Each welder shall be responsible for stamping his assigned symbol immediately after completion of the weld. A smooth, flat spot shall be ground or filed on the reinforcement cap. The welder shall stamp his/hers identifying mark upon this spot.
- For ferrous material less than 1/4" (1/2" for nonferrous), the welder's symbol shall be recorded on the base metal by use of a halogen-free paint marker, or recorded on isometric drawings by the welding supervisor which shall be available to the Quality Control Inspector.

7. Radiographic Inspection

- The Site Q/C Representative or Welding Foreman will schedule radiographic inspections.
- Radiographic requirements shall be determined by the client standard to assure compliance to contract Codes and specifications.
- Welds requiring radiography will be flagged by a suitable means which will be consistent through contract completion.
- The Site Q/C Representative will complete the Radiographic Inspection Status Record, to indicate status of radio graphically-inspected welds. This form will be forwarded to appropriate supervision for distribution.
- In addition to the records generated under this procedure, marked-up isometric and orthographic drawings will be used as weld maps to indicate completion of radiographic inspection. This will allow a progressive record and give system status.

PREMIÈRE PASSE E-6011 , 3/32
SMAW
REMPLISSAGE E-7018 , 1/8-5/32
SMAW
ACIER AU CARBONE
Procédure : P-1 , PR-1

et de la Protection du consommateur
Inspection des installations de tuyauterie
Division des appareils sous pression

DE SOUDAGE (DMS)
ding Procedure Specification (WPS)

lote: les titres désignent également les hommes et les femmes.

Entreprise/*Company*	
Nom	Construction Promec
Adresse/*Address*	369 rue Murdoch
	Rouyn-Noranda (Québec)
(819) 797-3456	Code postal J 9 X 1 G 4

(2) Enregistrement provincial *Provincial Registration*	MS / WP 8814.6

(3) **Désignation de la méthode/*Procedure Identification***

DMS N° *WPS No.*	P1
Révision N° *Revision No.*	0
RMS N° *PQR No.*	PR1
Section du code *Code section*	

(4) **Procédé(s) de soudage *Welding Process(es)***

1	SMAW	Manuel/*Manual* ☒	Semi-auto. ☐	Auto. ☐
2		Manuel/*Manual* ☐	Semi-auto. ☐	Auto. ☐
3		Manuel/*Manual* ☐	Semi-auto. ☐	Auto. ☐

(5) **Joints/*Joints*** (QW-402)

Genre/*Design*	VW Fillet ~~Chan Frein Simple~~ ~~Chan Frein Double~~
Soutien *Backing*	Oui/*Yes* ☒ Non/*No* ☒
Matériau de soutien *Backing material*	P1 ou soudure
Autre *Other*	

Croquis/*Sketch*

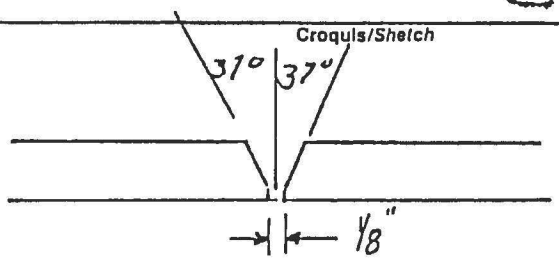

(6) **Métaux de base/*Base Metals*** (QW-403)

ou Spécifications type et grade *or Specifications type and grade*	P N°/*No.* P1	Gr N°/*No.*	à/*to*	P N°/*No.* P1	Gr N°/*No.*
Analyse chimique et prop. méc. *Chemical Analysis and Mech. Prop.*		F3	à/*to*	F4	
Gamme des épaisseurs qualifiées *Thickness Range Qualified*	Total 3/16" à 1½"	1 ¼"		2 1¼"	3
Autre *Other*					

(7) **Métaux d'apport/*Filler Metals*** (QW-404)

AWS N°/*No.*	E6011	SFA	5.1	*F-No.*	3	*A-No.*	1	Dia. 3/32-1/8-5/32
AWS N°/*No.*	E7018	SFA	5.1	*F-No.*	4	*A-No.*	1	Dia. 3/32-1/8-5/32
AWS N°/*No.*		SFA		*F-No.*		*A-No.*		Dia.

Marque de commerce du flux *Flux Tradename*	Classification du flux-électrode *Electrode-Flux Classification*
Pièce insérée consumable *Consumable Insert*	Autre *Other*

(8) **Positions/*Positions*** (QW-405)

Position(s) du chanfrein *Position(s) of Groove*	Toute position	
Progression du soudage *Welding Progression*	Montant/*Up* ☒	Descendant/*Down* ☒
Position(s) de l'angle *Position(s) of Fillet*	Toute position	
Autre *Other*		

(9) **Préchauffage/*Preheat*** (QW-406)

Température de préchauffage *Preheat Temperature*	Min.	60°F
Température de l'interpasse *Interpass Temperature*		
Maintien du préchauffage *Preheat Maintenance*		
Autre *Other*		

(10) **Traitement thermique postsoudage/*Postweld Heat Treatment*** (QW-407)

Gamme de températures *Temperature Range*	Aucun
Gamme de durée *Time Range*	
Autre *Other*	

(11) **Gaz/*Gas*** (QW-408)

Composition du gaz de protection *Shielding Gas Composition*	
Débit du gaz *Gas Flow Rate*	
Composition du gaz de soutien *Backing Gas Composition*	
Débit du gaz *Gas Flow Rate*	
Composition du gaz de protection traînant *Trailing Shielding Gas Composition*	

Caractéristiques électriques et t[illegible]niques/*Electrical Characteristics and Tec[illegible]ue* (QW-409) + (QW-410)

[illegible]uche(s) de soudure [illegible]er(s)	Procédé *Process*	Métal d'apport *Filler Metal* Classification *Classification*	Diamètre *Diameter*	Courant *Current* Type *Type*	Polarité *Polarity*	Gamme d'ampérage *Amp Range*	Gamme de voltage *Volt Range*	Gamme de vitesse *Travel Speed Range*
è	SHAW	E6011	$\frac{1}{8}$" à $\frac{5}{32}$"	DC	Inversé	75 - 85	26-30	--
tres	SHAW	E7018	$\frac{1}{8}$" à $\frac{5}{32}$"	DC	Inversé	105 -110	26-30	--

[illegible]sseur et type d'électrode de tungstène *[illegible]gsten Electrode Size and Type*	--
[illegible]e de transfert du métal pour GMAW *[illegible]e of Metal Transfer for GMAW*	--
[illegible]ion droit ou oscillant *[illegible]g or Weave Bead*	Droit et oscillant
[illegible]édé de gougeage arrière *[illegible]od of Back Gouging*	Arc Air
[illegible]oyage initial et entre les passes (brossage, meulage, etc.) *[illegible]l and Interpass Cleaning (Brushing, Grinding, etc.)*	Brossage ou meulage
[illegible]ètre de la tuyère à gaz *[illegible]e or Gas Cup Size*	--
[illegible]llation *[illegible]llation* Largeur *Width*	-- Fréquence *Frequency*
[illegible]nce entre tuyère & pièce *[illegible] to Work Distance*	--
[illegible] ou multiple (par côté) *[illegible]ple [illegible]ingle Pass (per Side)*	--
[illegible]rode unique ou multiple *[illegible]ple or Single Electrode*	--
[illegible]me de vitesse d'alimentation de l'électrode *[illegible]rode Wire feed speed range*	--
	Pas de martelage

Autres commentaires/*Supplementary Comments*

[illegible]gnature du représentant de l'entreprise *[illegible]mpany Representative's Signature* Donald Dutil

Date *Date* 15 janv. 88

(16)

QC MINISTÈRE DU TRAVAIL ET DE LA MAIN-D'OEUVRE

APPROUVÉ

SELON LA [illegible] APPAREILS SOUS PRESSION [illegible]

VÉRIFIÉ PAR [illegible]

DATE 88 01 25

Réservé au ministère/*Department use only*

[illegible]par [illegible] Date: 88 01 20

N°

Gouvernement du Québec
Ministère de l'Habitation
et de la Protection du consommateur
Division des appareils sous pression

RÉSULTAT DE LA MÉTHODE DE SOUDAGE (RMS)
Procedure Qualification Record (PQR)

tires désignent également les hommes et les femmes.

(Référence: ASME Section IX)

1 Entreprise/Company

om/Name: Construction Promec

dresse/Address: 369 rue Murdoch

Rouyn-Noranda (Québec)

819-797-3456 | Code postal: J 9 X 1 G 4

2 Enregistrement provincial / *Provincial Registration* | MS / WP 8814.6

3 Désignation du résultat/*Record Identification*

RMS N° / *PQR No.*: PR-1

DMS N° / *WPS No.*: P -1

4 Procédé(s) de soudage/*Welding Process(es)*

SMAW — Type: Manuel

Type:

Type:

5

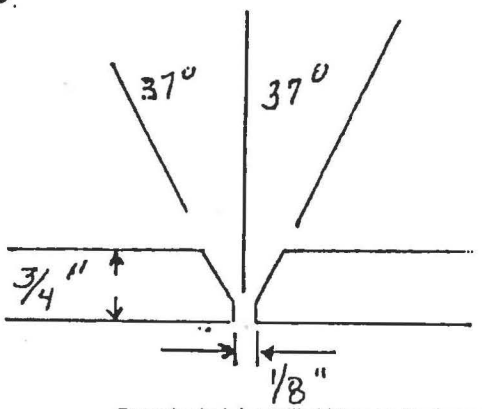

Croquis du joint utilisé/*Groove Design used*

6 Métaux de base/*Base Metals* (QW-403)

No. 1 Gr No. à/*to* P No. 1 Gr No.

pécification/*Specification* — Tension/*Tensile*

SA - 516 - 70 — 70 000

paisseur / *hickness*: 3/4 "

Diamètre/*Diameter*

utre / *ther*

7 Métaux d'apport/*Filler Metals* (QW-404)

Classification *(AWS)*	SFA - No.	F - No.	A - No.
E-6011	5.1	3	1
E-7018	5.1	4	1

utre / *ther*

8 Positions/*Positions* (QW-405)

osition(s) du joint / *osition(s) of Groove*: 1 - G

rogression du soudage / *elding Progression*: Montant / *Up* ☐ Descendant / *Down* ☐

utre / *ther*

9 Préchauffage/*Preheat* (QW-406)

empérature de préchauffage / *reheat Temperature*: 60°F

empérature de l'interpasse / *terpass Temperature*

utre / *ther*

10 Traitement thermique postsoudage/ *Postweld Heat Treatment* (QW-407)

Température / *Temperature*: aucun

Durée / *Time*

Autre / *Other*

11 Gaz/*Gas* (QW-408)

Composition du gaz de protection / *Shielding Gas Composition*: --

Débit du gaz / *Gas Flow Rate*

Composition du gaz de soutien / *Backing Gas Composition*

Débit du gaz / *Gas Flow Rate*

Autre / *Other*

12 Technique/*Technique* (QW-410)

Cordon droit ou oscillant / *String or Weave Bead*: droit

Oscillation / *Oscillation*

Passe unique ou multiple (par côté) / *Multipass or Single Pass (Per Side)*: multiple

Électrode unique ou multiple / *Single or Multiple Electrode*: unique

Autre / *Other*

13 Caractéristiques électriques et techniques/*Electrical Characteristics and Technique* (QW-409) + (QW-410)

Couche(s) de ure / Nel ir(s)	Procédé / *Process*	Métal d'apport / *Filler Metal* — Classification / *Classification*	Métal d'apport — Diamètre / *Diameter*	Courant / *Current* — Type / *Type*	Polarité / *Polarity*	Ampérage / *Amp*	Voltage / *Volt*	Vitesse / *Travel Speed*
ère	SMAW	E-6011	1/8	DC	Inversé	85	26-30	-
utres	SMAW	E-7018	1/8	DC	Inversé	105	26-30	-

(15) Essais à la traction/Tensile Tests

Eprouvette Specimen	Dimensions Largeur Width	Dimensions Epaisseur Thickness	Surface Area	Charge limite Ultimate Total Load	Contrainte limite Ultimate Unit Stress	Nature et endroit de la rupture Character and Location of Failure
(i) G-1	.781	.810	.6326	51800	81,884	matériel
G-6	.785	.829	.6508	54300	83,436	matériel

(16) Essais de pliage guidé/Guided Bend Tests — Référence:

Eprouvette Specimen	Face Face	Racine Root	Côté Side	Résultat Result	Eprouvette Specimen	Face Face	Racine Root	Côté Side	Résultat Result
(i) G-2		X		Accepté	(i) G-3	X			Accepté
(i) G-4		X		Accepté	(i) G-5	X			Accepté

(16) Essais de résilience/Toughness Tests — Référence:

Eprouvette Specimen	Endroit de l'entaille Notch Location	Forme de l'entaille Notch Type	Température de l'éprouvette Specimen Temperature	Énergie de rupture Impact Value	Expansion latérale Lateral Expansion: % cisaillement/shear	Expansion latérale Lateral Expansion: Millièmes Mills	Essai en chute libre Drop Weight: Cassé Break	Essai en chute libre Drop Weight: Non cassé No Break

(17) Essai de soudure d'angle/Fillet Weld Test — Référence:

Résultat satisfaisant Result-Satisfactory — Oui Yes ☐ Non No ☐

Pénétration dans métal adjacent Penetration into Parent Metal — Oui Yes ☐ Non No ☐

Résultats Macroscopiques Macro-Results

(18) Autres essais/Other Tests — Référence:

Reviewed and accepted by Construction Promec Inc. QC Manager
Date: March 29, 2007 Signed: [signature]
Jean-Guy Bisson, eng

(19) Nom du soudeur Welder's Name: Serge Gagné — Symbole Stamp No.: G

Essais effectués par Tests conducted by: Mequaltech — Essai de laboratoire No. Laboratory Test No.: 88-078

Nous certifions que les renseignements concernant ce résultat sont exacts et que les essais de soudage ont été préparés, soudés et exécutés conformément aux exigences de la section IX du Code ASME.

We certify that the statements in this record are correct and that the test welds were prepared, welded and tested in accordance with the requirements of section IX of the ASME Code.

(20) Signature du représentant de l'entreprise Company Representative's Signature: [signature] — Date Date: 15 janvier 1988

QC MINISTÈRE DU TRAVAIL ET DE LA MAIN-D'OEUVRE
APPROUVÉ
SELON LA LOI SUR LES APPAREILS SOUS PRESSION D.L.T.
VÉRIFIÉ PAR
DATE

Réservé au Ministère/Department Use Only 8814.6

Pièces soudées le Pieces Welded on: 14 janvier 88 — Inspecteur Inspector: Yvon Viau

Résultats vérifiés le Record Verified on: 880125 — Inspecteur Inspector: [signature]

Caractéristiques électriques et t niques/Electrical Characteristics and Tec ue (QW-409) + (QW-410)

Couche(s) de soudure / Weld Layer(s)	Procédé / Process	Métal d'apport / Filler Metal: Classification / Classification	Métal d'apport / Filler Metal: Diamètre / Diameter	Courant / Current: Type / Type	Courant / Current: Polarité / Polarity	Courant / Current: Gamme d'ampérage / Amp Range	Courant / Current: Gamme de voltage / Volt Range	Gamme de vitesse / Travel Speed Range
.e	SHAW	E6011	1" à 5"/32	DC	Inversé	75 - 85	26-30	--
tres	SHAW	E7018	1" à 5"/32	DC	Inversé	105 -110	26-30	--

sseur et type d'électrode de tungstène / gsten Electrode Size and Type	--
le de transfert du métal pour GMAW / le of Metal Transfer for GMAW	--
fon droit ou oscillant / g or Weave Bead	Droit et oscillant
:édé de gougeage arrière / nod of Back Gouging	Arc Air
oyage initial et entre les passes (brossage, meulage, etc.) / al and Interpass Cleaning (Brushing, Grinding, etc.)	Brossage ou meulage
nètre de la tuyère à gaz / ce or Gas Cup Size	--
illation / illation — Largeur / Width	-- — Fréquence / Frequency
ance entre tuyère & pièce / ta... to Work Distance	--
s... ou multiple (par côté) / tiple ... ingle Pass (per Side)	--
:trode unique ou multiple / ...iple or Single Electrode	--
nme de vitesse d'alimentation de l'électrode / ...trode Wire feed speed range	--
e / er	Pas de martelage

Autres commentaires/Supplementary Comments

INGÉNIEUR - ENGINEER
Jean-Guy Bisson
111343
QUÉBEC

Reviewed and accepted by Construction Promec Inc. QC Manager
Date: March 29, 2007 Signed: [signature]
Jean-Guy Bisson, eng

Signature du représentant de l'entreprise / Company Representative's Signature: [signature]

Date / Date: 15 janv. 88

(16)

QC MINISTÈRE DU TRAVAIL ET DE LA MAIN-D'OEUVRE
APPROUVÉ
SELON LA LOI ... APPAREILS SOUS PRESSION L.R.Q.
VÉRIFIÉ PAR .....
DATE 88.01.25

Réservé au ministère/Department use only

...é par [signature] Date: 88/1/22

...ro N°

Appendix A

ALL APPLICABLE ITRs & LOGs

Date de qualification	Qualification
2017-05-06	Soudage sur appareils sous pression Classe A Tuyaux 50 mm, catégorie 160-P1-6G, F3-F4

Emploi Québec

Certificat de qualification

Nom de famille
MASSICOTTE-ROY

Prénom
ALEXANDRE

Numéro de dossier
0000000176159

Délivré en vertu de la Loi sur la formation et la qualification professionnelles de la main-d'oeuvre (L.R.Q., chapitre F-5).

Délivré le
2017-05-06

Expire le
2019-05-06

X

Signature

Ministère du Travail, de l'Emploi et de la Solidarité sociale

001386104

1-1016 (04-2015)

ıte de qualification	Qualification
2015-11-18	Soudage sur appareils sous pression Classe A Tuyaux 50 mm, catégorie 160-P1-6G, F3-F4

034 (07-2009)

Plier ici

Détacher sur le pointillé

Plier ici

Emploi
Québec

Certificat de qualification

Nom de famille
FAUBERT

Prénom
STEVEN

Numéro de dossier
0000000125746

Délivré en vertu de la Loi sur la formation et la qualification professionnelles de la main-d'oeuvre (L.R.Q., chapitre F-5).

Délivré le
2015-11-18

Expire le
2017-11-18

X
Signature

Ministère du Travail, de l'Emploi et de la Solidarité sociale

001139657

Objet : Délivrance de votre certificat de qualification

Date de qualification	Qualification
2015-05-28	Soudage sur appareils sous pression Classe A Tuyaux 50 mm, catégorie 160-P1-6G, F3-F4

Emploi
Québec

Certificat de qualification

Nom de famille
MARTEL

Prénom
SYLVAIN

Numéro de dossier
0000000046942

Délivré en vertu de la Loi sur la formation et la qualification professionnelles de la main-d'oeuvre (L.R.Q., chapitre F-5).

Délivré le
2015-05-28

Expire le
2017-05-28

X Sylvain Martel
Signature

Ministère de l'Emploi et de la Solidarité sociale

001055843



Date de qualification	Qualification
2017-05-06	Soudage sur appareils sous pression Classe A Tuyaux 50 mm, catégorie 160-P1-6G, F3-F4

Détacher sur le pointillé

Emploi Québec

Certificat de qualification

Nom de famille
LEROUX

Prénom
STEPHANE

Numéro de dossier
0000000102229

Délivré en vertu de la Loi sur la formation et la qualification professionnelles de la main-d'oeuvre (L.R.Q., chapitre F-5).

Délivré le
2017-05-06

Expire le
2019-05-06

X
Signature

Ministère du Travail, de l'Emploi et de la Solidarité sociale

001386103

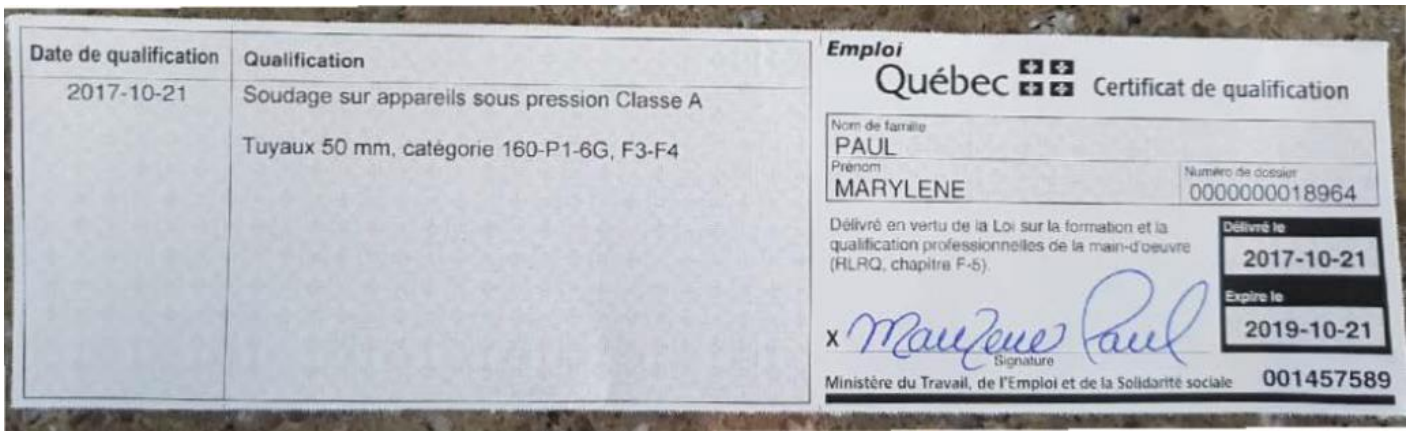

Date de qualification	Qualification
2017-10-21	Soudage sur appareils sous pression Classe A Tuyaux 50 mm, catégorie 160-P1-6G, F3-F4

Emploi Québec — Certificat de qualification

Nom de famille: PAUL

Prénom: MARYLENE

Numéro de dossier: 0000000018964

Délivré en vertu de la Loi sur la formation et la qualification professionnelles de la main-d'oeuvre (RLRQ, chapitre F-5).

Délivré le: 2017-10-21

Expire le: 2019-10-21

x Signature

Ministère du Travail, de l'Emploi et de la Solidarité sociale 001457589

Régie du bâtiment Québec — Appareils sous pression

ÉPREUVE DE SOUDEUR OU D'OPÉRATEUR
WELDER OR WELDING OPERATOR QUALIFICATION TEST

Entreprise / *Organisation*		**Désignation de la méthode / *Using WPS NO***	
Nom / *Name*: Groupe Promec inc.		DMS / *WPS*: P1 Révision 0	
Adresse / *Adresse*: 1300 rue Saguenay		Enregistrement provincial / *Provincial registration*	
Rouyn-Noranda, Québec	Code postal / Postal code: J9X 7C3	MS / *WP*: 8814.6	
Nom du soudeur ou opérateur / *Welder or welding operator's name*: Marc Caron		Symbole / *Stamp No*: 2C	

Variables / *Variables*		**Inscrire valeurs / *Record actual values***	**Gamme qualifiée / *Qualification range***
	Soudeur / Welder ☒ ou / or Opérateur / Operator ☐		SOUDEUR
	Procédé / *Process*: SMAW	Type: MANUEL	SMAW-MANUEL
QW-403 Métaux de base / *Base Metals*	Mat'l (P.-No):	P1À P1	P1ÀP15F, P34 À P49 ET TOUS MÉTAUX DE COMPOSITION CHIMIQUE
	Diamètre / *Diameter*:	2" SCH 160	1" DIA.EXT. MINIMUM ET PLUS
	Chanfrein / *Groove*: 0,344	Épaisseur / *Thickness*: 0,344	AUCUNE LIMITE
	Angle / *Fillet*:	Épaisseur / *Thickness*: ------	AUCUNE LIMITE
QW-408	Gaz de soutien / *Backing gas*: N/A	Type / *Type*: N/A	N/A
QW-409 C. Élect. / *Elec. C.*	Courant / *Current*: D.C.	Polarité / *Polarity*: INVERSÉE	TOUT COURANT ,TOUTE POLARITÉ
	Mode transfert / *Transfer mode* N/A		N/A
QW-404 Métaux d'apport	Classe / *Class (AWS)*: E-6011,E-7018	*Fno*: F3,F4	F4,F3,F2,F1
	Dépot soudure / *Weld deposit*: F3=0.125" F4=0.219"		F3=0.250" F4=0.438"
Filler métals	Nb. de couche / Nb layer: N/A		N/A
	Pièce insérée / *Insert*: N/A		N/A
QW-402 Joint	Soutien / *Backing*: F3 =NON F4=OUI		F3 SANS SOUTIEN,F4,F3,F2,F1=AVEC SOUTIENT
QW-405	Position: 6 G	Progression: MONTANTE	TOUTES POSITIONS MONTANTE
QW-360	Contrôle visuel direct ou à distance / *Direct or remote visual control*: N/A		N/A
	Contrôle de voltage automatique / *Automatic voltage control*: N/A		N/A
	Suiveur de joint automatique / *Automatic joint tracking*: N/A		N/A
	Passe unique ou multiple / *Single pass or multiple*: N/A		N/A

Résultats de pliage ou radiographie / *Guided bend or radiographic result*

Éprouvette / *Spécimen*	Pliage de côté / *Side bend*	Pliage transversal / *Transverse bend*	Pliage longitudinal / *Longitudinal bend*	Radiographie / *Radiographic*	Résultats / *Results*
2C				X	Accepté

Rev 01

Résultats examen visuel / *Visual examination results (QW-302.4)*: CT

Résultats de soudage d'angle: (voir verso) / *For fillet weld test result : (see over)*

Essais effectués par / *Test conducted by*: Mistras division Saguenay | Date / *Date*: 20 OCT. 2017 | Laboratoire-Essai N° / Laboratory-Test No: 17-27434-046

Nous certifions que les renseignements ci-dessus sont exacts et que les essais de soudage ont été préparés et exécutés conformément aux exigences de la section IX du Code ASME
We certify that the statements in this record are correct and the test weld were prepared, welded and tested in accordance with the requirements of Section IX of the ASME Code

Entreprise / *Organisation* | Signature | Date / *Date*: 17 OCT. 2017

Réservé à la Régie / *Board use only*

Pièces soudées le: 17 OCT. 2017 Inspecteur:	N°	Accepté: GG	N° facture:
Essais vérifiés le: 06 NOV. 2017 Inspecteur:		Refusé:	N° dossier:

807(2003-01)

AGNICO EAGLE

Vendor Document Status

1 ☐ Proceed to next submission and status.

2 ☐ Proceed with exceptions as noted to next submission and status.

3 ☐ Do not proceed.
Revise as noted and resubmit next submission and status.

4 ☑ Complete, no further submission required.

By: Jean-Francois Tremblay Date: 2017-05-02

Review and authorization to fabricate are only for general conformance with the design concept of the Project as expressed in the Contract Documents. Sole responsibility for the accuracy and completeness of this document, including but not limited to dimensions and quantities, remains with the Supplier/Contractor. Agnico Eagle does not warrant the accuracy or completeness of any of the information contained herein, nor does Agnico Eagle authorize or approve any construction means, methods, techniques, sequences or any safety precautions or procedures.

Agnico Eagle No. 6515-C-270-007-141-TES-0017 R: Sub001

DOCUMENT FOR INFORMATION

Agnico-Eagle Mines Ltd.
Inspection Deficiency Report

ITR Number : AEM-GE-ITR-005
Contract no. : C22466T / C22498E

NUQSANA PROMEC MINING

AGNICO EAGLE

Area:	CWP No:
Equipment Tag No:	Inspection Deficiency Report No:
Date:	Page_____ of _____
Reference Drawings:	
Reference Photos:	
Description of Deficiency:	
Suggested Solution:	
Engineering Contact Made: Yes ☐ No ☐	Name:
Course of Action:	
Engineering Follow-up Required: Yes ☐ No ☐	Date Required:

Promec's Representative Print Name		Client's Representative Print Name	
Promec's Representative Signature	Date	Client's Representative Signature	Date

6515-C-270-007

Fuel Tanks Piping Supply and Installation

Inspection Deficiency Log

Document Number : AEM-GE-LOG-004
Contract Number : C22466T / C22984E

Number	Description	Initiator	Dept.	Date	Contract No.		Progress Status
Deficiency-001						N/A	
Deficiency-002						N/A	
Deficiency-003						N/A	
Deficiency-004						N/A	
Deficiency-005						N/A	
Deficiency-006						N/A	
Deficiency-007						N/A	
Deficiency-008						N/A	
Deficiency-009						N/A	
Deficiency-010						N/A	
Deficiency-011						N/A	
Deficiency-012						N/A	
Deficiency-013						N/A	
Deficiency-014						N/A	
Deficiency-015						N/A	
Deficiency-016						N/A	
Deficiency-017						N/A	
Deficiency-018						N/A	
Deficiency-019						N/A	
Deficiency-020						N/A	
Deficiency-021						N/A	
Deficiency-022						N/A	
Deficiency-023						N/A	
Deficiency-024						N/A	
Deficiency-025						N/A	
Deficiency-026						N/A	
Deficiency-027						N/A	
Deficiency-028						N/A	
Deficiency-029						N/A	
Deficiency-030						N/A	
Deficiency-031						N/A	
Deficiency-032						N/A	
Deficiency-033						N/A	
Deficiency-034						N/A	
Deficiency-035						N/A	
Deficiency-036						N/A	
Deficiency-037						N/A	
Deficiency-038						N/A	
Deficiency-039						N/A	
Deficiency-040						N/A	

AGNICO EAGLE — Vendor Document Status

1 ☐ Proceed to next submission and status.

2 ☐ Proceed with exceptions as noted to next submission and status.

3 ☐ Do not proceed.
Revise as noted and resubmit next submission and status.

4 ☑ Complete, no further submission required.

By: JEAN-FRANCOIS TREMBLAY Date: 2017-05-16

Review and authorization to fabricate are only for general conformance with the design concept of the Project as expressed in the Contract Documents. Sole responsibility for the accuracy and completeness of this document, including but not limited to dimensions and quantities, remains with the Supplier/Contractor. Agnico Eagle does not warrant the accuracy or completeness of any of the information contained herein, nor does Agnico Eagle authorize or approve any construction means, methods, techniques, sequences or any safety precautions or procedures.

Agnico Eagle No. 6515-C-270-007-141-TES-0020 R: Sub001

DOCUMENT FOR INFORMATION

AIRMP.CA
Custom HVAC manufactured products

Inspection report – As built unit dimensions

Contract number : Amp 17-17 (PS2-403)
Client : Groupe promec inc.

CLIENT IDENTIFICATION:					
Monitored points	**C**	**NC**	**NN**	**Comments**	**Reference documents**
Validation of dimensions according to plans	☑	☐	☐		
					C : complying NC : non-complying NN : not-needed

Verified by : Karen Gendreau-Lacoste **Signature :** Karen G. lacoste **Date :** 8 juin 2017

Reviewd by : Richard Piquette, Operations director **Signature :** _____ **Date :** _____

AIRMP.CA
Custom HVAC manufactured products

Inspection report - General

Contract number : Amp17-17 (PS2-403) 1/2
Client : Groupe promec inc.

CLIENT IDENTIFICATION:

1. General look of the container

Points subject to monitoring	C	NC	NN	Comments	Reference dosumentation
1,1 State of the doores (joints, windows, etc.)	☑	☐	☐		
1,2 General structure state	☑	☐	☐		
1,3 Inside finnish	☑	☐	☐		
1,4 Sticker installation (Coils, units, etc.)	☐	☐	☑		
1,5 Cleanliness	☑	☐	☐		
1,6 Sealant joints	☑	☐	☐		

C : complying NC : non-complying NN : not-needed

2. OTHER INTEGRATED EQUIPMENTS & TESTS						
	Points subject to monitoring	**C**	**NC**	**NN**	**Comments**	**Reference dosumentation**
2,1	Insulation (Installation as per specification)	☑	☐	☐		
2,2	Vents and piping	☐	☐	☑		
2,3	Watertight containment and drains	☑	☐	☐		
2,4	Filters and framing (state, type, number, arrangements, etc.)	☐	☐	☑		
2,5	Lights, sockets, switches (type, number, etc.)	☐	☐	☑		
2,6	Instrumentation (pressure, flow, temperature, etc.)	☐	☐	☑		
2,7	The state and disposition of other components (burner, water seperator, special filters, humidifier, electrical coils, etc.)	☐	☐	☑		
2,8	Silencers, valves, air scrubbers, etc.	☐	☐	☑		
2,9	Detailed pictures	☑	☐	☐		
2,10	Nameplates	☑	☐	☐		
					C : complying NC : non-complying NN : not-needed	

Verified by : Karen Gendreau-Lacoste **Signature :** Karen G.Lacoste **Date :** 8 juin 2017

Reviewed by : Richard Piquette, Operations director **Signature :** _____ **Date :** _____

AGNICO EAGLE

Vendor Document Status

1 ☐ **Proceed to next submission and status.**

2 ☐ **Proceed with exceptions as noted to next submission and status.**

3 ☐ **Do not proceed.**
Revise as noted and resubmit next submission and status.

4 ☑ **Complete, no further submission required.**

By: Joël Morliere - WSP **Date:** 2017-06-28

Review and authorization to fabricate are only for general conformance with the design concept of the Project as expressed in the Contract Documents. Sole responsibility for the accuracy and completeness of this document, including but not limited to dimensions and quantities, remains with the Supplier/Contractor. Agnico Eagle does not warrant the accuracy or completeness of any of the information contained herein, nor does Agnico Eagle authorize or approve any construction means, methods, techniques, sequences or any safety precautions or procedures.

Agnico Eagle No. 6515-C-270-007-265-EDS-0035 **R:** Sub003

DOCUMENT FOR INFORMATION

wsp

DESSIN D'ATELIER
FICHE TECHNIQUE

L'apposition du présent visa ne constitue qu'une approbation administrative et une vérification de concordance avec les dessins d'ingénierie ou les devis et n'engage en aucune manière la responsabilité du signataire et du propriétaire de l'ouvrage quant à ce dessin d'atelier ou cette fiche technique dont l'entrepreneur est seul responsable.

☑ **Vu** ☐ **Corriger et resoumettre**

☐ **Refusé** ☐ **Faire corrections indiquées**

Il incombe à l'entrepreneur, au fournisseur et/ou au sous-traitant de confirmer et coordonner toutes quantités et dimensions, de choisir les procédés de fabrication et les techniques de construction, de coordonner son travail avec celui des autres corps de métier et d'exécuter tout travail de manière satisfaisante et sécuritaire.

Par: J. Morliere **Date:** 2017/06/28

Projet : 151-06440-40

AIRMP.CA
Manufacturier de produits CVAC sur mesure

750, rue Saguenay
Rouyn-Noranda (Québec) J9X 7B5

Téléphone : 819 797-1234
Télécopieur : 819 762 3801

PRE FABRICATED BUILDING

TECHNICAL SPECIFICATION



Equipment: **6515-403, Pumping station**

Date: June 13 **2017**

Client : **PROMEC**

Responsable: **Eric Poulin, piping Director**

Contract: **AMP17-17**

Revision : For fabrication

Submitted by : **Francis St-Pierre, Ing.**

Serial number : **AMP00380**

Table of Contents

1. General characteristics
2. Fabrication characteristics
3. Fabrication characteristics (continued)
4. General arrangement drawings

Manufacturier de produits CVAC sur mesure

Project : 6515-403, Pumping station
Client : Promec

Nomenclature

AMP -	PFB	2	320	E

BRAND

AMP- AIR MP

MODEL

PFB- PRE FABRICATED BUILDING

AHU- AIR HANDLING UNIT

INSTALLATION

1- INTERIOR

2- EXTERIOR

FT²

TYPE OF BUILDING

E- E-HOUSE

M- MECHANICAL ROOM

1. General characteristics

AIRMP.CA
Manufacturier de produits CVAC sur mesure

Project : 6515-403, Pumping station
Client : Promec

General characteristics

Type of unit

- ☐ Recirculation
- ☐ Cooling
- ☐ Filtration
- ☐ Heating
- ☒ Shelter
- ☐ Evacuation
- ☐ Air compensation

Emplacement

- ☐ Interior
- ☒ Exterior

Dimensions

	Length	Width	Height
Building (mm)	12154	2438	2591

Estimated weight: 11 000 kg

By others

- ☒ Support pilars
- ☒ On site assembly
- ☒ Electrical integration
- ☒ HVAC
- ☒ Lighting services

Notes :

Standard 40’ container

2. Fabrication characteristics

Manufacturier de produits CVAC sur mesure

Project : 6515-403, Pumping station
Client : Promec

Fabrication characteristics

Structure : 40 foot standard container

	Tôle				Gauge				Insulation		Thickness			R value
	AL	CP	GA	P	1/8	1	20	26	AI	TI	2"	4"	10"	
Interior finish	☐	☒	☐	☒	☐	☐	☐	☐	☐	☒	☐	☒	☐	26
Exterior finish	☐	☐	☐	☐	☐	☐	☐	☐	☐	☐	☐	☐	☐	--
Ceiling	☐	☒	☐	☒	☐	☐	☐	☐	☐	☒	☐	☒	☐	26
Roof	☐	☐	☐	☐	☐	☐	☐	☐	☐	☐	☐	☐	☐	--
Floor	☐	☐	☐	☐	☐	☐	☐	☐	☐	☒	☐	☒	☐	26

Finish

	Specification
Structural steel	Prep: Sandblast SSPC6 / Paint: Epoxy Barust 235, 8 to 12 mils dry
Exterior finish	Paint: Solvent clean SSPC1 / Polyurethane “Decthane 359” 2 to 3mils dry, Color: Slate Blue (QC 8260)
Inside finish	Galvanized grating on floor. Cement panels on walls.

AL:	ALuminum checker plate	CP:	Cement panel ½’’	GA:	Galv. sheet metal	P:	Plywood ¾’’
AI:	Acoustic insulation	TI:	Thermal insulation				

5/10/17 16:31:26

EMAIL PAGE COUVERTURE

==========

Société: Acier Leroux - Amos

5/10/17 16:31:26 Document Sommaire

Page couverture 1

Objet: MILL TEST CERTIFICATE

NO.COMMANDE :89337400

No.Bc Du Client :AIR-1822

City : ROUYN-NORANDA State/Province . QC

Séquence correspondant au(x) MTR imprimé(s):

Description item:	Coulée	MTR
1/8 X 1 19-4 CAILLEBOTIS GALV	LETTRE CONFORME	089026959

FISHER & LUDLOW
A NUCOR Company

CERTIFICAT DE CONFORMITÉ 2017

ACIER LEROUX
1331 Graham Bell
Boucherville, Qc
J4B 6A1

ATTN: Chantal Boisvert

A qui de droit,

Fisher & Ludlow certifie que le matériel utilisé pour la fourniture et/ou la fabrication du caillebotis soudé en acier, décrit ci-dessous, selon votre commande, est conforme à la norme de NAAMM MBG 531-00, NAAMM MBG 532-00.

DESCRIPTION	SPECIFICATION
Caillebotis et attaches	
Non peint, peint noir et galvanisé	ASTM -A1011/A1011M
Aluminium	ASTM -B221/B221M
Acier inoxydable	ASTM - A666
Planches de sécurité Grip Span & Shur Grip	
Pre-galvanise	(G90) - (ASTM - A653)
Aluminium	5052-H32 (ASTM-B209)
Acier inoxydable	(ASTM - A666)
Barreaux d'echelles et feuilles "Shur Step"	
H.R.P.O.	(ASTM - A569/A569M)
Alumnium	5052-H32 (ASTM-B209)
Acier inoxydable	(ASTM - A666)

Fisher & Ludlow Division Nucor
12450, Boul. Industriel Montreal, Pointe-aux-Trembles, Qc H1B 5M5
Tel: 514.640.5085 1.800.268.6277 *Télécopieur/Fax:* 514.640 1115

LEROUX

089026959

PermaBase[MD] BRAND

09 28 00/NGC

Cement Board Construction Guide







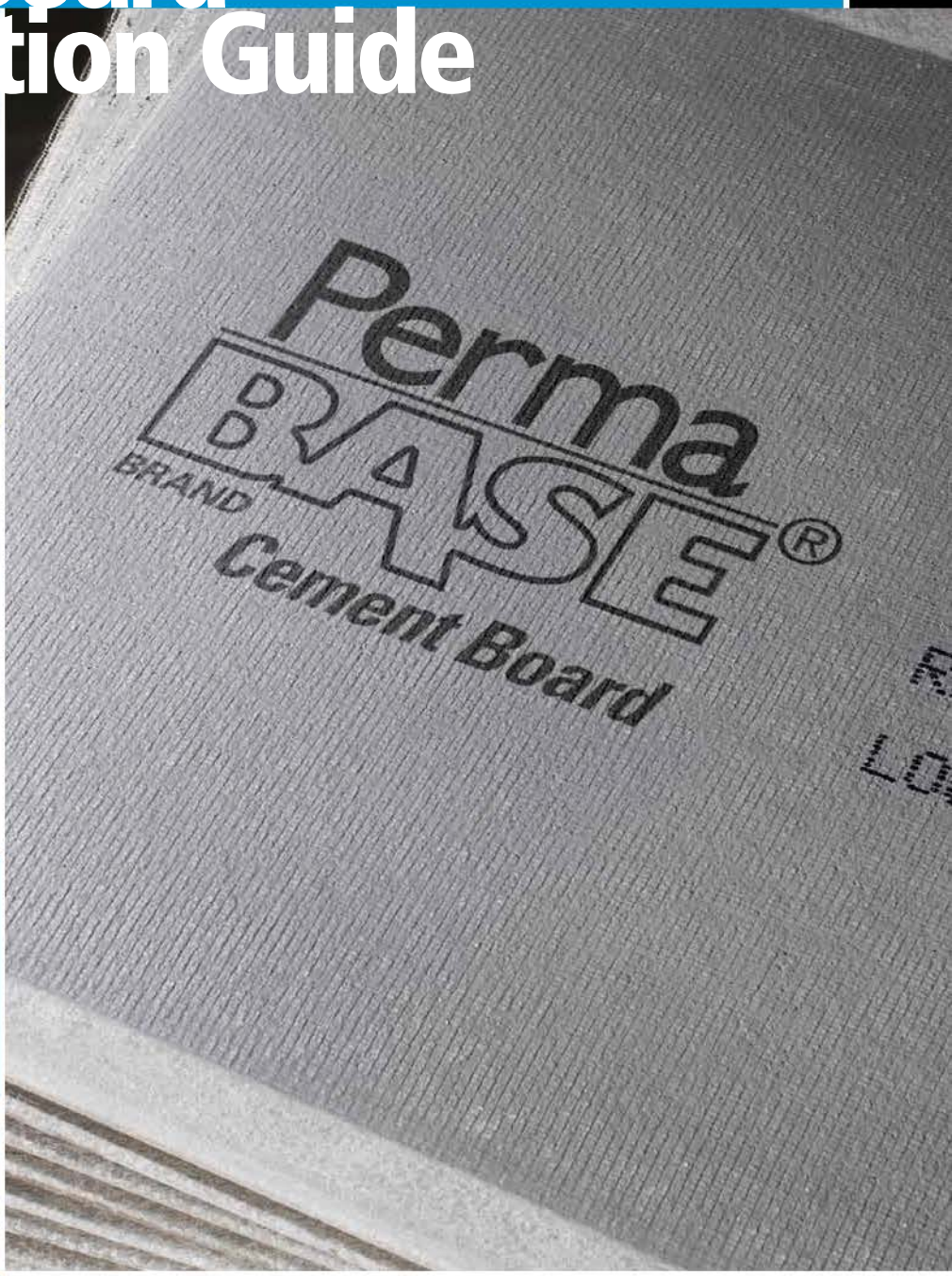

UNIFIX INC.

A Subsidiary Of National Gypsum Company

Helping You Build Better

Look Closer At The Best Cement Board Substrate

PermaBase[MD] Product Line At A Glance 4

Cement Board 6

PermaBase PLUS[MD] Cement Board 9

PermaBase UltraBacker[MD] Cement Board 10

PermaBase Flex[MD] Cement Board 11

How And Where 12

Interior Applications 12

Accessories 12

Exterior Applications 15

Ventilate Rainscreen Façade . 16

Cement Board Masonry Veneer Wall Systems (CBMV) 17

Heat Shield 18

Fire-Rated Assemblies 18

PermaBase Over Foundation Walls 19



With High-Quality Products And Resources

Founded in 1925, National Gypsum is one of the world's largest producers of quality building products. For nearly a century, customers like you have looked to us for the best products, service and technical support. With a focus on sustainability, we strive to bring you the finest in construction products, education and resources to meet and exceed your expectations.

With Design That Considers The Environment

Together, we can attain the highest level of ecological responsibility and resource-efficient technology. National Gypsum is committed to developing and implementing sustainable green building policies, standards and practices. Beyond offering products that can help contribute to healthier environments and have achieved GREENGUARD Certification for indoor air quality, we can help you meet the criteria for green programs and LEED credits.

GREENGUARD GOLD

PRODUCT CERTIFIED FOR LOW CHEMICAL EMISSIONS: UL.COM/GG UL 2818





With Technical Support You Can Count On

Great products are nothing without great customer service. For detailed technical information about product applications, installation requirements, code requirements or roof and wall assemblies, call 1-800-NATIONAL[MD]. Talk directly to a technical expert with up-to-date knowledge of products, specifications, building codes and more. Our technical experts can even review your plans and drawings and get back to you with answers to your questions within 48 hours.

Working Wherever Your Project Takes You



Choose From Four Types Of PermaBase[MD] BRAND Cement Board:

More Hard-Working Varieties With Qualities You Can Depend On

With four types of PermaBase[MD] BRAND Cement Board to choose from, you'll find a match for most any project. This durable substrate withstands prolonged exposure to moisture in both interior and exterior applications. Lightweight and easy to install, PermaBase promises to deliver for the long run – with the industry's best warranties. It is also GREENGUARD Certified for low-chemical emissions, which can contribute to healthier indoor environments.

Saving You Time And Money

These exclusive PermaBase features translate to cost savings for you:

EdgeTech[MD] Technology – This patented, reinforced edge allows fasteners to be installed closer to the board's edge and reduces damage from handling.

Polystyrene Beads – Embedded in the PermaBase core, these beads help to lighten the board's weight, improve the ease of cutting, and create lower water absorption, preventing the mortar/finish adhesive from drying prematurely.

Our PermaBase[MD] Product Family

1 PermaBase[MD] Cement Board

The original that set the industry standard.

2 PermaBase PLUS[MD] Cement Board

Weighs 25% less than other cement boards on the market.

3 PermaBase UltraBacker[MD] Cement Board

Provides excellent rigidity for special applications with the lowest water-absorption rate.

4 PermaBase Flex[MD] Cement Board

Very flexible yet strong, and ideal for use around archways, columns, stairwells – wherever an evenly curved surface is required.

APPLICATIONS

Product	Floors	Countertops	Walls	Ceilings	Exteriors
1/4" PermaBase	●	●	○	○	○
1/4" UltraBacker	●	●	○	○	○
7/16" PermaBase PLUS	●	●	●	●	●
PermaBase	●	●	●	●	●
PermaBase PLUS	●	●	●	●	●
PermaBase	●	●	●	●	●
PermaBase PLUS	●	●	●	●	●
PermaBase FLEX	○	○	●	●	●

Recommended:

Building In Strength And Quality

Reinforce With The Best Rigid Substrate: PermaBase[MD] BRAND Cement Board

PermaBase[MD] provides a durable surface designed to withstand prolonged exposure to moisture. Made with Portland cement, aggregate and fiberglass mesh, it works well as an underlayment for tub and shower surrounds, countertops, flooring and a variety of other interior and exterior applications. Lightweight and easy to install, our patented EdgeTech[MD] Technology allows a closer nail or screw application.

Quality To The Core



1. **Patented Reinforced Edge**
2. **Fiberglass Mesh**
3. **Cementitious Core**

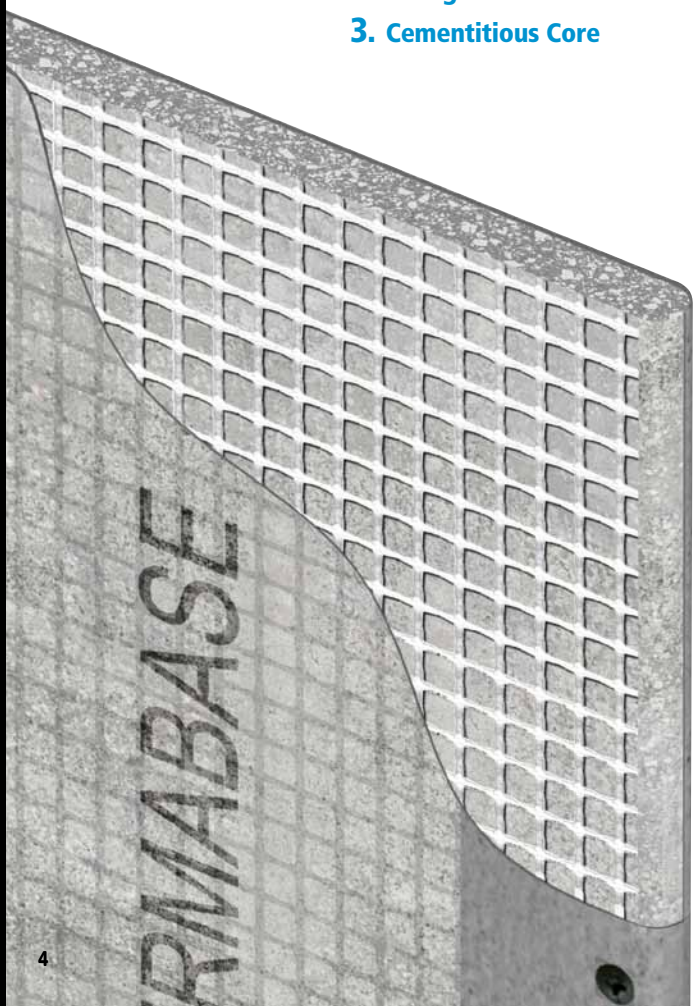



Resists Moisture Better

- Stays intact when exposed to water: will not rot, disintegrate or swell – built for the long run.
- Achieves the industry's lowest water-absorption rating (ASTM C473) – offering better installation.
- Helps inhibit mold growth with the highest possible score on mold tests (ASTM D3273 and ASTM G21).

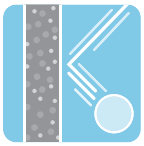

Stays Strong And Lasts Long

- Resists impact and remains dimensionally stable – extending the life of your project.
- Holds up to the toughest conditions.



Installs Quickly

- Lightweight and easy to cut – speeding up installation.
- Reduces jobsite waste – easier, cleaner cut.
- Patented EdgeTech[MD] Technology allows for a closer edge fastening and reduces damage from handling.



Works For Interior And Exterior Projects

– One Panel, Many Applications

- Adhere tile, stone or thin brick directly to PermaBase in exterior applications – saving time and money.
- Durable substrate for direct-applied coating systems.
- Meets UL & ULC classifications for one- and two-hour fire-rated assemblies.
- Building code approved – one substrate that does the job of many.



Offers Best In Class Warranty

- Lifetime Limited Warranty: Interior applications.
- 15-Year Limited Warranty: Exterior applications.





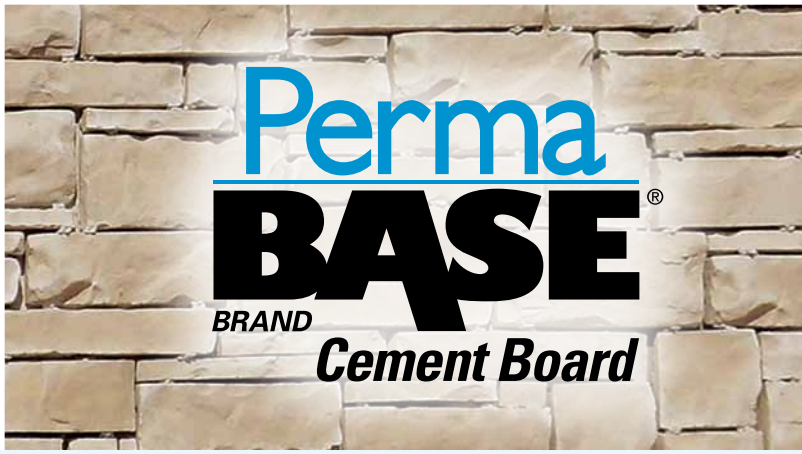

What Sets PermaBase[MD] Apart From The Rest?

Physical Feature Benefits	PermaBase Cement Board	Other Cement Boards	Fiber Cement Boards
Low Weight Glass Mesh Cement Board	✓	○	○
Reinforced Edge	✓	○	○
Fastens Near Edge With No Breakout	✓	○	○
Highest Damage Resistancy From Handling	✓	○	○
Cleanest To Score And Snap	✓	○	○
Lowest Water Absorption	✓	○	○
Meets 40 psf Rating Wind Load Test Results (Stud spacing 16" o.c.)	✓	○	○
Cuts With Utility Knife Vs. Power Tools	✓	✓	○
Standard Fasteners Countersink Into Board	✓	✓	○
Can Be Used In Both Residential And Commercial Steam Rooms And Saunas	✓	✓	○
Inorganic Vs. Organic Core	✓	✓	○
Lifetime Limited Warranty For Interior Use	✓	✓	○
15-Year Warranty For Exterior Use	✓	○	○

Product Feature: ✓

Expanding Your Project Horizon

Dream Up Your Designs – Interior And Exterior

Install Fast, Cut Costs And Improve Quality With PermaBase[MD] BRAND Cement Board

- Stays strong – manufactured from cement and fiberglass reinforcement.
-
-
-
- MD

  Technology allows fasteners to be installed closer to the board's reinforced edge and reduces damage from handling.
-
-





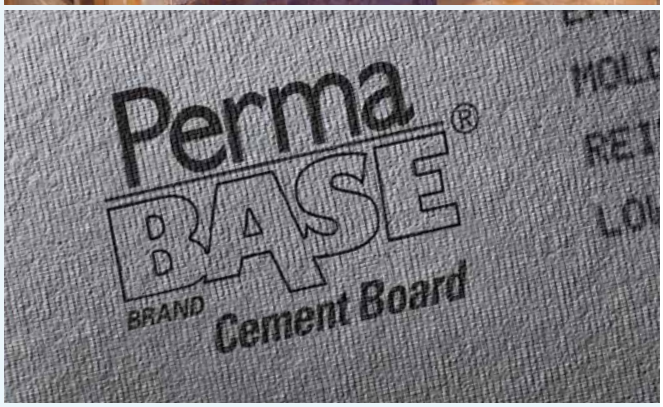

Interior Applications

PermaBase[MD] is a superior underlayment for many interior applications, including:

- **Kitchens**
  - Countertops
  - Backsplashes
- **Bathrooms**
  - Shower and tub enclosures
  - Garden and whirlpool tubs
  - Steamrooms and saunas
- **Special Additions**
  - Swimming pool and whirlpool decks and enclosures
- **Flooring**
  - For kitchens and bathrooms
  - For entryways and foyers
  - For laundry rooms
- **Walls**
  - For bathrooms
  - For accent walls
  - For fireplaces

Exterior Applications

PermaBase provides an excellent substrate for many in-demand exterior applications, including Cement Board Masonry Veneer Wall System (CBMV), Cement Board Stucco System (CBSS), Continuous Insulation (CI), and Exterior Insulation and Finish System (EIFS). PermaBase allows the combination of exterior finishes on one continuous wall sheathing, providing greater design flexibility.

- Commercial exteriors
- Residential exteriors
- Outdoor kitchens
- Decks



Cement Board Masonry Veneer Wall System (CBMV)

Combine the strength and durability of PermaBase with the popular beauty of stone and thin brick veneers. Use in residential and low-rise commercial applications.

Cement Board Masonry Veneer Wall System is designed to:

- Offer a complete, engineered solution for installation.
- Provide increased performance by utilizing polymer modified adhesive mortars (designed for hanging materials) vs. type S and N mortars (developed for stacking materials).
- Speed up your schedule – faster, easier and cleaner than traditional metal lath/scratch coat method.
- Offer the ability to incorporate an effective water-management system (type and placement of water barrier will vary based on local codes and/or warranties).

Designs you can achieve with this system:

- Use for a variety of building exteriors with manufactured or natural stone and thin brick veneers.

Note:

. For limitations, please see page 17 (Installation Guide).

Cement Board Stucco Wall System (CBSS)

Combine the strength and durability of PermaBase with the performance and aesthetics of reinforced base coats and textured finishes. Use in residential and low-rise commercial applications.

Cement Board Stucco Wall System is designed to:

- Provide increased impact and weather resistance (appropriate for all climates).
- Resist dirt, fading, cracking and peeling.
- Speed up your schedule – easier, cleaner installation than traditional stucco.
- Provide drainage system to help prevent water from penetrating behind cladding in frame construction.
- Comply with ASTM D226, protecting approved sheathings/ structural components and helping to evacuate incidental water.

Designs you can achieve with this system:

- Attachment of special pre-molded shapes.
- Variety of finishes – many texture and color options.

Note:

.

See page 17 (Installation Guide).



More Reasons PermaBase Is Excellent For Exterior Applications

- **Allows multiple finishes on one substrate.**
- **Saves time and labor when compared with field-applied metal lath, brown and scratch coat installations.**
- **Works rain or shine – less affected by jobsite weather conditions.**
- **Scores and snaps for quick installation.**
- **Qualifies for multiple-year system warranties.**



PHYSICAL PROPERTIES

Property Method	Test	1/4"	7/16" PLUS	1/2"	5/8"
Water Absorption % By Weight/24 Hours	ASTM C473	<8	10	<8	<8
Flexural Strength (psi)	ASTM C47	>1750	750	750	>1000
Fastener Holding (Wet And Dry, lbs.) (0.400" head diameter)	ASTM D1037	>85	>90	>90	>90
Weight (psf)	ASTM C473	1.8	2.1	2.9	3.65
Freeze/Thaw (Cycles) Per ASTM C666 Procedure B	ASTM C666	100	100	100	100
Flame Spread/Smoke Developed	ASTM E84 CAN/ULC-S102	0/0	0/0	0/0	0/0
Compressive Strength (psi) (Indentation)	ASTM D2394	N/A	N/A	1250	1250
Wind Load (psf, Studs 16" o.c.)	ASTM E330	N/A	30	40	40
Thermal "R"/k Value	Property of Material	0.2/2.7	0.28/2.7	0.37/2.7	0.47/.2.7
Bending Radius (ft.)	Property of Material	N/A	5	5	5
Falling Ball Impact (12" Drop)	ASTM D1037	Pass	Pass	Pass	Pass
Linear Variation (Due to change in moisture content)	ASTM D1037	<0.07%	0.05%	0.05%	0.05%
Fungus Resistance	ASTM G21	(No growth)	(No growth)	(No growth)	(No growth)
Mold Growth On Surface	ASTM D3273*	10	10	10	10

*When tested by an independent laboratory per ASTM D3273 ("Standard Test Method for Resistance to Growth of Mold on the Surface of Interior Coatings in an Environmental Chamber"), PermaBase achieved a panel score of 10, the highest score possible, indicating no mold growth under the laboratory test conditions. The use of PermaBase in actual installations may not produce the same results as were achieved in controlled laboratory conditions. No material can be considered "mold proof," nor is it certain that any material will resist mold indefinitely.

SIZES AND PACKAGING

Size: Thickness, Width And Length	# Of Pcs Per Unit
PermaBase Cement Board	
1/2" x 32" x 5' (12.7 mm x 813 mm x 1524 mm)	50
1/2" x 32" x 8' (12.7 mm x 813 mm x 2438 mm)	30
1/2" x 36" x 4' (12.7 mm x 914 mm x 1219 mm)	50*
1/2" x 36" x 5' (12.7 mm x 914 mm x 1524 mm)	50
1/2" x 36" x 6' (12.7 mm x 914 mm x 1829 mm)	50*
1/2" x 36" x 8' (12.7 mm x 914 mm x 2438 mm)	30
1/2" x 48" x 8' (12.7 mm x 1219 mm x 2438 mm)	30
5/8" x 36" x 5' (15.9 mm x 914 mm x 1524 mm)	40
5/8" x 48" x 8' (15.9 mm x 1219 mm x 2438 mm)	24
3/8" x 48" x 8' (9.5 mm x 1219 mm x 2438 mm)	40*
3/4" x 48" x 8' (19.0 mm x 1219 mm x 2438 mm)	20*
PermaBase Underlayment	
1/4" x 48" x 4' (6.4 mm x 1219 mm x 1219 mm)	60
1/4" x 36" x 5' (6.4 mm x 914 mm x 1524 mm)	60

* Special Order

For installation instructions and accessories, see page 12.

Lighter, Faster And Easier

When You Want The Best Lightweight Rigid Substrate: PermaBase BRAND PLUS Cement Board

This board has the same exceptional qualities built into PermaBase Cement Board but weighs 25% less. When you need to lighten your load, consider PermaBase PLUS for all interior and exterior applications.



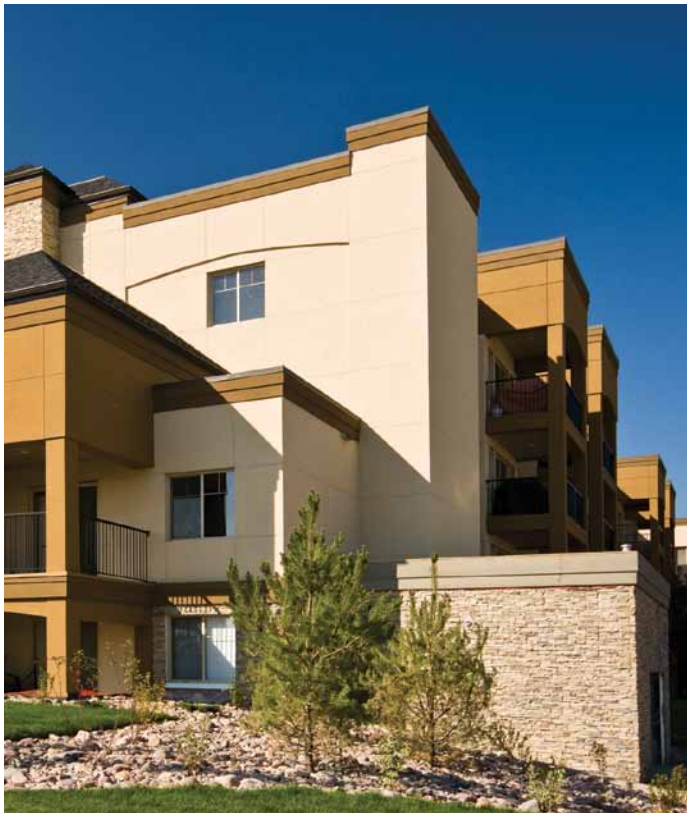

Resists Moisture Better

- Stays intact when exposed to water: will not rot, disintegrate or swell – built for the long run.
- Achieves the industry's lowest water-absorption rating (ASTM C473) – offering better installation.
- Helps inhibit mold growth with the highest possible score on mold tests (ASTM D3273 and ASTM G21).

Stays Strong And Lasts Long

- Resists impact and remains dimensionally stable – extending the life of your project.
- Holds up to the toughest conditions.

Installs Fast And Easy

- Lightweight and easy to cut – speeding up installation.
- Reduces jobsite waste – easier, cleaner cut.
- Patented EdgeTech[MD] Technology allows for a closer edge fastening and reduces damage from handling.

Works For Interior And Exterior Projects

– One Panel, Many Applications

- Great for all interior applications, as well as exterior decks and outdoor kitchens.
- Meets UL & ULC classifications for one- and two-hour fire-rated assemblies.
- Building code approved – one substrate that does the job of many.
- Adhere tile, stone or thin brick directly to PermaBase PLUS in exterior applications – saving time and money.
- Durable substrate for direct-applied coating systems.

Offers Best In Class Warranty

- Lifetime Limited Warranty: Interior applications.
- 15-Year Limited Warranty: Exterior applications.

PermaBASE BRAND PLUS® Cement Board

SIZES AND PACKAGING

Size: Thickness, Width And Length	# Of Pcs Per Unit
7/16" x 36" x 5' (11.1 mm x 914 mm x 1,524 mm)	60
1/2" x 48" x 8' (12.7 mm x 1,219 mm x 2,438 mm)	40
5/8" x 48" x 8' (15.9 mm x 1,219 mm x 2,438 mm)	32

For installation instructions and accessories, see page 12.

PermaBase BRAND UltraBacker Cement Board

Smoother, Stronger, More Stable

When You Want The Best Rigid 1/4-Inch Underlayment That Buys You More Open Time: PermaBase BRAND UltraBacker Cement Board

UltraBacker features a smooth mesh and mat surface. The 1/4-inch thickness eliminates the need to modify adjacent thresholds when abutting it to carpet, hardwood and other common flooring materials.

Resists Moisture Better Than Any Other Cement Board

- Features the *lowest water-absorption rating of <8%* (ASTM C473) – offering better installation.
- Stays intact when exposed to water: will not rot, disintegrate or swell – built for the long run.
- Helps inhibit mold growth with the highest possible score on mold tests (ASTM D3273 and ASTM G21).

Stays Strong And Lasts Long

- Resists impact and remains dimensionally stable – extending the life of your project.
- Holds up to the toughest conditions.
- 30% stronger and four times more rigid than competitive 1/4-inch cement board.

Installs Fast And Easy

- Can be applied over new or existing countertops or as a flooring underlayment – pre-manufactured panels save you time.
- Reduces jobsite waste – easier, cleaner cut.
- Patented EdgeTech[MD] Technology allows for a closer edge fastening and reduces damage from handling.

Offers Best In Class Warranty

- Lifetime Limited Warranty: Interior applications.

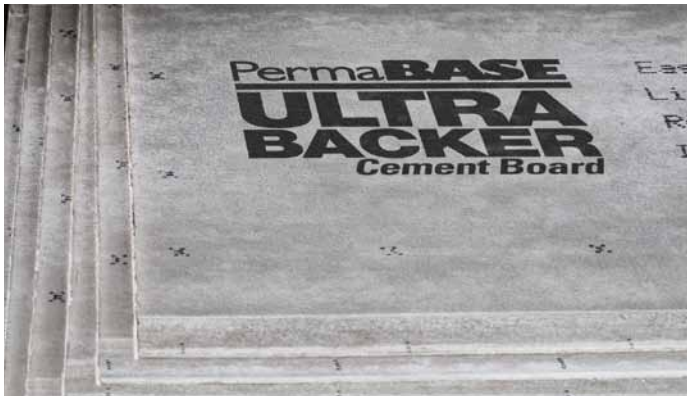



PermaBASE BRAND ULTRA BACKER Cement Board

SIZES AND PACKAGING	
Size: Thickness, Width And Length	**# Of Pcs Per Unit**
1/4" x 36" x 5' (6.4 mm x 914 mm x 1524 mm)	60

For installation instructions and accessories, see page 12.

Easy To Bend, Yet Stays Strong

When You Want The Best Substrate That Bends Like No Other: PermaBase[MD] BRAND Flex Cement Board

This very flexible PermaBase substrate is ideal to use around archways, columns, beams, or anywhere you need an evenly curved surface. Consider this also for radius shower walls, tub step-ups and stair construction – the possibilities are almost endless.



Resists Moisture Better

- Stays intact when exposed to water: will not rot, disintegrate or swell – built for the long run.
- Achieves the industry's lowest water-absorption rating (ASTM C473) – offering better installation.
- Helps inhibit mold growth with the highest possible score on mold tests (ASTM D3273 and ASTM G21).



Stays Strong Yet Flexes Like No Other Cement Board

- Holds up to the toughest conditions yet bends like no other.
- Resists impact and remains dimensionally stable – extending the life of your project.



Installs Fast And Easy

- Pre-manufactured panels save you time.
- Bends easily – 6" radius at 90°.
- Reduces jobsite waste – easier, cleaner cut.



Offers Best In Class Warranty

- Lifetime Limited Warranty: Interior applications.
- 15-Year Limited Warranty: Exterior applications.

Installation

.c. (See page 12 for more information.)

- For convex surfaces, PermaBase Flex must be applied with the rough surface and tapered edges exposed.
- For concave surfaces, PermaBase Flex must be applied with the smooth surface exposed.
- PermaBase Flex Cement Board should not be used for fire-rated assemblies.
- Maximum framing spacing should not exceed 8"o.c.
- Maximum fastener spacing should not exceed 8"o.c. for wall and 6"o.c. for ceiling applications.





PermaBASE BRAND FLEX® Cement Board

SIZES AND PACKAGING

Size: Thickness, Width and Length	# Of Pcs Per Unit
1/2" x 36" x 6' (12.7 mm x 914 mm x 1829 mm)	25
1/2" x 48" x 8' (12.7 mm x 1219 mm x 2438 mm)*	30

* Special Order

For installation instructions and accessories, see page 12.

Installation Guide

Interior Applications

An ideal substrate for interior applications, such as:

- Shower and tub enclosures
- Garden/whirlpool tubs
- Countertops
- Backsplashes
- Steamrooms and saunas
- Swimming pool and whirlpool decks and enclosures
- Floor underlayment
  - Entryways
  - Kitchens
  - Bathrooms
  - Foyers
  - Laundry rooms

Installation

General: All framing should comply with local building code requirements and be designed to provide support with a maximum allowable deflection of L/360 under all intended loads. Framing members should be spaced a maximum of 16" o.c.

Cut or score PermaBase on printed side of panel. Use a straightedge and pencil to mark line. Use utility knife to score/cut the glass mesh. Snap the board and cut through the now visible glass mesh on the other side. Install tile and tile setting materials in accordance with current ANSI specifications and Tile Council of North America (TCNA) guidelines.

Control Joints: For interior installations, allow a maximum of 30 lineal feet between control joints. A control joint must be installed but not limited to the following locations: where expansion joints occur in the framing or building (discontinue all cross furring members located behind joint); when boards abut dissimilar materials; where framing material changes; at changes of building shape or structural system; at each story separation. Place control joints at corners of window and door openings, or follow specifications of architect. Control joint cavity shall not be filled with coating or other materials.



Walls And Ceilings

Provide additional blocking when necessary to permit proper PermaBase attachment.

Do not install PermaBase directly over protrusions from stud plane, such as heavy brackets and fastener heads. Studs above a shower floor should either be notched or

Installation Accessories

For a seamless installation, we recommend PermaBase[MD] Tape and PermaBase[MD] Screws.



Fasteners

PermaBase corrosion resistant screws or equivalent, 1-1/4" or 2" long, for use with wood framing. Type S-12 screws or equivalent, 1-1/4" or 1-5/8" long, for use with 20 gauge or heavier steel framing.

Galvanized roofing nails, 1-1/2" long with hot dipped galvanized coating for use with wood framing. Nails should meet Federal Specification #FF-N105B/type 2 style 20.

Joint Reinforcement

PermaBase mesh tape must be used on all edges and cuts made to size. Use 2" wide polymer-coated (alkali resistant) mesh tape for interior applications and 3" wide polymer-coated (alkali resistant) mesh tape for exterior applications.

Bonding Materials

Treat joint and set facing material, preferably with latex-Portland cement mortar or with dry-set (thin-set) mortar. All mortars should comply with ANSI A118.1, A118.4 or A118.15 standards. Type 1 organic adhesive meeting ANSI A-136.1 may be utilized for interior use only.

furred to accommodate the thickness of the waterproof membrane or pan. The surround opening for a tub or precast shower receptor should not be more than 1/4" longer than unit to be installed.

Ceiling Framing: The deflection of the complete ceiling assembly due to dead load (including insulation, PermaBase, bonding material and facing material) should not exceed L/360. The dead load applied to the ceiling frame should not exceed 10 psf. Ceiling joist or furring channel should not exceed 16" o.c. (Edges of PermaBase parallel to framing should be continuously supported.) Provide additional blocking when necessary to permit proper PermaBase attachment.

PermaBase Cement Board: Apply PermaBase with ends and edges closely butted but not forced together. Stagger ends joints in successive courses. Drive fasteners into field of cement board first, working toward ends and edges. Space fasteners maximum 8" o.c. for walls, 6" o.c. for ceilings with perimeter fasteners at least 3/8" and less than 5/8" from ends and edges. Ensure PermaBase is tight to framing.

Fasteners must be installed into framing members. Select proper fastener type and length for the application.

Joint Reinforcement: Trowel bonding material to completely fill the tapered recessed board joints and gaps between each panel. On non-tapered joints apply a 6" wide, approx. 1/16" thick coat of bonding material over entire joint. For all joints, immediately embed 2" alkali resistant fiberglass mesh tape fully into applied bonding material and allow it to cure. For outside corners, 3" wide mesh tape is recommended. Same bonding material should be applied to corners, control joints, trims and other accessories. Feather bonding material over fasteners to fully conceal.

Divider Wall Installation



1. **PermaBase Cement Board**
2. **Membrane**
3. **Latex-Portland Cement Mortar**
4. **Alkali-Resistant Mesh Tape**

Shower Installation



1. **Support Framing 1/4" / 12" slope toward drain**
2. **Plywood, Min. 1/2"**
3. **PermaBase[MD] Cement Board**
4. **Membrane**
5. **Latex-Portland Cement Mortar**
6. **Alkali-Resistant Mesh Tape**
7. **Sealant**
8. **Tile and Grout**

Floors And Counters

.c. floor joists, 5/8" tongue and groove exterior grade plywood or 3/4" tongue and groove exterior grade OSB may be used. For 19.2" o.c. and 24" o.c. floor joists, 3/4" tongue and groove exterior grade plywood or OSB must be used. Tile size for floors with 24" o.c. floor joists must be 12" x 12" or larger. The joist and subfloor assembly must meet L/360 as well as the appropriate code tables for live and dead loads.

Underlayment: Using a 1/4" square-notched trowel, apply a setting bed of polymer-modified mortar (or thin-set mortar) to the subfloor or counter base. Immediately laminate PermaBase to subfloor or base leaving a 1/8" space between boards at all joints and corners. Leave a 1/4" gap along walls. Stagger all joints so that they do not line up with underlying substrate joints. Fasten PermaBase every 8" o.c. throughout board field and around all edges while setting bed mortar is still workable. Around perimeter of each board, locate fasteners 2" from corners and not less than 3/8" from the edges. Fill all joints solid with bonding material. On non-tapered joints such as butt ends, apply a 6" wide, 1/16" thick coat over the entire joint. For all joints, immediately embed 2" fiberglass mesh tape fully into applied bonding material; ensure that tape is centered over joint. Apply bonding material over fasteners to fully conceal. Remove all excess bonding material and allow to cure.

Limitations

- Joints should be treated with alkali resistant fiberglass mesh tape set in a polymer modified mortar.
- Conventional paper drywall tape, joint compound and drywall nails or screws should not be used.
- Maximum wall framing spacing should not exceed 16" o.c. and must be designed to limit deflection to L/360 under all live and dead loads.
- Steel framing must be 20 gauge (galvanized) or heavier – 16" o.c.
- 1/4" PermaBase and 1/4" UltraBacker should not be used on walls or ceilings.
- PermaBase is not a water barrier. Consult local building code for moisture barrier requirements.
- Not recommended for use with vinyl flooring or carpets.
- For exterior and interior finishes applied directly to PermaBase, reinforcing mesh must be embedded in basecoat. Consult finish manufacturer for additional requirements.
- PermaBase should not be exposed to temperatures over 220°F (105°C).
- PermaBase is not a nailing base for other finishes.

Countertop Installation



1. **Plywood**
2. **Latex-Portland Cement Mortar**
3. **PermaBase[MD] Cement Board**
4. **Fiberglass Mesh Tape (Alkali-Resistant) Embedded in Mortar**
5. **Latex-Portland Cement Mortar**
6. **Tile and Grout**

Floor Underlayment

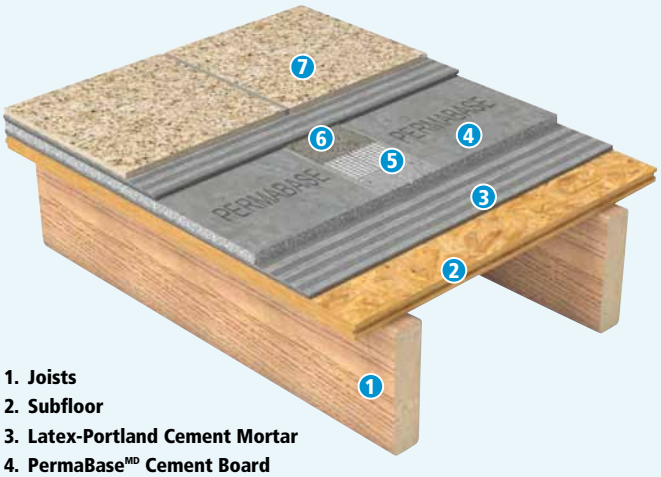

1. **Joists**
2. **Subfloor**
3. **Latex-Portland Cement Mortar**
4. **PermaBase[MD] Cement Board**
5. **Fiberglass Mesh Tape (Alkali-Resistant)**
6. **Latex-Portland Cement Mortar**
7. **Tile**

Exterior Applications

An ideal substrate for exterior applications such as:

- Tile applications
- Stucco applications
- Cement board stucco
- Thin brick
- Adhered stone veneer
- Thin porcelain tile
- Ventilated rainscreen facade
- EIFS
- Soffit panels
- Sheathing panels
- Outdoor kitchens/grills

Installation

General: All framing should comply with local building code requirements and be designed to provide support with a maximum allowable deflection of L/360 under all intended live including wind) and dead loads.

Some applications may require stricter deflection requirements. Consult finish manufacturer for recommendations.

Note:

.

Control Joints: For exterior installations, allow a maximum of 16 lineal feet between control joints. Consult finish manufacturer for other requirements. For exterior tile applications, control joints should be spaced a maximum of every 12'. A control joint must be installed but not limited to the following locations: where expansion joints occur in the framing or building (discontinue all cross furring members located behind joint); when boards abut dissimilar materials; where framing material changes; at changes of building shape or structural system; at each story separation. Place control joints at corners of window and door openings, or follow specifications of architect. Control joint cavity shall not be filled with coating or other materials.

.c. Edges/ ends of PermaBase parallel to framing should be continuously supported. Provide additional blocking when necessary to permit proper PermaBase attachment. Do not install PermaBase directly over protrusions from stud plane such as heavy brackets or fastener heads.

Ceiling Framing: The deflection of the complete ceiling assembly due to dead load (including insulation, PermaBase, bonding material and facing material) should not exceed L/360. The dead load applied to the ceiling frame should not exceed 10 psf. Ceiling joist or furring channel should not exceed 16" o.c. (Edges of PermaBase parallel to framing should be continuously supported.) Provide additional blocking when necessary to permit proper PermaBase attachment.

Water Barrier: While PermaBase is unaffected by moisture, a Water/Air Resistive Barrier (WRB) must be installed to protect the cavity. The type and specific placement or location of the water barrier will vary based on local building codes and/or manufacturers warranties. Consult the WRB manufacturer's recommendations for specific installation guidelines.

PermaBase Cement Board: Apply PermaBase with ends and edges closely butted but not forced together. Stagger end joints in successive courses. Drive fasteners into field of cement board first, working toward ends and edges. Space fasteners maximum 8" o.c. for walls, 6" o.c. for ceilings with perimeter fasteners at least 3/8" and less than 5/8" from ends and edges.

Joint Reinforcement: Trowel bonding material to completely fill the tapered recessed board joints and gaps between each panel. On non-tapered joints apply a 6" wide, approximately 1/16" thick coat of bonding material over entire joint. For all joints, immediately embed 3" alkali resistant fiberglass mesh tape fully into applied bonding material and





allow to cure. Same bonding material should be applied to corners, control joints, trims or other accessories. Feather bonding material over fasteners to fully conceal.

Decks

.c. Subfloor should be sloped at a minimum pitch of 1/4" per foot. The floor surface should be true to plane within 1/8" in 10'.

Underlayment: Using a 1/4" square-notched trowel, apply a setting bed of Latex-Portland cement mortar to the subfloor. Immediately laminate PermaBase to subfloor leaving a 1/8" space between boards at all joints and corners. Leave a 1/4" gap along walls. Stagger joints so they do not line up with underlying substrate joints. Fasten PermaBase every 8" o.c. throughout board field and around all edges while setting bed mortar is still workable. Around perimeter of each board, locate fasteners 2" from the corners and not less than 3/8" from the edges. Fill all joints solid with bonding material. On non-tapered joints such as butt ends, apply a 6" wide, 1/16" thick coat over the entire joint. For all joints, embed alkali-resistant fiberglass mesh tape fully into applied bonding material; ensure that tape is centered over joint. Apply bonding material over fasteners to fully conceal. Remove all excess bonding material and allow it to cure.

Waterproof Membrane: Trowel apply waterproof membrane to the entire surface of the cement board, following membrane manufacturer's installation instructions in detail.

Water-Managed, High-Impact Resistant Wall System

Cement Board Ventilated Rainscreen Façade System

Description

The Cement Board Ventilated Rainscreen Facade System is a water managed exterior cladding wall system designed to provide increased high impact and weather resistance and improved dimensional stability.

The Cement Board Ventilated Rainscreen Facade System combines the strength and durability of PermaBase Cement Board with the performance and beauty of reinforced base coats and textured finishes. It includes specific components such as wood or metal furring, latex-modified Portland cement base coat, glass fiber mesh, trims, primer and acrylic textured finish coat. It provides unequaled protection against water penetration and weathering.

The Cement Board Ventilated Rainscreen Facade System allows you to enclose and finish a project in as little as two days, speeding occupancy. It has already been satisfactorily used for over 25 years on thousands and thousands of square meters of exterior walls.

Uses

For all your exterior walls needing high-impact and weather resistance in commercial, institutional and residential applications.

Advantages

Durability/Strength: PermaBase Cement Board provides an exceptionally hard, durable surface that is able to withstand prolonged exposure to moisture and has a proven durability in cold climates.

PermaBase offers a competitive advantage over similar products on the market with its patented EdgeTech[MD] technology. The tapered, reinforced edge design allows for closer nail or screw application to the edge.

Weather Resistance: Acrylic finishes repel weather at the system's surface.

Water-Managed Design: The water-managed design of the system provides positive drainage directly behind the cladding, enabling the escape of incidental water that might enter around or through window or door openings and penetrate behind the cladding in frame construction. It also provides air pressure equilibrium, minimizing the chances of water being driven into the wall cavity by incidental building envelope pressure differential.

Design Options: Cement Board Stucco provides the popular stucco look, including the attachment of special pre-molded shapes and a wide variety of finish texture and color options in standard colors and custom colors.

Contact exterior coatings manufacturer for color and installation instructions.

Some exterior wall assemblies including the PermaBase boards were tested according to CAN/ULC-S101. Consult ULC's online directories for details.

Limitations

- Boards shall never be fastened directly on studs.
- Thin veneer construction will tend to reveal planar irregularities in the frame construction.
- Minor cracking at joints might become visible in the finished exterior surface.
- For exterior finishes applied direct to PermaBase, reinforcing mesh must be embedded in basecoat. Consult Unifix's website to get the latest exterior cladding system complete architectural specifications and for detailed installation instructions.
- The cavity between the PermaBase Cement Board and the intermediate sheathing or the insulation board must allow for venting to the exterior, at the bottom and at the top of the wall, in order to provide efficient water drainage and humidity management.

Residential Ventilated Rain Screen Installation

1. Sheathing
2. Weather Resistant Barrier
3. Furring Strip
4. PermaBase[MD] Cement Board
5. Mesh Tape
6. Basecoat
7. Basecoat
8. Mesh
9. Basecoat
10. Primer
11. Finish Coat
12. Flashing Tape
13. Weep Screed

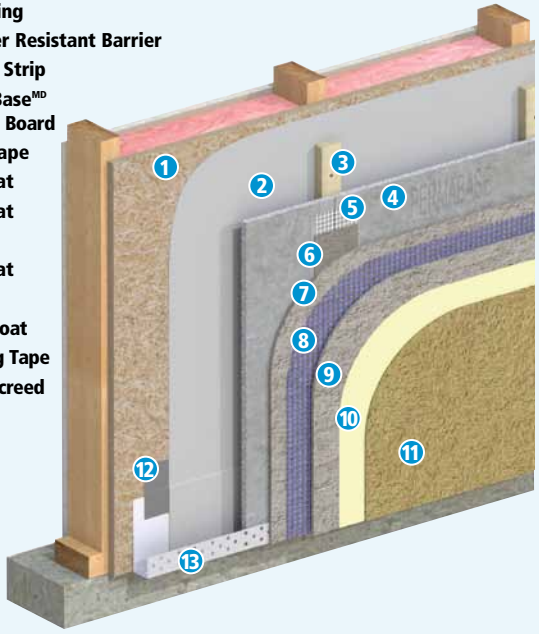

Commercial Ventilated Rain Screen Installation

1. Exterior Gypsum Sheathing
2. Weather Resistant Barrier
3. Insulation
4. Furring
5. PermaBase[MD] Cement Board
6. Mesh Tape
7. Basecoat
8. Basecoat
9. Mesh
10. Basecoat
11. Primer
12. Finish Coat
13. Flashing Tape
14. Weep Screed

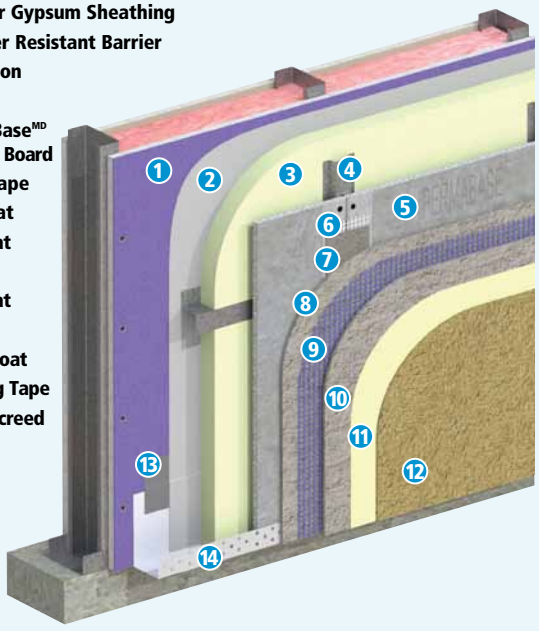

Cement Board Masonry Veneer Wall System (CBMV)

PermaBase as a component of CBMV Systems

The use of adhered manufactured stone and thin brick masonry veneers is increasing in popularity. Cement Board Masonry Veneer Wall Systems (CBMV) have been designed to offer complete, engineered solutions for the installation of manufactured and natural stone masonry veneer, as well as thin brick veneers.

These systems have been developed and are marketed by various manufacturers of the adhering materials used to install them as well as the veneer manufacturers themselves. CBMV Systems offer increased performance by utilizing polymer modified adhesive mortars which have been designed for hanging materials versus type S and N mortars that were primarily designed for stacking materials. In some cases these systems offer warranties.

Several of these systems call for the use of an ASTM C1325 cement board. In addition to meeting this requirement, the features and benefits of PermaBase Cement Board make it an ideal component for use in these systems.

Advantages

Durability/Strength: PermaBase Cement Board provides an exceptionally hard, durable surface that is able to withstand prolonged exposure to moisture and has a proven durability in cold climates.

Consistency: PermaBase is produced in a factory controlled environment which provides for a consistent product produced within tighter tolerances than can be achieved with field fabricated substrates.

Cutting and Handling: PermaBase is produced with its patented EdgeTech technology. The tapered, reinforced edge design allows for fastening of nails or screws closer to the edge without crumbling or spinout. The homogeneous core provides a very clean score and snap using a standard drywall knife.

Low Water Absorption: PermaBase has the lowest water absorption of any cement board which provides greater open time and increased workability of the adhering materials used in the application of veneer products.

Limitations

The system shall be engineered to withstand all applicable loads, including live, dead, seismic, positive and negative, etc. CBMV Systems utilize a primary sheathing beneath the PermaBase Cement Board to provide required structural performance. The selection and installation of this sheathing varies according to the type of wall construction.

In the case of exterior walls only, the CBMV Wall System shall not exceed 3 meters (9.8') in height above the foundation walls. Do not use the CBMV System to make soffits or use underground or in frequently submerged areas. Make sure to follow the latest national, provincial or local building code regulations.

Consult Unifix's website to get the latest exterior cladding system complete architectural specifications and for detailed installation instructions.

The details provided give a general sense of representative CBMV Systems only.

Water Resistant Barriers (WRB)

While PermaBase is unaffected by moisture, a water resistant barrier (WRB) must be installed to protect the cavity. One of the advantages of CBMV Systems is the ability to incorporate an effective, accountable water management system. The type and specific placement of the water barrier will vary based on local building codes and/or manufacturers warranties.

Residential Manufactured Stone Veneer Wall Installation

1. **Sheathing**
2. **Weather Resistant Barrier**
3. **PermaBase[MD] Cement Board**
4. **Mesh Tape**
5. **Mortar**
6. **Mortar**
7. **Thin Stone Veneer**
8. **Flashing Tape**
9. **Weep Screed**

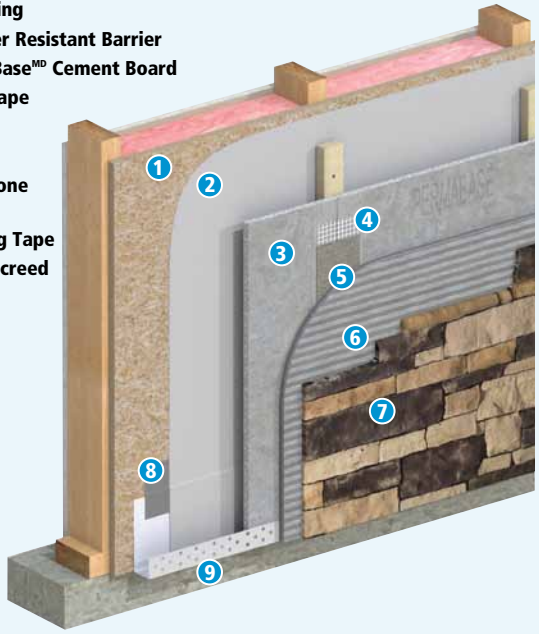

Commercial Manufactured Stone Veneer Wall

1. **Exterior Gypsum Sheathing**
2. **Weather Resistant Barrier**
3. **Insulation**
4. **Z-Furring**
5. **PermaBase Cement Board**
6. **Mesh Tape**
7. **Mortar**
8. **Mortar**
9. **Stone Veneer**
10. **Flashing Tape**
11. **Weep Screed**

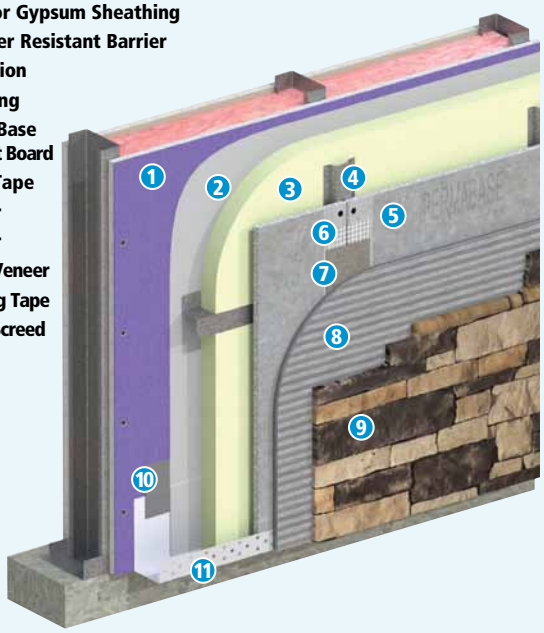

This section of the PermaBase Construction Guide provides information on how to utilize PermaBase within both a CBMV System and a Ventilated Rainscreen Facade System. While some typical examples are shown (right) for reference purposes, the specifications and details on how to design and construct individual systems should be obtained from the design professional, or the adhering material or veneer manufacturer of the materials that are being used to complete the system.

For more information go to: **unifixinc.com/applications**

Heat Shield Applications

Features/Benefits

- Protects walls and floors.
- Reduces clearance in back up to 40%.
- Lightweight and easy to install.
- CAN/ULC- S632 & UL1618 tested.

Limitations: Do not apply combustible finishes, such as wallpaper, on the panel surface.

Installation

The heat shield made with PermaBase boards can reduce the required clearance between a heat producing appliance and the wall by up to 40%, except where the clearance includes provision for access or ventilation.

Furring is made by cutting a full PermaBase panel into 4" (100 mm) wide strips. Attach a double layer of these furring strips to the wall studs using cement board screws which provide a minimum penetration of 3/4" (19 mm) into the framing. When installing the panels, leave a minimum 2" (50 mm) gap at the ceiling and a 1"- 2" (25-50 mm) gap at the floor.

Fasten the PermaBase panels to the studs with galvanized roofing nail or cement board screws spaced 8" (200 mm) o.c. Be sure your cement board screws are long enough to go through the furring and into the studs at least 3/4" (19 mm). Do not put any nails or screws into the wall area directly behind the proposed location of the appliance.

Finish the joints with polymer modified Portland cement mortar and alkali resistant fiberglass tape. Cover fasteners with the same mortar. The mortar should be dry before applying any decorative coating.

Heat build-up is reduced by allowing air to enter and exit the cavity between the wall and the heat shield. This air space is required for the good functioning of the heat shield. Do not close or block these openings.

Heat Shield Installation

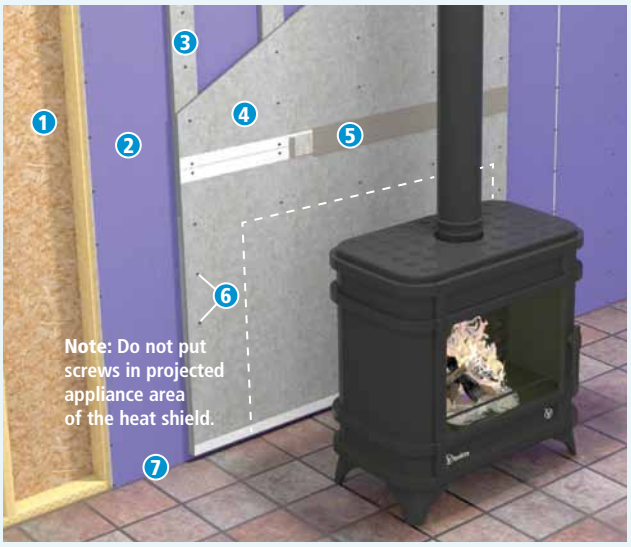

1. **Studs Spaced 16 in. o.c.**
2. **Existing Gypsum Board**
3. **Two Layers 4 in. wide Furring Strips**
4. **PermaBase[MD] Heat Shield**
5. **Joint Treatment**
6. **Fasteners Spaced 8 in. o.c. Maximum**
7. **1-2 in. Minimum Clearance from the Floor**

PermaBase[MD] heat shielding permits clearance reduction up to 40 percent of the manufacturer's suggested clearance.

UL Listed PermaBase[MD] Cement Board Partitions – Steel Framing

1-hour Fire Rating
V452 UL Design



7/16" PermaBase PLUS or 1/2" PermaBase applied vertically or horizontally to one side of 3-5/8" steel studs 16" o.c. 5/8" Fire-Shield Gypsum Board applied vertically to opposite side. 3" mineral wool insulation in stud cavities.

1-hour Fire Rating
U425 UL Design

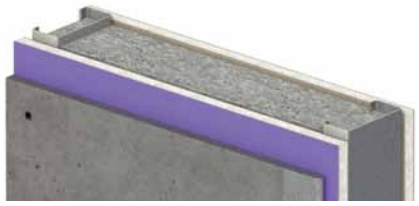

7/16" PermaBase PLUS or 1/2" PermaBase applied vertically or horizontally over 5/8" Fire-Shield Gypsum Board applied vertically to each side of 3-1/2", 20-gauge steel studs 16" o.c. PermaBase secured to studs with cement board screws of adequate length to penetrate studs 3/8" spaced 8" o.c.

1-hour Fire Rating
V438 UL Design



7/16" PermaBase PLUS or 1/2" PermaBase applied vertically or horizontally over 5/8" Fire-Shield Gypsum Board applied vertically to each side of 3-5/8" steel studs 16" o.c. PermaBase secured to studs with cement board screws of adequate length to penetrate studs 3/8" spaced 8" o.c.

2-hour Fire Rating
V452 UL Design

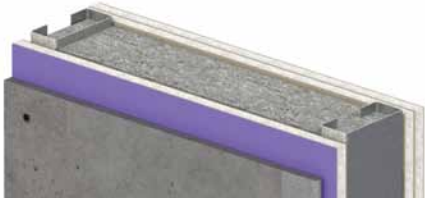

7/16" PermaBase PLUS or 1/2" PermaBase applied vertically over 1/2" Fire-Shield C or 5/8" Fire-Shield Gypsum Board, applied vertically to one side of 3-5/8" steel studs 16" o.c. 2 layers 1/2" Fire-Shield C or 5/8" Fire-Shield Gypsum Board applied vertically to opposite side. 3" mineral wool insulation in stud cavities.

PermaBase Over Foundation Walls

Installation

The 1/2" PermaBase boards can be installed below ground level over extruded polystyrene boards that are themselves installed over a foundation wall, under the following conditions.

1. That the PermaBase boards be fully supported, over their entire surface, by the polystyrene boards.

2. That the PermaBase boards be installed using our specially designed PermaBase screws, every 8" o.c. (200 mm), over furring channels (wood or galvanized metal 20 gauge or thicker) that comply with the following requirements:

a. That the furring strips be spaced at a maximum of 24" (610 mm) o.c.

b. That the furring strips have the same thickness (or depth) as the polystyrene board.

c. That the furring strips be in full contact with the foundation wall.

d. That the furring strip be affixed to the foundation wall with the proper fasteners and in sufficient number to provide an adequate support for the board, its finish and other building loads.

e. That the furring strips be corrosion or rot proof.

3. That the extruded polystyrene boards be approved for exterior use, below ground and that they have a compressive strength of 20 psi (140 kPa) or higher when tested according to ASTM D1621.

4. That the PermaBase boards are installed below ground at a maximum depth of 10' (3 m).

5. That the water table level be at all times be below the base of the foundation wall.

6. That the base of the foundation wall be properly drained in order to avoid any accumulation of water and consequently an added pressure on the wall.

7. That the wall design be in conformance with the applicable and most up to date local, provincial, and federal building codes where the project is located.

Limitations: The PermaBase boards are resistant to water but are not water impermeable or waterproof and cannot be considered a vapor barrier. Where a wall or cavity must be kept dry, use proper water resistant membranes, in conformance with the applicable and most up to date local, provincial, and federal building codes where the project is located. Some waterproofing compounds, sealants, or adhesives may contain solvents or petroleum distillates. These may damage the polystyrene. Please contact the manufacturers of these products to verify their compatibility with polystyrene and concrete. The PermaBase boards are not structural boards.

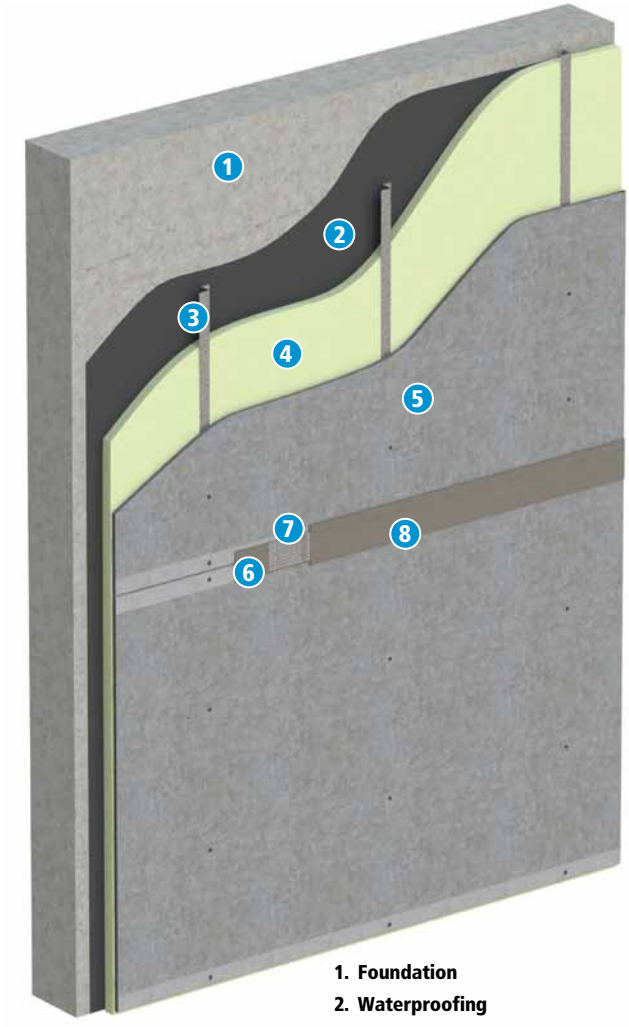

1. **Foundation**
2. **Waterproofing**
3. **Furring Strips**
4. **Insulation**
5. **PermaBase^{MD} Cement Board**
6. **Mortar**
7. **Mesh Tape**
8. **Mortar**

LIMITED WARRANTY AND REMEDIES

Products manufactured and sold by National Gypsum Company are warranted by National Gypsum Company to its customers to be free from defects in materials and workmanship at the time of shipment. THIS EXPRESS WARRANTY IS THE ONLY WARRANTY APPLICABLE TO SUCH PRODUCTS, AND IS IN LIEU OF AND EXCLUDES ALL OTHER EXPRESS ORAL OR WRITTEN WARRANTIES AND ALL IMPLIED WARRANTIES, INCLUDING BUT NOT LIMITED TO THE IMPLIED WARRANTIES OF MERCHANTABILITY AND FITNESS FOR A PARTICULAR PURPOSE.

National Gypsum Company will not be liable for any incidental, indirect or consequential losses, damages or expenses. The customer's exclusive remedy for any type of claim or action for defective products will be limited to the replacement of the products (in the form originally shipped) or, at National Gypsum's option, to a payment or credit not greater than the original purchase price of the products.

National Gypsum Company will not be liable for products claimed to be defective where the defect resulted from causes not within National Gypsum's control, or which arose or occurred after shipment, including but not limited to accidents, misuse, mis-handling, improper installation, contamination or adulteration by other materials or goods, or abnormal conditions of temperature, moisture, dirt or corrosive matter.

Any claim that products sold by National Gypsum Company were defective or otherwise did not conform to the contract of sale is waived unless the customer submits it in writing to National Gypsum within thirty (30) days from the date the customer discovered or should have discovered the defect or non-conformance. No legal action or proceeding complaining of goods sold by National Gypsum may be brought by the customer more than one year after the date the customer discovered or should have discovered the defect or problem of which it complains.

Mold And Mildew Resistance

PermaBase was designed to provide extra protection against mold and mildew. When tested by an independent laboratory, PermaBase received the highest possible ratings on ASTM G21 and D3273. The use of PermaBase in actual installations may not produce the same results as were achieved in controlled laboratory conditions. No material can be considered "mold-proof," nor is it certain that any material will resist mold or mildew indefinitely. When used in conjunction with good design, handling and construction practices, PermaBase can provide increased mold resistance. As with any building material, avoiding water exposure during handling, storage and installation, and after installation is complete, is the best way to avoid the formation of mold or mildew.

Member of TCNA
Tile Council of North America, Inc.

Perma BASE® BRAND Cement Board

GREENGUARD GOLD
PRODUCT CERTIFIED FOR LOW CHEMICAL EMISSIONS: UL.COM/GG UL 2818

UNIFIX Inc.
35, rue Unifix
Bromont, QC J2L 1N5
Canada

Web: unifixinc.com

Phone: (450) 534-0955
Fax: (450) 534-0953
Toll Free: (800) 461-0955
Email: info@unifixinc.com

UNIFIX INC.®
A Subsidiary Of National Gypsum Company

Section 1: Product and Company Identification

Product Name
PermaBase® BRAND Cement Board Products

Product Identifiers

PermaBase	***PermaBase UltraBacker***	***PermaBase DEK***
PermaBase Flex	***PermaBase Plus***	

Other means of identification
Tile Backer Board, Cementitous Backer Board (CBU)

Recommended Use
Underlayment for ceramic tile on floors, countertops, EIFS systems. Use per manufacturer's recommendations.

Restrictions on Use
Use in well-ventilated area and avoid breathing dust.
Avoid skin contact.

Manufacturer/Supplier Details
National Gypsum Company
2001 Rexford Road
Charlotte, NC 28211

In Canada:
UNIFIX INC. A subsidiary of National Gypsum Company
35, Unifix Street
Bromont, QC J2L 1N5 CANADA

Emergency Telephone Number
Director Quality Services
(704) 551-5820 - 24 Hour Emergency Response
Website: www.nationalgypsum.com

1-450-534-0955 or toll free 1-800-461-0955 (8h00 -17h00)
e-mail: info@unifixinc.com
Website: www.unifixinc.com

Section 2: Hazards Identification

United States (US)
According to OSHA 29CFR 1910.1200 (HCS)

GHS Classification of the substance or mixture
Carcinogenicity - Category 1A - (H-350)
Specific target organ toxicity, repeated exposure – Category 1 (H-372)
Acute toxicity, inhalation - Category 4 (H-332)
Skin corrosion/irritation Category 2 (H315)
Serious eye irritation – Category 2A (H-319)

GHS Label Elements
Pictogram



Signal Word **Danger**

Hazard Statements

H-350	May cause cancer.
H-332, 372	Harmful if inhaled. Causes damage to organs (lungs) through prolonged or repeated exposure.
H-315, 319	Causes skin irritation and serious eye irritation

Precautionary Statements
Prevention
Obtain special instructions before use.
Do not handle until all safety precautions have been read and understood.
Do not breathe dust.
Use personal protective equipment as required. (See Section 8)
Use engineering controls and wet methods to minimize dust.

Section 2: Hazards Identification (Continued)

Response
If breathing is difficult, remove victim to fresh air and keep at rest in a position comfortable for breathing.
If on skin, wash with plenty of soap and water. If skin irritation occurs, get medical attention.
If in eyes, rinse cautiously with water for several minutes. Remove contact lenses, if present and easy to do. Continue rinsing.
Get medical attention if exposed or concerned.

Storage
Store material in a cool, dry, ventilated area, away from excessive heat or sunlight.

Disposal
Dispose of material in accordance with federal, state, and local regulations.

Section 3: Composition/Information on Ingredients

Chemical Name	Common name/ Synonym	Identifiers CAS Number	% (weight)	Impurities
Silicon Dioxide (SiO_2)	Sand, quartz	14808-60-7	<50	
In CANADA- Calcium Carbonate	Limestone, industrial sand	1317-65-3	<50	Crystalline silica (CAS # 14808-60-7)
Mixture-calcium and aluminum silicates	Portland Cement	65997-15-1	<25	Crystalline silica (CAS # 14808-60-7)
Mixture-silicates, aluminates	Pozzolan, fly ash	68131-74-8	<25	Crystalline silica (CAS # 14808-60-7)
Mixture-calcium aluminates	High Alumina Cement	65997-16-2	<6	Crystalline silica (CAS # 14808-60-7)
Mixture-calcium, aluminum silicates, amorphous silica	Fiberglass scrim or fiberglass mat laminate	65997-17-3	<5	
Calcium Hydroxide	Hydrated lime	1305-62-0	<2	Crystalline silica (CAS # 14808-60-7)

Section 4: First-Aid Measures

Inhalation Remove exposed individual to fresh air immediately. If breathing difficulty persists, seek medical attention.

Eye contact Do not rub or scratch eyes. Immediately flush eyes with water for 15 minutes.
Remove contact lenses (if applicable). Seek medical attention if irritation persists.

Skin contact Flush and wash skin with soap and water. Utilize lotions to alleviate dryness if present. Seek medical attention if irritation persists.

Ingestion This product is not expected to be hazardous and no harmful effects are expected upon ingestion of small amounts. Larger amounts may cause abdominal discomfort or possible obstruction of the digestive tract. Seek medical attention if problems persist.

Medical Conditions aggravated by exposure
Pre-existing upper respiratory and lung diseases such as, but not limited to, bronchitis, emphysema and asthma. Pre-existing skin diseases such as, but not limited to, rashes and dermatitis.

Most important symptoms/effects, acute and delayed: See Section 11. (Toxicological Information)

Section 5: Fire-Fighting Measures

Extinguishing Media
Dry chemical, foam, water, or extinguishing media appropriate for surrounding fire.

Unusual Fire and Explosion Hazards
Mixture poses no fire-related hazard.

Special hazards arising from the mixture
None known

Special Protective Equipment and Precautions for Firefighters
A SCBA is recommended to limit exposures to combustion products when fighting any fire.

Section 6: Accidental Release Measures

Personal precautions, protective equipment and emergency procedures
Product is an article composite.
General recommendations:
Wear appropriate Personal Protective Equipment. (See Section 8)
Maintain proper ventilation.

Environmental precautions
This product could be toxic to fish due to its high alkalinity from the Portland Cement.
Dispose of in accordance with applicable federal, state, and local regulations.

Methods and materials for containment and cleaning up
Pick-up larger pieces to avoid a tripping hazard.
Sweep or vacuum remaining material into a waste container for disposal.
Use a light water spray to minimize dust generation.

Section 7: Handling and Storage

Precautions for safe handling
Avoid breathing dust.
Minimize generation of dust.
Provide appropriate exhaust ventilation at places where dust is formed.
Avoid contact with eyes, skin and clothing.
Wear recommended personal protective equipment when handling. (See Section 8)

Conditions for safe storage, including any incompatibilities
Store material in a cool, dry, ventilated area, away from excessive heat or sunlight.
Store panels flat to minimize damage.
Do not stack panels too high when storing to minimize the risk of falling.
Avoid contact with strong acids.

Section 8: Exposure Controls/Personal Protection

Control Parameters

	Exposure Limits	
Component	**OSHA PEL (mg/m3)**	**ACGIH TLV (mg/m3)**
Portland Cement	15 (T) 5 (R)	10 (T)
High Alumina Cement	15 (T) 5 (R)	10 (T)
Pozzolan	15 (T) 5 (R)	10 (T)
Sand	[(10) / (%SiO2+2)] (R); [(30) / (%SiO2+2)] (T)	0.025 (R)
Crystalline Silica (Quartz)[1]	[(10) / (%SiO2+2)] (R); [(30) / (%SiO2+2)] (T)	0.025 (R)
Fiberglass Scrim	15 (T) 5 (R)	1 f/cc (R)
Calcium Hydroxide (Hydrated Lime)	15 (T) 5 (R)	5 (R)
Calcium Carbonate	15 (T) 5 (R)	10 (T)

1 – Present as an impurity in raw materials
T- Total Dust
R- Respirable Dust

Exposure Controls

Appropriate Engineering Controls

Work/Hygiene Practices: Utilize methods to minimize dust production. Utilize wet methods, when appropriate, to reduce generation of dust.

Ventilation: Provide local and general exhaust ventilation sufficient to maintain a dust level below the PEL/TLV.

Personal Protective Equipment

Respiratory Protection

A NIOSH approved particulate respirator is recommended in poorly ventilated areas or if the PEL/TLV is exceeded. OSHA's 29 CFR 1910.134 (Respiratory Protection Standard) must be followed whenever work conditions require respirator use.

Eye Protection

Safety glasses or goggles.

Skin

Gloves, protective clothing and/or barrier creams may be utilized if conditions warrant.

Section 9: Physical and Chemical Properties

(a) Appearance: Gray solid
(b) Odor: Slight organic odor upon opening that dissipates quickly.
(c) Odor threshold: Not available
(d) pH : ~12
(e) Melting point/freezing point: Not Available
(f) Initial boiling point and boiling range: Not Available
(g) Flash point: Not available
(h) Evaporation rate: Not available
(i) Flammability (solid, gas): Not flammable
(j) Upper/lower flammability or explosive limits: Not available
(k) Vapor pressure: Not available
(l) Vapor density: Not available
(m) Relative density: ~1.2
(n) Solubility(ies): Slightly soluble in water
(o) Partition coefficient: n-octanol/water: Not available
(p) Auto-ignition temperature: Not available
(q) Decomposition temperature: Unknown
(r) Viscosity: Not available
(s) VOC (Volatile Organic Compound): N/A

Section 10: Stability and Reactivity

(a) Reactivity: No data available
(b) Chemical stability: Stable in dry environments
(c) Possibility of hazardous reactions: None known
(d) Conditions to avoid (e.g., static discharge, shock, or vibration): Contact with strong acids.
(e) Incompatible materials: Strong acids
(f) Hazardous decomposition products: None known.

Section 11: Toxicological Information

Information on Toxicological effects

Information on likely routes of exposure

Ingestion	May cause gastrointestinal irritation.
Inhalation	Dust may irritate respiratory system. Chronic exposure may result in lung disease. (See below)
Skin contact	May cause irritation, itching or dermatitis. (See below)
Eye contact	Contact with dust may cause mechanical irritation.

Symptoms related to the physical, chemical and toxicological characteristics

Acute exposure to airborne dust concentrations in excess of the PEL/TLV may result in coughing, dyspnea, wheezing, and a burning irritation of the nose, throat, and upper respiratory tract, along with possible impaired pulmonary function. Chronic exposures may result in lung disease. (Silicosis and/or lung cancer)

Contact with wet Portland Cement may cause severe irritation, redness, and possible burns. Continued and prolonged contact may result in drying of the skin. Contact with dust or glass fibers may produce itching, rash and/or redness. Repeated or prolonged exposure may result in dermatitis.

Toxicological data

No toxicological data is available for this product. Toxicological information for components of this product listed below.

Acute toxicity	Not available
Skin corrosion/irritation	Not available
Serious eye damage/eye irritation	Not available
Skin sensitization	Not available
Respiratory sensitization	Not available
Sensitization	Not available
Mutagenicity	Not available
Carcinogenicity	Not available

This product contains crystalline silica. (quartz) The International Agency for Research on Cancer (IARC) classifies crystalline silica inhaled in the form of quartz or cristobalite from occupational sources as carcinogenic to humans, Group 1. The National Toxicology Program (NTP) classifies respirable crystalline silica as a substance which may be reasonably anticipated to be a carcinogen. OSHA does not regulate crystalline silica as a human carcinogen.

Reproductive effects	Not available
Specific target organ toxicity – single exposure	Not available
Aspiration toxicity	Not available

Section 12: Ecological Information

(a) Ecotoxicity (aquatic and terrestrial, where available): This product could be toxic to fish due to its high alkalinity from the Portland Cement. No studies are available.
(b) Persistence and degradability: Unknown
(c) Bioaccumulative potential: Unknown.
(d) Mobility in soil: Unknown
(e) Other adverse effects (such as hazardous to the ozone layer): None known

Section 13: Disposal Considerations

This material is not considered a hazardous waste. Dispose of according to Local, State, Federal, and Provincial Environmental Regulations.

Section 14: Transport Information

This product is not a DOT hazardous material
Shipping Name: Same as product name
ICAO/IATA/IMO: Not applicable

Section 15: Regulatory Information

All ingredients are included on the TSCA inventory.

Federal Regulations

SARA Title III: Not listed under Sections 302, 304, and 313
CERCLA: Not listed
RCRA: Not listed
OSHA: Dust and potential respirable crystalline silica generated during product use may be hazardous.

State Regulations
California Prop 65: Respirable crystalline silica is known to the state of California to cause cancer.
Canada WHMIS
All components of this product are included in the Canadian Domestic Substances List (DSL).
Crystalline silica: WHMIS Classification D2A

Section 16: Other Information

SDS Prepared by: National Gypsum Company
2001 Rexford Road
Charlotte, NC 28211
Phone Number: (704) 551-5820

Date of Preparation: July 16, 2015

Revision indicators and Date
Effective Date Change: 7/16/2015 Supersedes: 6/1/2015
Format Changes: Conforms to OSHA 29CFR 1910.1200 (HCS)
Compliant with the 2015 Canadian Workplace Hazardous Materials Information System (WHMIS 2015), the Canadian Hazardous Products Act, and the Controlled Products Regulations. (CPR)

Key to Abbreviations

ACGIH	American Conference of Governmental Industrial Hygienists
CAS	Chemical Abstract Services Number
CFR	Code of Federal Regulations
DOT	Department of Transportation
EPA	Environmental Protection Agency
HEPA	High Efficiency Particulate Air
HCS	Hazard Communications Standard
HMIS	Hazardous Material Identification System
IARC	International Agency for Research on Cancer
IATA	International Air Transport Association
ICAO	International Civil Aviation Organization
IMO	International Maritime Organization
NIOSH	National Institute for Occupational Safety and Health
NFPA	National Fire Protection Association
NTP	National Toxicology Program
OSHA	Occupational Safety and Health Administration
PEL	Permissible Exposure Limit
PPE	Personal Protective Equipment
TLV	Threshold Limit Value
TSCA	Toxic Substance Control Act
TWA	Time Weighted Average
WHMIS	Workplace Hazardous Materials Information System

The information and recommendations contained herein are based upon data believed to be correct. However, no guarantee or warranty of any kind expressed or implied is made with respect to the information contained herein. This safety data sheet was prepared to comply with the OSHA Hazard Communication Standard (29 CFR 1910.1200).

Disclaimer of Liability:
As the conditions or methods of use are beyond our control, we do not assume any responsibility and expressly disclaim any liability for any use of the material. Information contained herein is believed to be true and accurate, but all statements or suggestions are made without any warranty, express or implied, regarding accuracy of the information, the hazards connected with the use of the material, or the results to be obtained for the use thereof.

Spécification

Pratique standardisé

Proposé à :

AIR MP
754, Rue Saguenay
Rouyn-Noranda (Qc) J9X 7B5

A/S : Guillaume Gauthier

Préparé et présenté par :

Danielle Matte

NACE CIP Certifié Niveau 3
#64593

Distribution E.S.
104-A, 5e Ave Est
La Sarre (Qc) J9Z 2Y1
T.819.339.2101
admin@distributiones.com

1. Système standard

Primer :

ARP Primer Époxy (Kits Gallon)
→Gris pâle
→Satiné

Finition :

Supershield Uréthane (Kits Gallon)
→Toutes les couleurs
→Standard Lustré 80-90% lustre
→Disponible en différents lustres sur demande.

2. Système salin

Projets résistance saline – 3000 heures

Primer :

Guertin EF75122 Époxy (Kits 4 Gallons)
→ Gris Charcoal
→ Semi-Lustre

Finition :

Supershield Uréthane (Kits Gallon)
→Toutes les couleurs
→Standard Lustré 80-90% lustre
→Disponible en différents lustres sur demande.

Distribution E.S.
104-A, 5e Ave Est
La Sarre (Qc) J9Z 2Y1
T.819.339.2101
admin@distributiones.com

PRIMER – Système 1 – Projet standard

Époxy de finition sans sablage ARP 2.1VOC Primer

Ratio : 3 :1 → vendus en kits 1x GALLONS

Partie-A : 83030A01 @ format 2.84 litres
Partie-B : 83030B01 @ format 950 ml

NE PAS DILUER ; PRÊT À L'USAGE

NE PAS PIGMENTER

Résistance saline : >1500hrs

Préparation :

- Bien lire la fiche technique avant d'appliquer
- Le nettoyage au solvant (SSPC-SP1) est nécessaire
- Arrondir tous les coins et adoucir les soudures, retirer les bavures de soudage, contaminants lousses (SSPC-SP2 ET SSPC-SP3)
- Pour acier autre que satiné, effectuer un grenaillage conformément la norme SSPC-SP6

Application :

- Mélanger la Partie A et Partie B indépendamment avant de les mélanger ensemble.
- Combiner les 2 parties ensemble en ratio 3 :1 en mélangeant mécaniquement à basse révolution pendant au moins 2 minutes jusqu'à ce que le mélange ait une consistance uniforme
- Utiliser un mesh 100 pour le filtre
- S'assurer que le taux d'humidité ambiante est en dessous de 80%.

ÉPAISSEURS :
Appliquer entre 4 et 6 mils humide
Vous obtiendrez entre 2.4 et 3.6 mils sec (DFT)

APPLIQUER LA FINITION SUPERSHIELD LA JOURNÉE MÊME, ENTRE 1h et 6h APRÈS

Distribution E.S.
104-A, 5e Ave Est
La Sarre (Qc) J9Z 2Y1
T.819.339.2101
admin@distributiones.com

PRIMER – Système 2 – Résistance Saline

Époxy Haute Performance EF75122

Ratio : 4 :1

Partie-A : EF75112P1-12L @ format 12 litres
Partie-B : EF75061P2-3L @ format 3 litres

NE PAS DILUER ; PRÊT À L'USAGE

NE PAS PIGMENTER

Résistance saline >3000h.

Préparation :

- Bien lire la fiche technique avant d'appliquer
- Le nettoyage au solvant (SSPC-SP1) est nécessaire
- Arrondir tous les coins et adoucir les soudures, retirer les bavures de soudage, contaminants lousses (SSPC-SP2 ET SSPC-SP3)
- Pour acier autre que satiné, effectuer un grenaillage conformément la norme SSPC-SP6

Application :

- Mélanger la Partie A et Partie B indépendamment avant de les mélanger ensemble.
- Combiner les 2 parties ensemble en ratio 4 :1 en mélangeant mécaniquement à basse révolution pendant au moins 3 minutes jusqu'à ce que le mélange ait une consistance uniforme
- Utiliser un mesh 100 pour le filtre
- S'assurer que le taux d'humidité ambiante est en dessous de 80%.

ÉPAISSEURS :
Appliquer entre 7 et 8 mils humide
Vous obtiendrez entre 4.2 et 4.8 mils sec (DFT)

APPLIQUER LA FINITION SUPERSHIELD LA JOURNÉE MÊME, ENTRE 1h et 6h APRÈS

Distribution E.S.
104-A, 5e Ave Est
La Sarre (Qc) J9Z 2Y1
T.819.339.2101
admin@distributiones.com

FINITION URÉTHANE – Système Universel (1 et 2)

Uréthane Supershield sans Isocyanathes formule 3 :1

Ratio : 3 :1

Partie-A : Supershield Intermix @ format 2.83l
Partie-B : SI25002P214 @ format 946ml

NE PAS DILUER ; PRÊT À L'USAGE

Préparation :

- Bien lire la fiche technique avant d'appliquer
- Aucun temps d'induction nécessaire

Application :

- Mélanger la Partie A et Partie B indépendamment avant de les mélanger ensemble.
- Combiner les 2 parties ensemble en ratio 3 :1 (vendu en kits) en mélangeant mécaniquement à basse révolution pendant au moins 2 minutes jusqu'à ce que le mélange ait une consistance uniforme
- Utiliser un mesh 100 pour le filtre
- S'assurer que le taux d'humidité ambiante est en dessous de 80%.
- Appliquer sur le primer en système « wet-on-wet » après 1 heure seulement, et dans un maximum de 6 heures sinon il y aura délamination entre les 2 produits.
- Le produit sera prêt à manipuler après 1 à 3 heures dépendant de la chaleur ambiante.

ÉPAISSEURS :
Appliquer entre 4 et 5 mils humide
Vous obtiendrez entre 2.6 et 3.2 mils sec (DFT)

Distribution E.S.
104-A, 5e Ave Est
La Sarre (Qc) J9Z 2Y1
T.819.339.2101
admin@distributiones.com

MÉTHODE DE PRISE DE MESURE D'ÉPAISSEUR DE PEINTURE

SELON SSPC-PA2

STANDARD DE BASE

- 3 relevés dans un rayon de 4cm à 5 endroits différents pour chaque surface de 100pi2
- Les relevés doivent être mesurés à maximum de 1po d'un rebord
- Total de 15 relevés individuels pour établir 1 mesure
- Un minimum de 5 relevés doit être dans le spectre de DFT requis par la spécification
- Aucun relevé peut représenter une valeur de :
    - Moins de 80% du DFT requis par la spécification
    - Plus de 120% du DFT requis par la spécification
- Si la moyenne des relevés indique une mesure acceptée par la spécification, passer à une autre pièce
- Si la moyenne des relevés indique une mesure hors spécification, la pièce ne doit pas être acceptée par le chargé de projet.

STANDARD SELON GRANDEUR DES SURFACES

- Pour les surfaces de moins de 1000pi2, sélectionner au hasard 3 endroits de 100pi2 et effectuer les prises de mesures conformément au standard de base mentionné ci-haut (45 relevés)
- Pour les surfaces de plus de 1000pi2, mesurer le premier 100pi2 conformément au standard de base mentionné ci-haut (45 relevés), et effectuer par la suite 1 seule mesure (15 relevés) pour chaque section de 100pi2 suivante.
- Lorsqu'une anomalie est détectée, reculer de section (100pi2) et prendre des relevés conformément au standard de base pour les surfaces de moins de 1000pi2 (5 spots de 3 relevés à 3 endroits différents = 45 relevés) jusqu'à ce que les sections respectent la spécification.
- Refaire les pièces défectueuses et recommencer.

LEXIQUE :

Relevé : Prise de mesure individuelle avec la jauge électronique à un endroit précis
Mesure : C'est la mesure du DFT utilisé pour le résultat final. Il est calculé en faisant moyenne des relevés.
DFT : Épaisseur de peinture sèche (dry film thickness)

Distribution E.S.
104-A, 5e Ave Est
La Sarre (Qc) J9Z 2Y1
T.819.339.2101
admin@distributiones.com

INTEGRITY
INNOVATION
PERFORMANCE

GUERTIN
A Division of Cloverdale Paint Inc.

TECHNICAL DATA
EF75122

Description

EF75122 is a grey, high solids, 2.8 VOC, epoxy primer. It is designed to fill blast profiles in a single coat. No induction time is required.

Mixed Coating Properties

Mix Ratio	4 Parts base to 1 Part epoxy part 2
VOC	
EF75060P2	3.00 lbs / gal or 360 grams / litre
EF75061P2	2.80 lbs / gal or 336 grams / litre
Volume Solids	
EF75060P2	57.61%
EF75061P2	60.64%
Sag	
Airless	12 - 15 mils
Air Assist Airless	12 - 15 mils
Air Spray	12 - 15 mils
HVLP	12 - 15 mils
Viscosity @ 70°F (21°C)	25 - 30 Seconds Zahn#2 / 300 cps
Pot Life @ 77°F (25°C)	
EF75060P2	5.00 hours
EF75061P2	4.00 hours
Salt Spray (B1000)	3000 hours @ 4 mils DFT
Theoretical Coverage	
EF75060P2	924 ft^2 / gal (22.6 m^2 / litre) @ 1 mil DFT
EF75061P2	972 ft^2 / gal (23.8 m^2 / litre) @ 1 mil DFT

DFT = Dry Film Thickness

Product Weight - *Container weight not included*

EF75122P1 base	13.82 lbs / gallon or 1.656 kg / litre
EF75060P2 standard cure	7.58 lbs / gallon or 0.909 kg / litre
EF75061P2 fast cure	7.76 lbs / gallon or 0.930 kg / litre

Shelf Life

Shelf Life is applicable only for material stored in unopened and undamaged original factory filled containers at 4° to 38°C (39° to 100°F).

EF75122P1	1 year	EF75060P2	2 years
		EF75061P2	2 years

Subject to reinspection. Store unused material in tightly closed containers. Contents of partially filled containers may show surface skinning after storage. If skinning forms, remove by straining before use.

BENEFITS

- excellent edge coverage
- exceptional corrosion resistance
- excellent adhesion
- excellent sprayability
- humidity resistance

USES

- power transmission & distribution equipment
- containment tanks
- OEM - chemical tankers & trailers
- OEM - oil patch applications
- OEM - fleet applications

Guertin Coatings, A Division of Cloverdale Paint Inc.
50 Panet Road • Winnipeg, Manitoba • R2J 0R9 • T 204.237.0241 • F 204.233.5051
www.cloverdalepaint.com

Distribution E.S.
104-A, 5e Ave Est
La Sarre (Qc) J9Z 2Y1
T.819.339.2101
admin@distributiones.com

TECHNICAL DATA
EF75122

Surface Preparation

SSPC – SP6 Commercial Blast minimum recommended or a minimum of 3-stage to 7-stage phosphate cleaning system.

Mixing Instructions

1) Pre-Mix EF75122P1 Base for 2 minutes with an air-operated Jiffy Mixer®, or equivalent, to produce a uniform consistency within its container

2) Properly ratio material at 4:1 (by volume):

4 Parts EF75122P1 Base to
1 Part EF75060P2 Standard Cure Epoxy Part 2 or
1 Part EF75061P2 Fast Cure Epoxy Part 2

3) Mix material for 3 minutes with an air-operated Jiffy Mixer®, or equivalent, to a uniform consistency before use

4) No induction time required

5) No Thinning required

6) Filter through 100 mesh in line filter

Application Instructions

Application Temperature

Minimum	55℉ (10℃)
Maximum	100℉ (38℃)

Equipment Settings

Air Spray:	pot pressure:	10 – 20 psi
	atomizing air:	45 – 65 psi
	nozzle set:	1.4 – 1.8
Airless Spray:	fluid pressure:	2000 - 2500 psi
	tip size:	.013 - .019
Air Assist Airless:	fluid pressure:	700 - 1500 psi
	atomizing air:	20 – 60 psi
	tip size:	.013 - .019

- Precision plural component equipment is recommended. All spray equipment including lines and filters must be kept clean at all times to avoid nozzle plugging. When hand mixing follow /Mixing Instructions' procedures.
- Apply in wet coats making even parallel passes. Overlap each pass 50% to minimize holidays, bare areas and pinholes.
- Excess wet film will cause sags and runs.

Recommended dry film thickness is 3 mils above profile.

If thinners are required: *Please contact your Guertin Representative for recommendations.*

Note: Successful application requires following the recommended temperature, humidity conditions and film thickness ranges.

Recoat Window for best D.O.I.

Substrate Temp	70℉ (21℃)
Over Itself	up to 3 days
With Urethane Topcoat	4 hours up to 24 hours
With Super-Shield® Topcoat	1 hour to 4 hours

Flash times:
Allow a minimum of 4.0 hours flash off time before applying a two-component urethane topcoat. Higher film builds (>4mils) and/or cooler temperatures will require longer flash times.

The epoxy primer can be recoated with itself up to 3 days. After 3 days the epoxy primer must be scuff sanded.

It can be topcoated with 2K urethane and Super-Shield® topcoats up to 24 hours. After 24 hours the epoxy primer must be scuff sanded.

It is recommended to apply at ambient air and surface temperatures between 55°- 100℉ (10°- 38℃). App ly at a relative humidity level below 80%.

Surface temperature must be at least 5℉ (3℃) abov e the dew point to ensure that moisture condensation does not occur during application and the drying period.

Higher/lower temperatures & humidity, film thickness, improper activator range and poor air movement will affect the dry time and recoat window.

Equipment Cleanup

Clean application equipment with Guertin's SP02859T0 or SP05127T0.

Safety Precautions

FOR INDUSTRIAL USE ONLY. To be used by professionally trained personnel using proper safety equipment. Use only with adequate ventilation. Warning: this product is flammable, keep away from heat, sparks and open flame. Please refer to material safety data sheets.

Warranty

Guertin Coatings warrants its product to be free from defects in materials and workmanship and will REPLACE ANY PRODUCT PROVED TO BE DEFECTIVE, OR REFUND OF THE ORIGINAL PURCHASE PRICE OF THE QUANTITY PROVED TO BE DEFECTIVE. Requests for refund or replacement of product must be made in writing within one year from the original date of purchase. This Warranty does not apply to defects due, directly or indirectly, to misuse, abuse, negligent application, or acts of God.

GUERTIN COATINGS WILL NOT BE LIABLE FOR DEATH, INJURIES TO PERSONS OR PROPERTY, OR FOR INCIDENTAL, CONTINGENT, SPECIAL OR CONSEQUENTIAL DAMAGES ARISING FROM THE USE OF OUR PRODUCT, INCLUDING DOWNTIME OR LOSS OF USE OF PRODUCT.

All data, statements, and recommendations made herein are based upon information we believe to be reliable, but are made without any representation, guarantee or warranty of accuracy. Our products are sold on the condition that the user himself will evaluate them, as well as our recommendations, to determine their suitability for his own purpose before adoption. Also, statements regarding the use of our products or processes are not to be construed as recommendations for their use in violation of any patent rights or in violation of any applicable laws or regulations.

Guertin Coatings, A Division of Cloverdale Paint Inc.
50 Panet Road • Winnipeg, Manitoba • R2J 0R9 • T 204.237.0241 • F 204.233.5051
www.cloverdalepaint.com

Distribution E.S.
104-A, 5e Ave Est
La Sarre (Qc) J9Z 2Y1
T.819.339.2101
admin@distributiones.com

F I C H E S I G N A L E T I Q U E

SECTION I - RENSEIGNEMENTS SUR LE PRODUIT

Identificateur du Produit: GREY HIGH BUILD ANTICORROSIVE
NumÉro du Produit: EF75122P1
Usage du Produit: PEINTURE
WHMIS CATEGORIE: B2 D2A D2B

NOM DU FABRICANT:
Cloverdale Paint Inc.
50 PANET ROAD
WINNIPEG, MB
R2J 0R9 204/237-0241

NOM DU FOURNISSEUR:
Cloverdale Paint Inc.
50 PANET ROAD
WINNIPEG, MB
R2J 0R9 204/237-0241

PREPARE PAR: Mr Robert Tinsley, 204-237-0241 DATE: 04/10/15

SECTION II - INGREDIENTS DANGEREUX

INGREDIENTS	NUMERO CAS	POURCENTAGE	LIMITES D'EXPOSITION	LC50	LD50
TITANIUM DIOXIDE	13463-67-7	5.0-10.0	10 MG/M3	6.82MG/L RAT	>25G/KGORAL RAT
MAGNESIUM SILICATE(TALC)	13776-74-4	10.0-30.0	5 mg/m3 DUST	N/AV	N/AV
CARBON BLACK	1333-86-4	0.1-1.0	3.5mg/m3DUST	>156 MG/M3 RAT	>240 MG/KG IP
BISPHENOL A DIGLYCIDYL ETHER	25068-38-6	1.0-5.0	NO INFO	N/AV	N/AV
XYLENE; MIXED ISOMERS	1330-20-7	1.0-5.0	100 ppm	5000 PPM RAT	4G/KG RAT ORAL
METHYL AMYL KETONE	110-43-0	1.0-5.0	50 ppm	2000 PPM RAT	1600 MG/KG RAT
METHYL ISOBUTYL KETONE	108-10-1	1.0-5.0	50 ppm	5700 PPM RAT	2080MG/KG RAT
METHYL ETHYL KETONE	78-93-3	5.0-10.0	200 ppm	2000 PPM RAT	2737 MG/KG RAT
N-BUTYL ACETATE	123-86-4	1.0-5.0	150 ppm	2000 PPM RAT	14.0 G/KG RAT
GLYCOL ETHER PM ACETATE	108-65-6	1.0-5.0	50 ppm	N/AV	8532MG/KG RAT
PROPYLENE GLYCOL MONOMETHYL ETHER	107-98-2	1.0-5.0	100 ppm	13000 MG/KG RAT	5660 MG/KG RAT
ETHYLBENZENE	100-41-4	1.0-5.0	100 ppm	>4000 PPM RAT	3.5 G/KG RAT

N.A. - SANS OBJET

SECTION III - PROPRIETES PHYSIQUES

POINT D'EBULLITION : 79-260 C
ODEUR :ODEUR PIQUANTE
APPARENCE :LIQUIDE GRIS
SOLUBILITE :2% EAUABLEE
VOLATILES EN VOLUME: 40.0%
PH @ 0.00 % : 7.0
TENSION DE VAPEUR :77.5 mm Hg

DENSITE DE LA VAPEUR:PLUS LOURD QUE L'AIR
TAUX D'EVAPORATION :PLUS RAPIDE QUE ACETATE BUTYLE
DENSITE SPECIFIQUE : 1.584
POINT DE CONGELATION: -40 C

Distribution E.S.
104-A, 5e Ave Est
La Sarre (Qc) J9Z 2Y1
T.819.339.2101
admin@distributiones.com

SECTION IV - RISQUES D'INCENDIE OU D'EXPLOSION

POINT D'ECLAIR: -6 C (TAGLIABUE C. C.)
CLASS 3, DIV. 1

LEL: 1.0%
UEL: 13.8%

MOYENS D'EXTINCTION: CHIMIQUES SECS CO2 LA MOUSSE BROUILLARD DE L'EAU

RISQUE PARTICULIERE DE LUTTE CONTRE L'INCENDIE: LIQUIDE COMBUSTIBLE (POINT ECLAIR EST INFERIEUR A 100 F/38 C). PEUT FORMER DES MELANGES INFLAMMABLES. LES VAPEURS PEUVENT ETRE EXPLOSIVE DANS L'AIR. ELIMINER TOUTE SOURCE D'IGNITION. TOUT EQUIPMENT DOIT ETRE MIS A LA TERRE. GARDER LE RECIPIENT FERME.

PROCEDURE D'EXTINCTION: LES POMPIERS DOIVENT PORTER UN APPAREIL RESPIRATOIRE AUTONOME ET DES VETEMENTS DE PROTECTION COMPLETS. UTILISER DE L'EAU PULVERIZEE POUR REFROIDER LES STRUCTURES ET LES CONTENANTS EXPOSES AU FEU.

SECTION V - DANGERS POUR LA SANTE

EFFETS DE LA SUREXPOSITION: *** INHALATION: LES VAPEURS PEUVENT IRRITER. L'EXPOSITION A DES VAPEURS TRES CONCENTREES PEUVENT CAUSER DES MAUX DE TETES, DES ETOURDISSEMENTS, DES NAUSEES, UNE DEPRESSION DU SYSTEME NERVEUX CENTRAL. L'EXPOSITION PROLONGEE A DES VAPEURS TRES CONCENTREES PEUT CAUSER L'EVANOUISSEMENT OU LA MORT. *** INGESTION: MODEREMENT TOXIQUE. LE PRODUIT EST NOCIF LORSQU'IL EST INGERE. L'INGESTION DE GRANDES QUANTITES PEUT CAUSER DES MAUX DE TETES, DES NAUSEES, DES VOMISSEMENTS, UNE DEPRESSION DU SYSTEME NERVEUX CENTRAL. UNE PETITE QUANTITE DE CE LIQUIDE ASPIREE DANS LES POUMONS SOIT PAR INGESTION OU PAR VOMISSEMENT, RISQUE D'AVOIR DE GRAVE EFFETS NOCIF POUR LA SANTE (P.EX., PROVOQUER UN OEDEMENT PULMONAIRE). *** PEAU: PEUT CAUSER DE L'IRRITATION MODEREE. PEUT CAUSER LE DEGRAISSMENT ET LA DERMATITE. UNE EXPOSITION PROLONGEE PEUT RESULTER A UNE SENSIBILITE DANS LA PEAU. PEUT PROVOQUER DES BRULURES CHIMIQUES. PEUT ETRE ABSORVER PAR LA PEAU ET PROVOQUER UN RISQUE POUR LA SANTE. *** YEUX: LES VAPEURS PEUVENT IRRITER. LE LIQUIDE ET LES BRUINES IRRITENT LES YEUX ET PEUVENT CAUSER DES BRULURES. *** EFFETS DE LA SUREXPOSITION: CONTIENT SILICE. LA SUREXPOSTION A LONG TERME AU SILICE CAUSE LA SILICOSE ET LA DETERIATION CARDIOPULMONAIRE. LA SUREXPOSITION A LONG TERME AU NOIR DE CARBONE PEUT ENTRAINER DES LESIONS CUMULATIVES AU COEUR ET AUX POUMONS. L'EXPOSITION PROLONGEES OU REPETEES PEUT CAUSER UNE SENSIBILITE DE LA PEAU ET/OU UNE SENSIBILITE RESPIRATOIRE. L'EXPOSITION PROLONGEES OU REPETEES PEUT CAUSER UN MAUVAIS FONCTIONNEMENT DU FOIE, DES REINS, ET/OU DU SYSTEME NERVEUX. L'EXPOSITION PROLONGEES OU REPETEES PEUVENT CAUSER A LA LONGUE DES DOMMAGES AUX SYSTEME SANGUIN, GASTRO-INTESTINAL, NERVEUX, ET/OU REPRODUCTEUR. LES EXPOSITIONS PROLONGEES ET REPETEES PEUVENT PROVOQUER DES EFFETS TOXIQUE. L'EXPOSITION A CE PRODUIT NE DEVRAIT CAUSER AUCUN PROBLEME LORSQUE MANIFULER AVEC SOINS. LE CIRC A CLASSÉ L'ÉTHYLBENZENE PARMI LES SUBSTANCES DU GROUPE 2B EN SE FONDANT SUR DES DONNÉES SUFFISANTES DÉMONTRANT SA CANCÉROGÉNÉCITÉ POUR LES ANIMAUX DE LABORATOIRE, MAIS DE DONNÉES INSUFFISANTES SELON LES RÉSULTATS DE CERTAINES ÉTUDES MENÉES SUR DES ANIMAUX, DE TRES GRANDES EXPOSITIONS AUX XYLENES ON ENTRAINÉ DES EFFETS NÉFASTES SURE LE DÉVELOPPEMENT DES EMBRYONS/FOTUS. CES EFFETS SONT SOUVENT APPARUS A DES NIVEAUX D'EXPOSITION TOXIQUES POUR LA MERE. LA PORTÉE DE CES RÉSULTATS POUR LES HUMAINS N'A PAS ÉTÉ ÉTABLIE. LES EXPOSITIONS EXCESSIVES LONG TERME PEUT CAUSER TALCOSE, FIBROSE PULMONAIRE, QUI A SON TOUR MON ENTRAINER DES DOMMAGES GRAVES ET PERMANENTS AUX POUMONS. UNE ÉTUDE PORTANT SUR L'INHALATION DURANT TOUTE UNE VIE FAIT RESSORTIR QU'UNE EXPOSITION A DE LA POUSSIERE DE DIOXYDE DE TITANE A UNE CONCENTRATION DE 250 MG/M3 A ENTRAINÉ L'APPARITION DE TUMEURS AUX POUMONS CHEZ DES RATS. CES TUMEURS NE SONT APPARUES QU'A DES CONCENTRATIONS DE POUSSIERES QUI DÉPASSENT LA CAPACITÉ DES MÉCANISMES DE CLAIRANCE PULMONAIRE DES ANIMAUX ET SONT DIFFÉRENTES DES TUMEURS PULMONAIRES COMMUNES CHEZ L'ETRE HUMAIN TANT DANS LE TYPE QUE DANS

Distribution E.S.
104-A, 5e Ave Est
La Sarre (Qc) J9Z 2Y1
T.819.339.2101
admin@distributiones.com

SECTION V - DANGERS POUR LA SANTE

L'EMPLACEMENT. LA PERTINENCE DE CES RÉSULTATS SURE LE CANCER (CIRC) A CLASSÉ LE DIOXYDE DE TITANE PARMI LES LES CANCÉROGENES PRÉSUMÉS POUR LES HUMAINS (GROUPE 2B) EN SE FONDANT SURE DES DONNÉES INSUFFISANTES DÉMONTRANT SA CANCÉROGÉNÉCITÉ CHEZ LES HUMAINS ET DE DONNÉES SUFFISANTES DÉMONTRANT SA

CONDITIONS MEDICALES GENERALEMENT AGGRAVEES PAR L'EXPOSITION: LES PROBLEMES CUTANES. LES PROBLEMES OCCULAIRES. LES PROBLEMES RESPIRATOIRE CHRONIQUES. EN 1995 CIRC A CONCLUDE EXISTE DES PREUVES SUFFISANTES CHEZ LES ANIMAUX EXPERIMENTAUX DE LA CANCEROGENICITE DU NOIR DE CARBONE CLASSEMENT BLACK PROBABLEMENT CANCEROGENE AUX HUMAINS.

VOIES PRIMAIRES DE PENETRATION: CONTACT DERMIQUE INHALATION INGESTION

MESURES DE PREMIERS SOINS: *** INHALATION: TRANSPORTER A L'AIR FRAIS. AIDER LA RESPIRATION SI NECESSAIRE. GARDER LA VICTIME AU CHAUD ET CALME. CONSULTER UN MEDECIN. *** INGESTION: NE PAS FAIRE VOMIR OU BOIRE. FAIRE REPOSER. CONSULTER SANS DELAI UN MEDECIN. SI LE VOMISSEMENT SE PRODUIT, GARDER LA TETE DE LA VICTIME BAISSEE AU-DESSOUS DE SES HANCHES POUR EVITER L'ASPIRATION DANS LES POUMONS. *** PEAU: LAVER LA PEAU CONTAMINEE AVEC DE L'EAU. CONSULTER SANS DELAI UN MEDECIN. *** YEUX: RINCER DE L'EAU CLAIRE PENDANT AU MOINS 15 MINUTES ET FAIRE IMMEDIATEMENT APPEL A UN MEDECIN.

SECTION VI - DONNEES SUR LA REACTIVITE

STABILITE: CE PRODUIT EST STABLE DANS DES CONDITIONS NORMALES D'ENTREPOSAGE.

POLYMERISATION DANGERUSE: NE SE PRODUIRA PAS DANS DES CONDITIONS NORMALES.

PRODUITS DE DECOMPOSITION DANGEREUX: OXYDES DE CARBONE. VAPEURS TOXIQUES ET FUMEE. FUMEE INFLAMMABLES.

CONDITIONS A EVITER: CHALEUR, ETINCELLES, FLAMMES.

PRODUITS INCOMPATIBLES: AGENTS OXIDABLE. ACIDES. ALCALINS. AMINES. AGENTS REDUCTEURS. AGENTS D'AZOTES. LES SULFURES. HALOGENES. L'EAU. LES COMPOSES CHLORINES.

SENSIBILITE AUX DECHARGES ELECTROSTATIQUES: PRENDRE DES PRECAUTIONS CONTRE LES DECHARGES STATIQUES.

SECTION VII - MESURES POUR FUITE OU DEVERSEMENT

ACTION A PRENDRE EN CAS DE FUITE OU DE DEVERSEMENT: ELIMINER TOUTE SOURCE D'IGNITION. ARRETER LA SOURCE DE FUITE. ASSURER UN VENTILATION EVACUER TOUT PERSONNEL NON-ESSENTIEL. PORTER LES VETEMENTS NECESSAIRE. ENDIGER L'ENDROIT POUR EMPECHER PROPAGATION. ABSORBER LE LIQUIDE AVEC UN PRODUIT ABSORBANT INERTE. TRANSFERER DANS UN CONTENANT A L'EPREUVE D'IGNITION.

METHODES D'ELIMINATION: NE PAS CONTAMINER LES COURS D'EAU POTABLE, LES LACS, LES ETANGS OU LES RUISSEAUX. SELON REGLEMENTS MUNICIPAUX, LES LOIS PROVINCIAL ET FEDERALES APPLICABLE A VOTRE LOCALITE.

Distribution E.S.
104-A, 5e Ave Est
La Sarre (Qc) J9Z 2Y1
T.819.339.2101
admin@distributiones.com

SECTION VIII - PRECAUTIONS D'EMPLOI

PROTECTION RESPIRATOIRE: UTILISER UN MASQUE RESPIRATOIRE A HAUT RENDEMENT QUI PROTEGE CONTRE LES VAPEURS ORGANIQUES ET LES POUSSIERES TOXIQUES. POUR DES HAUTES CONCENTRATIONS, UTILISER UN MASQUE RESPIRATOIRE A ALIMENTATION D'

VENTILATION: VENTILATION EFFICACE SUR PLACE POUR EVACUER LA POUSSIERE. EMPLOYER UN APPAREILAGE DE VENTILATION ANTIDEFLATION.

GANTS PROTECTEURS: PORTER DES GANTS/VETEMENTS RESISTANTS AUX PRODUITS CHIMIQUES AFIN DE PROTEGER LA PEAU POTENTIELLEMENT EXPOSEE.

PROTECTION YEUX: EVITER LE CONTACT AVEC LES YEUX. PORTER DES LUNETTES PROTECTRICES CONTRE LES PRODUITS CHIMIQUES ET UN ECRAN FACIAL.

AUTRE EQUIPMENT PROTECTEUR: TABLIER ET BOTTES IMPERMEABLES. DOUCHE OCULAIRE ET DOUCHE D'URGENCE.

AUTRE MESURES DE PROTECTION: EVITER TOUT CONTACT AVEC LES YEUX, LA PEAU ET LES VETEMENTS. EVITER DE RESPIRER. NE PAS INGERER. CONSERVER LOIN DE TOUS ALIMENTS. BIEN LAVER LES MAINS APRES AVOIR MANIPULER LA MATIERE. CHANGER ET LAVER LES VETEMENTS CONTAMINES.

RENSEIGNEMENTS SPECAUX EN MATIERE D'EXPEDITION: PEINTURE. LIQUIDE INFLAMMABLE CLASSE:3 UN# 1263 LE GROUPE D'EMBALLAGE II. CANUTEC 24 HOUR EMERGENCY NUMBER: (613) 996-6666

SECTION IX - PRECAUTIONS SPECIALES

PRECAUTIONS A PRENDRE A LA MANIPULATION ET L'ENTREPOSAGE: ENTREPOSER DANS UN ENDROIT FRAIS, SEC ET BIEN VENTILE, A L'ECART DES MATIERES INCOMPATIBLES. NE PAS LAISSER A PROXIMITE D'UNE SOURCE DE CHALEUR, D'ETINCELLES, OU D'UNE FLAMME. GARDER LE RECIPIENT FERME. TOUT EQUIPMENT DOIT ETRE MIS A LA TERRE.

AUTRES PRECAUTIONS: NE PAS COUPER, BROYER, SOUDER OU PERCER SUR OU PRES DE CE CONTENANT.

SECTION X - HMIS INFORMATION

HMIS RATIO: SANTE: 2 FLAMMABILITE: 3 REACTIVITE: 1 PROTECTION PERSONNELLE: K

Distribution E.S.
104-A, 5e Ave Est
La Sarre (Qc) J9Z 2Y1
T.819.339.2101
admin@distributiones.com

INTEGRITY
INNOVATION
PERFORMANCE

Cloverdale INDUSTRIAL • INDUSTRIEL

TECHNICAL DATA
EF25000 SUPER-SHIELD® SERIES
3:1 & 4:1 Mix Ratio

Description

The EF25000 Series is a high performance, isocyanate free urethane system that is VOC compliant at ≤2.8 - 3.5 lbs / gal (≤335 - 420 grams/litre). Each of Cloverdale's Super-Shield® coatings are custom formulated to customer specifications; application and cure properties vary to optimize performance.

Mixed Coating Properties

Mix Ratio	3 Parts base to 1 Part catalyst (faster cure, lower spray viscosity, excellent flow out) 4 Parts base to 1 Part catalyst (STD cure, higher sag resistance, longer open time)
VOC	≤2.8 - 3.5 lbs / gal or ≤335 - 420 grams / litre
Volume Solids	50 - 65%
Sag	
Airless	4 – 5 mils
Air Assist Airless	4 – 5 mils
Air Spray	4 – 5 mils
HVLP	4 – 5 mils
Viscosity @ 70℉ (21℃)	30 ± 3 Seconds Zahn#2 (3:1 Mixing) 35 ± 3 Seconds Zahn#2 (4:1 Mixing)
Pot Life @ 77℉ (25℃)	2.00 hours
Gloss	
20°	Matte to ultra gloss (to customer specifications)
60°	Matte to ultra gloss (to customer specifications)
Impacts	160+ in/lbs @ 2 mils DFT
Pencil Hardness	HB – F
Theoretical Coverage @ 1 mil DFT	802 - 1042 ft^2 / gal (19.7 – 25.6 m^2 / litre)

DFT = Dry Film Thickness

Product Weight - *Container weight not included*

EF25000 base	8.76 – 11.26 lbs / gallon or 1.050 – 1.350 kg / litre
SI25002P2 catalyst	6.75 lbs / gallon or 0.810 kg / litre

Shelf Life

Shelf Life is applicable only for material stored in unopened and undamaged original factory filled containers at 39°- 100℉ (4°to 38℃).

EF25000 series base 2 years SI25002P2 6 months

Subject to reinspection. Store unused material in tightly closed containers. Contents of partially filled containers may show surface skinning after storage. If skinning forms, remove by straining before use.

BENEFITS

- ISO Free
- outstanding appearance
- excellent DOI
- excellent color & gloss retention
- low VOC
- ultra low HAP's
- meets Canadian auto refinish single stage VOC requirement
- 4:1 meets AIM VOC spec for 'other industrial maintenance coatings'

USES

- fleet finishing applications
- oil field application
- ACE
- electrical transformers
- recreational vehicles
- plastics

Cloverdale Paint Inc.
50 Panet Road • Winnipeg, Manitoba • R2J 0R9 • T 204.237.0241 • F 204.233.5051
www.cloverdalepaint.com

Distribution E.S.
104-A, 5e Ave Est
La Sarre (Qc) J9Z 2Y1
T.819.339.2101
admin@distributiones.com

TECHNICAL DATA
EF25000 Series

Surface Preparation
Properly prepared, primed surface following all application procedures and recoat instructions on primer technical data sheet.

Mixing Instructions
Mixing at 3:1 by volume:

3 Parts SI25000 series base to
1 Part SI25002P2 activator

Mixing at 4:1 by volume:

4 Parts SI25000 series base to
1 Part SI25002P2 activator

Mix thoroughly to uniform consistency before use. Filter through 100 mesh in line filter.

Application Instructions
Application Temperature

Minimum	55℉ (10℃)
Maximum	100℉ (38℃)

Equipment Settings

Air Spray:	pot pressure:	10 – 20 psi
	atomizing air:	45 – 65 psi
	nozzle set:	1.0 – 1.8
Airless Spray:	fluid pressure:	2000 - 2500 psi
	tip size:	.011 - .015
Air Assist Airless:	fluid pressure:	700 - 1500 psi
	atomizing air:	20 – 60 psi
	tip size:	.011 - .015

- Precision plural component equipment is recommended. All spray equipment including lines and filters must be kept clean at all times to avoid nozzle plugging. When hand mixing smaller quantities, stir thoroughly to a uniform consistency prior to use.
- Apply in wet coat making even parallel passes. Overlap each pass 50% to minimize holidays, bare areas and pinholes.
- Excess wet film will cause sags and runs.

Recommended dry film thickness is 2 – 3 mils.

Supershield® is only recommended to be a finish coat over two component epoxy primers. Never apply over one component or urethane primers.

If thinners are required: *Please contact your Cloverdale Representative for recommendations.*

Note: Successful application requires following the recommended temperature, humidity conditions and film thickness ranges.

Drying Schedule
To customer specifications

Recoat Window for Best DOI

Substrate Temp	70℉ (21℃)
Over Itself	15 minutes to 1 day
Over Epoxy Primers	1 hour to 3 days

Flash times: Please refer to specific Cloverdale Primer Technical Data Sheet for appropriate flash times and recoat windows for this topcoat.

It is recommended to apply at ambient air and surface temperatures between 55°- 100℉ (10°- 38℃). App ly at a relative humidity level between 33% - 85%.

Surface temperature must be at least 5℉ (3℃) abov e the dew point to ensure that moisture condensation does not occur during application and the drying period.

Higher/lower temperatures & humidity, film thickness, improper activator range and poor air movement will affect the dry time and recoat window.

Equipment Cleanup
Clean application equipment with Cloverdale's SP03078T0.

Safety Precautions
FOR INDUSTRIAL USE ONLY. To be used by professionally trained personnel using proper safety equipment. Use only with adequate ventilation. Warning: this product is flammable, keep away from heat, sparks and open flame. Please refer to material safety data sheets.

Warranty
Cloverdale Paint Inc. warrants its product to be free from defects in materials and workmanship and will REPLACE ANY PRODUCT PROVED TO BE DEFECTIVE, OR REFUND OF THE ORIGINAL PURCHASE PRICE OF THE QUANTITY PROVED TO BE DEFECTIVE. Requests for refund or replacement of product must be made in writing within one year from the original date of purchase. This Warranty does not apply to defects due, directly or indirectly, to misuse, abuse, negligent application, or acts of God.

CLOVERDALE PAINT INC. WILL NOT BE LIABLE FOR DEATH, INJURIES TO PERSONS OR PROPERTY, OR FOR INCIDENTAL, CONTINGENT, SPECIAL OR CONSEQUENTIAL DAMAGES ARISING FROM THE USE OF OUR PRODUCT, INCLUDING DOWNTIME OR LOSS OF USE OF PRODUCT.

All data, statements, and recommendations made herein are based upon information we believe to be reliable, but are made without any representation, guarantee or warranty of accuracy. Our products are sold on the condition that the user himself will evaluate them, as well as our recommendations, to determine their suitability for his own purpose before adoption. Also, statements regarding the use of our products or processes are not to be construed as recommendations for their use in violation of any patent rights or in violation of any applicable laws or regulations.

Cloverdale Paint Inc.
50 Panet Road • Winnipeg, Manitoba • R2J 0R9 • T 204.237.0241 • F 204.233.5051
www.cloverdalepaints.com

Distribution E.S.
104-A, 5e Ave Est
La Sarre (Qc) J9Z 2Y1
T.819.339.2101
admin@distributiones.com

F I C H E S I G N A L E T I Q U E

SECTION I - RENSEIGNEMENTS SUR LE PRODUIT

Identificateur du Produit: SUPERSHIELD
Numéro du Produit: SI25000-12
Usage du Produit: PEINTURE
WHMIS CATEGORIE: B2 D2AD2B

NOM DU FABRICANT:
Cloverdale Paint Inc.
50 PANET ROAD
WINNIPEG, MB
R2J 0R9 204/237-0241

NOM DU FOURNISSEUR:
Cloverdale Paint Inc.
50 PANET ROAD
WINNIPEG, MB
R2J 0R9 204/237-0241

PREPARE PAR: Mr Robert Tinsley, 204-237-0241 DATE: 05/16/13

SECTION II - INGREDIENTS DANGEREUX

INGREDIENTS	NUMERO CAS	POURCENTAGE	LIMITES D'EXPOSITION	LC50	LD50
IRON OXIDE	1309-37-1	5.0-10.0	10 mg/m3	N/AV	N/AV
ACRYLATED URETHANE OLIGOMER	N/AV	5.0-10.0	NO INFO	N/AV	N/AV
XYLENE; MIXED ISOMERS	1330-20-7	1.0-5.0	100 ppm	5000 PPM RAT	4G/KG RAT ORAL
METHYL AMYL KETONE	110-43-0	5.0-10.0	50 ppm	2000 PPM RAT	1600 MG/KG RAT
N-BUTYL ACETATE	123-86-4	10.0-30.0	150 ppm	2000 PPM RAT	14.0 G/KG RAT
ETHYL 3-ETHOXYPROPIONATE	763-69-9	1.0-5.0	50 ppm	>1000 PPM RAT	5000 MG/KG RAT
ETHYLBENZENE	100-41-4	1.0-5.0	100 ppm	>4000 PPM RAT	3.5 G/KG RAT
1,6 HEXANEDIOL DIACRYLATE	13048-33-4	1.0-5.0	NO INFO	N/AV	4.9 G/KG RAT
TRIMETHYLOLPROPANE TRIACRYLATE	15625-89-5	5.0-10.0	NO INFO	N/AV	>5 G/KG RAT

N.A. - SANS OBJET

SECTION III - PROPRIETES PHYSIQUES

POINT D'EBULLITION : 126-170 C
ODEUR :ODEUR PIQUANT

APPARENCE :LIQUIDE EPAIS
SOLUBILITE :NEGLIGEABLE
VOLATILES EN VOLUME: 32.7%
PH @ 0.00 % : 7.0
TENSION DE VAPEUR :18.8 mm Hg

DENSITE DE LA VAPEUR:PLUS LOURD QUE L'AIR
TAUX D'EVAPORATION :PLUS RAPIDE QUE ACETATE BUTYLE

DENSITE SPECIFIQUE : 1.100
POINT DE CONGELATION: -40 C

Distribution E.S.
104-A, 5e Ave Est
La Sarre (Qc) J9Z 2Y1
T.819.339.2101
admin@distributiones.com

SECTION IV - RISQUES D'INCENDIE OU D'EXPLOSION

POINT D'ECLAIR: 15 C
(TAGLIABUE C. C.)
CLASS 3, DIV. 2

LEL: 1.0%
UEL: 12.1%

MOYENS D'EXTINCTION: CO2 CHIMIQUES SECS LA MOUSSE

RISQUE PARTICULIER DE LUTTE CONTRE L'INCENDIE: LIQUIDE COMBUSTIBLE (POINT ECLAIR EST INFERIEUR A 100 F/38 C). PEUT FORMER DES MELANGES INFLAMMABLES. LES VAPEURS PEUVENT ETRE EXPLOSIVE DANS L'AIR. ELIMINER TOUTE SOURCE D'IGNITION. TOUT EQUIPMENT DOIT ETRE MIS A LA TERRE. GARDER LE RECIPIENT FERME.

PROCEDURE D'EXTINCTION: LES POMPIERS DOIVENT PORTER UN APPAREIL RESPIRATOIRE AUTONOME ET DES VETEMENTS DE PROTECTION COMPLETS. UTILISER DE L'EAU PULVERIZEE POUR REFROIDIR LES STRUCTURES ET LES CONTENANTS EXPOSES AU FEU.

SECTION V - DANGERS POUR LA SANTE

EFFETS DE LA SUREXPOSITION: *** INHALATION: LES VAPEURS PEUVENT IRRITER. L'EXPOSITION A DES VAPEURS TRES CONCENTREES PEUVENT CAUSER DES MAUX DE TETES, DES ETOURDISSEMENTS, DES NAUSEES, UNE DEPRESSION DU SYSTEME NERVEUX CENTRAL. L'EXPOSITION PROLONGEE A DES VAPEURS TRES CONCENTREES PEUT CAUSER L'EVANOUISSEMENT OU LA MORT. *** INGESTION: MODEREMENT TOXIQUE. LE PRODUIT EST NOCIF LORSQU'IL EST INGERE. L'INGESTION DE GRANDES QUANTITES PEUT CAUSER DES MAUX DE TETES, DES NAUSEES, DES VOMISSEMENTS, UNE DEPRESSION DU SYSTEME NERVEUX CENTRAL. UNE PETITE QUANTITE DE CE LIQUIDE ASPIREE DANS LES POUMONS SOIT PAR INGESTION OU PAR VOMISSEMENT, RISQUE D'AVOIR DE GRAVE EFFETS NOCIF POUR LA SANTE (P.EX., PROVOQUER UN OEDEM PULMONAIRE). *** PEAU: PEUT CAUSER DE L'IRRITATION MODEREE. PEUT CAUSER LE DEGRAISSMENT ET LA DERMATITE. UNE EXPOSITION PROLONGEE PEUT RESULTER A UNE SENSIBILITE DANS LA PEAU. PEUT PROVOQUER DES BRULURES CHIMIQUES. PEUT ETRE ABSORBER PAR LA PEAU ET PROVOQUER UN RISQUE POUR LA SANTE. *** YEUX: LES VAPEURS PEUVENT IRRITER. LE LIQUIDE ET LES BRUINES IRRITENT LES YEUX ET PEUVENT CAUSER DES BRULURES. *** EFFETS DE LA SUREXPOSITION: L'EXPOSITION PROLONGEES OU REPETEES PEUT CAUSER UNE SENSIBILITE DE LA PEAU ET/OU UNE SENSIBILITE RESPIRATOIRE. L'EXPOSITION PROLONGEES OU REPETEES PEUVENT CAUSER A LA LONGUE DES DOMMAGES AUX SYSTEME SANGUIN, GASTRO-INTESTINAL, NERVEUX, ET/OU REPRODUCTEUR. LE CIRC A CLASSE L'ETHYLBENZENE PARMI LES SUBSTANCES DU GROUPE 2B EN SE FONDANT SUR DES DONNEES SUFFISANTES DEMONTRANT SA CANCEROGENECITE POUR LES ANIMAUX DE LABORATOIRE, MAIS DE DONNEES INSUFFISANTES DEMONTRANT L'APPARITION DE CANCER CHEZ LES HUMAINS. SELON LES RESULTATS DE CERTAINES ETUDES MENEES SUR DES ANIMAUX, DE TRES GRANDES EXPOSITIONS AUX XYLENES ON ENTRAINE DES EFFETS NEFASTES SUR LE DEVELOPPEMENT DES EMBRYONS/FETUS. CES EFFETS SONT SOUVENT APPARUS A DES NIVEAUX D'EXPOSITION TOXIQUES POUR LA MERE. LA PORTEE DE CES RESULTATS POUR LES HUMAINS N'A PAS ETE ETABLIE.

CONDITIONS MEDICALES GENERALEMENT AGGRAVEES PAR L'EXPOSITION: LES PROBLEMES CUTANES. LES PROBLEMES RESPIRATOIRE CHRONIQUES.

VOIES PRIMAIRES DE PENETRATION: INHALATION CONTACT DERMIQUE

MESURES DE PREMIERS SOINS: *** INHALATION: TRANSPORTER A L'AIR FRAIS. AIDER LA RESPIRATION SI NECESSAIRE. GARDER LA VICTIME AU CHAUD ET CALME. CONSULTER UN MEDECIN. *** INGESTION: NE PAS FAIRE VOMIR OU BOIRE. FAIRE REPOSER. CONSULTER SANS DELAI UN MEDECIN. SI LE VOMISSEMENT SE PRODUIT, GARDER LA TETE DE LA VICTIME BAISSEE AU-DESSOUS DE SES HANCHES POUR EVITER L'ASPIRATION DANS LES POUMONS. *** PEAU: LAVER LA PEAU CONTAMINEE AVEC DE L'EAU. CONSULTER SANS DELAI UN MEDECIN. *** YEUX: RINCER DE L'EAU CLAIRE PENDANT AU MOINS 15 MINUTES ET FAIRE IMMEDIATEMENT APPEL A UN MEDECIN.

Distribution E.S.
104-A, 5e Ave Est
La Sarre (Qc) J9Z 2Y1
T.819.339.2101
admin@distributiones.com

SECTION VI - DONNEES SUR LA REACTIVITE

STABILITE: CE PRODUIT EST STABLE DANS DES CONDITIONS NORMALES D'ENTREPOSAGE.

POLYMERISATION DANGERUSE: NE SE PRODUIRA PAS DANS DES CONDITIONS NORMALES.

PRODUITS DE DECOMPOSITION DANGEREUX: OXYDES DE CARBONE. OXYDES D'AZOTE. VAPEURS TOXIQUES ET FUMEE.

CONDITIONS A EVITER: CHALEUR, ETINCELLES, FLAMMES.

PRODUITS INCOMPATIBLES: AGENTS OXIDABLE. ACIDES. ALCALINS. AGENTS REDUCTEURS. LES SULFURES. LES METAUX ACTIFS, IONS DE METAUX. LE CUIVRE. HALOGENES. L'EAU.

SENSIBILITE AUX DECHARGES ELECTROSTATIQUES: PRENDRE DES PRECAUTIONS CONTRE LES DECHARGES STATIQUES.

SECTION VII - MESURES POUR FUITE OU DEVERSEMENT

ACTION A PRENDRE EN CAS DE FUITE OU DE DEVERSEMENT: ELIMINER TOUTE SOURCE D'IGNITION. ARRETER LA SOURCE DE FUITE. EVACUER TOUT PERSONNEL NON-ESSENTIEL. PORTER LES VETEMENTS NECESSAIRE. ENDIGER L'ENDROIT POUR EMPECHER PROPAGATION. ABSORBER LE LIQUIDE AVEC UN PRODUIT ABSORBANT INERTE. TRANSFERER DANS UN CONTENANT A L'EPREUVE D'IGNITION.

METHODES D'ELIMINATION: NE PAS CONTAMINER LES COURS D'EAU POTABLE, LES LACS, LES ETANGS OU LES RUISSEAUX. SELON REGLEMENTS MUNICIPAUX, LES LOIS PROVINCIAL ET FEDERALES APPLICABLE A VOTRE LOCALITE.

SECTION VIII - PRECAUTIONS D'EMPLOI

PROTECTION RESPIRATOIRE: UTILISER UN MASQUE RESPIRATOIRE A HAUT RENDEMENT QUI PROTEGE CONTRE LES VAPEURS ORGANIQUES ET LES POUSSIERES TOXIQUES. POUR DES HAUTES CONCENTRATIONS, UTILISER UN MASQUE RESPIRATOIRE A ALIMENTATION D'AIR.

VENTILATION: VENTILATION EFFICACE SUR PLACE POUR EVACUER LA POUSSIERE. EMPLOYER UN APPAREILAGE DE VENTILATION ANTIDEFLATION.

GANTS PROTECTEURS: PORTER DES GANTS/VETEMENTS RESISTANTS AUX PRODUITS CHIMIQUES AFIN DE PROTEGER LA PEAU POTENTIELLEMENT EXPOSEE.

PROTECTION YEUX: EVITER LE CONTACT AVEC LES YEUX. PORTER DES LUNETTES PROTECTRICES CONTRE LES PRODUITS CHIMIQUES ET UN ECRAN FACIAL.

AUTRE EQUIPMENT PROTECTEUR: TABLIER ET BOTTES IMPERMEABLES. DOUCHE OCULAIRE ET DOUCHE D'URGENCE.

AUTRE MESURES DE PROTECTION: EVITER TOUT CONTACT AVEC LES YEUX, LA PEAU ET LES VETEMENTS. EVITER DE RESPIRER. NE PAS INGERER. CONSERVER LOIN DE TOUS ALIMENTS. BIEN LAVER LES MAINS APRES AVOIR MANIPULER LA MATIERE. CHANGER ET LAVER LES VETEMENTS CONTAMINES.

RENSEIGNEMENTS SPECAUX EN MATIERE D'EXPEDITION: PEINTURE. LIQUIDE INFLAMMABLE CLASSE:3 UN# 1263 LE GROUPE D'EMBALLAGE II. CANUTEC 24 HOUR EMERGENCY NUMBER: (613) 996-6666

Distribution E.S.
104-A, 5e Ave Est
La Sarre (Qc) J9Z 2Y1
T.819.339.2101
admin@distributiones.com

SECTION IX - PRECAUTIONS SPECIALES

PRECAUTIONS A PRENDRE A LA MANIPULATION ET L'ENTREPOSAGE: ENTREPOSER DANS UN ENDROIT FRAIS, SEC ET BIEN VENTILE, A L'ECART DES MATIERES INCOMPATIBLES. NE PAS LAISSER A PROXIMITE D'UNE SOURCE DE CHALEUR, D'ETINCELLES, OU D'UNE FLAMME. GARDER LE RECIPIENT FERME. TOUT EQUIPMENT DOIT ETRE MIS A LA TERRE.

AUTRES PRECAUTIONS: NE PAS UTILISER DE PRESSION POUR VIDER LE CONTENANT. NE PAS COUPER, BROYER, SOUDER OU PERCER SUR OU PRES DE CE CONTENANT. TOUS LES CONTENANTS CONTIENNENTDES RESIDUS ET DES VAPEURS. MANIPULER LES CONTENANTS VIDES COMME S'ILS ETAIENT PLEINS.

SECTION X - HMIS INFORMATION

HMIS RATIO: SANTE: 2 FLAMMABILITE: 3 REACTIVITE: 1 PROTECTION PERSONNELLE: E

Distribution E.S.
104-A, 5e Ave Est
La Sarre (Qc) J9Z 2Y1
T.819.339.2101
admin@distributiones.com

83030
DATA SHEET

2.1 VOC ARP Primer

Automotive Primer

Industry Approvals		
Auto Refinish:	✓	Category 1
Env. Canada:		Exempt
MPI:		N/a
AWWA:		N/a

General Properties

A high performance epoxy primer for vehicle refinish applications requiring a primer with less than 250 gr/lt VOC. The 83030 primer has superior corrosion resistance when applied to prepared steel. No induction time required. 83030 has excellent sanding capability, but provides a finish so smooth that sanding is often not required.

Recommended Uses

For use in vehicle refinish applications, truck boxes & bodies, power distribution equipment, tanks, agricultural equipment, and general industrial priming.

Product Information

GENERIC TYPE
Amine Cured Epoxy

PIGMENT TYPE
Anti-corrosive

COLOR
Grey

BASES
N/a

FINISH
Flat

AVERAGE VOLUME SOLIDS
60.2%

AVERAGE WEIGHT SOLIDS
77.0%

RECOMMENDED FILM THICKNESS
Wet: 3.3-5.0 mils (82 - 125 microns)
Dry: 2-3 mils (50 - 75 microns)
See your Cloverdale Representative for project recommendations.

THEORETICAL COVERAGE
965 ft²/gal @1 mil (25 microns) DFT
23.7 m²/L @ 1 mil (25 microns) DFT
Actual coverage may vary depending on substrate and application methods.

MIXED RATIO
3 Parts 83030A; 1 Part 83030B

INDUCTION TIME
No induction time required

POT LIFE
7 hours at 25°C (77°F) (less at higher temperatures)

VISCOSITY MIXED
57 - 63 KU

TEMPERATURE RESISTANCE (DRY)
93°C (200°F) Continuous
120°C (250°F) Intermittent

V.O.C. MIXED
250 gm./lit. (2.1 lb./gal.)
**refer to MSD sheet for current VOC values*

THINNER
Use as supplied.

ACCELERATOR
A-65

Methods of Application

AIRLESS SPRAY	1500 - 200 psi with tip sizes .011" - .013" or equivalent
H.V.L.P.	Tip size 1.4 - 1.6 mm. 8 - 10 psi cap pressure
CONVENTIONAL	40 - 50 psi gun pressure
BRUSH / ROLLER	Not recommended

Drying Time - Temperature, Relative Humidity, and Film Thickness will affect dry and re-coat times.

Substrate Temperature	Touch Dry	Hard Dry	Overcoat Interval with Armourshield		
			Minimum	Maximum	Normal
25°C (77°F)	3.5 hours	6 hours	2 hours	3 days	4 hours

Distribution E.S.
104-A, 5e Ave Est
La Sarre (Qc) J9Z 2Y1
T.819.339.2101
admin@distributiones.com

83030

Recommended Topcoats

Most Cloverdale Conventional and High Performance Coatings. Note: Only the 837 and 839 series urethanes should be used for ARP applications.

Surface Preparation

Area to be painted should be thoroughly cleaned with a detergent solution in water followed by a wash using a wax and grease remover. Sand the bare metal areas using 80-180 grit abrasive. Old, existing finishes should be sanded using 320 – 400 grit paper. Sanded areas should be re-cleaned and primed as quickly as possible after drying.

Limitations

Not recommended for immersion service. For best results apply when substrate temperature is above 10°C (50°F), and at a minimum of 3°C (5°F) above the dew point. Do not apply when the relative humidity is above 85%.

Mixing Instructions

Mix 83030 base A component and curing agent 83030 activator B separately with good agitation. Add curing agent to base component and mix thoroughly until homogenous. If thinning is necessary or required proceed only after recommended induction time has passed.

Safety Precautions

This product is for industrial use only. **Refer to Material Safety Data Sheet for proper health and safety information.**

Storage and Handling

FLASH POINT	-20°C (-4°F) TCC
PRODUCT WEIGHT	1.435 kg/lt mixed (container extra)
STORAGE	Cool, dry, secure location. See your Cloverdale Paint Representative.
PACKAGE SIZE	1 gal kit - 3 qts 83030A and 1 qt. 83030B 4 gal kit - 3 gal 83030A and 1 gal 83030B

Some package sizes or colors may be by special order only. Please check with your Cloverdale Representative when ordering.

Warranty Disclaimer

Cloverdale Paint manufactures quality products. In the event that this product is defective or in any way unsuitable for the application for which it is sold, Cloverdale Paint Inc. will replace the product free of charge. The warranty provided by this data sheet is the only warranty or guarantee of quality made in respect of this product by Cloverdale Paint Inc. By purchasing this product the customer accepts this warranty in lieu of all others, and waives all claims to any other remedy arising from any warranty or guarantee of quality, whether such warranty or guarantee of quality was made expressly to the customer or implied by any applicable law.

Cloverdale Paint Inc.
6950 King George Boulevard, Surrey, British Columbia, Canada V3W 4Z1
Web Site: www.cloverdalepaint.com **Email:** helpdesk@cloverdalepaint.com
Phone: 604 596 6261 **Fax:** 604 597 2677

Distribution E.S.
104-A, 5e Ave Est
La Sarre (Qc) J9Z 2Y1
T.819.339.2101
admin@distributiones.com

83030

PERFORMANCE CRITERIA

1. Abrasion Resistance
Method: ASTM D4060 Abrasion Resistance of Organic Coating by Taber Abrader, 1000 gram load, CS-17 Wheel, 1000 Cycles
Coating System: 1 coat 83030
Results: 161 mg.

2. Adhesion
Method: ASTM D4541, method "E"

Coating System: 83030 primer, 839 Armourshield topcoat
Results: >900 psi

3. Chemical Resistance
Method: Covered spot test for 1 week at room temperature

Coating System: 1 coat 83030

Coating was exposed to - 5% Sodium Hydroxide Solution; 5% Sulfuric Acid Solution; 5% Hydrochloric Acid; 5% Mono Basic Sodium Phosphate Solution; 5% Sodium Hypochlorite Solution; Heavy Duty Liquid Detergent
Results: Unaffected - slight discoloration permitted

4. Recoating Window
Method: Internal method - Minimum = the time to >80% gloss @ 20 degree angle. Maximum = longest time tested with 5B adhesion of topcoat

Coating System: 83030 primer, 839 Armourshield topcoat
Results: 2 hrs to >72 hrs

5. Salt Spray (Fog)
Method: ASTM B117
Coating System A: 1 coat 83030
Results:>1000 hrs
Coating System B: 1 coat 83030, 1 coat 83904
Results: >1500 hrs

6. Flexibility
Method: ASTM D522 Cylindrical Mandrel Bend

Coating System: 1 coat 83030
Results: Not less than 9% elongation

7. Pencil Hardness
Method: ASTM D3363
Coating System A: 1 coat 83030
Results: pass 2H

Check for recent amendments to this data sheet at www.cloverdalepaint.com

Cloverdale Paint Inc.
6950 King George Boulevard, Surrey, British Columbia, Canada V3W 4Z1
Web Site: www.cloverdalepaint.com **Email:** helpdesk@cloverdalepaint.com
Phone: 604 596 6261 **Fax:** 604 597 2677

Distribution E.S.
104-A, 5e Ave Est
La Sarre (Qc) J9Z 2Y1
T.819.339.2101
admin@distributiones.com

MATERIAL SAFETY DATA SHEET

SECTION I - PRODUCT IDENTIFICATION AND USE

Product Identifier: 2.1 VOC ARP PRIMER BASE
Identification Number: 83030A
Product Use: PAINT
WHMIS Class: B2 D1B D2A

MANUFACTURER:
Cloverdale Paint Inc.
50 PANET ROAD
WINNIPEG, MB
R2J 0R9 204/237-0241

SUPPLIER:
Cloverdale Paint Inc.
50 PANET ROAD
WINNIPEG, MB
R2J 0R9 204/237-0241

PREPARED BY: Mr Robert Tinsley, 204-237-0241 DATE: 03/19/14

SECTION II - HAZARDOUS INGREDIENTS

CHEMICAL NAME	CAS NUMBER	WT. PERCENT RANGE	EXPOSURE LIMIT	LC50	LD50
TITANIUM DIOXIDE	13463-67-7	10.0-30.0	10 MG/M3	6.82MG/L RAT	>25G/KGORAL R
MAGNESIUM SILICATE(TALC)	13776-74-4	10.0-30.0	5 mg/m3 DUST	N/AV	N/AV
BISPHENOL A DIGLYCIDYL ETHER	25068-38-6	10.0-30.0	NO INFO	N/AV	N/AV
ALKYL GLYCIDYL ETHER	68609-97-2	1.0-5.0	NO INFO	N/AV	>19.2 G/KG RA
XYLENE; MIXED ISOMERS	1330-20-7	1.0-5.0	100 ppm	5000 PPM RAT	4G/KG RAT ORA
METHYL ISOBUTYL KETONE	108-10-1	1.0-5.0	50 ppm	5700 PPM RAT	2080MG/KG RAT
METHYL ETHYL KETONE	78-93-3	5.0-10.0	200 ppm	2000 PPM RAT	2737 MG/KG RA
ACETONE	67-64-1	1.0-5.0	750 ppm	16000 PPM RAT	7400 MG/KG RA
PROPYLENE GLYCOL MONOMETHYL ETHER	107-98-2	1.0-5.0	100 ppm	13000 MG/KG RAT	5660 MG/KG RA
FURFURYL ALCOHOL	98-00-0	1.0-5.0	NO INFO	233 MG/KG RAT	177 MG/KG RAT
TER-BUTYL ACETATE	504-88-5	1.0-5.0	NO INFO	2230 MG/M3 RAT	4100 MG/KG RA

N.A. - NOT APPLICABLE

SECTION III - PHYSICAL DATA

BOILING RANGE : 56-260 C
ODOR : AROMATIC
APPEARANCE : GREY LIQUID
VOLATILE BY WEIGHT: 18.6%
VOLATILE BY VOLUME: 35.7%
PH @ 0.00 % : 7.0
VAPOR PRESSURE : 184 mm Hg
VAPOR DENSITY : IS HEAVIER THAN AIR
EVAPORATION RATE: IS FASTER THAN BUTYL ACETATE
SOLUBILITY : 8% WATER SOLUBLE
SPECIFIC GRAVITY: 1.483
FREEZING POINT : -40 C

Distribution E.S.
104-A, 5e Ave Est
La Sarre (Qc) J9Z 2Y1
T.819.339.2101
admin@distributiones.com

SECTION IV - FIRE AND EXPLOSION DATA

FLASH POINT: -18 C
(TAGLIABUE C. C.)
CLASS 3, DIVISION 1

LEL: 1.0%
UEL: 16.3%

EXTINGUISHING MEDIA: DRY CHEMICAL CARBON DIOXIDE FOAM WATER FOG

UNUSUAL FIRE AND EXPLOSION HAZARDS: FLAMMABLE LIQUID (FLASH POINT LESS THAN 100 F/38 C). MAY FORM FLAMMABLE MIXTURES. VAPORS MAY BE EXPLOSIVE IN AIR. ELIMINATE IGNITION SOURCES. GROUND ALL EQUIPMENT. KEEP CONTAINER CLOSED.

SPECIAL FIREFIGHTING PROCEDURES: FIREFIGHTERS SHOULD WEAR SELF CONTAINED BREATHING APPARATUS AND FULL PROTECTIVE CLOTHING. USE WATER SPRAY TO COOL NEARBY CONTAINERS AND STRUCTURES EXPOSED TO FIRE.

SECTION V - HEALTH HAZARD DATA

EFFECTS OF OVER EXPOSURE: *** INHALATION: VAPORS MAY BE IRRITATING. EXPOSURE TO HIGH VAPOR CONCENTRATIONS MAY CAUSE HEADACHES, DIZZINESS, NAUSEA, AND CENTRAL NERVOUS SYSTEM DEPRESSION. PROLONGED EXPOSURE TO HIGH VAPOR CONCENTRATIONS MAY CAUSE UNCONSCIOUSNESS OR DEATH. *** INGESTION: MODERATELY TOXIC. HARMFUL IF SWALLOWED. SWALLOWING LARGE QUANTITIES CAUSES HEADACHES, NAUSEA, VOMITING, AND CENTRAL NERVOUS SYSTEM DEPRESSION. MAY CAUSE LIVER AND/OR KIDNEY DAMAGE. SMALL AMOUNTS OF LIQUID DRAWN INTO THE LUNGS FROM SWALLOWING OR VOMITING MAY CAUSE SEVERE HEALTH AFFECTS (E.G.PULMONARY EDEMA). *** SKIN: CAN CAUSE MODERATE IRRITATION. CAN CAUSE DEFATTING AND DERMATITIS. PROLONGED EXPOSURE MAY CAUSE SKIN SENSITIZATION. CAN CAUSE CHEMICAL BURNS. CAN BE ABSORBED THROUGH THE SKIN CAUSING A HEALTH HAZARD. *** EYES: VAPORS MAY IRRITATE. LIQUID AND MISTS WILL IRRITATE AND MAY BURN THE EYES. *** CHRONIC AFFECTS OF OVEREXPOSURE: CONTAINS SILICA. LONG TERM EXPOSURE TO SILICA DUST MAY CAUSE SILICOSIS AND CARDIOPULMONARY IMPAIRMENT. REPEATED OR PROLONGED EXPOSURES MAY CAUSE SKIN AND/OR RESPIRATORY SENSITIZATION. REPEATED OR PROLONGED EXPOSURES MAY CAUSE LIVER, KIDNEY, AND/OR NEURAL DYSFUNCTION. REPEATED OR PROLONGED EXPOSURES MAY CAUSE DELAYED EFFECTS INVOLVING BLOOD, GASTRO-INTESTINAL, NERVOUS AND/OR REPRODUCTIVE SYSTEMS. LONG TERM EXPOSURE TO DUSTS CAN LEAD TO RESPIRATORY IMPAIRMENT. HIGH EXPOSURES TO XYLENES IN SOME ANIMAL STUDIES HAVE BEEN REPORTED TO CAUSE HEALTH EFFECTS ON THE DEVELOPING EMBRYO/FETUS. THESE EFFECTS WERE OFTEN AT LEVELS TOXIC TO THE MOTHER. THE SIGNIFICANCE OF THESE FINDINGS TO HUMANS HAS NOT BEEN DETERMINED. LONG-TERM EXCESSIVE EXPOSURES MAY CAUSE TALCOSIS, PULMONARY FIBROSIS, WHICH IN TURN MAY LEAD TO SEVERE AND PERMANENT DAMAGE TO THE LUNGS. IN A LIFETIME INHALATION STUDY, EXPOSURE TO 250 MG/M3 TITANIUM DIOXIDE DUST RESULTED IN THE DEVELOPMENT OF LUNG TUMOURS IN RATS. THESE TUMOURS OCCURRED ONLY AT DUST LEVELS THAT OVERWHELMED THE ANIMALS' LUNG CLEARANCE MECHANISMS AND WERE DIFFERENT FROM COMMON HUMAN LUNG TUMOURS IN BOTH TYPE AND LOCATION. THE RELEVANCE OF THESE FINDINGS TO HUMANS IS UNKNOWN. THE INTERNATIONAL AGENCY FOR RESEARCH ON CANCER (IARC) HAS CLASSIFIED TITANTIUM DIOXIDE AS POSSIBLY CARCINOGENIC TO HUMANS (GROUP 2B) BASED ON INADEQUATE EVIDENCE OF CARCINOGENICITY IN HUMANS AND SUFFICIENT EVIDENCE OF CARCINOGENICITY IN EXPERIMENTAL ANIMALS. ACCORDING TO THE INTERNATIONAL AGENCY FOR RESEARCH ON CANCER (IARC), METHYL ISOBUTYL KETONE IS POSSIBLY CARCINOGENIC TO HUMANS (GROUP 2B)

MEDICAL CONDITIONS PRONE TO AGGRAVATION BY EXPOSURE: SKIN DISORDERS. EYE DISORDERS. CHRONIC RESPIRATORY DISORDERS.

PRIMARY ROUTE(S) OF ENTRY: DERMAL INHALATION INGESTION

EMERGENCY AND FIRST AID PROCEDURES: *** INHALATION: REMOVE TO FRESH AIR. ASSIST

Distribution E.S.
104-A, 5e Ave Est
La Sarre (Qc) J9Z 2Y1
T.819.339.2101
admin@distributiones.com

SECTION V - HEALTH HAZARD DATA

BREATHING IF NECESSARY. KEEP VICTIM WARM AND QUIET. SEEK MEDICAL ATTENTION. *** INGESTION: DO NOT INDUCE VOMITING OR GIVE FLUIDS. KEEP AT REST. GET PROMPT MEDICAL ATTENTION. IF VOMITING OCCURS, KEEP VICTIM'S HEAD BELOW HIPS TO PREVENT ASPIRATION INTO THE LUNGS. *** SKIN: FLUSH CONTAMINATED SKIN WITH WATER. GET PROMPT MEDICAL ATTENTION. *** EYES: FLUSH WITH CLEAN WATER FOR AT LEAST 15 MINUTES AND IMMEDIATELY GET MEDICAL ATTENTION.

SECTION VI - REACTIVITY DATA

STABILITY: THIS PRODUCT IS STABLE UNDER NORMAL STORAGE CONDITIONS.

HAZARDOUS POLYMERIZATION: COULD OCCUR UNDER NORMAL CONDITIONS. CARE MUST BE EXERCISED.

HAZARDOUS DECOMPOSITION PRODUCTS: OXIDES OF CARBON. TOXIC FUMES AND SMOKE. FLAMMABLE FUMES.

CONDITIONS TO AVOID: HEAT, SPARKS OR FLAME.

INCOMPATABILITY: OXIDIZING AGENTS. ACIDS. ALKALIES. AMINES. SULFIDES. ALDEHYDES. HALOGENS. CHLORINATED COMPOUNDS.

SENSITIVITY TO STATIC DISCHARGE: TAKE PRECAUTIONARY MEASURES AGAINST STATIC DISCHARGES.

SECTION VII - SPILL OR LEAK PROCEDURES

STEPS TO BE TAKEN IN CASE MATERIAL IS RELEASED OR SPILLED: ELIMINATE IGNITION SOURCES. STOP SOURCE OF SPILL. VENTILATE AREA. EVACUATE ALL NON ESSENTIAL PERSONNEL. WEAR APPROPRIATE PROTECTIVE EQUIPMENT. DIKE SPILL TO KEEP FROM SPREADING. COVER WITH INERT ABSORBENT. REMOVE TO DISPOSAL CONTAINER.

WASTE DISPOSAL METHOD: DO NOT CONTAMINATE ANY LAKES, PONDS, STREAMS, OR UNDERGROUND WATER SUPPLIES. DISPOSE OF IN ACCORDANCE WITH LOCAL, PROVINCIAL AND FEDERAL REGULATIONS IN YOUR AREA.

SECTION VIII - SAFE HANDLING AND USE INFORMATION

RESPIRATORY PROTECTION: USE A COMBINATION ORGANIC VAPOR/TOXIC PARTICULATE HIGH EFFICIENCY FILTER RESPIRATOR. FOR HIGH CONCENTRATIONS, USE AIR SUPPLIED RESPIRATOR.

VENTILATION: EFFICIENT LOCAL EXHAUST VENTILATION IS REQUIRED. USE EXPLOSION PROOF VENTILATION EQUIPMENT.

PROTECTIVE GLOVES: WEAR APPROPRIATE CHEMICAL RESISTANT GLOVES/CLOTHING TO PREVENT SKIN CONTACT.

EYE PROTECTION: DO NOT GET IN EYES. WEAR SAFETY GLASSES/GOGGLES OR A FACE SHIELD.

OTHER PROTECTIVE EQUIPMENT: IMPERMEABLE APRON AND BOOTS. EYE BATH AND SAFETY

Distribution E.S.
104-A, 5e Ave Est
La Sarre (Qc) J9Z 2Y1
T.819.339.2101
admin@distributiones.com

SECTION VIII - SAFE HANDLING AND USE INFORMATION

SHOWER.

HYGENIC PRACTICES: DO NOT GET IN EYES, SKIN OR CLOTHING. AVOID INHALING. DO NOT SWALLOW. KEEP AWAY FROM FOOD PRODUCTS. WASH HANDS THOROUGHLY AFTER HANDLING. CHANGE AND WASH CONTAMINATED CLOTHING.

SPECIAL SHIPPING INFORMATION: PAINT. FLAMMABLE LIQUID CLASS:3 UN#1263 PACKING GROUP II. CANUTEC 24 HOUR EMERGENCY NUMBER: (613) 996-6666

SECTION IX - SPECIAL PRECAUTIONS

PRECAUTIONS TO BE TAKEN IN HANDLING AND STORAGE: STORE IN A COOL, DRY, WELL VENTILATED AREA, AWAY FROM ALL INCOMPATIBLE MATERIALS. KEEP AWAY FROM HEAT, SPARKS AND FLAME. KEEP CONTAINER CLOSED. GROUND ALL EQUIPMENT.

OTHER PRECAUTIONS: DO NOT USE PRESSURE TO EMPTY CONTAINERS. DO NOT CUT, GRIND, WELD OR DRILL ON OR NEAR THIS CONTAINER. CONTAINERS WILL RETAIN PRODUCT RESIDUES AND VAPORS. HANDLE EMPTY CONTAINERS AS IF THEY WERE FULL. DO NOT PUNCTURE, INCINERATE, BURN OR STORE ABOVE 45 C. SOME OR ALL OF THE LISTED COMPONENTS OF THIS PRODUCT MAY PRESENT A HEALTH THREAT IN THE FORM OF DUSTS.

SECTION X - HMIS INFORMATION

HMIS: HEALTH: 2 FLAMMABILITY: 3 REACTIVITY: 1 PERSONAL PROTECTION: K

Distribution E.S.
104-A, 5e Ave Est
La Sarre (Qc) J9Z 2Y1
T.819.339.2101
admin@distributiones.com

MATERIAL SAFETY DATA SHEET

SECTION I - PRODUCT IDENTIFICATION AND USE

Product Identifier: 2.1 VOC ARP PRIMER ACTIVATOR
Identification Number: 83030B
Product Use: PAINT ADDITIVE WHMIS Class: B2 D1AD2AE

MANUFACTURER:
Cloverdale Paint Inc.
50 PANET ROAD
WINNIPEG, MB
R2J 0R9 204/237-0241

SUPPLIER:
Cloverdale Paint Inc.
50 PANET ROAD
WINNIPEG, MB
R2J 0R9 204/237-0241

PREPARED BY: Mr Robert Tinsley, 204-237-0241 DATE: 02/03/16

SECTION II - HAZARDOUS INGREDIENTS

CHEMICAL NAME	CAS NUMBER	WT. PERCENT RANGE	EXPOSURE LIMIT	LC50	LD50
XYLENE: MIXED ISOMERS	1330-20-7	1.0-5.0	100 ppm	5000 PPM RAT	4G/KG RAT ORAL
METHYL ISOBUTYL KETONE	108-10-1	1.0-5.0	50 ppm	5700 PPM RAT	2080MG/KG RAT
ACETONE	67-64-1	5.0-10.0	750 ppm	16000 PPM RAT	7400 MG/KG RAT
N-BUTYL ALCOHOL	71-36-3	1.0-5.0	100 ppm	8000 PPM RAT	790 MG/KG RAT
2-BUTOXYETHANOL	111-76-2	1.0-5.0	50 ppm SKIN	925 PPM MOUSE	470 MG/KG RAT
DIMETHYLAMINOMETHYL PHENOL	90-72-2	1.0-5.0	NO INFO	N/AV	1200 MG/KG RAT
ETHYLBENZENE	100-41-4	1.0-5.0	100 ppm	>4000 PPM RAT	3.5 G/KG RAT
BENZYL ALCOHOL	100-51-6	10.0-30.0	NO INFO	1400 PPM RAT	1230 MG/KG RAT
ALIPHATIC POLYAMIDE	106906-26-1	10.0-30.0	NO INFO	N/AV	N/AV

N.A. - NOT APPLICABLE

SECTION III - PHYSICAL DATA

BOILING RANGE : 56-206 C
ODOR : AROMATIC
APPEARANCE : CLEAR LIQUID
VOLATILE BY WEIGHT: 13.2%
VOLATILE BY VOLUME: 20.8%
PH @ 0.00 % : 7.0
VAPOR PRESSURE : 184 mm Hg

VAPOR DENSITY : IS HEAVIER THAN AIR
EVAPORATION RATE: IS FASTER THAN BUTYL ACETATE
SOLUBILITY : 7% WATER SOLUBLE
SPECIFIC GRAVITY: 1.295
FREEZING POINT : -40 C

Distribution E.S.
104-A, 5e Ave Est
La Sarre (Qc) J9Z 2Y1
T.819.339.2101
admin@distributiones.com

SECTION IV - FIRE AND EXPLOSION DATA

FLASH POINT: -18 C
(TAGLIABUE C. C.)
CLASS 3, DIVISION 1

LEL: 1.0%
UEL: 12.8%

EXTINGUISHING MEDIA: DRY CHEMICAL CARBON DIOXIDE FOAM WATER FOG

UNUSUAL FIRE AND EXPLOSION HAZARDS: FLAMMABLE LIQUID (FLASH POINT LESS THAN 100 F/38 C). MAY FORM FLAMMABLE MIXTURES. VAPORS MAY BE EXPLOSIVE IN AIR. ELIMINATE IGNITION SOURCES. GROUND ALL EQUIPMENT. KEEP CONTAINER CLOSED.

SPECIAL FIREFIGHTING PROCEDURES: FIREFIGHTERS SHOULD WEAR SELF CONTAINED BREATHING APPARATUS AND FULL PROTECTIVE CLOTHING. USE WATER SPRAY TO COOL NEARBY CONTAINERS AND STRUCTURES EXPOSED TO FIRE.

SECTION V - HEALTH HAZARD DATA

EFFECTS OF OVER EXPOSURE: *** INHALATION: VAPORS AND MISTS ARE EXTREMELY CORROSIVE. BRONCHITIS, PULMONARY EDEMA, AND CHEMICAL PNEUMONITIS MAY OCCUR. *** INGESTION: HIGHLY TOXIC. MAY BE FATAL. SWALLOWING LARGE QUANTITIES CAUSES HEADACHES, NAUSEA, VOMITING, AND CENTRAL NERVOUS SYSTEM DEPRESSION. MAY CAUSE LIVER AND/OR KIDNEY DAMAGE. VAPORS, MISTS, AND LIQUID ARE CORROSIVE. SWALLOWING CAN CAUSE DEATH. SMALL AMOUNTS OF LIQUID DRAWN INTO THE LUNGS FROM SWALLOWING OR VOMITING MAY CAUSE SEVERE HEALTH AFFECTS (E.G.PULMONARY EDEMA). *** SKIN: VAPORS, MISTS AND LIQUID ARE EXTREMELY CORROSIVE. CAN CAUSE DEFATTING AND DERMATITIS. PROLONGED EXPOSURE MAY CAUSE SKIN SENSITIZATION. CAN CAUSE CHEMICAL BURNS. CAN BE ABSORBED THROUGH THE SKIN CAUSING A HEALTH HAZARD. *** EYES: VAPORS, LIQUID AND MISTS ARE EXTERMELY CORROSIVE. BRIEF CONTACT WILL BE SEVERELY IRRITATING AND MAY DAMAGE THE EYES AND CAUSE PEMANENT INJURY OR BLINDNESS. *** CHRONIC AFFECTS OF OVEREXPOSURE: REPEATED OR PROLONGED EXPOSURES MAY CAUSE SKIN AND/OR RESPIRATORY SENSITIZATION. REPEATED OR PROLONGED EXPOSURES MAY CAUSE LIVER, KIDNEY, AND/OR NEURAL DYSFUNCTION. REPEATED OR PROLONGED EXPOSURES MAY CAUSE DELAYED EFFECTS INVOLVING BLOOD, GASTRO-INTESTINAL, NERVOUS AND/OR REPRODUCTIVE SYSTEMS. ETHYL BENZENE HAS BEEN CLASSIFIED BY THE IARC AS A GROUP 2B SUBSTANCE ON THE BASIS OF SUFFICIENT EVIDENCE FOR CARCINOGENICITY IN LABORATORY ANIMALS BUT INADEQUATE EVIDENCE FOR CANCER IN HUMANS. HIGH EXPOSURES TO XYLENES IN SOME ANIMAL STUDIES HAVE BEEN REPORTED TO CAUSE HEALTH EFFECTS ON THE DEVELOPING EMBRYO/FETUS. THESE EFFECTS WERE OFTEN AT LEVELS TOXIC TO THE MOTHER. THE SIGNIFICANCE OF THESE FINDINGS TO HUMANS HAS NOT BEEN DETERMINED. CARCINOGENICITY IN EXPERIMENTAL ANIMALS. ACCORDING TO THE INTERNATIONAL AGENCY FOR RESEARCH ON CANCER (IARC), METHYL ISOBUTYL KETONE IS POSSIBLY CARCINOGENIC TO HUMANS (GROUP 2B) 2-BUTOXYETHANOL MAY CAUSE REPRODUCTIVE EFFECTS BASED ON STUDIES IN LABORATORY ANIMALS AT HIGH GENERALLY TOXIC DOSES. 2-BUTOXYETHANOL MAY CAUSE TERATOGENIC/EMBRYTOXIC EFFECTS BASED ON IN STUDIES IN LABORATORY ANIMALS

MEDICAL CONDITIONS PRONE TO AGGRAVATION BY EXPOSURE: ALLERGIES. SKIN DISORDERS. EYE DISORDERS. CENTRAL NERVOUS SYSTEM DISORDERS. CHRONIC RESPIRATORY DISORDERS.

PRIMARY ROUTE(S) OF ENTRY: INHALATION DERMAL INGESTION

EMERGENCY AND FIRST AID PROCEDURES: *** INHALATION: REMOVE TO FRESH AIR. ASSIST BREATHING IF NECESSARY. KEEP VICTIM WARM AND QUIET. SEEK MEDICAL ATTENTION. *** INGESTION: DO NOT INDUCE VOMITING OR GIVE FLUIDS. KEEP AT REST. GET PROMPT MEDICAL ATTENTION. IF VOMITING OCCURS, KEEP VICTIM'S HEAD BELOW HIPS TO PREVENT ASPIRATION INTO THE LUNGS. *** SKIN: FLUSH CONTAMINATED SKIN WITH WATER. GET PROMPT MEDICAL ATTENTION. *** EYES: FLUSH

Distribution E.S.
104-A, 5e Ave Est
La Sarre (Qc) J9Z 2Y1
T.819.339.2101
admin@distributiones.com

SECTION V - HEALTH HAZARD DATA

WITH CLEAN WATER FOR AT LEAST 15 MINUTES AND IMMEDIATELY GET MEDICAL ATTENTION.

SECTION VI - REACTIVITY DATA

STABILITY: THIS PRODUCT IS STABLE UNDER NORMAL STORAGE CONDITIONS.

HAZARDOUS POLYMERIZATION: COULD OCCUR UNDER NORMAL CONDITIONS. CARE MUST BE EXERCISED.

HAZARDOUS DECOMPOSITION PRODUCTS: OXIDES OF CARBON. OXIDES OF NITROGEN. TOXIC FUMES AND SMOKE.

CONDITIONS TO AVOID: HEAT, SPARKS OR FLAME.

INCOMPATABILITY: DIRECT SUNLIGHT AVOID EXTENDED CONTACT WITH AIR OR OXYGEN HEATING IN AIR MAY PRODUCE IRRITATING ALDEHYDES, ACIDS AND KETONES BASES. SODIUM HYDROXIDE ALUMINUM AND ITS ALLOYS OXIDIZING AGENTS. ACIDS. ALKALIES. AMINES. CYANIDES, ISOCYANATES. SULFIDES. ALDEHYDES. HALOGENS. WATER

SENSITIVITY TO STATIC DISCHARGE: TAKE PRECAUTIONARY MEASURES AGAINST STATIC DISCHARGES.

SECTION VII - SPILL OR LEAK PROCEDURES

STEPS TO BE TAKEN IN CASE MATERIAL IS RELEASED OR SPILLED: ELIMINATE IGNITION SOURCES. STOP SOURCE OF SPILL. VENTILATE AREA. EVACUATE ALL NON ESSENTIAL PERSONNEL. WEAR APPROPRIATE PROTECTIVE EQUIPMENT. DIKE SPILL TO KEEP FROM SPREADING. COVER WITH INERT ABSORBENT. REMOVE TO DISPOSAL CONTAINER.

WASTE DISPOSAL METHOD: DO NOT CONTAMINATE ANY LAKES, PONDS, STREAMS, OR UNDERGROUND WATER SUPPLIES. DISPOSE OF IN ACCORDANCE WITH LOCAL, PROVINCIAL AND FEDERAL REGULATIONS IN YOUR AREA.

SECTION VIII - SAFE HANDLING AND USE INFORMATION

RESPIRATORY PROTECTION: USE A COMBINATION ORGANIC VAPOR/TOXIC PARTICULATE HIGH EFFICIENCY FILTER RESPIRATOR. FOR HIGH CONCENTRATIONS, USE AIR SUPPLIED RESPIRATOR.

VENTILATION: EFFICIENT LOCAL EXHAUST VENTILATION IS REQUIRED. USE EXPLOSION PROOF VENTILATION EQUIPMENT.

PROTECTIVE GLOVES: WEAR APPROPRIATE CHEMICAL RESISTANT GLOVES/CLOTHING TO PREVENT SKIN CONTACT.

EYE PROTECTION: DO NOT GET IN EYES. WEAR SAFETY GLASSES/GOGGLES OR A FACE SHIELD.

OTHER PROTECTIVE EQUIPMENT: OVERALLS, APRON. EYE BATH AND SAFETY SHOWER.

HYGENIC PRACTICES: DO NOT GET IN EYES, SKIN OR CLOTHING. AVOID INHALING. DO NOT

Distribution E.S.
104-A, 5e Ave Est
La Sarre (Qc) J9Z 2Y1
T.819.339.2101
admin@distributiones.com

SECTION VIII - SAFE HANDLING AND USE INFORMATION

SWALLOW. KEEP AWAY FROM FOOD PRODUCTS. WASH HANDS THOROUGHLY AFTER HANDLING. CHANGE AND WASH CONTAMINATED CLOTHING.

SPECIAL SHIPPING INFORMATION: PAINT RELATED MATERIAL. FLAMMABLE LIQUID CLASS:3 UN#1263 PACKING GROUP II. CANUTEC 24 HOUR EMERGENCY NUMBER: (613) 996-6666

SECTION IX - SPECIAL PRECAUTIONS

PRECAUTIONS TO BE TAKEN IN HANDLING AND STORAGE: STORE IN A COOL, DRY, WELL VENTILATED AREA, AWAY FROM ALL INCOMPATIBLE MATERIALS. KEEP AWAY FROM HEAT, SPARKS AND FLAME. GROUND ALL EQUIPMENT.

OTHER PRECAUTIONS: DO NOT CUT, GRIND, WELD OR DRILL ON OR NEAR THIS CONTAINER. DO NOT PUNCTURE, INCINERATE, BURN OR STORE ABOVE 45 C.

SECTION X - HMIS INFORMATION

HMIS: HEALTH: 3 FLAMMABILITY: 3 REACTIVITY: 1 PERSONAL PROTECTION: K

Polyisocyanurate Foam Sheathing Continuous Insulation

AP™ FOIL-FACED

PRODUCT DATA SHEET



DESCRIPTION

Johns Manville AP™ Foil-Faced Foam Sheathing board consists of a uniform closed-cell polyisocyanurate foam core bonded on each side to a foil facer. One side has a reflective foil facer and the other side has a white non-reflective foil facer to suit your building needs.

Polyiso provides one of the highest R-values per inch of any rigid insulation (R-6.0 at 1 inch). Furthermore, when properly installed, AP Foil-Faced Foam Sheathing functions as a water-resistive barrier, vapor barrier and air barrier, eliminating the need to install additional components.

AP Foil-Faced Foam Sheathing is produced with an EPA-compliant hydrocarbon-based blowing agent that has zero Ozone Depletion Potential (ODP) and virtually no Global Warming Potential (GWP); it also meets both CFC- and HCFC-free specification requirements. Polyiso is one of North America's most widely used insulation products and has been cited by the EPA for its responsible impact on the environment.

AP Foil-Faced Foam Sheathing provides exceptional heat, moisture and air control to protect your building's exterior wall assembly.

INSTALLATION

AP Foil-Faced Foam Sheathing is lightweight and can be easily cut with a utility knife or saw. Use maximum board lengths to minimize the number of joints. Vertical joints should be staggered. Butt joints should be centered over framing. To create a water-resistive barrier or an air barrier, treat seams and penetrations as instructed in the installation guide and in accordance with manufacturer's guidelines. Once installed, AP Foil-Faced Foam Sheathing may be left exposed for up to 60 days. Consult your local building department for code requirements.

COMPLIANCES

- ASTM C1289 Type 1, Class 1
- CAN/ULC S704, Type 1, Class 1
- ICC-ES Evaluation Report ESR-3398
- Canadian Construction Materials Centre 13104-L
- Air Barrier Association of America Evaluated Air Barrier Material, Assembly & Water Resistive Barrier
- International Building Code
- International Residential Code
- International Energy Conservation Code
- ENERGY STAR
- ASHRAE 90.1
- California State Insulation Quality Standards

PERFORMANCE STANDARDS

- ASTM C1289, Standard Specification for Faced Rigid Cellular Polyisocyanurate Thermal Insulation Board
- CAN/ULC-S704, Standard for Thermal Insulation, Polyurethane and Polyisocyanurate, Boards, Faced
- ASTM E84, Test for Surface Burning Characteristics of Building Materials
- CAN/ULC S102, Standard Method of Test for Surface Burning Characteristics of Building Materials and Assemblies
- NFPA 259, Standard Test Method for Potential Heat of Building Materials
- NFPA 285, Standard Fire Test Method for Evaluation of Fire Propagation Characteristics of Exterior Non-Load-Bearing Wall Assemblies Containing Combustible Components
- AC 71, Acceptance Criteria for Foam Plastic Sheathing Panels Used as Water-Resistive Barriers
- ASTM E331, Standard Test Method for Water Penetration of Exterior Windows, Skylights, Doors, and Curtain Walls by Uniform Static Air Pressure Difference
- AATCC Test Method 127, Water Resistance: Hydro Static Pressure Test
- ASTM E1233, Standard Test Method for Structural Performance of Exterior Windows, Doors, Skylights, and Curtain Walls by Cyclic Air Pressure Differential
- ASTM E2178, Standard Test Method for Air Permeance of Building Materials
- ASTM E2357, Standard Test Method for Determining Air Leakage of Air Barrier Assemblies

AVAILABILITY

AP Foil-Faced Foam Sheathing is available in the sizes shown in Table 1 (see reverse). For additional information or special size inquiries, please consult a sales representative at 800-654-3103.

PERFORMANCE ADVANTAGES

Thermal Insulation: inch for inch, polyiso has one of the highest energy efficiencies. R-values for AP Foil-Faced Foam Sheathing are shown in Table 1, and physical properties are shown in Table 2 (see reverse). R means resistance to heat flow. The higher the R-value, the greater the insulating power.

Water-Resistive Barrier: when properly installed as part of a Johns Manville Wall System, AP Foil-Faced Foam Sheathing meets the ICC-ES AC71 acceptance criteria for foam plastic sheathing used as a water-resistive barrier. Please see the installation guide for qualifying assemblies and detailed instructions.

Vapor Barrier: at a minimum thickness of one inch, AP Foil-Faced Foam Sheathing has a vapor permeance of 0.05 perms and qualifies as a Class I vapor retarder.

Air Barrier: when properly installed as part of a Johns Manville Wall System, AP Foil-Faced Foam Sheathing meets the Air Barrier Association of America boardstock criteria for materials and assemblies. Please see installation guide for qualifying assemblies and detailed instructions.

Noncorrosive: does not accelerate corrosion of pipes, wiring or metal studs.

Lightweight: easy to handle, can be cut with a utility knife or saw.

ENERGY, QUALITY & ENVIRONMENT

ICC ES™ Intertek US abaa EVALUATED

POLYISO™ The top performer.

LEARN MORE AT energystar.gov

Polyisocyanurate Foam Sheathing Continuous Insulation



PRODUCT DATA SHEET **AP™ FOIL-FACED**

STORAGE
Store AP Foil-Faced Foam Sheathing elevated above the floor or ground and standing water. If stored outdoors, keep dry by covering completely with a waterproof tarpaulin.

LIMITATIONS
AP Foil-Faced Foam Sheathing is nonstructural. The walls must be braced in accordance with the requirements of the applicable code.

WARRANTY
All Johns Manville products are sold subject to Johns Manville's Limited Warranty and Limitation of Remedy. For a copy of these documents, call 800-654-3103.

WARNING
AP Foil-Faced Foam Sheathing is combustible and shall only be used as specified by the local building code with respect to flame spread classification and to the use of a suitable thermal barrier when required.

TECHNICAL SERVICES
Johns Manville can provide technical information to assist in addressing questions regarding AP Foil-Faced Foam Sheathing. Please call 800-654-3103 for technical assistance.

PERFORMANCE DATA

THERE ARE 2 LAYERS OF 2" THICK INSULATING PANELS, FOR A TOTAL OF 4" ALL AROUND. APPLIED ON WALLS, CEILING AND FLOOR.

Table 1: Thermal Performance

THICKNESS (inches)	R-VALUE U.S.[1] (°F•ft²•h/BTU)	THICKNESS (mm)	RSI-VALUE[1] (°K•m²/W)	BOARD SIZE (ft)	R-VALUE WITH REFLECTIVE AIR SPACE[2]		
					½" Air Space	¾" Air Space	1" Air Space

[1] *Aged R-value at 75° F in accordance with ASTM C1289.*
[2] *Only applies when an ideal reflective air space and horizontal heat flow conditions exist. The shiny foil side of product must face the air space. Determined in accordance with FTC 16 CFR Part 460 requirements and published ASHRAE air space R-values. Refer to the 2009 ASHRAE Handbook of Fundamentals, Chapter 26, Table 3, for details.*

Table 2: Physical Properties

PROPERTY	UNITS	TEST METHOD	RESULT
	F•ft²•hr/BTU	ASTM C518*	6.0
Compressive Strength	psi	ASTM D1621	≥ 16
Flexural Strength	psi	ASTM C203	≥ 40
Water Absorption	% by volume	ASTM C209	0.1
Water Vapor Permeance	perms	ASTM E96	0.05
Surface Burning Characteristics**			
Flame Spread†	index	ASTM E84	≤ 25
Smoke Developed†	index	ASTM E84	≤ 450
Service Temperature	°F		-100 to 250

**Aged R-value at 75° F in accordance with ASTM C1289.*
***Numerical ratings are not intended to reflect hazards present in actual fire conditions.*
†Foam core tested at 4 inches.

Visit our website at **www.JM.com** or call **800-654-3103** | **Building Insulation Division** P.O. Box 5108 | Denver, CO 80217-5108

Data as shown in this literature is intended to be used as a general guideline only. The physical and chemical properties of AP Foil-Faced Polyisocyanurate Foam Sheathing listed herein represent typical, average values obtained in accordance with accepted test methods and are subject to normal manufacturing variations. They are supplied as a technical service and are subject to change without notice. Any references to numerical flame spread or smoke developed ratings are not intended to reflect hazards presented by these or any other materials under actual fire conditions. Check with the sales office nearest you for current information. All Johns Manville products are sold subject to Johns Manville's Limited Warranty and Limitation of Remedy. For a copy of the Johns Manville Limited Warranty and Limitation of Remedy or for information on other Johns Manville thermal and acoustical insulation and systems, visit the website or call the 800 number above. 717 17th Street Denver CO, 80202

BID-0151 7/15

© 2015 Johns Manville. All Rights Reserved.

3. Fabrication characteristics (continued)

Manufacturier de produits CVAC sur mesure

Project : 6515-403, Pumping station
Client : Promec

Fabrication characteristics (continuation)

Identification tag

FABRICATION MEP	
TAG NO:	6515-403, Pumping station
MODEL:	AMP-PFB-2-320-E
SERIE:	AMP00380

Pedestrian door

Description:

(1x) 42'' x 84''

4'' insulated freezer style

Warning informations

☒ Risk of electrocution

Entrance®

GLACE-GUARD
Cold Storage Doors

ISO 9001 2008 CERTIFIED

The high performance entrance door!

The Glace-Guard™ Entrance door combines insulation performance and durability, while being attractive and virtually maintenance free. This entrance door, available in 3" or 4" thickness, is made of high quality metal skins. Its panels are insulated with a rigid polyurethane foam core, providing the highest insulation value. Its hardware is engineered to withstand an intensive usage, while providing safety and smoothness of operation.

The Glace-Guard™ Entrance door is operated by industrial cam-lift hinges, heavy duty pull handle and heavy gauge steel automatic door closer, ensuring trouble-free operation and effortless firm closing.

The Glace-Guard™ Entrance door is suitable for coolers and freezers, for both interior and exterior applications. It is your best door investment when performance, durability and low maintenance costs are criteria of selection.

The Glace-Guard™ Entrance door is ideal for applications such as:

- Supermarkets
- Restaurants
- Cold storage distribution warehouses
- Grocery distribution warehouses
- Food processing plants



Cold storage entrance door
Model Glace-Guard™ Entrance ET-300

Entrance®/ Glace-Guard™

ET-300, ET-400 Series

Section 08326

Well insulated:
The Glace-Guard™ Entrance ET-300 (3" thick) and ET-400 (4" thick) doors are insulated with a rigid polyurethane foam core.

Designed for energy savings:
Full perimeter magnetic vinyl gasket and bottom double U-shaped rubber gasket to ensure airtight joints.

Built to last with superior quality materials:
Proven experience and expertise achieve a perfect adherence of the polyurethane foam to the metal skins, ensuring panel strength, rigidity and preservation of insulation value over time. The high quality 26 gauge galvanized steel with superior 25-micron polyester top coat, ensures durability and resistance to corrosion.

Heavy duty hardware for long lasting use and smooth operation:
Industrial cam-lift hinges, heavy duty pull handle and heavy gauge steel door closer, combined with a variety of accessories, provide trouble-free operation, safety and durability.

THERMOSTOP
Tradition of quality

CFC-FREE 3"|4" POLYURETHANE INSULATION

Entrance®
GLACE-GUARD Cold Storage Doors

Entrance ET-300	3" (75mm) thick
Entrance ET-400	4" (100mm) thick

Technical specifications

Section 08326

Reference product:
Glace-Guard™ Entrance ET-300 or Glace-Guard™ Entrance ET-400, as manufactured by Thermostop Inc., www.thermostop.com

Temperature range:
-20°F to +120°F (-29°C to +49°C)

Standard dimensions:
- 36" x 84" (914mm x 2134mm)
- 60" x 84" (1524mm x 2134mm)

Other dimensions available upon request.

Thickness:
- Glace-Guard™ Entrance ET-300: 3" (75mm) thick
- Glace-Guard™ Entrance ET-400: 4" (100mm) thick

Panels:
Insulated with rigid polyurethane, foamed in place under high pressure between two metal skins. Standard 26ga. steel skins, white stucco finish. For other skin options, please consult ***Metal skins options***. Panel frame is made with heavy duty aluminum extrusions.

Door frame and thermal barrier:
Door frame is made of shock-proof 5/32" (4mm) thick exterior and interior extruded aluminum angles. The exterior aluminum angle has an incorporated resin thermal break.

Hinges:
- For doors with width under 60" (1524mm): Self-closing and reversible high pressure die-cast zinc hinges with self-lubricating nylon cams. Brushed chrome finish.



- For doors with width of 60" (1524mm) and greater: Heavy duty self-closing and reversible high pressure die-cast zinc flanges, 3/16" (5mm) thick steel strap. Gray finish.



Pull handle:
High pressure die-cast zinc cylinder locking handle, complete with emergency inside release system. Brushed chrome finish.



Door closer:
Heavy gauge steel mechanical door closer, complete with extra-wide hook. Chrome finish.



Perimeter magnetic gasket:
A full perimeter magnetic vinyl gasket insures that the door is airtight and vapour-proof on the perimeter joint.

Bottom door gasket:
Extruded aluminum retainer with two U-shaped rubber gaskets to insure airtight joints.

Heat trace (optional):
For freezer applications, the door is equipped with a heat trace on four (4) sides of the door, preventing ice or frost accumulation and eliminating the need to have a heated threshold.

Kick plate (optional):
36" (914mm) high steel kick plate, on full door width, to protect the door bottom against forklift impacts.
- 16ga. galvanized steel, smooth finish
- 18ga. stainless steel, #304 finish

Metal skins options:

Steel	Finish
26ga. (0.41mm)	stucco, white
20ga. (0.86mm)	

Aluminum	Finish
24ga. (0.60mm)	stucco, white or grey RAL-9006
16ga. (1.30mm)	



Door frame details

THERMOSTOP
Tradition of quality

3775 Losch Blvd.
Longueuil (Quebec)
Canada
J3Y 5T7

Phone: **450.678.8666**
Toll free: 866.678.0123
Fax: 450.678.7765
thermostop.com

Warranty

Thermostop doors and hardware carry a warranty of one (1) year against any defects or faulty workmanship. The door panels carry a ten (10) year limited warranty against perforation due to rusting, and a five (5) year limited warranty on delamination, under normal operational conditions.

THERMOSTOP

SHOP DRAWING - COOLER ENTRANCE DOOR GLACE-GUARD ET-400

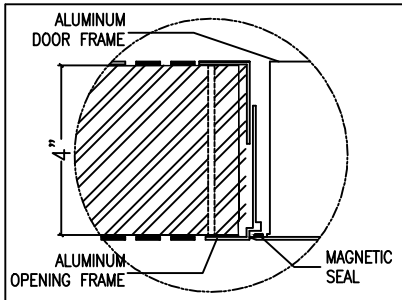

DOOR FRAME DETAIL

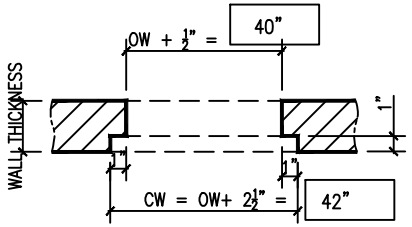

PLAN VIEW

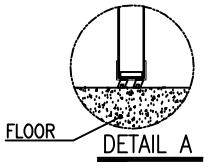

DETAIL A

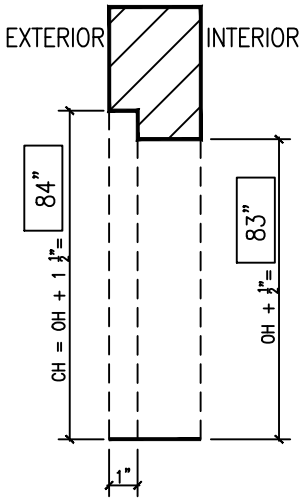

SECTION

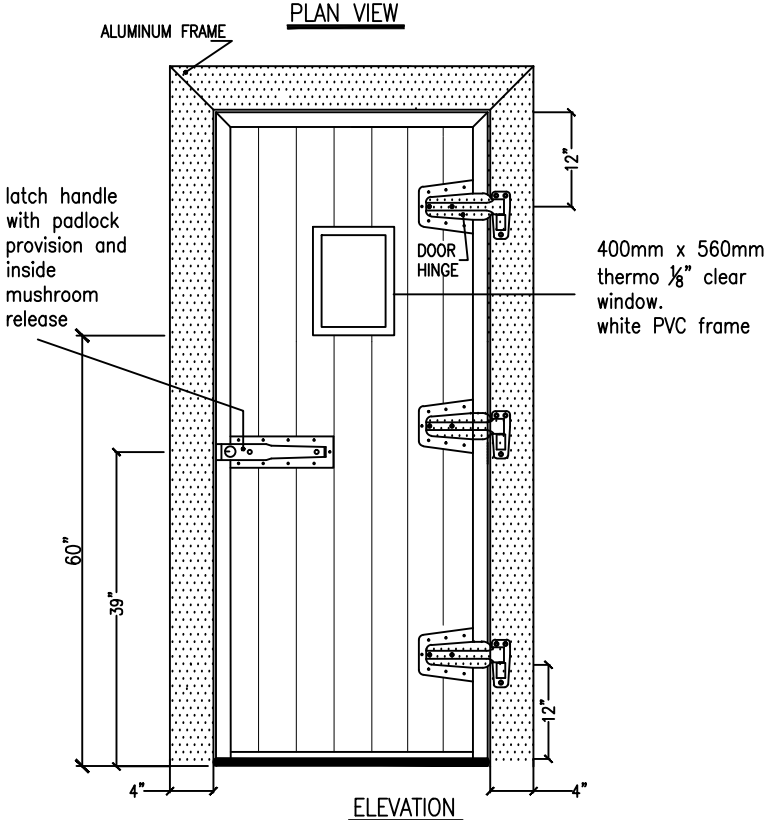

ELEVATION

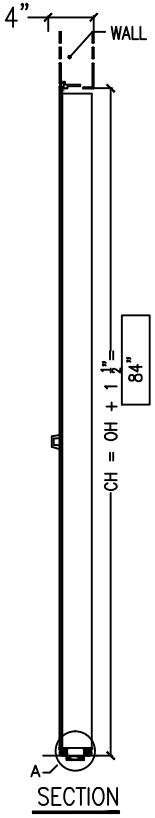

SECTION

Specifications:

☒ ET–400: 4"(100mm)
☒ Cooler application (36°F and above)

Standard Features:

*Polyurethane insulated panels
*20ga galvanized steel, white, smooth finish with ribs
*Heavy–duty mirror frame 5/32" (4mm) in two extruded angles. Aluminium mill finished.
*Magnetic seals on door frame perimeter.
*Bottom double blade seal on door panel.
* 3 (three) 10" cam–lift hinges.
* 1 (one) LATCH handle with padlock provision (padlock by others) & inside MUSHROOM release

Latch handle is chrome finished steel. Hinges are brush chrome finished steel

Others features:

* Exterior chain with S hook and eye bolt
* Interior storm door chain with spring

DIMENSIONS	QTY	FINISHED OPENING		REQUIRED CLEARANCE		APPROVED FOR MANUFACTURING BY:
	4	WIDTH (OW)	HEIGHT (OH)	WIDTH (CW)	HEIGHT (CH)	Name: Date:
		39.50"	82.50"	42"	84"	Signature:

Legend

OW = OPENING WIDTH
OH = OPENING HEIGHT
CW = CLEARANCE WIDTH
CH = CLEARANCE HEIGHT

GLACE–GUARD
Cold Storage Doors

THERMOSTOP INC.

3775, boulevard Losch, Longueuil (Québec), Canada J3Y 5T7,
Tel.: (450) 678-8666, Fax: (450) 678-7765,www.thermostop.com

Distributor: AIRMP INC.	Date: 05–09–2017	Drawn by:	Verify by:	Page:	**Note :**
Customer:	Revision:	F.L.	L.H.	1/2	*Drawings not to scale



ITEM # 1825

STANDARD LOUVER

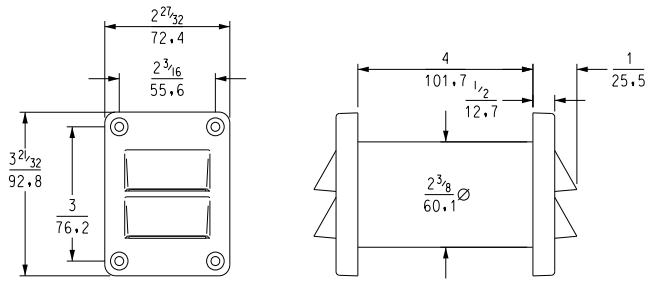

SQUARE LOUVER

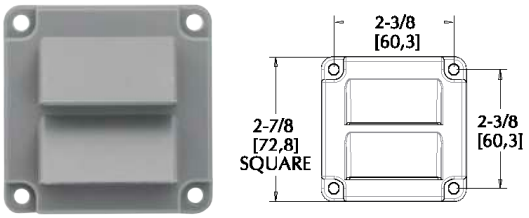

US Patent No. 6,176,776

1825 NARROW JAMB HEATED VENT

- Exclusive, patented Kason ventilator seals tight and opens at lowest pressure of any competitive vent.
- Lightweight, springless valves provide greater air flow at lower pressure than spring-loaded valves.
- Lower pressure allows doors to open and close with ease and reduces stress on walk-in enclosure joints, reducing chance of leaks.
- Computer-designed heater eliminates valve freezing.
- Narrow profile unit mounts in door jamb.
- Port installs through 2 1/2" (63.5mm) diameter hole with minimal wiring.
- Poppet valves close tightly to prevent air leakage.
- Engineered to optimize the self-closing potential of Kason Walk-in hinges, latches and door closers.

PERFORMANCE TESTED

Comprehensive performance tests show that Kason 1825 pressure relief ports provide better air flow at lower pressure and greater frost resistance than competitive ventilators.

SPECIFICATIONS

MATERIAL:
Gray ABS plastic valve body and louvers, PVC tube, internal aluminum and stainless steel parts.

POWER:
.04 amp @ 120 VAC; 4W heater.
.02 amp @ 230 VAC; 4W heater.

UL LISTING:
File No. E57306

SELECTION:
See Quantity Selector Chart, page B-59.

MOUNTING:
No. 1825 only mounts horizontally. Drilled for No. 10 (5.0mm) screws. Requires 2-1/2" (63.5mm) diameter hole.

Model No.	Item	Qty/Carton	Wgt./Carton
11825000004	Heated Vent, 120 VAC, 4" Wall	10	7 lb. (3.2 kg)
11825000006	Heated Vent, 230 VAC, 4" Wall	10	7 lb. (3.2 kg)
11825S00004	Heated Square Louver Vent, 120 VAC, 4" Wall	10	7 lb. (3.2 kg)
11825S00006	Heated Square Louver Vent, 230 VAC, 4" Wall	10	7 lb. (3.2 kg)
11825000008	Unheated Vent, 4" Wall	10	7 lb. (3.2 kg)

*Other thicknesses available. Contact factory.

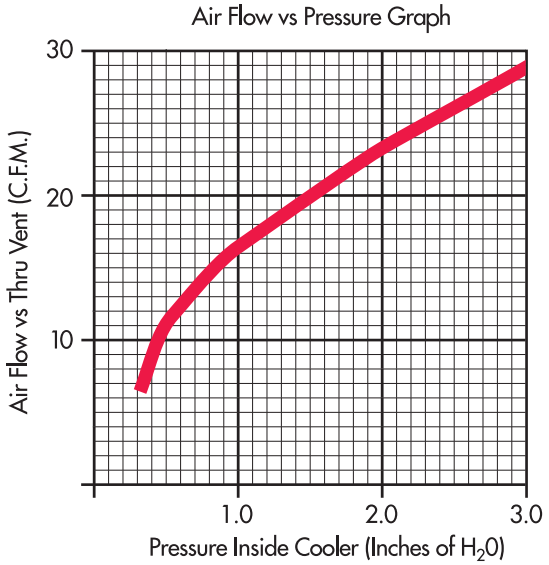

 © 2016 Kason Industries, Inc.

4. General arrangement drawings

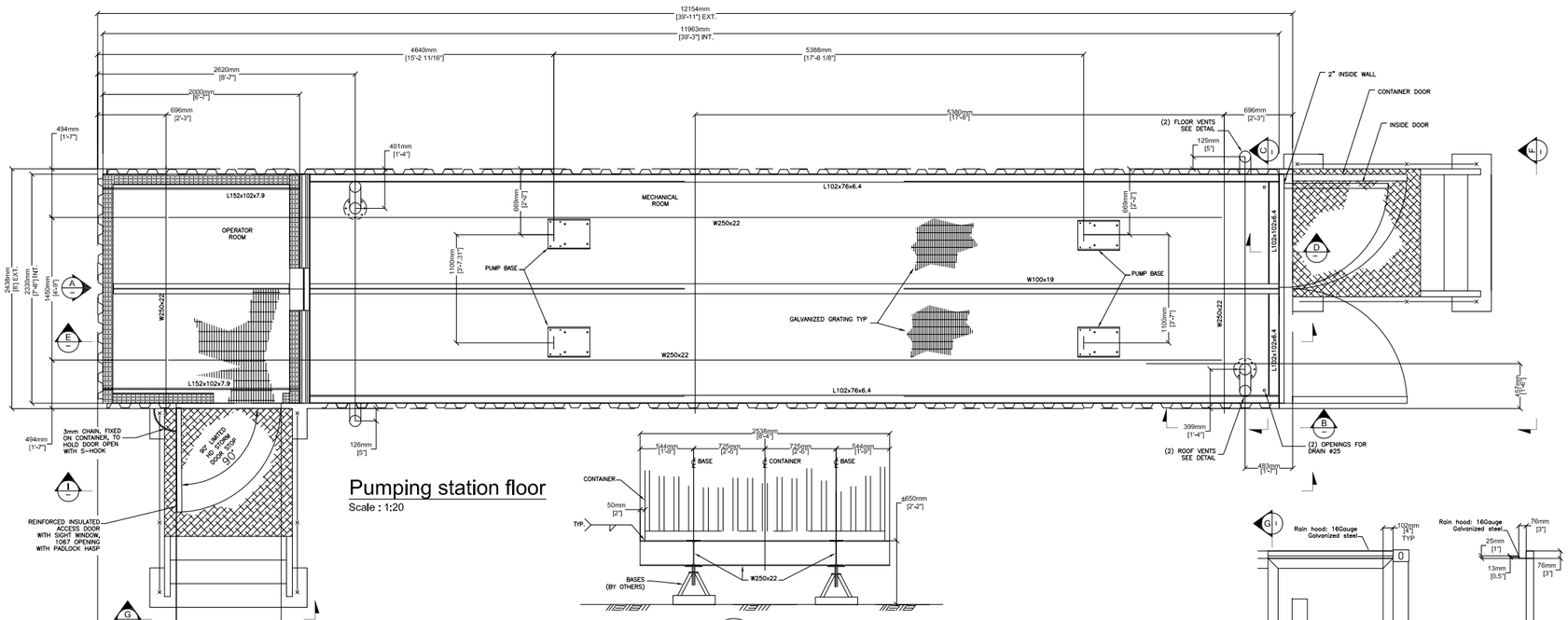

Pumping station floor
Scale : 1:20

A Section
Scale : 1:20

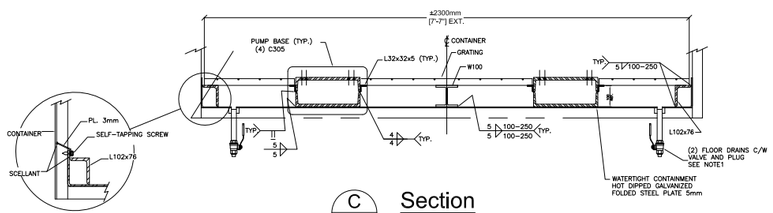

Watertight containment

C Section
Scale : 1:10

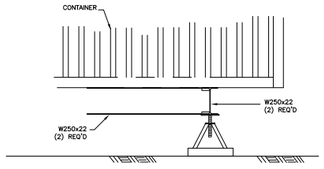

B Section
Scale : 1:20

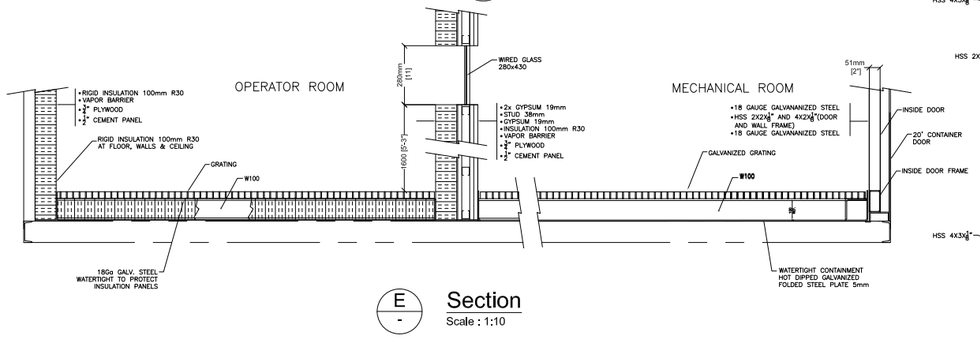

E Section
Scale : 1:10

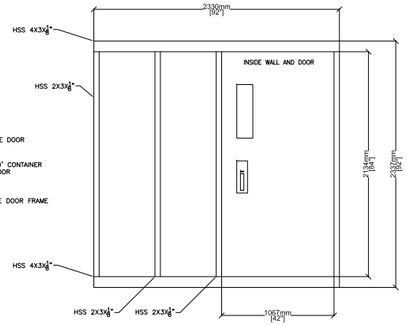

F VIEW
Scale : 1:10

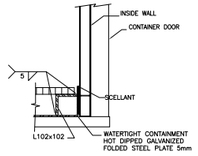

D SECTION
Scale : 1:10

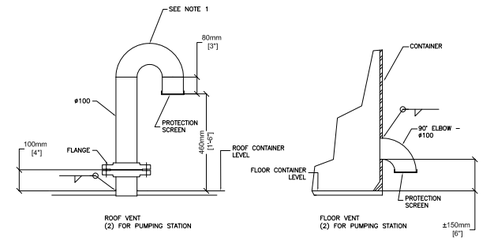

Vent for pumping station
Scale : 1:10

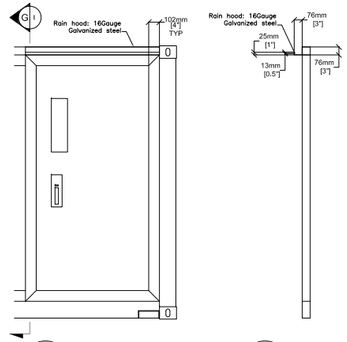

G Section
Scale : 1:10

H Section
Scale : 1:10

PAINTING SPECIFICATION:
1 - SOLVENT CLEANING, SSPC-SP1
2 - APPLICATION OF "DEUTHANE 359" POLYURETHANE, 2 TO 3 MILS DRY
3 - COLOR: SLATE BLUE, QC 8260

NOTES:
1 - ALL VENTS, RAIN HOODS AND FLOOR DRAINS WILL BE PREPARED IN OUR SHOP AND SHIPPED LOOSE. HOLES ON THE CONTAINER WILL BE MADE IN OUR SHOP AND BLANKED FOR TRANSPORTATION.

# Rev.	Emission	By	Date
3	Released for contruction	F.S.	2017-05-23
2	For approval	F.S.	2017-05-04
1	For approval	F.S.	2017-05-02

AIRMP
Custom HVAC manufactured products
750, rue Saguenay, Rouyn-Noranda, Québec, Canada, J9X 7B5
Tél. : (819) 762-2818 Téléc. : (819) 762-3801
www.airmp.com

Client : Groupe PROMEC Inc.

Project : 65-403-245-200, Pumping station

Title : General arrangement drawing

Designed by : WSP	# Quote : 17-0062	Sheet : 1 de 2
Drafted by : Francis St-Pierre	# Project : AMP17-17	
Verified by : Groupe PROMEC Inc.	# Drawing : AMP17-17 PS2	

R:\Projets\AMP17-17\3 Dessins\Dessins d'approbation\PS2 - 403\AMP17-17 PS2.dwg

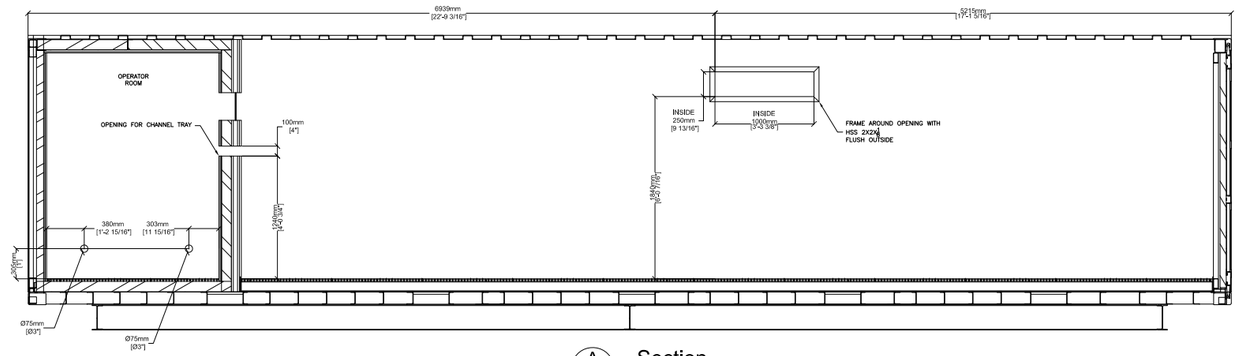

A
-

Section

Scale : 1:20

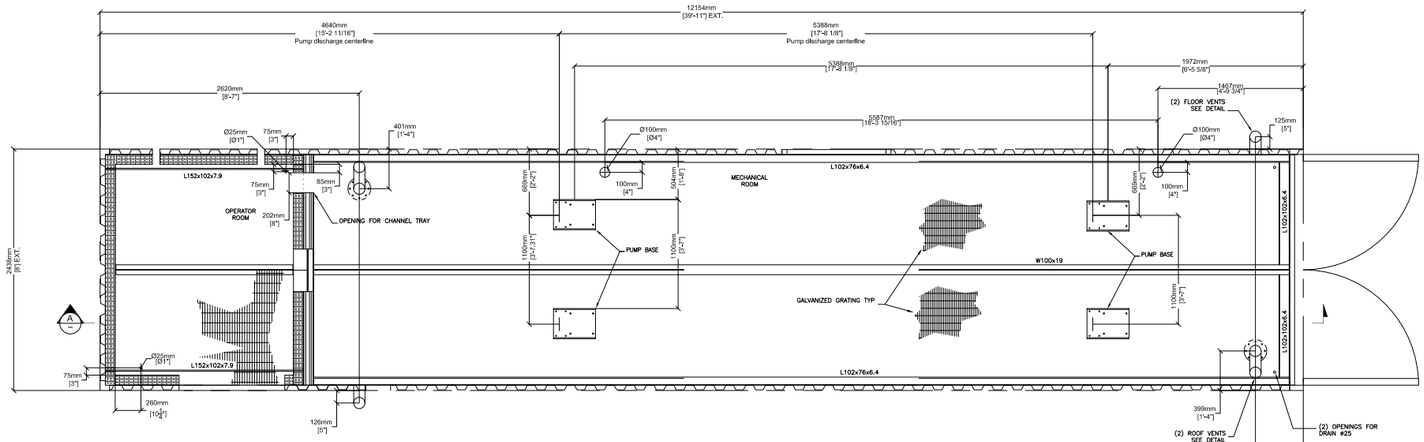

Pumping pump base location

Scale : 1:20

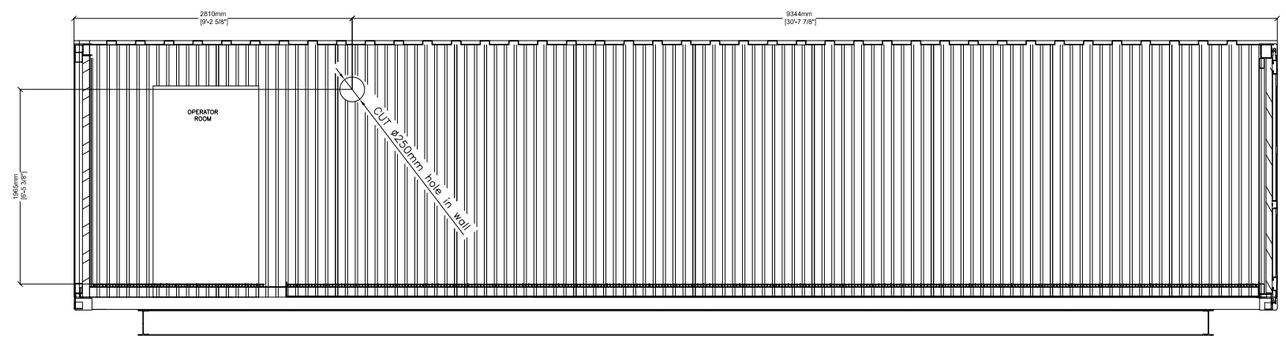

B
-

Section

Scale : 1:20

# Rev.	Emission	By	Date
2	For construction	F.S.	2017-06-01
1	For approval	F.S.	2017-05-31

AIRMP.CA
Custom HVAC manufactured products
750, rue Saguenay, Rouyn-Noranda, Québec, Canada, J9X 7B5
Tél. : (819) 762-2818 Téléc. : (819) 762-3801
www.airmp.com

Client : Groupe PROMEC Inc.

Project : 65-403-245-200, Pumping station

Title : Pump base and wall opening location

Designed by : WSP	# Quote : 17-0062	Sheet : 2 de 2
Drafted by : Francis St-Pierre	# Project : AMP17-17	
Verified by : Groupe PROMEC Inc.	# Drawing : AMP17-17 PS2	

Liste de matériel (Pour 1 assemblage)									
# Pièces	Description	Grade	Détail	Epais.	Largeur	Hauteur	Longueur	Qté	Poids (lb)
AMP17-17 ST01	W250x22 X 8'-3 15/16" LG				10 in	4 in	99 15/16 in	3	124
AMP17-17 ST02	W250x22 X 17'-7 5/8" LG				10 in	4 in	211 5/8 in	4	261

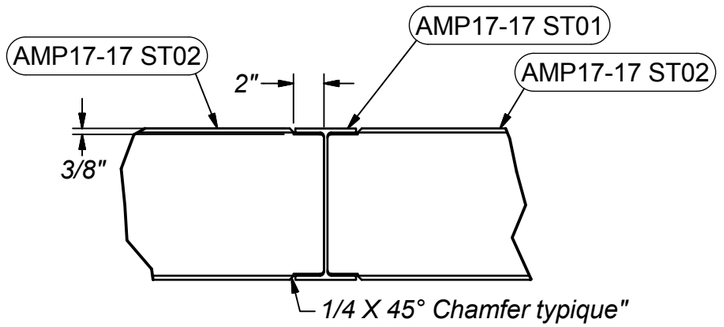

Détail A
Échelle 1 / 10

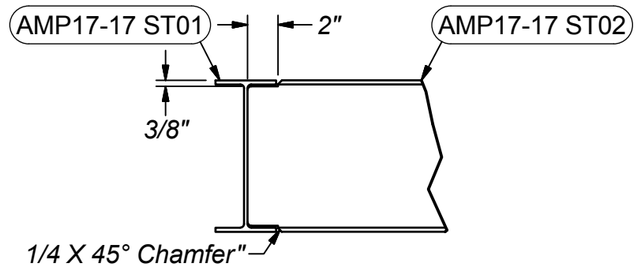

Détail B
Échelle 1 / 10

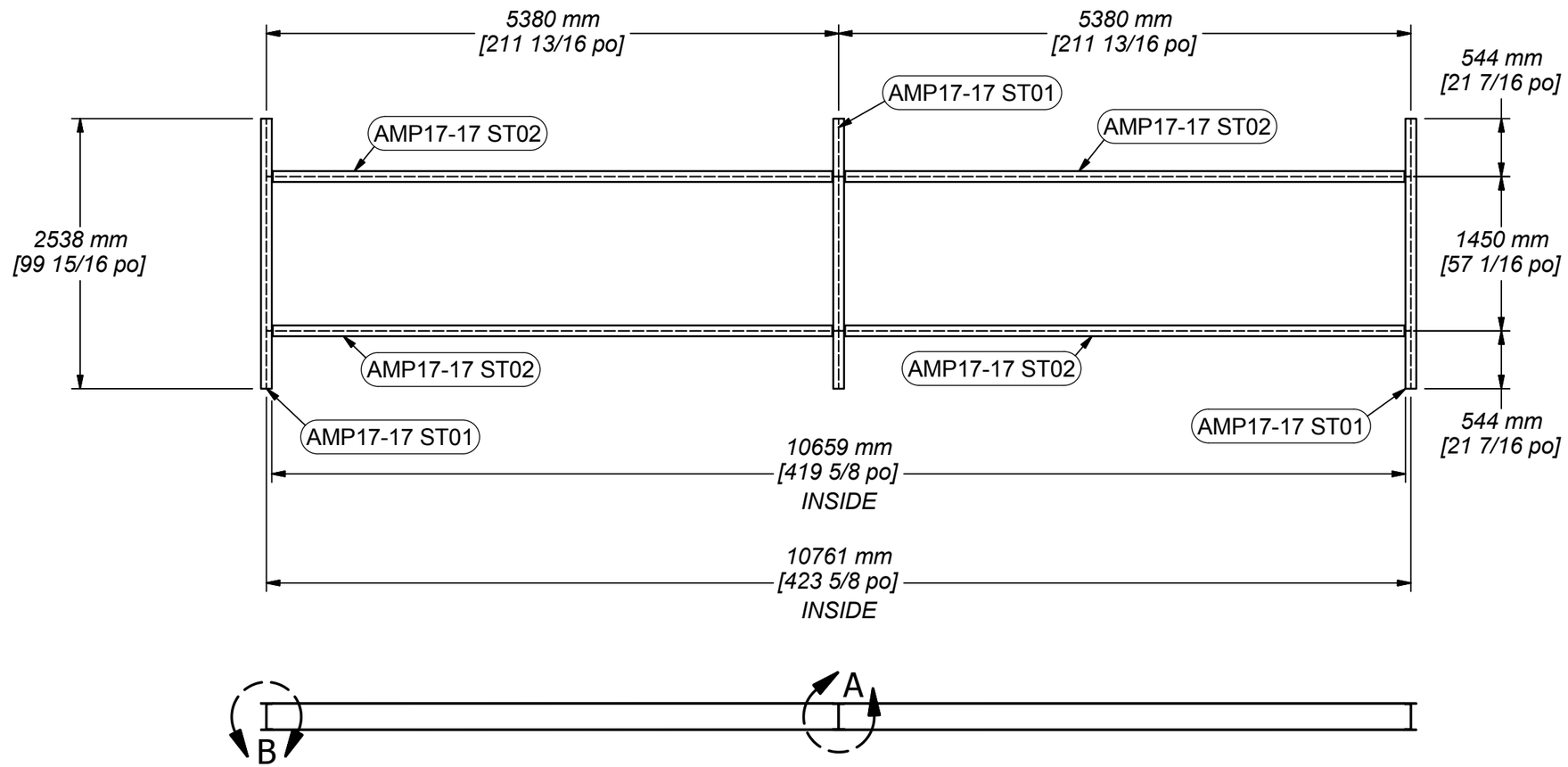

AIRMP.CA
Manufacturier de produits CVAC sur mesure

NOTES GÉNÉRALES :
GENERAL NOTES :

PROJET :
PROJECT # : **AMP17-17**

CLIENT :

TITRE :
TITLE :

PIECE :
PARTS : 40' pumping station - Under structur

QTÉ :
QTY : req.

POIDS :
WEIGHT : 1415 lb

SCEAU & SIGNÉ :
SEAL & SIGNED :

DESSINÉ :
DRAWN : Francis St-Pierre, Ing.

VÉRIFIÉ :
CHECKED : Richard Piquette

DATE : 2017-06-01

FEUILLE :
SHEET : 1 / 1

DESSIN REFERENCE :
REFERENCE DRAWING :

No. DESSIN :
DRAWING No. : **AMP17-17 ST_2**

REV: **0**

R:\Projets\AMP17-17\3 Dessins\Dessins de fabrication\ST - Structure\AMP17-17 ST_2.idw

AIRMP.CA
Custom HVAC manufactured products

Inspection report – As built unit dimensions

Contract number : Amp17-17 (ER2-403) 1/2
Client : Groupe promec inc.

CLIENT IDENTIFICATION:					
Monitored points	**C**	**NC**	**NN**	**Comments**	**Reference documents**
Validation of dimensions according to plans	☑	☐	☐		
					C : complying NC : non-complying NN : not-needed

Verified by : Karen Gendreau-Lacoste **Signature :** Karen G. lacoste **Date :** 24 mai 2017

Reviewd by : Richard Piquette, Operations director **Signature :** _____ **Date :** _____

AIRMP.CA
Custom HVAC manufactured products

Inspection report - General

Contract number : Amp17-17 (ER2-403) 112
Client : Groupe promec inc.

CLIENT IDENTIFICATION:

1. General look of the container

Points subject to monitoring	C	NC	NN	Comments	Reference dosumentation
1,1 State of the doores (joints, windows, etc.)	☑	☐	☐		
1,2 General structure state	☑	☐	☐		
1,3 Inside finnish	☑	☐	☐		
1,4 Sticker installation (Coils, units, etc.)	☐	☐	☑		
1,5 Cleanliness	☑	☐	☐		
1,6 Sealant joints	☑	☐	☐		

C : complying NC : non-complying NN : not-needed

2. OTHER INTEGRATED EQUIPMENTS & TESTS						
	Points subject to monitoring	**C**	**NC**	**NN**	**Comments**	**Reference dosumentation**
2,1	Insulation (Installation as per specification)	☑	☐	☐		
2,2	Vents and piping	☐	☐	☑		
2,3	Watertight containment and drains	☐	☐	☑		
2,4	Filters and framing (state, type, number, arrangements, etc.)	☐	☐	☑		
2,5	Lights, sockets, switches (type, number, etc.)	☐	☐	☑		
2,6	Instrumentation (pressure, flow, temperature, etc.)	☐	☐	☑		
2,7	The state and disposition of other components (burner, water seperator, special filters, humidifier, electrical coils, etc.)	☐	☐	☑		
2,8	Silencers, valves, air scrubbers, etc.	☐	☐	☑		
2,9	Detailed pictures	☑	☐	☐		
2,10	Nameplates	☑	☐	☐		
					C : complying NC : non-complying NN : not-needed	

Verified by : Karen Gendreau-Lacoste **Signature :** Karen G. Lacoste **Date :** 24 mai 2017

Reviewed by : Richard Piquette, Operations director **Signature :** _____ **Date :** _____

AGNICO EAGLE

Vendor Document Status

1 ☐ Proceed to next submission and status.

2 ☐ Proceed with exceptions as noted to next submission and status.

3 ☐ Do not proceed.
Revise as noted and resubmit next submission and status.

4 ■ Complete, no further submission required.

By: LUC SÉNÉCAL Date: 2017-06-09

Review and authorization to fabricate are only for general conformance with the design concept of the Project as expressed in the Contract Documents. Sole responsibility for the accuracy and completeness of this document, including but not limited to dimensions and quantities, remains with the Supplier/Contractor. Agnico Eagle does not warrant the accuracy or completeness of any of the information contained herein, nor does Agnico Eagle authorize or approve any construction means, methods, techniques, sequences or any safety precautions or procedures.

Agnico Eagle No. 6515-C-270-007-265-EDS-0031 R: Sub002

DOCUMENT FOR INFORMATION

AIRMP.CA
Manufacturier de produits CVAC sur mesure

750, rue Saguenay
Rouyn-Noranda (Québec) J9X 7B5

Téléphone : 819 797-1234
Télécopieur : 819 762 3801

PRE FABRICATED BUILDING

TECHNICAL SPECIFICATION



Equipment: **6515-403, Electrical room**

Date: **May** 23 **2017**

Client : **PROMEC**

Responsable: **Eric Poulin, piping Director**

Contract: **AMP17-17**

Revision : For fabrication

Submitted by : **Francis St-Pierre, Ing.**

Serial number : **AMP00379**

Table of Contents

1. General characteristics
2. Fabrication characteristics
3. Fabrication characteristics (continued)
4. General arrangement drawings

Manufacturier de produits CVAC sur mesure

Project : 6515-403, Electrical room
Client : Promec

Nomenclature

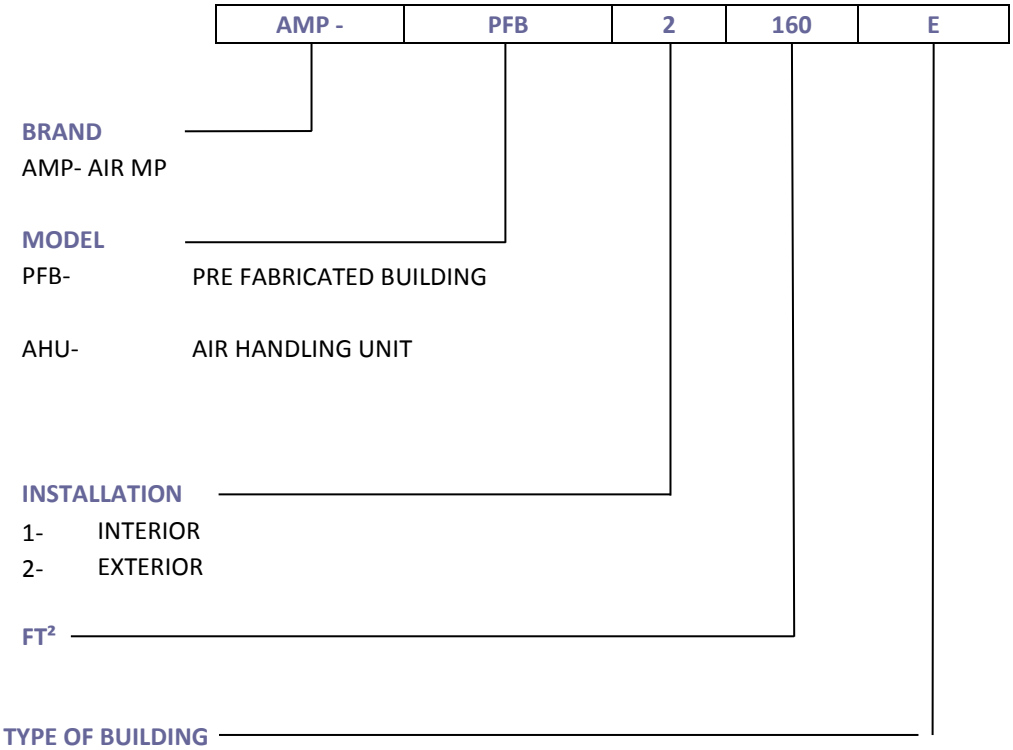

BRAND

AMP- AIR MP

MODEL

PFB- PRE FABRICATED BUILDING

AHU- AIR HANDLING UNIT

INSTALLATION

1- INTERIOR
2- EXTERIOR

FT²

TYPE OF BUILDING

E- E-HOUSE
M- MECHANICAL ROOM

1. General characteristics

AIRMP.CA
Manufacturier de produits CVAC sur mesure

Project : 6515-403, Electrical room
Client : Promec

General characteristics

Type of unit

- ☐ Recirculation
- ☐ Cooling
- ☐ Filtration
- ☐ Heating
- ☒ Shelter
- ☐ Evacuation
- ☐ Air compensation

Emplacement

- ☐ Interior
- ☒ Exterior

Dimensions

	Length	Width	Height
Building (mm)	6058	2438	2591
Estimated weight	5 500 kg		

By others

- ☒ Support pilars
- ☒ On site assembly
- ☒ Electrical integration
- ☒ HVAC
- ☒ Lighting services

Notes :

Standard 20’ container

2. Fabrication characteristics

AIRMP.CA
Manufacturier de produits CVAC sur mesure

Project : 6515-403, Electrical room
Client : Promec

Fabrication characteristics

Structure : 20 foot standard container

	Tôle				Gauge				Insulation		Thickness			R value
	AL	CP	GA	P	1/8	1	20	26	AI	TI	2"	4"	10"	
Interior finish	☐	☒	☐	☒	☐	☐	☐	☐	☐	☒	☐	☒	☐	26
Exterior finish	☐	☐	☐	☐	☐	☐	☐	☐	☐	☐	☐	☐	☐	--
Ceiling	☐	☒	☐	☒	☐	☐	☐	☐	☐	☒	☐	☒	☐	26
Roof	☐	☐	☐	☐	☐	☐	☐	☐	☐	☐	☐	☐	☐	--
Floor	☐	☐	☐	☐	☐	☐	☐	☐	☐	☒	☐	☒	☐	26

Finish

	Specification
Structural steel	Prep: Sandblast SSPC6 / Paint: Epoxy Barust 235, 8 to 12 mils dry
Exterior finish	Paint: Solvent clean SSPC1 / Polyurethane “Decthane 359” 2 to 3mils dry, Color: Slate Blue (QC 8260)
Inside finish	Galvanized grating on floor. Cement panels on walls.

AL:	ALuminum checker plate	CP:	Cement panel ½’’	GA:	Galv. sheet metal	P:	Plywood ¾’’
AI:	Acoustic insulation	TI:	Thermal insulation				

5/10/17 16:31:26

EMAIL PAGE COUVERTURE

==========

Société: Acier Leroux - Amos

5/10/17 16:31:26 Document Sommaire

Page couverture 1

Objet: MILL TEST CERTIFICATE

NO.COMMANDE :89337400

No.Bc Du Client :AIR-1822

City : ROUYN-NORANDA State/Province . QC

Séquence correspondant au(x) MTR imprimé(s):

Description item:	Coulée	MTR
1/8 X 1 19-4 CAILLEBOTIS GALV	LETTRE CONFORME	089026959

FISHER & LUDLOW
A NUCOR Company

CERTIFICAT DE CONFORMITÉ 2017

ACIER LEROUX
1331 Graham Bell
Boucherville, Qc
J4B 6A1

ATTN: Chantal Boisvert

A qui de droit,

Fisher & Ludlow certifie que le matériel utilisé pour la fourniture et/ou la fabrication du caillebotis soudé en acier, décrit ci-dessous, selon votre commande, est conforme à la norme de NAAMM MBG 531-00, NAAMM MBG 532-00.

DESCRIPTION	SPECIFICATION
Caillebotis et attaches	
Non peint, peint noir et galvanisé	ASTM -A1011/A1011M
Aluminium	ASTM -B221/B221M
Acier inoxydable	ASTM - A666
Planches de sécurité Grip Span & Shur Grip	
Pre-galvanise	(G90) - (ASTM - A653)
Aluminium	5052-H32 (ASTM-B209)
Acier inoxydable	(ASTM - A666)
Barreaux d'echelles et feuilles "Shur Step"	
H.R.P.O.	(ASTM - A569/A569M)
Alumnium	5052-H32 (ASTM-B209)
Acier inoxydable	(ASTM - A666)

Fisher & Ludlow Division Nucor
12450, Boul. Industriel Montreal, Pointe-aux-Trembles, Qc H1B 5M5
Tel: 514.640.5085 1.800.268.6277 *Télécopieur/Fax:* 514.640.1115

LEROUX

089026959

PermaBase[MD] BRAND

09 28 00/NGC

Cement Board Construction Guide







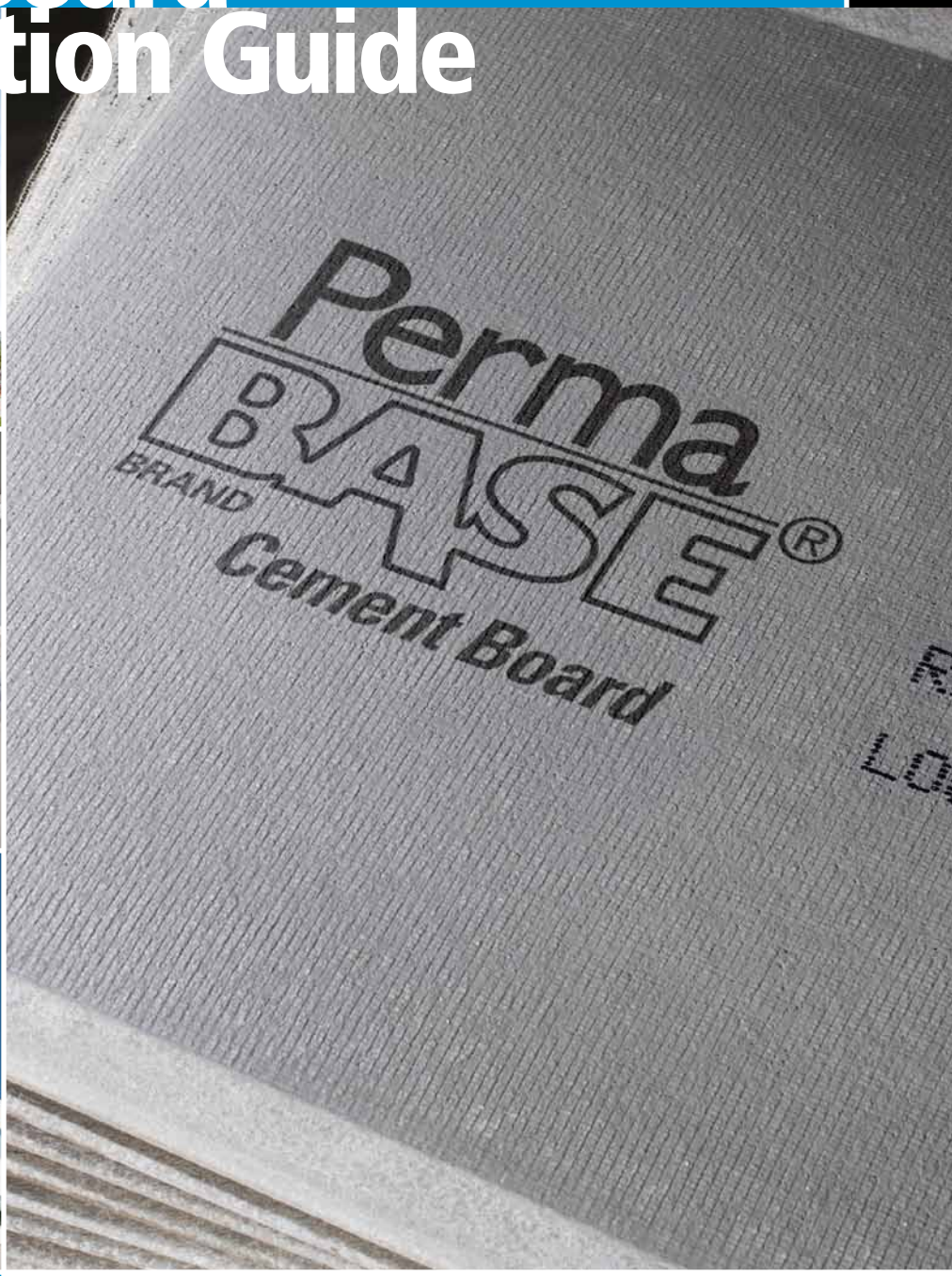

UNIFIX INC.®

A Subsidiary Of National Gypsum Company

Helping You Build Better

Look Closer At The Best Cement Board Substrate

PermaBase[MD] Product Line At A Glance 4

Cement Board 6

PermaBase PLUS[MD] Cement Board 9

PermaBase UltraBacker[MD] Cement Board 10

PermaBase Flex[MD] Cement Board 11

How And Where 12

Interior Applications 12

Accessories 12

Exterior Applications 15

Ventilate Rainscreen Façade . 16

Cement Board Masonry Veneer Wall Systems (CBMV) 17

Heat Shield 18

Fire-Rated Assemblies 18

PermaBase Over Foundation Walls 19



With High-Quality Products And Resources

Founded in 1925, National Gypsum is one of the world's largest producers of quality building products. For nearly a century, customers like you have looked to us for the best products, service and technical support. With a focus on sustainability, we strive to bring you the finest in construction products, education and resources to meet and exceed your expectations.

With Design That Considers The Environment

Together, we can attain the highest level of ecological responsibility and resource-efficient technology. National Gypsum is committed to developing and implementing sustainable green building policies, standards and practices. Beyond offering products that can help contribute to healthier environments and have achieved GREENGUARD Certification for indoor air quality, we can help you meet the criteria for green programs and LEED credits.

GREENGUARD GOLD

PRODUCT CERTIFIED FOR LOW CHEMICAL EMISSIONS: UL.COM/GG UL 2818





With Technical Support You Can Count On

Great products are nothing without great customer service. For detailed technical information about product applications, installation requirements, code requirements or roof and wall assemblies, call 1-800-NATIONAL[MD]. Talk directly to a technical expert with up-to-date knowledge of products, specifications, building codes and more. Our technical experts can even review your plans and drawings and get back to you with answers to your questions within 48 hours.

Working Wherever Your Project Takes You



Choose From Four Types Of PermaBase[MD] BRAND Cement Board:

More Hard-Working Varieties With Qualities You Can Depend On

With four types of PermaBase[MD] BRAND Cement Board to choose from, you'll find a match for most any project. This durable substrate withstands prolonged exposure to moisture in both interior and exterior applications. Lightweight and easy to install, PermaBase promises to deliver for the long run – with the industry's best warranties. It is also GREENGUARD Certified for low-chemical emissions, which can contribute to healthier indoor environments.

Saving You Time And Money

These exclusive PermaBase features translate to cost savings for you:

EdgeTech[MD] Technology – This patented, reinforced edge allows fasteners to be installed closer to the board's edge and reduces damage from handling.

Polystyrene Beads – Embedded in the PermaBase core, these beads help to lighten the board's weight, improve the ease of cutting, and create lower water absorption, preventing the mortar/finish adhesive from drying prematurely.

Our PermaBase[MD] Product Family

1 PermaBase[MD] Cement Board

The original that set the industry standard.

2 PermaBase PLUS[MD] Cement Board

Weighs 25% less than other cement boards on the market.

3 PermaBase UltraBacker[MD] Cement Board

Provides excellent rigidity for special applications with the lowest water-absorption rate.

4 PermaBase Flex[MD] Cement Board

Very flexible yet strong, and ideal for use around archways, columns, stairwells – wherever an evenly curved surface is required.

APPLICATIONS

Product	Floors	Countertops	Walls	Ceilings	Exteriors
1/4" PermaBase	●	●	○	○	○
1/4" UltraBacker	●	●	○	○	○
7/16" PermaBase PLUS	●	●	●	●	●
PermaBase	●	●	●	●	●
PermaBase PLUS	●	●	●	●	●
PermaBase	●	●	●	●	●
PermaBase PLUS	●	●	●	●	●
PermaBase FLEX	○	○	●	●	●

Recommended:

Building In Strength And Quality

Reinforce With The Best Rigid Substrate: PermaBase[MD] BRAND Cement Board

PermaBase[MD] provides a durable surface designed to withstand prolonged exposure to moisture. Made with Portland cement, aggregate and fiberglass mesh, it works well as an underlayment for tub and shower surrounds, countertops, flooring and a variety of other interior and exterior applications. Lightweight and easy to install, our patented EdgeTech[MD] Technology allows a closer nail or screw application.

Quality To The Core



1. **Patented Reinforced Edge**
2. **Fiberglass Mesh**
3. **Cementitious Core**

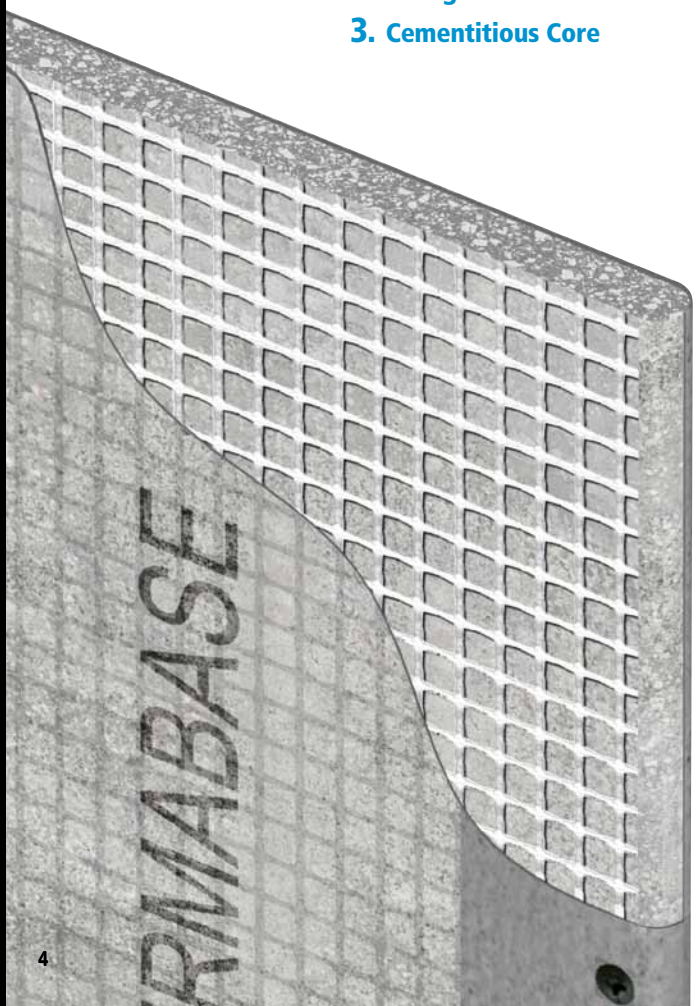



Resists Moisture Better

- Stays intact when exposed to water: will not rot, disintegrate or swell – built for the long run.
- Achieves the industry's lowest water-absorption rating (ASTM C473) – offering better installation.
- Helps inhibit mold growth with the highest possible score on mold tests (ASTM D3273 and ASTM G21).

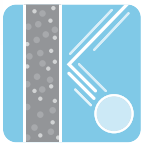

Stays Strong And Lasts Long

- Resists impact and remains dimensionally stable – extending the life of your project.
- Holds up to the toughest conditions.



Installs Quickly

- Lightweight and easy to cut – speeding up installation.
- Reduces jobsite waste – easier, cleaner cut.
- Patented EdgeTech[MD] Technology allows for a closer edge fastening and reduces damage from handling.



Works For Interior And Exterior Projects

– One Panel, Many Applications

- Adhere tile, stone or thin brick directly to PermaBase in exterior applications – saving time and money.
- Durable substrate for direct-applied coating systems.
- Meets UL & ULC classifications for one- and two-hour fire-rated assemblies.
- Building code approved – one substrate that does the job of many.



Offers Best In Class Warranty

- Lifetime Limited Warranty: Interior applications.
- 15-Year Limited Warranty: Exterior applications.





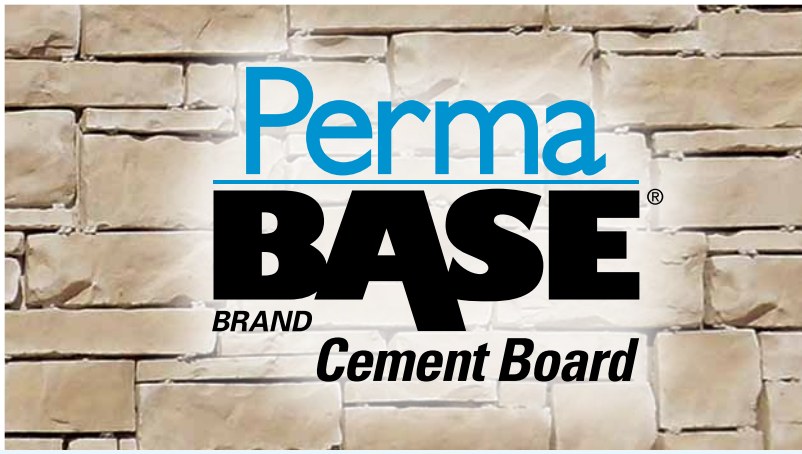

What Sets PermaBase[MD] Apart From The Rest?

Physical Feature Benefits	PermaBase Cement Board	Other Cement Boards	Fiber Cement Boards
Low Weight Glass Mesh Cement Board	✓	○	○
Reinforced Edge	✓	○	○
Fastens Near Edge With No Breakout	✓	○	○
Highest Damage Resistancy From Handling	✓	○	○
Cleanest To Score And Snap	✓	○	○
Lowest Water Absorption	✓	○	○
Meets 40 psf Rating Wind Load Test Results (Stud spacing 16" o.c.)	✓	○	○
Cuts With Utility Knife Vs. Power Tools	✓	✓	○
Standard Fasteners Countersink Into Board	✓	✓	○
Can Be Used In Both Residential And Commercial Steam Rooms And Saunas	✓	✓	○
Inorganic Vs. Organic Core	✓	✓	○
Lifetime Limited Warranty For Interior Use	✓	✓	○
15-Year Warranty For Exterior Use	✓	○	○

Product Feature: ✓

Expanding Your Project Horizon

Dream Up Your Designs – Interior And Exterior

Install Fast, Cut Costs And Improve Quality With PermaBase[MD] BRAND Cement Board

- Stays strong – manufactured from cement and fiberglass reinforcement.
-
-
-
- MD

  Technology allows fasteners to be installed closer to the board's reinforced edge and reduces damage from handling.
-
-





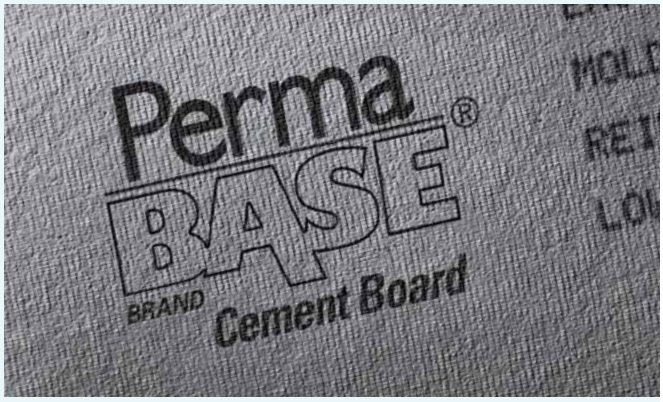

Interior Applications

PermaBase[MD] is a superior underlayment for many interior applications, including:

- **Kitchens**
  - Countertops
  - Backsplashes
- **Bathrooms**
  - Shower and tub enclosures
  - Garden and whirlpool tubs
  - Steamrooms and saunas
- **Special Additions**
  - Swimming pool and whirlpool decks and enclosures
- **Flooring**
  - For kitchens and bathrooms
  - For entryways and foyers
  - For laundry rooms
- **Walls**
  - For bathrooms
  - For accent walls
  - For fireplaces

Exterior Applications

PermaBase provides an excellent substrate for many in-demand exterior applications, including Cement Board Masonry Veneer Wall System (CBMV), Cement Board Stucco System (CBSS), Continuous Insulation (CI), and Exterior Insulation and Finish System (EIFS). PermaBase allows the combination of exterior finishes on one continuous wall sheathing, providing greater design flexibility.

- Commercial exteriors
- Residential exteriors
- Outdoor kitchens
- Decks



Cement Board Masonry Veneer Wall System (CBMV)

Combine the strength and durability of PermaBase with the popular beauty of stone and thin brick veneers. Use in residential and low-rise commercial applications.

Cement Board Masonry Veneer Wall System is designed to:

- Offer a complete, engineered solution for installation.
- Provide increased performance by utilizing polymer modified adhesive mortars (designed for hanging materials) vs. type S and N mortars (developed for stacking materials).
- Speed up your schedule – faster, easier and cleaner than traditional metal lath/scratch coat method.
- Offer the ability to incorporate an effective water-management system (type and placement of water barrier will vary based on local codes and/or warranties).

Designs you can achieve with this system:

- Use for a variety of building exteriors with manufactured or natural stone and thin brick veneers.

Note:

. For limitations, please see page 17 (Installation Guide).

Cement Board Stucco Wall System (CBSS)

Combine the strength and durability of PermaBase with the performance and aesthetics of reinforced base coats and textured finishes. Use in residential and low-rise commercial applications.

Cement Board Stucco Wall System is designed to:

- Provide increased impact and weather resistance (appropriate for all climates).
- Resist dirt, fading, cracking and peeling.
- Speed up your schedule – easier, cleaner installation than traditional stucco.
- Provide drainage system to help prevent water from penetrating behind cladding in frame construction.
- Comply with ASTM D226, protecting approved sheathings/ structural components and helping to evacuate incidental water.

Designs you can achieve with this system:

- Attachment of special pre-molded shapes.
- Variety of finishes – many texture and color options.

Note:

.

See page 17 (Installation Guide).



More Reasons PermaBase Is Excellent For Exterior Applications

- **Allows multiple finishes on one substrate.**
- **Saves time and labor when compared with field-applied metal lath, brown and scratch coat installations.**
- **Works rain or shine – less affected by jobsite weather conditions.**
- **Scores and snaps for quick installation.**
- **Qualifies for multiple-year system warranties.**



PHYSICAL PROPERTIES

Property Method	Test	1/4"	7/16" PLUS	1/2"	5/8"
Water Absorption % By Weight/24 Hours	ASTM C473	<8	10	<8	<8
Flexural Strength (psi)	ASTM C47	>1750	750	750	>1000
Fastener Holding (Wet And Dry, lbs.) (0.400" head diameter)	ASTM D1037	>85	>90	>90	>90
Weight (psf)	ASTM C473	1.8	2.1	2.9	3.65
Freeze/Thaw (Cycles) Per ASTM C666 Procedure B	ASTM C666	100	100	100	100
Flame Spread/Smoke Developed	ASTM E84 CAN/ULC-S102	0/0	0/0	0/0	0/0
Compressive Strength (psi) (Indentation)	ASTM D2394	N/A	N/A	1250	1250
Wind Load (psf, Studs 16" o.c.)	ASTM E330	N/A	30	40	40
Thermal "R"/k Value	Property of Material	0.2/2.7	0.28/2.7	0.37/2.7	0.47/.2.7
Bending Radius (ft.)	Property of Material	N/A	5	5	5
Falling Ball Impact (12" Drop)	ASTM D1037	Pass	Pass	Pass	Pass
Linear Variation (Due to change in moisture content)	ASTM D1037	<0.07%	0.05%	0.05%	0.05%
Fungus Resistance	ASTM G21	(No growth)	(No growth)	(No growth)	(No growth)
Mold Growth On Surface	ASTM D3273*	10	10	10	10

*When tested by an independent laboratory per ASTM D3273 ("Standard Test Method for Resistance to Growth of Mold on the Surface of Interior Coatings in an Environmental Chamber"), PermaBase achieved a panel score of 10, the highest score possible, indicating no mold growth under the laboratory test conditions. The use of PermaBase in actual installations may not produce the same results as were achieved in controlled laboratory conditions. No material can be considered "mold proof," nor is it certain that any material will resist mold indefinitely.

SIZES AND PACKAGING

Size: Thickness, Width And Length	# Of Pcs Per Unit
PermaBase Cement Board	
1/2" x 32" x 5' (12.7 mm x 813 mm x 1524 mm)	50
1/2" x 32" x 8' (12.7 mm x 813 mm x 2438 mm)	30
1/2" x 36" x 4' (12.7 mm x 914 mm x 1219 mm)	50*
1/2" x 36" x 5' (12.7 mm x 914 mm x 1524 mm)	50
1/2" x 36" x 6' (12.7 mm x 914 mm x 1829 mm)	50*
1/2" x 36" x 8' (12.7 mm x 914 mm x 2438 mm)	30
1/2" x 48" x 8' (12.7 mm x 1219 mm x 2438 mm)	30
5/8" x 36" x 5' (15.9 mm x 914 mm x 1524 mm)	40
5/8" x 48" x 8' (15.9 mm x 1219 mm x 2438 mm)	24
3/8" x 48" x 8' (9.5 mm x 1219 mm x 2438 mm)	40*
3/4" x 48" x 8' (19.0 mm x 1219 mm x 2438 mm)	20*
PermaBase Underlayment	
1/4" x 48" x 4' (6.4 mm x 1219 mm x 1219 mm)	60
1/4" x 36" x 5' (6.4 mm x 914 mm x 1524 mm)	60

* Special Order

For installation instructions and accessories, see page 12.

Lighter, Faster And Easier

When You Want The Best Lightweight Rigid Substrate: PermaBase BRAND PLUS Cement Board

This board has the same exceptional qualities built into PermaBase Cement Board but weighs 25% less. When you need to lighten your load, consider PermaBase PLUS for all interior and exterior applications.



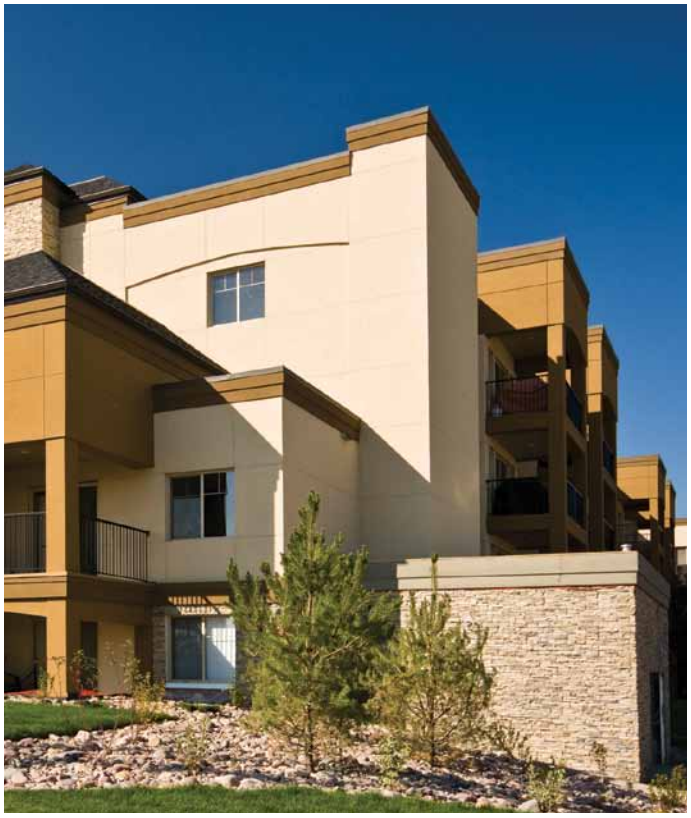

Resists Moisture Better

- Stays intact when exposed to water: will not rot, disintegrate or swell – built for the long run.
- Achieves the industry's lowest water-absorption rating (ASTM C473) – offering better installation.
- Helps inhibit mold growth with the highest possible score on mold tests (ASTM D3273 and ASTM G21).

Stays Strong And Lasts Long

- Resists impact and remains dimensionally stable – extending the life of your project.
- Holds up to the toughest conditions.

Installs Fast And Easy

- Lightweight and easy to cut – speeding up installation.
- Reduces jobsite waste – easier, cleaner cut.
- Patented EdgeTech[MD] Technology allows for a closer edge fastening and reduces damage from handling.

Works For Interior And Exterior Projects

– One Panel, Many Applications

- Great for all interior applications, as well as exterior decks and outdoor kitchens.
- Meets UL & ULC classifications for one- and two-hour fire-rated assemblies.
- Building code approved – one substrate that does the job of many.
- Adhere tile, stone or thin brick directly to PermaBase PLUS in exterior applications – saving time and money.
- Durable substrate for direct-applied coating systems.

Offers Best In Class Warranty

- Lifetime Limited Warranty: Interior applications.
- 15-Year Limited Warranty: Exterior applications.

PermaBASE BRAND PLUS® Cement Board

SIZES AND PACKAGING

Size: Thickness, Width And Length	# Of Pcs Per Unit
7/16" x 36" x 5' (11.1 mm x 914 mm x 1,524 mm)	60
1/2" x 48" x 8' (12.7 mm x 1,219 mm x 2,438 mm)	40
5/8" x 48" x 8' (15.9 mm x 1,219 mm x 2,438 mm)	32

For installation instructions and accessories, see page 12.

Smoother, Stronger, More Stable

When You Want The Best Rigid 1/4-Inch Underlayment That Buys You More Open Time: PermaBase BRAND UltraBacker Cement Board

UltraBacker features a smooth mesh and mat surface. The 1/4-inch thickness eliminates the need to modify adjacent thresholds when abutting it to carpet, hardwood and other common flooring materials.



Resists Moisture Better Than Any Other Cement Board

- Features the *lowest water-absorption rating of <8%* (ASTM C473) – offering better installation.
- Stays intact when exposed to water: will not rot, disintegrate or swell – built for the long run.
- Helps inhibit mold growth with the highest possible score on mold tests (ASTM D3273 and ASTM G21).



Stays Strong And Lasts Long

- Resists impact and remains dimensionally stable – extending the life of your project.
- Holds up to the toughest conditions.
- 30% stronger and four times more rigid than competitive 1/4-inch cement board.



Installs Fast And Easy

- Can be applied over new or existing countertops or as a flooring underlayment – pre-manufactured panels save you time.
- Reduces jobsite waste – easier, cleaner cut.
- Patented EdgeTech[MD] Technology allows for a closer edge fastening and reduces damage from handling.



Offers Best In Class Warranty

- Lifetime Limited Warranty: Interior applications.

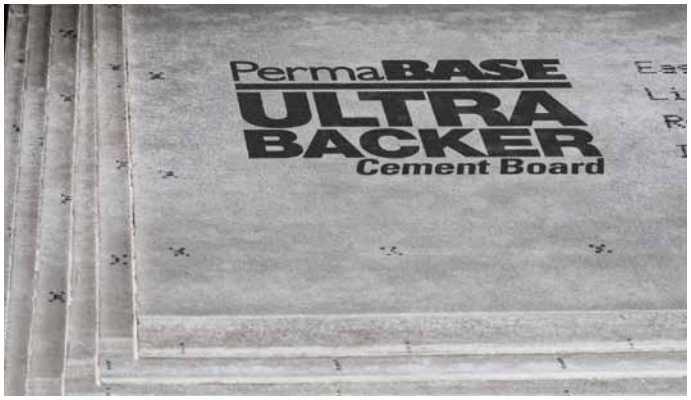



PermaBASE BRAND ULTRA BACKER Cement Board

SIZES AND PACKAGING	
Size: Thickness, Width And Length	**# Of Pcs Per Unit**
1/4" x 36" x 5' (6.4 mm x 914 mm x 1524 mm)	60

For installation instructions and accessories, see page 12.

Easy To Bend, Yet Stays Strong

When You Want The Best Substrate That Bends Like No Other: PermaBase[MD] BRAND Flex Cement Board

This very flexible PermaBase substrate is ideal to use around archways, columns, beams, or anywhere you need an evenly curved surface. Consider this also for radius shower walls, tub step-ups and stair construction – the possibilities are almost endless.



Resists Moisture Better

- Stays intact when exposed to water: will not rot, disintegrate or swell – built for the long run.
- Achieves the industry's lowest water-absorption rating (ASTM C473) – offering better installation.
- Helps inhibit mold growth with the highest possible score on mold tests (ASTM D3273 and ASTM G21).



Stays Strong Yet Flexes Like No Other Cement Board

- Holds up to the toughest conditions yet bends like no other.
- Resists impact and remains dimensionally stable – extending the life of your project.



Installs Fast And Easy

- Pre-manufactured panels save you time.
- Bends easily – 6" radius at 90°.
- Reduces jobsite waste – easier, cleaner cut.



Offers Best In Class Warranty

- Lifetime Limited Warranty: Interior applications.
- 15-Year Limited Warranty: Exterior applications.

Installation

.c. (See page 12 for more information.)

- For convex surfaces, PermaBase Flex must be applied with the rough surface and tapered edges exposed.
- For concave surfaces, PermaBase Flex must be applied with the smooth surface exposed.
- PermaBase Flex Cement Board should not be used for fire-rated assemblies.
- Maximum framing spacing should not exceed 8"o.c.
- Maximum fastener spacing should not exceed 8"o.c. for wall and 6"o.c. for ceiling applications.





PermaBASE BRAND FLEX® Cement Board

SIZES AND PACKAGING

Size: Thickness, Width and Length	# Of Pcs Per Unit
1/2" x 36" x 6' (12.7 mm x 914 mm x 1829 mm)	25
1/2" x 48" x 8' (12.7 mm x 1219 mm x 2438 mm)*	30

* Special Order

For installation instructions and accessories, see page 12.

Installation Guide

Interior Applications

An ideal substrate for interior applications, such as:

- Shower and tub enclosures
- Garden/whirlpool tubs
- Countertops
- Backsplashes
- Steamrooms and saunas
- Swimming pool and whirlpool decks and enclosures
- Floor underlayment
  - Entryways
  - Kitchens
  - Bathrooms
  - Foyers
  - Laundry rooms

Installation

General: All framing should comply with local building code requirements and be designed to provide support with a maximum allowable deflection of L/360 under all intended loads. Framing members should be spaced a maximum of 16" o.c.

Cut or score PermaBase on printed side of panel. Use a straightedge and pencil to mark line. Use utility knife to score/cut the glass mesh. Snap the board and cut through the now visible glass mesh on the other side. Install tile and tile setting materials in accordance with current ANSI specifications and Tile Council of North America (TCNA) guidelines.

Control Joints: For interior installations, allow a maximum of 30 lineal feet between control joints. A control joint must be installed but not limited to the following locations: where expansion joints occur in the framing or building (discontinue all cross furring members located behind joint); when boards abut dissimilar materials; where framing material changes; at changes of building shape or structural system; at each story separation. Place control joints at corners of window and door openings, or follow specifications of architect. Control joint cavity shall not be filled with coating or other materials.



Walls And Ceilings

Provide additional blocking when necessary to permit proper PermaBase attachment.

Do not install PermaBase directly over protrusions from stud plane, such as heavy brackets and fastener heads. Studs above a shower floor should either be notched or

Installation Accessories

For a seamless installation, we recommend PermaBase[MD] Tape and PermaBase[MD] Screws.



Fasteners

PermaBase corrosion resistant screws or equivalent, 1-1/4" or 2" long, for use with wood framing. Type S-12 screws or equivalent, 1-1/4" or 1-5/8" long, for use with 20 gauge or heavier steel framing.

Galvanized roofing nails, 1-1/2" long with hot dipped galvanized coating for use with wood framing. Nails should meet Federal Specification #FF-N105B/type 2 style 20.

Joint Reinforcement

PermaBase mesh tape must be used on all edges and cuts made to size. Use 2" wide polymer-coated (alkali resistant) mesh tape for interior applications and 3" wide polymer-coated (alkali resistant) mesh tape for exterior applications.

Bonding Materials

Treat joint and set facing material, preferably with latex-Portland cement mortar or with dry-set (thin-set) mortar. All mortars should comply with ANSI A118.1, A118.4 or A118.15 standards. Type 1 organic adhesive meeting ANSI A-136.1 may be utilized for interior use only.

furred to accommodate the thickness of the waterproof membrane or pan. The surround opening for a tub or precast shower receptor should not be more than 1/4" longer than unit to be installed.

Ceiling Framing: The deflection of the complete ceiling assembly due to dead load (including insulation, PermaBase, bonding material and facing material) should not exceed L/360. The dead load applied to the ceiling frame should not exceed 10 psf. Ceiling joist or furring channel should not exceed 16" o.c. (Edges of PermaBase parallel to framing should be continuously supported.) Provide additional blocking when necessary to permit proper PermaBase attachment.

PermaBase Cement Board: Apply PermaBase with ends and edges closely butted but not forced together. Stagger ends joints in successive courses. Drive fasteners into field of cement board first, working toward ends and edges. Space fasteners maximum 8" o.c. for walls, 6" o.c. for ceilings with perimeter fasteners at least 3/8" and less than 5/8" from ends and edges. Ensure PermaBase is tight to framing.

Fasteners must be installed into framing members. Select proper fastener type and length for the application.

Joint Reinforcement: Trowel bonding material to completely fill the tapered recessed board joints and gaps between each panel. On non-tapered joints apply a 6" wide, approx. 1/16" thick coat of bonding material over entire joint. For all joints, immediately embed 2" alkali resistant fiberglass mesh tape fully into applied bonding material and allow it to cure. For outside corners, 3" wide mesh tape is recommended. Same bonding material should be applied to corners, control joints, trims and other accessories. Feather bonding material over fasteners to fully conceal.

Divider Wall Installation



1. **PermaBase Cement Board**
2. **Membrane**
3. **Latex-Portland Cement Mortar**
4. **Alkali-Resistant Mesh Tape**

Shower Installation



1. **Support Framing 1/4" / 12" slope toward drain**
2. **Plywood, Min. 1/2"**
3. **PermaBase^{MD} Cement Board**
4. **Membrane**
5. **Latex-Portland Cement Mortar**
6. **Alkali-Resistant Mesh Tape**
7. **Sealant**
8. **Tile and Grout**

Floors And Counters

.c. floor joists, 5/8" tongue and groove exterior grade plywood or 3/4" tongue and groove exterior grade OSB may be used. For 19.2" o.c. and 24" o.c. floor joists, 3/4" tongue and groove exterior grade plywood or OSB must be used. Tile size for floors with 24" o.c. floor joists must be 12" x 12" or larger. The joist and subfloor assembly must meet L/360 as well as the appropriate code tables for live and dead loads.

Underlayment: Using a 1/4" square-notched trowel, apply a setting bed of polymer-modified mortar (or thin-set mortar) to the subfloor or counter base. Immediately laminate PermaBase to subfloor or base leaving a 1/8" space between boards at all joints and corners. Leave a 1/4" gap along walls. Stagger all joints so that they do not line up with underlying substrate joints. Fasten PermaBase every 8" o.c. throughout board field and around all edges while setting bed mortar is still workable. Around perimeter of each board, locate fasteners 2" from corners and not less than 3/8" from the edges. Fill all joints solid with bonding material. On non-tapered joints such as butt ends, apply a 6" wide, 1/16" thick coat over the entire joint. For all joints, immediately embed 2" fiberglass mesh tape fully into applied bonding material; ensure that tape is centered over joint. Apply bonding material over fasteners to fully conceal. Remove all excess bonding material and allow to cure.

Limitations

- Joints should be treated with alkali resistant fiberglass mesh tape set in a polymer modified mortar.
- Conventional paper drywall tape, joint compound and drywall nails or screws should not be used.
- Maximum wall framing spacing should not exceed 16" o.c. and must be designed to limit deflection to L/360 under all live and dead loads.
- Steel framing must be 20 gauge (galvanized) or heavier – 16" o.c.
- 1/4" PermaBase and 1/4" UltraBacker should not be used on walls or ceilings.
- PermaBase is not a water barrier. Consult local building code for moisture barrier requirements.
- Not recommended for use with vinyl flooring or carpets.
- For exterior and interior finishes applied directly to PermaBase, reinforcing mesh must be embedded in basecoat. Consult finish manufacturer for additional requirements.
- PermaBase should not be exposed to temperatures over 220°F (105°C).
- PermaBase is not a nailing base for other finishes.

Countertop Installation



1. **Plywood**
2. **Latex-Portland Cement Mortar**
3. **PermaBase[MD] Cement Board**
4. **Fiberglass Mesh Tape (Alkali-Resistant) Embedded in Mortar**
5. **Latex-Portland Cement Mortar**
6. **Tile and Grout**

Floor Underlayment

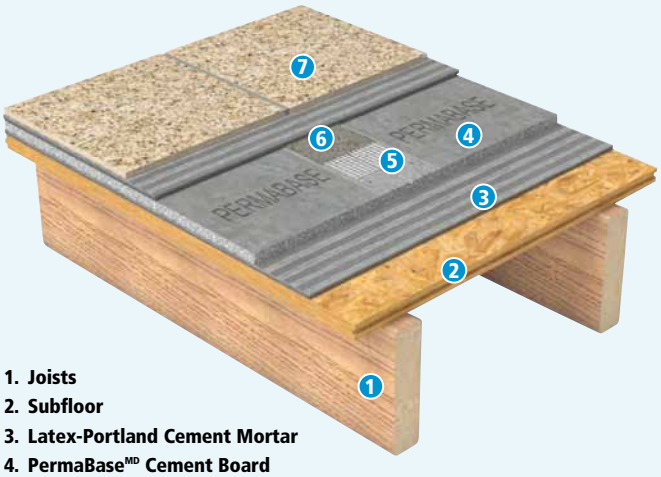

1. **Joists**
2. **Subfloor**
3. **Latex-Portland Cement Mortar**
4. **PermaBase[MD] Cement Board**
5. **Fiberglass Mesh Tape (Alkali-Resistant)**
6. **Latex-Portland Cement Mortar**
7. **Tile**

Exterior Applications

An ideal substrate for exterior applications such as:

- Tile applications
- Stucco applications
- Cement board stucco
- Thin brick
- Adhered stone veneer
- Thin porcelain tile
- Ventilated rainscreen facade
- EIFS
- Soffit panels
- Sheathing panels
- Outdoor kitchens/grills

Installation

General: All framing should comply with local building code requirements and be designed to provide support with a maximum allowable deflection of L/360 under all intended live including wind) and dead loads.

Some applications may require stricter deflection requirements. Consult finish manufacturer for recommendations.

Note:

.

Control Joints: For exterior installations, allow a maximum of 16 lineal feet between control joints. Consult finish manufacturer for other requirements. For exterior tile applications, control joints should be spaced a maximum of every 12'. A control joint must be installed but not limited to the following locations: where expansion joints occur in the framing or building (discontinue all cross furring members located behind joint); when boards abut dissimilar materials; where framing material changes; at changes of building shape or structural system; at each story separation. Place control joints at corners of window and door openings, or follow specifications of architect. Control joint cavity shall not be filled with coating or other materials.

.c. Edges/ ends of PermaBase parallel to framing should be continuously supported. Provide additional blocking when necessary to permit proper PermaBase attachment. Do not install PermaBase directly over protrusions from stud plane such as heavy brackets or fastener heads.

Ceiling Framing: The deflection of the complete ceiling assembly due to dead load (including insulation, PermaBase, bonding material and facing material) should not exceed L/360. The dead load applied to the ceiling frame should not exceed 10 psf. Ceiling joist or furring channel should not exceed 16" o.c. (Edges of PermaBase parallel to framing should be continuously supported.) Provide additional blocking when necessary to permit proper PermaBase attachment.

Water Barrier: While PermaBase is unaffected by moisture, a Water/Air Resistive Barrier (WRB) must be installed to protect the cavity. The type and specific placement or location of the water barrier will vary based on local building codes and/or manufacturers warranties. Consult the WRB manufacturer's recommendations for specific installation guidelines.

PermaBase Cement Board: Apply PermaBase with ends and edges closely butted but not forced together. Stagger end joints in successive courses. Drive fasteners into field of cement board first, working toward ends and edges. Space fasteners maximum 8" o.c. for walls, 6" o.c. for ceilings with perimeter fasteners at least 3/8" and less than 5/8" from ends and edges.

Joint Reinforcement: Trowel bonding material to completely fill the tapered recessed board joints and gaps between each panel. On non-tapered joints apply a 6" wide, approximately 1/16" thick coat of bonding material over entire joint. For all joints, immediately embed 3" alkali resistant fiberglass mesh tape fully into applied bonding material and





allow to cure. Same bonding material should be applied to corners, control joints, trims or other accessories. Feather bonding material over fasteners to fully conceal.

Decks

.c. Subfloor should be sloped at a minimum pitch of 1/4" per foot. The floor surface should be true to plane within 1/8" in 10'.

Underlayment: Using a 1/4" square-notched trowel, apply a setting bed of Latex-Portland cement mortar to the subfloor. Immediately laminate PermaBase to subfloor leaving a 1/8" space between boards at all joints and corners. Leave a 1/4" gap along walls. Stagger joints so they do not line up with underlying substrate joints. Fasten PermaBase every 8" o.c. throughout board field and around all edges while setting bed mortar is still workable. Around perimeter of each board, locate fasteners 2" from the corners and not less than 3/8" from the edges. Fill all joints solid with bonding material. On non-tapered joints such as butt ends, apply a 6" wide, 1/16" thick coat over the entire joint. For all joints, embed alkali-resistant fiberglass mesh tape fully into applied bonding material; ensure that tape is centered over joint. Apply bonding material over fasteners to fully conceal. Remove all excess bonding material and allow it to cure.

Waterproof Membrane: Trowel apply waterproof membrane to the entire surface of the cement board, following membrane manufacturer's installation instructions in detail.

Water-Managed, High-Impact Resistant Wall System

Cement Board Ventilated Rainscreen Façade System

Description

The Cement Board Ventilated Rainscreen Facade System is a water managed exterior cladding wall system designed to provide increased high impact and weather resistance and improved dimensional stability.

The Cement Board Ventilated Rainscreen Facade System combines the strength and durability of PermaBase Cement Board with the performance and beauty of reinforced base coats and textured finishes. It includes specific components such as wood or metal furring, latex-modified Portland cement base coat, glass fiber mesh, trims, primer and acrylic textured finish coat. It provides unequaled protection against water penetration and weathering.

The Cement Board Ventilated Rainscreen Facade System allows you to enclose and finish a project in as little as two days, speeding occupancy. It has already been satisfactorily used for over 25 years on thousands and thousands of square meters of exterior walls.

Uses

For all your exterior walls needing high-impact and weather resistance in commercial, institutional and residential applications.

Advantages

Durability/Strength: PermaBase Cement Board provides an exceptionally hard, durable surface that is able to withstand prolonged exposure to moisture and has a proven durability in cold climates.

PermaBase offers a competitive advantage over similar products on the market with its patented EdgeTech[MD] technology. The tapered, reinforced edge design allows for closer nail or screw application to the edge.

Weather Resistance: Acrylic finishes repel weather at the system's surface.

Water-Managed Design: The water-managed design of the system provides positive drainage directly behind the cladding, enabling the escape of incidental water that might enter around or through window or door openings and penetrate behind the cladding in frame construction. It also provides air pressure equilibrium, minimizing the chances of water being driven into the wall cavity by incidental building envelope pressure differential.

Design Options: Cement Board Stucco provides the popular stucco look, including the attachment of special pre-molded shapes and a wide variety of finish texture and color options in standard colors and custom colors.

Contact exterior coatings manufacturer for color and installation instructions.

Some exterior wall assemblies including the PermaBase boards were tested according to CAN/ULC-S101. Consult ULC's online directories for details.

Limitations

- Boards shall never be fastened directly on studs.
- Thin veneer construction will tend to reveal planar irregularities in the frame construction.
- Minor cracking at joints might become visible in the finished exterior surface.
- For exterior finishes applied direct to PermaBase, reinforcing mesh must be embedded in basecoat. Consult Unifix's website to get the latest exterior cladding system complete architectural specifications and for detailed installation instructions.
- The cavity between the PermaBase Cement Board and the intermediate sheathing or the insulation board must allow for venting to the exterior, at the bottom and at the top of the wall, in order to provide efficient water drainage and humidity management.

Residential Ventilated Rain Screen Installation

1. Sheathing
2. Weather Resistant Barrier
3. Furring Strip
4. PermaBase[MD] Cement Board
5. Mesh Tape
6. Basecoat
7. Basecoat
8. Mesh
9. Basecoat
10. Primer
11. Finish Coat
12. Flashing Tape
13. Weep Screed

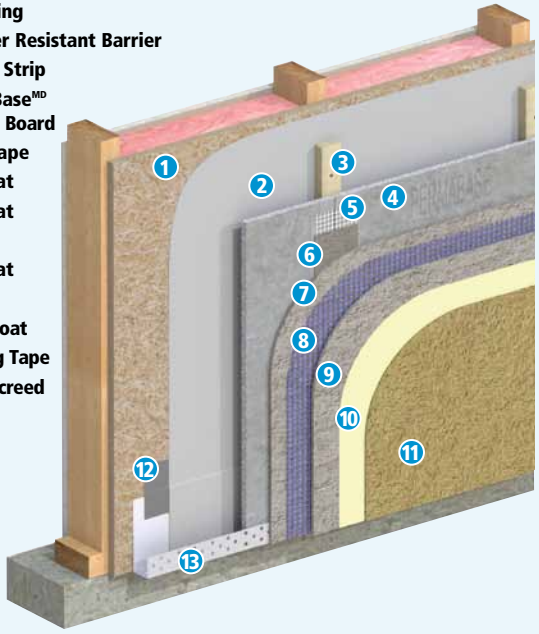

Commercial Ventilated Rain Screen Installation

1. Exterior Gypsum Sheathing
2. Weather Resistant Barrier
3. Insulation
4. Furring
5. PermaBase[MD] Cement Board
6. Mesh Tape
7. Basecoat
8. Basecoat
9. Mesh
10. Basecoat
11. Primer
12. Finish Coat
13. Flashing Tape
14. Weep Screed

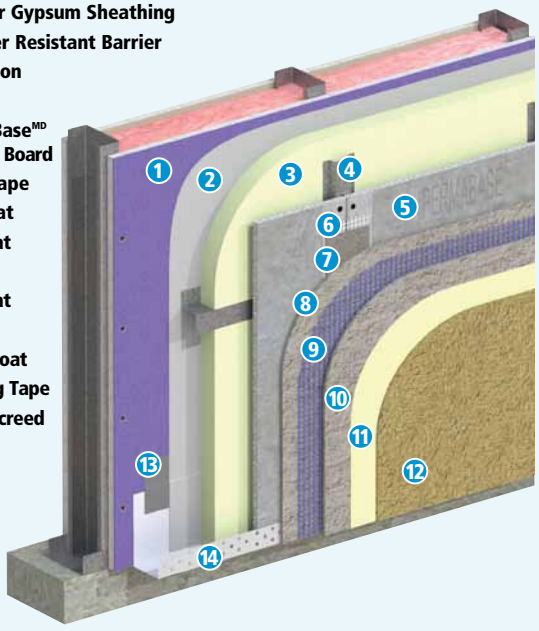

Cement Board Masonry Veneer Wall System (CBMV)

PermaBase as a component of CBMV Systems

The use of adhered manufactured stone and thin brick masonry veneers is increasing in popularity. Cement Board Masonry Veneer Wall Systems (CBMV) have been designed to offer complete, engineered solutions for the installation of manufactured and natural stone masonry veneer, as well as thin brick veneers.

These systems have been developed and are marketed by various manufacturers of the adhering materials used to install them as well as the veneer manufacturers themselves. CBMV Systems offer increased performance by utilizing polymer modified adhesive mortars which have been designed for hanging materials versus type S and N mortars that were primarily designed for stacking materials. In some cases these systems offer warranties.

Several of these systems call for the use of an ASTM C1325 cement board. In addition to meeting this requirement, the features and benefits of PermaBase Cement Board make it an ideal component for use in these systems.

Advantages

Durability/Strength: PermaBase Cement Board provides an exceptionally hard, durable surface that is able to withstand prolonged exposure to moisture and has a proven durability in cold climates.

Consistency: PermaBase is produced in a factory controlled environment which provides for a consistent product produced within tighter tolerances than can be achieved with field fabricated substrates.

Cutting and Handling: PermaBase is produced with its patented EdgeTech technology. The tapered, reinforced edge design allows for fastening of nails or screws closer to the edge without crumbling or spinout. The homogeneous core provides a very clean score and snap using a standard drywall knife.

Low Water Absorption: PermaBase has the lowest water absorption of any cement board which provides greater open time and increased workability of the adhering materials used in the application of veneer products.

Limitations

The system shall be engineered to withstand all applicable loads, including live, dead, seismic, positive and negative, etc. CBMV Systems utilize a primary sheathing beneath the PermaBase Cement Board to provide required structural performance. The selection and installation of this sheathing varies according to the type of wall construction.

In the case of exterior walls only, the CBMV Wall System shall not exceed 3 meters (9.8') in height above the foundation walls. Do not use the CBMV System to make soffits or use underground or in frequently submerged areas. Make sure to follow the latest national, provincial or local building code regulations.

Consult Unifix's website to get the latest exterior cladding system complete architectural specifications and for detailed installation instructions.

The details provided give a general sense of representative CBMV Systems only.

Water Resistant Barriers (WRB)

While PermaBase is unaffected by moisture, a water resistant barrier (WRB) must be installed to protect the cavity. One of the advantages of CBMV Systems is the ability to incorporate an effective, accountable water management system. The type and specific placement of the water barrier will vary based on local building codes and/or manufacturers warranties.

Residential Manufactured Stone Veneer Wall Installation

1. **Sheathing**
2. **Weather Resistant Barrier**
3. **PermaBase[MD] Cement Board**
4. **Mesh Tape**
5. **Mortar**
6. **Mortar**
7. **Thin Stone Veneer**
8. **Flashing Tape**
9. **Weep Screed**

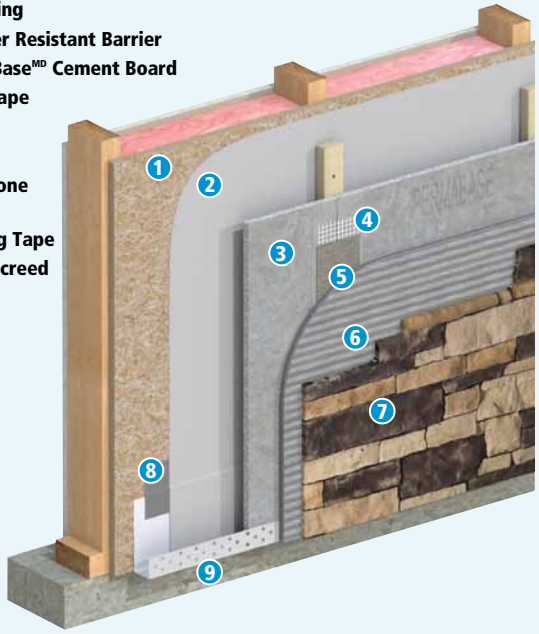

Commercial Manufactured Stone Veneer Wall

1. **Exterior Gypsum Sheathing**
2. **Weather Resistant Barrier**
3. **Insulation**
4. **Z-Furring**
5. **PermaBase Cement Board**
6. **Mesh Tape**
7. **Mortar**
8. **Mortar**
9. **Stone Veneer**
10. **Flashing Tape**
11. **Weep Screed**

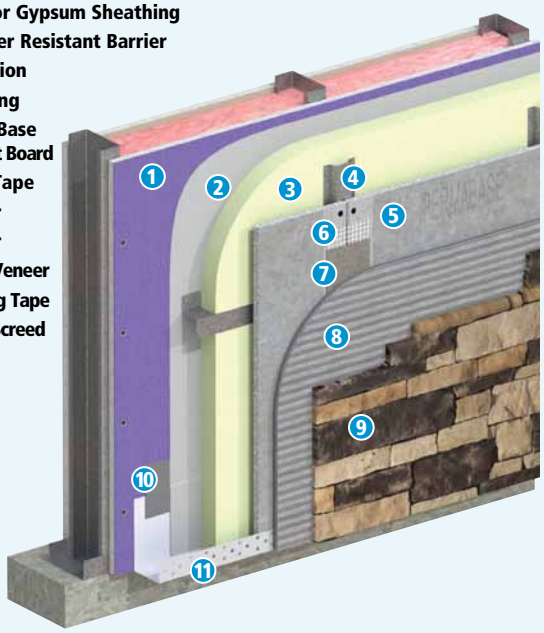

This section of the PermaBase Construction Guide provides information on how to utilize PermaBase within both a CBMV System and a Ventilated Rainscreen Facade System. While some typical examples are shown (right) for reference purposes, the specifications and details on how to design and construct individual systems should be obtained from the design professional, or the adhering material or veneer manufacturer of the materials that are being used to complete the system.

For more information go to: **unifixinc.com/applications**

Heat Shield Applications

Features/Benefits

- Protects walls and floors.
- Reduces clearance in back up to 40%.
- Lightweight and easy to install.
- CAN/ULC- S632 & UL1618 tested.

Limitations: Do not apply combustible finishes, such as wallpaper, on the panel surface.

Installation

The heat shield made with PermaBase boards can reduce the required clearance between a heat producing appliance and the wall by up to 40%, except where the clearance includes provision for access or ventilation.

Furring is made by cutting a full PermaBase panel into 4" (100 mm) wide strips. Attach a double layer of these furring strips to the wall studs using cement board screws which provide a minimum penetration of 3/4" (19 mm) into the framing. When installing the panels, leave a minimum 2" (50 mm) gap at the ceiling and a 1"- 2" (25-50 mm) gap at the floor.

Fasten the PermaBase panels to the studs with galvanized roofing nail or cement board screws spaced 8" (200 mm) o.c. Be sure your cement board screws are long enough to go through the furring and into the studs at least 3/4" (19 mm). Do not put any nails or screws into the wall area directly behind the proposed location of the appliance.

Finish the joints with polymer modified Portland cement mortar and alkali resistant fiberglass tape. Cover fasteners with the same mortar. The mortar should be dry before applying any decorative coating.

Heat build-up is reduced by allowing air to enter and exit the cavity between the wall and the heat shield. This air space is required for the good functioning of the heat shield. Do not close or block these openings.

Heat Shield Installation

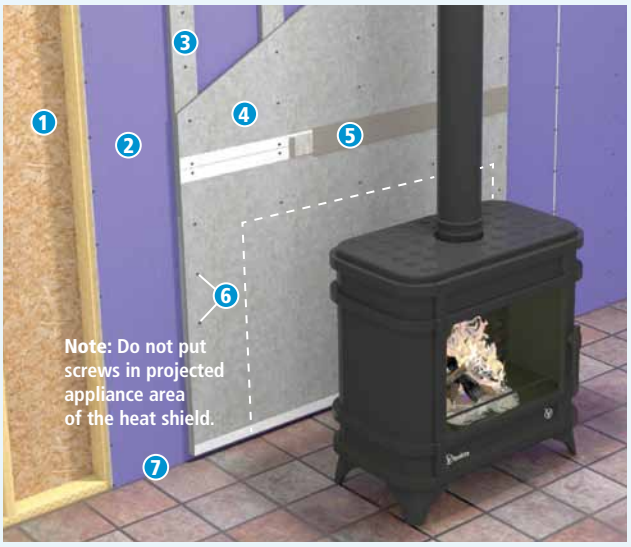

1. **Studs Spaced 16 in. o.c.**
2. **Existing Gypsum Board**
3. **Two Layers 4 in. wide Furring Strips**
4. **PermaBase[MD] Heat Shield**
5. **Joint Treatment**
6. **Fasteners Spaced 8 in. o.c. Maximum**
7. **1-2 in. Minimum Clearance from the Floor**

PermaBase[MD] heat shielding permits clearance reduction up to 40 percent of the manufacturer's suggested clearance.

UL Listed PermaBase[MD] Cement Board Partitions – Steel Framing

1-hour Fire Rating
V452 UL Design



7/16" PermaBase PLUS or 1/2" PermaBase applied vertically or horizontally to one side of 3-5/8" steel studs 16" o.c. 5/8" Fire-Shield Gypsum Board applied vertically to opposite side. 3" mineral wool insulation in stud cavities.

1-hour Fire Rating
U425 UL Design

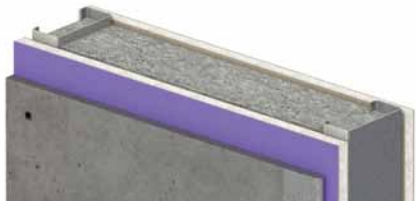

7/16" PermaBase PLUS or 1/2" PermaBase applied vertically or horizontally over 5/8" Fire-Shield Gypsum Board applied vertically to each side of 3-1/2", 20-gauge steel studs 16" o.c. PermaBase secured to studs with cement board screws of adequate length to penetrate studs 3/8" spaced 8" o.c.

1-hour Fire Rating
V438 UL Design



7/16" PermaBase PLUS or 1/2" PermaBase applied vertically or horizontally over 5/8" Fire-Shield Gypsum Board applied vertically to each side of 3-5/8" steel studs 16" o.c. PermaBase secured to studs with cement board screws of adequate length to penetrate studs 3/8" spaced 8" o.c.

2-hour Fire Rating
V452 UL Design

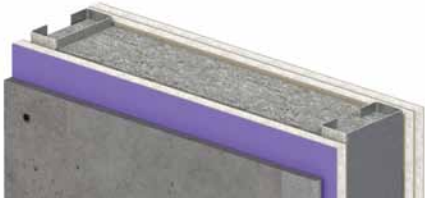

7/16" PermaBase PLUS or 1/2" PermaBase applied vertically over 1/2" Fire-Shield C or 5/8" Fire-Shield Gypsum Board, applied vertically to one side of 3-5/8" steel studs 16" o.c. 2 layers 1/2" Fire-Shield C or 5/8" Fire-Shield Gypsum Board applied vertically to opposite side. 3" mineral wool insulation in stud cavities.

PermaBase Over Foundation Walls

Installation

The 1/2" PermaBase boards can be installed below ground level over extruded polystyrene boards that are themselves installed over a foundation wall, under the following conditions.

1. That the PermaBase boards be fully supported, over their entire surface, by the polystyrene boards.

2. That the PermaBase boards be installed using our specially designed PermaBase screws, every 8" o.c. (200 mm), over furring channels (wood or galvanized metal 20 gauge or thicker) that comply with the following requirements:

a. That the furring strips be spaced at a maximum of 24" (610 mm) o.c.

b. That the furring strips have the same thickness (or depth) as the polystyrene board.

c. That the furring strips be in full contact with the foundation wall.

d. That the furring strip be affixed to the foundation wall with the proper fasteners and in sufficient number to provide an adequate support for the board, its finish and other building loads.

e. That the furring strips be corrosion or rot proof.

3. That the extruded polystyrene boards be approved for exterior use, below ground and that they have a compressive strength of 20 psi (140 kPa) or higher when tested according to ASTM D1621.

4. That the PermaBase boards are installed below ground at a maximum depth of 10' (3 m).

5. That the water table level be at all times be below the base of the foundation wall.

6. That the base of the foundation wall be properly drained in order to avoid any accumulation of water and consequently an added pressure on the wall.

7. That the wall design be in conformance with the applicable and most up to date local, provincial, and federal building codes where the project is located.

Limitations: The PermaBase boards are resistant to water but are not water impermeable or waterproof and cannot be considered a vapor barrier. Where a wall or cavity must be kept dry, use proper water resistant membranes, in conformance with the applicable and most up to date local, provincial, and federal building codes where the project is located. Some waterproofing compounds, sealants, or adhesives may contain solvents or petroleum distillates. These may damage the polystyrene. Please contact the manufacturers of these products to verify their compatibility with polystyrene and concrete. The PermaBase boards are not structural boards.

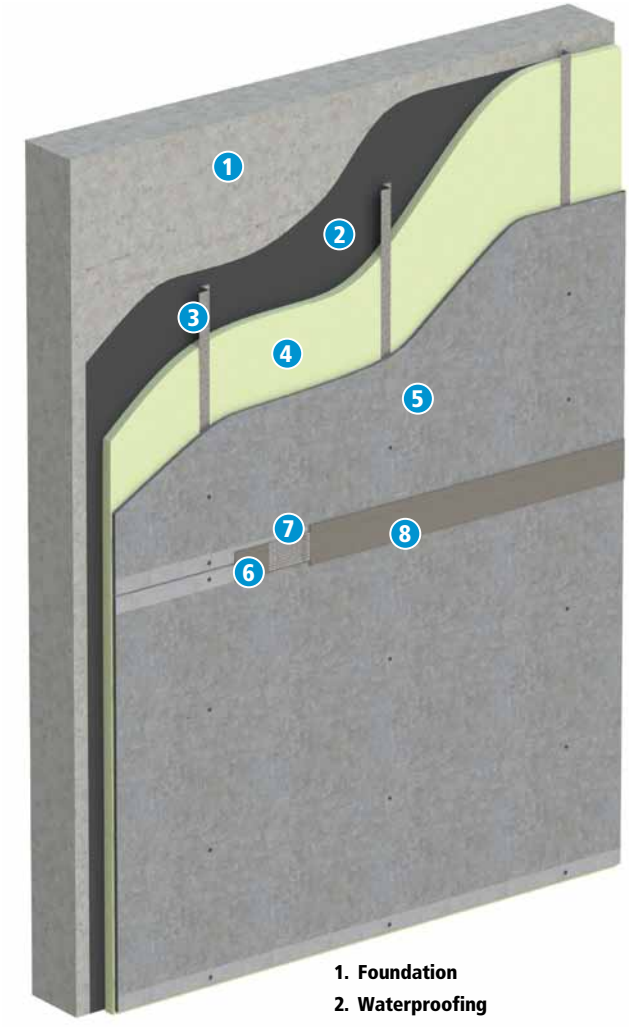

1. **Foundation**
2. **Waterproofing**
3. **Furring Strips**
4. **Insulation**
5. **PermaBase^{MD} Cement Board**
6. **Mortar**
7. **Mesh Tape**
8. **Mortar**

LIMITED WARRANTY AND REMEDIES

Products manufactured and sold by National Gypsum Company are warranted by National Gypsum Company to its customers to be free from defects in materials and workmanship at the time of shipment. THIS EXPRESS WARRANTY IS THE ONLY WARRANTY APPLICABLE TO SUCH PRODUCTS, AND IS IN LIEU OF AND EXCLUDES ALL OTHER EXPRESS ORAL OR WRITTEN WARRANTIES AND ALL IMPLIED WARRANTIES, INCLUDING BUT NOT LIMITED TO THE IMPLIED WARRANTIES OF MERCHANTABILITY AND FITNESS FOR A PARTICULAR PURPOSE.

National Gypsum Company will not be liable for any incidental, indirect or consequential losses, damages or expenses. The customer's exclusive remedy for any type of claim or action for defective products will be limited to the replacement of the products (in the form originally shipped) or, at National Gypsum's option, to a payment or credit not greater than the original purchase price of the products.

National Gypsum Company will not be liable for products claimed to be defective where the defect resulted from causes not within National Gypsum's control, or which arose or occurred after shipment, including but not limited to accidents, misuse, mis-handling, improper installation, contamination or adulteration by other materials or goods, or abnormal conditions of temperature, moisture, dirt or corrosive matter.

Any claim that products sold by National Gypsum Company were defective or otherwise did not conform to the contract of sale is waived unless the customer submits it in writing to National Gypsum within thirty (30) days from the date the customer discovered or should have discovered the defect or non-conformance. No legal action or proceeding complaining of goods sold by National Gypsum may be brought by the customer more than one year after the date the customer discovered or should have discovered the defect or problem of which it complains.

Mold And Mildew Resistance

PermaBase was designed to provide extra protection against mold and mildew. When tested by an independent laboratory, PermaBase received the highest possible ratings on ASTM G21 and D3273. The use of PermaBase in actual installations may not produce the same results as were achieved in controlled laboratory conditions. No material can be considered "mold-proof," nor is it certain that any material will resist mold or mildew indefinitely. When used in conjunction with good design, handling and construction practices, PermaBase can provide increased mold resistance. As with any building material, avoiding water exposure during handling, storage and installation, and after installation is complete, is the best way to avoid the formation of mold or mildew.

Member of TCNA
Tile Council of North America, Inc.

Perma BASE® BRAND Cement Board

GREENGUARD GOLD
PRODUCT CERTIFIED FOR LOW CHEMICAL EMISSIONS: UL.COM/GG UL 2818

UNIFIX Inc.
35, rue Unifix
Bromont, QC J2L 1N5
Canada

Web: unifixinc.com

Phone: (450) 534-0955
Fax: (450) 534-0953
Toll Free: (800) 461-0955
Email: info@unifixinc.com

UNIFIX INC.®
A Subsidiary Of National Gypsum Company

National Gypsum

Safety Data Sheet

SDS No. GB-1504
PermaBase® BRAND
Cement Board Products

Section 1: Product and Company Identification

Product Name
PermaBase® BRAND Cement Board Products

Product Identifiers
PermaBase ***PermaBase UltraBacker*** ***PermaBase DEK***
PermaBase Flex ***PermaBase Plus***

Other means of identification
Tile Backer Board, Cementitous Backer Board (CBU)
Recommended Use
Underlayment for ceramic tile on floors, countertops, EIFS systems. Use per manufacturer's recommendations.
Restrictions on Use
Use in well-ventilated area and avoid breathing dust.
Avoid skin contact.

Manufacturer/Supplier Details
National Gypsum Company
2001 Rexford Road
Charlotte, NC 28211

In Canada:
UNIFIX INC. A subsidiary of National Gypsum Company
35, Unifix Street
Bromont, QC J2L 1N5 CANADA

Emergency Telephone Number
Director Quality Services
(704) 551-5820 - 24 Hour Emergency Response
Website: www.nationalgypsum.com

1-450-534-0955 or toll free 1-800-461-0955 (8h00 -17h00)
e-mail: info@unifixinc.com
Website: www.unifixinc.com

Section 2: Hazards Identification

United States (US)
According to OSHA 29CFR 1910.1200 (HCS)
GHS Classification of the substance or mixture
Carcinogenicity - Category 1A - (H-350)
Specific target organ toxicity, repeated exposure – Category 1 (H-372)
Acute toxicity, inhalation - Category 4 (H-332)
Skin corrosion/irritation Category 2 (H315)
Serious eye irritation – Category 2A (H-319)
GHS Label Elements
Pictogram



Signal Word **Danger**
Hazard Statements
H-350 May cause cancer.
H-332, 372 Harmful if inhaled. Causes damage to organs (lungs) through prolonged or repeated exposure.
H-315, 319 Causes skin irritation and serious eye irritation
Precautionary Statements
Prevention
Obtain special instructions before use.
Do not handle until all safety precautions have been read and understood.
Do not breathe dust.
Use personal protective equipment as required. (See Section 8)
Use engineering controls and wet methods to minimize dust.

Section 2: Hazards Identification (Continued)

Response
If breathing is difficult, remove victim to fresh air and keep at rest in a position comfortable for breathing.
If on skin, wash with plenty of soap and water. If skin irritation occurs, get medical attention.
If in eyes, rinse cautiously with water for several minutes. Remove contact lenses, if present and easy to do. Continue rinsing.
Get medical attention if exposed or concerned.

Storage
Store material in a cool, dry, ventilated area, away from excessive heat or sunlight.

Disposal
Dispose of material in accordance with federal, state, and local regulations.

Section 3: Composition/Information on Ingredients

Chemical Name	Common name/ Synonym	Identifiers CAS Number	% (weight)	Impurities
Silicon Dioxide (SiO_2)	Sand, quartz	14808-60-7	<50	
In CANADA- Calcium Carbonate	Limestone, industrial sand	1317-65-3	<50	Crystalline silica (CAS # 14808-60-7)
Mixture-calcium and aluminum silicates	Portland Cement	65997-15-1	<25	Crystalline silica (CAS # 14808-60-7)
Mixture-silicates, aluminates	Pozzolan, fly ash	68131-74-8	<25	Crystalline silica (CAS # 14808-60-7)
Mixture-calcium aluminates	High Alumina Cement	65997-16-2	<6	Crystalline silica (CAS # 14808-60-7)
Mixture-calcium, aluminum silicates, amorphous silica	Fiberglass scrim or fiberglass mat laminate	65997-17-3	<5	
Calcium Hydroxide	Hydrated lime	1305-62-0	<2	Crystalline silica (CAS # 14808-60-7)

Section 4: First-Aid Measures

Inhalation Remove exposed individual to fresh air immediately. If breathing difficulty persists, seek medical attention.

Eye contact Do not rub or scratch eyes. Immediately flush eyes with water for 15 minutes.
Remove contact lenses (if applicable). Seek medical attention if irritation persists.

Skin contact Flush and wash skin with soap and water. Utilize lotions to alleviate dryness if present. Seek medical attention if irritation persists.

Ingestion This product is not expected to be hazardous and no harmful effects are expected upon ingestion of small amounts. Larger amounts may cause abdominal discomfort or possible obstruction of the digestive tract. Seek medical attention if problems persist.

Medical Conditions aggravated by exposure
Pre-existing upper respiratory and lung diseases such as, but not limited to, bronchitis, emphysema and asthma. Pre-existing skin diseases such as, but not limited to, rashes and dermatitis.

Most important symptoms/effects, acute and delayed: See Section 11. (Toxicological Information)

Section 5: Fire-Fighting Measures

Extinguishing Media
Dry chemical, foam, water, or extinguishing media appropriate for surrounding fire.

Unusual Fire and Explosion Hazards
Mixture poses no fire-related hazard.

Special hazards arising from the mixture
None known

Special Protective Equipment and Precautions for Firefighters
A SCBA is recommended to limit exposures to combustion products when fighting any fire.

Section 6: Accidental Release Measures

Personal precautions, protective equipment and emergency procedures
Product is an article composite.
General recommendations:
Wear appropriate Personal Protective Equipment. (See Section 8)
Maintain proper ventilation.

Environmental precautions
This product could be toxic to fish due to its high alkalinity from the Portland Cement.
Dispose of in accordance with applicable federal, state, and local regulations.

Methods and materials for containment and cleaning up
Pick-up larger pieces to avoid a tripping hazard.
Sweep or vacuum remaining material into a waste container for disposal.
Use a light water spray to minimize dust generation.

Section 7: Handling and Storage

Precautions for safe handling
Avoid breathing dust.
Minimize generation of dust.
Provide appropriate exhaust ventilation at places where dust is formed.
Avoid contact with eyes, skin and clothing.
Wear recommended personal protective equipment when handling. (See Section 8)

Conditions for safe storage, including any incompatibilities
Store material in a cool, dry, ventilated area, away from excessive heat or sunlight.
Store panels flat to minimize damage.
Do not stack panels too high when storing to minimize the risk of falling.
Avoid contact with strong acids.

Section 8: Exposure Controls/Personal Protection

Control Parameters

	Exposure Limits	
Component	**OSHA PEL (mg/m3)**	**ACGIH TLV (mg/m3)**
Portland Cement	15 (T) 5 (R)	10 (T)
High Alumina Cement	15 (T) 5 (R)	10 (T)
Pozzolan	15 (T) 5 (R)	10 (T)
Sand	[(10) / (%SiO2+2)] (R); [(30) / (%SiO2+2)] (T)	0.025 (R)
Crystalline Silica (Quartz)[1]	[(10) / (%SiO2+2)] (R); [(30) / (%SiO2+2)] (T)	0.025 (R)
Fiberglass Scrim	15 (T) 5 (R)	1 f/cc (R)
Calcium Hydroxide (Hydrated Lime)	15 (T) 5 (R)	5 (R)
Calcium Carbonate	15 (T) 5 (R)	10 (T)

1 – Present as an impurity in raw materials
T- Total Dust
R- Respirable Dust

Exposure Controls

Appropriate Engineering Controls

Work/Hygiene Practices: Utilize methods to minimize dust production. Utilize wet methods, when appropriate, to reduce generation of dust.

Ventilation: Provide local and general exhaust ventilation sufficient to maintain a dust level below the PEL/TLV.

Personal Protective Equipment

Respiratory Protection

A NIOSH approved particulate respirator is recommended in poorly ventilated areas or if the PEL/TLV is exceeded. OSHA's 29 CFR 1910.134 (Respiratory Protection Standard) must be followed whenever work conditions require respirator use.

Eye Protection

Safety glasses or goggles.

Skin

Gloves, protective clothing and/or barrier creams may be utilized if conditions warrant.

Section 9: Physical and Chemical Properties

(a) Appearance: Gray solid
(b) Odor: Slight organic odor upon opening that dissipates quickly.
(c) Odor threshold: Not available
(d) pH : ~12
(e) Melting point/freezing point: Not Available
(f) Initial boiling point and boiling range: Not Available
(g) Flash point: Not available
(h) Evaporation rate: Not available
(i) Flammability (solid, gas): Not flammable
(j) Upper/lower flammability or explosive limits: Not available
(k) Vapor pressure: Not available
(l) Vapor density: Not available
(m) Relative density: ~1.2
(n) Solubility(ies): Slightly soluble in water
(o) Partition coefficient: n-octanol/water: Not available
(p) Auto-ignition temperature: Not available
(q) Decomposition temperature: Unknown
(r) Viscosity: Not available
(s) VOC (Volatile Organic Compound): N/A

Section 10: Stability and Reactivity

(a) Reactivity: No data available
(b) Chemical stability: Stable in dry environments
(c) Possibility of hazardous reactions: None known
(d) Conditions to avoid (e.g., static discharge, shock, or vibration): Contact with strong acids.
(e) Incompatible materials: Strong acids
(f) Hazardous decomposition products: None known.

Section 11: Toxicological Information

Information on Toxicological effects

Information on likely routes of exposure

Ingestion	May cause gastrointestinal irritation.
Inhalation	Dust may irritate respiratory system. Chronic exposure may result in lung disease. (See below)
Skin contact	May cause irritation, itching or dermatitis. (See below)
Eye contact	Contact with dust may cause mechanical irritation.

Symptoms related to the physical, chemical and toxicological characteristics

Acute exposure to airborne dust concentrations in excess of the PEL/TLV may result in coughing, dyspnea, wheezing, and a burning irritation of the nose, throat, and upper respiratory tract, along with possible impaired pulmonary function. Chronic exposures may result in lung disease. (Silicosis and/or lung cancer)

Contact with wet Portland Cement may cause severe irritation, redness, and possible burns. Continued and prolonged contact may result in drying of the skin. Contact with dust or glass fibers may produce itching, rash and/or redness. Repeated or prolonged exposure may result in dermatitis.

Toxicological data

No toxicological data is available for this product. Toxicological information for components of this product listed below.

Acute toxicity	Not available
Skin corrosion/irritation	Not available
Serious eye damage/eye irritation	Not available
Skin sensitization	Not available
Respiratory sensitization	Not available
Sensitization	Not available
Mutagenicity	Not available
Carcinogenicity	Not available

This product contains crystalline silica. (quartz) The International Agency for Research on Cancer (IARC) classifies crystalline silica inhaled in the form of quartz or cristobalite from occupational sources as carcinogenic to humans, Group 1. The National Toxicology Program (NTP) classifies respirable crystalline silica as a substance which may be reasonably anticipated to be a carcinogen. OSHA does not regulate crystalline silica as a human carcinogen.

Reproductive effects	Not available
Specific target organ toxicity – single exposure	Not available
Aspiration toxicity	Not available

Section 12: Ecological Information

(a) Ecotoxicity (aquatic and terrestrial, where available): This product could be toxic to fish due to its high alkalinity from the Portland Cement. No studies are available.
(b) Persistence and degradability: Unknown
(c) Bioaccumulative potential: Unknown.
(d) Mobility in soil: Unknown
(e) Other adverse effects (such as hazardous to the ozone layer): None known

Section 13: Disposal Considerations

This material is not considered a hazardous waste. Dispose of according to Local, State, Federal, and Provincial Environmental Regulations.

Section 14: Transport Information

This product is not a DOT hazardous material
Shipping Name: Same as product name
ICAO/IATA/IMO: Not applicable

Section 15: Regulatory Information

All ingredients are included on the TSCA inventory.

Federal Regulations

SARA Title III: Not listed under Sections 302, 304, and 313
CERCLA: Not listed
RCRA: Not listed
OSHA: Dust and potential respirable crystalline silica generated during product use may be hazardous.

State Regulations
California Prop 65: Respirable crystalline silica is known to the state of California to cause cancer.
Canada WHMIS
All components of this product are included in the Canadian Domestic Substances List (DSL).
Crystalline silica: WHMIS Classification D2A

Section 16: Other Information

SDS Prepared by: National Gypsum Company
2001 Rexford Road
Charlotte, NC 28211
Phone Number: (704) 551-5820

Date of Preparation: July 16, 2015

Revision indicators and Date
Effective Date Change: 7/16/2015 Supersedes: 6/1/2015
Format Changes: Conforms to OSHA 29CFR 1910.1200 (HCS)
Compliant with the 2015 Canadian Workplace Hazardous Materials Information System (WHMIS 2015), the Canadian Hazardous Products Act, and the Controlled Products Regulations. (CPR)

Key to Abbreviations

ACGIH	American Conference of Governmental Industrial Hygienists
CAS	Chemical Abstract Services Number
CFR	Code of Federal Regulations
DOT	Department of Transportation
EPA	Environmental Protection Agency
HEPA	High Efficiency Particulate Air
HCS	Hazard Communications Standard
HMIS	Hazardous Material Identification System
IARC	International Agency for Research on Cancer
IATA	International Air Transport Association
ICAO	International Civil Aviation Organization
IMO	International Maritime Organization
NIOSH	National Institute for Occupational Safety and Health
NFPA	National Fire Protection Association
NTP	National Toxicology Program
OSHA	Occupational Safety and Health Administration
PEL	Permissible Exposure Limit
PPE	Personal Protective Equipment
TLV	Threshold Limit Value
TSCA	Toxic Substance Control Act
TWA	Time Weighted Average
WHMIS	Workplace Hazardous Materials Information System

The information and recommendations contained herein are based upon data believed to be correct. However, no guarantee or warranty of any kind expressed or implied is made with respect to the information contained herein. This safety data sheet was prepared to comply with the OSHA Hazard Communication Standard (29 CFR 1910.1200).

Disclaimer of Liability:
As the conditions or methods of use are beyond our control, we do not assume any responsibility and expressly disclaim any liability for any use of the material. Information contained herein is believed to be true and accurate, but all statements or suggestions are made without any warranty, express or implied, regarding accuracy of the information, the hazards connected with the use of the material, or the results to be obtained for the use thereof.

Spécification

Pratique standardisé

Proposé à :

AIR MP
754, Rue Saguenay
Rouyn-Noranda (Qc) J9X 7B5

A/S : Guillaume Gauthier

Préparé et présenté par :

Danielle Matte

NACE CIP Certifié Niveau 3
#64593

Distribution E.S.
104-A, 5e Ave Est
La Sarre (Qc) J9Z 2Y1
T.819.339.2101
admin@distributiones.com

1. Système standard

Primer :

ARP Primer Époxy (Kits Gallon)
→Gris pâle
→Satiné

Finition :

Supershield Uréthane (Kits Gallon)
→Toutes les couleurs
→Standard Lustré 80-90% lustre
→Disponible en différents lustres sur demande.

2. Système salin

Projets résistance saline – 3000 heures

Primer :

Guertin EF75122 Époxy (Kits 4 Gallons)
→ Gris Charcoal
→ Semi-Lustre

Finition :

Supershield Uréthane (Kits Gallon)
→Toutes les couleurs
→Standard Lustré 80-90% lustre
→Disponible en différents lustres sur demande.

Distribution E.S.
104-A, 5e Ave Est
La Sarre (Qc) J9Z 2Y1
T.819.339.2101
admin@distributiones.com

PRIMER – Système 1 – Projet standard

Époxy de finition sans sablage ARP 2.1VOC Primer

Ratio : 3 :1 → vendus en kits 1x GALLONS

Partie-A : 83030A01 @ format 2.84 litres
Partie-B : 83030B01 @ format 950 ml

NE PAS DILUER ; PRÊT À L'USAGE

NE PAS PIGMENTER

Résistance saline : >1500hrs

Préparation :

- Bien lire la fiche technique avant d'appliquer
- Le nettoyage au solvant (SSPC-SP1) est nécessaire
- Arrondir tous les coins et adoucir les soudures, retirer les bavures de soudage, contaminants lousses (SSPC-SP2 ET SSPC-SP3)
- Pour acier autre que satiné, effectuer un grenaillage conformément la norme SSPC-SP6

Application :

- Mélanger la Partie A et Partie B indépendamment avant de les mélanger ensemble.
- Combiner les 2 parties ensemble en ratio 3 :1 en mélangeant mécaniquement à basse révolution pendant au moins 2 minutes jusqu'à ce que le mélange ait une consistance uniforme
- Utiliser un mesh 100 pour le filtre
- S'assurer que le taux d'humidité ambiante est en dessous de 80%.

ÉPAISSEURS :
Appliquer entre 4 et 6 mils humide
Vous obtiendrez entre 2.4 et 3.6 mils sec (DFT)

APPLIQUER LA FINITION SUPERSHIELD LA JOURNÉE MÊME, ENTRE 1h et 6h APRÈS

Distribution E.S.
104-A, 5e Ave Est
La Sarre (Qc) J9Z 2Y1
T.819.339.2101
admin@distributiones.com

PRIMER – Système 2 – Résistance Saline

Époxy Haute Performance EF75122

Ratio : 4 :1

Partie-A : EF75112P1-12L @ format 12 litres
Partie-B : EF75061P2-3L @ format 3 litres

NE PAS DILUER ; PRÊT À L'USAGE

NE PAS PIGMENTER

Résistance saline >3000h.

Préparation :

- Bien lire la fiche technique avant d'appliquer
- Le nettoyage au solvant (SSPC-SP1) est nécessaire
- Arrondir tous les coins et adoucir les soudures, retirer les bavures de soudage, contaminants lousses (SSPC-SP2 ET SSPC-SP3)
- Pour acier autre que satiné, effectuer un grenaillage conformément la norme SSPC-SP6

Application :

- Mélanger la Partie A et Partie B indépendamment avant de les mélanger ensemble.
- Combiner les 2 parties ensemble en ratio 4 :1 en mélangeant mécaniquement à basse révolution pendant au moins 3 minutes jusqu'à ce que le mélange ait une consistance uniforme
- Utiliser un mesh 100 pour le filtre
- S'assurer que le taux d'humidité ambiante est en dessous de 80%.

ÉPAISSEURS :
Appliquer entre 7 et 8 mils humide
Vous obtiendrez entre 4.2 et 4.8 mils sec (DFT)

APPLIQUER LA FINITION SUPERSHIELD LA JOURNÉE MÊME, ENTRE 1h et 6h APRÈS

Distribution E.S.
104-A, 5e Ave Est
La Sarre (Qc) J9Z 2Y1
T.819.339.2101
admin@distributiones.com

FINITION URÉTHANE – Système Universel (1 et 2)

<u>Uréthane Supershield sans Isocyanathes formule 3 :1</u>

Ratio : 3 :1

Partie-A : Supershield Intermix @ format 2.83l
Partie-B : SI25002P214 @ format 946ml

NE PAS DILUER ; PRÊT À L'USAGE

Préparation :

- Bien lire la fiche technique avant d'appliquer
- Aucun temps d'induction nécessaire

Application :

- Mélanger la Partie A et Partie B indépendamment avant de les mélanger ensemble.
- Combiner les 2 parties ensemble en ratio 3 :1 (vendu en kits) en mélangeant mécaniquement à basse révolution pendant au moins 2 minutes jusqu'à ce que le mélange ait une consistance uniforme
- Utiliser un mesh 100 pour le filtre
- S'assurer que le taux d'humidité ambiante est en dessous de 80%.
- Appliquer sur le primer en système « wet-on-wet » après 1 heure seulement, et dans un maximum de 6 heures sinon il y aura délamination entre les 2 produits.
- Le produit sera prêt à manipuler après 1 à 3 heures dépendant de la chaleur ambiante.

ÉPAISSEURS :
Appliquer entre <u>4 et 5 mils humide</u>
Vous obtiendrez entre 2.6 et 3.2 mils sec (DFT)

Distribution E.S.
104-A, 5e Ave Est
La Sarre (Qc) J9Z 2Y1
T.819.339.2101
admin@distributiones.com

MÉTHODE DE PRISE DE MESURE D'ÉPAISSEUR DE PEINTURE

SELON SSPC-PA2

STANDARD DE BASE

- 3 relevés dans un rayon de 4cm à 5 endroits différents pour chaque surface de 100pi2
- Les relevés doivent être mesurés à maximum de 1po d'un rebord
- Total de 15 relevés individuels pour établir 1 mesure
- Un minimum de 5 relevés doit être dans le spectre de DFT requis par la spécification
- Aucun relevé peut représenter une valeur de :
    - Moins de 80% du DFT requis par la spécification
    - Plus de 120% du DFT requis par la spécification
- Si la moyenne des relevés indique une mesure acceptée par la spécification, passer à une autre pièce
- Si la moyenne des relevés indique une mesure hors spécification, la pièce ne doit pas être acceptée par le chargé de projet.

STANDARD SELON GRANDEUR DES SURFACES

- Pour les surfaces de moins de 1000pi2, sélectionner au hasard 3 endroits de 100pi2 et effectuer les prises de mesures conformément au standard de base mentionné ci-haut (45 relevés)
- Pour les surfaces de plus de 1000pi2, mesurer le premier 100pi2 conformément au standard de base mentionné ci-haut (45 relevés), et effectuer par la suite 1 seule mesure (15 relevés) pour chaque section de 100pi2 suivante.
- Lorsqu'une anomalie est détectée, reculer de section (100pi2) et prendre des relevés conformément au standard de base pour les surfaces de moins de 1000pi2 (5 spots de 3 relevés à 3 endroits différents = 45 relevés) jusqu'à ce que les sections respectent la spécification.
- Refaire les pièces défectueuses et recommencer.

LEXIQUE :

Relevé : Prise de mesure individuelle avec la jauge électronique à un endroit précis
Mesure : C'est la mesure du DFT utilisé pour le résultat final. Il est calculé en faisant moyenne des relevés.
DFT : Épaisseur de peinture sèche (dry film thickness)

Distribution E.S.
104-A, 5e Ave Est
La Sarre (Qc) J9Z 2Y1
T.819.339.2101
admin@distributiones.com

INTEGRITY
INNOVATION
PERFORMANCE

GUERTIN
A Division of Cloverdale Paint Inc.

TECHNICAL DATA
EF75122

Description

EF75122 is a grey, high solids, 2.8 VOC, epoxy primer. It is designed to fill blast profiles in a single coat. No induction time is required.

Mixed Coating Properties

Mix Ratio	4 Parts base to 1 Part epoxy part 2
VOC	
EF75060P2	3.00 lbs / gal or 360 grams / litre
EF75061P2	2.80 lbs / gal or 336 grams / litre
Volume Solids	
EF75060P2	57.61%
EF75061P2	60.64%
Sag	
Airless	12 - 15 mils
Air Assist Airless	12 - 15 mils
Air Spray	12 - 15 mils
HVLP	12 - 15 mils
Viscosity @ 70℉ (21℃)	25 - 30 Seconds Zahn#2 / 300 cps
Pot Life @ 77℉ (25℃)	
EF75060P2	5.00 hours
EF75061P2	4.00 hours
Salt Spray (B1000)	3000 hours @ 4 mils DFT
Theoretical Coverage	
EF75060P2	924 ft^2 / gal (22.6 m^2 / litre) @ 1 mil DFT
EF75061P2	972 ft^2 / gal (23.8 m^2 / litre) @ 1 mil DFT

DFT = Dry Film Thickness

Product Weight - *Container weight not included*

EF75122P1 base	13.82 lbs / gallon or 1.656 kg / litre
EF75060P2 standard cure	7.58 lbs / gallon or 0.909 kg / litre
EF75061P2 fast cure	7.76 lbs / gallon or 0.930 kg / litre

Shelf Life

Shelf Life is applicable only for material stored in unopened and undamaged original factory filled containers at 4° to 38℃ (39° to 100℉).

EF75122P1	1 year	EF75060P2	2 years
		EF75061P2	2 years

Subject to reinspection. Store unused material in tightly closed containers. Contents of partially filled containers may show surface skinning after storage. If skinning forms, remove by straining before use.

BENEFITS

- excellent edge coverage
- exceptional corrosion resistance
- excellent adhesion
- excellent sprayability
- humidity resistance

USES

- power transmission & distribution equipment
- containment tanks
- OEM - chemical tankers & trailers
- OEM - oil patch applications
- OEM - fleet applications

Guertin Coatings, A Division of Cloverdale Paint Inc.
50 Panet Road • Winnipeg, Manitoba • R2J 0R9 • T 204.237.0241 • F 204.233.5051
www.cloverdalepaint.com

Distribution E.S.
104-A, 5e Ave Est
La Sarre (Qc) J9Z 2Y1
T.819.339.2101
admin@distributiones.com

TECHNICAL DATA
EF75122

Surface Preparation

SSPC – SP6 Commercial Blast minimum recommended or a minimum of 3-stage to 7-stage phosphate cleaning system.

Mixing Instructions

1) Pre-Mix EF75122P1 Base for 2 minutes with an air-operated Jiffy Mixer®, or equivalent, to produce a uniform consistency within its container

2) Properly ratio material at 4:1 (by volume):

4 Parts EF75122P1 Base to
1 Part EF75060P2 Standard Cure Epoxy Part 2 or
1 Part EF75061P2 Fast Cure Epoxy Part 2

3) Mix material for 3 minutes with an air-operated Jiffy Mixer®, or equivalent, to a uniform consistency before use

4) No induction time required

5) No Thinning required

6) Filter through 100 mesh in line filter

Application Instructions

Application Temperature

Minimum	55℉ (10℃)
Maximum	100℉ (38℃)

Equipment Settings

Air Spray:	pot pressure:	10 – 20 psi
	atomizing air:	45 – 65 psi
	nozzle set:	1.4 – 1.8
Airless Spray:	fluid pressure:	2000 - 2500 psi
	tip size:	.013 - .019
Air Assist Airless:	fluid pressure:	700 - 1500 psi
	atomizing air:	20 – 60 psi
	tip size:	.013 - .019

- Precision plural component equipment is recommended. All spray equipment including lines and filters must be kept clean at all times to avoid nozzle plugging. When hand mixing follow /Mixing Instructions' procedures.
- Apply in wet coats making even parallel passes. Overlap each pass 50% to minimize holidays, bare areas and pinholes.
- Excess wet film will cause sags and runs.

Recommended dry film thickness is 3 mils above profile.

If thinners are required: *Please contact your Guertin Representative for recommendations.*

Note: Successful application requires following the recommended temperature, humidity conditions and film thickness ranges.

Recoat Window for best D.O.I.

Substrate Temp	70℉ (21℃)
Over Itself	up to 3 days
With Urethane Topcoat	4 hours up to 24 hours
With Super-Shield® Topcoat	1 hour to 4 hours

Flash times:
Allow a minimum of 4.0 hours flash off time before applying a two-component urethane topcoat. Higher film builds (>4mils) and/or cooler temperatures will require longer flash times.

The epoxy primer can be recoated with itself up to 3 days. After 3 days the epoxy primer must be scuff sanded.

It can be topcoated with 2K urethane and Super-Shield® topcoats up to 24 hours. After 24 hours the epoxy primer must be scuff sanded.

It is recommended to apply at ambient air and surface temperatures between 55°- 100℉ (10°- 38℃). App ly at a relative humidity level below 80%.

Surface temperature must be at least 5℉ (3℃) abov e the dew point to ensure that moisture condensation does not occur during application and the drying period.

Higher/lower temperatures & humidity, film thickness, improper activator range and poor air movement will affect the dry time and recoat window.

Equipment Cleanup

Clean application equipment with Guertin's SP02859T0 or SP05127T0.

Safety Precautions

FOR INDUSTRIAL USE ONLY. To be used by professionally trained personnel using proper safety equipment. Use only with adequate ventilation. Warning: this product is flammable, keep away from heat, sparks and open flame. Please refer to material safety data sheets.

Warranty

Guertin Coatings warrants its product to be free from defects in materials and workmanship and will REPLACE ANY PRODUCT PROVED TO BE DEFECTIVE, OR REFUND OF THE ORIGINAL PURCHASE PRICE OF THE QUANTITY PROVED TO BE DEFECTIVE. Requests for refund or replacement of product must be made in writing within one year from the original date of purchase. This Warranty does not apply to defects due, directly or indirectly, to misuse, abuse, negligent application, or acts of God.

GUERTIN COATINGS WILL NOT BE LIABLE FOR DEATH, INJURIES TO PERSONS OR PROPERTY, OR FOR INCIDENTAL, CONTINGENT, SPECIAL OR CONSEQUENTIAL DAMAGES ARISING FROM THE USE OF OUR PRODUCT, INCLUDING DOWNTIME OR LOSS OF USE OF PRODUCT.

All data, statements, and recommendations made herein are based upon information we believe to be reliable, but are made without any representation, guarantee or warranty of accuracy. Our products are sold on the condition that the user himself will evaluate them, as well as our recommendations, to determine their suitability for his own purpose before adoption. Also, statements regarding the use of our products or processes are not to be construed as recommendations for their use in violation of any patent rights or in violation of any applicable laws or regulations.

Guertin Coatings, A Division of Cloverdale Paint Inc.
50 Panet Road • Winnipeg, Manitoba • R2J 0R9 • T 204.237.0241 • F 204.233.5051
www.cloverdalepaint.com

Distribution E.S.
104-A, 5e Ave Est
La Sarre (Qc) J9Z 2Y1
T.819.339.2101
admin@distributiones.com

F I C H E S I G N A L E T I Q U E

SECTION I - RENSEIGNEMENTS SUR LE PRODUIT

Identificateur du Produit: GREY HIGH BUILD ANTICORROSIVE
NumÉro du Produit: EF75122P1
Usage du Produit: PEINTURE
WHMIS CATEGORIE: B2 D2A D2B

NOM DU FABRICANT:
Cloverdale Paint Inc.
50 PANET ROAD
WINNIPEG, MB
R2J 0R9 204/237-0241

NOM DU FOURNISSEUR:
Cloverdale Paint Inc.
50 PANET ROAD
WINNIPEG, MB
R2J 0R9 204/237-0241

PREPARE PAR: Mr Robert Tinsley, 204-237-0241 DATE: 04/10/15

SECTION II - INGREDIENTS DANGEREUX

INGREDIENTS	NUMERO CAS	POURCENTAGE	LIMITES D'EXPOSITION	LC50	LD50
TITANIUM DIOXIDE	13463-67-7	5.0-10.0	10 MG/M3	6.82MG/L RAT	>25G/KGORAL RAT
MAGNESIUM SILICATE(TALC)	13776-74-4	10.0-30.0	5 mg/m3 DUST	N/AV	N/AV
CARBON BLACK	1333-86-4	0.1-1.0	3.5mg/m3DUST	>156 MG/M3 RAT	>240 MG/KG IP
BISPHENOL A DIGLYCIDYL ETHER	25068-38-6	1.0-5.0	NO INFO	N/AV	N/AV
XYLENE; MIXED ISOMERS	1330-20-7	1.0-5.0	100 ppm	5000 PPM RAT	4G/KG RAT ORAL
METHYL AMYL KETONE	110-43-0	1.0-5.0	50 ppm	2000 PPM RAT	1600 MG/KG RAT
METHYL ISOBUTYL KETONE	108-10-1	1.0-5.0	50 ppm	5700 PPM RAT	2080MG/KG RAT
METHYL ETHYL KETONE	78-93-3	5.0-10.0	200 ppm	2000 PPM RAT	2737 MG/KG RAT
N-BUTYL ACETATE	123-86-4	1.0-5.0	150 ppm	2000 PPM RAT	14.0 G/KG RAT
GLYCOL ETHER PM ACETATE	108-65-6	1.0-5.0	50 ppm	N/AV	8532MG/KG RAT
PROPYLENE GLYCOL MONOMETHYL ETHER	107-98-2	1.0-5.0	100 ppm	13000 MG/KG RAT	5660 MG/KG RAT
ETHYLBENZENE	100-41-4	1.0-5.0	100 ppm	>4000 PPM RAT	3.5 G/KG RAT

N.A. - SANS OBJET

SECTION III - PROPRIETES PHYSIQUES

POINT D'EBULLITION : 79-260 C
ODEUR :ODEUR PIQUANTE
APPARENCE :LIQUIDE GRIS
SOLUBILITE :2% EAUABLEE
VOLATILES EN VOLUME: 40.0%
PH @ 0.00 % : 7.0
TENSION DE VAPEUR :77.5 mm Hg

DENSITE DE LA VAPEUR:PLUS LOURD QUE L'AIR
TAUX D'EVAPORATION :PLUS RAPIDE QUE ACETATE BUTYLE
DENSITE SPECIFIQUE : 1.584
POINT DE CONGELATION: -40 C

Distribution E.S.
104-A, 5e Ave Est
La Sarre (Qc) J9Z 2Y1
T.819.339.2101
admin@distributiones.com

SECTION IV - RISQUES D'INCENDIE OU D'EXPLOSION

POINT D'ECLAIR: -6 C (TAGLIABUE C. C.)
CLASS 3, DIV. 1

LEL: 1.0%
UEL: 13.8%

MOYENS D'EXTINCTION: CHIMIQUES SECS CO2 LA MOUSSE BROUILLARD DE L'EAU

RISQUE PARTICULIERE DE LUTTE CONTRE L'INCENDIE: LIQUIDE COMBUSTIBLE (POINT ECLAIR EST INFERIEUR A 100 F/38 C). PEUT FORMER DES MELANGES INFLAMMABLES. LES VAPEURS PEUVENT ETRE EXPLOSIVE DANS L'AIR. ELIMINER TOUTE SOURCE D'IGNITION. TOUT EQUIPMENT DOIT ETRE MIS A LA TERRE. GARDER LE RECIPIENT FERME.

PROCEDURE D'EXTINCTION: LES POMPIERS DOIVENT PORTER UN APPAREIL RESPIRATOIRE AUTONOME ET DES VETEMENTS DE PROTECTION COMPLETS. UTILISER DE L'EAU PULVERIZEE POUR REFROIDER LES STRUCTURES ET LES CONTENANTS EXPOSES AU FEU.

SECTION V - DANGERS POUR LA SANTE

EFFETS DE LA SUREXPOSITION: *** INHALATION: LES VAPEURS PEUVENT IRRITER. L'EXPOSITION A DES VAPEURS TRES CONCENTREES PEUVENT CAUSER DES MAUX DE TETES, DES ETOURDISSEMENTS, DES NAUSEES, UNE DEPRESSION DU SYSTEME NERVEUX CENTRAL. L'EXPOSITION PROLONGEE A DES VAPEURS TRES CONCENTREES PEUT CAUSER L'EVANOUISSEMENT OU LA MORT. *** INGESTION: MODEREMENT TOXIQUE. LE PRODUIT EST NOCIF LORSQU'IL EST INGERE. L'INGESTION DE GRANDES QUANTITES PEUT CAUSER DES MAUX DE TETES, DES NAUSEES, DES VOMISSEMENTS, UNE DEPRESSION DU SYSTEME NERVEUX CENTRAL. UNE PETITE QUANTITE DE CE LIQUIDE ASPIREE DANS LES POUMONS SOIT PAR INGESTION OU PAR VOMISSEMENT, RISQUE D'AVOIR DE GRAVE EFFETS NOCIF POUR LA SANTE (P.EX., PROVOQUER UN OEDEMENT PULMONAIRE). *** PEAU: PEUT CAUSER DE L'IRRITATION MODEREE. PEUT CAUSER LE DEGRAISSMENT ET LA DERMATITE. UNE EXPOSITION PROLONGEE PEUT RESULTER A UNE SENSIBILITE DANS LA PEAU. PEUT PROVOQUER DES BRULURES CHIMIQUES. PEUT ETRE ABSORVER PAR LA PEAU ET PROVOQUER UN RISQUE POUR LA SANTE. *** YEUX: LES VAPEURS PEUVENT IRRITER. LE LIQUIDE ET LES BRUINES IRRITENT LES YEUX ET PEUVENT CAUSER DES BRULURES. *** EFFETS DE LA SUREXPOSITION: CONTIENT SILICE. LA SUREXPOSTION A LONG TERME AU SILICE CAUSE LA SILICOSE ET LA DETERIATION CARDIOPULMONAIRE. LA SUREXPOSITION A LONG TERME AU NOIR DE CARBONE PEUT ENTRAINER DES LESIONS CUMULATIVES AU COEUR ET AUX POUMONS. L'EXPOSITION PROLONGEES OU REPETEES PEUT CAUSER UNE SENSIBILITE DE LA PEAU ET/OU UNE SENSIBILITE RESPIRATOIRE. L'EXPOSITION PROLONGEES OU REPETEES PEUT CAUSER UN MAUVAIS FONCTIONNEMENT DU FOIE, DES REINS, ET/OU DU SYSTEME NERVEUX. L'EXPOSITION PROLONGEES OU REPETEES PEUVENT CAUSER A LA LONGUE DES DOMMAGES AUX SYSTEME SANGUIN, GASTRO-INTESTINAL, NERVEUX, ET/OU REPRODUCTEUR. LES EXPOSITIONS PROLONGEES ET REPETEES PEUVENT PROVOQUER DES EFFETS TOXIQUE. L'EXPOSITION A CE PRODUIT NE DEVRAIT CAUSER AUCUN PROBLEME LORSQUE MANIFULER AVEC SOINS. LE CIRC A CLASSÉ L'ÉTHYLBENZENE PARMI LES SUBSTANCES DU GROUPE 2B EN SE FONDANT SUR DES DONNÉES SUFFISANTES DÉMONTRANT SA CANCÉROGÉNÉCITÉ POUR LES ANIMAUX DE LABORATOIRE, MAIS DE DONNÉES INSUFFISANTES SELON LES RÉSULTATS DE CERTAINES ÉTUDES MENÉES SUR DES ANIMAUX, DE TRES GRANDES EXPOSITIONS AUX XYLENES ON ENTRAINÉ DES EFFETS NÉFASTES SURE LE DÉVELOPPEMENT DES EMBRYONS/FOTUS. CES EFFETS SONT SOUVENT APPARUS A DES NIVEAUX D'EXPOSITION TOXIQUES POUR LA MERE. LA PORTÉE DE CES RÉSULTATS POUR LES HUMAINS N'A PAS ÉTÉ ÉTABLIE. LES EXPOSITIONS EXCESSIVES LONG TERME PEUT CAUSER TALCOSE, FIBROSE PULMONAIRE, QUI A SON TOUR MON ENTRAINER DES DOMMAGES GRAVES ET PERMANENTS AUX POUMONS. UNE ÉTUDE PORTANT SUR L'INHALATION DURANT TOUTE UNE VIE FAIT RESSORTIR QU'UNE EXPOSITION A DE LA POUSSIERE DE DIOXYDE DE TITANE A UNE CONCENTRATION DE 250 MG/M3 A ENTRAINÉ L'APPARITION DE TUMEURS AUX POUMONS CHEZ DES RATS. CES TUMEURS NE SONT APPARUES QU'A DES CONCENTRATIONS DE POUSSIERES QUI DÉPASSENT LA CAPACITÉ DES MÉCANISMES DE CLAIRANCE PULMONAIRE DES ANIMAUX ET SONT DIFFÉRENTES DES TUMEURS PULMONAIRES COMMUNES CHEZ L'ETRE HUMAIN TANT DANS LE TYPE QUE DANS

Distribution E.S.
104-A, 5e Ave Est
La Sarre (Qc) J9Z 2Y1
T.819.339.2101
admin@distributiones.com

SECTION V - DANGERS POUR LA SANTE

L'EMPLACEMENT. LA PERTINENCE DE CES RÉSULTATS SURE LE CANCER (CIRC) A CLASSÉ LE DIOXYDE DE TITANE PARMI LES LES CANCÉROGENES PRÉSUMÉS POUR LES HUMAINS (GROUPE 2B) EN SE FONDANT SURE DES DONNÉES INSUFFISANTES DÉMONTRANT SA CANCÉROGÉNÉCITÉ CHEZ LES HUMAINS ET DE DONNÉES SUFFISANTES DÉMONTRANT SA

CONDITIONS MEDICALES GENERALEMENT AGGRAVEES PAR L'EXPOSITION: LES PROBLEMES CUTANES. LES PROBLEMES OCCULAIRES. LES PROBLEMES RESPIRATOIRE CHRONIQUES. EN 1995 CIRC A CONCLUDE EXISTE DES PREUVES SUFFISANTES CHEZ LES ANIMAUX EXPERIMENTAUX DE LA CANCEROGENICITE DU NOIR DE CARBONE CLASSEMENT BLACK PROBABLEMENT CANCEROGENE AUX HUMAINS.

VOIES PRIMAIRES DE PENETRATION: CONTACT DERMIQUE INHALATION INGESTION

MESURES DE PREMIERS SOINS: *** INHALATION: TRANSPORTER A L'AIR FRAIS. AIDER LA RESPIRATION SI NECESSAIRE. GARDER LA VICTIME AU CHAUD ET CALME. CONSULTER UN MEDECIN. *** INGESTION: NE PAS FAIRE VOMIR OU BOIRE. FAIRE REPOSER. CONSULTER SANS DELAI UN MEDECIN. SI LE VOMISSEMENT SE PRODUIT, GARDER LA TETE DE LA VICTIME BAISSEE AU-DESSOUS DE SES HANCHES POUR EVITER L'ASPIRATION DANS LES POUMONS. *** PEAU: LAVER LA PEAU CONTAMINEE AVEC DE L'EAU. CONSULTER SANS DELAI UN MEDECIN. *** YEUX: RINCER DE L'EAU CLAIRE PENDANT AU MOINS 15 MINUTES ET FAIRE IMMEDIATEMENT APPEL A UN MEDECIN.

SECTION VI - DONNEES SUR LA REACTIVITE

STABILITE: CE PRODUIT EST STABLE DANS DES CONDITIONS NORMALES D'ENTREPOSAGE.

POLYMERISATION DANGERUSE: NE SE PRODUIRA PAS DANS DES CONDITIONS NORMALES.

PRODUITS DE DECOMPOSITION DANGEREUX: OXYDES DE CARBONE. VAPEURS TOXIQUES ET FUMEE. FUMEE INFLAMMABLES.

CONDITIONS A EVITER: CHALEUR, ETINCELLES, FLAMMES.

PRODUITS INCOMPATIBLES: AGENTS OXIDABLE. ACIDES. ALCALINS. AMINES. AGENTS REDUCTEURS. AGENTS D'AZOTES. LES SULFURES. HALOGENES. L'EAU. LES COMPOSES CHLORINES.

SENSIBILITE AUX DECHARGES ELECTROSTATIQUES: PRENDRE DES PRECAUTIONS CONTRE LES DECHARGES STATIQUES.

SECTION VII - MESURES POUR FUITE OU DEVERSEMENT

ACTION A PRENDRE EN CAS DE FUITE OU DE DEVERSEMENT: ELIMINER TOUTE SOURCE D'IGNITION. ARRETER LA SOURCE DE FUITE. ASSURER UN VENTILATION EVACUER TOUT PERSONNEL NON-ESSENTIEL. PORTER LES VETEMENTS NECESSAIRE. ENDIGER L'ENDROIT POUR EMPECHER PROPAGATION. ABSORBER LE LIQUIDE AVEC UN PRODUIT ABSORBANT INERTE. TRANSFERER DANS UN CONTENANT A L'EPREUVE D'IGNITION.

METHODES D'ELIMINATION: NE PAS CONTAMINER LES COURS D'EAU POTABLE, LES LACS, LES ETANGS OU LES RUISSEAUX. SELON REGLEMENTS MUNICIPAUX, LES LOIS PROVINCIAL ET FEDERALES APPLICABLE A VOTRE LOCALITE.

Distribution E.S.
104-A, 5e Ave Est
La Sarre (Qc) J9Z 2Y1
T.819.339.2101
admin@distributiones.com

SECTION VIII - PRECAUTIONS D'EMPLOI

PROTECTION RESPIRATOIRE: UTILISER UN MASQUE RESPIRATOIRE A HAUT RENDEMENT QUI PROTEGE CONTRE LES VAPEURS ORGANIQUES ET LES POUSSIERES TOXIQUES. POUR DES HAUTES CONCENTRATIONS, UTILISER UN MASQUE RESPIRATOIRE A ALIMENTATION D'

VENTILATION: VENTILATION EFFICACE SUR PLACE POUR EVACUER LA POUSSIERE. EMPLOYER UN APPAREILAGE DE VENTILATION ANTIDEFLATION.

GANTS PROTECTEURS: PORTER DES GANTS/VETEMENTS RESISTANTS AUX PRODUITS CHIMIQUES AFIN DE PROTEGER LA PEAU POTENTIELLEMENT EXPOSEE.

PROTECTION YEUX: EVITER LE CONTACT AVEC LES YEUX. PORTER DES LUNETTES PROTECTRICES CONTRE LES PRODUITS CHIMIQUES ET UN ECRAN FACIAL.

AUTRE EQUIPMENT PROTECTEUR: TABLIER ET BOTTES IMPERMEABLES. DOUCHE OCULAIRE ET DOUCHE D'URGENCE.

AUTRE MESURES DE PROTECTION: EVITER TOUT CONTACT AVEC LES YEUX, LA PEAU ET LES VETEMENTS. EVITER DE RESPIRER. NE PAS INGERER. CONSERVER LOIN DE TOUS ALIMENTS. BIEN LAVER LES MAINS APRES AVOIR MANIPULER LA MATIERE. CHANGER ET LAVER LES VETEMENTS CONTAMINES.

RENSEIGNEMENTS SPECAUX EN MATIERE D'EXPEDITION: PEINTURE. LIQUIDE INFLAMMABLE CLASSE:3 UN# 1263 LE GROUPE D'EMBALLAGE II. CANUTEC 24 HOUR EMERGENCY NUMBER: (613) 996-6666

SECTION IX - PRECAUTIONS SPECIALES

PRECAUTIONS A PRENDRE A LA MANIPULATION ET L'ENTREPOSAGE: ENTREPOSER DANS UN ENDROIT FRAIS, SEC ET BIEN VENTILE, A L'ECART DES MATIERES INCOMPATIBLES. NE PAS LAISSER A PROXIMITE D'UNE SOURCE DE CHALEUR, D'ETINCELLES, OU D'UNE FLAMME. GARDER LE RECIPIENT FERME. TOUT EQUIPMENT DOIT ETRE MIS A LA TERRE.

AUTRES PRECAUTIONS: NE PAS COUPER, BROYER, SOUDER OU PERCER SUR OU PRES DE CE CONTENANT.

SECTION X - HMIS INFORMATION

HMIS RATIO: SANTE: 2 FLAMMABILITE: 3 REACTIVITE: 1 PROTECTION PERSONNELLE: K

Distribution E.S.
104-A, 5e Ave Est
La Sarre (Qc) J9Z 2Y1
T.819.339.2101
admin@distributiones.com

INTEGRITY
INNOVATION
PERFORMANCE

TECHNICAL DATA
EF25000 SUPER-SHIELD® SERIES
3:1 & 4:1 Mix Ratio

Description

The EF25000 Series is a high performance, isocyanate free urethane system that is VOC compliant at ≤2.8 - 3.5 lbs / gal (≤335 - 420 grams/litre). Each of Cloverdale's Super-Shield® coatings are custom formulated to customer specifications; application and cure properties vary to optimize performance.

Mixed Coating Properties

Mix Ratio	3 Parts base to 1 Part catalyst (faster cure, lower spray viscosity, excellent flow out) 4 Parts base to 1 Part catalyst (STD cure, higher sag resistance, longer open time)
VOC	≤2.8 - 3.5 lbs / gal or ≤335 - 420 grams / litre
Volume Solids	50 - 65%
Sag	
Airless	4 – 5 mils
Air Assist Airless	4 – 5 mils
Air Spray	4 – 5 mils
HVLP	4 – 5 mils
Viscosity @ 70℉ (21℃)	30 ± 3 Seconds Zahn#2 (3:1 Mixing) 35 ± 3 Seconds Zahn#2 (4:1 Mixing)
Pot Life @ 77℉ (25℃)	2.00 hours
Gloss	
20°	Matte to ultra gloss (to customer specifications)
60°	Matte to ultra gloss (to customer specifications)
Impacts	160+ in/lbs @ 2 mils DFT
Pencil Hardness	HB – F
Theoretical Coverage @ 1 mil DFT	802 - 1042 ft^2 / gal (19.7 – 25.6 m^2 / litre)

DFT = Dry Film Thickness

Product Weight - *Container weight not included*

EF25000 base	8.76 – 11.26 lbs / gallon or 1.050 – 1.350 kg / litre
SI25002P2 catalyst	6.75 lbs / gallon or 0.810 kg / litre

Shelf Life

Shelf Life is applicable only for material stored in unopened and undamaged original factory filled containers at 39°- 100℉ (4°to 38℃).

EF25000 series base	2 years	SI25002P2	6 months

Subject to reinspection. Store unused material in tightly closed containers. Contents of partially filled containers may show surface skinning after storage. If skinning forms, remove by straining before use.

BENEFITS

- ISO Free
- outstanding appearance
- excellent DOI
- excellent color & gloss retention
- low VOC
- ultra low HAP's
- meets Canadian auto refinish single stage VOC requirement
- 4:1 meets AIM VOC spec for 'other industrial maintenance coatings'

USES

- fleet finishing applications
- oil field application
- ACE
- electrical transformers
- recreational vehicles
- plastics

Cloverdale Paint Inc.
50 Panet Road • Winnipeg, Manitoba • R2J 0R9 • T 204.237.0241 • F 204.233.5051
www.cloverdalepaint.com

Distribution E.S.
104-A, 5e Ave Est
La Sarre (Qc) J9Z 2Y1
T.819.339.2101
admin@distributiones.com

TECHNICAL DATA
EF25000 Series

Surface Preparation
Properly prepared, primed surface following all application procedures and recoat instructions on primer technical data sheet.

Mixing Instructions
Mixing at 3:1 by volume:

3 Parts SI25000 series base to
1 Part SI25002P2 activator

Mixing at 4:1 by volume:

4 Parts SI25000 series base to
1 Part SI25002P2 activator

Mix thoroughly to uniform consistency before use. Filter through 100 mesh in line filter.

Application Instructions
Application Temperature

Minimum	55℉ (10℃)
Maximum	100℉ (38℃)

Equipment Settings

Air Spray:	pot pressure:	10 – 20 psi
	atomizing air:	45 – 65 psi
	nozzle set:	1.0 – 1.8
Airless Spray:	fluid pressure:	2000 - 2500 psi
	tip size:	.011 - .015
Air Assist Airless:	fluid pressure:	700 - 1500 psi
	atomizing air:	20 – 60 psi
	tip size:	.011 - .015

- Precision plural component equipment is recommended. All spray equipment including lines and filters must be kept clean at all times to avoid nozzle plugging. When hand mixing smaller quantities, stir thoroughly to a uniform consistency prior to use.
- Apply in wet coat making even parallel passes. Overlap each pass 50% to minimize holidays, bare areas and pinholes.
- Excess wet film will cause sags and runs.

Recommended dry film thickness is 2 – 3 mils.

Supershield® is only recommended to be a finish coat over two component epoxy primers. Never apply over one component or urethane primers.

If thinners are required: *Please contact your Cloverdale Representative for recommendations.*

Note: Successful application requires following the recommended temperature, humidity conditions and film thickness ranges.

Drying Schedule
To customer specifications

Recoat Window for Best DOI

Substrate Temp	70℉ (21℃)
Over Itself	15 minutes to 1 day
Over Epoxy Primers	1 hour to 3 days

Flash times: Please refer to specific Cloverdale Primer Technical Data Sheet for appropriate flash times and recoat windows for this topcoat.

It is recommended to apply at ambient air and surface temperatures between 55°- 100℉ (10°- 38℃). App ly at a relative humidity level between 33% - 85%.

Surface temperature must be at least 5℉ (3℃) abov e the dew point to ensure that moisture condensation does not occur during application and the drying period.

Higher/lower temperatures & humidity, film thickness, improper activator range and poor air movement will affect the dry time and recoat window.

Equipment Cleanup
Clean application equipment with Cloverdale's SP03078T0.

Safety Precautions
FOR INDUSTRIAL USE ONLY. To be used by professionally trained personnel using proper safety equipment. Use only with adequate ventilation. Warning: this product is flammable, keep away from heat, sparks and open flame. Please refer to material safety data sheets.

Warranty
Cloverdale Paint Inc. warrants its product to be free from defects in materials and workmanship and will REPLACE ANY PRODUCT PROVED TO BE DEFECTIVE, OR REFUND OF THE ORIGINAL PURCHASE PRICE OF THE QUANTITY PROVED TO BE DEFECTIVE. Requests for refund or replacement of product must be made in writing within one year from the original date of purchase. This Warranty does not apply to defects due, directly or indirectly, to misuse, abuse, negligent application, or acts of God.

CLOVERDALE PAINT INC. WILL NOT BE LIABLE FOR DEATH, INJURIES TO PERSONS OR PROPERTY, OR FOR INCIDENTAL, CONTINGENT, SPECIAL OR CONSEQUENTIAL DAMAGES ARISING FROM THE USE OF OUR PRODUCT, INCLUDING DOWNTIME OR LOSS OF USE OF PRODUCT.

All data, statements, and recommendations made herein are based upon information we believe to be reliable, but are made without any representation, guarantee or warranty of accuracy. Our products are sold on the condition that the user himself will evaluate them, as well as our recommendations, to determine their suitability for his own purpose before adoption. Also, statements regarding the use of our products or processes are not to be construed as recommendations for their use in violation of any patent rights or in violation of any applicable laws or regulations.

Cloverdale Paint Inc.
50 Panet Road • Winnipeg, Manitoba • R2J 0R9 • T 204.237.0241 • F 204.233.5051
www.cloverdalepaints.com

Distribution E.S.
104-A, 5e Ave Est
La Sarre (Qc) J9Z 2Y1
T.819.339.2101
admin@distributiones.com

F I C H E S I G N A L E T I Q U E

SECTION I - RENSEIGNEMENTS SUR LE PRODUIT

Identificateur du Produit: SUPERSHIELD
Numéro du Produit: SI25000-12
Usage du Produit: PEINTURE
WHMIS CATEGORIE: B2 D2AD2B

NOM DU FABRICANT:
Cloverdale Paint Inc.
50 PANET ROAD
WINNIPEG, MB
R2J 0R9 204/237-0241

NOM DU FOURNISSEUR:
Cloverdale Paint Inc.
50 PANET ROAD
WINNIPEG, MB
R2J 0R9 204/237-0241

PREPARE PAR: Mr Robert Tinsley, 204-237-0241 DATE: 05/16/13

SECTION II - INGREDIENTS DANGEREUX

INGREDIENTS	NUMERO CAS	POURCENTAGE	LIMITES D'EXPOSITION	LC50	LD50
IRON OXIDE	1309-37-1	5.0-10.0	10 mg/m3	N/AV	N/AV
ACRYLATED URETHANE OLIGOMER	N/AV	5.0-10.0	NO INFO	N/AV	N/AV
XYLENE; MIXED ISOMERS	1330-20-7	1.0-5.0	100 ppm	5000 PPM RAT	4G/KG RAT ORAL
METHYL AMYL KETONE	110-43-0	5.0-10.0	50 ppm	2000 PPM RAT	1600 MG/KG RAT
N-BUTYL ACETATE	123-86-4	10.0-30.0	150 ppm	2000 PPM RAT	14.0 G/KG RAT
ETHYL 3-ETHOXYPROPIONATE	763-69-9	1.0-5.0	50 ppm	>1000 PPM RAT	5000 MG/KG RAT
ETHYLBENZENE	100-41-4	1.0-5.0	100 ppm	>4000 PPM RAT	3.5 G/KG RAT
1,6 HEXANEDIOL DIACRYLATE	13048-33-4	1.0-5.0	NO INFO	N/AV	4.9 G/KG RAT
TRIMETHYLOLPROPANE TRIACRYLATE	15625-89-5	5.0-10.0	NO INFO	N/AV	>5 G/KG RAT

N.A. - SANS OBJET

SECTION III - PROPRIETES PHYSIQUES

POINT D'EBULLITION : 126-170 C
ODEUR :ODEUR PIQUANT

APPARENCE :LIQUIDE EPAIS
SOLUBILITE :NEGLIGEABLE
VOLATILES EN VOLUME: 32.7%
PH @ 0.00 % : 7.0
TENSION DE VAPEUR :18.8 mm Hg

DENSITE DE LA VAPEUR:PLUS LOURD QUE L'AIR
TAUX D'EVAPORATION :PLUS RAPIDE QUE ACETATE BUTYLE

DENSITE SPECIFIQUE : 1.100
POINT DE CONGELATION: -40 C

Distribution E.S.
104-A, 5e Ave Est
La Sarre (Qc) J9Z 2Y1
T.819.339.2101
admin@distributiones.com

SECTION IV - RISQUES D'INCENDIE OU D'EXPLOSION

POINT D'ECLAIR: 15 C
(TAGLIABUE C. C.)
CLASS 3, DIV. 2

LEL: 1.0%
UEL: 12.1%

MOYENS D'EXTINCTION: CO2 CHIMIQUES SECS LA MOUSSE

RISQUE PARTICULIER DE LUTTE CONTRE L'INCENDIE: LIQUIDE COMBUSTIBLE (POINT ECLAIR EST INFERIEUR A 100 F/38 C). PEUT FORMER DES MELANGES INFLAMMABLES. LES VAPEURS PEUVENT ETRE EXPLOSIVE DANS L'AIR. ELIMINER TOUTE SOURCE D'IGNITION. TOUT EQUIPMENT DOIT ETRE MIS A LA TERRE. GARDER LE RECIPIENT FERME.

PROCEDURE D'EXTINCTION: LES POMPIERS DOIVENT PORTER UN APPAREIL RESPIRATOIRE AUTONOME ET DES VETEMENTS DE PROTECTION COMPLETS. UTILISER DE L'EAU PULVERIZEE POUR REFROIDIR LES STRUCTURES ET LES CONTENANTS EXPOSES AU FEU.

SECTION V - DANGERS POUR LA SANTE

EFFETS DE LA SUREXPOSITION: *** INHALATION: LES VAPEURS PEUVENT IRRITER. L'EXPOSITION A DES VAPEURS TRES CONCENTREES PEUVENT CAUSER DES MAUX DE TETES, DES ETOURDISSEMENTS, DES NAUSEES, UNE DEPRESSION DU SYSTEME NERVEUX CENTRAL. L'EXPOSITION PROLONGEE A DES VAPEURS TRES CONCENTREES PEUT CAUSER L'EVANOUISSEMENT OU LA MORT. *** INGESTION: MODEREMENT TOXIQUE. LE PRODUIT EST NOCIF LORSQU'IL EST INGERE. L'INGESTION DE GRANDES QUANTITES PEUT CAUSER DES MAUX DE TETES, DES NAUSEES, DES VOMISSEMENTS, UNE DEPRESSION DU SYSTEME NERVEUX CENTRAL. UNE PETITE QUANTITE DE CE LIQUIDE ASPIREE DANS LES POUMONS SOIT PAR INGESTION OU PAR VOMISSEMENT, RISQUE D'AVOIR DE GRAVE EFFETS NOCIF POUR LA SANTE (P.EX., PROVOQUER UN OEDEM PULMONAIRE). *** PEAU: PEUT CAUSER DE L'IRRITATION MODEREE. PEUT CAUSER LE DEGRAISSMENT ET LA DERMATITE. UNE EXPOSITION PROLONGEE PEUT RESULTER A UNE SENSIBILITE DANS LA PEAU. PEUT PROVOQUER DES BRULURES CHIMIQUES. PEUT ETRE ABSORBER PAR LA PEAU ET PROVOQUER UN RISQUE POUR LA SANTE. *** YEUX: LES VAPEURS PEUVENT IRRITER. LE LIQUIDE ET LES BRUINES IRRITENT LES YEUX ET PEUVENT CAUSER DES BRULURES. *** EFFETS DE LA SUREXPOSITION: L'EXPOSITION PROLONGEES OU REPETEES PEUT CAUSER UNE SENSIBILITE DE LA PEAU ET/OU UNE SENSIBILITE RESPIRATOIRE. L'EXPOSITION PROLONGEES OU REPETEES PEUVENT CAUSER A LA LONGUE DES DOMMAGES AUX SYSTEME SANGUIN, GASTRO-INTESTINAL, NERVEUX, ET/OU REPRODUCTEUR. LE CIRC A CLASSE L'ETHYLBENZENE PARMI LES SUBSTANCES DU GROUPE 2B EN SE FONDANT SUR DES DONNEES SUFFISANTES DEMONTRANT SA CANCEROGENECITE POUR LES ANIMAUX DE LABORATOIRE, MAIS DE DONNEES INSUFFISANTES DEMONTRANT L'APPARITION DE CANCER CHEZ LES HUMAINS. SELON LES RESULTATS DE CERTAINES ETUDES MENEES SUR DES ANIMAUX, DE TRES GRANDES EXPOSITIONS AUX XYLENES ON ENTRAINE DES EFFETS NEFASTES SUR LE DEVELOPPEMENT DES EMBRYONS/FETUS. CES EFFETS SONT SOUVENT APPARUS A DES NIVEAUX D'EXPOSITION TOXIQUES POUR LA MERE. LA PORTEE DE CES RESULTATS POUR LES HUMAINS N'A PAS ETE ETABLIE.

CONDITIONS MEDICALES GENERALEMENT AGGRAVEES PAR L'EXPOSITION: LES PROBLEMES CUTANES. LES PROBLEMES RESPIRATOIRE CHRONIQUES.

VOIES PRIMAIRES DE PENETRATION: INHALATION CONTACT DERMIQUE

MESURES DE PREMIERS SOINS: *** INHALATION: TRANSPORTER A L'AIR FRAIS. AIDER LA RESPIRATION SI NECESSAIRE. GARDER LA VICTIME AU CHAUD ET CALME. CONSULTER UN MEDECIN. *** INGESTION: NE PAS FAIRE VOMIR OU BOIRE. FAIRE REPOSER. CONSULTER SANS DELAI UN MEDECIN. SI LE VOMISSEMENT SE PRODUIT, GARDER LA TETE DE LA VICTIME BAISSEE AU-DESSOUS DE SES HANCHES POUR EVITER L'ASPIRATION DANS LES POUMONS. *** PEAU: LAVER LA PEAU CONTAMINEE AVEC DE L'EAU. CONSULTER SANS DELAI UN MEDECIN. *** YEUX: RINCER DE L'EAU CLAIRE PENDANT AU MOINS 15 MINUTES ET FAIRE IMMEDIATEMENT APPEL A UN MEDECIN.

Distribution E.S.
104-A, 5e Ave Est
La Sarre (Qc) J9Z 2Y1
T.819.339.2101
admin@distributiones.com

SECTION VI - DONNEES SUR LA REACTIVITE

STABILITE: CE PRODUIT EST STABLE DANS DES CONDITIONS NORMALES D'ENTREPOSAGE.

POLYMERISATION DANGERUSE: NE SE PRODUIRA PAS DANS DES CONDITIONS NORMALES.

PRODUITS DE DECOMPOSITION DANGEREUX: OXYDES DE CARBONE. OXYDES D'AZOTE. VAPEURS TOXIQUES ET FUMEE.

CONDITIONS A EVITER: CHALEUR, ETINCELLES, FLAMMES.

PRODUITS INCOMPATIBLES: AGENTS OXIDABLE. ACIDES. ALCALINS. AGENTS REDUCTEURS. LES SULFURES. LES METAUX ACTIFS, IONS DE METAUX. LE CUIVRE. HALOGENES. L'EAU.

SENSIBILITE AUX DECHARGES ELECTROSTATIQUES: PRENDRE DES PRECAUTIONS CONTRE LES DECHARGES STATIQUES.

SECTION VII - MESURES POUR FUITE OU DEVERSEMENT

ACTION A PRENDRE EN CAS DE FUITE OU DE DEVERSEMENT: ELIMINER TOUTE SOURCE D'IGNITION. ARRETER LA SOURCE DE FUITE. EVACUER TOUT PERSONNEL NON-ESSENTIEL. PORTER LES VETEMENTS NECESSAIRE. ENDIGER L'ENDROIT POUR EMPECHER PROPAGATION. ABSORBER LE LIQUIDE AVEC UN PRODUIT ABSORBANT INERTE. TRANSFERER DANS UN CONTENANT A L'EPREUVE D'IGNITION.

METHODES D'ELIMINATION: NE PAS CONTAMINER LES COURS D'EAU POTABLE, LES LACS, LES ETANGS OU LES RUISSEAUX. SELON REGLEMENTS MUNICIPAUX, LES LOIS PROVINCIAL ET FEDERALES APPLICABLE A VOTRE LOCALITE.

SECTION VIII - PRECAUTIONS D'EMPLOI

PROTECTION RESPIRATOIRE: UTILISER UN MASQUE RESPIRATOIRE A HAUT RENDEMENT QUI PROTEGE CONTRE LES VAPEURS ORGANIQUES ET LES POUSSIERES TOXIQUES. POUR DES HAUTES CONCENTRATIONS, UTILISER UN MASQUE RESPIRATOIRE A ALIMENTATION D'AIR.

VENTILATION: VENTILATION EFFICACE SUR PLACE POUR EVACUER LA POUSSIERE. EMPLOYER UN APPAREILAGE DE VENTILATION ANTIDEFLATION.

GANTS PROTECTEURS: PORTER DES GANTS/VETEMENTS RESISTANTS AUX PRODUITS CHIMIQUES AFIN DE PROTEGER LA PEAU POTENTIELLEMENT EXPOSEE.

PROTECTION YEUX: EVITER LE CONTACT AVEC LES YEUX. PORTER DES LUNETTES PROTECTRICES CONTRE LES PRODUITS CHIMIQUES ET UN ECRAN FACIAL.

AUTRE EQUIPMENT PROTECTEUR: TABLIER ET BOTTES IMPERMEABLES. DOUCHE OCULAIRE ET DOUCHE D'URGENCE.

AUTRE MESURES DE PROTECTION: EVITER TOUT CONTACT AVEC LES YEUX, LA PEAU ET LES VETEMENTS. EVITER DE RESPIRER. NE PAS INGERER. CONSERVER LOIN DE TOUS ALIMENTS. BIEN LAVER LES MAINS APRES AVOIR MANIPULER LA MATIERE. CHANGER ET LAVER LES VETEMENTS CONTAMINES.

RENSEIGNEMENTS SPECAUX EN MATIERE D'EXPEDITION: PEINTURE. LIQUIDE INFLAMMABLE CLASSE:3 UN# 1263 LE GROUPE D'EMBALLAGE II. CANUTEC 24 HOUR EMERGENCY NUMBER: (613) 996-6666

Distribution E.S.
104-A, 5e Ave Est
La Sarre (Qc) J9Z 2Y1
T.819.339.2101
admin@distributiones.com

SECTION IX - PRECAUTIONS SPECIALES

PRECAUTIONS A PRENDRE A LA MANIPULATION ET L'ENTREPOSAGE: ENTREPOSER DANS UN ENDROIT FRAIS, SEC ET BIEN VENTILE, A L'ECART DES MATIERES INCOMPATIBLES. NE PAS LAISSER A PROXIMITE D'UNE SOURCE DE CHALEUR, D'ETINCELLES, OU D'UNE FLAMME. GARDER LE RECIPIENT FERME. TOUT EQUIPMENT DOIT ETRE MIS A LA TERRE.

AUTRES PRECAUTIONS: NE PAS UTILISER DE PRESSION POUR VIDER LE CONTENANT. NE PAS COUPER, BROYER, SOUDER OU PERCER SUR OU PRES DE CE CONTENANT. TOUS LES CONTENANTS CONTIENNENTDES RESIDUS ET DES VAPEURS. MANIPULER LES CONTENANTS VIDES COMME S'ILS ETAIENT PLEINS.

SECTION X - HMIS INFORMATION

HMIS RATIO: SANTE: 2 FLAMMABILITE: 3 REACTIVITE: 1 PROTECTION PERSONNELLE: E

Distribution E.S.
104-A, 5e Ave Est
La Sarre (Qc) J9Z 2Y1
T.819.339.2101
admin@distributiones.com

83030
DATA SHEET

2.1 VOC ARP Primer

Automotive Primer

Industry Approvals		
Auto Refinish:	✔	Category 1
Env. Canada:		Exempt
MPI:		N/a
AWWA:		N/a

General Properties

A high performance epoxy primer for vehicle refinish applications requiring a primer with less than 250 gr/lt VOC. The 83030 primer has superior corrosion resistance when applied to prepared steel. No induction time required. 83030 has excellent sanding capability, but provides a finish so smooth that sanding is often not required.

Recommended Uses

For use in vehicle refinish applications, truck boxes & bodies, power distribution equipment, tanks, agricultural equipment, and general industrial priming.

Product Information

GENERIC TYPE
Amine Cured Epoxy

PIGMENT TYPE
Anti-corrosive

COLOR
Grey

BASES
N/a

FINISH
Flat

AVERAGE VOLUME SOLIDS
60.2%

AVERAGE WEIGHT SOLIDS
77.0%

RECOMMENDED FILM THICKNESS
Wet: 3.3-5.0 mils (82 - 125 microns)
Dry: 2-3 mils (50 - 75 microns)
See your Cloverdale Representative for project recommendations.

THEORETICAL COVERAGE
965 ft^2/gal @1 mil (25 microns) DFT
23.7 m^2/L @ 1 mil (25 microns) DFT
Actual coverage may vary depending on substrate and application methods.

MIXED RATIO
3 Parts 83030A; 1 Part 83030B

INDUCTION TIME
No induction time required

POT LIFE
7 hours at 25°C (77°F) (less at higher temperatures)

VISCOSITY MIXED
57 - 63 KU

TEMPERATURE RESISTANCE (DRY)
93°C (200°F) Continuous
120°C (250°F) Intermittent

V.O.C. MIXED
250 gm./lit. (2.1 lb./gal.)
**refer to MSD sheet for current VOC values*

THINNER
Use as supplied.

ACCELERATOR
A-65

Methods of Application

AIRLESS SPRAY	1500 - 200 psi with tip sizes .011" - .013" or equivalent
H.V.L.P.	Tip size 1.4 - 1.6 mm. 8 - 10 psi cap pressure
CONVENTIONAL	40 - 50 psi gun pressure
BRUSH / ROLLER	Not recommended

Drying Time - Temperature, Relative Humidity, and Film Thickness will affect dry and re-coat times.

Substrate Temperature	Touch Dry	Hard Dry	Overcoat Interval with Armourshield		
			Minimum	Maximum	Normal
25°C (77°F)	3.5 hours	6 hours	2 hours	3 days	4 hours

Distribution E.S.
104-A, 5e Ave Est
La Sarre (Qc) J9Z 2Y1
T.819.339.2101
admin@distributiones.com

83030

Recommended Topcoats

Most Cloverdale Conventional and High Performance Coatings. Note: Only the 837 and 839 series urethanes should be used for ARP applications.

Surface Preparation

Area to be painted should be thoroughly cleaned with a detergent solution in water followed by a wash using a wax and grease remover. Sand the bare metal areas using 80-180 grit abrasive. Old, existing finishes should be sanded using 320 – 400 grit paper. Sanded areas should be re-cleaned and primed as quickly as possible after drying.

Limitations

Not recommended for immersion service. For best results apply when substrate temperature is above 10°C (50°F), and at a minimum of 3°C (5°F) above the dew point. Do not apply when the relative humidity is above 85%.

Mixing Instructions

Mix 83030 base A component and curing agent 83030 activator B separately with good agitation. Add curing agent to base component and mix thoroughly until homogenous. If thinning is necessary or required proceed only after recommended induction time has passed.

Safety Precautions

This product is for industrial use only. **Refer to Material Safety Data Sheet for proper health and safety information.**

Storage and Handling

FLASH POINT	-20°C (-4°F) TCC
PRODUCT WEIGHT	1.435 kg/lt mixed (container extra)
STORAGE	Cool, dry, secure location. See your Cloverdale Paint Representative.
PACKAGE SIZE	1 gal kit - 3 qts 83030A and 1 qt. 83030B 4 gal kit - 3 gal 83030A and 1 gal 83030B

Some package sizes or colors may be by special order only. Please check with your Cloverdale Representative when ordering.

Warranty Disclaimer

Cloverdale Paint manufactures quality products. In the event that this product is defective or in any way unsuitable for the application for which it is sold, Cloverdale Paint Inc. will replace the product free of charge. The warranty provided by this data sheet is the only warranty or guarantee of quality made in respect of this product by Cloverdale Paint Inc. By purchasing this product the customer accepts this warranty in lieu of all others, and waives all claims to any other remedy arising from any warranty or guarantee of quality, whether such warranty or guarantee of quality was made expressly to the customer or implied by any applicable law.

Cloverdale Paint Inc.
6950 King George Boulevard, Surrey, British Columbia, Canada V3W 4Z1
Web Site: www.cloverdalepaint.com **Email:** helpdesk@cloverdalepaint.com
Phone: 604 596 6261 **Fax:** 604 597 2677

Distribution E.S.
104-A, 5e Ave Est
La Sarre (Qc) J9Z 2Y1
T.819.339.2101
admin@distributiones.com

83030

PERFORMANCE CRITERIA

1. Abrasion Resistance
Method: ASTM D4060 Abrasion Resistance of Organic Coating by Taber Abrader, 1000 gram load, CS-17 Wheel, 1000 Cycles
Coating System: 1 coat 83030
Results: 161 mg.

2. Adhesion
Method: ASTM D4541, method "E"

Coating System: 83030 primer, 839 Armourshield topcoat
Results: >900 psi

3. Chemical Resistance
Method: Covered spot test for 1 week at room temperature

Coating System: 1 coat 83030

Coating was exposed to - 5% Sodium Hydroxide Solution; 5% Sulfuric Acid Solution; 5% Hydrochloric Acid; 5% Mono Basic Sodium Phosphate Solution; 5% Sodium Hypochlorite Solution; Heavy Duty Liquid Detergent
Results: Unaffected **-** slight discoloration permitted

4. Recoating Window
Method: Internal method - Minimum = the time to >80% gloss @ 20 degree angle. Maximum = longest time tested with 5B adhesion of topcoat

Coating System: 83030 primer, 839 Armourshield topcoat
Results: 2 hrs to >72 hrs

5. Salt Spray (Fog)
Method: ASTM B117
Coating System A: 1 coat 83030
Results:>1000 hrs
Coating System B: 1 coat 83030, 1 coat 83904
Results: >1500 hrs

6. Flexibility
Method: ASTM D522 Cylindrical Mandrel Bend

Coating System: 1 coat 83030
Results: Not less than 9% elongation

7. Pencil Hardness
Method: ASTM D3363
Coating System A: 1 coat 83030
Results: pass 2H

Check for recent amendments to this data sheet at www.cloverdalepaint.com

Cloverdale Paint Inc.
6950 King George Boulevard, Surrey, British Columbia, Canada V3W 4Z1
Web Site: www.cloverdalepaint.com **Email:** helpdesk@cloverdalepaint.com
Phone: 604 596 6261 **Fax:** 604 597 2677

Distribution E.S.
104-A, 5e Ave Est
La Sarre (Qc) J9Z 2Y1
T.819.339.2101
admin@distributiones.com

MATERIAL SAFETY DATA SHEET

SECTION I - PRODUCT IDENTIFICATION AND USE

Product Identifier: 2.1 VOC ARP PRIMER BASE
Identification Number: 83030A
Product Use: PAINT WHMIS Class: B2 D1B D2A

MANUFACTURER:
Cloverdale Paint Inc.
50 PANET ROAD
WINNIPEG, MB
R2J 0R9 204/237-0241

SUPPLIER:
Cloverdale Paint Inc.
50 PANET ROAD
WINNIPEG, MB
R2J 0R9 204/237-0241

PREPARED BY: Mr Robert Tinsley, 204-237-0241 DATE: 03/19/14

SECTION II - HAZARDOUS INGREDIENTS

CHEMICAL NAME	CAS NUMBER	WT. PERCENT RANGE	EXPOSURE LIMIT	LC50	LD50
TITANIUM DIOXIDE	13463-67-7	10.0-30.0	10 MG/M3	6.82MG/L RAT	>25G/KGORAL R
MAGNESIUM SILICATE(TALC)	13776-74-4	10.0-30.0	5 mg/m3 DUST	N/AV	N/AV
BISPHENOL A DIGLYCIDYL ETHER	25068-38-6	10.0-30.0	NO INFO	N/AV	N/AV
ALKYL GLYCIDYL ETHER	68609-97-2	1.0-5.0	NO INFO	N/AV	>19.2 G/KG RA
XYLENE; MIXED ISOMERS	1330-20-7	1.0-5.0	100 ppm	5000 PPM RAT	4G/KG RAT ORA
METHYL ISOBUTYL KETONE	108-10-1	1.0-5.0	50 ppm	5700 PPM RAT	2080MG/KG RAT
METHYL ETHYL KETONE	78-93-3	5.0-10.0	200 ppm	2000 PPM RAT	2737 MG/KG RA
ACETONE	67-64-1	1.0-5.0	750 ppm	16000 PPM RAT	7400 MG/KG RA
PROPYLENE GLYCOL MONOMETHYL ETHER	107-98-2	1.0-5.0	100 ppm	13000 MG/KG RAT	5660 MG/KG RA
FURFURYL ALCOHOL	98-00-0	1.0-5.0	NO INFO	233 MG/KG RAT	177 MG/KG RAT
TER-BUTYL ACETATE	504-88-5	1.0-5.0	NO INFO	2230 MG/M3 RAT	4100 MG/KG RA

N.A. - NOT APPLICABLE

SECTION III - PHYSICAL DATA

BOILING RANGE : 56-260 C
ODOR : AROMATIC
APPEARANCE : GREY LIQUID
VOLATILE BY WEIGHT: 18.6%
VOLATILE BY VOLUME: 35.7%
PH @ 0.00 % : 7.0
VAPOR PRESSURE : 184 mm Hg

VAPOR DENSITY : IS HEAVIER THAN AIR
EVAPORATION RATE: IS FASTER THAN BUTYL ACETATE
SOLUBILITY : 8% WATER SOLUBLE
SPECIFIC GRAVITY: 1.483
FREEZING POINT : -40 C

Distribution E.S.
104-A, 5e Ave Est
La Sarre (Qc) J9Z 2Y1
T.819.339.2101
admin@distributiones.com

SECTION IV - FIRE AND EXPLOSION DATA

FLASH POINT: -18 C
(TAGLIABUE C. C.)
CLASS 3, DIVISION 1

LEL: 1.0%
UEL: 16.3%

EXTINGUISHING MEDIA: DRY CHEMICAL CARBON DIOXIDE FOAM WATER FOG

UNUSUAL FIRE AND EXPLOSION HAZARDS: FLAMMABLE LIQUID (FLASH POINT LESS THAN 100 F/38 C). MAY FORM FLAMMABLE MIXTURES. VAPORS MAY BE EXPLOSIVE IN AIR. ELIMINATE IGNITION SOURCES. GROUND ALL EQUIPMENT. KEEP CONTAINER CLOSED.

SPECIAL FIREFIGHTING PROCEDURES: FIREFIGHTERS SHOULD WEAR SELF CONTAINED BREATHING APPARATUS AND FULL PROTECTIVE CLOTHING. USE WATER SPRAY TO COOL NEARBY CONTAINERS AND STRUCTURES EXPOSED TO FIRE.

SECTION V - HEALTH HAZARD DATA

EFFECTS OF OVER EXPOSURE: *** INHALATION: VAPORS MAY BE IRRITATING. EXPOSURE TO HIGH VAPOR CONCENTRATIONS MAY CAUSE HEADACHES, DIZZINESS, NAUSEA, AND CENTRAL NERVOUS SYSTEM DEPRESSION. PROLONGED EXPOSURE TO HIGH VAPOR CONCENTRATIONS MAY CAUSE UNCONSCIOUSNESS OR DEATH. *** INGESTION: MODERATELY TOXIC. HARMFUL IF SWALLOWED. SWALLOWING LARGE QUANTITIES CAUSES HEADACHES, NAUSEA, VOMITING, AND CENTRAL NERVOUS SYSTEM DEPRESSION. MAY CAUSE LIVER AND/OR KIDNEY DAMAGE. SMALL AMOUNTS OF LIQUID DRAWN INTO THE LUNGS FROM SWALLOWING OR VOMITING MAY CAUSE SEVERE HEALTH AFFECTS (E.G.PULMONARY EDEMA). *** SKIN: CAN CAUSE MODERATE IRRITATION. CAN CAUSE DEFATTING AND DERMATITIS. PROLONGED EXPOSURE MAY CAUSE SKIN SENSITIZATION. CAN CAUSE CHEMICAL BURNS. CAN BE ABSORBED THROUGH THE SKIN CAUSING A HEALTH HAZARD. *** EYES: VAPORS MAY IRRITATE. LIQUID AND MISTS WILL IRRITATE AND MAY BURN THE EYES. *** CHRONIC AFFECTS OF OVEREXPOSURE: CONTAINS SILICA. LONG TERM EXPOSURE TO SILICA DUST MAY CAUSE SILICOSIS AND CARDIOPULMONARY IMPAIRMENT. REPEATED OR PROLONGED EXPOSURES MAY CAUSE SKIN AND/OR RESPIRATORY SENSITIZATION. REPEATED OR PROLONGED EXPOSURES MAY CAUSE LIVER, KIDNEY, AND/OR NEURAL DYSFUNCTION. REPEATED OR PROLONGED EXPOSURES MAY CAUSE DELAYED EFFECTS INVOLVING BLOOD, GASTRO-INTESTINAL, NERVOUS AND/OR REPRODUCTIVE SYSTEMS. LONG TERM EXPOSURE TO DUSTS CAN LEAD TO RESPIRATORY IMPAIRMENT. HIGH EXPOSURES TO XYLENES IN SOME ANIMAL STUDIES HAVE BEEN REPORTED TO CAUSE HEALTH EFFECTS ON THE DEVELOPING EMBRYO/FETUS. THESE EFFECTS WERE OFTEN AT LEVELS TOXIC TO THE MOTHER. THE SIGNIFICANCE OF THESE FINDINGS TO HUMANS HAS NOT BEEN DETERMINED. LONG-TERM EXCESSIVE EXPOSURES MAY CAUSE TALCOSIS, PULMONARY FIBROSIS, WHICH IN TURN MAY LEAD TO SEVERE AND PERMANENT DAMAGE TO THE LUNGS. IN A LIFETIME INHALATION STUDY, EXPOSURE TO 250 MG/M3 TITANIUM DIOXIDE DUST RESULTED IN THE DEVELOPMENT OF LUNG TUMOURS IN RATS. THESE TUMOURS OCCURRED ONLY AT DUST LEVELS THAT OVERWHELMED THE ANIMALS' LUNG CLEARANCE MECHANISMS AND WERE DIFFERENT FROM COMMON HUMAN LUNG TUMOURS IN BOTH TYPE AND LOCATION. THE RELEVANCE OF THESE FINDINGS TO HUMANS IS UNKNOWN. THE INTERNATIONAL AGENCY FOR RESEARCH ON CANCER (IARC) HAS CLASSIFIED TITANTIUM DIOXIDE AS POSSIBLY CARCINOGENIC TO HUMANS (GROUP 2B) BASED ON INADEQUATE EVIDENCE OF CARCINOGENICITY IN HUMANS AND SUFFICIENT EVIDENCE OF CARCINOGENICITY IN EXPERIMENTAL ANIMALS. ACCORDING TO THE INTERNATIONAL AGENCY FOR RESEARCH ON CANCER (IARC), METHYL ISOBUTYL KETONE IS POSSIBLY CARCINOGENIC TO HUMANS (GROUP 2B)

MEDICAL CONDITIONS PRONE TO AGGRAVATION BY EXPOSURE: SKIN DISORDERS. EYE DISORDERS. CHRONIC RESPIRATORY DISORDERS.

PRIMARY ROUTE(S) OF ENTRY: DERMAL INHALATION INGESTION

EMERGENCY AND FIRST AID PROCEDURES: *** INHALATION: REMOVE TO FRESH AIR. ASSIST

Distribution E.S.
104-A, 5e Ave Est
La Sarre (Qc) J9Z 2Y1
T.819.339.2101
admin@distributiones.com

SECTION V - HEALTH HAZARD DATA

BREATHING IF NECESSARY. KEEP VICTIM WARM AND QUIET. SEEK MEDICAL ATTENTION. *** INGESTION: DO NOT INDUCE VOMITING OR GIVE FLUIDS. KEEP AT REST. GET PROMPT MEDICAL ATTENTION. IF VOMITING OCCURS, KEEP VICTIM'S HEAD BELOW HIPS TO PREVENT ASPIRATION INTO THE LUNGS. *** SKIN: FLUSH CONTAMINATED SKIN WITH WATER. GET PROMPT MEDICAL ATTENTION. *** EYES: FLUSH WITH CLEAN WATER FOR AT LEAST 15 MINUTES AND IMMEDIATELY GET MEDICAL ATTENTION.

SECTION VI - REACTIVITY DATA

STABILITY: THIS PRODUCT IS STABLE UNDER NORMAL STORAGE CONDITIONS.

HAZARDOUS POLYMERIZATION: COULD OCCUR UNDER NORMAL CONDITIONS. CARE MUST BE EXERCISED.

HAZARDOUS DECOMPOSITION PRODUCTS: OXIDES OF CARBON. TOXIC FUMES AND SMOKE. FLAMMABLE FUMES.

CONDITIONS TO AVOID: HEAT, SPARKS OR FLAME.

INCOMPATABILITY: OXIDIZING AGENTS. ACIDS. ALKALIES. AMINES. SULFIDES. ALDEHYDES. HALOGENS. CHLORINATED COMPOUNDS.

SENSITIVITY TO STATIC DISCHARGE: TAKE PRECAUTIONARY MEASURES AGAINST STATIC DISCHARGES.

SECTION VII - SPILL OR LEAK PROCEDURES

STEPS TO BE TAKEN IN CASE MATERIAL IS RELEASED OR SPILLED: ELIMINATE IGNITION SOURCES. STOP SOURCE OF SPILL. VENTILATE AREA. EVACUATE ALL NON ESSENTIAL PERSONNEL. WEAR APPROPRIATE PROTECTIVE EQUIPMENT. DIKE SPILL TO KEEP FROM SPREADING. COVER WITH INERT ABSORBENT. REMOVE TO DISPOSAL CONTAINER.

WASTE DISPOSAL METHOD: DO NOT CONTAMINATE ANY LAKES, PONDS, STREAMS, OR UNDERGROUND WATER SUPPLIES. DISPOSE OF IN ACCORDANCE WITH LOCAL, PROVINCIAL AND FEDERAL REGULATIONS IN YOUR AREA.

SECTION VIII - SAFE HANDLING AND USE INFORMATION

RESPIRATORY PROTECTION: USE A COMBINATION ORGANIC VAPOR/TOXIC PARTICULATE HIGH EFFICIENCY FILTER RESPIRATOR. FOR HIGH CONCENTRATIONS, USE AIR SUPPLIED RESPIRATOR.

VENTILATION: EFFICIENT LOCAL EXHAUST VENTILATION IS REQUIRED. USE EXPLOSION PROOF VENTILATION EQUIPMENT.

PROTECTIVE GLOVES: WEAR APPROPRIATE CHEMICAL RESISTANT GLOVES/CLOTHING TO PREVENT SKIN CONTACT.

EYE PROTECTION: DO NOT GET IN EYES. WEAR SAFETY GLASSES/GOGGLES OR A FACE SHIELD.

OTHER PROTECTIVE EQUIPMENT: IMPERMEABLE APRON AND BOOTS. EYE BATH AND SAFETY

Distribution E.S.
104-A, 5e Ave Est
La Sarre (Qc) J9Z 2Y1
T.819.339.2101
admin@distributiones.com

SECTION VIII - SAFE HANDLING AND USE INFORMATION

SHOWER.

HYGENIC PRACTICES: DO NOT GET IN EYES, SKIN OR CLOTHING. AVOID INHALING. DO NOT SWALLOW. KEEP AWAY FROM FOOD PRODUCTS. WASH HANDS THOROUGHLY AFTER HANDLING. CHANGE AND WASH CONTAMINATED CLOTHING.

SPECIAL SHIPPING INFORMATION: PAINT. FLAMMABLE LIQUID CLASS:3 UN#1263 PACKING GROUP II. CANUTEC 24 HOUR EMERGENCY NUMBER: (613) 996-6666

SECTION IX - SPECIAL PRECAUTIONS

PRECAUTIONS TO BE TAKEN IN HANDLING AND STORAGE: STORE IN A COOL, DRY, WELL VENTILATED AREA, AWAY FROM ALL INCOMPATIBLE MATERIALS. KEEP AWAY FROM HEAT, SPARKS AND FLAME. KEEP CONTAINER CLOSED. GROUND ALL EQUIPMENT.

OTHER PRECAUTIONS: DO NOT USE PRESSURE TO EMPTY CONTAINERS. DO NOT CUT, GRIND, WELD OR DRILL ON OR NEAR THIS CONTAINER. CONTAINERS WILL RETAIN PRODUCT RESIDUES AND VAPORS. HANDLE EMPTY CONTAINERS AS IF THEY WERE FULL. DO NOT PUNCTURE, INCINERATE, BURN OR STORE ABOVE 45 C. SOME OR ALL OF THE LISTED COMPONENTS OF THIS PRODUCT MAY PRESENT A HEALTH THREAT IN THE FORM OF DUSTS.

SECTION X - HMIS INFORMATION

HMIS: HEALTH: 2 FLAMMABILITY: 3 REACTIVITY: 1 PERSONAL PROTECTION: K

Distribution E.S.
104-A, 5e Ave Est
La Sarre (Qc) J9Z 2Y1
T.819.339.2101
admin@distributiones.com

MATERIAL SAFETY DATA SHEET

SECTION I - PRODUCT IDENTIFICATION AND USE

Product Identifier: 2.1 VOC ARP PRIMER ACTIVATOR
Identification Number: 83030B
Product Use: PAINT ADDITIVE WHMIS Class: B2 D1AD2AE

MANUFACTURER:
Cloverdale Paint Inc.
50 PANET ROAD
WINNIPEG, MB
R2J 0R9 204/237-0241

SUPPLIER:
Cloverdale Paint Inc.
50 PANET ROAD
WINNIPEG, MB
R2J 0R9 204/237-0241

PREPARED BY: Mr Robert Tinsley, 204-237-0241 DATE: 02/03/16

SECTION II - HAZARDOUS INGREDIENTS

CHEMICAL NAME	CAS NUMBER	WT. PERCENT RANGE	EXPOSURE LIMIT	LC50	LD50
XYLENE; MIXED ISOMERS	1330-20-7	1.0-5.0	100 ppm	5000 PPM RAT	4G/KG RAT ORAL
METHYL ISOBUTYL KETONE	108-10-1	1.0-5.0	50 ppm	5700 PPM RAT	2080MG/KG RAT
ACETONE	67-64-1	5.0-10.0	750 ppm	16000 PPM RAT	7400 MG/KG RAT
N-BUTYL ALCOHOL	71-36-3	1.0-5.0	100 ppm	8000 PPM RAT	790 MG/KG RAT
2-BUTOXYETHANOL	111-76-2	1.0-5.0	50 ppm SKIN	925 PPM MOUSE	470 MG/KG RAT
DIMETHYLAMINOMETHYL PHENOL	90-72-2	1.0-5.0	NO INFO	N/AV	1200 MG/KG RAT
ETHYLBENZENE	100-41-4	1.0-5.0	100 ppm	>4000 PPM RAT	3.5 G/KG RAT
BENZYL ALCOHOL	100-51-6	10.0-30.0	NO INFO	1400 PPM RAT	1230 MG/KG RAT
ALIPHATIC POLYAMIDE	106906-26-1	10.0-30.0	NO INFO	N/AV	N/AV

N.A. - NOT APPLICABLE

SECTION III - PHYSICAL DATA

BOILING RANGE : 56-206 C
ODOR : AROMATIC
APPEARANCE : CLEAR LIQUID
VOLATILE BY WEIGHT: 13.2%
VOLATILE BY VOLUME: 20.8%
PH @ 0.00 % : 7.0
VAPOR PRESSURE : 184 mm Hg

VAPOR DENSITY : IS HEAVIER THAN AIR
EVAPORATION RATE: IS FASTER THAN BUTYL ACETATE
SOLUBILITY : 7% WATER SOLUBLE
SPECIFIC GRAVITY: 1.295
FREEZING POINT : -40 C

Distribution E.S.
104-A, 5e Ave Est
La Sarre (Qc) J9Z 2Y1
T.819.339.2101
admin@distributiones.com

SECTION IV - FIRE AND EXPLOSION DATA

FLASH POINT: -18 C
(TAGLIABUE C. C.)
CLASS 3, DIVISION 1

LEL: 1.0%
UEL: 12.8%

EXTINGUISHING MEDIA: DRY CHEMICAL CARBON DIOXIDE FOAM WATER FOG

UNUSUAL FIRE AND EXPLOSION HAZARDS: FLAMMABLE LIQUID (FLASH POINT LESS THAN 100 F/38 C). MAY FORM FLAMMABLE MIXTURES. VAPORS MAY BE EXPLOSIVE IN AIR. ELIMINATE IGNITION SOURCES. GROUND ALL EQUIPMENT. KEEP CONTAINER CLOSED.

SPECIAL FIREFIGHTING PROCEDURES: FIREFIGHTERS SHOULD WEAR SELF CONTAINED BREATHING APPARATUS AND FULL PROTECTIVE CLOTHING. USE WATER SPRAY TO COOL NEARBY CONTAINERS AND STRUCTURES EXPOSED TO FIRE.

SECTION V - HEALTH HAZARD DATA

EFFECTS OF OVER EXPOSURE: *** INHALATION: VAPORS AND MISTS ARE EXTREMELY CORROSIVE. BRONCHITIS, PULMONARY EDEMA, AND CHEMICAL PNEUMONITIS MAY OCCUR. *** INGESTION: HIGHLY TOXIC. MAY BE FATAL. SWALLOWING LARGE QUANTITIES CAUSES HEADACHES, NAUSEA, VOMITING, AND CENTRAL NERVOUS SYSTEM DEPRESSION. MAY CAUSE LIVER AND/OR KIDNEY DAMAGE. VAPORS, MISTS, AND LIQUID ARE CORROSIVE. SWALLOWING CAN CAUSE DEATH. SMALL AMOUNTS OF LIQUID DRAWN INTO THE LUNGS FROM SWALLOWING OR VOMITING MAY CAUSE SEVERE HEALTH AFFECTS (E.G.PULMONARY EDEMA). *** SKIN: VAPORS, MISTS AND LIQUID ARE EXTREMELY CORROSIVE. CAN CAUSE DEFATTING AND DERMATITIS. PROLONGED EXPOSURE MAY CAUSE SKIN SENSITIZATION. CAN CAUSE CHEMICAL BURNS. CAN BE ABSORBED THROUGH THE SKIN CAUSING A HEALTH HAZARD. *** EYES: VAPORS, LIQUID AND MISTS ARE EXTERMELY CORROSIVE. BRIEF CONTACT WILL BE SEVERELY IRRITATING AND MAY DAMAGE THE EYES AND CAUSE PEMANENT INJURY OR BLINDNESS. *** CHRONIC AFFECTS OF OVEREXPOSURE: REPEATED OR PROLONGED EXPOSURES MAY CAUSE SKIN AND/OR RESPIRATORY SENSITIZATION. REPEATED OR PROLONGED EXPOSURES MAY CAUSE LIVER, KIDNEY, AND/OR NEURAL DYSFUNCTION. REPEATED OR PROLONGED EXPOSURES MAY CAUSE DELAYED EFFECTS INVOLVING BLOOD, GASTRO-INTESTINAL, NERVOUS AND/OR REPRODUCTIVE SYSTEMS. ETHYL BENZENE HAS BEEN CLASSIFIED BY THE IARC AS A GROUP 2B SUBSTANCE ON THE BASIS OF SUFFICIENT EVIDENCE FOR CARCINOGENICITY IN LABORATORY ANIMALS BUT INADEQUATE EVIDENCE FOR CANCER IN HUMANS. HIGH EXPOSURES TO XYLENES IN SOME ANIMAL STUDIES HAVE BEEN REPORTED TO CAUSE HEALTH EFFECTS ON THE DEVELOPING EMBRYO/FETUS. THESE EFFECTS WERE OFTEN AT LEVELS TOXIC TO THE MOTHER. THE SIGNIFICANCE OF THESE FINDINGS TO HUMANS HAS NOT BEEN DETERMINED. CARCINOGENICITY IN EXPERIMENTAL ANIMALS. ACCORDING TO THE INTERNATIONAL AGENCY FOR RESEARCH ON CANCER (IARC), METHYL ISOBUTYL KETONE IS POSSIBLY CARCINOGENIC TO HUMANS (GROUP 2B) 2-BUTOXYETHANOL MAY CAUSE REPRODUCTIVE EFFECTS BASED ON STUDIES IN LABORATORY ANIMALS AT HIGH GENERALLY TOXIC DOSES. 2-BUTOXYETHANOL MAY CAUSE TERATOGENIC/EMBRYTOXIC EFFECTS BASED ON IN STUDIES IN LABORATORY ANIMALS

MEDICAL CONDITIONS PRONE TO AGGRAVATION BY EXPOSURE: ALLERGIES. SKIN DISORDERS. EYE DISORDERS. CENTRAL NERVOUS SYSTEM DISORDERS. CHRONIC RESPIRATORY DISORDERS.

PRIMARY ROUTE(S) OF ENTRY: INHALATION DERMAL INGESTION

EMERGENCY AND FIRST AID PROCEDURES: *** INHALATION: REMOVE TO FRESH AIR. ASSIST BREATHING IF NECESSARY. KEEP VICTIM WARM AND QUIET. SEEK MEDICAL ATTENTION. *** INGESTION: DO NOT INDUCE VOMITING OR GIVE FLUIDS. KEEP AT REST. GET PROMPT MEDICAL ATTENTION. IF VOMITING OCCURS, KEEP VICTIM'S HEAD BELOW HIPS TO PREVENT ASPIRATION INTO THE LUNGS. *** SKIN: FLUSH CONTAMINATED SKIN WITH WATER. GET PROMPT MEDICAL ATTENTION. *** EYES: FLUSH

Distribution E.S.
104-A, 5e Ave Est
La Sarre (Qc) J9Z 2Y1
T.819.339.2101
admin@distributiones.com

SECTION V - HEALTH HAZARD DATA

WITH CLEAN WATER FOR AT LEAST 15 MINUTES AND IMMEDIATELY GET MEDICAL ATTENTION.

SECTION VI - REACTIVITY DATA

STABILITY: THIS PRODUCT IS STABLE UNDER NORMAL STORAGE CONDITIONS.

HAZARDOUS POLYMERIZATION: COULD OCCUR UNDER NORMAL CONDITIONS. CARE MUST BE EXERCISED.

HAZARDOUS DECOMPOSITION PRODUCTS: OXIDES OF CARBON. OXIDES OF NITROGEN. TOXIC FUMES AND SMOKE.

CONDITIONS TO AVOID: HEAT, SPARKS OR FLAME.

INCOMPATABILITY: DIRECT SUNLIGHT AVOID EXTENDED CONTACT WITH AIR OR OXYGEN HEATING IN AIR MAY PRODUCE IRRITATING ALDEHYDES, ACIDS AND KETONES BASES. SODIUM HYDROXIDE ALUMINUM AND ITS ALLOYS OXIDIZING AGENTS. ACIDS. ALKALIES. AMINES. CYANIDES, ISOCYANATES. SULFIDES. ALDEHYDES. HALOGENS. WATER

SENSITIVITY TO STATIC DISCHARGE: TAKE PRECAUTIONARY MEASURES AGAINST STATIC DISCHARGES.

SECTION VII - SPILL OR LEAK PROCEDURES

STEPS TO BE TAKEN IN CASE MATERIAL IS RELEASED OR SPILLED: ELIMINATE IGNITION SOURCES. STOP SOURCE OF SPILL. VENTILATE AREA. EVACUATE ALL NON ESSENTIAL PERSONNEL. WEAR APPROPRIATE PROTECTIVE EQUIPMENT. DIKE SPILL TO KEEP FROM SPREADING. COVER WITH INERT ABSORBENT. REMOVE TO DISPOSAL CONTAINER.

WASTE DISPOSAL METHOD: DO NOT CONTAMINATE ANY LAKES, PONDS, STREAMS, OR UNDERGROUND WATER SUPPLIES. DISPOSE OF IN ACCORDANCE WITH LOCAL, PROVINCIAL AND FEDERAL REGULATIONS IN YOUR AREA.

SECTION VIII - SAFE HANDLING AND USE INFORMATION

RESPIRATORY PROTECTION: USE A COMBINATION ORGANIC VAPOR/TOXIC PARTICULATE HIGH EFFICIENCY FILTER RESPIRATOR. FOR HIGH CONCENTRATIONS, USE AIR SUPPLIED RESPIRATOR.

VENTILATION: EFFICIENT LOCAL EXHAUST VENTILATION IS REQUIRED. USE EXPLOSION PROOF VENTILATION EQUIPMENT.

PROTECTIVE GLOVES: WEAR APPROPRIATE CHEMICAL RESISTANT GLOVES/CLOTHING TO PREVENT SKIN CONTACT.

EYE PROTECTION: DO NOT GET IN EYES. WEAR SAFETY GLASSES/GOGGLES OR A FACE SHIELD.

OTHER PROTECTIVE EQUIPMENT: OVERALLS, APRON. EYE BATH AND SAFETY SHOWER.

HYGENIC PRACTICES: DO NOT GET IN EYES, SKIN OR CLOTHING. AVOID INHALING. DO NOT

Distribution E.S.
104-A, 5e Ave Est
La Sarre (Qc) J9Z 2Y1
T.819.339.2101
admin@distributiones.com

SECTION VIII - SAFE HANDLING AND USE INFORMATION

SWALLOW. KEEP AWAY FROM FOOD PRODUCTS. WASH HANDS THOROUGHLY AFTER HANDLING. CHANGE AND WASH CONTAMINATED CLOTHING.

SPECIAL SHIPPING INFORMATION: PAINT RELATED MATERIAL. FLAMMABLE LIQUID CLASS:3 UN#1263 PACKING GROUP II. CANUTEC 24 HOUR EMERGENCY NUMBER: (613) 996-6666

SECTION IX - SPECIAL PRECAUTIONS

PRECAUTIONS TO BE TAKEN IN HANDLING AND STORAGE: STORE IN A COOL, DRY, WELL VENTILATED AREA, AWAY FROM ALL INCOMPATIBLE MATERIALS. KEEP AWAY FROM HEAT, SPARKS AND FLAME. GROUND ALL EQUIPMENT.

OTHER PRECAUTIONS: DO NOT CUT, GRIND, WELD OR DRILL ON OR NEAR THIS CONTAINER. DO NOT PUNCTURE, INCINERATE, BURN OR STORE ABOVE 45 C.

SECTION X - HMIS INFORMATION

HMIS: HEALTH: 3 FLAMMABILITY: 3 REACTIVITY: 1 PERSONAL PROTECTION: K

Polyisocyanurate Foam Sheathing Continuous Insulation

AP™ FOIL-FACED

PRODUCT DATA SHEET



DESCRIPTION

Johns Manville AP™ Foil-Faced Foam Sheathing board consists of a uniform closed-cell polyisocyanurate foam core bonded on each side to a foil facer. One side has a reflective foil facer and the other side has a white non-reflective foil facer to suit your building needs.

Polyiso provides one of the highest R-values per inch of any rigid insulation (R-6.0 at 1 inch). Furthermore, when properly installed, AP Foil-Faced Foam Sheathing functions as a water-resistive barrier, vapor barrier and air barrier, eliminating the need to install additional components.

AP Foil-Faced Foam Sheathing is produced with an EPA-compliant hydrocarbon-based blowing agent that has zero Ozone Depletion Potential (ODP) and virtually no Global Warming Potential (GWP); it also meets both CFC- and HCFC-free specification requirements. Polyiso is one of North America's most widely used insulation products and has been cited by the EPA for its responsible impact on the environment.

AP Foil-Faced Foam Sheathing provides exceptional heat, moisture and air control to protect your building's exterior wall assembly.

INSTALLATION

AP Foil-Faced Foam Sheathing is lightweight and can be easily cut with a utility knife or saw. Use maximum board lengths to minimize the number of joints. Vertical joints should be staggered. Butt joints should be centered over framing. To create a water-resistive barrier or an air barrier, treat seams and penetrations as instructed in the installation guide and in accordance with manufacturer's guidelines. Once installed, AP Foil-Faced Foam Sheathing may be left exposed for up to 60 days. Consult your local building department for code requirements.

COMPLIANCES

- ASTM C1289 Type 1, Class 1
- CAN/ULC S704, Type 1, Class 1
- ICC-ES Evaluation Report ESR-3398
- Canadian Construction Materials Centre 13104-L
- Air Barrier Association of America Evaluated Air Barrier Material, Assembly & Water Resistive Barrier
- International Building Code
- International Residential Code
- International Energy Conservation Code
- ENERGY STAR
- ASHRAE 90.1
- California State Insulation Quality Standards

PERFORMANCE STANDARDS

- ASTM C1289, Standard Specification for Faced Rigid Cellular Polyisocyanurate Thermal Insulation Board
- CAN/ULC-S704, Standard for Thermal Insulation, Polyurethane and Polyisocyanurate, Boards, Faced
- ASTM E84, Test for Surface Burning Characteristics of Building Materials
- CAN/ULC S102, Standard Method of Test for Surface Burning Characteristics of Building Materials and Assemblies
- NFPA 259, Standard Test Method for Potential Heat of Building Materials
- NFPA 285, Standard Fire Test Method for Evaluation of Fire Propagation Characteristics of Exterior Non-Load-Bearing Wall Assemblies Containing Combustible Components
- AC 71, Acceptance Criteria for Foam Plastic Sheathing Panels Used as Water-Resistive Barriers
- ASTM E331, Standard Test Method for Water Penetration of Exterior Windows, Skylights, Doors, and Curtain Walls by Uniform Static Air Pressure Difference
- AATCC Test Method 127, Water Resistance: Hydro Static Pressure Test
- ASTM E1233, Standard Test Method for Structural Performance of Exterior Windows, Doors, Skylights, and Curtain Walls by Cyclic Air Pressure Differential
- ASTM E2178, Standard Test Method for Air Permeance of Building Materials
- ASTM E2357, Standard Test Method for Determining Air Leakage of Air Barrier Assemblies

AVAILABILITY

AP Foil-Faced Foam Sheathing is available in the sizes shown in Table 1 (see reverse). For additional information or special size inquiries, please consult a sales representative at 800-654-3103.

PERFORMANCE ADVANTAGES

Thermal Insulation: inch for inch, polyiso has one of the highest energy efficiencies. R-values for AP Foil-Faced Foam Sheathing are shown in Table 1, and physical properties are shown in Table 2 (see reverse). R means resistance to heat flow. The higher the R-value, the greater the insulating power.

Water-Resistive Barrier: when properly installed as part of a Johns Manville Wall System, AP Foil-Faced Foam Sheathing meets the ICC-ES AC71 acceptance criteria for foam plastic sheathing used as a water-resistive barrier. Please see the installation guide for qualifying assemblies and detailed instructions.

Vapor Barrier: at a minimum thickness of one inch, AP Foil-Faced Foam Sheathing has a vapor permeance of 0.05 perms and qualifies as a Class I vapor retarder.

Air Barrier: when properly installed as part of a Johns Manville Wall System, AP Foil-Faced Foam Sheathing meets the Air Barrier Association of America boardstock criteria for materials and assemblies. Please see installation guide for qualifying assemblies and detailed instructions.

Noncorrosive: does not accelerate corrosion of pipes, wiring or metal studs.

Lightweight: easy to handle, can be cut with a utility knife or saw.

ENERGY, QUALITY & ENVIRONMENT

ICC ES™ Intertek abaa EVALUATED

POLYISO™ The top performer.

LEARN MORE AT energystar.gov

Polyisocyanurate Foam Sheathing Continuous Insulation



PRODUCT DATA SHEET **AP™ FOIL-FACED**

STORAGE
Store AP Foil-Faced Foam Sheathing elevated above the floor or ground and standing water. If stored outdoors, keep dry by covering completely with a waterproof tarpaulin.

LIMITATIONS
AP Foil-Faced Foam Sheathing is nonstructural. The walls must be braced in accordance with the requirements of the applicable code.

WARRANTY
All Johns Manville products are sold subject to Johns Manville's Limited Warranty and Limitation of Remedy. For a copy of these documents, call 800-654-3103.

WARNING
AP Foil-Faced Foam Sheathing is combustible and shall only be used as specified by the local building code with respect to flame spread classification and to the use of a suitable thermal barrier when required.

TECHNICAL SERVICES
Johns Manville can provide technical information to assist in addressing questions regarding AP Foil-Faced Foam Sheathing. Please call 800-654-3103 for technical assistance.

PERFORMANCE DATA

THERE ARE 2 LAYERS OF 2" THICK INSULATING PANELS, FOR A TOTAL OF 4" ALL AROUND. APPLIED ON WALLS, CEILING AND FLOOR.

Table 1: Thermal Performance

THICKNESS (inches)	R-VALUE U.S.[1] (°F•ft²•h/BTU)	THICKNESS (mm)	RSI-VALUE[1] (°K•m²/W)	BOARD SIZE (ft)	R-VALUE WITH REFLECTIVE AIR SPACE[2]		
					½" Air Space	¾" Air Space	1" Air Space

[1] *Aged R-value at 75° F in accordance with ASTM C1289.*
[2] *Only applies when an ideal reflective air space and horizontal heat flow conditions exist. The shiny foil side of product must face the air space. Determined in accordance with FTC 16 CFR Part 460 requirements and published ASHRAE air space R-values. Refer to the 2009 ASHRAE Handbook of Fundamentals, Chapter 26, Table 3, for details.*

Table 2: Physical Properties

PROPERTY	UNITS	TEST METHOD	RESULT
	F•ft²•hr/BTU	ASTM C518*	6.0
Compressive Strength	psi	ASTM D1621	≥ 16
Flexural Strength	psi	ASTM C203	≥ 40
Water Absorption	% by volume	ASTM C209	0.1
Water Vapor Permeance	perms	ASTM E96	0.05
Surface Burning Characteristics**			
Flame Spread†	index	ASTM E84	≤ 25
Smoke Developed†	index	ASTM E84	≤ 450
Service Temperature	°F		-100 to 250

**Aged R-value at 75° F in accordance with ASTM C1289.*
***Numerical ratings are not intended to reflect hazards present in actual fire conditions.*
†Foam core tested at 4 inches.

Visit our website at **www.JM.com** or call **800-654-3103** | **Building Insulation Division** P.O. Box 5108 | Denver, CO 80217-5108

Data as shown in this literature is intended to be used as a general guideline only. The physical and chemical properties of AP Foil-Faced Polyisocyanurate Foam Sheathing listed herein represent typical, average values obtained in accordance with accepted test methods and are subject to normal manufacturing variations. They are supplied as a technical service and are subject to change without notice. Any references to numerical flame spread or smoke developed ratings are not intended to reflect hazards presented by these or any other materials under actual fire conditions. Check with the sales office nearest you for current information. All Johns Manville products are sold subject to Johns Manville's Limited Warranty and Limitation of Remedy. For a copy of the Johns Manville Limited Warranty and Limitation of Remedy or for information on other Johns Manville thermal and acoustical insulation and systems, visit the website or call the 800 number above. 717 17th Street Denver CO, 80202

BID-0151 7/15

© 2015 Johns Manville. All Rights Reserved.

3. Fabrication characteristics (continued)

Manufacturier de produits CVAC sur mesure

Project : 6515-403, Electrical room
Client : Promec

Fabrication characteristics (continuation)

Identification tag

FABRICATION MEP	
TAG NO:	6515-403, Electrical room
MODEL:	AMP-PFB-2-160-E
SERIE:	AMP00379

Pedestrian door

Description:

(1x) 42'' x 84''

4’’ insulated freezer style

Warning informations

☒ Risk of electrocution

Entrance®

GLACE-GUARD
Cold Storage Doors

ISO 9001 2008 CERTIFIED

The high performance entrance door!

The Glace-Guard™ Entrance door combines insulation performance and durability, while being attractive and virtually maintenance free. This entrance door, available in 3" or 4" thickness, is made of high quality metal skins. Its panels are insulated with a rigid polyurethane foam core, providing the highest insulation value. Its hardware is engineered to withstand an intensive usage, while providing safety and smoothness of operation.

The Glace-Guard™ Entrance door is operated by industrial cam-lift hinges, heavy duty pull handle and heavy gauge steel automatic door closer, ensuring trouble-free operation and effortless firm closing.

The Glace-Guard™ Entrance door is suitable for coolers and freezers, for both interior and exterior applications. It is your best door investment when performance, durability and low maintenance costs are criteria of selection.

The Glace-Guard™ Entrance door is ideal for applications such as:

- Supermarkets
- Restaurants
- Cold storage distribution warehouses
- Grocery distribution warehouses
- Food processing plants



Cold storage entrance door
Model Glace-Guard™ Entrance ET-300

Entrance®/ Glace-Guard™

ET-300, ET-400 Series

Section 08326

Well insulated:
The Glace-Guard™ Entrance ET-300 (3" thick) and ET-400 (4" thick) doors are insulated with a rigid polyurethane foam core.

Designed for energy savings:
Full perimeter magnetic vinyl gasket and bottom double U-shaped rubber gasket to ensure airtight joints.

Built to last with superior quality materials:
Proven experience and expertise achieve a perfect adherence of the polyurethane foam to the metal skins, ensuring panel strength, rigidity and preservation of insulation value over time. The high quality 26 gauge galvanized steel with superior 25-micron polyester top coat, ensures durability and resistance to corrosion.

Heavy duty hardware for long lasting use and smooth operation:
Industrial cam-lift hinges, heavy duty pull handle and heavy gauge steel door closer, combined with a variety of accessories, provide trouble-free operation, safety and durability.

THERMOSTOP
Tradition of quality

CFC-FREE 3"/4" POLYURETHANE INSULATION

Entrance®
GLACE-GUARD Cold Storage Doors

Entrance ET-300	3" (75mm) thick
Entrance ET-400	4" (100mm) thick

Technical specifications

Section 08326

Reference product:
Glace-Guard™ Entrance ET-300 or
Glace-Guard™ Entrance ET-400,
as manufactured by Thermostop Inc.,
www.thermostop.com

Temperature range:
-20°F to +120°F (-29°C to +49°C)

Standard dimensions:
- 36" x 84" (914mm x 2134mm)
- 60" x 84" (1524mm x 2134mm)

Other dimensions available upon request.

Thickness:
- Glace-Guard™ Entrance ET-300: 3" (75mm) thick
- Glace-Guard™ Entrance ET-400: 4" (100mm) thick

Panels:
Insulated with rigid polyurethane, foamed in place under high pressure between two metal skins. Standard 26ga. steel skins, white stucco finish. For other skin options, please consult ***Metal skins options***. Panel frame is made with heavy duty aluminum extrusions.

Door frame and thermal barrier:
Door frame is made of shock-proof 5/32" (4mm) thick exterior and interior extruded aluminum angles. The exterior aluminum angle has an incorporated resin thermal break.

Hinges:
- For doors with width under 60" (1524mm): Self-closing and reversible high pressure die-cast zinc hinges with self-lubricating nylon cams. Brushed chrome finish.



- For doors with width of 60" (1524mm) and greater: Heavy duty self-closing and reversible high pressure die-cast zinc flanges, 3/16" (5mm) thick steel strap. Gray finish.



Pull handle:
High pressure die-cast zinc cylinder locking handle, complete with emergency inside release system. Brushed chrome finish.



Door closer:
Heavy gauge steel mechanical door closer, complete with extra-wide hook. Chrome finish.



Perimeter magnetic gasket:
A full perimeter magnetic vinyl gasket insures that the door is airtight and vapour-proof on the perimeter joint.

Bottom door gasket:
Extruded aluminum retainer with two U-shaped rubber gaskets to insure airtight joints.

Heat trace (optional):
For freezer applications, the door is equipped with a heat trace on four (4) sides of the door, preventing ice or frost accumulation and eliminating the need to have a heated threshold.

Kick plate (optional):
36" (914mm) high steel kick plate, on full door width, to protect the door bottom against forklift impacts.
- 16ga. galvanized steel, smooth finish
- 18ga. stainless steel, #304 finish

Metal skins options:

Steel	Finish
26ga. (0.41mm)	stucco, white
20ga. (0.86mm)	

Aluminum	Finish
24ga. (0.60mm)	stucco, white or grey RAL-9006
16ga. (1.30mm)	



Door frame details

THERMOSTOP
Tradition of quality

3775 Losch Blvd.
Longueuil (Quebec)
Canada
J3Y 5T7

Phone: **450.678.8666**
Toll free: 866.678.0123
Fax: 450.678.7765
thermostop.com

Warranty

Thermostop doors and hardware carry a warranty of one (1) year against any defects or faulty workmanship. The door panels carry a ten (10) year limited warranty against perforation due to rusting, and a five (5) year limited warranty on delamination, under normal operational conditions.

THERMOSTOP

SHOP DRAWING - COOLER ENTRANCE DOOR GLACE-GUARD ET-400

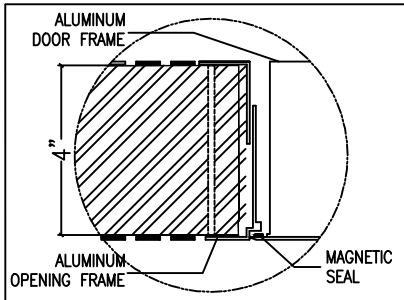

DOOR FRAME DETAIL

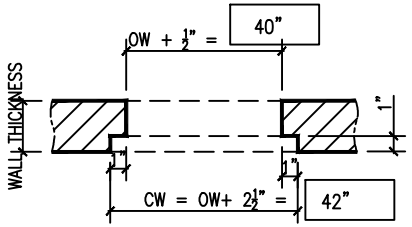

PLAN VIEW

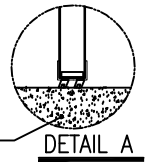

DETAIL A

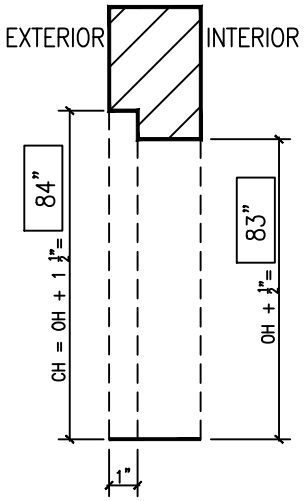

SECTION

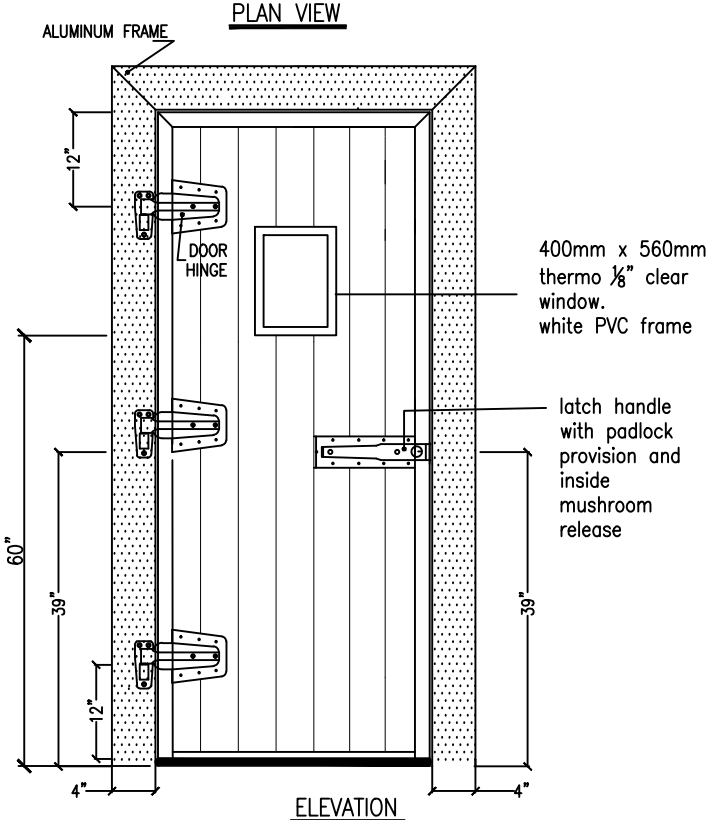

ELEVATION

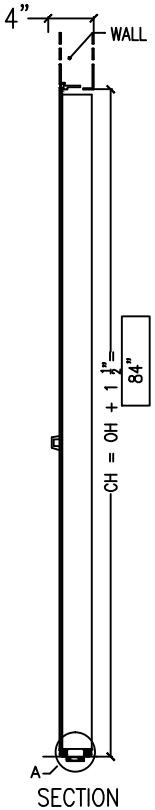

SECTION

Specifications:

☒ ET–400: 4"(100mm)
☒ Cooler application (36°F and above)

Standard Features:

*Polyurethane insulated panels
*20ga galvanized steel, white, smooth finish with ribs
*Heavy–duty mirror frame 5/32" (4mm) in two extruded angles. Aluminium mill finished.
*Magnetic seals on door frame perimeter.
*Bottom double blade seal on door panel.
* 3 (three) 10" cam–lift hinges.
* 1 (one) LATCH handle with padlock provision (padlock by others) & inside MUSHROOM release

Latch handle is chrome finished steel. Hinges are brush chrome finished steel

Other Features:

* Exterior chain with S hook and eye bolt
* Interior storm door chain with spring

DIMENSIONS	QTY	FINISHED OPENING		REQUIRED CLEARANCE		APPROVED FOR MANUFACTURING BY:
	2	WIDTH (OW)	HEIGHT (OH)	WIDTH (CW)	HEIGHT (CH)	Name: Date:
		39.50"	82.50"	42"	84"	Signature:

Legend

OW = OPENING WIDTH
OH = OPENING HEIGHT
CW = CLEARANCE WIDTH
CH = CLEARANCE HEIGHT

GLACE–GUARD
Cold Storage Doors

THERMOSTOP INC.

3775, boulevard Losch, Longueuil (Québec), Canada J3Y 5T7,
Tel.: (450) 678-8666, Fax: (450) 678-7765,www.thermostop.com

Distributor: AIRMP INC.	Date: 05–09–2017	Drawn by:	Verify by:	Page:	**Note :**
Customer:	Revision:	F.L.	L.H.	2/2	*Drawings not to scale

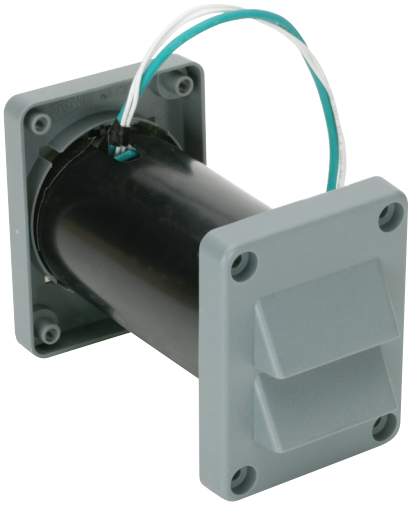

ITEM # 1825

STANDARD LOUVER

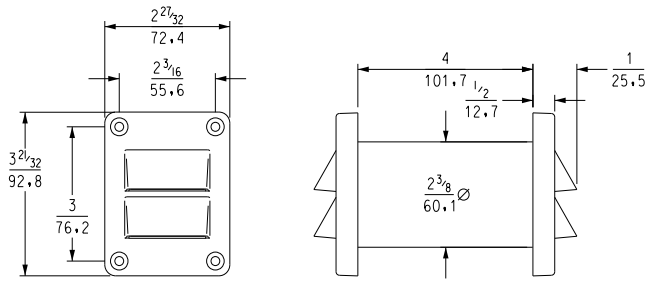

SQUARE LOUVER

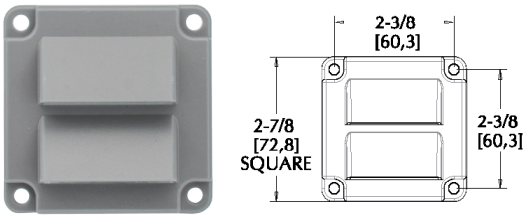

US Patent No. 6,176,776

1825 NARROW JAMB HEATED VENT

- Exclusive, patented Kason ventilator seals tight and opens at lowest pressure of any competitive vent.
- Lightweight, springless valves provide greater air flow at lower pressure than spring-loaded valves.
- Lower pressure allows doors to open and close with ease and reduces stress on walk-in enclosure joints, reducing chance of leaks.
- Computer-designed heater eliminates valve freezing.
- Narrow profile unit mounts in door jamb.
- Port installs through 2 1/2" (63.5mm) diameter hole with minimal wiring.
- Poppet valves close tightly to prevent air leakage.
- Engineered to optimize the self-closing potential of Kason Walk-in hinges, latches and door closers.

PERFORMANCE TESTED

Comprehensive performance tests show that Kason 1825 pressure relief ports provide better air flow at lower pressure and greater frost resistance than competitive ventilators.

SPECIFICATIONS

MATERIAL:
Gray ABS plastic valve body and louvers, PVC tube, internal aluminum and stainless steel parts.

POWER:
.04 amp @ 120 VAC; 4W heater.
.02 amp @ 230 VAC; 4W heater.

UL LISTING:
File No. E57306

SELECTION:
See Quantity Selector Chart, page B-59.

MOUNTING:
No. 1825 only mounts horizontally. Drilled for No. 10 (5.0mm) screws. Requires 2-1/2" (63.5mm) diameter hole.

Model No.	Item	Qty/Carton	Wgt./Carton
11825000004	Heated Vent, 120 VAC, 4" Wall	10	7 lb. (3.2 kg)
11825000006	Heated Vent, 230 VAC, 4" Wall	10	7 lb. (3.2 kg)
11825S00004	Heated Square Louver Vent, 120 VAC, 4" Wall	10	7 lb. (3.2 kg)
11825S00006	Heated Square Louver Vent, 230 VAC, 4" Wall	10	7 lb. (3.2 kg)
11825000008	Unheated Vent, 4" Wall	10	7 lb. (3.2 kg)

*Other thicknesses available. Contact factory.

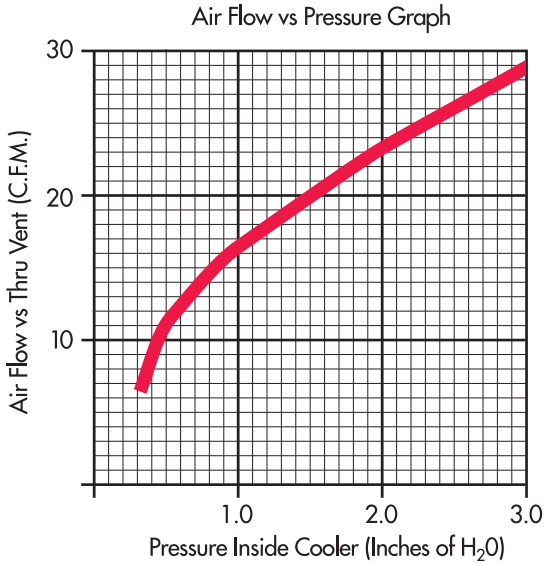

 © 2016 Kason Industries, Inc.

4. General arrangement drawings

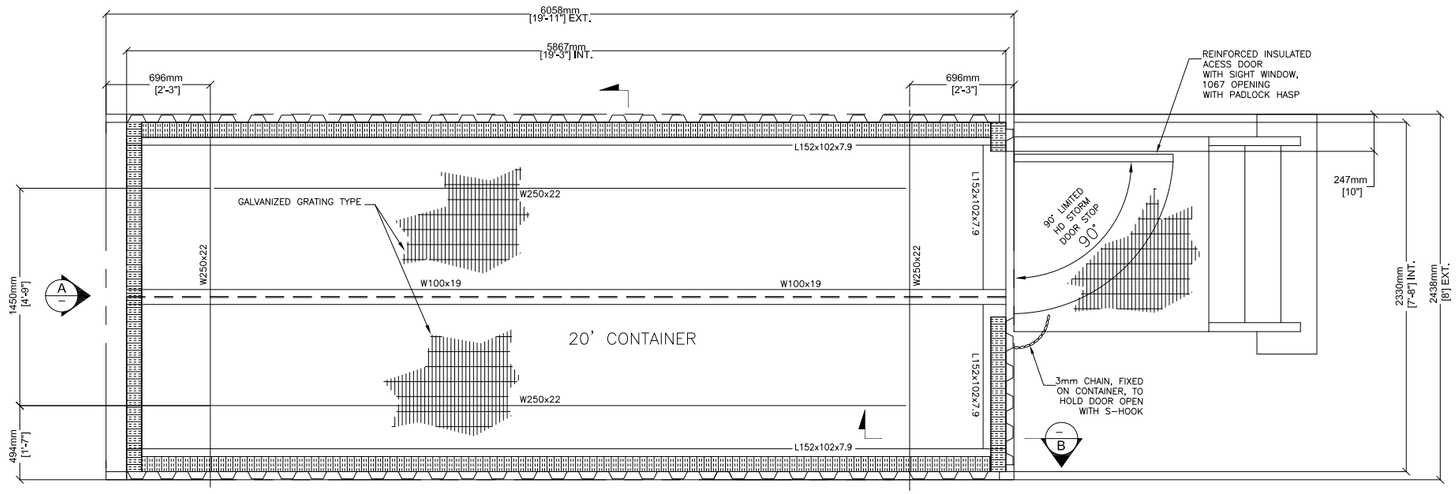

Electrical room floor
Scale : 1:20

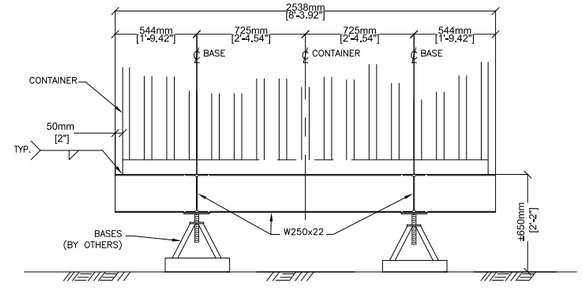

Section
Scale : 1:20

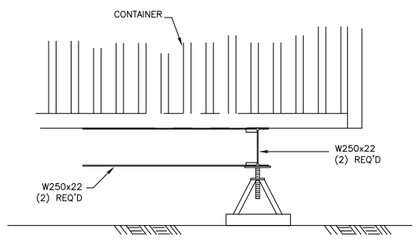

Section
Scale : 1:20

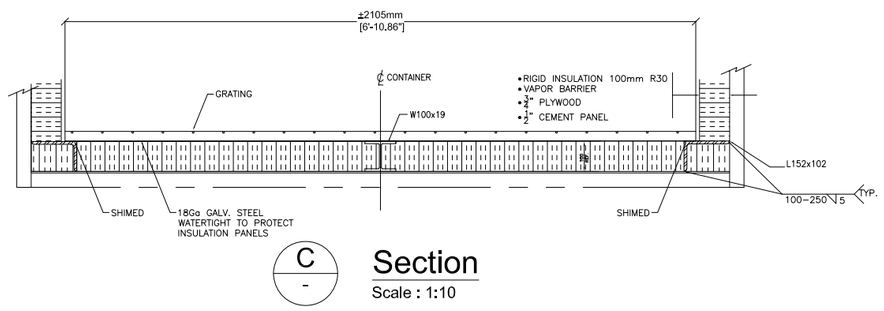

Section
Scale : 1:10

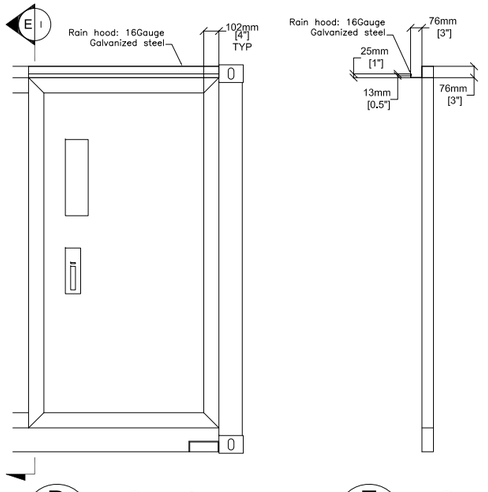

Section
Scale : 1:10

Section
Scale : 1:10

PAINTING SPECIFICATION:
1 - SOLVENT CLEANING, SSPC-SP1
2 - APPLICATION OF "DEUTHANE 359" POLYURETHANE, 2 TO 3 MILS DRY
3 - COLOR: SLATE BLUE, QC 8260

NOTES:
1 - RAIN HOODS WILL BE PREPARED IN OUR SHOP AND SHIPPED LOOSE.

# Rev.	Emission	By	Date
2	Released for fabrication	F.S.	2017-05-23
2	For approval	F.S.	2017-05-02
1	For approval	F.S.	2017-04-12

AIRMP.CA
Custom HVAC manufactured products
750, rue Saguenay, Rouyn-Noranda, Québec, Canada, J9X 7B5
Tél. : (819) 762-2818 Téléc. : (819) 762-3801
www.airmp.com

Client : Groupe PROMEC Inc.

Project : 65-403-275-207, Electrical room

Title : General arrangement drawing

Designed by : WSP	# Quote : 17-0062	Sheet : 1 de 1
Drafted by : Francis St-Pierre	# Project : AMP17-17	
Verified by : Groupe PROMEC Inc.	# Drawing : AMP17-17 ER2	

R:\Projets\AMP17-17\3 Dessins\Dessins d'approbation\ER2 - 403\AMP17-17 ER2.dwg

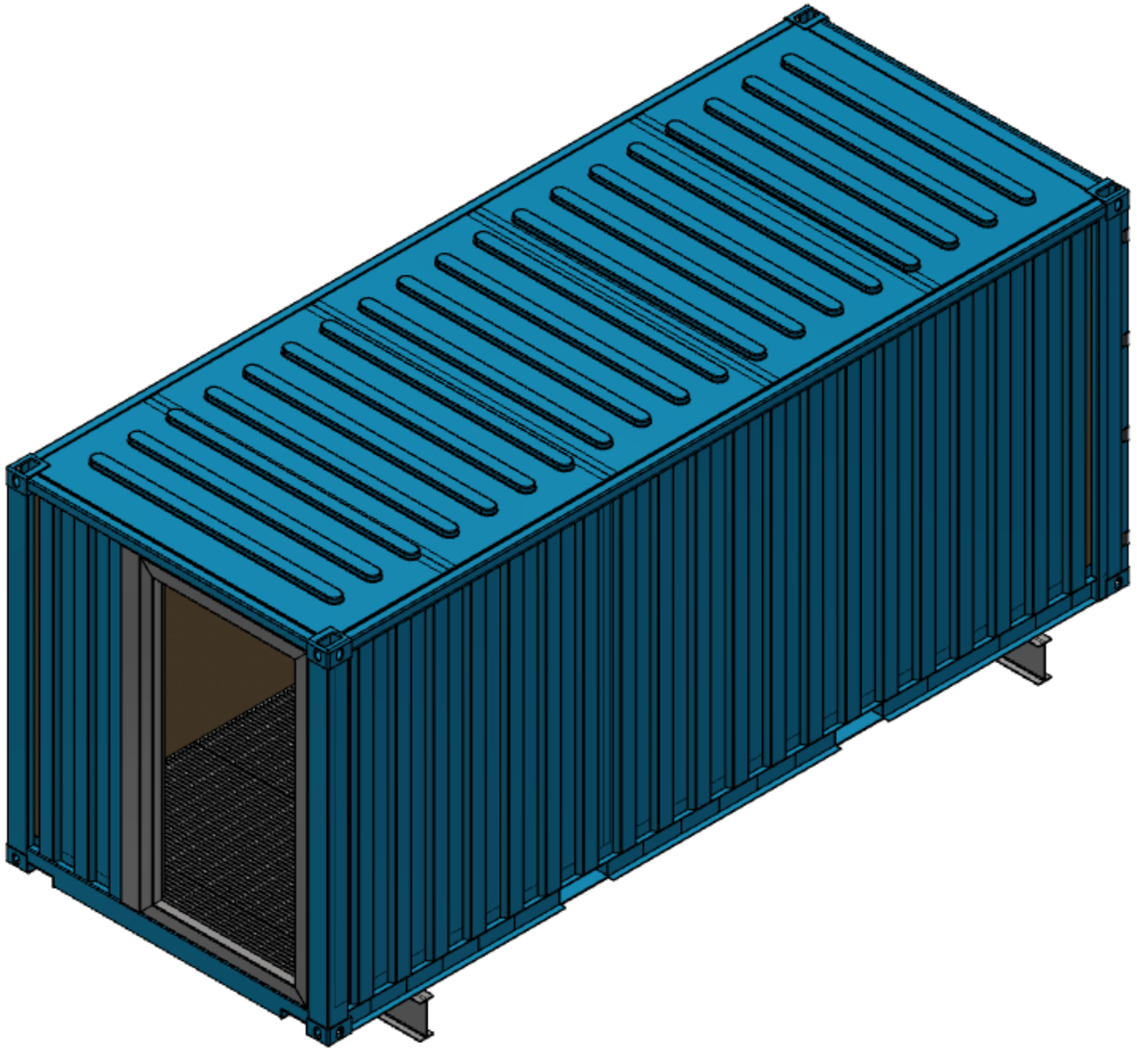
Y
Z
X

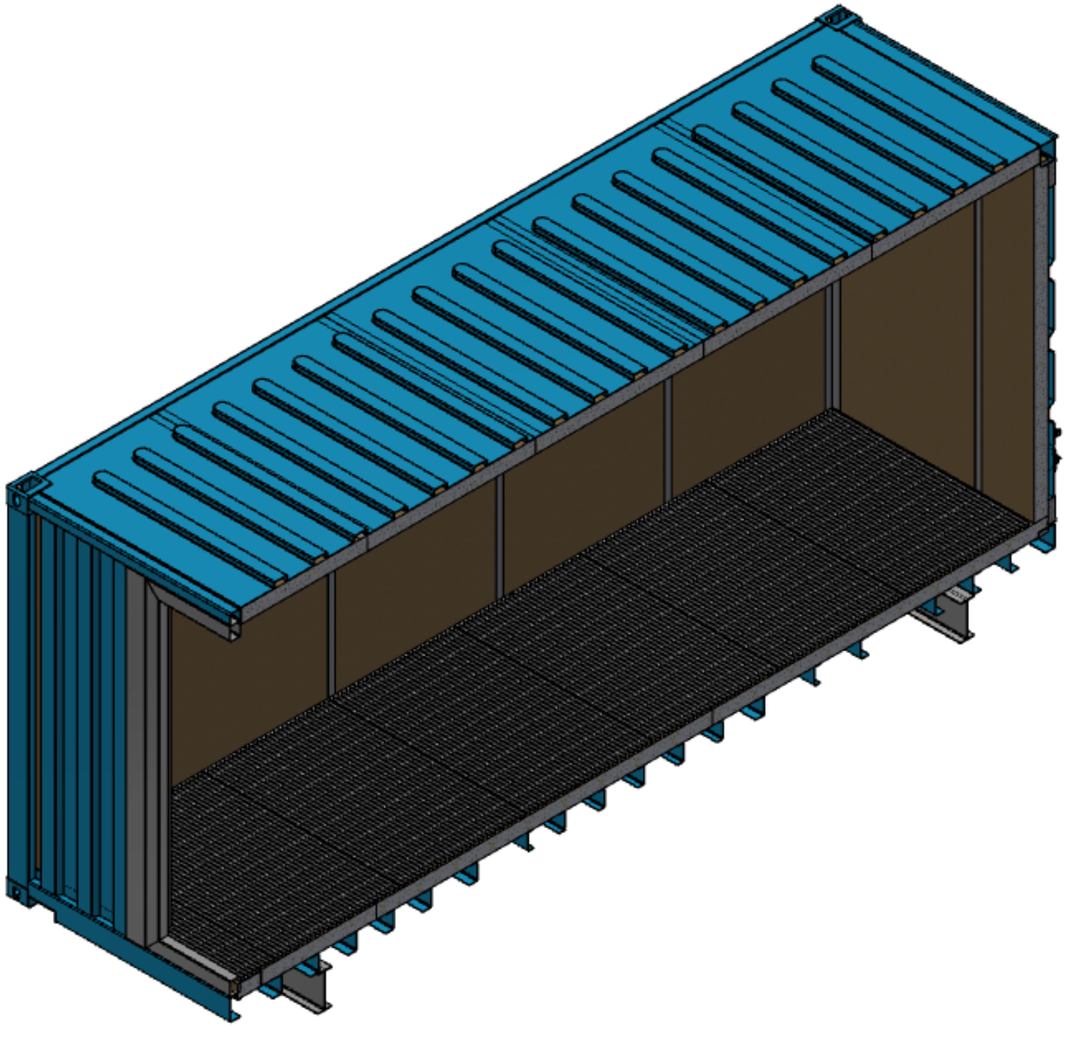
Y
Z
X

Liste de matériel (Pour 1 assemblage)						
# Pièces	Description	Grade	Détail	Epais.	Qté	Poids (lb)
AMP17-17 ST01	W250x22 X 8'-3 15/16" LG				2	124
AMP17-17 ST02	W250x22 X 15'-3 1/2" LG				2	226

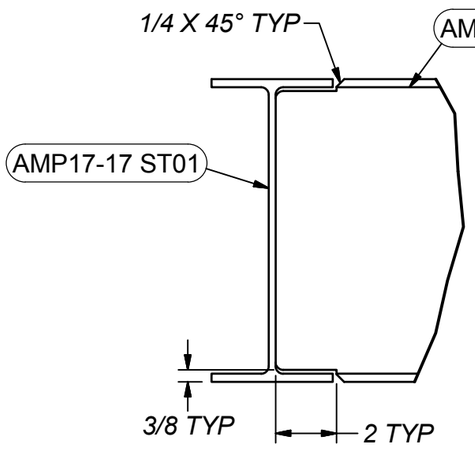

Détail A
Échelle 1 / 5

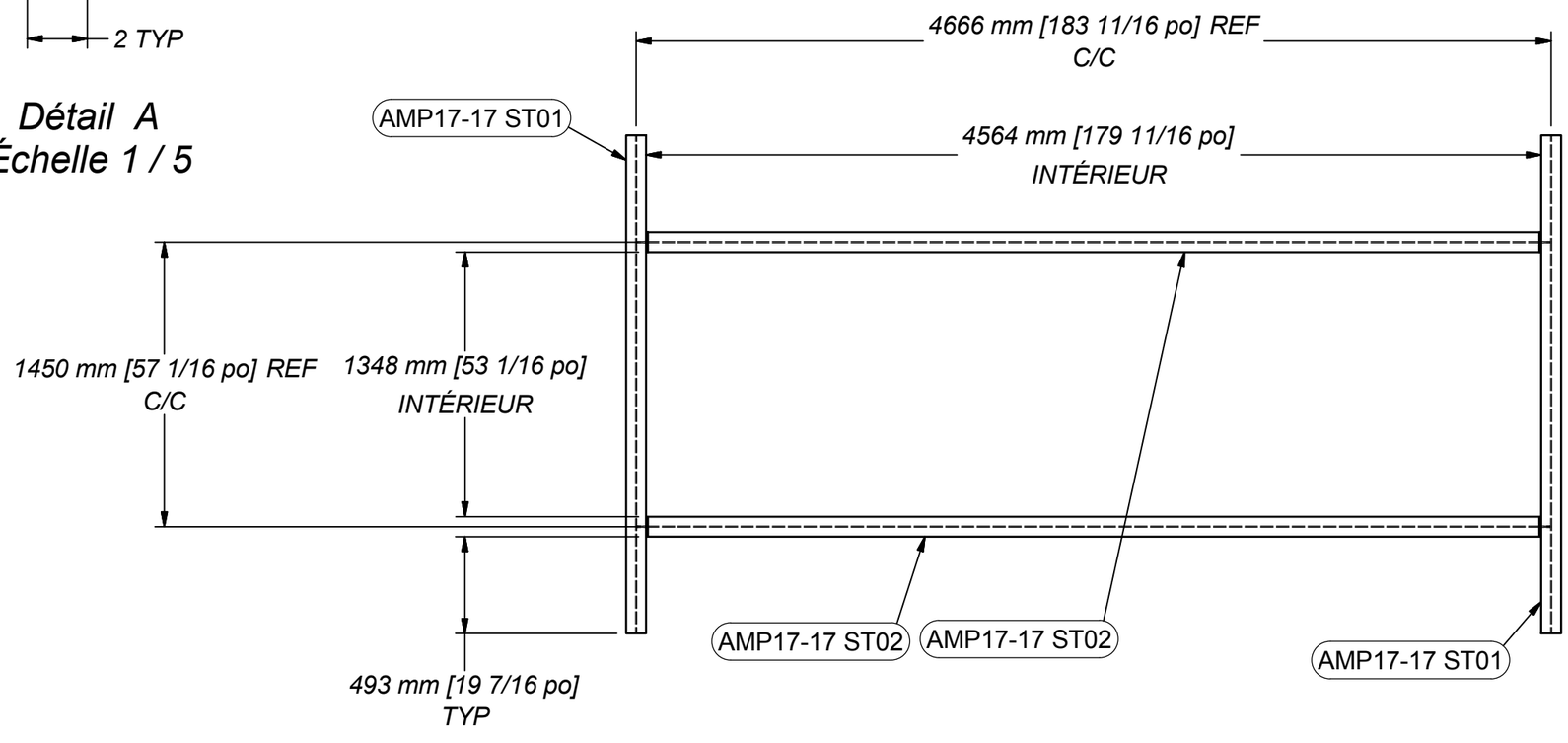

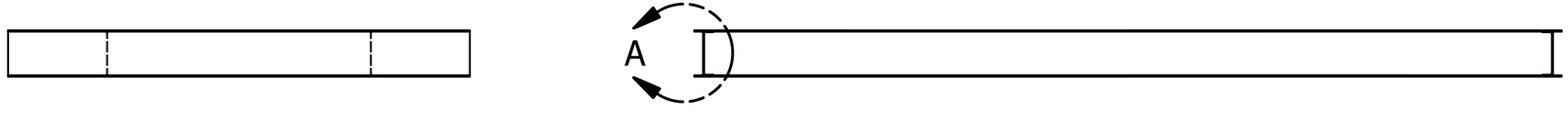

AIRMP.CA
Manufacturier de produits CVAC sur mesure

NOTES GÉNÉRALES :
GENERAL NOTES :

PROJET :
PROJECT # : **AMP17-17**

CLIENT :

TITRE :
TITLE :

PIECE :
PARTS : Electric room - Under structur

QTÉ :
QTY : req.

POIDS :
WEIGHT : 700 lb

SCEAU & SIGNÉ :
SEAL & SIGNED :

DESSINÉ :
DRAWN : Francis St-Pierre, Ing.

VÉRIFIÉ :
CHECKED : Richard Piquette

DATE : 2017-04-23

FEUILLE :
SHEET : 1 / 1

DESSIN REFERENCE :
REFERENCE DRAWING :

No. DESSIN :
DRAWING No. : **AMP17-17 ST_1**

REV: **0**

R:\Projets\AMP17-17\3 Dessins\Dessins de fabrication\ST - Structure\AMP17-17 ST_1.idw

ATTENTION, MESURER SUR PLACE POUR "NOTCHER"
LES FER ANGLE ET LA POUTRE CENTRALE CORRECTEMENT

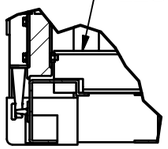

Détail C

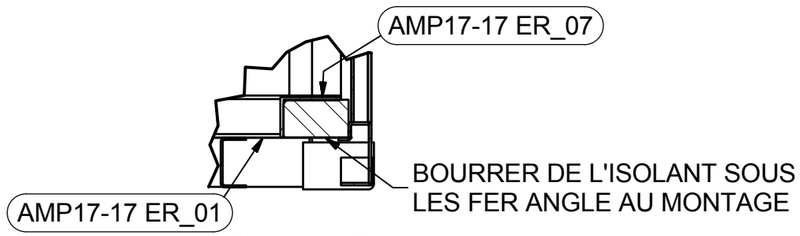

Détail D

Liste de matériel (Pour 1 assemblage)				
# Pièces	*Description*	*Grade*	*Qté*	*Poids (lb)*
AMP17-17 ST_1	*Electric room - Under structur*		*1*	*700*
Conteneur 20ft	*Conteneur de 20' - Plancher enlevé*		*1*	*1233*
AMP17-17 ER_01	*60" X 91" LG*	*3/16 GALV.*	*3*	*43*
AMP17-17 ER_02	*48 5/16" X 91" LG*	*3/16 GALV.*	*1*	*34*
AMP17-17 ER_03	*HSS 3" x 4" x 1/8" - 92" LG*	*4 x 3 x 1/8*	*2*	*41*
AMP17-17 ER_04	*HSS 3" x 4" x 1/8" - 50" LG*	*4 x 3 x 1/8*	*2*	*21*
AMP17-17 ER_05	*W 4x13 - 230 1/2" Lg*	*W 4x13*	*1*	*249*
AMP17-17 ER_06	*ANLGE 4" x 6" x 5/16" - 230 1/2" LG*	*L 6 x 4 x 5/16*	*1*	*200*
AMP17-17 ER_06_MIR	*ANLGE 4" x x - LG*	*L 6 x 4 x 5/16*	*1*	*200*
AMP17-17 ER_07	*ANLGE 4" x 6" x 5/16" - 37 1/4" LG*	*L 6 x 4 x 5/16*	*2*	*32*
AMP17-17 ER_08	*5 3/4" X 92" LG*	*20 GAUGE GALV.*	*1*	*6*

***ATTENTION**, LONGUEURS À TITRE DE RÉFÉRENCE SEULEMENT*
CONFIRMER LES DIMENSIONS EXACTES EN MESURANT DANS LE CONTENEUR

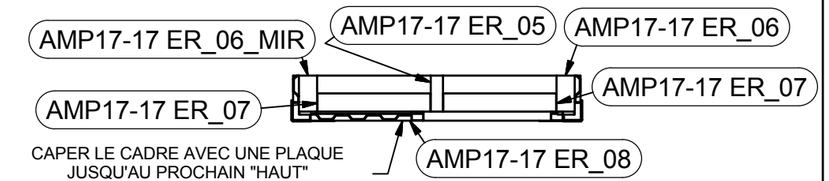

Section E-E

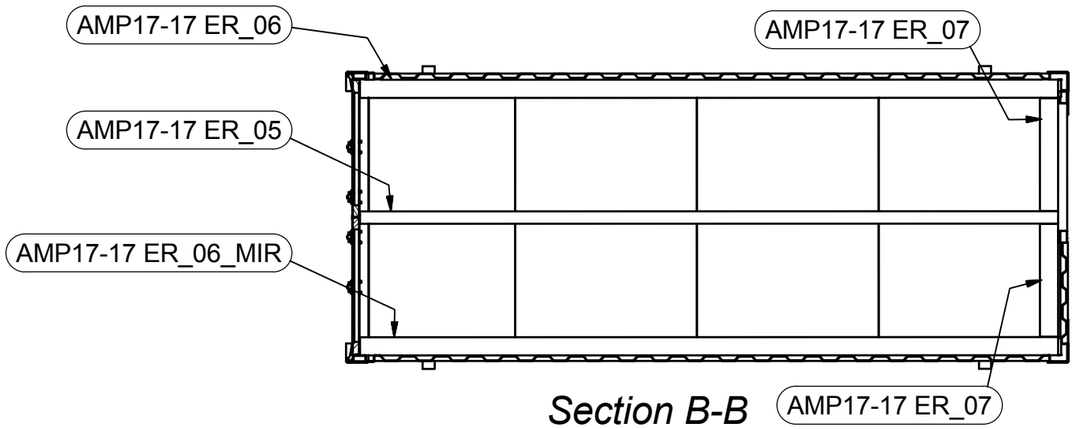

Section B-B

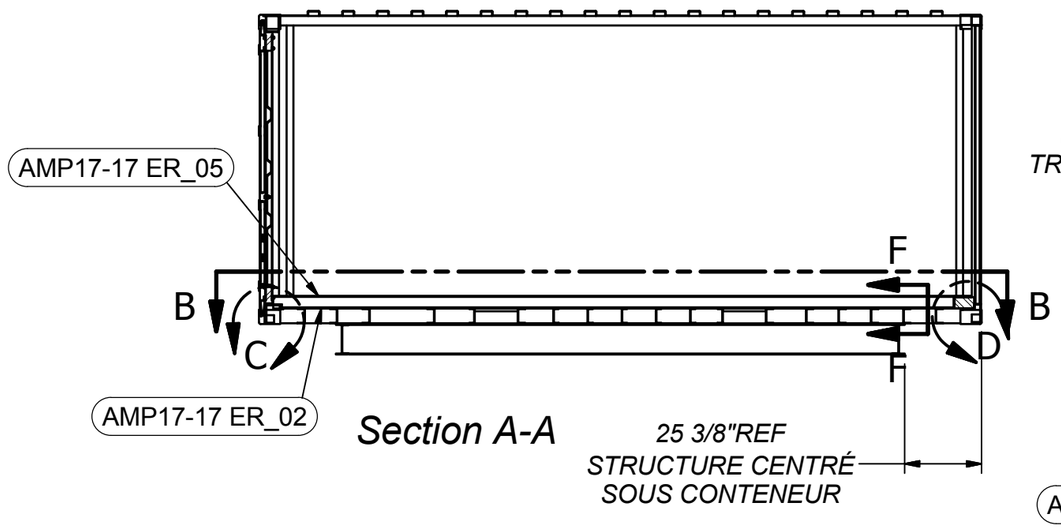

Section A-A

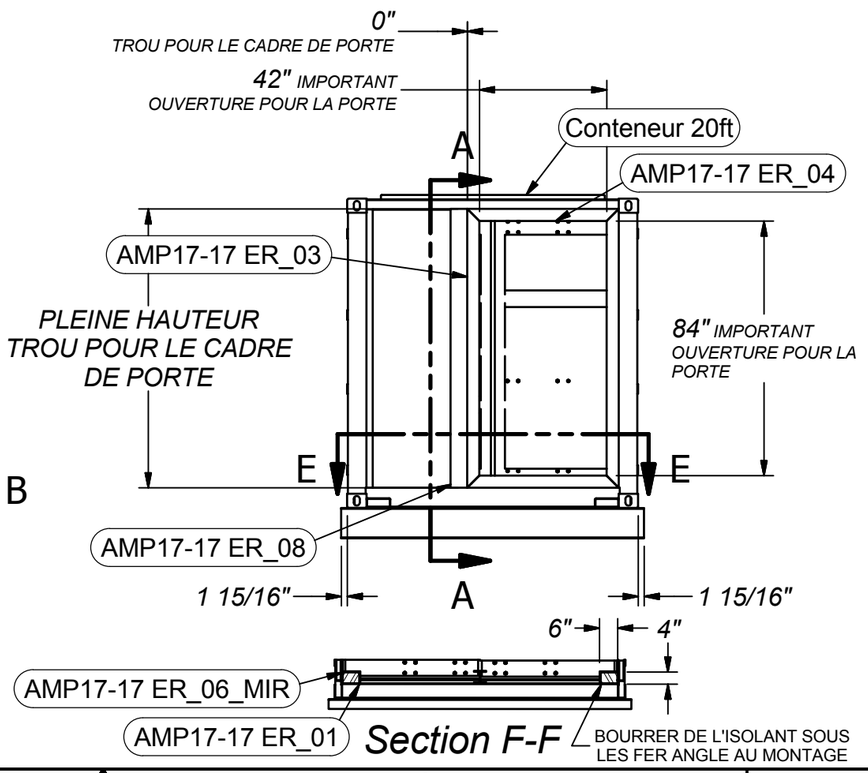

Section F-F

AIRMP.CA
Manufacturier de produits CVAC sur mesure

NOTES GÉNÉRALES :
GENERAL NOTES :

 # PROJET :
PROJECT # : **AMP17-17**

CLIENT :

TITRE :
TITLE :

PIECE :
PARTS : Electric room - Flooring & door frame

QTÉ :
QTY : req.

POIDS :
WEIGHT : 2916 lb

SCEAU & SIGNÉ :
SEAL & SIGNED :

DESSINÉ :
DRAWN : Francis St-Pierre, Ing.

VÉRIFIÉ :
CHECKED : Richard Piquette

DATE : 2017-04-23

FEUILLE :
SHEET : 1 / 1

DESSIN REFERENCE :
REFERENCE DRAWING :

No. DESSIN :
DRAWING No. : **AMP17-17 ER_4**

REV: **0**

R:\Projets\AMP17-17\3 Dessins\Dessins de fabrication\ER - electrical room\AMP17-17 ER_4.idw

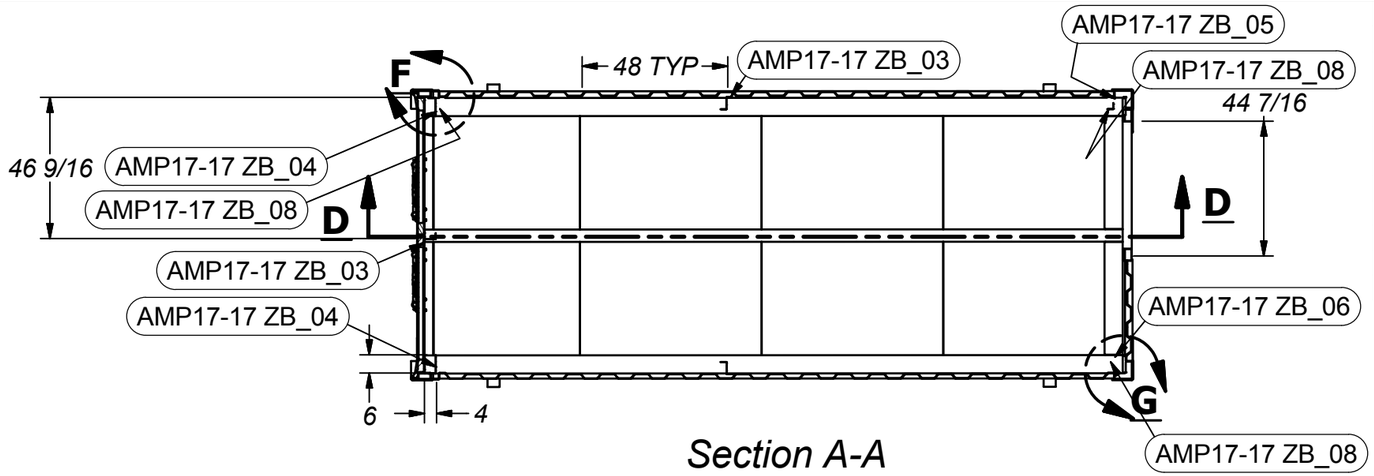

Section A-A

Liste de matériel (Pour 1 assemblage)				
# Pièces	Description	Grade	Qté	Poids (lb)
AMP17-17 ER_4	Electric room - Flooring & door frame		1	2916
AMP17-17 ZB_01	8" X 88 3/4" LG	18 GA. GALV.	8	8
AMP17-17 ZB_02	3 5/8" X 94" LG	18 GA. GALV.	2	4
AMP17-17 ZB_03	8" X 88 1/8" LG	18 GA. GALV.	9	8
AMP17-17 ZB_04	8 1/2" X 88 1/8" LG	18 GA. GALV.	2	8
AMP17-17 ZB_05	8 5/16" X 88 1/8" LG	18 GA. GALV.	1	8
AMP17-17 ZB_07	5" X 88 1/8" LG	18 GA. GALV.	1	5
AMP17-17 ZB_06	8" X 88 1/8" LG	18 GA. GALV.	1	8
AMP17-17 ZB_08	4" X 88 1/8" LG	18 GA. GALV.	4	4

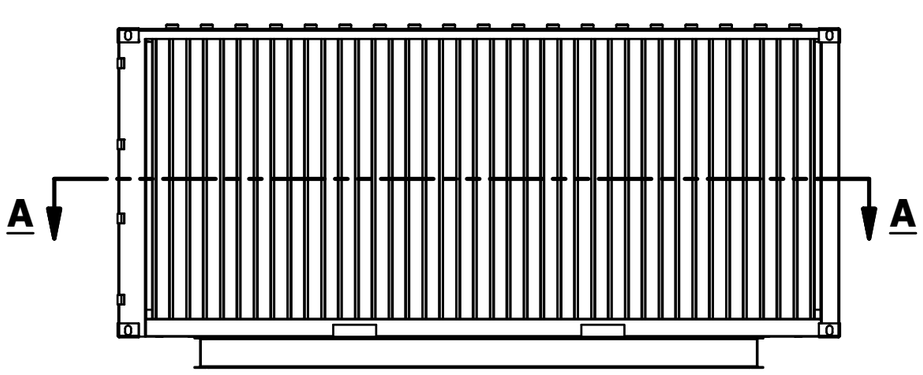

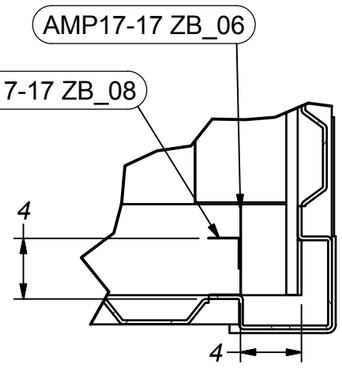

Détail G

NE PAS SOUDER LES Z-BARS SUR LES MURS, JUSTE EN BAS ET EN HAUT

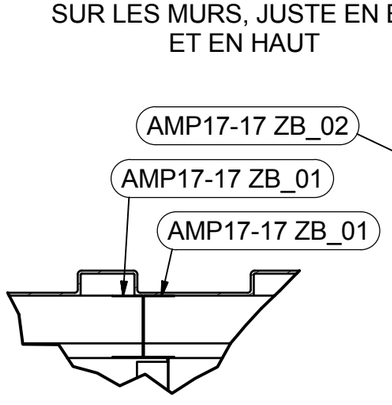

Détail E

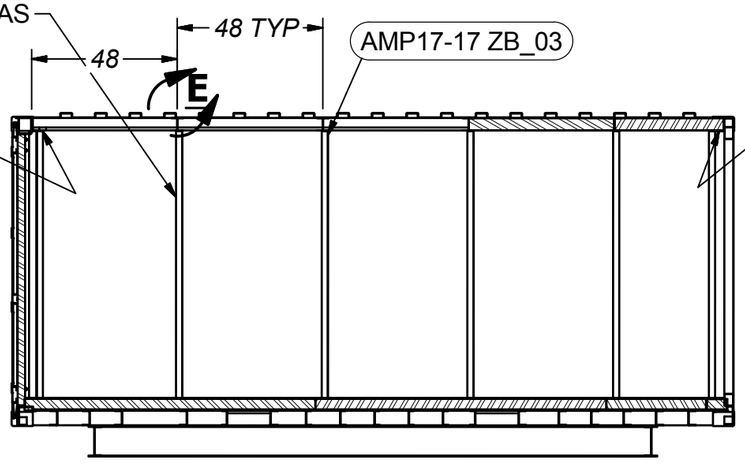

Section D-D

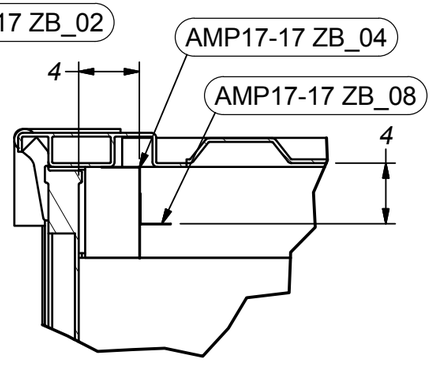

Détail F

AIRMP.CA
Manufacturier de produits CVAC sur mesure

NOTES GÉNÉRALES :
GENERAL NOTES :

 # PROJET :
PROJECT # : **AMP17-17**

CLIENT :

TITRE :
TITLE :

PIECE :
PARTS : Electric room - Z-BARS & insulation

QTÉ :
QTY : req.

POIDS :
WEIGHT : 3892 lb

SCEAU & SIGNÉ :
SEAL & SIGNED :

DESSINÉ :
DRAWN : Francis St-Pierre, Ing.

VÉRIFIÉ :
CHECKED : Richard Piquette

DATE : 2017-04-23

FEUILLE :
SHEET : 1 / 2

DESSIN REFERENCE :
REFERENCE DRAWING :

No. DESSIN :
DRAWING No. : **AMP17-17 ER_5**

REV: **0**

R:\Projets\AMP17-17\3 Dessins\Dessins de fabrication\ER - electrical room\AMP17-17 ER_5.idw

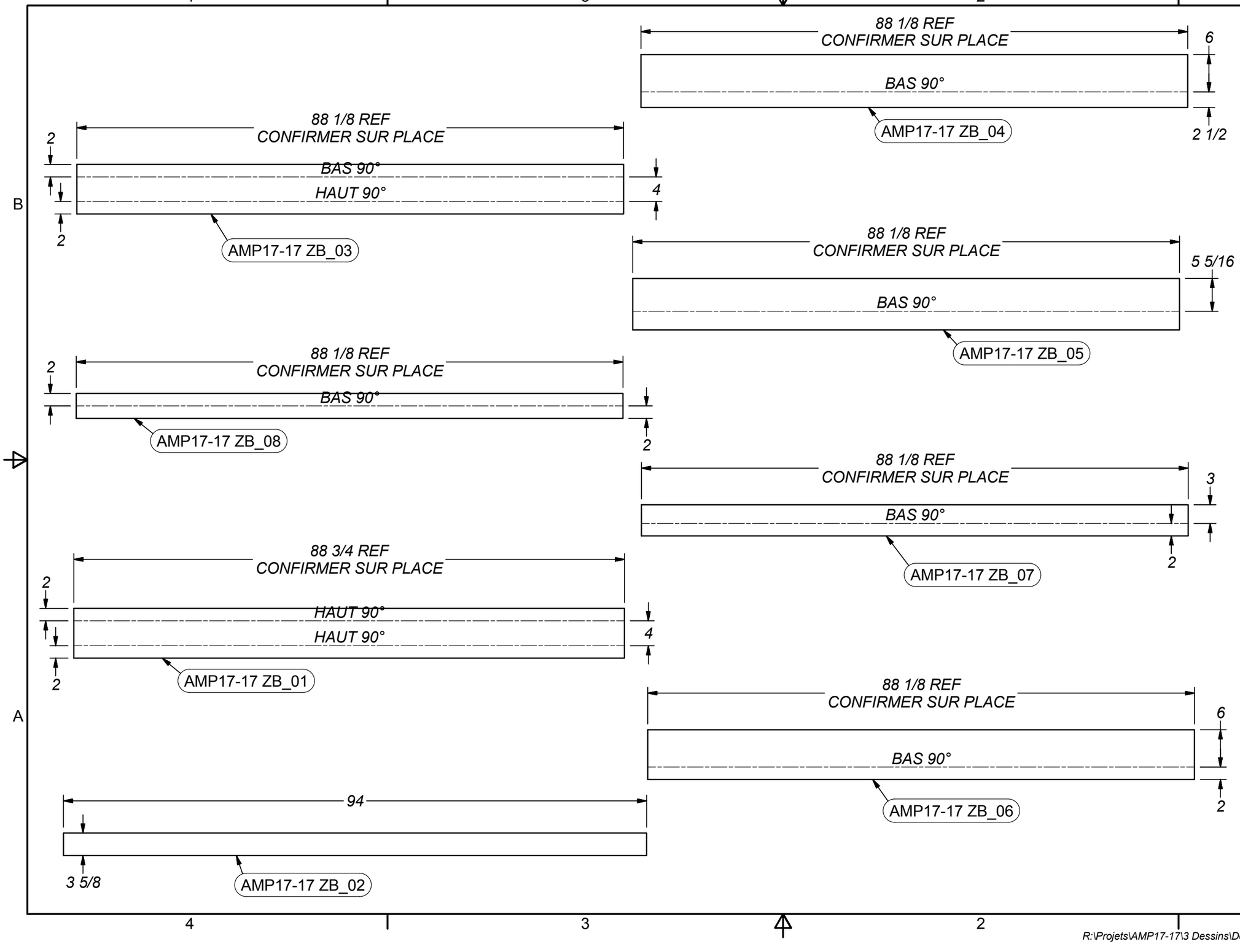

AIRMP.CA
Manufacturier de produits CVAC sur mesure

NOTES GÉNÉRALES :
GENERAL NOTES :

PROJET :
PROJECT # : **AMP17-17**

CLIENT :

TITRE :
TITLE :

PIECE :
PARTS : 8" X 88 3/4" LG

QTÉ :
QTY : req.

POIDS :
WEIGHT : 8 lb

SCEAU & SIGNÉ :
SEAL & SIGNED :

DESSINÉ :
DRAWN : Francis St-Pierre, Ing.

VÉRIFIÉ :
CHECKED : Richard Piquette

DATE : 2017-04-23

FEUILLE :
SHEET : 2 / 2

DESSIN REFERENCE :
REFERENCE DRAWING :

No. DESSIN :
DRAWING No. : **AMP17-17 ER_5**

REV: **0**

R:\Projets\AMP17-17\3 Dessins\Dessins de fabrication\ER - electrical room\AMP17-17 ER_5.idw

Liste de matériel (Pour 1 assemblage)						
# Pièces	Description	Grade	Détail	Epais.	Qté	Poids (lb)
AMP17-17 ER_5	Electric room - Z-BARS & insulation				1	3892
AMP17-17 ER_PL01	1 1/16" X 35 7/8" X 80 1/2" LG	GALV.			6	109
AMP17-17 ER_PL02_MIR	1 1/16" X 9 5/16" X 80 1/2" LG				1	23

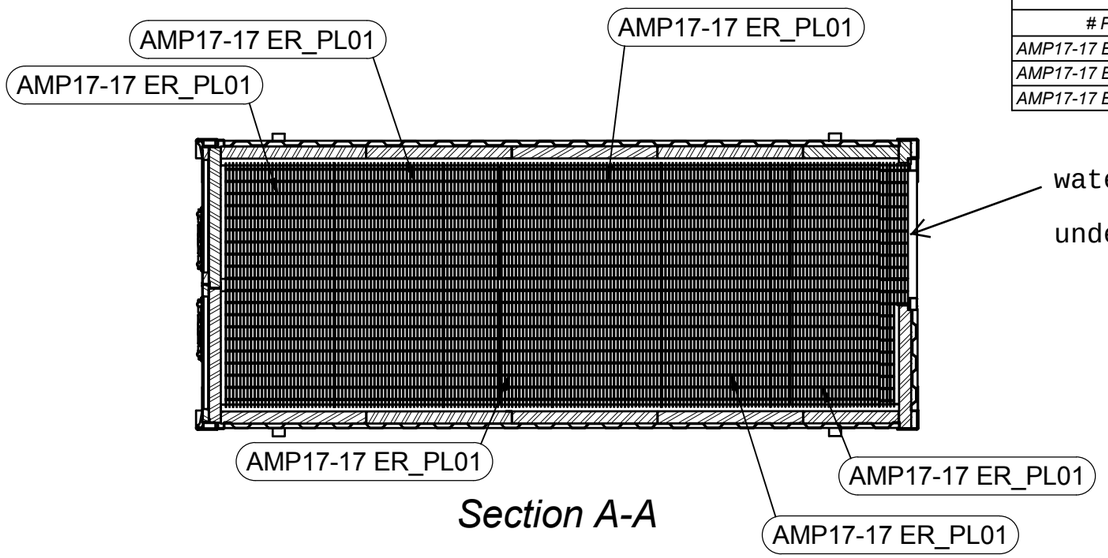

Section A-A

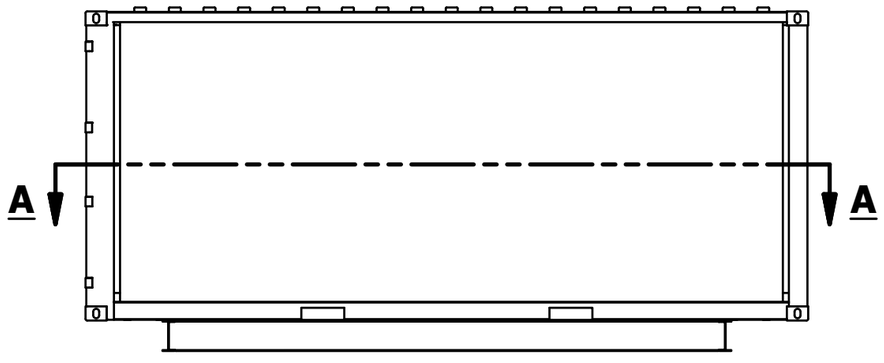

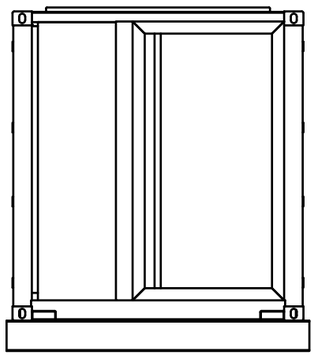

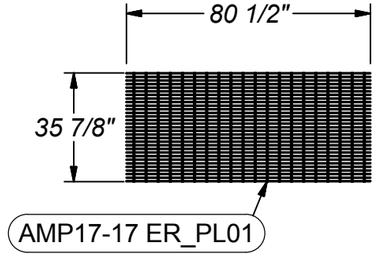

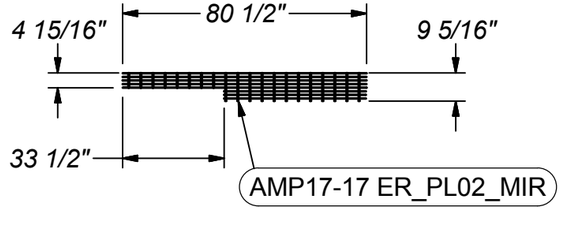

AIRMP.CA
Manufacturier de produits CVAC sur mesure

NOTES GÉNÉRALES :
GENERAL NOTES :

 # PROJET :
PROJECT # : **AMP17-17**

CLIENT :

TITRE :
TITLE :

PIECE :
PARTS : Electric room - Grating

QTÉ :
QTY : req.

POIDS :
WEIGHT : 4567 lb

SCEAU & SIGNÉ :
SEAL & SIGNED :

DESSINÉ :
DRAWN : Francis St-Pierre, Ing.

VÉRIFIÉ :
CHECKED : Richard Piquette

DATE : 2017-05-01

FEUILLE :
SHEET : 1 / 1

DESSIN REFERENCE :
REFERENCE DRAWING :

No. DESSIN :
DRAWING No. : **AMP17-17 ER_6**

REV: **0**

R:\Projets\AMP17-17\3 Dessins\Dessins de fabrication\ER - electrical room\AMP17-17 ER_6.idw

AIRMP.CA
Custom HVAC manufactured products

Inspection report – As built unit dimensions

Contract number : Amp17-17 (ER2-403) 1/2
Client : Groupe promec inc.

CLIENT IDENTIFICATION:					
Monitored points	**C**	**NC**	**NN**	**Comments**	**Reference documents**
Validation of dimensions according to plans	☑	☐	☐		
					C : complying NC : non-complying NN : not-needed

Verified by : Karen Gendreau-Lacoste **Signature :** Karen G. lacoste **Date :** 24 mai 2017

Reviewd by : Richard Piquette, Operations director **Signature :** _____ **Date :** _____

AIRMP.CA
Custom HVAC manufactured products

Inspection report - General

Contract number : Amp17-17 (ER2-403) 112
Client : Groupe promec inc.

CLIENT IDENTIFICATION:

1. General look of the container

Points subject to monitoring	C	NC	NN	Comments	Reference dosumentation
1,1 State of the doores (joints, windows, etc.)	☑	☐	☐		
1,2 General structure state	☑	☐	☐		
1,3 Inside finnish	☑	☐	☐		
1,4 Sticker installation (Coils, units, etc.)	☐	☐	☑		
1,5 Cleanliness	☑	☐	☐		
1,6 Sealant joints	☑	☐	☐		

C : complying NC : non-complying NN : not-needed

2. OTHER INTEGRATED EQUIPMENTS & TESTS						
	Points subject to monitoring	**C**	**NC**	**NN**	**Comments**	**Reference dosumentation**
2,1	Insulation (Installation as per specification)	☑	☐	☐		
2,2	Vents and piping	☐	☐	☑		
2,3	Watertight containment and drains	☐	☐	☑		
2,4	Filters and framing (state, type, number, arrangements, etc.)	☐	☐	☑		
2,5	Lights, sockets, switches (type, number, etc.)	☐	☐	☑		
2,6	Instrumentation (pressure, flow, temperature, etc.)	☐	☐	☑		
2,7	The state and disposition of other components (burner, water seperator, special filters, humidifier, electrical coils, etc.)	☐	☐	☑		
2,8	Silencers, valves, air scrubbers, etc.	☐	☐	☑		
2,9	Detailed pictures	☑	☐	☐		
2,10	Nameplates	☑	☐	☐		
					C : complying NC : non-complying NN : not-needed	

Verified by : Karen Gendreau-Lacoste **Signature :** Karen G. Lacoste **Date :** 24 mai 2017

Reviewed by : Richard Piquette, Operations director **Signature :** _____ **Date :** _____

AIRMP.CA
Custom HVAC manufactured products

Inspection report – Paint of the unit

Contract number : Amp17-17 (PS2-403)
Client : Groupe promec inc

CLIENT IDENTIFICATION:

Monitored points	C	NC	NN	Comments	Reference documents
Visual inspection :					
Runs	☑	☐	☐		
Misses/voids	☑	☐	☐		
Scrtches	☑	☐	☐		
Dry film thickness	☑	☐	☐		
				C : complying	**NC : non-complying NN : not needed**

Verified by : Karen Gendreau-Lacoste **Signature :** Karen G. lacoste **Date :** 8 Juin 2017

Reviewed by : Richard Piquette, Operations director **Signature :** _____ **Date :** _____

AIRMP.CA
Custom HVAC manufactured products

Inspection report – Paint of base

Contract number : Amp17-17 (PS2-403)
Client : Groupe promec inc.

CLIENT IDENTIFICATION:

Monitored points	C	NC	NN	Comments	Reference documents
Visual inspection :					
Runs	☑	☐	☐		
Misses/voids	☑	☐	☐		
Scrtches	☑	☐	☐		
Dry film thickness	☑	☐	☐		
				C : complying	**NC : non-complying** **NN : not needed**

Verified by : Karen Gendreau-Lacoste **Signature :** Karen G. lacoste **Date :** 8 Juin 2017

Reviewed by : Richard Piquette, Operations director **Signature :** _____ **Date :** _____

AIRMP.CA
Custom HVAC manufactured products

TABLE OF MEASURMENTS

BASE

SPOT -->	1	2	3	4	5	AVERAGE DFT FOR EPOXY	AVERAGE WANTED DFT
1	6,4	6,4	5,2	6,1	6,3		
2	6,9	6,5	6	5,7	7,1		
3	8,2	6,7	6,1	5,5	6		
AVERAGE	7,17	6,53	5,77	5,77	6,47	6,34	6 TO 12 mils

MAKE MODEL TEST EQUIPMENT : PosiTest DFT

SERIAL# TEST EQUIPMENT : A 13938F

STANDARD CALIBRATION USED : PLASTIC SHIM

DATE: 08-juin-17

PROJECT : Amp17-17 PS2-403 1/2

Verified by : Karen Gendreau-Lacoste

Reviewed by : Richard Piquette, Operations director

SIGNATURE : Karen G. lacoste

SIGNATURE :

AIRMP.CA
Custom HVAC manufactured products

TABLE OF MEASURMENTS

UNIT - NORTH WALL

SPOT -->	1	2	3	4	5	AVERAGE DFT FOR EPOXY	AVERAGE WANTED DFT
1	4,6	4,7	4,8	6,1	5,9		
2	4,7	4,2	4,6	5,1	4,9		
3	4,9	4,8	5,6	5,8	4,6		
AVERAGE	4,73	4,57	5,00	5,67	5,13	5,02	5 TO 6,8 mils

UNIT - SOUTH WALL

SPOT -->	1	2	3	4	5	AVERAGE DFT FOR EPOXY	AVERAGE WANTED DFT
1	7,6	5,4	5,5	7,4	5,1		
2	7,3	5,5	5	7,2	4,7		
3	7,6	5,2	5,7	7,1	4,8		
AVERAGE	7,50	5,37	5,40	7,23	4,87	6,07	5 TO 6,8 mils

AIRMP.CA
Custom HVAC manufactured products

TABLE OF MEASURMENTS

UNIT - EAST WALL

SPOT -->	1	2	3	4	5	AVERAGE DFT FOR EPOXY	AVERAGE WANTED DFT
1	4,4	4,5	5,7	5,1	5,3		
2	4,9	4,2	5,5	5,6	5,2		
3	4,8	4,7	5,4	5,3	5,1		
AVERAGE	4,70	4,47	5,53	5,33	5,20	5,04	5 TO 6,8 mils

UNIT - WEST WALL

SPOT -->	1	2	3	4	5	AVERAGE DFT FOR EPOXY	AVERAGE WANTED DFT
1	5,2	5,2	5,6	4,6	5,8		
2	5,6	5,7	5,4	4,8	5,8		
3	5,5	5,2	5,2	4,5	5,4		
AVERAGE	5,43	5,37	5,40	4,63	5,67	5,3	5 TO 6,8 mils

AIRMP.CA
Custom HVAC manufactured products

TABLE OF MEASURMENTS

UNIT - ROOF

SPOT -->	1	2	3	4	5	AVERAGE DFT FOR EPOXY	AVERAGE WANTED DFT
1	7,8	6,7	5,3	6,3	6,1		
2	7,6	6,5	5,6	6	5,3		
3	7,2	6,3	5,5	6,1	5,7		
AVERAGE	7,53	6,50	5,47	6,13	5,70	6,27	5 TO 6,8 mils

MAKE MODEL TEST EQUIPMENT : PosiTest DFT

SERIAL# TEST EQUIPMENT : A 13938F

STANDARD CALIBRATION USED : PLASTIC SHIM

DATE: 08-juin-17

PROJECT : amp17-17 PS2-403 1/2

Verified by : Karen Gendreau-Lacoste

Reviewed by : Richard Piquette, Operations director

SIGNATURE : Karen G. Lacoste

SIGNATURE :

AIRMP.CA
Custom HVAC manufactured products

Inspection report – Paint of the unit

Contract number : AMP17-17 (ER2-403) 1/2
Client : Groupe promec inc.

CLIENT IDENTIFICATION:

Monitored points	C	NC	NN	Comments	Reference documents
Visual inspection :					
Runs	☑	☐	☐		
Misses/voids	☑	☐	☐		
Scrtches	☑	☐	☐		
Dry film thickness	☑	☐	☐		
				C : complying	**NC : non-complying** **NN : not needed**

Verified by : Karen Gendreau-Lacoste **Signature :** Karen G. Lacoste **Date :** 24 mai 2017

Reviewed by : Richard Piquette, Operations director **Signature :** _____ **Date :** _____

AIRMP.CA
Custom HVAC manufactured products

Inspection report – Paint of base

Contract number : Amp17-17 (ER2-403) 1/2
Client : Groupe Promec inc.

CLIENT IDENTIFICATION:

Monitored points	C	NC	NN	Comments	Reference documents
Visual inspection :					
Runs	☑	☐	☐		
Misses/voids	☑	☐	☐		
Scrtches	☑	☐	☐		
Dry film thickness	☑	☐	☐		
				C : complying	**NC : non-complying NN : not needed**

Verified by : Karen Gendreau-Lacoste **Signature :** Karen G. lacoste **Date :** 24 mai 2017

Reviewed by : Richard Piquette, Operations director **Signature :** _____ **Date :** _____

AIRMP
Custom HVAC manufactured products

TABLE OF MEASURMENTS

BASE

SPOT -->	1	2	3	4	5	AVERAGE DFT FOR EPOXY	AVERAGE WANTED DFT
1	11,3	8,6	9,5	7,8	7,9		
2	9,1	7,9	9,1	7,8	7,8		
3	11,6	8,7	9,7	6,9	8		
AVERAGE	10,67	8,40	9,43	7,50	7,90	8,78	6 TO 12 mils

MAKE MODEL TEST EQUIPMENT : PosiTest DFT

SERIAL# TEST EQUIPMENT : A 13938F

STANDARD CALIBRATION USED : PLASTIC SHIM

DATE: 24 mai 2017

PROJECT : Amp17-17 ER2-403 1/2

Verified by : Karen Gendreau-Lacoste

Reviewed by : Richard Piquette, Operations director

SIGNATURE : Karen G.Lacoste

SIGNATURE : _____

AIRMP.CA
Custom HVAC manufactured products

TABLE OF MEASURMENTS

UNIT - EAST WALL

SPOT -->	1	2	3	4	5	AVERAGE DFT FOR EPOXY	AVERAGE WANTED DFT
1	7,9	7,1	6,9	6,5	6,6		
2	8,7	6,9	7,7	6,6	7,1		
3	8,7	7,7	6,6	6,7	6,8		
AVERAGE	8,43	7,23	7,07	6,60	6,83	7,23	5 TO 6,8 mils

UNIT - WEST WALL

SPOT -->	1	2	3	4	5	AVERAGE DFT FOR EPOXY	AVERAGE WANTED DFT
1	7,4	7,2	6,3	6,8	7,9		
2	8,1	7,5	6,4	7,3	8,4		
3	8,4	7,5	5,9	7,4	8,4		
AVERAGE	7,97	7,40	6,20	7,17	8,23	7,39	5 TO 6,8 mils

AIRMP CA
Custom HVAC manufactured products

TABLE OF MEASURMENTS

UNIT - NORTH WALL

SPOT -->	1	2	3	4	5	AVERAGE DFT FOR EPOXY	AVERAGE WANTED DFT
1	6,9	5,9	8	7,1	8,3		
2	6,7	6,1	7,6	7,3	8,7		
3	6,3	6,2	8	7,2	7,4		
AVERAGE	6,63	6,07	7,87	7,20	8,13	7,18	5 TO 6,8 mils

UNIT - SOUTH WALL

SPOT -->	1	2	3	4	5	AVERAGE DFT FOR EPOXY	AVERAGE WANTED DFT
1	6,1	7,4	6	8,7	5,3		
2	5,7	7,2	6,2	9	5,3		
3	5,6	7,1	5,9	9	6,3		
AVERAGE	5,80	7,23	6,03	8,90	5,63	6,72	5 TO 6,8 mils

AIRMP.CA
Custom HVAC manufactured products

TABLE OF MEASURMENTS

UNIT - ROOF

SPOT -->	1	2	3	4	5	AVERAGE DFT FOR EPOXY	AVERAGE WANTED DFT
1	10,2	8,4	8,4	9	7,1		
2	10,7	8,4	8,6	8,8	7,6		
3	10	8,7	7,5	9,7	8		
AVERAGE	10,30	8,50	8,17	9,17	7,57	8,74	5 TO 6,8 mils

MAKE MODEL TEST EQUIPMENT : PosiTest DFT

SERIAL# TEST EQUIPMENT : A 13938F

STANDARD CALIBRATION USED : PLASTIC SHIM

DATE: 24-mai-17

PROJECT : amp17-17 ER2-403 1/2

Verified by : Karen Gendreau-Lacoste

Reviewed by : Richard Piquette, Operations director

SIGNATURE : Karen G. Lacoste

SIGNATURE :

AGNICO EAGLE

Vendor Document Status

1 ☐ Proceed to next submission and status.

2 ☐ Proceed with exceptions as noted to next submission and status.

3 ☐ Do not proceed.
Revise as noted and resubmit next submission and status.

4 ☑ Complete, no further submission required.

By: JEAN-FRANCOIS TREMBLAY Date: 2017-05-16

Review and authorization to fabricate are only for general conformance with the design concept of the Project as expressed in the Contract Documents. Sole responsibility for the accuracy and completeness of this document, including but not limited to dimensions and quantities, remains with the Supplier/Contractor. Agnico Eagle does not warrant the accuracy or completeness of any of the information contained herein, nor does Agnico Eagle authorize or approve any construction means, methods, techniques, sequences or any safety precautions or procedures.

Agnico Eagle No. 6515-C-270-007-141-TES-0046 R: Sub001

DOCUMENT FOR INFORMATION

Agnico-Eagle Mines Ltd.
Walkways and Stairways Check List

ITR Number : AEM-ME-ITR-004
Contract no. : C22466T

SYSTEM: FUEL TANKS FARM	TAG NO. N/A	
LOCATION: PORTAIL #1	AREA: ALL	UNIT:

Check when satisfactory. If not satisfactory, include nonconformance report, control and re-inspect when correct

DESCRIPTION	STATUS	REMARKS
1. Installed in accordance with drawings and specifications		
2. Stairs and ladders are securely anchored		
3. Bolts are correct type and length		
4. Bolts tightened (indicated by the burnishing or preening of the corners by the impact wrench)		
5. Ladders and stairs are free of obstructions and are the correct width		
6. The first and last rung of stair riser is the correct height from grade or a platform		
7. Safety chains or bars are installed at ladder openings		
8. Hand grip surfaces on hand rails and ladders are ground smooth		
9. Toe plate is rigid and installed at all required locations		
10. Handrails & toe plates terminating at structural members are welded at structural joint		
11. Penetrations of pipe, ducts and conduit through platforms are located properly, correct size and banded with toe plates		
12. All grating secured to support steel with removable saddle clip anchors		
13. All paint and galvanized damaged areas have been touched up		
14. Ensure all valve operators, chain operators and access to valve handles		
15. Verify proper installation of fall arrest anchor points		

COMMENTS: WILL BE COMPLETED NEXT YEAR, INSTALLATION NOT COMPLETE

PROMEC DESIGNATE - SIGNATURE	TITLE	DATE
CLIENT DESIGNATE - SIGNATURE	TITLE	DATE

16 mai 2017 21:27:16, marcli, C:\Mario Cliche EXP\Clients\Normex\Escaliers reservoir\60 Réalisation\999-00048075-PP — Escalier pour réservoir\Details\VUE ISO.dwg

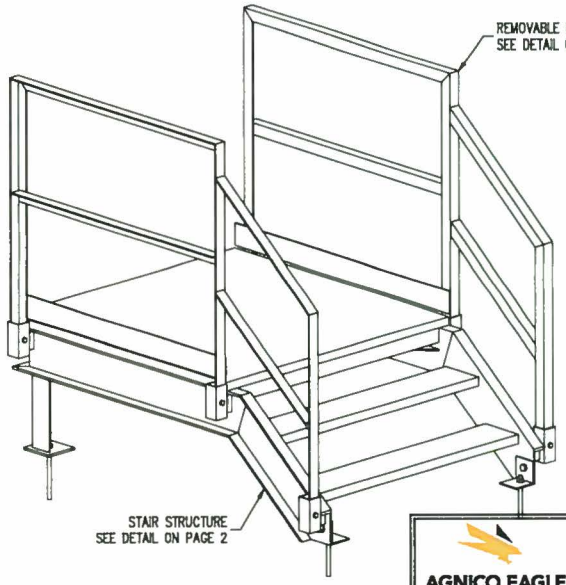

ISOMETRIC VIEW
CONTAINER CATWALK

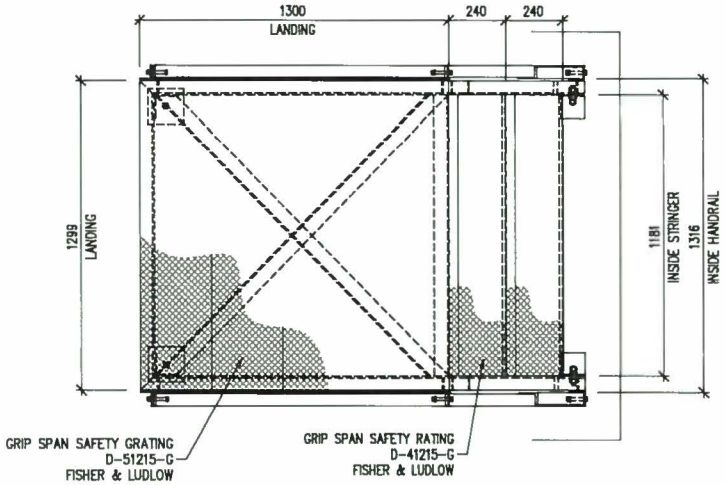

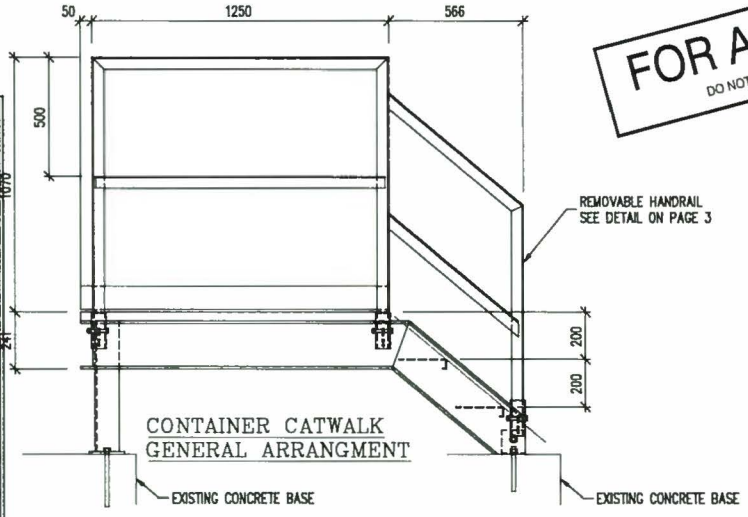

CONTAINER CATWALK
GENERAL ARRANGMENT

FOR APPROVAL
DO NOT USE FOR FABRICATION

WSP — SHOP DRAWING DATA SHEET

Affixing this stamp confirms that an administrative approval and/or a verification of compliance with shop drawings or specifications was made, but does not entail the liability of the author of the work or its owner with regards to this shop drawing or data sheet, for which the contractor is the sole responsible.

☑ Reviewed ☐ Reviewed as noted
☐ Rejected ☐ Filed for records

The contractor, supplier and/or sub-contractor is responsible for: confirming and coordinating all quantities and dimensions; selecting fabrication processes and techniques of construction; coordinating his or her work with that of all other trades and performing all work in a safe and satisfactory manner.

By: Joël Morliere Date: 2017/05/23

G-ADM-ZZZ-42-11E-2 Project # 151-06440-40

AGNICO EAGLE — Vendor Document Status

1 ☐ Proceed to next submission and status.
2 ☐ Proceed with exceptions as noted to next submission and status.
3 ☐ Do not proceed. Revise as noted and resubmit next submission and status.
4 ☑ Complete, no further submission required.

By: Joël Morliere Date: 2017-05-23

Review and authorization to fabricate are only for general conformance with the design concept of the Project as expressed in the Contract Documents. Sole responsibility for the accuracy and completeness of this document, including but not limited to dimensions and quantities, remains with the Supplier/Contractor. Agnico Eagle does not warrant the accuracy or completeness of any of the information contained herein, nor does Agnico Eagle authorize or approve any construction means, methods, techniques, sequences or any safety precautions or procedures.

Agnico Eagle No. 6515-C-270-007-245-SPD-0001 R: Sub001

DOCUMENT FOR INFORMATION

Révision :			
AA	2017-05-10	FOR APPROVAL	MC
No	Date (a-m-j)	Description	Par

Client :
NORMEX
LA SARRE, QUEBEC
(TEL.)819-333-1200
(FAX)819-333-1212

exp.
Les Services exp inc.
T : +1.819.762.2888 | F : +1.819.762.4814
25, 15e Rue, bureau 200
Rouyn-Noranda, QC J9X 2N3
CANADA
www.exp.com

Projet :	AGNICO EAGLE - MELIADINE DIVISION - FUEL DISTRIBUTION
Titre :	CONTAINER CATWALK STRUCTURAL GENERAL ARRANGEMENT
Approuvé par : JONATHAN FAUCHER ing	Dessiné par : MARIO CLICHE ing. — Date : 2017-05-10 — Page : 1 de 4
Dossier : 999-00048075-PP	Numéro de dessin : NMOI - 00048075 - A0 - S01 - AA

16 mai 2017 21:26:56, marcij, C:\Mario Cliche EXP\Clients\Normex\Escaliers reservoir\60 Réalisation\999-00048075-PP - Escalier pour réservoir\Details\GA_Page 2.dv

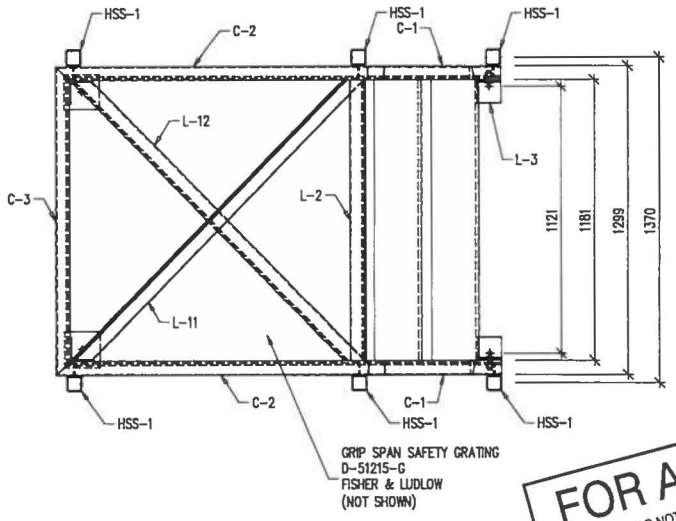

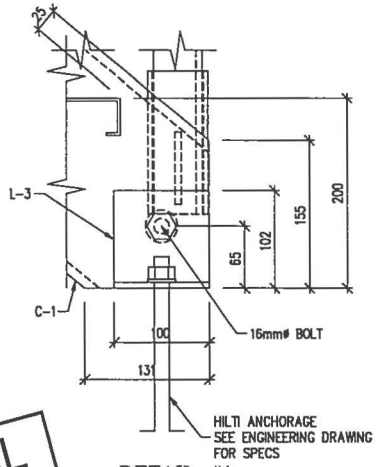

DETAIL #1

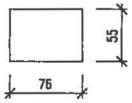

6x PL-1 PL 6.3x55x76-A36

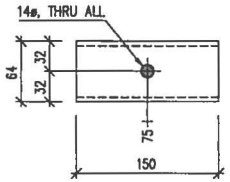

6x HSS-1 HS64x64x4.8-A500

FOR APPROVAL
DO NOT USE FOR FABRICATION

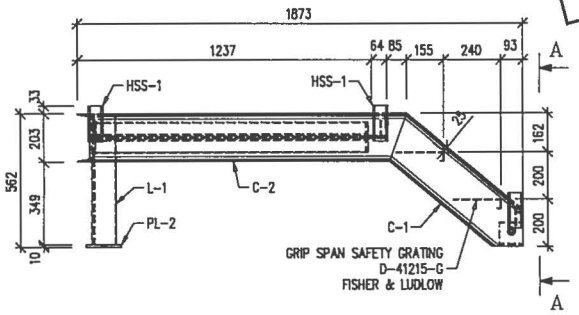

1 REQ'D STAIR STRUCTURE ARRANGEMENT

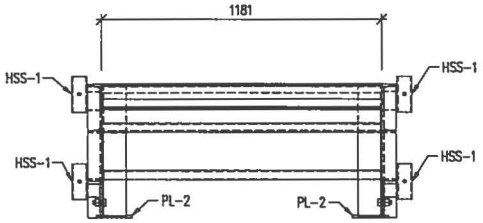

SECTION "A - A"

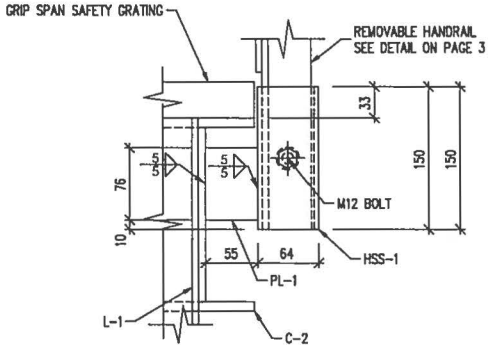

DETAIL #1

Révision :			
AA	2017-05-10	FOR APPROVAL	MC
No	Date (a-m-j)	Description	Par

Client

NORMEX
LA SARRE, QUEBEC
(TEL.)819-333-1200
(FAX)819-333-1212

exp.
Les Services exp inc.
T: +1.819.762.2686 | F: +1.819.762.4814
26, 19e Rue, bureau 200
Rouyn-Noranda, QC J9X 2M3
CANADA
www.exp.com

Projet :	AGNICO EAGLE - MELIADINE DIVISION - FUEL DISTRIBUTION		
Titre :	CONTAINER CATWALK STRUCTURAL STAIR DETAILS		
Approuvé par : JONATHAN FAUCHER ing.	Dessiné par : MARIO CLICHE ing.	Date : 2017-05-10	Page : 2 de 4
Dossier : 999-00048075-PP	Numéro de dessin : NMOI - 00048075 - A0 - S01 - AA		

16 mai 2017 21:25:46, marcil, C:\Mario Cliche EXP\Clients\Normex\Escaliers reservoir\60 Réalisation\999-00048075-PP - Escalier pour réservoir\Details\DETAIL STAIR.

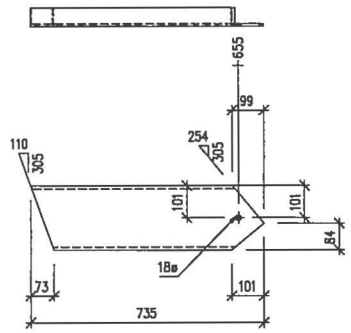

1L/1R C-1 C200x21-300W

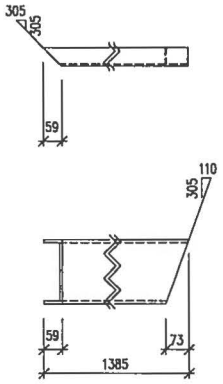

1L/1R C-2 C200x21-300W



FOR APPROVAL
DO NOT USE FOR FABRICATION

1x C-3 C200x21-300W

2x PL-2 PL 10x150x150-A36



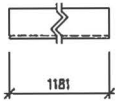

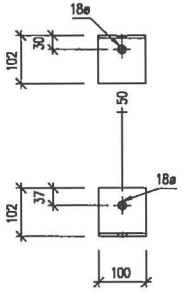

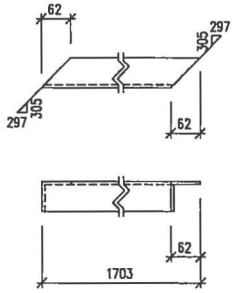

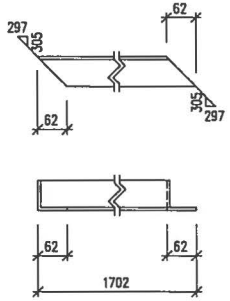

2x L-1 L102X102X6.4-300W 1x L-2 L64X64X6.4-300W 2x L-3 L102X102X6.4-300W 1x L-12 L64X64X6.4-300W 1x L-11 L64X64X6.4-300W

Révision :			
AA	2017-05-10	FOR APPROVAL	MC
No	Date (a-m-j)	Description	Par

Client :

NORMEX
LA SARRE, QUEBEC
(TEL.)819-333-1200
(FAX)819-333-1212

exp.
Les Services exp inc.
t : +1.819.762.2868 | f : +1.819.762.4814
76, 19e Rue, bureau 200
Rouyn-Noranda, QC J9X 2M3
CANADA
www.exp.com

Projet :	AGNICO EAGLE - MEADOWBANK DIVISION - FUEL DISTRIBUTION		
Titre :	CONTAINER CATWALK STRUCTURAL STAIR DETAILS		
Approuvé par : JONATHAN FAUCHER ing.	Dessiné par : MARIO CLICHE ing.	Date : 2017-05-10	Page : 3 de 4
Dossier : 999-00048075-PP	Numéro de dessin : NMOI - 00048075 - A0 - S01 - AA		

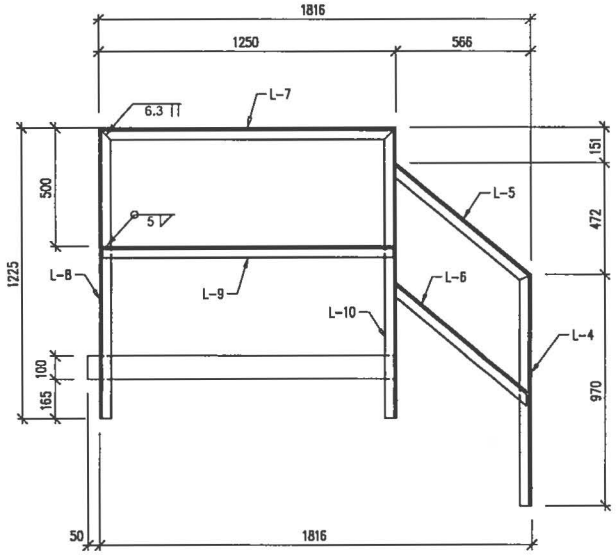

1L/1R REQ'D REMOVABLE HANDRAIL ARRANGEMENT

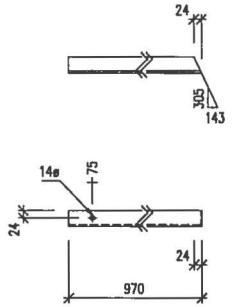

2x L-4 L51X51X6.4-300W

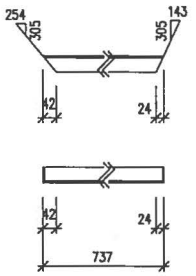

2x L-5 L51X51X6.4-300W

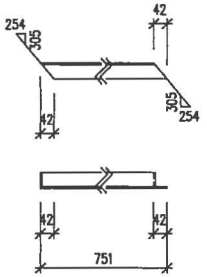

2x L-6 L51X51X6.4-300W

FOR APPROVAL
DO NOT USE FOR FABRICATION

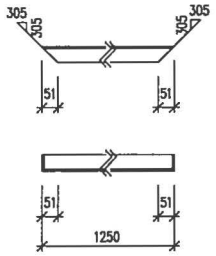

2x L-7 L51X51X6.4-300W

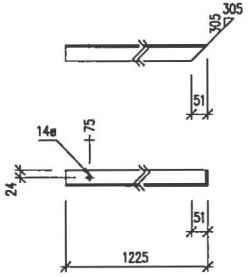

2x L-8 L51X51X6.4-300W

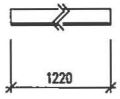

2x L-9 L51X51X6.4-300W

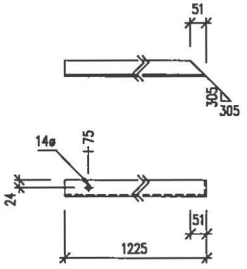

2x L-10 L51X51X6.4-300W

16 mai 2017 21:25:23, marcl, C:\Mario Cliche EXP\Clients\Normex\Escaliers reservoir\60 Réalisation\999-00048075-PP - Escalier pour réservoir\Details\6.dwg

Révision :			
AA	2017-05-10	FOR APPROVAL	MC
No	Date (a-m-j)	Description	Par

Client :

NORMEX
LA SARRE, QUEBEC
(TEL.)819-333-1200
(FAX)819-333-1212

exp.
Les Services exp inc.
T : +1.819.762.2666 | F : +1.819.762.4514
26, 19e Rue, bureau 200
Rouyn-Noranda, QC J9X 2X3
CANADA
www.exp.com

Projet :	AGNICO EAGLE - MELIADINE DIVISION - FUEL DISTRIBUTION		
Titre :	CONTAINER CATWALK STRUCTURAL HANDRAIL DETAILS		
Approuvé par : JONATHAN FAUCHER ing.	Dessiné par : MARIO CLICHE ing.	Date : 2017-05-10	Page : 4 de 4
Dossier : 999-00048075-PP	Numéro de dessin : NMOI - 00048075 - A0 - S01 - AA		

29 mai 2017 17:06:03, marcil, R:\ROU-00240067-A0\60 Réalisation\63 Dessins\Proc\Dike catwalk\999-00048075-PP - Dike catwalk\Details\ISO VIEW_PAGE 1.dwg

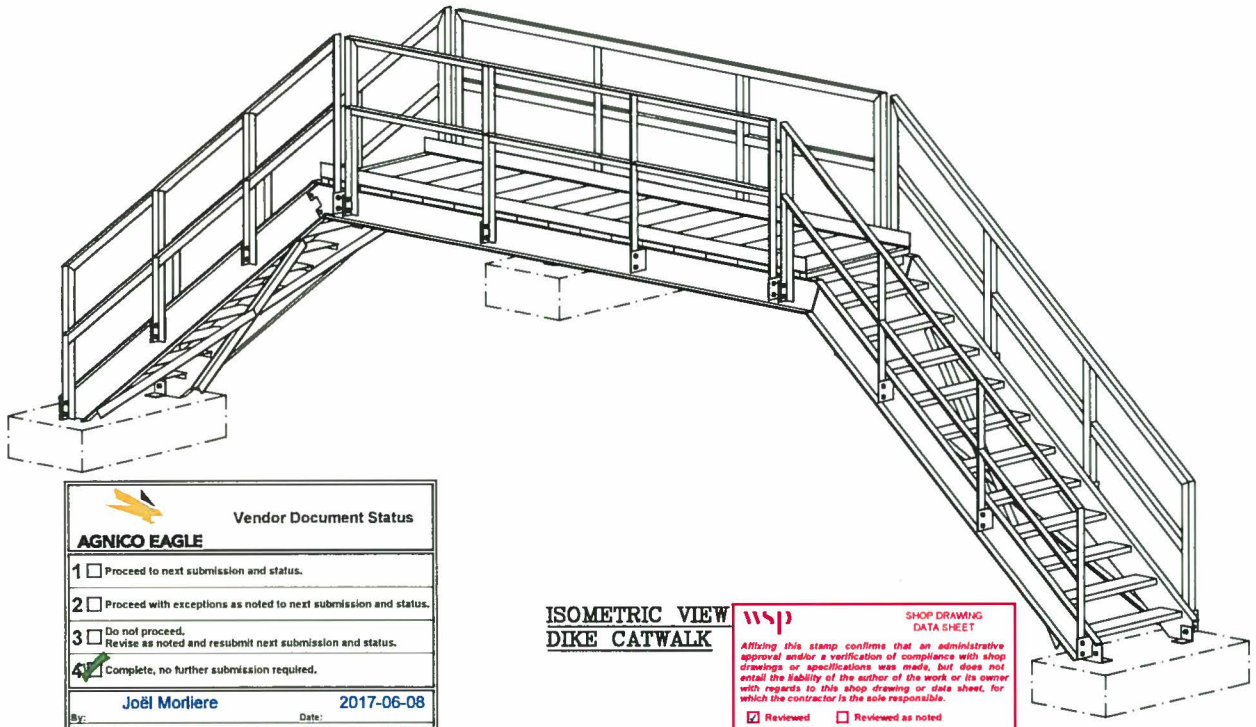

ISOMETRIC VIEW
DIKE CATWALK

GENERAL NOTES:
- REFERENCE DRAWING : 65-103-245-201 REVISION 2
- CATWALK, RAILING AND STAIRS ARE ASSEMBLED AND BOLTED ON SITE.

MATERIAL:
- GRATING FOR LANDING
  GRIP SPAN SAFETY GRATING
  GALVANIZED STEEL
  D-51215-G
  BY FISHER & LUDLOW
- STAIR
  GRIP SPAN SAFETY GRATING
  GALVANIZED STEEL
  D-41215-G
  BY FISHER & LUDLOW
- STEEL
  ALL STEEL MUST BE IN APPLIANCE WITH CSA G40.21
- WELD
  ALL WELDS MUST BE IN APPLIANCE WITH W59.1 AND W47
- PAINT
  SEE AGNICO EAGLE REQUESTED SPECS

DESIGN:
- DL = 0.5 KPa
- LL = 4.8 KPa
- DEFLECTION = L/300

FOR APPROVAL
DO NOT USE FOR FABRICATION

AGNICO EAGLE — Vendor Document Status

1 ☐ Proceed to next submission and status.
2 ☐ Proceed with exceptions as noted to next submission and status.
3 ☐ Do not proceed, Revise as noted and resubmit next submission and status.
4 ☑ Complete, no further submission required.

By: Joël Morliere Date: 2017-06-08

Review and authorization to fabricate are only for general conformance with the design concept of the Project as expressed in the Contract Documents. Sole responsibility for the accuracy and completeness of this document, including but not limited to dimensions and quantities, remains with the Supplier/Contractor. Agnico Eagle does not warrant the accuracy or completeness of any of the information contained herein, nor does Agnico Eagle authorize or approve any construction means, methods, techniques, sequences or any safety precautions or procedures.

Agnico Eagle No. 6515-C-270-007-245-SPD-0002 R: Sub002

DOCUMENT FOR INFORMATION

wsp — SHOP DRAWING DATA SHEET

Affixing this stamp confirms that an administrative approval and/or a verification of compliance with shop drawings or specifications was made, but does not entail the liability of the author of the work or its owner with regards to this shop drawing or data sheet, for which the contractor is the sole responsible.

☑ Reviewed ☐ Reviewed as noted
☐ Rejected ☐ Filed for records

The contractor, supplier and/or sub-contractor is responsible for: confirming and coordinating all quantities and dimensions; selecting fabrication processes and techniques of construction; coordinating his or her work with that of all other trades and performing all work in a safe and satisfactory manner.

By: J. Morliere Date: 2017/06/08

Project # 151-06440-40

Révision :			
BB	2017-05-29	HANDRAIL & STRINGER MODIFICATION	MC
AA	2017-05-16	FOR APPROVAL	MC
No	Date (a-m-j)	Description	Par

Client :
NORMEX
LA SARRE, QUEBEC
(TEL.)819-333-1200
(FAX)819-333-1212

exp.
Les Services exp inc.
T : +1.819.782.2666 | F : +1.819.782.4814
28, 19e Rue, bureau 200
Rouyn-Noranda, QC J9X 2M3
CANADA
www.exp.com

Projet : AGNICO EAGLE - MELIADINE DIVISION - FUEL DISTRIBUTION

Titre : DIKE CATWALK
STRUCTURAL
GENERAL ARRANGEMENT

Approuvé par :	Dessiné par :	Date :	Page :
JONATHAN FAUCHER ing.	MARIO CLICHE ing.	2017-05-16	1 de 6

Dossier : 999-00048075-PP

Numéro de dessin : NMOI - 00048075 - A0 - S03 - BB

29 mai 2017 17:02:30, marcil, R:\ROU-00240067-A0\60 Réalisation\63 Dessins\Proc\Dike catwalk\999-00048075-PP - Dike catwalk\Details\GA STAIR_PAGE 2-A.dwg

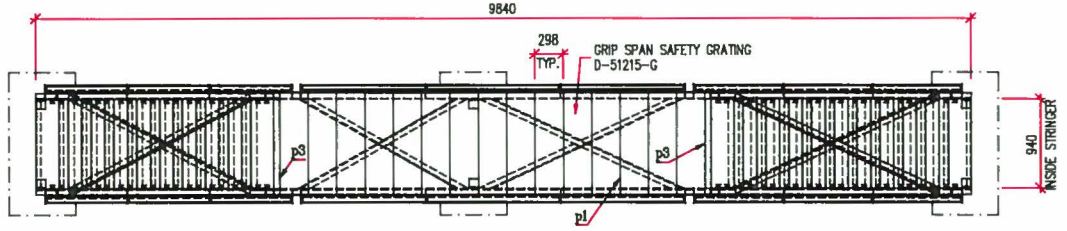

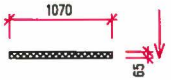

2x p3 PL 1070x38.1x65-GRIP SPAN

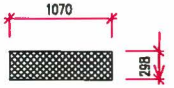

15x p1 PL 1070x38.1x298-GRIP SPAN

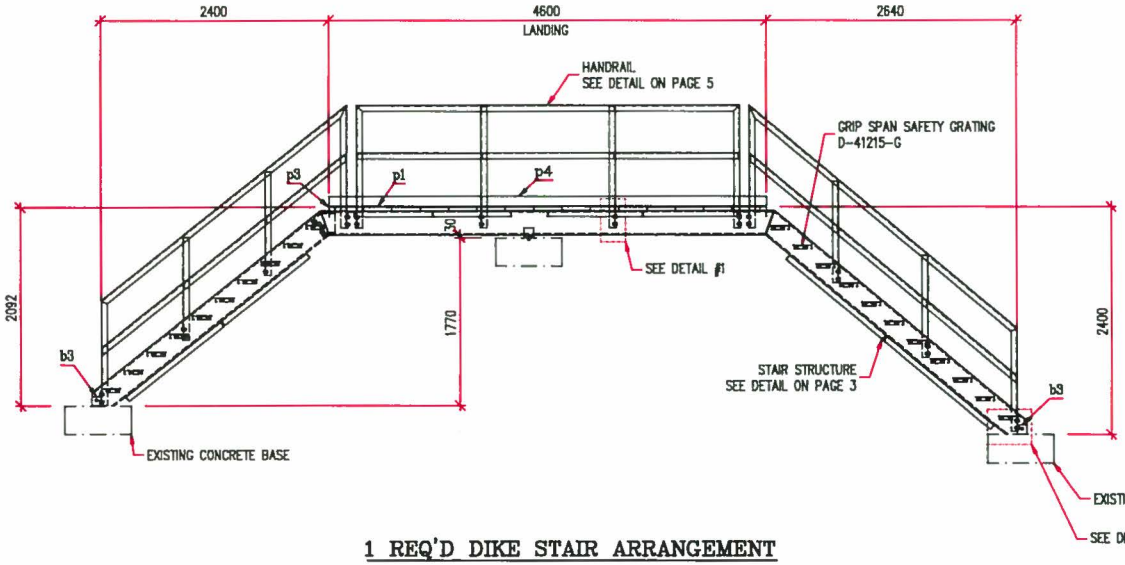

1 REQ'D DIKE STAIR ARRANGEMENT

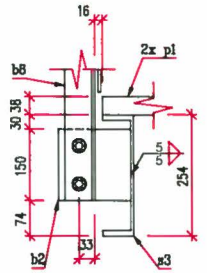

DETAIL #1

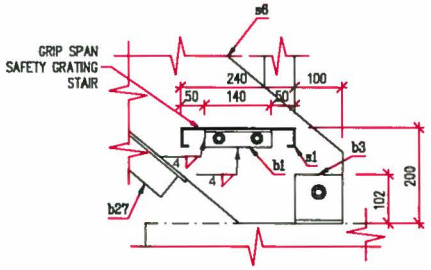

DETAIL #2

FOR APPROVAL
DO NOT USE FOR FABRICATION

Révision :			
BB	2017-05-29	HANDRAIL & STRINGER MODIFICATION	MC
AA	2017-05-16	FOR APPROVAL	MC
No	Date (a-m-j)	Description	Par

Client :
NORMEX
LA SARRE, QUEBEC
(TEL.)819-333-1200
(FAX)819-333-1212

Les Services exp Inc.
1 : +1.819.762.2666 | f : +1.819.762.4814
26, 19e Rue, bureau 200
Rouyn-Noranda, QC J9X 2M3
CANADA
www.exp.com

Projet :	AGNICO EAGLE - MELIADINE DIVISION - FUEL DISTRIBUTION
Titre :	DIKE CATWALK STRUCTURAL CATWALK ARRANGEMENT

Approuvé par : JONATHAN FAUCHER ing.	Dessiné par : MARIO CLICHE ing.	Date : 2017-05-16	Page : 2 de 6
Dossier : 999-00048075-PP	Numéro de dessin : NMOI - 00048075 - A0 - S03 - BB		

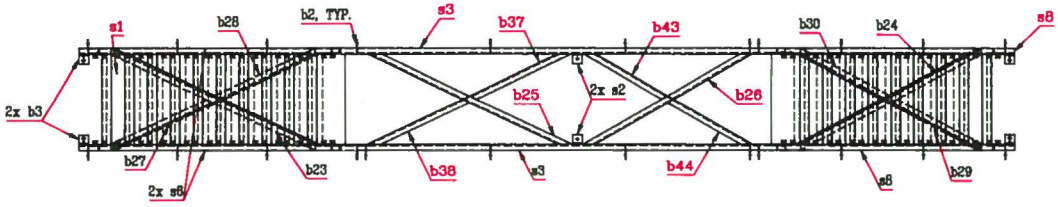

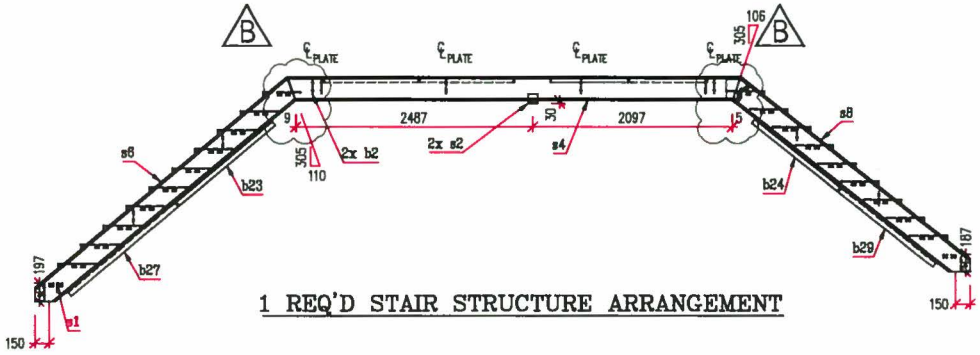

1 REQ'D STAIR STRUCTURE ARRANGEMENT

FOR APPROVAL
DO NOT USE FOR FABRICATION

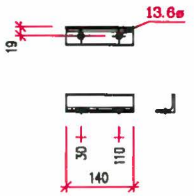

42x b1 L38X38X4.8-300W

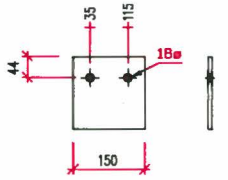

20x b2 FL 8X152 -44W

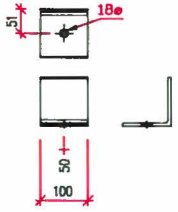

2x s2 L102X102X6.4-300W

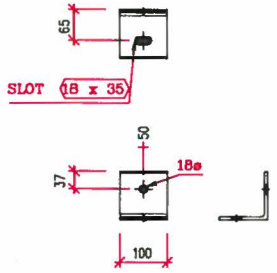

4x b3 L102X102X6.4-300W

29 mai 2017 17:04:23, marcil, R:\ROU-00240067-A0\60 Réalisation\63 Dessins\Proc\Dike catwalk\999-00048075-PP - Dike catwalk\Details\GA STAIR_PAGE 3-A.dwg

Révision :

No	Date (a-m-j)	Description	Par
BB	2017-05-29	HANDRAIL & STRINGER MODIFICATION	MC
AA	2017-05-16	FOR APPROVAL	MC

Client :

NORMEX
LA SARRE, QUEBEC
(TEL.)819-333-1200
(FAX)819-333-1212

Les Services exp Inc.
t +1.819.762.2686 | f +1.819.762.4814
28, 19e Rue, bureau 200
Rouyn-Noranda, QC J9X 2N3
CANADA
www.exp.com

Projet : AGNICO EAGLE - MELIADINE DIVISION - FUEL DISTRIBUTION

Titre : DIKE CATWALK
STRUCTURAL
STAIR ARRANGEMENT

Approuvé par :	Dessiné par :	Date :	Page :
JONATHAN FAUCHER ing.	MARIO CLICHE ing.	2017-05-16	3 de 6

Dossier : 999-00048075-PP

Numéro de dessin : NMOI - 00048075 - A0 - S03 - BB

29 mai 2017 17:07:13, marcil, R:\ROU-00240067-A0\60 Réalisation\63 Dessins\Proc\Dike catwalk\999-00048075-PP - Dike catwalk\Details\STAIR FAB DETAILS_PAGE

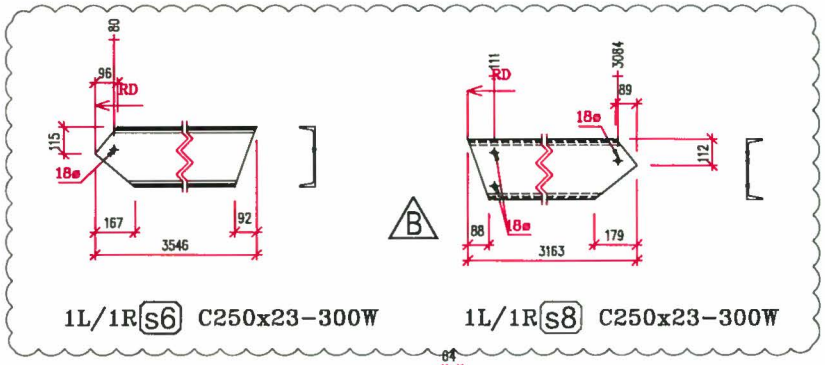

1L/1R s6 C250x23-300W 1L/1R s8 C250x23-300W

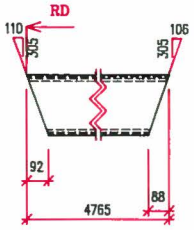

1L/1R s3 C250x23-300W

FOR APPROVAL
DO NOT USE FOR FABRICATION

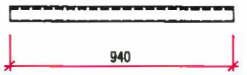

2x b16 L64X64X6.4-300W

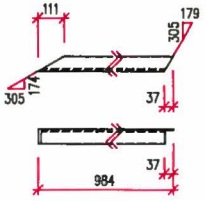

1x b44 L64X64X6.4-300W



1x b23 L64X64X6.4-300W



1x b24 L64X64X6.4-300W

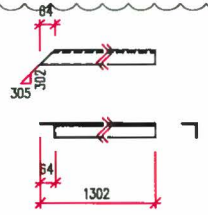

1x b30 L64X64X6.4-300W

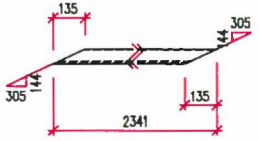

1x b25 L64X64X6.4-300W

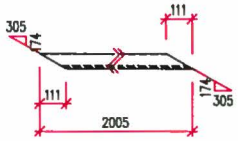

1x b26 L64X64X6.4-300W

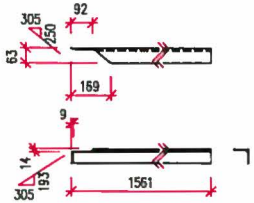

1x b27 L64X64X6.4-300W

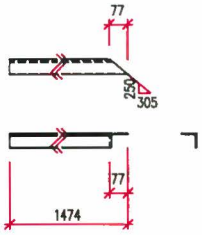

1x b28 L64X64X6.4-300W

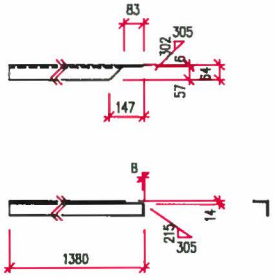

1x b29 L64X64X6.4-300W

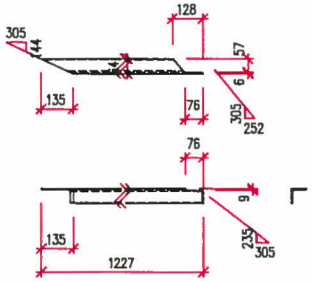

1x b37 L64X64X6.4-300W

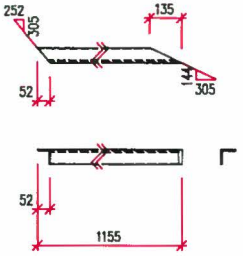

1x b38 L64X64X6.4-300W

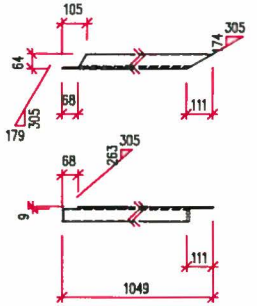

1x b43 L64X64X6.4-300W

Révision :			
BB	2017-05-29	HANDRAIL & STRINGER MODIFICATION	MC
AA	2017-05-16	FOR APPROVAL	MC
No	Date (a-m-j)	Description	Par

Client :

NORMEX
LA SARRE, QUEBEC
(TEL.)819-333-1200
(FAX)819-333-1212

exp
Les Services exp inc.
t : +1.819.762.2888 | f : +1.819.762.4814
26, 19e Rue, bureau 200
Rouyn-Noranda, QC J9X 2N3
CANADA
www.exp.com

Projet :	AGNICO EAGLE - MEL1ADINE DIVISION - FUEL DISTRIBUTION
Titre :	DIKE CATWALK STRUCTURAL STAIR DETAILS
Approuvé par : JONATHAN FAUCHER ing.	Dessiné par : MARIO CLICHE ing. / Date : 2017-05-16 / Page : 4 de 6
Dossier : 999-00048075-PP	Numéro de dessin : NMOI - 00048075 - A0 - S03 - BB

29 mai 2017 17:01:46, marcil, R:\ROU-00240067-A0\60 Réalisation\63 Dessins\Proc\Dike catwalk\999-00048075-PP - Dike catwalk\Details\GA HANDRAIL PAGE 5.dw

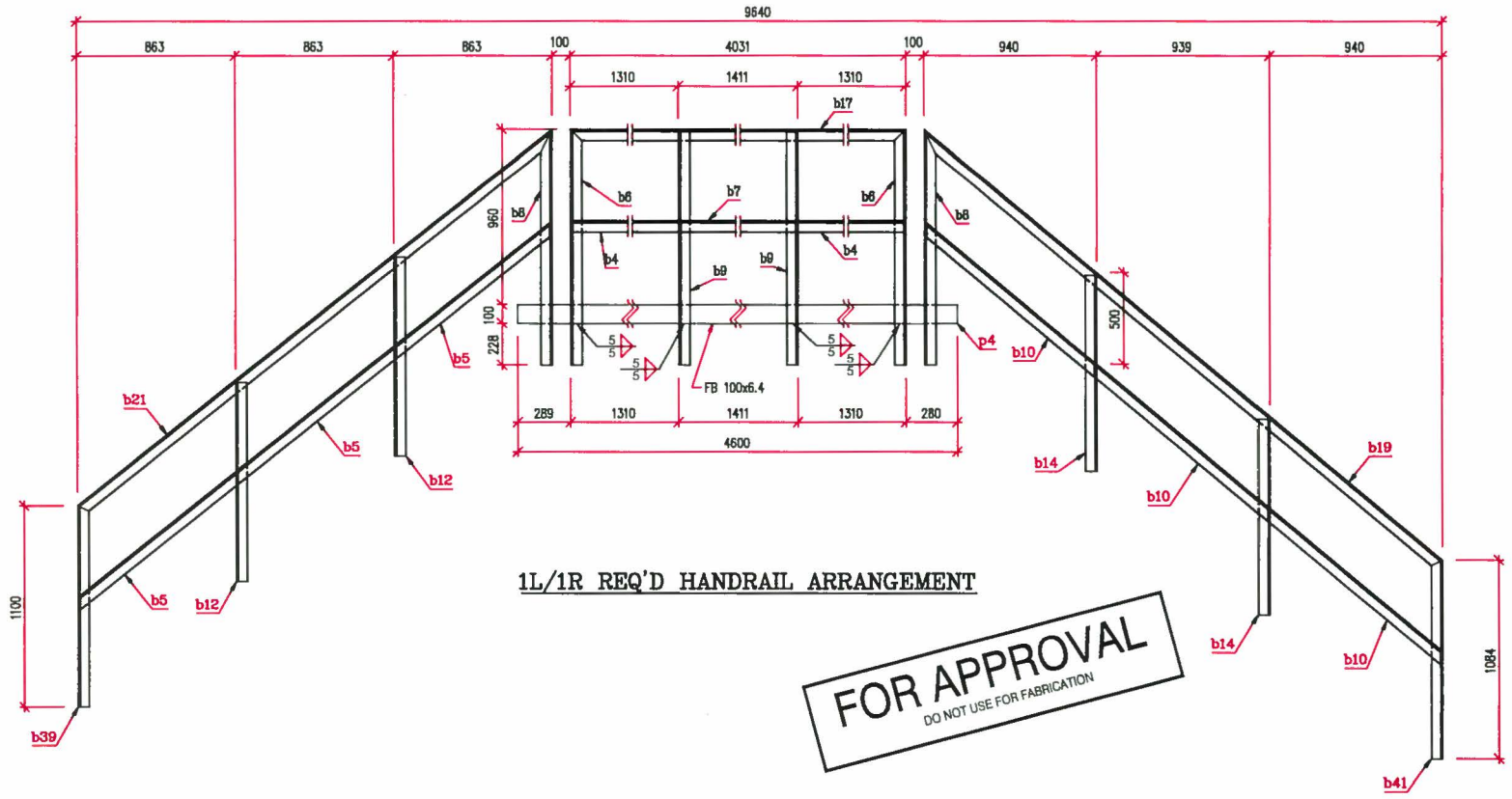

1L/1R REQ'D HANDRAIL ARRANGEMENT

FOR APPROVAL
DO NOT USE FOR FABRICATION

Révision :

No	Date (a-m-j)	Description	Par
BB	2017-05-29	HANDRAIL & STRINGER MODIFICATION	MC
AA	2017-05-16	FOR APPROVAL	MC

Client :

NORMEX
LA SARRE, QUEBEC
(TEL.)819-333-1200
(FAX)819-333-1212

Les Services exp inc.
t : +1.819.762.2888 | f : +1.819.762.4814
26, 19e Rue, bureau 200
Rouyn-Noranda, QC J9X 2M3
CANADA
www.exp.com

Projet : AGNICO EAGLE - MELIADINE DIVISION - FUEL DISTRIBUTION

Titre : DIKE CATWALK
STRUCTURAL
HANDRAIL ARRANGEMENT

Approuvé par :	Dessiné par :	Date :	Page :
JONATHAN FAUCHER ing.	MARIO CLICHE ing.	2017-05-16	5 de 6

Dossier : 999-00048075-PP

Numéro de dessin : NMOI - 00048075 - A0 - S03 - BB

29 mai 2017 17:01:10, marcil, R:\ROU-00240067-A0\60 Réalisation\63 Dessins\Proc\Dike catwalk\999-00048075-PP - Dike catwalk\Details\HANDRAIL FAB DETAILS.j



4x b4 L64X64X6.4-300W

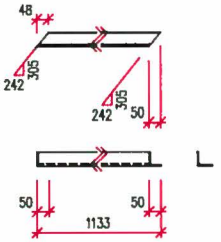

3L/3R b5 L64X64X6.4-300W



2x b7 L64X64X6.4-300W

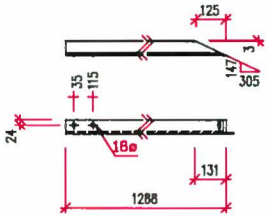

2L/2R b8 L64X64X6.4-300W

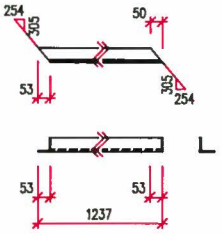

3L/3R b10 L64X64X6.4-300W

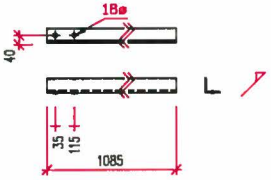

2L/2R b12 L64X64X6.4-300W

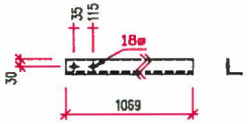

2L/2R b14 L64X64X6.4-300W

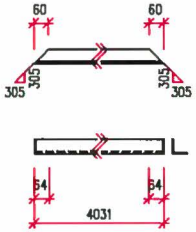

2x b17 L64X64X6.4-300W

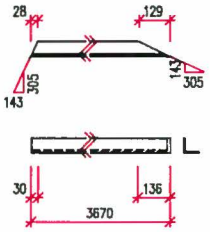

1L/1R b19 L64X64X6.4-300W

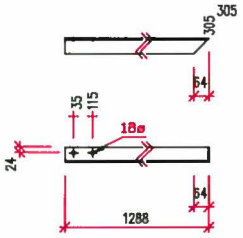

2L/2R b6 L64X64X6.4 - 300W

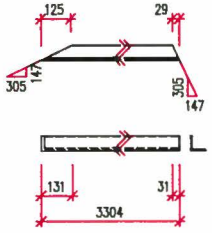

1L/1R b21 L64X64X6.4-300W

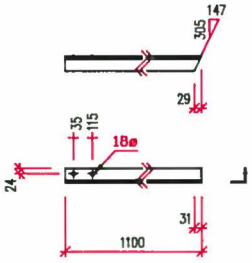

1L/1R b39 L64X64X6.4-300W

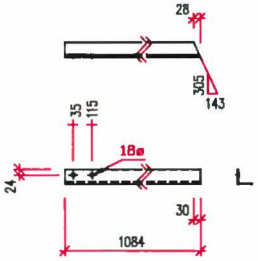

1L/1R b41 L64X64X6.4-300W

FOR APPROVAL
DO NOT USE FOR FABRICATION

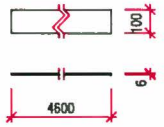

2x p4 PL 6.4x100x4600-A36

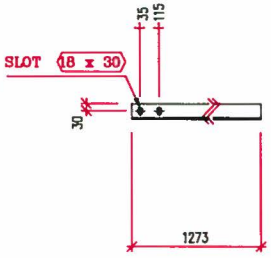

4x b9 L64X64X6.4 - 300W

Révision :			
BB	2017-05-29	HANDRAIL & STRINGER MODIFICATION	MC
AA	2017-05-16	FOR APPROVAL	MC
No	Date (a-m-j)	Description	Par

Client :

NORMEX
LA SARRE, QUEBEC
(TEL.)819-333-1200
(FAX)819-333-1212

exp
Les Services exp Inc.
T +1.819.762.2866 | F +1.819.762.4814
26, 19e Rue, bureau 200
Rouyn-Noranda, QC J9X 2M3
CANADA
www.exp.com

Projet :	AGNICO EAGLE - MELIADINE DIVISION - FUEL DISTRIBUTION		
Titre :	DIKE CATWALK STRUCTURAL HANDRAIL DETAILS		
Approuvé par : JONATHAN FAUCHER ing.	Dessiné par : MARIO CLICHE ing.	Date : 2017-05-16	Page : 6 de 6
Dossier : 999-00048075-PP	Numéro de dessin : NMOI - 00048075 - A0 - S03 - BB		

16 mai 2017 21:19:02, marcil, C:\Mario Cliche EXP\Clients\Normex\Escaliers reservoir\61 Réalisation\999-00048075-PP - Escalier tuyau\Details\Vue iso_page 1.dwg

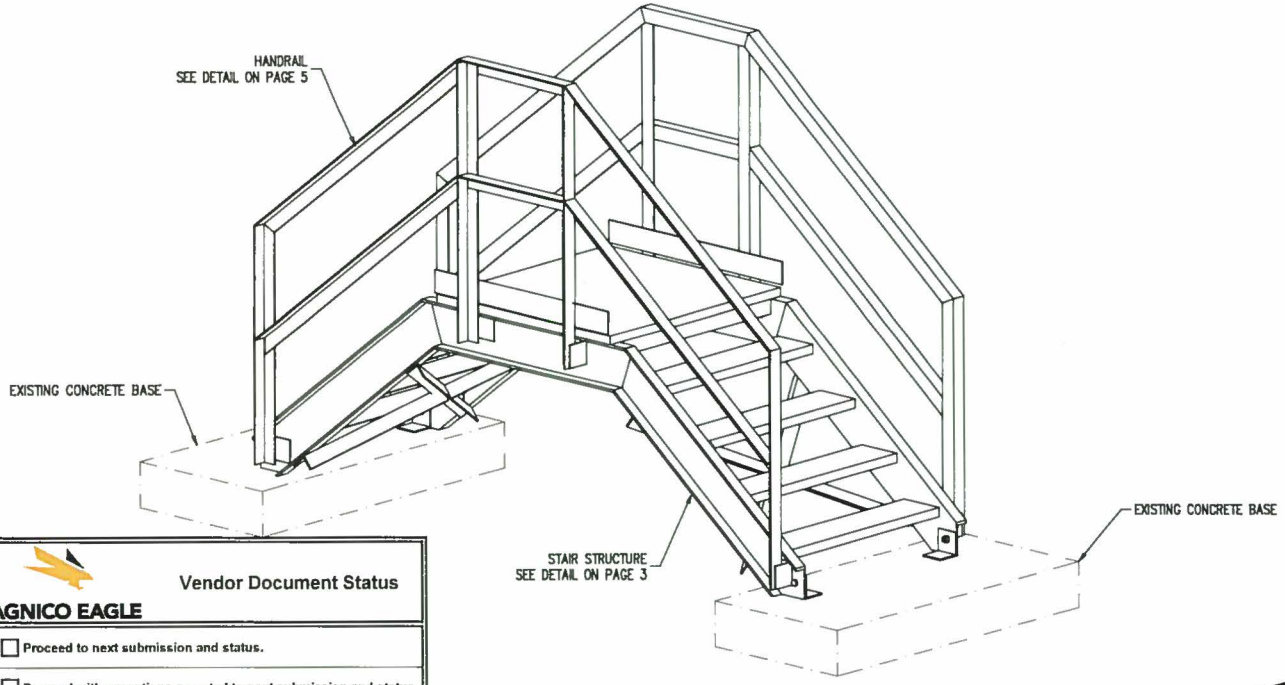

ISOMETRIC VIEW
PIPE CATWALK

GENERAL NOTES:
- REFERENCE DRAWING : 65-103-245-201 REVISION 2
- CATWALK, RAILING AND STAIRS ARE ASSEMBLED AND BOLTED ON SITE.

MATERIAL:
- GRATING FOR LANDING
  GRIP SPAN SAFETY GRATING
  GALVANIZED STEEL
  D-51215-G
  BY FISHER & LUDLOW
- STAIR
  GRIP SPAN SAFETY GRATING
  GALVANIZED STEEL
  D-41215-G
  BY FISHER & LUDLOW
- STEEL
  ALL STEEL MUST BE IN APPLIANCE WITH CSA G40.21
- WELD
  ALL WELDS MUST BE IN APPLIANCE WITH W59.1 AND W47
- PAINT
  SEE AGNICO EAGLE REQUESTED SPECS

DESIGN:
- DL = 0.5 KPa
- LL = 4.8 KPa
- DEFLECTION = L/300

FOR APPROVAL
DO NOT USE FOR FABRICATION

AGNICO EAGLE — Vendor Document Status

1 ☐ Proceed to next submission and status.
2 ☐ Proceed with exceptions as noted to next submission and status.
3 ☐ Do not proceed, Revise as noted and resubmit next submission and status.
4 ☑ Complete, no further submission required.

By: Joël Morliere Date: 2017-05-23

Review and authorization to fabricate are only for general conformance with the design concept of the Project as expressed in the Contract Documents. Sole responsibility for the accuracy and completeness of this document, including but not limited to dimensions and quantities, remains with the Supplier/Contractor. Agnico Eagle does not warrant the accuracy or completeness of any of the information contained herein, nor does Agnico Eagle authorize or approve any construction means, methods, techniques, sequences or any safety precautions or procedures.

Agnico Eagle No. 6515-C-270-007-245-SPD-0003 R: Sub001

DOCUMENT FOR INFORMATION

WSP — SHOP DRAWING DATA SHEET

Affixing this stamp confirms that an administrative approval and/or a verification of compliance with shop drawings or specifications was made, but does not entail the liability of the author of the work or its owner with regards to this shop drawing or data sheet, for which the contractor is the sole responsible.

☑ Reviewed ☐ Reviewed as noted
☐ Rejected ☐ Filed for records

The contractor, supplier and/or sub-contractor is responsible for: comfirming and coordinating all quantities and dimensions; selecting fabrication processes and techniques of construction; coordinating his or her work with that of all other trades and performing all work in a safe and satisfactory manner.

By: Joël Morliere Date: 2017/05/23

G-ADM-ZZZ-82-11E-2 Project # 151-06440-40

Révision :			
No	Date (a-m-j)	Description	Par
AA	2017-05-15	FOR APPROVAL	MC

Client : NORMEX, LA SARRE, QUEBEC (TEL.)819-333-1200 (FAX)819-333-1212

exp. Les Services exp inc. 1 +1.819.762.2888 | f +1.819.762.4814 76, 19e Rue, bureau 200 Rouyn-Noranda, QC J9X 2M3 CANADA

Projet :	AGNICO EAGLE - MELIADINE DIVISION - FUEL DISTRIBUTION
Titre :	PIPE CATWALK STRUCTURAL GENERAL ARRANGEMENT
Approuvé par : JONATHAN FAUCHER ing.	Dessiné par : MARIO CLICHE ing.
Date : 2017-05-15	Page : 1 de 5
Dossier : 999-00048075-PP	Numéro de dessin : NMOI - 00048075 - A0 - S02 - AA

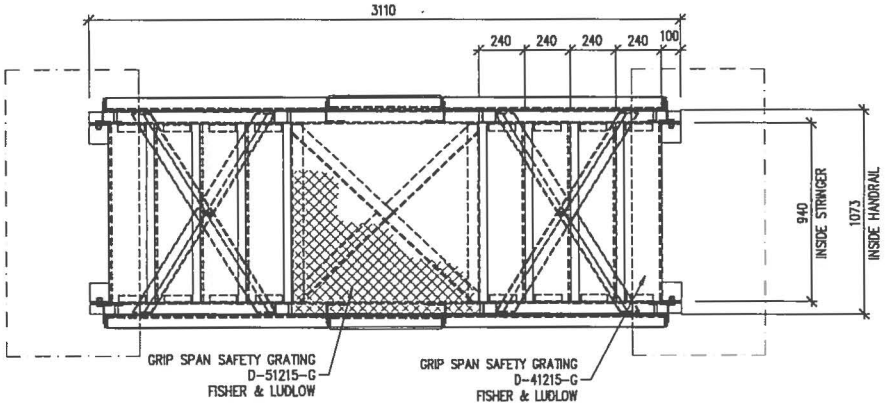

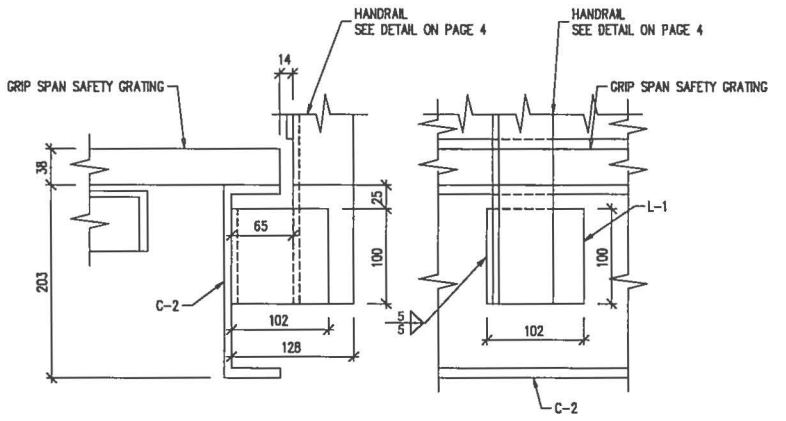

DETAIL #1

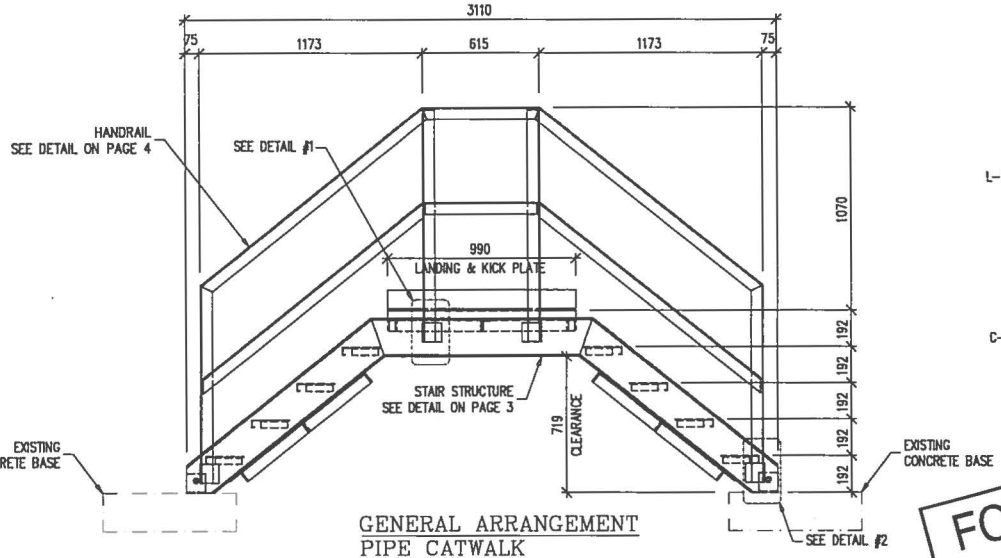

GENERAL ARRANGEMENT
PIPE CATWALK

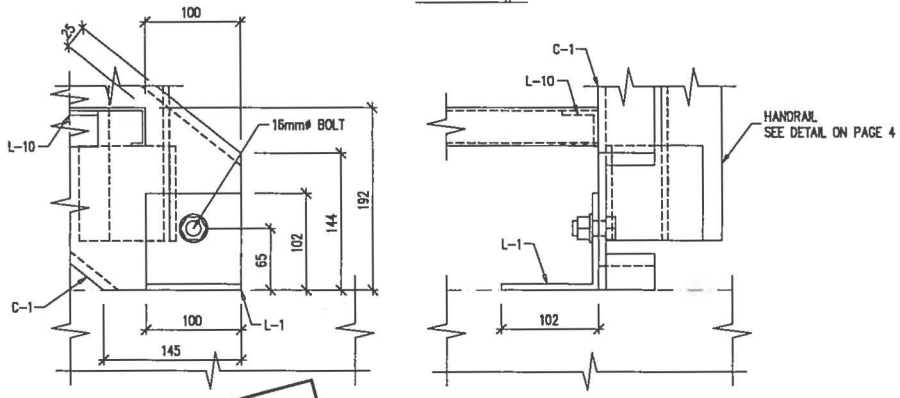

DETAIL #2

FOR APPROVAL
DO NOT USE FOR FABRICATION

16 mai 2017 21:18:36, marcil, C:\Mario Cliche EXP\Clients\Normex\Escaliers reservoir\61 Réalisation\999-00048075-PP - Escalier tuyau\Details\GA Stair_page 2.dwg

Révision :			
AA	2017-05-15	FOR APPROVAL	MC
No	Date (a-m-j)	Description	Par

Client :

NORMEX
LA SARRE, QUEBEC
(TEL.)819-333-1200
(FAX)819-333-1212

exp.
Les Services exp inc.
t : +1.819.762.2668 | f : +1.819.762.4814
26, 18e Rue, bureau 200
Rouyn-Noranda, QC J9X 2M3
CANADA
www.exp.com

Projet :	AGNICO EAGLE - MELIADINE DIVISION - FUEL DISTRIBUTION		
Titre :	PIPE CATWALK STRUCTURAL GENERAL ARRANGEMENT		
Approuvé par : JONATHAN FAUCHER ing.	Dessiné par : MARIO CLICHE ing.	Date : 2017-05-15	Page. 2 de 5
Dossier : 999-00048075-PP	Numéro de dessin : NMOI - 00048075 - A0 - S02 - AA		

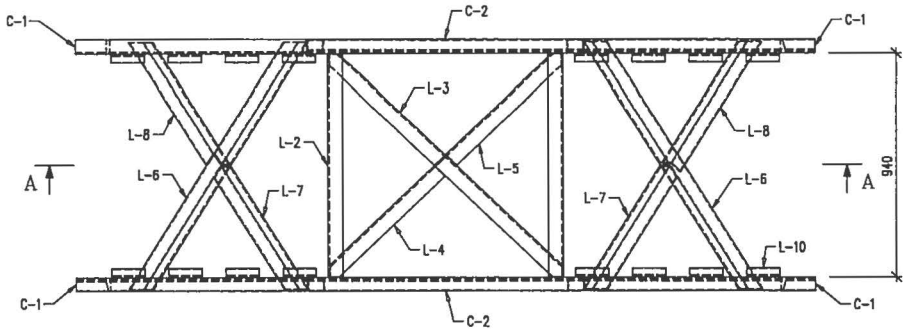

1 REQ'D STAIR STRUCTURE ARRANGEMENT

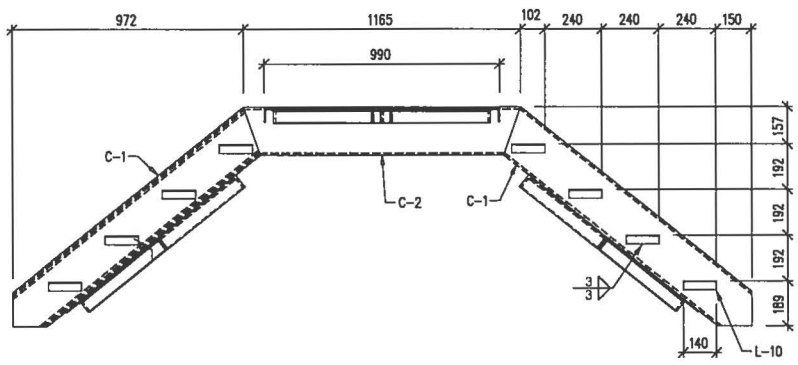

Section A – A

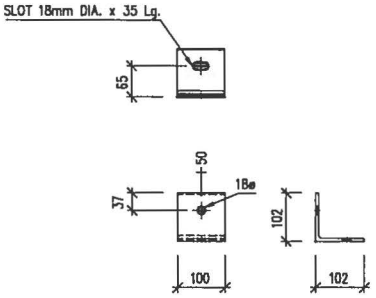

4x L-1 L102X102X6.4-300W

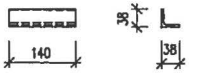

16x L-10 L38X38X4.8-300W

FOR APPROVAL
DO NOT USE FOR FABRICATION

16 mai 2017 21:18:07, marcli, C:\Mario Cliche EXP\Clients\Normex\Escaliers reservoir\61 Réalisation\999-00048075-PP - Escalier tuyau\Details\4.dwg

Révision :			
AA	2017-05-15	FOR APPROVAL	MC
No	Date (a-m-j)	Description	Par

Client :

NORMEX
LA SARRE, QUEBEC
(TEL.)819-333-1200
(FAX)819-333-1212

exp.
Les Services exp inc.
t : +1.819.762.2666 | f : +1.819.762.4814
26, 19e Rue, bureau 200
Rouyn-Noranda, QC J9X 2M3
CANADA
www.exp.com

Projet :	AGNICO EAGLE - MELIADINE DIVISION - FUEL DISTRIBUTION		
Titre :	PIPE CATWALK STRUCTURAL STAIR DETAILS		
Approuvé par : JONATHAN FAUCHER ing.	Dessiné par : MARIO CLICHE ing.	Date : 2017-05-15	Page : 3 de 5
Dossier : 999-00048075-PP	Numéro de dessin : NMOI - 00048075 - A0 - S02 - AA		

16 mai 2017 21:17:35, marcli, C:\Mario Cliche EXP\Clients\Normex\Escaliers reservoir\61 Réalisation\999-00048075-PP - Escalier tuyau\Details\Details escalier_page

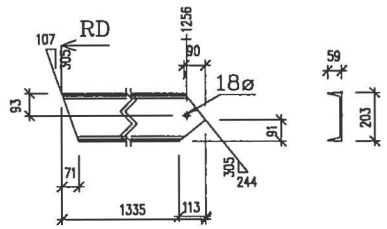

2L/2R C-1 C200x21-300W

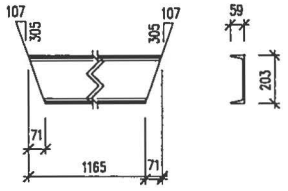

2x C-2 C200x21-300W

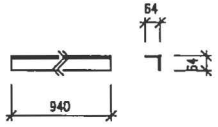

2x L-2 L64X64X6.4-300W

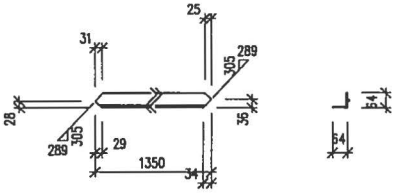

1x L-3 L64X64X6.4-300W

FOR APPROVAL
DO NOT USE FOR FABRICATION

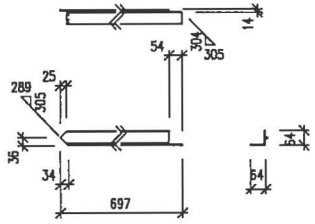

1x L-4 L64X64X6.4-300W

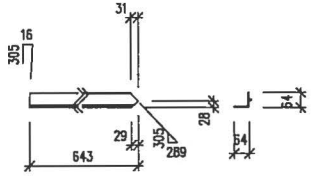

1x L-5 L64X64X6.4-300W

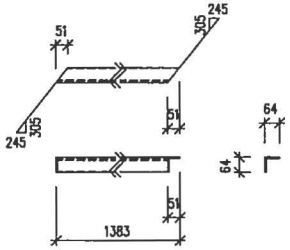

2x L-6 L64X64X6.4-300W

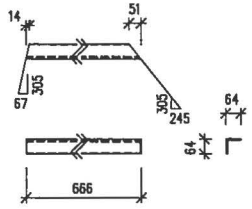

2x L-7 L64X64X6.4-300W

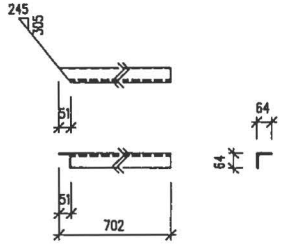

2x L-8 L64X64X6.4-300W

Révision :			
AA	2017-05-15	FOR APPROVAL	MC
No	Date (a-m-j)	Description	Par

Client :

NORMEX
LA SARRE, QUEBEC
(TEL.)819-333-1200
(FAX)819-333-1212

exp.
Les Services exp inc.
t: +1.819.762.2998 | f: +1.819.762.4814
29, 19e Rue, bureau 200
Rouyn-Noranda, QC J9X 2M3
CANADA
www.exp.com

Projet :	AGNICO EAGLE - MELIADINE DIVISION - FUEL DISTRIBUTION		
Titre :	PIPE CATWALK STRUCTURAL STAIR DETAILS		
Approuvé par : JONATHAN FAUCHER ing.	Dessiné par : MARIO CLICHE ing.	Date : 2017-05-15	Page : 4 de 5
Dossier : 999-00048075-PP	Numéro de dessin : NMOI - 00048075 - A0 - S02 - AA		

16 mai 2017 21:16:47, marcli, C:\Mario Cliche EXP\Clients\Normex\Escaliers reservoir\61 Réalisation\999-00048075-PP - Escalier tuyau\Details\Handrail_page 5.dwg

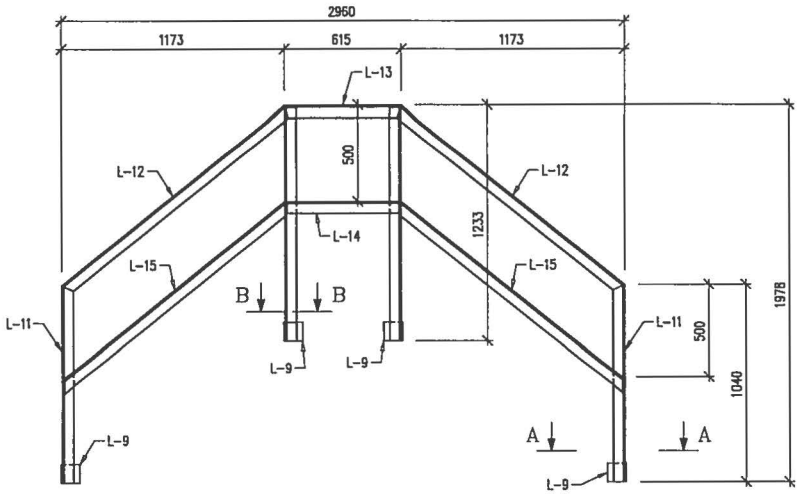

1L/1R REQ'D HANDRAIL ARRANGEMENT

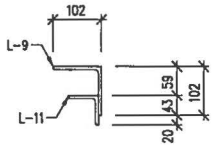

SECTION "A – A"

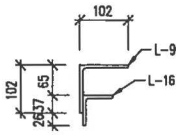

SECTION "B – B"

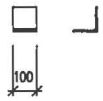

8x L–9 L102X102X6.4–300W

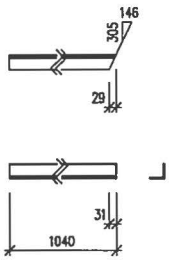

2L/2R L–11 L64X64X6.4–300W

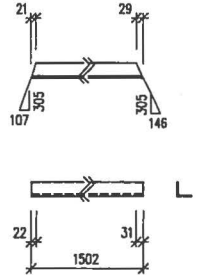

2L/2R L–12 L64X64X6.4–300W

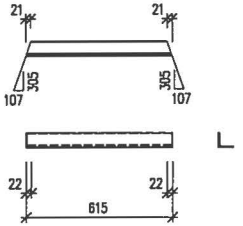

2x L–13 L64X64X6.4–300W

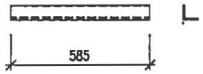

2x L–14 L64X64X6.4–300W

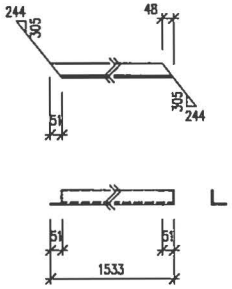

2L/2R L–15 L64X64X6.4–300W

FOR APPROVAL
DO NOT USE FOR FABRICATION

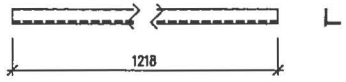

4x L–16 L64X64X6.4–300W

Révision :			
AA	2017-05-15	FOR APPROVAL	MC
No	Date (a-m-j)	Description	Par

Client :

NORMEX
LA SARRE, QUEBEC
(TEL.)819-333-1200
(FAX)819-333-1212

Les Services exp inc.
t : +1.819.783.2688 | f : +1.819.782.4614
25, 18e Rue, bureau 200
Rouyn-Noranda, QC J9X 2M3
CANADA
www.exp.com

Projet :	AGNICO EAGLE - MELIADINE DIVISION - FUEL DISTRIBUTION		
Titre :	PIPE CATWALK STRUCTURAL HANDRAIL DETAILS		
Approuvé par : JONATHAN FAUCHER ing.	Dessiné par : MARIO CLICHE ing.	Date : 2017-05-15	Page : 5 de 5
Dossier : 999-00048075-PP	Numéro de dessin : NMOI - 00048075 - A0 - S02 - AA		

☐ YELLOW ☐ PINK ☐ PURPLE ☐ STOCKROOM

31/05/2017
07:45:14

☐ GREEN ☐ BLUE ☐ ORANGE

REV:0000
PAGE :1

DESCRIPTION BON TRAVAIL: PEINTURE

#-BON TRAVAIL:
W80055

#-PROJET: 4048 (B)FUEL MODULE CATWALK
#-CLIENT: 598 CONSTRUCTION PROMEC

#-COMMANDE...: 61086
DATE DEBUT...: 01/05/2017
DATE REQUISE.: 15/06/2017
#-P.L.....: 4841

BYE: S.L
PAINT: OUI
GROUP: .
UNIT:
PART:
CONTACT: ERIC POULIN

NORMEX MÉTAL
CONRÔLE DE QUALITÉ

CONFORME ✓	OUI	NON

INSPECTÉ PAR: EMMANUEL OUELLET
SIGNATURE: Emmanuel Ouellet
DATE: 29 / 05 / 2017
JOUR MOIS ANNÉE

NOTES

PEINTURE DES HANDRAILS ET STRUCTURE
SYYTEME A 3 COUCHES,VOIR FEUILLES

MATERIAUX

#-REQUIS.	#-DESSIN	QTE	DESCRIPTION	MESURE	BATCH	ROLL	CUT	BEND	DRILL	MACH.	STOCK
001			POUR PEINTURE VOIR FEUILLE 2								

QUANTITE: 0.00 POIDS: 0.000 SURFACE: 0.00 D: Drawing S: Sketch T: Template

ICI DEVOE COATINGS
Membre du groupe mondial ICI

DEVOE COATINGS

Devoe Coatings est membre du groupe mondial ICI

Bar-Rust[MC] 235

Revêtement époxy à usages multiples

Numéro de catalogue 235-K-XXXX

DESCRIPTION

Revêtements intérieurs de réservoirs et canalisations
- Réservoirs d'eau potable
- Pompes submergées, cavités humides et tuyaux de drainage

Structures d'acier, équipement et maçonnerie
- Usines de pâtes et papiers
- Usines de produits chimiques et de fabrication d'engrais Usine d'épuration et de traitement des eaux usées
- Réservoirs et canalisations
- Ponts

Maçonnerie et béton
- Entrepôts
- Usines de traitement des aliments
- Usines de fabrication de boissons

Fabrication et nouvelle construction
- Accélère la production, même à de basses températures
- Revêtement à usages multiples convenant à de nombreuses surfaces

CARACTÉRISTIQUES

Protection exceptionnelle contre la corrosion
- Résistance à l'immersion en eau douce
- Conseillé dans les endroits où l'on trouve des produits chimiques corrosifs

Réduit le coût de préparation des surfaces
- Convient à de nombreuses surfaces
- Adhère très bien à la rouille tenace
- Adhère bien aux surfaces humides

Durcit à de basses températures
- Durcit à 0 °F (-18 °C)
- Séchage rapide pour recouvrir

Application
- Auto-apprêtant

Approbations
- EPA (Environmental Protection Agency - États-Unis) - eau potable (blanc cassé et chamois seulement)
- Cargo de grain - North England Ind. Health Ser.
- MIL-P-23236B(SH), types I et IV, classe 2
- Santé et bien-être social Canada - aliments séchés, cales à poisson (blanc cassé et chamois seulement)
- Approbation de l'USDA pour contact occasionnel avec la nourriture
- MIL-P-24647 et chapitre 631, tableau 631-8-10, quille, rail et superstructure

DONNÉES TECHNIQUES

Type de revêtement	Époxy catalysé
Couleurs	**Numéro de catalogue**
Voir la carte des couleurs	235-K-XXXX
Emballage	5 gal (18,5 l) et 1 gal (3,7 l) Ensemble de deux constituants
Rapport volumique des constituants	4 à 1
Lustre	Semi-lustré
Point éclair	100 °F (38 °C) Setaflash
Diluant	
Pour extérieur et nettoyage	Devoe T-10
Pour intérieur	Devoe T-4
Pour eau potable	Devoe T-5
Sur d'anciens revêt. alkydes	Devoe T-5
Durée de vie en pot	4,5 heures à 77 °F (25 °C)
Stabilité en stockage	Plus de 2 ans
Densité	11 lb/gal (1,3 kg/l)
Temps d'incorporation	15 minutes à 77 °F (25 °C)
COV - EPA 24	2,4 lb/gal (292 g/l)
Résistance à la température	250 °F (121 °C) sec

Pourcentage de solides/volume
68 % ASTM D2697 (7 jours)

Rendement superficiel volumique
1091 pi²/gal à un millième de po
26,9 m²/l à 25 microns

Épaisseur du feuil recommandée
5,9 - 11,8 millièmes de po humide pour obtenir
4,0 - 8,0 millièmes de po une fois sec

Application Pulvérisateur, pinceau ou rouleau

Courbe de temps de séchage
Heures à 5 millièmes de po (125 microns) E.F.S.

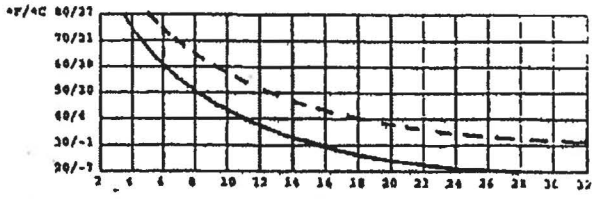

Courbe fournie à titre indicatif seulement. Des facteurs comme l'aération, l'épaisseur du feuil, l'humidité et l'utilisation d'un diluant peuvent faire varier le temps de séchage (ASTM D1640).

PROPRIÉTÉS D'EMPLOI

DEVOE COATINGS
ICI DEVOE COATINGS
Membre du groupe mondial ICI
9 Produits de finition
Revêtements spéciaux

GUIDE D'APPLICATION

Préparation de la surface

Tous les revêtements appliqués directement sur le métal offrent un rendement maximal lorsque la surface est décapée jusqu'à ce que le métal soit presque blanc. Cependant, le décapage au jet d'abrasif n'est pas toujours possible pour des raisons de coût ou autres. Les revêtements Bar-Rust ont été conçus pour être appliqué sur des surfaces qui n'ont pas reçu la meilleure préparation.La préparation recommandée pour une application de revêtement Bar-Rust 235 comprend l'enlèvement de l'eau, de la saleté, de l'huile, des débris et des écailles de rouille. Pour obtenir de meilleurs résultats, nettoyer la surface avec le nettoyeur Devprep 88 et laver ensuite avec de l'eau à haute pression. La norme minimale à respecter pour les applications sur des surfaces non immergées est la norme SSPC-SP2 du *Steel Structures Painting Council* ou la norme *Swedish Standard DSt2*. Pour les applications sur des surfaces immergées, la norme minimale est la norme SSPC-SP3 ou la norme *Swedish Standard DSt3*. Dans les deux cas, on peut aussi appliquer une couche de l'apprêt Pre-Prime 167 sous une couche de Bar-Rust 235. La plupart des époxy ont un pouvoir de repeinturage limité. S'adresser à un représentant Devoe pour obtenir plus de renseignements à ce sujet.

Mélange et dilution

Le revêtement Bar-Rust 235 est offert en ensemble de deux constituants de 5 gallons (18,5 litres) ou de 1 gallon (3,7 litres) qui contiennent chacun la quantité appropriée d'ingrédients. Les constituants doivent être bien mélangés ensemble. Brasser au mélangeur la base jusqu'à l'obtention d'une préparation lisse et homogène. Ajouter graduellement le convertisseur tout en mélangeant. Une fois tout le convertisseur ajouté, continuer à mélanger lentement. Allouer 15 minutes pour l'incorporation à 77 °F (25 °C). En général, il n'est ni nécessaire ni souhaitable de diluer la préparation. Toutefois, dans des conditions climatiques extrêmes, une petite quantité (10 % ou moins par volume) de l'un des diluants décrits au recto peut être ajoutée conformément aux règlements locaux relatifs à la teneur en composé organique volatil (COV) et à la qualité de l'air. Utiliser le diluant Devoe T-5 pour les applications de Bar-Rust 235 sur des réservoirs d'eau potable ou sur d'anciens revêtements alkydes. N'ajouter le diluant qu'après avoir bien mélangé les deux constituants. La durée de vie en pot de la préparation est de 5 heures à 77 °F (25 °C). Si elle est additionnée d'un diluant, sa durée de vie est de 4,5 heures à 70 °F (21 °C). Après cette période, la préparation peut sembler liquide, mais l'épaisseur du feuil risque de ne pas être adéquate et la pulvérisation moins bonne. À des températures plus élevées, la durée de vie en pot de la préparation diminue tandis qu'à des températures plus basses, elle augmente.

Application

Le revêtement Bar-Rust 235 peut être appliqué avec un pulvérisateur conventionnel ou sans air. On recommande, pour les applications avec un pulvérisateur conventionnel, un pistolet Graco n° 800 muni d'une buse de 0,070 po ou d'une buse plus large et une tête d'air à bon pouvoir de dispersion. La pression du liquide doit rester basse, à environ 15 psi (1,0 bar) et la pression de l'air doit être juste assez élevée pour obtenir une bonne dispersion du revêtement. Une pression d'air trop élevée peut causer une surpulvérisation.Pour les applications avec un pulvérisateur sans air, on recommande une pompe Bulldog Graco 30:1, une pompe Senator 35:1 ou une pompe plus puissante. Une buse de 0,021 à 0,025 po permettra d'obtenir une bonne forme de jet. Pour obtenir un résultat optimal, les tuyaux à liquide devraient avoir un d.i. d'au moins 3/8 de po et ne devraient pas avoir plus de 50 pi de longueur. Si on utilise un tuyau plus long ou que l'on fait l'application par temps froid, une pompe plus puissante ou l'ajout d'un diluant est recommandé. S'assurer d'obtenir un feuil d'épaisseur appropriée si on applique le revêtement Bar-Rust 235 au pinceau ou au rouleau. Appliquer une peinture anti-salissure sur le revêtement Bar-Rust 235 lorsque celui-ci n'est plus collant mais encore sensible à la pression du doigt. Les revêtements époxy peuvent changer de couleur et peuvent farîner lorsqu'ils sont exposés directement au soleil.

Systèmes de peintures pour revêtements de réservoirs : Deux couches de Bar-Rust 235 de 4 à 8 millièmes de po (100 à 200 microns) par couche, plus deux couches au pinceau sur les arêtes vives et les joints de soudure. Utiliser des couleurs différentes pour chaque couche, y compris les couches appliquées au pinceau.

Aération

Une bonne aération est essentielle pour obtenir un bon rendement du revêtement Bar-Rust 235 et pour la personne qui effectue le travail. S'assurer d'alimenter la pièce où le peinturage est effectué en air sec et frais afin que le solvant s'évapore. Comme les vapeurs de solvant sont plus lourdes que l'air, faire en sorte que les bouches d'aération atteignent les parties inférieures de la pièce. L'aération pendant le durcissement permet aux solvants contenus dans le revêtement de s'évaporer. Allouer une période d'aération de 7 jours pour le durcissement des réservoirs.

Précautions

Consulter la fiche technique sur la sécurité des substances et l'étiquette du produit pour connaître les mesures de sécurité et les précautions à prendre.

235/IM/Janvier 1996

ICI DEVOE COATINGS
Devoe Coatings est membre du groupe mondial ICI
8200, rue Keele
Concord ON L4K 2A5
(905) 669-1020

LIMITATION DE RESPONSABILITÉ: À notre connaissance, les données techniques contenues dans le présent document sont vraies et exactes au moment de la publication, mais peuvent changer sans préavis. Nous garantissons que notre produit est conforme aux spécifications indiquées dans le présent document. NOUS NE FAISONS AUCUNE AUTRE GARANTIE EXPRESSE OU IMPLICITE; NOTAMMENT NOUS NE FAISONS AUCUNE GARANTIE RELATIVE À LA QUALITÉ MARCHANDE OU À L'ADAPTATION À UN USAGE PARTICULIER. La responsabilité, le cas échéant, se limite au remplacement du produit ou au remboursement du prix d'achat. LA MAIN-D'OEUVRE ET LES COÛTS DE MAIN-D'OEUVRE, AINSI QUE LES AUTRES DOMMAGES INDIRECTS, SONT EXCLUS.

DEVOE HIGH PERFORMANCE COATINGS

DEVTHANE® 359

Mastic à l'uréthane aliphatique brillant à pouvoir garnissant élevé pour application directe sur métal (DTM) N° de réf. 359KXXXX

DESCRIPTION DU PRODUIT

Générique : uréthane aliphatique acrylique

Description générale : peinture émail brillante à l'uréthane aliphatique, à deux constituants, durcissement chimique, au pouvoir couvrant et au rendement élevés, conçue pour des surfaces nécessitant une stabilité maximale de brillance et de couleur.

Usages courants : utiliser sur des surfaces d'acier adéquatement préparées, planchers d'acier ou de béton, maçonnerie, cloisons sèches, plâtre, métal, blocs de béton, métal galvanisé, aluminium, béton coulé et brique émaillée. Idéal pour une utilisation, à l'intérieur et à l'extérieur, sur l'acier structural, la tuyauterie, les revêtements métalliques, le mobilier de cabines de contrôle, les convoyeurs, les pompes, les réservoirs de stockage, les tours éoliennes, les moteurs, la machinerie et les véhicules de transport. Peut aussi être utilisé dans les aires de service intense des usines de transformation des aliments, des laiteries, des écoles, des restaurants, des hôpitaux, des établissements correctionnels, des manufactures, des stades, des arénas et des parcs d'amusement.

CARACTÉRISTIQUES

Avantages :

- excellente stabilité de brillant et de couleur
- excellente résistance à l'abrasion et aux produits chimiques
- faible teneur en COV
- application facile avec un pinceau, un rouleau ou un pulvérisateur
- grand choix de couleurs, incluant les couleurs de sécurité
- excellente résistance aux maculations, au piquage et aux égratignures
- pouvoir couvrant élevé
- excellentes propriétés d'application
- applicable directement sur le métal

Restrictions : la couleur pourrait changer lorsque la température approche la limite de 250°F (121°C), mais le feuil demeurera intact.

DONNÉES TECHNIQUES

Couleur : disponible en blanc, noir et une gamme complète de couleurs sur commande
Fini : brillant élevé
Solvant de réduction : diluant T-9 (pulvérisateur), T-17 (pinceau ou rouleau)
Solvant de nettoyage : diluant T-9
Poids/gallon : 10,3 lb/gal (1,23 kg/l) – varie selon la couleur
COV (EPA 24) : 2, 8 lb/gal (340 g/l) – varie selon la couleur
Solides par volume (ASTM D-2697-7 jours) : 60 %
Rendement théorique à 1, 0 mil (25 microns) sec: 962 pi²/gal (23,7 m²/l)
Épaisseur de feuil recommandée : 4,0-6,0 mils (100-150 microns) sec – 8,7-10,0 mils (168-250 microns) humide. L'application directe sur le métal requiert une épaisseur de feuil sec de 5,0-6,0 mils (125-250 microns).
Systèmes : Veuillez consulter le guide du système approprié, les spécifications propres au travail ou votre représentant(e) d'ICI Peintures pour les systèmes indiqués pour ce produit. Choisir les systèmes en tenant compte de l'environnement particulier où ils seront appliqués.
Température de service maximale : 250° (121°C) sec
Temps de séchage minimum (ASTM D-1640) : à 4 mils (200 microns) sec

Température du subjectile	40°F (4°C)	60°F (16°C)	80°F (27°C)
Prêt à recouvrir - minimum	8 heures	5 heures	3 heures
Sec en profondeur	14 heures	9 heures	5 heures
Prêt à recouvrir - maximum			
par le même produit	2 semaines	2 semaines	2 semaines

Le temps de séchage peut être influencé par la ventilation, l'épaisseur du feuil, le taux d'humidité, le diluant et d'autres facteurs.
Avertissement : Les données qui précèdent sont uniquement des directives générales. Consultez toujours votre représentant(e) d'ICI Peintures pour les délais de recouvrement appropriés, étant donné que le délai de recouvrement maximum de ce produit peut diminuer ou augmenter de façon importante en raison de conditions variées incluant, mais sans s'y limiter, l'humidité, la température de la surface et l'utilisation d'additifs ou de diluants. L'utilisation d'accélérateurs ou de durcissement forcé peut diminuer le délai de recouvrement de couches individuelles. Les délais de recouvrement qui précèdent pourraient ne pas s'appliquer si un produit de recouvrement autre qu'un de ceux énumérés ci-dessus est utilisé. Si le délai de recouvrement maximum est dépassé, veuillez consulter votre représentant(e) d'ICI Peintures pour obtenir les recommandations appropriées afin d'améliorer l'adhérence. Le défaut de se conformer à ces précautions peut entraîner une délamination entre les couches.
Stabilité en stockage : plus de 12 mois à 77°F (25°C) non ouvert
Dureté : (ASTM D-3363, séchage pendant 7 jours à 77°F (25°C) : 5H
Proportions de mélange : 4 (base) : 1(convertisseur) – voir les instructions de mélangeage
Induction : aucune
Durée de vie en pot : 8 heures à 77°F (25°C) et 50% HR.

DONNÉES DE RENDEMENT

Adhérence : (ASTM D-4541) – Excellente
Résistance au brouillard salin : (ASTM B-117) – Excellente
Résistance à l'abrasion : (ASTM D-4060) – Excellente
Résistance à l'humidité : (ASTM D-2247) – Excellente
Exposition à l'extérieur : 45° sud de la Floride – Excellente

Résistance aux produits chimiques : (ASTM D-1308 – contact de 24 h) – excellente. Résiste aux éclaboussures et au déversement d'alcalis, sels, eau, graisses, produits alimentaires et détergents.
Résistance aux taches : (ASTM D-1308 – contact pendant une semaine) – excellente. Résiste, entre autres, aux taches de crayon, rouge à lèvres, café, terreau, poli à chaussures, jus de raisin, encre, marqueur et peinture pulvérisée.

DANGER! INFLAMMABLE. NOCIF OU MORTEL EN CAS D'INGESTION. Lire l'étiquette et la fiche signalétique avant d'utiliser.
Voir d'autres mises en garde sur la page suivante.

PRÉPARATION GÉNÉRALE DE LA SURFACE

Toutes les surfaces doivent être saines, sèches, propres et exemptes d'huile, de graisse, de moisissures, d'agents de démoulage, de produits de cure, de laitance ou autres substances étrangères. Pour assurer une apparence optimale, l'apprêt ou la couche de fond devra être lisse et exempte de tout défaut de surface tel que coulure, pulvérisation sèche et peau d'orange importante.

Nouvelles surfaces : Acier – Pour une application directe sur l'acier, décaper au jet d'abrasif jusqu'à ce que le métal soit presque blanc conformément aux normes SSPC-SP10 ou SSI-Sa2½. Le profil de l'acier, après le décapage, devrait être de 1,5-2,5 mils (38-63 microns) de profondeur et dentelé plutôt que bosselé (à la suite d'un grenaillage), ou nettoyer et apprêter avec l'époxy DEVRAN® 224HS, BAR-RUST® 235 ou BAR-RUST® 233H. Bloc de béton. – obturer avec l'époxy DEVRAN® 224HS, BAR-RUST® 235 ou BAR-RUST® 233H. Fibre de verre – essuyer avec le solvant, poncer légèrement et essuyer de nouveau avec le solvant. Apprêter avec le DEVRAN® 201. Planchers de béton, béton coulé – durcir au moins 30 jours.

Décaper à l'acide ou au jet d'abrasif le béton lisse, émaillé ou taché de laitance. Apprêter avec l'époxy DEVRAN® 224HS, BAR-RUST® 235 ou BAR-RUST® 233H dilué à 25% avec le diluant recommandé, ou utiliser l'enduit pénétrant PRE-PRIME® 167. Cloisons sèches – apprêter avec un apprêt vaporifuge au latex acrylique. Acier galvanisé et aluminium – enlever la saleté et les huiles avec un solvant ou avec le nettoyeur DEVPREP® 88, puis rincer à grande eau. Apprêter avec l'apprêt époxy DEVRAN® 201 ou 205. Pour une application directe sur le métal, décaper légèrement conformément à la norme SSPC-SP-7 pour créer un profil en surface.

Surfaces déjà peinturées : enlever la peinture cloquée et écaillée. Poncer légèrement les surfaces brillantes. Vérifier si il y a décollement ou saignement des anciens revêtements. Si oui, les enlever. Apprêter les surfaces nues avec l'apprêt spécifié à l'article Surfaces neuves.

MODE D'EMPLOI

Coloration : colorer la base appropriée avec les colorants CHROMA-CHEM 844. (Ne pas utiliser de colorants à base d'eau). Ajouter les colorants seulement à la portion base. Mélanger à fond avant d'ajouter la portion convertisseur. Lorsque le DEVTHANE® 359 est appliqué directement sur le métal, on obtient de meilleurs résultats en utilisant des couleurs prémélangées.

Dilution : normalement, la dilution n'est ni nécessaire ni souhaitable. Toutefois, dépendant des règlements locaux relatifs aux COV et à la qualité de l'air, une petite quantité (5% ou moins par volume) de solvants indiqués au recto peuvent être ajoutées. Une petite quantité (5% ou moins par volume) de diluant T-17 améliorera l'application au rouleau ou au pinceau. Si les règlements locaux relatifs au COV et à la qualité de l'air ne posent pas problème, et selon l'assemblage individuel de l'équipement de pulvérisation, une dilution additionnelle sera tolérée pour obtenir le fini individuel souhaité.

Mélangeage : la peinture-émail DEVTHANE® 359 est un produit à deux constituants fourni en ensembles de 5 gallons (18,925 l) et 1 gallon (3,785 l) qui contiennent la proportion adéquate d'ingrédients. Tout le contenu d'un contenant doit être mélangé avec l'autre. Il est important que les pièces d'équipement soient exemptes d'humidité et que celle-ci ne contamine pas le revêtement. Mélanger d'abord la portion base au malaxeur mécanique pour obtenir un mélange lisse et homogène. Puis ajouter le convertisseur lentement en agitant constamment. Quand tout le convertisseur a été ajouté, continuer de mélanger lentement. La durée d'utilisation du mélange est de 8 heures à 77°F (25°C). Des températures plus élevées et une humidité excessive réduiront le temps d'utilisation du revêtement, alors que des températures plus basses l'augmenteront.

Application : appliquer avec un pulvérisateur conventionnel ou sans air, un rouleau ou un pinceau. Pour la pulvérisation sans air, utiliser tout pulvérisateur sans air pneumatique, électrique ou à gaz ayant une capacité de 3000 psi (207 bars) et compatible avec des buses de 0,015 à 0,019" (0,375-0,475 mm). Des pistolets multiples et des longs tuyaux de liquide exigent des pompes ayant une capacité adéquate. Pour une pulvérisation à l'air, utiliser un pistolet DeVilbiss MBC-510, une buse « E » ou « D » et un chapeau d'air 704 ou l'équivalent. Ajuster la pression du liquide et de l'air pour obtenir une bonne forme de jet. L'application au pinceau et au rouleau peut nécessiter plusieurs couches pour obtenir l'épaisseur de feuil et/ou l'opacité requise.

Note : S'assurer que tout l'équipement de pulvérisation et les tuyaux de liquide sont propres et exempts d'eau ou de solvants non compatibles. Pour une application au pinceau, utiliser des pinceaux secs, propres et de bonne qualité. Pour une application au rouleau, utiliser des rouleaux neufs à poils courts. Ne pas appliquer sur des surfaces mouillées ou par temps très humide alors qu'une condensation ou un brouillard pourrait se déposer sur le revêtement pendant le durcissement.

Rendement superficiel spécifique : couvre 160-241 pi²/gal (3,9-5,9 m²/l) dépendant de la texture de la surface et de la porosité. Prévoir des pertes dues à la surpulvérisation ou aux aspérités des surfaces.

Temps de séchage : à 70°F (21°C) et 50% HR, prêt à recouvrir en 5 heures et sec en profondeur en 7 heures.

Nettoyage : utiliser le diluant T-9

Accélération du durcissement : on peut utiliser le catalyseur uréthane 070A0000 pour accélérer le durcissement si la température est à 40°F (5°C) ou moins. L'ajout de 1 (29,6 ml) ou 2 oz (59.12 ml) par gallon (3,785 l) réduira le temps de séchage en profondeur d'environ un tiers ou de moitié respectivement à 40°F (5°C). La durée de vie en pot sera réduite de moitié ou des trois quarts.

PRÉCAUTIONS

DANGER! LIQUIDE ET VAPEUR INFLAMMABLES. CAUSE DES BRÛLURES AUX YEUX ET À LA PEAU. NOCIF OU MORTEL EN CAS D'INGESTION. RISQUE D'ASPIRATION – PEUT PÉNÉTRER DANS LES POUMONS ET CAUSER DES DOMMAGES. NOCIF EN CAS D'INHALATION. PEUT AVOIR DES EFFETS SUR LE SYSTÈME NERVEUX CENTRAL, CAUSANT NOTAMMENT DES ÉTOURDISSEMENTS, MAUX DE TÊTE OU NAUSÉES. CAUSE L'IRRITATION DES VOIES RESPIRATOIRES. PEUT CAUSER DES RÉACTIONS ALLERGIQUES CUTANÉES ET PULMONAIRES. DANGEREUX SI ABSORBÉ PAR LA PEAU. UNE SUREXPOSITION PEUT CAUSER DES DOMMAGES AU SANG, AU FOIE ET AUX REINS. UTILISER UNIQUEMENT AVEC UNE VENTILATION ADÉQUATE. GARDER HORS DE LA PORTÉE DES ENFANTS. AVIS : les produits de cette série contiennent des solvants. Des rapports ont établi un lien entre une surexposition professionnelle répétée et prolongée aux solvants, et des dommages permanents au cerveau et au système nerveux. Un usage abusif intentionnel, en concentrant et en inhalant volontairement le contenu, peut être dangereux ou mortel. Pour toute information urgente, composer le 1 800 545-2843. Pour plus d'informations relatives à la sécurité, consulter la fiche signalétique de ce produit. Garder loin de la chaleur, des étincelles et des flammes. Ne pas fumer. Les vapeurs pourraient s'enflammer. Éteindre toutes les flammes, brûleurs, poêles, appareils de chauffage et becs brûleur et débrancher tous les moteurs et appareils électriques avant d'utiliser et jusqu'à ce que les vapeurs aient disparu. En cas de ponçage, porter un masque antipoussière pour éviter de respirer la poussière de ponçage. Ne pas respirer les vapeurs ou brumes de pulvérisation. Si vous éprouvez des larmoiements, des maux de tête ou des étourdissements, quittez l'endroit. Un respirateur bien utilisé peut offrir une protection additionnelle. Demander l'avis d'un professionnel avant son utilisation. Refermer le contenant après chaque usage. PREMIERS SOINS : en cas de contact avec la peau, bien laver rapidement à l'eau et au savon, et enlever les vêtements contaminés. En cas de contact avec les yeux, rincer immédiatement à grande eau, pendant au moins 15 minutes. Consulter un médecin de toute urgence. En cas d'ingestion, consulter immédiatement un médecin. Si l'inhalation entraîne un malaise, aller dans un endroit où l'air est frais. Si le malaise persiste ou que la respiration devient difficile, consulter un médecin. Note : ces mises en garde s'appliquent à l'ensemble des produits de cette série. Avant d'utiliser, lire et suivre les recommandations sur la FS et sur l'étiquette.

EXPÉDITION

Classification : peinture, 3 PG III, UN1263 (liquide inflammable)
Point d'éclair : 80°F (27°C)
Emballage : ensemble d'un gallon (3,785 l) — 0,8 gallon (3,04 l) de base, 0,2 gallon (0,76 l) de convertisseur
ensemble de 5 gallons (18,925 l) — 4 gallons (15,14 l) de base, 1 gallon (3,785 l) de convertisseur

Poids à l'expédition :
ensemble de 4 – 1 gallon (15,14) – 60 lbs (27,2 kg)
ensemble de 5 gallons (18,925) – 66 lbs (29,9 kg)

359KXXXX (08/01)
Formulaire n° 68656B

DEVOE HIGH PERFORMANCE COATINGS
Devoe Coatings est membre du groupe mondial ICI

8200, rue Keele
Concord ON L4K 2A5
(905) 669-1020

LIMITATION DE RESPONSABILITÉ: À notre connaissance, les données techniques contenues dans le présent document [illegible] et exactes au moment de la publication, mais peuvent changer sans préavis. Nous garantissons que notre produit est co[illegible] spécifications indiquées dans le présent document. NOUS NE FAISONS AUCUNE AUTRE GARANTIE EXPRESSE OU [illegible] NOTAMMENT NOUS NE FAISONS AUCUNE GARANTIE RELATIVE À LA QUALITÉ MARCHANDE OU À L'ADAPTATION À UN USAGE PARTICULIER. La responsabilité, le cas échéant, se limite au remplacement du produit ou au remboursement du prix d'achat. LA MAIN-D'OEUVRE ET LES COÛTS DE MAIN-D'OEUVRE, AINSI QUE LES AUTRES DOMMAGES INDIRECTS, SONT EXCLUS.

PROCÉDURE POUR PEINTURE

COTE: 4048

COMP.	GROUPE PROMEC	DATE	1-Jun-17	W.O.	W80055
DESCRIPTION	PEINTURER STRUCTURE				
COMPLÉTÉ PAR:					

NETTOYAGE		QUA.												
SANDBLAST SABLE		QUA.												
SANDBLAST GRENAILLE D'ACIER	SSPC-SP6													

DÉLAIS POUR APPLIQUER LE PRIMER OU LA PEINTURE APRÈS LE SANDBLAST

DEGRÉ D'HUMIDITÉ	TEMPS/HEURES		DEGRÉ D'HUMIDITÉ	TEMPS/HEURES
85 A 90 %	1		60 A 69%	8
80 A 84%	2		50 A 59%	10
70 A 79%	4		50 ET MOINS	24

PRIMER ÉPOXY

COMPAGNIE:	DEVOE				COULEUR		
PRODUIT	BAR-RUST 235 2973				LIGHT GREY		
MILS PAR COUCHE HUMIDE	14.71	A	17.65	PAR COUCHE			
MILS PAR COUCHE SEC	10	A	12	PAR COUCHE	TAUX DE SOLIDE %	68	
NOMBRE DE COUCHE	1						

RATIO	BASE	DURCISSEUR	DILUANT
	4	1	0 A 10%
	BAR-RUST 235	235C0910 (LENT)	XYLENE OU T-10

TEMPS DE SÉCHAGE MANIPULATION	77	°F	3.00	HRS		
DÉLAI DE RECOUVREMENT	6.00 A 720.00			HRS		
TEMPS D'INCORPORATION	0.15	MIN.			SURFACE	1900
DURÉE DE VIE EN POT	4.00	A	77	°F	PERTE	40
QUANTITÉ DE PRIMER MÉLANGE:					NOMBRE DE GALLONS	29.258

PEINTURE ÉPOXY

COMPAGNIE:	DEVOE				COULEUR		
PRODUIT	DEVTHANE 359 RAL 7030				STONE GREY		
MILS PAR COUCHE HUMIDE	5.00	A	6.67	PAR COUCHE			
MILS PAR COUCHE SEC	3	A	4	PAR COUCHE	TAUX DE SOLIDE %	60	
NOMBRE DE COUCHE	1						

RATIO	BASE	DURCISSEUR	DILUANT
	4	1	0 A 5%
	DEVTHANE 359	DEVTHANE 359 CONVERTISSEUR	T-9

TEMPS DE SÉCHAGE MANIPULATION	80	°F	5.00	HRS		
DÉLAI DE RECOUVREMENT	3.00			HRS		
TEMPS D'INCORPORATION		MIN.			SURFACE	1900
DURÉE DE VIE EN POT	8.00	A	77	°F	PERTE	40
QUANTITÉ DE PEINTURE MÉLANGE:					NOMBRE DE GALLONS	11.060

NOMBRE DE MILS DE PRIMER ET DE PEINTURE SEC LA JOB TERMINÉ.	13	A	16

ÉPOXY

PROCÉDURE POUR PEINTURE

COTE: 4048

COMP.: GROUPE PROMEC | DATE: 1-Jun-17 | W.O.: W80055

DESCRIPTION: PEINTURER HANDRAIL

COMPLÉTÉ PAR:

NETTOYAGE		QUA.											
SANDBLAST SABLE		QUA.											
SANDBLAST GRENAILLE D'ACIER	SSPC-SP6												

DÉLAIS POUR APPLIQUER LE PRIMER OU LA PEINTURE APRÈS LE SANDBLAST

DEGRÉ D'HUMIDITÉ	TEMPS/HEURES		DEGRÉ D'HUMIDITÉ	TEMPS/HEURES
85 A 90 %	1		60 A 69%	8
80 A 84%	2		50 A 59%	10
70 A 79%	4		50 ET MOINS	24

PRIMER ÉPOXY

COMPAGNIE: DEVOE | COULEUR

PRODUIT: BAR-RUST 235 2973 | LIGHT GREY

MILS PAR COUCHE HUMIDE: 14.71 A 17.65 PAR COUCHE

MILS PAR COUCHE SEC: 10 A 12 PAR COUCHE | TAUX DE SOLIDE %: 68

NOMBRE DE COUCHE: 1

RATIO	BASE	DURCISSEUR	DILUANT
	4	1	0 A 10%
	BAR-RUST 235	235C0910 (LENT)	XYLENE OU T-10

TEMPS DE SÉCHAGE MANIPULATION: 77 °F | 3.00 HRS

DÉLAI DE RECOUVREMENT: 6.00 A 720.00 HRS

TEMPS D'INCORPORATION: 0.15 MIN.

DURÉE DE VIE EN POT: 4.00 A 77 °F

SURFACE	1450
PERTE	200
NOMBRE DE GALLONS	
47.846	

QUANTITÉ DE PRIMER MÉLANGE:

PEINTURE ÉPOXY

COMPAGNIE: DEVOE | COULEUR

PRODUIT: DEVTHANE 359 RAL 1023 | SAFETY YELLOW

MILS PAR COUCHE HUMIDE: 5.00 A 6.67 PAR COUCHE

MILS PAR COUCHE SEC: 3 A 4 PAR COUCHE | TAUX DE SOLIDE %: 60

NOMBRE DE COUCHE: 1

RATIO	BASE	DURCISSEUR	DILUANT
	4	1	0 A 5%
	DEVTHANE 359	DEVTHANE 359 CONVERTISSEUR	T-9

TEMPS DE SÉCHAGE MANIPULATION: 80 °F | 5.00 HRS

DÉLAI DE RECOUVREMENT: 3.00 HRS

TEMPS D'INCORPORATION: MIN.

DURÉE DE VIE EN POT: 8.00 A 77 °F

SURFACE	1450
PERTE	200
NOMBRE DE GALLONS	
18.087	

QUANTITÉ DE PEINTURE MÉLANGE:

NOMBRE DE MILS DE PRIMER ET DE PEINTURE SEC LA JOB TERMINÉ: 13 A 16

ÉPOXY

NORMEX	RAPPORT DE JET DE SABLE ET RECOUVREMENT	W 800 55 1

Client : Construction Promec P.O.# : _____

Project : 4048 Quote No. : _____

Inspected by : _____ Date : _____

EQUIPMENT : _____

SANDBLAST (jet de sable)

SANDBLAST MATERIAL (matériel) : Grit INITIALS : BW DATE : 10-06-17

SANDBLAST PROFILE (Add PRESS-O-FILM below) **(profil du jet de sable)** (ajouter PRESS-O-FILM dans le rectangle)

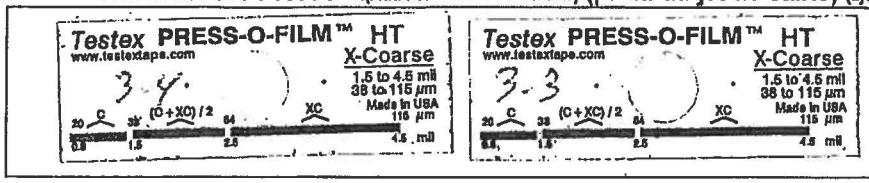

PRIMER (couche primaire)

PRODUCT : (produit) Bar Rust 235 COLOUR : Gris NO. OF COATS : (nombre de couches) 1-2

DRYING TEMP : (temp. de séchage) 24 DRYING TIME (hrs) : (temps de séchage) 24 % HUMIDITY: 22

AVG MILS/COAT (DFT) : (mils par couche sec) 1st 7 at 8 / 2nd 7 at 8 INITIALS : BV DATE : 10-06-17 / 11-06-17

TOP COAT (peinture)

PRODUCT : (produit) DEVOE 359 COLOUR : Stone grey NO. OF COATS : (nombre de couches) 1

DRYING TEMP. : Temp. de séchage) 24 DRYING TIME (hrs) : (temps de séchage) 24 % HUMIDITY : 25

AVG MILS/COAT (DFT) : (mils par couche sec) 1st 20 INITIALS : DM DATE : 12-06-17

FINAL INSPECTION: _____ DATE : _____
SIGNATURE

Remarks:

_____

_____

_____

_____

NORMEX	RAPPORT DE JET DE SABLE ET RECOUVREMENT	W 80055 1

Client : Construction Promec P.O.# : _____

Project : 4048 Quote No. : _____

Inspected by : _____ Date : _____

EQUIPMENT : _____

SANDBLAST (jet de sable)

SANDBLAST MATERIAL (matériel) : acier INITIALS : BW DATE : 12-06-17

SANDBLAST PROFILE(Add PRESS-O-FILM below) **(profil du jet de sable)** (ajouter PRESS-O-FILM dans le rectangle)



PRIMER (couche primaire)

PRODUCT : BAR-ROST 235 (produit) COLOUR : gris NO. OF COATS : 1-2 (nombre de couches)

DRYING TEMP : 24 (temp. de séchage) DRYING TIME (hrs) : 24 (temps de séchage) % HUMIDITY: 22

AVG MILS/COAT (DFT) : 1st 2.8 2nd 2.8 (mils par couche sec) INITIALS : BV DATE : 10-06-17 10-06-17

TOP COAT (peinture)

PRODUCT : DEVTHANE 359 (produit) COLOUR : Stone grey NO. OF COATS : 1 (nombre de couches)

DRYING TEMP. : 24 Temp. de séchage) DRYING TIME (hrs) : 24 (temps de séchage) % HUMIDITY : 25

AVG MILS/COAT (DFT) : 2.0 AV (mils par couche sec) INITIALS : DM DATE : 12-06-17

FINAL INSPECTION: _____ DATE : _____
SIGNATURE

Remarks:

_____

_____

_____

_____

NORMEX	RAPPORT DE JET DE SABLE ET RECOUVREMENT	W 80055	1

Client : Construction Phoenix P.O.# : _____

Project : 4048 Quote No. : _____

Inspected by : _____ Date : _____

EQUIPMENT : _____

SANDBLAST (jet de sable)

SANDBLAST MATERIAL (matériel) : Acer INITIALS : [illegible] DATE : 13-06-17

SANDBLAST PROFILE (Add PRESS-O-FILM below) **(profil du jet de sable)** (ajouter PRESS-O-FILM dans le rectangle)

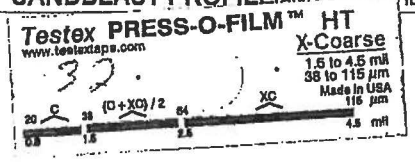

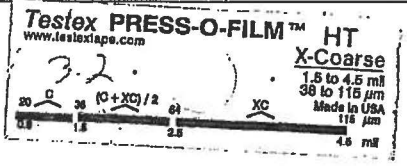

PRIMER (couche primaire)

PRODUCT : Bardot 235 (produit) COLOUR : Lark gris NO. OF COATS : 1 & 2 (nombre de couches)

DRYING TEMP : 24 (temp. de séchage) DRYING TIME (hrs) : 24 (temps de séchage) % HUMIDITY: 23

AVG MILS/COAT (DFT) : 1 & 7 & 8 / 2 & 7 & 8 (mils par couche sec) INITIALS : [illegible] DATE : 13-06-17 / 14-06-17

TOP COAT (peinture)

PRODUCT : Bardot 359 (produit) COLOUR : stone gray NO. OF COATS : 1 (nombre de couches)

DRYING TEMP. : 24 Temp. de séchage) DRYING TIME (hrs) : 24 (temps de séchage) % HUMIDITY : 18

AVG MILS/COAT (DFT) : 12 & 19 (mils par couche sec) INITIALS : [illegible] DATE : 15-06-17

FINAL INSPECTION: _____ DATE : _____
SIGNATURE

Remarks:

_____

_____

_____

_____

NORMEX	RAPPORT DE JET DE SABLE ET RECOUVREMENT	W 80055 1

Client : Contruction Pronec P.O.# : _____

Project : 4048 Quote No. : _____

Inspected by : _____ Date : _____

EQUIPMENT : _____

SANDBLAST (jet de sable)

SANDBLAST MATERIAL (matériel) : alum INITIALS : [signature] DATE : 13-06-17

SANDBLAST (Add PRESS-O-FILM below) (profil du jet de sable) (ajouter PRESS-O-FILM dans le rectangle)

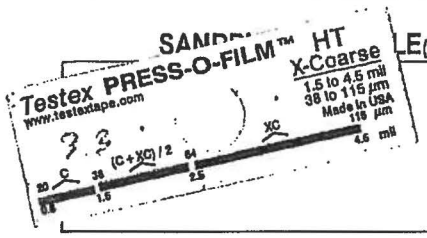



PRIMER (couche primaire)

PRODUCT : Bar Rus 235 (produit) COLOUR : light gris NO. OF COATS : 1-2 (nombre de couches)

DRYING TEMP : 24 (temp. de séchage) DRYING TIME (hrs) : 24 (temps de séchage) % HUMIDITY: 23

AVG MILS/COAT (DFT) : 1e 7 à 8 ~~2e 7 à 8~~ (mils par couche sec) INITIALS : [signature] DATE : 13-06-17 14-06-17

TOP COAT (peinture)

PRODUCT : Devitlore 359 (produit) COLOUR : Stone grey NO. OF COATS : 1 (nombre de couches)

DRYING TEMP. : 24 Temp. de séchage) DRYING TIME (hrs) : 24 (temps de séchage) % HUMIDITY : 18

AVG MILS/COAT (DFT) : 12 à 17 (mils par couche sec) INITIALS : [signature] DATE : 15-06-17

FINAL INSPECTION: _____ DATE : _____
SIGNATURE

Remarks:

_____

_____

_____

_____

NORMEX	RAPPORT DE JET DE SABLE ET RECOUVREMENT	W 800 55 — 1

Client : Construction Bonac P.O.# : _____

Project : 4048 Quote No. : _____

Inspected by : _____ Date : _____

EQUIPMENT : _____

SANDBLAST (jet de sable)

SANDBLAST MATERIAL (matériel) : Grit INITIALS : MY DATE : 16-07-17

SANDBLAST PROFILE (Add PRESS-O-FILM below) **(profil du jet de sable)** (ajouter PRESS-O-FILM dans le rectangle)

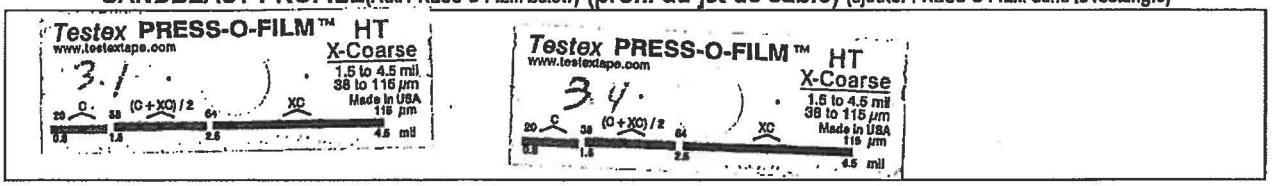

PRIMER (couche primaire)

PRODUCT (produit) : Barrier 235 COLOUR : grey NO. OF COATS (nombre de couches) : 1.2

DRYING TEMP (temp. de séchage) : 24 DRYING TIME (hrs) (temps de séchage) : 24 % HUMIDITY : 30

AVG MILS/COAT (DFT) (mils par couche sec) : 1e 7.8 2e 7.8 INITIALS : MY DATE : 16-06-17 17-06-17

TOP COAT (peinture)

PRODUCT (produit) : Devcon 359 COLOUR : Stone grey NO. OF COATS (nombre de couches) : 1

DRYING TEMP. (Temp. de séchage) : 24 DRYING TIME (hrs) (temps de séchage) : 24 % HUMIDITY : 28

AVG MILS/COAT (DFT) (mils par couche sec) : 10 & 15 INITIALS : MY DATE : 19-06-17

FINAL INSPECTION: _____ DATE : _____
SIGNATURE

Remarks:

_____

_____

_____

_____

NORMEX	RAPPORT DE JET DE SABLE ET RECOUVREMENT	W300 55 1

Client : Construction Rhomec P.O.# : _____

Project : 4048 Quote No. : _____

Inspected by : _____ Date : _____

EQUIPMENT : _____

SANDBLAST (jet de sable)

SANDBLAST MATERIAL (matériel) : acier INITIALS : MR DATE : 16-07-17

SANDBLAST PROFILE(Add PRESS-O-FILM below) **(profil du jet de sable)** (ajouter PRESS-O-FILM dans le rectangle)

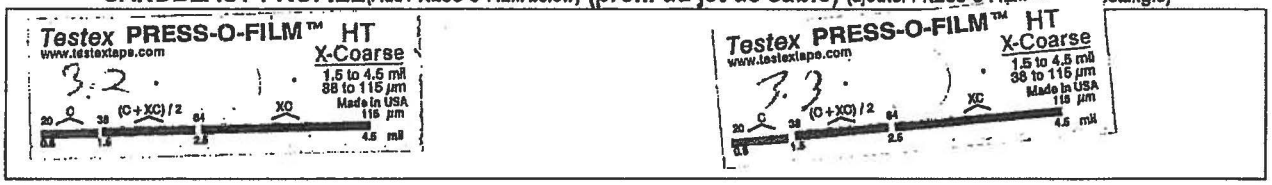

PRIMER (couche primaire)

PRODUCT : Barrier 235 (produit) COLOUR : gris NO. OF COATS : 1-2 (nombre de couches)

DRYING TEMP : 24 (temp. de séchage) DRYING TIME (hrs) : 24 (temps de séchage) % HUMIDITY: 30

AVG MILS/COAT (DFT) : 1st 7.8, 2nd 7.08 (mils par couche sec) INITIALS : MR DATE : 16-06-17, 17-06-17

TOP COAT (peinture)

PRODUCT : Durathane 379 (produit) COLOUR : jaune sécurité NO. OF COATS : 1 (nombre de couches)

DRYING TEMP. : 24 Temp. de séchage) DRYING TIME (hrs) : 24 (temps de séchage) % HUMIDITY : 28

AVG MILS/COAT (DFT) : lot 1.5 (mils par couche sec) INITIALS : MR DATE : 19-06-17

FINAL INSPECTION: _____ DATE : _____
SIGNATURE

Remarks:

_____

_____

_____

_____

NORMEX

Work Order Check List

Client: CONSTRUCTION PROMEC Quote: 4048 Work Order: 80049

Part Description: (11) CONTAINER CATWALK

N/A	YES	
☐	☑	Validate Material & Preparation
☐	☑	Visual Inspection complete. (Sharp edges, spatter, welding as per drawing...)
☐	☑	Dimensional Report.
☐	☑	Weld Map.
☐	☑	NDT (LPI, MPI, UT, X-Ray and Visual) refer to ITP & quality assurance program.
☐	☑	All parts fit as an assembly if required by production manager. (Revise packing list?)
☐	☑	Shop bolts required? If yes tightened. (How?)
☐	☑	Sandblasting & Coating Report.
☐	☑	Pictures.
☐	☑	All items on W.O. accounted for. (Work order screening)
☐	☑	Components packaged for shipping. (Includes ship loose items, belts, seals, motors....)
☑	☐	Are all extra materials and consumables entered on W.O.?
☑	☐	Are all error reports filled and attached?
☑	☐	Are all non conformance documented?

Note: Once complete and signed, returned to Project Manager.

Remark: Des fer angles ont été ajoutés sous les marches pour pouvoir les fixer dans les limons

Project Leader: Emmanuel Austin Date: 28/06/2017

Quality Control: Emmanuel Austin Date: 28/06/2017

Production Manager: _____ Date: _____

Qualification pour soudeur

Valide uniquement lorsqu'employé dans une compagnie certifiée par le CWB

Transférable Soudeur

Nom: MARCELLIN PAUL
Employeur: Normex Métal, La Sarre, QC
Gamme d'épaisseur: 3mm et plus

Date d'exp: mai 03, 2019

Matériau: Acier au carbone
Procédé: FCAW/MCAW
Norme: CSA W47.1
Catégorie: S

Mode: Semi-Automatique
Mécanisé avec électrode unique
Automatique avec électrode unique

Classe: PLAT/HORIZONTALE/VERTICALE(M)/PLAFOND

Voir les conditions au verso

L09



Qualification pour soudeur

Valide uniquement lorsqu'employé dans une compagnie certifiée par le CWB

Transferable Soudeur

Nom: STEVE LAMOUREUX

Date d'exp.: juil. 30, 2017

Employeur: Normex Metal, La Sarre, QC

Gamme d'épaisseur: 3mm et plus

Matériau: Acier au carbone

Procédé: FCAW/MCAW

Mode: Semi-Automatique

Norme: CSA W47.1

Mécanisé avec électrode unique

Catégorie: S

Automatique avec électrode unique

Classe: PLAT/HORIZONTAL/VERTICAL (MIPLAFONC)

Voir les conditions au verso

Soudeur # L06



Qualification pour soudeur

Valide uniquement lorsqu'employé dans une compagnie certifiée par le CWB

Transférable Soudeur

Nom: LOUIS CARON

Employeur: Normex Métal, La Sarre, QC

Gamme d'épaisseur: 3mm et plus

Mode: Semi-Automatique
Mécanisé avec électrode unique
Automatique avec électrode unique

Classe: PLAT/HORIZONTALE/VERTICALE(M)/PLAFOND

Date d'exp: févr. 16, 2018

Matériau: Acier au carbone
Procédé: FCAW/MCAW
Norme: CSA W47.1
Catégorie: B

Voir les conditions au verso

L-03

16 mai 2017 21:27:16, marcli, C:\Mario Cliche EXP\Clients\Normex\Escaliers reservoir\60 Réalisation\999-00048075-PP - Escalier pour réservoir\Details\VUE ISO.dwg

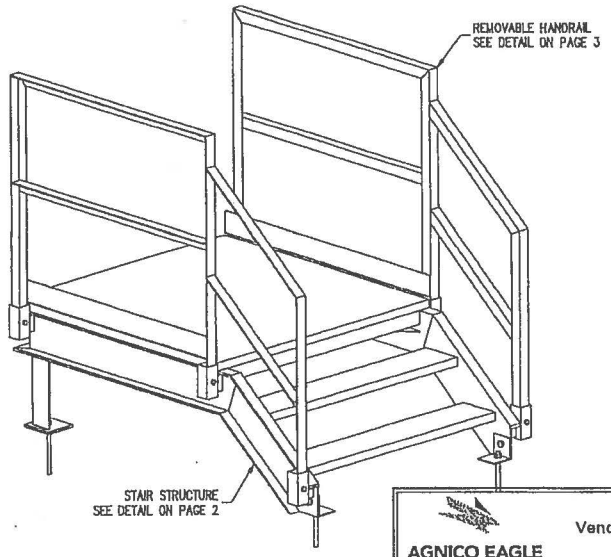

ISOMETRIC VIEW
CONTAINER CATWALK

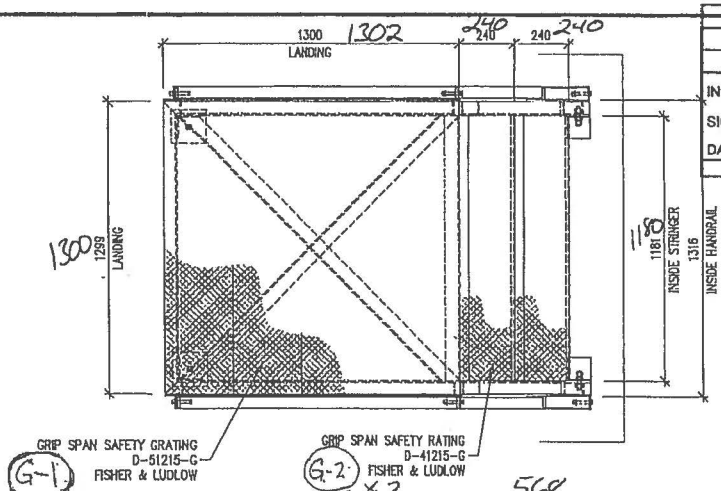

Soudage fait par : L03 - L06 - L09

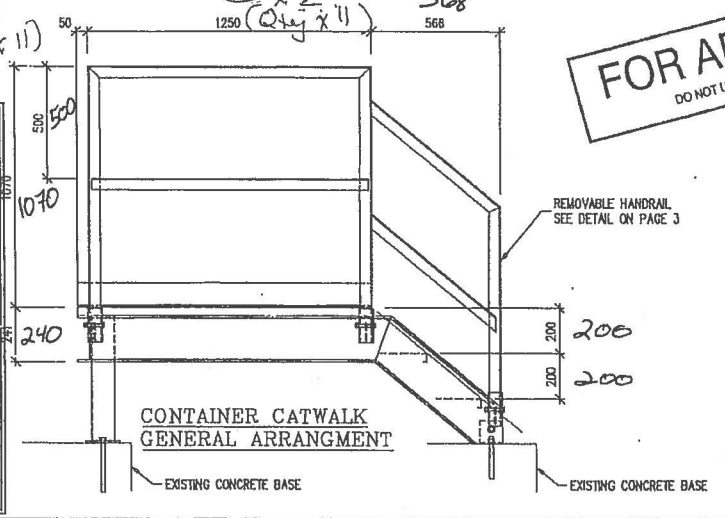

CONTAINER CATWALK
GENERAL ARRANGMENT

NORMEX METAL		
CONRÔLE DE QUALITÉ		
CONFORME ✓	OUI ✓	NON
INSPECTÉ PAR: Emmanuel Ouellet		
SIGNATURE: Emmanuel Ouellet		
DATE: 28 / 06 / 2017		
JOUR	MOIS	ANNÉE

FOR APPROVAL
DO NOT USE FOR FABRICATION

WSP SHOP DRAWING DATA SHEET

Affixing this stamp confirms that an administrative approval and/or a verification of compliance with shop drawings or specifications was made, but does not entail the liability of the author of the work or its owner with regards to this shop drawing or data sheet, for which the contractor is the sole responsible.

☑ Reviewed ☐ Reviewed as noted
☐ Rejected ☐ Filed for records

The contractor, supplier and/or sub-contractor is responsible for: confirming and coordinating all quantities and dimensions; selecting fabrication processes and techniques of construction; coordinating his or her work with that of all other trades and performing all work in a safe and satisfactory manner.

By: Joël Morliere Date: 2017/05/23

G-ADM-222-02-118-2 Project #: 161-06440-40

Vendor Document Status
AGNICO EAGLE

1 ☐ Proceed to next submission and status.
2 ☐ Proceed with exceptions as noted to next submission and status.
3 ☐ Do not proceed. Revise as noted and resubmit next submission and status.
4 ☑ Complete, no further submission required.

By: Joël Morliere Date: 2017-05-23

Review and authorization to fabricate are only for general conformance with the design concept of the Project as expressed in the Contract Documents. Sole responsibility for the accuracy and completeness of this document, including but not limited to dimensions and quantities, remains with the Supplier/Contractor. Agnico Eagle does not warrant the accuracy or completeness of any of the information contained herein, nor does Agnico Eagle authorize or approve any construction means, methods, techniques, sequences or any safety precautions or procedures.

Agnico Eagle No. 6515-C-270-007-245-SPD-0001 R: Sub001

DOCUMENT FOR INFORMATION

Révision :

No	Date (a-m-j)	Description	Par
AA	2017-05-10	FOR APPROVAL	MC

Client :
NORMEX
LA SARRE, QUEBEC
(TEL.)819-333-1200
(FAX)819-333-1212

exp.
Les Services exp inc.
1 : +1.819.762.7888 | f : +1.819.762.4611
28, 19e Rue, Bureau 330
Rouyn-Noranda, QC J9X 2M3
CANADA
www.exp.com

Projet :	AGNICO EAGLE - MELIADINE DIVISION - FUEL DISTRIBUTION
Titre :	CONTAINER CATWALK STRUCTURAL GENERAL ARRANGEMENT
Approuvé par : JONATHAN FAUCHER Ing	Dessiné par : MARIO CLICHE Ing.
Date : 2017-05-10	Page : 1 de 4
Dossier : 999-00048075-PP	Numéro de dessin : NMOI - 00048075 - A0 - S01 - AA

16 mai 2017 21:26:56, marcli, C:\Mario Cliche EXP\Clients\Normex\Escaliers reservoir\60 Réalisation\999-00048075-PP - Escalier pour réservoir\Details\GA_Page 2.rvt

NORMEX MÉTAL
CONTRÔLE DE QUALITÉ
CONFORME ✓ OUI NON
INSPECTÉ PAR: EMMANUEL OUELLET
SIGNATURE: Emmanuel Ouellet
DATE: 28 / 06 / 2017 (JOUR / MOIS / ANNÉE)

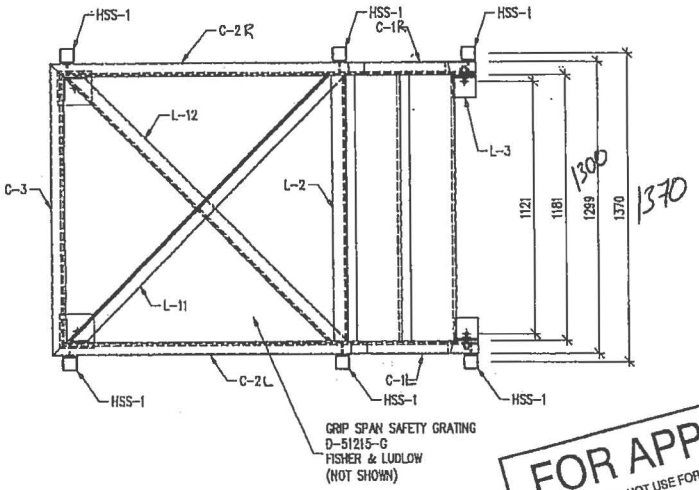

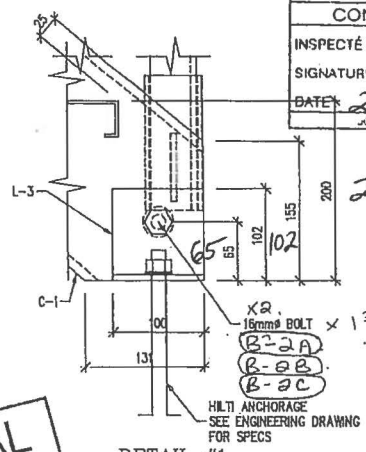

DETAIL #1

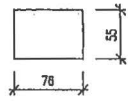

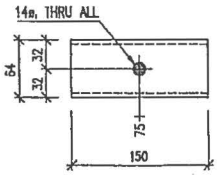

6x PL-1 PL 6.3x55x76-A36 ✓
(Qty x11)

6x HSS-1 HS64x64x4.8-A500 ✓
(Qty x11)

FOR APPROVAL
DO NOT USE FOR FABRICATION

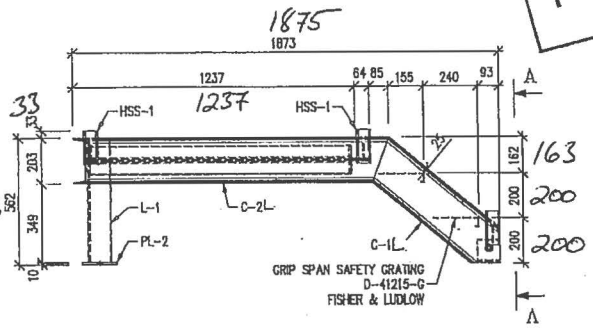

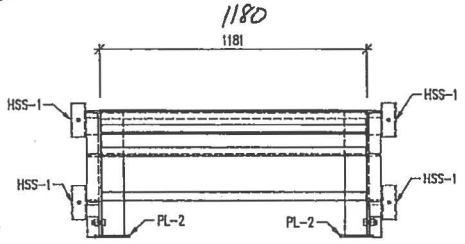

SECTION "A – A"

1 REQ'D STAIR STRUCTURE ARRANGEMENT

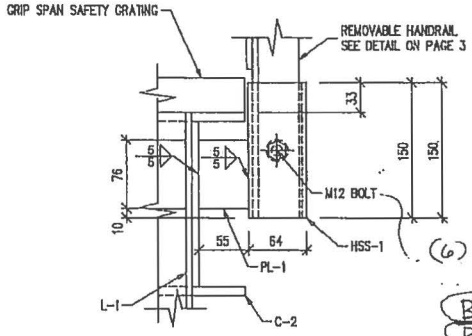

DETAIL #1

2 1/16" grip, 8" Lg

Révision :			
AA	2017-05-10	FOR APPROVAL	MC
No	Date (a-m-j)	Description	Par

Client :
NORMEX
LA SARRE, QUEBEC
(TEL.)819-333-1200
(FAX)819-333-1212

exp.
Les Services exp inc.
www.exp.com

Projet :	AGNICO EAGLE - MELIADINE DIVISION - FUEL DISTRIBUTION
Titre :	CONTAINER CATWALK STRUCTURAL STAIR DETAILS
Approuvé par : JONATHAN FAUCHER Ing.	Dessiné par : MARIO CLICHE Ing. — Date : 2017-05-10 — Page : 2 de 4
Dossier : 999-00048075-PP	Numéro de dessin : NMOI - 00048075 - A0 - S01 - AA

NORMEX

Work Order Check List

Client: CONSTRUCTION PROMEC Quote: 4048 Work Order: 800665

Part Description: CONTAINER CATWALK HANDRAILS (11L + 11R)

N/A	YES	
☐	☑	Validate Material & Preparation
☐	☑	Visual inspection complete. (Sharp edges, spatter, welding as per drawing...)
☐	☑	Dimensional Report.
☐	☑	Weld Map.
☐	☑	NDT (LPI, MPI, UT, X-Ray and Visual) refer to ITP & quality assurance program.
☐	☑	All parts fit as an assembly if required by production manager. (Revise packing list?)
☑	☐	Shop bolts required? If yes tightened. (How?)
☐	☑	Sandblasting & Coating Report.
☐	☑	Pictures.
☐	☑	All items on W.O. accounted for. (Work order screening)
☐	☑	Components packaged for shipping. (Includes ship loose items, belts, seals, motors....)
☑	☐	Are all extra materials and consumables entered on W.O.?
☑	☐	Are all error reports filled and attached?
☑	☐	Are all non conformance documented?

Note: Once complete and signed, returned to Project Manager.

Remark: Les gardes-corps ont été fabriquées dans un gabarit afin d'en assurer l'exactitude et la similitude

Project Leader: Emmanuel Quitta Date: 28/06/2017

Quality Control: Emmanuel Quitta Date: 28/06/2017

Production Manager: _____ Date: _____

Qualification pour soudeur

Valide uniquement lorsqu'employé dans une compagnie certifiée par le CWB

Transférable Soudeur

Nom: SAMUEL GOULET
Emplyeur: Normex Métal, La Sarre, QC
Gamme d'épaisseur: 3mm et plus

Mode: MANUEL

Date d'exp: mars 15, 2019

Matériau: Acier au carbone
Procédé: SMAW
Norme: CSA W47.1
Catégorie: S
Électrode: F4

Classe: PLAT/HORIZONTALE/VERTICALE(M)/PLAFOND

Voir les conditions au verso

Qualification pour soudeur

Valide uniquement lorsqu'employé dans une compagnie certifiée par le CWB

Transférable Soudeur

Nom: SAMUEL GOULET
Emplyeur: Normex Métal, La Sarre, QC
Gamme d'épaisseur: 3mm et plus

Mode: Semi-Automatique
Mécanisé avec électrode unique
Automatique avec électrode unique

Date d'exp: mars 15, 2019

Matériau: Acier au carbone
Procédé: FCAW/MCAW
Norme: CSA W47.1
Catégorie: S

Classe: PLAT/HORIZONTALE/VERTICALE(M)/PLAFOND

Voir les conditions au verso

L 25



Qualification pour soudeur

Valide uniquement lorsqu'employé dans une compagnie certifiée par le CWB

Transférable Soudeur

Nom: LOUIS CARON

Employeur: Normétx Métal, La Sarre, QC

Gamme d'épaisseur: 3mm et plus

Mode: Semi-Automatique
Mécanisé avec électrode unique
Automatique avec électrode unique

Classe: PLAT/HORIZONTAL/VERTICALE/M/PLAFOND

Date d'exp.: févr. 16, 2018

Matériau: Acier au carbone

Procédé: FCAW/MCAW

Norme: CSA W47.1

Catégorie: S

Voir les conditions au verso

L-03

Qualification pour soudeur

Valide uniquement lorsqu'employé dans une compagnie certifiée par le CWB

Transferable Soudeur

Nom: ALEXANDRE JULIEN
Employeur: Normex Métal, La Sarre, QC
Gamme d'épaisseur 3mm et plus

Mode: Semi-Automatique
Mécanisé avec électrode unique
Automatique avec électrode unique
Classe: PLAT

Date d'exp: nov. 17, 2010

Matériau: Acier au carbone
Procédé: FCAW/MCAW
Norme: CSA W47.1
Catégorie: S

Voir les conditions au verso

Qualification pour soudeur

Valide uniquement lorsqu'employé dans une compagnie certifiée par le CWB

Transferable Soudeur

Nom: ALEXANDRE JULIEN
Employeur: Normex Métal, La Sarre, QC
Gamme d'épaisseur: 3mm et plus

Mode: MANUEL

Classe: PLAT

Date d'exp: nov. 17, 2010

Matériau: Acier au carbone
Procédé: SMAW
Norme: CSA W47.1
Catégorie: S
Électrode: F4

Voir les conditions au verso

L 38

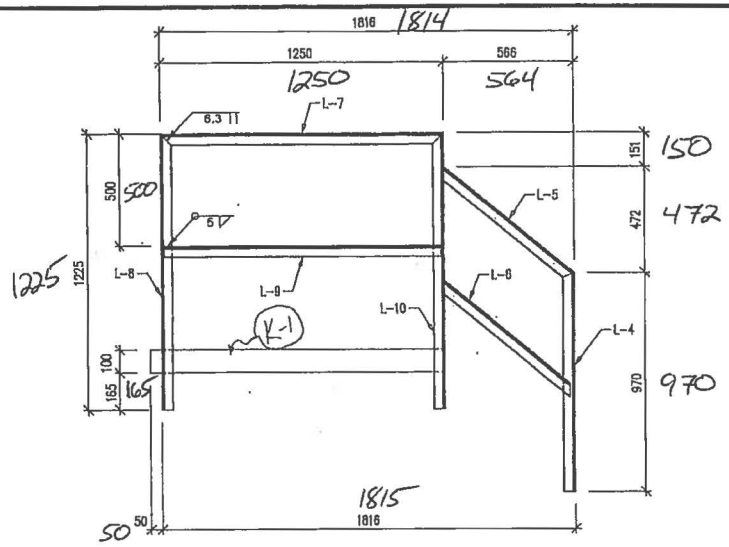

1L/1R REQ'D REMOVABLE HANDRAIL ARRANGEMENT

Qty X 11.

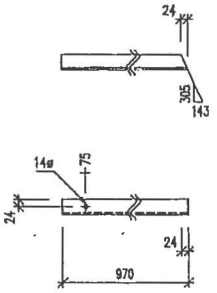

2x L-4 L51X51X6.4-300W

Qty x 11.

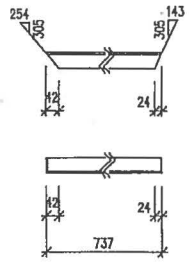

2x L-5 L51X51X6.4-300W

Qty x 11

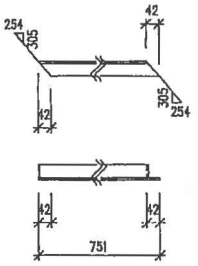

2x L-6 L51X51X6.4-300W

Qty x 11.

FOR APPROVAL
DO NOT USE FOR FABRICATION

NORMEX MÉTAL		
CONRÔLE DE QUALITÉ		
CONFORME ✓	OUI	NON
INSPECTÉ PAR: Emmanuel Ouellet		
SIGNATURE: Emmanuel Ouellet		
DATE: 28 / 06 / 2017		
JOUR	MOIS	ANNÉE

Soudage fait par:
L38 - L03 - L25

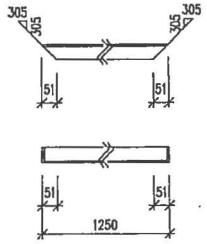

2x L-7 L51X51X6.4-300W

Qty x 11.

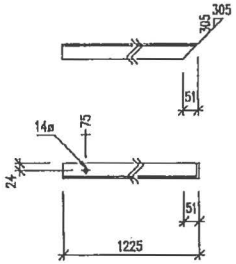

2x L-8 L51X51X6.4-300W

Qty x 11.

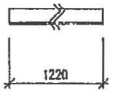

2x L-9 L51X51X6.4-300W

Qty x 11

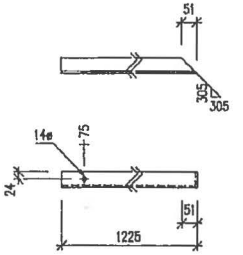

2x L-10 L51X51X6.4-300W

Qty x 11.

16 mai 2017 21:25:23, marcil, C:\Mario Cliche EXP\Clients\Normex\Escaliers reservoir\60 Réalisation\999-00048075-PP - Escalier pour réservoir\Details\6.dwg

Révision :			
AA	2017-05-10	FOR APPROVAL	MC
No	Date (a-m-j)	Description	Par

Client :

NORMEX
LA SARRE, QUEBEC
(TEL.)819-333-1200
(FAX)819-333-1212

exp.
Les Services exp Inc.
25, 19e Rue, bureau 200
Rouyn-Noranda, QC J9X 2M3
CANADA
www.exp.com

Projet : AGNICO EAGLE - MELIADINE DIVISION - FUEL DISTRIBUTION			
Titre : CONTAINER CATWALK STRUCTURAL HANDRAIL DETAILS			
Approuvé par : JONATHAN FAUCHER Ing.	Dessiné par : MARIO CLICHE Ing.	Date : 2017-05-10	Page : 4 de 4
Dossier : 999-00048075-PP	Numéro de dessin : NMOI - 00048075 - A0 - S01 - AA		

NORMEX

Work Order Check List

Client: CONSTRUCTION PROMEC Quote: 4048 Work Order: 80050

Part Description: (1) DIKE CATWALK SECTION 1 (1) DIKE CATWALK SECTION 2

N/A	YES	
☐	☑	Validate Material & Preparation
☐	☑	Visual Inspection complete. (Sharp edges, spatter, welding as per drawing...)
☐	☑	Dimensional Report.
☐	☑	Weld Map.
☐	☑	NDT (LPI, MPI, UT, X-Ray and Visual) refer to ITP & quality assurance program.
☐	☑	All parts fit as an assembly if required by production manager. (Revise packing list?)
☐	☑	Shop bolts required? If yes tightened. (How?)
☐	☑	Sandblasting & Coating Report.
☐	☑	Pictures.
☐	☑	All items on W.O. accounted for. (Work order screening)
☐	☑	Components packaged for shipping. (Includes ship loose items, belts, seals, motors....)
☑	☐	Are all extra materials and consumables entered on W.O.?
☑	☐	Are all error reports filled and attached?
☑	☐	Are all non conformance documented?

Note: Once complete and signed, returned to Project Manager.

Remark: Des fer angles ont été ajoutés sous les marches afin de les fixer. Ceci est le contrôle pour 1 dike catwalk sur 3 total.

Project Leader: Emmanuel Cloutier Date: 29/06/2017

Quality Control: Emmanuel Cloutier Date: 29/06/2017

Production Manager: _____ Date: _____

Qualification pour soudeur

Valide uniquement lorsqu'employé dans une compagnie certifiée par le CWB

Transférable Soudeur

Nom: LOUIS CARON
Date d'exp.: févr. 16, 2016

Employeur: Normex Métal, La Sarre, QC

Gamme d'épaisseur: 3mm et plus
Matériau: Acier au carbone

Procédé: FCAW/MCAW

Mode: Semi-Automatique
Norme: CSA W47.1

Mécanisé avec électrode unique
Catégorie: B

Automatique avec électrode unique

Classe: PLAT/HORIZONTALE/VERTICALE/M)/PLAFOND

Voir les conditions au verso

L-03

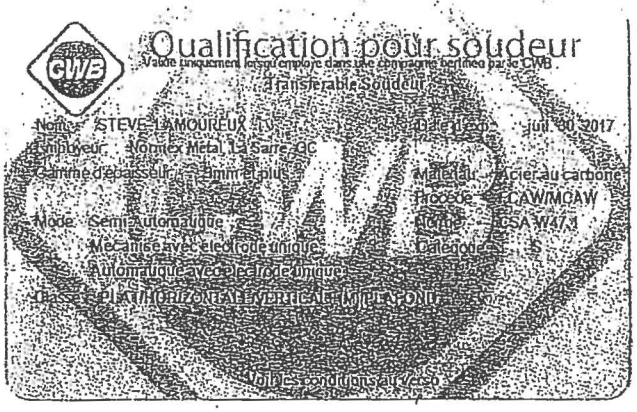

Qualification pour soudeur

Valide uniquement lorsqu'employé dans une compagnie certifiée par le CWB.

Transferable Soudeur

Nom : STEVE LAMOUREUX

Date d'exp. : juil. 30, 2017

Employeur : Normex Metal, La Sarre, QC

Gamme d'épaisseur : 3mm et plus

Matériau : Acier au carbone

Procédé : FCAW/MCAW

Mode : Semi-Automatique

Norme : CSA W47.1

Mécanisé avec électrode unique

Catégorie : S

Automatique avec électrode unique

Classe : PLAT/HORIZONTAL/VERTICAL/IMPLANTOND

Voir les conditions au verso

Soudeur # L06

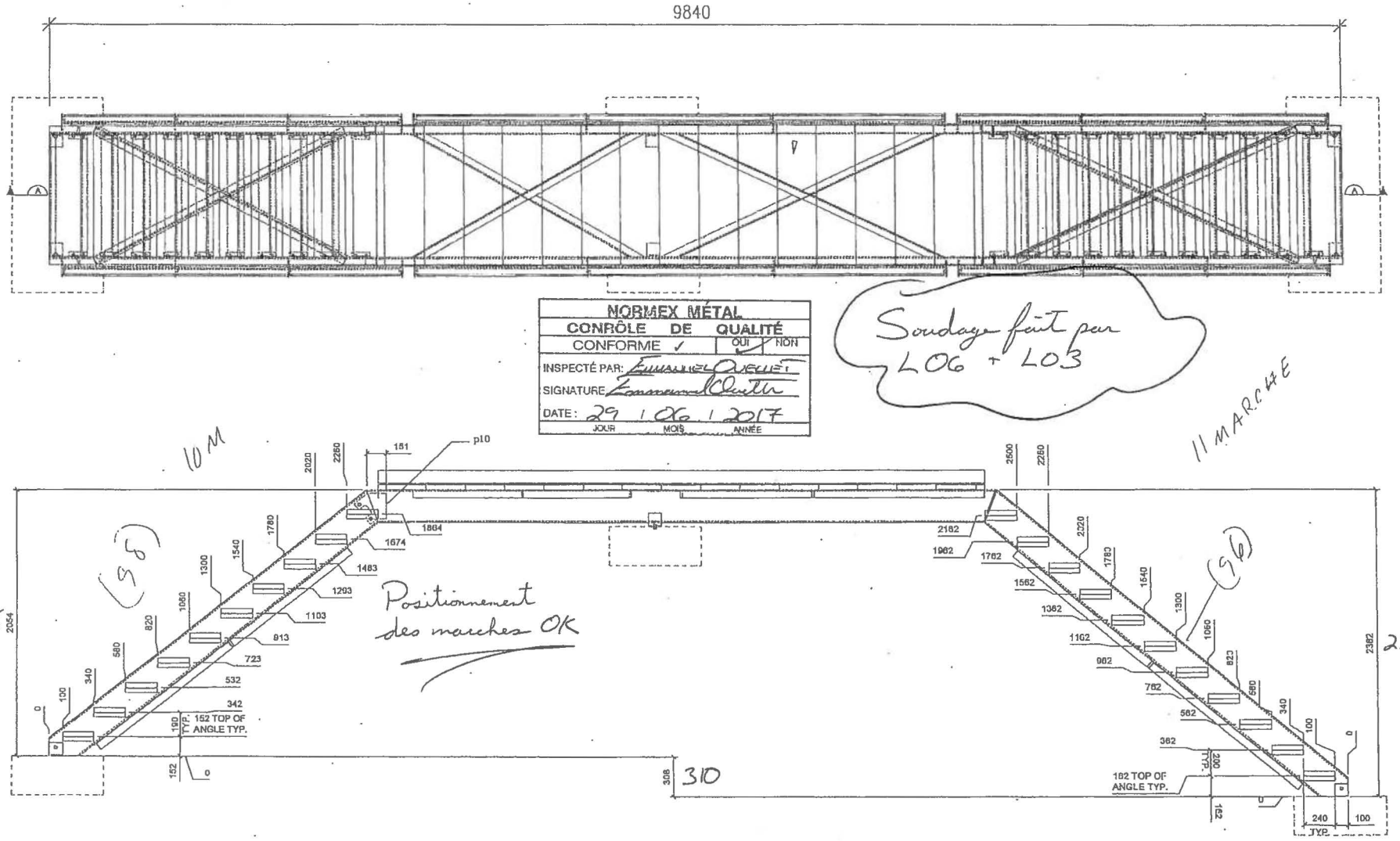

DIKE STAIR ARRANGEMENT – SECTION A–A

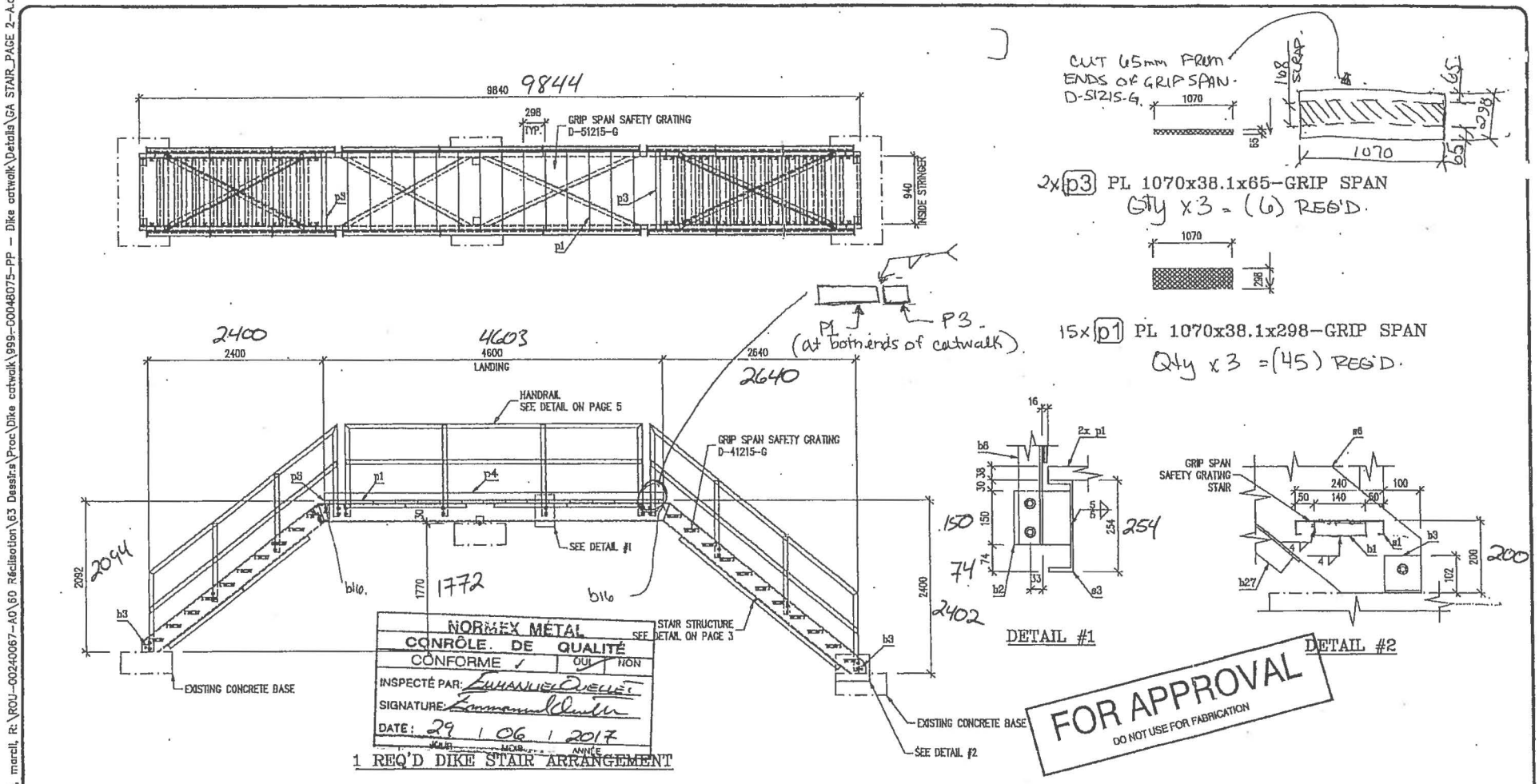

29 mai 2017 17:02:30, marcil, R:\ROU-00240067-A0\60 Réalisation\63 Dessins\Proc\Dike catwalk\999-00048075-PP - Dike catwalk\Details\GA STAIR_PAGE 2-A.dwg

Révision :			
BB	2017-05-29	HANDRAIL & STRINGER MODIFICATION	MC
AA	2017-05-18	FOR APPROVAL	MC
No	Date (a-m-j)	Description	Par

Client :

NORMEX
LA SARRE, QUEBEC
(TEL.)819-333-1200
(FAX)819-333-1212

exp.
Les Services exp Inc.
CANADA

Projet :	AGNICO EAGLE - MELIADINE DIVISION - FUEL DISTRIBUTION		
Titre :	DIKE CATWALK STRUCTURAL CATWALK ARRANGEMENT		
Approuvé par : JONATHAN FAUCHER Ing.	Dessiné par : MARIO CLICHE Ing.	Date : 2017-05-16	Page : 2 de 6
Dossier : 999-00048075-PP	Numéro de dessin : NMOI - 00048075 - A0 - S03 - BB		

29 mai 2017 17:04:23, marail, R:\ROU-00240067-A0\60 Réalisation\63 Dessins\Proc\Dike catwalk\999-00048075-PP - Dike catwalk\Details\GA STAIR_PAGE 3-A.dwg

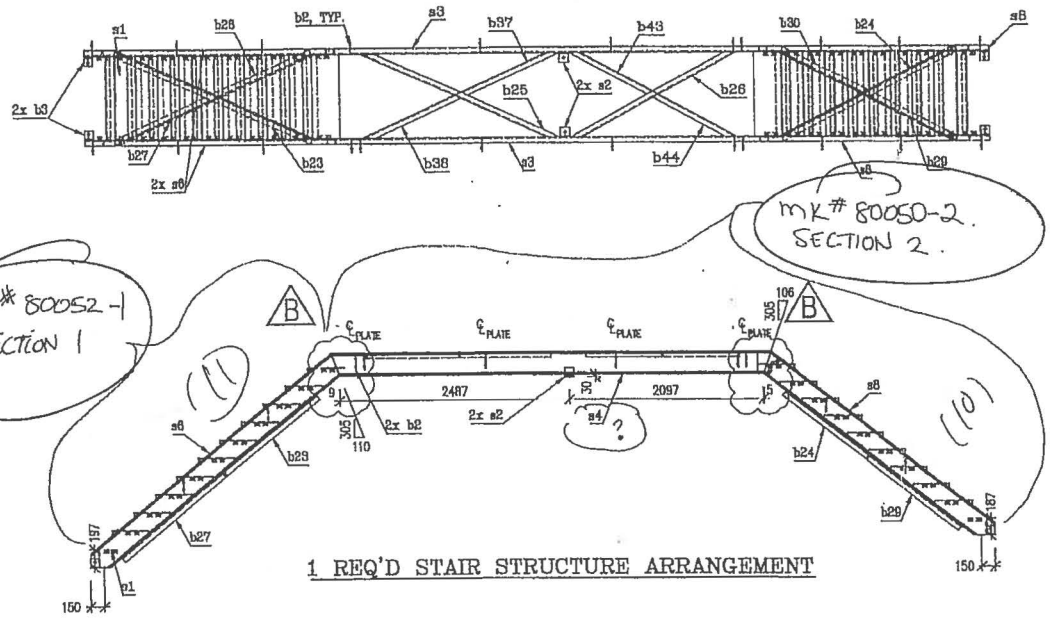

1 REQ'D STAIR STRUCTURE ARRANGEMENT

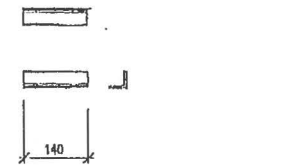

42x b1 L38X38X4.8-300W
Qty x 3 = (126) REQ'D

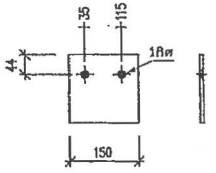

24x b2 FL 8X152 -44W
Qty x3 = (72) REQ'D.

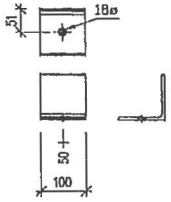

2x s2 L102X102X6.4-300W
Qty x3 = (6) REQ'D

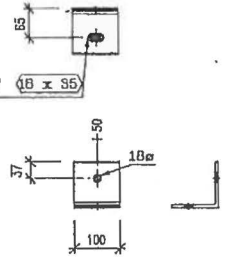

4x b3 L102X102X6.4-300W
Qty x3 = (12) REQ'D.

FOR APPROVAL
DO NOT USE FOR FABRICATION

Révision :			
BB	2017-05-29	HANDRAIL & STRINGER MODIFICATION	MC
AA	2017-05-16	FOR APPROVAL	MC
No	Date (a-m-j)	Description	Par

Client :
NORMEX
LA SARRE, QUEBEC
(TEL.)819-333-1200
(FAX)819-333-1212

exp.
Les Services exp inc.
Rouyn-Noranda, QC
CANADA
www.exp.com

Projet : AGNICO EAGLE - MEL/ADINE DIVISION - FUEL DISTRIBUTION			
Titre : DIKE CATWALK STRUCTURAL STAIR ARRANGEMENT			
Approuvé par : JONATHAN FAUCHER Ing.	Dessiné par : MARIO CLICHE Ing.	Date : 2017-05-16	Page : 3 de 6
Dossier : 999-00048075-PP	Numéro de dessin : NMOI - 00048075 - A0 - S03 - BB		

NORMEX

Work Order Check List

Client: CONSTRUCTION PROMEC Quote: 4048 Work Order: 80053

Part Description: STAIR HANDRAILS DIKE CATWALK

(1) 1L - (1) 1R - (1) 2L - (1) 2R

N/A	YES	
☐	☑	Validate Material & Preparation
☐	☑	Visual inspection complete. (Sharp edges, spatter, welding as per drawing...)
☐	☑	Dimensional Report.
☐	☑	Weld Map.
☐	☑	NDT (LPI, MPI, UT, X-Ray and Visual) refer to ITP & quality assurance program.
☐	☑	All parts fit as an assembly if required by production manager. (Revise packing list?)
☐	☑	Shop bolts required? If yes tightened. (How?)
☐	☑	Sandblasting & Coating Report.
☐	☑	Pictures.
☐	☑	All items on W.O. accounted for. (Work order screening)
☐	☑	Components packaged for shipping. (Includes ship loose items, belts, seals, motors....)
☑	☐	Are all extra materials and consumables entered on W.O.?
☑	☐	Are all error reports filled and attached?
☑	☐	Are all non conformance documented?

Note: Once complete and signed, returned to Project Manager.

Remark: _____

Project Leader: Emmanuel Quirin Date: 29/06/2017

Quality Control: Emmanuel Quirin Date: 29/06/2017

Production Manager: _____ Date: _____

Qualification pour soudeur

Valide uniquement lorsqu'employé dans une compagnie certifiée par le CWB

Transférable Soudeur

Nom: ALEXANDRE JULIEN
Employeur: Normex Métal, La Sarre, QC
Gamme d'épaisseur 3mm et plus

Mode: Semi-Automatique
Mécanisé avec électrode unique
Automatique avec électrode unique
Classe: PLAT

Date d'exp: nov. 17, 2010

Matériau: Acier au carbone
Procédé: FCAW/MCAW
Norme: CSA W47.1
Catégorie: S

Voir les conditions au verso

Qualification pour soudeur

Valide uniquement lorsqu'employé dans une compagnie certifiée par le CWB

Transférable Soudeur

Nom: ALEXANDRE JULIEN
Employeur: Normex Métal, La Sarre, QC
Gamme d'épaisseur: 3mm et plus

Mode: MANUEL

Classe: PLAT

Date d'exp: nov. 17, 2016

Matériau: Acier au carbone
Procédé: SMAW
Norme: CSA W47.1
Catégorie: S
Électrode: F4

Voir les conditions au verso

L 38

Qualification pour soudeur

Valide uniquement lorsqu'employé dans une compagnie certifiée par le CWB

Transférable Soudeur

Nom: SAMUEL GOULET
Employeur: Normex Métal, La Sarre, QC
Gamme d'épaisseur: 3mm et plus

Mode: MANUEL

Date d'exp: mars 15, 2019

Matériau: Acier au carbone
Procédé SMAW
Norme: CSA W47.1
Catégorie: S
Électrode: F4

Classe: PLAT/HORIZONTALE/VERTICALE(M)/PLAFOND

Voir les conditions au verso

Qualification pour soudeur

Valide uniquement lorsqu'employé dans une compagnie certifiée par le CWB

Transférable Soudeur

Nom: SAMUEL GOULET
Employeur: Normex Métal, La Sarre, QC
Gamme d'épaisseur: 3mm et plus

Mode: Semi-Automatique
Mécanisé avec électrode unique
Automatique avec électrode unique

Date d'exp: mars 15, 2019

Matériau: Acier au carbone
Procédé: FCAW/MCAW
Norme: CSA W47.1
Catégorie: S

Classe: PLAT/HORIZONTALE/VERTICALE(M)/PLAFOND

Voir les conditions au verso

L 25

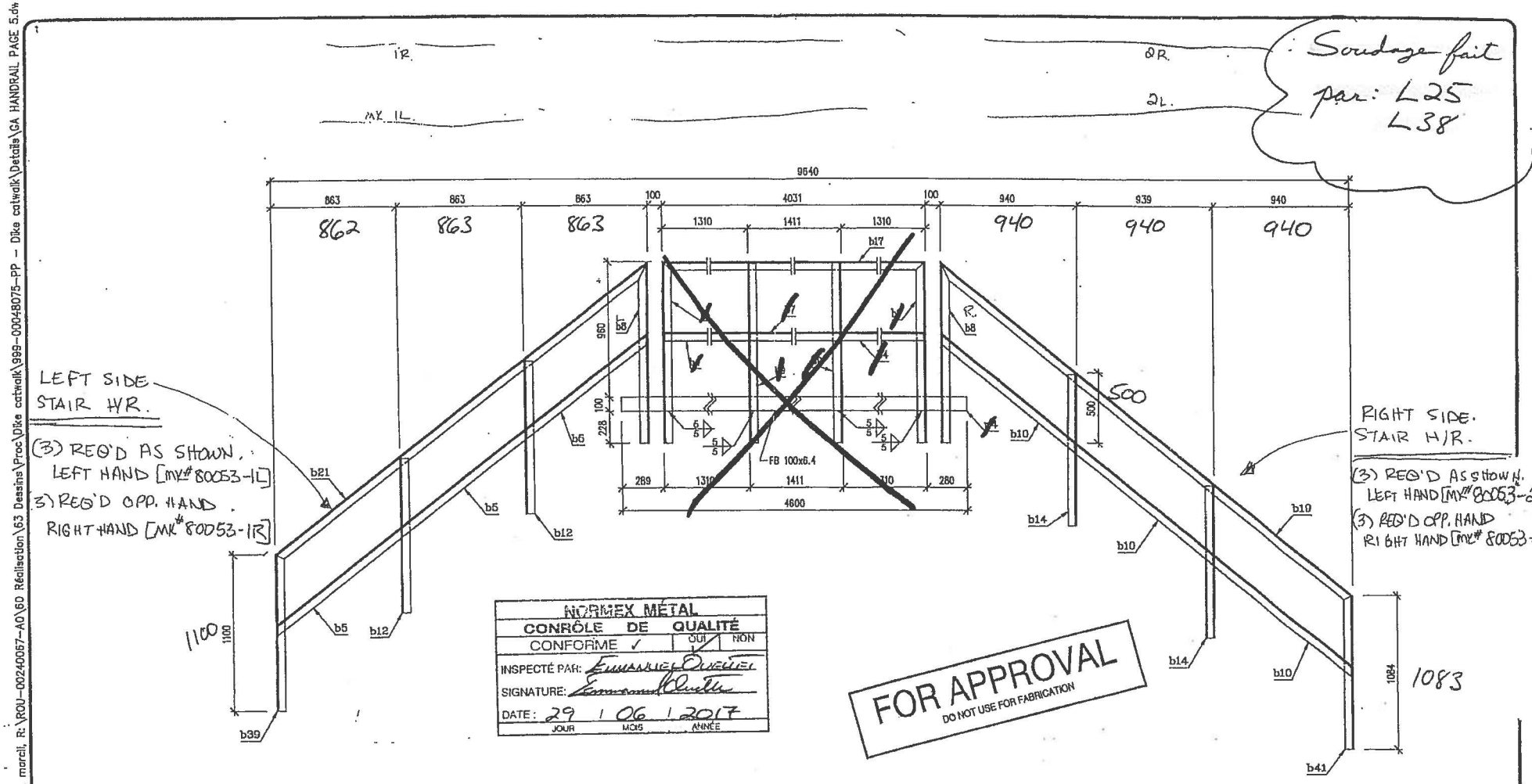

29 mai 2017 17:01:46, marcil, R:\ROU-00240067-A0\60 Réalisation\63 Dessins\Proc\Dike catwalk\999-00048075-PP - Dike catwalk\Details\GA HANDRAIL PAGE 5.dw

Révision :

No	Date (a-m-j)	Description	Par
BB	2017-05-29	HANDRAIL & STRINGER MODIFICATION	MC
AA	2017-05-16	FOR APPROVAL	MC

Client :

NORMEX
LA SARRE, QUEBEC
(TEL)819-333-1200
(FAX)819-333-1212

exp.
Les Services exp Inc.
1 : +1.819.762.3800 / : +1.819.762.4811
26, 19e Rue, bureau 200
Rouyn-Noranda, QC J9X 2M3
CANADA
www.exp.com

Projet : AGNICO EAGLE - MELIADINE DIVISION - FUEL DISTRIBUTION

Titre : DIKE CATWALK
STRUCTURAL
HANDRAIL ARRANGEMENT

Approuvé par :	Dessiné par :	Date :	Page :
JONATHAN FAUCHER Ing.	MARIO CLICHE Ing.	2017-05-16	5 de 6

Dossier : 999-00048075-PP

Numéro de dessin : NMOI - 00048075 - A0 - S03 - BB

NORMEX

Work Order Check List

Client: CONSTRUCTION PROMEC Quote: 4048 Work Order: 80052

Part Description: (2) STRAIGHT HANDRAIL DIKE CATWALKS

N/A	YES	
☐	☑	Validate Material & Preparation
☐	☑	Visual Inspection complete. (Sharp edges, spatter, welding as per drawing...)
☐	☑	Dimensional Report.
☐	☑	Weld Map.
☐	☑	NDT (LPI, MPI, UT, X-Ray and Visual) refer to ITP & quality assurance program.
☐	☑	All parts fit as an assembly if required by production manager. (Revise packing list?)
☑	☐	Shop bolts required? If yes tightened. (How?)
☐	☑	Sandblasting & Coating Report.
☐	☑	Pictures.
☐	☑	All items on W.O. accounted for. (Work order screening)
☐	☑	Components packaged for shipping. (Includes ship loose items, belts, seals, motors....)
☑	☐	Are all extra materials and consumables entered on W.O.?
☑	☐	Are all error reports filled and attached?
☑	☐	Are all non conformance documented?

Note: Once complete and signed, returned to Project Manager.

Remark: Contrôle de qualité pour les 2 handrails qui ont été envoyé sur un total de 6

Project Leader: Emmanuel Ouellet Date: 29/06/2017

Quality Control: Emmanuel Ouellet Date: 29/06/2017

Production Manager: _____ Date: _____

Qualification pour soudeur

Valide uniquement lorsqu'employé dans une compagnie certifiée par le CWB

Transférable Soudeur

Nom: SAMUEL GOULET
Employeur: Normex Métal, La Sarre, QC
Gamme d'épaisseur: 3mm et plus

Mode: MANUEL

Date d'exp: mars 15, 2019

Matériau: Acier au carbone
Procédé: SMAW
Norme: CSA W47.1
Catégorie: S
Électrode: F4

Classe: PLAT/HORIZONTALE/VERTICALE(M)/PLAFOND

Voir les conditions au verso

Qualification pour soudeur

Valide uniquement lorsqu'employé dans une compagnie certifiée par le CWB

Transférable Soudeur

Nom: SAMUEL GOULET
Employeur: Normex Métal, La Sarre, QC
Gamme d'épaisseur: 3mm et plus

Mode: Semi-Automatique
Mécanisé avec électrode unique
Automatique avec électrode unique

Date d'exp: mars 15, 2019

Matériau: Acier au carbone
Procédé: FCAW/MCAW
Norme: CSA W47.1
Catégorie: S

Classe: PLAT/HORIZONTALE/VERTICALE(M)/PLAFOND

Voir les conditions au verso

L 25

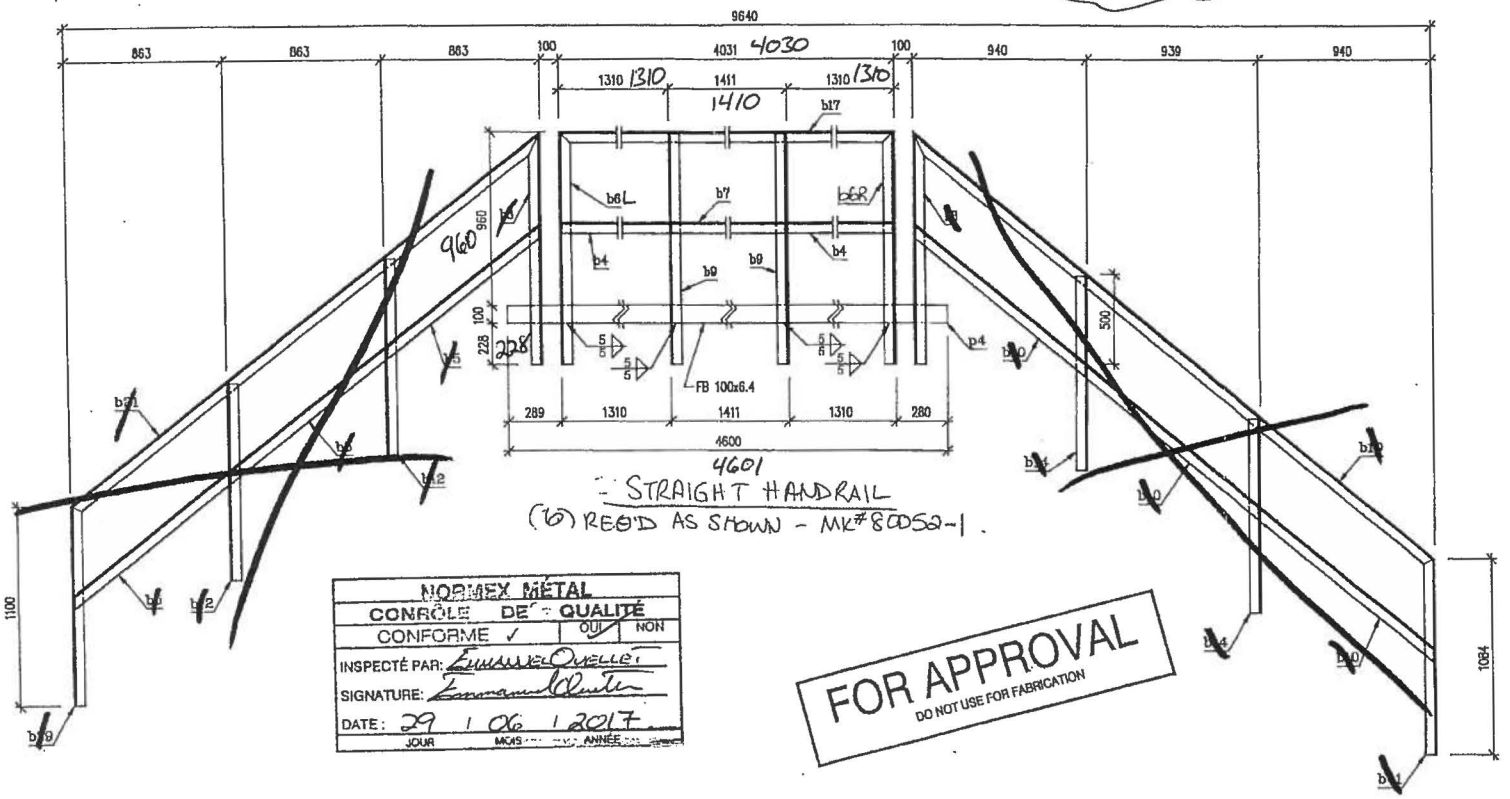

29 mai 2017 17:01:46, marcil, R:\ROU-00240067-A0\60 Réalisation\63 Dessins\Proc\Dike catwalk\999-00048075-PP - Dike catwalk\Details\GA HANDRAIL PAGE 5.dw

Révision :			
BB	2017-05-29	HANDRAIL & STRINGER MODIFICATION	MC
AA	2017-05-16	FOR APPROVAL	MC
No	Date (a-m-j)	Description	Par

Client :

NORMEX
LA SARRE, QUEBEC
(TEL.)819-333-1200
(FAX)819-333-1212

exp.
Les Services exp Inc.
t : +1.819.767.2960 | f : +1.819.767.4814
28, 18e Rue, bureau 200
Rouyn-Noranda, QC J9X 2M3
CANADA
www.exp.com

Projet : AGNICO EAGLE - MELIADINE DIVISION - FUEL DISTRIBUTION			
Titre : DIKE CATWALK STRUCTURAL HANDRAIL ARRANGEMENT			
Approuvé par : JONATHAN FAUCHER ing.	Dessiné par : MARIO CLICHE ing.	Date : 2017-05-16	Page : 5 de 6
Dossier : 999-00048075-PP	Numéro de dessin : NMOI - 00048075 - A0 - S03 - BB		

NORMEX

Work Order Check List

Client: CONSTRUCTION PROMEC Quote: 4048 Work Order: 80051

Part Description: (5) PIPE CATWALK

N/A	YES	
☐	☑	Validate Material & Preparation
☐	☑	Visual Inspection complete. (Sharp edges, spatter, welding as per drawing...)
☐	☑	Dimensional Report.
☐	☑	Weld Map.
☐	☑	NDT (LPI, MPI, UT, X-Ray and Visual) refer to ITP & quality assurance program.
☐	☑	All parts fit as an assembly if required by production manager. (Revise packing list?)
☐	☑	Shop bolts required? If yes tightened. (How?)
☐	☑	Sandblasting & Coating Report.
☐	☑	Pictures.
☐	☑	All items on W.O. accounted for. (Work order screening)
☐	☑	Components packaged for shipping. (Includes ship loose items, belts, seals, motors....)
☑	☐	Are all extra materials and consumables entered on W.O.?
☑	☐	Are all error reports filled and attached?
☑	☐	Are all non conformance documented?

Note: Once complete and signed, returned to Project Manager.

Remark: Des fer angles ont été ajoutés sous les marches pour les fixer dans les limons

Project Leader: Emmanuel Quitte Date: 28/06/2017

Quality Control: Emmanuel Quitte Date: 28/06/2017

Production Manager: _____ Date: _____

Qualification pour soudeur

Valide uniquement lorsqu'employé dans une compagnie certifiée par le CWB

Transférable Soudeur

Nom: MARCELLIN PAUL
Date d'exp: mai 03, 2019

Employeur: Normex Métal, La Sarre, QC

Gamme d'épaisseur: 3mm et plus
Matériau: Acier au carbone
Procédé: FCAW/MCAW

Mode: Semi-Automatique
Mécanisé avec électrode unique
Automatique avec électrode unique
Norme: CSA W47.1
Catégorie: S

Classe: PLAT/HORIZONTALE/VERTICALE(M)/PLAFOND

Voir les conditions au verso

L09

Qualification pour soudeur

Valide uniquement lorsqu'employé dans une compagnie certifiée par le CWB

Transferable Soudeur

Nom: JOEL GIRARD
Employeur: SMG SOUDURE INC, Duparquet, QC
Gamme d'épaisseur: 3mm et plus

Mode: Semi-Automatique
Mécanisé avec électrode unique
Automatique avec électrode unique

Classe: PLAT/HORIZONTALE/VERTICALE(M)/PLAFOND

Date d'exp: sept. 26, 2017
Matériau: Acier au carbone
Procédé: FCAW/MCAW
Norme: CSA W47.1
Catégorie: S

Voir les conditions au verso

Qualification pour soudeur

Valide uniquement lorsqu'employé dans une compagnie certifiée par le CWB

Transferable Soudeur

Nom: JOEL GIRARD
Employeur: SMG SOUDURE INC, Duparquet, QC
Gamme d'épaisseur: 3mm et plus

Mode: MANUEL

Classe: PLAT/HORIZONTALE/VERTICALE(M)/PLAFOND

Date d'exp: déc. 10, 2017
Matériau: Acier au carbone
Procédé: SMAW
Norme: CSA W47.1
Catégorie: S
Électrode: F4

Voir les conditions au verso

L37

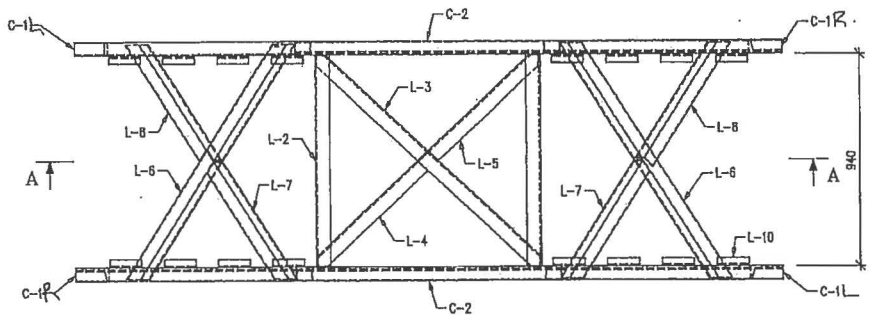

1 REQ'D STAIR STRUCTURE ARRANGEMENT

Qty x 5.

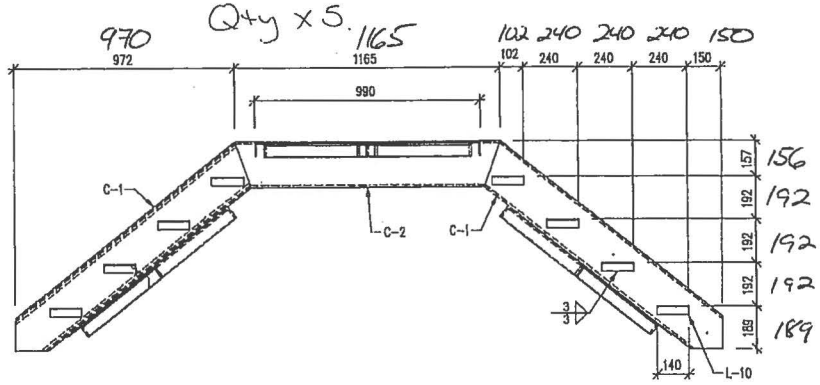

Section A – A

NORMEX MÉTAL
CONRÔLE DE QUALITÉ
CONFORME ✓ OUI NON
INSPECTÉ PAR: Emmanuel Ouellet
SIGNATURE: Emmanuel Ouellet
DATE: 28 / 06 / 2017
JOUR MOIS ANNÉE

Soudage fait par
L37 - L09

FOR APPROVAL
DO NOT USE FOR FABRICATION

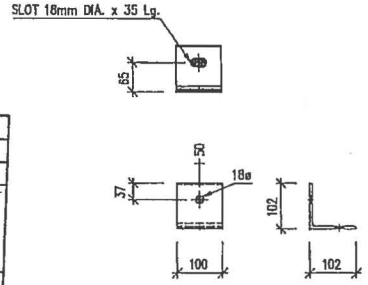

4x L-1 L102X102X6.4-300W

Qty X5

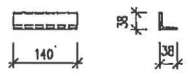

16x L-10 L38X38X4.8-300W

Qty x5.

Révision :			
AA	2017-05-15	FOR APPROVAL	MC
No	Date (a-m-j)	Description	Par

Client :
NORMEX
LA SARRE, QUEBEC
(TEL.)819-333-1200
(FAX)819-333-1212

exp.
Les Services exp inc.
CANADA
www.exp.com

Projet : AGNICO EAGLE - MELIADINE DIVISION - FUEL DISTRIBUTION			
Titre : PIPE CATWALK STRUCTURAL STAIR DETAILS			
Approuvé par : JONATHAN FAUCHER ing.	Dessiné par : MARIO CLICHE ing.	Date : 2017-05-15	Page : 3 de 5
Dossier : 999-00048075-PP	Numéro de dessin : NMOI - 00048075 - A0 - S02 - AA		

16 mai 2017 21:18:07, marcli, C:\Mario Cliche EXP\Clients\Normex\Escaliers reservoir\61 Réalisation\999-00048075-PP - Escalier tuycu\Details\4.dwg

NORMEX

Work Order Check List

Client: CONSTRUCTION PROMEC Quote: 4048 Work Order: 80066

Part Description: PIPE CATWALK HANDRAILS (5L + 5R)

N/A	YES	
☐	☑	Validate Material & Preparation
☐	☑	Visual Inspection complete. (Sharp edges, spatter, welding as per drawing...)
☐	☑	Dimensional Report.
☐	☑	Weld Map.
☐	☑	NDT (LPI, MPI, UT, X-Ray and Visual) refer to ITP & quality assurance program.
☐	☑	All parts fit as an assembly if required by production manager. (Revise packing list?)
☑	☐	Shop bolts required? If yes tightened. (How?)
☐	☑	Sandblasting & Coating Report.
☐	☑	Pictures.
☐	☑	All items on W.O. accounted for. (Work order screening)
☐	☑	Components packaged for shipping. (Includes ship loose items, belts, seals, motors....)
☑	☐	Are all extra materials and consumables entered on W.O.?
☑	☐	Are all error reports filled and attached?
☑	☐	Are all non conformance documented?

Note: Once complete and signed, returned to Project Manager.

Remark: Les gardes-corps ont été fabriqués dans un gabarit afin d'en assurer l'exactitude et la similitude.

Project Leader: Emmanuel Ouellet Date: 28/06/2017

Quality Control: Emmanuel Ouellet Date: 28/06/2017

Production Manager: _____ Date: _____



Qualification pour soudeur

Valide uniquement lorsqu'employé dans une compagnie certifiée par le CWB

Transférable Soudeur

Nom: LOUIS CARON
Date d'émi: févr. 16, 2018
Employeur: Normex Métal, La Sarre, QC
Gamme d'épaisseur: 3mm et plus
Matériau: Acier au carbone
Procédé: FCAW/MCAW
Mode: Semi-Automatique
Norme: CSA W47.1
Mécanisé avec électrode unique
Catégorie: B
Automatique avec électrode unique
Classe: PLAT/HORIZONTAL/VERTICALE(M)/PLAFOND

Voir les conditions au verso

L-03

Qualification pour soudeur

Valide uniquement lorsqu'employé dans une compagnie certifiée par le CWB

Transférable Soudeur

Nom: ALEXANDRE JULIEN
Employeur: Normex Métal, La Sarre, QC
Gamme d'épaisseur 3mm et plus

Mode: Semi-Automatique
Mécanisé avec électrode unique
Automatique avec électrode unique
Classe: PLAT

Date d'exp: nov. 17, 2010

Matériau: Acier au carbone
Procédé: FCAW/MCAW
Norme: CSA W47.1
Catégorie: S

Voir les conditions au verso

Qualification pour soudeur

Valide uniquement lorsqu'employé dans une compagnie certifiée par le CWB

Transférable Soudeur

Nom: ALEXANDRE JULIEN
Employeur: Normex Métal, La Sarre, QC
Gamme d'épaisseur: 3mm et plus

Mode: MANUEL

Classe: PLAT

Date d'exp: nov. 17, 2016

Matériau: Acier au carbone
Procédé: SMAW
Norme: CSA W47.1
Catégorie: S
Électrode: F4

Voir les conditions au verso

L 38

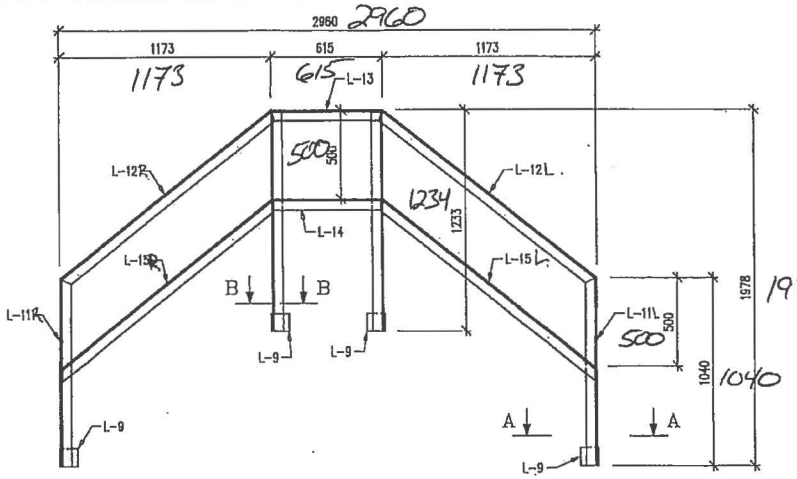

1L/1R REQ'D HANDRAIL ARRANGEMENT

Qty X5

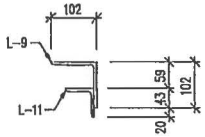

SECTION "A – A"

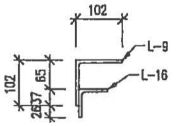

SECTION "B – B"

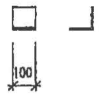

8x L-9 L102X102X6.4-300W

Qty X5

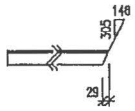

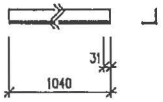

2L/2R L-11 L64X64X6.4-300W

(2) REQ'D. AS SHOWN. (L-11R).
(2) REQ'D OPP. HAND. (L-11L)

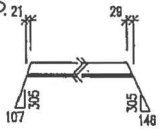

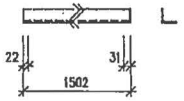

2L/2R L-12 L64X64X6.4-300W

Qty X5 (2) REQ'D AS SHOWN (L-12R)
(2) REQ'D OPP. HAND (L-12L).

NORMEX MÉTAL
CONTRÔLE DE QUALITÉ
CONFORME ✓ OUI NON
INSPECTÉ PAR: Emmanuel Quellet
SIGNATURE: Emmanuel Quellet
DATE: 28 / 06 / 2017
JOUR MOIS ANNÉE

Qty X5.

Soudage fait par L38-L03

FOR APPROVAL
DO NOT USE FOR FABRICATION



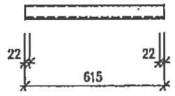

2x L-13 L64X64X6.4-300W

Qty X5.

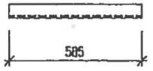

2x L-14 L64X64X6.4-300W

Qty X5.

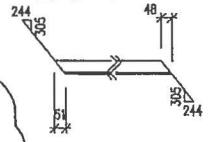

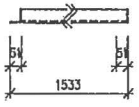

2L/2R L-15 L64X64X6.4-300W

(2) AS SHOWN (L-15L) + (2) OPP. HAND (L-15R)

Qty X5.

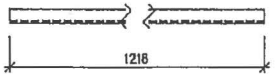

4x L-16 L64X64X6.4-300W

Qty X5.

16 mai 2017 21:16:47, marcli, C:\Mario Cliche EXP\Clients\Normex\Escaliers reservoir\61 Réalisation\999-00048075-PP - Escalier tuyau\Details\Handrail_page 5.dwg

Révision :			
AA	2017-05-15	FOR APPROVAL	MC
No	Date (a-m-j)	Description	Par

Client :

NORMEX
LA SARRE, QUEBEC
(TEL.)819-333-1200
(FAX)819-333-1212

exp.
Les Services exp inc.
www.exp.com

Projet :	AGNICO EAGLE - MELIADINE DIVISION - FUEL DISTRIBUTION
Titre :	PIPE CATWALK STRUCTURAL HANDRAIL DETAILS
Approuvé par : JONATHAN FAUCHER Ing.	Dessiné par : MARIO CLICHE Ing. — Date : 2017-05-15 — Page : 5 de 5
Dossier : 999-00048075-PP	Numéro de dessin : NMOI - 00048075 - A0 - S02 - AA

EROUX
DIVISION OF RUSSEL METALS INC.
DIVISION de MÉTAUX RUSSEL INC.

0E89340439-56661

COMBINATION SHORT FORM OF STRAIGHT BILL OF LADING - EXPRESS SHIPPING CONTRACT,
SUBJECT TO ALL TERMS, CONDITIONS AND LIMITATIONS INCORPORATED BY REFERENCE AS SHOWN ON THE BACK OF THIS BILL.
FORMULAIRE COMBINÉ DE CONNAISSEMENT DIRECT - ET DE CONTRAT D'EXPÉDITION PAR MESSAGERIE ASSUJETTI À TOUTES LES MODALITÉS, CONDITIONS ET LIMITATIONS QUI Y SONT INTÉGRÉES PAR RENVOI, AINSI QU'IL EST INDIQUÉ AU VERSO DU PRÉSENT CONNAISSEMENT.

ACIER LEROUX
1675 ROUTE DE L'AÉROPORT
C.P. 550 AMOS QC J9T3 TEL#: (819)732-8381

PROMISE.....: 05/31/17
REPRESENTANT Yvan Bégin

EXPÉDIÉ: 00
NORMEX METAL
9088-6615 QUEBEC INC.
11 BOUL. INDUSTRIEL
ROUTE 111 EST
LA SARRE QC J9Z 2X2

VENDU: 8910165 05/29/17
NORMEX METAL
9088-6615 QUEBEC INC.
P.O. BOX 565
EARLTON ON P0J 1E0

FREIGHT TERMS
MODALITÉS DE TRANSPORT
PORT PAYÉ
CARRIER
TRANSPORTEUR RT# 006
NOTRE CAMION
CUSTOMER PHONE #
TELEPHONE À LA CLIENTÈLE #
(819)333-1200

#BCC PLA06074 RELACHE#

VEHICLE IDENT
IDENTIFICATION DU VEHICULE
NIR:R-527158-1

INSTRUCTIONS CLIENT:
ECRIRE # DE COULEE SUR LA COPIE ROSE DU CLIENT
****
FERME A 13HR00 LE VENDREDI
COMMENT.:
LIVRAISON 31 MAI 17

Plumbec
Confirmé

LN#03	38700 CORNIÈRE ACIER L.à.C. #PIéC	2 X 2 X 1/4 44W X 20'	QTÉ COMM 28 EA	1786 LB
QTÉ expédiée.....				
ÉTQ 9063529	COUL 52078255	28 EA	1786 LB PAYS	CANADA

L-2469

CONFORME ✓ OUI NON
SIGNÉ
DATE JOUR MOIS ANNÉE

Les certificats d'analyse (MTR) seront automatiquement envoyés par email

PAGE: 1 TOTALS PALETTES _____ 28 EA 1786 LB

STEEL, STAINLESS STEEL, ALUMINUM, BRASS, COPPER, NICKEL AND SPECIALTY STEEL

The above listed products, in a natural state, do not pose inhalation, ingestion or contact hazards.

Prolonged overexposure to dust or fumes during welding, burning, grinding or machining may result in respiratory irritation, skin irritation or disease. USE ADEQUATE VENTILATION AND APPROPRIATE PERSONAL PROTECTIVE EQUIPMENT.

For Brass and Copper Alloys, contact with acids may liberate flammable and explosive hydrogen gas. If heated, copper oxide, zinc oxide, nickel oxide, tin oxide, cadmium oxide and/or lead fumes may be evolved. Aluminum products may slip during handling or transportation.

PRODUCTS MUST BE SECURED FOR HANDLING AND TRANSPORTATION. Cut steel containment strapping may result in the strapping rebounding and injuring those nearby. EXERCISE CAUTION.

For overexposure to metal fumes, remove to fresh air. For skin contact, wash thoroughly with soap and water. Obtain medical attention if symptoms persist.

SEE MATERIAL SAFETY DATA SHEETS FOR MORE DETAILED INFORMATION.

ACIER, ACIER INOXYDABLE, ALUMINIUM, LAITON, CUIVRE, NICKEL ET ACIER SPÉCIALISÉ

Les produits mentionnés ci-haut, à l'état brut, ne causent aucun danger au contact, en cas d'inhalation ou d'ingestion.

Une surexposition aux poussières ou aux émanations durant la soudure, la coupe au chalumeau, le meulage ou l'usinage pourrait causer en une irritation des voies respiratoires ou de la peau ou autres maladies. UNE VENTILATION ADÉQUATE EST DE MISE AINSI QUUN ÉQUIPEMENT PROTECTEUR APPROPRIÉ.

Pour ce qui est des alliages de cuivre et de laiton, un contact avec certains acides pourrait dégager des gaz hydrogène explosifs et inflammables. Si chauffé, de l'oxyde de cuivre, de zinc, de nickel, d'étain, de cadmium et/ou des vapeurs de plomb pourraient s'échapper. Les produits d'aluminium peuvent glisser lors de leur manipulation ou transportation.

TOUS LES PRODUITS DOIVENT ÊTRE ATTACHÉS SOLIDEMENT LORS DU TRANSPORT ET DE LA MANIPULATION.

Lors de la coupe, les courroies d'acier peuvent rebondir et causer des blessures. MANIPULEZ AVEC PRÉCAUTION.

En cas d'une surexposition aux émanations, rafraîchissez-vous et respirez de l'air frais. S'il y a contact avec la peau lavez la région affectée avec de l'eau et du savon. Si les symptômes persistent consultez votre médecin.

POUR PLUS D'INFORMATION, CONSULTEZ LA FEUILLE DE DONNÉES DE SÉCURITÉ.

DATE 31-MAI-2017

SIGNED
SIGNÉ

URCHASER'S ORDER IS FILLED IN ACCORDANCE WITH THE ABOVE TERMS AND CONDITIONS OF SALE AND THOSE ON THE REVERSE HEREOF, ALL OF WHICH TERMS AND CONDITIONS SUPERSEDE THE TERMS AND CONDITIONS (IF ANY) OF PURCHASER'S ORDER. BY ACCEP
LIVERY OF ALL OR PART OF THE ABOVE-DESCRIBED GOODS (HEREINAFTER CALLED THE "GOODS") OR BY PAYING FOR SAME IN WHOLE OR IN PART PURCHASER AGREES TO ALL THE TERMS AND CONDITIONS SET FORTH ABOVE AND ON THE REVERSE HEREOF.
COMMANDE DE L'ACHETEUR EST EXÉCUTÉE EN CONFORMITÉ DES CONDITIONS DE VENTE STIPULÉES CI-DESSUS ET AU VERSO DES PRÉSENTES. TOUTES CES CONDITIONS REMPLAÇANT CELLES (LE CAS ÉCHÉANT) ÉNONCÉES AU BON DE COMMANDE DE L'ACHETEU
CCEPTANT LA LIVRAISON DE TOUT OU PARTIE DES MARCHANDISES DÉCRITES CI-DESSUS (CI-APRÈS APPELÉES LES "MARCHANDISES") OU EN LES PAYANT INTÉGRALEMENT OU PARTIELLEMENT, L'ACHETEUR ACCEPTE TOUTES LES CONDITIONS STIPULÉES CI-DESSUS E
ERSO DES PRÉSENTES.

OFFICE/ADMINISTRATIVE SHIPPING/EXPEDITION DRIVER/CHAUFFEUR CUSTOMER/CLIENT

RL9-L (

6/01/17 8:04:33

EMAIL PAGE COUVERTURE

==========

Société: Acier Leroux - Amos

6/01/17 8:04:33 Document Sommaire

Page couverture 1

Objet: MILL TEST CERTIFICATE

NO.COMMANDE :89340439

No.Bc Du Client :PLA06074

City : LA SARRE State/Province . QC

Séquence correspondant au(x) MTR imprimé(s):

Ln#	Description item:	Coulée	MTR
3	2 X 2 X 1/4 CORN. LÀC 44W	52078255	094131988

CERTIFIED MATERIAL TEST REPORT

GERDAU

CA-ML-CAMBRIDGE
160 ORION PLACE
CAMBRIDGE, ON N1T 1R9
Canada

CUSTOMER SHIP TO	CUSTOMER BILL TO
LEROUX STEEL 1331 RUE GRAHAM BELL BOUCHERVILLE,QC J4B 6A1 Canada	LEROUX STEEL 1331 RUE GRAHAM BELL BOUCHERVILLE,QC J4B 6A1 Canada

GRADE	SHAPE / SIZE	DOCUMENT I
GGMULTI	Angle / 2X2X1/4	0000038149

LENGTH	WEIGHT	HEAT / BATCH
20'00"	37,324 LB	S2078255/02

SALES ORDER	CUSTOMER MATERIAL N°
4774780/000100	

SPECIFICATION / DATE or REVISION
ASTM A529-14, A572-15
ASTM A6-14,A36-14, ASME SA-36
ASTM A709-15, AASHTO M270-12
CSA G40.20-13/G40.21-13

CUSTOMER PURCHASE ORDER NUMBER	BILL OF LADING	DATE
94038191-FEMQ2	1301-0000029491	05/05/2017

CHEMICAL COMPOSITION

C %	Mn %	P %	S %	Si %	Cu %	Ni %	Cr %	Mo %	V %	Nb %
0.14	0.74	0.015	0.033	0.18	0.37	0.09	0.10	0.034	0.013	0.001

MECHANICAL PROPERTIES

Elong. %	G/L Inch	UTS PSI	UTS MPa	YS PSI	YS MPa
25.00	8.000	73987	510	53590	370
27.50	8.000	72747	502	52205	360

COMMENTS / NOTES

This grade meets the requirements for the following grades:
ASTM Grades: A36; A529-50; A572-50; A709-36; A709-50
CSA Grades: 44W; 50W
AASHTO Grades: M270-36; M270-50
ASME Grades: SA36

LEROUX

094131988

The above figures are certified chemical and physical test records as contained in the permanent records of company. We certify that these data are correct and in compliance with specified requirements. This material, including the billets, was melted and manufactured in Canada. CMTR complies with EN 10204 3.1.

BHASKAR YALAMANCHILI
QUALITY DIRECTOR
Phone: (409) 769-1014 Email: Bhaskar.Yalamanchili@gerdau.com

LEONARDO NUNES
QUALITY ASSURANCE MGR.
Phone: (905) 668-8811 EXT 4055 Email: Leonardo.Nunes@gerdau.com

LEROUX
DIVISION OF RUSSEL METALS INC.
DIVISION de MÉTAUX RUSSEL INC.

0E89340438-56467

COMBINATION SHORT FORM OF STRAIGHT BILL OF LADING - EXPRESS SHIPPING CONTRACT,
SUBJECT TO ALL TERMS, CONDITIONS AND LIMITATIONS INCORPORATED BY REFERENCE AS SHOWN ON THE BACK OF THIS BILL.
FORMULAIRE COMBINÉ DE CONNAISSEMENT DIRECT - ET DE CONTRAT D'EXPÉDITION PAR
MESSAGERIE ASSUJETTI À TOUTES LES MODALITÉS, CONDITIONS ET LIMITATIONS QUI Y SONT INTÉGRÉES PAR RENVOI, AINSI QU'IL EST INDIQUÉ AU VERSO DU PRÉSENT CONNAISSEMENT.

ACIER LEROUX
1675 ROUTE DE L'AÉROPORT
C.P. 550 AMOS QC J9T3 TEL#: (819)732-8381

PROMISE.....: 05/26/17
REPRESENTANT Yvan Bégin

EXPÉDIÉ: 00
NORMEX METAL
9088-6615 QUEBEC INC.
11 BOUL. INDUSTRIEL
ROUTE 111 EST
LA SARRE QC J9Z 2X2

VENDU: 8910165 05/25/17
NORMEX METAL
9088-6615 QUEBEC INC.
P.O. BOX 565
EARLTON ON P0J 1E0

FREIGHT TERMS
MODALITÉS DE TRANSPORT
PORT PAYÉ
CARRIER
TRANSPORTEUR RT# 006
NOTRE CAMION
CUSTOMER PHONE #
TELEPHONE À LA CLIENTÈLE #
(819)333-1200

#BCC PLA06074 RELACHE#

VEHICLE IDENT.
IDENTIFICATION DU VEHICULE
NIR:R-527158-1

INSTRUCTIONS CLIENT:
ECRIRE # DE COULEE SUR LA COPIE ROSE DU CLIENT
****
FERME A 13HR00 LE VENDREDI
COMMENT.:
LIVRAISON 26 MAI 17

Contrat #
CA1WAL1C

LN#02 32222 CORNIèRE ACIER L.à.C 2 1/2 X 2 1/2 X 1/4 44W QTÉ COMM
#PIéC L-2457 X 20' 14 EA 1148 LB
QTÉ expédiée..... 14 EA 1148 LB
ÉTQ 9062666 COUL 52077203 PAYS CANADA

LN#04 67628 CARRÉ PROFILÉ TUBULAIRE 2 1/2 X 2 1/2 X .188 A500C QTÉ COMM
#PIéC L-2458 X 24' 1 EA 135 LB
QTÉ expédiée..... 1 EA 135 LB
ÉTQ 9058058 COUL 824913 PAYS CANADA

CONFORME ✓	OUI	NON
SIGNÉ		
DATE 26/5/17 JOUR MOIS ANNÉE		

Les certificats d'analyse (MTR) seront automatiquement envoyés par email

PAGE: 1 TOTALS PALETTES 15 EA 1283 LB

STEEL, STAINLESS STEEL, ALUMINUM, BRASS, COPPER, NICKEL AND SPECIALTY STEEL

The above listed products, in a natural state, do not pose inhalation, ingestion or contact hazards.

Prolonged overexposure to dust or fumes during welding, burning, grinding or machining may result in respiratory irritation, skin irritation or disease. USE ADEQUATE VENTILATION AND APPROPRIATE PERSONAL PROTECTIVE EQUIPMENT.

For Brass and Copper Alloys, contact with acids may liberate flammable and explosive hydrogen gas. If heated, copper oxide, zinc oxide, nickel oxide, tin oxide, cadmium oxide and/or lead fumes may be evolved. Aluminum products may slip during handling or transportation.

PRODUCTS MUST BE SECURED FOR HANDLING AND TRANSPORTATION. steel containment strapping may result in the strapping rebounding and injuring those nearby. EXERCISE ION.

For overexposure to metal fumes, remove to fresh air. For skin contact, wash thoroughly with soap and water. Obtain medical attention if symptoms persist.

SEE MATERIAL SAFETY DATA SHEETS FOR MORE DETAILED INFORMATION.

ACIER, ACIER INOXYDABLE, ALUMINIUM, LAITON, CUIVRE, NICKEL ET ACIER SPÉCIALISÉ

Les produits mentionnés ci-haut, à l'état brut, ne causent aucun danger au contact, en cas d'inhalation ou d'ingestion.
Une surexposition aux poussières ou aux émanations durant la soudure, la coupe au chalumeau, le meulage ou l'usinage pourrait résulter en une irritation des voies respiratoires ou de la peau ou autres maladies. UNE VENTILATION ADÉQUATE EST DE MISE AINSI QU'UN ÉQUIPEMENT PROTECTEUR APPROPRIÉ.
Pour ce qui est des alliages de cuivre et de laiton, un contact avec certains acides pourrait dégager des gaz hydrogène explosifs et inflammables. Si chauffé, de l'oxyde de cuivre, de zinc, de nickel, d'étain, de cadmium et/ou des vapeurs de plomb pourraient s'échapper. Les produits d'aluminium peuvent glisser lors de leur manipulation ou transportation.
TOUS LES PRODUITS DOIVENT ÊTRE ATTACHÉS SOLIDEMENT LORS DU TRANSPORT ET DE LA MANIPULATION.
Lors de la coupe, les courroies d'acier peuvent rebondir et causer des blessures. MANIPULEZ AVEC PRÉCAUTION.
En cas d'une surexposition aux émanations, retirez-vous et respirez de l'air frais. S'il y a contact avec la peau lavez la région affectée avec de l'eau et du savon. Si les symptômes persistent consultez votre médecin.
POUR PLUS D'INFORMATION, CONSULTEZ LA FEUILLE DE DONNÉES DE SÉCURITÉ.

DATE 26/5/2017 RS

SIGNED
SIGNÉ

PURCHASER'S ORDER IS FILLED IN ACCORDANCE WITH THE ABOVE TERMS AND CONDITIONS OF SALE AND THOSE ON THE REVERSE HEREOF, ALL OF WHICH TERMS AND CONDITIONS SUPERSEDE THE TERMS AND CONDITIONS (IF ANY) OF PURCHASER'S ORDER. BY ACCEPTING DELIVERY OF ALL OR PART OF THE ABOVE-DESCRIBED GOODS (HEREINAFTER CALLED THE "GOODS") OR BY PAYING FOR SAME IN WHOLE OR IN PART PURCHASER AGREES TO ALL THE TERMS AND CONDITIONS SET FORTH ABOVE AND ON THE REVERSE HEREOF.
LA COMMANDE DE L'ACHETEUR EST EXÉCUTÉE EN CONFORMITÉ DES CONDITIONS DE VENTE STIPULÉES CI-DESSUS ET AU VERSO DES PRÉSENTES. TOUTES CES CONDITIONS REMPLAÇANT CELLES (LE CAS ÉCHÉANT) ÉNONCÉES AU BON DE COMMANDE DE L'ACHETEUR. EN ACCEPTANT LA LIVRAISON DE TOUT OU PARTIE DES MARCHANDISES DÉCRITES CI-DESSUS (CI-APRÈS APPELÉES LES "MARCHANDISES") OU EN LES PAYANT INTÉGRALEMENT OU PARTIELLEMENT, L'ACHETEUR ACCEPTE TOUTES LES CONDITIONS STIPULÉES CI-DESSUS ET AU VERSO DES PRÉSENTES.

OFFICE/ADMINISTRATIVE SHIPPING/EXPEDITION DRIVER/CHAUFFEUR CUSTOMER/CLIENT

RLS-L C

5/26/17 8:41:58

EMAIL PAGE COUVERTURE

==========

Société:

5/26/17 8:41:58 Document Sommaire

Page couverture 1

Objet: MILL TEST CERTIFICATE

NO.COMMANDE :89340438

No.Bc Du Client :PLA06074

City : LA SARRE State/Province . QC

Séquence correspondant au(x) MTR imprimé(s):

Ln#	Description item:	Coulée	MTR
2	2 1/2 X 2 1/2 X 1/4 CORN. LÀC 44W	52077203	094128583
4	2 1/2X2 1/2X.188PROF.TUB.CAR. A500C	824913	094119175

CERTIFIED MATERIAL TEST REPORT

GERDAU

CA-ML-WHITBY
1 GERDAU CT
WHITBY, ON L1N 5T1
Canada

CUSTOMER SHIP TO	CUSTOMER BILL TO
LEROUX STEEL 1331 RUE GRAHAM BELL BOUCHERVILLE,QC J4B 6A1 Canada	LEROUX STEEL 1331 RUE GRAHAM BELL BOUCHERVILLE,QC J4B 6A1 Canada

GRADE	SHAPE / SIZE	DOCUMENT ID:
GGMULTI	Angle / 2 1/2X2 1/2X1/4	0000031022

LENGTH	WEIGHT	HEAT / BATCH
20'00"	37,884 LB	52077203/02

SALES ORDER	CUSTOMER MATERIAL N°
4465103/000180	

SPECIFICATION / DATE or REVISION
ASTM A529-14, A572-15
ASTM A6-14,A36-14, ASME SA-36
ASTM A709-15, AASHTO M270-12
CSA G40.20-13/G40.21-13

CUSTOMER PURCHASE ORDER NUMBER	BILL OF LADING	DATE
94037803-FEMQ1	1302-0000055481	02/08/2017

CHEMICAL COMPOSITION

C %	Mn %	P %	S %	Si %	Cu %	Ni %	Cr %	V %	Nb %
0.13	0.77	0.018	0.044	0.18	0.31	0.11	0.13	0.016	0.001

MECHANICAL PROPERTIES

Elong. %	G/L Inch	UTS PSI	UTS MPa	YS 0.2% PSI	YS MPa
28.80	8.000	70992	489	55041	379
28.80	8.000	71000	490	54833	378

COMMENTS / NOTES

This grade meets the requirements for the following grades:
ASTM Grades: A36; A529-50; A572-50; A709-36; A709-50
CSA Grades: 44W; 50W
AASHTO Grades: M270-36; M270-50
ASME Grades: SA36

LEROUX

094128583

The above figures are certified chemical and physical test records as contained in the permanent records of company. We certify that these data are correct and in compliance with specified requirements. This material, including the billets, was melted and manufactured in Canada. CMTR complies with EN 10204 3.1.

BHASKAR YALAMANCHILI
QUALITY DIRECTOR
Phone: (409) 769-1014 Email: Bhaskar.Yalamanchili@gerdau.com

LEONARDO NUNES
QUALITY ASSURANCE MGR.
Phone: (905) 668-8811 EXT 4055 Email: Leonardo.Nunes@gerdau.com

ACIER

STEEL

Acier Fati Steel, Inc.
1445 Boul. Lionel-Boulet
Varennes, J3X 1P7
Québec, CANADA
Tél. : 450-929-1812
Télécop. : 450-929-1798
www.fatisteel.com

RAPPORT DE TEST MATÉRIEL

1/2

Vendu
à : ACIER LEROUX BOUCHERVILLE
Chantal Boisvert
1300 Graham Bell
Boucherville, QC
J4B 6A1
Canada

Expédier
à : ACIER LEROUX BOUCHERVILLE
Chantal Boisvert
1300 Graham Bell
Boucherville, QC
J4B 6A1
Canada

N° bon de livraison BL16-02681
Date de document 5/16/2016

Votre n° de commande M 94036779
Notre n° de vente SO16-00897

Description		2.500 x 2.500 x 288.000 x 0.188 HR A500 B/C									
Heat Number		6096B4				Made In		Canada			
C	Mn	P	S	Si	Al	Cu	Cb	Mo	Ni	Cr	V
0.170	0.650	0.010	0.005	0.020	0.030	0.020	0.000	0.000	0.010	0.020	0.000
Yield (Psi)		Tensile (Psi)		ELN.2IN (%)		Certification					
57,500		66,100.00		26.5		ASTM A500 B/C					

Description		2.500 x 2.500 x 288.000 x 0.188 HR A500 B/C									
Heat Number		6462B4				Made In		Canada			
C	Mn	P	S	Si	Al	Cu	Cb	Mo	Ni	Cr	V
0.160	0.650	0.008	0.006	0.020	0.029	0.020	0.000	0.000	0.010	0.020	0.000
Yield (Psi)		Tensile (Psi)		ELN.2IN (%)		Certification					
57,400		68,200.00		26.1		ASTM A500 B/C					

Description		2.500 x 2.500 x 288.000 x 0.188 HR A500 B/C									
Heat Number		7245B4				Made In		Canada			
C	Mn	P	S	Si	Al	Cu	Cb	Mo	Ni	Cr	V
0.170	0.690	0.009	0.008	0.020	0.029	0.030	0.000	0.000	0.020	0.030	0.000
Yield (Psi)		Tensile (Psi)		ELN.2IN (%)		Certification					
56,000		68,700.00		24		ASTM A500 B/C					

Description		2.500 x 2.500 x 288.000 x 0.188 HR A500 B/C									
Heat Number		7247B4				Made In		Canada			
C	Mn	P	S	Si	Al	Cu	Cb	Mo	Ni	Cr	V
0.170	0.670	0.012	0.006	0.020	0.026	0.040	0.000	0.000	0.020	0.030	0.000
Yield (Psi)		Tensile (Psi)		ELN.2IN (%)		Certification					
54,800		69,500.00		28		ASTM A500 B/C					

Les résultats reportés sur ce document représentent les attributs actuels du matériel fourni et indiquent [illegible] spécifications applicables et les conditions contractuelles.

LEROUX

094119175

ACIER

STEEL

Acier Fati Steel, Inc.
1445 Boul. Lionel-Boulet
Varennes, J3X 1P7
Québec, CANADA
Tél. : 450-929-1812
Télécop. : 450-929-1798
www.fatisteel.com

RAPPORT DE TEST MATÉRIEL

2/2

Vendu
à : ACIER LEROUX BOUCHERVILLE
Chantal Boisvert
1300 Graham Bell
Boucherville, QC
J4B 6A1
Canada

Expédier
à : ACIER LEROUX BOUCHERVILLE
Chantal Boisvert
1300 Graham Bell
Boucherville, QC
J4B 6A1
Canada

N° bon de livraison BL16-02681
Date de document 5/16/2016

Votre n° de commande M 94036779
Notre n° de vente SO16-00897

Description		2.500 x 2.500 x 288.000 x 0.188 HR A500 B/C									
Heat Number		824913				Made In		Canada			
C	Mn	P	S	Si	Al	Cu	Cb	Mo	Ni	Cr	V
0.170	0.790	0.014	0.008	0.021	0.000	0.029	0.002	0.003	0.009	0.027	0.003
Yield (Psi)		Tensile (Psi)		ELN.2IN (%)		Certification					
57,000		65,800.00		26		ASTM A500 B/C					

Les résultats reportés sur ce document représentent les attributs actuels du matériel fourni et indiquent la conformité compléete avec toutes les spécifications applicables et les conditions contractuelles.

EROUX
VISION OF RUSSEL METALS INC.
DIVISION de MÉTAUX RUSSEL INC.

0E89340440-56797

COMBINATION SHORT FORM OF STRAIGHT BILL OF LADING - EXPRESS SHIPPING CONTRACT,
SUBJECT TO ALL TERMS, CONDITIONS AND LIMITATIONS INCORPORATED BY REFERENCE AS SHOWN ON THE BACK OF THIS BILL.
FORMULAIRE COMBINÉ DE CONNAISSEMENT DIRECT - ET DE CONTRAT D'EXPÉDITION PAR
MESSAGERIE ASSUJETTI À TOUTES LES MODALITÉS, CONDITIONS ET LIMITATIONS QUI Y SONT INTÉGRÉES PAR RENVOI, AINSI QU'IL EST INDIQUÉ AU VERSO DU PRÉSENT CONNAISSEMENT.

ACIER LEROUX
1675 ROUTE DE L'AÉROPORT
C.P. 550 AMOS QC J9T3 TEL#: (819)732-8381

PROMISE.....: 05/31/17
REPRESENTANT Yvan Bégin

EXPÉDIÉ: 00
NORMEX METAL
9088-6615 QUEBEC INC.
11 BOUL. INDUSTRIEL
ROUTE 111 EST
LA SARRE QC J9Z 2X2

VENDU: 8910165 05/31/17
NORMEX METAL
9088-6615 QUEBEC INC.
P.O. BOX 565
EARLTON ON P0J 1E0

FREIGHT TERMS
MODALITÉS DE TRANSPORT
PORT PAYÉ
CARRIER
TRANSPORTEUR RT# 006
NOTRE CAMION
CUSTOMER PHONE #
TÉLÉPHONE À LA CLIENTÈLE #
(819)333-1200

#BCC PLA06074 RELACHE#

VEHICLE IDENT.
IDENTIFICATION DU VEHICULE
NIR:R-527158-1

INSTRUCTIONS CLIENT:
ECRIRE # DE COULEE SUR LA COPIE ROSE DU CLIENT
****
FERME A 13HR00 LE VENDREDI
COMMENT.:
LIVRAISON 31 MAI 17

PRIMEC CATWALK
containers

LN#				QTÉ COMM	
01	28862 PROFILÉ EN U #PIÉC	8 X 13.75	50W X 20'	11 EA	3025 LB

Commentaire
A COUPER
11 FOIS 20'
****

L-2490

CONFORME OUI NON
SIGNÉ
DATE 02 06 17
JOUR MOIS ANNÉE

Les certificats d'analyse (MTR) seront automatiquement envoyés par email

PAGE: 1 TOTALS PALETTES _____ 11 EA 3025 LB

STEL, STAINLESS STEEL, ALUMINUM, BRASS, COPPER, NICKEL AND SPECIALTY STEEL

...e above listed products, in a natural state, do not pose inhalation, ingestion or contact hazards.
...olonged overexposure to dust or fumes during welding, burning, grinding or machining may result in ...spiratory irritation, skin irritation or disease. USE ADEQUATE VENTILATION AND APPROPRIATE PERSONAL ...ROTECTIVE EQUIPMENT.
...r Brass and Copper Alloys, contact with acids may liberate flammable and explosive hydrogen gas. If heated, ...pper oxide, zinc oxide, nickel oxide, tin oxide, cadmium oxide and/or lead fumes may be evolved. Aluminum ...oducts may slip during handling or transportation.
...UCTS MUST BE SECURED FOR HANDLING AND TRANSPORTATION. ...d containment strapping may result in the strapping rebounding and injuring those nearby. EXERCISE
...exposure to metal fumes, remove to fresh air. For skin contact, wash thoroughly with soap and water. ...btain medical attention if symptoms persist.
...EE MATERIAL SAFETY DATA SHEETS FOR MORE DETAILED INFORMATION.

ACIER, ACIER INOXYDABLE, ALUMINIUM, LAITON, CUIVRE, NICKEL ET ACIER SPÉCIALISÉ

Les produits mentionnés ci-haut, à l'état brut, ne causent aucun danger au contact, en cas d'inhalation ou d'ingestion.
Une surexposition aux poussières ou aux émanations durant la soudure, la coupe au chalumeau, le meulage ou l'usinage pourrait résulter en une irritation des voies respiratoires ou de la peau ou autres maladies. UNE VENTILATION ADÉQUATE EST DE MISE AINSI QU'UN ÉQUIPEMENT PROTECTEUR APPROPRIÉ.
Pour ce qui est des alliages de cuivre et de laiton, un contact avec certains acides pourrait dégager des gaz hydrogène explosifs et inflammables. Si chauffé, de l'oxyde de cuivre, de zinc, de nickel, d'étain, de cadmium et/ou des vapeurs de plomb pourraient s'échapper. Les produits d'aluminium peuvent glisser lors de leur manipulation ou transportation.
TOUS LES PRODUITS DOIVENT ÊTRE ATTACHÉS SOLIDEMENT LORS DU TRANSPORT ET DE LA MANIPULATION.
Lors de la coupe, les courroies d'acier peuvent rebondir et causer des blessures. MANIPULEZ AVEC PRÉCAUTION.
En cas d'une surexposition aux émanations, retirez-vous et respirez de l'air frais. S'il y a contact avec la peau lavez la région affectée avec de l'eau et du savon. Si les symptômes persistent consultez votre médecin.
POUR PLUS D'INFORMATION, CONSULTEZ LA FEUILLE DE DONNÉES DE SÉCURITÉ.

DATE _____
SIGNED
SIGNÉ

...CHASER'S ORDER IS FILLED IN ACCORDANCE WITH THE ABOVE TERMS AND CONDITIONS OF SALE AND THOSE ON THE REVERSE HEREOF, ALL OF WHICH TERMS AND CONDITIONS SUPERSEDE THE TERMS AND CONDITIONS (IF ANY) OF PURCHASER'S ORDER. BY ACCEPTIN...
...VERY OF ALL OR PART OF THE ABOVE-DESCRIBED GOODS (HEREINAFTER CALLED THE "GOODS") OR BY PAYING FOR SAME IN WHOLE OR IN PART PURCHASER AGREES TO ALL THE TERMS AND CONDITIONS SET FORTH ABOVE AND ON THE REVERSE HEREOF.
...OMMANDE DE L'ACHETEUR EST EXÉCUTÉE EN CONFORMITÉ DES CONDITIONS DE VENTE STIPULÉES CI-DESSUS ET AU VERSO DES PRÉSENTES. TOUTES CES CONDITIONS REMPLAÇANT CELLES (LE CAS ÉCHÉANT) ÉNONCÉES AU BON DE COMMANDE DE L'ACHETEUR E...
...EPTANT LA LIVRAISON DE TOUT OU PARTIE DES MARCHANDISES DÉCRITES CI-DESSUS (CI-APRÈS APPELÉES LES "MARCHANDISES") OU EN LES PAYANT INTÉGRALEMENT OU PARTIELLEMENT, L'ACHETEUR ACCEPTE TOUTES LES CONDITIONS STIPULÉES CI-DESSUS ET A...
...SO DES PRÉSENTES.

OFFICE/ADMINISTRATIVE SHIPPING/EXPEDITION DRIVER/CHAUFFEUR CUSTOMER/CLIENT

RLG-L 04/1

6/02/17 9:02:40

EMAIL PAGE COUVERTURE

==========

Société:

6/02/17 9:02:40 Document Sommaire

Page couverture 1

Objet: MILL TEST CERTIFICATE

NO.COMMANDE :89340440

No.Bc Du Client :PLA06074

City : LA SARRE State/Province . QC

Séquence correspondant au(x) MTR imprimé(s):

Ln#	Description item:	Coulée	MTR
1	8 X 13.75 PROFILÉ EN U 50W	52077454	094130101

CERTIFIED MATERIAL TEST REPORT

GERDAU

CA-ML-WHITBY
1 GERDAU CT
WHITBY, ON L1N 5T1
Canada

CUSTOMER SHIP TO	CUSTOMER BILL TO
LEROUX STEEL 1331 RUE GRAHAM BELL BOUCHERVILLE,QC J4B 6A1 Canada	LEROUX STEEL 1331 RUE GRAHAM BELL BOUCHERVILLE,QC J4B 6A1 Canada

GRADE	SHAPE / SIZE	DOCUMENT ID:
GGMULTI	Channel / 8 X 13.75#	0000035240

LENGTH	WEIGHT	HEAT / BATCH
40'00"	61,600 LB	52077454/02

SALES ORDER	CUSTOMER MATERIAL N°
4777761/000040	

SPECIFICATION / DATE or REVISION
ASTM A529-14, A572-15
ASTM A6-14,A36-14, ASME SA-36
ASTM A709-15, AASHTO M270-12
CSA G40.20-13/G40.21-13

CUSTOMER PURCHASE ORDER NUMBER	BILL OF LADING	DATE
94038187	1302-0000057236	03/20/2017

CHEMICAL COMPOSITION

C %	Mn %	P %	S %	Si %	Cu %	Ni %	Cr %	V %	Nb %
0.16	0.85	0.014	0.021	0.19	0.24	0.09	0.09	0.021	0.001

MECHANICAL PROPERTIES

YS 0.2% PSI	UTS PSI	YS MPa	UTS MPa	G/L Inch	Elong. %
55132	74822	380	516	8.000	23.60
54768	74073	378	511	8.000	23.60

COMMENTS / NOTES

This grade meets the requirements for the following grades:
ASTM Grades: A36; A529-50; A572-50; A709-36; A709-50
CSA Grades: 44W; 50W
AASHTO Grades: M270-36; M270-50
ASME Grades: SA36

LEROUX

094130101

The above figures are certified chemical and physical test records as contained in the permanent records of company. We certify that these data are correct and in compliance with specified requirements. This material, including the billets, was melted and manufactured in Canada. CMTR complies with EN 10204 3.1.

BHASKAR YALAMANCHILI
QUALITY DIRECTOR
Phone: (409) 769-1014 Email: Bhaskar.Yalamanchili@gerdau.com

LEONARDO NUNES
QUALITY ASSURANCE MGR.
Phone: (905) 668-8811 EXT 4055 Email: Leonardo.Nunes@gerdau.com

EROUX
IVISION OF RUSSEL METALS INC.
ISION de MÉTAUX RUSSEL INC.

0E89340907-56883

COMBINATION SHORT FORM OF STRAIGHT BILL OF LADING - EXPRESS SHIPPING CONTRACT,
SUBJECT TO ALL TERMS, CONDITIONS AND LIMITATIONS INCORPORATED BY REFERENCE AS SHOWN ON THE BACK OF THIS BILL.
FORMULAIRE COMBINÉ DE CONNAISSEMENT DIRECT - ET DE CONTRAT D'EXPÉDITION PAR
MESSAGERIE ASSUJETTI À TOUTES LES MODALITÉS, CONDITIONS ET LIMITATIONS QUI Y SONT INTÉGRÉES PAR RENVOI, AINSI QU'IL EST INDIQUÉ AU VERSO DU PRÉSENT CONNAISSEMENT.

ACIER LEROUX
1675 ROUTE DE L'AÉROPORT
C.P. 550 AMOS QC J9T3 TEL#: (819)732-8381

PROMISE.....: 06/02/17
REPRESENTANT Yvan Bégin

EXPÉDIÉ: 00
NORMEX METAL
9088-6615 QUEBEC INC.
11 BOUL. INDUSTRIEL
ROUTE 111 EST
LA SARRE QC J9Z 2X2

VENDU: 8910165 06/01/17
NORMEX METAL
9088-6615 QUEBEC INC.
P.O. BOX 565
EARLTON ON P0J 1E0

FREIGHT TERMS
MODALITÉS DE TRANSPORT
PORT PAYÉ
CARRIER
TRANSPORTEUR RT# 006
NOTRE CAMION
CUSTOMER PHONE #
TÉLÉPHONE À LA CLIENTÈLE #
(819)333-1200

#BCC PLA06103 RELACHE#

VEHICLE IDENT.
IDENTIFICATION DU VEHICULE
NIR:R-527158-1

INSTRUCTIONS CLIENT:
ECRIRE # DE COULEE SUR LA COPIE ROSE DU CLIENT
****
FERME A 13HR00 LE VENDREDI
COMMENT.:
LIVRAISON 2 JUIN 17

LN#				QTÉ COMM	
01	28862 PROFILÉ EN U	8 X 13.75	50W		
	#PIèC		X 20'	1 EA	275 LB
	Commentaire A COUPER				
	1 FOIS 20'				
	**********				

L-2497

CONFORME OUI NON
SIGNÉ
DATE JOUR MOIS ANNÉE

Les certificats d'analyse (MTR) seront automatiquement envoyés par email

PAGE: 1 TOTALS PALETTES _____ 1 EA 275 LB

STEEL, STAINLESS STEEL, ALUMINUM, BRASS, COPPER, NICKEL AND SPECIALTY STEEL

The above listed products, in a natural state, do not pose inhalation, ingestion or contact hazards.

Prolonged overexposure to dust or fumes during welding, burning, grinding or machining may result in respiratory irritation, skin irritation or disease. USE ADEQUATE VENTILATION AND APPROPRIATE PERSONAL PROTECTIVE EQUIPMENT.

For Brass and Copper Alloys, contact with acids may liberate flammable and explosive hydrogen gas. If heated, copper oxide, zinc oxide, nickel oxide, tin oxide, cadmium oxide and/or lead fumes may be evolved. Aluminum products may slip during handling or transportation.

PRODUCTS MUST BE SECURED FOR HANDLING AND TRANSPORTATION. ...nt containment strapping may result in the strapping rebounding and injuring those nearby. EXERCISE ...

For overexposure to metal fumes, remove to fresh air. For skin contact, wash thoroughly with soap and water. Obtain medical attention if symptoms persist.

SEE MATERIAL SAFETY DATA SHEETS FOR MORE DETAILED INFORMATION.

ACIER, ACIER INOXYDABLE, ALUMINIUM, LAITON, CUIVRE, NICKEL ET ACIER SPÉCIALISÉ

Les produits mentionnés ci-haut, à l'état brut, ne causent aucun danger au contact, en cas d'inhalation ou d'ingestion.
Une surexposition aux poussières ou aux émanations durant la soudure, la coupe ou chalumeau, le meulage ou l'usinage pourrait résulter en une irritation des voies respiratoires ou de la peau ou autres maladies. UNE VENTILATION ADÉQUATE EST DE MISE AINSI QUUN ÉQUIPEMENT PROTECTEUR APPROPRIÉ.
Pour ce qui est des alliages de cuivre et de laiton, un contact avec certains acides pourrait dégager des gaz hydrogène explosifs et inflammables. Si chauffé, de l'oxyde de cuivre, de zinc, de nickel, d'étain, de cadmium et/ou des vapeurs de plomb pourraient s'échapper. Les produits d'aluminium peuvent glisser lors de leur manipulation ou transportation.
TOUS LES PRODUITS DOIVENT ÊTRE ATTACHÉS SOLIDEMENT LORS DU TRANSPORT ET DE LA MANIPULATION.
Lors de la coupe, les courroies d'acier peuvent rebondir et causer des blessures. MANIPULEZ AVEC PRÉCAUTION.
En cas d'une surexposition aux émanations, retirez-vous et respirez de l'air frais. S'il y a contact avec la peau lavez la région affectée avec de l'eau et du savon. Si les symptômes persistent consultez votre médecin.
POUR PLUS D'INFORMATION, CONSULTEZ LA FEUILLE DE DONNÉES DE SÉCURITÉ.

DATE

SIGNED
SIGNÉ

RCHASER'S ORDER IS FILLED IN ACCORDANCE WITH THE ABOVE TERMS AND CONDITIONS OF SALE AND THOSE ON THE REVERSE HEREOF, ALL OF WHICH TERMS AND CONDITIONS SUPERSEDE THE TERMS AND CONDITIONS (IF ANY) OF PURCHASER'S ORDER. BY ACCEPTI ...IVERY OF ALL OR PART OF THE ABOVE-DESCRIBED GOODS (HEREINAFTER CALLED THE 'GOODS') OR BY PAYING FOR SAME IN WHOLE OR IN PART PURCHASER AGREES TO ALL THE TERMS AND CONDITIONS SET FORTH ABOVE AND ON THE REVERSE HEREOF.
COMMANDE DE L'ACHETEUR EST EXÉCUTÉE EN CONFORMITÉ DES CONDITIONS DE VENTE STIPULÉES CI-DESSUS ET AU VERSO DES PRÉSENTES. TOUTES CES CONDITIONS REMPLAÇANT CELLES (LE CAS ÉCHÉANT) ÉNONCÉES AU BON DE COMMANDE DE L'ACHETEUR CEPTANT LA LIVRAISON DE TOUT OU PARTIE DES MARCHANDISES DÉCRITES CI-DESSUS (CI-APRÉS APPELÉES LES 'MARCHANDISES') OU EN LES PAYANT INTÉGRALEMENT OU PARTIELLEMENT, L'ACHETEUR ACCEPTE TOUTES LES CONDITIONS STIPULÉES CI-DESSUS ET ...SO DES PRÉSENTES.

OFFICE/ADMINISTRATIVE SHIPPING/EXPEDITION DRIVER/CHAUFFEUR CUSTOMER/CLIENT

RL9-L 04

6/02/17 9:03:43

EMAIL PAGE COUVERTURE

==========

Société:

6/02/17 9:03:43 Document Sommaire

Page couverture 1

Objet: MILL TEST CERTIFICATE

NO.COMMANDE :89340907

No.Bc Du Client :PLA06103

City : LA SARRE State/Province . QC

Séquence correspondant au(x) MTR imprimé(s):

Ln#	Description item:	Coulée	MTR
1	8 X 13.75 PROFILÉ EN U 50W	52077454	094130101

CERTIFIED MATERIAL TEST REPORT

GERDAU

CA-ML-WHITBY
1 GERDAU CT
WHITBY, ON L1N 5T1
Canada

CUSTOMER SHIP TO	CUSTOMER BILL TO
LEROUX STEEL 1331 RUE GRAHAM BELL BOUCHERVILLE,QC J4B 6A1 Canada	LEROUX STEEL 1331 RUE GRAHAM BELL BOUCHERVILLE,QC J4B 6A1 Canada

GRADE	SHAPE / SIZE	DOCUMENT ID:
GGMULTI	Channel / 8 X 13.75#	0000035240

LENGTH	WEIGHT	HEAT / BATCH
40'00"	61,600 LB	52077454/02

SALES ORDER	CUSTOMER MATERIAL N°
4777761/000040	

SPECIFICATION / DATE or REVISION
ASTM A529-14, A572-15
ASTM A6-14,A36-14, ASME SA-36
ASTM A709-15, AASHTO M270-12
CSA G40.20-13/G40.21-13

CUSTOMER PURCHASE ORDER NUMBER	BILL OF LADING	DATE
94038187	1302-0000057236	03/20/2017

CHEMICAL COMPOSITION

C %	Mn %	P %	S %	Si %	Cu %	Ni %	Cr %	V %	Nb %
0.16	0.85	0.014	0.021	0.19	0.24	0.09	0.09	0.021	0.001

MECHANICAL PROPERTIES

YS 0.2% PSI	UTS PSI	YS MPa	UTS MPa	G/L Inch	Elong. %
55132	74822	380	516	8.000	23.60
54768	74073	378	511	8.000	23.60

COMMENTS / NOTES

This grade meets the requirements for the following grades:
ASTM Grades: A36; A529-50; A572-50; A709-36; A709-50
CSA Grades: 44W; 50W
AASHTO Grades: M270-36; M270-50
ASME Grades: SA36

LEROUX

094130101

The above figures are certified chemical and physical test records as contained in the permanent records of company. We certify that these data are correct and in compliance with specified requirements. This material, including the billets, was melted and manufactured in Canada. CMTR complies with EN 10204 3.1.

BHASKAR YALAMANCHILI
QUALITY DIRECTOR
Phone: (409) 769-1014 Email: Bhaskar.Yalamanchili@gerdau.com

LEONARDO NUNES
QUALITY ASSURANCE MGR.
Phone: (905) 668-8811 EXT 4055 Email: Leonardo.Nunes@gerdau.com

EROUX
VISION OF RUSSEL METALS INC.
SION de MÉTAUX RUSSEL INC.

0E89340908-56915

COMBINATION SHORT FORM OF STRAIGHT BILL OF LADING - EXPRESS SHIPPING CONTRACT,
SUBJECT TO ALL TERMS, CONDITIONS AND LIMITATIONS INCORPORATED BY REFERENCE AS SHOWN ON THE BACK OF THIS BILL.
FORMULAIRE COMBINÉ DE CONNAISSEMENT DIRECT - ET DE CONTRAT D'EXPÉDITION PAR
MESSAGERIE ASSUJETTI À TOUTES LES MODALITÉS, CONDITIONS ET LIMITATIONS QUI Y SONT INTÉGRÉES PAR RENVOI, AINSI QU'IL EST INDIQUÉ AU VERSO DU PRÉSENT CONNAISSEMENT.

ACIER LEROUX
1675 ROUTE DE L'AÉROPORT
C.P. 550 AMOS QC J9T3 TEL#: (819)732-8381

PROMISE.....: 06/02/17
REPRESENTANT Yvan Bégin

EXPÉDIÉ: 00
NORMEX METAL
9088-6615 QUEBEC INC.
11 BOUL. INDUSTRIEL
ROUTE 111 EST
LA SARRE QC J9Z 2X2

VENDU: 8910165 06/01/17
NORMEX METAL
9088-6615 QUEBEC INC.
P.O. BOX 565
EARLTON ON P0J 1E0

FREIGHT TERMS / MODALITÉS DE TRANSPORT
PORT PAYÉ
CARRIER / TRANSPORTEUR RT# 006
NOTRE CAMION
CUSTOMER PHONE # / TÉLÉPHONE À LA CLIENTÈLE #
(819)333-1200

#BCC PLA06103 RELACHE#

VEHICLE IDENT. / IDENTIFICATION DU VEHICULE
NIR:R-527158-1

INSTRUCTIONS CLIENT:
ECRIRE # DE COULEE SUR LA COPIE ROSE DU CLIENT
****
FERME A 13HR00 LE VENDREDI
COMMENT.:
LIVRAISON 2 JUIN 17

EXTRA PROMEC
2 CONTRAINTE CATHWALK

LN#02 38700 CORNIÈRE ACIER L.à.C.	2 X 2 X 1/4 44W				QTÉ COMM	
#PIÉC L-2487		X	20'	3 EA		191 LB
QTÉ expédiée.....						
ÉTQ 9063529 COUL 52078255	3 EA	191	LB	PAYS	CANADA	

LN#03 32222 CORNIÈRE ACIER L.à.C	2 1/2 X 2 1/2 X 1/4 44W				QTÉ COMM	
#PIÉC L-2488		X	20'	2 EA		164 LB
QTÉ expédiée.....						
ÉTQ 9063603 COUL 52077203	2 EA	164	LB	PAYS	CANADA	

CONFORME OUI NON
SIGNÉ
DATE 01 06 17
JOUR MOIS ANNÉE

Les certificats d'analyse (MTR) seront automatiquement envoyés par email

PAGE: 1 TOTALS PALETTES 5 EA 355 LB

STEEL, STAINLESS STEEL, ALUMINUM, BRASS, COPPER, NICKEL AND SPECIALTY STEEL

he above listed products, in a natural state, do not pose inhalation, ingestion or contact hazards.

rolonged overexposure to dust or fumes during welding, burning, grinding or machining may result in espiratory irritation, skin irritation or disease. USE ADEQUATE VENTILATION AND APPROPRIATE PERSONAL ROTECTIVE EQUIPMENT.

or Brass and Copper Alloys, contact with acids may liberate flammable and explosive hydrogen gas. If heated, opper oxide, zinc oxide, nickel oxide, tin oxide, cadmium oxide and/or lead fumes may be evolved. Aluminum ontacts may slip during handling or transportation.

ODUCTS MUST BE SECURED FOR HANDLING AND TRANSPORTATION.
ral containment strapping may result in the strapping rebounding and injuring those nearby. EXERCISE

or overexposure to metal fumes, remove to fresh air. For skin contact, wash thoroughly with soap and water. btain medical attention if symptoms persist.

EE MATERIAL SAFETY DATA SHEETS FOR MORE DETAILED INFORMATION.

ACIER, ACIER INOXYDABLE, ALUMINIUM, LAITON, CUIVRE, NICKEL ET ACIER SPÉCIALISÉ

Les produits mentionnés ci-haut, à l'état brut, ne causent aucun danger au contact, en cas d'inhalation ou d'ingestion.
Une surexposition aux poussières ou aux émanations durant la soudure, la coupe au chalumeau, le meulage ou l'usinage pourrait résulter en une irritation des voies respiratoires ou de la peau ou autres maladies, UNE VENTILATION ADÉQUATE EST DE MISE AINSI QU'UN ÉQUIPEMENT PROTECTEUR APPROPRIÉ.
Pour ce qui est des alliages de cuivre et de laiton, un contact avec certains acides pourrait dégager des gaz hydrogène explosifs et inflammables. Si chauffé, de l'oxyde de cuivre, de zinc, de nickel, d'étain, de cadmium et/ou des vapeurs de plomb pourraient s'échapper. Les produits d'aluminium peuvent glisser lors de leur manipulation ou transportation.
TOUS LES PRODUITS DOIVENT ÊTRE ATTACHÉS SOUDEMENT LORS DU TRANSPORT ET DE LA MANIPULATION.
Lors de la coupe, les courroies d'acier peuvent rebondir et causer des blessures. MANIPULEZ AVEC PRÉCAUTION.
En cas d'une surexposition aux émanations, retirez-vous et respirez de l'air frais. S'il y a contact avec la peau lavez la région affectée avec de l'eau et du savon. Si les symptômes persistent consultez votre médecin.
POUR PLUS D'INFORMATION, CONSULTEZ LA FEUILLE DE DONNÉES DE SÉCURITÉ.

DATE
SIGNED
SIGNÉ

CHASER'S ORDER IS FILLED IN ACCORDANCE WITH THE ABOVE TERMS AND CONDITIONS OF SALE AND THOSE ON THE REVERSE HEREOF, ALL OF WHICH TERMS AND CONDITIONS SUPERSEDE THE TERMS AND CONDITIONS (IF ANY) OF PURCHASER'S ORDER. BY ACCEPTIN IVERY OF ALL OR PART OF THE ABOVE-DESCRIBED GOODS (HEREINAFTER CALLED THE "GOODS") OR BY PAYING FOR SAME IN WHOLE OR IN PART PURCHASER AGREES TO ALL THE TERMS AND CONDITIONS SET FORTH ABOVE AND ON THE REVERSE HEREOF.
COMMANDE DE L'ACHETEUR EST EXÉCUTÉE EN CONFORMITÉ DES CONDITIONS DE VENTE STIPULÉES CI-DESSUS ET AU VERSO DES PRÉSENTES. TOUTES CES CONDITIONS REMPLAÇANT CELLES (LE CAS ÉCHÉANT) ÉNONCÉES AU BON DE COMMANDE DE L'ACHETEUR E CEPTANT LA LIVRAISON DE TOUT OU PARTIE DES MARCHANDISES DÉCRITES CI-DESSUS (CI-APRÈS APPELÉES LES "MARCHANDISES") OU EN LES PAYANT INTÉGRALEMENT OU PARTIELLEMENT, L'ACHETEUR ACCEPTE TOUTES LES CONDITIONS STIPULÉES CI-DESSUS ET A SO DES PRÉSENTES.

OFFICE/ADMINISTRATIVE SHIPPING/EXPEDITION DRIVER/CHAUFFEUR CUSTOMER/CLIENT

RL9-L 04/

6/02/17 8:47:14

EMAIL PAGE COUVERTURE

==========

Société:

6/02/17 8:47:14 Document Sommaire

Page couverture 1

Objet: MILL TEST CERTIFICATE

NO.COMMANDE :89340908

No.Bc Du Client :PLA06103

City : LA SARRE State/Province . QC

Séquence correspondant au(x) MTR imprimé(s):

Ln#	Description item:	Coulée	MTR
2	2 X 2 X 1/4 CORN. LÀC 44W	52078255	094131988
3	2 1/2 X 2 1/2 X 1/4 CORN. LÀC 44W	52077203	094128583

CERTIFIED MATERIAL TEST REPORT

GERDAU

CA-ML-CAMBRIDGE
160 ORION PLACE
CAMBRIDGE, ON N1T 1R9
Canada

CUSTOMER SHIP TO	CUSTOMER BILL TO
LEROUX STEEL 1331 RUE GRAHAM BELL BOUCHERVILLE,QC J4B 6A1 Canada	LEROUX STEEL 1331 RUE GRAHAM BELL BOUCHERVILLE,QC J4B 6A1 Canada

GRADE	SHAPE / SIZE	DOCUMENT I
GGMULTI	Angle / 2X2X1/4	0000038149

LENGTH	WEIGHT	HEAT / BATCH
20'00"	37,324 LB	S2078255/02

SALES ORDER	CUSTOMER MATERIAL N°
4774780/000100	

SPECIFICATION / DATE or REVISION
ASTM A529-14, A572-15
ASTM A6-14,A36-14, ASME SA-36
ASTM A709-15, AASHTO M270-12
CSA G40.20-13/G40.21-13

CUSTOMER PURCHASE ORDER NUMBER	BILL OF LADING	DATE
94038191-FEMQ2	1301-0000029491	05/05/2017

CHEMICAL COMPOSITION

C %	Mn %	P %	S %	Si %	Cu %	Ni %	Cr %	Mo %	V %	Nb %
0.14	0.74	0.015	0.033	0.18	0.37	0.09	0.10	0.034	0.013	0.001

MECHANICAL PROPERTIES

Elong. %	G/L Inch	UTS PSI	UTS MPa	YS PSI	YS MPa
25.00	8.000	73987	510	53590	370
27.50	8.000	72747	502	52205	360

COMMENTS / NOTES

This grade meets the requirements for the following grades:
ASTM Grades: A36; A529-50; A572-50; A709-36; A709-50
CSA Grades: 44W; 50W
AASHTO Grades: M270-36; M270-50
ASME Grades: SA36

LEROUX

094131988

The above figures are certified chemical and physical test records as contained in the permanent records of company. We certify that these data are correct and in compliance with specified requirements. This material, including the billets, was melted and manufactured in Canada. CMTR complies with EN 10204 3.1.

BHASKAR YALAMANCHILI
QUALITY DIRECTOR
Phone: (409) 769-1014 Email: Bhaskar.Yalamanchili@gerdau.com

LEONARDO NUNES
QUALITY ASSURANCE MGR.
Phone: (905) 668-8811 EXT 4055 Email: Leonardo.Nunes@gerdau.com

CERTIFIED MATERIAL TEST REPORT

GERDAU

CA-ML-WHITBY
1 GERDAU CT
WHITBY, ON L1N 5T1
Canada

CUSTOMER SHIP TO	CUSTOMER BILL TO
LEROUX STEEL 1331 RUE GRAHAM BELL BOUCHERVILLE,QC J4B 6A1 Canada	LEROUX STEEL 1331 RUE GRAHAM BELL BOUCHERVILLE,QC J4B 6A1 Canada

GRADE	SHAPE / SIZE	DOCUMENT ID:
GGMULTI	Angle / 2 1/2X2 1/2X1/4	0000031022

LENGTH	WEIGHT	HEAT / BATCH
20`00"	37,884 LB	52077203/02

SALES ORDER	CUSTOMER MATERIAL N°
4465103/000180	

SPECIFICATION / DATE or REVISION
ASTM A529-14, A572-15
ASTM A6-14,A36-14, ASME SA-36
ASTM A709-15, AASHTO M270-12
CSA G40.20-13/G40.21-13

CUSTOMER PURCHASE ORDER NUMBER	BILL OF LADING	DATE
94037803-FEMQ1	1302-0000055481	02/08/2017

CHEMICAL COMPOSITION

C %	Mn %	P %	S %	Si %	Cu %	Ni %	Cr %	V %	Nb %
0.13	0.77	0.018	0.044	0.18	0.31	0.11	0.13	0.016	0.001

MECHANICAL PROPERTIES

Elong. %	G/L Inch	UTS PSI	UTS MPa	YS 0.2% PSI	YS MPa
28.80	8.000	70992	489	55041	379
28.80	8.000	71000	490	54833	378

COMMENTS / NOTES

This grade meets the requirements for the following grades:
ASTM Grades: A36; A529-50; A572-50; A709-36; A709-50
CSA Grades: 44W; 50W
AASHTO Grades: M270-36; M270-50
ASME Grades: SA36

LEROUX

094128583

The above figures are certified chemical and physical test records as contained in the permanent records of company. We certify that these data are correct and in compliance with specified requirements. This material, including the billets, was melted and manufactured in Canada. CMTR complies with EN 10204 3.1.

BHASKAR YALAMANCHILI
QUALITY DIRECTOR
Phone: (409) 769-1014 Email: Bhaskar.Yalamanchili@gerdau.com

LEONARDO NUNES
QUALITY ASSURANCE MGR.
Phone: (905) 668-8811 EXT 4055 Email: Leonardo.Nunes@gerdau.com

EROUX
DIVISION OF RUSSEL METALS INC.
DIVISION DE MÉTAUX RUSSEL INC.

0E89340478-56711

COMBINATION SHORT FORM OF STRAIGHT BILL OF LADING - EXPRESS SHIPPING CONTRACT,
SUBJECT TO ALL TERMS, CONDITIONS AND LIMITATIONS INCORPORATED BY REFERENCE AS SHOWN ON THE BACK OF THIS BILL.
FORMULAIRE COMBINÉ DE CONNAISSEMENT DIRECT - ET DE CONTRAT D'EXPÉDITION PAR
MESSAGERIE ASSUJETTI À TOUTES LES MODALITÉS, CONDITIONS ET LIMITATIONS QUI Y SONT INTÉGRÉES PAR RENVOI, AINSI QU'IL EST INDIQUÉ AU VERSO DU PRÉSENT CONNAISSEMENT.

ACIER LEROUX
1675 ROUTE DE L'AÉROPORT — PROMISE.....: 05/31/17
C.P. 550 AMOS QC J9T3 — TEL#: (819)732-8381 — REPRESENTANT J LALANCETTE

EXPÉDIÉ: 00
NORMEX METAL
9088-6615 QUEBEC INC.
11 BOUL. INDUSTRIEL
ROUTE 111 EST
LA SARRE QC J9Z 2X2

VENDU: 8910165 05/30/17
NORMEX METAL
9088-6615 QUEBEC INC.
P.O. BOX 565
EARLTON ON P0J 1E0

FREIGHT TERMS / MODALITÉS DE TRANSPORT
PORT PAYÉ
CARRIER / TRANSPORTEUR RT# 006
NOTRE CAMION
CUSTOMER PHONE # / TÉLÉPHONE À LA CLIENTÈLE #
(819)333-1200

#BCC PLA06076 RELACHE#

VEHICLE IDENT. / IDENTIFICATION DU VEHICULE
NIR:R-527158-1

INSTRUCTIONS CLIENT:
ECRIRE # DE COULEE SUR LA COPIE ROSE DU CLIENT
****
FERME A 13HR00 LE VENDREDI

DIKE ON WATCH

LN#01 38642 CORNIèRE ACIER L.à.C	1 1/2 X 1 1/2 X 3/16 44W			QTÉ COMM	
#PIéC L-2478		X	20'	1 EA	36 LB
QTÉ expédiée.....					
ÉTQ 9061831 COUL 52077556	1 EA	36	LB PAYS	CANADA	

LN#02 15889 PROFILÉ EN U	10 X 15.3 50W			QTÉ COMM	
#PIéC L-2479		X	40'	7 EA	4284 LB
QTÉ expédiée.....					
ÉTQ 9063112 COUL 613252	7 EA	4284	LB PAYS	POLOGNE	

CONFORME ☐ OUI ☐ NON
SIGNÉ
DATE 31/05/17
JOUR MOIS ANNÉE

Les certificats d'analyse (MTR) seront automatiquement envoyés par email

PAGE: 1 TOTALS PALETTES _____ 8 EA 4320 LB

STEEL, STAINLESS STEEL, ALUMINUM, BRASS, COPPER, NICKEL AND SPECIALTY STEEL

The above listed products, in a natural state, do not pose inhalation, ingestion or contact hazards.

Prolonged overexposure to dust or fumes during welding, burning, grinding or machining may result in respiratory irritation, skin irritation or disease. USE ADEQUATE VENTILATION AND APPROPRIATE PERSONAL PROTECTIVE EQUIPMENT.

For Brass and Copper Alloys, contact with acids may liberate flammable and explosive hydrogen gas. If heated, copper oxide, zinc oxide, nickel oxide, tin oxide, cadmium oxide and/or lead fumes may be evolved. Aluminum products may slip during handling or transportation.

PRODUCTS MUST BE SECURED FOR HANDLING AND TRANSPORTATION. Material containment strapping may result in the strapping rebounding and injuring those nearby. EXERCISE CAUTION.

For overexposure to metal fumes, remove to fresh air. For skin contact, wash thoroughly with soap and water. Obtain medical attention if symptoms persist.

SEE MATERIAL SAFETY DATA SHEETS FOR MORE DETAILED INFORMATION.

ACIER, ACIER INOXYDABLE, ALUMINIUM, LAITON, CUIVRE, NICKEL ET ACIER SPÉCIALISÉ

Les produits mentionnés ci-haut, à l'état brut, ne causent aucun danger au contact, en cas d'inhalation ou d'ingestion.

Une surexposition aux poussières ou aux émanations durant la soudure, la coupe au chalumeau, le meulage ou l'usinage pourrait résulter en une irritation des voies respiratoires ou de la peau ou autres maladies. UNE VENTILATION ADÉQUATE EST DE MISE AINSI QU'UN ÉQUIPEMENT PROTECTEUR APPROPRIÉ.

Pour ce qui est des alliages de cuivre et de laiton, un contact avec certains acides pourrait dégager des gaz hydrogène explosifs et inflammables. Si chauffé, de l'oxyde de cuivre, de zinc, de nickel, d'étain, de cadmium et/ou des vapeurs de plomb pourraient s'échapper. Les produits d'aluminium peuvent glisser lors de leur manipulation ou transportation.

TOUS LES PRODUITS DOIVENT ÊTRE ATTACHÉS SOLIDEMENT LORS DU TRANSPORT ET DE LA MANIPULATION.

Lors de la coupe, les courroies d'acier peuvent rebondir et causer des blessures. MANIPULEZ AVEC PRÉCAUTION.

En cas d'une surexposition aux émanations, retirez-vous et respirez de l'air frais. S'il y a contact avec la peau lavez la région affectée avec de l'eau et du savon. Si les symptômes persistent consultez votre médecin.

POUR PLUS D'INFORMATION, CONSULTEZ LA FEUILLE DE DONNÉES DE SÉCURITÉ.

DATE 31 MAI 2017

SIGNED
SIGNÉ

PURCHASER'S ORDER IS FILLED IN ACCORDANCE WITH THE ABOVE TERMS AND CONDITIONS OF SALE AND THOSE ON THE REVERSE HEREOF, ALL OF WHICH TERMS AND CONDITIONS SUPERSEDE THE TERMS AND CONDITIONS (IF ANY) OF PURCHASER'S ORDER. BY ACCEPTING DELIVERY OF ALL OR PART OF THE ABOVE-DESCRIBED GOODS (HEREINAFTER CALLED THE "GOODS") OR BY PAYING FOR SAME IN WHOLE OR IN PART PURCHASER AGREES TO ALL THE TERMS AND CONDITIONS SET FORTH ABOVE AND ON THE REVERSE HEREOF.
LA COMMANDE DE L'ACHETEUR EST EXÉCUTÉE EN CONFORMITÉ DES CONDITIONS DE VENTE STIPULÉES CI-DESSUS ET AU VERSO DES PRÉSENTES. TOUTES CES CONDITIONS REMPLAÇANT CELLES (LE CAS ÉCHÉANT) ÉNONCÉES AU BON DE COMMANDE DE L'ACHETEUR ACCEPTANT LA LIVRAISON DE TOUT OU PARTIE DES MARCHANDISES DÉCRITES CI-DESSUS (CI-APRÈS APPELÉES LES "MARCHANDISES") OU EN LES PAYANT INTÉGRALEMENT OU PARTIELLEMENT, L'ACHETEUR ACCEPTE TOUTES LES CONDITIONS STIPULÉES CI-DESSUS ET AU VERSO DES PRÉSENTES.

OFFICE/ADMINISTRATIVE SHIPPING/EXPEDITION DRIVER/CHAUFFEUR CUSTOMER/CLIENT

RLS-L 0

6/01/17 8:05:46

EMAIL PAGE COUVERTURE

==========

Société: Acier Leroux - Amos

6/01/17 8:05:46 Document Sommaire

Page couverture 1

Objet: MILL TEST CERTIFICATE

NO.COMMANDE :89340478

No.Bc Du Client :PLA06076

City : LA SARRE State/Province . QC

Séquence correspondant au(x) MTR imprimé(s):

Ln#	Description item:	Coulée	MTR
1	1 1/2 X 1 1/2 X 3/16 CORN. LÀC 44W	52077556	094129587
2	10 X 15.3 PROFILÉ EN U 50W	613252	094124694

CERTIFIED MATERIAL TEST REPORT

GERDAU

CA-ML-CAMBRIDGE
160 ORION PLACE
CAMBRIDGE, ON N1T 1R9
Canada

CUSTOMER SHIP TO	CUSTOMER BILL TO
LEROUX STEEL 1331 RUE GRAHAM BELL BOUCHERVILLE,QC J4B 6A1 Canada	LEROUX STEEL 1331 RUE GRAHAM BELL BOUCHERVILLE,QC J4B 6A1 Canada

GRADE	SHAPE / SIZE	DOCUMENT
GGMULTI	Angle / 1 1/2X1 1/2X3/16	0000033196

LENGTH	WEIGHT	HEAT / BATCH
20'00"	25,740 LB	52077556/02

SALES ORDER	CUSTOMER MATERIAL N°
4585552/000060	

SPECIFICATION / DATE or REVISION
ASTM A529-14, A572-15
ASTM A6-14,A36-14, ASME SA-36
ASTM A709-15, AASHTO M270-12
CSA G40.20-13/G40.21-13

CUSTOMER PURCHASE ORDER NUMBER	BILL OF LADING	DATE
94037961	1301-0000028506	03/07/2017

CHEMICAL COMPOSITION

C %	Mn %	P %	S %	Si %	Cu %	Ni %	Cr %	Mo %	V %	Nb %
0.15	0.78	0.020	0.018	0.17	0.25	0.11	0.15	0.031	0.012	0.001

MECHANICAL PROPERTIES

Elong. %	G/L Inch	UTS PSI	UTS MPa	YS PSI	YS MPa
25.00	8.000	74339	513	53274	367
25.00	8.000	74556	514	53590	370

COMMENTS / NOTES

This grade meets the requirements for the following grades:
ASTM Grades: A36; A529-50; A572-50; A709-36; A709-50
CSA Grades: 44W; 50W
AASHTO Grades: M270-36; M270-50
ASME Grades: SA36

LEROUX

094129587

The above figures are certified chemical and physical test records as contained in the permanent records of company. We certify that these data are correct and in compliance with specified requirements. This material, including the billets, was melted and manufactured in Canada. CMTR complies with EN 10204 3.1.

BHASKAR YALAMANCHILI
QUALITY DIRECTOR
Phone: (409) 769-1014 Email: Bhaskar.Yalamanchili@gerdau.com

LEONARDO NUNES
QUALITY ASSURANCE MGR.
Phone: (905) 668-8811 EXT 4055 Email: Leonardo.Nunes@gerdau.com

A01
ArcelorMittal Poland S.A.
Oddział w Dąbrowie Górniczej
al. J. Piłsudskiego 92
41-308 Dąbrowa Górnicza

A02
MILL TEST REPORT
ASTM A6/A6M Nr: 1001876000

Z01.1
Dąbrowa Górnicza, 12.09.2016

ArcelorMittal

A06.1
Purchaser: ARCELORMITTAL COMMERCIAL SECTIONS S A
4221 ESCH-SUR-ALZETTE Luksemburg / Luxembourg / Luxemburg
66 RUE DE LUXEMBOURG 66 RUE DE LUXEMBOURG

A06.2
Address: Acier Leroux div. of Russel Metals 401697
J4B 6A1 BOUCHERVILLE Kanada / Canada / Kanada
1331, GRAHAM BELL

A07	No of purchase order	Contract No	Manuf. Order No/Pos	Delivery Note	Number of transport
	M94037300	PL/27783966S/16-10685468	20014545/000007	62452828	315139455689
	ORDER: M94037300	LOT: SOREL		PREBON: 1700023428/7	

B01 According	Classification standards	Tolerance standards
ASTM A6/A6M-14	CSA G40.21-04	ASTM A6/A6M-14

B02-B03 B09-B11
Heavy channels C 10 X 15,3 length: 12192,00 mm steel grade: 350W

B07 Heat	Bundles/Pieces	B13 Weight
613252	8 / 128	35,536 t
Total	04:33:02	ORYGINAŁ/ORIGINAL 10[illegible]2016
	8 / 128	35,536 t

C71-C92 Chemical composition [%]

B07 Heat	C	Mn	Si	P	S	Cu	Cr	Ni	Al	N_2	Mo	Nb	V	Ti	Sn	Pb	As	B	O	H_2	CEV
613252	0,16	0,71	0,195	0,013	0,010	0,03	0,04	0,015	0,003	0,0087	0,005	0,001	0,023	0,001	0,004	0,001	0,001	0,0002			0,28

Mechanical properties

B07	C11	C12	C13	D73	C41	C44	C42 - Work of fracture
	TENSILE TEST						CHARPY IMPACT TEST [J]

Heat	YS [Mpa]	YS02 [Mpa]	UTS [Mpa]	EL [mm]	EL [%]	YS/UTS	YS02/UTS	Pr.width KV [mm]	Temp. °C	Test 1	Test 2	Test 3	average test
613252	417,0		508,0	200	20,1	0,82							
613252	433,0		508,0	200	20,2	0,85							

Z01 Statement of compliance: The producer guarantees that delivered goods are in accordance with the conditions of the order.

A05, Z02.2
Główny Specjalista
ds. Certyfikacji Wyrobów i Dokumentacji
Kontroli Jakości Zygut
Zdzisław Kwiatkowski

LEROUX

094124694

Wystawił: Antoni Czechowski

E.ROUX
DIVISION OF RUSSEL METALS INC.
DIVISION DE MÉTAUX RUSSEL INC.

0E89340478-56711

COMBINATION SHORT FORM OF STRAIGHT BILL OF LADING - EXPRESS SHIPPING CONTRACT, SUBJECT TO ALL TERMS, CONDITIONS AND LIMITATIONS INCORPORATED BY REFERENCE AS SHOWN ON THE BACK OF THIS BILL.
FORMULAIRE COMBINÉ DE CONNAISSEMENT DIRECT - ET DE CONTRAT D'EXPÉDITION PAR MESSAGERIE ASSUJETTI À TOUTES LES MODALITÉS, CONDITIONS ET LIMITATIONS QUI Y SONT INTÉGRÉES PAR RENVOI, AINSI QU'IL EST INDIQUÉ AU VERSO OU PRÉSENT CONNAISSEMENT.

ACIER LEROUX
1675 ROUTE DE L'AÉROPORT
C.P. 550 AMOS QC J9T3 TEL#: (819)732-8381

PROMISE.....: 05/31/17
REPRESENTANT J LALANCETTE

EXPÉDIÉ: 00
NORMEX METAL
9088-6615 QUEBEC INC.
11 BOUL. INDUSTRIEL
ROUTE 111 EST
LA SARRE QC J9Z 2X2

VENDU: 8910165 05/30/17
NORMEX METAL
9088-6615 QUEBEC INC.
P.O. BOX 565
EARLTON ON P0J 1E0

FREIGHT TERMS / MODALITÉS DE TRANSPORT
PORT PAYÉ
CARRIER / TRANSPORTEUR RT# 006
NOTRE CAMION
CUSTOMER PHONE # / TÉLÉPHONE À LA CLIENTÈLE #
(819)333-1200

#BCC PLA06076 RELACHE#

VEHICLE IDENT / IDENTIFICATION DU VEHICULE
NIR:R-527158-1

INSTRUCTIONS CLIENT:
ECRIRE # DE COULEE SUR LA COPIE ROSE DU CLIENT
****
FERME A 13HR00 LE VENDREDI

DIKE ATTACK

LN#01 38642 CORNIèRE ACIER L.à.C 1 1/2 X 1 1/2 X 3/16 44W QTÉ COMM
#PIéC L-2478 X 20' 1 EA 36 LB
QTÉ expédiée.....
ÉTQ 9061831 COUL 52077556 1 EA 36 LB PAYS CANADA

LN#02 15889 PROFILÉ EN U 10 X 15.3 50W QTÉ COMM
#PIéC L-2479 X 40' 7 EA 4284 LB
QTÉ expédiée.....
ÉTQ 9063112 COUL 613252 7 EA 4284 LB PAYS POLOGNE

CONFORME ? OUI NON
SIGNÉ
DATE 31/05/17
JOUR MOIS ANNÉE

Les certificats d'analyse (MTR) seront automatiquement envoyés par email

PAGE: 1 TOTALS PALETTES 8 EA 4320 LB

STEEL, STAINLESS STEEL, ALUMINUM, BRASS, COPPER, NICKEL AND SPECIALTY STEEL

The above listed products, in a natural state, do not pose inhalation, ingestion or contact hazards.

Prolonged overexposure to dust or fumes during welding, burning, grinding or machining may result in respiratory irritation, skin irritation or disease. USE ADEQUATE VENTILATION AND APPROPRIATE PERSONAL PROTECTIVE EQUIPMENT.

For Brass and Copper Alloys, contact with acids may liberate flammable and explosive hydrogen gas. If heated, copper oxide, zinc oxide, nickel oxide, tin oxide, cadmium oxide and/or lead fumes may be evolved. Aluminum products may slip during handling or transportation.

PRODUCTS MUST BE SECURED FOR HANDLING AND TRANSPORTATION.
Cut containment strapping may result in the strapping rebounding and injuring those nearby. EXERCISE CAUTION.

For overexposure to metal fumes, remove to fresh air. For skin contact, wash thoroughly with soap and water. Obtain medical attention if symptoms persist.

SEE MATERIAL SAFETY DATA SHEETS FOR MORE DETAILED INFORMATION.

ACIER, ACIER INOXYDABLE, ALUMINIUM, LAITON, CUIVRE, NICKEL ET ACIER SPÉCIALISÉ

Les produits mentionnés ci-haut, à l'état brut, ne causent aucun danger au contact, en cas d'inhalation ou d'ingestion.
Une surexposition aux poussières ou aux émanations durant la soudure, la coupe au chalumeau, le meulage ou l'usinage pourrait résulter en une irritation des voies respiratoires ou de la peau ou autres maladies. UNE VENTILATION ADÉQUATE EST DE MISE AINSI QU'UN ÉQUIPEMENT PROTECTEUR APPROPRIÉ.
Pour ce qui est des alliages de cuivre et de laiton, un contact avec certains acides pourrait dégager des gaz hydrogène explosifs et inflammables. Si chauffé, de l'oxyde de cuivre, de zinc, de nickel, d'étain, de cadmium et/ou des vapeurs de plomb pourraient s'échapper. Les produits d'aluminium peuvent glisser lors de leur manipulation ou transportation.
TOUS LES PRODUITS DOIVENT ÊTRE ATTACHÉS SOLIDEMENT LORS DU TRANSPORT ET DE LA MANIPULATION.
Lors de la coupe, les courroies d'acier peuvent rebondir et causer des blessures. MANIPULEZ AVEC PRÉCAUTION.
En cas d'une surexposition aux émanations, retirez-vous et respirez de l'air frais. S'il y a contact avec la peau lavez la région affectée avec de l'eau et du savon. Si les symptômes persistent consultez votre médecin.
POUR PLUS D'INFORMATION, CONSULTEZ LA FEUILLE DE DONNÉES DE SÉCURITÉ.

DATE 31 Mai 2017
SIGNED
SIGNÉ

PURCHASER'S ORDER IS FILLED IN ACCORDANCE WITH THE ABOVE TERMS AND CONDITIONS OF SALE AND THOSE ON THE REVERSE HEREOF, ALL OF WHICH TERMS AND CONDITIONS SUPERSEDE THE TERMS AND CONDITIONS (IF ANY) OF PURCHASER'S ORDER. BY ACCEPTING DELIVERY OF ALL OR PART OF THE ABOVE-DESCRIBED GOODS (HEREINAFTER CALLED THE "GOODS") OR BY PAYING FOR SAME IN WHOLE OR IN PART PURCHASER AGREES TO ALL THE TERMS AND CONDITIONS SET FORTH ABOVE AND ON THE REVERSE HEREOF.
COMMANDE DE L'ACHETEUR EST EXÉCUTÉE EN CONFORMITÉ DES CONDITIONS DE VENTE STIPULÉES CI-DESSUS ET AU VERSO DES PRÉSENTES. TOUTES CES CONDITIONS REMPLAÇANT CELLES (LE CAS ÉCHÉANT) ÉNONCÉES AU BON DE COMMANDE DE L'ACHETEUR ACCEPTANT LA LIVRAISON DE TOUT OU PARTIE DES MARCHANDISES DÉCRITES CI-DESSUS (CI-APRÈS APPELÉES LES "MARCHANDISES") OU EN LES PAYANT INTÉGRALEMENT OU PARTIELLEMENT, L'ACHETEUR ACCEPTE TOUTES LES CONDITIONS STIPULÉES CI-DESSUS ET AU VERSO DES PRÉSENTES.

OFFICE/ADMINISTRATIVE SHIPPING/EXPEDITION DRIVER/CHAUFFEUR CUSTOMER/CLIENT

RLD-L 0

6/01/17 8:05:46

EMAIL PAGE COUVERTURE

==========

Société: Acier Leroux - Amos

6/01/17 8:05:46 Document Sommaire

Page couverture 1

Objet: MILL TEST CERTIFICATE

NO.COMMANDE :89340478

No.Bc Du Client :PLA06076

City : LA SARRE State/Province . QC

Séquence correspondant au(x) MTR imprimé(s):

Ln#	Description item:	Coulée	MTR
1	1 1/2 X 1 1/2 X 3/16 CORN. LÀC 44W	52077556	094129587
2	10 X 15.3 PROFILÉ EN U 50W	613252	094124694

CERTIFIED MATERIAL TEST REPORT

GERDAU

CA-ML-CAMBRIDGE
160 ORION PLACE
CAMBRIDGE, ON N1T 1R9
Canada

CUSTOMER SHIP TO	CUSTOMER BILL TO
LEROUX STEEL 1331 RUE GRAHAM BELL BOUCHERVILLE,QC J4B 6A1 Canada	LEROUX STEEL 1331 RUE GRAHAM BELL BOUCHERVILLE,QC J4B 6A1 Canada

GRADE	SHAPE / SIZE	DOCUMENT
GGMULTI	Angle / 1 1/2X1 1/2X3/16	0000033196

LENGTH	WEIGHT	HEAT / BATCH
20'00"	25,740 LB	52077556/02

SALES ORDER	CUSTOMER MATERIAL N°
4585552/000060	

SPECIFICATION / DATE or REVISION
ASTM A529-14, A572-15
ASTM A6-14,A36-14, ASME SA-36
ASTM A709-15, AASHTO M270-12
CSA G40.20-13/G40.21-13

CUSTOMER PURCHASE ORDER NUMBER	BILL OF LADING	DATE
94037961	1301-0000028506	03/07/2017

CHEMICAL COMPOSITION

C %	Mn %	P %	S %	Si %	Cu %	Ni %	Cr %	Mo %	V %	Nb %
0.15	0.78	0.020	0.018	0.17	0.25	0.11	0.15	0.031	0.012	0.001

MECHANICAL PROPERTIES

Elong. %	G/L Inch	UTS PSI	UTS MPa	YS PSI	YS MPa
25.00	8.000	74339	513	53274	367
25.00	8.000	74556	514	53590	370

COMMENTS / NOTES

This grade meets the requirements for the following grades:
ASTM Grades: A36; A529-50; A572-50; A709-36; A709-50
CSA Grades: 44W; 50W
AASHTO Grades: M270-36; M270-50
ASME Grades: SA36

LEROUX

094129587

The above figures are certified chemical and physical test records as contained in the permanent records of company. We certify that these data are correct and in compliance with specified requirements. This material, including the billets, was melted and manufactured in Canada. CMTR complies with EN 10204 3.1.

BHASKAR YALAMANCHILI
QUALITY DIRECTOR
Phone: (409) 769-1014 Email: Bhaskar.Yalamanchili@gerdau.com

LEONARDO NUNES
QUALITY ASSURANCE MGR.
Phone: (905) 668-8811 EXT 4055 Email: Leonardo.Nunes@gerdau.com

EROUX
DIVISION OF RUSSEL METALS INC.
DIVISION de MÉTAUX RUSSEL INC.

0E94853576-21170

COMBINATION SHORT FORM OF STRAIGHT BILL OF LADING - EXPRESS SHIPPING CONTRACT,
SUBJECT TO ALL TERMS, CONDITIONS AND LIMITATIONS INCORPORATED BY REFERENCE AS SHOWN ON THE BACK OF THIS DILL.
FORMULAIRE COMBINÉ DE CONNAISSEMENT DIRECT - ET DE CONTRAT D'EXPÉDITION PAR
MESSAGERIE ASSUJETTI À TOUTES LES MODALITÉS, CONDITIONS ET LIMITATIONS QUI Y SONT INTÉGRÉES PAR RENVOI, AINSI QU'IL EST INDIQUÉ AU VERSO DU PRÉSENT CONNAISSEMENT.

ACIER LEROUX
1675 ROUTE DE L'AÉROPORT
C.P. 550 AMOS QC J9T3 TEL#: (819)732-8381

PROMISE.....: 05/31/17
REPRESENTANT J LALANCETTE

EXPÉDIÉ: 00
NORMEX METAL
9088-6615 QUEBEC INC.
11 BOUL. INDUSTRIEL
ROUTE 111 EST
LA SARRE QC J9Z 2X2

VENDU: 8910165 05/29/17
NORMEX METAL
9088-6615 QUEBEC INC.
P.O. BOX 565
EARLTON ON P0J 1E0

FREIGHT TERMS
MODALITÉS DE TRANSPORT
PORT PAYÉ
CARRIER
TRANSPORTEUR RT# 006
NOTRE CAMION
CUSTOMER PHONE #
TÉLÉPHONE À LA CLIENTÈLE #
(819)333-1200

#BCC PLA06076 RELACHE#

VEHICLE IDENT.
IDENTIFICATION DU VEHICULE
NIR:R-527158-1

INSTRUCTIONS CLIENT:
ECRIRE # DE COULEE SUR LA COPIE ROSE DU CLIENT
****
FERME A 13HR00 LE VENDREDI

PRUMERC
DICE CATHWALK

LN#03 32222 CORNIèRE ACIER L.à.C	2 1/2 X 2 1/2 X 1/4 44W X 20'	QTÉ COMM 43 EA	3526 LB
#PIÉC			
QTÉ expédiée.....			
ÉTQ 1411627 COUL 52076443	10 EA	820 LB	PAYS CANADA
ÉTQ 1413890 COUL 52077202	33 EA	2706 LB	PAYS CANADA
QTÉ Totale Expéd.:	43 EA	3526 LB	

CONFORME OUI NON
SIGNÉ
DATE 31 05 17
JOUR MOIS ANNÉE

Acier Leroux Amos
DIVISION DE MÉTAUX RUSSEL INC.
SUJET À INSPECTION QUANT À LA QUANTITÉ ET LA QUALITÉ
Reçu le : 30 MAI 2017 Par :
Inspecté le : Par:

L-2480

Les certificats d'analyse (MTR) seront automatiquement envoyés par email

PAGE: 1 TOTALS PALETTES _____ 43 EA 3526 LB

STEEL, STAINLESS STEEL, ALUMINUM, BRASS, COPPER, NICKEL AND SPECIALTY STEEL

The above listed products, in a natural state, do not pose inhalation, ingestion or contact hazards.

Prolonged overexposure to dust or fumes during welding, burning, grinding or machining may result in respiratory irritation, skin irritation or disease. USE ADEQUATE VENTILATION AND APPROPRIATE PERSONAL PROTECTIVE EQUIPMENT.

For Brass and Copper Alloys, contact with acids may liberate flammable and explosive hydrogen gas. If heated, copper oxide, zinc oxide, nickel oxide, tin oxide, cadmium oxide and/or lead fumes may be evolved. Aluminum products may slip during handling or transportation.

PRODUCTS MUST BE SECURED FOR HANDLING AND TRANSPORTATION. Steel containment strapping may result in the strapping rebounding and injuring those nearby. EXERCISE CARE.

For overexposure to metal fumes, remove to fresh air. For skin contact, wash thoroughly with soap and water. Obtain medical attention if symptoms persist.

SEE MATERIAL SAFETY DATA SHEETS FOR MORE DETAILED INFORMATION.

ACIER, ACIER INOXYDABLE, ALUMINIUM, LAITON, CUIVRE, NICKEL ET ACIER SPÉCIALISÉ

Les produits mentionnés ci-haut, à l'état brut, ne causent aucun danger au contact, en cas d'inhalation ou d'ingestion.
Une surexposition aux poussières ou aux émanations durant la soudure, la coupe au chalumeau, le meulage ou l'usinage pourrait résulter en une irritation des voies respiratoires ou de la peau ou autres maladies. UNE VENTILATION ADÉQUATE EST DE MISE AINSI QU'UN ÉQUIPEMENT PROTECTEUR APPROPRIÉ.
Pour ce qui est des alliages de cuivre et de laiton, un contact avec certains acides pourrait dégager des gaz hydrogène explosifs et inflammables. Si chauffé, de l'oxyde de cuivre, de zinc, de nickel, d'étain, de cadmium et/ou des vapeurs de plomb pourraient s'échapper. Les produits d'aluminium peuvent glisser lors de leur manipulation ou transportation.
TOUS LES PRODUITS DOIVENT ÊTRE ATTACHÉS SOLIDEMENT LORS DU TRANSPORT ET DE LA MANIPULATION.
Lors de la coupe, les courroies d'acier peuvent rebondir et causer des blessures. MANIPULEZ AVEC PRÉCAUTION.
En cas d'une surexposition aux émanations, retirez-vous et respirez de l'air frais. S'il y a contact avec la peau lavez la région affectée avec de l'eau et du savon. Si les symptômes persistent consultez votre médecin.
POUR PLUS D'INFORMATION, CONSULTEZ LA FEUILLE DE DONNÉES DE SÉCURITÉ.

DATE _____

SIGNED
SIGNÉ _____

RCHASER'S ORDER IS FILLED IN ACCORDANCE WITH THE ABOVE TERMS AND CONDITIONS OF SALE AND THOSE ON THE REVERSE HEREOF, ALL OF WHICH TERMS AND CONDITIONS SUPERSEDE THE TERMS AND CONDITIONS (IF ANY) OF PURCHASER'S ORDER. BY ACCEPT LIVERY OF ALL OR PART OF THE ABOVE-DESCRIBED GOODS (HEREINAFTER CALLED THE "GOODS") OR BY PAYING FOR SAME IN WHOLE OR IN PART PURCHASER AGREES TO ALL THE TERMS AND CONDITIONS SET FORTH ABOVE AND ON THE REVERSE HEREOF.
COMMANDE DE L'ACHETEUR EST EXÉCUTÉE EN CONFORMITÉ DES CONDITIONS DE VENTE STIPULÉES CI-DESSUS ET AU VERSO DES PRÉSENTES. TOUTES CES CONDITIONS REMPLAÇANT CELLES (LE CAS ÉCHÉANT) ÉNONCÉES AU BON DE COMMANDE DE L'ACHETEUR CEPTANT LA LIVRAISON DE TOUT OU PARTIE DES MARCHANDISES DÉCRITES CI-DESSUS (CI-APRÈS APPELÉES LES "MARCHANDISES") OU EN LES PAYANT INTÉGRALEMENT OU PARTIELLEMENT, L'ACHETEUR ACCEPTE TOUTES LES CONDITIONS STIPULÉES CI-DESSUS ET RSO DES PRÉSENTES.

OFFICE/ADMINISTRATIVE SHIPPING/EXPEDITION DRIVER/CHAUFFEUR CUSTOMER/CLIENT

RL9-L 0

5/29/17 10:30:07

EMAIL PAGE COUVERTURE

==========

Société:

5/29/17 10:30:07 Document Sommaire

Page couverture 1

Objet: MILL TEST CERTIFICATE

NO.COMMANDE :94853576

No.Bc Du Client :PLA06076

City : LA SARRE State/Province . QC

Séquence correspondant au(x) MTR imprimé(s):

Ln#	Description item:	Coulée	MTR
3	2 1/2 X 2 1/2 X 1/4 CORN. LÀC 44W	52076443	094128168

3	2 1/2 X 2 1/2 X 1/4 CORN. LÀC 44W	52077202	094128768

CERTIFIED MATERIAL TEST REPORT

GERDAU

CA-ML-WHITBY
41 GERDAU CT
WHITBY, ON L1N 5T1
Canada

CUSTOMER SHIP TO	CUSTOMER BILL TO
LEROUX STEEL 1331 RUE GRAHAM BELL BOUCHERVILLE,QC J4B 6A1 Canada	LEROUX STEEL 1331 RUE GRAHAM BELL BOUCHERVILLE,QC J4B 6A1 Canada

GRADE	SHAPE / SIZE	DOCUMENT ID:
GGMULTI	Angle / 2 1/2X2 1/2X1/4	0000030063

LENGTH	WEIGHT	HEAT / BATCH
20'00"	69,126 LB	52076443/03

SALES ORDER	CUSTOMER MATERIAL N°
4467119/000190	

SPECIFICATION / DATE or REVISION
ASTM A529-14, A572-15
ASTM A6-14,A36-14, ASME SA-36
ASTM A709-15, AASHTO M270-12
CSA G40.20-13/G40.21-13

CUSTOMER PURCHASE ORDER NUMBER	BILL OF LADING	DATE
94037796-FEMQ1	1302-0000055096	01/31/2017

CHEMICAL COMPOSITION

C %	Mn %	P %	S %	Si %	Cu %	Ni %	Cr %	V %	Nb %
0.14	0.70	0.015	0.034	0.20	0.28	0.10	0.14	0.015	0.001

MECHANICAL PROPERTIES

Elong. %	G/L Inch	UTS PSI	UTS MPa	YS 0.2% PSI	YS MPa
29.40	8.000	71765	495	53277	367
29.40	8.000	72203	498	53136	366

COMMENTS / NOTES

This grade meets the requirements for the following grades:
ASTM Grades: A36; A529-50; A572-50; A709-36; A709-50
CSA Grades: 44W; 50W
AASHTO Grades: M270-36; M270-50
ASME Grades: SA36

LEROUX

094128168

The above figures are certified chemical and physical test records as contained in the permanent records of company. We certify that these data are correct and in compliance with specified requirements. This material, including the billets, was melted and manufactured in Canada. CMTR complies with EN 10204 3.1.

BHASKAR YALAMANCHILI
QUALITY DIRECTOR
Phone: (409) 769-1014 Email: Bhaskar.Yalamanchili@gerdau.com

LEONARDO NUNES
QUALITY ASSURANCE MGR.
Phone: (905) 668-8811 EXT 4055 Email: Leonardo.Nunes@gerdau.com

CERTIFIED MATERIAL TEST REPORT

GERDAU

CA-ML-WHITBY
1 GERDAU CT
WHITBY, ON L1N 5T1
Canada

CUSTOMER SHIP TO	CUSTOMER BILL TO
LEROUX STEEL 1331 RUE GRAHAM BELL BOUCHERVILLE,QC J4B 6A1 Canada	LEROUX STEEL 1331 RUE GRAHAM BELL BOUCHERVILLE,QC J4B 6A1 Canada

GRADE	SHAPE / SIZE	DOCUMENT ID:
GGMULTI	Angle / 2 1/2X2 1/2X1/4	0000031506

LENGTH	WEIGHT	HEAT / BATCH
20'00"	37,884 LB	52077202/02

SALES ORDER	CUSTOMER MATERIAL N°
4585552/000160	

SPECIFICATION / DATE or REVISION
ASTM A529-14, A572-15
ASTM A6-14,A36-14, ASME SA-36
ASTM A709-15, AASHTO M270-12
CSA G40.20-13/G40.21-13

CUSTOMER PURCHASE ORDER NUMBER	BILL OF LADING	DATE
94037961	1302-0000055639	02/13/2017

CHEMICAL COMPOSITION

C %	Mn %	P %	S %	Si %	Cu %	Ni %	Cr %	V %	Nb %
0.13	0.84	0.018	0.029	0.19	0.31	0.12	0.15	0.016	0.001

MECHANICAL PROPERTIES

Elong. %	G/L Inch	UTS PSI	UTS MPa	YS 0.2% PSI	YS MPa
29.40	8.000	72857	502	57227	395
28.80	8.000	72833	502	57583	397

COMMENTS / NOTES

This grade meets the requirements for the following grades:
ASTM Grades: A36; A529-50; A572-50; A709-36; A709-50
CSA Grades: 44W; 50W
AASHTO Grades: M270-36; M270-50
ASME Grades: SA36

LEROUX

094128768

The above figures are certified chemical and physical test records as contained in the permanent records of company. We certify that these data are correct and in compliance with specified requirements. This material, including the billets, was melted and manufactured in Canada. CMTR complies with EN 10204 3.1.

BHASKAR YALAMANCHILI
QUALITY DIRECTOR
Phone: (409) 769-1014 Email: Bhaskar.Yalamanchili@gerdau.com

LEONARDO NUNES
QUALITY ASSURANCE MGR.
Phone: (905) 668-8811 EXT 4055 Email: Leonardo.Nunes@gerdau.com

EROUX
DIVISION OF RUSSEL METALS INC.
DE DIVISION de MÉTAUX RUSSEL INC.

0E89340988-57208

COMBINATION SHORT FORM OF STRAIGHT BILL OF LADING - EXPRESS SHIPPING CONTRACT,
SUBJECT TO ALL TERMS, CONDITIONS AND LIMITATIONS INCORPORATED BY REFERENCE AS SHOWN ON THE BACK OF THIS BILL.
FORMULAIRE COMBINÉ DE CONNAISSEMENT DIRECT - ET DE CONTRAT D'EXPÉDITION PAR
MESSAGERIE ASSUJETTI À TOUTES LES MODALITÉS, CONDITIONS ET LIMITATIONS QUI Y SONT INTÉGRÉES PAR RENVOI, AINSI QU'IL EST INDIQUÉ AU VERSO OU PRÉSENT CONNAISSEMENT.

ACIER LEROUX
1675 ROUTE DE L'AÉROPORT
C.P. 550 AMOS QC J9T3 TEL#: (819)732-8381

PROMISE.....: 06/14/17
REPRESENTANT Yvan Bégin

EXPÉDIÉ: 00
NORMEX METAL
9088-6615 QUEBEC INC.
11 BOUL. INDUSTRIEL
ROUTE 111 EST
LA SARRE QC J9Z 2X2

VENDU: 8910165 06/06/17
NORMEX METAL
9088-6615 QUEBEC INC.
P.O. BOX 565
EARLTON ON P0J 1E0

FREIGHT TERMS
MODALITÉS DE TRANSPORT
PORT PAYÉ
CARRIER
TRANSPORTEUR RT# 006
NOTRE CAMION
CUSTOMER PHONE #
TÉLÉPHONE À LA CLIENTÈLE #
(819)333-1200

#BCC PLA06104 RELACHE#

VEHICLE IDENT.
IDENTIFICATION DU VEHICULE
NIR:R-527158-1

INSTRUCTIONS CLIENT:
ECRIRE # DE COULEE SUR LA COPIE ROSE DU CLIENT
****
FERME A 13HR00 LE VENDREDI
COMMENT.:
LIVRAISON 14 JUIN 17

Promec

LN#03 04188 GRIP SPAN ANCHOR AVEC VIS AUTO-PERC QTÉ COMM
#PIÉC L-2507 ✓ X 1.0000 10 EA 1 LB
QTÉ expédiée.....
ÉTQ 9063939 COUL LETTRE CONFORME 10 EA 1 LB PAYS CANADA

LN#04 04188 GRIP SPAN CLIPS (S-CLIP) QTÉ COMM
#PIÉC L-2508 ✓ X 1.0000 20 EA 2 LB
QTÉ expédiée.....
ÉTQ 9063940 COUL LETTRE CONFORME 20 EA 2 LB

CONFORME ✓ OUI NON
SIGNÉ
DATE 27 06 2017
JOUR MOIS ANNÉE

Les certificats d'analyse (MTR) seront automatiquement envoyés par email

PAGE: 1 TOTALS PALETTES 30 EA 3 LB

STEEL, STAINLESS STEEL, ALUMINUM, BRASS, COPPER, NICKEL AND SPECIALTY STEEL

The above listed products, in a natural state, do not pose inhalation, ingestion or contact hazards.

Prolonged overexposure to dust or fumes during welding, burning, grinding or machining may result in respiratory irritation, skin irritation or disease. USE ADEQUATE VENTILATION AND APPROPRIATE PERSONAL PROTECTIVE EQUIPMENT.

For Brass and Copper Alloys, contact with acids may liberate flammable and explosive hydrogen gas. If heated, copper oxide, zinc oxide, nickel oxide, tin oxide, cadmium oxide and/or lead fumes may be evolved. Aluminum products may slip during handling or transportation.

PRODUCTS MUST BE SECURED FOR HANDLING AND TRANSPORTATION. steel containment strapping may result in the strapping rebounding and injuring those nearby. EXERCISE N.

overexposure to metal fumes, remove to fresh air. For skin contact, wash thoroughly with soap and water. Obtain medical attention if symptoms persist.

SEE MATERIAL SAFETY DATA SHEETS FOR MORE DETAILED INFORMATION.

ACIER, ACIER INOXYDABLE, ALUMINIUM, LAITON, CUIVRE, NICKEL ET ACIER SPÉCIALISÉ

Les produits mentionnés ci-haut, à l'état brut, ne causent aucun danger au contact, en cas d'inhalation ou d'ingestion.
Une surexposition aux poussières ou aux émanations durant la soudure, la coupe au chalumeau, le meulage ou l'usinage pourrait résulter en une irritation des voies respiratoires ou de la peau ou autres maladies. UNE VENTILATION ADÉQUATE EST DE MISE AINSI QU'UN ÉQUIPEMENT PROTECTEUR APPROPRIÉ.
Pour ce qui est des alliages de cuivre et de laiton, un contact avec certains acides pourrait dégager des gaz hydrogène explosifs et inflammables. Si chauffé, de l'oxyde de cuivre, de zinc, de nickel, d'étain, de cadmium et/ou des vapeurs de plomb pourraient s'échapper. Les produits d'aluminium peuvent glisser lors de leur manipulation ou transportation.
TOUS LES PRODUITS DOIVENT ÊTRE ATTACHÉS SOLIDEMENT LORS DU TRANSPORT ET DE LA MANIPULATION.
Lors de la coupe, les courroies d'acier peuvent rebondir et causer des blessures. MANIPULEZ AVEC PRÉCAUTION.
En cas d'une surexposition aux émanations, retirez-vous et respirez de l'air frais. S'il y a contact avec la peau lavez la région affectée avec de l'eau et du savon. Si les symptômes persistent consultez votre médecin.
POUR PLUS D'INFORMATION, CONSULTEZ LA FEUILLE DE DONNÉES DE SÉCURITÉ.

DATE _____
SIGNED
SIGNÉ _____

PURCHASER'S ORDER IS FILLED IN ACCORDANCE WITH THE ABOVE TERMS AND CONDITIONS OF SALE AND THOSE ON THE REVERSE HEREOF, ALL OF WHICH TERMS AND CONDITIONS SUPERSEDE THE TERMS AND CONDITIONS (IF ANY) OF PURCHASER'S ORDER. BY ACCEPTING DELIVERY OF ALL OR PART OF THE ABOVE-DESCRIBED GOODS (HEREINAFTER CALLED THE "GOODS") OR BY PAYING FOR SAME IN WHOLE OR IN PART PURCHASER AGREES TO ALL THE TERMS AND CONDITIONS SET FORTH ABOVE AND ON THE REVERSE HEREOF.
LA COMMANDE DE L'ACHETEUR EST EXÉCUTÉE EN CONFORMITÉ DES CONDITIONS DE VENTE STIPULÉES CI-DESSUS ET AU VERSO DES PRÉSENTES. TOUTES CES CONDITIONS REMPLAÇANT CELLES (LE CAS ÉCHÉANT) ÉNONCÉES AU BON DE COMMANDE DE L'ACHETEUR EN ACCEPTANT LA LIVRAISON DE TOUT OU PARTIE DES MARCHANDISES DÉCRITES CI-DESSUS (CI-APRÈS APPELÉES LES "MARCHANDISES") OU EN LES PAYANT INTÉGRALEMENT OU PARTIELLEMENT, L'ACHETEUR ACCEPTE TOUTES LES CONDITIONS STIPULÉES CI-DESSUS ET AU VERSO DES PRÉSENTES.

OFFICE/ADMINISTRATIVE SHIPPING/EXPEDITION DRIVER/CHAUFFEUR CUSTOMER/CLIENT

RL9-L

6/06/17 14:48:33

EMAIL COVER PAGE

==========

Company:

6/06/17 14:48:33 Document Summary:

Cover Page: 1

Subject: MILL TEST CERTIFICATE

Order Number :89340988

Customer PO# :PLA06104

City : LA SARRE State/Province : QC

The order of the printed MTRs is as follows:

PO Ln#	Item Description:	Heat	MTR
3	INDUSTRIAL FASTENERS	LETTRE CONFORME	089022989

ACCURATE
SCREEN + GRATING
Products with holes, backed with solid service

10905-48 Street S.E, Unit #147, Calgary, AB T2C 1G8

To whom it may concern,

Accurate Screen and Grating certifies all bar grating materials conform to applicable NAAM specifications MBG 531-00 and that all expanded metal conforms to the expanded metal manual EMMA 557-99.

Compliance specification

Expanded Metal	Specification
Carbon Steel	ASTM A366 (alloy C1008)
Aluminum	3003 H-14 aluminum
Channel Grating Diamond and Round Hole	
Galvanized	ASTM A36 G90 coating
Aluminum	5052 H-32 aluminum
Ladder Rungs	
Galv	ASTM A36 G90 Coating
Aluminum	5052 H-32 aluminum
Bar Grating	
Bare and Painted	ASTM A36
Galv	ASTM A36 G90 coating
Aluminum	6063-T6

Materials Manager

Todd Bigelow

LEROUX

089022989

6/06/17 14:48:34

EMAIL COVER PAGE

==========

Company:

6/06/17 14:48:34 Document Summary:

Cover Page: 1

Subject: MILL TEST CERTIFICATE

Order Number :89340988

Customer PO# :PLA06104

City : LA SARRE State/Province : QC

The order of the printed MTRs is as follows:

PO Ln#	Item Description:	Heat	MTR
4	INDUSTRIAL FASTENERS	LETTRE CONFORME	089022989

ACCURATE
SCREEN+GRATING
Products with holes, backed with solid service

10905-48 Street S.E, Unit #147, Calgary, AB T2C 1G8

To whom it may concern,

Accurate Screen and Grating certifies all bar grating materials conform to applicable NAAM specifications MBG 531-00 and that all expanded metal conforms to the expanded metal manual EMMA 557-99.

Compliance specification

Expanded Metal	Specification
Carbon Steel	ASTM A366 (alloy C1008)
Aluminum	3003 H-14 aluminum
Channel Grating Diamond and Round Hole	
Galvanized	ASTM A36 G90 coating
Aluminum	5052 H-32 aluminum
Ladder Rungs	
Galv	ASTM A36 G90 Coating
Aluminum	5052 H-32 aluminum
Bar Grating	
Bare and Painted	ASTM A36
Galv	ASTM A36 G90 coating
Aluminum	6063-T6

Materials Manager

Todd Bigelow

LEROUX

089022989

EROUX
DIVISION OF RUSSEL METALS INC.
DIVISION de MÉTAUX RUSSEL INC.

0E89340822-57211

COMBINATION SHORT FORM OF STRAIGHT BILL OF LADING - EXPRESS SHIPPING CONTRACT, SUBJECT TO ALL TERMS, CONDITIONS AND LIMITATIONS IIICORPORATED BY REFERENCE AS SHOWN ON THE DACK OF THIS BILL.
FORMULAIRE COMBINÉ DE CONNAISSEMENT DIRECT - ET DE CONTRAT D'EXPÉDITION PAR MESSAGERIE ASSUJETTI À TOUTES LES MODALITÉS, CONDITIONS ET LIMITATIONS QUI Y SONT INTÉGRÉES PAR RENVOI, AINSI QU'IL EST IIIDIQUÉ AU VERSO DU PRÉSENT CONNAISSEMENT.

ACIER LEROUX
1675 ROUTE DE L'AÉROPORT
C.P. 550 AMOS QC J9T3 TEL#: (819)732-8381

PROMISE.....: 06/07/17
REPRESENTANT Yvan Bégin

EXPÉDIÉ: 00
NORMEX METAL
9088-6615 QUEBEC INC.
11 BOUL. INDUSTRIEL
ROUTE 111 EST
LA SARRE QC J9Z 2X2

VENDU: 8910165 06/06/17
NORMEX METAL
9088-6615 QUEBEC INC.
P.O. BOX 565
EARLTON ON P0J 1E0

FREIGHT TERMS / MODALITÉS DE TRANSPORT
PORT PAYÉ
CARRIER / TRANSPORTEUR RT# 006
NOTRE CAMION
CUSTOMER PHONE # / TÉLÉPHONE À LA CLIENTÈLE #
(819)333-1200

#BCC P0055281 RELACHE#

VEHICLE IDENT / IDENTIFICATION DU VEHICULE
NIR:R-527158-1

INSTRUCTIONS CLIENT:
ECRIRE # DE COULEE SUR LA COPIE ROSE DU CLIENT
****
FERME A 13HR00 LE VENDREDI
COMMENT.:
LIVRAISON 7 JUIN 17

P Romeo

LN#03 04188 GRIP SPAN ANCHOR AVEC VIS AUTO-PERC QTÉ COMM
#PIÉC X .0394 188 EA 19 LB
QTÉ expédiée..... L-2505 .....
ÉTQ 9063941 COUL LETTRE CONFORME 188 EA 19 LB PAYS CANADA
Commentaire GRIP SPAN ANCHORS AVEC VIS AUTO-PERCANTE 1/4" STAINLESS AVEC WASHER & RUBBER GASKET.

LN#06 04188 GRIP SPAN CLIPS ASS'Y (S-CLIP) QTÉ COMM
#PIÉC X .0394 492 EA 49 LB
QTÉ expédiée..... L-2506 .....
ÉTQ 9063942 COUL LETTRE CONFORME 492 EA 49 LB PAYS CANADA
Commentaire GRIP SPAN CLIP ASSEMBLIES "S-CLIP" AVEC 5/16" HEX.HEAD BOLT & ANCHOR

CONFORME	OUI	NON
SIGNÉ		
DATE	07 / 06 / 17	
	JOUR MOIS	ANNÉE

Les certificats d'analyse (MTR) seront automatiquement envoyés par email

PAGE: 1 TOTALS PALETTES _____ 680 EA 68 LB

STEEL, STAINLESS STEEL, ALUMINUM, BRASS, COPPER, NICKEL AND SPECIALTY STEEL

The above listed products, in a natural state, do not pose inhalation, ingestion or contact hazards.

Prolonged overexposure to dust or fumes during welding, burning, grinding or machining may result in respiratory irritation, skin irritation or disease. USE ADEQUATE VENTILATION AND APPROPRIATE PERSONAL PROTECTIVE EQUIPMENT.

For Brass and Copper Alloys, contact with acids may liberate flammable and explosive hydrogen gas. If heated, copper oxide, zinc oxide, nickel oxide, tin oxide, cadmium oxide and/or lead fumes may be evolved. Aluminum products may slip during handling or transportation.

PRODUCTS MUST BE SECURED FOR HANDLING AND TRANSPORTATION. Cutting steel containment strapping may result in the strapping rebounding and injuring those nearby. EXERCISE CAUTION.

For overexposure to metal fumes, remove to fresh air. For skin contact, wash thoroughly with soap and water. Obtain medical attention if symptoms persist.

SEE MATERIAL SAFETY DATA SHEETS FOR MORE DETAILED INFORMATION.

ACIER, ACIER INOXYDABLE, ALUMINIUM, LAITON, CUIVRE, NICKEL ET ACIER SPÉCIALISÉ

Les produits mentionnés ci-haut, à l'état brut, ne causent aucun danger au contact, en cas d'inhalation ou d'ingestion.

Une surexposition aux poussières ou aux émanations durant la soudure, la coupe ou l'ébarbage, le meulage ou l'usinage pourrait résulter en une irritation des voies respiratoires ou de la peau ou autres maladies. UNE VENTILATION ADÉQUATE EST DE MISE AINSI QU'UN ÉQUIPEMENT PROTECTEUR APPROPRIÉ.

Pour ce qui est des alliages de cuivre et de laiton, un contact avec certains acides pourrait dégager des gaz hydrogène explosifs et inflammables. Si chauffé, de l'oxyde de cuivre, de zinc, de nickel, d'étain, de cadmium et/ou des vapeurs de plomb pourraient s'échapper. Les produits d'aluminium peuvent glisser lors de leur manipulation ou transportation.

TOUS LES PRODUITS DOIVENT ÊTRE ATTACHÉS SOLIDEMENT LORS DU TRANSPORT ET DE LA MANIPULATION.

Lors de la coupe, les courroies d'acier peuvent rebondir et causer des blessures. MANIPULEZ AVEC PRÉCAUTION.

En cas d'une surexposition aux émanations, retirez-vous et respirez de l'air frais. S'il y a contact avec la peau lavez la région affectée avec de l'eau et du savon. Si les symptômes persistent consultez votre médecin.

POUR PLUS D'INFORMATION, CONSULTEZ LA FEUILLE DE DONNÉES DE SÉCURITÉ.

DATE _____

SIGNED
SIGNÉ _____

PURCHASER'S ORDER IS FILLED IN ACCORDANCE WITH THE ABOVE TERMS AND CONDITIONS OF SALE AND THOSE ON THE REVERSE HEREOF, ALL OF WHICH TERMS AND CONDITIONS SUPERSEDE THE TERMS AND CONDITIONS (IF ANY) OF PURCHASER'S ORDER. BY ACCEPTANCE OF DELIVERY OF ALL OR PART OF THE ABOVE-DESCRIBED GOODS (HEREINAFTER CALLED THE "GOODS") OR BY PAYING FOR SAME IN WHOLE OR IN PART PURCHASER AGREES TO ALL THE TERMS AND CONDITIONS SET FORTH ABOVE AND ON THE REVERSE HEREOF.
LA COMMANDE DE L'ACHETEUR EST EXÉCUTÉE EN CONFORMITÉ DES CONDITIONS DE VENTE STIPULÉES CI-DESSUS ET AU VERSO DES PRÉSENTES. TOUTES CES CONDITIONS REMPLAÇANT CELLES (LE CAS ÉCHÉANT) ÉNONCÉES AU BON DE COMMANDE DE L'ACHETEUR. EN ACCEPTANT LA LIVRAISON DE TOUT OU PARTIE DES MARCHANDISES DÉCRITES CI-DESSUS (CI-APRÈS APPELÉES LES "MARCHANDISES") OU EN LES PAYANT INTÉGRALEMENT OU PARTIELLEMENT, L'ACHETEUR ACCEPTE TOUTES LES CONDITIONS STIPULÉES CI-DESSUS ET AU VERSO DES PRÉSENTES.

OFFICE/ADMINISTRATIVE SHIPPING/EXPEDITION DRIVER/CHAUFFEUR CUSTOMER/CLIENT

RL9-L (

6/06/17 14:56:45

EMAIL COVER PAGE

==========

Company:

6/06/17 14:56:45 Document Summary:

Cover Page: 1

Subject: MILL TEST CERTIFICATE

Order Number :89340822

Customer PO# :P0055281

City : LA SARRE State/Province : QC

The order of the printed MTRs is as follows:

PO Ln#	Item Description:	Heat	MTR
3	INDUSTRIAL FASTENERS	LETTRE CONFORME	089022989

ACCURATE
SCREEN + GRATING
Products with holes, backed with solid service

10905-48 Street S.E, Unit #147, Calgary, AB T2C 1G8

To whom it may concern,

Accurate Screen and Grating certifies all bar grating materials conform to applicable NAAM specifications MBG 531-00 and that all expanded metal conforms to the expanded metal manual EMMA 557-99.

Compliance specification

Expanded Metal	Specification
Carbon Steel	ASTM A366 (alloy C1008)
Aluminum	3003 H-14 aluminum
Channel Grating Diamond and Round Hole	
Galvanized	ASTM A36 G90 coating
Aluminum	5052 H-32 aluminum
Ladder Rungs	
Galv	ASTM A36 G90 Coating
Aluminum	5052 H-32 aluminum
Bar Grating	
Bare and Painted	ASTM A36
Galv	ASTM A36 G90 coating
Aluminum	6063-T6

Materials Manager

Todd Bigelow

LEROUX

089022989

6/06/17 14:56:45

EMAIL COVER PAGE

==========

Company:

6/06/17 14:56:45 Document Summary:

Cover Page: 1

Subject: MILL TEST CERTIFICATE

Order Number :89340822

Customer PO# :P0055281

City : LA SARRE State/Province : QC

The order of the printed MTRs is as follows:

PO Ln#	Item Description:	Heat	MTR
6	INDUSTRIAL FASTENERS	LETTRE CONFORME	089022989

ACCURATE
SCREEN + GRATING
Products with holes, backed with solid service

10905-48 Street S.E, Unit #147, Calgary, AB T2C 1G8

To whom it may concern,

Accurate Screen and Grating certifies all bar grating materials conform to applicable NAAM specifications MBG 531-00 and that all expanded metal conforms to the expanded metal manual EMMA 557-99.

Compliance specification

Expanded Metal	Specification
Carbon Steel	ASTM A366 (alloy C1008)
Aluminum	3003 H-14 aluminum
Channel Grating Diamond and Round Hole	
Galvanized	ASTM A36 G90 coating
Aluminum	5052 H-32 aluminum
Ladder Rungs	
Galv	ASTM A36 G90 Coating
Aluminum	5052 H-32 aluminum
Bar Grating	
Bare and Painted	ASTM A36
Galv	ASTM A36 G90 coating
Aluminum	6063-T6

Materials Manager

Todd Bigelow

LEROUX
089022989

EROUX
DIVISION OF RUSSEL METALS INC.
DIVISION de MÉTAUX RUSSEL INC.

0E89340354-57185

COMBINATION SHORT FORM OF STRAIGHT BILL OF LADING - EXPRESS SHIPPING CONTRACT, SUBJECT TO ALL TERMS, CONDITIONS AND LIMITATIONS INCORPORATED BY REFERENCE AS SHOWN ON THE BACK OF THIS BILL.
FORMULAIRE COMBINÉ DE CONNAISSEMENT DIRECT - ET DE CONTRAT D'EXPÉDITION PAR MESSAGERIE ASSUJETTI À TOUTES LES MODALITÉS, CONDITIONS ET LIMITATIONS QUI Y SONT INTÉGRÉES PAR RENVOI, AINSI QU'IL EST INDIQUÉ AU VERSO DU PRÉSENT CONNAISSEMENT.

ACIER LEROUX
1675 ROUTE DE L'AÉROPORT
C.P. 550 AMOS QC J9T3 TEL#: (819)732-8381

PROMISE.....: 06/02/17
REPRESENTANT Yvan Bégin

EXPÉDIÉ: 00
NORMEX METAL
9088-6615 QUEBEC INC.
11 BOUL. INDUSTRIEL
ROUTE 111 EST
LA SARRE QC J9Z 2X2

VENDU: 8910165 06/06/17
NORMEX METAL
9088-6615 QUEBEC INC.
P.O. BOX 565
EARLTON ON P0J 1E0

FREIGHT TERMS / MODALITÉS DE TRANSPORT
PORT PAYÉ
CARRIER / TRANSPORTEUR RT# 006
NOTRE CAMION
CUSTOMER PHONE # / TÉLÉPHONE À LA CLIENTÈLE #
(819)333-1200

#BCC P0055281 RELACHE#

VEHICLE IDENT. / IDENTIFICATION DU VEHICULE
NIR:R-527158-1

INSTRUCTIONS CLIENT:
ECRIRE # DE COULEE SUR LA COPIE ROSE DU CLIENT
****
FERME A 13HR00 LE VENDREDI
COMMENT.:
LIVRAISON PARTIELLE: 2 JUIN 17
LIVRAISON FINALE: 7 JUIN 17

~~EXPÉDIÉ~~ PRÉVU CAMION CONTAINER

LN#01 54306 GRILLE 9 1/2 X1 1/2 XCALIBRE12 SECURITE MOTIF DIAMANT GALV QTÉ COMM
#PIÈC L-2503 OK X 12' 41 EA 2460 LB
QTÉ expédiée.....
ÉTQ 9063943 COUL LETTRE CONFORME 41 EA 2460 LB PAYS CANADA

LN#02 54328 GRILLE 11 3/4X1 1/2 XCALIBRE12 SECURITE MOTIF DIAMANT GALV QTÉ COMM
#PIÈC L-2504 X 12' OK 50 EA 3540 LB
QTÉ expédiée.....
ÉTQ 9063884 COUL LETTRE CONFORME 3540 LB 50 EA PAYS CANADA

CONFORME OUI X NON
SIGNÉ
DATE JOUR MOIS ANNÉE

Les certificats d'analyse (MTR) seront automatiquement envoyés par email

PAGE: 1 TOTALS PALETTES _____ 91 EA 6000 LB

STEEL, STAINLESS STEEL, ALUMINUM, BRASS, COPPER, NICKEL AND SPECIALTY STEEL

The above listed products, in a natural state, do not pose inhalation, ingestion or contact hazards.

Prolonged overexposure to dust or fumes during welding, burning, grinding or machining may result in respiratory irritation, skin irritation or disease. USE ADEQUATE VENTILATION AND APPROPRIATE PERSONAL PROTECTIVE EQUIPMENT.

For Brass and Copper Alloys, contact with acids may liberate flammable and explosive hydrogen gas. If heated, copper oxide, zinc oxide, nickel oxide, tin oxide, cadmium oxide and/or lead fumes may be evolved. Aluminum [illegible] may slip during handling or transportation.

PRODUCTS MUST BE SECURED FOR HANDLING AND TRANSPORTATION.
[illegible] containment strapping may result in the strapping rebounding and injuring those nearby. EXERCISE CAUTION.

For overexposure to metal fumes, remove to fresh air. For skin contact, wash thoroughly with soap and water. Obtain medical attention if symptoms persist.

SEE MATERIAL SAFETY DATA SHEETS FOR MORE DETAILED INFORMATION.

ACIER, ACIER INOXYDABLE, ALUMINIUM, LAITON, CUIVRE, NICKEL ET ACIER SPÉCIALISÉ

Les produits mentionnés ci-haut, à l'état brut, ne causent aucun danger au contact, en cas d'inhalation ou d'ingestion.

Une surexposition aux poussières ou aux émanations durant la soudure, la coupe au chalumeau, le meulage ou l'usinage pourrait résulter en une irritation des voies respiratoires ou de la peau ou autres maladies. UNE VENTILATION ADÉQUATE EST DE MISE AINSI QU'UN ÉQUIPEMENT PROTECTEUR APPROPRIÉ.

Pour ce qui est des alliages de cuivre et de laiton, un contact avec certains acides pourrait dégager des gaz hydrogène explosifs et inflammables. Si chauffé, de l'oxyde de cuivre, de zinc, de nickel, d'étain, de cadmium ainsi que des vapeurs de plomb pourraient s'échapper. Les produits d'aluminium peuvent glisser lors de leur manipulation ou transportation.

TOUS LES PRODUITS DOIVENT ÊTRE ATTACHÉS SOUDEMENT LORS DU TRANSPORT ET DE LA MANIPULATION.

Lors de la coupe, les courroies d'acier peuvent rebondir et causer des blessures. MANIPULEZ AVEC PRÉCAUTION.

En cas d'une surexposition aux émanations, retirez-vous et respirez de l'air frais. S'il y a contact avec la peau lavez la région affectée avec de l'eau et du savon. Si les symptômes persistent consultez votre médecin.

POUR PLUS D'INFORMATION, CONSULTEZ LA FEUILLE DE DONNÉES DE SÉCURITÉ.

DATE _____

SIGNED
SIGNÉ

PURCHASER'S ORDER IS FILLED IN ACCORDANCE WITH THE ABOVE TERMS AND CONDITIONS OF SALE AND THOSE ON THE REVERSE HEREOF, ALL OF WHICH TERMS AND CONDITIONS SUPERSEDE THE TERMS AND CONDITIONS (IF ANY) OF PURCHASER'S ORDER. BY ACCEPTING DELIVERY OF ALL OR PART OF THE ABOVE-DESCRIBED GOODS (HEREINAFTER CALLED THE "GOODS") OR BY PAYING FOR SAME IN WHOLE OR IN PART PURCHASER AGREES TO ALL THE TERMS AND CONDITIONS SET FORTH ABOVE AND ON THE REVERSE HEREOF.
LA COMMANDE DE L'ACHETEUR EST EXÉCUTÉE EN CONFORMITÉ DES CONDITIONS DE VENTE STIPULÉES CI-DESSUS ET AU VERSO DES PRÉSENTES. TOUTES CES CONDITIONS REMPLAÇANT CELLES (LE CAS ÉCHÉANT) ÉNONCÉES AU BON DE COMMANDE DE L'ACHETEUR. EN ACCEPTANT LA LIVRAISON DE TOUT OU PARTIE DES MARCHANDISES DÉCRITES CI-DESSUS (CI-APRÈS APPELÉES LES "MARCHANDISES") OU EN LES PAYANT INTÉGRALEMENT OU PARTIELLEMENT, L'ACHETEUR ACCEPTE TOUTES LES CONDITIONS STIPULÉES CI-DESSUS ET AU VERSO DES PRÉSENTES.

OFFICE/ADMINISTRATIVE SHIPPING/EXPEDITION DRIVER/CHAUFFEUR CUSTOMER/CLIENT

RLS-L

6/07/17 9:22:54

EMAIL PAGE COUVERTURE

==========

Société:

6/07/17 9:22:54 Document Sommaire

Page couverture 1

Objet: MILL TEST CERTIFICATE

NO.COMMANDE :89340354

No.Bc Du Client :P0055281

City : LA SARRE State/Province . QC

Séquence correspondant au(x) MTR imprimé(s):

Ln#	Description item:	Coulée	MTR
1	9 1/2 X 1 1/2 X12CAL GR.SÉC DIA GAL LETTRE CONFORME	089022989	
2	11 3/4X 1 1/2 X12CAL G.SÉC DIA GALV LETTRE CONFORME	089026958	

ACCURATE
SCREEN + GRATING
Products with holes, backed with solid service

10905-48 Street S.E, Unit #147, Calgary, AB T2C 1G8

To whom it may concern,

Accurate Screen and Grating certifies all bar grating materials conform to applicable NAAM specifications MBG 531-00 and that all expanded metal conforms to the expanded metal manual EMMA 557-99.

Compliance specification

Expanded Metal	Specification
Carbon Steel	ASTM A366 (alloy C1008)
Aluminum	3003 H-14 aluminum
Channel Grating Diamond and Round Hole	
Galvanized	ASTM A36 G90 coating
Aluminum	5052 H-32 aluminum
Ladder Rungs	
Galv	ASTM A36 G90 Coating
Aluminum	5052 H-32 aluminum
Bar Grating	
Bare and Painted	ASTM A36
Galv	ASTM A36 G90 coating
Aluminum	6063-T6

Materials Manager

Todd Bigelow

LEROUX

089022989

AMICO
DRAMEX

3 janvier 2017

Client : ACIER LEROUX AMOS

Bon de Commande : VALIDE POUR 2017

La présente certifie qu'AMICO DRAMEX a expédié ou expédiera un ou plusieurs produits décrits ci-dessous, et que ces derniers répondent aux normes correspondantes.

PRODUIT	PAYS D'ORIGINE	SPECIFICATIONS
Métal déployé	Canada	EMMA-557 Acier : ASTM A1011 CS-T-B / A1008 Aluminium : ASTM B209 Galvanisé à chaud : ASTM A123 Inoxydable : T-304, T-316
Caillebotis a barre soudé	États-Unis	NAAMM MGB-531 Acier : ASTM A1011/A1011M Galvanisé à chaud : ASTM A123 Inoxydable : T-304, T-316
Caillebotis "Swage Locked"	États-Unis	NAAMM MGB-531 Aluminium : ASTM B-221, 6063-T6
Profilés Diamond Grip, Safety Grip, Safety Tread Planchers et Barreaux Safety Tread	Canada	Acier : ASTM 1011 Acier Pré-galvanisé : G 90, ASTM A653 Aluminium : 5052-H32 Inoxydable : T-304, T-316

LEROUX

089026958

AMICO DRAMEX

62 rue Kelly, St-Jean-sur-Richelieu, Québec, Tel. 800.463.3255, Fax 450.347.0541, amico-online.com

EROUX
IVISION OF RUSSEL METALS INC.
ISION de MÉTAUX RUSSEL INC.

0E89340983-57649

COMBINATION SHORT FORM OF STRAIGHT BILL OF LADING - EXPRESS SHIPPING CONTRACT,
SUBJECT TO ALL TERMS, CONDITIONS AND LIMITATIONS INCORPORATED BY REFERENCE AS SHOWN ON THE BACK OF THIS BILL.
FORMULAIRE COMBINÉ DE CONNAISSEMENT DIRECT - ET DE CONTRAT D'EXPÉDITION PAR
MESSAGERIE ASSUJETTI À TOUTES LES MODALITÉS, CONDITIONS ET LIMITATIONS QUI Y SONT INTÉGRÉES PAR RENVOI, AINSI QU'IL EST INDIQUÉ AU VERSO OU PRÉSENT CONNAISSEMENT.

ACIER LEROUX
1675 ROUTE DE L'AÉROPORT
C.P. 550 AMOS QC J9T3 TEL#: (819)732-8381

PROMISE.....: 06/14/17
REPRESENTANT Yvan Bégin

EXPÉDIÉ: 00
NORMEX METAL
9088-6615 QUEBEC INC.
11 BOUL. INDUSTRIEL
ROUTE 111 EST
LA SARRE QC J9Z 2X2

VENDU: 8910165 06/13/17
NORMEX METAL
9088-6615 QUEBEC INC.
P.O. BOX 565
EARLTON ON P0J 1E0

FREIGHT TERMS
MODALITÉS DE TRANSPORT
PORT PAYÉ
CARRIER
TRANSPORTEUR RT# 006
NOTRE CAMION
CUSTOMER PHONE #
TELEPHONE À LA CLIENTÈLE #
(819)333-1200

#BCC PLA06104 RELACHE#

VEHICLE IDENT.
IDENTIFICATION DU VEHICULE
NIR:R-527158-1

INSTRUCTIONS CLIENT:
ECRIRE # DE COULEE SUR LA COPIE ROSE DU CLIENT
****
FERME A 13HR00 LE VENDREDI
COMMENT.:
LIVRAISON 14 JUIN 17

ETIQUETTE
#4048
ATTACHE

LN#01 54306 GRILLE 9 1/2 X1 1/2 XCALIBRE12 SECURITE MOTIF DIAMANT GALV QTÉ COMM
#PIÉC X 12' 2 EA 120 LB
QTÉ expédiée.....
ÉTQ 9063943 COUL LETTRE CONFORME 120 LB 2 EA PAYS CANADA L2521

LN#02 54328 GRILLE 11 3/4X1 1/2 XCALIBRE12 SECURITE MOTIF DIAMANT GALV QTÉ COMM
#PIÉC X 12' 5 EA 354 LB
QTÉ expédiée.....
ÉTQ 9064010 COUL LETTRE CONFORME 354 LB 5 EA PAYS CANADA L2522

CONFORME OUI NON
SIGNÉ
DATE 14/06/17
JOUR MOIS ANNÉE

Les certificats d'analyse (MTR) seront automatiquement envoyés par email

PAGE: 1 TOTALS PALETTES 7 EA .474 LB

STEEL, STAINLESS STEEL, ALUMINUM, BRASS, COPPER, NICKEL AND SPECIALTY STEEL

The above listed products, in a natural state, do not pose inhalation, ingestion or contact hazards.

Prolonged overexposure to dust or fumes during welding, burning, grinding or machining may result in respiratory irritation, skin irritation or disease. USE ADEQUATE VENTILATION AND APPROPRIATE PERSONAL PROTECTIVE EQUIPMENT.

For Brass and Copper Alloys, contact with acids may liberate flammable and explosive hydrogen gas. If heated, copper oxide, zinc oxide, nickel oxide, tin oxide, cadmium oxide and/or lead fumes may be evolved. Aluminum products may slip during handling or transportation.

UCTS MUST BE SECURED FOR HANDLING AND TRANSPORTATION.
sel containment strapping may result in the strapping rebounding and injuring those nearby. EXERCISE

For overexposure to metal fumes, remove to fresh air. For skin contact, wash thoroughly with soap and water. Obtain medical attention if symptoms persist.

SEE MATERIAL SAFETY DATA SHEETS FOR MORE DETAILED INFORMATION.

ACIER, ACIER INOXYDABLE, ALUMINIUM, LAITON, CUIVRE, NICKEL ET ACIER SPÉCIALISÉ

Les produits mentionnés ci-haut, à l'état brut, ne causent aucun danger au contact, en cas d'inhalation ou d'ingestion.
Une surexposition aux poussières ou aux émanations durant la soudure, la coupe au chalumeau, le meulage ou l'usinage pourrait résulter en une irritation des voies respiratoires ou de la peau ou autres maladies. UNE VENTILATION ADÉQUATE EST DE MISE AINSI QU'UN ÉQUIPEMENT PROTECTEUR APPROPRIÉ.
Pour ce qui est des alliages de cuivre et de laiton, un contact avec certains acides pourrait dégager des gaz hydrogène explosifs et inflammables. Si chauffé, de l'oxyde de cuivre, de zinc, de nickel, d'étain, de cadmium et/ou des vapeurs de plomb pourraient s'échapper. Les produits d'aluminium peuvent glisser lors de leur manipulation ou transportation.
TOUS LES PRODUITS DOIVENT ÊTRE ATTACHÉS SOLIDEMENT LORS DU TRANSPORT ET DE LA MANIPULATION.
Lors de la coupe, les coupoles d'acier peuvent rebondir et causer des blessures. MANIPULEZ AVEC PRÉCAUTION.
En cas d'une surexposition aux émanations, retirez-vous et respirez de l'air frais. S'il y a contact avec la peau lavez la région affectée avec de l'eau et du savon. Si les symptômes persistent consultez votre médecin.
POUR PLUS D'INFORMATION, CONSULTEZ LA FEUILLE DE DONNÉES DE SÉCURITÉ.

DATE 14/6/2017 RF

SIGNED
SIGNÉ

RCHASER'S ORDER IS FILLED IN ACCORDANCE WITH THE ABOVE TERMS AND CONDITIONS OF SALE AND THOSE ON THE REVERSE HEREOF, ALL OF WHICH TERMS AND CONDITIONS SUPERSEDE THE TERMS AND CONDITIONS (IF ANY) OF PURCHASER'S ORDER. BY ACCEPTI LIVERY OF ALL OR PART OF THE ABOVE-DESCRIBED GOODS (HEREINAFTER CALLED THE "GOODS") OR BY PAYING FOR SAME IN WHOLE OR IN PART PURCHASER AGREES TO ALL THE TERMS AND CONDITIONS SET FORTH ABOVE AND ON THE REVERSE HEREOF.
COMMANDE DE L'ACHETEUR EST EXÉCUTÉE EN CONFORMITÉ DES CONDITIONS DE VENTE STIPULÉES CI-DESSUS ET AU VERSO DES PRÉSENTES. TOUTES CES CONDITIONS REMPLAÇANT CELLES (LE CAS ÉCHÉANT) ÉNONCÉES AU BON DE COMMANDE DE L'ACHETEUR CEPTANT LA LIVRAISON DE TOUT OU PARTIE DES MARCHANDISES DÉCRITES CI-DESSUS (CI-APRÉS APPELÉES LES "MARCHANDISES") OU EN LES PAYANT INTÉGRALEMENT OU PARTIELLEMENT, L'ACHETEUR ACCEPTE TOUTES LES CONDITIONS STIPULÉES CI-DESSUS ET RSO DES PRÉSENTES.

OFFICE/ADMINISTRATIVE SHIPPING/EXPEDITION DRIVER/CHAUFFEUR CUSTOMER/CLIENT

RLS-L 04

6/14/17 9:05:39

EMAIL PAGE COUVERTURE

==========

Société:

6/14/17 9:05:39 Document Sommaire

Page couverture 1

Objet: MILL TEST CERTIFICATE

NO.COMMANDE :89340983

No.Bc Du Client :PLA06104

City : LA SARRE State/Province . QC

Séquence correspondant au(x) MTR imprimé(s):

Ln#	Description item:	Coulée	MTR
1	9 1/2 X 1 1/2 X12CAL GR.SÉC DIA GAL LETTRE CONFORME		089022989
2	11 3/4X 1 1/2 X12CAL G.SÉC DIA GALV LETTRE CONFORME		089026958

ACCURATE
SCREEN + GRATING
Products with holes, backed with solid service

10905-48 Street S.E, Unit #147, Calgary, AB T2C 1G8

To whom it may concern,

Accurate Screen and Grating certifies all bar grating materials conform to applicable NAAM specifications MBG 531-00 and that all expanded metal conforms to the expanded metal manual EMMA 557-99.

Compliance specification

Expanded Metal	Specification
Carbon Steel	ASTM A366 (alloy C1008)
Aluminum	3003 H-14 aluminum
Channel Grating Diamond and Round Hole	
Galvanized	ASTM A36 G90 coating
Aluminum	5052 H-32 aluminum
Ladder Rungs	
Galv	ASTM A36 G90 Coating
Aluminum	5052 H-32 aluminum
Bar Grating	
Bare and Painted	ASTM A36
Galv	ASTM A36 G90 coating
Aluminum	6063-T6

Materials Manager

Todd Bigelow

LEROUX

089022989

3 janvier 2017

Client : ACIER LEROUX AMOS

Bon de Commande : VALIDE POUR 2017

La présente certifie qu'AMICO DRAMEX a expédié ou expédiera un ou plusieurs produits décrits ci-dessous, et que ces derniers répondent aux normes correspondantes.

PRODUIT	PAYS D'ORIGINE	SPECIFICATIONS
Métal déployé	Canada	EMMA-557 Acier : ASTM A1011 CS-T-B / A1008 Aluminium : ASTM B209 Galvanisé à chaud : ASTM A123 Inoxydable : T-304, T-316
Caillebotis a barre soudé	États-Unis	NAAMM MGB-531 Acier : ASTM A1011/A1011M Galvanisé à chaud : ASTM A123 Inoxydable : T-304, T-316
Caillebotis "Swage Locked"	États-Unis	NAAMM MGB-531 Aluminium : ASTM B-221, 6063-T6
Profilés Diamond Grip, Safety Grip, Safety Tread Planchers et Barreaux Safety Tread	Canada	Acier : ASTM 1011 Acier Pré-galvanisé : G 90, ASTM A653 Aluminium : 5052-H32 Inoxydable : T-304, T-316

.EROUX

089026958

AMICO DRAMEX

:ROUX
/ISION OF RUSSEL METALS INC.
DIVISION de MÉTAUX RUSSEL INC.

0E89340445-56798

COMBINATION SHORT FORM OF STRAIGHT BILL OF LADING - EXPRESS SHIPPING CONTRACT,
SUBJECT TO ALL TERMS, CONDITIONS AND LIMITATIONS INCORPORATED BY REFERENCE AS SHOWN ON THE BACK OF THIS BILL.
FORMULAIRE COMBINÉ DE CONNAISSEMENT DIRECT - ET DE CONTRAT D'EXPÉDITION PAR
MESSAGERIE ASSUJETTI À TOUTES LES MODALITÉS, CONDITIONS ET LIMITATIONS QUI Y SONT INTÉGRÉES PAR RENVOI, AINSI QU'IL EST INDIQUÉ AU VERSO DU PRÉSENT CONNAISSEMENT.

ACIER LEROUX
1675 ROUTE DE L'AÉROPORT
C.P. 550 AMOS QC J9T3 TEL#: (819)732-8381

PROMISE.....: 05/31/17
REPRESENTANT Yvan Bégin

EXPÉDIÉ: 00
NORMEX METAL
9088-6615 QUEBEC INC.
11 BOUL. INDUSTRIEL
ROUTE 111 EST
LA SARRE QC J9Z 2X2

VENDU: 8910165 05/31/17
NORMEX METAL
9088-6615 QUEBEC INC.
P.O. BOX 565
EARLTON ON P0J 1E0

FREIGHT TERMS
MODALITÉS DE TRANSPORT
PORT PAYÉ
CARRIER
TRANSPORTEUR RT# 006
NOTRE CAMION
CUSTOMER PHONE #
TÉLÉPHONE À LA CLIENTÈLE #
(819)333-1200

#BCC PLA06075 RELACHE#

VEHICLE IDENT.
IDENTIFICATION DU VEHICULE
NIR:R-527158-1

INSTRUCTIONS CLIENT:
ECRIRE # DE COULEE SUR LA COPIE ROSE DU CLIENT
****
FERME A 13HR00 LE VENDREDI
COMMENT.:
LIVRAISON 31 MAI 17

PIÈCE CATALOGUE
PRIMEC

LN#				QTÉ	COMM
04	28862 PROFILÉ EN U	.8 X 13.75	50W		
	#PIéC		X 20'	7 EA	1925 LB
Commentaire	A COUPER				
	7 FOIS 20'				
	**********				

L-2492

CONFORME ✓ | OUI X | NON
SIGNÉ
DATE 02/06/17
JOUR MOIS ANNÉE

Les certificats d'analyse (MTR) seront automatiquement envoyés par email

PAGE: 1 TOTALS PALETTES _____ 7 EA 1925 LB

STEEL, STAINLESS STEEL, ALUMINUM, BRASS, COPPER, NICKEL AND SPECIALTY STEEL

e above listed products, in a natural state, do not pose inhalation, ingestion or contact hazards.
olonged overexposure to dust or fumes during welding, burning, grinding or machining may result in
spiratory irritation, skin irritation or disease. USE ADEQUATE VENTILATION AND APPROPRIATE PERSONAL
OTECTIVE EQUIPMENT.
/ Brass and Copper Alloys, contact with acids may liberate flammable and explosive hydrogen gas. If heated,
pper oxide, zinc oxide, nickel oxide, tin oxide, cadmium oxide and/or lead fumes may be evolved. Aluminum
oducts may slip during handling or transportation.
UCTS MUST BE SECURED FOR HANDLING AND TRANSPORTATION.
containment strapping may result in the strapping rebounding and injuring those nearby. EXERCISE
posure to metal fumes, remove to fresh air. For skin contact, wash thoroughly with soap and water.
ain medical attention if symptoms persist.
E MATERIAL SAFETY DATA SHEETS FOR MORE DETAILED INFORMATION.

ACIER, ACIER INOXYDABLE, ALUMINIUM, LAITON, CUIVRE, NICKEL ET ACIER SPÉCIALISÉ

Les produits mentionnés ci-haut, à l'état brut, ne causent aucun danger au contact, en cas d'inhalation ou d'ingestion.
Une surexposition aux poussières ou aux émanations durant la soudure, la coupe au chalumeau, le meulage ou l'usinage pourrait résulter en une irritation des voies respiratoires ou de la peau ou autres maladies. UNE VENTILATION ADÉQUATE EST DE MISE AINSI QU'UN ÉQUIPEMENT PROTECTEUR APPROPRIÉ.
Pour ce qui est des alliages de cuivre et de laiton, un contact avec certains acides pourrait dégager des gaz hydrogène explosifs et inflammables. Si chauffé, de l'oxyde de cuivre, de zinc, de nickel, d'étain, de cadmium et/ou des vapeurs de plomb pourraient s'échapper. Les produits d'aluminium peuvent glisser lors de leur manipulation ou transportation.
TOUS LES PRODUITS DOIVENT ÊTRE ATTACHÉS SOLIDEMENT LORS DU TRANSPORT ET DE LA MANIPULATION.
Lors de la coupe, les courroies d'acier peuvent rebondir et causer des blessures. MANIPULEZ AVEC PRÉCAUTION.
En cas d'une surexposition aux émanations, retirez-vous et respirez de l'air frais. SI y a contact avec la peau lavez la région affectée avec de l'eau et du savon. Si les symptômes persistent consultez votre médecin.
POUR PLUS D'INFORMATION, CONSULTEZ LA FEUILLE DE DONNÉES DE SÉCURITÉ.

DATE _____
SIGNED
SIGNÉ _____

CHASER'S ORDER IS FILLED IN ACCORDANCE WITH THE ABOVE TERMS AND CONDITIONS OF SALE AND THOSE ON THE REVERSE HEREOF, ALL OF WHICH TERMS AND CONDITIONS SUPERSEDE THE TERMS AND CONDITIONS (IF ANY) OF PURCHASER'S ORDER. BY ACCEPTIN
VERY OF ALL OR PART OF THE ABOVE-DESCRIBED GOODS (HEREINAFTER CALLED THE "GOODS") OR BY PAYING FOR SAME IN WHOLE OR IN PART PURCHASER AGREES TO ALL THE TERMS AND CONDITIONS SET FORTH ABOVE AND ON THE REVERSE HEREOF.
OMMANDE DE L'ACHETEUR EST EXÉCUTÉE EN CONFORMITÉ DES CONDITIONS DE VENTE STIPULÉES CI-DESSUS ET AU VERSO DES PRÉSENTES. TOUTES CES CONDITIONS REMPLAÇANT CELLES (LE CAS ÉCHÉANT) ÉNONCÉES AU BON DE COMMANDE DE L'ACHETEUR EI
EPTANT LA LIVRAISON DE TOUT OU PARTIE DES MARCHANDISES DÉCRITES CI-DESSUS (CI-APRÈS APPELÉES LES "MARCHANDISES") OU EN LES PAYANT INTÉGRALEMENT OU PARTIELLEMENT, L'ACHETEUR ACCEPTE TOUTES LES CONDITIONS STIPULÉES CI-DESSUS ET AI
O DES PRÉSENTES.

OFFICE/ADMINISTRATIVE SHIPPING/EXPEDITION DRIVER/CHAUFFEUR CUSTOMER/CLIENT

RLS-L 04/1

6/02/17 9:05:21

EMAIL PAGE COUVERTURE

==========

Société:

6/02/17 9:05:21 Document Sommaire

Page couverture 1

Objet: MILL TEST CERTIFICATE

NO.COMMANDE :89340445

No.Bc Du Client :PLA06075

City : LA SARRE State/Province . QC

Séquence correspondant au(x) MTR imprimé(s):

Ln#	Description item:	Coulée	MTR
4	8 X 13.75 PROFILÉ EN U 50W	622636	094125424
---	---	---	---
4	8 X 13.75 PROFILÉ EN U 50W	52077454	094130101

A01
ArcelorMittal Poland S.A.
Oddział w Dąbrowie Górniczej
al. J. Piłsudskiego 92
41-308 Dąbrowa Górnicza

A02
MILL TEST REPORT

ASTM A6/A6M Nr: 1001875531

Z01.1
Dąbrowa Górnicza, 12.09.2016

ArcelorMittal

A05.1
Purchaser: ARCELORMITTAL COMMERCIAL SECTIONS S A
4221 ESCH-SUR-ALZETTE Luksemburg / Luxembourg / Luxemburg
66 RUE DE LUXEMBOURG 66 RUE DE LUXEMBOURG

A05.2
Address: Acier Leroux div. of Russel Metals 401897
J4B 6A1 BOUCHERVILLE Kanada / Canada / Kanada
1331, GRAHAM BELL

A07	No of purchase order	Contract No	Manuf. Order No/Pos	Delivery Note	Number of transport
	M94037300	PL/277839563/16-10886488	20014545/000005	62453689	316139466216
	ORDER: M94037300	LOT: SOREL		PREBON: 1700023428/5	

B01 According	Classification standards	Tolerance standards
ASTM A6/A6M-14	CSA G40.21-04	ASTM A6/A6M-14

B02-B03, B09-B11
Heavy channels C 8 X 13,7 length: 12192,00 mm steel grade: 350W

B07 Heat	Bundles/Pieces	B13 Weight
622636	6 / 120	29,934 t
Total	04:33:58	ORYGINAŁ/ORIGINAL
	6 / 120	29,934 t

C71-C92 Chemical composition [%]

B07 Heat	C	Mn	Si	P	S	Cu	Cr	Ni	Al	N_2	Mo	Nb	V	Ti	Sn	Pb	As	B	O	H_2	CEV
622636	0,16	0,83	0,197	0,015	0,008	0,01	0,03	0,005	0,002	0,0059	0,001	0,001	0,040	0,001	0,002	0,001	0,001	0,0002			0,33

Mechanical properties

B07	C11	C12	C13	D73	C41	C44	C42 - Work of fracture
	TENSILE TEST						CHARPY IMPACT TEST (J)

Heat	YS [Mpa]	YS02 [Mpa]	UTS [Mpa]	EL [mm]	EL [%]	YS/UTS	YS02/UTS	Pr.width KV [mm]	Temp. °C	Test 1	Test 2	Test 3	average test
622636	354,0		493,0	200	22,3	0,72							
622636	360,0		498,0	200	22,3	0,72							

Z01 Statement of compliance: The producer guarantees that delivered goods are in accordance with the conditions of the order.

A05, Z02.2

Główny Specjalista
ds. Certyfikacji Wyrobów i Zarządzania Jakością
Kierownik sygnuje zbiorczo

Wystawił: Antoni Czechowski

LEROUX

094125424

CERTIFIED MATERIAL TEST REPORT

GERDAU

CA-ML-WHITBY
1 GERDAU CT
WHITBY, ON L1N 5T1
Canada

CUSTOMER SHIP TO	CUSTOMER BILL TO
LEROUX STEEL 1331 RUE GRAHAM BELL BOUCHERVILLE,QC J4B 6A1 Canada	LEROUX STEEL 1331 RUE GRAHAM BELL BOUCHERVILLE,QC J4B 6A1 Canada

GRADE	SHAPE / SIZE	DOCUMENT ID:
GGMULTI	Channel / 8 X 13.75#	0000035240

LENGTH	WEIGHT	HEAT / BATCH
40'00"	61,600 LB	52077454/02

SALES ORDER	CUSTOMER MATERIAL N°
4777761/000040	

SPECIFICATION / DATE or REVISION
ASTM A529-14, A572-15
ASTM A6-14,A36-14, ASME SA-36
ASTM A709-15, AASHTO M270-12
CSA G40.20-13/G40.21-13

CUSTOMER PURCHASE ORDER NUMBER	BILL OF LADING	DATE
94038187	1302-0000057236	03/20/2017

CHEMICAL COMPOSITION

C %	Mn %	P %	S %	Si %	Cu %	Ni %	Cr %	V %	Nb %
0.16	0.85	0.014	0.021	0.19	0.24	0.09	0.09	0.021	0.001

MECHANICAL PROPERTIES

YS 0.2% PSI	UTS PSI	YS MPa	UTS MPa	G/L Inch	Elong. %
55132	74822	380	516	8.000	23.60
54768	74073	378	511	8.000	23.60

COMMENTS / NOTES

This grade meets the requirements for the following grades:
ASTM Grades: A36; A529-50; A572-50; A709-36; A709-50
CSA Grades: 44W; 50W
AASHTO Grades: M270-36; M270-50
ASME Grades: SA36

LEROUX

094130101

The above figures are certified chemical and physical test records as contained in the permanent records of company. We certify that these data are correct and in compliance with specified requirements. This material, including the billets, was melted and manufactured in Canada. CMTR complies with EN 10204 3.1.

BHASKAR YALAMANCHILI
QUALITY DIRECTOR
Phone: (409) 769-1014 Email: Bhaskar.Yalamanchili@gerdau.com

LEONARDO NUNES
QUALITY ASSURANCE MGR.
Phone: (905) 668-8811 EXT 4055 Email: Leonardo.Nunes@gerdau.com

EROUX
IVISION OF RUSSEL METALS INC.
ION de MÉTAUX RUSSEL INC.

0E89340444-56695

COMBINATION SHORT FORM OF STRAIGHT BILL OF LADING - EXPRESS SHIPPING CONTRACT,
SUBJECT TO ALL TERMS, CONDITIONS AND LIMITATIONS INCORPORATED BY REFERENCE AS SHOWN ON THE BACK OF THIS BILL.
FORMULAIRE COMBINÉ DE CONNAISSEMENT DIRECT - ET DE CONTRAT D'EXPÉDITION PAR
MESSAGERIE ASSUJETTI À TOUTES LES MODALITÉS, CONDITIONS ET LIMITATIONS QUI Y SONT INTÉGRÉES PAR RENVOI, AINSI QU'IL EST INDIQUÉ AU VERSO DU PRÉSENT CONNAISSEMENT.

ACIER LEROUX
1675 ROUTE DE L'AÉROPORT
C.P. 550 AMOS QC J9T3 TEL#: (819)732-8381

PROMISE.....: 05/31/17
REPRESENTANT Yvan Bégin

EXPÉDIÉ: 00
NORMEX METAL
9088-6615 QUEBEC INC.
11 BOUL. INDUSTRIEL
ROUTE 111 EST
LA SARRE QC J9Z 2X2

VENDU: 8910165 05/30/17
NORMEX METAL
9088-6615 QUEBEC INC.
P.O. BOX 565
EARLTON ON P0J 1E0

FREIGHT TERMS
MODALITÉS DE TRANSPORT
PORT PAYÉ
CARRIER
TRANSPORTEUR RT# 006
NOTRE CAMION
CUSTOMER PHONE #
TÉLÉPHONE À LA CLIENTÈLE #
(819)333-1200

#BCC PLA06075 RELACHE#

VEHICLE IDENT.
IDENTIFICATION DU VEHICULE
NIR:R-527158-1

INSTRUCTIONS CLIENT:
ECRIRE # DE COULEE SUR LA COPIE ROSE DU CLIENT
****
FERME A 13HR00 LE VENDREDI
COMMENT.:
LIVRAISON 31 MAI 17

PIPE CATWALK

LN#			QTÉ COMM	
05	32222 CORNIèRE ACIER L.à.C	2.1/2 X 2 1/2 X 1/4 44W X 20'	10 EA	820 LB
	#PIéC			

QTÉ expédiée.....
ÉTQ 9063603 COUL 52077203 10 EA 820 LB PAYS CANADA

L-2472

CONFORME ? OUI NON
SIGNÉ
DATE 31/05/17
JOUR MOIS ANNÉE

Les certificats d'analyse (MTR) seront automatiquement envoyés par email

PAGE: 1 TOTALS PALETTES 10 EA 820 LB

STEEL, STAINLESS STEEL, ALUMINUM, BRASS, COPPER, NICKEL AND SPECIALTY STEEL

The above listed products, in a natural state, do not pose inhalation, ingestion or contact hazards.

Prolonged overexposure to dust or fumes during welding, burning, grinding or machining may result in respiratory irritation, skin irritation or disease. USE ADEQUATE VENTILATION AND APPROPRIATE PERSONAL PROTECTIVE EQUIPMENT.

For Brass and Copper Alloys, contact with acids may liberate flammable and explosive hydrogen gas. If heated, copper oxide, zinc oxide, nickel oxide, tin oxide, cadmium oxide and/or lead fumes may be evolved. Aluminum ...ts may slip during handling or transportation.

...DUCTS MUST BE SECURED FOR HANDLING AND TRANSPORTATION. ...teel containment strapping may result in the strapping rebounding and injuring those nearby. EXERCISE ...ON.

For overexposure to metal fumes, remove to fresh air. For skin contact, wash thoroughly with soap and water. Obtain medical attention if symptoms persist.

SEE MATERIAL SAFETY DATA SHEETS FOR MORE DETAILED INFORMATION.

ACIER, ACIER INOXYDABLE, ALUMINIUM, LAITON, CUIVRE, NICKEL ET ACIER SPÉCIALISÉ

Les produits mentionnés ci-haut, à l'état brut, ne causent aucun danger au contact, en cas d'inhalation ou d'ingestion.
Une surexposition aux poussières ou aux émanations durant la soudure, la coupe au chalumeau, le meulage ou l'usinage pourrait résulter en une irritation des voies respiratoires ou de la peau ou autres maladies. UNE VENTILATION ADÉQUATE EST DE MISE AINSI QU'UN ÉQUIPEMENT PROTECTEUR APPROPRIÉ.
Pour ce qui est des alliages de cuivre et de laiton, un contact avec certains acides pourrait dégager des gaz hydrogène explosifs et inflammables. Si chauffé, de l'oxyde de cuivre, de zinc, de nickel, d'étain, de cadmium et/ou des vapeurs de plomb pourraient s'échapper. Les produits d'aluminium peuvent glisser lors de leur manipulation ou transportation.
TOUS LES PRODUITS DOIVENT ÊTRE ATTACHÉS SOLIDEMENT LORS DU TRANSPORT ET DE LA MANIPULATION.
Lors de la coupe, les courroies d'acier peuvent rebondir et causer des blessures. MANIPULEZ AVEC PRÉCAUTION.
En cas d'une surexposition aux émanations, retirez-vous et respirez de l'air frais. S'il y a contact avec la peau lavez la région affectée avec de l'eau et du savon. Si les symptômes persistent consultez votre médecin.
POUR PLUS D'INFORMATION, CONSULTEZ LA FEUILLE DE DONNÉES DE SÉCURITÉ.

DATE 31/05/2017
SIGNED
SIGNÉ

...RCHASER'S ORDER IS FILLED IN ACCORDANCE WITH THE ABOVE TERMS AND CONDITIONS OF SALE AND THOSE ON THE REVERSE HEREOF, ALL OF WHICH TERMS AND CONDITIONS SUPERSEDE THE TERMS AND CONDITIONS (IF ANY) OF PURCHASER'S ORDER. BY ACCEPTING ...LIVERY OF ALL OR PART OF THE ABOVE-DESCRIBED GOODS (HEREINAFTER CALLED THE "GOODS") OR BY PAYING FOR SAME IN WHOLE OR IN PART PURCHASER AGREES TO ALL THE TERMS AND CONDITIONS SET FORTH ABOVE AND ON THE REVERSE HEREOF.
...COMMANDE DE L'ACHETEUR EST EXÉCUTÉE EN CONFORMITÉ DES CONDITIONS DE VENTE STIPULÉES CI-DESSUS ET AU VERSO DES PRÉSENTES. TOUTES CES CONDITIONS REMPLAÇANT CELLES (LE CAS ÉCHÉANT) ...NONCÉES AU BON DE COMMANDE DE L'ACHETEUR ...CEPTANT LA LIVRAISON DE TOUT OU PARTIE DES MARCHANDISES DÉCRITES CI-DESSUS (CI-APRÈS APPELÉES LES "MARCHANDISES") OU EN LES PAYANT INTÉGRALEMENT OU PARTIELLEMENT, L'ACHETEUR ACCEPTE TOUTES LES CONDITIONS STIPULÉES CI-DESSUS ET ...RSO DES PRÉSENTES.

OFFICE/ADMINISTRATIVE SHIPPING/EXPEDITION DRIVER/CHAUFFEUR CUSTOMER/CLIENT

RLP-1. C

6/01/17 8:04:58

EMAIL PAGE COUVERTURE

==========

Société: Acier Leroux - Amos

6/01/17 8:04:58 Document Sommaire

Page couverture 1

Objet: MILL TEST CERTIFICATE

NO.COMMANDE :89340444

No.Bc Du Client :PLA06075

City : LA SARRE State/Province . QC

Séquence correspondant au(x) MTR imprimé(s):

Ln#	Description item:	Coulée	MTR
5	2 1/2 X 2 1/2 X 1/4 CORN. LÀC 44W	52077203	094128583

CERTIFIED MATERIAL TEST REPORT

GERDAU

CA-ML-WHITBY
1 GERDAU CT
WHITBY, ON L1N 5T1
Canada

CUSTOMER SHIP TO	CUSTOMER BILL TO
LEROUX STEEL 1331 RUE GRAHAM BELL BOUCHERVILLE,QC J4B 6A1 Canada	LEROUX STEEL 1331 RUE GRAHAM BELL BOUCHERVILLE,QC J4B 6A1 Canada

GRADE	SHAPE / SIZE	DOCUMENT ID:
CGMULTI	Angle / 2 1/2X2 1/2X1/4	0000037022

LENGTH	WEIGHT	HEAT / BATCH
20'00"	37,884 LB	52077203/02

SALES ORDER	CUSTOMER MATERIAL N°
4465103/000180	

SPECIFICATION / DATE or REVISION
ASTM A529-14, A572-15
ASTM A6-14,A36-14, ASME SA-36
ASTM A709-15, AASHTO M270-12
CSA G40.20-13/G40.21-13

CUSTOMER PURCHASE ORDER NUMBER	BILL OF LADING	DATE
94037803-FEMQ1	1302-0000055481	02/08/2017

CHEMICAL COMPOSITION

C %	Mn %	P %	S %	Si %	Cu %	Ni %	Cr %	V %	Nb %
0.13	0.77	0.018	0.044	0.18	0.31	0.11	0.13	0.016	0.001

MECHANICAL PROPERTIES

Elong. %	G/L Inch	UTS PSI	UTS MPa	YS 0.2% PSI	YS MPa
28.80	8.000	70992	489	55041	379
28.80	8.000	71000	490	54833	378

COMMENTS / NOTES

This grade meets the requirements for the following grades:
ASTM Grades: A36; A529-50; A572-50; A709-36; A709-50
CSA Grades: 44W; 50W
AASHTO Grades: M270-36; M270-50
ASME Grades: SA36

LEROUX

094128583

The above figures are certified chemical and physical test records as contained in the permanent records of company. We certify that these data are correct and in compliance with specified requirements. This material, including the billets, was melted and manufactured in Canada. CMTR complies with EN 10204 3.1.

BHASKAR YALAMANCHILI
QUALITY DIRECTOR
Phone: (409) 769-1014 Email: Bhaskar.Yalamanchili@gerdau.com

LEONARDO NUNES
QUALITY ASSURANCE MGR.
Phone: (905) 668-8811 EXT 4055 Email: Leonardo.Nunes@gerdau.com

EROUX
DIVISION OF RUSSEL METALS INC.
DIVISION de MÉTAUX RUSSEL INC.

0E89340442-56468

COMBINATION SHORT FORM OF STRAIGHT BILL OF LADING - EXPRESS SHIPPING CONTRACT,
SUBJECT TO ALL TERMS, CONDITIONS AND LIMITATIONS INCORPORATED BY REFERENCE AS SHOWN ON THE BACK OF THIS BILL.
FORMULAIRE COMBINÉ DE CONNAISSEMENT DIRECT - ET DE CONTRAT D'EXPÉDITION PAR
MESSAGERIE ASSUJETTI À TOUTES LES MODALITÉS, CONDITIONS ET LIMITATIONS QUI Y SONT INTÉGRÉES PAR RENVOI, AINSI QU'IL EST INDIQUÉ AU VERSO DU PRÉSENT CONNAISSEMENT.

ACIER LEROUX
1675 ROUTE DE L'AÉROPORT
C.P. 550 AMOS QC J9T3 TEL#: (819)732-8381

PROMISE.....: 05/26/17
REPRESENTANT Yvan Bégin

EXPÉDIÉ: 00
NORMEX METAL
9088-6615 QUEBEC INC.
11 BOUL. INDUSTRIEL
ROUTE 111 EST
LA SARRE QC J9Z 2X2

VENDU: 8910165 05/25/17
NORMEX METAL
9088-6615 QUEBEC INC.
P.O. BOX 565
EARLTON ON P0J 1E0

FREIGHT TERMS
MODALITÉS DE TRANSPORT
PORT PAYÉ
CARRIER
TRANSPORTEUR RT# 006
NOTRE CAMION
CUSTOMER PHONE #
TELEPHONE À LA CLIENTÈLE #
(819)333-1200

#BCC PLA06075 RELACHE#

VEHICLE IDENT.
IDENTIFICATION DU VEHICULE
NIR:R-527158-1

INSTRUCTIONS CLIENT:
ECRIRE # DE COULEE SUR LA COPIE ROSE DU CLIENT
****
FERME A 13HR00 LE VENDREDI
COMMENT.:
LIVRAISON 26 MAI 17

PINE
CAT WALK
4048

LN#01	38642 CORNIèRE ACIER L.à.C	1 1/2 X 1 1/2 X 3/16 44W				QTÉ COMM	
	#PIéC L-2455	X	20'	2 EA		72 LB	
QTÉ expédiée.....							
ÉTQ 9061831	COUL 52077556	2 EA	72 LB	PAYS	CANADA		

LN#03	32222 CORNIèRE ACIER L.à.C	2 1/2 X 2 1/2 X 1/4 44W				QTÉ COMM	
	#PIéC L-2456	X	20'	20 EA		1640 LB	
QTÉ expédiée.....							
ÉTQ 9062666	COUL 52077203	20 EA	1640 LB	PAYS	CANADA		

CONFORME	OUI	NON
SIGNÉ		
DATE	26 / 05 / 17	
	JOUR MOIS ANNÉE	

Les certificats d'analyse (MTR) seront automatiquement envoyés par email

PAGE: 1 TOTALS PALETTES _____ 22 EA 1712 LB

STEEL, STAINLESS STEEL, ALUMINUM, BRASS, COPPER, NICKEL AND SPECIALTY STEEL

The above listed products, in a natural state, do not pose inhalation, ingestion or contact hazards.

Prolonged overexposure to dust or fumes during welding, burning, grinding or machining may result in respiratory irritation, skin irritation or disease. USE ADEQUATE VENTILATION AND APPROPRIATE PERSONAL PROTECTIVE EQUIPMENT.

For Brass and Copper Alloys, contact with acids may liberate flammable and explosive hydrogen gas. If heated, copper oxide, zinc oxide, nickel oxide, tin oxide, cadmium oxide and/or lead fumes may be evolved. Aluminum ...ts may slip during handling or transportation.

...ODUCTS MUST BE SECURED FOR HANDLING AND TRANSPORTATION. ...steel containment strapping may result in the strapping rebounding and injuring those nearby. EXERCISE ...ON.

For overexposure to metal fumes, remove to fresh air. For skin contact, wash thoroughly with soap and water. Obtain medical attention if symptoms persist.

SEE MATERIAL SAFETY DATA SHEETS FOR MORE DETAILED INFORMATION.

ACIER, ACIER INOXYDABLE, ALUMINIUM, LAITON, CUIVRE, NICKEL ET ACIER SPÉCIALISÉ

Les produits mentionnés ci-haut, à l'état brut, ne causent aucun danger au contact, en cas d'inhalation ou d'ingestion.
Une surexposition aux poussières ou aux émanations durant la soudure, la coupe au chalumeau, le meulage ou l'usinage pourrait résulter en une irritation des voies respiratoires ou de la peau ou autres maladies. UNE VENTILATION ADÉQUATE EST DE MISE AINSI QU'UN ÉQUIPEMENT PROTECTEUR APPROPRIÉ.
Pour ce qui est des alliages de cuivre et de laiton, un contact avec certains acides pourrait dégager des gaz hydrogène explosifs et inflammables. Si chauffé, de l'oxyde de cuivre, de zinc, de nickel, d'étain, de cadmium et/ou des vapeurs de plomb pourraient s'échapper. Les produits d'aluminium peuvent glisser lors de leur manipulation ou transportation.
TOUS LES PRODUITS DOIVENT ÊTRE ATTACHÉS SOUDEMENT LORS DU TRANSPORT ET DE LA MANIPULATION.
Lors de la coupe, les courroies d'acier peuvent rebondir et causer des blessures. MANIPULEZ AVEC PRÉCAUTION.
En cas d'une surexposition aux émanations, retirez-vous et respirez de l'air frais. S'il y a contact avec la peau lavez la région affectée avec de l'eau et du savon. Si les symptômes persistent consultez votre médecin.
POUR PLUS D'INFORMATION, CONSULTEZ LA FEUILLE DE DONNÉES DE SÉCURITÉ.

DATE 26/5/2017

SIGNED
SIGNÉ

RCHASER'S ORDER IS FILLED IN ACCORDANCE WITH THE ABOVE TERMS AND CONDITIONS OF SALE AND THOSE ON THE REVERSE HEREOF, ALL OF WHICH TERMS AND CONDITIONS SUPERSEDE THE TERMS AND CONDITIONS (IF ANY) OF PURCHASER'S ORDER. BY ACCEPT LIVERY OF ALL OR PART OF THE ABOVE-DESCRIBED GOODS (HEREINAFTER CALLED THE "GOODS") OR BY PAYING FOR SAME IN WHOLE OR IN PART PURCHASER AGREES TO ALL THE TERMS AND CONDITIONS SET FORTH ABOVE AND ON THE REVERSE HEREOF.
COMMANDE DE L'ACHETEUR EST EXÉCUTÉE EN CONFORMITÉ DES CONDITIONS DE VENTE STIPULÉES CI-DESSUS ET AU VERSO DES PRÉSENTES. TOUTES CES CONDITIONS REMPLAÇANT CELLES (LE CAS ÉCHÉANT) ÉNONCÉES AU BON DE COMMANDE DE L'ACHETEUR CEPTANT LA LIVRAISON DE TOUT OU PARTIE DES MARCHANDISES DÉCRITES CI-DESSUS (CI-APRÈS APPELÉES LES "MARCHANDISES") OU EN LES PAYANT INTÉGRALEMENT OU PARTIELLEMENT, L'ACHETEUR ACCEPTE TOUTES LES CONDITIONS STIPULÉES CI-DESSUS ET RSO DES PRÉSENTES.

OFFICE/ADMINISTRATIVE SHIPPING/EXPEDITION DRIVER/CHAUFFEUR CUSTOMER/CLIENT

RL9-L 0

5/26/17 8:41:49

EMAIL PAGE COUVERTURE

==========

Société:

5/26/17 8:41:49 Document Sommaire

Page couverture 1

Objet: MILL TEST CERTIFICATE

NO.COMMANDE :89340442

No.Bc Du Client :PLA06075

City : LA SARRE State/Province . QC

Séquence correspondant au(x) MTR imprimé(s):

Ln#	Description item:	Coulée	MTR
1	1 1/2 X 1 1/2 X 3/16 CORN. LÀC 44W	52077556	094129587
3	2 1/2 X 2 1/2 X 1/4 CORN. LÀC 44W	52077203	094128583

CERTIFIED MATERIAL TEST REPORT

GERDAU

CA-ML-CAMBRIDGE
160 ORION PLACE
CAMBRIDGE, ON N1T 1R9
Canada

CUSTOMER SHIP TO	CUSTOMER BILL TO
LEROUX STEEL 1331 RUE GRAHAM BELL BOUCHERVILLE,QC J4B 6A1 Canada	LEROUX STEEL 1331 RUE GRAHAM BELL BOUCHERVILLE,QC J4B 6A1 Canada

GRADE	SHAPE / SIZE	DOCUMENT
GGMULTI	Angle / 1 1/2X1 1/2X3/16	0000033196

LENGTH	WEIGHT	HEAT / BATCH
20'00"	25,740 LB	52077556/02

SALES ORDER	CUSTOMER MATERIAL N°
4585552/000060	

SPECIFICATION / DATE or REVISION
ASTM A529-14, A572-15
ASTM A6-14,A36-14, ASME SA-36
ASTM A709-15, AASHTO M270-12
CSA G40.20-13/G40.21-13

CUSTOMER PURCHASE ORDER NUMBER	BILL OF LADING	DATE
94037961	1301-0000028506	03/07/2017

CHEMICAL COMPOSITION

C %	Mn %	P %	S %	Si %	Cu %	Ni %	Cr %	Mo %	V %	Nb %
0.15	0.78	0.020	0.018	0.17	0.25	0.11	0.15	0.031	0.012	0.001

MECHANICAL PROPERTIES

Elong. %	G/L Inch	UTS PSI	UTS MPa	YS PSI	YS MPa
25.00	8.000	74339	513	53274	367
25.00	8.000	74556	514	53590	370

COMMENTS / NOTES

This grade meets the requirements for the following grades:
ASTM Grades: A36; A529-50; A572-50; A709-36; A709-50
CSA Grades: 44W; 50W
AASHTO Grades: M270-36; M270-50
ASME Grades: SA36

LEROUX

094129587

The above figures are certified chemical and physical test records as contained in the permanent records of company. We certify that these data are correct and in compliance with specified requirements. This material, including the billets, was melted and manufactured in Canada. CMTR complies with EN 10204 3.1.

BHASKAR YALAMANCHILI
QUALITY DIRECTOR
Phone: (409) 769-1014 Email: Bhaskar.Yalamanchili@gerdau.com

LEONARDO NUNES
QUALITY ASSURANCE MGR.
Phone: (905) 668-8811 EXT 4055 Email: Leonardo.Nunes@gerdau.com

CERTIFIED MATERIAL TEST REPORT

GERDAU

CA-ML-WHITBY
1 GERDAU CT
WHITBY, ON L1N 5T1
Canada

CUSTOMER SHIP TO	CUSTOMER BILL TO
LEROUX STEEL 1331 RUE GRAHAM BELL BOUCHERVILLE,QC J4B 6A1 Canada	LEROUX STEEL 1331 RUE GRAHAM BELL BOUCHERVILLE,QC J4B 6A1 Canada

GRADE	SHAPE / SIZE	DOCUMENT ID:
GGMULTI	Angle / 2 1/2X2 1/2X1/4	0000031022

LENGTH	WEIGHT	HEAT / BATCH
20'00"	37,884 LB	52077203/02

SALES ORDER	CUSTOMER MATERIAL N°
4465103/000180	

SPECIFICATION / DATE or REVISION
ASTM A529-14, A572-15
ASTM A6-14,A36-14, ASME SA-36
ASTM A709-15, AASHTO M270-12
CSA G40.20-13/G40.21-13

CUSTOMER PURCHASE ORDER NUMBER	BILL OF LADING	DATE
94037803-FEMQ1	1302-0000055481	02/08/2017

CHEMICAL COMPOSITION

C %	Mn %	P %	S %	Si %	Cu %	Ni %	Cr %	V %	Nb %
0.13	0.77	0.018	0.044	0.18	0.31	0.11	0.13	0.016	0.001

MECHANICAL PROPERTIES

Elong. %	G/L Inch	UTS PSI	UTS MPa	YS 0.2% PSI	YS MPa
28.80	8.000	70992	489	55041	379
28.80	8.000	71000	490	54833	378

COMMENTS / NOTES

This grade meets the requirements for the following grades:
ASTM Grades: A36; A529-50; A572-50; A709-36; A709-50
CSA Grades: 44W; 50W
AASHTO Grades: M270-36; M270-50
ASME Grades: SA36

LEROUX

094128583

The above figures are certified chemical and physical test records as contained in the permanent records of company. We certify that these data are correct and in compliance with specified requirements. This material, including the billets, was melted and manufactured in Canada. CMTR complies with EN 10204 3.1.

BHASKAR YALAMANCHILI
QUALITY DIRECTOR
Phone: (409) 769-1014 Email: Bhaskar.Yalamanchili@gerdau.com

LEONARDO NUNES
QUALITY ASSURANCE MGR.
Phone: (905) 668-8811 EXT 4055 Email: Leonardo.Nunes@gerdau.com

NUQSANA-PROMEC MINING

Client: AGNICO-EAGLE MINES LTD.
Contract Title: Fuel Tanks Piping Supply and Installation
Contract No.: 6515-C-270-007
Promec Ref.: C22466T

Daily Weld Report

ITR No.: AEM-WE-ITR-001
Area No.: ALL
System No.: ALL

ISO or Pipe Dwg No.	Weld Number	Type	Ø Size (in)	Welder Ticket	Remarks
403P-100-PD1-CC10-002 6/12	1	BW	4"	AR	Rod
403P-100-PD1-CC10-002 7/12	1	BW	4"	AR	Rod
403P-100-PD1-CC10-002 8/12	1	BW	4"	MP	Rod
	2			MP	
	3			MP	
403P-100-PD1-CC10-002 9/12	1	BW	4"	MP	Rod
403P-100-PD1-CC10-002 10/12	1	BW	1/2"	AR	Rod
403P-100-PD1-CC10-002 11/12	1	BW	4"	AR	Rod

Prepared by

Date

Foreman

Signature

Date

NUQSANA-PROMEC MINING

Client: AGNICO-EAGLE MINES LTD.
Contract Title: Fuel Tanks Piping Supply and Installation
Contract No.: 6515-C-270-007
Promec Ref.: C22466T

Daily Weld Report

ITR No.: AEM-WE-ITR-001
Area No.: ALL
System No.: ALL

ISO or Pipe Dwg No.	Weld Number	Type	Ø Size (in)	Welder Ticket	Remarks
403P-100-PD1-CC10-004 1/2	1	BW	4"	MP	Rod
	2			MP	
	3			MP	
	4			MP	
	5			MP	
	6			MP	
403P-100-PD1-CC10-004 2/2	1	BW	4"	AR	Rod
403P-100-PD1-CC10-008 1/10	1	BW	4"	AR	Rod
403P-100-PD1-CC10-008 2/10	1	BW	1/2"	AR	Rod
403P-100-PD1-CC10-008 3/10	1	BW	4"	JM	Rod
	2	BW		JM	Rod

Prepared by

Date

Foreman

Signature

Date

NUQSANA-PROMEC MINING

Client: AGNICO-EAGLE MINES LTD.
Contract Title: Fuel Tanks Piping Supply and Installation
Contract No.: 6515-C-270-007
Promec Ref.: C22466T

Daily Weld Report

ITR No.: AEM-WE-ITR-001
Area No.: ALL
System No.: ALL

ISO or Pipe Dwg No.	Weld Number	Type	Ø Size (in)	Welder Ticket	Remarks
403P-100-PD1-CC10-008	1	BW	4"	JM	Rad
4/10	2			A/O	
403P-100-PD1-CC10-008	1	BW	4"	AR	Rad
5/10	2	BW		AR	
403P-100-PD1-CC10-008	1	BW	4"	AR	Rad
6/10	2				
403P-100-PD1-CC10-008	1	BW	4"	MP	Rad
7/10	2			MP	
	3			MP	
	4			MP	
	5			MP	
	6			MP	
403P-100-PD1-CC10-009	1	BW	4"	AR	Rad
1/3					

Prepared by

Date

Foreman

Signature

Date

NUQSANA PROMEC MINING

Client: AGNICO-EAGLE MINES LTD.
Contract Title: Fuel Tanks Piping Supply and Installation
Contract No.: 6515-C-270-007
Promec Ref.: C22466T

Daily Weld Report

ITR No.: AEM-WE-ITR-001
Area No.: ALL
System No.: ALL

ISO or Pipe Dwg No.	Weld Number	Type	Ø Size (in)	Welder Ticket	Remarks
403P-100-PD1-CC10-009 2/3	1	BW	4"	JM	Rod
	2				
403P-100-PD1-CC10-009 3/3	1	BW	4"	JM	Rod
	2				
403P-80-PD1-CC10-014 1/2	1	BW	3"	MP	Rod
	2				
	3				
403P-80-PD1-CC10-014 2/2	1	BW	3"	AR	Rod
403P-80-PD1-CC10-015 1/19	1	BW	3"	AR	Rod
	2			AR	
	3			AR	
	4			AR	
	5			AR	
	6			AR	
	7			AR	

Prepared by

Date

Foreman

Signature

Date

NUQSANA-PROMEC MINING

Client: AGNICO-EAGLE MINES LTD.
Contract Title: Fuel Tanks Piping Supply and Installation
Contract No.: 6515-C-270-007
Promec Ref.: C22466T

Daily Weld Report

ITR No.: AEM-WE-ITR-001
Area No.: ALL
System No.: ALL

ISO or Pipe Dwg No.	Weld Number	Type	Ø Size (in)	Welder Ticket	Remarks
403P-80-PD1-CC1D-015 2/19	1	BW	3"	SF	Rod
	2			SF	
	3			SF	
	4			A/O	
403P-80-PD1-CC1D-015 5/19	1	BW	3"	SL	Rod
	2				
	3				
	4				
403P-80-PD1-CC1D-015 6/19	1	BW	3"	SL	Rod
	2				
	3				
	4				
403P-80-PD1-CC1D-015 7/19	1	BW	3"	SL	Rod
	2				
	3				
	4				

Prepared by

Date

Foreman

Signature

Date

NUQSANA-PROMEC MINING

Client: AGNICO-EAGLE MINES LTD.
Contract Title: Fuel Tanks Piping Supply and Installation
Contract No.: 6515-C-270-007
Promec Ref.: C22466T

Daily Weld Report

ITR No.: AEM-WE-ITR-001
Area No.: ALL
System No.: ALL

ISO or Pipe Dwg No.	Weld Number	Type	Ø Size (in)	Welder Ticket	Remarks
403P-80-PD1-CC10-015 8/19	1	BW	3"	SL	Rod
	2				
	3				
	4				
	5				
403P-80-PD1-CC10-015 9/19	1	BW	3"	SL	Rod
	2				
	3				
	4				
	5				
403P-80-PD1-CC10-015 10/19	1	BW	3"	SL	Rod
	2				
	3				
	4				

Prepared by

Date

Foreman

Signature

Date

NUQSANA-PROMEC MINING

Client: AGNICO-EAGLE MINES LTD.
Contract Title: Fuel Tanks Piping Supply and Installation
Contract No.: 6515-C-270-007
Promec Ref.: C22466T

Daily Weld Report

ITR No.: AEM-WE-ITR-001
Area No.: ALL
System No.: ALL

ISO or Pipe Dwg No.	Weld Number	Type	Ø Size (in)	Welder Ticket	Remarks
403P-80-PD1-CC10-015 11/19	1	BW	3"	SL	Rod
	2				
	3				
403P-80-PD1-CC10-015 12/19	1	BW	3"	SL	Rod
	2				
	3				
403P-80-PD1-CC10-015 13/19	1	BW	3"	SL	Rod
	2				
	3				
403P-80-PD1-CC10-015 14/19	1	BW	3"	SL	Rod
	2			AR	

Prepared by

Date

Foreman

Signature

Date

NUQSANA-PROMEC MINING

Client: AGNICO-EAGLE MINES LTD.
Contract Title: Fuel Tanks Piping Supply and Installation
Contract No.: 6515-C-270-007
Promec Ref.: C22466T

Daily Weld Report

ITR No.: AEM-WE-ITR-001
Area No.: ALL
System No.: ALL

ISO or Pipe Dwg No.	Weld Number	Type	Ø Size (in)	Welder Ticket	Remarks
444-Proposed fuel tank	1	BW	3"	AR	Rad
location	2				
	3				
	4				
	5				
	6				
	7				
	8				
	9				
	10				
	11				
403P-80-PDI-CC10-029	1	BW	3"	MP	Rad
5/10					
403P-80-PDI-CC10-029	1	BW	3"	AR	Rad
6/10	2				
403P-80-PDI-CC10-029	1	BW	3"	JM	Rad
7/10	2				

Prepared by

Date

Foreman

Signature

Date

NUQSANA PROMEC MINING

Client: AGNICO-EAGLE MINES LTD.
Contract Title: Fuel Tanks Piping Supply and Installation
Contract No.: 6515-C-270-007
Promec Ref.: C22466T

Daily Weld Report

ITR No.: AEM-WE-ITR-001
Area No.: ALL
System No.: ALL

ISO or Pipe Dwg No.	Weld Number	Type	Ø Size (in)	Welder Ticket	Remarks
403P-80-PD1-CC1U-029 8/10	1	BW	3"	JM	Rod

Prepared by

Date

Foreman

Signature

Date

AGNICO EAGLE

Vendor Document Status

1 ☐ Proceed to next submission and status.

2 ☐ Proceed with exceptions as noted to next submission and status.

3 ☐ Do not proceed.
Revise as noted and resubmit next submission and status.

4 ☑ Complete, no further submission required.

By: JEAN-FRANCOIS TREMBLAY Date: 2017-05-02

Review and authorization to fabricate are only for general conformance with the design concept of the Project as expressed in the Contract Documents. Sole responsibility for the accuracy and completeness of this document, including but not limited to dimensions and quantities, remains with the Supplier/Contractor. Agnico Eagle does not warrant the accuracy or completeness of any of the information contained herein, nor does Agnico Eagle authorize or approve any construction means, methods, techniques, sequences or any safety precautions or procedures.

Agnico Eagle No. 6515-C-270-007-141-TES-0043 R: Sub001

DOCUMENT FOR INFORMATION

NUQSANA PROMEC MINING

Client: AGNICO-EAGLE MINES LTD.
Contract Title: Fuel Tanks Piping Supply and Installation
Contract No.: 6515-C-270-007
Promec Ref.: C22466T

Daily Weld Report

ITR No.: AEM-WE-ITR-001
Area No.: ALL
System No.: ALL

ISO or Pipe Dwg No.	Weld Number	Type	Ø Size (in)	Welder Ticket	Remarks

Prepared by

Date

Foreman

Signature

Date

AGNICO EAGLE

Vendor Document Status

1 ☐ Proceed to next submission and status.

2 ☐ Proceed with exceptions as noted to next submission and status.

3 ☐ Do not proceed.
Revise as noted and resubmit next submission and status.

4 ☑ Complete, no further submission required.

By: JEAN-FRANCOIS TREMBLAY Date: 2017-05-02

Review and authorization to fabricate are only for general conformance with the design concept of the Project as expressed in the Contract Documents. Sole responsibility for the accuracy and completeness of this document, including but not limited to dimensions and quantities, remains with the Supplier/Contractor. Agnico Eagle does not warrant the accuracy or completeness of any of the information contained herein, nor does Agnico Eagle authorize or approve any construction means, methods, techniques, sequences or any safety precautions or procedures.

Agnico Eagle No. 6515-C-270-007-141-TES-0049 R: Sub001

DOCUMENT FOR INFORMATION

NUQSANA-PROMEC MINING SERVICES INC.

6515-C-270-007

Fuel Tanks Piping Supply and Installation

Weld Log

Document Number : AEM-GE-LOG-005
Contract Number : C22466T

AGNICO EAGLE

Field Weld #	Type	Diam.	Material	Schedule	Welder Ticket	Visual	NDE	Pass/Fail	Spool #	Isometric

DESSINS ISOMÉTRIQUE IDENTIFAINT LES JOINTS AYANT SUBIS DES ESSAIS

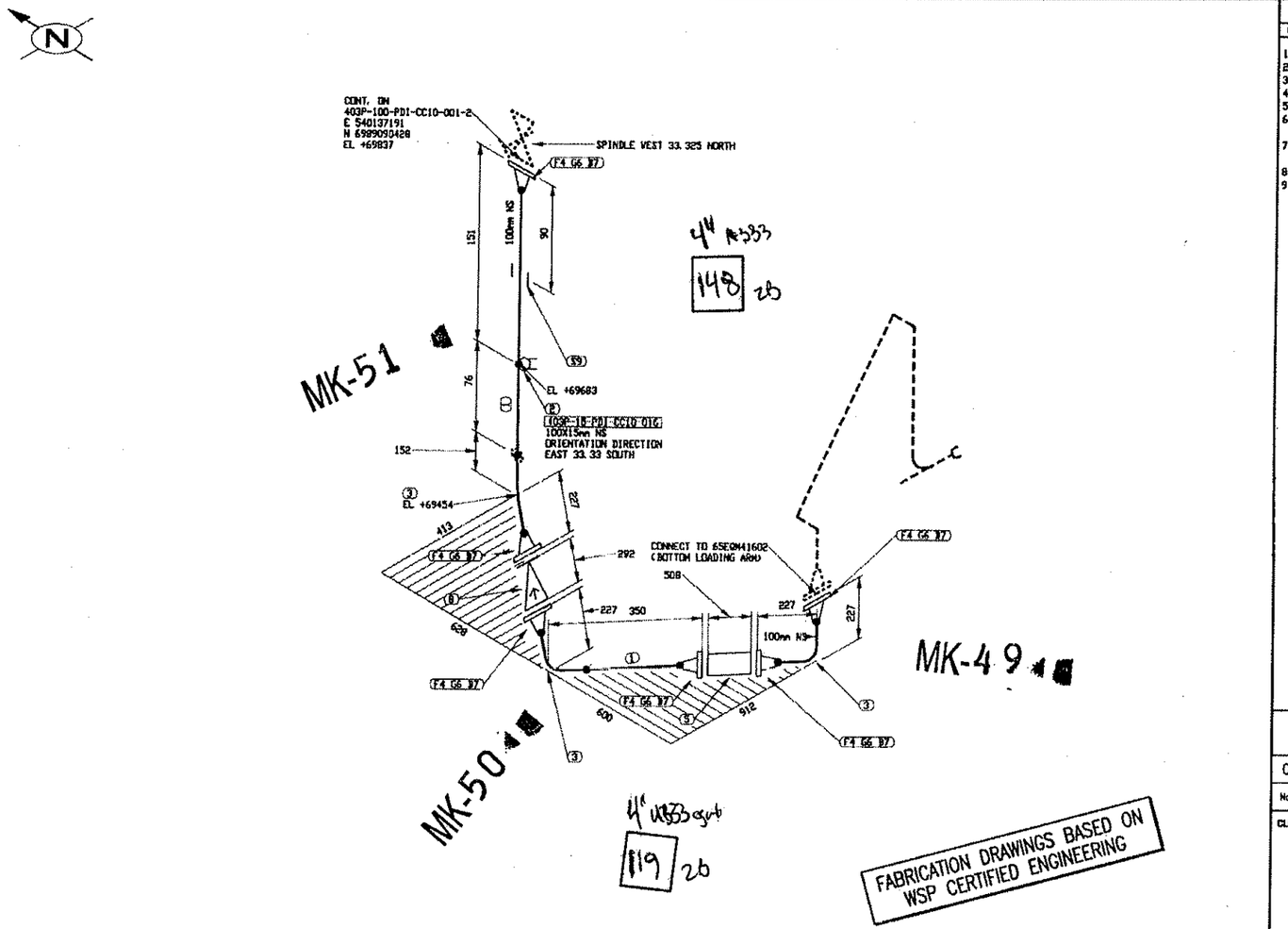

FABRICATION DRAWINGS BASED ON WSP CERTIFIED ENGINEERING

JQ2216.6
Ft GMAW AC 001R6
P1 a P1

LISTE DE MATERIEL

No	QTE	DIA	MATERIEL/CATALOGUE	DESCRIPTION
1	276 MM	100	A 333 Gr. 6	SCH STD, SMLS PIPE
2	1	100X15	A 350 Gr. LF2	CL 3000, THREDOLET
3	3	100	A 420 Gr. WPL6	SCH STD, BW LR 90 DEG ELBOW
4	6	100	A 350 Gr. LF2	CL 150, SCH STD, RF, WN FLANGE
5	1	100		CL 150, SINGLE BRAIDED HOSE ASSEMBLY
6	6	100	ASME B16.20	CL 150, GARLOCK 5500, RING TYPE GASKET 1/8" THK
7	48	16	A 193 B7/A 194 2H	CL 150, 8 - 15.875 X 90 STUD BOLTS c/w TWO HEAVY HEX NUTS
8	1	100	CK-29	CL 150, RF, SWING CHECK VALVE
9	1	100		PIPE SUPPORT BY CONTRACTOR

CONTRAT UF
2106 X 20

EN ATELIER LE
04 JUIL. 2017
par : BS

REÇU le
03 JUIL. 2017
Rép: _____

No.	DATE	REVISION	PAR / APP.
0	2017/06/30	ISSUED FOR CONSTRUCTION	QVN

CLIENT:

AGNICO EAGLE

NUQSANA PROMEC MINING

ultragen

CONSULTANT PROJECT NO. 591700

SCEAU PROFESSIONNEL

CONC.: KHV
DATE: 2017/05/29
DESSINÉ PAR: KVE
DATE: 2017/05/29
VÉR. PAR:
DATE:
APP.:
DATE:
ÉCHELLE: AUCUNE

PROJET: AGNICO EAGLE - MELIADINE DIVISION
403P - COMBUSTIBLE

TITRE: PORTAIL #1
FABRICATION ISOMETRIC
FUEL FROM TRUCK UNLOADING TO 65PQD41604A/B

No PROJET	No DESSIN	PAGES	REV.
6515	403P-100-PDI-CC10-001	1/6	0

NO. DE CONDUITE		SPECIFICATION	PRODUIT	SYSTEME REVETEMENT	CODE DE COULEUR	ISOLATION ET TRACAGE	EPAISS. D'ISOLATION		
403P-100-PDI-CC10-001		CC10	PDI					65-403-270-200	PIPE SUPPORT DETAILS
PRESSION D'OPERATION	TEMPERATURE D'OPERATION	PRESSION DE CONCEPTION	TEMPERATURE DE CONCEPTION	PRESSION D'ESSAI	CLASSE D'INSPECTION	CODE DE SERVICE	TRAITEMENT THERMIQUE	65-403-205-200	P&ID
PSIG	[illegible] °F	N/A PSIG	10 à 15 °F	N/A PSIG		B31.3		No. DESSIN	DESSINS DE REFERENCE

Fluide Diesel End J% RX

U- F.

403P-MN-01

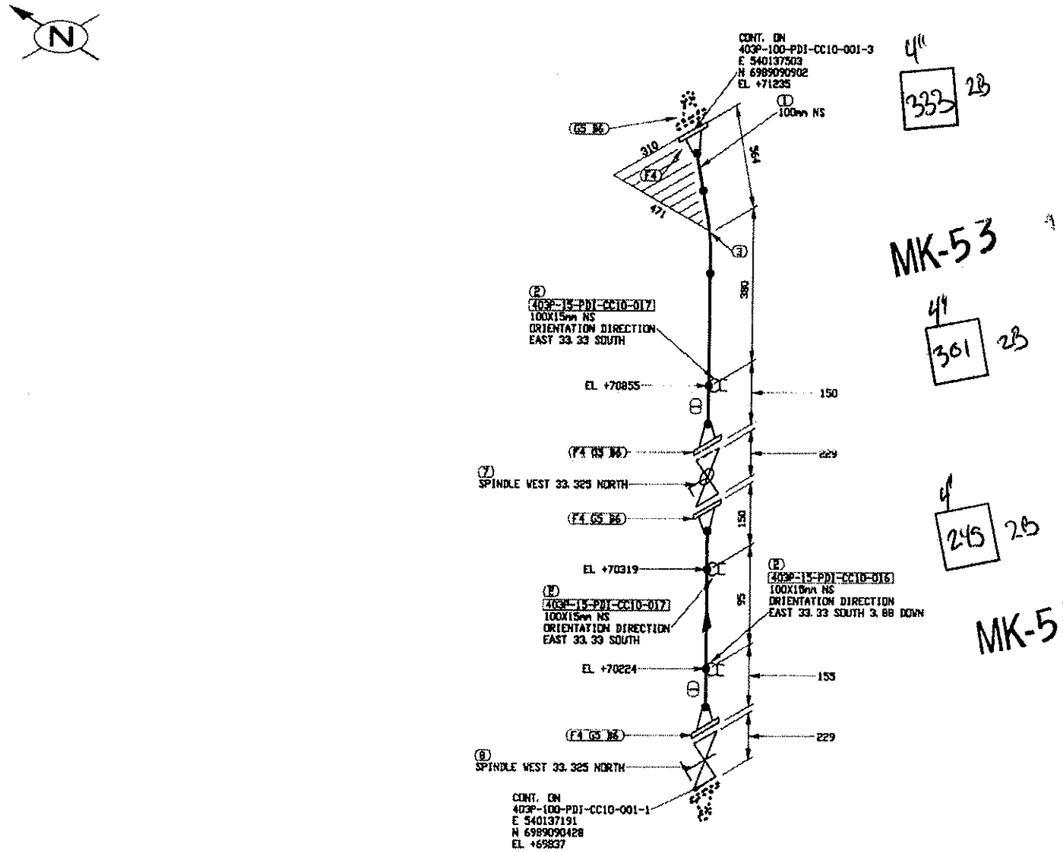

FABRICATION DRAWINGS BASED ON WSP CERTIFIED ENGINEERING

LISTE DE MATERIEL

No	QTE	DIA	MATERIEL/CATALOGUE	DESCRIPTION
1	891 MM	100	A 333 Gr. 6	SCH STD, SMLS PIPE
2	3	100X15	A 350 Gr. LF2	CL 3000, THREDOLET
3	1	100	A 420 Gr. WPL6	SCH STD, BW LR 90 DEG ELBOW
4	4	100	A 350 Gr. LF2	CL 150, SCH STD, RF, WN FLANGE
5	4	100	ASME B16.20	CL 150, GARLOCK 5500, RING TYPE GASKET 1/8" THK
6	32	16	A 193 B7/A 194 2H	CL 150, 8 - 15.875 X 90 STUD BOLTS c/w TWO HEAVY HEX NUTS
7	1	100	BA-31	CL 150, RF, BALL VALVE
8	1	100	GA-10	CL 150, RF, GATE VALVE

CONTRAT UF
21.06 x 20

REÇU le
03 JUIL. 2017
Rép: _____

EN ATELIER LE
04 JUIL. 2017
par : [signature]

No.	DATE	REVISION	QVN / PAR / APP.
0	2017/06/30	ISSUED FOR CONSTRUCTION	

CLIENT:

AGNICO EAGLE

NUQSANA PROMEC MINING

ultragen

CONSULTANT PROJECT NO. 591700

SCEAU PROFESSIONNEL

CONC.: KHY
DATE: 2017/05/28
DESSINÉ PAR: KYE
DATE: 2017/05/28
VÉR. PAR:
DATE:
APP.:
DATE:
ÉCHELLE: AUCUNE

PROJET: AGNICO EAGLE - MELIADINE DIVISION
403P - COMBUSTIBLE

TITRE: PORTAIL #1
FABRICATION ISOMETRIC
FUEL FROM TRUCK UNLOADING TO 65PO041604A/B

No PROJET	No DESSIN	PAGES	REV.
6515	403P-100-PDI-CC10-001	2/6	0

403P-MN-01

NO. DE CONDUITE		SPECIFICATION	PRODUIT	SYSTEME REVETEMENT	CODE DE COULEUR	ISOLATION ET TRACAGE	EPAISS. D'ISOLATION		
403P-100-PDI-CC10-001		CC10	PDI					65-403-270-200	PIPE SUPPORT DETAILS
PRESSION D'OPERATION	TEMPERATURE D'OPERATION	PRESSION DE CONCEPTION	TEMPERATURE DE CONCEPTION	PRESSION D'ESSAI	CLASSE D'INSPECTION	CODE DE SERVICE	TRAITEMENT THERMIQUE	65-403-205-200	P&ID
PSIG	°F	PSIG	10 à 15 °F	N/A PSIG		31.3		No. DESSIN	DESSINS DE REFERENCE

Fluide Diesel End 5% RX

U- F.

JG2216.6
PT G-MAW AC001 RC
P1 a P1

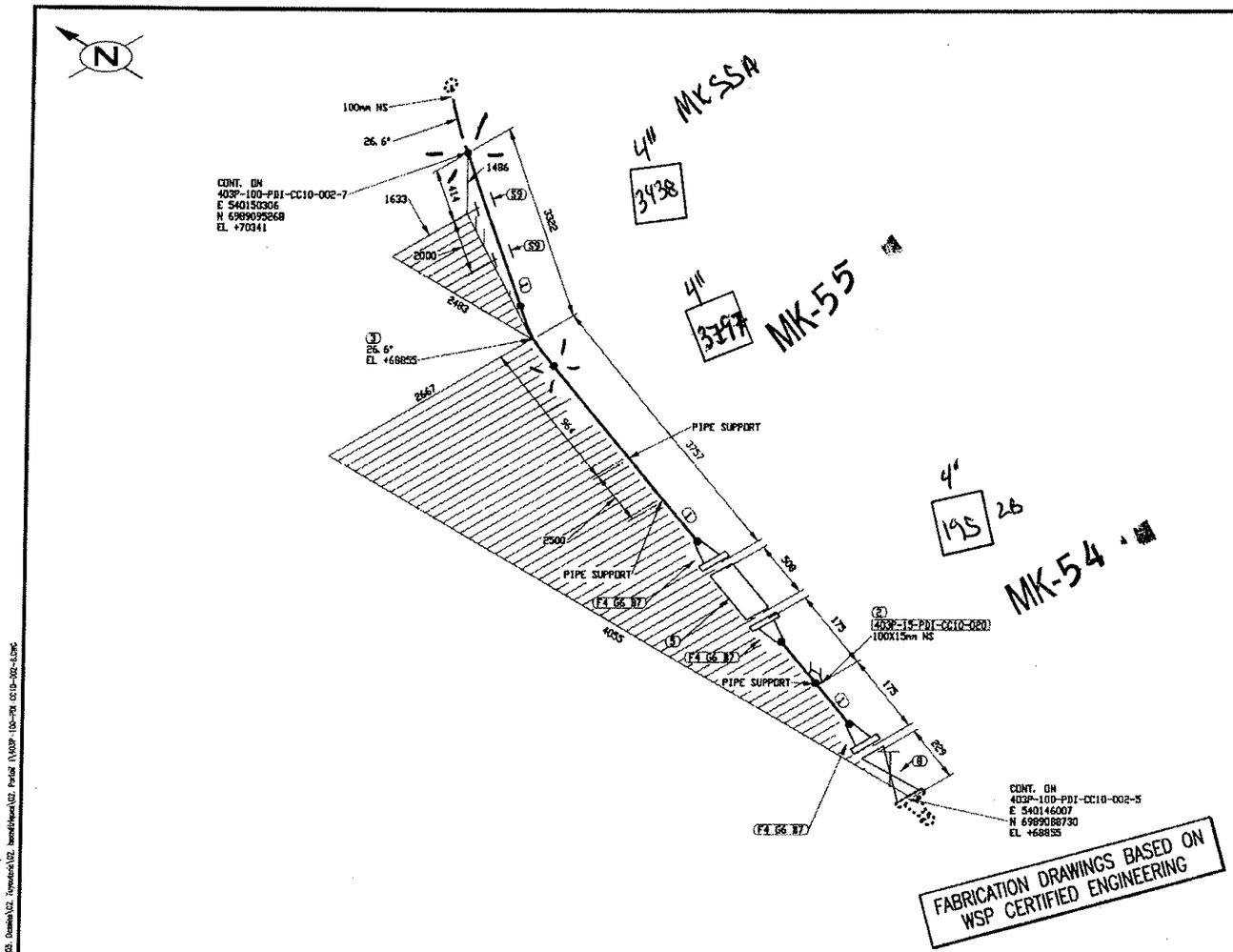

LISTE DE MATERIEL

No	QTE	DIA	MATERIEL/CATALOGUE	DESCRIPTION
1	6981 MM	100	A 333 Gr. 6	SCH STD, SMLS PIPE
2	1	100X15	A 350 Gr. LF2	CL 3000, THREDOLET
3	1	100	A 420 Gr. WPL6	SCH STD, BV LR 45 DEG ELBOW TRIM TO 26.57
4	3	100	A 350 Gr. LF2	CL 150, SCH STD, RF, WN FLANGE
5	3	100		CL 150, SINGLE BRAIDED HOSE ASSEMBLY
6	24	100	ASME B16.20	CL 150, GARLOCK 5500, RING TYPE GASKET 1/8" THK
7	32	16	A 193 B7/A 194 2H	CL 150, 8 - 15.875 X 90 STUD BOLTS c/w TWO HEAVY HEX NUTS
8	1	100	GA-10	CL 150, RF, GATE VALVE
9	2	100		PIPE SUPPORT AS PER DETAIL 3, DWG 65-403-270-200

A 44 B 97 C 36

CONTRAT UF
2106X20

REÇU le
03 JUIL. 2017
Rép:

EN ATELIER LE
04 JUIL. 2017
par:

No.	DATE	REVISION	QVN / PAR / APP.
0	2017/06/30	ISSUED FOR CONSTRUCTION	

CLIENT: AGNICO EAGLE

NUQSANA PROMEC MINING

ultragen
CONSULTANT PROJECT NO. 591700

SCEAU PROFESSIONNEL

CONC.: IGH
DATE: 2017/06/28
DESSINÉ PAR: KVE
DATE: 2017/06/28
VÉR. PAR:
DATE:
APP.:
DATE:
ÉCHELLE: AUCUNE

PROJET: AGNICO EAGLE - MELIADINE DIVISION
403P - COMBUSTIBLE

TITRE: PORTAIL #1
FABRICATION ISOMETRIC
FUEL FROM 65PDD41604A/B TO 65TNK41607 & 65TNK41608

No PROJET	No DESSIN	PAGES	REV.
6515	403P-100-PDI-CC10-002	6/12	0

403P-MN-01, 403P-MN-02

NO. DE CONDUITE		SPECIFICATION	PRODUIT	SYSTEME REVETEMENT	CODE DE COULEUR	ISOLATION ET TRACAGE	EPAISS. D'ISOLATION		
403P-100-PDI-CC10-002		CC10	PDI					65-403-270-200	PIPE SUPPORT DETAILS
PRESSION D'OPERATION	TEMPERATURE D'OPERATION	PRESSION DE CONCEPTION	TEMPERATURE DE CONCEPTION	PRESSION D'ESSAI	CLASSE D'INSPECTION	CODE DE SERVICE	TRAITEMENT THERMIQUE	65-403-205-200	P&ID
PSIG	°F	N/A PSIG	100 à 15 °F	N/A PSIG		D313		No DESSIN	DESSINS DE REFERENCE

IMPRIMÉ LE: Jun 30 2017, 8:44am

Fluide Diesel Ind 5% RX

U-F

JG2216.6
PT GMAW AC001 Rev 6
P1 à P1

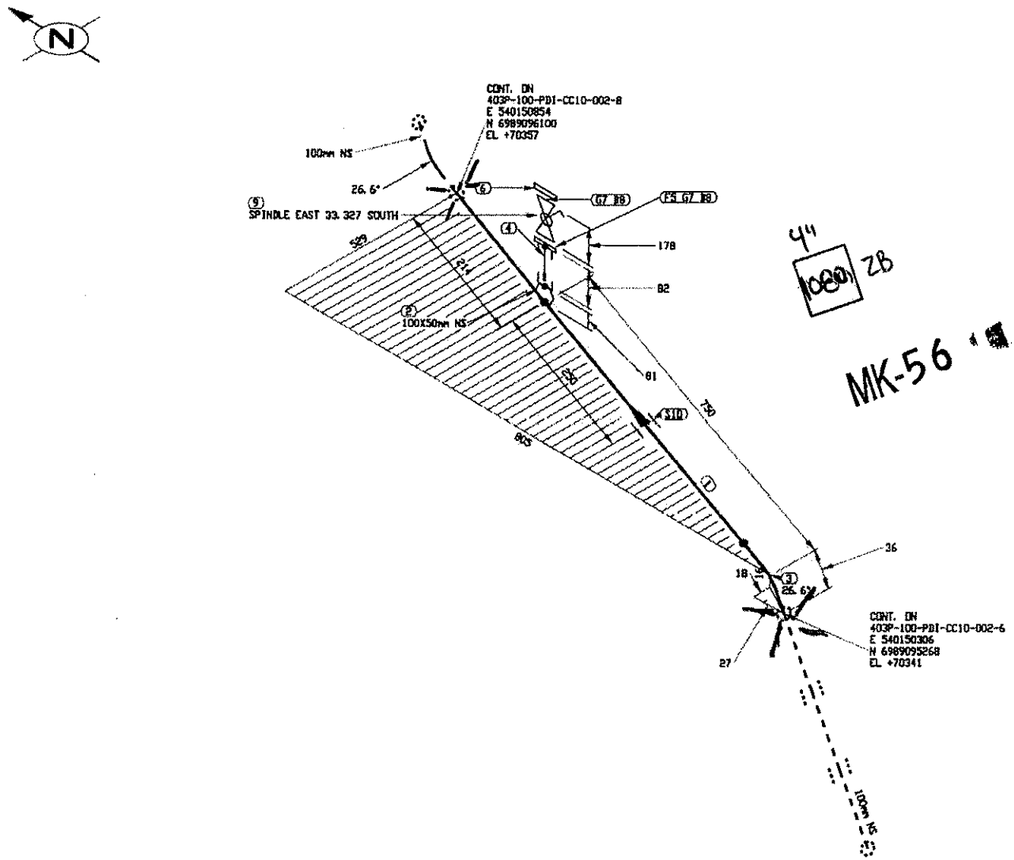

4" 1080 ZB

MK-56

FABRICATION DRAWINGS BASED ON WSP CERTIFIED ENGINEERING

LISTE DE MATERIEL

No	QTE	DIA	MATERIEL/CATALOGUE	DESCRIPTION
1	928 MM	100	A 333 Gr. 6	SCH STD, SMLS PIPE
2	1	100X50	A 350 Gr. LF2	CL 3000, SOCKOLET
3	1	100	A 420 Gr. WPL6	SCH STD, BW LR 45 DEG ELBOW TRIM TO 26.57
4	1	50	A 333 Gr. 6	SCH 80, NIPPLE x 75mm LG PBE
5	1	50	A 350 Gr. LF2	CL 150, SCH 80, RF, SW FLANGE
6	1	50	A 350 Gr. LF2	CL 150, RF, BLIND FLANGE
7	2	50	ASME B16.20	CL 150, GARLOCK 5500, RING TYPE GASKET 1/8" THK
8	8	16	A 193 B7/A 194 2H	CL 150, 4 - 15.875 X 85 STUD BOLTS c/w TWO HEAVY HEX NUTS
9	1	50	BA-31	CL 150, RF, BALL VALVE
10	1	100		PIPE SUPPORT AS PER DETAIL 3, DWG 65-403-270-200

A=44 B=97 C36

EN ATELIER LE
04 JUIL. 2017
par BS

CONTRAT UF
21,06 X20

REÇU le
03 JUIL. 2017
Rép: _____

No.	DATE	REVISION	PAR / APP.
0	2017/06/30	ISSUED FOR CONSTRUCTION	QVN

CLIENT:

AGNICO EAGLE

NUQSANA PROMEC MINING

ultragen

CONSULTANT PROJECT NO. 591700

SCEAU PROFESSIONNEL

CONC.: KHV
DATE: 2017/05/25
DESSINÉ PAR: KVE
DATE: 2017/05/25
VÉR. PAR:
DATE:
APP.:
DATE:
ÉCHELLE: AUCUNE

PROJET: AGNICO EAGLE - MELIADINE DIVISION
403P - COMBUSTIBLE

TITRE: PORTAIL #1
FABRICATION ISOMETRIC
FUEL FROM 65POD41604A/B TO 65TNK41607 & 65TNK41608

No PROJET	No DESSIN	PAGES	RÉV.
6515	403P-100-PDI-CC10-002	7/12	0

403P-MN-01, 403P-MN-02

NO. DE CONDUITE		SPECIFICATION	PRODUIT	SYSTEME REVETEMENT	CODE DE COULEUR	ISOLATION ET TRACAGE	EPAISS. D'ISOLATION		
403P-100-PDI-CC10-002		CC10	PDI					65-403-270-200	PIPE SUPPORT DETAILS
PRESSION D'OPERATION	TEMPERATURE D'OPERATION	PRESSION DE CONCEPTION	TEMPERATURE DE CONCEPTION	PRESSION D'ESSAI	CLASSE D'INSPECTION	CODE DE SERVICE	TRAITEMENT THERMIQUE	65-403-205-200	P&ID
PSIG	°F	N/A PSIG	10 à 15 °F	N/A PSIG		B31.3		No. DESSIN	DESSINS DE REFERENCE

FICHIER: W:\Agnico Eagle\Meliadine\591700 (Fuel Distribution)\05. Dessins\02. Tuyauterie\02. Isometriques\02. Portail 1\403P-100-PDI-CC10-002-7.DWG

IMPRIMÉ LE: Jun 30, 2017, 8:46am

JQ2216.6
PtG-MAW AC-001 R6
P1 a P1

Fluide Diesel End 5% Rx

U-F.

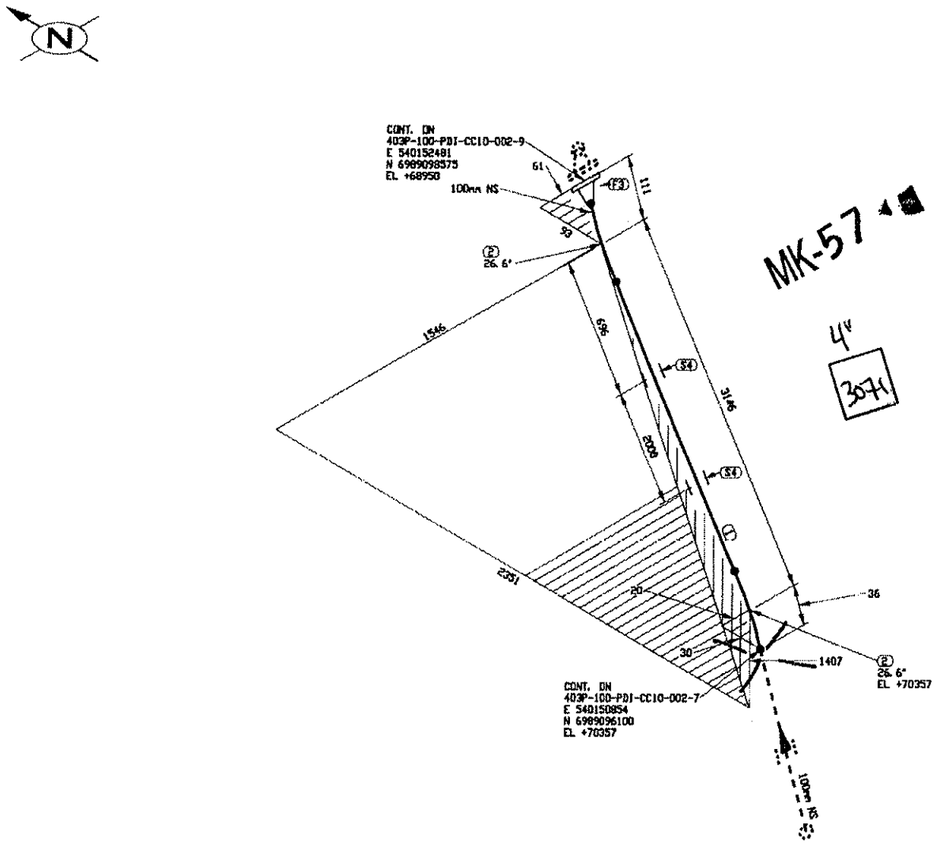

MK-57

4"

3071

FABRICATION DRAWINGS BASED ON WSP CERTIFIED ENGINEERING

LISTE DE MATERIEL

No	QTE	D/A	MATERIEL/CATALOGUE	DESCRIPTION
1	3074 MM	100	A 333 Gr. 6	SCH STD, SMLS PIPE
2	2	100	A 420 Gr. WPL6	SCH STD, BW LR 45 DEG ELBOW TRIM TO 26.57
3	1	100	A 350 Gr. LF2	CL 150, SCH STD, RF, WN FLANGE
4	2	100	SUPAG-DN100	PIPE SUPPORT AS PER DETAIL 3, DWG 65-403-270-200

A 44 B 97 C 36

CONTRAT UF

21.06 X 20

EN ATELIER LE

04 JUIL. 2017

par: BS

REÇU le

03 JUIL. 2017

Rép: _____

No.	DATE	REVISION	PAR / APP.
0	2017/06/30	ISSUED FOR CONSTRUCTION	QVN

CLIENT:

AGNICO EAGLE

NUQSANA PROMEC MINING

ultragen

CONSULTANT PROJECT NO. 591700

SCEAU PROFESSIONNEL

CONC.: KHV
DATE: 2017/06/29
DESSINÉ PAR: KVE
DATE: 2017/06/29
VER. PAR:
DATE:
APP.:
DATE:
FONTE: AUCUNE

PROJET: AGNICO EAGLE - MELIADINE DIVISION
403P - COMBUSTIBLE

TITRE: PORTAIL #1
FABRICATION ISOMETRIC
FUEL FROM 65POD41604A/B TO 65TNK41607 & 65TNK41608

No PROJET	No DESSIN	PAGES	REV.
6515	403P-100-PDI-CC10-002	8/12	0

403P-MN-01, 403P-MN-02

NO. DE CONDUITE		SPECIFICATION	PRODUIT	SYSTEME REVETEMENT	CODE DE COULEUR	ISOLATION ET TRACAGE	EPAISS. D'ISOLATION		
403P-100-PDI-CC10-002		CC10	PDI					65-403-270-200	PIPE SUPPORT DETAILS
PRESSION D'OPERATION	TEMPERATURE D'OPERATION	PRESSION DE CONCEPTION	TEMPERATURE DE CONCEPTION	PRESSION D'ESSAI	CLASSE D'INSPECTION	CODE DE SERVICE	TRAITEMENT THERMIQUE	65-403-205-200	P&ID
PSIG	°F	N/A PSIG	10 à 15 °F	N/A PSIG		B363		No. DESSIN	DESSINS DE REFERENCE

Flexible Diesel End 5% Rx

JQ2216.6

PT GMAW AC-001 P1 à P1 R6

U-F.

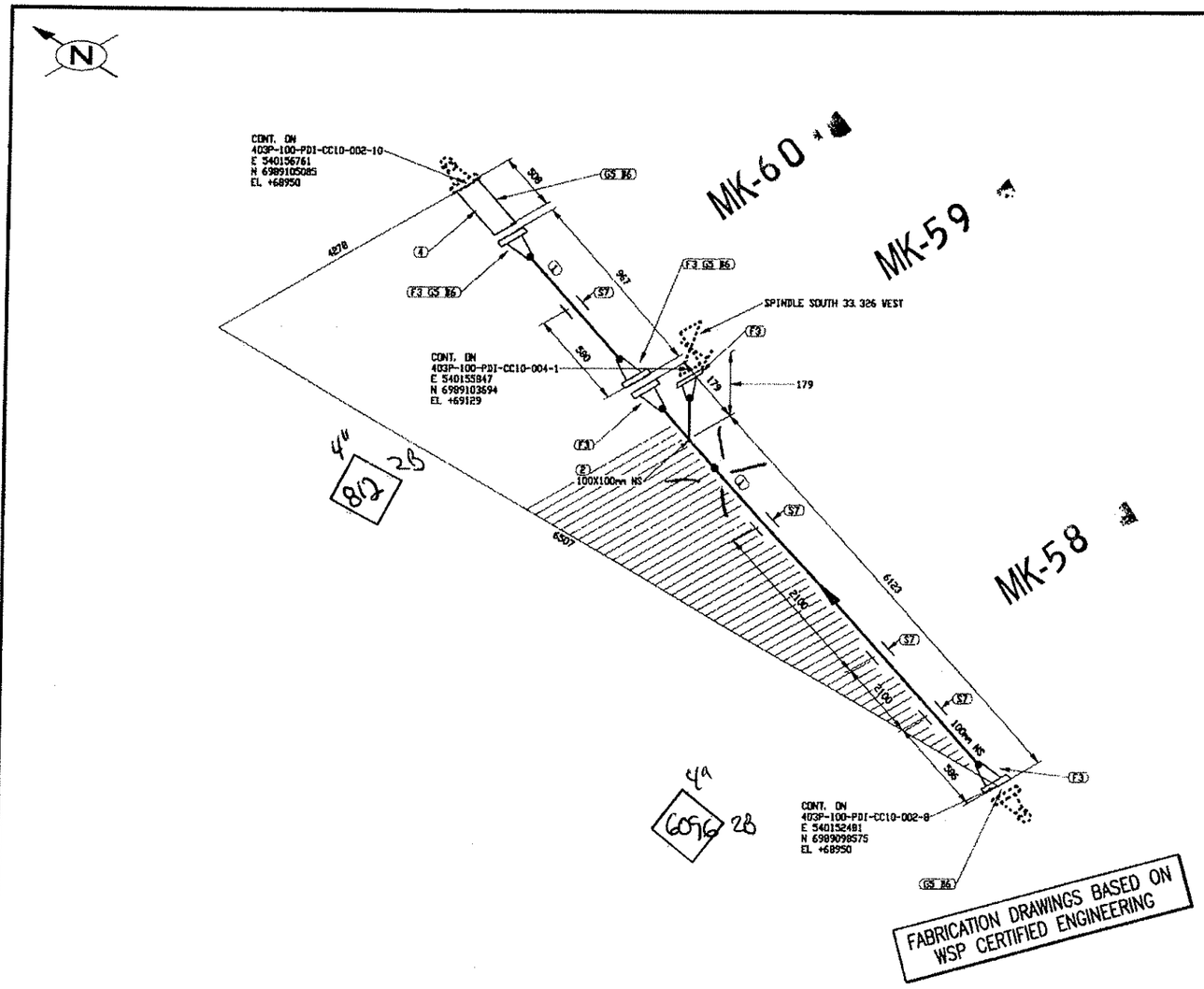

FABRICATION DRAWINGS BASED ON WSP CERTIFIED ENGINEERING

LISTE DE MATERIEL

No	QTE	DIA	MATERIEL/CATALOGUE	DESCRIPTION
1	6762 MM	100	A 333 Gr. 6	SCH STD, SMLS PIPE
2	1	100X100	A 420 Gr. WPL6	SCH STD, BW STRAIGHT TEE
3	5	100	A 350 Gr. LF2	CL 150, SCH STD, RF, WN FLANGE
4	1	100		CL 150, SINGLE BRAIDED HOSE ASSEMBLY
5	4	100	ASME B16.20	CL 150, GARLOCK 3500, RING TYPE GASKET 1/8" THK
6	32	16	A 193 B7/A 194 2H	CL 150, 8 - 15.875 X 90 STUD BOLTS c/w TWO HEAVY HEX NUTS
7	4	100	SUPAG-DN100	PIPE SUPPORT AS PER DETAIL 3, DWG 65-403-270-200

CONTRAT UF
21.06X20

REÇU le
03 JUIL. 2017
Rép: _____

ENTREPOSÉ LE
04 JUIL. 2017
par: _____

No.	DATE	REVISION	APP.
0	2017/06/30	ISSUED FOR CONSTRUCTION	QVN

CLIENT: AGNICO EAGLE

NUQSANA PROMEC MINING

ultragen

CONSULTANT PROJECT NO. 591700

SCEAU PROFESSIONNEL

CONC.: KH-V
DATE: 2017/06/29
DESSINÉ PAR: KVE
DATE: 2017/06/29
VÉR. PAR:
DATE:
APP.:
DATE:
ÉCHELLE: AUCUNE

PROJET: AGNICO EAGLE - MELIADINE DIVISION
403P - COMBUSTIBLE

TITRE: PORTAIL #1
FABRICATION ISOMETRIC
FUEL FROM 65PDD41604A/B TO 65TNK41607 & 65TNK41608

No PROJET	No DESSIN	PAGES	REV.
6515	403P-100-PDI-CC10-002	9/12	0

403P-MN-01, 403P-MN-02

NO. DE CONDUITE	SPECIFICATION	PRODUIT	SYSTEME REVETEMENT	CODE DE COULEUR	ISOLATION ET TRACAGE	EPAISS. D'ISOLATION		
403P-100-PDI-CC10-002	CC10	PDI					65-403-270-200	PIPE SUPPORT DETAILS
PRESSION D'OPERATION / TEMPERATURE D'OPERATION	PRESSION DE CONCEPTION / TEMPERATURE DE CONCEPTION	PRESSION D'ESSAI	CLASSE D'INSPECTION	CODE DE SERVICE	TRAITEMENT THERMIQUE		65-403-205-200	P&ID
PSIG / °F	N/A PSIG / 104.9 °F	N/A PSIG		B31.3			No. DESSIN	DESSINS DE REFERENCE

Fluide Diesel Ed 5% Rv

IMPRIMÉ LE: Jun 30 2017 8:54am

TOKEN: K:\Vgmcc (Local)\Velocities\591700 (Fond Stockbuster)\02. Essais\02. Expositions\02. Nouvelles\02. Portail 1\403P-100-PDI-CC10-002.DWG

JQ2216.6
PT-GMAW-ACC01 Rev6
P1 à P1

U-F.

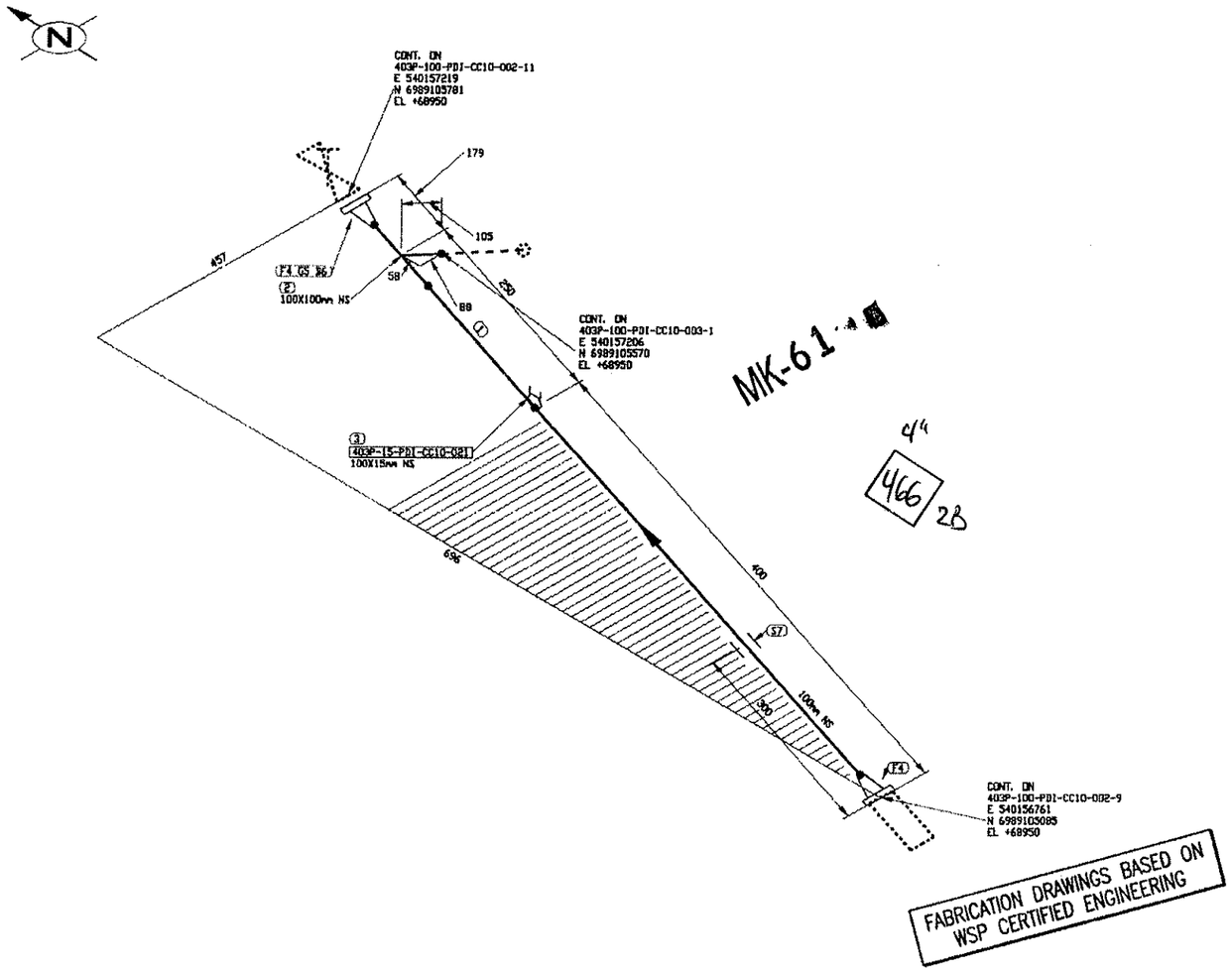

MK-61

4"

466 2B

FABRICATION DRAWINGS BASED ON WSP CERTIFIED ENGINEERING

LISTE DE MATERIEL

No	QTE	DIA	MATERIEL/CATALOGUE	DESCRIPTION
1	470 MM	100	A 333 Gr. 6	SCH STD, SMLS PIPE
2	1	100X100	A 420 Gr. WPL6	SCH STD, BW STRAIGHT TEE
3	1	100X15	A 350 Gr. LF2	CL 3000, THREDOLET
4	2	100	A 350 Gr. LF2	CL 150, SCH STD, RF, WN FLANGE
5	1	100	ASME B16.20	CL 150, GARLOCK 3500, RING TYPE GASKET 1/8" THK
6	8	16	A 193 B7/A 194 2H	CL 150, 8 - 15.875 X 90 STUB BOLTS c/w TWO HEAVY HEX NUTS
7	1	100		PIPE SUPPORT AS PER DETAIL 3, DWG 65-403-270-200

CONTRAT UF
21.06.20

REÇU le
03 JUIL. 2017
Rép:

EN ATELIER LE
04 JUIL. 2017
par :

No.	DATE	REVISION	QVN / PAR / APP.
0	2017/06/30	ISSUED FOR CONSTRUCTION	QVN

CLIENT: AGNICO EAGLE

NUQSANA PROMEC MINING

ultragen

CONSULTANT PROJECT No. 591700

SCEAU PROFESSIONNEL

CONC.: KHV DATE: 2017/09/28
DESSINE PAR: KVE DATE: 2017/09/28
VER. PAR: DATE:
APP.: DATE:
ECHELLE: AUCUNE

PROJET: AGNICO EAGLE - MELIADINE DIVISION
403P - COMBUSTIBLE

TITRE: PORTAIL #1
FABRICATION ISOMETRIC
FUEL FROM 65PDD41604A/B TO 65TNK41607 & 65TNK41608

No PROJET	No DESSIN	PAGES	REV.
6515	403P-100-PDI-CC10-002	10/12	0

403P-MN-01, 403P-MN-02

NO. DE CONDUITE		SPECIFICATION	PRODUIT	SYSTEME REVETEMENT	CODE DE COULEUR	ISOLATION ET TRACAGE	EPAISS D'ISOLATION		
403P-100-PDI-CC10-002		CC10	PDI					65-403-270-200	PIPE SUPPORT DETAILS
PRESSION D'OPERATION	TEMPERATURE D'OPERATION	PRESSION DE CONCEPTION	TEMPERATURE DE CONCEPTION	PRESSION D'ESSAI	CLASSE D'INSPECTION	CODE DE SERVICE	TRAITEMENT THERMIQUE	65-403-205-200	P&ID
PSIG	°F	N/A PSIG	10X7 °F	N/A PSIG		B31.3		No. DESSIN	DESSINS DE REFERENCE

IMPRIME LE: Jun 30, 2017 8:58am

JQ2216.6
PT-GMAW-M-0001 REV6
P1 à P1

Fluide: Diesel Cnd: 5% Rx

U-F

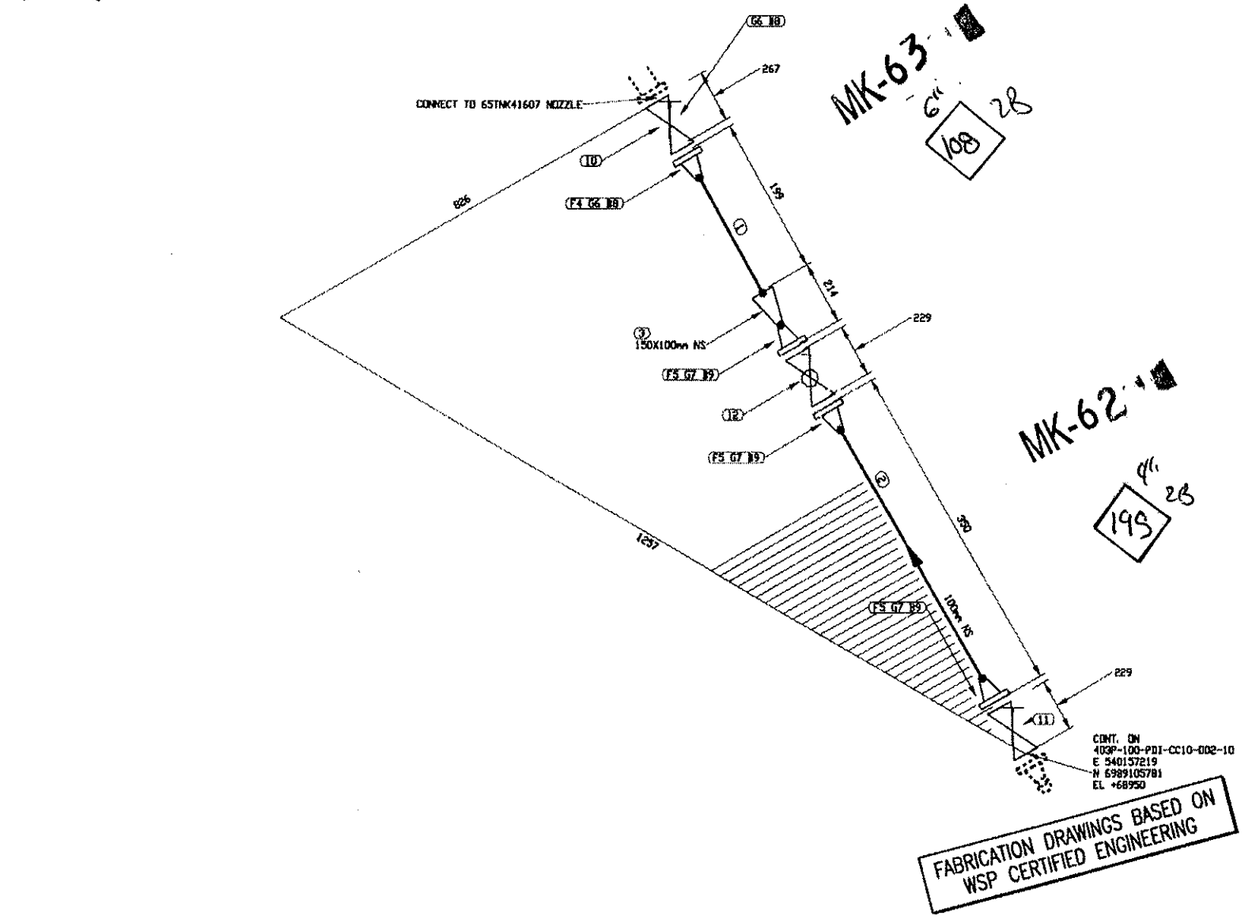

LISTE DE MATERIEL

No	QTE	DIA	MATERIEL/CATALOGUE	DESCRIPTION
1	111 MM	150	A 333 Gr. 6	SCH STD, SMLS PIPE
2	200 MM	100	A 333 Gr. 6	SCH STD, SMLS PIPE
3	1	150X100	A 420 Gr. WPL6	SCH STD, BW CONC RED
4	1	150	A 350 Gr. LF2	CL 150, SCH STD, RF, WN FLANGE
5	3	100	A 350 Gr. LF2	CL 150, SCH STD, RF, WN FLANGE
6	2	150	ASME B16.20	CL 150, GARLOCK 3500, RING TYPE GASKET 1/8" THK
7	3	100	ASME B16.20	CL 150, GARLOCK 3500, RING TYPE GASKET 1/8" THK
8	16	19	A 193 B7/A 194 2H	CL 150, Ø - 19.05 X 100 STUD BOLTS c/w TWO HEAVY HEX NUTS
9	24	16	A 193 B7/A 194 2H	CL 150, Ø - 15.875 X 90 STUD BOLTS c/w TWO HEAVY HEX NUTS
10	1	150	GA-10	CL 150, RF, GATE VALVE
11	1	100	GA-10	CL 150, RF, GATE VALVE
12	1	100	BA-31	CL 150, RF, BALL VALVE

CONTRAT UF
21.06.20

REÇU le
03 JUIL. 2017
Rép:

EN ATELIER LE
04 JUIL. 2017
par: BS

No.	DATE	REVISION	APP.
0	2017/06/30	ISSUED FOR CONSTRUCTION	QVN

CLIENT: AGNICO EAGLE

NUQSANA PROMEC MINING

ultragen

CONSULTANT PROJECT NO. 591700

SCEAU PROFESSIONNEL

CONC.: KHV
DATE: 2017/06/28
DESSINÉ PAR: KVE
DATE: 2017/06/28
VER. PAR:
DATE:
APP.:
DATE:
ÉCHELLE: AUCUNE

PROJET: AGNICO EAGLE - MEL1ADINE DIVISION
403P - COMBUSTIBLE

TITRE: PORTAIL #1
FABRICATION ISOMETRIC
FUEL FROM 65PUD41604A/B TO 65TNK41607 & 65TNK41608

No PROJET	No DESSIN	PAGES	REV.
6515	403P-100-PDI-CC10-002	11/12	0

403P-MAN-01, 403P-MAN-02

NO. DE CONDUITE		SPECIFICATION	PRODUIT	SYSTEME REVETEMENT	CODE DE COULEUR	ISOLATION ET TRACAGE	EPAISS. D'ISOLATION		
403P-100-PDI-CC10-002		CC10	PDI					65-403-270-200	PIPE SUPPORT DETAILS
PRESSION D'OPERATION	TEMPERATURE D'OPERATION	PRESSION DE CONCEPTION	TEMPERATURE DE CONCEPTION	PRESSION D'ESSAI	CLASSE D'INSPECTION	CODE DE SERVICE	TRAITEMENT THERMIQUE	65-403-205-200	P&ID
PSIG	°F	N/A PSIG	100 à 15 °F	N/A PSIG		D-31.3		No. DESSIN	DESSINS DE REFERENCE

Fluide Diesel Ent 3% RX

JG2216.6
PT-GMAW/FCAW-02
P1 à P1 HG

U-F

IMPRIMÉ LE: Jun 30, 2017, 8:57am
PATH: W:\Projets Exp\Vancouver\591700 (Fort Distribution)\05. Drawing\02. Isométriques\02. Portail 1\403P-100-PDI-CC10-002-11.DWG

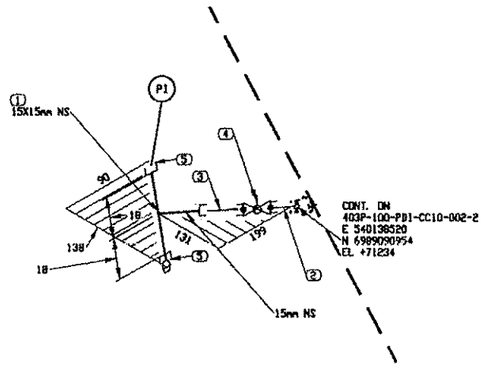

LISTE DE MATERIEL

No	QTE	DIA	MATERIEL/CATALOGUE	DESCRIPTION
1	1	15X15	A 350 Gr. LF2	CL 3000, THRD STRAIGHT TEE
2	1	15	A 333 Gr. 6	SCH 80, NIPPLE x 75mm LG PBE
3	1	15	A 333 Gr. 6	SCH 80, NIPPLE x 75mm LG PDExTDE
4	1	15	BA-29	CL 600, SW, BALL VALVE
5	2	15	A 350 Gr. LF2	MNPT SOLID STL BULL PLUG

CONTRAT UF
21.06X20

REÇU le
03 JUIL. 2017
Rép: _____

EN ATELIER LE
04 JUIL. 2017
par: BS

FABRICATION DRAWINGS BASED ON WSP CERTIFIED ENGINEERING

No.	DATE	REVISION	QVN / PAR / APP.
0	2017/06/30	ISSUED FOR CONSTRUCTION	

CLIENT: AGNICO EAGLE

NUQSANA PROMEC MINING

ultragen

CONSULTANT PROJECT NO. 591700

SCEAU PROFESSIONNEL

CONC.: KHV
DATE: 2017/06/28
DESSINÉ PAR: KVE
DATE: 2017/03/28
VER. PAR:
DATE:
APP.:
DATE:
ÉCHELLE: AUCUNE

PROJET: AGNICO EAGLE - MEL1ADINE DIVISION
403P - COMBUSTIBLE

TITRE: PORTAIL #1
FABRICATION ISOMETRIC
FUEL FROM 65PDI41604A/B TO 65TNK41607 & 65TNK41608

No PROJET	No DESSIN	PAGES	REV.
6515	403P-100-PDI-CC10-002	12/12	0

403P-MN-01, 403P-MN-02

NO DE CONDUITE		SPECIFICATION	PRODUIT	SYSTEME REVETEMENT	CODE DE COULEUR	ISOLATION ET TRACAGE	EPAISS. D'ISOLATION		
403P-100-PDI-CC10-002		CC10	PDI					65-403-270-200	PIPE SUPPORT DETAILS
PRESSION D'OPERATION	TEMPERATURE D'OPERATION	PRESSION DE CONCEPTION	TEMPERATURE DE CONCEPTION	PRESSION D'ESSAI	CLASSE D'INSPECTION	CODE DE SERVICE	TRAITEMENT THERMIQUE	65-403-205-200	P&ID
PSIG	°F	N/A PSIG	10 à 17 °F	N/A PSIG		D31.3		No. DESSIN	DESSINS DE REFERENCE

FORM 10.4.2 - Rev 3 - Dwg\Workplan\501700 (Final Deliverables)\05. Drawings\02. Isometrics\02. Portail 1\403P-100-PDI-CC10-002-12.DWG

IMPRIMÉ LE: Jun 30 2017, 8:59am

JQ2216.6
PT-GMAW-AC-CO1G
P1 à P1

Fluide Diesel End 5% RX

U-F.

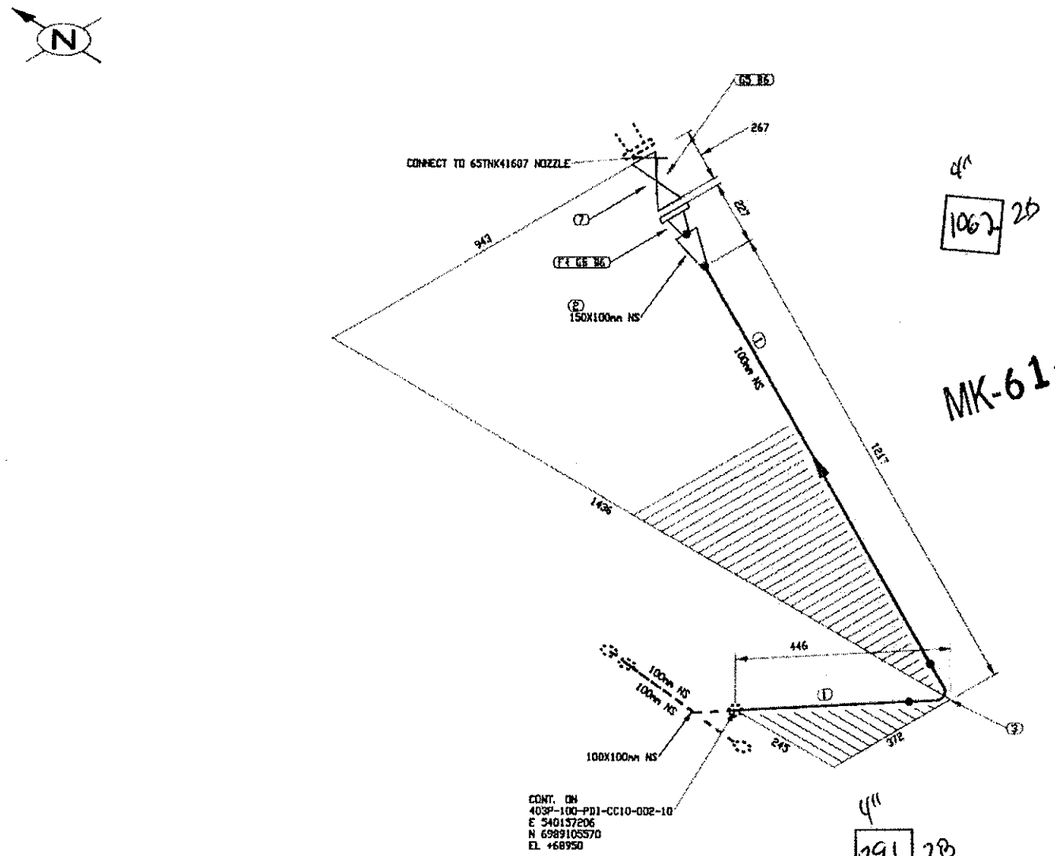

FABRICATION DRAWINGS BASED ON WSP CERTIFIED ENGINEERING

LISTE DE MATERIEL

No	QTE	DIA	MATERIEL/CATALOGUE	DESCRIPTION
1	1359 MM	100	A 333 Gr. 6	SCH STD, SMLS PIPE
2	1	150X100	A 420 Gr. WPL6	SCH STD, BW CONC RED
3	1	100	A 420 Gr. WPL6	SCH STD, BW LR 90 DEG ELBOW
4	1	150	A 350 Gr. LF2	CL 150, SCH STD, RF, WN FLANGE
5	2	150	ASME B16.20	CL 150, GARLOCK 5500, RING TYPE GASKET 1/8" THK
6	16	19	A 193 B7/A 194 2H	CL 150, 8 - 19.05 X 100 STUD BOLTS c/w TWO HEAVY HEX NUTS
7	1	150	GA-10	CL 150, RF, GATE VALVE

CONTRAT UF
21.06 X 20

REÇU le
03 JUIL. 2017
Rép: _____

EN ATELIER LE
04 JUIL. 2017
par: BS

No.	DATE	REVISION	QVN / PAR / APP.
0	2017/06/30	ISSUED FOR CONSTRUCTION	

CLIENT: AGNICO EAGLE

NUQSANA PROMEC MINING

ultragen

CONSULTANT PROJECT NO. 591700

SCEAU PROFESSIONNEL

CONC.: KHV
DATE: 2017/05/29
DESSINÉ PAR: KVE
DATE: 2017/05/29
VER. PAR:
DATE:
APP.:
DATE:
ECHELLE: AUCUNE

PROJET: AGNICO EAGLE - MELIADINE DIVISION
403P - COMBUSTIBLE

TITRE: PORTAIL #1
FABRICATION ISOMETRIC
FUEL FROM 65POD41607 TO LOADING NOZZLE

No PROJET	No DESSIN	PAGES	REV.
6515	403P-100-PDI-CC10-003	1/1	0

403P-MN-01

NO. DE CONDUITE		SPECIFICATION	PRODUIT	SYSTEME REVETEMENT	CODE DE COULEUR	ISOLATION ET TRACAGE	EPAISS. D'ISOLATION		
403P-100-PDI-CC10-003		CC10	PDI					65-403-270-200	PIPE SUPPORT DETAILS
PRESSION D'OPERATION	TEMPERATURE D'OPERATION	PRESSION DE CONCEPTION	TEMPERATURE DE CONCEPTION	PRESSION D'ESSAI	CLASSE D'INSPECTION	CODE DE SERVICE	TRAITEMENT THERMIQUE	65-403-205-200	P&ID
PSIG	°F	N/A PSIG	10 à 15 °F	N/A PSIG		B31.3		No. DESSIN	DESSINS DE REFERENCE

JQ2216.6
PT GMAW AG001A6
P1 a P1

Fluide Diesel End 5% RX

U-F

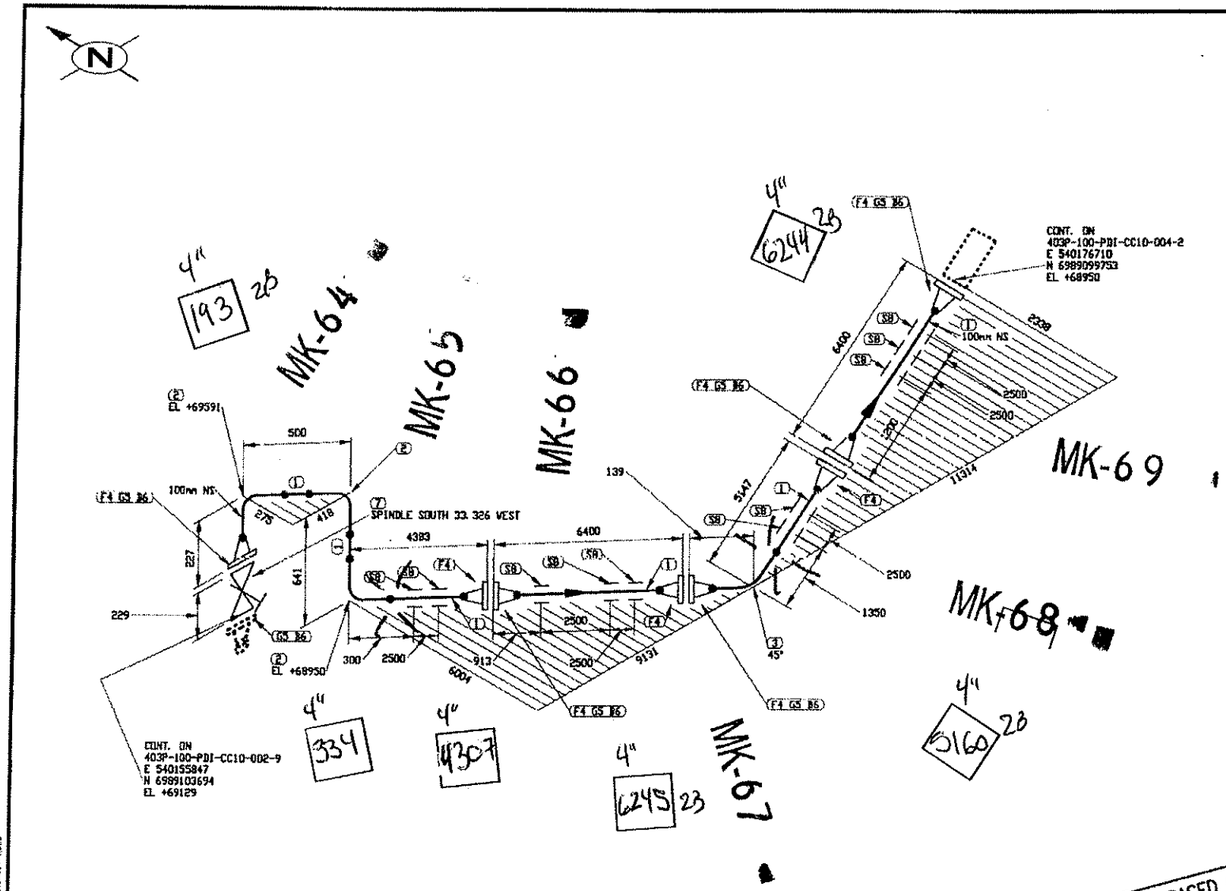

FABRICATION DRAWINGS BASED ON WSP CERTIFIED ENGINEERING

LISTE DE MATERIEL

No	QTE	DIA	MATERIEL/CATALOGUE	DESCRIPTION
1	22199 MM	100	A 333 Gr. 6	SCH STD, SMLS PIPE
2	3	100	A 420 Gr. WPL6	SCH STD, BW LR 90 DEG ELBOW
3	1	100	A 420 Gr. WPL6	SCH STD, BW LR 45 DEG ELBOW
4	8	100	A 350 Gr. LF2	CL 150, SCH STD, RF, WN FLANGE
5	6	100	ASME B16.20	CL 150, GARLOCK 5500, RING TYPE GASKET 1/8" THK
6	48	16	A 193 B7/A 194 2H	CL 150, 8 - 15.875 X 90 STUD BOLTS c/w TWO HEAVY HEX NUTS
7	1	100	GA-10	CL 150, RF, GATE VALVE
8	10	100		PIPE SUPPORT AS PER DETAIL 3, DWG 65-403-270-200

CONTRAT UF
21.06 X 20

REÇU le
03 JUIL. 2017
Rép: _____

EN ATELIER LE
04 JUIL. 2017
par : BG

No.	DATE	REVISION	QVN / PAR / APP.
0	2017/06/30	ISSUED FOR CONSTRUCTION	

CLIENT:

AGNICO EAGLE

NUQSANA PROMEC MINING

ultragen

CONSULTANT PROJECT NO. 591700

SCEAU PROFESSIONNEL

CONC.: KHV
DATE: 2017/05/29
DESSINÉ PAR: KVE
DATE: 2017/05/29
VÉR. PAR:
DATE:
APP.:
DATE:
ÉCHELLE: AUCUNE

PROJET: AGNICO EAGLE - MELIADINE DIVISION
403P - COMBUSTIBLE

TITRE: PORTAIL #1
FABRICATION ISOMETRIC
FUEL FROM 403P-100-PDI-CC10-002 TO 65TNK41608 LOADING NOZZLE

No PROJET	No DESSIN	PAGES	REV.
6515	403P-100-PDI-CC10-004	1/2	0

NO. DE CONDUITE		SPECIFICATION	PRODUIT	SYSTEME REVETEMENT	CODE DE COULEUR	ISOLATION ET TRACAGE	EPAISS. D'ISOLATION		
403P-100-PDI-CC10-004		CC10	PDI					65-403-270-200	PIPE SUPPORT DETAILS
PRESSION D'OPERATION	TEMPERATURE D'OPERATION	PRESSION DE CONCEPTION	TEMPERATURE DE CONCEPTION	PRESSION D'ESSAI	CLASSE D'INSPECTION	CODE DE SERVICE	TRAITEMENT THERMIQUE	65-403-205-200	P&ID
PSIG	°F	NA PSIG	10 à 15 °F	NA PSIG		B31.3		No. DESSIN	DESSINS DE REFERENCE

JQ2216.6
Pt-GMAW-OC-001 R6
P1 à P1

Fluide Diesel End: 5% RX

403P-MN-01

U-F.

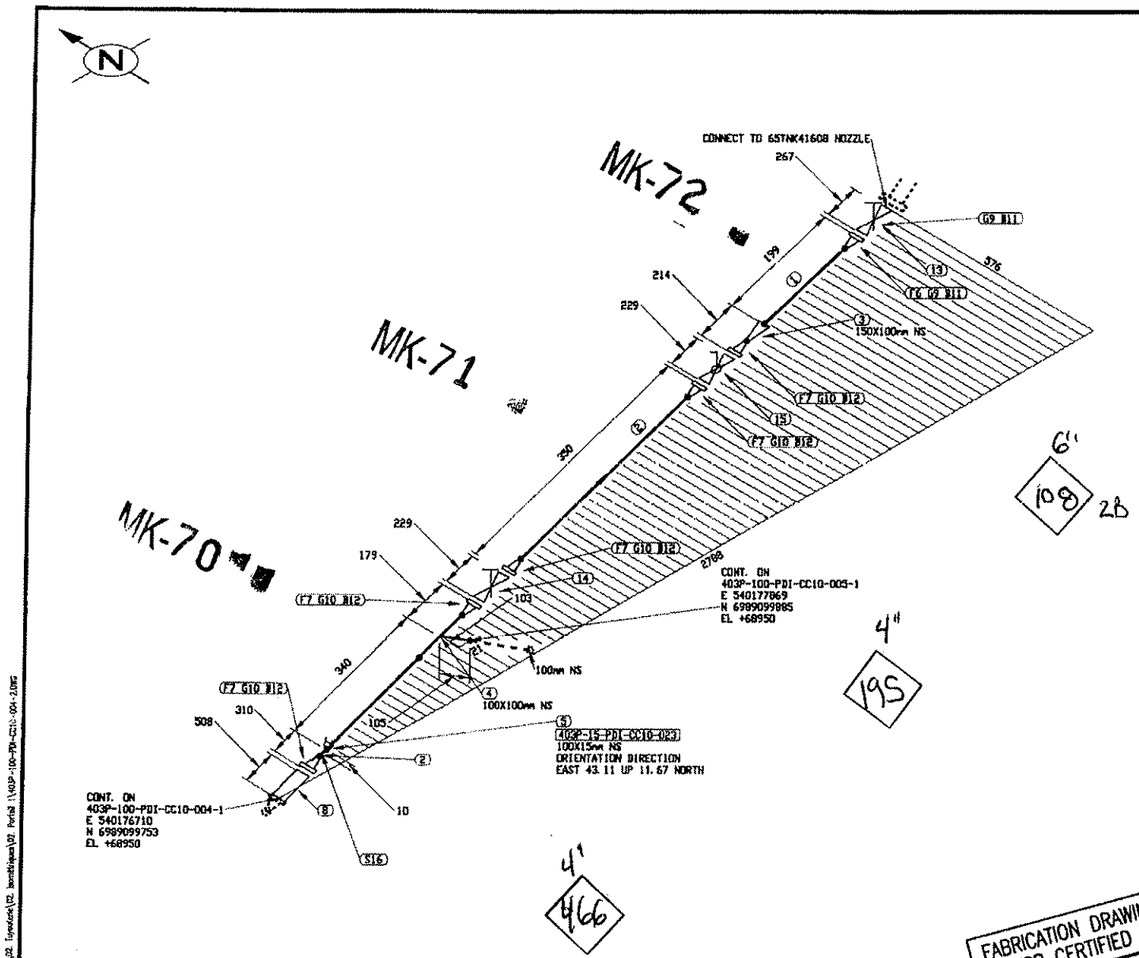

FABRICATION DRAWINGS BASED ON WSP CERTIFIED ENGINEERING

LISTE DE MATERIEL

No	QTE	DIA	MATERIEL/CATALOGUE	DESCRIPTION
1	112 MM	150	A 333 Gr. 6	SCH STD, SMLS PIPE
2	671 MM	100	A 333 Gr. 6	SCH STD, SMLS PIPE
3	1	150X100	A 420 Gr. WPL6	SCH STD, BW CONC RED
4	1	100X100	A 420 Gr. WPL6	SCH STD, BW STRAIGHT TEE
5	1	100X15	A 350 Gr. LF2	CL 3000, THREDOLET
6	1	150	A 350 Gr. LF2	CL 150, SCH STD, RF, WN FLANGE
7	5	100	A 350 Gr. LF2	CL 150, SCH STD, RF, WN FLANGE
8	1	100		CL 150, SINGLE BRAIDED HOSE ASSEMBLY
9	2	150	ASME B16.20	CL 150, GARLOCK 5500, RING TYPE GASKET 1/8" THK
10	5	100	ASME B16.20	CL 150, GARLOCK 5500, RING TYPE GASKET 1/8" THK
11	16	19	A 193 B7/A 194 2H	CL 150, 8 - 19.05 X 100 STUD BOLTS c/w TWO HEAVY HEX NUTS
12	40	16	A 193 B7/A 194 2H	CL 150, 8 - 15.875 X 90 STUD BOLTS c/w TWO HEAVY HEX NUTS
13	1	150	GA-10	CL 150, RF, GATE VALVE
14	1	100	GA-10	CL 150, RF, GATE VALVE
15	1	100	BA-31	CL 150, RF, BALL VALVE
16	1	100		PIPE SUPPORT AS PER DETAIL 3, DWG 65-403-270-200

CONTRAT UF
21.06 X 20

REÇU le
03 JUIL. 2017
Rép: _____

No.	DATE	REVISION	QVN / PAR / APP.
0	2017/06/30	ISSUED FOR CONSTRUCTION	QVN

CLIENT: AGNICO EAGLE

NUQSANA PROMEC MINING

ultragen

CONSULTANT PROJECT NO. 591700

SCEAU PROFESSIONNEL

CONC.: KHV
DATE: 2017/05/29
DESSINÉ PAR: KVE
DATE: 2017/05/29
VÉR. PAR:
DATE:
APP.:
DATE:
ÉCHELLE: AUCUNE

PROJET: AGNICO EAGLE - MELIADINE DIVISION
403P - COMBUSTIBLE

TITRE: PORTAIL #1
FABRICATION ISOMETRIC
FUEL FROM 403P-100-PDI-CC10-002 TO 65TNK41608 LOADING NOZZLE

No PROJET	No DESSIN	PAGES	REV.
6515	403P-100-PDI-CC10-004	2/2	0

NO. DE CONDUITE		SPECIFICATION	PRODUIT	SYSTEME REVETEMENT	CODE DE COULEUR	ISOLATION ET TRACAGE	EPAISS. D'ISOLATION		
403P-100-PDI-CC10-004		CC10	PDI					65-403-270-200	PIPE SUPPORT DETAILS
PRESSION D'OPERATION	TEMPERATURE D'OPERATION	PRESSION DE CONCEPTION	TEMPERATURE DE CONCEPTION	PRESSION D'ESSAI	CLASSE D'INSPECTION	CODE DE SERVICE	TRAITEMENT THERMIQUE	65-403-205-200	P&ID
PSIG	°F	NA PSIG	la NG °F	N/A PSIG		631.3		No. DESSIN	DESSINS DE REFERENCE

JQ2216.6
PT GMAW-AC-001 R6
P1 a P1

Fluid Dread Cnd : 5% Rx

U-F.

403P-MN-01

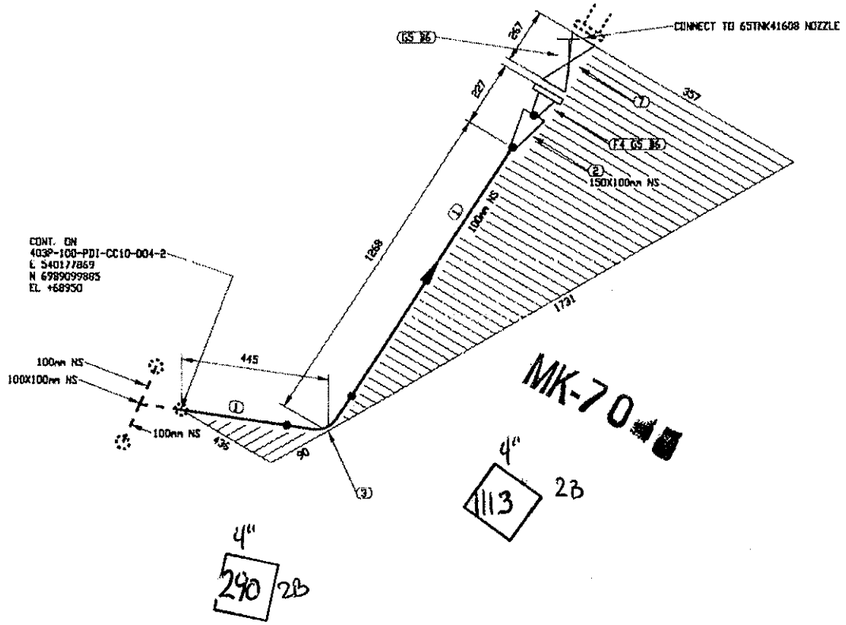

FABRICATION DRAWINGS BASED ON WSP CERTIFIED ENGINEERING

LISTE DE MATERIEL

No	QTE	DIA	MATERIEL/CATALOGUE	DESCRIPTION
1	1409 MM	100	A 333 Gr. 6	SCH STD, SMLS PIPE
2	1	150X100	A 420 Gr. WPL6	SCH STD, BW CONC RED
3	1	100	A 420 Gr. WPL6	SCH STD, BW LR 90 DEG ELBOW
4	1	150	A 350 Gr. LF2	CL 150, SCH STD, RF, WN FLANGE
5	2	150	ASME B16.20	CL 150, GARLOCK 3500, RING TYPE GASKET 1/8" THK
6	16	19	A 193 B7/A 194 2H	CL 150, 8 - 19.05 X 100 STUD BOLTS c/w TWO HEAVY HEX NUTS
7	1	150	GA-10	CL 150, RF, GATE VALVE

CONTRAT UF
21.06x20

REÇU le
03 JUIL. 2017
Rép: _____

EN ATELIER LE
04 JUIL. 2017
par: BS

No.	DATE	REVISION	APP.
0	2017/06/30	ISSUED FOR CONSTRUCTION	QVN

CLIENT: AGNICO EAGLE

NUQSANA-PROMEC MINING

Ultragen

CONSULTANT PROJECT NO. 591700

SCEAU PROFESSIONNEL

CONC.: KHV
DATE: 2017/05/29
DESSINÉ PAR: KVE
DATE: 2017/05/29
VER. PAR:
DATE:
APP.:
DATE:
ÉCHELLE: AUCUNE

PROJET: AGNICO EAGLE - MELIADINE DIVISION
403P - COMBUSTIBLE

TITRE: PORTAIL #1
FABRICATION ISOMETRIC
FUEL FROM 403P-100-PDI-CC10-004 TO 65TNK41608 LOADING NOZZLE

No PROJET	No DESSIN	PAGES	REV.
6515	403P-100-PDI-CC10-005	1/1	0

403P-MN-01

NO. DE CONDUITE		SPECIFICATION	PRODUIT	SYSTEME REVETEMENT	CODE DE COULEUR	ISOLATION ET TRACAGE	EPAISS. D'ISOLATION		
403P-100-PDI-CC10-005		CC10	PDI					65-403-270-200	PIPE SUPPORT DETAILS
PRESSION D'OPERATION	TEMPERATURE D'OPERATION	PRESSION DE CONCEPTION	TEMPERATURE DE CONCEPTION	PRESSION D'ESSAI	CLASSE D'INSPECTION	CODE DE SERVICE	TRAITEMENT THERMIQUE	65-403-205-200	P&ID
PSIG	°F	N/A PSIG	10 C 15°F	N/A PSIG		B31.3		No. DESSIN	DESSINS DE REFERENCE

Fluide diesel - End. 5% RX

JQ2216.6
PT-GMAW-AC-001
P1aP1
RG

U-F.

FICHIER: K:\Vortex Eng\Modèles\591700 (Fort Rainbow)\06. Drawing\02. Tuyauterie\102. Portail 1\403P-100-PDI-CC10-005-1.DWG

IMPRIMÉ LE: Jun 30, 2017, 9:10am

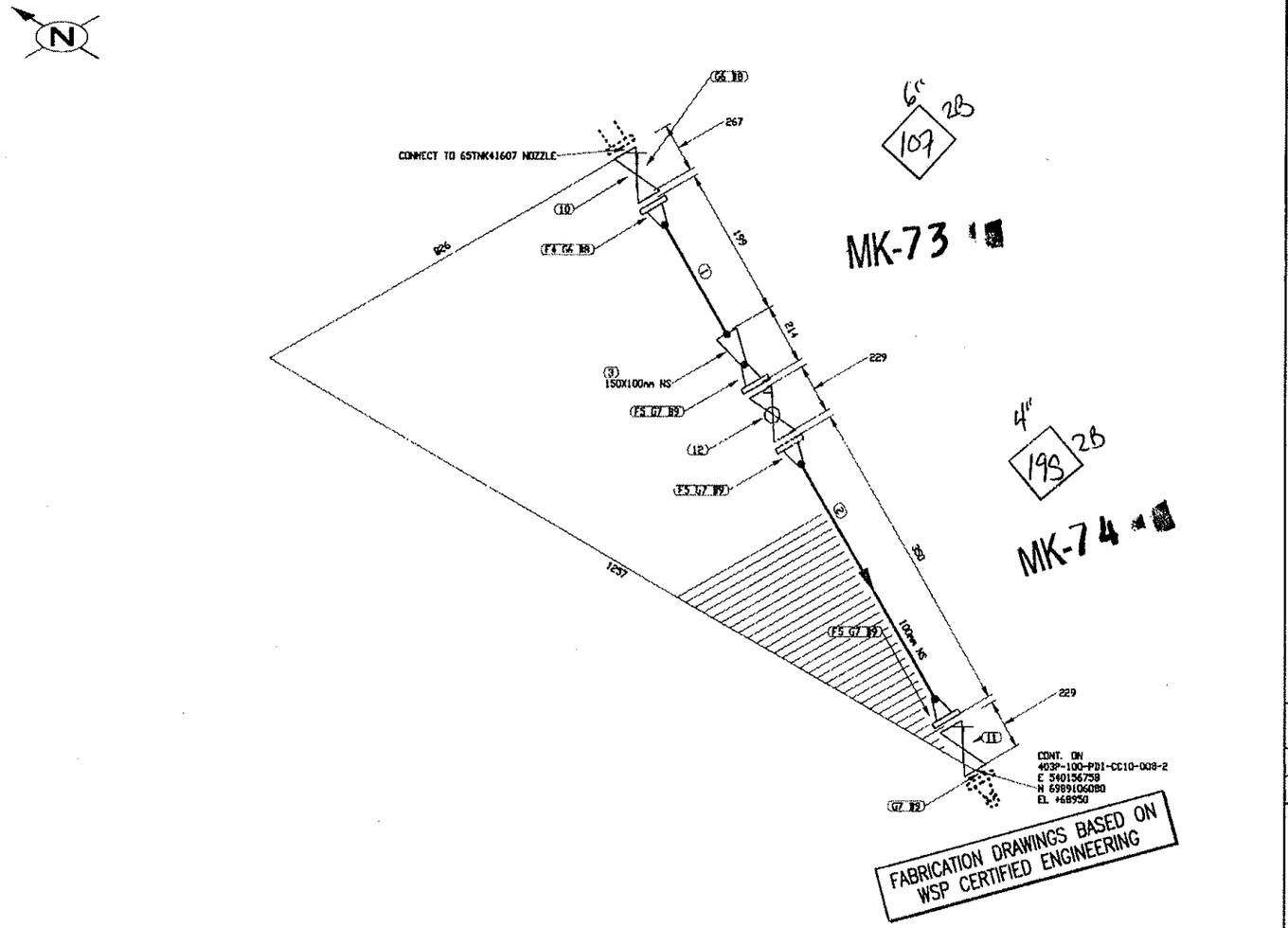

LISTE DE MATERIEL

No	QTE	DIA	MATERIEL/CATALOGUE	DESCRIPTION
1	111 MM	150	A 333 Gr. 6	SCH STD, SMLS PIPE
2	200 MM	100	A 333 Gr. 6	SCH STD, SMLS PIPE
3	1	150X100	A 420 Gr. WPL6	SCH STD, BW CONC RED
4	1	150	A 350 Gr. LF2	CL 150, SCH STD, RF, WN FLANGE
5	3	100	A 350 Gr. LF2	CL 150, SCH STD, RF, WN FLANGE
6	2	150	ASME B16.20	CL 150, GARLOCK 5500, RING TYPE GASKET 1/8" THK
7	4	100	ASME B16.20	CL 150, GARLOCK 5500, RING TYPE GASKET 1/8" THK
8	16	19	A 193 B7/A 194 2H	CL 150, 8 - 19.05 X 100 STUD BOLTS c/w TWO HEAVY HEX NUTS
9	32	16	A 193 B7/A 194 2H	CL 150, 8 - 15.875 X 90 STUD BOLTS c/w TWO HEAVY HEX NUTS
10	1	150	GA-10	CL 150, RF, GATE VALVE
11	1	100	GA-10	CL 150, RF, GATE VALVE
12	1	100	BA-31	CL 150, RF, BALL VALVE

CONTRAT UF
21.06 X 20

REÇU le
03 JUIL. 2017
Rép: _____

EN ATELIER LE
04 JUIL. 2017
par : BS

No.	DATE	REVISION	QVN / PAR / APP.
0	2017/06/30	ISSUED FOR CONSTRUCTION	

CLIENT:

AGNICO EAGLE

NUQSANA PROMEC MINING

ultragen

CONSULTANT PROJECT NO. 591700

SCEAU PROFESSIONNEL

CONC.: KHV
DATE: 2017/05/29
DESSINÉ PAR: KVE
DATE: 2017/05/29
VER. PAR:
DATE:
APP.:
DATE:
ÉCHELLE: AUCUNE

PROJET: AGNICO EAGLE - MELIADINE DIVISION
403P - COMBUSTIBLE

TITRE: PORTAIL #1
FABRICATION ISOMETRIC
FUEL FROM 65TNK41607 UNLOADING NOZZLE TO 65POD41603B

No PROJET	No DESSIN	PAGES	REV.
6515	403P-100-PDI-CC10-008	1/10	0

403P-MN-01

NO. DE CONDUITE		SPECIFICATION	PRODUIT	SYSTEME REVETEMENT	CODE DE COULEUR	ISOLATION ET TRACAGE	EPAISS. D'ISOLATION		
403P-100-PDI-CC10-008		CC10	PDI					65-403-270-200	PIPE SUPPORT DETAILS
PRESSION D'OPERATION	TEMPERATURE D'OPERATION	PRESSION DE CONCEPTION	TEMPERATURE DE CONCEPTION	PRESSION D'ESSAI	CLASSE D'INSPECTION	CODE DE SERVICE	TRAITEMENT THERMIQUE	65-403-205-200	P&ID
PSIG	°F	N/A PSIG	10 à 15 °F	N/A PSIG		B31.3		No. DESSIN	DESSINS DE REFERENCE

JQ2216.6
Pt G-MAW Action
P1 à P1

Fluide : Diesel End = 5% Rx

U-F.

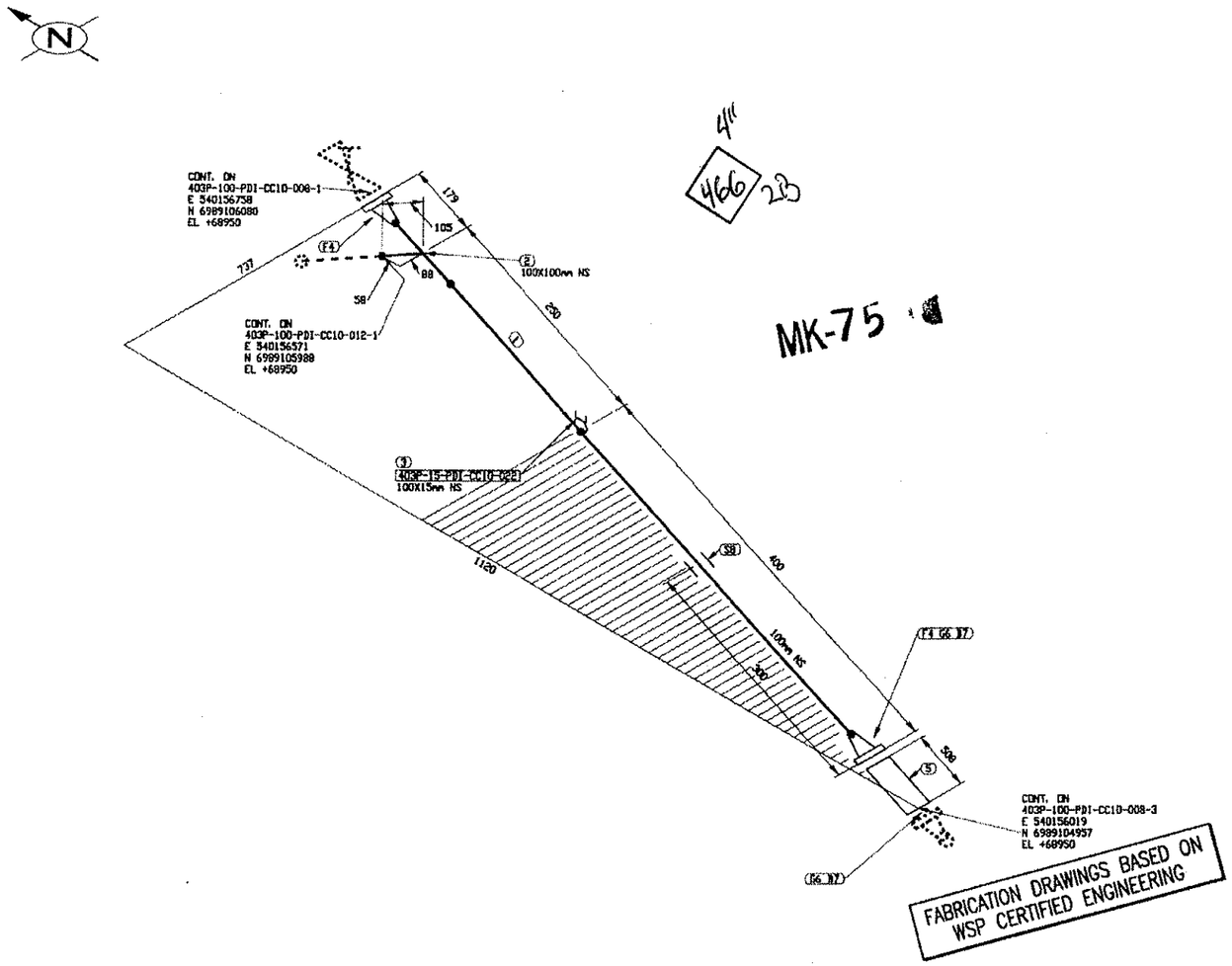

FABRICATION DRAWINGS BASED ON WSP CERTIFIED ENGINEERING

LISTE DE MATERIEL

No	QTE	DIA	MATERIEL/CATALOGUE	DESCRIPTION
1	470 MM	100	A 333 Gr. 6	SCH STD, SMLS PIPE
2	1	100X100	A 420 Gr. WPL6	SCH STD, BW STRAIGHT TEE
3	1	100X15	A 350 Gr. LF2	CL 3000, THREDOLET
4	2	100	A 350 Gr. LF2	CL 150, SCH STD, RF, WN FLANGE
5	1	100		CL 150, SINGLE BRAIDED HOSE ASSEMBLY
6	2	100	ASME B16.20	CL 150, GARLOCK 5500, RING TYPE GASKET 1/8" THK
7	16	16	A 193 B7/A 194 2H	CL 150, 8 - 15.875 X 90 STUD BOLTS c/w TWO HEAVY HEX NUTS
8	1	100		PIPE SUPPORT AS PER DETAIL 3, DWG: 65-403-270-200

CONTRAT UF
2106X20

REÇU le
03 JUIL. 2017
Rép: _____

EN ATELIER LE
04 JUIL. 2017
par: B7

No.	DATE	REVISION	QVN / PAR / APP.
0	2017/06/30	ISSUED FOR CONSTRUCTION	

CLIENT:

AGNICO EAGLE

NUQSANA PROMEC MINING

ultragen

CONSULTANT PROJECT NO. 591700

SCEAU PROFESSIONNEL

CONC.: KHV
DATE: 2017/05/29
DESSINÉ PAR: KVE
DATE: 2017/05/29
VÉR. PAR:
DATE:
APP.:
DATE:
ÉCHELLE: AUCUNE

PROJET: AGNICO EAGLE - MELIADINE DIVISION
403P - COMBUSTIBLE

TITRE: PORTAIL #1
FABRICATION ISOMETRIC
FUEL FROM 65TNK41607 UNLOADING NOZZLE TO 65POD41603B

No PROJET	No DESSIN	PAGES	REV.
6515	403P-100-PDI-CC10-008	2/10	0

NO. DE CONDUITE		SPECIFICATION	PRODUIT	SYSTEME REVETEMENT	CODE DE COULEUR	ISOLATION ET TRACAGE	EPAISS. D'ISOLATION		
403P-100-PDI-CC10-008		CC10	PDI					65-403-270-200	PIPE SUPPORT DETAILS
PRESSION D'OPERATION	TEMPERATURE D'OPERATION	PRESSION DE CONCEPTION	TEMPERATURE DE CONCEPTION	PRESSION D'ESSAI	CLASSE D'INSPECTION	CODE DE SERVICE	TRAITEMENT THERMIQUE	65-403-205-200	P&ID
PSIG	°F	N/A PSIG	10 à 15 °F	N/A PSIG		B31.3		No. DESSIN	DESSINS DE REFERENCE

JQ2216.6
PT G-MAW AC-001
P1 a P1

Fluid Diesel Ende: 5% Rx

U-F

403P-MN-01

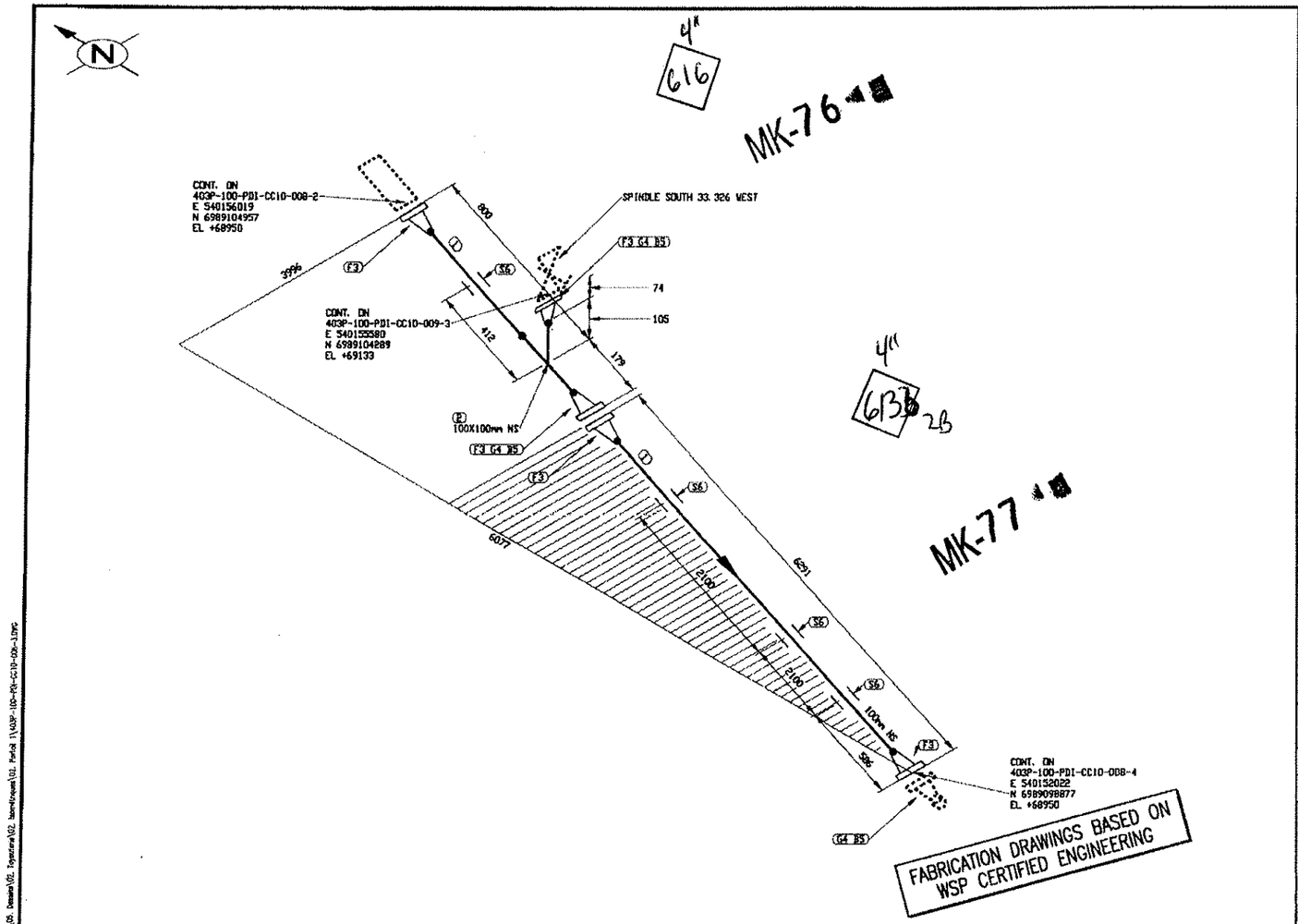

LISTE DE MATERIEL

No	QTE	DIA	MATERIEL/CATALOGUE	DESCRIPTION
1	6761 MM	100	A 333 Gr. 6	SCH STD, SMLS PIPE
2	1	100X100	A 420 Gr. WPL6	SCH STD, BW STRAIGHT TEE
3	5	100	A 350 Gr. LF2	CL 150, SCH STD, RF, WN FLANGE
4	3	100	ASME B16.20	CL 150, GARLOCK 5500, RING TYPE GASKET 1/8" THK
5	24	16	A 193 B7/A 194 2H	CL 150, 8 - 15.875 X 90 STUB BOLTS c/w TWO HEAVY HEX NUTS
6	4	100		PIPE SUPPORT AS PER DETAIL 3, DWG: 65-403-270-200

CONTRAT UI
21.06 X 20

REÇU le
03 JUIL. 2017
Rép: _____

EN ATELIER LE
04 JUIL. 2017
par: [signature]

No.	DATE	REVISION	QVN / PAR / APP.
0	2017/06/30	ISSUED FOR CONSTRUCTION	

CLIENT: AGNICO EAGLE

NUQSANA PROMEC MINING

ultragen

CONSULTANT PROJECT NO. 591700

SCEAU PROFESSIONNEL

CONC.: KHV
DATE: 2017/05/29
DESSINÉ PAR: KVE
DATE: 2017/05/29
VÉR. PAR:
DATE:
APP.:
DATE:
ÉCHELLE: AUCUNE

PROJET: AGNICO EAGLE - MELIADINE DIVISION
403P - COMBUSTIBLE

TITRE: PORTAIL #1
FABRICATION ISOMETRIC
FUEL FROM 65TNK41607 UNLOADING NOZZLE TO 65POD41603B

No PROJET	No DESSIN	PAGES	RÉV.
6515	403P-100-PDI-CC10-008	3/10	0

NO. DE CONDUITE		SPECIFICATION	PRODUIT	SYSTEME REVETEMENT	CODE DE COULEUR	ISOLATION ET TRACAGE	EPAISS. D'ISOLATION		
403P-100-PDI-CC10-008		CC10	PDI					65-403-270-200	PIPE SUPPORT DETAILS
PRESSION D'OPERATION	TEMPERATURE D'OPERATION	PRESSION DE CONCEPTION	TEMPERATURE DE CONCEPTION	PRESSION D'ESSAI	CLASSE D'INSPECTION	CODE DE SERVICE	TRAITEMENT THERMIQUE	65-403-205-200	P&ID
PSIG	°F	N/A PSIG	14 à 15 °F	N/A PSIG		B31.3		No. DESSIN	DESSINS DE REFERENCE

WPRIME LE: Jun 30 2017, 10:10am

Fluide Diesel Cnd = 5% RX

JQ2216.6
Pt GMAW AC001
Pl a Pl

U-F

403P-MN-01

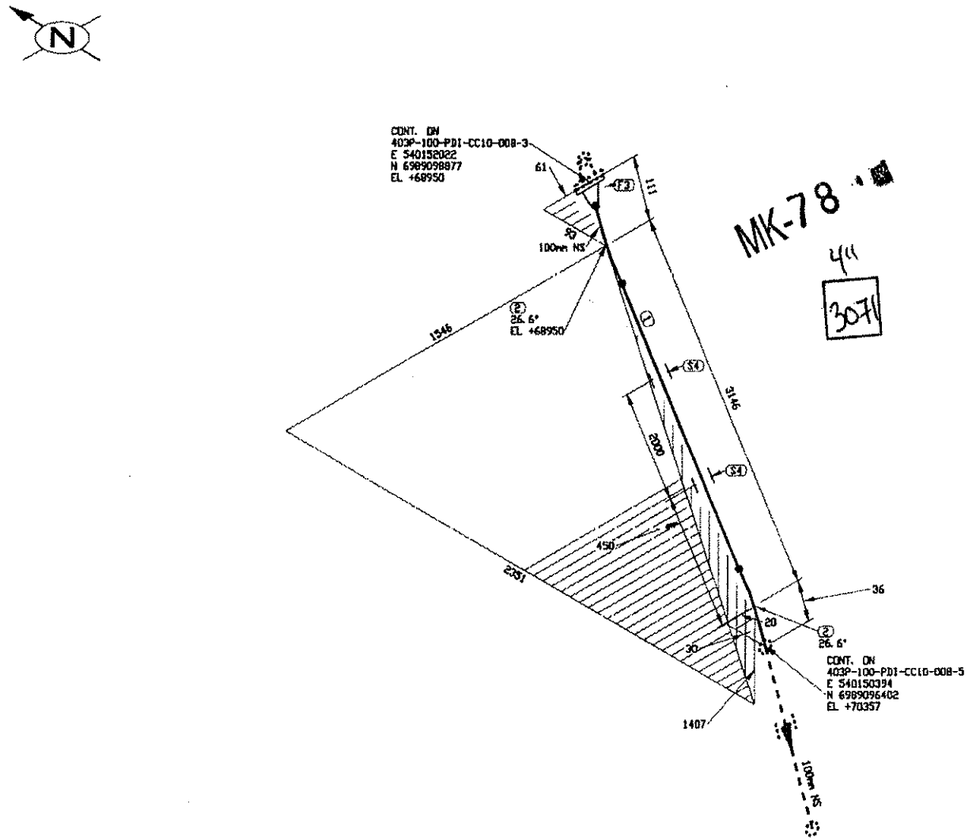

MK-78

4"

3071

FABRICATION DRAWINGS BASED ON WSP CERTIFIED ENGINEERING

JQ2216.6
PT G-MAW AC-001
P1 a P1 RG

A = 44B = 97C = 36

LISTE DE MATERIEL

No	QTE	DIA	MATERIEL/CATALOGUE	DESCRIPTION
1	3074 MM	100	A 333 Gr. 6	SCH STD, SMLS PIPE
2	2	100	A 420 Gr. WPL6	SCH STD, BW LR 45 DEG ELBOW TRIM TO 26.57
3	1	100	A 350 Gr. LF2	CL 150, SCH STD, RF, WN FLANGE
4	2	100		PIPE SUPPORT AS PER DETAIL 3, DWG: 65-403-270-200

CONTRAT UF
21.06 X20

EN ATELIER LE
04 JUIL. 2017
par : BS

REÇU le
03 JUIL. 2017
Rép:

No.	DATE	REVISION	QVN / PAR / APP.
0	2017/06/30	ISSUED FOR CONSTRUCTION	

CLIENT:

AGNICO EAGLE

NUQSANA PROMEC MINING

ultragen

CONSULTANT PROJECT NO. 591700

EN ATELIER LE
04 JUIL. 2017
par : BS

SCEAU PROFESSIONNEL

CONC.: KHV
DATE: 2017/06/29
DESSINE PAR: KVE
DATE: 2017/06/29
VER. PAR:
DATE:
APP.:
DATE:
ÉCHELLE: AUCUNE

PROJET: AGNICO EAGLE - MELIADINE DIVISION
403P - COMBUSTIBLE

TITRE: PORTAIL #1
FABRICATION ISOMETRIC
FUEL FROM 65TNK41607 UNLOADING NOZZLE TO 65POD41603B

No PROJET	No DESSIN	PAGES	REV.
6515	403P-100-PDI-CC10-008	4/10	0

NO. DE CONDUITE		SPECIFICATION	PRODUIT	SYSTEME REVETEMENT	CODE DE COULEUR	ISOLATION ET TRACAGE	EPAISS. D'ISOLATION		
403P-100-PDI-CC10-008		CC10	PDI					65-403-270-200	PIPE SUPPORT DETAILS
PRESSION D'OPERATION	TEMPERATURE D'OPERATION	PRESSION DE CONCEPTION	TEMPERATURE DE CONCEPTION	PRESSION D'ESSAI	CLASSE D'INSPECTION	CODE DE SERVICE	TRAITEMENT THERMIQUE	65-403-205-200	P&ID
PSIG	°F	N/A PSIG	60 °F	N/A PSIG		B31.3		No. DESSIN	DESSINS DE REFERENCE

Diesel

403P-MN-01

U-F

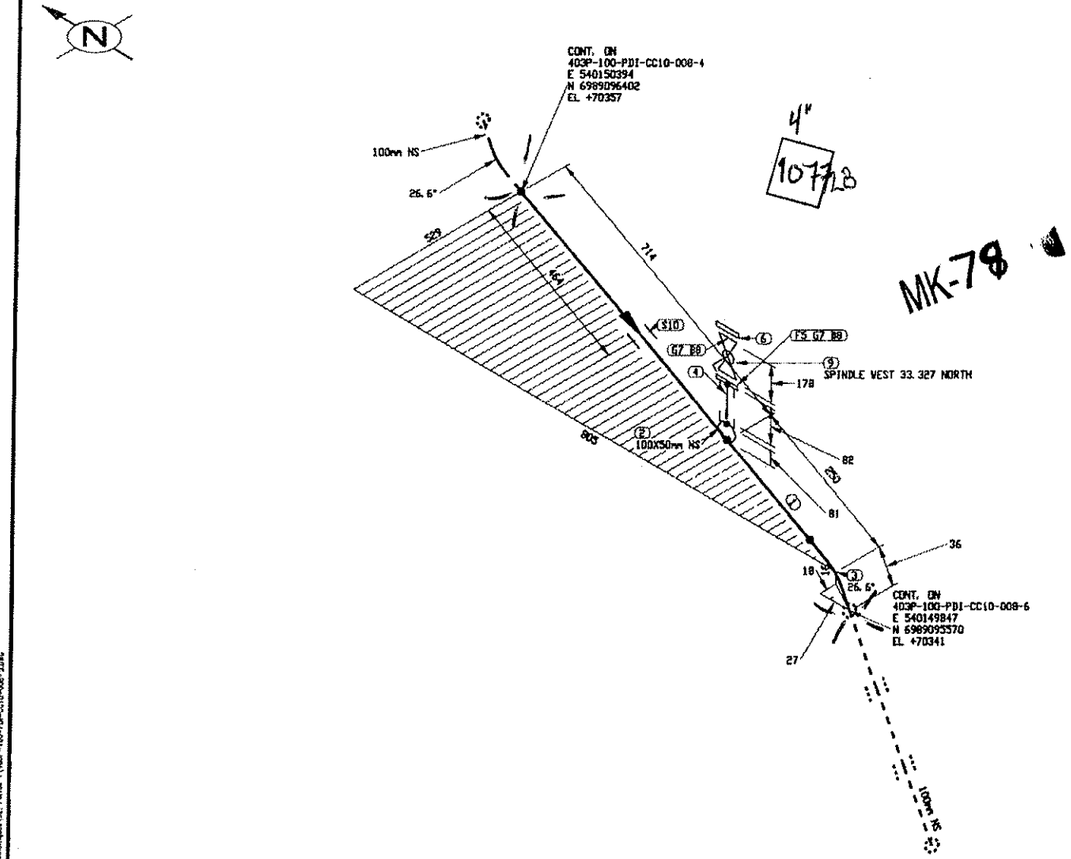

FABRICATION DRAWINGS BASED ON WSP CERTIFIED ENGINEERING

LISTE DE MATERIEL

No	QTE	DIA	MATERIEL/CATALOGUE	DESCRIPTION
1	928 MM	100	A 333 Gr. 6	SCH STD, SMLS PIPE
2	1	100X50	A 350 Gr. LF2	CL 3000, SOCKOLET
3	1	100	A 420 Gr. WPL6	SCH STD, BW LR 45 DEG ELBOW TRIM TO 26.57
4	1	50	A 333 Gr. 6	SCH 80, NIPPLE x 75mm LG PBE
5	1	50	A 350 Gr. LF2	CL 150, SCH 80, RF, SW FLANGE
6	1	50	A 350 Gr. LF2	CL 150, RF, BLIND FLANGE
7	2	50	ASME B16.20	CL 150, GARLOCK 5500, RING TYPE GASKET 1/8" THK
8	8	16	A 193 B7/A 194 2H	CL 150, 4 - 15 875 X 65 STUD BOLTS c/w TWO HEAVY HEX NUTS
9	1	50	BA-31	CL 150, RF, BALL VALVE
10	1	100		PIPE SUPPORT AS PER DETAIL 3, DWG 65-403-270-200

CONTRAT UF
2106X20

REÇU le
03 JUIL. 2017
Rép:

EN ATELIER LE
04 JUIL. 2017
par: BS

No.	DATE	REVISION	QVN / PAR / APP.
0	2017/06/30	ISSUED FOR CONSTRUCTION	

CLIENT: AGNICO EAGLE

NUQSANA PROMEC MINING

ultragen
CONSULTANT PROJECT NO. 591700

SCEAU PROFESSIONNEL

CONC.: KHV
DATE: 2017/05/29
DESSINÉ PAR: KVE
DATE: 2017/05/29
VER. PAR:
DATE:
APP.:
DATE:
ÉCHELLE: AUCUNE

PROJET: AGNICO EAGLE - MELIADINE DIVISION
403P - COMBUSTIBLE

TITRE: PORTAIL #1
FABRICATION ISOMETRIC
FUEL FROM 65TNK41607 UNLOADING NOZZLE TO 6SP0D41603B

No PROJET	No DESSIN	PAGES	REV.
6515	403P-100-PDI-CC10-008	5/10	0

403P-MN-01

NO. DE CONDUITE		SPECIFICATION	PRODUIT	SYSTEME REVETEMENT	CODE DE COULEUR	ISOLATION ET TRACAGE	EPAISS. D'ISOLATION		
403P-100-PDI-CC10-008		CC10	PDI					65-403-270-200	PIPE SUPPORT DETAILS
PRESSION D'OPERATION	TEMPERATURE D'OPERATION	PRESSION DE CONCEPTION	TEMPERATURE DE CONCEPTION	PRESSION D'ESSAI	CLASSE D'INSPECTION	CODE DE SERVICE	TRAITEMENT THERMIQUE	65-403-205-200	P&ID
PSIG	°F	N/A PSIG	60 à 15 °F	N/A PSIG		B31.3		No. DESSIN	DESSINS DE REFERENCE

IMPRIMÉ LE: Jun 30, 2017, 9:46am

Fluide Diesel and 5% BX

U-F

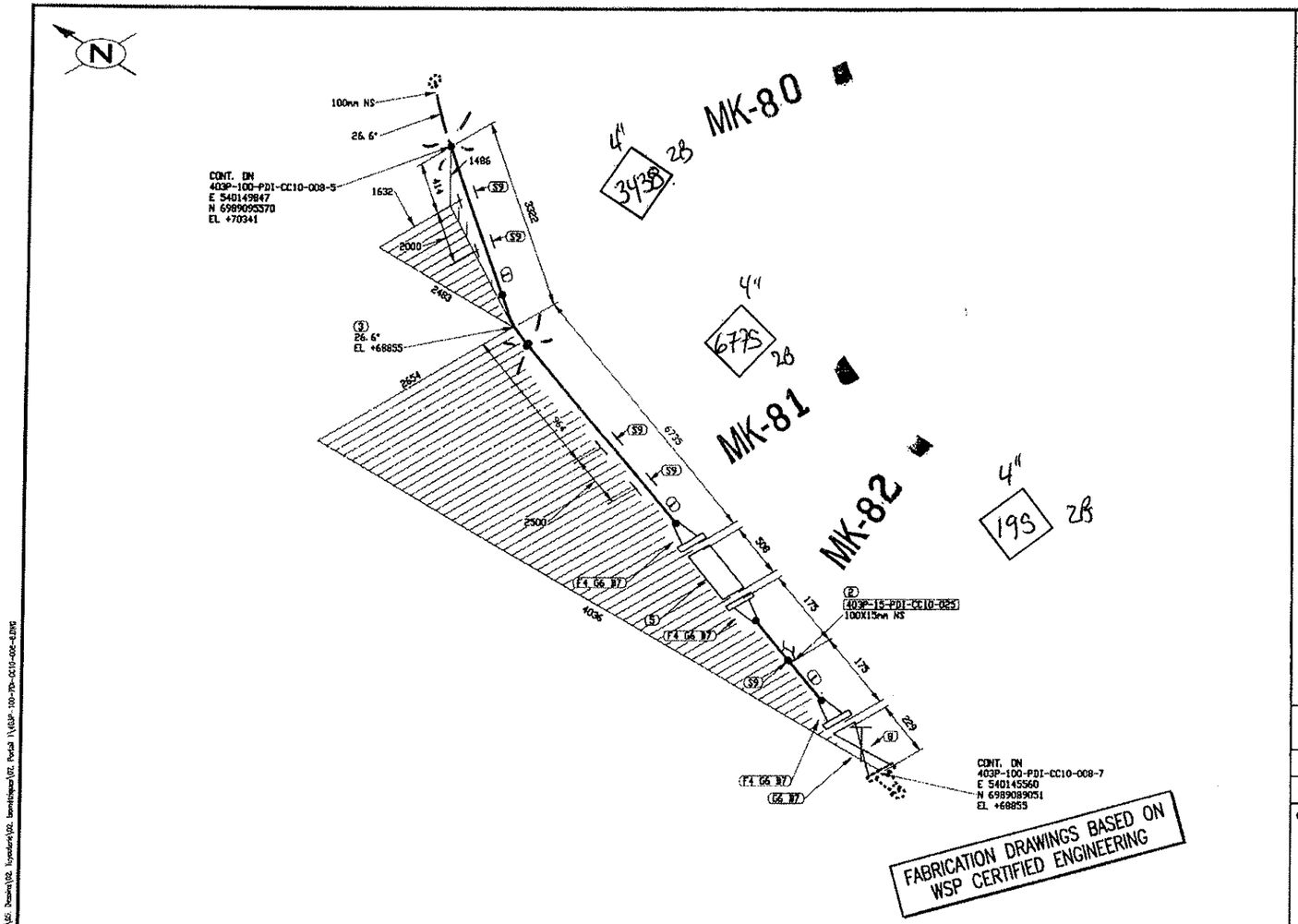

FABRICATION DRAWINGS BASED ON WSP CERTIFIED ENGINEERING

LISTE DE MATERIEL

No	QTE	DIA	MATERIEL/CATALOGUE	DESCRIPTION
1	6952 MM	100	A 333 Gr. 6	SCH STD, SMLS PIPE
2	1	100X15	A 350 Gr. LF2	CL 3000, THREDOLET
3	1	100	A 420 Gr. WPL6	SCH STD, BW LR 45 DEG ELBOW TRIM TO 26.57
4	3	100	A 350 Gr. LF2	CL 150, SCH STD, RF, WN FLANGE
5	1	100		CL 150, SINGLE BRAIDED HOSE ASSEMBLY
6	4	100	ASME B16.20	CL 150, GARLOCK 5500, RING TYPE GASKET 1/8" THK
7	32	16	A 193 B7/A 194 2H	CL 150, 8 - 15.875 X 90 STUD BOLTS c/w TWO HEAVY HEX NUTS
8	1	100	GA-10	CL 150, RF, GATE VALVE
9	5	100		PIPE SUPPORT AS PER DETAIL 3, DWG: 65-403-270-200

CONTRAT U
21.06X20

REÇU le
03 JUIL. 2017
Rép: _____

EN ATELIER LE
04 JUIL. 2017
par : BS

No.	DATE	REVISION	PAR / APP.
0	2017/06/30	ISSUED FOR CONSTRUCTION	QVN

CLIENT:

AGNICO EAGLE

NUQSANA PROMEC MINING

ultragen

CONSULTANT PROJECT NO. 591700

SCEAU PROFESSIONNEL

CONC.: KHY
DATE: 2017/06/28
DESSINÉ PAR: KVE
DATE: 2017/06/28
VÉR. PAR:
DATE:
APP.:
DATE:
ÉCHELLE: AUCUNE

PROJET: AGNICO EAGLE - MELIADINE DIVISION
403P - COMBUSTIBLE

TITRE: PORTAIL #1
FABRICATION ISOMETRIC
FUEL FROM 65TNK41607 UNLOADING NOZZLE TO 65PDD41603B

No PROJET	No DESSIN	PAGES	RÉV.
6515	403P-100-PDI-CC10-008	6/10	0

NO. DE CONDUITE		SPECIFICATION	PRODUIT	SYSTEME REVETEMENT	CODE DE COULEUR	ISOLATION ET TRACAGE	EPAISS. D'ISOLATION		
403P-100-PDI-CC10-008		CC10	PDI					65-403-270-200	PIPE SUPPORT DETAILS
PRESSION D'OPERATION	TEMPERATURE D'OPERATION	PRESSION DE CONCEPTION	TEMPERATURE DE CONCEPTION	PRESSION D'ESSAI	CLASSE D'INSPECTION	CODE DE SERVICE	TRAITEMENT THERMIQUE	65-403-205-200	P&ID
PSIG	°F	N/A PSIG	10 à 15 °F	N/A PSIG		B31.3		No. DESSIN	DESSINS DE REFERENCE

IMPRIMÉ LE: Jun 30, 2017, 9:56am

JQ2216.6
PT GMAW AC-001
P1 a P1 R6

Fluide Diesel

U-F.

403P-MN 01

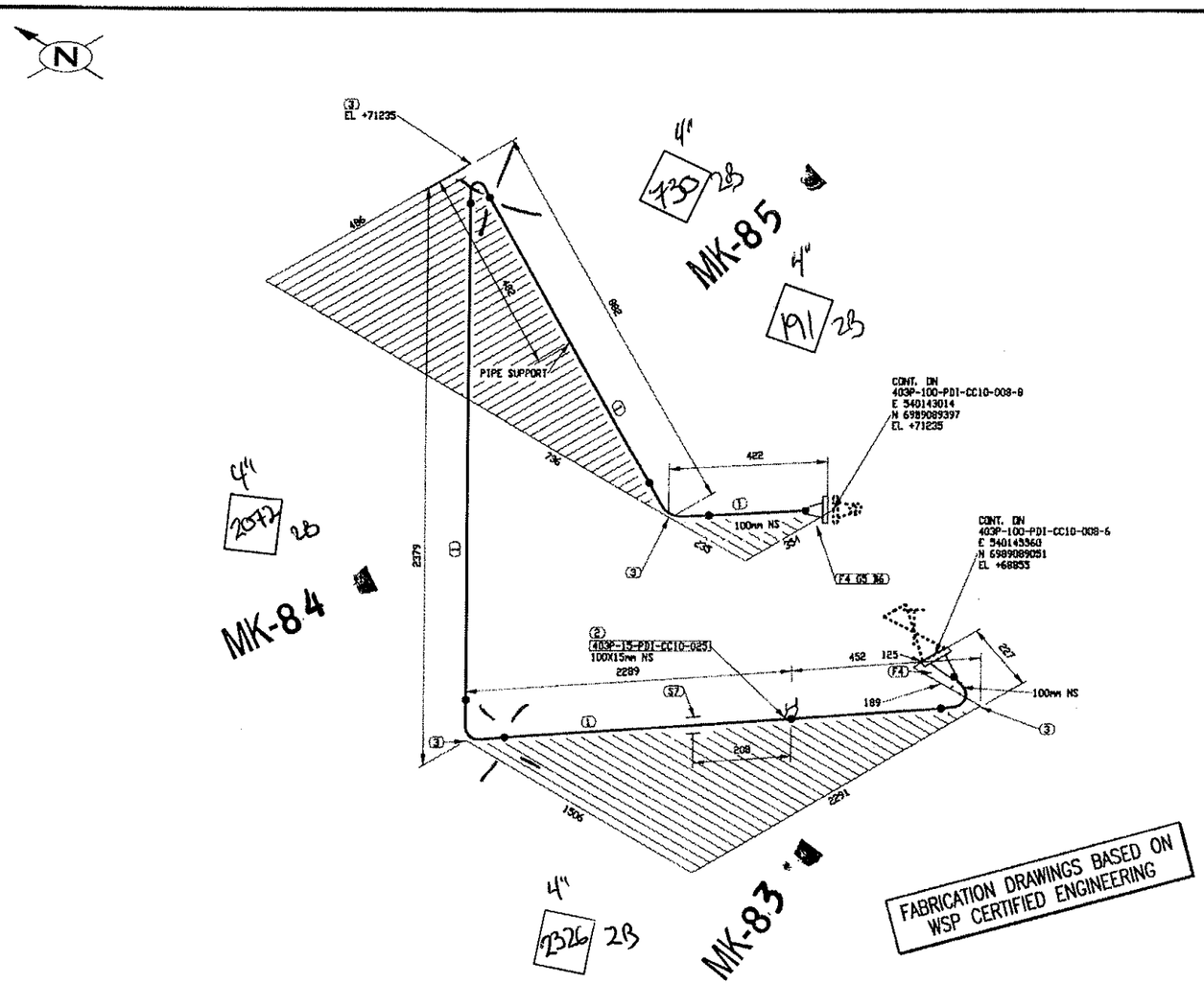

LISTE DE MATERIEL

No	QTE	DIA	MATERIEL/CATALOGUE	DESCRIPTION
1	5285 MM	100	A 333 Gr. 6	SCH STD, SMLS PIPE
2	1	100X15	A 350 Gr. LF2	CL 3000, THREDOLET
3	4	100	A 420 Gr. WPL6	SCH STD, BW LR 90 DEG ELBOW
4	2	100	A 350 Gr. LF2	CL 150, SCH STD, RF, WN FLANGE
5	1	100	ASME B16.20	CL 150, GARLOCK 5500, RING TYPE GASKET 1/8" THK
6	8	16	A 193 B7/A 194 2H	CL 150, 8 - 15.875 X 90 STUD BOLTS c/w TWO HEAVY HEX NUTS
7	1	100		PIPE SUPPORT AS PER DETAIL 3, DWG 65-403-270-200

CONTRAT U
21.06X20

REÇU le
03 JUIL. 2017
Rép:

ENATELIER LE
04 JUIL. 2017
par:

No.	DATE	REVISION	APP.
0	2017/06/30	ISSUED FOR CONSTRUCTION	QVN

CLIENT:

AGNICO EAGLE

NUQSANA PROMEC MINING

ultragen

CONSULTANT PROJECT NO. 591700

SCEAU PROFESSIONNEL

CONC.: KHV
DATE: 2017/05/28
DESSINÉ PAR: KVE
DATE: 2017/06/28
VÉR. PAR:
DATE:
APP.:
DATE:
ÉCHELLE: AUCUNE

PROJET: AGNICO EAGLE - MEL1ADINE DIVISION
403P - COMBUSTIBLE

TITRE: PORTAIL #1
FABRICATION ISOMETRIC
FUEL FROM 65TNK41607 UNLOADING NOZZLE TO 65PUD41603B

No PROJET	No DESSIN	PAGES	REV.
6515	403P-100-PDI-CC10-008	7/10	0

403P-MAN-01

NO. DE CONDUITE		SPECIFICATION	PRODUIT	SYSTEME REVETEMENT	CODE DE COULEUR	ISOLATION ET TRAÇAGE	EPAISS. D'ISOLATION		
403P-100-PDI-CC10-008		CC10	PDI					65-403-270-200	PIPE SUPPORT DETAILS
PRESSION D'OPERATION	TEMPERATURE D'OPERATION	PRESSION DE CONCEPTION	TEMPERATURE DE CONCEPTION	PRESSION D'ESSAI	CLASSE D'INSPECTION	CODE DE SERVICE	TRAITEMENT THERMIQUE	65-403-205-200	P&ID
PSIG	°F	NA PSIG	10 à 15 °F	NA PSIG		B31.3		No. DESSIN	DESSINS DE REFERENCE

IMPRIMÉ LE: Jun 30, 2017, 12:00pm

J:\2216.6 GMAW-AC-01 P1 à P1 R6

Fluid Diesel Cnd = 5% Rx

U-F

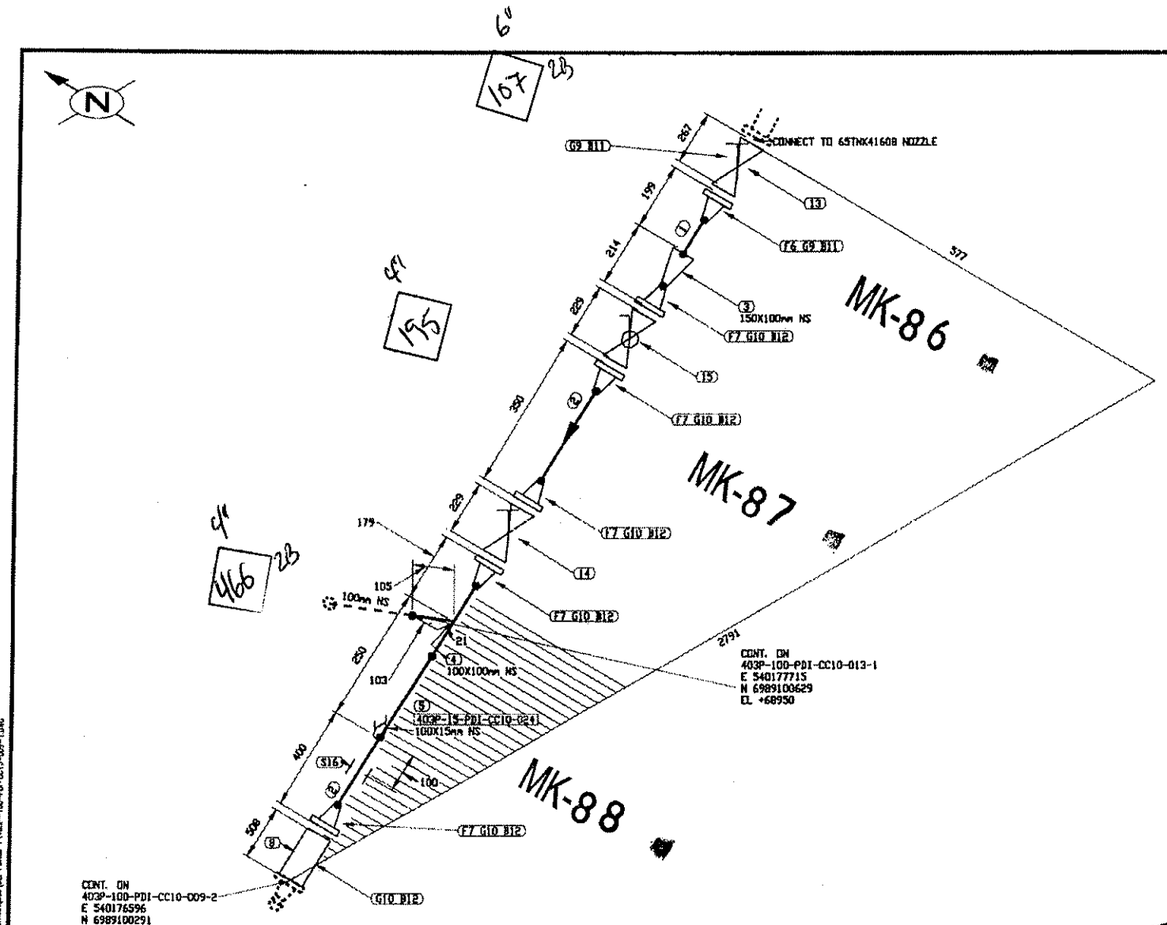

LISTE DE MATERIEL

No	QTE	DIA	MATERIEL/CATALOGUE	DESCRIPTION
1	112 MM	150	A 333 Gr. 6	SCH STD, SMLS PIPE
2	671 MM	100	A 333 Gr. 6	SCH STD, SMLS PIPE
3	1	150X100	A 420 Gr. WPL6	SCH STD, BW CONC RED
4	1	100X100	A 420 Gr. WPL6	SCH STD, BW STRAIGHT TEE
5	1	100X15	A 350 Gr. LF2	CL 3000, THREDOLET
6	1	150	A 350 Gr. LF2	CL 150, SCH STD, RF, WN FLANGE
7	5	100	A 350 Gr. LF2	CL 150, SCH STD, RF, WN FLANGE
8	1	100		CL 150, SINGLE BRAIDED HOSE ASSEMBLY
9	2	150	ASME B16.20	CL 150, GARLOCK 5500, RING TYPE GASKET 1/8" THK
10	6	100	ASME B16.20	CL 150, GARLOCK 5500, RING TYPE GASKET 1/8" THK
11	16	19	A 193 B7/A 194 2H	CL 150, 8 - 19.05 X 100 STUD BOLTS c/w TWO HEAVY HEX NUTS
12	48	16	A 193 B7/A 194 2H	CL 150, 8 - 15.875 X 90 STUD BOLTS c/w TWO HEAVY HEX NUTS
13	1	150	GA-10	CL 150, RF, GATE VALVE
14	1	100	GA-10	CL 150, RF, GATE VALVE
15	1	100	BA-31	CL 150, RF, BALL VALVE
16	1	100		PIPE SUPPORT AS PER DETAIL 3, DWG 65-403-270-200

CONTRAT U
21.06x20

REÇU le
03 JUIL. 2017
Rép:

EN ATELIER LE
04 JUIL. 2017
par:

FABRICATION DRAWINGS BASED ON WSP CERTIFIED ENGINEERING

No.	DATE	REVISION	
0	2017/06/30	ISSUED FOR CONSTRUCTION	QVN
			PAR
			APP.

CLIENT: AGNICO EAGLE

NUQSANA PROMEC MINING

Ultragen
CONSULTANT PROJECT NO. 591700

SCEAU PROFESSIONNEL

CONC.: KHV
DATE: 2017/05/29
DESSINÉ PAR: KVE
DATE: 2017/05/29
VER. PAR:
DATE:
APP.:
DATE:
ÉCHELLE: AUCUNE

PROJET: AGNICO EAGLE - MELIADINE DIVISION
403P - COMBUSTIBLE

TITRE: PORTAIL #1
FABRICATION ISOMETRIC
FUEL FROM 65TNK41608 UNLOADING NEZZLE TO 403P-100-PDI-CC10-008

No PROJET	No DESSIN	PAGES	REV.
6515	403P-100-PDI-CC10-009	1/3	0

403P-MN-01

NO. DE CONDUITE		SPECIFICATION	PRODUIT	SYSTEME REVETEMENT	CODE DE COULEUR	ISOLATION ET TRACAGE	EPAISS. D'ISOLATION		
403P-100-PDI-CC10-009		CC10	PDI					65-403-270-200	PIPE SUPPORT DETAILS
PRESSION D'OPERATION	TEMPERATURE D'OPERATION	PRESSION DE CONCEPTION	TEMPERATURE DE CONCEPTION	PRESSION D'ESSAI	CLASSE D'INSPECTION	CODE DE SERVICE	TRAITEMENT THERMIQUE	65-403-205-200	P&ID
PSIG	°F	NA PSIG	140/15 °F	MA PSIG		B31.3		No. DESSIN	DESSINS DE REFERENCE

IMPRIMÉ LE: Jun 30, 2017, 10:47am

JQ2216.6
RT GMAW + FCAW
P1 à P1 AG

Fluide Diesel - Cat 590 Rx

U - F.

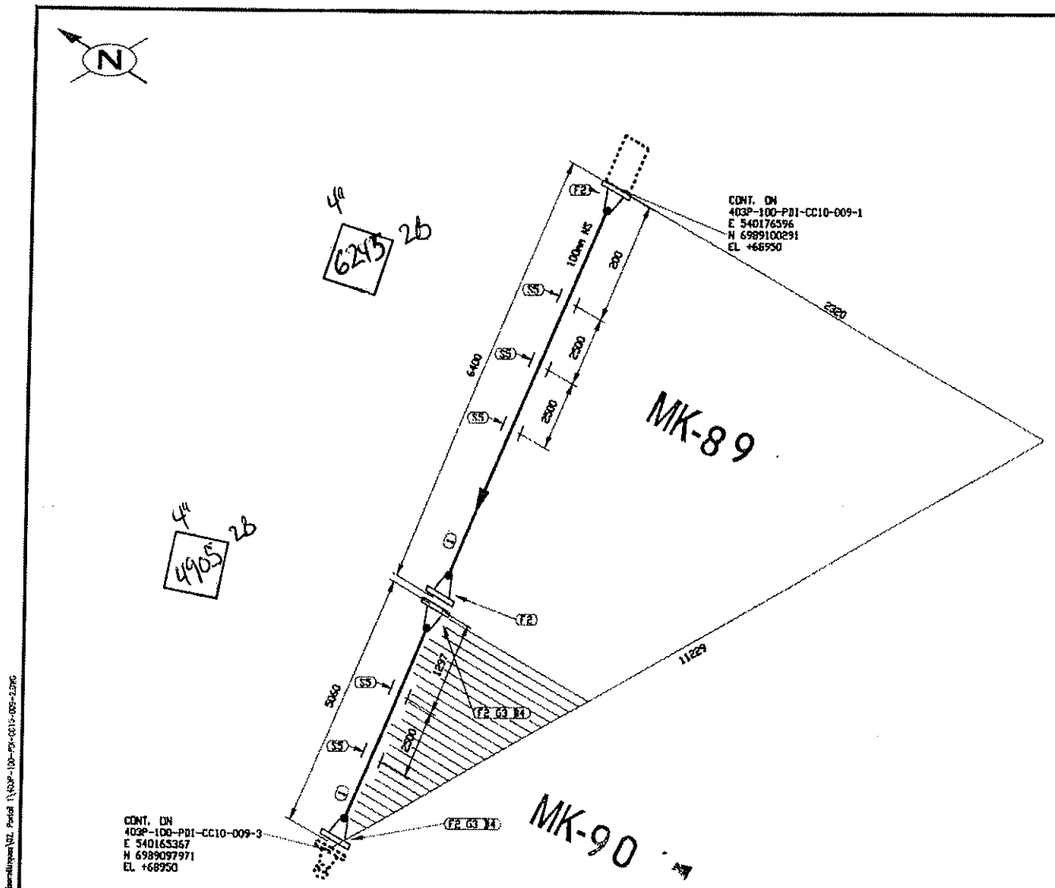

FABRICATION DRAWINGS BASED ON WSP CERTIFIED ENGINEERING

LISTE DE MATERIEL

No	QTE	DIA	MATERIEL/CATALOGUE	DESCRIPTION
1	11161 MM	100	A 333 Gr. 6	SCH STD, SMLS PIPE
2	4	100	A 350 Gr. LF2	CL 150, SCH STD, RF, WN FLANGE
3	2	100	ASME B16.20	CL 150, GARLOCK 5500, RING TYPE GASKET 1/8" THK
4	16	16	A 193 B7/A 194 2H	CL 150, 8 - 15.875 X 90 STUD BOLTS c/w TWO HEAVY HEX NUTS
5	5	100		PIPE SUPPORT AS PER DETAIL 3, DWG 65-403-270-200

CONTRAT U
2106X20

REÇU le
03 JUIL. 2017
Rép: _____

EN ATELIER LE
04 JUIL. 2017
par : BS

No.	DATE	REVISION	QVN / PAR / APP.
0	2017/06/30	ISSUED FOR CONSTRUCTION	QVN

CLIENT:

AGNICO EAGLE

NUQSANA PROMEC MINING

ultragen

CONSULTANT PROJECT NO. 591700

SCEAU PROFESSIONNEL

CONC.: KHV
DATE: 2017/05/29
DESSINÉ PAR: KVE
DATE: 2017/05/29
VÉR. PAR:
DATE:
APP.:
DATE:
ÉCHELLE: AUCUNE

PROJET: AGNICO EAGLE - MELIADINE DIVISION
403P - COMBUSTIBLE

TITRE: PORTAIL #1
FABRICATION ISOMETRIC
FUEL FROM 65TNK41608 UNLOADING NOZZLE TO 403P-100-PDI-CC10-008

No PROJET	No DESSIN	PAGES	REV.
6515	403P-100-PDI-CC10-009	2/3	0

NO. DE CONDUITE		SPECIFICATION	PRODUIT	SYSTEME REVETEMENT	CODE DE COULEUR	ISOLATION ET TRACAGE	EPAISS. D'ISOLATION		
403P-100-PDI-CC10-009		CC10	PDI					65-403-270-200	PIPE SUPPORT DETAILS
PRESSION D'OPERATION	TEMPERATURE D'OPERATION	PRESSION DE CONCEPTION	TEMPERATURE DE CONCEPTION	PRESSION D'ESSAI	CLASSE D'INSPECTION	CODE DE SERVICE	TRAITEMENT THERMIQUE	65-403-205-200	P&ID
PSIG	°F	NA PSIG	10 à 15 °F	NA PSIG		B31.3°		No. DESSIN	DESSINS DE REFERENCE

JQ2216.6
GMAW
P1 a P1

Fluide Diesel Cad 5% AX

U-F.

403P-MN-01

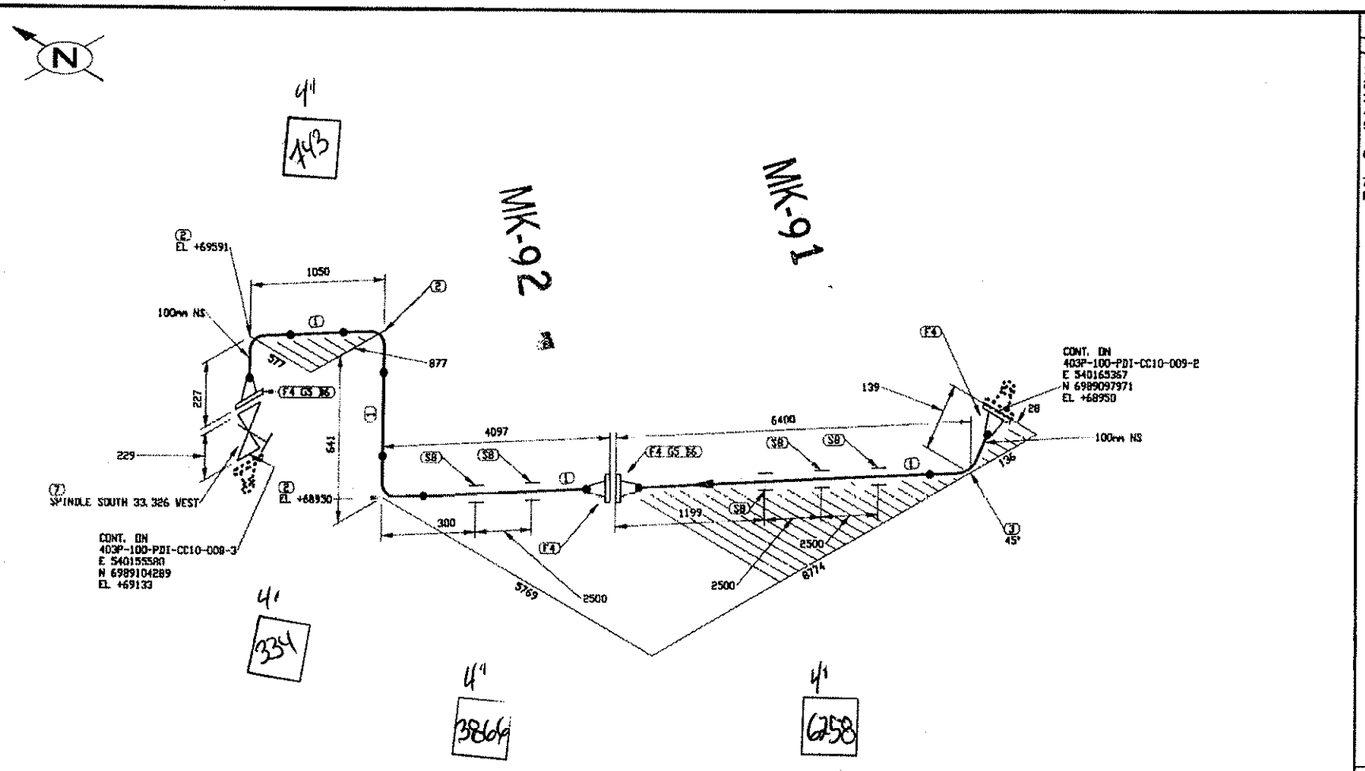

FABRICATION DRAWINGS BASED ON WSP CERTIFIED ENGINEERING

LISTE DE MATERIEL

No	QTE	DIA	MATERIEL/CATALOGUE	DESCRIPTION
1	11216 MM	100	A 333 Gr. 6	SCH STD, SMLS PIPE
2	3	100	A 420 Gr. WPL6	SCH STD, BW LR 90 DEG ELBOW
3	1	100	A 420 Gr. WPL6	SCH STD, BW LR 45 DEG ELBOW
4	4	100	A 350 Gr. LF2	CL 150, SCH STD, RF, WN FLANGE
5	2	100	ASME B16.20	CL 150, GARLOCK 5500, RING TYPE GASKET 1/8" THK
6	16	16	A 193 B7/A 194 2H	CL 150, 8 - 15.875 X 90 STUD BOLTS c/w TWO HEAVY HEX NUTS
7	1	100	GA-10	CL 150, RF, GATE VALVE
8	5	100		PIPE SUPPORT AS PER DETAIL 3. DWG: 65-403-270-200

CONTRAT
21.06 X20

REÇU le
03 JUIL. 2017
Rép: _____

EN ATELIER LE
04 JUIL. 2017
par: BS

No.	DATE	REVISION	QVN / PAR / APP.
0	2017/06/30	ISSUED FOR CONSTRUCTION	QVN

CLIENT:

AGNICO EAGLE

NUQSANA PROMEC MINING

ultragen

CONSULTANT PROJECT NO. 591700

SCEAU PROFESSIONNEL

CONC.: KHV
DATE: 2017/05/29
DESSINÉ PAR: KVE
DATE: 2017/05/29
VÉR. PAR:
DATE:
APP.:
DATE:
ÉCHELLE: AUCUNE

PROJET: AGNICO EAGLE - MELIADINE DIVISION
403P - COMBUSTIBLE

TITRE: PORTAIL #1
FABRICATION ISOMETRIC
FUEL FROM 65TNK41608 UNLOADING NOZZLE TO 403P-100-PDI-CC10-008

No PROJET	No DESSIN	PAGES	REV.
6515	403P-100-PDI-CC10-009	3/3	0

NO. DE CONDUITE		SPECIFICATION	PRODUIT	SYSTEME REVETEMENT	CODE DE COULEUR	ISOLATION ET TRACAGE	EPAISS. D'ISOLATION		
403P-100-PDI-CC10-009		CC10	PDI					65-403-270-200	PIPE SUPPORT DETAILS
PRESSION D'OPERATION	TEMPERATURE D'OPERATION	PRESSION DE CONCEPTION	TEMPERATURE DE CONCEPTION	PRESSION D'ESSAI	CLASSE D'INSPECTION	CODE DE SERVICE	TRAITEMENT THERMIQUE	65-403-205-200	P&ID
PSIG	°F	N/A PSIG	1ac 15 °F	N/A PSIG		B31.3		No. DESSIN	DESSINS DE REFERENCE

JQ2216.6
P+ G-MAW AC-001 R6
P1 a P1

Fluide Diesel End 5% LX

U-F

403P-MN-01

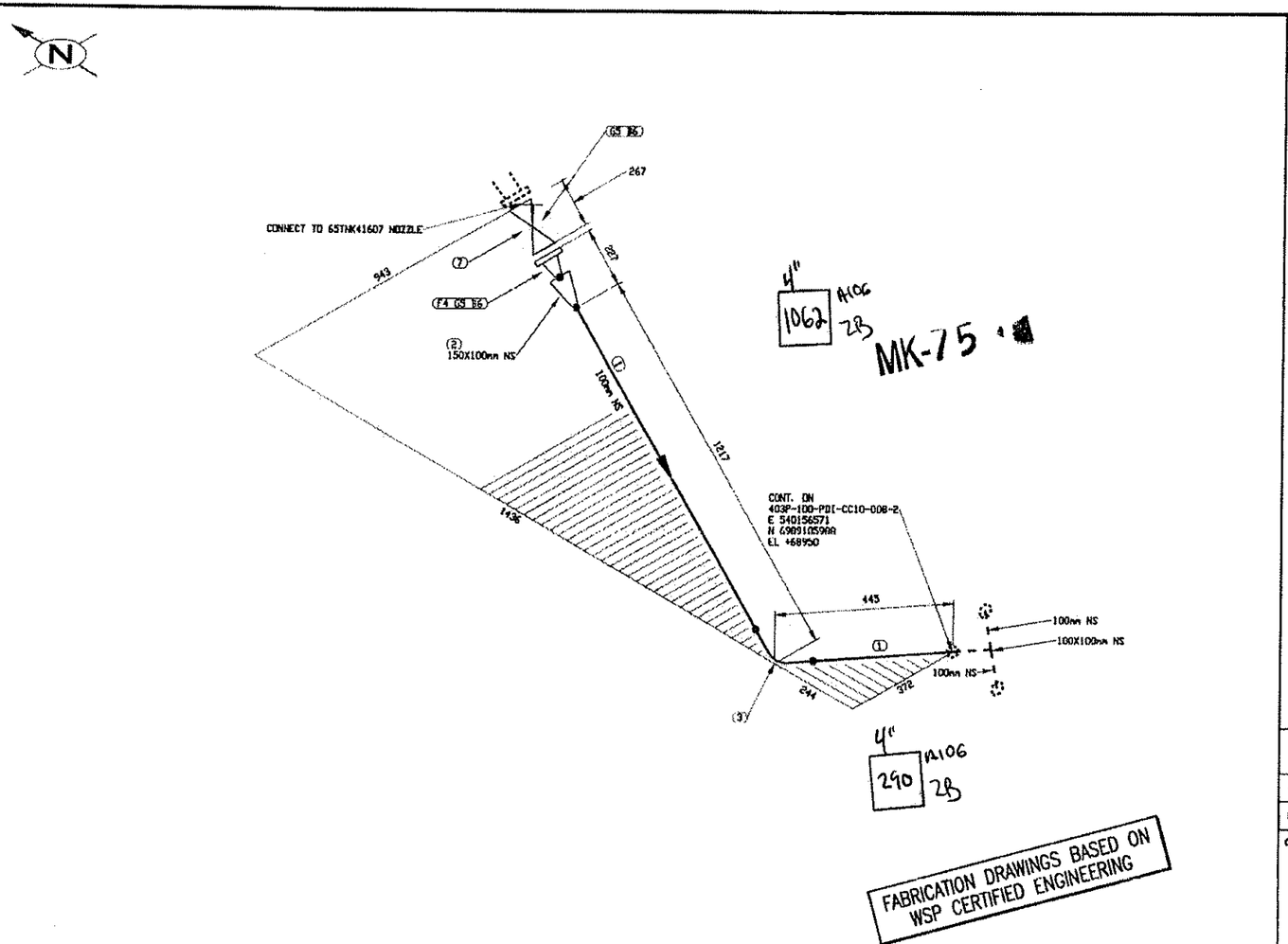

LISTE DE MATERIEL

No	QTE	DIA	MATERIEL/CATALOGUE	DESCRIPTION
1	1358 MM	100	A 333 Gr. 6	SCH STD, SMLS PIPE
2	1	150X100	A 420 Gr. WPL6	SCH STD, BW CONC RED
3	1	100	A 420 Gr. WPL6	SCH STD, BW LR 90 DEG ELBOW
4	1	150	A 350 Gr. LF2	CL 150, SCH STD, RF, WN FLANGE
5	2	150	ASME B16.20	CL 150, GARLOCK 5500, RING TYPE GASKET 1/8" THK
6	16	19	A 193 B7/A 194 2H	CL 150, 8 - 19.05 X 100 STUD BOLTS c/w TWO HEAVY HEX NUTS
7	1	150	GA-10	CL 150, RF, GATE VALVE

CONTRAT UF
21.06 X20

REÇU le
03 JUIL. 2017
Rép: _____

EN ATELIER LE
04 JUIL. 2017
par: BS

No.	DATE	REVISION	PAR / APP.
0	2017/06/30	ISSUED FOR CONSTRUCTION	QVN

CLIENT:

AGNICO EAGLE

NUQSANA PROMEC MINING

ultragen

CONSULTANT PROJECT NO. 591700

SCEAU PROFESSIONNEL

CONC.: KHV
DATE: 2017/06/30
DESSINÉ PAR: KVE
DATE: 2017/06/28
VÉR. PAR:
DATE:
APP.:
DATE:
ÉCHELLE: AUCUNE

PROJET: AGNICO EAGLE - MELIADINE DIVISION
403P - COMBUSTIBLE

TITRE: PORTAIL #1
FABRICATION ISOMETRIC
FUEL FROM 65TNK-41607 NOZZLE TO 403P-100-PDI-CC10-008

No PROJET	No DESSIN	PAGES	REV.
6515	403P-100-PDI-CC10-012	1/1	0

NO. DE CONDUITE		SPECIFICATION	PRODUIT	SYSTEME REVETEMENT	CODE DE COULEUR	ISOLATION ET TRACAGE	EPAISS. D'ISOLATION		
403P-100-PDI-CC10-012		CC10	PDI					65-403-270-200	PIPE SUPPORT DETAILS
PRESSION D'OPERATION	TEMPERATURE D'OPERATION	PRESSION DE CONCEPTION	TEMPERATURE DE CONCEPTION	PRESSION D'ESSAI	CLASSE D'INSPECTION	CODE DE SERVICE	TRAITEMENT THERMIQUE	65-403-205-200	P&ID
PSIG	°F	NA PSIG	10 à 15 °F	N/A PSIG		B 31.3		No. DESSIN	DESSINS DE REFERENCE

JQ2216.6
Pt G-MAUTAC-001
Pl a Pl

Fluide Diesel End 5% Rx

U-F.

403P-MN-01

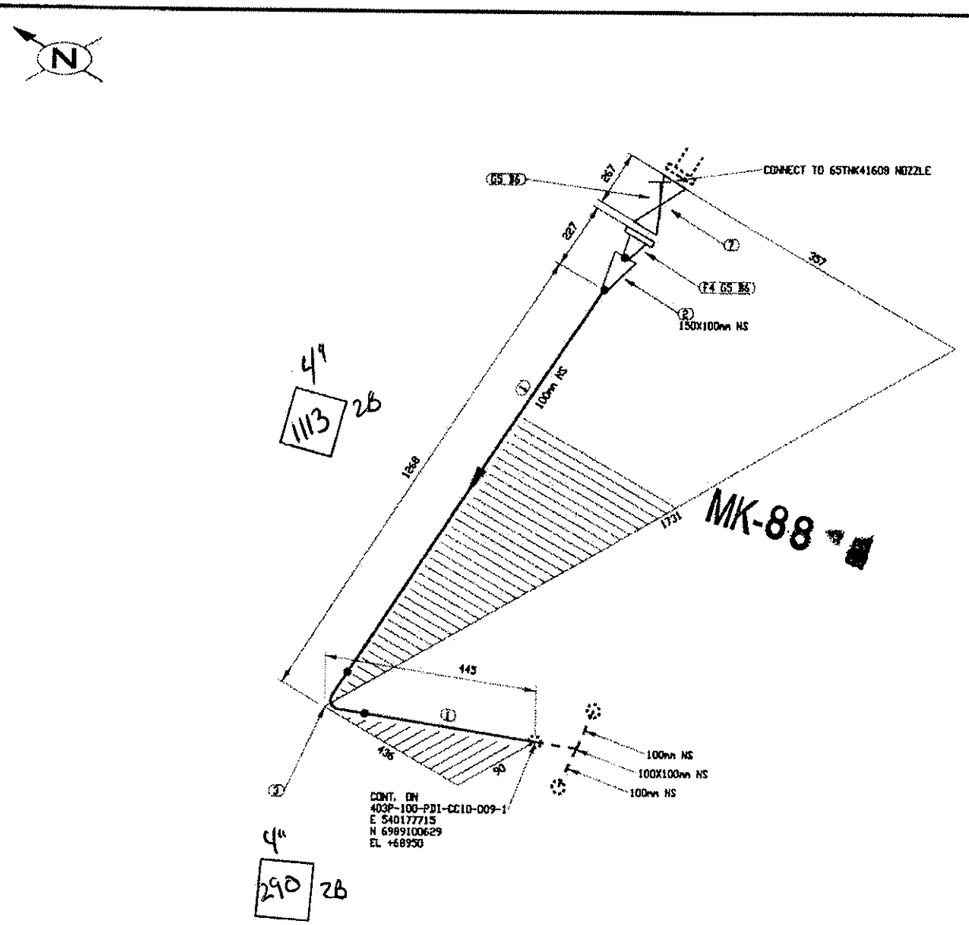

FABRICATION DRAWINGS BASED ON WSP CERTIFIED ENGINEERING

LISTE DE MATERIEL

No	QTE	D/A	MATERIEL/CATALOGUE	DESCRIPTION
1	1409 KM	100	A 333 Gr. 6	SCH STD, SMLS PIPE
2	1	150X100	A 420 Gr. WPL6	SCH STD, BW CONC RED
3	1	100	A 420 Gr. WPL6	SCH STD, BW LR 90 DEG ELBOW
4	1	150	A 350 Gr. LF2	CL 150, SCH STD, RF, WN FLANGE
5	2	150	ASME B16.20	CL 150, GARLOCK 5500, RING TYPE GASKET 1/8" THK
6	16	19	A 193 B7/A 194 2H	CL 150, 8 - 19.05 X 100 STUD BOLTS c/w TWO HEAVY HEX NUTS
7	1	150	GA-10	CL 150, RF, GATE VALVE

CONTRAT UF
21.06X20

REÇU le
03 JUIL. 2017
Rép: _____

EN ATELIER I
04 JUIL. 2017
par : BS

No.	DATE	REVISION	PAR / APP.
0	2017/06/30	ISSUED FOR CONSTRUCTION	QVN

CLIENT: AGNICO EAGLE

NUQSANA PROMEC MINING

ultragen

CONSULTANT PROJECT NO. 591700

SCEAU PROFESSIONNEL

CONC.: KHV DATE: 2017/05/29
DESSINÉ PAR: KVE DATE: 2017/05/29
VÉR. PAR: DATE:
APP.: DATE:
ÉCHELLE: AUCUNE

PROJET: AGNICO EAGLE - MELIADINE DIVISION
403P - COMBUSTIBLE

TITRE: PORTAIL #1
FABRICATION ISOMETRIC
FUEL FROM 65TNK41608 TO 403P-100-PDI-CC10-009

No PROJET	No DESSIN	PAGES	RÉV.
6515	403P-100-PDI-CC10-013	1/1	0

403P-MN-01

NO. DE CONDUITE		SPECIFICATION	PRODUIT	SYSTEME REVETEMENT	CODE DE COULEUR	ISOLATION ET TRACAGE	EPAISS. D'ISOLATION		
403P-100-PDI-CC10-013		CC10	PDI					65-403-270-200	PIPE SUPPORT DETAILS
PRESSION D'OPERATION	TEMPERATURE D'OPERATION	PRESSION DE CONCEPTION	TEMPERATURE DE CONCEPTION	PRESSION D'ESSAI	CLASSE D'INSPECTION	CODE DE SERVICE	TRAITEMENT THERMIQUE	65-403-205-200	P&ID
— PSIG	— °F	NA PSIG	10 à 15 °F	NA PSIG	5% RX	B31.3		No. DESSIN	DESSINS DE REFERENCE

Fluide Diesel

JQ2216.6
Pt GMAW AC 1001
P1 à P1
RC

U-F

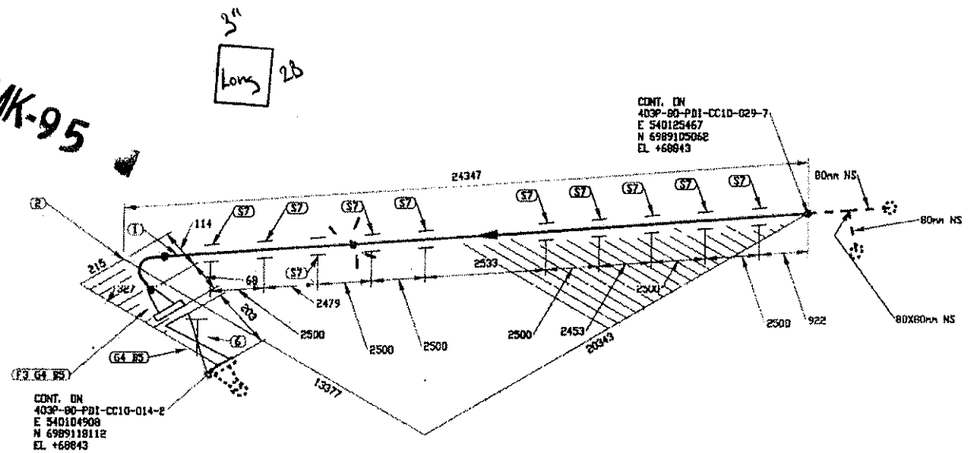

LISTE DE MATERIEL

No	QTE	DIA	MATERIEL/CATALOGUE	DESCRIPTION
1	24233 MM	80	A 333 Gr. 6	SCH STD, SMLS PIPE
2	1	80	A 420 Gr. WPL6	SCH STD, BW LR 90 DEG ELBOW
3	1	80	A 350 Gr. LF2	CL 150, SCH STD, RF, WN FLANGE
4	2	80	ASME B16.20	CL 150, GARLOCK 3500, RING TYPE GASKET 1/8" THK
5	8	16	A 193 B7/A 194 2H	CL 150, 4 - 15.875 X 90 STUD BOLTS c/w TWO HEAVY HEX NUTS
6	1	80	GA-10	CL 150, RF, GATE VALVE
7	10	80		PIPE SUPPORT AS PER DETAIL 3, DWG 65-403-270-200

CONTRAT
21.06X20

REÇU le
03 JUIL. 2017
Rép:

EN ATELIER LE
04 JUIL. 2017
par: B7

No.	DATE	REVISION	QVN / PAR / APP.
0	2017/06/30	ISSUED FOR CONSTRUCTION	

FABRICATION DRAWINGS BASED ON WSP CERTIFIED ENGINEERING

CLIENT: AGNICO EAGLE

NUQSANA PROMEC MINING

ultragen

CONSULTANT PROJECT NO. 591700

SCEAU PROFESSIONNEL

CONC.: KHV
DATE: 2017/05/29
DESSINE PAR: KVE
DATE: 2017/05/29
VÉR. PAR:
DATE:
APP.:
DATE:
ÉCHELLE: AUCUNE

PROJET: AGNICO EAGLE - MELIADINE DIVISION
403P - COMBUSTIBLE

TITRE: PORTAIL #1
FABRICATION ISOMETRIC
FUEL FROM 403P-80-PDI-CC10-029 TO 65TNK41610

No PROJET	No DESSIN	PAGES	REV.
6515	403P-80-PDI-CC10-014	1/2	0

403P-MN-01

NO. DE CONDUITE		SPECIFICATION	PRODUIT	SYSTEME REVETEMENT	CODE DE COULEUR	ISOLATION ET TRACAGE	EPAISS. D'ISOLATION		
403P-80-PDI-CC10-014		CC10	PDI	no	-			65-403-270-200	PIPE SUPPORT DETAILS
PRESSION D'OPERATION	TEMPERATURE D'OPERATION	PRESSION DE CONCEPTION	TEMPERATURE DE CONCEPTION	PRESSION D'ESSAI	CLASSE D'INSPECTION	CODE DE SERVICE	TRAITEMENT THERMIQUE	65-403-205-200	P&ID
— PSIG	⁀ °F	NA PSIG	1a à 15 °F	NA PSIG	5%RX	B31.3		No. DESSIN	DESSINS DE REFERENCE

IMPRIMÉ LE: Jun 20, 2017 4:41pm

JQ2216.6
GMAW/FCAW
P1 a P1

Fluide Diesel

U-F

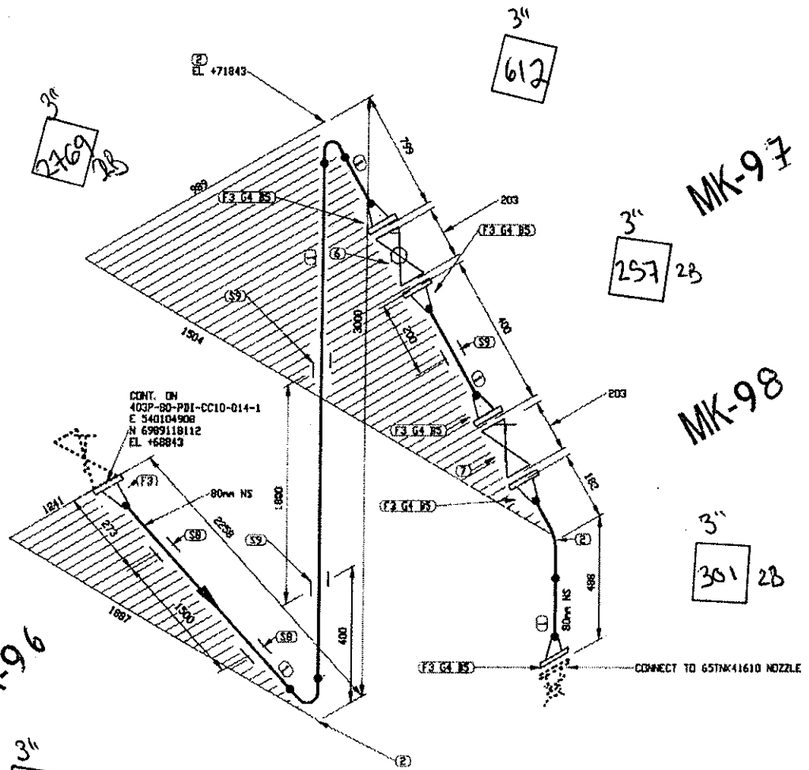

FABRICATION DRAWINGS BASED ON WSP CERTIFIED ENGINEERING

LISTE DE MATERIEL

No	QTE	DIA	MATERIEL/CATALOGUE	DESCRIPTION
1	6033 MM	80	A 333 Gr. 6	SCH STD, SMLS PIPE
2	3	80	A 420 Gr. WPL6	SCH STD, BW LR 90 DEG ELBOW
3	6	80	A 350 Gr. LF2	CL 150, SCH STD, RF, WN FLANGE
4	5	80	ASME B16.20	CL 150, GARLOCK 5500, RING TYPE GASKET 1/8" THK
5	20	16	A 193 B7/A 194 2H	CL 150, 4 - 15.875 X 90 STUD BOLTS c/w TWO HEAVY HEX NUTS
6	1	80	BA-31	CL 150, RF, BALL VALVE
7	1	80	GA-10	CL 150, RF, GATE VALVE
8	2	80		PIPE SUPPORT AS PER DETAIL 3, DWG 65-403-270-200
9	3	80		PIPE SUPPORT BY CONTRACTOR

CONTRAT U
21.06×20

REÇU le
03 JUIL. 2017
Rép:

ENATELIER
04 JUIL. 2017
par: BS

No.	DATE	REVISION	APP.
0	2017/06/30	ISSUED FOR CONSTRUCTION	QVN

CLIENT: AGNICO EAGLE

NUQSANA PROMEC MINING

ultragen

CONSULTANT PROJECT NO. 591700

SCEAU PROFESSIONNEL

NO. DE CONDUITE	SPECIFICATION	PRODUIT	SYSTEME REVETEMENT	CODE DE COULEUR	ISOLATION ET TRAÇAGE	EPAISS. D'ISOLATION		
403P-80-PDI-CC10-014	CC10	PDI		-			65-403-270-200	PIPE SUPPORT DETAILS
PRESSION D'OPERATION / TEMPERATURE D'OPERATION	PRESSION DE CONCEPTION	TEMPERATURE DE CONCEPTION	PRESSION D'ESSAI	CLASSE D'INSPECTION	CODE DE SERVICE	TRAITEMENT THERMIQUE	65-403-205-200	P&ID
— PSIG / — °F	N/A PSIG	10 à 45 °F	N/A PSIG	5% Rx	B31.3	—	No DESSIN	DESSINS DE REFERENCE

Fluide Diesel

CONC.: KHV
DATE: 2017/08/28
DESSINÉ PAR: KVE
DATE: 2017/05/28
VÉR. PAR:
DATE:
APP.:
DATE:
ÉCHELLE: AUCUNE

PROJET: AGNICO EAGLE - MEL1ADINE DIVISION
403P - COMBUSTIBLE

TITRE: PORTAIL #1
FABRICATION ISOMETRIC
FUEL FROM 403P-80-PDI-CC10-029 TO 65TNK41610

No PROJET	No DESSIN	PAGES	REV.
6515	403P-80-PDI-CC10-014	2/2	0

403P-MN-01

IMPRIMÉ LE : Jun 29, 2017, 4:42pm

JQ2216.6
GMAW
P1 à P1

U.F.

MK-101

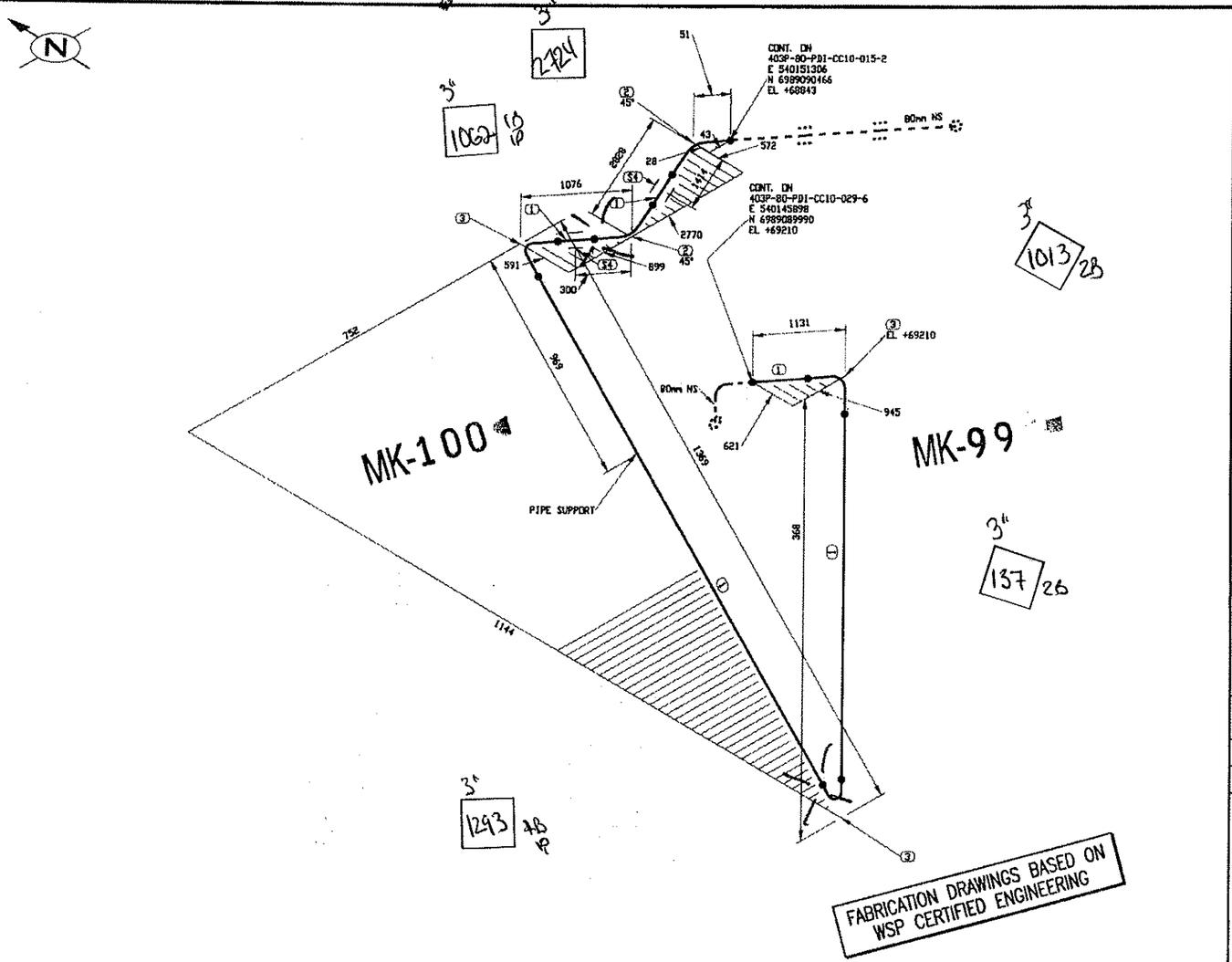

FABRICATION DRAWINGS BASED ON WSP CERTIFIED ENGINEERING

LISTE DE MATERIEL

No	QTE	DIA	MATERIEL/CATALOGUE	DESCRIPTION
1	5934 KM	80	A 333 Gr. 6	SCH STD, SNLS PIPE
2	2	80	A 420 Gr. WPL6	SCH STD, BW LR 45 DEG ELBOW
3	3	80	A 420 Gr. WPL6	SCH STD, BW LR 90 DEG ELBOW
4	2	80	SUPAG-DN80	PIPE SUPPORT AS PER DETAIL 3, DWG 65-403-270-200

CONTRAT UF
21.06 X20

REÇU le
03 JUIL. 2017
Rép: _____

No.	DATE	REVISION	PAR / APP.
0	2017/06/30	ISSUED FOR CONSTRUCTION	QVN

CLIENT:

AGNICO EAGLE

NUQSANA PROMEC MINING

ultragen

CONSULTANT PROJECT NO. 591700

SCEAU PROFESSIONNEL

CONC.: KHV
DATE: 2017/05/29
DESSINÉ PAR: KVE
DATE: 2017/05/29
VÉR. PAR:
DATE:
APP.:
DATE:
ECHELLE: AUCUNE

PROJET: AGNICO EAGLE - MELIADINE DIVISION
403P - COMBUSTIBLE

TITRE: PORTAIL #1
FABRICATION ISOMETRIC
FUEL FROM 403P-80-PDI-CC10-014 TO 65TNK41611

No PROJET	No DESSIN	PAGES	REV.
6515	403P-80-PDI-CC10-015	1/19	0

403P-MN-01

NO. DE CONDUITE		SPECIFICATION	PRODUIT	SYSTEME REVETEMENT	CODE DE COULEUR	ISOLATION ET TRACAGE	EPAISS. D'ISOLATION		
403P-80-PDI-CC10-015		CC10	PDI		-			65-403-270-200	PIPE SUPPORT DETAILS
PRESSION D'OPERATION	TEMPERATURE D'OPERATION	PRESSION DE CONCEPTION	TEMPERATURE DE CONCEPTION	PRESSION D'ESSAI	CLASSE D'INSPECTION	CODE DE SERVICE	TRAITEMENT THERMIQUE	65-403-205-200	P&ID
— PSIG	— °F	NA PSIG	140 15 °F	NA PSIG	5% Rx	B31.3	—	No. DESSIN	DESSINS DE REFERENCE

JQ2216.6
Pt GMAW AC001 R6
P1 a P1

Fluide Diesel

U-F.

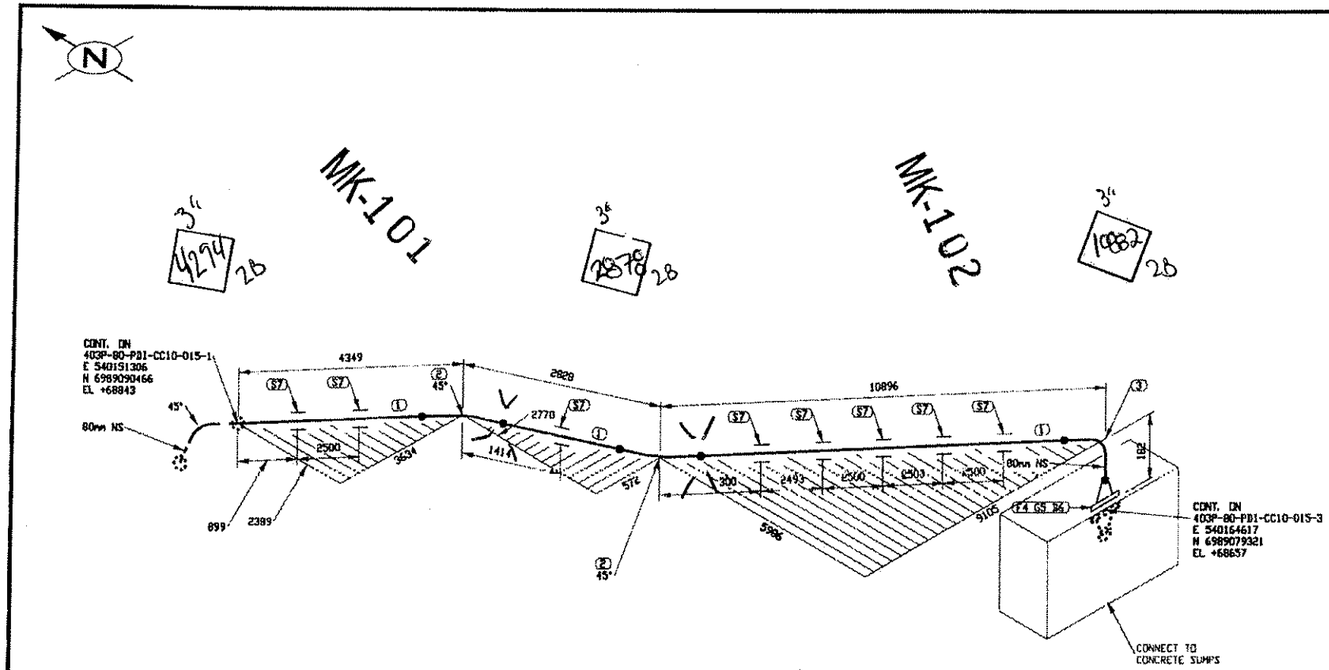

LISTE DE MATERIEL

No	QTE	DIA	MATERIEL/CATALOGUE	DESCRIPTION
1	17755 MM	80	A 333 Gr. 6	SCH STD, SMLS PIPE
2	2	80	A 420 Gr. WPL6	SCH STD, BW LR 45 DEG ELBOW
3	1	80	A 420 Gr. WPL6	SCH STD, BW LR 90 DEG ELBOW
4	1	80	A 350 Gr. LF2	CL 150, SCH STD, RF, WN FLANGE
5	1	80	ASME B16.20	CL 150, GARLOCK 5500, RING TYPE GASKET 1/8" THK
6	4	16	A 193 B7/A 194 2H	CL 150, 4 - 15.875 X 90 STUD BOLTS c/w TWO HEAVY HEX NUTS
7	8	80		PIPE SUPPORT AS PER DETAIL 3, BVG 65-403-270-200

CONTRAT UF
21.06X20

REÇU le
03 JUIL. 2017
Rép: _____

EN ATELIER LE
04 JUIL. 2017
par: [signature]

No.	DATE	REVISION	PAR / APP.
0	2017/06/30	ISSUED FOR CONSTRUCTION	QVN

FABRICATION DRAWINGS BASED ON WSP CERTIFIED ENGINEERING

CLIENT: AGNICO EAGLE

NUQSANA PROMEC MINING

ultragen

CONSULTANT PROJECT NO. 591700

SCEAU PROFESSIONNEL

CONC.: KHV
DATE: 2017/05/29
DESSINÉ PAR: KVE
DATE: 2017/05/29
VÉR. PAR:
DATE:
APP.:
DATE:
ÉCHELLE: AUCUNE

PROJET: AGNICO EAGLE - MELIADINE DIVISION
403P - COMBUSTIBLE

TITRE: PORTAIL #1
FABRICATION ISOMETRIC
FUEL FROM 403P-80-PDI-CC10-014 TO 65THK41611

No PROJET	No DESSIN	PAGES	REV.
6515	403P-80-PDI-CC10-015	2/19	0

403P MN-01

NO. DE CONDUITE		SPECIFICATION	PRODUIT	SYSTEME REVETEMENT	CODE DE COULEUR	ISOLATION ET TRACAGE	EPAISS. D'ISOLATION		
403P-80-PDI-CC10-015		CC10	PDI		-			65-403-270-200	PIPE SUPPORT DETAILS
PRESSION D'OPERATION	TEMPERATURE D'OPERATION	PRESSION DE CONCEPTION	TEMPERATURE DE CONCEPTION	PRESSION D'ESSAI	CLASSE D'INSPECTION	CODE DE SERVICE	TRAITEMENT THERMIQUE	65-403-205-200	P&ID
— PSIG	— °F	— PSIG	10.875 °F	NA PSIG	590 kX	B31.3	—	No. DESSIN	DESSINS DE REFERENCE

Fluide Diesel

U-F.

JQ2216.6
PX G-MAW AC001
P1 a P1 RC

IMPRIMÉ LE: Jun 29, 2017, 5:30pm

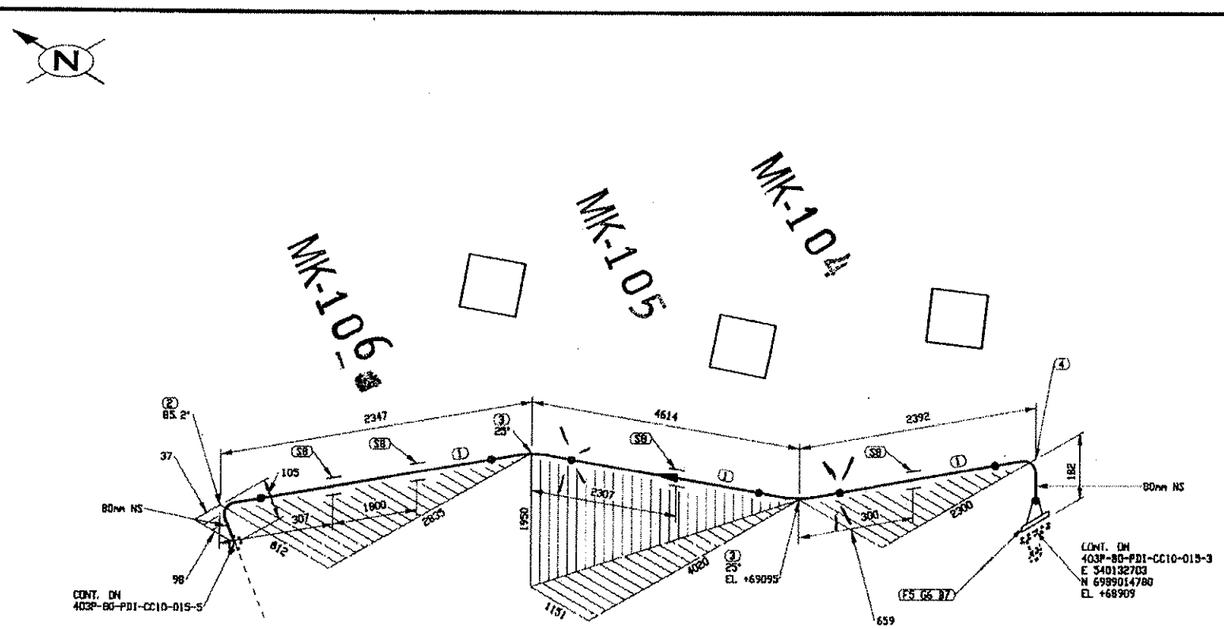

LISTE DE MATERIEL

No	QTE	DIA	MATERIEL/CATALOGUE	DESCRIPTION
1	9627 MM	80	A 333 Gr. 6	SCH STD, SMLS PIPE
2	1	80	A 420 Gr. WPL6	SCH STD, BV LR 90 DEG ELBOW TRIM TO 85.18
3	2	80	A 420 Gr. WPL6	SCH STD, BV LR 45 DEG ELBOW TRIM TO 25.00
4	1	80	A 420 Gr. WPL6	SCH STD, BV LR 90 DEG ELBOW
5	1	80	A 350 Gr. LF2	CL 150, SCH STD, RF, WN FLANGE
6	1	80	ASME B16.20	CL 150, GARLOCK 5500, RING TYPE GASKET 1/8" THK
7	4	16	A 193 B7/A 194 2H	CL 150, 4 - 15.875 X 90 STUD BOLTS c/w TWO HEAVY HEX NUTS
8	4	80		PIPE SUPPORT AS PER DETAIL 3, DWG: 65-403-270-200

CONTRAT UF
2106X20

REÇU le
03 JUIL. 2017
Rép: _____

EN ATELIER
04 JUIL. 2017
par: BS

No.	DATE	REVISION	QVN / PAR / APP.
0	2017/06/30	ISSUED FOR CONSTRUCTION	QVN

FABRICATION DRAWINGS BASED ON WSP CERTIFIED ENGINEERING

CLIENT: AGNICO EAGLE

NUQSANA PROMEC MINING

ultragen

CONSULTANT PROJECT NO. 591700

SCEAU PROFESSIONNEL

CONC.: KHV DATE: 2017/05/29
DESSINÉ PAR: KVE DATE: 2017/05/29
VÉR. PAR: DATE:
APP.: DATE:
ÉCHELLE: AUCUNE

PROJET: AGNICO EAGLE - MELIADINE DIVISION
403P - COMBUSTIBLE

TITRE: PORTAIL #1
FABRICATION ISOMETRIC
FUEL FROM 403P-80-PDI-CC10-014 TO 65TNK41611

No PROJET	No DESSIN	PAGES	REV.
6515	403P-80-PDI-CC10-015	4/19	0

NO. DE CONDUITE		SPECIFICATION	PRODUIT	SYSTEME REVETEMENT	CODE DE COULEUR	ISOLATION ET TRACAGE	EPAISS. D'ISOLATION		
403P-80-PDI-CC10-015		CC10	PDI		-			65-403-270-200	PIPE SUPPORT DETAILS
PRESSION D'OPERATION	TEMPERATURE D'OPERATION	PRESSION DE CONCEPTION	TEMPERATURE DE CONCEPTION	PRESSION D'ESSAI	CLASSE D'INSPECTION	CODE DE SERVICE	TRAITEMENT THERMIQUE	65-403-205-200	P&ID
— PSIG	— °F	NA PSIG	14 à 15 °F	NA PSIG	5% RX	B31.3	—	No DESSIN	DESSINS DE REFERENCE

Fluide diesel

JQ2216.6
Pt GMAW #001
P1 à P1 #6

U-F

403P-MN-01

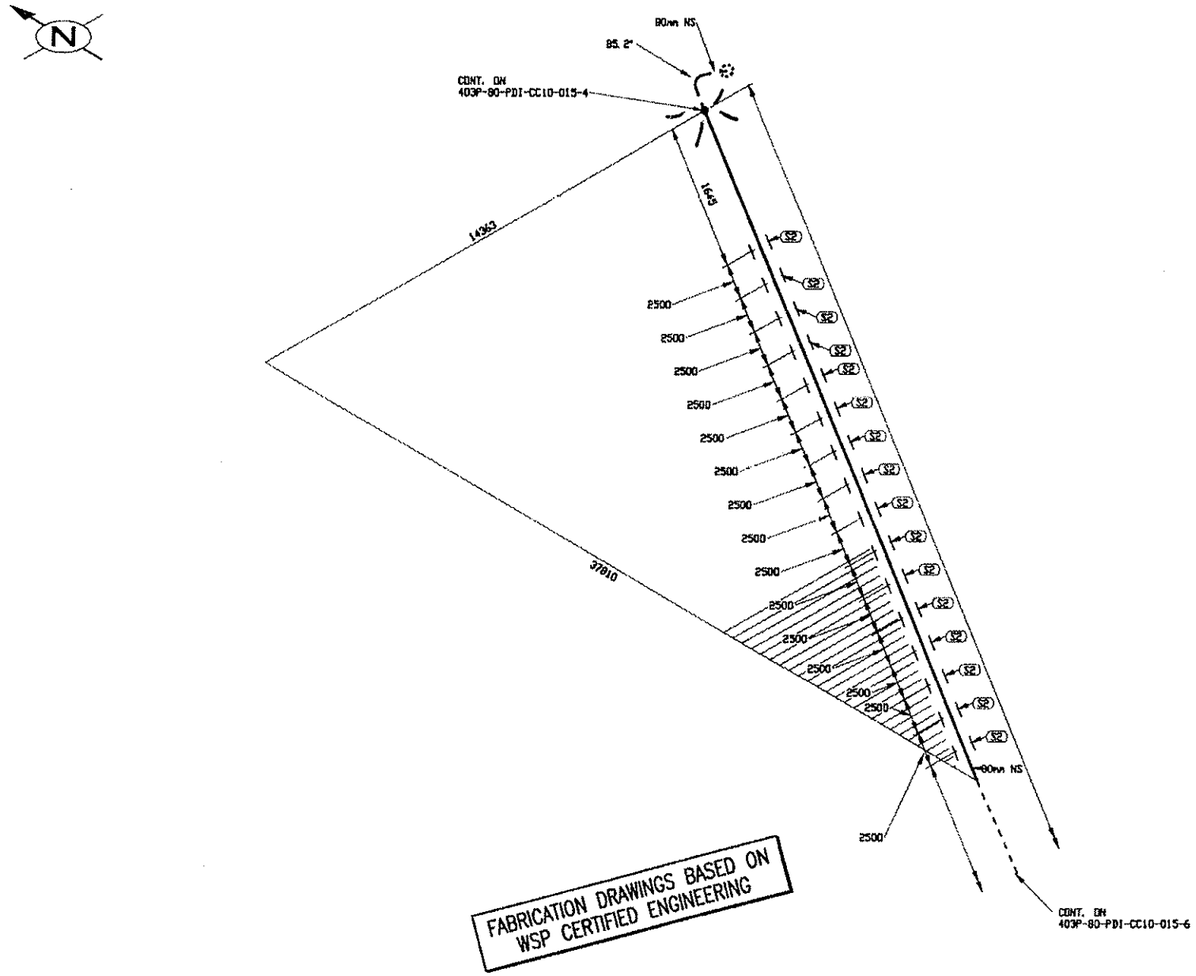

FABRICATION DRAWINGS BASED ON WSP CERTIFIED ENGINEERING

LISTE DE MATERIEL

No	QTE	DIA	MATERIEL/CATALOGUE	DESCRIPTION
1	40395 MM	80	A 333 Gr. 6	SCH STD, SMLS PIPE
2	16	80		PIPE SUPPORT AS PER DETAIL 3, DWG 65-403-270-200

CONTRAT UF
21.06X20

REÇU le
03 JUIL. 2017
Rép:

ENATELIER LE
04 JUIL. 2017
par: BS

No.	DATE	REVISION	QVN / PAR / APP.
0	2017/06/30	ISSUED FOR CONSTRUCTION	

CLIENT: AGNICO EAGLE

NUQSANA:PROMEC MINING

ultragen
CONSULTANT PROJECT NO. 591700

SCEAU PROFESSIONNEL

CONC.: KHV	DATE: 2017/05/29
DESSINE PAR: KVE	DATE: 2017/05/29
VÉR. PAR:	DATE:
APP.:	DATE:
ÉCHELLE: AUCUNE	

PROJET: AGNICO EAGLE - MELIADINE DIVISION
403P - COMBUSTIBLE

TITRE: PORTAIL #1
FABRICATION ISOMETRIC
FUEL FROM 403P-80-PDI-CC10-014 TO 65TNK41611

No PROJET	No DESSIN	PAGES	REV.
6515	403P-80-PDI-CC10-015	5/19	0

403P-MN-01

NO. DE CONDUITE		SPECIFICATION	PRODUIT	SYSTEME REVETEMENT	CODE DE COULEUR	ISOLATION ET TRACAGE	EPAISS. D'ISOLATION		
403P-80-PDI-CC10-015		CC10	PDI		-			65-403-270-200	PIPE SUPPORT DETAILS
PRESSION D'OPERATION	TEMPERATURE D'OPERATION	PRESSION DE CONCEPTION	TEMPERATURE DE CONCEPTION	PRESSION D'ESSAI	CLASSE D'INSPECTION	CODE DE SERVICE	TRAITEMENT THERMIQUE	65-403-205-200	P&ID
— PSIG	— °F	— PSIG	10 à 55 °F	N/A PSIG	5% HX	B31.3	—	No. DESSIN	DESSINS DE REFERENCE

IMPRIMÉ LE: Jun 29, 2017, 5:33pm

FICHIER: W:\Agnico Eagle\Meliadine\591700 (Fuel Distribution)\05. Design\02. Isométriques\02. Portail 1\403P-80-PDI-CC10-015-5.DWG

JQ2216.6
Pt GMAW NC001
P1 à P1 4F

Fluide Diesel

U-F

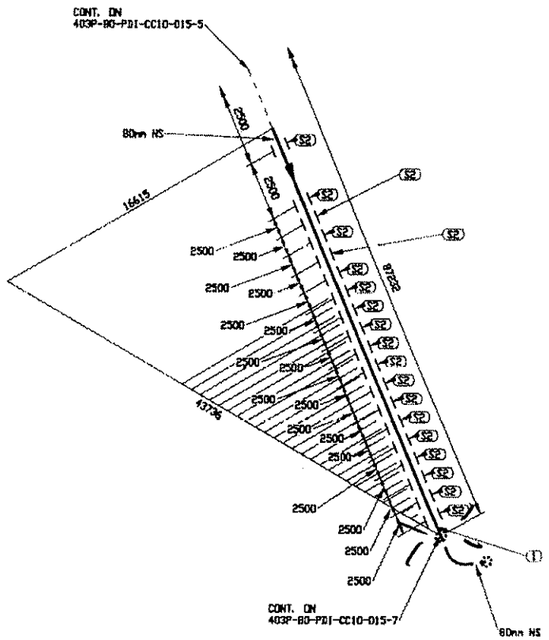
CONT. ON
403P-80-PDI-CC10-015-5
80mm NS
16615
2500
2500
2500

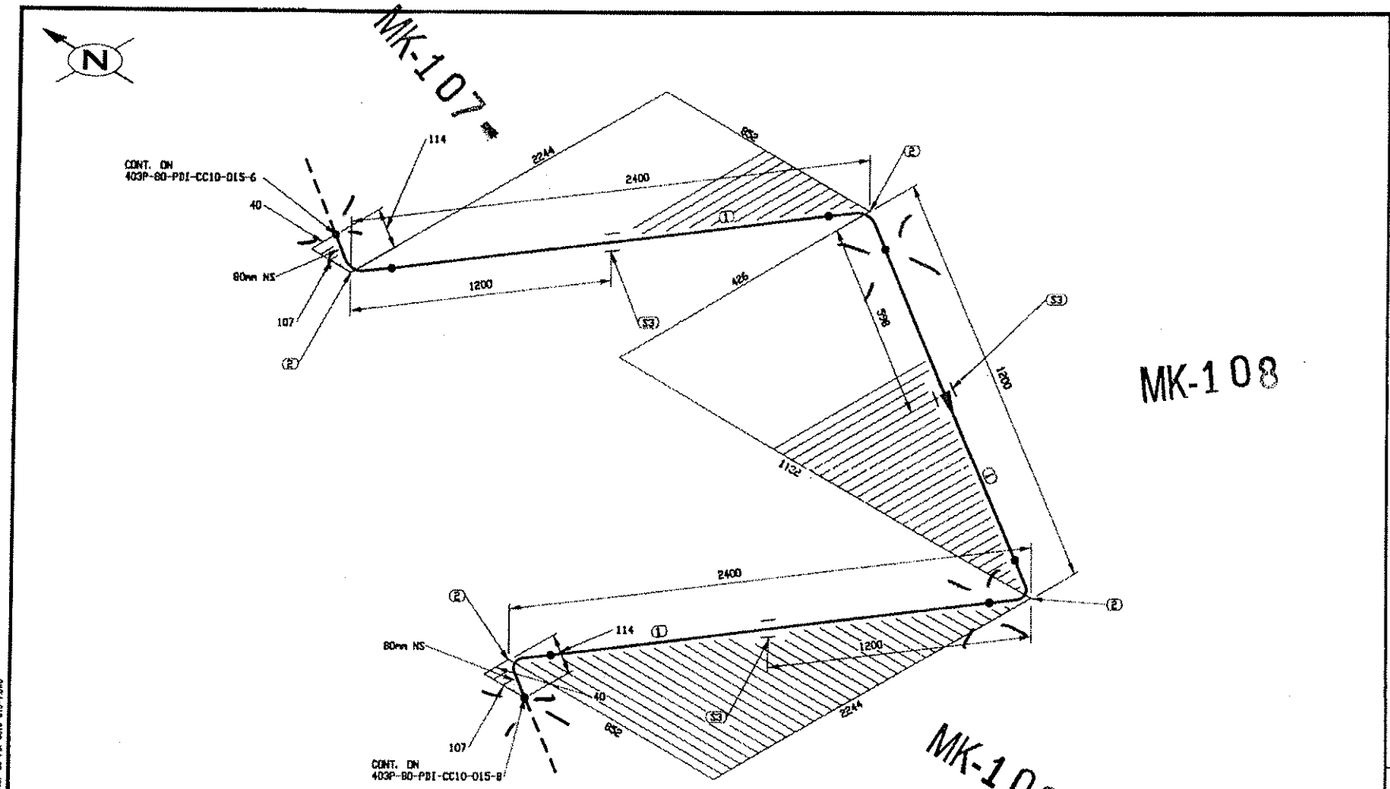

FABRICATION DRAWINGS BASED ON WSP CERTIFIED ENGINEERING

LISTE DE MATERIEL

No	QTE	DIA	MATERIEL/CATALOGUE	DESCRIPTION
1	5316 MM	80	A 333 Gr. 6	SCH STD, SMLS PIPE
2	4	80	A 420 Gr. WPL6	SCH STD, BW LR 90 DEG ELBOW
3	3	80		PIPE SUPPORT AS PER DETAIL 3, DWG: 65-403-270-200

CONTRAT U.
21.06X20

REÇU le
03 JUIL. 2017
Rép: _____

No.	DATE	REVISION	PAR / APP.
0	2017/06/30	ISSUED FOR CONSTRUCTION	QVN

CLIENT:

AGNICO EAGLE

NUQSANA PROMEC MINING

ultragen

CONSULTANT PROJECT NO. 591700

EN ATELIER LE
04 JUIL. 2017
par : [signature]

NO. DE CONDUITE		SPECIFICATION	PRODUIT	SYSTEME REVETEMENT	CODE DE COULEUR	ISOLATION ET TRACAGE	EPAISS. D'ISOLATION		
403P-80-PDI-CC10-015		CC10	PDI		-			65-403-270-200	PIPE SUPPORT DETAILS
PRESSION D'OPERATION	TEMPERATURE D'OPERATION	PRESSION DE CONCEPTION	TEMPERATURE DE CONCEPTION	PRESSION D'ESSAI	CLASSE D'INSPECTION	CODE DE SERVICE	TRAITEMENT THERMIQUE	65-403-205-200	P&ID
— PSIG	— T	[illegible] PSIG	14 à 15 T	— PSIG	5%2X	B31.3	—	No DESSIN	DESSINS DE REFERENCE

SCEAU PROFESSIONNEL

CONC.: KHV
DATE: 2017/05/29
DESSINÉ PAR: KVE
DATE: 2017/05/29
VER. PAR:
DATE:
APP.:
DATE:
ÉCHELLE: AUCUNE

PROJET: AGNICO EAGLE - MELIADINE DIVISION
403P - COMBUSTIBLE

TITRE: PORTAIL #1
FABRICATION ISOMETRIC
FUEL FROM 403P-80-PDI-CC10-014 TO 65TNK41611

No PROJET	No DESSIN	PAGES	REV.
6515	403P-80-PDI-CC10-015	7/19	0

403P-MN-01

JQ2216.6
Pt GMAW NC001
P1 a P1 R6

U-F



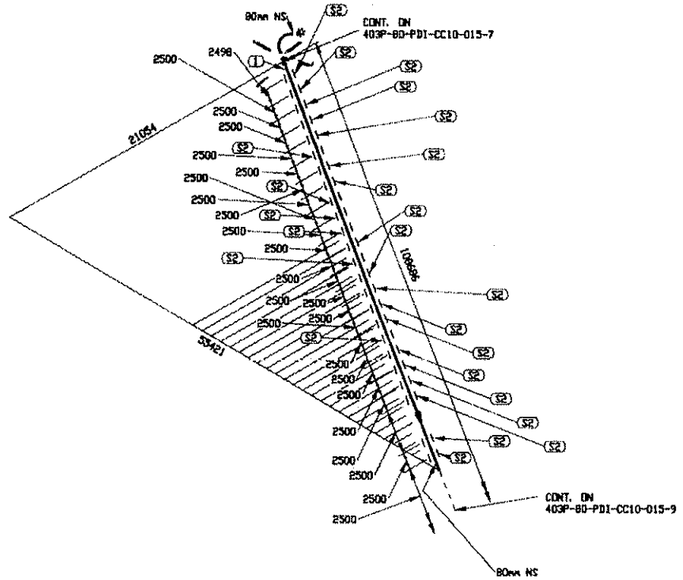

FABRICATION DRAWINGS BASED ON WSP CERTIFIED ENGINEERING

LISTE DE MATERIEL

No.	QTE.	DIA.	MATERIEL/CATALOGUE	DESCRIPTION
1	59286 HH	80	A 333 Gr. 6	SCH STD, SMLS PIPE
2	24	80		PIPE SUPPORT AS PER DETAIL 3, DWG 65-403-270-200

CONTRAT UF
21.06 X 20

EN ATELIER LE
04 JUIL. 2017
par : [signature]

REÇU le
03 JUIL. 2017
Rép: _____

No.	DATE	REVISION	QVN / PAR / APP.
0	2017/06/30	ISSUED FOR CONSTRUCTION	QVN

CLIENT:

AGNICO EAGLE

NUQSANA PROMEC MINING

ultragen

CONSULTANT PROJECT NO. 591700

SCEAU PROFESSIONNEL

CONC.: KHV
DATE: 2017/06/28
DESSINÉ PAR: KVE
DATE: 2017/05/29
VÉR. PAR:
DATE:
APP.:
DATE:
ÉCHELLE: AUCUNE

PROJET: AGNICO EAGLE - MELIADINE DIVISION
403P - COMBUSTIBLE

TITRE: PORTAIL #1
FABRICATION ISOMETRIC
FUEL FROM 403P-80-PDI-CC10-014 TO 65TNX41611

No PROJET	No DESSIN	PAGES	REV.
6515	403P-80-PDI-CC10-015	8/19	0

NO. DE CONDUITE		SPECIFICATION	PRODUIT	SYSTEME REVETEMENT	CODE DE COULEUR	ISOLATION ET TRACAGE	EPAISS. D'ISOLATION		
403P-80-PDI-CC10-015		CC10	PDI		-			65-403-270-200	PIPE SUPPORT DETAILS
PRESSION D'OPERATION	TEMPERATURE D'OPERATION	PRESSION DE CONCEPTION	TEMPERATURE DE CONCEPTION	PRESSION D'ESSAI	CLASSE D'INSPECTION	CODE DE SERVICE	TRAITEMENT THERMIQUE	65-403-205-200	P&ID
— PSIG	— °F	NA PSIG	10 à 15 °F	— PSIG	5%R	B31.3	—	No. DESSIN	DESSINS DE REFERENCE

Fluide Diesel

Pt JQ2216.6 AC 001
GMAW
P1 à P1

403P-MN-01

U-F.

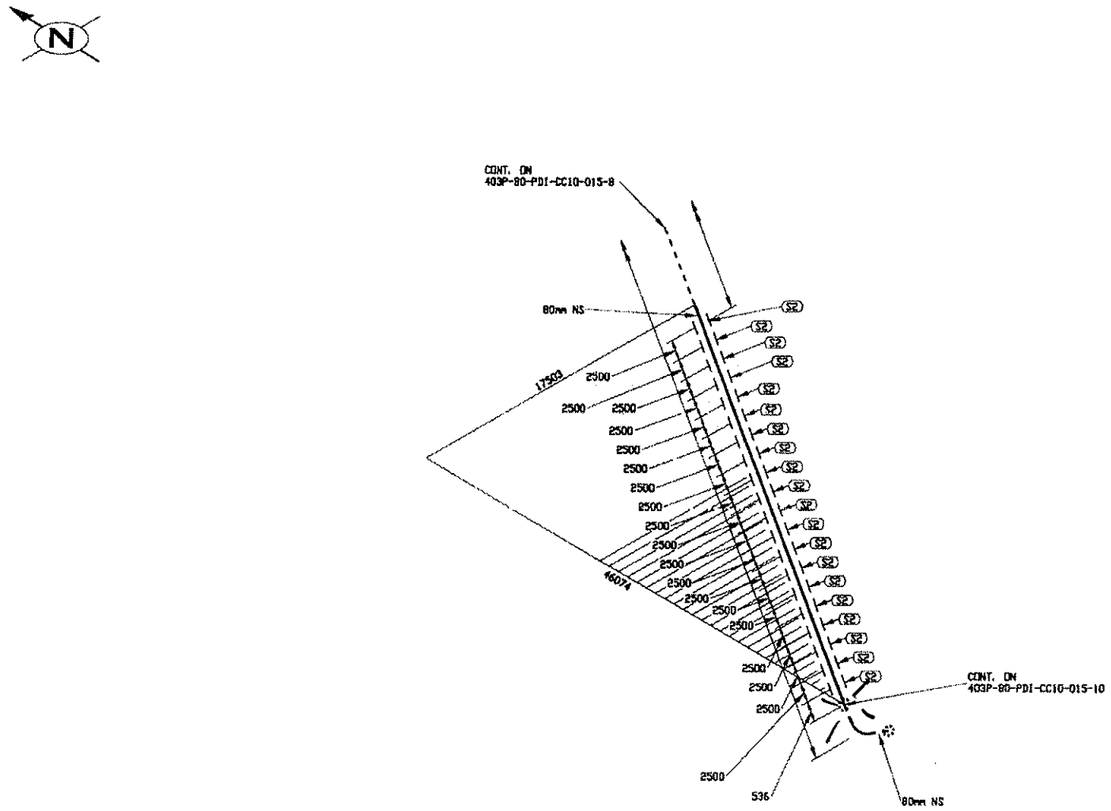

FABRICATION DRAWINGS BASED ON WSP CERTIFIED ENGINEERING

LISTE DE MATERIEL

No	QTE	DIA	MATERIEL/CATALOGUE	DESCRIPTION
1	49286 MM	80	A 333 Gr. 6	SCH STD, SMLS PIPE
2	20	80		PIPE SUPPORT AS PER DETAIL 3, DWG: 65-403-270-200

CONTRAT UF
21,06 X 20

REÇU le
03 JUIL. 2017
Rép: _____

No.	DATE	REVISION	PAR / APP.
0	2017/06/30	ISSUED FOR CONSTRUCTION	QVN

CLIENT:

AGNICO EAGLE

NUQSANA PROMEC MINING

ultragen

CONSULTANT PROJECT NO. 591700

EN ATELIER LE
04 JUIL. 2017
par : BS

NO. DE CONDUITE		SPECIFICATION	PRODUIT	SYSTEME REVETEMENT	CODE DE COULEUR	ISOLATION ET TRACAGE	EPAISS. D'ISOLATION		
403P-80-PDI-CC10-015		CC10	PDI		--			65-403-270-200	PIPE SUPPORT DETAILS
PRESSION D'OPERATION	TEMPERATURE D'OPERATION	PRESSION DE CONCEPTION	TEMPERATURE DE CONCEPTION	PRESSION D'ESSAI	CLASSE D'INSPECTION	CODE DE SERVICE	TRAITEMENT THERMIQUE	65-403-205-200	P&ID
— PSIG	— °F	— PSIG	10 à 15°F	— PSIG	5% Rx	B31.3	—	No. DESSIN	DESSINS DE REFERENCE

SCEAU PROFESSIONNEL

CONC.: KHV
DATE: 2017/05/29
DESSINÉ PAR: KVE
DATE: 2017/05/29
VÉR. PAR:
DATE:
APP.:
DATE:
ÉCHELLE: AUCUNE

PROJET: AGNICO EAGLE - MELIADINE DIVISION
403P - COMBUSTIBLE

TITRE: PORTAIL #1
FABRICATION ISOMETRIC
FUEL FROM 403P-80-PDI-CC10-014 TO 65TNK41611

No PROJET	No DESSIN	PAGES	RÉV.
6515	403P-80-PDI-CC10-015	9/19	0

403P-MN-01

JQ2216.6
Pt GMAW DC001
P1 a P1 RC

Fluide Pxcl

U-F

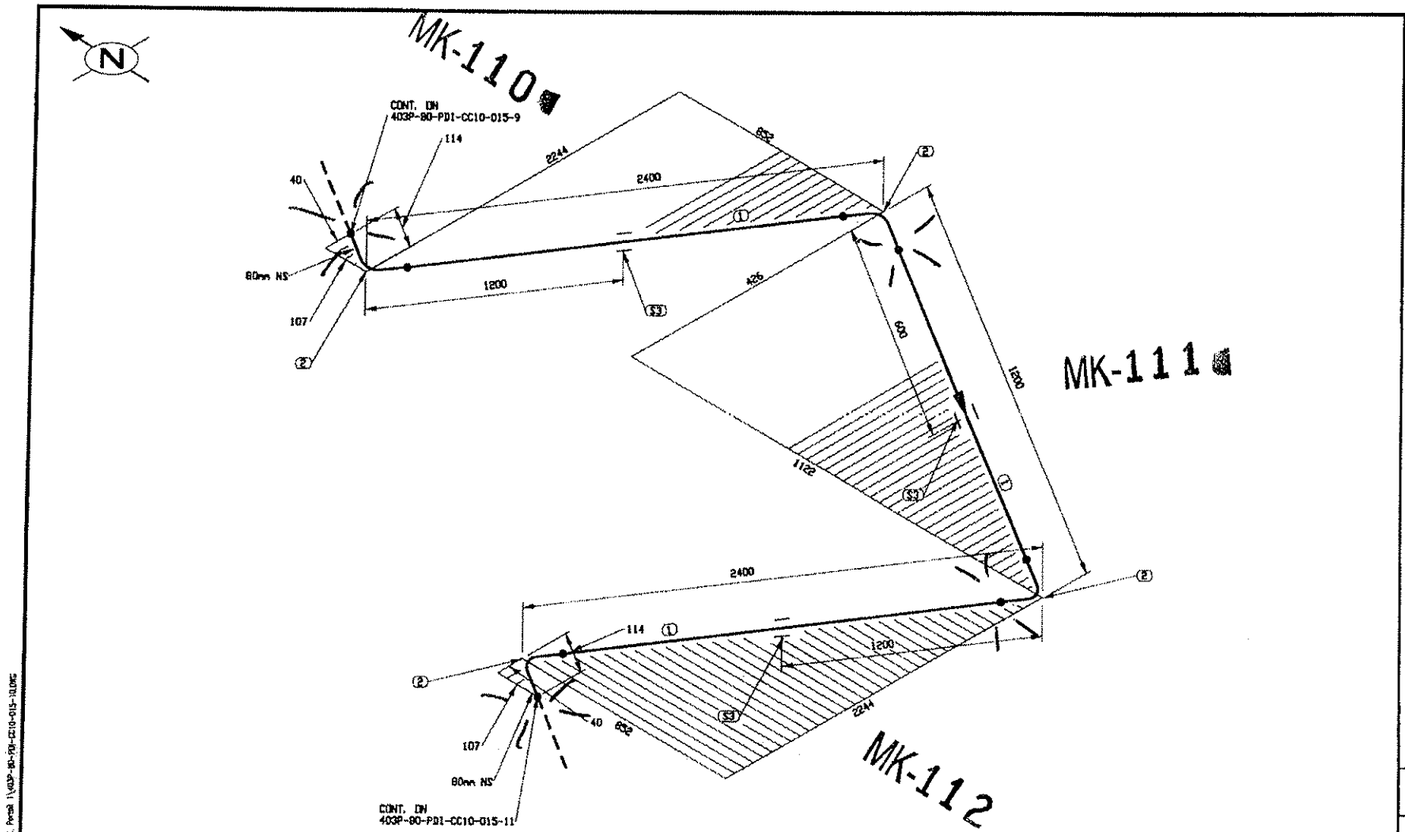

FABRICATION DRAWINGS BASED ON WSP CERTIFIED ENGINEERING

LISTE DE MATERIEL

No	QTE	DIA	MATERIEL/CATALOGUE	DESCRIPTION
1	5316 MM	80	A 333 Gr. 6	SCH STD, SMLS PIPE
2	4	80	A 420 Gr. WPL6	SCH STD, BW LR 90 DEG ELBOW
3	3	80		PIPE SUPPORT AS PER DETAIL 3, DWG: 65-403-270-200

CONTRAT UF
21.06 X 20

REÇU le
03 JUIL. 2017
Rép: _____

EN ATELIER LE
04 JUIL. 2017
par : BS

No.	DATE	REVISION	QVN / PAR / APP.
0	2017/06/30	ISSUED FOR CONSTRUCTION	

CLIENT: AGNICO EAGLE

NUQSANA PROMEC MINING

ultragen

CONSULTANT PROJECT NO. 591700

SCEAU PROFESSIONNEL

CONC.: KHV
DATE: 2017/06/29
DESSINÉ PAR: KVE
DATE: 2017/06/29
VÉR. PAR:
DATE:
APP.:
DATE:
ÉCHELLE: AUCUNE

PROJET: AGNICO EAGLE - MELIADINE DIVISION
403P - COMBUSTIBLE

TITRE: PORTAIL #1
FABRICATION ISOMETRIC
FUEL FROM 403P-80-PDI-CC10-014 TO 65TNK41611

No PROJET	No DESSIN	PAGES	RÉV.
6515	403P-80-PDI-CC10-015	10/19	0

NO. DE CONDUITE		SPECIFICATION	PRODUIT	SYSTEME REVETEMENT	CODE DE COULEUR	ISOLATION ET TRACAGE	EPAISS. D'ISOLATION		
403P-80-PDI-CC10-015		CC10	PDI		-			65-403-270-200	PIPE SUPPORT DETAILS
PRESSION D'OPERATION	TEMPERATURE D'OPERATION	PRESSION DE CONCEPTION	TEMPERATURE DE CONCEPTION	PRESSION D'ESSAI	CLASSE D'INSPECTION	CODE DE SERVICE	TRAITEMENT THERMIQUE	65-403-205-200	P&ID
— PSIG	— °F	— PSIG	10 à 15 °F	— PSIG	5% Rx	B31.3		NO. DESSIN	DESSINS DE REFERENCE

JQ2216.6
Pt GMAW
P1 à P1

IMPRIMÉ LE: Jun 29, 2017 5:37pm

Fluide Diesel

4C3P-MN-01

U-F.

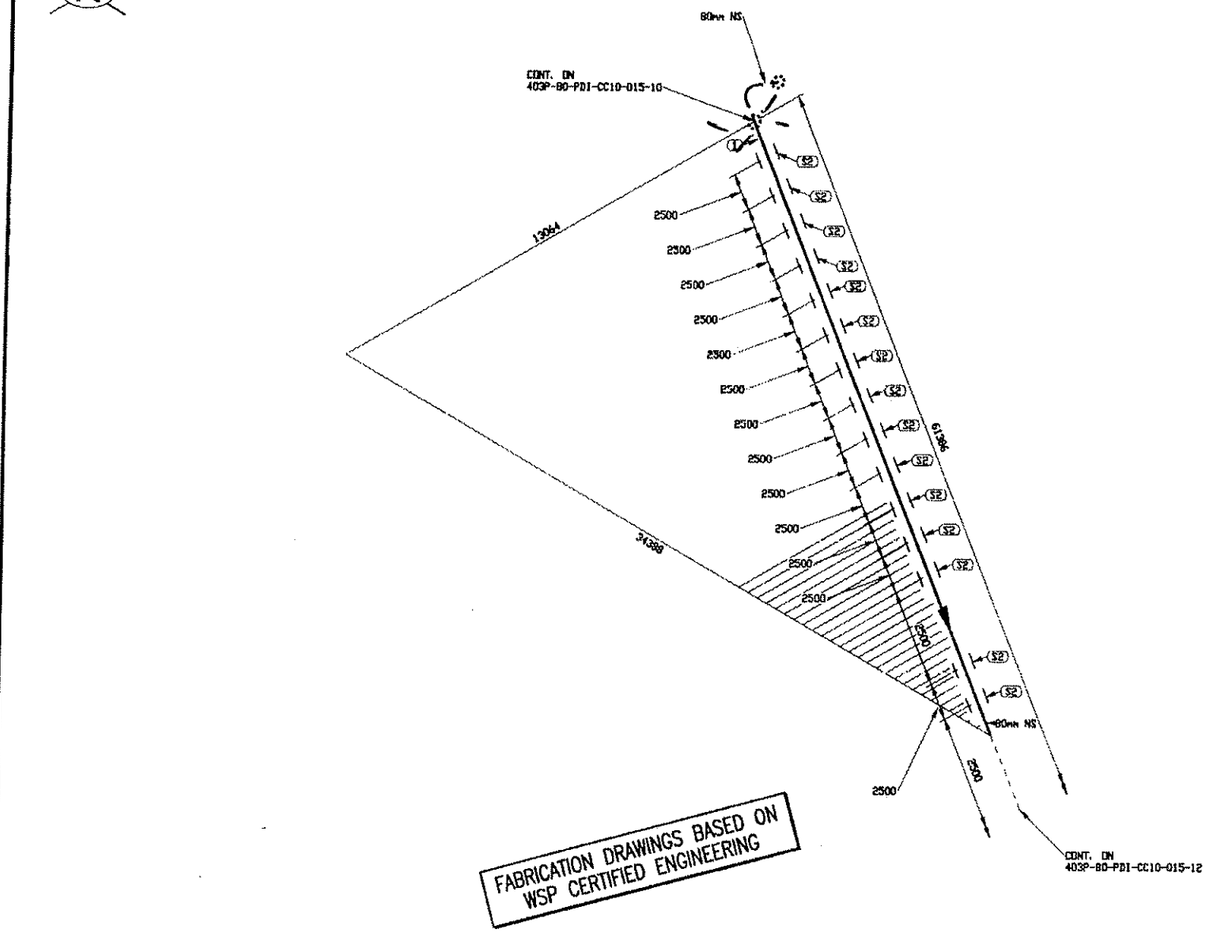

FABRICATION DRAWINGS BASED ON WSP CERTIFIED ENGINEERING

LISTE DE MATERIEL

No	QTE	DIA	MATERIEL/CATALOGUE	DESCRIPTION
1	36786 MM	80	A 333 Gr. 6	SCH STD, SMLS PIPE
2	15	80		PIPE SUPPORT AS PER DETAIL 3, DWG 65-403-270-200

CONTRAT UF
21.06 X20

EN ATELIER LE
04 JUIL. 2017
par : [signature]

REÇU le
03 JUIL. 2017
Rép: _____

No.	DATE	REVISION	PAR	APP.
0	2017/06/30	ISSUED FOR CONSTRUCTION	QVN	

CLIENT:

AGNICO EAGLE

NUQSANA PROMEC MINING

ultragen

CONSULTANT PROJECT NO. 591700

SCEAU PROFESSIONNEL

CONC.: KHV
DATE: 2017/06/29
DESSINÉ PAR: KVE
DATE: 2017/06/29
VÉR. PAR:
DATE:
APP.:
DATE:
ÉCHELLE: AUCUNE

PROJET: AGNICO EAGLE - MELIADINE DIVISION
403P - COMBUSTIBLE

TITRE: PORTAIL #1
FABRICATION ISOMETRIC
FUEL FROM 403P-80-PDI-CC10-014 TO 65TNK41611

No PROJET	No DESSIN	PAGES	REV.
6515	403P-80-PDI-CC10-015	11/19	0

403P-MN-01

NO. DE CONDUITE		SPECIFICATION	PRODUIT	SYSTEME REVETEMENT	CODE DE COULEUR	ISOLATION ET TRACAGE	EPAISS. D'ISOLATION		
403P-80-PDI-CC10-015		CC10	PDI		-			65-403-270-200	PIPE SUPPORT DETAILS
PRESSION D'OPERATION	TEMPERATURE D'OPERATION	PRESSION DE CONCEPTION	TEMPERATURE DE CONCEPTION	PRESSION D'ESSAI	CLASSE D'INSPECTION	CODE DE SERVICE	TRAITEMENT THERMIQUE	65-403-205-200	P&ID
— PSIG	— °F	— PSIG	10 à 17 °F	— PSIG	5% RX	D31.3	—	No. DESSIN	DESSINS DE REFERENCE

JQ2216.6
pt GMAWAC001
Pl a Pl 26

Fluide Diesel

U-F.

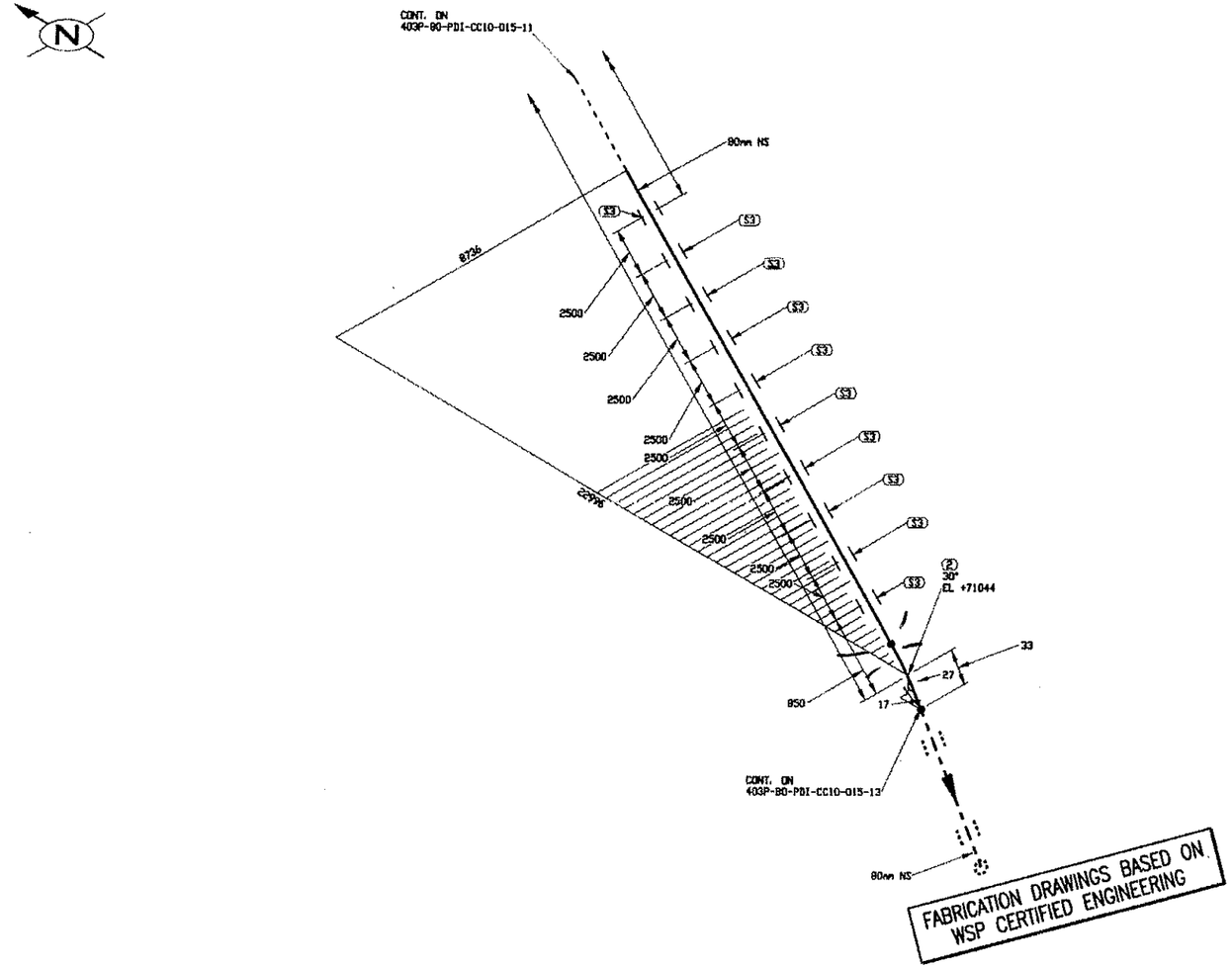
N
CONT. ON
403P-80-PDI-CC10-015-11
80mm NS
6726
2500
2500
2500

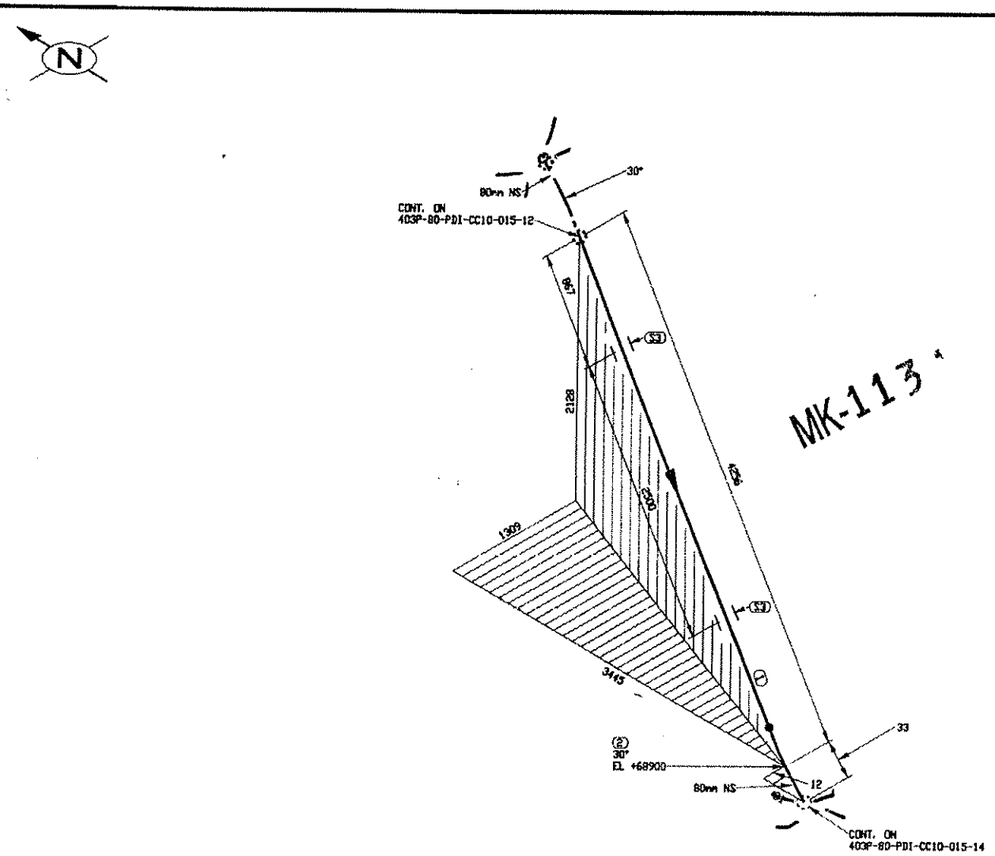

MK-113

FABRICATION DRAWINGS BASED ON WSP CERTIFIED ENGINEERING

LISTE DE MATERIEL

No	QTE	DIA	MATERIEL/CATALOGUE	DESCRIPTION
1	4223 MM	80	A 333 Gr. 6	SCH STD, SMLS PIPE
2	1	80	A 420 Gr. WPL6	SCH STD, BW LR 45 DEG ELBOW TRIM TO 30.00
3	2	80		PIPE SUPPORT AS PER DETAIL 3, DWG: 65-403-270-200

CONTRAT UF
21.06X20

REÇU le
03 JUIL. 2017
Rép: _____

No.	DATE	REVISION	QVN / PAR / APP.
0	2017/06/30	ISSUED FOR CONSTRUCTION	QVN

CLIENT: AGNICO EAGLE

NUQSANA PROMEC MINING

ultragen

CONSULTANT PROJECT NO. 591700

EN ATELIER LE
04 JUIL. 2017
par : BS

NO. DE CONDUITE		SPECIFICATION	PRODUIT	SYSTEME REVETEMENT	CODE DE COULEUR	ISOLATION ET TRACAGE	EPAISS. D'ISOLATION		
403P-80-PDI-CC10-015		CC10	PDI		-			65-403-270-200	PIPE SUPPORT DETAILS
PRESSION D'OPERATION	TEMPERATURE D'OPERATION	PRESSION DE CONCEPTION	TEMPERATURE DE CONCEPTION	PRESSION D'ESSAI	CLASSE D'INSPECTION	CODE DE SERVICE	TRAITEMENT THERMIQUE	65-403-205-200	P&ID
— PSIG	— °F	— PSIG	10 à 15 °F	— PSIG	5% RX	B31.3	—	No. DESSIN	DESSINS DE REFERENCE

SCEAU PROFESSIONNEL

CONC.: KHV
DATE: 2017/05/29
DESSINÉ PAR: KVE
DATE: 2017/05/29
VÉR. PAR:
DATE:
APP.:
DATE:
ÉCHELLE: AUCUNE

PROJET: AGNICO EAGLE - MELIADINE DIVISION
403P - COMBUSTIBLE

TITRE: PORTAIL #1
FABRICATION ISOMETRIC
FUEL FROM 403P-80-PDI-CC10-014 TO 65TNK41611

No PROJET	No DESSIN	PAGES	REV.
6515	403P-80-PDI-CC10-015	13/19	0

403P-MN-01

JQ2216-6
Pt GMAW AC-001
P1 à P1 R6

U-F

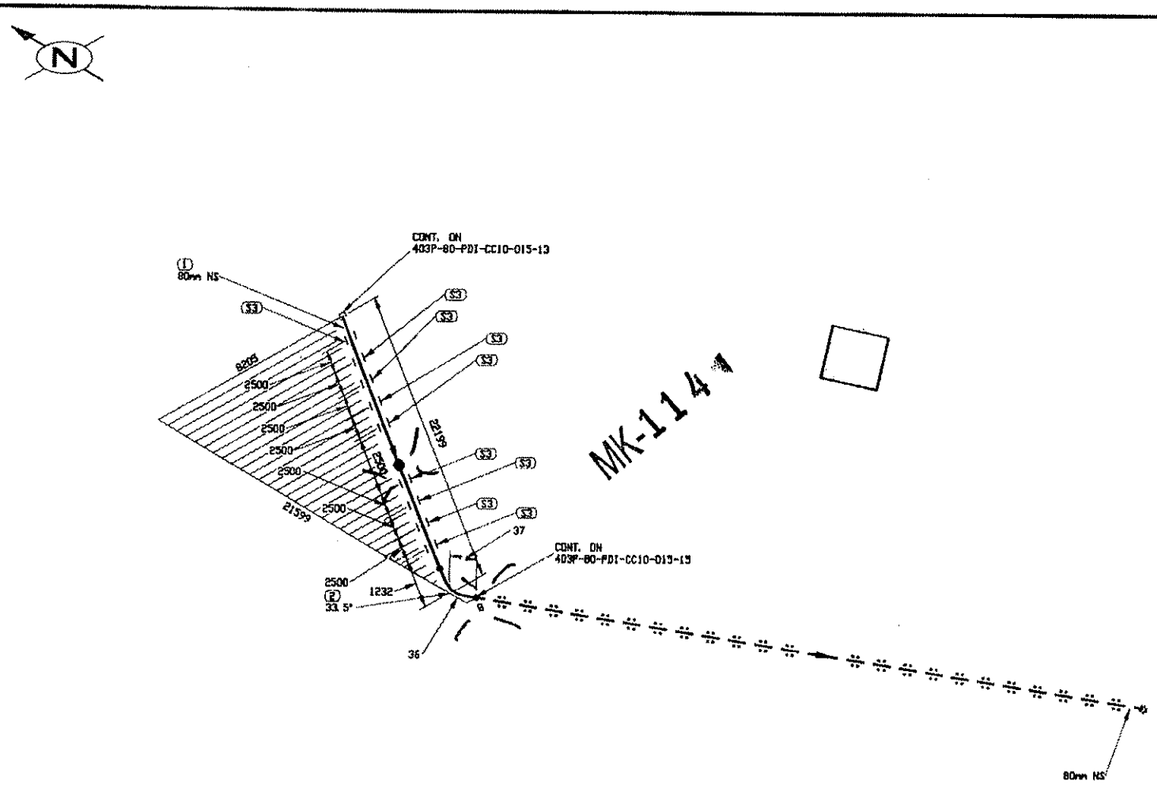

MK-1141

FABRICATION DRAWINGS BASED ON WSP CERTIFIED ENGINEERING

LISTE DE MATERIEL

No	QTE	DIA	MATERIEL/CATALOGUE	DESCRIPTION
1	22162 MM	80	A 333 Gr. 6	SCH STD, SMLS PIPE
2	1	80	A 420 Gr. WPL6	SCH STD, BW LR 45 DEG ELBOW TRIM TO 33.52
3	9	80		PIPE SUPPORT AS PER DETAIL 3, DWG: 65-403-270-200

CONTRAT UF
21.06 X20

REÇU le
03 JUIL. 2017
Rép: _____

No.	DATE	REVISION	PAR / APP.
0	2017/06/30	ISSUED FOR CONSTRUCTION	QVN

CLIENT:

AGNICO EAGLE

NUQSANA PROMEC MINING

ultragen

CONSULTANT PROJECT NO. 591700

SCEAU PROFESSIONNEL

CONC.: KHV
DATE: 2017/06/29
DESSINÉ PAR: KVE
DATE: 2017/06/29
VÉR. PAR:
DATE:
APP.:
DATE:
ÉCHELLE: AUCUNE

PROJET: AGNICO EAGLE - MELIADINE DIVISION
403P - COMBUSTIBLE

TITRE: PORTAIL #1
FABRICATION ISOMETRIC
FUEL FROM 403P-80-PDI-CC10-014 TO 65TNK41611

No PROJET	No DESSIN	PAGES	REV.
6515	403P-80-PDI-CC10-015	14/19	0

NO. DE CONDUITE		SPECIFICATION	PRODUIT	SYSTEME REVETEMENT	CODE DE COULEUR	ISOLATION ET TRACAGE	EPAISS. D'ISOLATION		
403P-80-PDI-CC10-015		CC10	PDI		-			65-403-270-200	PIPE SUPPORT DETAILS
PRESSION D'OPERATION	TEMPERATURE D'OPERATION	PRESSION DE CONCEPTION	TEMPERATURE DE CONCEPTION	PRESSION D'ESSAI	CLASSE D'INSPECTION	CODE DE SERVICE	TRAITEMENT THERMIQUE	65-403-205-200	P&ID
— PSIG	— °F	— PSIG	10 à 15 °F	— PSIG	5% RX	B31.3	—	No DESSIN	DESSINS DE REFERENCE

JQ2216.6
Pt G-MAW K1001
P1 a P1 R6

EN ATELIER LE
04 JUIL. 2017
par: [signature]

403P-MN-01

IMPRIME LE: Jun 29, 2017, 5:41pm

Fluide Diesel

U-F.

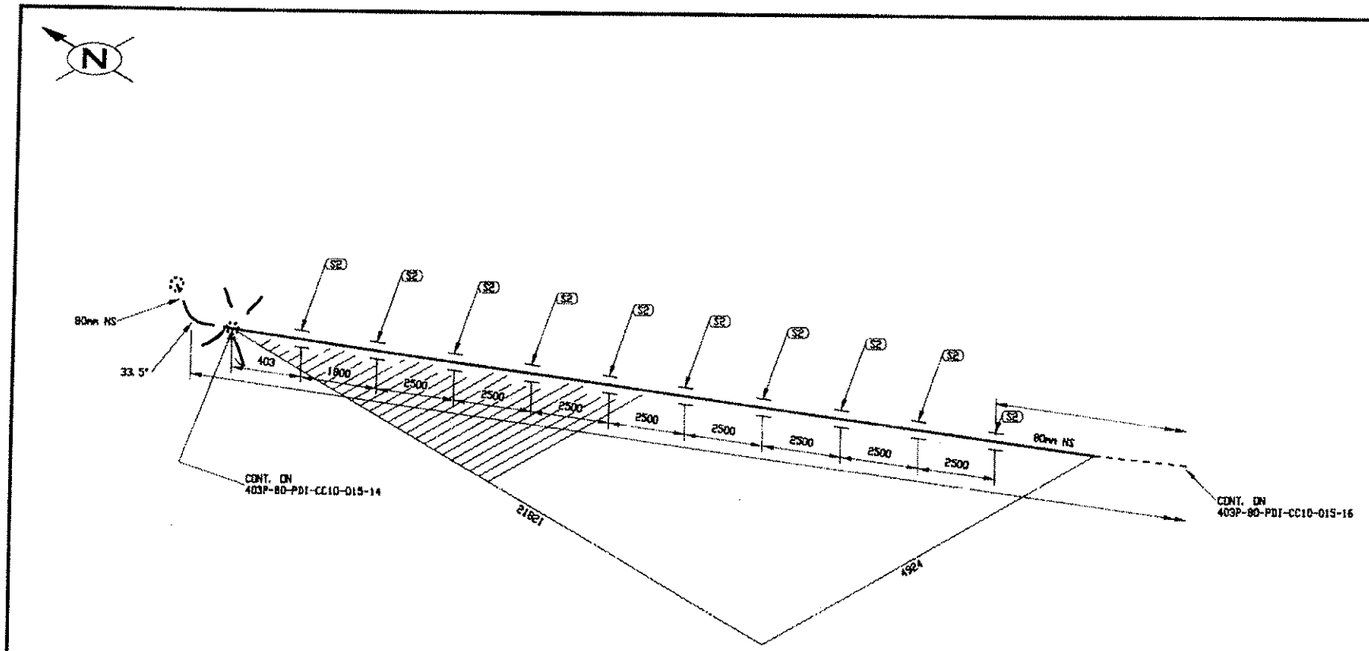

LISTE DE MATERIEL				
No	DTE	DIA	MATERIEL/CATALOGUE	DESCRIPTION
1	23453 MM	80	A 333 Gr. 6	SCH STD, SMLS PIPE
2	10	80		PIPE SUPPORT AS PER DETAIL 3, DWG 65-403-270-200

CONTRAT UF
21.06 X20

REÇU le
03 JUIL. 2017
Rép: _____

FABRICATION DRAWINGS BASED ON WSP CERTIFIED ENGINEERING

No.	DATE	REVISION	PAR	APP.
0	2017/06/30	ISSUED FOR CONSTRUCTION	QVN	

CLIENT: AGNICO EAGLE

NUQSANA PROMEC MINING

ultragen

CONSULTANT PROJECT NO. 591700

SCEAU PROFESSIONNEL

CONC.: KHV DATE: 2017/05/29
DESSINÉ PAR: KVE DATE: 2017/05/29
VER. PAR: DATE:
APP.: DATE:
ECHELLE: AUCUNE

PROJET: AGNICO EAGLE - MELIADINE DIVISION
403P - COMBUSTIBLE

TITRE: PORTAIL #1
FABRICATION ISOMETRIC
FUEL FROM 403P-80-PDI-CC10-014 TO 65TNK41611

No PROJET	No DESSIN	PAGES	REV.
6515	403P-80-PDI-CC10-015	15/19	0

NO. DE CONDUITE	SPECIFICATION	PRODUIT	SYSTEME REVETEMENT	CODE DE COULEUR	ISOLATION ET TRACAGE	EPAISS. D'ISOLATION		
403P-80-PDI-CC10-015	CC10	PDI		-			65-403-270-200	PIPE SUPPORT DETAILS
PRESSION D'OPERATION / TEMPERATURE D'OPERATION	PRESSION DE CONCEPTION	TEMPERATURE DE CONCEPTION	PRESSION D'ESSAI	CLASSE D'INSPECTION	CODE DE SERVICE	TRAITEMENT THERMIQUE	65-403-205-200	P&ID
— PSIG / — °F	— PSIG	10 à 15°F	— PSIG	5%RX	B31.3	—	No. DESSIN	DESSINS DE REFERENCE

IMPRIMÉ LE: Jun 29, 2017, 5:42pm

403P-MN-01

EN ATELIER LE
04 JUIL. 2017
par: BD

JQ2216.6
PT GMAW NCC01
PTS P1 & 6

Flange Diagl

U-F

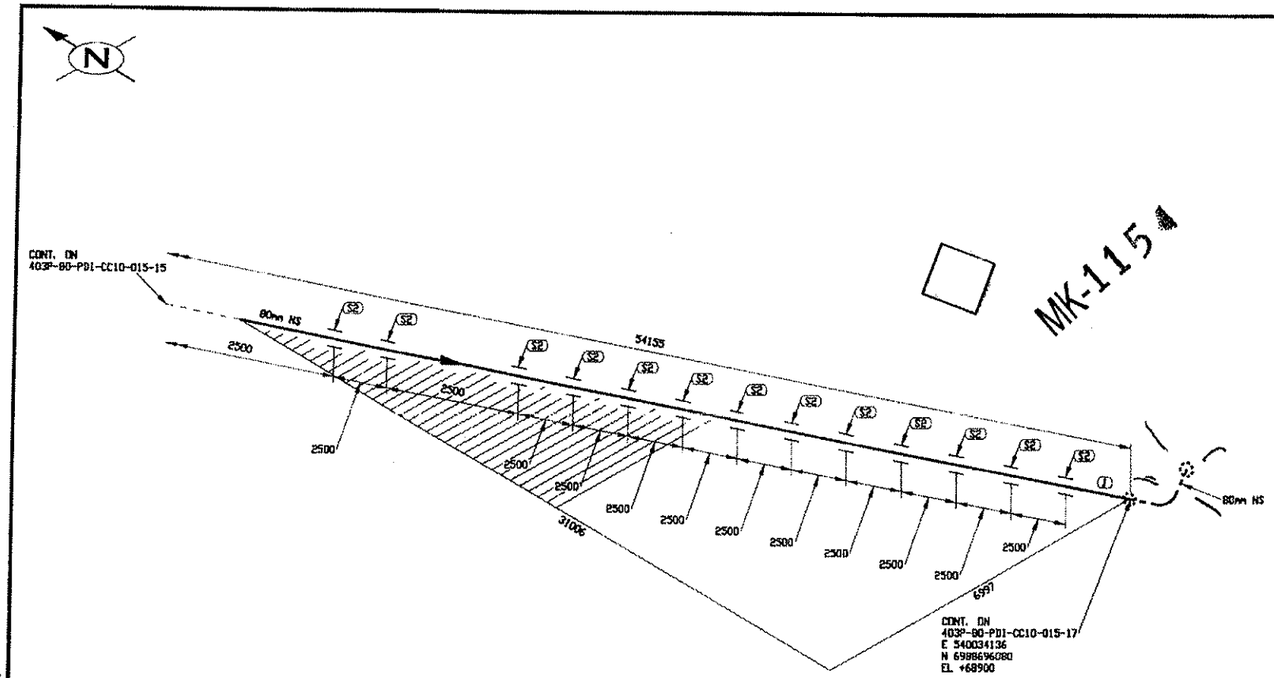
N
MK-115
CONT. ON
403P-80-PDI-CC10-015-15
80mm NS
2500
2500
2500

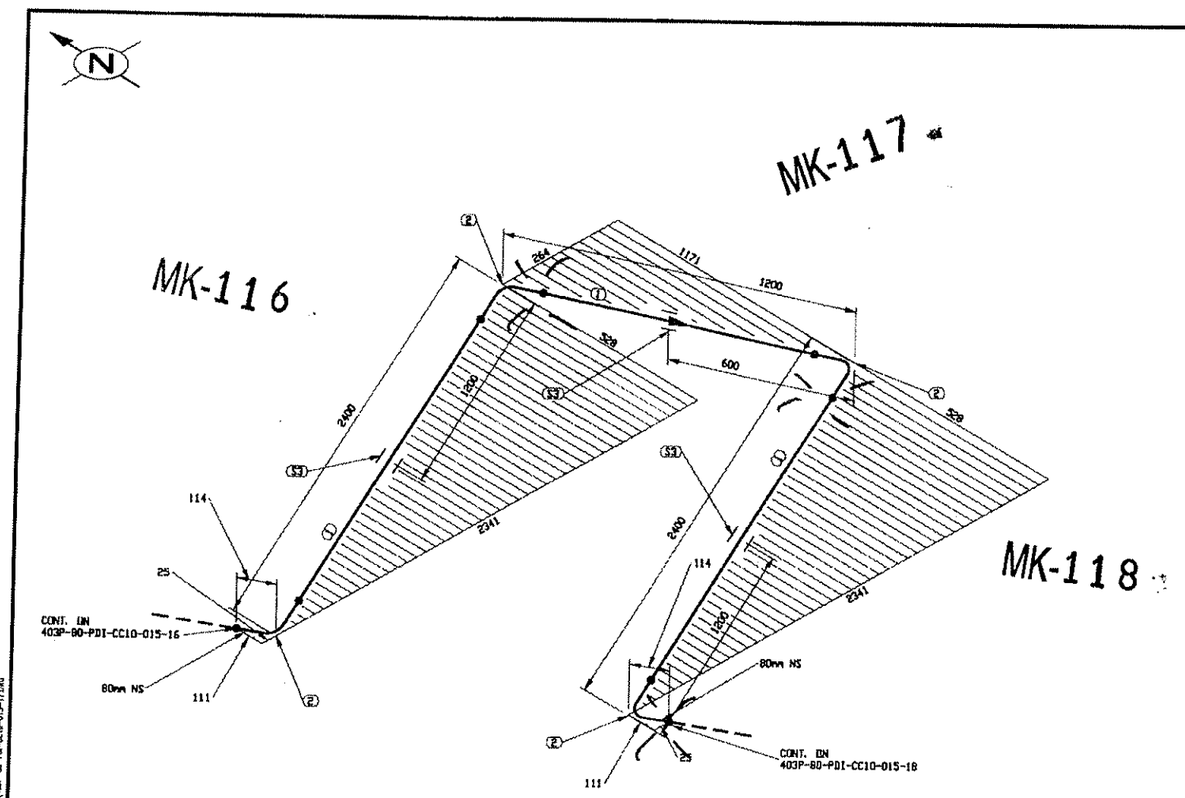

LISTE DE MATERIEL

No	QTE	DIA	MATERIEL/CATALOGUE	DESCRIPTION
1	5316 MM	80	A 333 Gr. 6	SCH STD, SMLS PIPE
2	4	80	A 420 Gr. WPL6	SCH STD, BV LR 90 DEG ELBOW
3	3	80		PIPE SUPPORT AS PER DETAIL 3, DWG: 65-403-270-200

CONTRAT U
21.06X20

REÇU le
03 JUIL. 2017
Rép:

EN ATELIER LE
04 JUIL. 2017
par :

FABRICATION DRAWINGS BASED ON WSP CERTIFIED ENGINEERING

No.	DATE	REVISION	APP.
0	2017/06/30	ISSUED FOR CONSTRUCTION	QVN

CLIENT: AGNICO EAGLE

NUQSANA PROMEC MINING

ultragen

CONSULTANT PROJECT No. 591700

SCEAU PROFESSIONNEL

CONC.: KVN DATE: 2017/05/26
DESSINÉ PAR: KVE DATE: 2017/05/29
VÉR. PAR: DATE:
APP.: DATE:
ÉCHELLE: AUCUNE

PROJET: AGNICO EAGLE - MELIADINE DIVISION
403P - COMBUSTIBLE

TITRE: PORTAIL #1
FABRICATION ISOMETRIC
FUEL FROM 403P-80-PDI-CC10-014 TO 65TNK41611

No PROJET	No DESSIN	PAGES	REV.
6515	403P-80-PDI-CC10-015	17/19	0

403P MN-01

NO. DE CONDUITE		SPECIFICATION	PRODUIT	SYSTEME REVETEMENT	CODE DE COULEUR	ISOLATION ET TRACAGE	EPAISS. D'ISOLATION		
403P-80-PDI-CC10-015		CC10	PDI		–			65-403-270-200	PIPE SUPPORT DETAILS
PRESSION D'OPERATION	TEMPERATURE D'OPERATION	PRESSION DE CONCEPTION	TEMPERATURE DE CONCEPTION	PRESSION D'ESSAI	CLASSE D'INSPECTION	CODE DE SERVICE	TRAITEMENT THERMIQUE	65-403-205-200	P&ID
— PSIG	— °F	— PSIG	10 & 17 °F	— PSIG	5% RX	B31.3		No. DESSIN	DESSINS DE REFERENCE

IMPRIMÉ LE: Jun 28 2017 5:44pm

FICHIER: W:\Projets Corp\Modelisation\591700 (Prot Distribution)\02_Donnes\02_Input\dwg\02_Portail 1\403P-80-PDI-CC10-015-17.DWG

JQ2216.6
Pt GMAW 16 005
Pt a Pl 46

Fluide Diesel

U-F

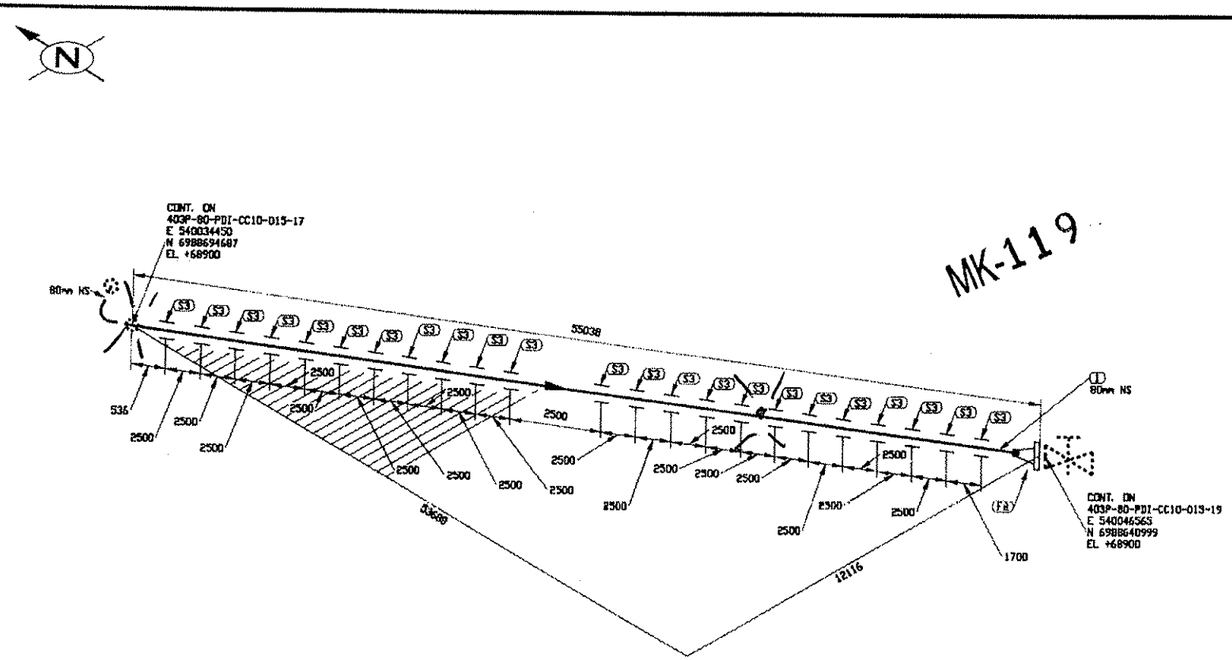

MK-119

FABRICATION DRAWINGS BASED ON WSP CERTIFIED ENGINEERING

LISTE DE MATERIEL

No	QTE	DIA	MATERIEL/CATALOGUE	DESCRIPTION
1	54970 MM	80	A 333 Gr. 6	SCH STD, SMLS PIPE
2	1	80	A 350 Gr. LF2	CL 150, SCH STD, RF, WN FLANGE
3	23	80		PIPE SUPPORT AS PER DETAIL 3, DWG 65-403-270-200

CONTRAT UF
21.06 X20

REÇU le
03 JUIL. 2017
Rép: _____

EN ATELIER LE
04 JUIL. 2017
par: [signature]

No.	DATE	REVISION	QVN / PAR / APP.
0	2017/06/30	ISSUED FOR CONSTRUCTION	

CLIENT: AGNICO EAGLE

NUQSANA PROMEC MINING

ultragen

CONSULTANT PROJECT NO. 591700

SCEAU PROFESSIONNEL

CONC.: KHV
DATE: 2017/06/29
DESSINÉ PAR: KVE
DATE: 2017/06/29
VÉR. PAR:
DATE:
APP.:
DATE:
ÉCHELLE: AUCUNE

PROJET: AGNICO EAGLE - MELIADINE DIVISION
403P - COMBUSTIBLE

TITRE: PORTAIL #1
FABRICATION ISOMETRIC
FUEL FROM 403P-80-PDI-CC10-014 TO 65TNK41611

No PROJET	No DESSIN	PAGES	REV.
6515	403P-80-PDI-CC10-015	18/19	0

403P-MN-01

NO. DE CONDUITE		SPECIFICATION	PRODUIT	SYSTEME REVETEMENT	CODE DE COULEUR	ISOLATION ET TRACAGE	EPAISS. D'ISOLATION		
403P-80-PDI-CC10-015		CC10	PDI		-			65-403-270-200	PIPE SUPPORT DETAILS
PRESSION D'OPERATION	TEMPERATURE D'OPERATION	PRESSION DE CONCEPTION	TEMPERATURE DE CONCEPTION	PRESSION D'ESSAI	CLASSE D'INSPECTION	CODE DE SERVICE	TRAITEMENT THERMIQUE	65-403-205-200	P&ID
— PSIG	— °F	— PSIG	10 à 15 °F	— PSIG	5% RX	B31.3	—	No. DESSIN	DESSINS DE REFERENCE

JQ2216.6
Pt GMAW TC 800
P1 à P1 L6

Fluide Diesel

U-F.

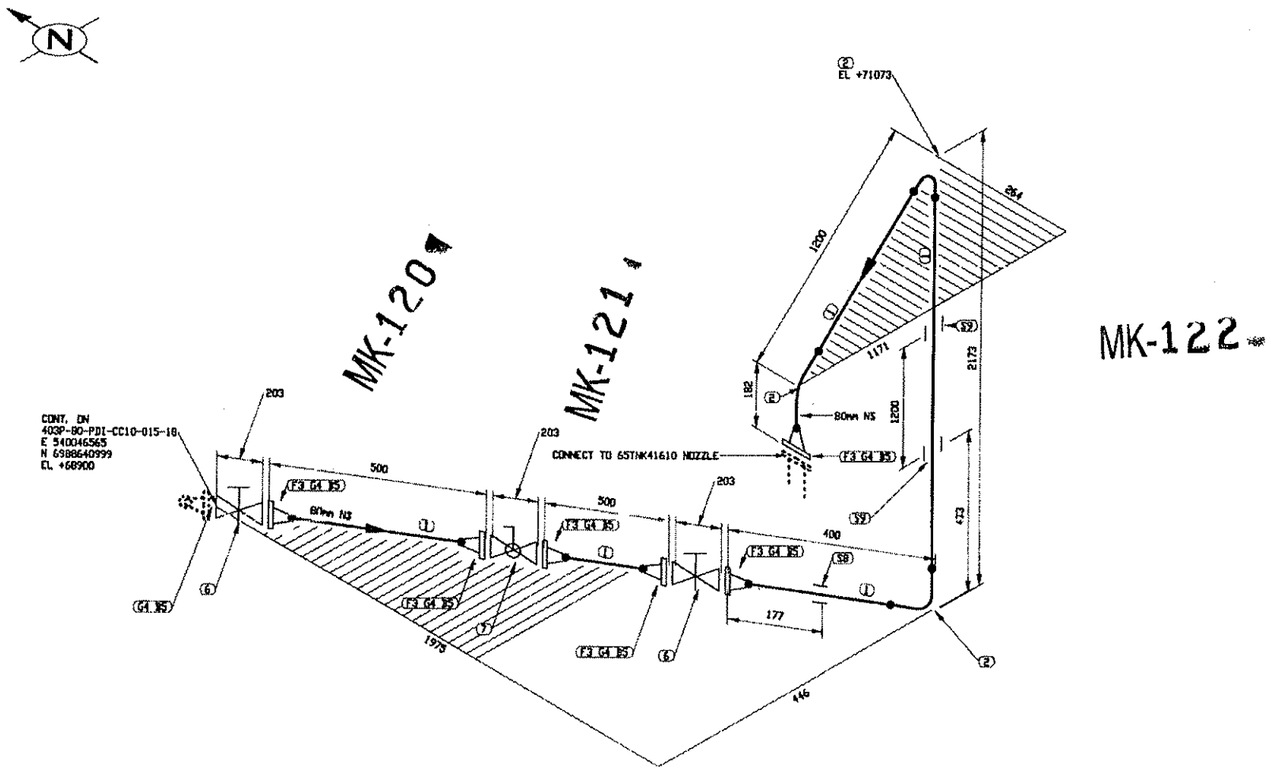

LISTE DE MATERIEL

No	QTE	DIA	MATERIEL/CATALOGUE	DESCRIPTION
1	3862 MM	80	A 333 Gr. 6	SCH STD, SMLS PIPE
2	3	80	A 420 Gr. WPL6	SCH STD, BW LR 90 DEG ELBOW
3	6	80	A 350 Gr. LF2	CL 150, SCH STD, RF, WN FLANGE
4	7	80	ASME B16.20	CL 150, GARLOCK 5500, RING TYPE GASKET 1/8" THK
5	28	16	A 193 B7/A 194 2H	CL 150, 4 - 15.875 X 90 STUD BOLTS c/w TWO HEAVY HEX NUTS
6	2	80	GA-10	CL 150, RF, GATE VALVE
7	1	80	BA-31	CL 150, RF, BALL VALVE
8	1	80		PIPE SUPPORT AS PER DETAIL 3, DWG 65-403-270-200
9	2	80		PIPE SUPPORT BY CONTRACTOR

CONTRAT UF
21.06X20

REÇU 18
03 JUIL. 2017
Rép: _____

EN ATELIER LE
04 JUIL. 2017
par: [signature]

No.	DATE	REVISION	QVN / PAR / APP.
0	2017/06/30	ISSUED FOR CONSTRUCTION	

FABRICATION DRAWINGS BASED ON WSP CERTIFIED ENGINEERING

CLIENT: AGNICO EAGLE

NUQSANA PROMEC MINING

ultragen

CONSULTANT PROJECT NO. 591700

SCEAU PROFESSIONNEL

CONC.: KHY DATE: 2017/05/29
DESSINÉ PAR: KVE DATE: 2017/05/29
VÉR. PAR: DATE:
APP.: DATE:
ÉCHELLE: AUCUNE

PROJET: AGNICO EAGLE - MELIADINE DIVISION
403P - COMBUSTIBLE

TITRE: PORTAIL #1
FABRICATION ISOMETRIC
FUEL FROM 403P-80-PDI-CC10-014 TO 65TNK41611

No PROJET	No DESSIN	PAGES	REV.
6515	403P-80-PDI-CC10-015	19/19	0

403P-MN-01

NO. DE CONDUITE		SPECIFICATION	PRODUIT	SYSTEME REVETEMENT	CODE DE COULEUR	ISOLATION ET TRACAGE	EPAISS. D'ISOLATION		
403P-80-PDI-CC10-015		CC10	PDI		-			65-403-270-200	PIPE SUPPORT DETAILS
PRESSION D'OPERATION	TEMPERATURE D'OPERATION	PRESSION DE CONCEPTION	TEMPERATURE DE CONCEPTION	PRESSION D'ESSAI	CLASSE D'INSPECTION	CODE DE SERVICE	TRAITEMENT THERMIQUE	65-403-205-200	P&ID
— PSIG	— °F	— PSIG	10 à 15 °F	— PSIG	5% Rx	B31.3	—	No. DESSIN	DESSINS DE REFERENCE

JQ2216.6
Pt-GMAW AC-001
P1 a P1 R6

Fluide Diesel

U-F.

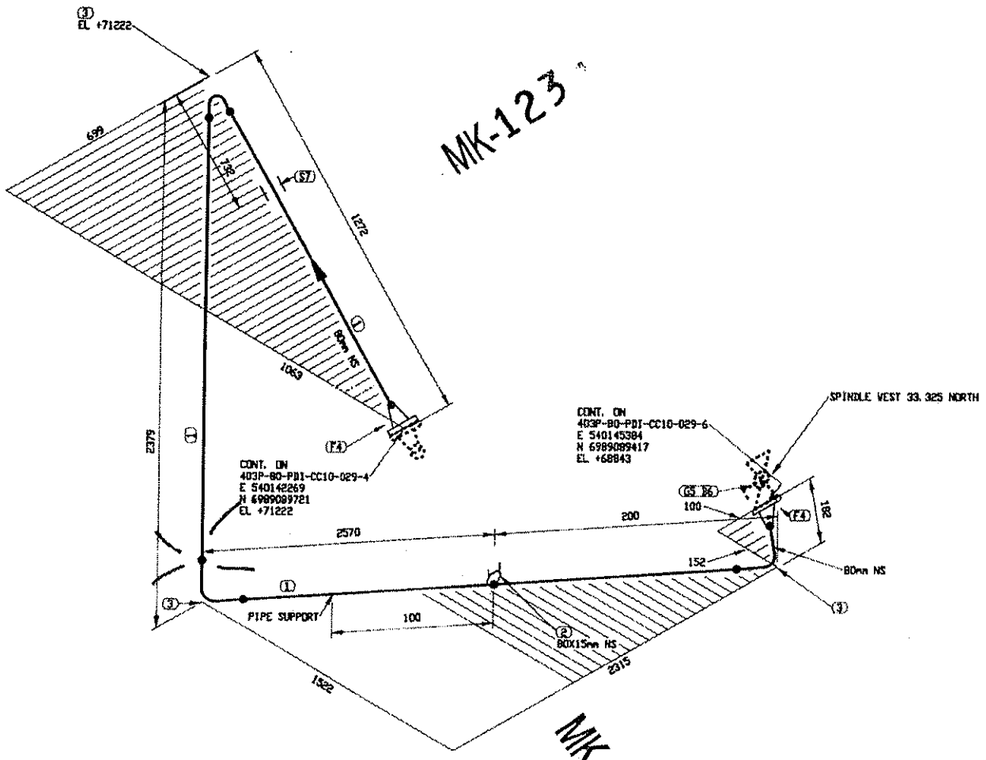

FABRICATION DRAWINGS BASED ON WSP CERTIFIED ENGINEERING

LISTE DE MATERIEL

No	QTE	DIA	MATERIEL/CATALOGUE	DESCRIPTION
1	5783 MM	80	A 333 Gr. 6	SCH STD, SMLS PIPE
2	1	80X15	A 350 Gr. LF2	CL 3000, THREDOLET
3	3	80	A 420 Gr. WPL6	SCH STD, BW LR 90 DEG ELBOW
4	2	80	A 350 Gr. LF2	CL 150, SCH STD, RF, WN FLANGE
5	1	80	ASME B16.20	CL 150, GARLOCK 9500, RING TYPE GASKET 1/8" THK
6	4	16	A 193 B7/A 194 2H	CL 150, 4 - 15.875 X 90 STUD BOLTS c/w TWO HEAVY HEX NUTS
7	1	80		PIPE SUPPORT AS PER DETAIL 3, DWG 65-403-270-200

CONTRAT UF
21.06X20

REÇU le
03 JUIL. 2017
Rép:

ENATELIER LE
04 JUIL. 2017
par: BS.

No.	DATE	REVISION	APP.
0	2017/06/30	ISSUED FOR CONSTRUCTION	QVN

CLIENT: AGNICO EAGLE

NUQSANA PROMEC MINING

ultragen

CONSULTANT PROJECT NO. 591700

SCEAU PROFESSIONNEL

CONC.: KHV
DATE: 2017/06/29
DESSINÉ PAR: KVE
DATE: 2017/06/29
VÉR. PAR:
DATE:
APP.:
DATE:
ÉCHELLE: AUCUNE

PROJET: AGNICO EAGLE - MEL1ADINE DIVISION
403P - COMBUSTIBLE

TITRE: PORTAIL #1
FABRICATION ISOMETRIC
FUEL FROM 65PID41603A/B TO 65TNK41609/10/11

No PROJET	No DESSIN	PAGES	RÉV.
6515	403P-80-PDI-CC10-029	5/10	0

NO. DE CONDUITE	SPECIFICATION	PRODUIT	SYSTEME REVETEMENT	CODE DE COULEUR	ISOLATION ET TRACAGE	EPAISS. D'ISOLATION		
403P-80-PDI-CC10-029	CC10	PDI		-			65-403-270-200	PIPE SUPPORT DETAILS
PRESSION D'OPERATION / TEMPERATURE D'OPERATION	PRESSION DE CONCEPTION / TEMPERATURE DE CONCEPTION	PRESSION D'ESSAI	CLASSE D'INSPECTION	CODE DE SERVICE	TRAITEMENT THERMIQUE		65-403-205-200	P&ID
— PSIG — °F	— PSIG 100 °F	— PSIG	5%	B31.3	—		No. DESSIN	DESSINS DE REFERENCE

Fluide Diesel

U-F

403P-MN-01

IMPRIMÉ LE: Jun 29, 2017, 3:54pm

FICHIER: N:\Projet Engr\Modeles\591700 (Non Distribuable)\05. Drawers\02. Symétrie\02. Isométriques\02. Portail 1\403P-80-PDI-CC10-029-5.DWG

JQ2216.6
Pt GMAW AC
P1 a P10 01
R6

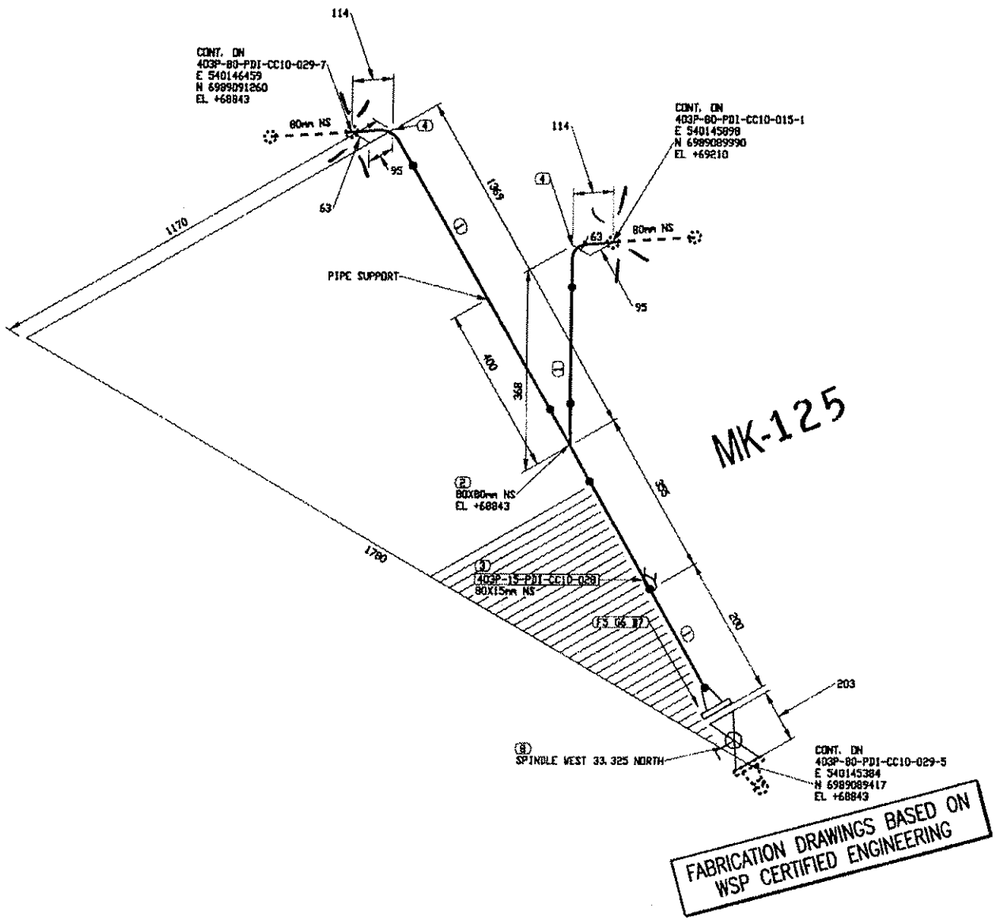

LISTE DE MATÉRIEL

No	QTE	DIA	MATERIEL/CATALOGUE	DESCRIPTION
1	1738 NN	80	A 333 Gr. 6	SCH STD, SMLS PIPE
2	1	80X80	A 420 Gr. WPL6	SCH STD, BW STRAIGHT TEE
3	1	80X15	A 350 Gr. LF2	CL 3000, THREDOLET
4	2	80	A 420 Gr. WPL6	SCH STD, BW LR 90 DEG ELBOW
5	1	80	A 350 Gr. LF2	CL 150, SCH STD, RF, WN FLANGE
6	1	80	ASME B16.20	CL 150, GARLOCK 5500, RING TYPE GASKET 1/8" THK
7	4	16	A 193 B7/A 194 2H	CL 150, 4 - 15.875 X 90 STUD BOLTS c/w TWO HEAVY HEX NUTS
8	1	80	BA-31	CL 150, RF, BALL VALVE

CONTRAT UF
21.06.20

REÇU le
03 JUIL. 2017
Rép:

EN ATELIER LE
04 JUIL. 2017
par: BS

No.	DATE	REVISION	PAR / APP.
0	2017/06/30	ISSUED FOR CONSTRUCTION	QVN

CLIENT: AGNICO EAGLE

NUQSANA PROMEC MINING

ultragen

CONSULTANT PROJECT NO. 591700

SCEAU PROFESSIONNEL

CONC.: KHV
DATE: 2017/05/29
DESSINÉ PAR: KVE
DATE: 2017/05/29
VÉR. PAR:
DATE:
APP.:
DATE:
ÉCHELLE: AUCUNE

PROJET: AGNICO EAGLE - MEL1ADINE DIVISION
403P - COMBUSTIBLE

TITRE: PORTAIL #1
FABRICATION ISOMETRIC
FUEL FROM 65PID41603A/B TO 65TNK41609/10/11

No PROJET	No DESSIN	PAGES	REV.
6515	403P-80-PDI-CC10-029	6/10	0

403P-MM-01

NO. DE CONDUITE		SPÉCIFICATION	PRODUIT	SYSTÈME REVÊTEMENT	CODE DE COULEUR	ISOLATION ET TRAÇAGE	ÉPAISS. D'ISOLATION		
403P-80-PDI-CC10-029		CC10	PDI		-			65-403-270-200	PIPE SUPPORT DETAILS
PRESS. D'OPÉRATION	TEMPÉRATURE D'OPÉRATION	PRESSION DE CONCEPTION	TEMPÉRATURE DE CONCEPTION	PRESSION D'ESSAI	CLASSE D'INSPECTION	CODE DE SERVICE	TRAITEMENT THERMIQUE	65-403-205-200	P&ID
— PSIG	— °F	— PSIG	140/15 °F	— PSIG	5% RX	B31.3	—	No. DESSIN	DESSINS DE RÉFÉRENCE

TRACÉ: K:\Projets Eagle\Modelisation\06 Portail (Fuel Distribution)\05. Dessins\02. Isométriques\02. Portail 1\403P-80-PDI-CC10-029-4.DWG

IMPRIMÉ LE: Jun 29, 2017, 3:55pm

JQ221C-6
Pt GMAW AQ-001
RG
P1 & P1

Fluide Diesel

U-F

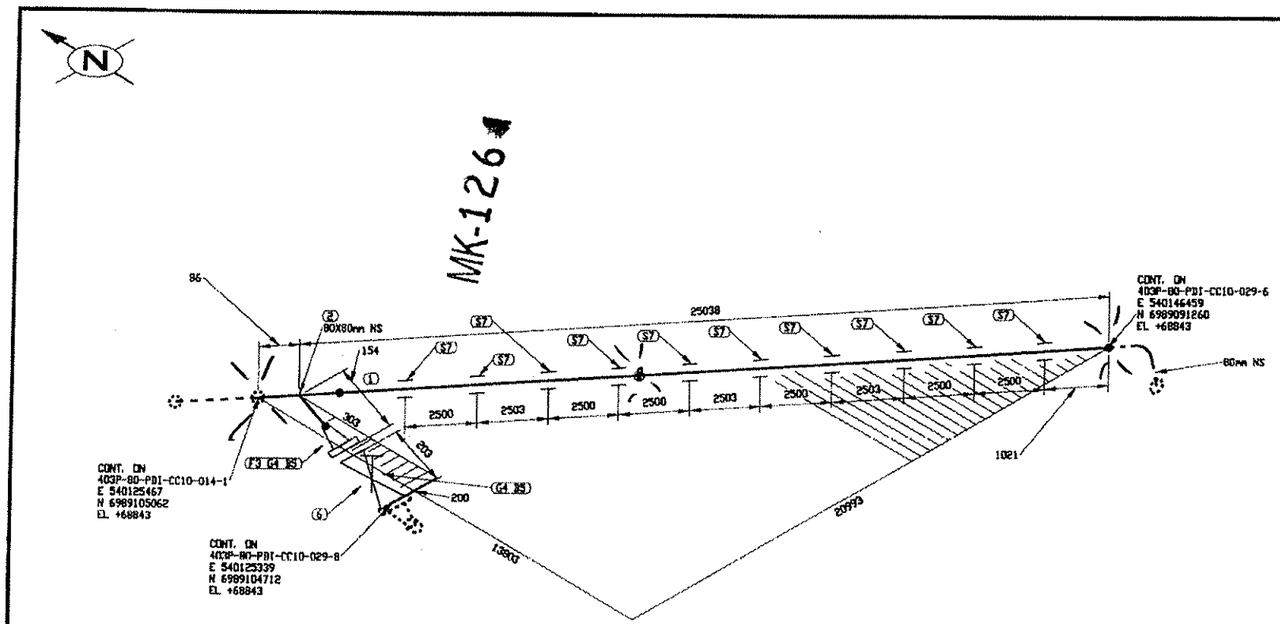

FABRICATION DRAWINGS BASED ON WSP CERTIFIED ENGINEERING

LISTE DE MATERIEL

No	QTE	DIA	MATERIEL/CATALOGUE	DESCRIPTION
1	24953 MM	80	A 333 Gr. 6	SCH STD, SMLS PIPE
2	1	80X80	A 420 Gr. WPL6	SCH STD, BW STRAIGHT TEE
3	1	80	A 350 Gr. LF2	CL 150, SCH STD, RF, WN FLANGE
4	2	80	ASME B16.20	CL 150, GARLOCK 3500, RING TYPE GASKET 1/8" THK
5	8	16	A 193 B7/A 194 2H	CL 150, 4 - 15.875 X 90 STUD BOLTS c/w TWO HEAVY HEX NUTS
6	1	80	GA-10	CL 150, RF, GATE VALVE
7	10	80		PIPE SUPPORT AS PER DETAIL 3, DWG 65-403-270-200

CONTRAT UF
21.06.20

REÇU le
03 JUIL. 2017
Rép:

EN ATELIER LE
04 JUIL. 2017
par:

No.	DATE	REVISION	APP.
0	2017/06/30	ISSUED FOR CONSTRUCTION	QVN / FAR

CLIENT: AGNICO EAGLE

NUQSANA PROMEC MINING

ultragen

CONSULTANT PROJECT NO. 591700

SCEAU PROFESSIONNEL

CONC.: KHV DATE: 2017/06/29
DESSINE PAR: KVE DATE: 2017/05/29
VER. PAR: DATE:
APP.: DATE:
ÉCHELLE: AUCUNE

PROJET: AGNICO EAGLE - MELIADINE DIVISION
403P - COMBUSTIBLE

TITRE: PORTAIL #1
FABRICATION ISOMETRIC
FUEL FROM 65POD41603A/B TO 65TNK41609/10/11

No PROJET	No DESSIN	PAGES	REV.
6515	403P-80-PDI-CC10-029	7/10	0

403P-MAN-01

NO. DE CONDUITE	SPECIFICATION	PRODUIT	SYSTEME REVETEMENT	CODE DE COULEUR	ISOLATION ET TRACAGE	EPAISS. D'ISOLATION		
403P-80-PDI-CC10-029	CC10	PDI		-			65-403-270-200	PIPE SUPPORT DETAILS
PRESSION D'OPERATION / TEMPERATURE D'OPERATION	PRESSION DE CONCEPTION / TEMPERATURE DE CONCEPTION	PRESSION D'ESSAI	CLASSE D'INSPECTION	CODE DE SERVICE	TRAITEMENT THERMIQUE		65-403-205-200	P&ID
PSIG / °F	PSIG / 100 °F	PSIG	5% RX	B31.3	—		No. DESSIN	DESSINS DE REFERENCE

FEUILLE #1

IMPRIMÉ LE: Jun 29, 2017, 4:12pm

Fluide Diesel

U-F

JG2216.6
Pt GMAW DC 001
Pt a Pl Ac

bomf\dgsvy02. Portail 1\403P-80-PDI-CC10-029-7.DWG

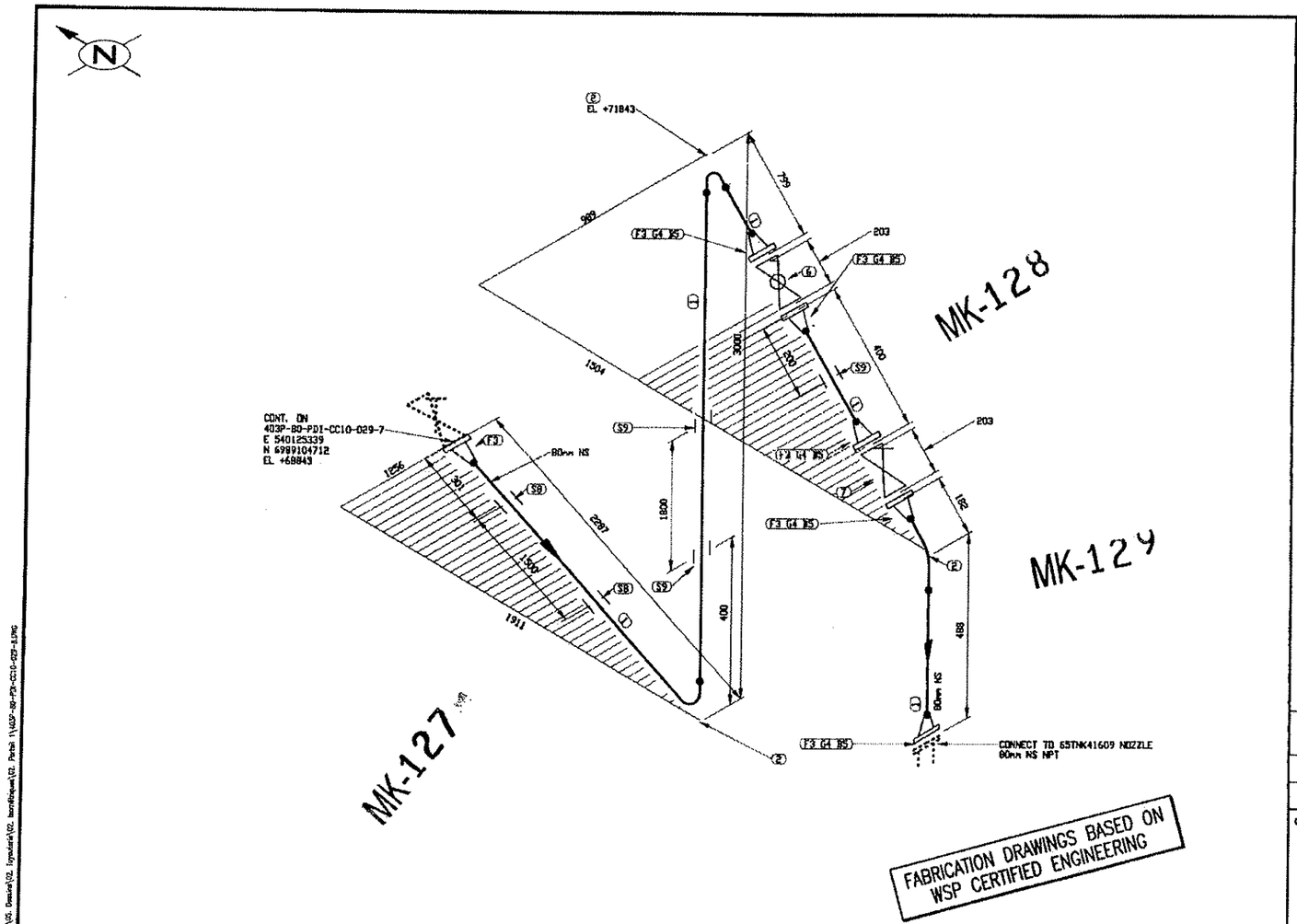

FABRICATION DRAWINGS BASED ON WSP CERTIFIED ENGINEERING

LISTE DE MATERIEL

No	QTE	DIA	MATERIEL/CATALOGUE	DESCRIPTION
1	5922 MM	80	A 333 Gr. 6	SCH STD, SMLS PIPE POExTOE
2	3	80	A 420 Gr. WPL6	SCH STD, BV LR 90 DEG ELBOW
3	6	80	A 350 Gr. LF2	CL 150, SCH STD, RF, WN FLANGE
4	5	80	ASME B16.20	CL 150, GARLOCK 5500, RING TYPE GASKET 1/8" THK
5	20	16	A 193 B7/A 194 2H	CL 150, 4 - 15.875 X 90 STUD BOLTS c/w TWO HEAVY HEX NUTS
6	1	80	BA-31	CL 150, RF, BALL VALVE
7	1	80	GA-10	CL 150, RF, GATE VALVE
8	2	80		PIPE SUPPORT AS PER DETAIL 3, DWG: 65-403-270-200
9	3	80		PIPE SUPPORT BY CONTRACTOR

CONTRAT UF
21.06 X 20

REÇU le
03 JUIL. 2017
Rép: _____

EN ATELIER LE
04 JUIL. 2017
par: [signature]

No.	DATE	REVISION	QVN / PAR / APP.
0	2017/06/30	ISSUED FOR CONSTRUCTION	QVN

CLIENT:

AGNICO EAGLE

NUQSANA PROMEC MINING

ultragen

CONSULTANT PROJECT NO. 591700

SCEAU PROFESSIONNEL

CONC.: KHV
DATE: 2017/05/29
DESSINÉ PAR: KVE
DATE: 2017/05/29
VÉR. PAR:
DATE:
APP.:
DATE:
ÉCHELLE: AUCUNE

PROJET: AGNICO EAGLE - MELIADINE DIVISION
403P - COMBUSTIBLE

TITRE: PORTAIL #1
FABRICATION ISOMETRIC
FUEL FROM 65PID41603A/B TO 65TNK41609/10/11

No PROJET	No DESSIN	PAGES	RÉV.
6515	403P-80-PDI-CC10-029	8/10	0

NO. DE CONDUITE		SPECIFICATION	PRODUIT	SYSTEME REVETEMENT	CODE DE COULEUR	ISOLATION ET TRACAGE	EPAISS. D'ISOLATION		
403P-80-PDI-CC10-029		CC10	PDI		-			65-403-270-200	PIPE SUPPORT DETAILS
PRESSION D'OPERATION	TEMPERATURE D'OPERATION	PRESSION DE CONCEPTION	TEMPERATURE DE CONCEPTION	PRESSION D'ESSAI	CLASSE D'INSPECTION	CODE DE SERVICE	TRAITEMENT THERMIQUE	65-403-205-200	P&ID
— PSIG	— °F	— PSIG	1a à 15 °F	— PSIG	5% RX	B31.3	—	No. DESSIN	DESSINS DE REFERENCE

JQ22K.6
GMAW
P1 a P1

Fluide Diesel

U-F

403P-MN-01



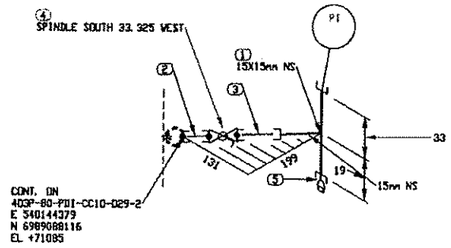

LISTE DE MATERIEL

No	QTE	DIA	MATERIEL/CATALOGUE	DESCRIPTION
1	1	15X15	A 350 Gr. LF2	CL 3000, THRD STRAIGHT TEE
2	1	15	A 333 Gr. 6	SCH 80, NIPPLE x 75mm LG PBE
3	1	15	A 333 Gr. 6	SCH 80, NIPPLE x 75mm LG PDExTOE
4	1	15	BA-29	CL 600, SW, BALL VALVE
5	1	15	A 350 Gr. LF2	MNPT SOLID STL BULL PLUG

CONTRAT UF
21.06 X20

REÇU le
03 JUIL. 2017
Rép: _____

No.	DATE	REVISION	PAR	APP.
0	2017/06/30	ISSUED FOR CONSTRUCTION	QVN	

ENATELIER LE
04 JUIL. 2017
par : [signature]

FABRICATION DRAWINGS BASED ON WSP CERTIFIED ENGINEERING

CLIENT:

AGNICO EAGLE

NUQSANA PROMEC MINING

ultragen

CONSULTANT PROJECT NO. 591700

SCEAU PROFESSIONNEL

CONC.: KHV
DATE: 2017/06/28
DESSINÉ PAR: KVE
DATE: 2017/06/28
VÉR. PAR:
DATE:
APP.:
DATE:
ÉCHELLE: AUCUNE

PROJET: AGNICO EAGLE - MELIADINE DIVISION
403P - COMBUSTIBLE

TITRE: PORTAIL #1
FABRICATION ISOMETRIC
FUEL FROM 65POD41603A/B TO 65TNK41609/10/11

No PROJET	No DESSIN	PAGES	REV.
6515	403P-80-PDI-CC10-029	9/10	0

NO. DE CONDUITE		SPECIFICATION	PRODUIT	SYSTEME REVETEMENT	CODE DE COULEUR	ISOLATION ET TRACAGE	EPAISS. D'ISOLATION		
403P-80-PDI-CC10-029		CC10	PDI		–			65-403-270-200	PIPE SUPPORT DETAILS
PRESSION D'OPERATION	TEMPERATURE D'OPERATION	PRESSION DE CONCEPTION	TEMPERATURE DE CONCEPTION	PRESSION D'ESSAI	CLASSE D'INSPECTION	CODE DE SERVICE	TRAITEMENT THERMIQUE	65-403-205-200	P&ID
— PSIG	— °F	— PSIG	10 à 15 °F	— PSIG	5% BX	B31.3	—	No. DESSIN	DESSINS DE REFERENCE

JQ2216.6
PA-GMAW AL-001
P1 a P1 RC

Fluide Diesel

U-F

403P-MN-01

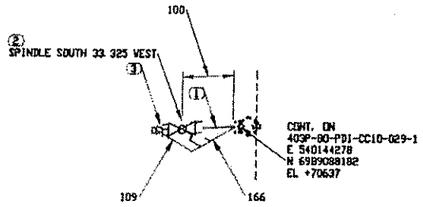

LISTE DE MATERIEL				
No	QTE	DIA	MATERIEL/CATALOGUE	DESCRIPTION
1	1	25	A 333 Gr. 6	SCH 80, NIPPLE x 75mm LG PDExTDE
2	1	25	BA-32	CL 600, THRD, BALL VALVE
3	1	25	A 350 Gr. LF2	MNPT SOLID STL BULL PLUG

CONTRAT UF
21.06X20

REÇU le
03 JUIL. 2017
Rép: _____

EN ATELIER LE
04 JUIL. 2017
par : _____

FABRICATION DRAWINGS BASED ON WSP CERTIFIED ENGINEERING

No.	DATE	REVISION	PAR / APP.
0	2017/06/30	ISSUED FOR CONSTRUCTION	QVN /

CLIENT: AGNICO EAGLE

NUQSANA FROMEC MINING

ultragen

CONSULTANT PROJECT NO. 591700

SCEAU PROFESSIONNEL

CONC.: KHV
DATE: 2017/06/29
DESSINÉ PAR: KVE
DATE: 2017/05/29
VÉR. PAR:
DATE:
APP.:
DATE:
ÉCHELLE: AUCUNE

PROJET: AGNICO EAGLE - MELIADINE DIVISION
403P - COMBUSTIBLE

TITRE: PORTAIL #1
FABRICATION ISOMETRIC
FUEL FROM 65POD41603A/B TO 65TNK41609/10/11

No PROJET	No DESSIN	PAGES	RÉV.
6515	403P-80-PDI-CC10-029	10/10	0

403P-MN-01

NO. DE CONDUITE		SPÉCIFICATION	PRODUIT	SYSTÈME REVÊTEMENT	CODE DE COULEUR	ISOLATION ET TRAÇAGE	ÉPAISS. D'ISOLATION		
403P-80-PDI-CC10-029		CC10	PDI		-			65-403-270-200	PIPE SUPPORT DETAILS
PRESSION D'OPÉRATION	TEMPÉRATURE D'OPÉRATION	PRESSION DE CONCEPTION	TEMPÉRATURE DE CONCEPTION	PRESSION D'ESSAI	CLASSE D'INSPECTION	CODE DE SERVICE	TRAITEMENT THERMIQUE	65-403-205-200	P&ID
— PSIG	— °F	— PSIG	10 à 15°	[illegible] PSIG	5% RX	B31.3	—	No. DESSIN	DESSINS DE RÉFÉRENCE

TRACÉ: N:\Agnico Eagle\Meliadine\591700 (Fuel Distribution)\06. Drawings\02. Isométriques\02. Portail 1\403P-80-PDI-CC10-029-1.DWG
IMPRIMÉ LE: Jun 29, 2017, 3:59pm

Fuel Diesel

JOB 216.6
GMAWK-001
PI à PI
206

U-F.



(9127-8754 Québec inc.)
2380 de la Métallurgie
Jonquière (Québec)
G7X 9H2

MANUEL DE CONTRÔLE DE LA QUALITÉ

RAPPORT DE FABRICATION

FABRICANT : UNIES-FAB

(NOTRE REF. :UF-2106)

PROJET

PROJET

FABRIQUANT : UNIES-FAB (NOTRE REF. : UF-2106)

CLIENT :

INDEX DES SECTIONS

1. LÉGENDE
2. LISTE DES PROCÉDURES
3. PROCÉDURES DE SOUDURES
4. LISTE DES SOUDEURS
5. RAPPORTS DES TESTS DE QUALIFICATIONS DES SOUDEURS
6. LISTE DES JOINTS DE SOUDURE INSPECTÉS (E.N.D)
7. RAPPORTS D'INSPECTION & D'ESSAI
8. DÉCLARATION DU CLIENT
9. DÉCLARATION DE CONFORMITÉ DU CONSTRUCTEUR
10. FEUILLE DE ROUTE DE LA TUYAUTERIE
11. DESSINS ISOMÉTRIQUE IDENTIFIANT LES JOINTS AYANT SUBIS DES ESSAIS
12. MILLS TESTS

LÉGENDE

LÉGENDE DES DESSINS

 NUMÉRO DE SOUDURE

 IDENTIFICATION DU SOUDEUR (POINÇON)

 INSPECTION VISUEL

 NUMÉRO D'ESSAIS RADIOGRAPHIQUE (E.N.D.)

LISTE DES PROCÉDURES DE SOUDURE

NO. PROCEDURE	RÉVISION	TYPE DE MATÉRIEL	REMARQUE
JQ2216.6		A333 GR 6	

PROCÉDURES DE SOUDURE

Régie du bâtiment Québec — Appareils sous pression

DESCRIPTION DE LA METHODE DE SOUDAGE (DMS)
Welding Procedure Specification (WPS)

Notes: Les titres désignent également les hommes et les femmes.

(1) Entreprise/*Company*

Nom/Name: UNIES FAB INC

Adresse/Adress: 2380 DE LA MÉTALLURGIE JONQUIÈRE

QC

Code postal: G7X 9H2

(2) Enregistrement provincial / *Provincial Registration*: MS WP JQ 2216.6

(3) Désignation de la méthode/*Procédure Identification*

DMS N° / WPS No.: PT-GMAW-AC-001 — Révision N° / Revision No.: 7

RMS N° / PQR No.: PT-GMAW-001,GMAW-001

Section du code / Code section: SECTION IX

(4) Procédé(s) de soudage / *Welding Process(es)*

1	GMAW COURT CIRCUIT	Manuel/Manual ☐	Semi-auto. ☒	Machine ☐	Auto. ☐
2	GMAW GLOBULAIRE ,PLUIE	Manuel/Manual ☐	Semi-auto. ☒	Machine ☐	Auto. ☐
3		Manuel/Manual ☐	Semi-auto. ☐	Machine ☐	Auto. ☐

(5) Joints/*Joints* (QW-402)

Genre/Design: BOUT À BOUT , ANGLE

Soutien / Backing — Oui / Yes ☒ — Non / No ☒ — Matériau de soutien / Backing material: P1 OU SOUDURE

Support de retenue / Retainer: NON

Autre / Other: N/A

Voir Annexe ⓪

(6) Métaux de base/*Base Metals* (QW-403)

PN°/No. 1 Gr N°/No. 1-2-3 à/to PN°/No. 1 Gr N°/no. 1-2-3

ou Spécifications type et grade / or Specifications type and grade: N/A à/to N/A

ou Analyse chimique et prop. méc. / or Chemical Analysis and Mech. Prop.: N/A à/to N/A

Gamme des épaisseurs qualifiées métaux de base / Base Metal Thickness Range Qualified — Chanfrein / Groove — Min.: 3/16" — Max.: 8" — Angle: Filet: AUCUNE

Épaisseur maximale de la plus épaisse des passes de soudage / Maximum thickness of any welding pass: 1/4"

Autre / Other: N/A

(7) Métaux d'apport/*Filler Metals* (QW-404)

1 AWS N° No. E70C-6C-H4/ 6M H4	SFA 5.18	F-No. 6	A-No. (*)	Dia. 0.062" À 1/16"
2 AWS N° No.	SFA	F-No.	A-No.	Dia.
3 AWS N° No.	SFA	F-No.	A-No.	Dia.

Gamme des épaisseurs qualifiées pour dépôt de soudage / Weld Metal Thickness Range Qualified — Chanfrein / Groove — 1 max.: 0.1375 — 2 max.: 8" — 3 max.: — Angle: Filet: ALL

Marque de commerce du flux / Flux Tradename: N/A — Classification du flux-électrode / Electrode-Flux Classification:

Pièce insérée consumable / Consumable Insert: N/A — Autre / Other: FIL FOURRÉ SANS LAITIER (METAL CORED)

Autre / Other: CARBON:0.07%-0.15% MANGANESE:1.40%-1.85% SILICON

(8) Positions/*Positions* (QW-405)

Position(s) du chanfrein / Position(s) of Groove: TOUTE POSITION

Progression du soudage / Welding Progression — Montant / Up ☒ — Descendant / Down ☐

Position(s) de l'angle / Position(s) of Fillet: TOUTE POSITION

Autre / Other: N/A

(9) Préchauffage/*Preheat* (QW-406)

Température de préchauffage / Preheat Temperature: Min. .60 °F

Température de l'interpasse / Interpass Temperature: Max. 450°F

Maintien du préchauffage / Preheat Maintenance: N/A

Autre / Other: N/A

(10) *Traitement thermique postsoudage/ Postweld Heat Treatment* (QW-407)

Gamme de températures / Temperature Range: N/A

Gamme de durée / Time range: N/A

Autre / Other: N/A

(11) Gaz/*Gas* (QW-408)

Composition du gaz de protection / Shielding Gas Composition: 83%AR 17%CO2

Débit du gaz / Gas Flow Rate: 30-40 CFH

Composition du gaz de soutien / Backing Gas Composition: N/A

Débit du gaz / Gas Flow Rate: N/A

Composition du gaz de protection traînant / Trailing Shielding Gas Composition: N/A

(12) Caractéristiques électriques et techniques/Electrical Characteristics and Technique (QW-409) + (QW-410)

Couche(s) de soudure Weld Layer(s)	Procédé Process	Métal d'apport/Filler Metal		Courant/Current				Gamme de vitesse Travel Speed Range
		Classification Classification	Diamètre Diameter	Type Type	Polarité Polarity	Gamme d'ampérage Amp Range	Gams de voltage Volt Range	
1	GMAW	E70-6C / 6M	0.052"	DC	EP	190-310	23-31	N/A
2& PLUS	GMAW	E70-6C / 6M	0.052"	DC	EP	190-310	23-31	N/A
1	GMAW	E70-6C / 6M	1/16"	DC	EP	200-340	23-33	N/A
2& PLUS	GMAW	E70-6C / 6M	1/16"	DC	EP	200-340	23-33	N/A

Énergie de chaleur maximale / Maximum Heat Input: N/A

Courant variable / Pulsing Current: N/A

Grosseur et type d'électrode de tungstène / Tungsten Electrode Size and Type: N/A

Mode de transfert du métal pour GMAW / Mode of Metal Transfert for GMAW: 1ière passe COURT CIRCUIT 2ième &plus , GLOBULAIRE ,PLUIE

Cordon droit ou oscillant / String or Weave Bead:

Procédé de gougeage arrière / Method of Back Gouging: arc air , meulage

Nettoyage initial et entre les passes (brossage, meulage, etc) / Initial and Interpass Cleaning (Brushing, Grinding, etc.): brossage et meulage

Diamètre de la tuyère à gaz / Orifice or Gas Cup Size: 1/2" à 3/4"

Oscillation / Oscillation: N/A Largeur / Width: N/A Fréquence / Frequency: N/A

Distance entre tube-contact et pièce / Contact Tube to Work Distance: 1/2" à 3/4"

Passe unique ou multiple (par côté) / Multiple or single Pass (per Side): UNIQUE / MULTIPLE

Électrode unique ou multiple / Multiple or Single Electrode: UNIQUE

Gamme de vitesse d'alimentation de l'électrode / Electrode Wire feed speed range: N/A

Martelage / Peening: NON

Autre / Other: 410.64 NON /APPLIQUABLE

(13) Autres commentaires/Supplementary Comments

REVISION #7 :AJOUT DE MÉTAL D'APPORT E70C6M 0.052 & 1/16"

(14) Signature du représentant de l'entreprise / Company Representative's Signature: Brian Savard

Date: 08 NOV. 2016

(15) Réservé à la Régie/Board use only

Vérifié par: C. Kmieux

Date: 08 NOV. 2016

Facture N°:

(16)

QC RÉGIE DU BÂTIMENT
JQ-2216.6
APPROUVÉ
SELON LA LOI SUR LES APPAREILS SOUS PRESSION 20.01
VÉRIFIÉ PAR C. Kmieux
DATE 08 NOV. 2016

UNIES-FAB

Résultat de la méthode de soudage (RMS)
Procedure Qualification Record (PQR)

Note: Les titres désignent également les hommes et les femmes.

(Référence: ASME section 1X)

Entreprise/Compagny	
Nom/Name	UNIES-FAB
Adresse/Adress	2380, de la Métallurgie
Ville/City	Jonquière (Québec)
Code postal	G7X 9H2

Enregistrement provincial / Provincial registration	MS / WP	JQ 2216,6

Désignation du résultat/ Record identification

RMS No / PQR No	PT-GMAW-001
DMS No / WPS No	PT-GMAW-AC-001

Procédé(s) de soudage/ Welding Process(es)

1	GMAW	Type	Semi-automatique
2		Type	
3		Type	

Métaux de base/ Base Metals (QW404)

P No:	Gr No:	à/to	P No:	Gr No:
1	2		1	2

Spécification/ Specification	Tension/ Tensile
SA53, Grade B	60 Ksi

Épaisseur du coupon / Thickness of test coupon	0,432	Diamètre / Diameter	6"
Épaisseur de la plus épaisse des passes de soudage / Thickness of the welding pass with the highest thickness	1/4"		

Métaux d'apport/ Filler Metals (QW-404)

	Classification (AWS)	SFA	F No	A No	Épaisseur du dépôt
1	ER 7056	5,18	6	*	0,432"
2					
3					

Autre / Other: (*) Chem: C:0,07%-0,15%, Mn1,40%-1,85% Si: 0,80%-1,15%

Positions/ Positions (QW-405)

Position(s) du joint / Position(s) of grove	6G			
Progression du soudage / Welding progression		Montant / Up	X	Descendant / Down
Autre / Other	N/A			

Préchauffage/ Preheat (QW-406)

Température de préchauffage / Preheat temperature	50F
Température de l'interpasse / Interpass temperature	450F MAX
Autre / Other	N/A

Croquis détaillé du joint utilisé/ Detailed groove design used

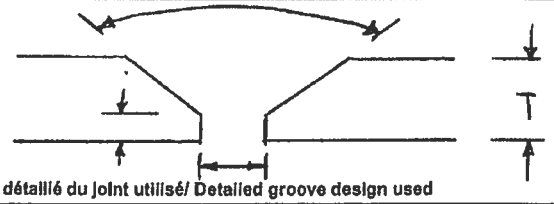

Traitement thermique postsoudage / Postweld heat treatment (QW-407)

Température / Temperature	N/A
Durée / Time	N/A
Autre / Other	N/A

Gaz/ Gas (QW-408)

Composition du gaz de protection / Shielding gas composition	83% AIR, 17% CO2
Débit du gaz / Gas flow rate	
Composition du gaz de soutien / Backing gas composition	N/A
Débit du gaz / Gas flow rate	N/A
Autre / Other	N/A

Technique/ Technique (QW-409) (QW-410)

Cordon droit ou oscillant / String or weave bead	String bead
Oscillation / Oscillation	N/A
Passe unique ou multiple (par coté) / Multipass or single pass (per side)	Multipass
Électrode unique ou multiple / Singie or multiple electrode	Single electrode
Mode de transfert du métal pour GMAW / Mode of metal transfer for GMAW	Short circuit et pluie
Autre / Other	N/A

Caractéristiques électrique et techniques/ Electrical characteristics and technique (QW-409) +(QW-410)

Couche(s) de soudure / Weld Layer(s)	Procédé / Process	Métal d'apport / Filler metal		Courant/ Current				vitesse / travel speed	Énergie absorbée J/po / Heat input J/in
		Classification / Classification	Diamètre / Diametre	Type / Type	polarité / polarity	ampérage / amp.	voltage / Volt		
Root	GMAW	ER 7056	0,035	DC	EP	88	17,5		
Fill	GMAW	ER 7056	0,045	DC	EP	124	20		

Essais à la traction/ Tensile test				Référence		
Éprouvette Specimen	Dimensions Largeur Width	Dimensions Épaisseur Thickness	Surface Area	Charge limite Ultimate total load	Contrainte limite Ultimate unit stress	Nature et endroit de la rupture Character and location or failure
2:1T PT1	0,410"	0,750"	0,308 po 2	67 854 lbs/po2	20 900 lbs	Base Metal
5:4T PT1	0,418"	0,749"	0,313 po 2	68 690 lbs/po2	21 500 lbs	Base Metal

Essais de pliage guide/ Guided bend tests 13-avril-07					Référence					13-avril-07
Éprouvette Specimen	Face Face	Racine Root	Coté Side	Résultat Result (D)	Éprouvette Specimen	Face Face	Racine Root	Coté Side	Résultat Result (D)	
1:2SPT1			X	Satisfactory	4:5SPT1			X	Satisfactory	
3:3SPT1			X	Satisfactory	6:6SPT1			X	Satisfactory	

Essais de résilience/ Thoughness tests					Référence			
Éprouvette Specimen	Endroit de l'entaille Notch location	Forme de l'entaille Notch type	Température de l'éprouvette Specimen temperature	Énergie de rupture Impact value	Expansion latérale Lateral Expansion % cisaillement Shear	Expansion latérale Lateral Expansion Millièmes Mils	Essai en chute libre Drop weight Cassé Break	Essai en chute libre Drop weight Non cassé No break

Essai de soudure d'angle/ Fillet weld test			Référence		
Résultat sastisfaisant / Result satisfactory	Oui / Yes	Non / No	Pénétration dans le métal adjacent / Penetration into parent metal	Oui / Yes	Non / No

Résultat macroscopiques / Macro-results

Autre / Other: 2003-11-04 Changement de nom de l'entreprise. Voir Révision 3

Nom du soudeur / Welder's name: Dave Lagacé

Symbole / Stamp No.: PT-1

Essais effectués par / Test conducted by: Eric Gosselin X-PER-X INC.

Essai de laboratoire No. / Laboratory test No.: 96001-43

Nous certifions que les renseignements concernant ce résultat sont exacts et que les essais de soudage ont été préparés, soudés et exécutés conformément aux exigences de la section IX du code ASME.

We certify that the statement in this record are correct and that the test welds were prepared, welded and tested in accordance with the requirement of section IX of the ASME code.

Signature du représentant de l'entreprise / Compagny representative's Signature du représentant: Dave Lagacé — Date / Date: 18-oct-96

Réservé à la Régie/ Board use only

Pièce soudé le / Inspecteur: 10-oct-96

Résultat vérifiés le / Inspector: 18-oct-96

RÉGIE DU BÂTIMENT JONQUIÈRE
APPROUVÉ
Selon la loi sur les appareils sous pression ch A-20.01
VÉRIFIÉ PAR
DATE 18-oct-96

RÉSULTAT DE LA MÉTHODE DE SOUDAGE (RMS)

Les titres désignent également les hommes et les femmes

(1) Entreprise		(2) Enregistrement provincial	MS JQ 2216.6
Nom	Unies-Fab	(3) Désignation du résultat	
Adresse	2380, de la Métallurgie	RMS No	GMAW-001
Ville	Jonquière (Québec)	DMS No	PT-GMAW-AC-001 Rev 6
Code Postal	G7X 9H2	(5)	Voir feuille en annexe
(4) Procédé(s) de soudage			
1 GMAW	Type MANUEL		
2	Type		
3	Type		
(6) Métaux de base			
PNo 1 GrNo 1 à	Pno 1 GrNo 1		
Spécification	Tension		
A516 gr 50	65 000PSI		
Épaisseur du coupon	1.5'' PLAQUE		
Épaisseur de la plus épaisse des passes de soudage	1/2"		

(7) Métaux d'apport (QW-404				
Classification	SFA-No	F-N	A-No	Épaisseur du dépôt
E70C 6M	5.18	6		1 ½''

Autre	
(8) Positions (QW-406)	
Position(s) du joint	HOR. 2G
Progression du soudage	Montant ☐ Descendant ☐
Autre	N/A
(9) Préchauffage (QW-406)	
Température de préchauffage	200 F
Température de l'interpasse	
Autre	N/A

Croquis détaillé du joint utilisé

(10)Traitement thermique postsoudage (QW-407)	
Température	N/A
Durée	N/A
Autre	N/A
(11) Gaz (QW-408)	
Composition du gaz de protection	83% ar 17% Co2
Débit du gaz	30
Combustion du gaz de soutien	NON
Débit du gaz	NON
Autre	NON
(12) Technique (QW-409)+(QW-410)	
Cordon droit ou oscillant	Droit ou oscillant
Oscillation	oui
Passe unique ou multiple	Multiple
Électrode unique ou multiple	Unique
Mode de transfert du métal pour gmaw	cc et pluie
Autre	N/A

(13) Caractéristiques électriques et techniques (QW-409) + (QW-410)

Couche(s) de soudure	Procédé	Métal d'apport		Courant				Vitesse	Énergie absorbée
		Classification	Diamètre	Type	Polarité	Ampérage	Voltage		
1 court-circuit	GMAW	ER 70C-6M	0.045''	DC	EN	145	19		
2 -72 pluie	GMAW	ER 70C-6M	0.045"	DC	EP	245	29		

VERSO DE JQ2216.6

(14) Essais à la traction					Référence QW 150, Section IX	
Éprouvette	Dimensions		Surface	Charge limite	Contrainte limite	Nature et endroit de la rupture
	Largeur	Épaisseur				
QT2	0,755"	1,441"	1,088 po²	86 020 lbs	79 100 PSi	métal de base
QT5	0,758"	1,455"	1,103 po²	87 780 lbs	79 600 PSi	métal de base

(15) Essais de pliage guidé					Référence QW 160, Section IX				
Éprouvette	Face	Racine	Coté	Résultat	Éprouvette	Face	Racine	Coté	Résultat
QS1			X	Accepté	QS4			X	Accepté
QS3			X	Accepté	QS6			X	Accepté

(16) Essais de résilience				Référence				
Éprouvette	Endroit de l'entaille	Forme de l'entaille	Température de l'éprouvette	Énergie de rupture	Expansion latérale		Essai en chute libre	
					% cisaillement	Millièmes	Cassé	Non cassé

(17) Essai de soudure d'angle	Référence
Résultat satisfaisant Oui ☐ Non ☐ ☐	Pénétration dans le métal adjacent Oui Non
Résultats Macroscopiques	

(18) Autre

(19) Nom du soudeur Jean-François Roberge Symbole 31

Essais effectuées par Philippe Virgillat Essai de laboratoire no Q15-22434A-001

Nous certifions que les renseignements concernant ce résultat sont exacts et que les essais de soudage ont été préparés, Soudés et exécutés conformément aux exigences de la section IX du Code ASME.

(20) Signature du représentant de l'entreprise [signature] Date 2015-01-13

(21) Réservé à la Régie	
Pièces soudées le 18 déc 2014	Inspecteur [signature]
Résultats vérifiés le 16 Jan 2015	Inspecteur [signature]

RÉGIE DU BÂTIMENT
JONQUIÈRE
APPROUVÉ
Selon la loi sur les appareils sous pression ch A 20.01
VÉRIFIÉ PAR [signature]
DATE 16 Jan 2015

Méthode de Soudage SQ2216.6

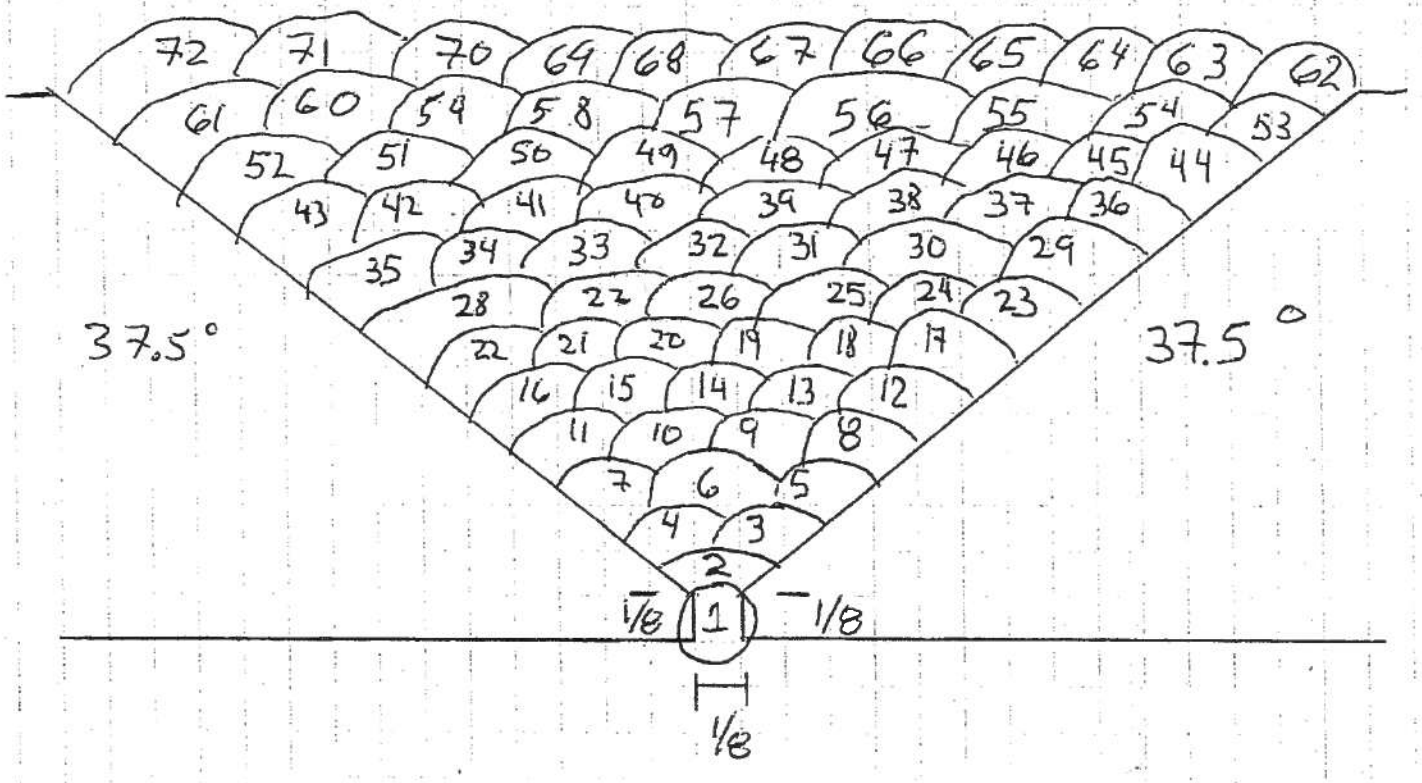

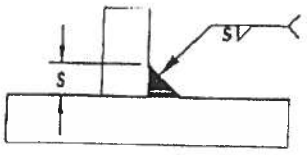
S
S

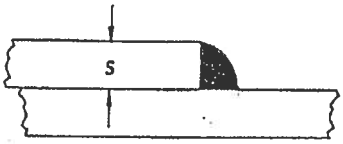
S

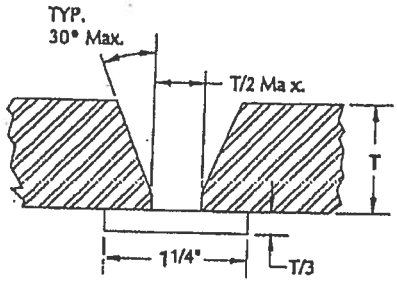
TYP.
30° Max.
T/2 Max.
T
1 1/4"
T/3

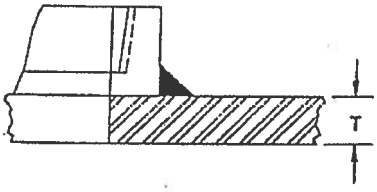
T

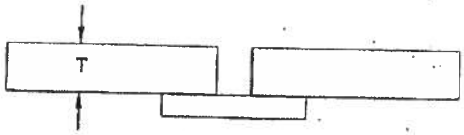
T

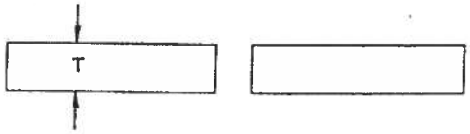
T

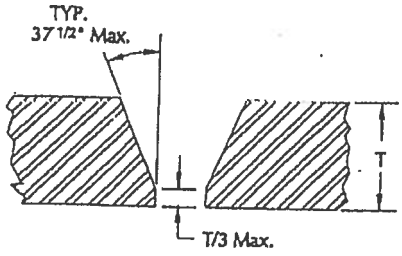
TYP.
37 1/2° Max.
T
T/3 Max.

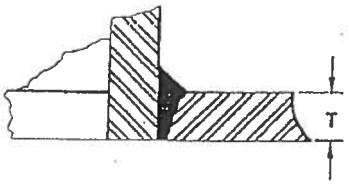
T

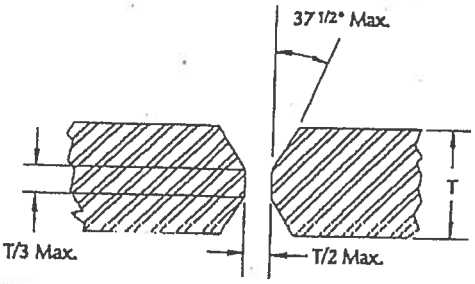
37 1/2° Max.
T
T/3 Max.
T/2 Max.

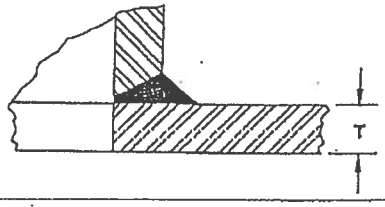
T

LISTE DES SOUDEURS

LISTE DES SOUDEURS

NOM DU SOUDEUR	NO. DE POINÇON	REMARQUES
Antonio Déry	6	
Benoit Tremblay	21	
Christian Michaud	24	
Cédric Villeneuve	30	
Jean Francois Roberge	31	
Christopher Lagacé	38	

RAPPORTS DES TESTS DE QUALIFICATIONS DES SOUDEURS

Régie du bâtiment Québec — Appareils sous pression

ÉPREUVE DE SOUDEUR OU D'OPÉRATEUR
WELDER OR WELDING OPERATOR QUALIFICATION TEST

Entreprise / *Organisation*		**Désignation de la méthode / *Using WPS NO***
Nom / *Name*: UNIES-FAB		DMS / *WPS*: PT-GMAW-AC-001 REV.7
Adresse / *Adresse*: 2380 DE LA MÉTALLURGIE		Enregistrement provincial / *Provincial registration*
JONQUIÈRE , QC	Code postal / *Postal code*: G7X 9H2	MS / *WP*: JQ2216.6
Nom du soudeur ou opérateur / *Welder or welding operator's name*: Cédric Villeneuve		Symbole / *Stamp No*: 30

Variables / *Variables*		**Inscrire valeurs / *Record actual values***	**Gamme qualifiée / *Qualification range***
Soudeur / Welder ☒ ou / or Opérateur / Operator ☐			SOUDEUR
Procédé / *Process*: GMAW	Type: SEMI-AUTO		GMAW SEMI AUTO
QW-403 Métaux de base / ***Base Metals***	Mat'l (P.-No): P1 @ P1		P1@P15F,P34 ETP41@P49
	Diamètre / *Diameter*: 2" SCH 160		1" DIA.EXT. MINIMUM ET PLUS
	Chanfrein / *Groove*:	Épaisseur / *Thickness*: .344	AUCUNE LIMITE
	Angle / *Fillet*:	Épaisseur / *Thickness*:	AUCUNE LIMITE
QW-408	Gaz de soutien / *Backing gas*: NON	Type / *Type*: N/A	AVEC OU SANS
QW-409 C. Élect. / ***Elec. C.***	Courant / *Current*: D.C.	Polarité / *Polarity*: INVERSÉE	TOUT COURANT,TOUTE POLARITÉ
	Mode transfert / *Transfer mode*	COURT CIRCUIT /~~PLUIE~~ GLOBULAIRE	COURT CIRCUIT /GLOBULAIRE, PLUIE
QW-404 Métaux d'apport / ***Filler métals***	Classe / *Class (AWS)*: E-70C6M	*Fno*: 6	F6
	Dépot soudure / *Weld deposit*: 1ère :0,125"/2e:0.219"		1ère:0,1375"/ 2ième:0.436"
	Nb. de couche / Nb layer: N/A		N/A
	Pièce insérée / *Insert*: N/A		N/A
QW-402 Joint	Soutien / *Backing*: SANS		AVEC OU SANS SOUTIEN
QW-405	Position: 2G	Progression: N/A	PLAT ,HORIZONTALE
QW-360	Contrôle visuel direct ou à distance / *Direct or remote visual control*: N/A		N/A
	Contrôle de voltage automatique / *Automatic voltage control*: N/A		N/A
	Suiveur de joint automatique / *Automatic joint tracking*: N/A		N/A
	Passe unique ou multiple / *Single pass or multiple*: N/A		N/A

Résultats de pliage ou radiographie / *Guided bend or radiographic result*

Éprouvette / *Spécimen*	Pliage de côté / *Side bend*	Pliage transversal / *Transverse bend*	Pliage longitudinal / *Longitudinal bend*	Radiographie / *Radiographic*	Résultats / *Results*
1R		X			accepté PDA
2F		X			accepté PDA.

Résultats examen visuel / *Visual examination results (QW-302.4)*: G.

Résultats de soudage d'angle: (voir verso) / *For fillet weld test result : (see over)*

Essais effectués par / *Test conducted by*	Date / *Date*	Laboratoire-Essai N° / Laboratory-Test No

Nous certifions que les renseignements ci-dessus sont exacts et que les essais de soudage ont été préparés et exécutés conformément aux exigences de la section IX du Code ASME
We certify that the statements in this record are correct and the test weld were prepared, welded and tested in accordance with the requirements of Section IX of the ASME Code

	Entreprise / *Organisation*	Signature	Date / *Date*

Réservé à la Régie / *Board use only*

Pièces soudées le: 20 DEC. 2016	Inspecteur: G. Simoneau	N°	Accepté: 2G ◎	N° facture:
Essais vérifiés le: 20 DEC. 2016	Inspecteur: G. Simoneau		Refusé:	N° dossier:

807(2003-01)

UNIES-FAB Inc.

ÉPREUVE DE SOUDEUR OU D'OPERATEUR
WELDER OR WELDING OPERATOR QUALIFICATION TEST

NOTE: Les titres désignent également les hommes et les femmes.

Entreprise / *Organization*		Désignation de la méthode / *Using wps NO*	
Nom / *Name*	UNIES-FAB.	DMS / *WPS*	PT-GMAW-AC-001 REV 4
Adresse / *Address*	2380, de la Métallurgie	Enregistrement provincial / *Provincial registration*	JQ-2216,6
	Jonquière QC Code postal / *postal code* G 7 X 9 H 2	MS / *WP*	
Nom du soudeur ou operateur / *Welder or welding operator's name*	BENOÎT TREMBLAY	Symbole / *Stamp No* 21	N.A.S. / *S.I.N.*

Variables / *Variables*		Inscrire valeurs / *Record actual values*	Gamme qualifiée / *Qualification range*
	Soudeur / *Welder* ☒ ou / *or* Operateur / *Operator* ☐		SOUDEUR
	Procédé / *Process:*	GMAW Type: MANUEL	GMAW-MANUEL
QW-403 Metaux de base *Base Metals*	Mat'l (P.-No):	P1 @ P1	P1 A P11 , P34 , P41 À P47 ET TOUS MATÉRIAUX DE COMPOSITION CHIMIQUE
	Diametre / *Diameter:*	2"	1" DIA. EXT.MINIMUM ET PLUS
	Chanfrein / *Groove* Épaisseur / *Thickness:*	0,344	AUCUNE LIMITE
	Angle / *Fillet* Épaisseur / *Thickness:*		AUCUNE LIMITE
QW-408	Gaz de soutien / *Backing gas:*	N/A Type / *Type:* N/A	
QW-409 C. elect. *Elec. C.*	Courant / *Current:*	C.C, Polarité / *Polarity:* INVERSÉE	TOUS COURANTS, TOUTES POLARITÉS
	Mode transfert / *Transfer mode:*	COURT-CIRCUIT ET PLUIE	COURT-CIRCUIT GLOBULAIRE, PLUIE
QW-404 Metaux d'apport *Filler metals*	No spec. / *Spec No (SFA):*	5,18	TOUTES
	Classe / *Class (AWS):*	E-70C 6M *F No:* F6	F6
	Dépôt soudure / *Weld deposit:*	C-CIRCUIT0,125 PLUIE 0,219	(COURT-CIRCUIT 0,1375) (PLUIE 0,436)
	Pièce insérée / *Insert:*	NON	AVEC OU SANS
QW-402	Soutien / *Backing:*	NON	AVEC OU SANS
QW-405	Position: 2G	Progression: N/A	PLAT ET HORIZONTAL
QW-360 Machine	Contrôle visuel direct ou à distance *Direct or remote visual control*	N/A	N/A
	Contrôle de voltage automatique *Automatic voltage control*	N/A	N/A
	Suiveur de joint automatique *Automatic joint tracking*	N/A	N/A
	Passe unique ou multiple *Single pass or multiple*	N/A	N/A

Résultats de pliage ou radiographie / *Guided bend or radiographic results*

Éprouvette *Specimen*	Pliage de côté *Side bend*	Pliage transverse *Transverse bend*	Pliage longitudinal *Longitudinal bend*	Radiographie *Radiographic*	Résultats / *Results*
Q4RB		X face			accepté - pda
Q2RB		X racine			accepté - pda

Résultats examen visuel / *Visual examination results (QW-302.4):* MS

Résultats de soudure d'angle (voir verso) / *For fillet weld test results: (see over)*

Essais effectués par / *Test conducted by*	Date / *Date* 23-août-11	Laboratoire-Essais N° / *Laboratory-test No*

Nous certifions que les renseignements ci-dessus sont exacts et que les essais de soudage ont été préparés et exécutés conformément aux exigences de la section IX du code ASME.
We certify that the statements in this record are correct and the test welds were prepared, welded and tested in accordance with the requirement of Section IX of the ASME code.

	Entreprise / *Organization*	Signature: André Gaudreault	Date / *Date* 23 août 2011

Réservé à la Régie / *Board use only*

Pièces soudées le: 2011/08/23	Inspecteur: Marcel L. Tousignant	No 14436	Accepté: X (C1)		N° facture:
Essais vérifiés le: 2011/08/23	Inspecteur: Marcel L. Tousignant		Refusé:		N° dossier:

DAVE(01-2003)

UNIES-FAB inc.

ÉPREUVE DE SOUDEUR OU D'OPERATEUR
WELDER OR WELDING OPERATOR QUALIFICATION TEST

NOTE: Les titres désignent également les hommes et les femmes.

Entreprise / *Organization*		Désignation de la méthode / *Using wps No*	
Nom / *Name*	UNIES-FAB.	DMS / *WPS*	PT-GMAW-AC-001 REV 4
Adresse / *Address*	2380, de la Métallurgie	Enregistrement provincial / *Provincial registration*	JQ-2216,6
	Jonquière QC Code postal / *postal code* G 7 X 9 H 2	MS / *WP*	
Nom du soudeur ou operateur / *Welder or welding operator's name*	CHRISTIAN MICHAUD	Symbole / *Stamp No.* 24	N.A.S. / *S.I.N.*

Variables / *Variables*		Inscrire valeurs / *Record actual values*	Gamme qualifiée / *Qualification range*
Soudeur / *Welder* ☒ ou / *or* Operateur / *Operator* ☐			SOUDEUR
Procédé / *Process:*		GMAW Type: MANUEL	GMAW-MANUEL
QW-403 Metaux de base *Base Metals*	Mat'l (P.-No):	P1 @ P1	P1 A P11 , P34 , P41 À P47 ET TOUS MATÉRIAUX DE COMPOSITION CHIMIQUE
	Diametre / *Diameter:*	2"	1" DIA. EXT.MINIMUM ET PLUS
	Chanfrein / *Groove* Épaisseur / *Thickness:*	0,344	AUCUNE LIMITE
	Angle / *Fillet* Épaisseur / *Thickness:*		AUCUNE LIMITE
QW-408	Gaz de soutien / *Backing gas:*	N/A Type / *Type:* N/A	
QW-409 C. elect. *Elec. C.*	Courant / *Current:*	C.C, Polarité / *Polarity:* INVERSÉE	TOUS COURANTS, TOUTES POLARITÉS
	Mode transfert / *Transfer mode:*	COURT-CIRCUIT ET PLUIE	COURT-CIRCUIT, GLOBULAIRE, PLUIE
QW-404 Metaux d'apport *Filler metals*	No spec. / *Spec No (SFA):*	5,18	TOUTES
	Classe / *Class (AWS):*	E-70C 6M *F No:* F6	F6
	Dépôt soudure / *Weld deposit:*	C-CIRCUIT0,125 PLUIE 0,219	(COURT-CIRCUIT 0,1375) (PLUIE 0,436)
	Pièce insérée / *Insert:*	NON	AVEC OU SANS
QW-402 Joint	Soutien / *Backing:*	NON	AVEC OU SANS
QW-405	Position:	2G Progression: N/A	PLAT ET HORIZONTAL
QW-360 Machine	Contrôle visuel direct ou à distance / *Direct or remote visual control*	N/A	N/A
	Contrôle de voltage automatique / *Automatic voltage control*	N/A	N/A
	Suiveur de joint automatique / *Automatic joint tracking*	N/A	N/A
	Passe unique ou multiple / *Single pass or multiple*	N/A	N/A

Résultats de pliage ou radiographie / *Guided bend or radiographic results*

Éprouvette *Specimen*	Pliage de côté *Side bend*	Pliage transversal *Transverse bend*	Pliage longitudinal *Longitudinal bend*	Radiographie *Radiographic*	Résultats / *Results*
Q01F		X			accepté PDA
Q02R		X			accepté PDA

Résultats examen visuel / *Visual examination results (QW-302.4):* NAB

Résultats de soudure d'angle (voir verso) / *For fillet weld test results (see ovar)*

Essais effectués par / *Test conducted by*	Date / *Date* 02-sept-10	Laboratoire-Essais N° / *Laboratory-test No*

Nous certifions que les renseignements ci-dessus sont exacts et que les essais de soudage ont été préparés et exécutés conformément aux exigences de la section IX du code ASME.
We certify that the statements in this record are correct and the test welds wereprepared,welded and tested in accordance with the requirement of Section IX of the ASME code.

	Entreprise / *Organization*	Signature	Date / *Date*
		André Gauchard	2010-09-02

Réservé à la Régie / *Board use only*

Pièces soudées le: 02 SEP. 2010	Inspecteur: C. Bonneau	No 13838	Accepté: 2G	N° facture:
Essais vérifiés le: 09 SEP. 2010	Inspecteur C. Bonneau		Refusé:	N° dossier:

DAVE(01-2003)

Régie du bâtiment Québec — Appareils sous pression

ÉPREUVE DE SOUDEUR OU D'OPÉRATEUR
WELDER OR WELDING OPERATOR QUALIFICATION TEST

Entreprise / *Organisation*			Désignation de la méthode / *Using WPS NO*
Nom *Name*	UNIES-FAB inc.		DMS / *WPS* PT-GMAW-AC-001-REV 4
Adresse *Adresse*	2380, de la MÉTALLURGIE		Enregistrement provincial *Provincial registration*
	JONQUIÈRE, QUÉBEC	Code postal / *Postal code* G7X 9H2	MS / *WP* JQ-2216,6
Nom du soudeur ou opérateur *Welder or welding operator's name*	JEAN-FRANÇOIS ~~DESBIENS~~ ROBERGE		Symbole *Stamp No* 31
Variables / *Variables*	Inscrire valeurs *Record actual values*	15 AVR. 2011	**Gamme qualifiée / *Qualification range***
Soudeur / Welder ☑ ou / or Opérateur / Operator ☐			SOUDEUR
Procédé / *Process*: GMAW	Type: SEMI-AUTO		GMAW SEMI - AUTO
QW-403 Métaux de base *Base Metals*	Mat'l (P.-No): P1@P1		P1 A P15F, P34 ET P41 A P49 ET TOUS
			MATÉRIAUX DE COMPOSITION CHIMIQUE
	Diamètre / *Diameter*: 2"		1"DIA. EXT. MINIMUM ET PLUS
	Chanfrein / *Groove:*	Épaisseur / *Thickness:* 0.344	AUCUNE LIMITE
	Angle / *Fillet:*	Épaisseur / *Thickness:*	AUCUNE LIMITE
QW-408	Gaz de soutien / *Backing gas*: N/A	Type / *Type*: N/A	
QW-409 C. Élect. *Elec. C.*	Courant / *Current*: CC	Polarité / *Polarity*: INVERSÉE	TOUS COURANTS, TOUTES POLARITÉS
	Mode transfert / *Transfer mode*	COURT-CIRCUIT ET PLUIE	COURT-CIRCUIT, GLOBULAIRE ET PLUIE
QW-404 Métaux d'apport	Classe / *Class (AWS)*: ~~(5.22) E309LT1-1~~ E-70C 5.18 F6 C1		F6
	Dépot soudure / *Weld deposit*: C-CIRCUIT 0.125 PLUIE 0.219		(COUR-CIRCUIT 0.1375) (PLUIE 0.436)
Filler métals	Nb. do couche / Nb layer: N/A		
	Pièce insérée / *Insert*: NON		AVEC OU SANS
QW-402 Joint	Soutien / *Backing*: COURT-CIRCUIT SANS / PLUIE AVEC		COURT-CIRCUIT AVEC OU SANS / PLUIE AVEC
QW-405	Position: 6G	Progression: N/A	TOUTES POSITIONS MONTANTES
QW-360	Contrôle visuel direct ou à distance *Direct or remote visual control* N/A		N/A
	Contrôle de voltage automatique *Automatic voltage control* N/A		N/A
	Suiveur de joint automatique *Automatic joint tracking* N/A		N/A
	Passe unique ou multiple *Single pass or multiple* N/A		N/A

Résultats de pliage ou radiographie / *Guided bend or radiographic result*

Éprouvette *Spécimen*	Pliage de côté *Side bend*	Pliage transversal *Transverse bend*	Pliage longitudinal *Longitudinal bend*	Radiographie *Radiographic*	Résultats / *Results*
1F		X			accepté pas defauts
2F		X			accepté defauts < 3mm
3F		X			accepté defauts < 3mm
4F		X			accepté defauts < 3mm.

Résultats examen visuel / *Visual examination results (QW-302.4)*: N/A

Résultats de soudage d'angle: (voir verso) / *For fillet weld test result : (see over)*

Essais effectués par *Test conducted by*	Date *Date*	Laboratoire-Essai N° *Laboratory-Test No*

Nous certifions que les renseignements ci-dessus sont exacts et que les essais de soudage ont été préparés et exécutés conformément aux exigences de la section IX du Code ASME
We certify that the statements in this record are correct and the test weld were prepared, welded and tested in accordance with the requirements of Section IX of the ASME Code

Entreprise *Organisation*	Signature	Date *Date*
	André Gaudreault	2011-04-14

Réservé à la Régie / *Board use only*

Pièces soudées le: 14 AVR. 2011 Inspecteur C. Lamieux	N°	Accepté: 6GO	N° facture:
Essais vérifiés le: 14 AVR. 2011 Inspecteur C. Lamieux		Refusé:	N° dossier:

807(200...)

UNIES-FAB Inc.

ÉPREUVE DE SOUDEUR OU D'OPERATEUR
WELDER OR WELDING OPERATOR QUALIFICATION TEST

NOTE: Les titres désignent également les hommes et les femmes.

Entreprise / *Organization*		Désignation de la méthode / *Using WPS NO*	
Nom / *Name*	UNIES-FAB.	DMS / *WPS*	PT-GMAW-AC-001 REV 4
Adresse / *Address*	2380, de la Métallurgie	Enregistrement provincial / *Provincial registration*	JQ-2216,6
	Jonquière QC — Code postal / *postal code* G 7 X 9 H 2	MS / *WP*	
Nom du soudeur ou operateur / *Welder or welding operator's name*	MAXIME BOULIANNE-TREMBLAY	Symbole / *Stamp No* 34	N.A.S. / *S.I.N.*

Variables / *Variables*	Inscrire valeurs / *Record actual values*		Gamme qualifiée / *Qualification range*
	Soudeur / *Welder* ☒ ou / *or* Operateur / *Operator* ☐		SOUDEUR
	Procédé / *Process:*	GMAW Type: MANUEL	GMAW-MANUEL
QW-403 Metaux de base *Base Metals*	Mat'l (P.-No):	P1 À P1	P1 A P15F , P34 , P41 À P49 ET TOUS
			MÉTAUX DE COMPOSITION CHIMIQUE
	Diametre / *Diameter:*	2" SCH 160	1" DIA. EXT.MINIMUM ET PLUS
	Chanfrein / *Groove* Épaisseur / *Thickness:*	0,344	AUCUNE LIMITE
	Angle / *Fillet* Épaisseur / *Thickness:*		AUCUNE LIMITE
QW-408	Gaz de soutien / *Backing gas:*	N/A Type / *Type:* N/A	
QW-409 C. elect. *Elec. C.*	Courant / *Current:*	C.C, Polarité / *Polarity:* INVERSÉE	TOUS COURANT, TOUTES POLARITÉ
	Mode transfert / *Transfer mode:*	COURT-CIRCUIT ET PLUIE	COURT-CIRCUIT/GLOBULAIRE ET PLUIE
QW-404 Metaux d'apport *Filler metals*	No spec. / *Spec No (SFA):*	5,18	
	Classe / *Class (AWS):*	E70C6M *F No:* F6	F6
	Dépôt soudure / *Weld deposit:*	C,C = 0,125 ET PLUIE 0,219	(COURT-CIRCUIT 0,1375) (PLUIE 0,438)
	Pièce insérée / *Insert:*	NON	AVEC OU SANS
QW-402 Joint	Soutien / *Backing:*	C-C SANS / PLUIE AVEC	C-C AVEC OU SANS/ PLUIE AVEC
QW-405	Position: 2G	Progression: N/A	PLAT ET HORIZONTAL
QW-360 Machine	Contrôle visuel direct ou à distance / *Direct or remote visual control*	N/A	N/A
	Contrôle de voltage automatique / *Automatic voltage control*	N/A	N/A
	Suiveur de joint automatique / *Automatic joint tracking*	N/A	N/A
	Passe unique ou multiple / *Single pass or multiple*	N/A	N/A

Résultats de pliage ou radiographie / *Guided bend or radiographic results*

Éprouvette *Specimen*	Pliage de côté *Side bend*	Pliage transversal *Transverse bend*	Pliage longitudinal *Longitudinal bend*	Radiographie *Radiographic*	Résultats / *Results*
D1F3		FACE			accepté
D2R3		RACINE			accepté

Résultats examen visuel / *Visual examination results (QW-302.4):*

Résultats de soudure d'angle / *Fillet weld test results (see over)*

Essais effectués par / *Test conducted by*	Date / *Date*	Laboratoire-Essais N° / *Laboratory-test No*

Nous certifions que les renseignements ci-dessus sont exacts et que les essais de soudage ont été préparés et exécutés conformément aux exigences de la section IX du code ASME.
We certify that the statements in this record are correct and the test welds wereprepared,welded and tested in accordance with the requirement of Section IX of the ASME code.

UNIES-FAB	Entreprise / *Organization*	Signature	Date / *Date* 12 août 2015

Réservé au Régie / *Board use only*

Pièces soudées le: 12 août 2015	Inspecteur:	No 2	Accepté: oui	N° facture:
Essais vérifiés le: 12 août 2015	Inspecteur:		Refusé:	N° dossier:

DAVE(01-2003)

Régie du bâtiment
Québec — Appareils sous pression

ÉPREUVE DE SOUDEUR OU D'OPÉRATEUR
WELDER OR WELDING OPERATOR QUALIFICATION TEST

Entreprise / *Organisation*		Désignation de la méthode / *Using WPS NO*
Nom *Name* UNIES-FAB INC		DMS / *WPS* PT-GMAW-AC-001 REV. 60
Adresse *Adresse* 2380 DE LA MÉTALLURGIE		Enregistrement provincial *Provincial registration*
JONQUIÈRE ,QC	Code postal / *Postal code* G7X 9H2	MS / *WP* JQ2216.6
Nom du soudeur ou opérateur *Welder or welding operator's name* CHRISTOPHER LAGACÉ		Symbole *Stamp No* 38

Variables / *Variables*		Inscrire valeurs *Record actual values*	Gamme qualifiée / *Qualification range*
	Soudeur / Welder ☒ ou / or Opérateur / Operator ☐		SOUDEUR
	Procédé / *Process*: GMAW	Type: SEMI-AUTO	GMAW SEMI AUTO
QW-403 Métaux de base *Base Metals*	Mat'l (P.-No): P1@P1		P1@P15F , P34 ET P41@P49
	Diamètre / *Diameter*: 2" SCH 160		1" DIA.EXT. MINIMUM ET PLUS
	Chanfrein / *Groove*:	Épaisseur / *Thickness*: .344	AUCUNE LIMITE
	Angle / *Fillet*:	Épaisseur / *Thickness*:	AUCUNE LIMITE
QW-408	Gaz de soutien / *Backing gas*: NON	Type / *Type*: N/A	AVEC OU SANS
QW-409 C. Élect. *Elec. C.*	Courant / *Current*: D,C,	Polarité / *Polarity*: INVERSÉE	TOUT COURANT ,TOUTE POLARITÉ
	Mode transfert / *Transfer mode*	COURT CIRCUIT /PLUIE	COURT CIRCUIT / GLOBULAIRE ,PLUIE
QW-404 Métaux d'apport	Classe / *Class (AWS)*: E-70C 6M	*Fno*: 6	F6
	Dépot soudure / *Weld deposit*:	1ere:0,125"/ 2e :0,219"	1ere:0,1375" / 2ième :0,436"
Filler métals	Nb. de couche / Nb layer: N/A		N/A
	Pièce insérée / *Insert*: N/A		N/A
QW-402 Joint	Soutien / *Backing*: SANS		avec ou sans soutien
QW-405	Position: 2G	Progression: N/A	plat,horizontale
QW-360	Contrôle visuel direct ou à distance *Direct or remote visual control* N/A		N/A
	Contrôle de voltage automatique *Automatic voltage control* N/A		N/A
	Suiveur de joint automatique *Automatic joint tracking* N/A		N/A
	Passe unique ou multiple *Single pass or multiple* N/A		N/A

Résultats de pliage ou radiographie / *Guided bend or radiographic result*

Éprouvette *Spécimen*	Pliage de côté *Side bend*	Pliage transversal *Transverse bend*	Pliage longitudinal *Longitudinal bend*	Radiographie *Radiographic*	Résultats / *Results*
1R		X			accepté DÉFaut < 1/8"
2F		X			Accepté PDA

Résultats examen visuel / *Visual examination results (QW-302.4)*: BS

Résultats de soudage d'angle: (voir verso) / *For fillet weld test result : (see over)*

Essais effectués par *Test conducted by*	Date *Date*	Laboratoire-Essai N° *Laboratory-Test No*

Nous certifions que les renseignements ci-dessus sont exacts et que les essais de soudage ont été préparés et exécutés conformément aux exigences de la section IX du Code ASME
We certify that the statements in this record are correct and the test weld were prepared, welded and tested in accordance with the requirements of Section IX of the ASME Code

Entreprise *Organisation*	Signature	Date *Date*
	Brian Savio	08 NOV. 2016

Réservé à la Régie / *Board use only*

Pièces soudées le 08 NOV. 2016 Inspecteur: Gmieux	N°	Accepté: 2G	N° facture:
Essais vérifiés le: 08 NOV. 2016 Inspecteur: Gmieux		Refusé:	N° dossier:

807(2003-01)

LISTE DES JOINTS DE SOUDURE INSPECTÉS (E.N.D)

UNIE FAB inc.

DATE: 31-août-17

PROJET: UF-2106 & UF-2165

LISTE DES JOINTS DE SOUDURE E.N.D.

# DESSIN ISOMÉTRIQUE	DIA	NO PIÈCES	NO JOINT	CODE	NO SOUDEUR	NO RAPPORT D'ESSAIS	DATE	STATUS	SCH	ACIER	SS	REMARQUES
103-150-PDI-CC10-003 2/12	6"	MK-21	J1	31,3	34	s17-22434a-011	2017-06-14	ok	0,28	A333		RADIOGRAPHIE
103-150-PDI-CC10-005 2/5	6"	MK-41	J2	31,3	30	s17-22434a-011	2017-06-14	ok	0,28	A333		RADIOGRAPHIE
103-150-PDI-CC10-001 9/13	6"	MK-9	J3	31,3	30	s17-22434a-011	2017-06-14	ok	0,28	A333		RADIOGRAPHIE
103-150-PDI-CC10-001 13/13	8"	MK-14	J4	31,3	34	s17-22434a-011	2017-06-14	ok	0,322	A333		RADIOGRAPHIE
103-150-PDI-CC10-006 1/1	6"	MK-40	J5	31,3	6	s17-22434a-011	2017-06-14	ok	0,28	A333		RADIOGRAPHIE
103-150-PDI-CC10-004 1/1	6"	MK-20	J6	31,3	31	s17-22434a-011	2017-06-14	ok	0,28	A333		RADIOGRAPHIE
103-150-PDI-CC10-004 1/1	6"	MK-20	J7	31,3	31	s17-22434a-011	2017-06-14	ok	0,28	A333		RADIOGRAPHIE
103-150-PDI-CC10-003 3/12	6"	MK-32	J8	31,3	31	s17-22434a-011	2017-06-14	ok	0,28	A333		RADIOGRAPHIE
103-150-PDI-CC10-005 3/5	6"	MK-43	J9	31,3	24	s17-22434a-011	2017-06-14	ok	0,28	A333		RADIOGRAPHIE
103-150-PDI-CC10-001 11/13	6"	MK-11	J10	31,3	24	s17-22434a-011	2017-06-14	ok	0,28	A333		RADIOGRAPHIE
103-150-PDI-CC10-005 5/5	6"	MK-46	J11	31,3	21	s17-22434a-011	2017-06-14	ok	0,28	A333		RADIOGRAPHIE
403P-100-PDI-CC10-002 6/12	4"	MK-54	J12	31,3	31	s17-22434a-013	2017-07-10	ok	0,28	A333		RADIOGRAPHIE
403P-100-PDI-CC10-004 1/2	4"	MK-67	J13	31,3	38	s17-22434a-013	2017-07-10	ok	0,28	A333		RADIOGRAPHIE
403P-100-PDI-CC10-001 2/6	4"	MK-52	J14	31,3	31	s17-22434a-013	2017-07-10	ok	0,28	A333		RADIOGRAPHIE
403P-100-PDI-CC10-001 2/6	4"	MK-53	J15	31,3	6	s17-22434a-013	2017-07-10	ok	0,28	A333		RADIOGRAPHIE
403P-100-PDI-CC10-002 6/12	4"	MK-55A	J16	31,3	24	s17-22434a-013	2017-07-10	ok	0,28	A333		RADIOGRAPHIE
403P-100-PDI-CC10-002 6/12	4"	MK-55	J17	31,3	24	s17-22434a-013	2017-07-10	ok	0,28	A333		RADIOGRAPHIE
403P-100-PDI-CC10-004 1/2	4"	MK-65	J18	31,3	24	s17-22434a-013	2017-07-10	ok	0,28	A333		RADIOGRAPHIE
403I-100-PDI-CC10-102 9/10	4	MK-138	J19	31,3	30	s17-22434a-028	2017-08-31	ok	0,237	A333		RADIOGRAPHIE
403I-100-PDI-CC10-102 5/10	4	MK-131	J20	31,3	31	s17-22434a-028	2017-08-31	ok	0,237	A333		RADIOGRAPHIE
403I-100-PDI-CC10-102 5/10	4	MK-130	J21	31,3	21	s17-22434a-028	2017-08-31	ok	0,237	A333		RADIOGRAPHIE
403I-100-PDI-CC10-102 6/10	4	MK-132	J22	31,3	38	s17-22434a-028	2017-08-31	ok	0,237	A333		RADIOGRAPHIE
403I-100-PDI-CC10-114 1/1	3	MK-160	J23	31,3	34	s17-22434a-028	2017-08-31	ok	0,216	A333		RADIOGRAPHIE
403I-100-PDI-CC10-104 1/2	4	MK-141	J24	31,3	21	s17-22434a-028	2017-08-31	ok	0,237	A333		RADIOGRAPHIE
403I-100-PDI-CC10-129 10/10	3	MK-157	J25	31,3	34	s17-22434a-028	2017-08-31	ok	0,216	A333		RADIOGRAPHIE

403I-100-PDI-CC10-114 1/1	3	MK-162	J26	31,3	30	s17-22434a-028	2017-08-31	ok	0,216	A333		RADIOGRAPHIE
403I-100-PDI-CC10-102 8/10	4	MK-134	J27	31,3	31	s17-22434a-028	2017-08-31	ok	0,237	A333		RADIOGRAPHIE
403I-100-PDI-CC10-114 1/1	3	MK-161	J28	31,3	38	s17-22434a-028	2017-08-31	ok	0,216	A333		RADIOGRAPHIE
403I-100-PDI-CC10-102 6/10	4	MK-133	J29	31,3	24	s17-22434a-028	2017-08-31	ok	0,237	A333		RADIOGRAPHIE

AGNICO EAGLE

Vendor Document Status

1 ☐ Proceed to next submission and status.

2 ☐ Proceed with exceptions as noted to next submission and status.

3 ☐ Do not proceed.
Revise as noted and resubmit next submission and status.

4 ☑ Complete, no further submission required.

By: JEAN-FRANCOIS TREMBLAY JG Date: 2017-05-16

Review and authorization to fabricate are only for general conformance with the design concept of the Project as expressed in the Contract Documents. Sole responsibility for the accuracy and completeness of this document, including but not limited to dimensions and quantities, remains with the Supplier/Contractor. Agnico Eagle does not warrant the accuracy or completeness of any of the information contained herein, nor does Agnico Eagle authorize or approve any construction means, methods, techniques, sequences or any safety precautions or procedures.

Agnico Eagle No. 6515-C-270-007-141-TES-0044 R: Sub001

DOCUMENT FOR INFORMATION

Agnico-Eagle Mines Ltd.
Check List for Pipe Systems

ITR Number : AEM-PI-ITR-002
Contract no. : C22466T

NUQSANA-PROMEC MINING SERVICES INC.

AGNICO EAGLE

SYSTEM:	DRAWING No.(s):
LOCATION: PORTAIL #1	
P&ID REFERENCE:	

GENERAL	YES	N/A
Correct Origin & Destination	o	o
Line Size Correct	o	o
Material Correct	o	o
Schedule Correct	o	o
Flange Rating & Facing Correct	o	o
Line Slopes per Drawing	o	o
Branches Located Correctly	o	o
Weep Holes in Reinforcing Pad	o	o
High Point Vents Installed	o	o
Low Point Drains Installed	o	o
Reducers Correct	o	o
Blinds Installed	o	o
Cold Spring or Pre-Spring Per Drawing	o	o
Strainers Installed	o	o
Seal Welding Complete	o	o
Flange Face Checked	o	o
Painting / Insulation Complete	o ✓	o
Identification / Tagging Complete	o	o
WORKMANSHIP		
Fit-Up	o	o
Cleanliness	o	o
Installation Straight & Plumb	o	o
VALVES		
Flow Direction Correct	o	o
Correct Tag Number, Description & Trim	o	o
By-Pass Installed (if required)	o	o
Chain Wheel Installed	o	o
Extension Installed	o	o
Stem Oriented Properly	o	o
Drain, Flush, Connections Installed	o	o
Special Packing	o	o
Check Valve Flappers Removed	o	o

GASKETS & BOLTS	YES	N/A
Correct Number of Bolts	o	o
Correct Bolting Material	o	o
Correct Bolt Length	o	o
Nuts Tight	o	o
Correct Gasket Type & Thickness	o	o
Stud Ends Machine and Stamped	o	o
Studs Cleaned and Lubricated	o	o
PIPE SUPPORTS		
Supports in accordance with Drawings	o	o
Anchors Installed	o	o
Guides Installed	o	o
Proper Shoes Installed & Welded	o	o
Spring Hanger Type & Setting	o	o
Field Supports Installed (Small Bore)	o	o
Temporary Supports Removed	o	o
Lines Properly Supported for Hydrotest	o	o
INSTRUMENTS		
PSV's Tested (Correct Item Number)	o	o
Correct Control Valves Installed	o	o
Meter Runs Properly Installed	o	o
Jacking Screws Included	o	o
Valves at Meter Runs Installed	o	o
Pressure Gauge Valves Installed	o	o
Temperature Connections Properly Oriented	o	o
Sample Connections Installed	o	o
Orifice Taps Correctly Installed	o	o
Spec. Changes Occur at Point Specified	o	o
NON-DESTRUCTIVE EXAMINATION		
Welding Complete	o	o
Stress Relieving Complete	o	o
NDE Complete & Signed-Off	o	o

STÉPHANE DORÉ		2017-11-07
Verified by (Print)	Verified by (Sign)	Date
ERIC Poulin		
Approved by (Print)	Approved by (Sign)	Date

UNIES-FAB INC.
2380 de la Métallurgie
Jonquière (Québec)
G7X 9H2
Tel:(418) 546-0044
Fax:(418) 546-0074

Bon de livraison: UF-2106-2

Exp. Par: BRIAN SAVARD
 # contrat: UF-2106

Exp. À: Groupe Promec inc. 1300 rue Saguenay,
Rouyn-Noranda, Québec, J9X7C3

DATE: 2017-06-05
Transport: TRANSCOL

EXP À:

DATE:
Transport:

COMMANDE 21065-19445

# ART.	Qte	DESCRIPTION		
		CAP	LIVR	Pièce de tuyauterie
1	10			Thread-o-let su 6 #30000 lf2 A350 (1")
2	20			Thread-o-let su 6 #30000 lf2 A350 (½")
3	10			Sockolet #3000 FS A350 Gr.LF2 sur 6 (1")
4	10			Sockolet #3000 FS A350 Gr.LF2 (½")
5	6			Sockolet #3000 FS A350 Gr.LF2 sur 6 (2")
6	20			Union SW 3000# FS A350 Gr.LF2 (½")
7	1			Weld-o-let Sch.40 A420 Gr.WPL6 sur 6 (2")

		PIECES RETOURNER CHEZ UNIES-FAB (AVANT 15 JOURS)	PIECES À FACTURER
Heure d'arrivée			
Heure de départ			
PIECES DE BOIS 4" x 4"			

Total 77 pièces

Remarques:

REÇU PAR: _____
SIGNATURE DU TRANSPORT

Veuillez faxer ce document une fois signé S.V.P

_____
SIGNATURE DU CLIENT

M.E.G.A.

INSPECTION CERTIFICATE

Certificato d'ispezione

REPORT N. / Rapporto N.	TC-018189-16-0001	Issued on / Revised on	02/09/2016	Customer / Cliente	ALLIED FITTING CANADA 172 TURBO DRIVE SHERWOOD PARK, ALBERTA T8H 2J6 - CANADA	Job n. / Com. n.	18189
Revision / Revisione	0	According to / In accordo a	EN 10204:2004 UNI EN 10204:2005	Type / Tipo	3.1	Page n. / Pagina n	19 of 25
						Purchase order and project/Ordine e progetto	62216AMG

DESCRIPTION / DESCRIZIONE

Test Prova	Item Pos.	Qty Q.tà	Customer code Codice cliente	Material Materiale	Heat Colata	Product Prodotto
YDDR	158	850		A/SA350-15 LF2 CL.1	P3131335951	MEGALET S. 3000 NPT A/SA350 LF2 CL1 1x3-80
YRCC	158	1150		A/SA350-15 LF2 CL.1	14/72397	MEGALET S. 3000 NPT A/SA350 LF2 CL1 1x3-80
UUCL	174	50		A/SA350-15 LF2 CL.1	11/75387	MEGALET S. 9000 NPT A/SA350 LF2 CL1 1/2x2.1/2-24
STCL	177	25		A/SA350-15 LF2 CL.1	14/71266	MEGALET S. 3000 SW A/SA350 LF2 CL1 3/4x1-2.1/2
YDDR	178	28		A/SA350-15 LF2 CL.1	P3131335951	MEGALET S. 3000 SW A/SA350 LF2 CL1 1x3-80

Test Prova	HEAT TREATMENT DATA AND REFERENCES TO OTHER CERTIFICATES / Dettagli di trattamento termico e riferimenti ad altri certificati	RAW AND FORGING MATERIAL CERTIFICATES / Certificati di acciaieria/forgia
YDDR	MATERIAL PRODUCED BY ELECT.FURNACE-NORMALIZED AT 880 C COOLED IN STILL AIR.	CERT.FC-005256-15-0004.MEGA/CERT.2031.MEGA*
YRCC	MATERIAL PRODUCED BY ELECT.FURNACE-NORMALIZED AT 930 C COOLED IN STILL AIR.	CERT.FC-005452-15-0001.MEGA/CERT.5550 SORBIT
UUCL	MATERIAL PRODUCED BY ELECTRIC FURNACE-QUENCHED AT 900 C TEMPERED AT 610 C	CERT.000174.EVASI*
STCL	MATERIAL PRODUCED BY ELECT.FURNACE NORMALIZED AT 920 C COOLED IN STILL AIR.	CERT.FC-005034-13-0002.MEGA/CERT.1310-1 TTR
YDDR	MATERIAL PRODUCED BY ELECT.FURNACE-NORMALIZED AT 880 C COOLED IN STILL AIR.	CERT.FC-005256-15-0004.MEGA/CERT.2031.MEGA*

Test Prova	Test loc. Preso a	Orient. Direz.	TENSILE TEST AT ROOM TEMPERATURE / Trazione a tempertura ambiente							CVN (KV) / Prova di resilienza					Bend [B] Flatt. [F] Piega Schiacc.	Hardness Durezza
			Specimen / Provino			Yield strength	Tensile strength	Elongation	Red. Of Area	Dimens.	T	Abs. Energy	Shear A	Lat Exp		
			Shape Forma	A [mm²] Sezione	L [mm] Lungh.	Snerv. [Mpa] Min:	Rottura [Mpa] Min:	Allung. [%] Min:	Contraz. [%] Min:	Dimens. [mm]	Temp. [°C]	Energia ass. [J]	Area d [%]	Esp. Lat. [mm]		
YDDR	T/2	LONG	Round	30 400	25.000	360.100	558.300	35.400	70.100	10x10x55	-46	50-49-62	–	0.55-0.52-0.61		HBW 150-155
YRCC	T/2	LONG	Round	60 100	35.000	367.400	517.900	35.900	71.000	10x10x55	-46	45-97-51	–	--		HBW 150-150
UUCL	T/2	LONG	Round	30 500	25.000	335.320	522.100	29.400	66.300	10x10x55	-46	68-72-88	–	--		HBW 155-160
STCL	T/2	LONG	Round	30 600	25.000	352.600	519.100	35.200	69.800	10x10x55	-46	136-144-102	–	--		HBW 153-156
YDDR	T/2	LONG	Round	30 400	25.000	360.100	558.300	35.400	70.100	10x10x55	-46	50-49-62	–	0.55-0.52-0.61		HBW 150-155

Test Prova	C [%]	Si [%]	Mn [%]	S [%]	P [%]	Cr [%]	Ni [%]	Mo [%]	Ti [%]	Cu [%]	V [%]	Al [%]	H [%]	Nb [%]	N [%]	Sn [%]	O [%]	B [%]	Fe [%]	Zr [%]	CE[A] [%]	PREN[B] [%]	X fact.[C] [%]	J fact.[D] [%]
YDDR	0.1800	0.2250	1.0300	0.0020	0.0100	0.1600	0.0290	0.0050		0.0430	0.0030	0.0290	0.00018	0.0027	0.0062		0.0011	0.0003			0.3900			
YRCC	0.1950	0.1900	1.0000	0.0070	0.0110	0.0800	0.0600	0.0100	0.0180	0.1700	0.0020	0.0310	0.00021	0.0010	0.0091	0.0090	0.0019				0.3953			
UUCL	0.1950	0.2100	0.9000	0.0060	0.0090	0.0800	0.0300	0.0100	0.0170	0.0800	0.0190	0.0270		0.0020		0.0060					0.3741			
STCL	0.1900	0.2100	0.9800	0.0080	0.0130	0.1000	0.0600	0.0200	0.0180	0.1700	0.0020	0.0310	0.00020	0.0020	0.0092	0.0100	0.0016				0.3930			
YDDR	0.1800	0.2250	1.0300	0.0020	0.0100	0.1600	0.0290	0.0050		0.0430	0.0030	0.0290	0.00018	0.0027	0.0062		0.0011	0.0003			0.3900			

REMARKS / Note

1: MATERIAL ACCORDING TO NACE MR0175/ISO 15156-1-2-3 Ed.2009. MATERIAL ACCORDING TO NACE MR0103 Ed.2012
2: MATERIAL ACCORDING TO ASME Sect. II Part. A 2015 Edition.
3: FULLY KILLED STEEL, FINE GRAIN TREATED, PRODUCED BY ELECTRIC FURNACE

A: CE = C + Mn/6 + (Cr+Mo+V)/5 + (Cu+Ni)/15 | B: PREN = Cr + 3.3Mo + 16N
C: X factor = (10P + 5Sb+4Sn+As)/100 - elements expressed in ppm
D: J factor = ((Mn + Si)(P + Sn)) x 10E4

Additional elements:

Quality inspector representative / Ispettore controllo qualità: Riccardo Scorsatti

This certificate is issued by a computerized system and it is valid with electronic signature. On the original certificate the trademark M.E.G.A. is printed in green color.

Form QC-01-01 Rev. 0 2013-03-15

35

M.E.G.A.

INSPECTION CERTIFICATE

Certificato d'ispezione

REPORT N. / Rapporto N.	TC-018189-16-0001	Issued on / Revised on	02/09/2016	Customer / Cliente	ALLIED FITTING CANADA	Job n. / Com. n.	18189
Revision / Revisione	0	According to / In accordo a	EN 10204:2004 / UNI EN 10204:2005	Type / Tipo	3.1		
					172 TURBO DRIVE SHERWOOD PARK, ALBERTA T8H 2J6 - CANADA	Page n./ Pagina n.	25 of 25
						Purchase order and project/Ordine e progetto	62216AMG

We hereby certify that all items supplied for the above purchase orders meet all the requirements of the applicable specification of manufacture, the purchase item descriptions, purchase specifications and purchase order requirements. Visual, dimensional and marking check of items supplied has been carried out by our internal inspectors with satisfactory results.

The chemical and mechanical values shown on the EN 10204 certificate are true copy of the mill test certificate issued by the steel mill, or by the laboratory that determined it. All material is certified to be mercury free and free from radioactivity contamination. No weld repair was performed. Marking was performed by low stress stamps in accordance with MSS SP25.
Manufacturing standards:
- 45° and 90° elbows, tees, crosses, full and half couplings, caps, square, hexagonal and round plugs, hexagonal and flush bushings are manufactured in accordance with ASMEB.16.11; threads in accordance with ANSI/ASME B1.20.1.
- Outlet branches are manufactured in accordance with: ASME B.31.1, B.31.3 and MSS-SP-97
- Seamless swage nipples are manufactured in accordance with: BS3799-74 or MSS SP95-86
- Seamless pipe nipples are manufactured in accordance with: B36.10-95 or B36.19-85
- Flanged outlet branches are manufactured in accordance with: ASME B.31.1, B.31.3 and B.16.5
- Unions are manufactured in accordance with: BS 3799 or MSS SP-83

When the length of flanged nipolet is not specified in the description, it is 150 mm.
The material is according to ASTM and ASME Boiler and Pressure Vessel Code Section II.
When the Edition/Revision of the listed standards is not mentioned, it is assumed to be the latest.

Yield strength detected by 0.2% off-set method
Austenitic and duplex stainless steels have been pickled and passivated. Machined surfaces do not require pickling and passivation.

M.E.G.A. is approved with certificate 75/2002/MUC by T.U.V. (certification Body N.0036) to issue certificate of specific product control in accordance with the Pressure Equipment Directive 97/23/EC (PED) Annex 1, Paragraph 4.3.
Testing equipment used:
- Tensile test machine Galdabini Quasar 250 serial No. VAOG – Procedure MAC-03 Rev. 1
- Impact test Cermac JB-W500 serial No. 04031 – Procedure MAC-04 Rev. 1
- Brinell Hardness test Wolpert Dia Testor 2RC serial No. 8900298/0001 – Procedure MAC-05 Rev. 1
- Rockwell Hardness test EMCO Test DJ10 Serial No. 255 - Procedure MAC-06 Rev. 1
- Chemical analysis spectrometer Baird DV4 serial No. P017 (ASTM E415 and E1086) – Procedure QC-07 Rev. 0

The product are manufactured in Italy.

Quality inspector representative Ispettore controllo qualità	Riccardo Scorsetti

This certificate is issued by a computerized system and it is valid with electronic signature. On the original certificate the trademark M.E.G.A. is printed in green color.

M.E.G.A. S.p.A. - Via Dalla Chiesa, 3 - 24020 Scanzorosciate (Bergamo) - Italy - VAT IT 00210060166 - Ph. +39 035 661280 / 661199 - Fax +39 035 665535 - E-mail inspection@mega-fittings.com

M.E.G.A.

INSPECTION CERTIFICATE

Certificato d'ispezione

REPORT N. / Rapporto N.	TC-016151-15-0002	Issued on / Emesso il	25/01/2016	Customer / Cliente	ALLIED FITTING CANADA 172 TURBO DRIVE SHERWOOD PARK, ALBERTA T8H 2J6 - CANADA
Revision / Revisione	0	According to / In accordo a	EN 10204:2004 UNI EN 10204:2005	Type / Tipo	3.1

Job n. / Com. n. 16151 — Page n./ Pagina n. 17 of 26

Purchase order and project/Ordine e progetto: 91015AMG

DESCRIPTION / DESCRIZIONE

Test Prova	Item Pos.	Qty Q.tà	Customer code Codice cliente	Material Materiale	Heat Colata	Product Prodotto
VRLF	109	18		A/SA105-14	12/72457	MEGALET S. 9000 NPT A/SA105N 3/4x3.1/2-24
VXAS	109	32		A/SA105-14	12/73926	MEGALET S. 9000 NPT A/SA105N 3/4x3.1/2-24
STAT	111	2000		A/SA350-14 LF2 CL.1	14/71266	MEGALET S. 3000 NPT A/SA350 LF2 CL1 1/2x3/4-80
STAS	117	16		A/SA105-14	14/71266	MEGALET S. 3000 SW A/SA105N 1/2x3/4-80
STLT	117	484		A/SA105-14	14/71266	MEGALET S. 3000 SW A/SA105N 1/2x3/4-80

Test Prova	HEAT TREATMENT DATA AND REFERENCES TO OTHER CERTIFICATES / Dettagli di trattamento termico e riferimenti ad altri certificati	RAW AND FORGING MATERIAL CERTIFICATES / Certificati di acciaieria/forgia
VRLF	MATERIAL PRODUCED BY ELECT.FURNACE-NORMALIZED AT 900 C COOLED IN STILL AIR.	CERT.000306.EVASI*588177MEGA
VXAS	MATERIAL PRODUCED BY ELECT.FURNACE-NORMALIZED AT 900 C COOLED IN STILL AIR.	CERT.89.EVASI*0013MEGA
STAT	MATERIAL PRODUCED BY ELECT.FURNACE-NORMALIZED AT 920 C COOLED IN STILL AIR.	CERT.FC-005034-14-0001.MEGA/I*CERT.1305-1 TTR
STAS	MATERIAL PRODUCED BY ELECT.FURNACE-NORMALIZED AT 880 C COOLED IN STILL AIR.	CERT.FC-005034-14-0003.MEGA/CERT.1423.MEGA*
STLT	MATERIAL PRODUCED BY ELECT.FURNACE-NORMALIZED AT 880 C COOLED IN STILL AIR.	CERT.FC-005034-14-0010.MEGA/CERT.1634.MEGA

Test Prova	Test loc. Preso a	Orient. Direz.	TENSILE TEST AT ROOM TEMPERATURE / Trazione a temperatura ambiente						CVN (KV) / Prova di resilienza					Bend [B] Piatt. [F] Piega Schiacc.	Hardness Durezza
			Specimen / Provino			Yield strength Snerv [Mpa]	Tensile strength Rottura [Mpa]	Elongation Allung. [%]	Red. Of Area Contraz. [%]	Dimens. Dimens. [mm]	T Temp. [°C]	Abs. Energy Energia ass. [J]	Shear A Area d [%]	Lat Exp Esp. lat. [mm]		
			Shape Forma	A [mm²] Sezione	L [mm] Lungh.	Min:	Min:	Min:	Min:							
VRLF	T/2	LONG	Round	30.600	25.000	338.400	544.100	28.200	66.300	10x10x55	0	66-72-70	--	--		HBW 145-150
VXAS	T/2	LONG	Round	31.100	25.000	321.200	491.600	36.600	69.000	10x10x55	0	72-51-55	--	--		HBW 143-145
STAT	T/2	LONG	Round	30.700	25.000	355.400	528.300	36.500	70.400	10x10x55	-46	106-125-139	--	--		HBW 155-160
STAS	T/2	LONG	Round	30.100	25.000	320.100	508.800	39.900	70.400	10x10x55	0	50-55-110	--	--		HBW 143-145
STLT	T/2	LONG	Round	30.500	25.000	318.400	512.600	38.900	69.700	10x10x55	0	175-186-193	--	--		HBW 142-146

Test Prova	C [%]	Si [%]	Mn [%]	S [%]	P [%]	Cr [%]	Ni [%]	Mo [%]	Ti [%]	Cu [%]	V [%]	Al [%]	H [%]	Nb [%]	N [%]	Sn [%]	O [%]	B [%]	Fe [%]	Zr [%]	CE[A] [%]	PREN[B] [%]	X fact.[C] [%]	J fact.[D] [%]
VRLF	0.2000	0.1800	0.9100	0.0100	0.0090	0.1000	0.0500	0.0100	0.0220	0.1500	0.0190	0.0260		0.0020		0.0080		0.0005			0.3907			
VXAS	0.1800	0.2400	0.8700	0.0100	0.0090	0.0600	0.0500	0.0100	0.0190	0.1200	0.0180	0.0250		0.0010		0.0080					0.3539			
STAT	0.1900	0.2100	0.9800	0.0080	0.0130	0.1000	0.0600	0.0200	0.0180	0.1700	0.0020	0.0310	0.0002	0.0020	0.0092	0.0100	0.0016				0.3930			
STAS	0.1900	0.2100	0.9800	0.0080	0.0130	0.1000	0.0600	0.0200	0.0180	0.1700	0.0020	0.0310	0.0002	0.0020	0.0092	0.0100	0.0016				0.3930			
STLT	0.1900	0.2100	0.9800	0.0080	0.0130	0.1000	0.0600	0.0200	0.0180	0.0020	0.0020	0.0310	0.0002	0.0020	0.0092	0.0100	0.0016				0.3818			

REMARKS / Note

1: MATERIAL ACCORDING TO NACE MR0175/ISO 15156-1-2-3 Ed.2009. MATERIAL ACCORDING TO NACE MR0103 Ed.2012

2: MATERIAL ACCORDING TO ASME Sect. II Part. A 2015 Edition.

A: CE = C + Mn/6 + (Cr+Mo+V)/5 + (Cu+Ni)/15 | B: PREN = Cr + 3.3Mo + 16N

C: X factor = (10P + 55b+4Sn+As)/100 - elements expressed in ppm

D: J factor = ((Mn + Si)(P + Sn)) x 10E4

Additional elements: -

Quality inspector representative / Ispettore controllo qualità: Emmanuel Centemeri

This certificate is issued by a computerized system and it is valid with electronic signature. On the original certificate the trademark M.E.G.A. is printed in green color.

Form QC-01-01 Rev. 0 2013-03-15

M.E.G.A.

INSPECTION CERTIFICATE

Certificato d'ispezione

REPORT N. / Rapporto N.	TC-016151-15-0002	Issued on / Emesso il	25/01/2016	Customer / Cliente	ALLIED FITTING CANADA	Job n. / Com. n.	16151
Revision / Revisione	0	According to / In accordo a	EN 10204:2004 UNI EN 10204:2005	Type / Tipo	3.1		172 TURBO DRIVE SHERWOOD PARK, ALBERTA T8H 2J6 - CANADA

Page n. / Pagina n. 26 of 26

Purchase order and project/Ordine e progetto: 91015AMG

We hereby certify that all items supplied for the above purchase orders meet all the requirements of the applicable specification of manufacture, the purchase item descriptions, purchase specifications and purchase order requirements. Visual, dimensional and marking check of items supplied has been carried out by our internal inspectors with satisfactory results.

The chemical and mechanical values shown on the EN 10204 certificate are true copy of the mill test certificate issued by the steel mill, or by the laboratory that determined it. All material is certified to be mercury free. No weld repair was performed. Marking was performed by low stress stamps in accordance with MSS SP25.
Manufacturing standards:
- 45° and 90° elbows, tees, crosses, full and half couplings, caps, square, hexagonal and round plugs, hexagonal and flush bushings are manufactured in accordance with ASME B16.11; threads in accordance with ANSI/ASME B1.20.1.
- Outlet branches are manufactured in accordance with: ASME B.31.1, B.31.3 and MSS-SP-97
- Seamless swage nipples are manufactured in accordance with: BS3799-74 or MSS SP95-85
- Seamless pipe nipples are manufactured in accordance with: B36.10-95 or B36.19-85
- Flanged outlet branches are manufactured in accordance with: ASME B.31.1, B.31.3 and B.16.5
- Unions are manufactured in accordance with: BS 3799 or MSS SP-83

When the length of flanged nipolet is not specified in the description, it is 150 mm.
The material is according to ASTM and ASME Boiler and Pressure Vessel Code Section II.
When the Edition/Revision of the listed standards is not mentioned, it is assumed to be the latest.

Yield strength detected by 0.2% off-set method
Austenitic and duplex stainless steels have been pickled and passivated. Machined surfaces do not require pickling and passivation.

M.E.G.A. is approved with certificate 75/2002/MUC by T.U.V. (certification Body N.0036) to issue certificate of specific product control in accordance with the Pressure Equipment Directive 97/23/EC (PED) Annex 1, Paragraph 4.3.
Testing equipment used:
- Tensile test machine Galdabini Quasar 250 serial No. VAOG – Procedure MAC-03 Rev. 1
- Impact test Cermac JB-W500 serial No. 04031 – Procedure MAC-04 Rev. 1
- Brinell Hardness test Wolpert Dia Testor 2RC serial No. 8900298/0001 – Procedure MAC-05 Rev. 1
- Rockwell Hardness test EMCO Test DJ10 Serial No. 255 - Procedure MAC-06 Rev. 1
- Chemical analysis spectrometer Baird DV4 serial No. P017 (ASTM E415 and E1086) – Procedure QC-07 Rev. 0

The product are manufactured in Italy.

Quality inspector representative / Ispettore controllo qualità	Emmanuel Centemeri

This certificate is issued by a computerized system and it is valid with electronic signature. On the original certificate the trademark M.E.G.A. is printed in green color.

Form QC-01-01 Rev. 0 2013-03-15

M.E.G.A.

INSPECTION CERTIFICATE

Certificato d'ispezione

REPORT N. / Rapporto N.	TC-014620-15-0005	Issued on / Emesso il	19/05/2015	Customer / Cliente	ALLIED FITTING CANADA
Revision / Revisione	0	According to / In accordo a	EN 10204:2005	Type / Tipo	3.1
					172 TURBO DRIVE SHERWOOD PARK, ALBERTA T8H 2J6 - CANADA

Job n. / Com. n. 14620 — Page n./ Pagina n. 24 of 28

Purchase order and project/Ordine e progetto: 12015AMG

Test / Prova	Item / Pos.	Qty / Q.tà	Customer code / Codice cliente	Material / Materiale	Heat / Colata	Product / Prodotto
						DESCRIPTION / DESCRIZIONE
SSFA	321	10		A/SA350-14 LF2 CL.1	12/73926	MEGALET Sch.STD A/SA350 LF2 CL1 2x8-12
SSUX	321	50		A/SA350-14 LF2 CL.1	13/76109	MEGALET Sch.STD A/SA350 LF2 CL1 2x8-12
PSRF	338	5		A/SA350-14 LF2 CL.1	0745422/07	MEGALET S. 3000 NPT A/SA350 LF2 CL1 4x10-12
SSXS	342	300		A/SA350-14 LF2 CL.1	216632	MEGALET S. 3000 SW A/SA350 LF2 CL1 1x6-36
PSTN	345	50		A/SA350-14 LF2 CL.1	1T 33083	MEGALET S. 3000 SW A/SA350 LF2 CL1 2x3

Test / Prova	HEAT TREATMENT DATA AND REFERENCES TO OTHER CERTIFICATES / Dettagli di trattamento termico e riferimenti ad altri certificati	RAW AND FORGING MATERIAL CERTIFICATES / Certificati di acciaieria/forgia
SSFA	MATERIAL PRODUCED BY ELECTRIC FURNACE-QUENCHED AT 920 C TEMPERED AT 630 C	CERT.89+95.EVASI*CERT.461-5 TTR
SSUX	MATERIAL PRODUCED BY ELECT.FURNACE-NORMALIZED AT 920 C COOLED IN STILL AIR.	CERT.327.EVASI*CERT.933-7 TTR
PSRF	MATERIAL PRODUCED BY ELECTRIC FURNACE-QUENCHED AT 930 C TEMPERED AT 640 C	CERT.10189.MEGA/I*566975MEGA*
SSXS	MATERIAL PRODUCED BY ELECT.FURNACE-NORMALIZED AT 920 C COOLED IN STILL AIR.	CERT.110.EVASI*CERT.1306-2 TTR
PSTN	MATERIAL PRODUCED BY ELECTRIC FURNACE-QUENCHED AT 930 C TEMPERED AT 640 C	CERT.393/1 EVASI*568336MEGA*

Test / Prova	Test loc. / Preso a	Orient. / Direz.	TENSILE TEST AT ROOM TEMPERATURE / Trazione a tempertura ambiente						CVN (KV) / Prova di resilienza					Bend [B] Flatt. [F] Piega Schiacc.	Hardness / Durezza
			Specimen / Provino			Yield strength Snerv [Mpa]	Tensile strength Rottura [Mpa]	Elongation Allung. [%]	Red. Of Area Contraz. [%]	Dimens. Dimens. [mm]	T Temp. [°C]	Abs. Energy Energia ass. [J]	Shear A Area d [%]	Lat Exp Esp. Lat. [mm]		
			Shape Forma	A [mm²] Sezione	L [mm] Lungh.	Min:	Min:	Min:	Min:							
SSFA	T/2	LONG	Round	30.500	25.000	337.100	499.500	30.500	66.300	10x10x55	-46	45 - 40 - 51	--	--		HBW 160 - 164
SSUX	T/2	LONG	Round	30.400	25.000	338.200	512.400	31.400	70.800	10X10X55	-46	59 - 70 - 68	--	--		HBW 146 - 149
PSRF	T/2	LONG	Round	59.400	35.000	344.200	523.500	32.800	77.900	10x10x55	-46	128 - 136 - 154	--	--		HBW 142 - 146
SSXS	T/2	LONG	Round	30.500	25.000	355.100	542.500	29.600	65.300	10x10x55	-46	89 - 83 - 79	--	--		HBW 156 - 159
PSTN	T/2	LONG	Round	30.600	25.000	388.000	559.000	27.200	62.300	10x10x55	-46	66 - 64 - 66	--	--		HBW 163 - 167

Test / Prova	C [%]	Si [%]	Mn [%]	S [%]	P [%]	Cr [%]	Ni [%]	Mo [%]	Ti [%]	Cu [%]	V [%]	Al [%]	Co [%]	Nb [%]	N [%]	Sn [%]	W [%]	B [%]	Fe [%]	Zr [%]	CE[A] [%]	PREN[B] [%]	X fact.[C] [%]	J fact.[D] [%]
SSFA	0.1800	0.2400	0.8700	0.0100	0.0090	0.0600	0.0500	0.0100	0.0190	0.1200	0.0180	0.0250		0.0010		0.0080					0.3539			
SSUX	0.1950	0.2200	0.9600	0.0100	0.0140	0.1100	0.0600	0.0100	0.0220	0.1800	0.0220	0.0240		0.0020		0.0100					0.3994			
PSRF	0.1800	0.2350	1.0500	0.0030	0.0170	0.1050	0.0160	0.0050		0.0250	0.0030	0.0260		0.0017							0.3803			
SSXS	0.1610	0.2140	1.0200	0.0050	0.0070	0.0980	0.1280	0.0220		0.2380	0.0040	0.0260		0.0010							0.3802			
PSTN	0.1900	0.2300	0.8300	0.0100	0.0100	0.0600	0.0600	0.0100	0.0020	0.1300	<0.0800	0.0290		0.0020		0.0080		0.0003			0.3633			

REMARKS / Note

1: MATERIAL ACCORDING TO NACE MR0175/ISO 15156-1-2-3 Ed.2009. MATERIAL ACCORDING TO NACE MR0103 Ed.2012

2: MATERIAL ACCORDING TO ASME Sect. II Part. A 2013 Edition.

A: CE = C + Mn/6 + (Cr+Mo+V)/5 + (Cu+Ni)/15 | B: PREN = Cr + 3.3Mo + 16N

C: X factor = (10P + 5Sb+4Sn+As)/100 - elements expressed in ppm

D: J factor = ((Mn + Si)(P + Sn)) x 10E4

Quality inspector representative / Ispettore controllo qualità: Riccardo Scorsetti

This certificate is issued by a computerized system and it is valid with electronic signature. On the original certificate the trademark M.E.G.A. is printed in green color.

Form QC-C1-01 Rev. 0 2013-03-15

M.E.G.A.

INSPECTION CERTIFICATE

Certificato d'ispezione

REPORT N. / Rapporto N.	TC-014620-15-0005	Issued on / Emesso il	19/05/2015	Customer / Cliente	ALLIED FITTING CANADA	Job n. / Com. n.	14620
Revision / Revisione	0	According to / In accordo a	EN 10204:2005	Type / Tipo	3.1		172 TURBO DRIVE SHERWOOD PARK, ALBERTA T8H 2J6 - CANADA

Page n./ Pagina n. 28 of 28

Purchase order and project/Ordine e progetto

12015AMG

We hereby certify that all items supplied for the above purchase orders meet all the requirements of the applicable specification of manufacture, the purchase item descriptions, purchase specifications and purchase order requirements. Visual, dimensional and marking check of items supplied has been carried out by our internal inspectors with satisfactory results.

The chemical and mechanical values shown on the EN 10204 certificate are true copy of the mill test certificate issued by the steel mill, or by the laboratory that determined it. All material is certified to be mercury free. No weld repair was performed. Marking was performed by low stress stamps in accordance with MSS SP25.

Manufacturing standards:

- 45° and 90° elbows, tees, crosses, full and half couplings, caps, square, hexagonal and round plugs, hexagonal and flush bushings are manufactured in accordance with ANSI/ASME B1.20.1.
- Outlet branches are manufactured in accordance with: ASME B.31.1, B.31.3 and MSS-SP-97
- Seamless swage nipples are manufactured in accordance with: BS3799-74 or MSS SP95-86
- Seamless pipe nipples are manufactured in accordance with: B36.10-95 or B36.19-85
- Flanged outlet branches are manufactured in accordance with: ASME B.31.1, B.31.3 and B.16.5
- Unions are manufactured in accordance with: BS 3799 or MSS SP-83

When the length of flanged nipolet is not specified in the description, it is 150 mm.

The material is according to ASTM and ASME Boiler and Pressure Vessel Code Section II.

When the Edition/Revision of the listed standards is not mentioned, it is assumed to be the latest.

Yield strength detected by 0.2% off-set method

Austenitic and duplex stainless steels have been pickled and passivated. Machined surfaces do not require pickling and passivation.

M.E.G.A. is approved with certificate 75/2002/MUC by T.U.V. (certification Body N.0036) to issue certificate of specific product control in accordance with the Pressure Equipment Directive 97/23/EC (PED) Annex 1, Paragraph 4.3.

Testing equipment used:

- Tensile test machine Galdabini Quasar 250 serial No. VAOG – Procedure QC-03 Rev. 1
- Impact test Cermac JB-W500 serial No. 04031 – Procedure QC-02 Rev. 1
- Hardness test Wolpert Dia Testor 2RC serial No. 8900298/0001 – Procedure QC-04 Rev. 0
- Chemical analysis spectrometer Baird DV4 serial No. P017 (ASTM E415 and E1086) – Procedure QC-07 Rev. 0

The product are manufactured in Italy.

Quality inspector representative Ispettore controllo qualità	Riccardo Scorsetti

This certificate is issued by a computerized system and it is valid with electronic signature. On the original certificate the trademark M.E.G.A. is printed in green color.

M.E.G.A. S.p.A. - Via Dalla Chiesa, 3 - 24020 Scanzorosciate (Bergamo) - Italy - VAT IT 00210060166 - Ph. +39 035 661280 / 661199 - Fax +39 035 665535 - E-mail inspection@mega-fittings.com

M.E.G.A.

INSPECTION CERTIFICATE

Certificato d'ispezione

REPORT N. / Rapporto N.	TC-014620-15-0002	Issued on / Emesso il	26/03/2015	Customer / Cliente	ALLIED FITTING CANADA	Job n. / Com. n.	14620	Page n./ Pagina n.	29 of 34
Revision / Revisione	C	According to / In accordo a	EN 10204:2005	Type / Tipo	3.1	172 TURBO DRIVE SHERWOOD PARK, ALBERTA T8H 2J6 - CANADA		Purchase order and project/Ordine e progetto	12015AMG

DESCRIPTION / DESCRIZIONE

Test / Prova	Item / Pos.	Qty / Q.tà	Customer code / Codice cliente	Material / Materiale	Heat / Colata	Product / Prodotto
VXAB	341	400		A/SA350-14 LF2 CL.1	212552	MEGALET S. 3000 SW A/SA350 LF2 CL1 1/2x3-36
PURF	343	33		A/SA350-14 LF2 CL.1	09/79536	MEGALET S. 3000 SW A/SA350 LF2 CL1 1.1/2x6-10
VLAU	343	167		A/SA350-14 LF2 CL.1	11/79089	MEGALET S. 3000 SW A/SA350 LF2 CL1 1.1/2x6-10
SSXT	344	37		A/SA350-14 LF2 CL.1	13/75938	MEGALET S. 3000 SW A/SA350 LF2 CL1 1.1/2x12-36
UXLL	344	63		A/SA350-14 LF2 CL.1	11/77092	MEGALET S. 3000 SW A/SA350 LF2 CL1 1.1/2x12-36

Test / Prova	HEAT TREATMENT DATA AND REFERENCES TO OTHER CERTIFICATES / Dettagli di trattamento termico e riferimenti ad altri certificati	RAW AND FORGING MATERIAL CERTIFICATES / Certificati di acciaieria/forgia
VXAB	MATERIAL PRODUCED BY ELECTRIC FURNACE-QUENCHED AT 900 C TEMPERED AT 610 C	CERT.82.EVASI*0029MEGA
PURF	MATERIAL PRODUCED BY ELECTRIC FURNACE-QUENCHED AT 920 C TEMPERED AT 590 C	CERT.49.EVASI*569712MEGA
VLAU	MATERIAL PRODUCED BY ELECTRIC FURNACE-QUENCHED AT 900 C TEMPERED AT 630 C	CERT.206.EVASI*587127MEGA
SSXT	MATERIAL PRODUCED BY ELECT.FURNACE-NORMALIZED AT 920 C COOLED IN STILL AIR.	CERT.174.EVASI*CERT.1306-3 TTR
UXLL	MATERIAL PRODUCED BY ELECTRIC FURNACE-QUENCHED AT 900 C TEMPERED AT 610 C	CERT.312+326.EVASI*582889MEGA

Test	Test loc.	Orient.	TENSILE TEST AT ROOM TEMPERATURE / Trazione a tempertura ambiente							CVN (KV) / Prova di resilienza					Bend	Flatten.	Hardness
			Specimen / Provino			Yield strength	Tensile strength	Elongation	Red. Of Area	Dimens.	T	Abs. Energy	Shear A	Lat Exp			
Prova	Preso a	Direz.	Shape / Forma	A [mm²] / Sezione	L [mm] / Lungh.	Snerv [Mpa] Min:	Rottura [Mpa] Min:	Allung. [%] Min:	Contraz. [%] Min:	Dimens. [mm]	Temp. [°C]	Energia ass. [J]	Area d [%]	Esp. Lat. [mm]	Piega	Schiacc.	Durezza [HBN]
VXAB	T/2	LONG	Round	30.600	25.000	315.200	524.100	30.900	66.200	10x10x55	-46	86 - 92 - 80	--	--			150 - 155
PURF	T/2	LONG	Round	30.600	25.000	336.000	528.000	29.300	64.600	10x10x55	-46	52 - 56 - 74	--	--			145 - 150
VLAU	T/2	LONG	Round	30.500	25.000	374.200	551.200	27.100	63.500	10x10x55	-46	69 - 71 - 79	--	--			150 - 155
SSXT	T/2	LONG	Round	30.700	25.000	348.500	537.400	34.100	66.300	10x10x55	-46	70 - 75 - 62	--	--			153 - 156
UXLL	T/2	LONG	Round	30.600	25.000	385.200	554.100	27.100	63.400	10x10x55	-46	65 - 73 - 78	--	--			150 - 156

Test	C	Si	Mn	S	P	Cr	Ni	Mo	Ti	Cu	V	Al	Co	Nb	N	Sn	W	B	Fe	Zr	CE[A]	PREN[B]	X fact.[C]	J fact.[D]
Prova	[%]	[%]	[%]	[%]	[%]	[%]	[%]	[%]	[%]	[%]	[%]	[%]	[%]	[%]	[%]	[%]	[%]	[%]	[%]	[%]	[%]	[%]	[%]	[%]
VXAB	0.1640	0.1650	1.0250	0.0080	0.0060	0.0760	0.1300	0.0300		0.1760	0.0020	0.0250		0.0010		0.0090					0.3768			
PURF	0.1950	0.2100	0.8900	0.0060	0.0090	0.1100	0.0600	0.0100	0.0210	0.1600	0.0180	0.0270		0.0020		0.0020					0.3855			
VLAU	0.1950	0.1900	0.8800	0.0100	0.0150	0.1200	0.0600	0.0100	0.0200	0.1600	0.0150	0.0250		0.0010		0.0090					0.3853			
SSXT	0.1800	0.2100	0.8600	0.0100	0.0120	0.0900	0.0500	0.0100	0.0200	0.1300	0.0150	0.0270		0.0020		0.0080					0.3583			
UXLL	0.1800	0.2100	0.8500	0.0080	0.0080	0.1200	0.0500	0.0100	0.0160	0.1800	0.0160	0.0200		0.0010		0.0110					0.3661			

REMARKS / Note

1: MATERIAL ACCORDING TO NACE MR0175/ISO 15156-1-2-3 Ed.2009

2: MATERIAL ACCORDING TO NACE MR0103 Ed.2012

A: CE = C + Mn/6 + (Cr+Mo+V)/5 + (Cu+Ni)/15 | B: PREN = Cr + 3.3Mo + 16N

C: X factor = (10P + 5Sb+4Sn+As)/100 - elements expressed in ppm

D: J factor = ((Mn + Si)(P + Sn)) x 104

Quality inspector representative / Ispettore controllo qualità: Riccardo Scorsetti

This certificate is issued by a computerized system and it is valid with electronic signature. On the original certificate the trademark M.E.G.A. is printed in green color.

Form QC-01-01 Rev. 0 2013-03-15

M.E.G.A.

INSPECTION CERTIFICATE

Certificato d'ispezione

REPORT N. / Rapporto N.	TC-014620-15-0002	Issued on / Emesso il	26/03/2015	Customer / Cliente	ALLIED FITTING CANADA	Job n. / Com. n.	14620
Revision / Revisione	0	According to / In accordo a	EN 10204:2005	Type / Tipo	3.1	Page n. / Pagina n.	34 of 34
					172 TURBO DRIVE SHERWOOD PARK, ALBERTA T8H 2J6 - CANADA	Purchase order and project/Ordine e progetto	12015AMG

We hereby certify that all items supplied for the above purchase orders meet all the requirements of the applicable specification of manufacture, the purchase item descriptions, purchase specifications and purchase order requirements. Visual, dimensional and marking check of items supplied has been carried out by our internal inspectors with satisfactory results.

The chemical and mechanical values shown on the EN 10204 certificate are true copy of the mill test certificate issued by the steel mill, or by the laboratory that determined it. All material is certified to be mercury free. No weld repair was performed. Marking was performed by low stress stamps in accordance with MSS SP25.
Manufacturing standards:
- 45° and 90° elbows, tees, crosses, full and half couplings, caps, square, hexagonal and round plugs, hexagonal and flush bushings are manufactured in accordance with ASMEB.16.11; threads in accordance with ANSI/ASME B1.20.1.
- Outlet branches are manufactured in accordance with: ASME B.31.1, B.31.3 and MSS-SP-97
- Seamless swage nipples are manufactured in accordance with: BS3799-74 or MSS SP95-86
- Seamless pipe nipples are manufactured in accordance with: B36.10-95 or B36.19-85
- Flanged outlet branches are manufactured in accordance with: ASME B.31.1, B.31.3 and B.16.5
- Unions are manufactured in accordance with: BS 3799 or MSS SP-83

When the length of flanged nipolet is not specified in the description, it is 150 mm.
The material is according to ASTM and ASME Boiler and Pressure Vessel Code Section II.
When the Edition/Revision of the listed standards is not mentioned, it is assumed to be the latest.

Yield strength detected by 0.2% off-set method
Austenitic and duplex stainless steels have been pickled and passivated. Machined surfaces do not require pickling and passivation.

M.E.G.A. is approved with certificate 75/2002/MUC by T.U.V. (certification Body N.0036) to issue certificate of specific product control in accordance with the Pressure Equipment Directive 97/23/EC (PED) Annex 1, Paragraph 4.3.
Testing equipment used:
- Tensile test machine Galdabini Quasar 250 serial No. VAOG – Procedure QC-03 Rev. 1
- Impact test Cermac JB-W500 serial No. 04031 – Procedure QC-02 Rev. 1
- Hardness test Wolpert Dia Testor 2RC serial No. 8900298/0001 – Procedure QC-04 Rev. 0
- Chemical analysis spectrometer Baird DV4 serial No. P017 (ASTM E415 and E1086) – Procedure QC-07 Rev. 0

The product are manufactured in Italy.

Quality control laboratory Laboratorio controllo qualità	Riccardo Scorsetti

This certificate is issued by a computerized system and it is valid with electronic signature. On the original certificate the trademark M.E.G.A. is printed in green color.

M.E.G.A. S.p.A. - Via Dalla Chiesa, 3 - 24020 Scanzorosciate (Bergamo) - Italy - VAT IT 00210060166 - Ph. +39 035 661280 / 661199 - Fax +39 035 665535 - E-mail inspection@mega-fittings.com

M.E.G.A.

INSPECTION CERTIFICATE

Certificato d'ispezione

REPORT N. / Rapporto N.	TC-018189-16-0001	Issued on / Revised on	02/09/2016	Customer / Cliente	ALLIED FITTING CANADA 172 TURBO DRIVE SHERWOOD PARK, ALBERTA T8H 2J6 - CANADA
Job n. / Com. n.	18189	Page n. / Pagina n.	20 of 25		
Revision / Revisione	0	According to / In accordo a	EN 10204:2004 UNI EN 10204:2005	Type / Tipo	3.1
Purchase order and project/Ordine e progetto	62216AMG				

DESCRIPTION / DESCRIZIONE

Test Prova	Item Pos.	Qty Q.tà	Customer code Codice cliente	Material Materiale	Heat Colata	Product Prodotto
YRCC	178	472		A/SA350-15 LF2 CL.1	14/72397	MEGALET S. 3000 SW A/SA350 LF2 CL1 1x3-80
ZCTB	179	25		A/SA350-15 LF2 CL.1	14/73165	MEGALET S. 3000 SW A/SA350 LF2 CL1 1.1/2x3-6
ZCRU	180	30		A/SA350-15 LF2 CL.1	14/72325	MEGALET S. 3000 SW A/SA350 LF2 CL1 2x3.1/2-6
ZLBN	181	60		A/SA350-15 LF2 CL.1	14/72325	MEGALET S. 3000 SW A/SA350 LF2 CL1 2x8-80
ZDBU	182	210		A/SA350-15 LF2 CL.1	14/71245	MEGALET S. 6000 SW A/SA350 LF2 CL1 1x1.1/4-80

Test Prova	HEAT TREATMENT DATA AND REFERENCES TO OTHER CERTIFICATES / Dettagli di trattamento termico e riferimenti ad altri certificati	RAW AND FORGING MATERIAL CERTIFICATES / Certificati di acciaieria/forgia
YRCC	MATERIAL PRODUCED BY ELECT.FURNACE-NORMALIZED AT 930 C COOLED IN STILL AIR.	CERT.FC-005452-15-0001.MEGA/CERT.5550 SORBIT
ZCTB	MATERIAL PRODUCED BY ELECT.FURNACE-NORMALIZED AT 930 C COOLED IN STILL AIR.	CERT.FC-005509-15-0002.MEGA/CERT.473.SORBIT
ZCRU	MATERIAL PRODUCED BY ELECT.FURNACE-NORMALIZED AT 930 C COOLED IN STILL AIR.	CERT.FC-005265-15-0036.MEGA/CERT.473 SORBIT
ZLBN	MATERIAL PRODUCED BY ELECT.FURNACE NORMALIZED AT 900 C COOLED IN STILL AIR.	CERT.FC-005265-15-0042.MEGA/CERT.2798.MEGA*
ZDBU	MATERIAL PRODUCED BY ELECT.FURNACE-NORMALIZED AT 900 C COOLED IN STILL AIR.	CERT.FC-005509-15-0006.MEGA/CERT.962 SORBIT

Test	Test loc.	Orient.	TENSILE TEST AT ROOM TEMPERATURE / Trazione a tempertura ambiente							CVN (KV) / Prova di resilienza					Bend [B]	Hardness
			Specimen / Provino			Yield strength	Tensile strength	Elongation	Red. Of Area	Dimens.	T	Abs. Energy	Shear A	Lat Exp	Flatt. [F]	
Prova	Preso a	Direz.	Shape Forma	A [mm²] Sezione	L [mm] Lungh.	Snerv. [Mpa] Min:	Rottura [Mpa] Min:	Allung. [%] Min:	Contraz. [%] Min:	Dimens. [mm]	Temp. [°C]	Energia ass. [J]	Area d [%]	Esp. Lat. [mm]	Piega Schiacc.	Durezza
YRCC	T/2	LONG	Round	60.100	35.000	367.400	517.900	35.900	71.000	10x10x55	-46	45-97-51	--	--		HBW 150-150
ZCTB	T/2	LONG	Round	30.700	25.000	318.400	510.400	35.800	70.100	10x10x55	-46	88-90-105	--	--		HBW 154-158
ZCRU	T/2	LONG	Round	30.400	25.000	315.300	509.400	36.600	76.800	10x10x55	-46	70-81-92	--	--		HBW 159-163
ZLBN	T/2	LONG	Round	30.600	25.000	324.600	502.800	40.100	78.400	10x10x55	-46	220-99-125	100-55-65	2.07-1.22-1.42		HBW 150-162
ZDBU	T/2	LONG	Round	30.800	25.000	341.200	531.500	27.000	74.800	10x10x55	-46	90-105-102	--	--		HBW 150-163

Test	C	Si	Mn	S	P	Cr	Ni	Mo	Ti	Cu	V	Al	H	Nb	N	Sn	O	B	Fe	Zr	CE[A]	PREN[B]	X fact.[C]	J fact.[D]
Prova	[%]	[%]	[%]	[%]	[%]	[%]	[%]	[%]	[%]	[%]	[%]	[%]	[%]	[%]	[%]	[%]	[%]	[%]	[%]	[%]	[%]	[%]	[%]	[%]
YRCC	0.1950	0.1900	1.0000	0.0070	0.0110	0.0800	0.0600	0.0100	0.0180	0.1700	0.0020	0.0310	0.00021	0.0010	0.0091	0.0090	0.0019				0.3953			
ZCTB	0.1900	0.2300	0.9600	0.0100	0.0150	0.1700	0.1200	0.0200	0.0180	0.2000	0.0020	0.0300	0.00023	0.0010	0.0095	0.0100	0.0017				0.4097			
ZCRU	0.1850	0.2300	0.9700	0.0060	0.0130	0.1200	0.0500	0.0100	0.0210	0.1700	0.0020	0.0320	0.00020	0.0010	0.0093	0.0090	0.0014				0.3877			
ZLBN	0.1850	0.2300	0.9700	0.0060	0.0130	0.1200	0.0500	0.0100	0.0210	0.1700	0.0020	0.0320	0.00020	0.0010	0.0093	0.0090	0.0014				0.3877			
ZDBU	0.1850	0.2300	0.9100	0.0030	0.0150	0.1200	0.0500	0.0100	0.0180	0.1600	0.0020	0.0350	0.00018	0.0020	0.0095	0.0090	0.0010	0.0003			0.3770			

REMARKS / Note

1: MATERIAL ACCORDING TO NACE MR0175/ISO 15156-1-2-3 Ed.2009. MATERIAL ACCORDING TO NACE MR0103 Ed.2012
2: MATERIAL ACCORDING TO ASME Sect. II Part. A 2015 Edition.
3: FULLY KILLED STEEL, FINE GRAIN TREATED, PRODUCED BY ELECTRIC FURNACE

A: CE = C + Mn/6 + (Cr+Mo+V)/5 + (Cu+Ni)/15 | B: PREN = Cr + 3.3Mo + 16N
C: X factor = (10P + 5Sb+4Sn+As)/100 - elements expressed in ppm
D: J factor = ((Mn + Si)(P + Sn)) x 10E4

Additional elements: ZETE': Ca 0,0013 |

Quality inspector representative / Ispettore controllo qualità: Riccardo Scorsetti

This certificate is issued by a computerized system and it is valid with electronic signature. On the original certificate the trademark M.E.G.A. is printed in green color.

Form QC-01-01 Rev. 0 2013-03-15

M.E.G.A.

INSPECTION CERTIFICATE

Certificato d'ispezione

REPORT N. / Rapporto N.	TC-018189-16-0001	Issued on / Revised on	02/09/2016	Customer / Cliente	ALLIED FITTING CANADA	Job n. / Com. n.	18189
Revision / Revisione	0	According to / In accordo a	EN 10204:2004 / UNI EN 10204:2005	Type / Tipo	3.1		172 TURBO DRIVE SHERWOOD PARK, ALBERTA T8H 2J6 - CANADA

Page n./ Pagina n. 25 of 25

Purchase order and project/Ordine e progetto

62216AMG

We hereby certify that all items supplied for the above purchase orders meet all the requirements of the applicable specification of manufacture, the purchase item descriptions, purchase specifications and purchase order requirements. Visual, dimensional and marking check of items supplied has been carried out by our internal inspectors with satisfactory results.

The chemical and mechanical values shown on the EN 10204 certificate are true copy of the mill test certificate issued by the steel mill, or by the laboratory that determined it. All material is certified to be mercury free and free from radioactivity contamination. No weld repair was performed. Marking was performed by low stress stamps in accordance with MSS SP25.

Manufacturing standards:

- 45° and 90° elbows, tees, crosses, full and half couplings, caps, square, hexagonal and round plugs, hexagonal and flush bushings are manufactured in accordance with ASMEB.16.11; threads in accordance with ANSI/ASME B1.20.1.
- Outlet branches are manufactured in accordance with: ASME B.31.1, B.31.3 and MSS-SP-97
- Seamless swage nipples are manufactured in accordance with: BS3799-74 or MSS SP95-86
- Seamless pipe nipples are manufactured in accordance with: B36.10-95 or B36.19-85
- Flanged outlet branches are manufactured in accordance with: ASME B.31.1, B.31.3 and B.16.5
- Unions are manufactured in accordance with: BS 3799 or MSS SP-83

When the length of flanged nipolet is not specified in the description, it is 150 mm.
The material is according to ASTM and ASME Boiler and Pressure Vessel Code Section II.
When the Edition/Revision of the listed standards is not mentioned, it is assumed to be the latest.

Yield strength detected by 0.2% off-set method
Austenitic and duplex stainless steels have been pickled and passivated. Machined surfaces do not require pickling and passivation.

M.E.G.A. is approved with certificate 75/2002/MUC by T.U.V. (certification Body N.0036) to issue certificate of specific product control in accordance with the Pressure Equipment Directive 97/23/EC (PED) Annex 1, Paragraph 4.3.
Testing equipment used:

- Tensile test machine Galdabini Quasar 250 serial No. VAOG – Procedure MAC-03 Rev. 1
- Impact test Cermac JB-W500 serial No. 04031 – Procedure MAC-04 Rev. 1
- Brinell Hardness test Wolpert Dia Testor 2RC serial No. 8900298/0001 – Procedure MAC-05 Rev. 1
- Rockwell Hardness test EMCO Test DJ10 Serial No. 255 - Procedure MAC-06 Rev. 1
- Chemical analysis spectrometer Baird DV4 serial No. P017 (ASTM E415 and E1086) – Procedure QC-07 Rev. 0

The product are manufactured in Italy.

Quality inspector representative Ispettore controllo qualità	Riccardo Scorsetti

This certificate is issued by a computerized system and it is valid with electronic signature. On the original certificate the trademark M.E.G.A. is printed in green color.

M.E.G.A. S.p.A. - Via Dalla Chiesa, 3 - 24020 Scanzorosciate (Bergamo) - Italy - VAT IT 00210060166 - Ph. +39 035 661280 / 661199 - Fax +39 035 665535 - E-mail inspection@mega-fittings.com

MILL TEST & INSPECTION CERTIFICATE

ACCORDING TO EN 10204 :2004 3.1

CUSTOMER : BRI-CHEM STEEL CORPORATION
CERT. NO : 100610 L/C NO :
ORDER NO : DATE : 03/05/2010
INVOICE NO : PAGE : 1 ORIGIN : TAIWAN

拍鏈鐵工股份有限公司
高雄縣仁武鄉烏林村仁心路 303 號
BOTH-WELL STEEL FITTINGS CO., LTD.
NO.303, JEN-HSIN ROAD JEN-WU HSIANG
KAOHSIUNG HSIEN, TAIWAN R.O.C.(81460)
TEL: 886-7-371-0497, 371-1536, 372-0260 FAX: 886-7-371-3864 , 371-3882
web site:http://www.bothwell.com.tw e-mail:bothwell@www.bothwell.com.tw or box@mail.bothwell.com.tw

An ISO 9001:2000 Registered Manufacturer

ITEM	BW HT.CD.	RAW MATERIAL HEAT NO.	DESCRIPTION	QUANTITY	SPECIFICATION FOR MATERIAL	SPECIFICATION FOR FITTING	INSPECTION SURFACE	INSPECTION DIM.
001	Y046	X1658	UNION 1/2" 3000# S/W	100 PC	ASTM A350 -07 ASME SA350 -E04 LF2-Class1	MSS SP-83 - 2006	GOOD	GOOD

ITEM	BW HT.CD.	CHEMICAL COMPOSITION (%) C	Si	Mn	P	S	Cu	Cr	Ni	Mo	V	Cb(Nb)	N	Al	Ti	Zr		CE	MATERIAL SUPPLIER
Min		-	0.150	0.600	-	-	-	-	-	-	-	-	-						
Max		0.300	0.300	1.350	0.035	0.040	0.400	0.300	0.400	0.120	0.080	0.020	-						
001	Y046	0.190	0.210	0.980	0.014	0.001	0.040	0.260	0.080	0.020	0.003	0.000	-						

ITEM	BW HT.CD.	MECHANICAL PROPERTIES T. S. (KSI)	Y. S. (KSI)	EL. (%)	R of A (%)	Hardness (HB)(AVG)	Charpy Impact -50 °F / -46 °C MIN./AVG. 16 / 20 (Joule) 1	2	3	AVG.	HEAT TREATMENT
Min		70.0	36.0	22.0	30.0	-					NORMALIZED + TEMPERED
Max		95.0	-	-	-	197					
001	Y046	78.9	60.5	35.2	80.0	146	167	206	192	188.333	900℃ A.C. + 620℃ A.C.

ADDITIONAL TEST/REMARKS
CONFORM TO NACE MR0175-2003/MR0103
STEEL MAKING PROCESS : ELECTRIC FURNACE

WE HEREBY CERTIFY, THAT THE MATERIAL DESCRIBED ABOVE HAS BEEN TESTED AND COMPLIES WITH THE TERMS OF THE ORDER CONTRACT.

Q.C. MANAGER
CHIN CHENG HSIEH

INSPECTOR
YUAN YAO CHANG

BRI-CHEM STEEL CORPORATION
MTR APPROVED
Kenton Deichant, PEng.
2010 Mar 5

BW-D0839 REV:1

柏龍鐵工股份有限公司
高雄縣仁武鄉烏林村仁心路 303 號
BOTH-WELL STEEL FITTINGS CO., LTD.
NO.303, JEN-HSIN ROAD JEN-WU HSIANG
KAOHSIUNG HSIEN, TAIWAN R.O.C.(81460)
TEL: 886-7-371-0497, 371-1536, 372-0260 FAX: 886-7-371-3864 , 371-3882
web site:http://www.bothwell.com.tw e-mail:bothwell@www.bothwell.com.tw or box@mail.bothwell.com.tw

An ISO 9001:2000 Registered Manufacturer

ISO 9001 BUREAU VERITAS Certification N° TW08091Q

ANAB ACCREDITED

MILL TEST & INSPECTION CERTIFICATE

ACCORDING TO EN10204/DIN50049/3.1.B

ORIGIN:TAIWAN

CUSTOMER:WEIFANG STEEL CANADA LTD. INVOICE NO:BW089706095 DATE: 12/10/08

CERT NO:83363-5 ORDER NO: AG0031-LF2 L/C NO: PAGE: 1

ITEM	BOTH WELL HT.CD.	RAW MATERIAL HEAT NO.	DESCRIPTION	QUANTITY	SPECIFICATION: ASTM A350 -04a ASME SA350 -E04 LF2-Class1 DIMENSION: MSS SP-83 - 2006 SURFACE: BY VISUAL...GOOD
045	Y025	83523	UNION 1/2" 3000# NPT	700 PC	
091	Y025	83523	UNION 1/2" 3000# S/W	259 PC	

CHEMICAL COMPOSITION (%)

ITEM	BOTH WELL HT.CD	C	Si	Mn	P	S	Cu	Cr	Ni	Mo	V	Cb(Nb)	N
Min		-	0.150	0.600	-	-	-	-	-	-	-	-	-
Max		0.300	0.300	1.350	0.035	0.040	0.400	0.300	0.400	0.120	0.080	0.020	-
045	Y025	0.210	0.210	0.970	0.013	0.007	0.010	0.040	0.020	0.000	0.000	0.010	-
091	Y025	0.210	0.210	0.970	0.013	0.007	0.010	0.040	0.020	0.000	0.000	0.010	-

MECHANICAL TEST

ITEM	BOTH WELL HT.CD	Tensile Strength (KSI)	Yield Strength (KSI)	Elon-Gation (%)	R of A (%)	Hardness (AVG.) (HB)
Min		70.0	36.0	22.0	30.0	-
Max		95.0	-	-	-	197
045	Y025	70.4	44.6	32.8	67.4	137
091	Y025	70.4	44.6	32.8	67.4	137

Remark:
CONFORM TO NACE MR0175-2003/MR0103
STEEL MAKING PROCESS : ELECTRIC FURNACE
HEAT TREATED(℃) NORMALIZED:900℃ TEMPERED:620℃
IMPACT VALUE(CHARPY) -50°F(-46.0℃)

HEAT NO.	HT.CD.	JOULE(J)			AVG.(J)
83605	Y024	182.0	189.0	188.0	186.3
83523	Y025	32.0	31.0	71.0	35.6

WE CERTIFY THE ABOVE MENTIONED FITTINGS HAVE BEEN MANUFACTURED AND TESTED IN ACCORDANCE WITH THE SPECIFICATIONS SHOWN

C.C. Hsieh
Q.C. MANAGER
CHIN CHENG HSIEH

C.C Huang
INSPECTOR
CHUN CHIEH HUANG

BW-D0839 REV:0

M.E.G.A.

INSPECTION CERTIFICATE
Certificato d'ispezione

REPORT N. / Rapporto N.	TC-018189-16-0002	Issued on / Revised on	22/11/2016	Customer / Cliente	ALLIED FITTING CANADA 172 TURBO DRIVE SHERWOOD PARK, ALBERTA T8H 2J6 - CANADA
Revision / Revisione	0	According to / In accordo a	EN 10204:2004 UNI EN 10204:2005	Type / Tipo	3.1

Job n. / Com. n. 18189 — Page n./ Pagina n. 22 of 30

Purchase order and project/Ordine e progetto
62216AMG

DESCRIPTION / DESCRIZIONE

Test / Prova	Item / Pos.	Qty / Q.tà	Customer code / Codice cliente	Material / Materiale	Heat / Colata	Product / Prodotto
BZBC	188	10		A/SA350-15 LF2 CL.1	13/77052	ELBOMEGALET S. 6000 NPT A/SA350 LF2 CL1 1.1/2x1.1/2-36
ZNSD	189	100		A/SA350-15 LF2 CL.1	14/79164	MEGALET Sch.STD A/SA350 LF2 CL1 2x3.1/2-6
YXCU	191	5		A/SA350-15 LF2 CL.1	15/75954	MEGALET Sch.STD A/SA350 LF2 CL1 3x6-8
ZNXD	191	20		A/SA350-15 LF2 CL.1	16/78363	MEGALET Sch.STD A/SA350 LF2 CL1 3x6-8
YXCA	192	10		A/SA350-15 LF2 CL.1	15/75954	MEGALET Sch.STD A/SA350 LF2 CL1 3x10-24

Test / Prova	HEAT TREATMENT DATA AND REFERENCES TO OTHER CERTIFICATES / Dettagli di trattamento termico e riferimenti ad altri certificati	RAW AND FORGING MATERIAL CERTIFICATES / Certificati di acciaieria/forga
BZBC	MATERIAL PRODUCED BY ELECT.FURNACE-NORMALIZED AT 900 C COOLED IN STILL AIR.	CERT.48359.RIVA*
ZNSD	MATERIAL PRODUCED BY ELECT.FURNACE-NORMALIZED AT 900 C COOLED IN STILL AIR.	CERT.FC-005611-16-0029.MEGA/CERT.2895.MEGA
YXCU	MATERIAL PRODUCED BY ELECT.FURNACE-NORMALIZED AT 930 C COOLED IN STILL AIR.	CERT.FC-005462-15-0005.MEGA/CERT.311 SORBIT*H=0.00017
ZNXD	MATERIAL PRODUCED BY ELECT.FURNACE-NORMALIZED AT 920 C COOLED IN STILL AIR.	CERT.FC-005611-16-0035.MEGA/CERT.579/L-1 TTR
YXCA	MATERIAL PRODUCED BY ELECT.FURNACE-NORMALIZED AT 930 C COOLED IN STILL AIR.	CERT.FC-005462-15-0003.MEGA/CERT.67 SORBIT

Test / Prova	Test loc. / Preso a	Orient. / Direz.	TENSILE TEST AT ROOM TEMPERATURE / Trazione a tempertura ambiente						CVN (KV) / Prova di resilienza					Bend [B] Flatt. [F] Piega Schiacc.	Hardness / Durezza
			Specimen / Provino			Yield strength Snerv. [Mpa] Min:	Tensile strength Rottura [Mpa] Min:	Elongation Allung. [%] Min:	Red. Of Area Contraz. [%] Min:	Dimens. Dimens. [mm]	T Temp. [°C]	Abs. Energy Energia ass. [J]	Shear A Area d [%]	Lat Exp Esp. Lat. [mm]		
			Shape Forma	A [mm²] Sezione	L [mm] Lungh.										
BZBC	T/2	LONG	Round	122.300	50.000	368.900	528.400	32.500	72.300	10X10X55	-46	66-80-73	--	--		HBW 157-159
ZNSD	T/2	LONG	Round	122.100	50.000	353.300	529.800	37.800	73.400	10X10X55	-46	101-96-105	55-50-55	1.18-1.06-1.30		HBW 154-157
YXCU	T/2	LONG	Round	30.400	25.000	382.800	549.300	33.900	75.600	10x10x55	-46	66-156-102	--	--		HBW 171-174
ZNXD	T/2	LONG	Round	30.800	25.000	344.200	526.300	34.700	77.100	10X10X55	-46	92-42-73	45-30-40	1.15-0.68-0.97		HBW 160-164
YXCA	T/2	LONG	Round	30.700	25.000	386.400	555.900	31.900	75.700	10x10x55	-46	99-68-72	--	--		HBW 179-181

Test / Prova	C [%]	Si [%]	Mn [%]	S [%]	P [%]	Cr [%]	Ni [%]	Mo [%]	Ti [%]	Cu [%]	V [%]	Al [%]	H [%]	Nb [%]	N [%]	Sn [%]	O [%]	B [%]	Fe [%]	Zr [%]	CE[A] [%]	PREN[B] [%]	X fact.[C] [%]	J fact.[D] [%]
BZBC	0.1500	0.2400	1.2000	0.0100	0.0150	0.1100	0.0700	0.0100	0.0260	0.1900	0.0620	0.0260		0.0020	0.0116	0.0100					0.4037			
ZNSD	0.2000	0.1900	0.9500	0.0090	0.0150	0.1500	0.0800	0.0100	0.0190	0.2000	0.0030	0.0290		0.0020	0.0087	0.0110	0.0020				0.4095			
YXCU	0.1950	0.2000	1.0300	0.0060	0.0150	0.1400	0.0600	0.0100	0.0150	0.1700	0.0010	0.0260		0.0010	0.0095	0.0110	0.0018	0.0003			0.4121			
ZNXD	0.1900	0.2100	1.0500	0.0060	0.0140	0.1400	0.0600	0.0100	0.0220	0.1600	0.0020	0.0200	0.0002	0.0030	0.0100	0.0090	0.0019				0.4100			
YXCA	0.1950	0.2000	1.0300	0.0060	0.0150	0.1400	0.0600	0.0100	0.0150	0.1700	0.0010	0.0260	0.0301	0.0010	0.0095	0.0110	0.0018				0.4121			

REMARKS / Note

1: MATERIAL ACCORDING TO NACE MR0175/ISO 15156-1-2-3 Ed.2009. MATERIAL ACCORDING TO NACE MR0103 Ed.2012.
2: MATERIAL ACCORDING TO ASME Sect. II Part. A 2015 Edition.
3: FULLY KILLED STEEL, FINE GRAIN TREATED.

A: CE = C + Mn/6 + (Cr+Mo+V)/5 + (Cu+Ni)/15 | B: PREN = Cr + 3.3Mo + 16N
C: X factor = (10P + 5Sb+4Sn+As)/100 - elements expressed in ppm
D: J factor = ((Mn + Si)(P + Sn)) x 10E4

Additional elements: 'ZNSD': Ca 0,0013 |

Quality inspector representative / Ispettore controllo qualità: Emmanuel Centemeri

This certificate is issued by a computerized system and it is valid with electronic signature. On the original certificate the trademark M.E.G.A. is printed in green color.

RAPPORTS D'INSPECTION & D'ESSAI

14/07/2017

Rapport d'inspection

Client: UNIES - FAB Projet: UF-2106

Sablage

SP-1	SP-2	SP-3	SP-5	SP-6	SP-7	SP-8	SP-10	SP-11
				X				

Profil: 2.1 MILS

Peinture

Primer: AMERCOAT 370 — 2.6 MILS

Temp Ambiante	Temp Morceau	Humidité	Point de rosée
23,4 °C	22 °C	57.5 %	14.8 °C

Moyenne: 3.2 MILS

AMERCOAT 370 — 2-3 MILS

Temp Ambiante	Temp Morceau	Humidité	Point de rosée
23.4 °C	22 °C	57.5	14.8

Moyenne: 4.2 MILS

_____ — MILS

Tem Ambiante	Temp Morceau	Humidité	Point de rosée

Moyenne:

Couleur: JAUNE PENTONE C.

Remarque: SERIE MK-49 à MK-100

N.B. Peinture selon devis

Rapport d'inspection

Client: CWIES - FAB Projet: UF-2106

Sablage

SP-1	SP-2	SP-3	SP-5	SP-6	SP-7	SP-8	SP-10	SP-11
				X				

Profil: 2.4 MILS

Peinture

Primer: AMERCOAT 370 4-6 MILS

Temp Ambiante	Temp Morceau	Humidité	Point de rosée
22.7°C		64%	15.6

Moyenne: 4.6 MILS

MILS

Temp Ambiante	Temp Morceau	Humidité	Point de rosée

Moyenne:

MILS

Tem Ambiante	Temp Morceau	Humidité	Point de rosée

Moyenne:

Couleur: PENTONE C

Remarque: SÉRIE MK-101 à MK-129

N.B. Peinture selon devis

DÉCLARATION DU CLIENT

F 6.2

DÉCLARATION DU CLIENT

Identification du client : Nom : Groupe Promec. Adresse : 1300 rue Saguenay/R-N 224 66 et. No téléphone : 819-797-7500

No contrat : 6515-C-270-007. No télécopieur : 819-797-7501

Lieu de l'installation : Nunavut, Meliadine Project.

Test Hydrostatique ☑
Test Pneumatique ☑ ☑ au Chantier ☐ en Atelier ☐ N/A

Responsabilité : du test hydrostatique ☑ CLIENT ☐ UNIES-FAB
Dimension et Type de tuyauterie : A333, acier Noir 3"-4"-6"-½"

Pression de soupape de sûreté ou de conception : N/A.

Température : conception : 10 A 15°
Type de fluide : Diesel

Méthode de soudage ☑ GMAW ☐ GTAW ☐ SMAW en atelier.

Types d'essais à effectuer

- ☐ Liquide Pénétrant
- ☑ Radiographie
- ☐ Particule magnétique
- ltrason
- ☐ Autres

Pourcentage : 5%.

Lequel : _____

Code à respecter pour la Fabrication

☐ B 31.1 ☑ B 31.3 ☐ B 31.5
☐ Autre Lequel : _____

Conception de la tuyauterie effectuée par : Ultragen. (w$p client Agricu-eaile.)
Je reconnais que les informations sur cette déclaration sont exactes.

Approbation du client : [signature] date : 24-05-2017.

Section Unies-Fab : projet : UF 2106
Responsable du projet : Brian Sage

REV. : 3

DÉCLARATION DE CONFORMITÉ DU CONSTRUCTEUR

UNIES-FAB (9127-8754 Québec Inc.)	DÉCLARATION DE CONFORMITÉ DU CONSTRUCTEUR DE

Contrat No. : UF -2135

1. Construit par UNIES-FAB (9127-8754 Québec Inc.), 2380 de la Métallurgie, Jonquière, Québec, G7X 9H2

2. Construit pour : GROUPE PROMEC 1300 RUE SAGUENAY ROUYN- NORANDA QU.BEC
Nom et adresse

3. Utilisateur : NUNAVUT MELIADINE PROJECT

4. No. C.R.N. : N/A

5. No. Enreg. Programme provincial de contrôle de la qualité et date d'expiration : QQP 468 25 FEV 2019

6. Code - ANSI/ASME B31.1 ☐ B31.3 ☒ B31.5 ☐ Autre ☐

Procédé (Air, Vapeur, etc.)	Pression maximale opération (S.V. permise)	Température de conception	Pression d'essais	Dia. tuyau	Médium d'essais	Essais non destructifs (E.N.D.)
DIESEL	N/A	10 À 15°C	N/A			5% RADIOGRPHIE

Identification

Lieu d'essais ☒ Chantier ☒ Atelier 5% RADIOGRAPHIE
Essais effectués par le client ☒ Oui ☐ Non

CERTIFICAT DE CONFORMITÉ

Nous certifions que les données de cette déclaration de conformité sont correctes et que les tuyauteries décrites dans cette déclaration sont conformes à la loi et aux règlements provinciaux régissant les chaudières
et appareils sous pression.

Date : 15/09/2017 UNIES-FAB (9127-8754 Québec Inc.)

Par : Brian Savard Gérant contrôle qualité

CERTIFICAT D'INSPECTION

Je, soussigné, employé par _____ ai inspecté la tuyauterie décrite dans cette déclaration
de conformité et, autant que je le sache, la construction de cette tuyauterie est conforme aux sections pertinentes du Code ANSI/ASME ainsi qu'à la loi et aux règlements provinciaux régissant les chaudières et appareils sous pression.

Date : _____ Date : _____

_____ _____
Inspecteur du propriétaire Inspecteur autorisé

FEUILLE DE ROUTE DE LA TUYAUTERIE

F 6.1

UNIES-FAB (9127-8754 Québec Inc.)	FEUILLE DE ROUTE DE TUYAUTERIE	
	CLIENT :GROUPE PROMEC	
	PROJET : NUNAVUT MELIADINE PROJECT	
CONTRAT # :UF2106 P.O.# : **61284**	DESSIN # :MK-1@MK-46	FEUILLE DE ROUTE#01

APPROBATION			PRÉPARÉ PAR :B. SAVARD	DATE :2017-06-23
UNIES-FAB	CLIENT	I.A.		
PAR :	PAR	PAR :		
DATE :	DATE :	DATE :		

DESCRIPTION DE LA TUYAUTERIE	Dia.	Sch.	Longueur appr.	Dia.	Sch.	Longueur appr.
Année de Construction : 2017	8"	40S	3 PIED			
Code Const. : B31.3	6"	40S	420 PIED			
Pression Conception : N/A	4"	40S	6 PIED			
Temp. Conception :10 À 15°C	3"	40S	1 PIED			
C.R.N.# : N/A						
Longueur Total Appr. 430 PIED						

LIEU D'INSTALLATION : NUNAVUT MELIADINE PROJECT

POLITIQUE D'UNIES-FAB (9127-8754 Québec Inc.) LORS DE LA FABRICATION, EN 8 POINTS

	DATE :	PAR ICQ
1 - Rédiger la déclaration du client	21-06-2017	BS
2 - Réception du matériel (Mill test)	12-06-2017	BS
3 - Coupe des matériaux	16-06-2017	BS
4 - Assemblage	21-06-2017	BS
5 - Soudage (poinçonnage)	26-06-2017	BS
6 - Inspection de la soudure (et essais non-destructif s'il y a lieu)	15-06-2017	BS
7 - Inspection dimensionnelle et identification	26-06-2017	BS
8 - Expédition	29-06-2017	BS

NOTES : L'I.C.Q. doit initialer et dater chaque étape qui est complétée.

Lorsqu'un point d'arrêt est indiqué par le contrôle de la qualité, aucun autre travail ne peut être entrepris avant que l'inspection n'est signifié son acceptation en initialant et datant la feuille de route.

Lorsqu'un point d'arrêt est indiqué par l'I.A., aucun travail ne peut être entrepris avant que l'inspecteur Autorisé n'est signifié son acceptation en initialant et datant la feuille de route.

REV. : 3

F 6.1

UNIES-FAB (9127-8754 Québec Inc.)	FEUILLE DE ROUTE DE TUYAUTERIE	
	CLIENT :GROUPE PROMEC	
	PROJET : NUNAVUT MELIADINE PROJECT	
CONTRAT # :UF2106 / P.O.# : **61284**	DESSIN # :	FEUILLE DE ROUTE#01

APPROBATION			PRÉPARÉ PAR :B. SAVARD	DATE :2017-06-15
UNIES-FAB	CLIENT	I.A.		
PAR :	PAR	PAR :		
DATE :	DATE :	DATE :		

DESCRIPTION DE LA TUYAUTERIE

Année de Construction : 2017
Code Const. : B31.3
Pression Conception : N/A
Temp. Conception :10 À 15°C
C.R.N.# : N/A
Longueur Total Appr. 792 PIED

Dia.	Sch.	Longueur appr.	Dia.	Sch.	Longueur appr.
6"	40S	2 PIED			
4"	40S	325 PIED			
3"	40S	465 PIED			

LIEU D'INSTALLATION : NUNAVUT MELIADINE PROJECT

POLITIQUE D'UNIES-FAB (9127-8754 Québec Inc.) LORS DE LA FABRICATION, EN 8 POINTS

	DATE :	PAR ICQ
1 - Rédiger la déclaration du client	21-06-2017	BS
2 - Réception du matériel (Mill test)	29-06-2017	BS
3 - Coupe des matériaux	07-07-2017	BS
4 - Assemblage	14-07-2017	BS
5 - Soudage (poinçonnage)	14-07-2017	BS
6 - Inspection de la soudure (et essais non-destructif s'il y a lieu)	10-07-2017	BS
7 - Inspection dimensionnelle et identification	14-07-2017	BS
8 - Expédition	20-07-2017	BS

NOTES : L'I.C.Q. doit initialer et dater chaque étape qui est complétée.

Lorsqu'un point d'arrêt est indiqué par le contrôle de la qualité, aucun autre travail ne peut être entrepris avant que l'inspection n'est signifié son acceptation en initialant et datant la feuille de route.

Lorsqu'un point d'arrêt est indiqué par l'I.A., aucun travail ne peut être entrepris avant que l'Inspecteur Autorisé n'est signifié son acceptation en initialant et datant la feuille de route.

REV. : 3

UNIES-FAB (9127-8754 Québec Inc.)	FEUILLE DE ROUTE DE TUYAUTERIE	
	CLIENT :GROUPE PROMEC	
	PROJET : NUNAVUT MELIADINE PROJECT	
CONTRAT # :UF2135 / P.O.# : **61284**	DESSIN # :	FEUILLE DE ROUTE#01

APPROBATION			PRÉPARÉ PAR :B. SAVARD	DATE :2017-08-14
UNIES-FAB	CLIENT		I.A.	
PAR :	PAR		PAR :	
DATE :	DATE :		DATE :	

DESCRIPTION DE LA TUYAUTERIE	Dia.	Sch.	Longueur appr.	Dia.	Sch.	Longueur appr.
Année de Construction : 2017	4"	40S	305			
Code Const. : B31.3	3"	40S	155			
Pression Conception : N/A						
Temp. Conception :10 À 15°C						
C.R.N.# : N/A						
Longueur Total Appr. 460 PIED						

LIEU D'INSTALLATION : NUNAVUT MELIADINE PROJECT

POLITIQUE D'UNIES-FAB (9127-8754 Québec Inc.) LORS DE LA FABRICATION, EN 8 POINTS

	DATE :	PAR ICQ
1 - Rédiger la déclaration du client	21-06-2017	BS
2 - Réception du matériel (Mill test)	12-06-2017	BS
3 - Coupe des matériaux	14-08-2017	BS
4 - Assemblage	31-08-2017	BS
5 - Soudage (poinçonnage)	05-09-2017	BS
6 - Inspection de la soudure (et essais non-destructif s'il y a lieu)	31-08-2017	BS
7 - Inspection dimensionnelle et identification	05-09-2017	BS
8 - Expédition	06-09-2017	BS

NOTES : L'I.C.Q. doit initialer et dater chaque étape qui est complétée.

Lorsqu'un point d'arrêt est indiqué par le contrôle de la qualité, aucun autre travail ne peut être entrepris avant que l'inspection n'est signifié son acceptation en initialant et datant la feuille de route.

Lorsqu'un point d'arrêt est indiqué par l'I.A., aucun travail ne peut être entrepris avant que l'Inspecteur Autorisé n'est signifié son acceptation en initialant et datant la feuille de route.

REV. : 3

AGNICO EAGLE

Vendor Document Status

1 ☐ Proceed to next submission and status.

2 ☐ Proceed with exceptions as noted to next submission and status.

3 ☐ Do not proceed.
Revise as noted and resubmit next submission and status.

4 ☑ Complete, no further submission required.

By: JEAN-FRANCOIS TREMBLAY Date: 2017-05-02

Review and authorization to fabricate are only for general conformance with the design concept of the Project as expressed in the Contract Documents. Sole responsibility for the accuracy and completeness of this document, including but not limited to dimensions and quantities, remains with the Supplier/Contractor. Agnico Eagle does not warrant the accuracy or completeness of any of the information contained herein, nor does Agnico Eagle authorize or approve any construction means, methods, techniques, sequences or any safety precautions or procedures.

Agnico Eagle No. 6515-C-270-007-141-TES-0048 R: Sub001

DOCUMENT FOR INFORMATION

Agnico-Eagle Mines Ltd.
Pump Alignment Report

ITR Number : AEM-ME-ITR-001
Contract no. : C22466T

SYSTEM :	**UNIT : 65POD41603A**
LOCATION : PUMPING STATION - PORTAL #1	**SPECIFICATION :**

Instrument : _____

Serial : _____

File number : _____

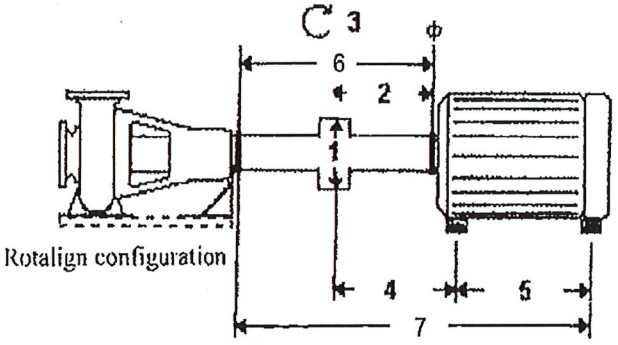

Rotalign configuration

1 Coupling Diameter _____
2 Sensor to Center _____
3 RPM _____
4 Center to First Foot _____
5 Distance Between Feet _____
6 Distance Between Prisim _____
7 Sensor to first foot _____

COUPLING RESULTS

Vertical Gap	Vertical Offset	Horizontal Gap	Horizontal Offset
(+) (-)	(+) (-)	(+) (-)	(+) (-)

FEET RESULTS

Vertical Front Foot	Vertical Rear Foot	Horizontal Front Foot	Horizontal Rear Foot

SOFT FOOT

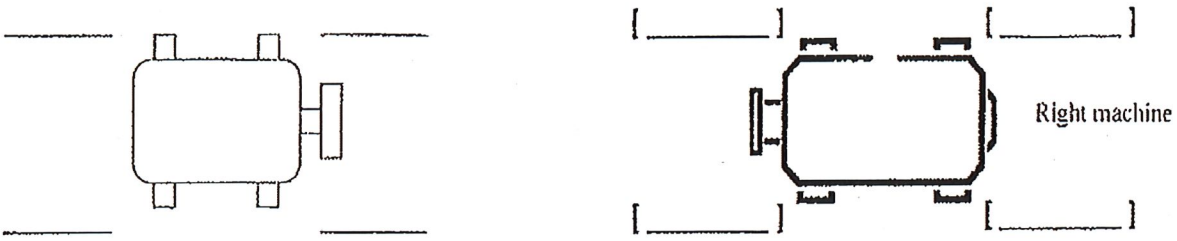

Comments :

PROMEC DESIGNATE - SIGNATURE | TITLE | DATE

CLIENT DESIGNATE - SIGNATURE | TITLE | DATE

FORMULAIRE	No doc: F174-33
RAPPORT D'ALIGNEMENT AU LASER - MOTEUR	Version : 01
	Révision : a

Équipement:

Numéro équipement: 65VSD41603A

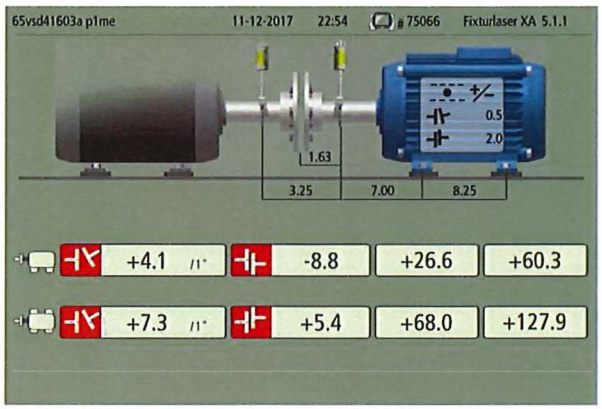

Relevé des lectures	
Verticale angulaire	+0.0041''
Verticale parallèle	+0.0073''
Horizontale angulaire	-0.0088''
Horizontale parallèle	+0.0054''

Désalignement maximale - angulaire :	.014''
Désalignement maximale en parallèle :	.087''

Note : Coupling Lovejoy

Fait par : Jérémie Lecompte Cie : Nuqsana Promec Date : 2017-11-12

Approuvé par (PROMEC) : Jérémie Lecompte Signature : Date : 23-11-2017

Approuvé par (CLIENT) : Signature : Date :

Préparé par : Teresa Punys	Approuvé par : Sophia-Lyse Capkun	Date : 03-09-2017

Ce document peut-être une version/révision périmée.
Si vous devez l'imprimer S.V.P. Référez-vous au site PROMEC officiel afin de déterminer si cette version/révision est celle en vigueur.
I:\Site-NOR\Processus Promec 9001-2015\174

FORMULAIRE	No doc: F174-33
RAPPORT D'ALIGNEMENT AU LASER - MOTEUR	Version : 01
	Révision : a

Équipement:

Numéro équipement: 65VSD41603B

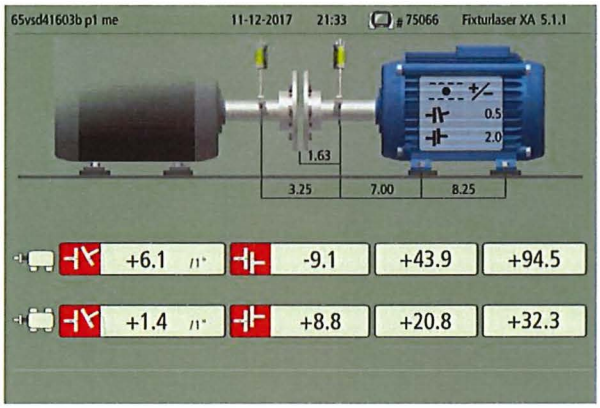

Relevé des lectures	
Verticale angulaire	+0.0061''
Verticale parallèle	+0.0014''
Horizontale angulaire	-0.0091''
Horizontale parallèle	+0.0088''

Désalignement maximale - angulaire :	.014''
Désalignement maximale en parallèle :	.087''

Note : Coupling Lovejoy

Fait par : Jérémie Lecompte Cie : Nuqsana Promec Date : 2017-11-12

Approuvé par (PROMEC) : Jérémie Lecompte Signature : Date : 2017-11-23

Approuvé par (CLIENT) : Signature : Date :

Préparé par : Teresa Punys	Approuvé par : Sophia-Lyse Capkun	Date : 03-09-2017

Ce document peut-être une version/révision périmée.
Si vous devez l'imprimer S.V.P. Référez-vous au site PROMEC officiel afin de déterminer si cette version/révision est celle en vigueur.
I:\Site-NOR\Processus Promec 9001-2015\174

FORMULAIRE	No doc: F174-33
RAPPORT D'ALIGNEMENT AU LASER - MOTEUR	Version : 01
	Révision : a

Équipement:

Numéro équipement: 65VSD41604A

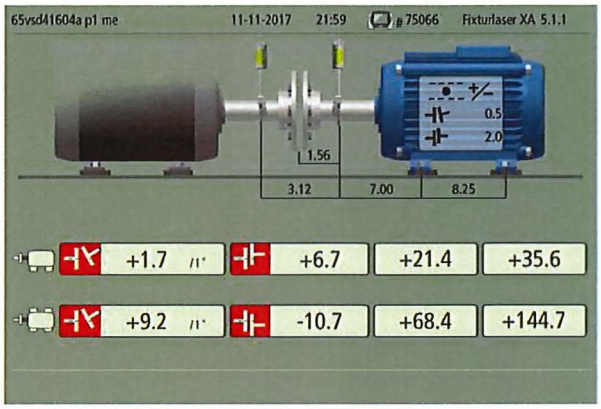

Relevé des lectures	
Verticale angulaire	+0.0017''
Verticale parallèle	+0.0092''
Horizontale angulaire	+0.0067''
Horizontale parallèle	-0.0107''

Désalignement maximale - angulaire :	.014''
Désalignement maximale en parallèle :	.087''

Note : Coupling Lovejoy

Fait par : Jérémie Lecompte Cie : Nuqsana Promec Date : 2017-11-11

Approuvé par (PROMEC) : Jérémie Lecompte Signature : Date : 23-11-2017

Approuvé par (CLIENT) : Signature : Date :

Préparé par : Teresa Punys	Approuvé par : Sophia-Lyse Capkun	Date : 03-09-2017

Ce document peut-être une version/révision périmée.
Si vous devez l'imprimer S.V.P. Référez-vous au site PROMEC officiel afin de déterminer si cette version/révision est celle en vigueur.
I:\Site-NOR\Processus Promec 9001-2015\174

FORMULAIRE	No doc: F174-33
RAPPORT D'ALIGNEMENT AU LASER - MOTEUR	Version : 01
	Révision : a

Équipement:

Numéro équipement: 65VSD41604B

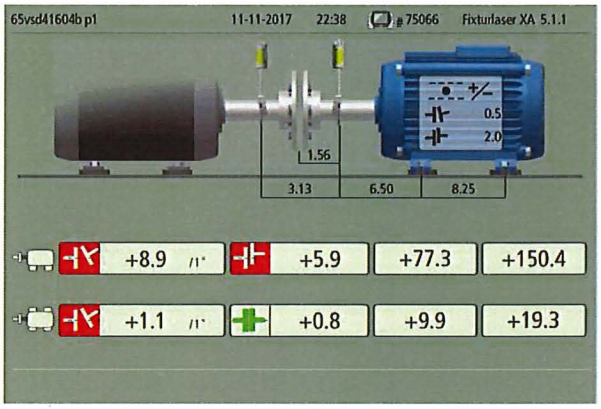

Relevé des lectures	
Verticale angulaire	+0.0089''
Verticale parallèle	+0.0011''
Horizontale angulaire	+0.0059''
Horizontale parallèle	+0.0008''

Désalignement maximale - angulaire :	.014''
Désalignement maximale en parallèle :	.087''

Note : Coupling Lovejoy

Fait par : Jérémie Lecompte Cie : Nuqsana Promec Date : 2017-11-11

Approuvé par (PROMEC) : Jérémie Lecompte Signature : Date : 23-11-2017

Approuvé par (CLIENT) : Signature : Date :

Préparé par : Teresa Punys	Approuvé par : Sophia-Lyse Capkun	Date : 03-09-2017

Ce document peut-être une version/révision périmée.
Si vous devez l'imprimer S.V.P. Référez-vous au site PROMEC officiel afin de déterminer si cette version/révision est celle en vigueur.
I:\Site-NOR\Processus Promec 9001-2015\174

RAPPORT INSPECTION DE PEINTURE F-90 / PAINT INSPECTION REPORT F-90

CONTRÔLE DE QUALITÉ / QUALITY CONTRÔLE

Projet / *Project #*: 5389-02 Client / *Customer* : Promec

Description : Pipe Support – HSS 10"

Référence spécification de peinture/ *Paint specifications ref* : AE Méliadine

Inspection visuel du sablage/ *Visual Sandblast inspection* SP 6 (TYPE / INITIAL)

Instruction spécial/ *Special instructions* : N/A

Testex PRESS-O-FILM™ HT X-Coarse
www.testextape.com
5389B 2.5 MP
1.5 to 4.5 mil
38 to 115 µm
Made in USA
15-05-2017

Quantité sable utilisé/ *Quantity sand used:* 10 poches

Profile de sablage/ *Sandblast profil* :

#1 Quantité d'apprêt utilisée/ *Quantity primer used*: 5 gal # de lot d'appret primer/ *Lot # of primer:* TE 6874 UH Diluant/ *Thinner* :

Temps de séchage/ *Drying time* 2 hrs Température pièce/ *Room Temperature* 23.4°C Taux d'humidité/ *Humidity Level* 20.7 %

#2 Quantité de peinture utilisée/ *Quantity paint used*: 5 gal # de lot de peinture/ *Lot # of paint:* SM2383 UH Diluant/ *Thinner* : GTA 415

Temps de séchage/ *Drying time* 10 hrs Température pièce/ *Room Temperature* 23 °C Taux d'humidité/ *Humidity Level* 24 %

#3 Quantité de peinture utilisée/ *Quantity paint used*: 5 gal # de lot de peinture/ *Lot # of paint:* SH9274 UH Diluant/ *Thinner* : GTA 056

Temps de séchage/ *Drying time* 10 hrs Température pièce/ *Room Temperature* 25.4°C Taux d'humidité/ *Humidity Level* 22.8 %

No de pièces/ *Part Number :*	Esp Moyenne/ *Dft Average*	Vérifié par/ *Verified by:* Peintre/ *Painter*	Control Qualité/ *Quality control*	DATE
(1) 5389-01	14.3	[signature]	[signature]	2017/05/14
(2) 5389-01	15.1			
(3) 5389-01	15.8			
(4) 5389-01	14.8			
(5) 5389-01	14.0			
(6) 5389-01	15.9			
(7) 5389-01	15.2			
(8) 5389-01	15.8			
(9) 5389-01	14.6			
(10) 5389-01	14.8			
(11) 5389-01	16.4			
(12) 5389-01	16.1	[signature]		

Peintre / Painter: [signature]

Peinture rencontre les spécifications / *Paint meets specs* OUI / *YES* NON / *NO*

Contrôleur de qualité / *Quality Controller* : [signature] Signature 2017/05/16 Date

F-90 Rapport inspection de peinture / Paint Inspection Report
Reviseur : J.P. Leclerc
2017-03-27

No de pièces/ Part Number :	Esp Moyenne/ Dft Average	Vérifié par/ Verified by:		DATE
		Peintre/ Painter	Control Qualité/ Quality control	
(13) 5389-01	14.8			2017/05/
(14) 5389-01	16.1			
(15) 5389-01	17.0			
(16) 5389-01	15.2			
(17) 5389-01	15.8			
(18) 5389-01	16.3			
(19) 5389-01	17.1			
(20) 5389-01	15.3			
(21) 5389-01	14.6			
(22) 5389-01	14.7			
(23) 5389-01	14.8			
(24) 5389-01	15.2			
(25) 5389-01	15.8			
(26) 5389-01	14.9			
(27) 5389-01	16.2			
(28) 5389-01	15.3			
(29) 5389-01	16.0			
(30) 5389-01	17.2			
(31) 5389-01	16.8			
(32) 5389-01	14.9			
(33) 5389-01	16.2			
(34) 5389-01	15.8			
(35) 5389-01	14.2			
(36) 5389-01	15.8			
(37) 5389-01	16.2			
(38) 5389-01	16.8			
(39) 5389-01	15.8			
(40) 5389-01	14.8			
(41) 5389-01	15.2			
(42) 5389-01	14.9			
(43) 5389-01	16.2			
(44) 5389-01	14.8			
(45) 5389-01	16.6			
(46) 5389-01	17.2			
(47) 5389-01	14.8			
(48) 5389-01	15.6			

RAPPORT INSPECTION DE PEINTURE F-90 / PAINT INSPECTION REPORT F-90

CONTRÔLE DE QUALITÉ / QUALITY CONTRÔLE

Projet / *Project #*: 5389-02 Client / *Customer* : Promec

Description : Pipe Support – HSS 10"

Référence spécification de peinture/ *Paint specifications ref* : AE Méliadine

Inspection visuel du sablage/ *Visual Sandblast inspection* Sp 6 (TYPE) OB (INITIAL)

Instruction spécial/ *Special instructions* : N/A

Quantité sable utilisé/ *Quantity sand used:* 10 poches

Profile de sablage/ *Sandblast profil* : Testex PRESS-O-FILM™ HT X-Coarse 1.5 to 4.5 mil 38 to 115 µm Made in USA 115 µm 45 mil 5389B 2.6 MP 16-05-2017

#1

Quantité d'apprêt utilisée/ *Quantity primer used:* 5 gal # de lot d'appret primer/ *Lot # of primer:* JE6874UH Diluant/ *Thinner :* GTA 415

Temps de séchage/ *Drying time* 2 hrs Température pièce/ *Room Temperature* 22.8 Taux d'humidité/ *Humidity Level* 36.4 %

#2

Quantité de peinture utilisée/ *Quantity paint used:* 5 gal # de lot de peinture/ *Lot # of paint:* SM2383UH Diluant/ *Thinner :* GTA 415

Temps de séchage/ *Drying time* 8 hrs Température pièce/ *Room Temperature* 25.6 Taux d'humidité/ *Humidity Level* 33.8 %

#3

Quantité de peinture utilisée/ *Quantity paint used:* 5 gal # de lot de peinture/ *Lot # of paint:* SH9274UH Diluant/ *Thinner :* GTA 056

Temps de séchage/ *Drying time* 5 hrs Température pièce/ *Room Temperature* 21.3 Taux d'humidité/ *Humidity Level* 31.6 %

No de pièces/ *Part Number :*	Esp Moyenne/ *Dft Average*	Vérifié par/ *Verified by:*		DATE
		Peintre/ *Painter*	Control Qualité/ *Quality control*	
(49) 5389-01	16.8	MA	SB	2017/05/16
(50) 5389-01	16.9			
(51) 5389-01	15.7			
(52) 5389-01	16.2			
(53) 5389-01	16.5			
(54) 5389-01	16.3			
(55) 5389-01	16.9			
(56) 5389-01	17.2			
(57) 5389-01	15.8			
(58) 5389-01	16.2			
(59) 5389-01	16.7			
(60) 5389-01	16.9	MA	PD	
(61) 5389-01	16.3			2017/05/16

Peintre / Painter: Marc

Peinture rencontre les spécifications / *Paint meets specs* OUI / *YES* NON / *NO*

Contrôleur de qualité / *Quality Controller* : 2017/05/16

Signature Date

No de pièces/ *Part Number :*	Esp Moyenne/ *Dft Average*	Vérifié par/ *Verified by:*		DATE
		Peintre/ *Painter*	Control Qualité/ *Quality control*	
(62) 5389-01	15.9			2017/05/16
(63) 5389-01	16.2			
(64) 5389-01	15.9			
(65) 5389-01	15.9			
(66) 5389-01	16.1			
(67) 5389-01	16.9			
(68) 5389-01	16.9			
(69) 5389-01	17.2			
(70) 5389-01	17.1			
(71) 5389-01	17.00			
(72) 5389-01	16.5			
(73) 5389-01	16.3			
(74) 5389-01	16.9			
(75) 5389-01	16.8			
(76) 5389-01	16.7			
(77) 5389-01	16.3			
(78) 5389-01	17.7			
(79) 5389-01	14.9			
(80) 5389-01	15.8			
(81) 5389-01	16.2			
(82) 5389-01	16.04			
(83) 5389-01	16.3			
(84) 5389-01	16.8			
(85) 5389-01	17.3			
(86) 5389-01	16.7			
(87) 5389-01	16.3			
(88) 5389-01	16.9			
(89) 5389-01	16.6			
(90) 5389-01	16.2			
(91) 5389-01	15.8			

RAPPORT INSPECTION DE PEINTURE F-90 / PAINT INSPECTION REPORT F-90

CONTRÔLE DE QUALITÉ / QUALITY CONTRÔLE

Projet / *Project #*: 5389-02 Client / *Customer* : Promec

Description : Pipe Support – HSS 10"

Référence spécification de peinture/ *Paint specifications ref* : AE Méliadine

Inspection visuel du sablage/ *Visual Sandblast inspection* : SP6 (TYPE) CB (INITIAL)

Instruction spécial/ *Special instructions* : N/A

Testex PRESS-O-FILM™ HT www.testextape.com 5389B 2.2 MP X-Coarse 1.5 to 4.5 mil 38 to 115 µm Made in USA 18-05-2017

Quantité sable utilisé/ *Quantity sand used:* 10 poches

Profile de sablage/ *Sandblast profil* :

#1

Quantité d'apprêt utilisée/ *Quantity primer used:* 5 gal

de lot d'appret primer/ *Lot # of primer:* TE68740H

Diluant/ *Thinner* : 6TA 415

Temps de séchage/ *Drying time* 3hrs

Température pièce/ *Room Temperature* 22°C

Taux d'humidité/ *Humidity Level* 28%

#2

Quantité de peinture utilisée/ *Quantity paint used:* 5 gal

de lot de peinture/ *Lot # of paint:* SM2383 CH

Diluant/ *Thinner* : 6TA 415

Temps de séchage/ *Drying time* 8hrs

Température pièce/ *Room Temperature* 22.8°C

Taux d'humidité/ *Humidity Level* 28%

#3

Quantité de peinture utilisée/ *Quantity paint used:* 5 gal

de lot de peinture/ *Lot # of paint:* S#92 7414

Diluant/ *Thinner* : 6TA 056

Temps de séchage/ *Drying time* 10hrs

Température pièce/ *Room Temperature* 26.7°C

Taux d'humidité/ *Humidity Level* 27.8%

No de pièces/ *Part Number :*	**Esp Moyenne/ *Dft Average***	**Vérifié par/ *Verified by:***		**DATE**
		Peintre/ *Painter*	Control Qualité/ *Quality control*	
(97) 5389-01	18.2	MJ	SP	2017/05/28
(98) 5389-01	15.9			
(99) 5389-01	16.1			
(100) 5389-01	14.7			
(101) 5389-01	14.9			
(102) 5389-01	18.2			
(103) 5389-01	17.1			
(104) 5389-01	14.9			
(105) 5389-01	15.2			
(106) 5389-01	16.2			
(107) 5389-01	16.9		SP	
(108) 5389-01	14.8	MJ		2017/05/28

Peintre / Painter: MJ

Peinture rencontre les spécifications / *Paint meets specs* OUI / *YES* NON / *NO*

Contrôleur de qualité / *Quality Controller* : SP (Signature) 2017/05/28 (Date)

No de pièces/ *Part Number :*	Esp Moyenne/ *Dft Average*	Vérifié par/ *Verified by:*		DATE
		Peintre/ *Painter*	Control Qualité/ *Quality control*	
(109) 5389-01	17.3			2017/05/08
(110) 5389-01	16.9			
(111) 5389-01	17.8			
(112) 5389-01	15.9			
(113) 5389-01	16.2			
(114) 5389-01	16.5			
(115) 5389-01	15.8			
(116) 5389-01	16.3			
(117) 5389-01	14.8			
(118) 5389-01	16.2			
(119) 5389-01	15.8			
(120) 5389-01	15.6			
(121) 5389-01	15.8			
(122) 5389-01	15.7			
(123) 5389-01	16.2			
(124) 5389-01	17.0			
(125) 5389-01	16.8			
(126) 5389-01	17.2			
(127) 5389-01	16.9			
(128) 5389-01	15.7			
(129) 5389-01	15.8			
(130) 5389-01	16.1			
(131) 5389-01	16.1			
(132) 5389-01	16.2			
(133) 5389-01	14.8			
(134) 5389-01	14.7			
(135) 5389-01	16.0			
(136) 5389-01	14.9			
(137) 5389-01	16.2			
(138) 5389-01	14.7			
				2017/05/08

RAPPORT INSPECTION DE PEINTURE F-90 / PAINT INSPECTION REPORT F-90

CONTRÔLE DE QUALITÉ / QUALITY CONTRÔLE

Projet / *Project* #: 5389-02 Client / *Customer* : Promec

Description : Pipe Support – HSS 10"

Référence spécification de peinture/ *Paint specifications ref* : AE Méliadine

Inspection visuel du sablage/ *Visual Sandblast inspection* SP6 TYPE CB INITIAL

Instruction spécial/ *Special instructions* : N/A

Testex PRESS-O-FILM™ HT www.testextape.com X-Coarse 1.5 to 4.5 mil 38 to 115 µm Made in USA

5389B 2.8 MP

Quantité sable utilisé/ *Quantity sand used:* 10 poches

Profile de sablage/ *Sandblast profil* :

#1	Quantité d'apprêt utilisée/ *Quantity primer used:* 5 gal	# de lot d'appret primer/ *Lot # of primer:* TE687404	Diluant/ *Thinner* : GTA 415		
	Temps de séchage/ *Drying time* 2 hrs	Température pièce/ *Room Temperature* 19.8°C	Taux d'humidité/ *Humidity Level* 32%		
#2	Quantité de peinture utilisée/ *Quantity paint used:* 5 gal	# de lot de peinture/ *Lot # of paint:* SM2383UH	Diluant/ *Thinner* : GTA 415		
	Temps de séchage/ *Drying time* 10 hrs	Température pièce/ *Room Temperature* 23°C	Taux d'humidité/ *Humidity Level* 38%		
#3	Quantité de peinture utilisée/ *Quantity paint used:* 5 gal.	# de lot de peinture/ *Lot # of paint:* SA927404	Diluant/ *Thinner* : GTA 856		
	Temps de séchage/ *Drying time* 6 hrs	Température pièce/ *Room Temperature* 21.6°C	Taux d'humidité/ *Humidity Level* 27%.		

No de pièces/ *Part Number :*	**Esp Moyenne/ *Dft Average***	**Vérifié par/ *Verified by:***		**DATE**
		Peintre/ *Painter*	Control Qualité/ *Quality control*	
(139) 5389-01	14.6	MP	SP	2017/05/23
(140) 5389-01	14.8			
(141) 5389-01	16.1			
(142) 5389-01	14.9			
(143) 5389-01	15.6			
(144) 5389-01	14.8			
(145) 5389-01	14.7			
(146) 5389-01	15.2			
(147) 5389-01	16.3			
(148) 5389-01	16.7			
(149) 5389-01	15.9	MP	SP	2017/05/23
(150) 5389-01	16.2			

Peintre / Painter: MP

Peinture rencontre les spécifications / *Paint meets specs* OUI / *YES* NON / *NO*

Contrôleur de qualité / *Quality Controller* : SP Signature 2017/05/25 Date

No de pièces/ *Part Number :*	Esp Moyenne/ *Dft Average*	Vérifié par/ *Verified by:*		DATE
		Peintre/ *Painter*	Control Qualité/ *Quality control*	
(151) 5389-01	18.4			2017/05/25
(152) 5389-01	17.6			
(153) 5389-01	17.3			
(154) 5389-01	16.8			
(155) 5389-01	16.9			
(156) 5389-01	14.6			
(157) 5389-01	15.2			
(158) 5389-01	17.1			
(159) 5389-01	14.9			
(160) 5389-01	15.8			
(161) 5389-01	16.7			
(162) 5389-01	16.8			
(163) 5389-01	17.8			
(164) 5389-01	16.1			
(165) 5389-01	15.1			
(166) 5389-01	16.2			
(167) 5389-01	15.8			
(168) 5389-01	15.9			
(169) 5389-01	16.2			
(170) 5389-01	16.9			
(171) 5389-01	16.8			
(172) 5389-01	14.3			
(173) 5389-01	14.3			
(174) 5389-01	14.8			
(175) 5389-01	15.1			
(176) 5389-01	14.7			
(177) 5389-01	14.6			
(178) 5389-01	15.2			
(179) 5389-01	14.3			
(180) 5389-01	15.3.			

AJP

RAPPORT INSPECTION DE PEINTURE F-90 / PAINT INSPECTION REPORT F-90

CONTRÔLE DE QUALITÉ / QUALITY CONTRÔLE

Projet / *Project #*: 5389-02 Client / *Customer* : Promec

Description : Pipe Support – HSS 10"

Référence spécification de peinture/ *Paint specifications ref* : AE Méliadine

Inspection visuel du sablage/ *Visual Sandblast inspection* SP6 (TYPE) CB (INITIAL)

Instruction spécial/ *Special Instructions* : N/A

Testex PRESS-O-FILM™ HT
www.testextape.com
5389B 2,9 M.P X-Coarse
1.5 to 4.5 mil
38 to 115 µm
Made in USA
115 µm
23-05-2017

Quantité sable utilisé/ *Quantity sand used:* 10 poches

Profile de sablage/ *Sandblast profil* :

#1

Quantité d'apprêt utilisée/ *Quantity primer used:* 5 gal

de lot d'appret primer/ *Lot # of primer:* TE6874UH

Diluant/ *Thinner* : GTA 415

Temps de séchage/ *Drying time* 3 hrs

Température pièce/ *Room Temperature* 22.8°C

Taux d'humidité/ *Humidity Level* 28%

#2

Quantité de peinture utilisée/ *Quantity paint used:* 5 gal

de lot de peinture/ *Lot # of paint:* SM2383UH

Diluant/ *Thinner* : GTA 415

Temps de séchage/ *Drying time* 10 hrs

Température pièce/ *Room Temperature* 27.2°C

Taux d'humidité/ *Humidity Level* 22%

#3

Quantité de peinture utilisée/ *Quantity paint used:* 5 gal

de lot de peinture/ *Lot # of paint:* SH9274UH

Diluant/ *Thinner* : GTA 056.

Temps de séchage/ *Drying time* 6 hrs

Température pièce/ *Room Temperature* 19.8°C

Taux d'humidité/ *Humidity Level* 33%

No de pièces/ *Part Number :*	Esp Moyenne/ *Dft Average*	Vérifié par/ *Verified by:* Peintre/ *Painter*	Control Qualité/ *Quality control*	DATE
(181) 5389-01	16.2	[signature]	[signature]	2017/05/25
(182) 5389-01	16.6			
(183) 5389-01	17.1			
(184) 5389-01	16.8			
(185) 5389-01	16.9			
(186) 5389-01	17.0			
(187) 5389-01	16.9			
(188) 5389-01	16.9			
(189) 5389-01	[illegible]			

No de pièces/ *Part Number :*	Esp Moyenne/ *Dft Average*	Vérifié par/ *Verified by:*		DATE
		Peintre/ *Painter*	Control Qualité/ *Quality control*	
(193) 5389-01	16.3			2017/05/23
(194) 5389-01	16.9			
(195) 5389-01	17.2			
(196) 5389-01	17.0			
(197) 5389-01	16.8			
(198) 5389-01	16.4			
(199) 5389-01	16.8			
(200) 5389-01	17.0			
(201) 5389-01	16.6			
(202) 5389-01	16.8			
(203) 5389-01	17.8			
(204) 5389-01	18.7			
(205) 5389-01	17.6			
(206) 5389-01	16.9			
(207) 5389-01	17.3			
(208) 5389-01	16.8			
(209) 5389-01	17.8			
(210) 5389-01	15.6			
(211) 5389-01	15.4			
(212) 5389-01	15.8			
(213) 5389-01	16.2			
(214) 5389-01	15.9			
(215) 5389-01	16.3			
(216) 5389-01	15.2			
(217) 5389-01	16.4			
(218) 5389-01	15.8			
(219) 5389-01	16.2			
(220) 5389-01	16.4			
(221) 5389-01	15.9			
(222) 5389-01	15.4			
				2017/05/23

RAPPORT INSPECTION DE PEINTURE F-90 / PAINT INSPECTION REPORT F-90

CONTRÔLE DE QUALITÉ / QUALITY CONTRÔLE

Projet / *Project #:* 5389-02 Client / *Customer* : Promec

Description : Pipe Support – HSS 10"

Référence spécification de peinture/ *Paint specifications ref* : AE Mélladine

Inspection visuel du sablage/ *Visual Sandblast Inspection* Sp6 (TYPE) CB (INITIAL)

Instruction spécial/ *Special instructions* : N/A

Quantité sable utilisé/ *Quantity sand used*: 6 poches

Profile de sablage/ *Sandblast profil* : Testex PRESS-O-FILM™ HT X-Coarse 1.5 to 4.5 mil 38 to 115 µm Made in USA — 5389 28 MP — 20-04-2017

#1 Quantité d'apprêt utilisée/ *Quantity primer used*: 3 gal # de lot d'appret primer/ *Lot # of primer:* TE687404 GTA 415 Diluant/ *Thinner :*

Temps de séchage/ *Drying time* 2 hrs Température pièce/ *Room Temperature* 23.8 °C Taux d'humidité/ *Humidity Level* 22%

#2 Quantité de peinture utilisée/ *Quantity paint used*: 3 gal # de lot de peinture/ *Lot # of paint:* SM 2383 UH Diluant/ *Thinner :* GTA 415

Temps de séchage/ *Drying time* 9 hrs Température pièce/ *Room Temperature* 25.6 °C Taux d'humidité/ *Humidity Level* 21%

#3 Quantité de peinture utilisée/ *Quantity paint used*: 3 gal # de lot de peinture/ *Lot # of paint:* SM 9274 UH Diluant/ *Thinner :* GTA 056

Temps de séchage/ *Drying time* 6 hrs Température pièce/ *Room Temperature* 24.8 °C Taux d'humidité/ *Humidity Level* 32%

No de pièces/ *Part Number :*	**Esp Moyenne/ *Dft Average***	**Vérifié par/ *Verified by:***		**DATE**
		Peintre/ *Painter*	Control Qualité/ *Quality control*	
(223) 5389-01	16.4	MA	ED	2017/05/26
(224) 5389-01	15.8			
(225) 5389-01	16.2			
(226) 5389-01	15.6			
(227) 5389-01	15.8			
(228) 5389-01	15.6			
(229) 5389-01	15.4			
(230) 5389-01	16.2			
(231) 5389-01	15.8			
(232) 5389-01	16.8			
(233) 5389-01	15.4			
(234) 5389-01	16.2			
(235) 5389-01	15.6	MA	ED	2017/05/26

Peintre / Painter: MA

Peinture rencontre les spécifications / *Paint meets specs* OUI / *YES* NON / *NO*

Contrôleur de qualité / *Quality Controller* : 2017/05/26

Signature Date

No de pièces/ *Part Number :*	Esp Moyenne/ *Dft Average*	Vérifié par/ *Verified by:*		DATE
		Peintre/ *Painter*	Control Qualité/ *Quality control*	
(236) 5389-01	15.4			2017/05/28
(237) 5389-01	15.8			
(238) 5389-01	15.6			
(239) 5389-01	16.2			
(240) 5389-01	16.1			
5389 - 06A	14.9			
5389 - 06A	14.2			
5389 - 06A	16.1			
5389 - 06A.	14.8			2017/05/28

RAPPORT INSPECTION DE PEINTURE F-90 / PAINT INSPECTION REPORT F-90

CONTRÔLE DE QUALITÉ / QUALITY CONTRÔLE

Projet / *Project #*: 5389-02 Client / *Customer* : Promec

Description : Pipe Support – HSS 10" avec U-Bolt

Référence spécification de peinture/ *Paint specifications ref* : AE Méliadine

Inspection visuel du sablage/ *Visual Sandblast inspection* : SP6 (TYPE) CB (INITIAL)

Instruction spécial/ *Special instructions* : N/A

Testex PRESS-O-FILM™ HT www.testextape.com — 2.8 — X-Coarse 1.5 to 4.5 mil 38 to 115 µm Made in USA

Quantité sable utilisé/ *Quantity sand used*: 11 poches

Profile de sablage/ *Sandblast profil* : 30-05-2017

#1

Quantité d'apprêt utilisée/ *Quantity primer used*: 6 gal # de lot d'appret primer/ *Lot # of primer*: TE6874UH Diluant/ *Thinner* : GTA 415

Temps de séchage/ *Drying time* 8 hrs Température pièce/ *Room Temperature* 21.7 °C Taux d'humidité/ *Humidity Level* 27%

#2

Quantité de peinture utilisée/ *Quantity paint used*: 6 gal # de lot de peinture/ *Lot # of paint*: TE5015UH Diluant/ *Thinner* : GTA 415

Temps de séchage/ *Drying time* 12 hrs Température pièce/ *Room Temperature* 23.6 °C Taux d'humidité/ *Humidity Level* 31%

#3

Quantité de peinture utilisée/ *Quantity paint used*: 6 gal. # de lot de peinture/ *Lot # of paint*: GH9274UH Diluant/ *Thinner* : GTA 056

Temps de séchage/ *Drying time* 8 hrs Température pièce/ *Room Temperature* 20.8°C Taux d'humidité/ *Humidity Level* 26%.

No de pièces/ *Part Number* :	Esp Moyenne/ *Dft Average*	Vérifié par/ *Verified by:* Peintre/ *Painter*	Vérifié par/ *Verified by:* Control Qualité/ *Quality control*	DATE
(1) 5389-01A	19.9			2017/05/30
(2) 5389-01A	18.8			
(3) 5389-01A	17.6			
(4) 5389-01A	18.2			
(5) 5389-01A	16.9			
(6) 5389-01A	17.2			
(7) 5389-01A	17.4			
(8) 5389-01A	16.8			
(9) 5389-01A	18.0			
(10) 5389-01A	18.2			
(11) 5389-01A	18.5			
(12) 5389-01A	18.2			
(13) 5389-01A	18.8			2017/05/30

Peintre / Painter:

Peinture rencontre les spécifications / *Paint meets specs* OUI / *YES* NON / *NO*

Contrôleur de qualité / *Quality Controller* : 2017/06/01

Signature Date

No de pièces/ *Part Number :*	Esp Moyenne/ *Dft Average*	Vérifié par/ *Verified by:* Peintre/ *Painter*	Control Qualité/ *Quality control*	DATE
(14) 5389-01A	17.9			2017/05/30
(15) 5389-01A	17.8			
(16) 5389-01A	17.5			
(17) 5389-01A	16.9			
(18) 5389-01A	17.2			
(19) 5389-01A	16.9			
(20) 5389-01A	17.0			
(21) 5389-01A	17.2			
(22) 5389-01A	16.8			
(23) 5389-01A	16.9			
(24) 5389-01A	16.4			
(25) 5389-01A	16.9			
(26) 5389-01A	17.2			
(27) 5389-01A	18.4			
(28) 5389-01A	17.2			
(29) 5389-01A	16.4			
(30) 5389-01A	18.3			
(31) 5389-01A	16.9			
(32) 5389-01A	16.8			
(33) 5389-01A	17.9			
(34) 5389-01A	16.8			
(35) 5389-01A	17.9			
(36) 5389-01A	17.8			
(37) 5389-01A	17.2			
(38) 5389-01A	17.0			
(39) 5389-01A	16.9			
(40) 5389-01A	16.8			
(41) 5389-01A	16.6			
(42) 5389-01A	17.8			
(43) 5389-01A	16.9			
(44) 5389-01A	17.8			
(45) 5389-01A	16.9			
(46) 5389-01A	16.8			
(47) 5389-01A	16.4			
(48) 5389-01A	16.2			
(49) 5389-01A	16.9			
(50) 5389-01A	17.2			
(51) 5389-01A	17.9			
(52) 5389-01A	17.8			2017/05/30

(53) 5389-01A	18.2			2017/05/30
(54) 5389-01A	17.9			
(55) 5389-01A	17.1			

RAPPORT INSPECTION DE PEINTURE F-90 / PAINT INSPECTION REPORT F-90

CONTRÔLE DE QUALITÉ / QUALITY CONTRÔLE

Projet / *Project #:* 5389-02 Client / *Customer :* Promec

Description : Pipe Support – ~~MES-104~~ Flag.

Référence spécification de peinture/ *Paint specifications ref :* AE Méliadine

Inspection visuel du sablage/ *Visual Sandblast inspection* SP6 (TYPE) CB (INITIAL)

Instruction spécial/ *Special instructions :* N/A

Testex PRESS-O-FILM™ HT www.testextape.com 53892 2.7 MP X-Coarse 1.5 to 4.5 mil 38 to 115 µm Made in USA 115 µm 20 C 38 (C+XC)/2 64 XC 0.8 1.5 2.5 4.5 mil 31-05-2017

Quantité sable utilisé/ *Quantity sand used:* 2 poches

Profile de sablage/ *Sandblast profil :*

#1

Quantité d'apprêt utilisée/ *Quantity primer used:* 2 gal

de lot d'appret primer/ *Lot # of primer:* TE6874UH

Diluant/ *Thinner :* GTA 415

Temps de séchage/ *Drying time* 2 hrs

Température pièce/ *Room Temperature* 24.7°C

Taux d'humidité/ *Humidity Level* 54.6 %

#2

Quantité de peinture utilisée/ *Quantity paint used:* 2 gal

de lot de peinture/ *Lot # of paint:* TE7081UH ~~TE7081UH~~

Diluant/ *Thinner :* GTA 415

Temps de séchage/ *Drying time* 10 hrs

Température pièce/ *Room Temperature* 25.0°C

Taux d'humidité/ *Humidity Level* 52.1 %

#3

Quantité de peinture utilisée/ *Quantity paint used:* 2 gal

de lot de peinture/ *Lot # of paint:* 5492744UH

Diluant/ *Thinner :* GTA 0570

Temps de séchage/ *Drying time* 10 hrs

Température pièce/ *Room Temperature* 22.8°C

Taux d'humidité/ *Humidity Level* 36.2 %

No de pièces/ *Part Number :*	**Esp Moyenne/ *Dft Average***	**Vérifié par/ *Verified by:***		**DATE**
		Peintre/ *Painter*	Control Qualité/ *Quality control*	
(1) 5389-02A	14.2			2017/05/31
(2) 5389-02A	14.6			
(3) 5389-02A	14.6			
(4) 5389-02A	14.8			
(5) 5389-02A	14.9			
(6) 5389-02A	14.1			
(7) 5389-02A	13.9			
(8) 5389-02A	14.2			
(9) 5389-02A				

No de pièces/ *Part Number :*	Esp Moyenne/ *Dft Average*	Vérifié par/ *Verified by:*		DATE
		Peintre/ *Painter*	Control Qualité/ *Quality control*	
(13) 5389-02A	13.9			2017/05/31
(14) 5389-02A	14.2			
(15) 5389-02A	14.6			
(16) 5389-02A	15.1			
(17) 5389-02A	14.3			
(18) 5389-02A	14.5			
(19) 5389-02A	14.5			
(20) 5389-02A	15.3			
(21) 5389-02A	14.2			
(22) 5389-02A	15.2			
(23) 5389-02A	14.7			
(24) 5389-02A	14.8			
(25) 5389-02A	14.6.			2017/05/31

RAPPORT INSPECTION DE PEINTURE F-90 / PAINT INSPECTION REPORT F-90

CONTRÔLE DE QUALITÉ / QUALITY CONTRÔLE

Projet / *Project #*: 5389-02 Client / *Customer* : Promec

Description : Pipe Support – Small « T »

Référence spécification de peinture/ *Paint specifications ref* : AE Méliadine

Inspection visuel du sablage/ *Visual Sandblast inspection* SP6 (TYPE) (INITIAL)

Instruction spécial/ *Special instructions* : N/A

Quantité sable utilisé/ *Quantity sand used:* 10 poches

Profile de sablage/ *Sandblast profil* : B 2.9 mp

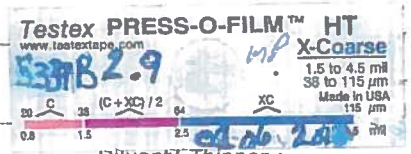

#1 Quantité d'apprêt utilisée/ *Quantity primer used:* 5 gal # de lot d'appret primer/ *Lot # of primer:* TE6874UH Diluant/ *Thinner* : GTA 415

Temps de séchage/ *Drying time* 2 hrs Température pièce/ *Room Temperature* 22°C Taux d'humidité/ *Humidity Level* 31.9%

#2 Quantité de peinture utilisée/ *Quantity paint used:* 5 gal # de lot de peinture/ *Lot # of paint:* TE5015UH Diluant/ *Thinner* : GTA 415

Temps de séchage/ *Drying time* 8 hrs Température pièce/ *Room Temperature* 24°C Taux d'humidité/ *Humidity Level* 33%

#3 Quantité de peinture utilisée/ *Quantity paint used:* 5 gal # de lot de peinture/ *Lot # of paint:* SH9274UH Diluant/ *Thinner* : GTA 056

Temps de séchage/ *Drying time* 6 hrs Température pièce/ *Room Temperature* 22°C Taux d'humidité/ *Humidity Level* 27%

No de pièces/ *Part Number :*	Esp Moyenne/ *Dft Average*	Vérifié par/ *Verified by:*		DATE
		Peintre/ *Painter*	Control Qualité/ *Quality control*	
(1) 5389-03A	17.8			2017/08/04
(2) 5389-03A	16.9			
(3) 5389-03A	18.2			
(4) 5389-03A	17.3			
(5) 5389-03A	17.6			
(6) 5389-03A	18.1			
(7) 5389-03A	16.9			
(8) 5389-03A	17.0			
(9) 5389-03A				

No de pièces/ *Part Number :*	Esp Moyenne/ *Dft Average*	Vérifié par/ *Verified by:*		DATE
		Peintre/ *Painter*	Control Qualité/ *Quality control*	
(13) 5389-03A	16.6			2017/06/01
(14) 5389-03A	16.8			
(15) 5389-03A	17.2			
(16) 5389-03A	17.6			
(17) 5389-03A	17.8			
(18) 5389-03A	16.4			
(19) 5389-03A	16.6			
(20) 5389-03A	15.8			
(21) 5389-03A	17.2			
(22) 5389-03A	18.3			
(23) 5389-03A	19.2			
(24) 5389-03A	15.5			
(25) 5389-03A	16.8			
(26) 5389-03A	17.7			
(27) 5389-03A	15.8			
(28) 5389-03A	16.2			
(29) 5389-03A	15.8			
(30) 5389-03A	17.8			
(31) 5389-03A	18.3			
(32) 5389-03A	16.8			
(33) 5389-03A	17.8			
(34) 5389-03A	14.9			
(35) 5389-03A	17.8			
(36) 5389-03A	15.6			
(37) 5389-03A	17.8			
(38) 5389-03A	16.4			
(39) 5389-03A	15.7			
(40) 5389-03A	18.2			
(41) 5389-03A	16.5			
(42) 5389-03A	17.4			
(43) 5389-03A	16.3			
(44) 5389-03A	15.8			
(45) 5389-03A	15.9			
(46) 5389-03A	16.2			
(47) 5389-03A	16.8			
(48) 5389-03A	15.2			2017/06/01

RAPPORT INSPECTION DE PEINTURE F-90 / PAINT INSPECTION REPORT F-90

CONTRÔLE DE QUALITÉ / QUALITY CONTRÔLE

Projet / *Project #* : 5389-02 Client / *Customer* : Promec

Description : Pipe Support – Small « T »

Référence spécification de peinture/ *Paint specifications ref* : AE Méliadine

Inspection visuel du sablage/ *Visual Sandblast inspection* SPG (TYPE) CB (INITIAL)

Instruction spécial/ *Special instructions* : N/A

Testex PRESS-O-FILM™ HT X-Coarse 1.5 to 4.5 mil 38 to 115 µm Made in USA 115 µm 4.5 mil

Quantité sable utilisé/ *Quantity sand used:* 10 pocles

Profile de sablage/ *Sandblast profil* : 3098 2.8

#1 Quantité d'apprêt utilisée/ *Quantity primer used:* 5 gal # de lot d'appret primer/ *Lot # of primer:* TE6874UH Diluant/ *Thinner* : GTA 415

Temps de séchage/ *Drying time* 3 hrs Température pièce/ *Room Temperature* 23°C Taux d'humidité/ *Humidity Level* 32.8%

#2 Quantité de peinture utilisée/ *Quantity paint used:* 5 gal # de lot de peinture/ *Lot # of paint:* SM2383UH Diluant/ *Thinner* : GTA 415

Temps de séchage/ *Drying time* 10 hrs Température pièce/ *Room Temperature* 24°C Taux d'humidité/ *Humidity Level* 31.7%

#3 Quantité de peinture utilisée/ *Quantity paint used:* 5 gal # de lot de peinture/ *Lot # of paint:* SH9274UH Diluant/ *Thinner* : GTA 056

Temps de séchage/ *Drying time* 10 hrs Température pièce/ *Room Temperature* 23°C Taux d'humidité/ *Humidity Level* 28.6%

No de pièces/ *Part Number :*	Esp Moyenne/ *Dft Average*	Vérifié par/ *Verified by:* Peintre/ *Painter*	Control Qualité/ *Quality control*	DATE
(49) 5389-03A	17.3	[signature]	[signature]	2017/06/05
(50) 5389-03A	17.4			
(51) 5389-03A	18.8			
(52) 5389-03A	18.3			
(53) 5389-03A	16.3			
(54) 5389-03A	16.9			
(55) 5389-03A	15.3			
(56) 5389-03A	15.7			
(57) 5389-03A	16.5			
(58) 5389-03A	15.8			
(59) 5389-03A	15.2			
(60) 5389-03A	14.9			
(61) 5389-03A	16.8	[signature]	[signature]	2017/06/05

Peintre / Painter: [signature]

Peinture rencontre les spécifications / *Paint meets specs* OUI / *YES* NON / *NO*

Contrôleur de qualité / *Quality Controller* : [signature] 2017/06/07

F-90 Rapport inspection de peinture / Paint Inspection Report
Reviseur : J.P. Leclerc
2017-03-27

RAPPORT INSPECTION DE PEINTURE F-90 / PAINT INSPECTION REPORT F-90

CONTRÔLE DE QUALITÉ / QUALITY CONTRÔLE

Projet / *Project #:* 5389-02 Client / *Customer :* Promec

Description : Pipe Support – Small « T »

Référence spécification de peinture/ *Paint specifications ref :* AE Méliadine

Inspection visuel du sablage/ *Visual Sandblast inspection* SPG (TYPE) CB (INITIAL)

Instruction spécial/ *Special instructions :* N/A

Testex PRESS-O-FILM™ HT X-Coarse 1.5 to 4.5 mil 38 to 115 µm Made in USA

Quantité sable utilisé/ *Quantity sand used:* 10 pocks

Profile de sablage/ *Sandblast profil :* 3049B 2.8

#1 Quantité d'apprêt utilisée/ *Quantity primer used:* 5 gal # de lot d'appret primer/ *Lot # of primer:* TE6874UH Diluant/ *Thinner :* GTA 415

Temps de séchage/ *Drying time* 3 hrs Température pièce/ *Room Temperature* 23°C Taux d'humidité/ *Humidity Level* 32.8%

#2 Quantité de peinture utilisée/ *Quantity paint used:* 5 gal # de lot de peinture/ *Lot # of paint:* SM2383UH Diluant/ *Thinner :* GTA 415

Temps de séchage/ *Drying time* 10 hrs Température pièce/ *Room Temperature* 24°C Taux d'humidité/ *Humidity Level* 31.7%

#3 Quantité de peinture utilisée/ *Quantity paint used:* 5 gal # de lot de peinture/ *Lot # of paint:* SH9274UH Diluant/ *Thinner :* GTA 056

Temps de séchage/ *Drying time* 10 hrs Température pièce/ *Room Temperature* 23°C Taux d'humidité/ *Humidity Level* 28.6%

No de pièces/ *Part Number :*	Esp Moyenne/ *Dft Average*	Vérifié par/ *Verified by:* Peintre/ *Painter*	Control Qualité/ *Quality control*	DATE
(49) 5389-03A	17.3			2017/06/05
(50) 5389-03A	17.4			
(51) 5389-03A	18.8			
(52) 5389-03A	18.3			
(53) 5389-03A	16.3			
(54) 5389-03A	16.9			
(55) 5389-03A	15.3			
(56) 5389-03A	15.7			
(57) 5389-03A	16.5			
(58) 5389-03A	15.8			
(59) 5389-03A	15.2			
(60) 5389-03A	14.9			
(61) 5389-03A	16.8			2017/06/05

Peintre / Painter:

Peinture rencontre les spécifications / *Paint meets specs* OUI / *YES* NON / *NO*

Contrôleur de qualité / *Quality Controller :* 2017/06/07

F-90 Rapport inspection de peinture / Paint Inspection Report
Reviseur : J.P. Leclerc
2017-03-27

Signature Date

No de pièces/ *Part Number :*	Esp Moyenne/ *Dft Average*	Vérifié par/ *Verified by:* Peintre/ *Painter*	Vérifié par/ *Verified by:* Control Qualité/ *Quality control*	DATE
(62) 5389-03A	14.7			2017/06/05
(63) 5389-03A	16.8			
(64) 5389-03A	15.9			
(65) 5389-03A	16.2			
(66) 5389-03A	14.7			
(67) 5389-03A	16.9			
(68) 5389-03A	18.7			
(69) 5389-03A	19.9			
(70) 5389-03A	18.8			
(71) 5389-03A	15.9			
(72) 5389-03A	17.3			
(73) 5389-03A	16.7			
(74) 5389-03A	14.8			
(75) 5389-03A	14.8			
(76) 5389-03A	15.6			
(77) 5389-03A	14.7			
(78) 5389-03A	16.2			
(79) 5389-03A	16.5			
(80) 5389-03A	15.9			
(81) 5389-03A	14.9			
(82) 5389-03A	15.0			
(83) 5389-03A	17.4			
(84) 5389-03A	16.7			
(85) 5389-03A	16.3			
(86) 5389-03A	14.7			
(87) 5389-03A	14.6			
(88) 5389-03A	17.7			
(89) 5389-03A	18.7			
(90) 5389-03A	20.7			
(91) 5389-03A	19.2			
(92) 5389-03A	17.8			
(93) 5389-03A	16.2			
(94) 5389-03A	18.9			
(95) 5389-03A	16.2			
(96) 5389-03A	17.8			2017/06/05

RAPPORT INSPECTION DE PEINTURE F-90 / PAINT INSPECTION REPORT F-90

CONTRÔLE DE QUALITÉ / QUALITY CONTRÔLE

Projet / *Project #*: 5389-02 Client / *Customer* : Promec

Description : Pipe Support – Small « T »

Référence spécification de peinture/ *Paint specifications ref* : AE Méliadine

Inspection visuel du sablage/ *Visual Sandblast inspection* SP6 TYPE GB INITIAL

Instruction spécial/ *Special instructions* : N/A

Quantité sable utilisé/ *Quantity sand used:* 10 poches

Profile de sablage/ *Sandblast profil* : Testex PRESS-O-FILM™ HT www.testexinc.com 5389B2.7 X-Coarse 1.5 to 4.5 mil 38 to 115 µm Made in USA 115 µm 2017

#1

Quantité d'apprêt utilisée/ *Quantity primer used:* 5 gal # de lot d'appret primer/ *Lot # of primer:* TE6874UH Diluant/ *Thinner :* GTA 415

Temps de séchage/ *Drying time* 2 hrs Température pièce/ *Room Temperature* 22.8°C Taux d'humidité/ *Humidity Level* 32%

#2

Quantité de peinture utilisée/ *Quantity paint used:* 5 gal # de lot de peinture/ *Lot # of paint:* SM2383UH Diluant/ *Thinner :* GTA 415

Temps de séchage/ *Drying time* 16 hrs Température pièce/ *Room Temperature* 25.6°C Taux d'humidité/ *Humidity Level* 28%

#3

Quantité de peinture utilisée/ *Quantity paint used:* 5 gal. # de lot de peinture/ *Lot # of paint:* SH9274UH Diluant/ *Thinner :* GTA 056

Temps de séchage/ *Drying time* 8 hrs Température pièce/ *Room Temperature* 24.3°C Taux d'humidité/ *Humidity Level* 21%

No de pièces/ *Part Number :*	Esp Moyenne/ *Dft Average*	Vérifié par/ *Verified by:* Peintre/ *Painter*	Control Qualité/ *Quality control*	DATE
(97) 5389-03A	17.8	MS	SB	2017/06/09
(98) 5389-03A	16.5			
(99) 5389-03A	16.1			
(100) 5389-03A	19.1			
(101) 5389-03A	18.6			
(102) 5389-03A	18.3			
(103) 5389-03A	17.0			
(104) 5389-03A	23.1			
(105) 5389-03A	20.8			
(106) 5389-03A	15.3			
(107) 5389-03A	15.7			
(108) 5389-03A	16.0	MS	SB	2017/06/09

Peintre / Painter: MS

Peinture rencontre les spécifications / *Paint meets specs* OUI / *YES* NON / *NO*

Contrôleur de qualité / *Quality Controller* : SB Signature 2017/06/14 Date

No de pièces/ *Part Number :*	Esp Moyenne/ *Dft Average*	Vérifié par/ *Verified by:*		DATE
		Peintre/ *Painter*	Control Qualité/ *Quality control*	
(109) 5389-03A	19.1			2017/06/09
(110) 5389-03A	19.9			
(111) 5389-03A	15.8			
(112) 5389-03A	19.4			
(113) 5389-03A	17.1			
(114) 5389-03A	15.6			
(115) 5389-03A	15.7			
(116) 5389-03A	20.5			
(117) 5389-03A	16.7			
(118) 5389-03A	17.2			
(119) 5389-03A	14.7			
(120) 5389-03A	18.5			
(121) 5389-03A	18.4			
(122) 5389-03A	19.9			
(123) 5389-03A	16.6			
(124) 5389-03A	16.3			
(125) 5389-03A	20.8			
(126) 5389-03A	16.2			
(127) 5389-03A	15.6			
(128) 5389-03A	20.3			
(129) 5389-03A	17.4			
(130) 5389-03A	19.5			
(131) 5389-03A	20.8			
(132) 5389-03A	16.7			
(133) 5389-03A	15.6			
(134) 5389-03A	16.7			
(135) 5389-03A	17.5			
(136) 5389-03A	18.6			
(137) 5389-03A	17.0			
(138) 5389-03A	14.3			2017/06/09

RAPPORT INSPECTION DE PEINTURE F-90 / PAINT INSPECTION REPORT F-90

CONTRÔLE DE QUALITÉ / QUALITY CONTRÔLE

Projet / *Project #*: 5389-02 Client / *Customer* : Promec

Description : Pipe Support – Small « T »

Référence spécification de peinture/ *Paint specifications ref* : AE Mélladine

Inspection visuel du sablage/ *Visual Sandblast inspection* SP6 (TYPE) CB (INITIAL)

Instruction spécial/ *Special instructions* : N/A

Quantité sable utilisé/ *Quantity sand used:* 10 poches

Profile de sablage/ *Sandblast profil* :

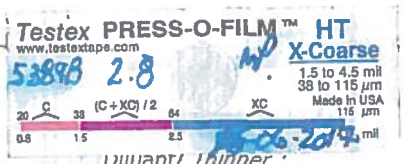

#1 Quantité d'apprêt utilisée/ *Quantity primer used:* 5 gal # de lot d'appret primer/ *Lot # of primer:* 7E68740H Diluant/ *Thinner* : GTA 415

Temps de séchage/ *Drying time* 3 hrs Température pièce/ *Room Temperature* 23.7 °C Taux d'humidité/ *Humidity Level* 21%

#2 Quantité de peinture utilisée/ *Quantity paint used:* 5 gal # de lot de peinture/ *Lot # of paint:* SM23830H Diluant/ *Thinner* : GTA 415

Temps de séchage/ *Drying time* 10 hrs Température pièce/ *Room Temperature* 23.1 °C Taux d'humidité/ *Humidity Level* 23%

#3 Quantité de peinture utilisée/ *Quantity paint used:* 5 gal # de lot de peinture/ *Lot # of paint:* SH92740H Diluant/ *Thinner* : GTA 056

Temps de séchage/ *Drying time* 8 hrs Température pièce/ *Room Temperature* 24 °C Taux d'humidité/ *Humidity Level* 32%

No de pièces/ *Part Number :*	Esp Moyenne/ *Dft Average*	Vérifié par/ *Verified by:* Peintre/ *Painter*	Vérifié par/ *Verified by:* Control Qualité/ *Quality control*	DATE
(139) 5389-03A	16.2	MA	CB	2016/06/16
(140) 5389-03A	14.7			
(141) 5389-03A	19.0			
(142) 5389-03A	16.8			
(143) 5389-03A	14.6			
(144) 5389-03A	15.1			
(145) 5389-03A	18.5			
(146) 5389-03A	16.3			
(147) 5389-03A	16.3			
(148) 5389-03A	14.6			
(149) 5389-03A	15.5			
(150) 5389-03A	21.2	MA	CB	2016/06/16

Peintre / Painter: MA

Peinture rencontre les spécifications / *Paint meets specs* OUI / *YES* NON / *NO*

Contrôleur de qualité / *Quality Controller* : CB (Signature) 2016/06/20 (Date)

No de pièces/ *Part Number :*	Esp Moyenne/ *Dft Average*	Vérifié par/ *Verified by:*		DATE
		Peintre/ *Painter*	Control Qualité/ *Quality control*	
(151) 5389-03A	20.1			2017/06/16
(152) 5389-03A	23.6			
(153) 5389-03A	16.7			
(154) 5389-03A	17.4			
(155) 5389-03A	15.0			
(156) 5389-03A	14.9			
(157) 5389-03A	19.7			
(158) 5389-03A	16.3			
(159) 5389-03A	18.2			
(160) 5389-03A	15.9			
(161) 5389-03A	20.7			
(162) 5389-03A	14.9			
(163) 5389-03A	14.7			
(164) 5389-03A	17.4			
(165) 5389-03A	14.2			
(166) 5389-03A	14.6			
(167) 5389-03A	19.3			
(168) 5389-03A	21.1			
(169) 5389-03A	19.8			
(170) 5389-03A	20.4			
(171) 5389-03A	17.7			
(172) 5389-03A	20.2			
(173) 5389-03A	18.7			
(174) 5389-03A	23.3			
(175) 5389-03A	17.8			
(176) 5389-03A	19.2			
(177) 5389-03A	18.3			
(178) 5389-03A	16.9			
(179) 5389-03A	16.3			
(180) 5389-03A	16.8			2017/06/16

RAPPORT INSPECTION DE PEINTURE F-90 / PAINT INSPECTION REPORT F-90

CONTRÔLE DE QUALITÉ / QUALITY CONTRÔLE

Projet / *Project #*: 5389-02 Client / *Customer* : Promec

Description : Pipe Support – Small « T »

Référence spécification de peinture/ *Paint specifications ref* : AE Méliadine

Inspection visuel du sablage/ *Visual Sandblast inspection* SP6 TYPE — INITIAL

Instruction spécial/ *Special instructions* : N/A

Testex PRESS-O-FILM™ HT X-Coarse 1.5 to 4.5 mil 38 to 115 µm Made in USA 115 µm
5389B 2.9 MP 19-06-2014

Quantité sable utilisé/ *Quantity sand used*: 10 poches

Profile de sablage/ *Sandblast profil* :

#1

Quantité d'apprêt utilisée/ *Quantity primer used*: 5 gal # de lot d'appret primer/ *Lot # of primer*: TE 6874UH Diluant/ *Thinner* : GTA 415

Temps de séchage/ *Drying time* 72 hrs Température pièce/ *Room Temperature* 21.7 °C Taux d'humidité/ *Humidity Level* 33%

#2

Quantité de peinture utilisée/ *Quantity paint used*: 5 gal # de lot de peinture/ *Lot # of paint*: SM2388UH Diluant/ *Thinner* : GTA 415

Temps de séchage/ *Drying time* 10 hrs Température pièce/ *Room Temperature* 24°C Taux d'humidité/ *Humidity Level* 34.8%

#3

Quantité de peinture utilisée/ *Quantity paint used*: 5 gal # de lot de peinture/ *Lot # of paint*: SH9274UH Diluant/ *Thinner* : GTA 050

Temps de séchage/ *Drying time* 8 hrs Température pièce/ *Room Temperature* 22.8°C Taux d'humidité/ *Humidity Level* 28%

No de pièces/ *Part Number :*	**Esp Moyenne/ *Dft Average***	**Vérifié par/ *Verified by:***		**DATE**
		Peintre/ *Painter*	Control Qualité/ *Quality control*	
(181) 5389-03A	16.8	MP	SB	2014/06/19
(182) 5389-03A	14.9			
(183) 5389-03A	16.4			
(184) 5389-03A	14.8			
(185) 5389-03A	16.4			
(186) 5389-03A	15.8			
(187) 5389-03A	14.6			
(188) 5389-03A	15.4			
(189) 5389-03A				

No de pièces/ *Part Number :*	Esp Moyenne/ *Dft Average*	Vérifié par/ *Verified by:*		DATE
		Peintre/ *Painter*	Control Qualité/ *Quality control*	
(193) 5389-03A	16.2			2017/06/19
(194) 5389-03A	16.8			
(195) 5389-03A	14.7			
(196) 5389-03A	15.8			
(197) 5389-03A	16.2			
(198) 5389-03A	15.4			
(199) 5389-03A	17.2			
(200) 5389-03A	18.3			
(201) 5389-03A	16.9			
(202) 5389-03A	15.8			
(203) 5389-03A	17.3			
(204) 5389-03A	16.9			
(205) 5389-03A	14.6			
(206) 5389-03A	15.8			
(207) 5389-03A	16.8			
(208) 5389-03A	14.7			
(209) 5389-03A	15.9			
(210) 5389-03A	16.6			
(211) 5389-03A	17.8			
(212) 5389-03A	14.9			
(213) 5389-03A	16.6			
(214) 5389-03A	17.8			
(215) 5389-03A	15.8			
(216) 5389-03A	16.9			
(217) 5389-03A	17.3			
(218) 5389-03A	16.2			
(219) 5389-03A	15.8			
(220) 5389-03A	14.9			
(221) 5389-03A	15.8			
(222) 5389-03A	16.7			2017/06/19

RAPPORT INSPECTION DE PEINTURE F-90 / PAINT INSPECTION REPORT F-90

CONTRÔLE DE QUALITÉ / QUALITY CONTRÔLE

Projet / *Project #*: 5389-02 Client / *Customer* : Promec

Description : Pipe Support – Small « T »

Référence spécification de peinture/ *Paint specifications ref* : AE Méliadine

Inspection visuel du sablage/ *Visual Sandblast inspection* SP6 (TYPE) CB (INITIAL)

Instruction spécial/ *Special instructions* : N/A

Testex PRESS-O-FILM™ HT www.testextape.com 5389-3-1 MP X-Coarse 1.5 to 4.5 mil 38 to 115 µm Made in USA 115 µm 2-06-2017 mil

Quantité sable utilisé/ Quantity sand used: 11 poches

Profile de sablage/ *Sandblast profil* :

#1

Quantité d'apprêt utilisée/ *Quantity primer used:* 6 gal # de lot d'appret primer/ *Lot # of primer:* TE-6874HH Diluant/ *Thinner* : GTA 415

Temps de séchage/ *Drying time* 2 hrs Température pièce/ *Room Temperature* 24.2°C Taux d'humidité/ *Humidity Level* 37%

#2

Quantité de peinture utilisée/ *Quantity paint used:* 6 gal # de lot de peinture/ *Lot # of paint:* SM2383UH Diluant/ *Thinner* : GTA 415

Temps de séchage/ *Drying time* 10 hrs Température pièce/ *Room Temperature* 23.9°C Taux d'humidité/ *Humidity Level* 33%

#3

Quantité de peinture utilisée/ *Quantity paint used:* 6 gal. # de lot de peinture/ *Lot # of paint:* SH9274UH Diluant/ *Thinner* : GTA 056.

Temps de séchage/ *Drying time* 10 hrs Température pièce/ *Room Temperature* 24°C Taux d'humidité/ *Humidity Level* 36%

No de pièces/ *Part Number :*	**Esp Moyenne/ *Dft Average***	**Vérifié par/ *Verified by:***		**DATE**
		Peintre/ *Painter*	Control Qualité/ *Quality control*	
(223) 5389-03A	14.7	MA	SD	2017/06/21
(224) 5389-03A	15.8			
(225) 5389-03A	16.2			
(226) 5389-03A	14.7			
(227) 5389-03A	18.9			
(228) 5389-03A	19.3			
(229) 5389-03A	18.4			
(230) 5389-03A	16.4			
(231) 5389-03A	17.4			
(232) 5389-03A	16.3			
(233) 5389-03A	17.3			
(234) 5389-03A	17.8			
(235) 5389-03A	16.4	MA	SD	2017/06/21

Peintre / Painter: Marc

Peinture rencontre les spécifications / *Paint meets specs* OUI / *YES* NON / *NO*

Contrôleur de qualité / *Quality Controller* : 2017/06/23

Signature Date

No de pièces/ *Part Number :*	Esp Moyenne/ *Dft Average*	Vérifié par/ *Verified by:* Peintre/ *Painter*	Control Qualité/ *Quality control*	DATE
(236) 5389-03A	15.6			2017/06/21
(237) 5389-03A	16.2			
(238) 5389-03A	17.4			
(239) 5389-03A	16.2			
(240) 5389-03A	16.3			
(241) 5389-03A	16.9			
(242) 5389-03A	17.8			
(243) 5389-03A	14.7			
(244) 5389-03A	15.8			
(245) 5389-03A	16.2			
(246) 5389-03A	15.6			
(247) 5389-03A	14.8			
(248) 5389-03A	14.2			
(249) 5389-03A	15.3			
(250) 5389-03A	16.6			
(251) 5389-03A	14.2			
(252) 5389-03A	15.7			
(253) 5389-03A	14.2			
(254) 5389-03A	16.3			
(255) 5389-03A	15.7			
(256) 5389-03A	16.2			
(257) 5389-03A	14.7			
(258) 5389-03A	16.3			
(259) 5389-03A	15.7			
(260) 5389-03A	14.2			
(261) 5389-03A	17.3			
(262) 5389-03A	14.2			
(263) 5389-03A	16.3			
(264) 5389-03A	15.2			
(265) 5389-03A	15.7			
(266) 5389-03A	16.2			
(267) 5389-03A	17.3			
(268) 5389-03A	15.2			
(269) 5389-03A	15.7			
(270) 5389-03A	15.8			
(271) 5389-03A	16.7			
(272) 5389-03A	20.8			
(273) 5389-03A	19.2			2017/06/21

RAPPORT INSPECTION DE PEINTURE F-90 / PAINT INSPECTION REPORT F-90

CONTRÔLE DE QUALITÉ / QUALITY CONTRÔLE

Projet / *Project #*: 5389-02 Client / *Customer* : Promec

Description : Pipe Support – Pipe Shoe

Référence spécification de peinture/ *Paint specifications ref* : AE Méliadine

Inspection visuel du sablage/ *Visual Sandblast inspection* SP6 (TYPE) (INITIAL)

Instruction spécial/ *Special instructions* : N/A

Quantité sable utilisé/ *Quantity sand used:* 10 poches

Profile de sablage/ *Sandblast profil* : Testex PRESS-O-FILM™ HT www.testextape.com 5389B 3.1 MP 1.5 to 4.5 mil 38 to 115 µm Made in USA 115 µm 2-06-2017

#1

Quantité d'apprêt utilisée/ *Quantity primer used:* 5 gal # de lot d'appret primer/ *Lot # of primer:* TF687404H Diluant/ *Thinner* : GTA 415

Temps de séchage/ *Drying time* 2 hrs Température pièce/ *Room Temperature* 23.4 °C Taux d'humidité/ *Humidity Level* 32 %

#2

Quantité de peinture utilisée/ *Quantity paint used:* 5 gal # de lot de peinture/ *Lot # of paint:* TE5015UH Diluant/ *Thinner* : GTA 415

Temps de séchage/ *Drying time* 10 hrs Température pièce/ *Room Temperature* 25 °C Taux d'humidité/ *Humidity Level* 37 %

#3

Quantité de peinture utilisée/ *Quantity paint used:* 5 gal. # de lot de peinture/ *Lot # of paint:* SH9274UH Diluant/ *Thinner* : GTA 056

Temps de séchage/ *Drying time* 8 hrs Température pièce/ *Room Temperature* 21 °C Taux d'humidité/ *Humidity Level* 28 %.

No de pièces/ *Part Number :*	Esp Moyenne/ *Dft Average*	Vérifié par/ *Verified by:* Peintre/ *Painter*	Vérifié par/ *Verified by:* Control Qualité/ *Quality control*	DATE
(1) 5389-04A	16.8			2017/06/12
(2) 5389-04A	14.9			
(3) 5389-04A	15.8			
(4) 5389-04A	16.2			
(5) 5389-04A	16.8			
(6) 5389-04A	14.9			
(7) 5389-04A	18.2			
(8) 5389-04A	14.8			
(9) 5389-04A	15.9			
(10) 5389-04A	16.9			
(11) 5389-04A	14.8			
(12) 5389-04A	18.2			2017/06/12

Peintre / Painter:

Peinture rencontre les spécifications / *Paint meets specs* OUI / YES NON / *NO*

Contrôleur de qualité / *Quality Controller* : Signature Date 2017/06/14

No de pièces/ *Part Number :*	Esp Moyenne/ *Dft Average*	Vérifié par/ *Verified by:*		DATE
		Peintre/ *Painter*	Control Qualité/ *Quality control*	
(13) 5389-04A	17.8			2017/06/17
(14) 5389-04A	18.9			
(15) 5389-04A	14.8			
(16) 5389-04A	15.2			
(17) 5389-04A	16.9			
(18) 5389-04A	14.8			
(19) 5389-04A	14.6			
(20) 5389-04A	15.9			
(21) 5389-04A	15.8			
(22) 5389-04A	14.9			
(23) 5389-04A	14.7			
(24) 5389-04A	16.2			
(25) 5389-04A	16.1			
(26) 5389-04A	17.3			
(27) 5389-04A	16.7			
(28) 5389-04A	15.2			
(29) 5389-04A	15.9			
(30) 5389-04A	15.8			
(31) 5389-04A	16.2			
(32) 5389-04A	16.4			
(33) 5389-04A	15.6			
(34) 5389-04A	15.8			
(35) 5389-04A	15.8			
(36) 5389-04A	15.6			
(37) 5389-04A	16.2			
(38) 5389-04A	18.2			
(39) 5389-04A	14.6			
(40) 5389-04A	17.2			
(41) 5389-04A	16.9			
(42) 5389-04A	14.8			
(43) 5389-04A	16.7			

RAPPORT INSPECTION DE PEINTURE F-90 / PAINT INSPECTION REPORT F-90

CONTRÔLE DE QUALITÉ / QUALITY CONTRÔLE

Projet / *Project #*: 5389-02 Client / *Customer* : Promec

Description : Pipe Support – Pipe Shoe

Référence spécification de peinture/ *Paint specifications ref* : AE Méliadine

Inspection visuel du sablage/ *Visual Sandblast inspection* SP6 (TYPE) CD (INITIAL)

Instruction spécial/ *Special instructions* : N/A

Testex PRESS-O-FILM™ HT www.testextape.com 5389B 2.9 MP. X-Coarse 1.5 to 4.5 mil 38 to 115 µm Made in USA 115 µm 13-06-2017

Quantité sable utilisé/ *Quantity sand used*: 6 poches

Profile de sablage/ *Sandblast profil* :

#1 Quantité d'apprêt utilisée/ *Quantity primer used*: 4 gal # de lot d'appret primer/ *Lot # of primer*: PF16874VH Diluant/ *Thinner* : GTA 415

Temps de séchage/ *Drying time* 2 hrs Température pièce/ *Room Temperature* 23°C Taux d'humidité/ *Humidity Level* 38%

#2 Quantité de peinture utilisée/ *Quantity paint used*: 4 gal # de lot de peinture/ *Lot # of paint*: PE5015UH Diluant/ *Thinner* : GTA 415

Temps de séchage/ *Drying time* 8 hrs Température pièce/ *Room Temperature* 24°C Taux d'humidité/ *Humidity Level* 33%

#3 Quantité de peinture utilisée/ *Quantity paint used*: 4 gal # de lot de peinture/ *Lot # of paint*: SH9274UH Diluant/ *Thinner* : GTA 056.

Temps de séchage/ *Drying time* 8 hrs. Température pièce/ *Room Temperature* 21°C Taux d'humidité/ *Humidity Level* 37.6%

No de pièces/ *Part Number :*	Esp Moyenne/ *Dft Average*	Vérifié par/ *Verified by:* Peintre/ *Painter*	Control Qualité/ *Quality control*	DATE
(1) 5389-05A	16.2			2017/06/13
(2) 5389-05A	14.8			
(3) 5389-05A	15.9			
(4) 5389-05A	16.8			
(5) 5389-05A	16.9			
(6) 5389-05A	16.8			
(7) 5389-05A	17.7			
(8) 5389-05A	17.8			
(9) 5389-05A	14.9			
(10) 5389-05A	14.6			
(11) 5389-05A	14.8			
(12) 5389-05A	16.2			2017/06/13

Peintre / Painter:

Peinture rencontre les spécifications / *Paint meets specs* OUI / *YES* NON / *NO*

Contrôleur de qualité / *Quality Controller* : Signature Date 2017/06/15

No de pièces/ *Part Number :*	Esp Moyenne/ *Dft Average*	Vérifié par/ *Verified by:*		DATE
		Peintre/ *Painter*	Control Qualité/ *Quality control*	
(13) 5389-05A	15.8			2017/06/13
(14) 5389-05A	17.2			
(15) 5389-05A	16.8			
(16) 5389-05A	16.8			
(17) 5389-05A	14.8			
(18) 5389-05A	15.6			
(19) 5389-05A	15.8			
(20) 5389-05A	16.2			
(21) 5389-05A	14.8			
(22) 5389-05A	15.9			
(23) 5389-05A	15.2			
(24) 5389-05A	16.8			
(25) 5389-05A	14.8			
(26) 5389-05A	16.2			
(27) 5389-05A	14.7			
(28) 5389-05A	15.8			
(29) 5389-05A	17.2			
(30) 5389-05A	15.8			
(31) 5389-05A	18.1			
(32) 5389-05A	18.6			
(33) 5389-05A	15.9			
(34) 5389-05A	16.9			
(35) 5389-05A	14.3			
(36) 5389-05A	16.2			
(37) 5389-05A	15.8			
(38) 5389-05A	14.9			
(39) 5389-05A	14.8			
(40) 5389-05A	16.2			
(41) 5389-05A	17.8			
(42) 5389-05A	14.9			2017/06/13

RAPPORT INSPECTION DE PEINTURE F-90 / PAINT INSPECTION REPORT F-90
CONTRÔLE DE QUALITÉ / QUALITY CONTRÔLE

Projet / *Project #*: 5389-02 Client / *Customer* : Promec

Description : Pipe Support – Pipe Shoe

Référence spécification de peinture/ *Paint specifications ref* : AE Méliadine

Inspection visuel du sablage/ *Visual Sandblast inspection* Spc (TYPE) CB (INITIAL)

Instruction spécial/ *Special instructions* : N/A

Testex PRESS-O-FILM™ HT X-Coarse 1.5 to 4.5 mil 38 to 115 µm Made in USA 31-05-2017

Quantité sable utilisé/ *Quantity sand used:* 7 pocles.

Profile de sablage/ *Sandblast profil* :

#1 Quantité d'apprêt utilisée/ *Quantity primer used:* 4 gal # de lot d'appret primer/ *Lot # of primer:* TE6874UH Diluant/ *Thinner* : GTA 415

Temps de séchage/ *Drying time* 2 hrs Température pièce/ *Room Temperature* 21°C Taux d'humidité/ *Humidity Level* 23%

#2 Quantité de peinture utilisée/ *Quantity paint used:* 4 gal # de lot de peinture/ *Lot # of paint:* TE5015UH Diluant/ *Thinner* : GTA 415

Temps de séchage/ *Drying time* 10 hrs Température pièce/ *Room Temperature* 24.6°C Taux d'humidité/ *Humidity Level* 28%

#3 Quantité de peinture utilisée/ *Quantity paint used:* 4 gal # de lot de peinture/ *Lot # of paint:* SH9274UH Diluant/ *Thinner* : GTA 056

Temps de séchage/ *Drying time* 10 hrs Température pièce/ *Room Temperature* 21.8°C Taux d'humidité/ *Humidity Level* 22%

No de pièces/ *Part Number :*	Esp Moyenne/ *Dft Average*	Vérifié par/ *Verified by:* Peintre/ *Painter*	Control Qualité/ *Quality control*	DATE
(1) 5389-07A	14.8	[signature]	[signature]	2017/05/31
(2) 5389-07A	14.6			
(3) 5389-07A	14.9			
(4) 5389-07A	15.2			
(5) 5389-07A	15.6			
(6) 5389-07A	14.8			
(7) 5389-07A	14.9			
(8) 5389-07A	15.6			
(9) 5389-07A	15.4			
(10) 5389-07A	16.3			
(11) 5389-07A	14.8			
(12) 5389-07A	16.9	[signature]	[signature]	2017/05/31

Peintre / Painter: [signature]

Peinture rencontre les spécifications / *Paint meets specs* OUI / *YES* NON / *NO*

Contrôleur de qualité / *Quality Controller* : [signature] Signature 2017/06/02 Date

F-90 Rapport inspection de peinture / Paint Inspection Report
Reviseur : J.P. Leclerc
2017-03-27

No de pièces/ *Part Number :*	Esp Moyenne/ *Dft Average*	Vérifié par/ *Verified by:*		DATE
		Peintre/ *Painter*	Control Qualité/ *Quality control*	
(13) 5389-07A	14.6			2017/05/31
(14) 5389-07A	13.9			
(15) 5389-07A	15.2			
(16) 5389-07A	16.4			
(17) 5389-07A	16.8			
(18) 5389-07A	14.9			
(19) 5389-07A	15.2			
(20) 5389-07A	16.3			
(21) 5389-07A	15.8			
(22) 5389-07A	14.9			
(23) 5389-07A	15.3			
(24) 5389-07A	14.5			
(25) 5389-07A	14.6			
(26) 5389-07A	15.5			
(27) 5389-07A	16.3			
(28) 5389-07A	15.8			
(29) 5389-07A	16.8			
(30) 5389-07A	15.6			
(31) 5389-07A	16.8			
(32) 5389-07A	16.4			
(33) 5389-07A	17.8			
(34) 5389-07A	14.6			
(35) 5389-07A	14.9			
(36) 5389-07A	15.1			
(37) 5389-07A	16.8			
(38) 5389-07A	14.2			
(39) 5389-07A	15.9			
(40) 5389-07A	14.8			
(41) 5389-07A	16.2			
(42) 5389-07A	17.3			
(43) 5389-07A	15.8			
(44) 5389-07A	14.9			
(45) 5389-07A	16.9			
(46) 5389-07A	15.8			
(47) 5389-07A	14.7			
(48) 5389-07A	15.9			
(49) 5389-07A	16.2			
(50) 5389-07A	14.8			
(51) 5389-07A	14.2.			2017/05/31

(52) 5389-07A	16.1			2017/08/31
(53) 5389-07A	17.8			
(54) 5389-07A	19.1			
(55) 5389-07A	18.4			
(56) 5389-07A	14.9			
(57) 5389-07A	15.16			
(58) 5389-07A	18.2			
(59) 5389-07A	17.1			
(60) 5389-07A	17.0			
(61) 5389-07A	16.4			
(62) 5389-07A	18.1			
(63) 5389-07A	17.6			
(64) 5389-07A	16.9			
(65) 5389-07A	16.8			
(66) 5389-07A	16.7			
(67) 5389-07A	17.8			
(68) 5389-07A	17.1			
(69) 5389-07A	18.4			
(70) 5389-07A	18.6			
(71) 5389-07A	16.4			
(72) 5389-07A	16.8			
(73) 5389-07A	17.4			
(74) 5389-07A	18.2			
(75) 5389-07A	16.4			
(76) 5389-07A	17.3			
(77) 5389-07A	15.9			
(78) 5389-07A	16.8			
(79) 5389-07A	15.9			
(80) 5389-07A	16.8			
(81) 5389-07A	17.3			
(82) 5389-07A	18.7			
(83) 5389-07A	16.7			
(84) 5389-07A	14.8			
(85) 5389-07A	15.9			
(86) 5389-07A				

(95) 5389-07A	16.1			2017/05/31
(96) 5389-07A	14.9			
(97) 5389-07A	16.2			
(98) 5389-07A	17.3			
(99) 5389-07A	10.9			
(100) 5389-07A	14.8			2017/05/31

Parts listing (For 1 ass'y)

# Part	Description	Grade	Detail	Thick.	Width	Height	Length	Qty	Weight
5389B-01A-01	HSS	A500-C		9.5 mm	254 mm	254 mm	1000 mm	1	71 kg
5389B-01A-02	Steel angle	44W	PUNCH	9.5 mm	76 mm	76 mm	260 mm	2	3 kg

FIG 137 PIPE SIZE 6"Ø

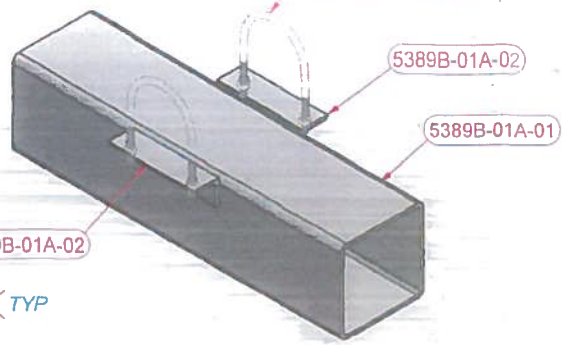

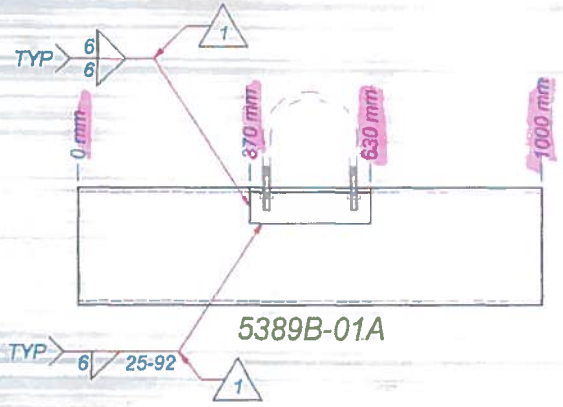

5389B-01A

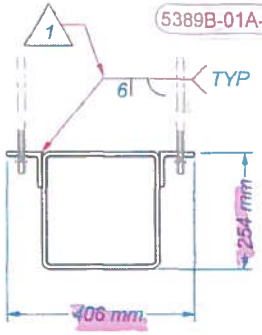

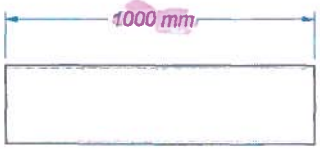

5389B-01A-01

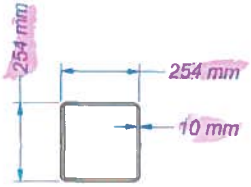

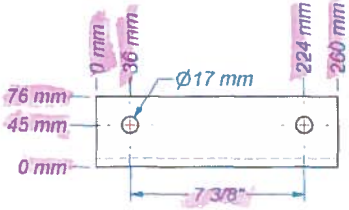

5389B-01A-02

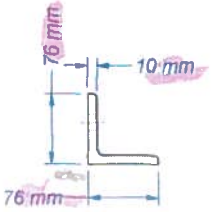

AJP
Tel. (819) 947-8291
Fax. (819) 947-6321
E-Mail: info@acier.com
Site Web: www.acierjp.com

NOTES GÉNÉRALES :
GENERAL NOTES :

1. FOR STRUCTURAL STEEL GENERAL NOTES SEE DRAWING SS-00
2. SPEC. PEINTURE : AE-Meliadine-02 (Coating System 2, Color Code RAL 7030)

Historique des revisions / Revision history

Rev	Description	Date	Par / By
1	Mod soudures	2017-05-11	B.Lauzon

Promec

PROJET / PROJECT # 5389

WO WO-5389-02

CLIENT: AGNICO EAGLE

TITRE / TITLE:
PIPING FUEL DISTRIBUTION

PIPE SUPPORT

PIECE / PARTS: MARINE LINE SUPPORT

QTÉ / QTY: 55 req.

POIDS / WEIGHT: 77 kg

SCEAU & SIGNÉ / SEAL & SIGNED:
12 MAI 2017

DESSINÉ / DRAWN: B.Lauzon

VÉRIFIÉ / CHECKED: Rémi Jean

DATE: 2017-04-18

FEUILLE / SHEET: 1 / 1

DESSIN RÉFÉRENCE / REFERENCE DRAWING: 65-403-270-200

No DESSIN / DRAWING No: 5389B-01A

REV: 1

P:\Clients\Promec\5389 Support tuyau\Des Fab\5389B-01A.idw

Parts listing (For 1 ass'y)

# Part	Description	Grade	Detail	Thick.	Width	Height	Length	Qty	Weight
5389B-02A-01	Tuyau Ø3/4" SCH40	A53		2.9 mm	27 mm	21 mm	200 mm	1	0 kg
5389B-02A-02	Steel rod	44W		19.1 mm			1650 mm	1	4 kg
5389B-02A-03	Flat Bar	44W		6.4 mm	152 mm		152 mm	1	1 kg

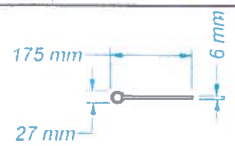

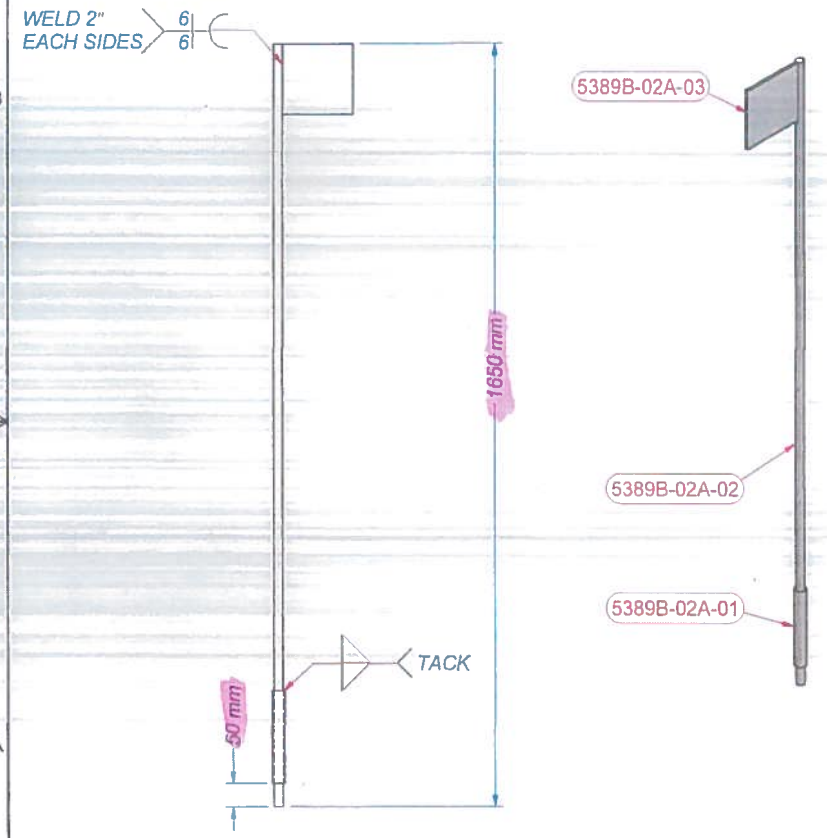

5389B-02A



5389B-02A-01

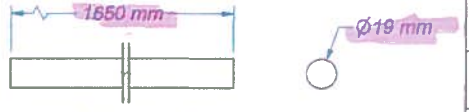

5389B-02A-02

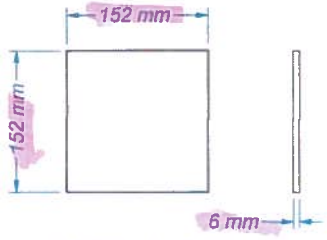

5389B-02A-03

AJP

Tel.: (819) 547-8291
Fax.: (819) 547-6321
E-Mail: info@acier.com
Site Web: www.acierjp.com

NOTES GENERALES
GENERAL NOTES :

1. FOR STRUCTURAL STEEL GENERAL NOTES SEE DRAWING SS-00
2. SPEC. PEINTURE : AE-Meliadine-02 (Coating System 2, Color Code RAL 7030)

PROJET / PROJECT # : 5389
WO : WO-5389-02

CLIENT : AGNICO EAGLE

TITRE / TITLE :
PIPING FUEL DISTRIBUTION

PIPE SUPPORT

PIECE / PARTS : IDENTIFICATION PLATE

QTÉ / QTY : 25 req.
POIDS / WEIGHT : 5 kg

SCEAU & SIGNÉ / SEAL & SIGNED :
15 MAI 2017

DESSINÉ / DRAWN : B.Lauzon
VÉRIFIÉ / CHECKED : Rémi Jean

DATE : 2017-04-18
FEUILLE / SHEET : 1 / 1

DESSIN REFERENCE / REFERENCE DRAWING : 65-403-270-200

No. DESSIN / DRAWING No. : 5389B-02A
REV : 0

P:\Clients\Promec\5389 Support tuyau\Des Fab\5389B-02A.idw

Parts listing (For 1 ass'y)

# Part	Description	Grade	Detail	Thick.	Width	Height	Length	Qty	Weight
5389B-03A-01	HSS	A500-C		4.8 mm	102 mm	102 mm	600 mm	2	8 kg
5389B-03A-02	HSS	A500-C		4.8 mm	102 mm	102 mm	497 mm	1	7 kg
5389B-03A-03	HSS	A500-C		4.8 mm	102 mm	102 mm	400 mm	2	6 kg
5389B-03A-05	Flat Bar	44W		4.8 mm	102 mm		252 mm	2	1 kg
5389B-03A-06	U.H.M.W	UHMW	DRILL	9.5 mm	102 mm		398 mm	1	0 kg
94195A177	SS Self-Tapping Screw #10 1 1/4"lg	SS						4	0 kg

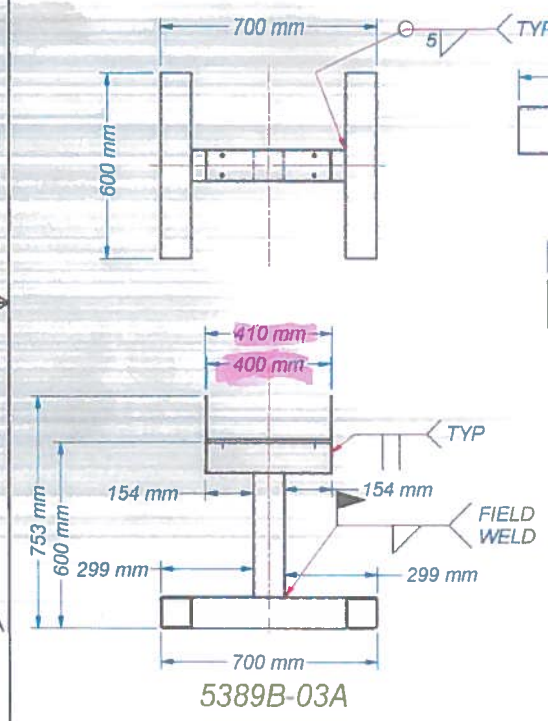

5389B-03A

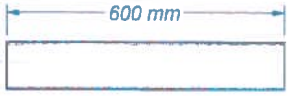

5389B-03A-01

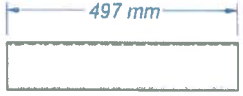

5389B-03A-02



5389B-03A-03

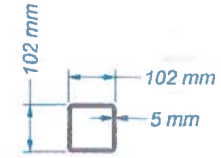

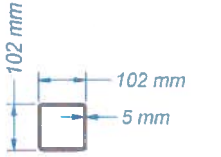

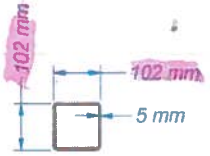

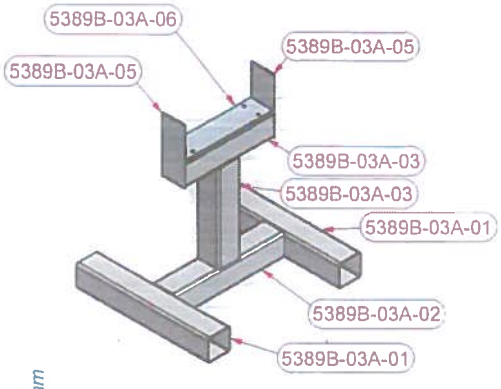

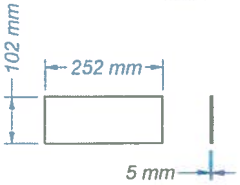

5389B-03A-05

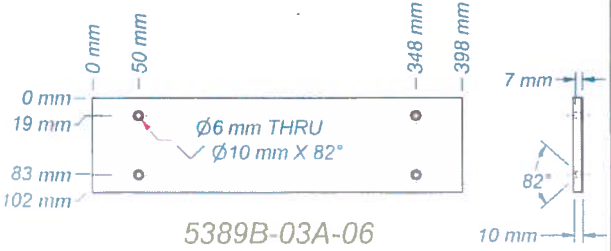

5389B-03A-06

AJP
Tél.:(819) 947-8291
Fax.:(819) 947-6321
E-Mail: info@acier.com
Site Web: www.acierjp.com

NOTES GÉNÉRALES
GENERAL NOTES :

1. FOR STRUCTURAL STEEL GENERAL NOTES SEE DRAWING SS-00
2. SPEC. PEINTURE : AE-Meliadine-02 (Coating System 2, Color Code RAL 7030)

PROJET / PROJECT # : 5389

WO : WO-5389-02

CLIENT : AGNICO EAGLE

TITRE / TITLE :

PIPING FUEL DISTRIBUTION

PIPE SUPPORT

PIÈCE / PARTS : PIPE SUPPORT (1) PIPE

QTÉ / QTY : 273 req.

POIDS / WEIGHT : 37 kg

SCEAU & SIGNÉ
SEAL & SIGNED

DESSINÉ / DRAWN : B.Lauzon

VÉRIFIÉ / CHECKED : Rémi Jean

DATE : 2017-04-18

FEUILLE / SHEET : 1 / 1

DESSIN RÉFÉRENCE / REFERENCE DRAWING : 65-403-270-200

No. DESSIN / DRAWING No : 5389B-03A

REV. : 0

P:\Clients\Promec\5389 Support tuyau\Des Fab\5389B-03A.idw

Parts listing (For 1 ass'y)

# Part	Description	Grade	Detail	Thick.	Width	Height	Length	Qty	Weight
5389B-03A-01	HSS	A500-C		4.8 mm	102 mm	102 mm	600 mm	2	8 kg
5389B-03A-02	HSS	A500-C		4.8 mm	102 mm	102 mm	497 mm	1	7 kg
5389B-03A-03	HSS	A500-C		4.8 mm	102 mm	102 mm	400 mm	2	6 kg
5389B-03A-05	Flat Bar	44W		4.8 mm	102 mm		252 mm	2	1 kg

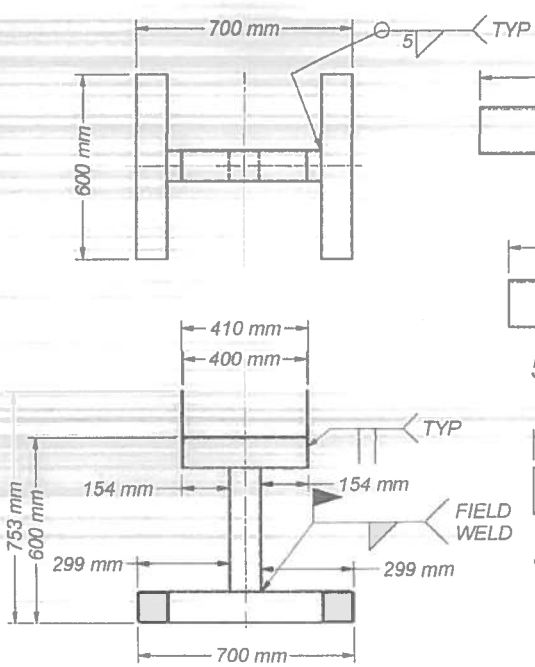

5389B-04A

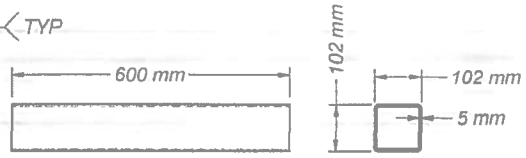

5389B-03A-01



5389B-03A-02

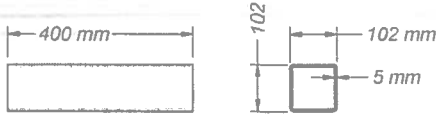

5389B-03A-03

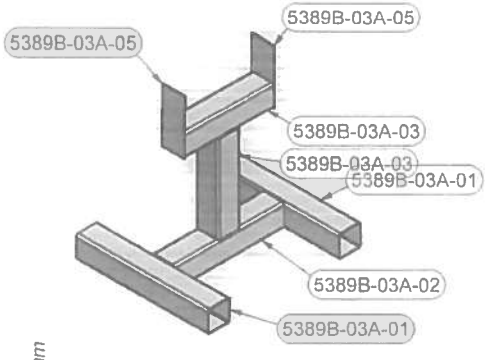

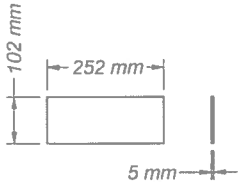

5389B-03A-05

AJP

Tél.:(819) 947-8291
Fax. (819) 947-5321
E-Mail: info@acier.com
Site Web: www.acierjp.com

NOTES GÉNÉRALES
GENERAL NOTES :

1. FOR STRUCTURAL STEEL GENERAL NOTES SEE DRAWING SS-00
2. SPEC. PEINTURE : AE-Meliadine-02 (Coating System 2, Color Code RAL 7030)

PROJET / PROJECT # **5389**

WO WO-5389-02

CLIENT: **AGNICO EAGLE**

TITRE / TITLE:
PIPING FUEL DISTRIBUTION

PIPE SUPPORT

PIECE / PARTS: PIPE SUPPORT (1) PIPE NO TEFLON

QTÉ / QTY: 100 req. | POIDS / WEIGHT: 37 kg

SCEAU & SIGNÉ / SEAL & SIGNED

DESSINÉ / DRAWN: B.Lauzon

VÉRIFIÉ / CHECKED: Rémi Jean

DATE: 2017-04-18

FEUILLE / SHEET: 1 / 1

DESSIN RÉFÉRENCE / REFERENCE DRAWING: 65-403-270-200

No. DESSIN / DRAWING No.: 5389B-04A

REV: 0

P:\Clients\Promec\5389 Support tuyau\Des Fab\5389B-04A idw

Parts listing (For 1 ass'y)

# Part	Description	Grade	Detail	Thick.	Width	Height	Length	Qty	Weight
5389B-03A-01	HSS	A500-C		4.8 mm	102 mm	102 mm	600 mm	2	8 kg
5389B-03A-02	HSS	A500-C		4.8 mm	102 mm	102 mm	497 mm	1	7 kg
5389B-03A-03	HSS	A500-C		4.8 mm	102 mm	102 mm	400 mm	1	6 kg
5389B-03A-05	Flat Bar	44W		4.8 mm	102 mm		252 mm	2	1 kg
5389B-05A-01	HSS	A500-C		4.8 mm	102 mm	102 mm	600 mm	1	8 kg
5389B-05A-02	U.H.M.W	UHMW	DRILL	9.5 mm	102 mm		598 mm	1	1 kg
94195A177	SS Self-Tapping Screw #10 1 1/4"lg	SS						4	0 kg

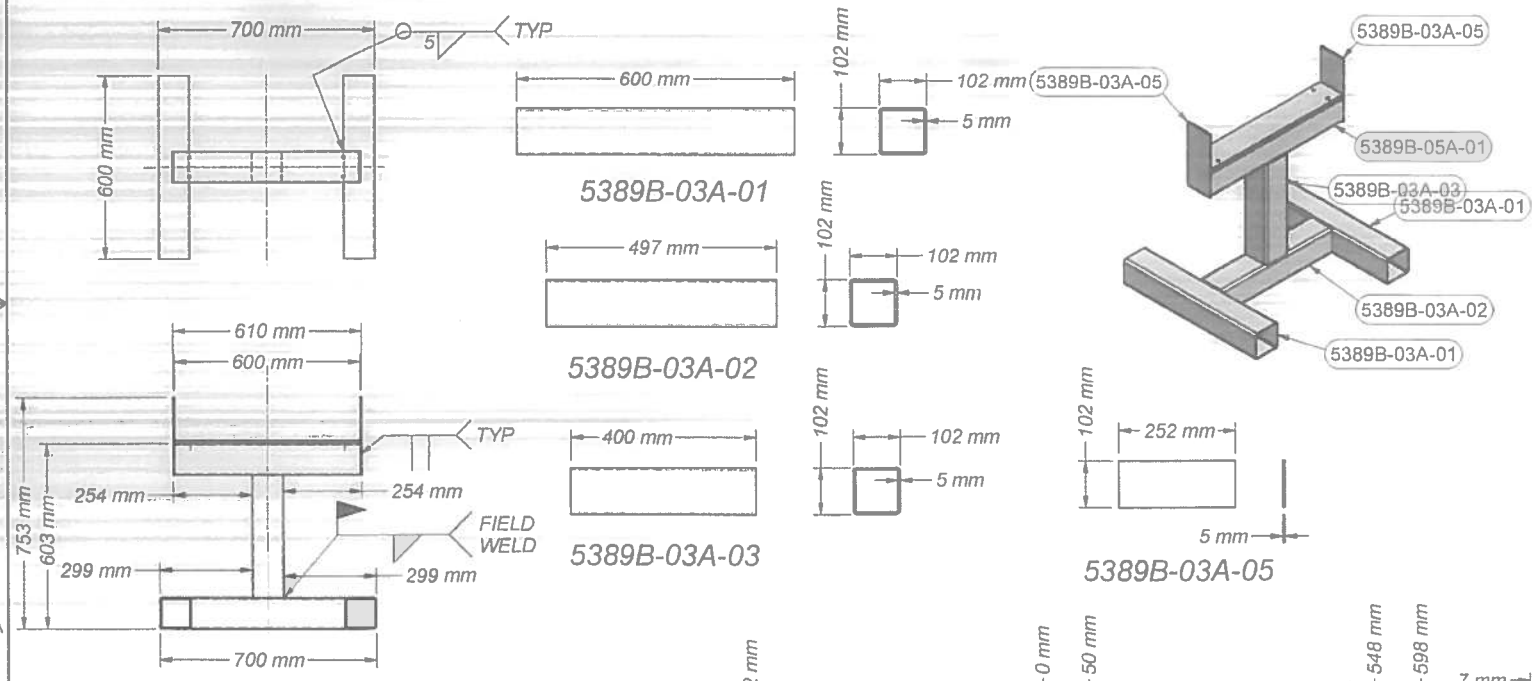

AJP
Tél.:(819) 947-8291
Fax.:(819) 947-5321
E-Mail: info@acier.com
Site Web: www.acierjp.com

NOTES GÉNÉRALES :
GENERAL NOTES :

1. FOR STRUCTURAL STEEL GENERAL NOTES SEE DRAWING SS-00
2. SPEC. PEINTURE : AE-Meliadine-02 (Coating System 2, Color Code RAL 7030)

PROJET : 5389
PROJECT #

WO WO-5389-02

CLIENT : AGNICO EAGLE

TITRE :
TITLE

PIPING FUEL DISTRIBUTION

PIPE SUPPORT

PIECE : PIPE SUPPORT (2) PIPES
PARTS

QTÉ : 42 req.
QTY

POIDS : 40 kg
WEIGHT

SCEAU & SIGNÉ
SEAL & SIGNED

DESSINÉ : B.Lauzon
DRAWN

VÉRIFIÉ : Rémi Jean
CHECKED

DATE : 2017-04-18

FEUILLE : 1 / 1
SHEET

DESSIN RÉFÉRENCE :
REFERENCE DRAWING

65-403-270-200

No. DESSIN : 5389B-05A
DRAWING No

REV 0

P:\Clients\Promec\5389 Support tuyau\Des Fab\5389B-05A.idw

Parts listing (For 1 ass'y)

# Part	Description	Grade	Detail	Thick.	Width	Height	Length	Qty	Weight
5389B-03A-01	HSS	A500-C		4.8 mm	102 mm	102 mm	600 mm	2	8 kg
5389B-03A-02	HSS	A500-C		4.8 mm	102 mm	102 mm	497 mm	1	7 kg
5389B-03A-03	HSS	A500-C		4.8 mm	102 mm	102 mm	400 mm	1	6 kg
5389B-03A-05	Flat Bar	44W		4.8 mm	102 mm		252 mm	2	1 kg
5389B-03A-06	U.H.M.W	UHMW	DRILL	9.5 mm	102 mm		398 mm	1	0 kg
5389B-06A-01	HSS	A500-C	DETAIL	4.8 mm	102 mm	102 mm	400 mm	1	5 kg
94195A177	SS Self-Tapping Screw #10 1 1/4"lg	SS						4	0 kg

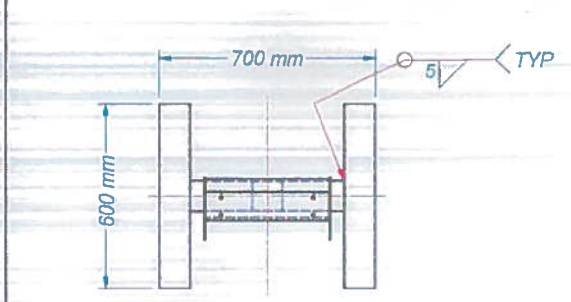

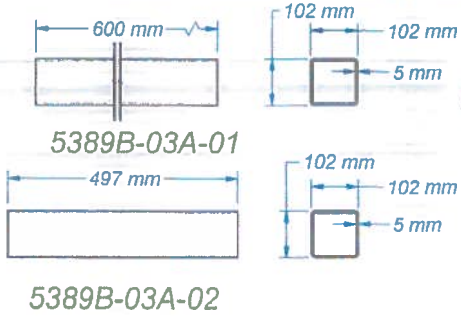

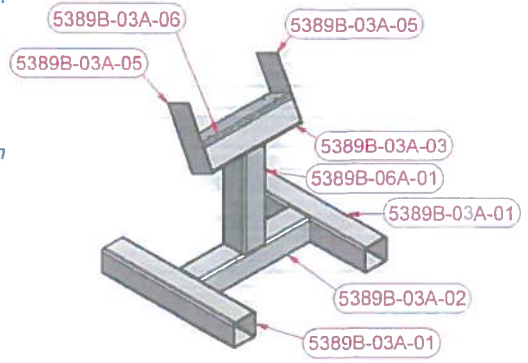

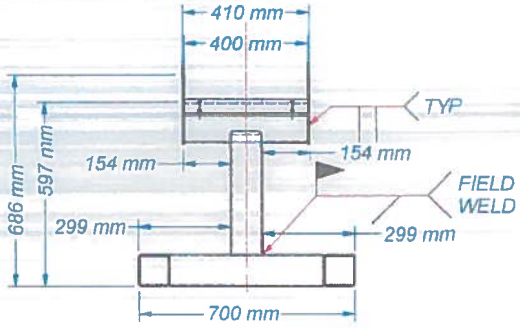

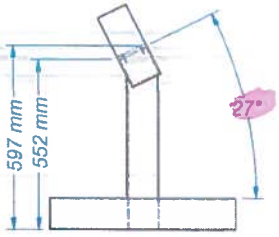

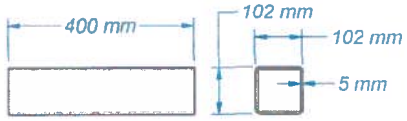

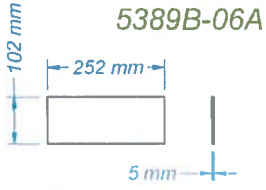

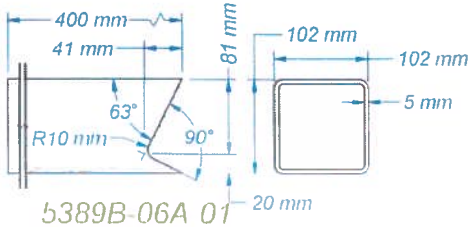



AJP

Tél.:(819) 947-8291
Fax. (819) 947-6321
E-Mail: info@acer.com
Site Web: www.acerjp.com

NOTES GENERALES :
GENERAL NOTES :

1. FOR STRUCTURAL STEEL GENERAL NOTES SEE DRAWING SS-00
2. SPEC. PEINTURE : AE-Meliadine-02 (Coating System 2, Color Code RAL 7030)

PROJET : 5389
PROJECT #
WO : WO-5389-02

CLIENT : AGNICO EAGLE

TITRE :
TITLE
PIPING FUEL DISTRIBUTION

PIPE SUPPORT

PIECE : PIPE SUPPORT (1) PIPE WITH SLOPE
PARTS :

QTE : 4 req.
QTY :

POIDS : 37 kg
WEIGHT :

SCEAU & SIGNE
SEAL & SIGNED
03 MAI 2017.

DESSINE : B.Lauzon
DRAWN

VÉRIFIÉ : Rémi Jean
CHECKED

DATE : 2017-04-18

FEUILLE : 1 / 1
SHEET

DESSIN REFERENCE :
REFERENCE DRAWING :
65-403-270-200

No. DESSIN : 5389B-06A
DRAWING No

REV : 0

P:\Clients\Promec\5389 Support tuyau\Des Fab\5389B-06A.idw

Parts listing (For 1 ass'y)

# Part	Description	Grade	Detail	Thick.	Width	Height	Length	Qty	Weight
5389B-07A-01	W200x36 (W8x24)	50W	DETAIL				300 mm	1	5 kg
5389B-07A-02	U.H.M.W	UHMW	DRILL	9.5 mm	165 mm		300 mm	1	0 kg
94195A177	SS Self-Tapping Screw #10 1 1/4"lg	SS						4	0 kg

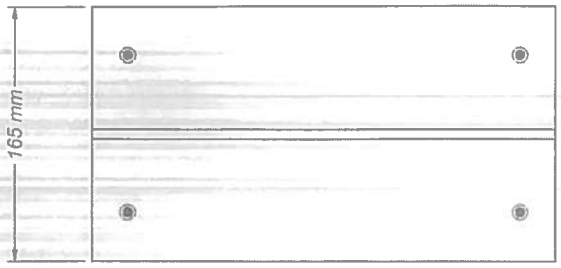

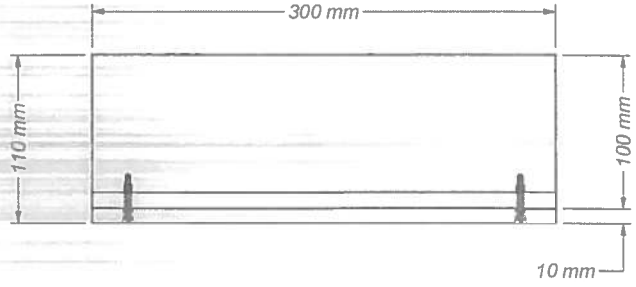

5389B-07A

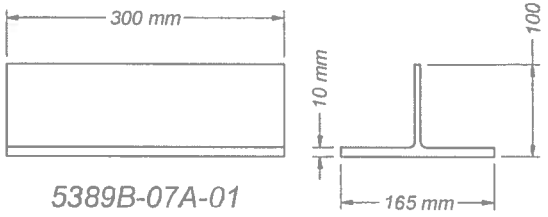

5389B-07A-01

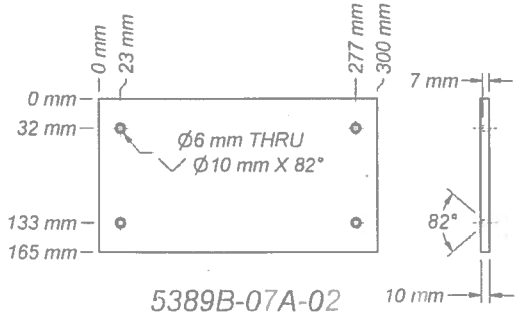

5389B-07A-02

AJP

Tél.:(819) 947-8291
Fax.:(819) 947-0321
E-Mail: info@acier.com
Site Web: www.acierjp.com

NOTES GÉNÉRALES
GENERAL NOTES :

1. FOR STRUCTURAL STEEL GENERAL NOTES SEE DRAWING SS-00
2. SPEC. PEINTURE : AE-Meliadine-02 (Coating System 2, Color Code RAL 7030)

PROJET / PROJECT # 5389

WO WO-5389-02

CLIENT: AGNICO EAGLE

TITRE / TITLE:
PIPING FUEL DISTRIBUTION

PIPE SUPPORT

PIECE / PARTS: PIPE SHOE

QTÉ / QTY: 100 req.

POIDS / WEIGHT: 6 kg

SCEAU & SIGNÉ
SEAL & SIGNED

DESSINÉ : DRAWN :	VÉRIFIÉ : CHECKED
B.Lauzon	Rémi Jean
DATE: 2017-04-18	FEUILLE : SHEET : 1 / 1

DESSIN RÉFÉRENCE :
REFERENCE DRAWING
65-403-270-200

No DESSIN : DRAWING No :	REV:
5389B-07A	0

P:\Clients\Promec\5389 Support tuyau\Des Fab\5389B-07A.idw

SPÉCIFICATION DE PROCÉDURE DE SOUDAGE FEUILLE DE DONNÉES DE PROCÉDURE DE SOUDAGE	No.: MC-2F-045-MF				Rev.: 1
	Jour	2	Mois	1	Année 2012

Nom de la compagnie: Les Aciers J.P. Inc.
Adressse: 15, 3ième Ave, La Reine (QC) J0Z 2L0

Norme(s) de référence: CSA W47.1 et CSA W59

Procédés de soudage	1	MCAW	Pulsé	Oui ☐	Non ☑	2	N/A Pulsé	Oui ☐ Non ☐
Gaz de protection		92 Ar-8 CO_2	Débit	15-25 l/min			Débit	
Position		1 er côté : Plat et Hor. 2 è côté:						
Mode d'application		Manuel ☐	Semi-auto ☑	Machine ☐	Auto ☐			
Type d'assemblage		— — ☐	T ☑	☑ ═══ ☑	II ☐			
Type de soudure		Complet ☐	Partiel E= ☐	Angle ☑				
Support envers		Matériel : N/A		Épaisseur:				
Gougeage à l'envers		Oui ☐ Méthode :						
		Non ☑ Profondeur :		Largeur :				
Longueur de fil libre		15-25 mm						
Diamètre(s) de buses		12-16 mm						
Classification du flux		N/A						
Électrode de tungstène		Type: N/A		Diamètre: N/A				
Procédures de nettoyage								

T1 et T2 peuvent etre inverses

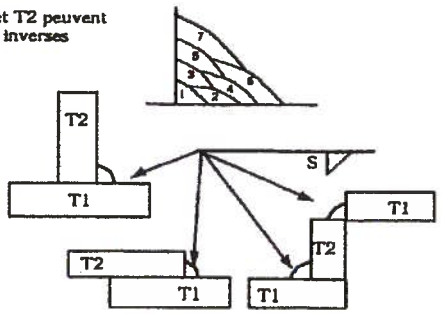

Identification du matériel de base (Pour CSA W186 indiquer le carbone équivalent et contenu maximum de souffre et de phosphore)

Pièce	Normes de référence et grade ou classe	Épaiss. Ou Diam.	Exigences spécifiques
I	CSA W59, Tableau 11-1 Groupes 1-2-3	3 mm min	
II	CSA W59, Tableau 11-1 Groupes 1-2-3	3 mm min	

Identification du métal d'apport

Procédé	Classification	Numéro(s) de(s) passe(s)	Exigences spécifiques
1	E491C-6M-HXX ou E492C-6M-HXX (XX = 4, 8 ou 16)	toutes	Protéger des saletés une fois désemballé
2			

Paramètres de soudage — Taux de dépôt(kg/hre): 4.56

Dimension S (mm)	Épaisseur T1 (mm)	Épaisseur T2 (mm)	No. de la couche	Numéro des passes	Diamètre du métal d'apport (mm)	Vitesse de dévidage (cm/min)	Polarité CCEP Courant +/-10%(A)	Tension +/-7% (Volts)	Vitesse d'arc +/-15% (mm/min)	Apport de chaleur (KJ/po)	Poids de soudure (kg/m)
4	3-4	3 min	1	1	1.2	1000	270	27.5	800		
5	5	5 min	1	1	1.2	1000	270	27.5	650		
5	6-12	6-12	1	1	1.2	1000	270	27.5	650		
6	6	6 min	1	1	1.2	1000	270	27.5	435		
6	8-20	8-20	1	1	1.2	1000	270	27.5	435		
8	8 min	8 min	1typ	1 typ	1.2	1000	270	27.5	250		
10	10 min	10 min	2	2-3	1.2	1000	270	27.5	435		
13	13 min	13 min	2-3	2-5	1.2	1000	270	27.5	370		
16	16 min	16 min	2-4	2-7	1.2	1000	270	27.5	500		

Caractéristique statique tension-courant: tension const.	Temp. entrepasse max.:	N/A	Préch. min.:	CSA W59 Tab 5-3
Traitement Thermique N/A Degré C: N/A	Temp. entrepasse min.:	CSA W59 Tab 5-3		

Rem.:

Acceptation du CWB (Spécification)	Acceptation du CWB (Feuille de données)	Représentant de la cie
	Accepté par le CWB January 19, 2012 Valide uniquement lorsque les produits d'apport sont certifés par le CWB	Louis Groteau 4310 QUÉBEC JAN 17 2012

Omniweld Solutions Intégrées

Spécification de mode opératoire de soudage

Application:

Cette spécification de mode opératoire de soudage (SMOS) s'applique au procédé **MCAW** et vise à compléter les feuilles de données de mode opératoire de soudage (FDMOS). Cette SMOS doit être reproduite à l'endos de chacune des FDMOS du mode opératoire MCAW. Elle n'indique que les informations qui ne sont pas déjà inscrites sur la FDMOS et qui sont exigées par les articles applicables des sections 10 et 11 de la norme W47.1-03.

Tout changement apporté aux variables essentielles d'une FDMOS ou SMOS, entraînera obligatoirement la révision ou la rédaction d'une nouvelle SMOS ou FDMOS.

Préparation du métal de base:

La préparation des bords ou des surfaces à joindre doit être effectuée par cisaillage, par meulage, par burinage, par usinage, par coupage ou par gougeage à l'arc au carbone avec jet d'air, par oxycoupage ou par gougeage avec oxygène.

Les surfaces à souder doivent être exemptes d'arêtes, de fissures ou autres défauts susceptibles de nuire à la qualité ou à la résistance de la soudure. Également, dans un rayon de 2" de la soudure, il ne doit pas avoir sur les surfaces, de calamine non adhérente, de laitier, de rouille écaillée, de peinture, de graisse, d'humidité ou autre corps étranger qui empêcheront l'obtention de soudures répondants aux critères de qualité de la norme ou qui dégageraient des vapeurs toxiques pour le soudeur.

Conditionnement des produits d'apport:

L'électrode de soudage doit être sèche et libre de rouille de surface, de poussière ou matière étrangère.

Gaz de protection:

Le gaz de protection utilisé doit avoir un point de rosé de -40C ou moins. Le soudage ne doit pas se faire dans un courant d'air ou au vent sauf si la zone de travail est protégée par un abris dont la forme et les matériaux utilisés permettront de réduire le vent à moins de 8 Km/h et empêchera la neige ou la pluie d'entrer.

Nettoyage des soudures:

Toute substance nuisible doit être enlevée avant l'application des passes suivantes.

Préchauffage/interpasse:

Le préchauffage doit être appliqué avant le début du soudage du côté opposé au soudage de façon à ce que la température atteigne la température de préchauffage spécifiée sur toute l'épaisseur du matériau et sur une largeur égale à l'épaisseur de la pièce mais pas moins que 3 po de chaque côté de la soudure et devant le point de soudage.

Si le soudage est interrompu et que la température du métal de base descend sous la température spécifiée, le préchauffage doit être appliqué à nouveau pour ramener la température de la pièce à la température de préchauffage spécifiée.

Quand le soudage est terminé, la pièce doit refroidir à l'air libre sans l'utilisation de moyens pour accélérer le refroidissement, comme de l'air comprimé soufflé sur la pièce, de l'eau et on ne doit pas la sortir dehors pour qu'elle soit exposée au froid l'hiver et/ou au vent à la pluie ou à la neige.

Traitement thermique:

Aucun PWHT n'est prévu sauf si les spécifications sont indiquées sur la feuille de données de mode opératoire de soudage et qu' elle n'ait été approuvées par le CWB.

Qualité:

Les soudures doivent être exemptes de défauts excédant les spécifications de la section 5 de la norme W59.

- Les défauts internes débouchant ou pas, (fissures, soufflures, inclusions, manque de fusion etc) doivent être réparés en enlevant la partie défectueuse et en ajoutant de la soudure pour obtenir une soudure saine conforme aux spécifications.
- Les défauts de surface (caniveau, cratère non rempli, soudure trop petite, etc.) peuvent être réparés par l'ajout de soudure.
- Les défauts de profil (convexité excessive, débordement etc.) peuvent être corrigés par meulage ou burinage.

Approbation CWB

CWB Accepté par le CWB

January 19, 2012

Valide uniquement lorsque les produits d'apport sont certifiés par le CWB

Approbation Compagnie

INGÉNIEUR - ENGINEER
Louis Coiteau
40810
QUÉBEC
JAN 16 2012

SPÉCIFICATION DE PROCÉDURE DE SOUDAGE FEUILLE DE DONNÉES DE PROCÉDURE DE SOUDAGE				No.: MC-F1-3-1G-MF-045				Rev.: 2	
				Jour 2		Mois 1		Année 2012	
Nom de la compagnie Les Aciers J.P. Inc. Adressse: 15, 3ième : ave La Reine (QC) J0Z 2L0						Norme(s) de référence: CSA W47.1 et CSA W59			
Procédés de soudage	1	MCAW	Pulsé	Oui ☐	Non ☑	2	N/A	Pulsé	Oui ☐ Non ☐
Gaz de protection		92 Ar-8 CO_2	Débit	15-25 li/min				Débit	
Position		1 er côté : Plat		2 è côté: Plat					
Mode d'application		Manuel ☐	Semi-auto ☑	Machine ☐	Auto ☐				
Type d'assemblage		— — ☑	T ☐	⌐ ☐	═ ☐	II ☐			
Type de soudure		Complet ☑	Partiel E= ☐	Angle ☐					
Support envers		Matériel : N/A		Épaisseur:					
Gougeage à l'envers		Oui ☐	Méthode :						
		Non ☑	Profondeur :	Largeur :					
Longueur de fil libre		15-25 mm							
Diamètre(s) de buses		12-16 mm							
Classification du flux		N/A							
Électrode de tungstène		Type: N/A		Diamètre: N/A					
Procédures de nettoyage									

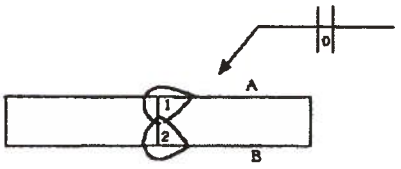

T ⩽ 6
ETT = T

Identification du matériel de base (Pour CSA W186 Indiquer le carbone équivalent et contenu maximum de souffre et de phosphore)

Pièce	Normes de référence et grade ou classe	Épaiss. Ou Diam.	Exigences spécifiques
I	CSA W59, Tableau 11-1 Groupes 1-2-3	3 à 6 mm	
II	CSA W59, Tableau 11-1 Groupes 1-2-3	3 à 6 mm	

Identification du métal d'apport

Procédé	Classification	Numéro(s) de(s) passe(s)	Exigences spécifiques
1	E491C-6M-HXX ou E492C-6M-HXX (XX = 4, 8 ou 16)	toutes	Protéger des saletés une fois
2			désemballé

Paramètres de soudage — Taux de dépôt(kg/hre)

Épaisseur des pièces (mm)	Gorge efficace E (mm)	No. du côté	No. de la couche	Numéro des passes	Diamètre du métal d'apport (mm)	Vitesse de dévidage (cm/min)	Polarité CCEP Courant +/-10%(A)	Tension +/-7% (Volts)	Vitesse d'arc +/-15% (mm/min)	Apport de chaleur (KJ/po)	Poids de soudure (kg/m)
3	3	A-B	1-2	1 - 2	1.2	900	230	26.5	500		
4	4	A-B	1-2	1 - 2	1.2	950	250	27.5	400		
5	5	A-B	1-2	1 - 2	1.2	1000	270	27.5	325		
6	6	A-B	1-2	1 - 2	1.2	1000	270	27.5	220		
T1 = 3 T2 = 6	3	A-B	1-2	1 - 2	1.2	925	240	26.5	450		

Caractéristique statique tension-courant: tension const.		Temp. entrepasse max.:	N/A	Préch. min.:	10 C
Traitement Thermique N/A	Degré C: N/A	Temp. entrepasse min.:	10 C		
Rem.:					

Acceptation du CWB (Spécification)	Acceptation du CWB (Feuille de données)	Représentant de la cie
	Accepté par le CWB January 19, 2012 Valide uniquement lorsque les produits d'apport sont certifés par le CWB	INGÉNIEUR - ENGINEER Louis Croteau 40310 QUÉBEC JAN 19 2012

Omniweld Solutions Intégrées

Spécification de mode opératoire de soudage

Application:

Cette spécification de mode opératoire de soudage (SMOS) s'applique au procédé **MCAW** et vise à compléter les feuilles de données de mode opératoire de soudage (FDMOS). Cette SMOS doit être reproduite à l'endos de chacune des FDMOS du mode opératoire MCAW. Elle n'indique que les informations qui ne sont pas déjà inscrites sur la FDMOS et qui sont exigées par les articles applicables des sections 10 et 11 de la norme W47.1-03.

Tout changement apporté aux variables essentielles d'une FDMOS ou SMOS, entraînera obligatoirement la révision ou la rédaction d'une nouvelle SMOS ou FDMOS.

Préparation du métal de base:

La préparation des bords ou des surfaces à joindre doit être effectuée par cisaillage, par meulage, par burinage, par usinage, par coupage ou par gougeage à l'arc au carbone avec jet d'air, par oxycoupage ou par gougeage avec oxygène.

Les surfaces à souder doivent être exemptes d'arêtes, de fissures ou autres défauts susceptibles de nuire à la qualité ou à la résistance de la soudure. Également, dans un rayon de 2" de la soudure, il ne doit pas avoir sur les surfaces, de calamine non adhérente, de laitier, de rouille écaillée, de peinture, de graisse, d'humidité ou autre corps étranger qui empêcheront l'obtention de soudures répondants aux critères de qualité de la norme ou qui dégageraient des vapeurs toxiques pour le soudeur.

Conditionnement des produits d'apport:

L'électrode de soudage doit être sèche et libre de rouille de surface, de poussière ou matière étrangère.

Gaz de protection:

Le gaz de protection utilisé doit avoir un point de rosé de -40C ou moins. Le soudage ne doit pas se faire dans un courant d'air ou au vent sauf si la zone de travail est protégée par un abris dont la forme et les matériaux utilisés permettront de réduire le vent à moins de 8 Km/h et empêchera la neige ou la pluie d'entrer.

Nettoyage des soudures:

Toute substance nuisible doit être enlevée avant l'application des passes suivantes.

Préchauffage/interpasse:

Le préchauffage doit être appliqué avant le début du soudage du côté opposé au soudage de façon à ce que la température atteigne la température de préchauffage spécifiée sur toute l'épaisseur du matériau et sur une largeur égale à l'épaisseur de la pièce mais pas moins que 3 po de chaque côté de la soudure et devant le point de soudage.

Si le soudage est interrompu et que la température du métal de base descend sous la température spécifiée, le préchauffage doit être appliqué à nouveau pour ramener la température de la pièce à la température de préchauffage spécifiée.

Quand le soudage est terminé, la pièce doit refroidir à l'air libre sans l'utilisation de moyens pour accélérer le refroidissement, comme de l'air comprimé souffié sur la pièce, de l'eau et on ne doit pas la sortir dehors pour qu'elle soit exposée au froid l'hiver et/ou au vent à la pluie ou à la neige.

Traitement thermique:

Aucun PWHT n'est prévu sauf si les spécifications sont indiquées sur la feuille de données de mode opératoire de soudage et qu' elle n'ait été approuvées par le CWB.

Qualité:

Les soudures doivent être exemptes de défauts excédant les spécifications de la section 5 de la norme W59.

- Les défauts internes débouchant ou pas, (fissures, soufflures, inclusions, manque de fusion etc) doivent être réparés en enlevant la partie défectueuse et en ajoutant de la soudure pour obtenir une soudure saine conforme aux spécifications.
- Les défauts de surface (caniveau, cratère non rempli, soudure trop petite, etc.) peuvent être réparés par l'ajout de soudure.
- Les défauts de profil (convexité excessive, débordement etc.) peuvent être corrigés par meulage ou burinage.

CWB Accepté par le CWB

January 19, 2012

Valide uniquement lorsque les produits d'apport sont certifés par le CWB

Approbation CWB

Approbation Compagnie

INGÉNIEUR - ENGINEER
Louis Croteau
40310
QUÉBEC
JAN 16 2012

LISTE DE PLANIFICATION DE PROJET POUR LA CERTIFICATION CSA W47.1-09 M à J #7

PROJET # :	5389-02
ACHETEUR :	Promec
DESSINS ET SPÉCIFICATIONS DE RÉFÉRENCE :	5389
MÉTAUX DE BASE UTILISÉ :	44W
MÉTAUX D'APPORT (MARQUE, NOM DE COMMERCE ET CLASSIFICATION) :	E491C 6M
NORMES APPLICABLES :	47.1
INSTRUCTIONS CONCERNANT LES MÉTAUX DE BASES PARTICULIERS SOUDÉS AVEC DES MÉTAUX D'APPORT APPROPRIÉS. (Si applicable) Commentaires:	N/A
ESSAIS NON-DESTRUCTIFS À EFFECTUER ET STIPULÉS AU CONTRAT AINSI QUE LES EXIGENCES À RENCONTRER. (Si applicable) Commentaires:	N/A

POINTS À VÉRIFIER EN RAPPORT AU SOUDAGE

	OUI	NON	N/A
Y-a-t-il des écarts entre les renseignements inscrits au contrat et les capacités immédiates de l'entreprise à effectuer les travaux de soudage? Si oui, comment l'acheteur en a été avisé et quelles sont les actions à prendre pour remédier à la situation:		✓	
Les actions à prendre pour remédier aux écarts ont-elles toutes été prises avant le début du contrat? Si non, pourquoi:			✓
Le superviseur en soudage, ou son délégué, est-il aux emplacements où le soudage est effectué? Nom: Patrick Perreault	✓		
Une vérification à savoir si les équipements pour le soudage indiquent les mêmes paramètres que sur FDMOS a-t-elle été faite? Numéros des équipements utilsés:	✓		
Y-a-t-il des certificats de coulée (mill tests) ou bons de commandes pour identifier tous les matériaux soudés ? Numéros des bons de commandes/certificats de coulée:	✓		
Les produits d'apport sont-ils dans des emballages étanches et entreposés dans un endroit au chaud et sec?	✓		
Les électrodes à bas hydrogène sont-ils dans des emballages scellées et/ou dans les fours aux températures prescrites?			✓
Des opérations de préchauffage sont-elles requises SELON LES MODES OPÉRATOIRES et/ou SELON LE TABLEAU 5.3 DE LA NORME CSA W59 selon la désignation de l'hydrogène diffusible des métaux d'apport utilisés (aucune, H16, H8, H4)?		✓	
Température de préchauffage et entre-passes à rencontrer (si requis) #FDMOS/Temp° :	Degré de température : N/A		
Le métal de base a-t-il été préparé conformément aux exigences des SMOS et selon les exigences des normes applicables ?	✓		
La compagnie possède-t-elle toutes les SMOS/FDMOS pour les assemblages à souder?	✓		
Les Modes Opératoires de Soudage (SMOS/FDMOS) sont-ils disponibles pour l'atelier et/ou le chantier?	✓		
Tous les soudeurs effectuant le soudage pour le projet sont-ils qualifiés selon les travaux de soudage à réaliser? Nom des soudeurs utilisés ou rapports CWB mensuels à consulter (mois/année)	✓		
Y a-t-il un responsable externe de l'inspection visuelle pour que toutes les soudures rencontrent les exigences des normes, codes ou des spécifications applicables AVANT LIVRAISON? Nom(s):		✓	

Document approuvé par (lettres moulées): Patrick Perreault **Date:** 04/04/17

Signature du principal responsable de la planification du projet : Patrick Perreault

LISTE DE PLANIFICATION DE PROJET POUR LA CERTIFICATION CSA W47.1-09 M à J #7

PROJET # :	5389-02
ACHETEUR :	Promec
DESSINS ET SPÉCIFICATIONS DE RÉFÉRENCE :	5389
MÉTAUX DE BASE UTILISÉ :	44W
MÉTAUX D'APPORT (MARQUE, NOM DE COMMERCE ET CLASSIFICATION) :	E491C 6M
NORMES APPLICABLES :	47,1
INSTRUCTIONS CONCERNANT LES MÉTAUX DE BASES PARTICULIERS SOUDÉS AVEC DES MÉTAUX D'APPORT APPROPRIÉS. (Si applicable) Commentaires:	N/A
ESSAIS NON-DESTRUCTIFS À EFFECTUER ET STIPULÉS AU CONTRAT AINSI QUE LES EXIGENCES À RENCONTRER. (Si applicable) Commentaires:	N/A

POINTS À VÉRIFIER EN RAPPORT AU SOUDAGE

	OUI	NON	N/A
Y-a-t-il des écarts entre les renseignements inscrits au contrat et les capacités immédiates de l'entreprise à effectuer les travaux de soudage? Si oui, comment l'acheteur en a été avisé et quelles sont les actions à prendre pour remédier à la situation:		✓	
Les actions à prendre pour remédier aux écarts ont-elles toutes été prises avant le début du contrat? Si non, pourquoi:			✓
Le superviseur en soudage, ou son délégué, est-il aux emplacements où le soudage est effectué? Nom: Patrick Perreault	✓		
Une vérification à savoir si les équipements pour le soudage indiquent les mêmes paramètres que sur FDMOS a-t-elle été faite? Numéros des équipements utilisés:	✓		
Y-a-t-il des certificats de coulée (mill tests) ou bons de commandes pour identifier tous les matériaux soudés ? Numéros des bons de commandes/certificats de coulée:	✓		
Les produits d'apport sont-ils dans des emballages étanches et entreposés dans un endroit au chaud et sec?	✓		
Les électrodes à bas hydrogène sont-ils dans des emballages scellées et/ou dans les fours aux températures prescrites?			✓
Des opérations de préchauffage sont-elles requises SELON LES MODES OPÉRATOIRES et/ou SELON LE TABLEAU 5.3 DE LA NORME CSA W59 selon la désignation de l'hydrogène diffusible des métaux d'apport utilisés (aucune, H16, H8, H4)?		✓	
Température de préchauffage et entre-passes à rencontrer (si requis) #FDMOS/Temp° :	Degré de température : N/A		
Le métal de base a-t-il été préparé conformément aux exigences des SMOS et selon les exigences des normes applicables ?	✓		
La compagnie possède-t-elle toutes les SMOS/FDMOS pour les assemblages à souder?	✓		
Les Modes Opératoires de Soudage (SMOS/FDMOS) sont-ils disponibles pour l'atelier et/ou le chantier?	✓		
Tous les soudeurs effectuant le soudage pour le projet sont-ils qualifiés selon les travaux de soudage à réaliser? Nom des soudeurs utilisés ou rapports GWB mensuels à consulter (mois/année).	✓		
Y a-t-il un responsable externe de l'inspection visuelle pour que toutes les soudures rencontrent les exigences des normes, codes ou des spécifications applicables AVANT LIVRAISON? Nom(s):		✓	

Document approuvé par (lettres moulées): Patrick Perreault **Date:** 04/07/17

Signature du principal responsable de la planification du projet : Patrick Perreault

RAPPORT POUR	06 (MOIS)	2017 (ANNÉE)

Code de compagnie					
A	C	i	J	P	1

Formulaire CWB 108F/2003-2

			QUALIFICATION						
# Employé	#	Nom de famille et prénom	Type	Procédé	Position / Classe / Catégorie	Niveau (W47.1 seul.)	Date expiration	Autorité de qualification	Usine (u) Chantier (c)
195	1	BRAULT, DARCY	S	FCAW	1 & 2 & 3		6 avr. 2019	CWB	U-C
		BRAULT, DARCY	S	MCAW	1 & 2 & 3		6 avr. 2019	CWB	U-C
		BRAULT, DARCY	S	FCAW/MCAW	1 & 2	MC-G8:G9	27 mars 2019	CWB	U-C
134	2	GAUTHIER, JEAN FRANÇOIS	S	FCAW	1 & 2 & 3		4 mai 2019	CWB	U-C
		GAUTHIER, JEAN FRANÇOIS	S	MCAW	1 & 2 & 3		4 mai 2019	CWB	U-C
270	3	AROUA, BASSEM	S	FCAW	1 & 2 & 3 & 4		25 mars 2019	CWB	U-C
		AROUA, BASSEM	S	MCAW	1 & 2 & 3 & 4		25 mars 2019	CWB	U-C
		AROUA, BASSEM	S	SMAW	1 & 2 & 3 & 4		25 juil. 2017	CWB	U-C
271	4	BERRACHED, MOHAMED	S	MCAW	1 & 2 & 3 & 4		4 mai 2019	CWB	U-C
		BERRACHED, MOHAMED	S	FCAW	1 & 2 & 3 & 4		4 mai 2019	CWB	U-C
		BERRACHED, MOHAMED	S	FCAW/MCAW	1 & 2	MC-G8:G9	27 mars 2019	CWB	U-C
15	5	MÉLANÇON, PIER-LUC	S	FCAW	1 & 2 & 3		4 mai 2019	CWB	U-C
		MÉLANÇON, PIER-LUC	S	MCAW	1 & 2 & 3		4 mai 2019	CWB	U-C
193	6	JEAN, SÉBASTIEN	S	FCAW	1		25 mars 2019	CWB	U-C
		JEAN, SÉBASTIEN	S	MCAW	1		25 mars 2019	CWB	U-C
336	7	MARIE-EVE BÉLANGER-MONAST	S	FCAW	1 & 2		30 avr. 2018	CWB	U-C
		MARIE-EVE BÉLANGER-MONAST	S	MCAW	1 & 2		30 avr. 2018	CWB	U-C
		MARIE-EVE BÉLANGER-MONAST	S	FCAW/MCAW	1 & 2	MC-G8:G9	27 mars 2019	CWB	U-C
330	8	JEAN-FRANÇOIS GILBERT	S	SMAW	1 & 2		30 avr. 2018	CWB	U-C
		JEAN-FRANÇOIS GILBERT	S	FCAW	1		20 oct. 2018	CWB	U-C
		JEAN-FRANÇOIS GILBERT	S	MCAW	1		20 oct. 2018	CWB	U-C
302	9	GIBBS SÉBASTIEN	S	FCAW	1 & 2		20 oct. 2018	CWB	U-C
		GIBBS SÉBASTIEN	S	MCAW	1 & 2		20 oct. 2018	CWB	U-C
331	10	DESROSIERS JACQUES	S	FCAW	1		20 oct. 2018	CWB	U-C
		DESROSIERS JACQUES	S	MCAW	1		20 oct. 2018	CWB	U-C
304	11	YVES LAROCHE	S	MCAW	1		11 févr. 2019	CWB	U-C
		YVES LAROCHE	S	FCAW	1		11 févr. 2019	CWB	U-C
204	12	KEVIN TREMBLAY	S	SMAW	1 & 2		30 avr. 2018	CWB	U-C
		KEVIN TREMBLAY	S	MCAW	1		25 mars 2019	CWB	U-C
		KEVIN TREMBLAY	S	FCAW	1		25 mars 2019	CWB	U-C
366	13	PILON MARC	S	SMAW	1		10 déc. 2018	CWB	U-C

PATRICK PERREAULT
MARC BRIÈRE
Signature du superviseur du soudage

NUQSANA PROMEC MINING SERVICES INC.



6515-C-270-007

Fuel Tanks Piping Supply and Installation

Weld Log

Document Number : AEM-GE-LOG-005
Contract Number : C22466T



AGNICO EAGLE

Field Weld #	Type	Diam.	Material	Schedule	Welder Ticket	Visual	NDE	Pass/Fail	Spool #	Isometric

MISTRAS
Division Estrie

Rapport / Report	E17- 26447A-010			
	Page	1	de/of	2

Ultrasons
ULTRASONIC TESTING

Client / Customer	Fabricant / Manufacturer	Commande no / P.O. Number
Groupe Promec Inc.	Groupe Promec Inc.	22466T
Éric Poulin Responsable / Responsible	Éric Poulin Responsable / Responsible	WO-40383761 No d'ouvrage / Job no
Projet / Project: AGNICO EAGLE-MELIADINE DIVISION 103-COMBUSTIBLE	Description: UT sur des joints 4" et 3" SCH 40	

Équipement / Equipment

Marque / Mark	Modèle / Model	# Série / Serial #
Olympus	Omniscan MX, 16/64M	100714

Palpeurs / Transducers

Cable	type	L	
	BNC-microdot	6	pi/ft

Marque / Mark	MHz	Diam.	Angle	# Série / Serial #
Technisonic	2,25	1/2"	70°	43004

Matériau / Material	Doc. de référence / Reference Doc.	
Acier carbone	Norme / Code:	ASME
Type de soudure / Weld type: Butt	Section:	B31.1
	Année / Year:	2016
Bloc de calibration / calibration bloc: IIW type 2 +Bloc ASME	Critères / Criteria:	--
	Technique / Method: I-TEC-02	
Milieu de couplage / Coupling liquid: Echogel Grade-20		

Identification Soudure / Weld	Face de contact / Contact Face	Epaisseur / Thickness	No réflecteur / Reflector Number	Angle de palpeur / of probe (°)	Evaluation: DAC, Référence / Reference (dB)	Evaluation: ou / or: Amplitude, de la DAC / from DAC (%)	Evaluation: ou / or: Amplitude, de la DAC / from DAC (dB)	Evaluation: Type d'indication / Indication Type	Localisation / Localization: Longueur / Length	Localisation / Localization: Trajet sonore / Soundpath	Localisation / Localization: Profondeur à partir de la surface / Depth from the surface	Localisation / Localization: Distance: De / From X	Localisation / Localization: Distance: De / From Y	Acceptation / Acceptability
Une inspection par ultrasons a été réalisée sur 5% des joints à pleine pénétration.														
Pour l'idendification des joints inspectés se conférer au tableau de la page 2.														
Joint 4" # 1		SCH 40		0°	42									Accepté
		SCH 40		70°	53									Accepté
Joint 4" # 2		SCH 40		0°	42									Accepté
		SCH 40		70°	53									Accepté
Joint 4" # 3		SCH 40		0°	42									Accepté
		SCH 40		70°	53									Accepté
Joint 4" # 4		SCH 40		0°	42									Accepté
		SCH 40		70°	53									Accepté
Joint 3" # 5		SCH 40		0°	42									Accepté
		SCH 40		70°	53									Accepté
Joint 3" # 6		SCH 40		0°	42									Accepté
		SCH 40		70°	53									Accepté

Technicien / Technician	Date	Approuvé par / Approved by	Niveau / Level		Vérifié par / Verified by
Pape Arago Bodian	2017-07-12	*Pape Arago Bodian*	ONGC / CGSB	2	KF

Ultrasons ULTRASONIC TESTING

Client / Customer	Fabricant / Manufacturer	Commande no / P.O. Number
Groupe Promec Inc.	Groupe Promec Inc.	22466T
Éric Poulin Responsable / Responsible	Éric Poulin Responsable / Responsible	WO-40383761 No d'ouvrage / Job no
Projet / Project: AGNICO EAGLE-MELIADINE DIVISION 103-COMBUSTIBLE	Description: UT sur des joints 4" et 3" SCH 40	

Identification Soudure / Weld	Face de contact / Contact Face	Epaisseur / Thickness	No réflecteur / Reflector Number	Angle de palpeur / of probe (°)	Evaluation: DAC, Référence / Reference (dB)	Evaluation: ou / or: Amplitude, de la DAC / from DAC (%)	Evaluation: ou / or: Amplitude, de la DAC / from DAC (dB)	Evaluation: Type d'indication / Indication Type	Localisation / Localization: Longueur / Length	Localisation / Localization: Trajet sonore / Soundpath	Localisation / Localization: Profondeur à partir de la surface / Depth from the surface	Localisation / Localization: Distance: De / From X	Localisation / Localization: Distance: De / From Y	Acceptation / Acceptability
Joint 3" # 7	SCH 40			0°	42									Accepté
	SCH 40			70°	53									Accepté
Joint 3" # 8	SCH 40			0°	42									Accepté
	SCH 40			70°	53									Accepté

Joint inspectée	N° DESSIN	N° SOUDURE	SOUDEUR
Joint 4" # 1	403-100-PDI-CC10-002 page (3/12)	#7	AO
Joint 4" # 2	403-100-PDI-CC10-002 page (2/12)	#2	AO
Joint 4" # 3	403-100-PDI-CC10-002 page (2/12)	#4	I
Joint 4" # 4	403-100-PDI-CC10-002 page (2/12)	#1	AO
Joint 3" # 5	403-80-PDI-CC10-029 page (1/10)	#2	AR
Joint 3" # 6	403-80-PDI-CC10-029 page (3/10)	#3	AO
Joint 3" # 7	403-80-PDI-CC10-029 page (3/10)	#6	AO
Joint 3" # 8	403-80-PDI-CC10-029 page (3/10)	#7	AO



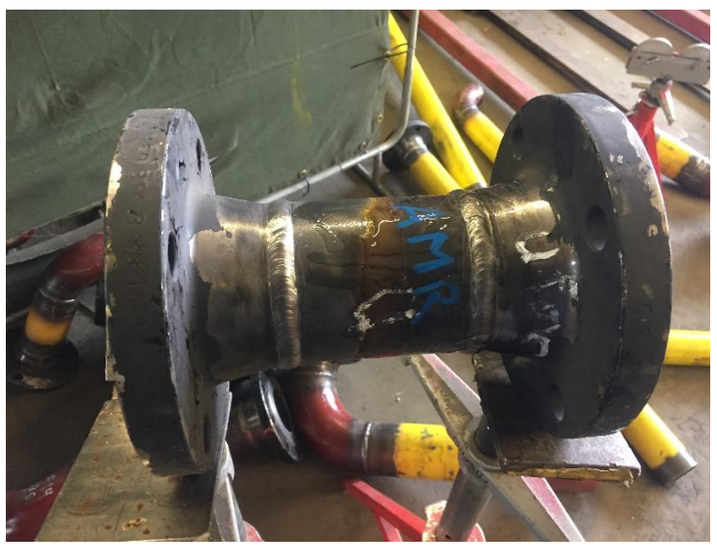



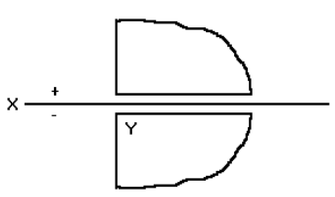

LÉGENDE

Surf. : Surface / Surface	L.O.P. : Manque de pénétration / Lack of Penetration	B.T. ; Traversée / Burn Through
C. : Concavité / Concavity	L.O.F. : Manque de Fusion / Lack of Fusion	H.L. : Alignement défecteux / Misalignment
C.K. : Fissure / Crack	I.U.C. : Caniveau intérieur / Inside Undercut	S.I. : Inclusion de Laitier / Slag Inclusion
P. : Porosité / Porosity	O.U.C. : Caniveau Extérieur / Outside Undercut	F/A. : Défaut du film / Film Artefact

Technicien / Technician	Date	Approuvé par / Approved by	Niveau / Level		Vérifié par / Verified by
Pape Arago Bodian	2017-07-12	*Pape Arago Bodian*	ONGC / CGSB	2	KF

MISTRAS
Division Saguenay

Rapport / Report	S17- 22434A-013			
	Page	1	de/of	2

Radiographie / RADIOGRAPHY

Client / Customer	Fabricant / Manufacturer	Commande no / P.O. Number
Unies-Fab	Unies-Fab	N/A
Responsable / Responsible	**Responsable / Responsible**	**No d'ouvrage / Job no**
Brian Savard	Brian Savard	UF-2106
Projet / Project	**Description**	
Promec	Radiographie sur tuyauteries	

Source
Appareil/ Device: Delta 880 S/N D4446
Isotope: Iridium 192
Cu: 48 MA:
Exposition: varia min
Point focal/focal spot: po

Exposition
Méthode/method: Double paroi / double wall
Contact

Interprétation / Viewing
Méthode/method: Lecture simple / simple viewing

Développement / Processing
Méthode/method: Manuel/manual

Distance
Source/ surface: varia po/ inch
Surface / film : varia po/ inch

FILMS

Film:	Qté / Qty	Type
3½ x 8½		
3½ x 17		
4½ x 8½	21	Fuji 80
4½ x 17		
7 x 17		
14 x 17		

Doc. de référence / Reference Doc.

Norme / Code:	ASME
Section:	B31.3
Année / Year:	2014
Critères / Criteria:	Condition Normal

Technique / Method
I TEC 03

Pénét. / I.Q.I		Plomb / Lead	Film / cassette	Exposition Qté/Qty	Matériau / Material
ASTM 1B11	ASTM 1B11	0,010" /0,010"	Simple	21	Acier carbone/Carbone steel

Identification de la radiographie / Radiograph identification		Épaisseur / Thickness: Matériel / Matérial	Renforcement / Build up	Soudure / Weld	Soudeur / Welder	Évaluation / Interpretations: ACC	REJ	Discontinuité et Localisation du manque / Discontinuity and Defect location			CR: Contraste / Contrast	CR: Brillance / Brightness
Joint 12 MK-54 *	O - 5	,236"	,125"	,350"	31	√						
403P-100-PDI-CC10-002 6/12	5 - 10	,236"	,125"	,350"	31	√						
	10 - O	,236"	,125"	,350"	31	√						
Joint 13 MK-67 *	O - 5	,236"	,125"	,350"	38	√						
403P-100-PDI-CC10-004 1/2	5 - 10	,236"	,125"	,350"	38	√						
	10 - O	,236"	,125"	,350"	38	√						
Joint 14 MK-52 *	O - 5	,236"	,125"	,350"	31	√						
403P-100-PDI-CC10-001 2/6	5 - 10	,236"	,125"	,350"	31	√						
	10 - O	,236"	,125"	,350"	31	√						
Joint 15 MK-53 *	O - 5	,236"	,125"	,350"	6	√						
403P-100-PDI-CC10-001 2/6	5 - 10	,236"	,125"	,350"	6	√						
	10 - O	,236"	,125"	,350"	6	√						
Joint 16 MK-55A *	O - 5	,236"	,125"	,350"	24	√						
403P-100-PDI-CC10-002 6/12	5 - 10	,236"	,125"	,350"	24	√						
	10 - O	,236"	,125"	,350"	24	√						

LEGENDE / LEGEND

Surf. : Surface / Surface	L.O.P. : Manque de pénétration / Lack of Penetration	B.T. : Traversée / Burn Through	G : Glaçon / Icicle
C. : Concavité / Concavity	L.O.F. : Manque de Fusion / Lack of Fusion	H.L. : Alignement défecteux / Misalignment	A.D. : Arrêt-départ / Stop-start
C.K. : Fissure / Crack	I.U.C. : Caniveau intérieur / Inside Undercut	S.I. : Inclusion de Laitier / Slag Inclusion	T.I. : Inclusion de tungstène / tungsten incl.
P. : Porosité / Porosity	O.U.C. : Caniveau Extérieur / Outside Undercut	F/A. : Défaut du film / Film Artefact	

Technicien / Technician	Date	Approuvé par / Approved by	Niveau / Level		Vérifié par / Verified by
Jean-Philip Gingras	2017-07-10	*Jean-Philip Gingras*	ONGC / CGSB	2	VR

Brian Savard 10/07/2017

MISTRAS
Division Saguenay

Rapport / Report	S17- 22434A-013			
	Page	2	de/of	2

Radiographie RADIOGRAPHY

Client / Customer	Fabricant / Manufacturer	Commande no / P.O. Number
Unies-Fab	Unies-Fab	N/A
Responsable / Responsible	**Responsable / Responsible**	**No d'ouvrage / Job no**
Brian Savard	Brian Savard	UF-2106
Projet / Project	**Description**	
Promec	Radiographie sur tuyauteries	

Identification de la radiographie / Radiograph identification		Épaisseur / Thickness			Soudeur / Welder	Évaluation / Interpretation		Discontinuité et localisation du manque / Discontinuity and Defect location			CR	
		Matériel / Matérial	Renforcement / Build up	Soudure / Weld		ACC	REJ				Contraste / Contrast	Brillance / Brightness
Joint 17 MK-55	O - 5	,236"	,125"	,350"	24	√						
403P-100-PDI-CC10-002 6/12	5 - 10	,236"	,125"	,350"	24	√						
	10 - O	,236"	,125"	,350"	24	√						
Joint 18 MK-65	O - 5	,236"	,125"	,350"	24	√						
403P-100-PDI-CC10-004 1/2	5 - 10	,236"	,125"	,350"	24	√						
	10 - O	,236"	,125"	,350"	24	√						

LÉGENDE / LEGEND

Surf. : Surface / Surface	L.O.P. : Manque de pénétration / Lack of Penetration	M.T. : Traversée / Burn Through	O. : Oblique / Oblique		
C. : Concavité / Concavity	L.O.F. : Manque de Fusion / Lack of Fusion	M.L. : Alignement défectueux / Misalignment	A.D. : Arrêt-départ / Stop-start		
C.K. : Fissure / Crack	I.U.C. : Caniveau intérieur / Inside Undercut	S.I. : Inclusion de Laitier / Slag Inclusion	T.I. : Inclusion de tungstène / tungsten incl.		
P. : Porosité / Porosity	O.U.C. : Caniveau Extérieur / Outside Undercut	F/A. : Défaut du film / Film Artefact			

Technicien / Technician	Date	Approuvé par / Approved by	Niveau / Level		Vérifié par / Verified by
Jean-Philip Gingras	2017-07-10	*Jean-Philip Gingras*	ONGC / CGSB	2	VR

F-Radiog.xlsx

Rév.25

Brian Savard 10/07/2017

TO BE VALIDATED

AT A LATER DATE

NDE Will be perform next summer. Temperature was too cold to be done.

AGNICO EAGLE

Vendor Document Status

1 ☐ Proceed to next submission and status.

2 ☐ Proceed with exceptions as noted to next submission and status.

3 ☐ Do not proceed.
Revise as noted and resubmit next submission and status.

4 ☑ Complete, no further submission required.

By: JEAN-FRANCOIS TREMBLAY Date: 2017-06-22

Review and authorization to fabricate are only for general conformance with the design concept of the Project as expressed in the Contract Documents. Sole responsibility for the accuracy and completeness of this document, including but not limited to dimensions and quantities, remains with the Supplier/Contractor. Agnico Eagle does not warrant the accuracy or completeness of any of the information contained herein, nor does Agnico Eagle authorize or approve any construction means, methods, techniques, sequences or any safety precautions or procedures.

Agnico Eagle No. 6515-C-270-007-141-TES-0045 R: Sub002

DOCUMENT FOR INFORMATION

NUQSANA PROMEC MINING

Agnico-Eagle Mines Ltd.
Pressure Test Report

ITR Number : AEM-PI-ITR-001
Contract no. : C22466T

AGNICO EAGLE

Design Code	Design Test Pressure	Test Medium	Medium Temp.	Test Duration

P&ID (Highlight Boundaries)	Rev	Line	Drawing/ISO	Rev	Spool

Pressure Test Specifications

	Contractor	Date (dd-mm-yy)	Client	Date (dd-mm-yy)
Pre-Hydro Inspection				
NDE/PWHT Clearance				
Release for Test				

Test Instruments

	Make/Model	Serial Number	Test Range (psi)	Calibration Date
Upper				
Lower				

Test Data

	Time	Test Pressure	Ambient Temp. (C)	Pipe Temp. (C)	Comments
Start					
Finish					

Comments/Referenced Documents (e.g. applicable field reports):

PRESSURE TEST COMPLETE

Contractor Representative			Client Representative		
Name (Print)	Signature	Date	Name (Print)	Signature	Date

LINE RESTORATION COMPLETE

Contractor Representative			Client Representative		
Name (Print)	Signature	Date	Name (Print)	Signature	Date

ADDITIONAL LINES

P&ID	Rev	Line	Drawing/ISO	Rev	Spool

P&ID	Rev	Line	Drawing/ISO	Rev	Spool

NUQSANA-PROMEC MINING

Agnico-Eagle Mines Ltd.
Pressure Test Report

ITR Number : AEM-PI-ITR-001
Contract no. : C22466T

AGNICO EAGLE

P&ID	Rev	Line	Drawing/ISO	Rev	Spool
		Test 1	403P-100-PDI-CC10-002	0	P5 5/12
					Jusqu'a 12/12
			403P-100-PDI-CC10-003	0	1/1
			403P-100-PDI-CC10-004	0	1/2
					2/2
			403P-100-PDI-CC10-005		1/1
		Test 2	403P-100-PDI-CC10-008		1/10
					2/10 3/10 4/10
					5/10 6/10 7/10
			403P-100-PDI-CC10-009		1/3 2/3 3/3
			403P-100-PDI-CC10-12		1/1
			403P-100-PDI-CC10-13		1/1

Agnico-Eagle Mines Ltd.
Pressure Test Report

ITR Number : AEM-PI-ITR-001
Contract no. : C22466T

NUQSANA-PROMEC MINING SERVICES INC.

AGNICO EAGLE

Design Code	Design Test Pressure	Test Medium	Medium Temp.	Test Duration
	60 PSI	Pneumatic	-15°C	1h

P&ID (Highlight Boundaries)	Rev	Line	Drawing/ISO	Rev	Spool
65-416-205-200	1	403P-80 PDI-CC10-014	1/2 2/2	0	
		403P-80 - PDI -CC10-015	1/19 2/19	0	

Pressure Test Specifications

	Contractor	Date (dd-mm-yy)	Client	Date (dd-mm-yy)
Pre-Hydro Inspection				
NDE/PWHT Clearance				
Release for Test	Promec	12/11/17	AEM	12/11/17

Test Instruments

	Make/Model	Serial Number	Test Range (psi)	Calibration Date
Upper	PFQ Series, Winters	617-0674	0 - 300	May 15 2017
Lower				

Test Data

	Time	Test Pressure	Ambient Temp. (C)	Pipe Temp. (C)	Comments
Start	5 h00 PM	60 PSI	-15°C	-15°C	
Finish	6 h00 PM	60 PSI	-15°C	-15°C	

Comments/Referenced Documents (e.g. applicable field reports):

PRESSURE TEST COMPLETE

Contractor Representative			Client Representative		
R Lamothe		12/11/17			
Name (Print)	Signature	Date	Name (Print)	Signature	Date

LINE RESTORATION COMPLETE

Contractor Representative			Client Representative		
R Lamothe		12/11/17			
Name (Print)	Signature	Date	Name (Print)	Signature	Date

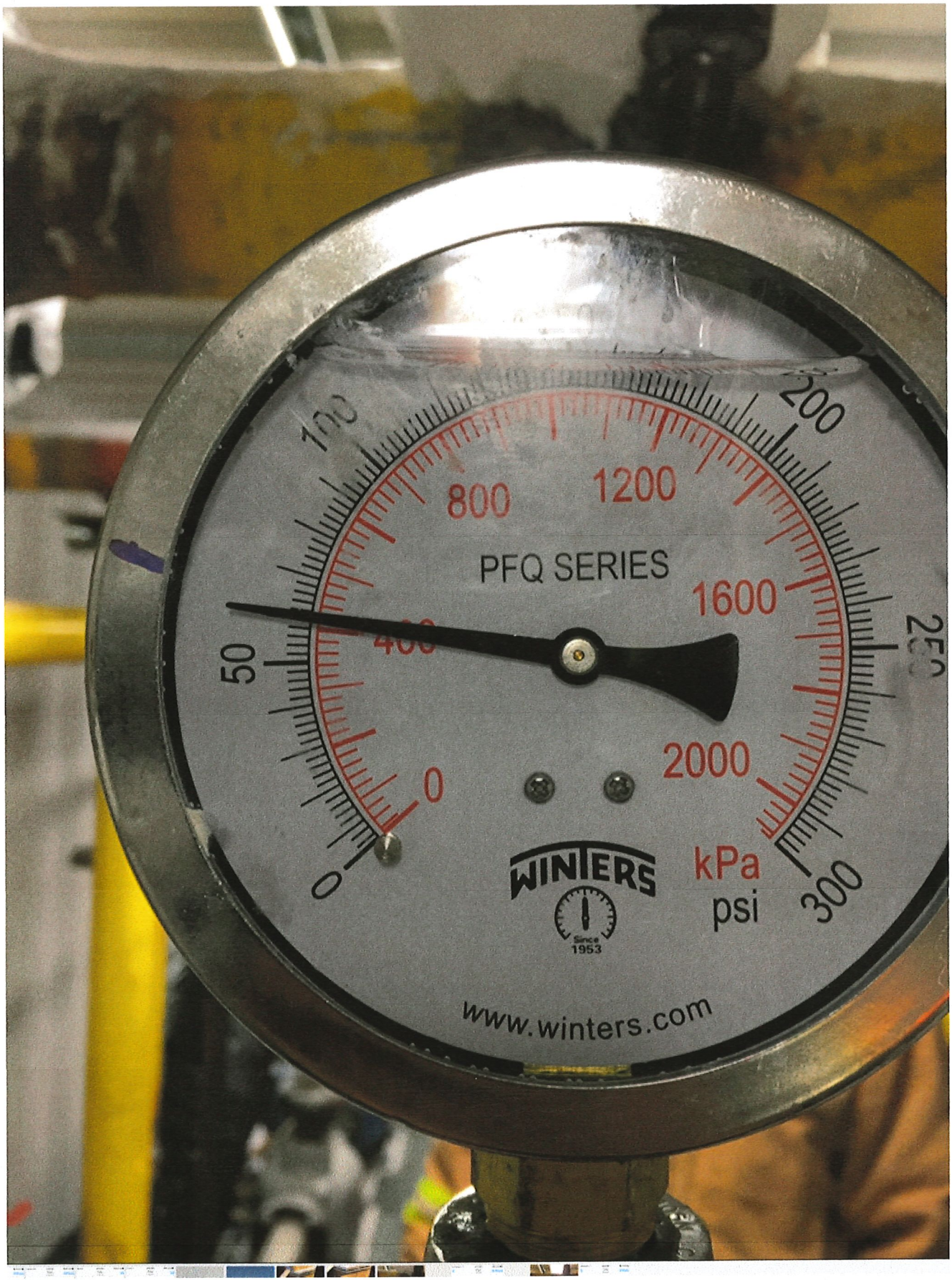
PFQ SERIES
WINTERS
Since 1953
kPa
psi
www.winters.com

No Service 11:44 AM 77%

Today
6:56 AM

Edit

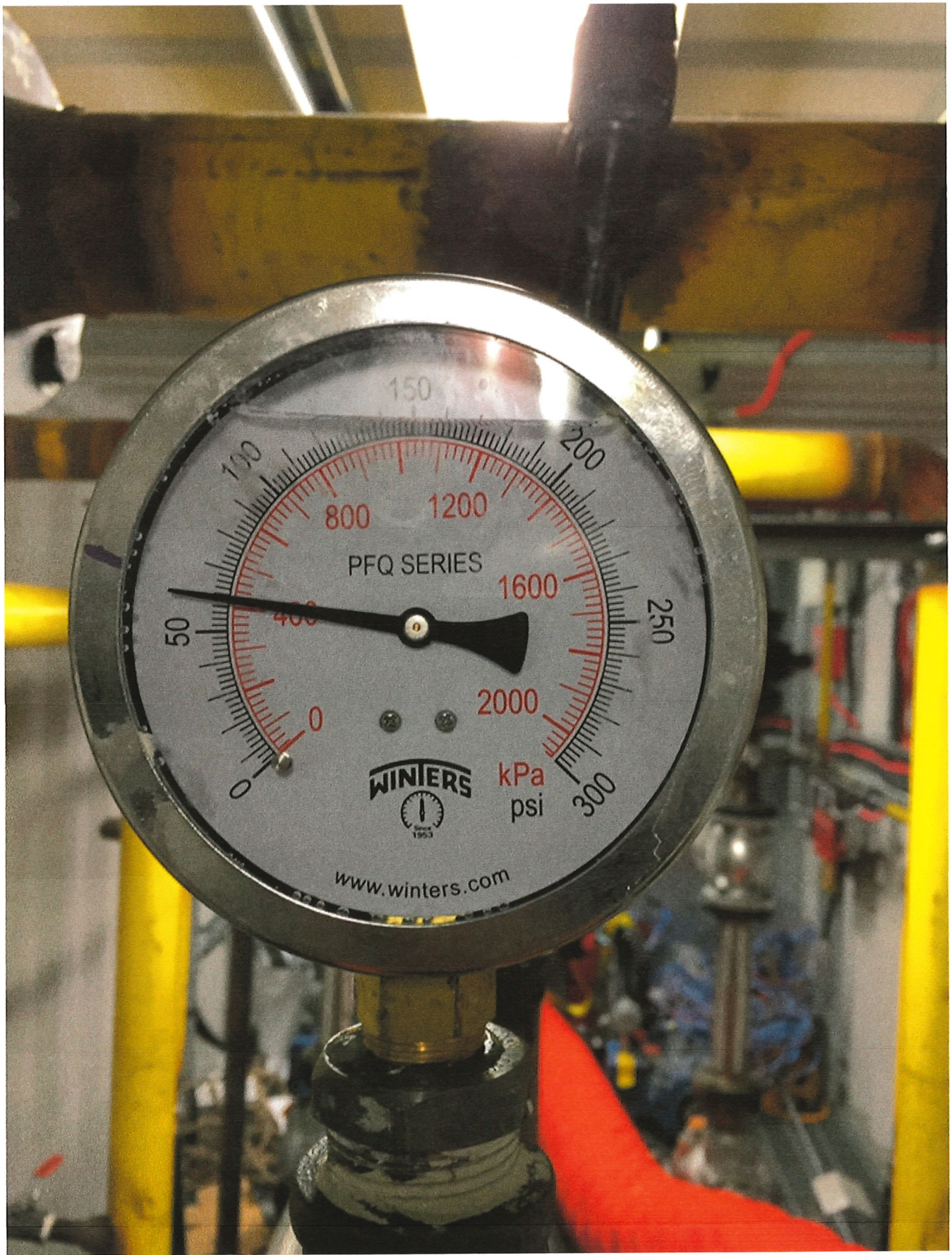

Test 1

Agnico-Eagle Mines Ltd.
Pressure Test Report

ITR Number : AEM-PI-ITR-001
Contract no. : C22466T

Design Code	Design Test Pressure	Test Medium	Medium Temp.	Test Duration
	60 PSI	Pneumatic	-12°C	1h

P&ID (Highlight Boundaries)	Rev	Line	Drawing/ISO	Rev	Spool
		See Page 2			

Pressure Test Specifications

	Contractor	Date (dd-mm-yy)	Client	Date (dd-mm-yy)
Pre-Hydro Inspection				
NDE/PWHT Clearance				
Release for Test	Promec	10/11/17	AEM	10/11/17

Test Instruments

	Make/Model	Serial Number	Test Range (psi)	Calibration Date
Upper	PFQ Winters	617-0674	0-300	May 15 2017
Lower				

Test Data

	Time	Test Pressure	Ambient Temp. (C)	Pipe Temp. (C)	Comments
Start	7h30	60 PSI	-12°C	-12°C	
Finish	9h00	60 PSI	-12°C	-12°C	

Comments/Referenced Documents (e.g. applicable field reports):

PRESSURE TEST COMPLETE

Contractor Representative			Client Representative		
Robbie Lowthe		10/11/17			
Name (Print)	Signature	Date	Name (Print)	Signature	Date

LINE RESTORATION COMPLETE

Contractor Representative			Client Representative		
		10/11/17			
Name (Print)	Signature	Date	Name (Print)	Signature	Date

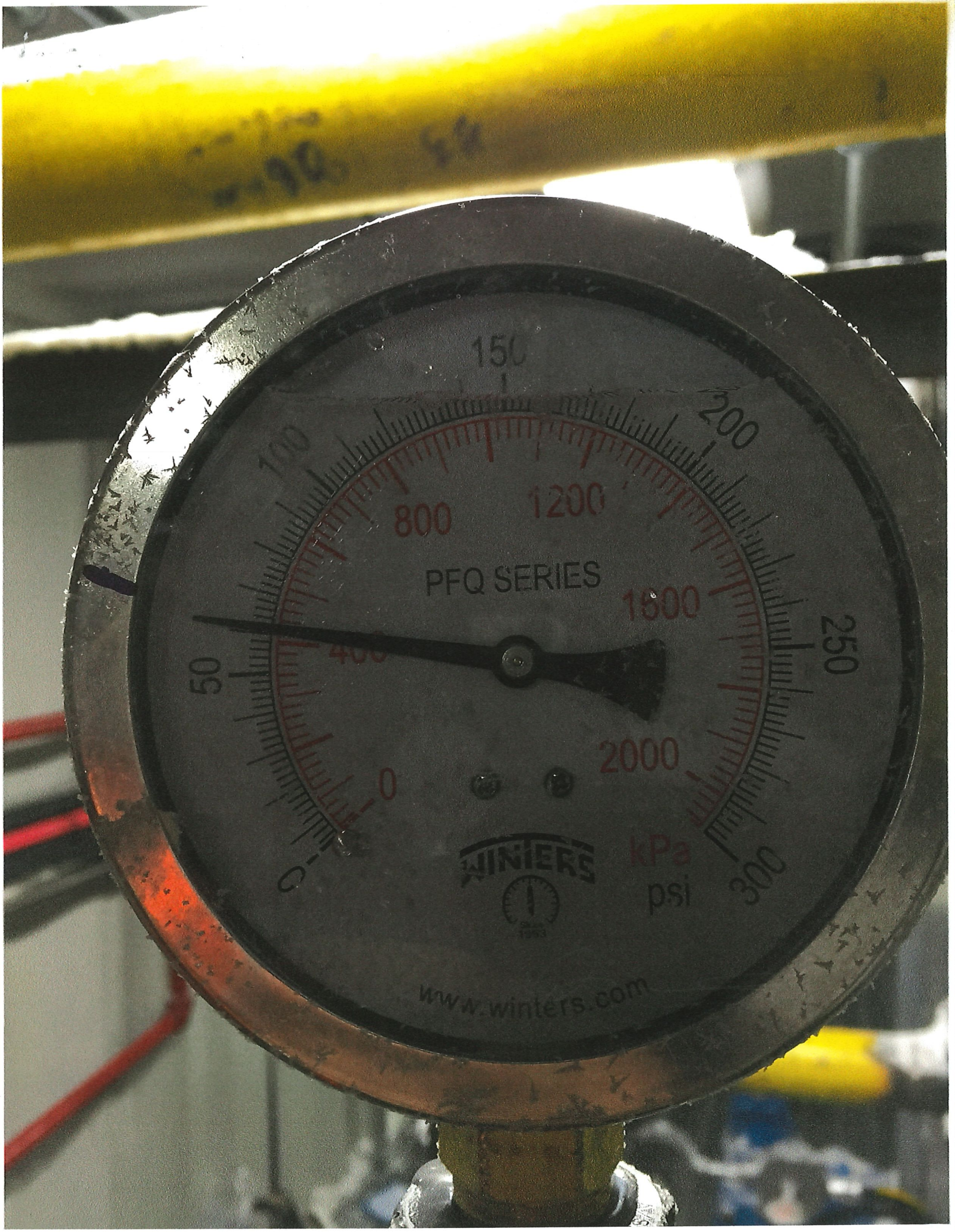
150
200
100
800
1200
PFQ SERIES
1600
50
250
400
2000
0
WINTERS
kPa
psi
300
www.winters.com

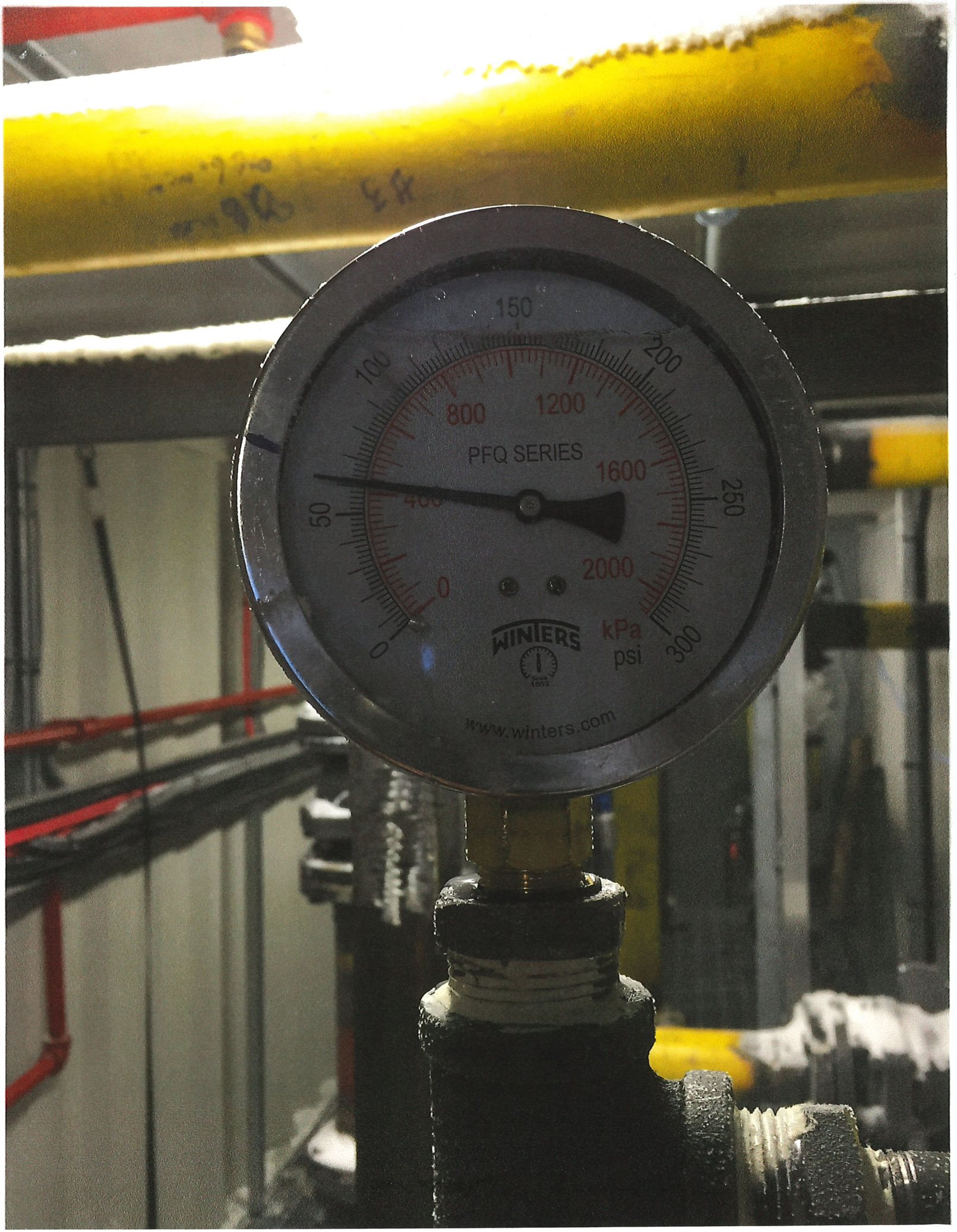
150
100
200
800
1200
PFQ SERIES
1600
50
250
2000
0
0
300
WINTERS
kPa
psi
www.winters.com

Test 2

Agnico-Eagle Mines Ltd.
Pressure Test Report

ITR Number : AEM-PI-ITR-001
Contract no. : C22466T

Design Code	Design Test Pressure	Test Medium	Medium Temp.	Test Duration
	60 PSI	Pneumatic	-15 °C	1h

P&ID (Highlight Boundaries)	Rev	Line	Drawing/ISO	Rev	Spool
		See Page 2			

Pressure Test Specifications

	Contractor	Date (dd-mm-yy)	Client	Date (dd-mm-yy)
Pre-Hydro Inspection				
NDE/PWHT Clearance				
Release for Test	Promec	10/11/17	AEM	10/11/17

Test Instruments

	Make/Model	Serial Number	Test Range (psi)	Calibration Date
Upper	PFQ Winters	617 0674	0-300	May 15 2017
Lower				

Test Data

	Time	Test Pressure	Ambient Temp. (C)	Pipe Temp. (C)	Comments
Start	7h30	60 PSI	-15°	-15°	
Finish	10h00	60 PSI	-15°	-15°	

Comments/Referenced Documents (e.g. applicable field reports):

PRESSURE TEST COMPLETE

Contractor Representative			Client Representative		
Robbie Lamothe		10/11/17			
Name (Print)	Signature	Date	Name (Print)	Signature	Date

LINE RESTORATION COMPLETE

Contractor Representative			Client Representative		
	Robbie Lamothe	11/11/17			
Name (Print)	Signature	Date	Name (Print)	Signature	Date

No Service 9:59 AM 81%

Today
7:29 AM

Edit

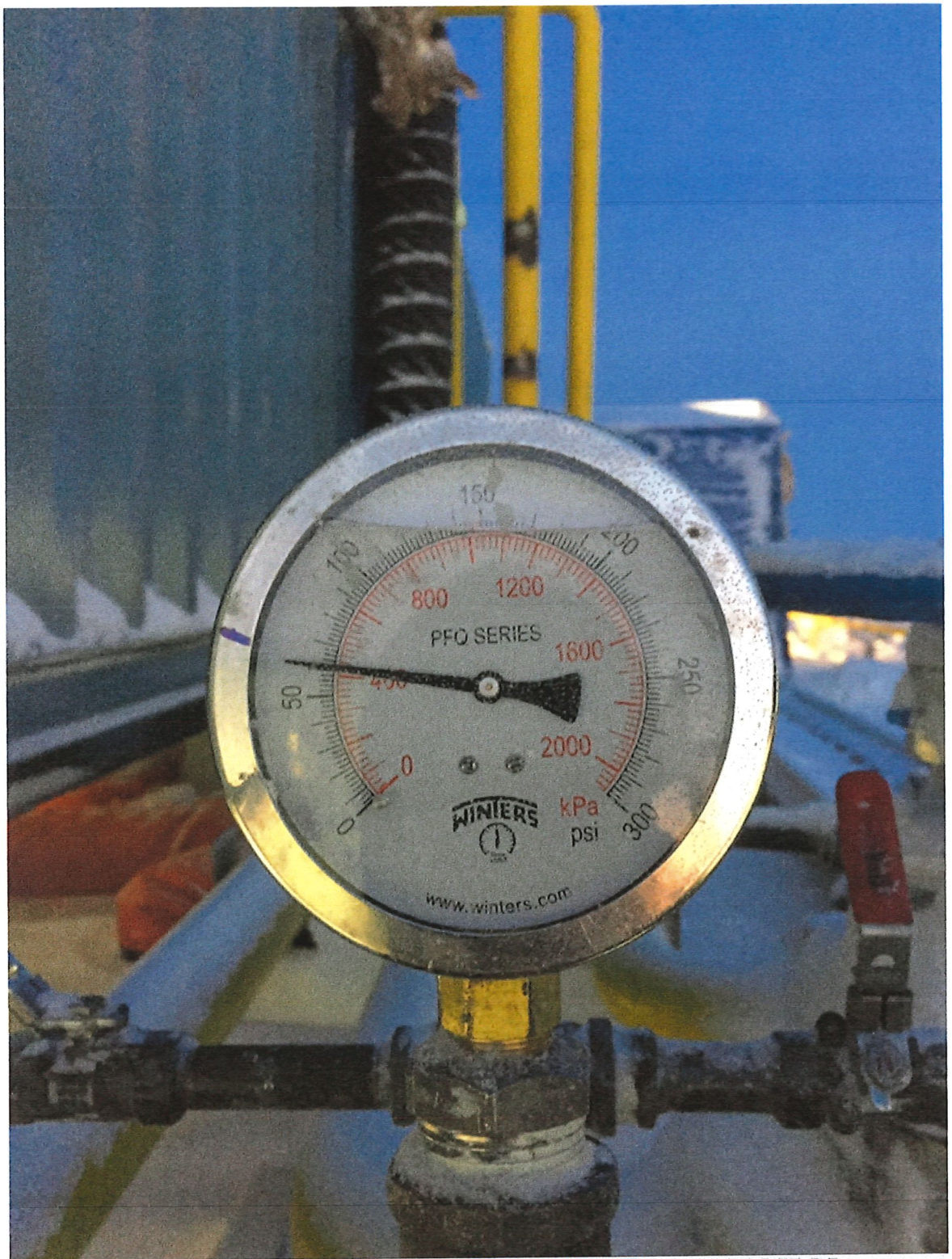



No Service 10:01 AM 81%

Today
9:54 AM

Edit

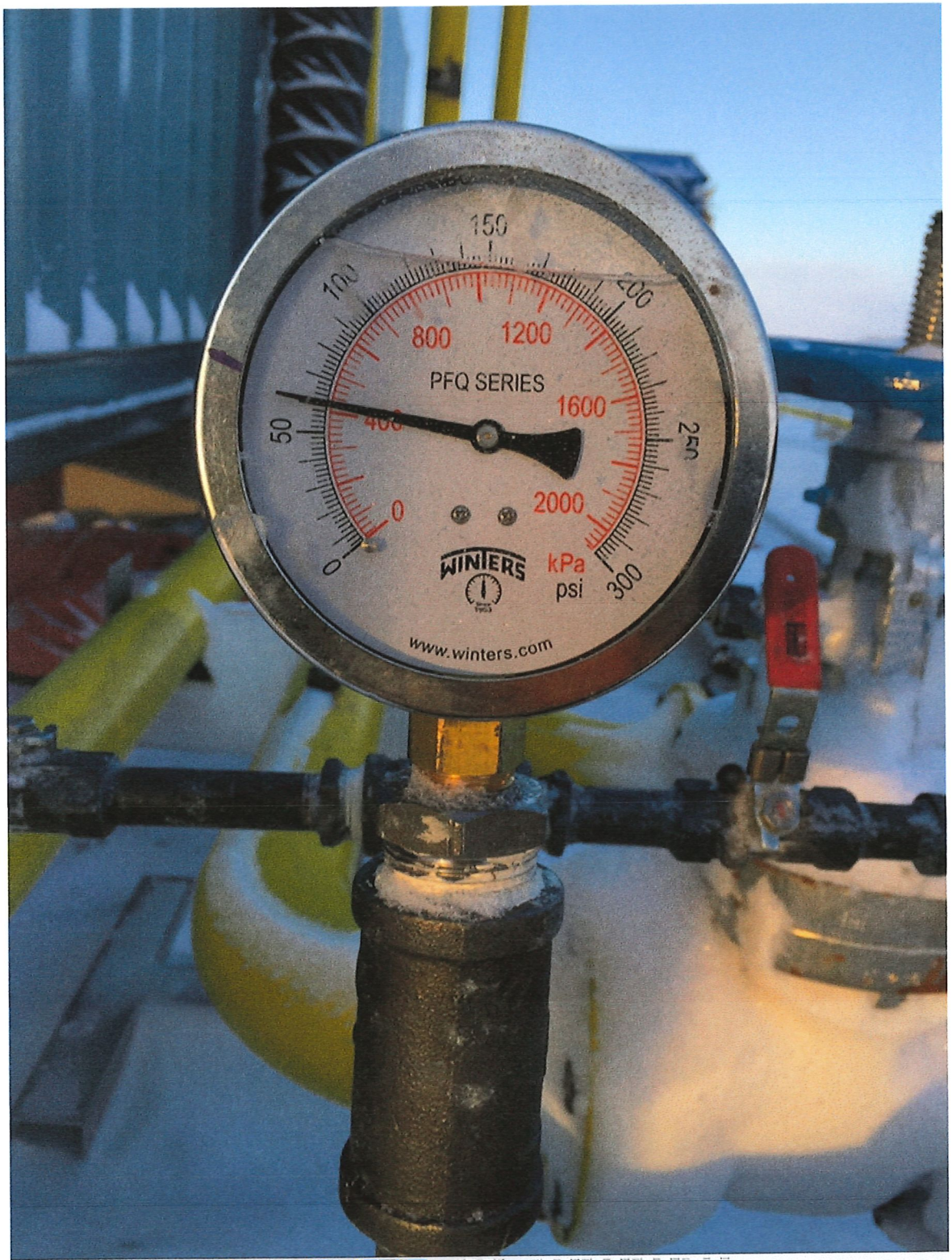



NUQSANA PROMEC MINING

Agnico-Eagle Mines Ltd.
Pressure Test Report

ITR Number : AEM-PI-ITR-001
Contract no. : C22466T

AGNICO EAGLE

Design Code	Design Test Pressure	Test Medium	Medium Temp.	Test Duration
	60 PSI	Pneumatic	-15°C	60 min

P&ID	Rev	Line	Drawing/ISO	Rev	Spool
See attached		??	??		
Drawings					
New line to Vent					
Raise Reservoir 50000	lit	Fuel			

Pressure Test Specifications

	Contractor	Date (dd-mm-yy)	Client	Date (dd-mm-yy)
Pre-Hydro Inspection				
NDE/PWHT Clearance				
Release for Test	R Lamothe Promec	2/12/17		

Test Instruments

	Make/Model	Serial Number	Test Range (psi)	Calibration Date
Upper			0-300 PSI	
Lower				

Test Data

	Time	Test Pressure	Ambient Temp. (C)	Pipe Temp. (C)	Comments
Start	11h08 AM	60 PSI	-15°C	-15°C	
Finish	1h46 PM	60 PSI	-15°C	-15°C	

Comments/Referenced Documents (e.g. applicable field reports):

ECN-006 Added 50k liter tank.

PRESSURE TEST COMPLETE

Contractor Representative			Client Representative		
R Lamothe		2/12/17	Serge Leblanc		02/12/2017
Name (Print)	Signature	Date	Name (Print)	Signature	Date

LINE RESTORATION COMPLETE

Contractor Representative			Client Representative		
R Lamothe		2/12/17	Serge Leblanc		02/12/2017
Name (Print)	Signature	Date	Name (Print)	Signature	Date

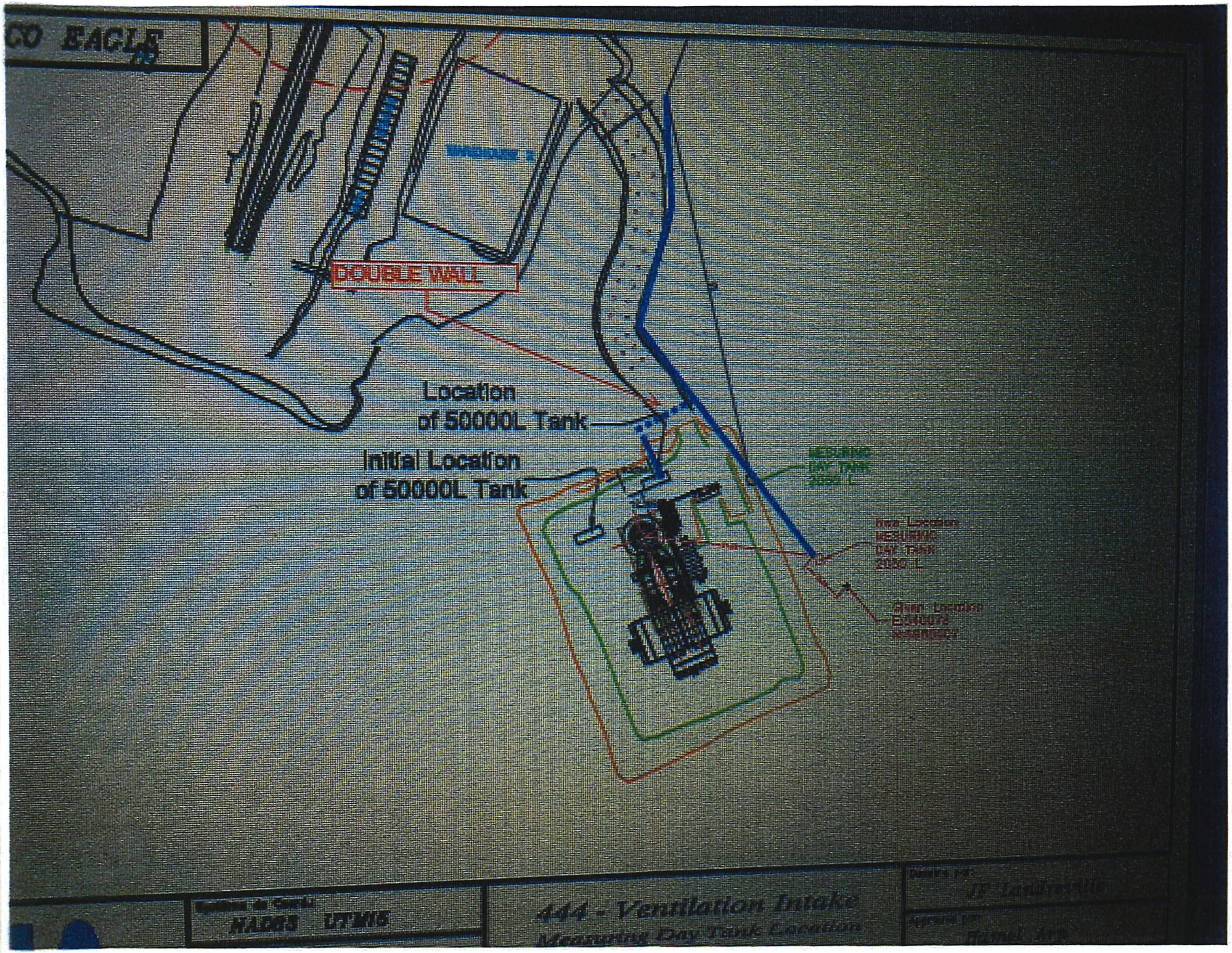
DOUBLE WALL
Location
of 50000L Tank
Initial Location
of 50000L Tank

Today
11:08 AM

Edit

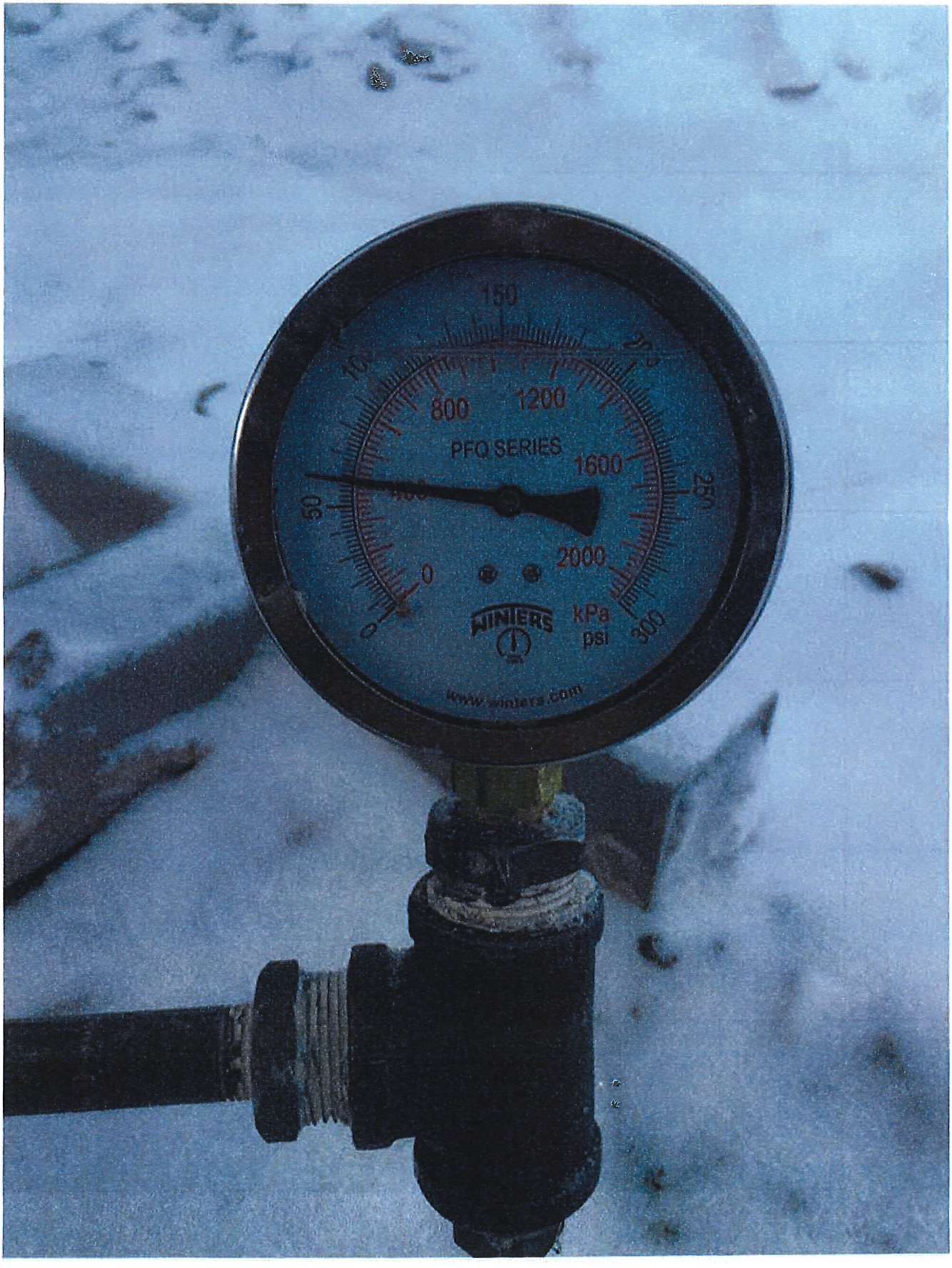

Today
1:46 PM

Edit

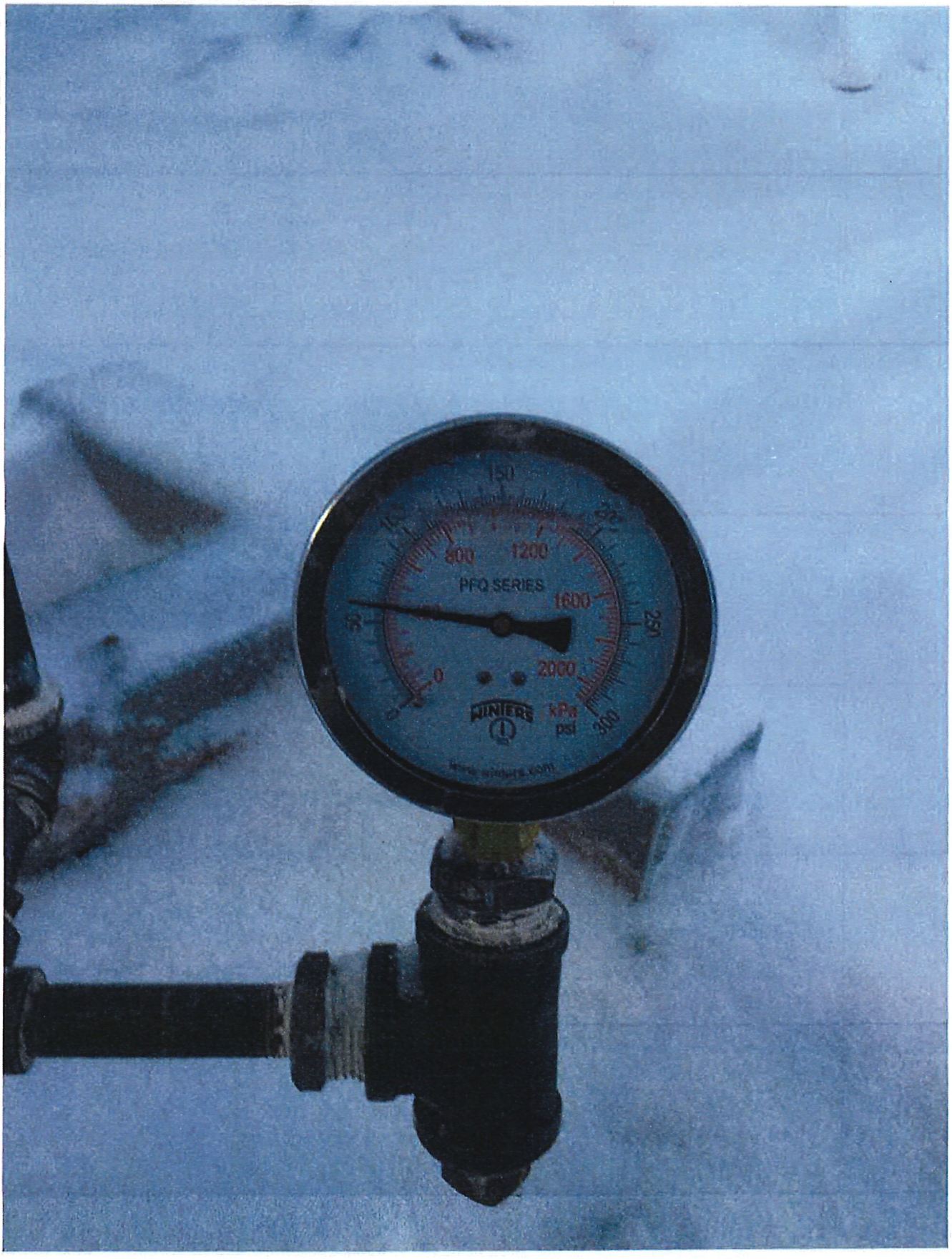

TO BE VALIDATED

AT A LATER DATE

TO BE VALIDATED

AT A LATER DATE

VIKING FIRE PROTECTION INC. 3005 | Pitfield boulevard | Saint-Laurent, Québec, Canada | H4S 1H4
Tel.: 514.332.5110 Fax: 514.332.6260 info@vikingfire.ca

AUTOMATIC DRY CHEMICAL FIRE SUPRESSION SYSTEMS

TECHNICAL MANUAL

FOR

AGNICO EAGLE MELIADINE PROJECT KIVALLIQ REGION, NUNAVUT TERRITORY, CANADA

C-270-007 – FUEL MODULES

SUBMITTED BY

VIKING FIRE PROTECTION INC.
3005, PITFIELD BOUL.
ST-LAURENT, QUÉBEC,
CANADA H4S 1H4
Tel.: 514-332-5110
Fax: 514-332-6260

CONTRACT N° VMC04097

July 2017

VIKING FIRE PROTECTION INC. 3005 | Pitfield boulevard | Saint-Laurent, Québec, Canada | H4S 1H4
Tel.: 514.332.5110 Fax: 514.332.6260 info@vikingfire.ca

TABLE OF CONTENT

- **Chapter 1**
  General Information
- **Chapter 2**
  Components
- **Chapter 3**
  Design
- **Chapter 4**
  Installation
- **Chapter 5**
  Maintenance

VIKING FIRE PROTECTION INC. 3005 | Pitfield boulevard | Saint-Laurent, Québec, Canada | H4S 1H4
Tel.: 514.332.5110 Fax: 514.332.6260 info@vikingfire.ca

CHAPTER 1

GENERAL INFORMATION

CHAPTER I
General Information

INTRODUCTION

PYRO-CHEM automatic dry chemical fire suppression systems are of the pre-engineered type as defined by the NFPA Standard for Dry Chemical Extinguishing Systems, NFPA-17. The extinguishing units described in this manual are intended to be installed, inspected, and maintained in accordance with NFPA-17. Limitations detailed in this manual have been established through extensive testing by Underwriters Laboratories, Inc. Installation and maintenance of the system must conform to the limitations detailed in this manual and be performed by an Authorized PYRO-CHEM dealer.

The PYRO-CHEM Industrial Fire Suppression System utilizes a either a sodium bicarbonate based dry chemical agent (specifically designed to suppress liquid, gas or electrical fires) or a monoammonium phosphate based dry chemical agent (specifically designed to suppress carbonaceous solid, liquid, gas or electrical fires). The system provides mechanical or electrical automatic actuation and can be manually actuated through a remote mechanical pull station. Upon actuation, the system discharges a pre-determined amount of agent to the hazard area.

The shutdown of fuel and power to the hazard area is required upon system actuation. Exhaust fan(s) in the ventilation system must be shut off during system discharge to allow the proper concentration of agent to build up in the hazard area.

TEMPERATURE LIMITATIONS

The operating temperature ranges of the PYRO-CHEM System are:

Monoammonium Phosphate (ABC) Total Flooding Systems: –20 °F (–28 °C) minimum to 120 °F (49 °C) maximum.

Local Application – Overhead Systems: 32 °F (0 °C) minimum to 120 °F (49 °C) maximum.

Local Application – Tankside Systems: –20 °F (–28 °C) minimum to 120 °F (49 °C) maximum.

UL LISTING

The PYRO-CHEM Industrial Fire Suppression System has been tested to the UL Standard for Pre-Engineered Dry Chemical Extinguishing System Units, UL1254 (Revised Sept. 29, 1998), and Listed by Underwriters Laboratories, Inc.

VIKING FIRE PROTECTION INC. 3005 Pitfield boulevard Saint-Laurent, Québec, Canada H4S 1H4
Tel.: 514.332.5110 Fax: 514.332.6260 info@vikingfire.ca

CHAPTER 2

COMPONENTS

CHAPTER II
COMPONENTS

CYLINDERS & VALVE

PYRO-CHEM automatic dry chemical systems are supplied in 17 pound, 25 pound, 35 pound, 50 pound, and 70 pound capacity cylinders. They are the Models PCI-15ABC, PCI-17ABC, PCI-25sBC, PCI-25sABC, PCI-35ABC, PCI-50sBC, PCI-50sABC, and PCI-70ABC. Each cylinder must be separately piped to its own nozzles. All models are charged with dry nitrogen to 350 psi @ 70° F. These systems are for **indoor hazard protection only.** The particular models are as follows:

PCI-15ABC. This system is charged with 12.5 pounds of monoammonium phosphate-based dry chemical, PYRO-CHEM Part No. 550170. It is Listed for use in total flooding applications. It is rated to protect Class "A," "B," and "C" hazards.

PCI-17ABC. This system is charged with 17 pounds of monoammonium phosphate based dry chemical, PYRO-CHEM Part No. 550170. It is Listed for use in total flooding applications. It is rated to protect Class "A," "B," and "C" hazards.

PCI-25sBC. This system is charged with 25 pounds of regular sodium bicarbonate based dry chemical, PYRO-CHEM Part No. 550162. It is Listed for use in local overhead and local tankside applications. It is rated to protect only Class "B" and "C" hazards.

PCI-25sABC. This system is charged with 25 pounds of monoammonium phosphate based dry chemical, PYRO-CHEM Part No. 550170. It is Listed for use in local overhead and local tankside applications. It is rated to protect Class "A," "B," and "C" hazards.

PCI-35ABC. This system is charged with 35 pounds of monoammonium phosphate based dry chemical, PYRO-CHEM Part No. 550170. It is Listed for use in total flooding applications. It is rated to protect Class "A," "B," and "C" hazards.

PCI-50sBC. This system is charged with 50 pounds of regular sodium bicarbonate based dry chemical, PYRO-CHEM Part No. 550162. It is Listed for use in local overhead and local tankside applications. It is rated to protect only Class "B" and "C" hazards.

PCI-50sABC. This system is charged with 50 pounds of monoammonium phosphate based dry chemical, PYRO-CHEM Part No. 550170. It is Listed for use in local overhead and local tankside applications. It is rated to protect Class "A," "B," and "C" hazards.

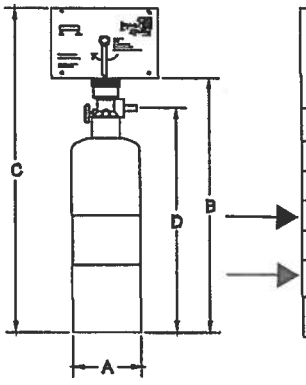

MODEL NO.	A	B	C	D	WEIGHT	MOUNTING BRACKET USED
PCI-15ABC	6.00	21.44	27.19	18.69	30 lbs.	MB-15
PCI-17ABC	8.00	24.81	30.56	22.06	50 lbs.	MB-15
PCI-25sABC/BC	8.00	24.81	30.56	22.06	58 lbs.	MB-15
PCI-35ABC	10.00	29.94	35.69	27.18	71 lbs.	MB-1
PCI-50sABC/BC	10.00	29.94	35.69	27.18	86 lbs.	MB-1
PCI-70ABC	12.00	35.31	41.06	32.56	130 lbs.	MB-1
ALL DIMENSIONS IN INCHES						

Figure 2-1 Cylinder and Valve Assemblies
002841PC

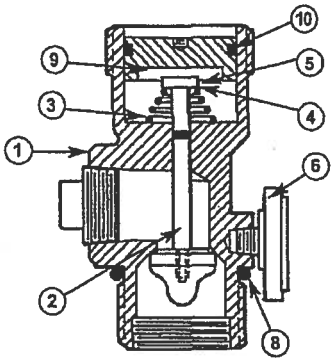

ITEM	PART NO.	DESCRIPTION
1	– – –	VALVE BODY
2	– – –	VALVE STEM & CAP ASSEMBLY
3	550022	CONICAL SPRING
4	550261	RETAINING WASHER
5	550024	E-RING
6	550025	PRESSURE GAUGE
7	550026	HIGH TEMPERATURE RELIEF PLUG
8	550029	VALVE BODY O-RING
9	550805	PISTON
10	550636	PISTON O-RING

Figure 2-2 Valve Cross Section
002842PC

PCI-70ABC. This system is charged with 70 pounds of monoammonium phosphate based dry chemical, PYRO-CHEM Part No. 550170. It is Listed for use in total flooding applications. It is rated to protect Class "A," "B," and "C" hazards.

The dimensions of the PCI-15/17/25s/35/50s/70 cylinder and valve assemblies are shown in **Figure 2-1.** The cylinder is manufactured, tested, and marked in accordance with DOT specification 4BW350.

The valve shown in **Figure 2-2** is a pressure sealed, poppet type valve. It is used on the PCI-15/17/25s/35/50s/70, PAC-10, and PAC-200 cylinders. The valve discharge port is 3/4 in. NPT.

NOZZLES

Nozzles have been developed for total flooding, local application overhead, and local application tankside. The Model NF-ABC nozzle is used for total flooding protection. The Model N-SCR nozzle is used for screening the opening. The Model N-OTF nozzle is used for overhead total flooding application in the work area. The Model N-PLU nozzle is used for overhead application in the plenum area. The Model N-DCT nozzle is used for exhaust duct protection. The Models N-LA-ABC and N-LA-BC nozzles are used for local overhead application. The Model N-TS nozzle is used for local tankside application. See **Figure 2-3.**

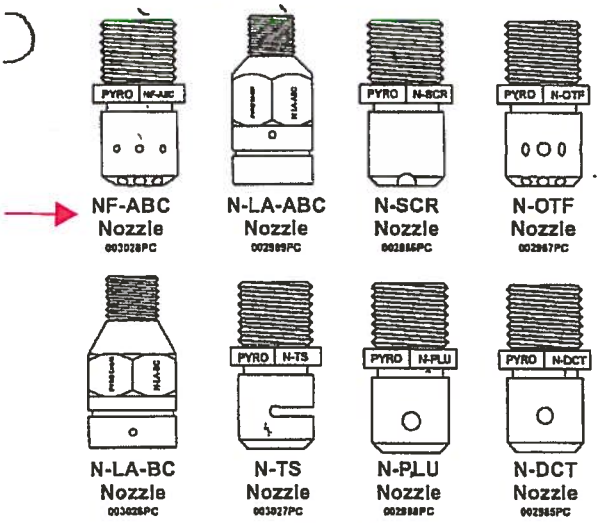

Figure 2-3. Nozzles.

CYLINDER BRACKETING

Vertical wall mounting for the **PCI-15ABC, PCI-17ABC,** and **PCI-25sBC/ABC,** is provided by the Model **MB-15** mounting bracket kit. Vertical wall mounting for the **PCI-35ABC, PCI-50sBC/ABC** and **PCI-70ABC** is provided by the Model **MB-1** mounting bracket kit. **See Figure 2-4.**

For vertical floor mounting of the **PCI-15ABC, PCI-17ABC, PCI-25sBC** and **PCI-25sABC,** an 8 in. unistrut type mounting bracket is available, the Model **MB-U8.**

For vertical floor mounting of the **PCI-35ABC, PCI-50sBC,** and **PCI-50sABC,** a 10 in. unistrut type mounting bracket is available, the Model **MB-U10.**

For vertical floor mounting of the **PCI-70ABC,** a 12 in. unistrut type mounting bracket is available, the Model **MB-U12.**

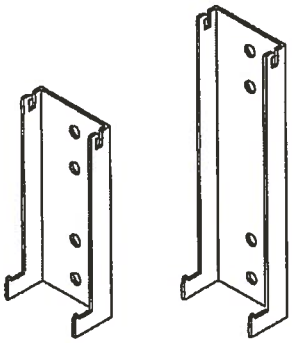

Figure 2-4 Mounting Brackets MB-15 and MB-1.
002843PC

MODEL MCH3 – MECHANICAL CONTROL HEAD

The Model MCH3 mechanical control head is a fully mechanical control head which can be connected to the PCI-15/17/25s/35/50s/70 cylinder valve. This control head will support a fusible link detection system, a remote mechanical pull station (Model RPS-M), and a mechanical or electric gas shut-off valve. A micro switch (Model MS-SPDT, MS-DPDT, MS-3PDT, or MS-4PDT) can be ordered separately and field installed. It is equipped with a local manual control handle that allows for mechanical system actuation. Operation of the local manual control requires removing the pull pin and rotating the handle clockwise. The Model MCH3 control head can actuate a maximum of five (5) cylinders. **See Figure 2-5.**

MODEL MCH3 CONTROL HEAD

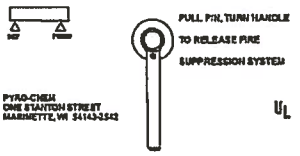

Figure 2-5. Mechanical Control Head.
004790PC

MODEL ECH3 – ELECTRIC CONTROL HEAD

The Model ECH3 electric control head is an electrically operated control head which can be connected to the PCI-15/17/25s/35/50s/70 cylinder valve. This control head will support an electric thermal detection system, a remote mechanical pull station (Model RPS-M), and an electric gas shut-off valve. It will not support a fusible link detection system. A micro switch (Model MS-DPDT) is included. The Model ECH3 control head is available in both 120 VAC (Model ECH3-120) and 24 VDC (Model ECH3-24). It is equipped with a local manual control handle that allows for mechanical system actuation. Operation of the local manual control requires removing the pull pin and rotating the handle clockwise. The Model ECH3 control head can actuate a maximum of five (5) cylinders. See Figure 2-6.

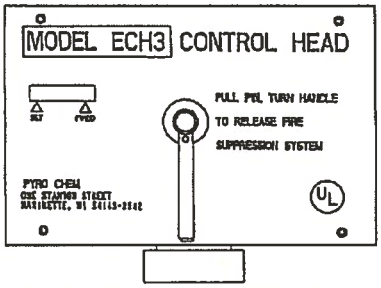

Figure 2-6. Electric Control Head.
004789PC

MODEL NMCH3 – MECHANICAL CONTROL HEAD

The Model NMCH3 Mechanical Control Head is a fully mechanical control head which can be connected to the PCI-15/17/25s/35/50s/70 cylinder valve. This control head will support a fusible link detection system, a remote mechanical pull station (Model RPS-M), and a mechanical or electric shut-off valve. A micro switch (Model MS-SPDT, MS-DPDT, MS-3PDT, or MS-4PDT) can be ordered separately and field installed. There is no local manual actuation for the Model NMCH3. The Model NMCH3 control head can actuate a maximum of five (5) cylinders. See Figure 2-6a.

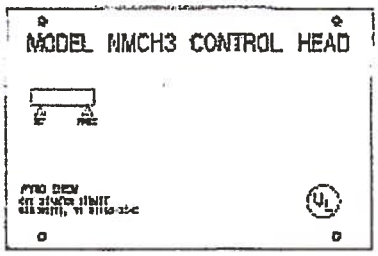

Figure 2-6a. Mechanical Control Head.
006843PC

MODEL MB-P2 - CONTROL HEAD MOUNTING BRACKET

The Model MB-P2 mounting bracket must be used to mount the Model MCH3, NMCH3 or ECH3 control head if the control head is not mounted directly on a cylinder valve. See Figure 2-7.

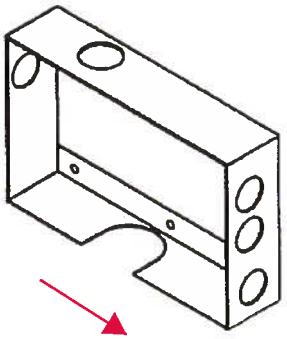

Figure 2-7. Model MB-P2 – Control Head Mounting Bracket.
002845PC

CAUTION

Do not screw the control head directly to a wall as this will warp the control head, not allowing the mechanism to actuate.

MODEL PDA-D2 PNEUMATIC ACTUATING ADAPTOR

The Model PDA-D2 Pneumatic Actuating Adaptor is used to open the cylinder valve when the system is actuated. It must be installed on the valve of each cylinder unless a control head has been mounted on the cylinder valve. See Figure 2-7a.

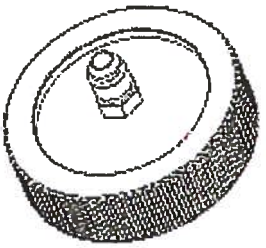

Figure 2-7a. Model PDA-D2 Pneumatic Actuating Adaptor.
006886PC

DETECTION EQUIPMENT

1. Model FLK-1.

The Model FLK-1 fusible link kit includes a 10 in. steel bracket, two (2) 1/2 in. EMT connectors, two (2) cable crimps, and two (2) "S" hooks. Fusible links must be ordered separately. See Figure 2-10.

2. Model FLK-1A.

The Model FLK-1A fusible link kit includes an 8 in. steel bracket, two (2) 1/2 in. EMT connectors, two (2) cable crimps, and two (2) "S" hooks. Fusible links must be ordered separately.

3. Model FLH-1.

The Model FLH-1 fusible link hanger is an accessory designed to simplify the installation of fusible links in the fusible link line. It can be used with the Model FLK-1/1A fusible link kits (kits must be ordered separately). The Fusible Link Hanger makes it possible to install fusible links without cutting and crimping loops in the fusible link line for each link. They are available in packages of 25 (FLH-25) only. See Figure 2-11.

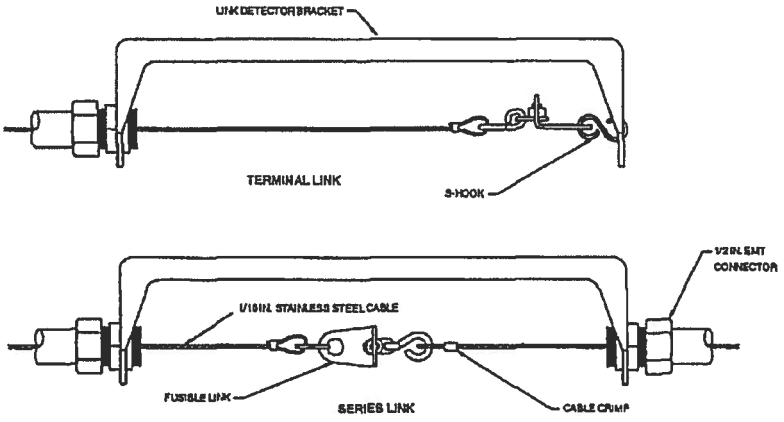

Figure 2-10. Model FLK-1 Fusible Link
002849PC

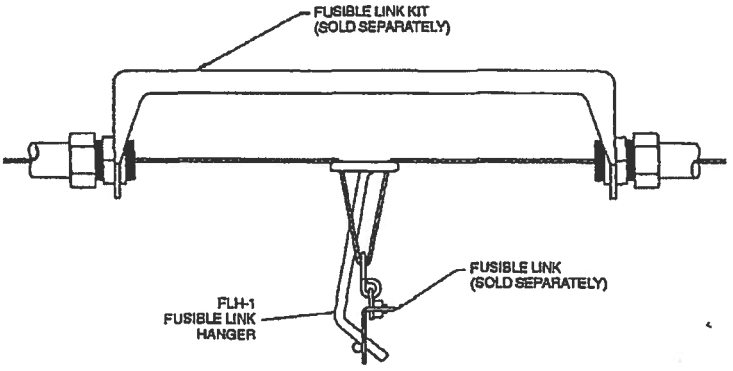

Figure 2-11. Model FLH-1 Fusible Link Hanger
002850PC

4. Fusible Links.

The fusible link is designed to separate at a specific temperature, releasing tension from the fusible link line, causing system actuation. See Figure 2-12.

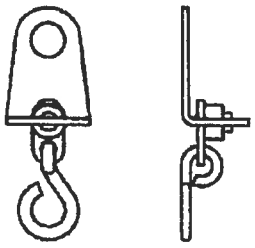

Figure 2-12. ML Style Fusible Link.
002851PC

After determining the maximum ambient temperature at the fusible link location, select the correct fusible link according to the temperature condition chart below:

Fusible Link Model No.	Maximum Ambient Temperature
FL-165	100° F. (38° C.)
FL-212	150° F. (66° C.)
FL-280	225° F. (107° C.)
FL-360	290° F. (143° C.)
FL-450	360° F. (182° C.)
FL-500	400° F. (204° C.)

5. Thermal Detectors.

Rate compensated temperature thermal detectors are normally open, mechanical contact closure switches designed to operate at a factory preset temperature. They are available in six preset temperatures which meet NFPA standards and are UL Listed and FM Approved.

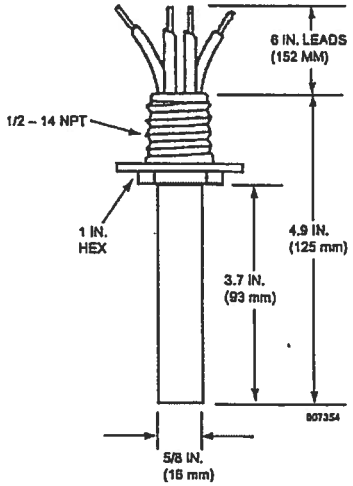

Figure 2-12a. Thermal Detector.

After determining the maximum ambient temperature at the thermal detector location, select the correct thermal detector according to the temperature condition chart below:

Thermal Detector Model No.	Maximum Ambient Temperature
TD-140	100° F. (38° C.)
TD-190	150° F. (66° C.)
TD-225	185° F. (85° C.)
TD-325	285° F. (141° C.)
TD-450	410° F. (210° C.)
TD-600	560° F. (293° C.)

REMOTE MECHANICAL PULL STATION

Model RPS-M

Remote manual control for system releasing devices is provided by the Model RPS-M remote mechanical pull station. It is connected to the system releasing device by stainless steel cable. This cable is enclosed in 1/2 in. EMT with corner pulleys at each change in direction. The remote mechanical pull station shall be located at the point of egress from the hazard area. See Figure 2-13.

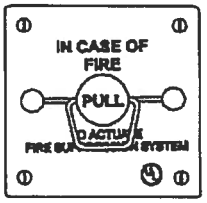

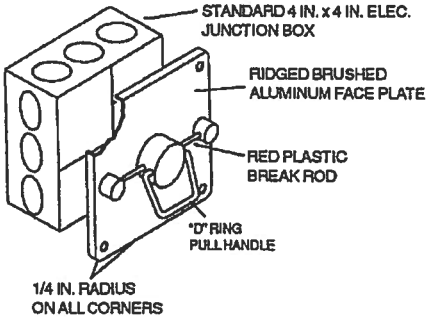

Figure 2-13. Model RPS-M Mechanical Pull Station.
002852PC

CORNER PULLEYS

1. Model SBP-1.

A corner pulley is used whenever a change in stainless steel cable direction is required. The Model SBP-1 corner pulley is equipped with a set screw fitting for connection to ▸1/2 in. EMT. See Figure 2-15.

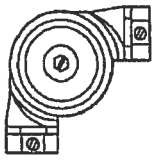

Figure 2-15. Model SBP-1 Corner Pulley.
000150

2. Model CBP-1.

A corner pulley is used whenever a change in stainless cable direction is required. The Model CBP-1 is a grease-tight corner pulley designed for areas likely to experience excessive deposit build-up. It is equipped with a compres- ▸sion fitting for connection to 1/2 in. EMT. See Figure 2-16.

Note: The Model CBP-1 is not a liquid tight sealing device.

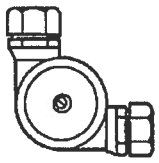

Figure 2-16. Model CBP-1 Corner Pulley.
000151

▸3. Model WBP-1.

A corner pulley is used whenever a change in stainless cable direction is required. The Model WBP-1 is a liquid-tight corner pulley designed for areas likely to experience excessive moisture build-up. It is equipped with a female pipe thread for connection to 1/2 in. rigid conduit. See Figure 2-17.

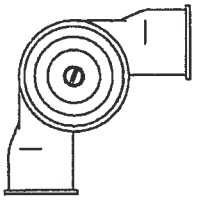

Figure 2-17. Model WBP-1 Corner Pulley.
005194PC

TEE PULLEY

The Model TP-1 tee pulley is used to connect two mechanical gas valves or two remote mechanical pull stations to a single control head. The tee pulley replaces two standard 90° corner pulleys. See Figure 2-18.

CAUTION

The Tee Pulley must never be used to connect multiple fusible link lines to a single control head.

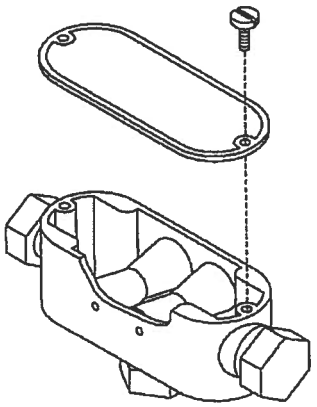

Figure 2-18. Model TP-1 Tee Pulley.
002687PC

▸SWING CHECK VALVE

The Swing Check Valve, Part No. 417788, is required when piping a main and reserve Monarch tank on the same distribution piping. It allows the dry chemical agent to discharge through the agent piping leading to the discharge nozzles, while preventing it from flowing into the piping from the other tank. The swing check valve body is constructed of brass with a 1 in. NPT female thread. See Figure 2-19.

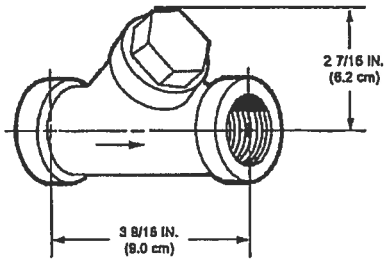

Figure 2-19. Swing Check Valve.
000430

ELECTRICAL SWITCHES

The electrical switches are intended for use with electric gas valves, alarms, contactors, lights, contractor supplied electric power shut-off devices and other electrical devices that are designed to shut off or turn on when the system is actuated.

Switches are available in kits: One Switch Kit, Part No. 551154; Two Switch Kit, Part No. 551155; Three Switch Kit, Part No. 551156, and Four Switch Kit, Part No. 551157. Mounting hardware and 12 in. wire assemblies are provided with each kit. Each switch has a set of single-pole, double-throw contacts rated:

UL/cUL/CSA Rating	ENEC Rating
250 VAC, 21A Resistive	IE4T105μ Approved
250 VAC, 2 HP	250V, 21A Resistive
125 VAC, 1 HP	8A Motor Load

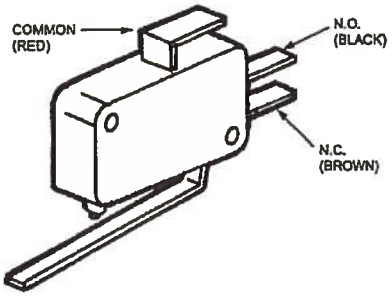

Figure 2-20a. Model MS-SPDT Micro Switch.
001612

The Alarm Initiating Switch Kit, Part No. 550077, can be field mounted within the control head. This switch must be used to close a supervised alarm circuit to the building main fire alarm panel when the control head actuates. This action will signal the fire alarm panel that there was a system actuation in the hazard area. The switch kit contains all necessary mounting components along with a mounting instruction sheet. The switch is rated 50 mA, 28 VDC.

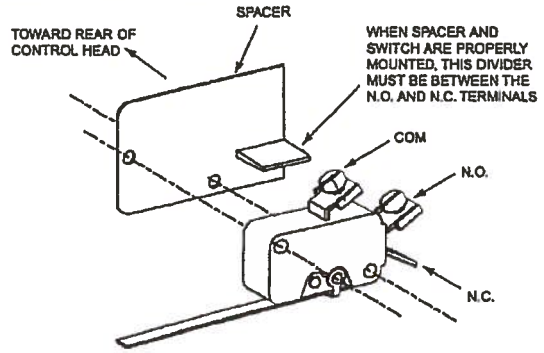

Figure 2-20b. Alarm Initiating Switch.
004890

See NFPA 72, "National Fire Alarm Code," Initiating Devices section, for the correct method of wiring connection to the fire alarm panel.

MODEL SM-120/24 SOLENOID MONITOR

The Model SM-120/24 solenoid monitor is used in conjunction with the Model ECH3 control head to supervise the actuation and detection circuits. In the event of a problem in the circuit, a light on the monitor goes out. The Model SM-120 is used with the Model ECH3-120 control head. The Model SM-24 is used with the Model ECH3-24 control head. Two sets of NO/NC dry contacts are provided. The unit mounts directly to a three gang wall outlet box. The Model SM-120 acts as a reset relay when used with an electric gas valve. Electric gas valve wiring instructions are provided in the installation section of this manual. See Figure 2-21.

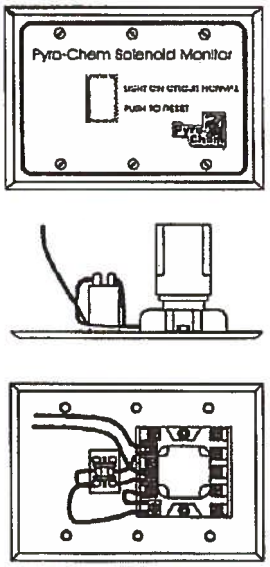

Figure 2-21. Model SM-24/120 Solenoid Monitor.
002860PC

COMPONENT LIST
GENERAL PURPOSE SYSTEM

MODEL NO.	DESCRIPTION	PART NO.
PCI-15ABC	15 lb. ABC Cylinder and Valve Assembly	550388
PCI-17ABC	17 lb. ABC Cylinder and Valve Assembly	551654
PCI-25sBC	25 lb. BC Cylinder and Valve Assembly	550391
PCI-25sABC	25 lb. ABC Cylinder and Valve Assembly	550390
PCI-35ABC	35 lb. ABC Cylinder and Valve Assembly	551097
PCI-50sBC	50 lb. BC Cylinder and Valve Assembly	550393
PCI-50sABC	50 lb. ABC Cylinder and Valve Assembly	550392
PCI-70ABC	70 lb. ABC Cylinder and Valve Assembly	551094
PAC-10	Pneumatic Actuating Cylinder	550104
PAC-200	Pneumatic Actuating Cylinder	550690
MB-P2	Control Head Mounting Bracket	550853
MB-15	Mounting Bracket (PCI-15,17,25s Cylinders)	550054
MB-1	Mounting Bracket (PCI-35,70 Cylinders)	550053
MB-U8	8 In. Unistrut Mounting Bracket	550324
MB-U10	10 in. Unistrut Mounting Bracket	550383
MB-U12	12 In. Unistrut Mounting Bracket	550638
MCH3	Mechanical Control Head	551200
NMCH3	Mechanical Control Head	551203
ECH3-24	24VDC Electrical Control Head	551201
ECH3-120	120VDC Electrical Control Head	551202
– – –	8 In. S.S. Actuation Hose	417582
– – –	16 In. S.S. Actuation Hose	31809
– – –	24 In. S.S. Actuation Hose	32336
– – –	42 In. S.S. Actuation Hose	430815
– – –	Male Elbow	31810
– – –	Male Tee	31811
– – –	Male Straight Connector	32338
PDA-D2	Pneumatic Actuating Adaptor	550829
– – –	Swing Check Valve	417788
NF-ABC	Nozzle Assembly	551678
N-LA-ABC	Nozzle Assembly	550646
N-LA-BC	Nozzle Assembly	550342
N-TS	Nozzle Assembly	550337
RPS-M	Remote Mechanical Pull Station	551074
RPS-E2	Remote Electric Pull Station	551166
FKL-1	10 In. Fusible Link Bracket	550131
FKL-1A	8 In. Fusible Link Bracket	550132
FLH-25	Fusible Link Hanger (25)	550876
FL-165	165° F Fusible Link	550368
FL-212	212° F Fusible Link	550365
FL-280	280° F Fusible Link	550366
FL-360	360° F Fusible Link	550009
FL-450	450° F Fusible Link	550367
FL-500	500° F Fusible Link	56816
SM-24	24VDC Solenoid Monitor	550303
SM-120	120VAC Solenoid Monitor	550302
TD-140	140° F Thermal Detector	550351
TD-190	190° F Thermal Detector	550352
TD-225	225° F Thermal Detector	550353
TD-325	325° F Thermal Detector	550354
TD-450	450° F Thermal Detector	550355
TD-600	600° F Thermal Detector	550356
GV-75	3/4 In. Mechanical Gas Valve	550593
GV-100	1 In. Mechanical Gas Valve	550594

COMPONENT LIST
GENERAL PURPOSE SYSTEM (Continued)

MODEL NO.	DESCRIPTION	PART NO.
▸GV-125	1 1/4 In. Mechanical Gas Valve	550595
GV-150	1 1/2 In. Mechanical Gas Valve	550596
GV-200	2 In. Mechanical Gas Valve	551049
GV-250	2 1/2 In. Mechanical Gas Valve	550185
GV-300	3 in. Mechanical Gas Valve	550186
EGVSO-75	3/4 in. Electric Gas Valve	550358
EGVSO-100	1 In. Electric Gas Valve	550359
EGVSO-125	1 1/4 In. Electric Gas Valve	550360
EGVSO-150	1 1/2 in. Electric Gas Valve	550361
EGVSO-200	2 In. Electric Gas Valve	550362
EGVSO-250	2 1/2 In. Electric Gas Valve	550363
▸EGVSO-300	3 In. Electric Gas Valve	550385
MS-SPDT	Micro-Switch – Single Pole Double Throw	551154
MS-DPDT	Micro-Switch – Double Pole Double Throw	551155
MS-3PDT	Micro-Switch – 3 Pole Double Throw	551156
MS-4PDT	Micro-Switch – 4 Pole Double Throw	551157
▸– – –	Alarm Initiating Switch	550077
PS-SPDT-XP	Pressure Switch – Single Pole Double Throw	550052
CO2-6	6 x CO_2 Cartridge	551059
CBP-1	Compression Bearing Corner Pulley	423250
SBP-1	Screw Bearing Corner Pulley	415670
▸WBP-1	Weather Proof Corner Pulley (10 Per Package)	550983
TP-1	Tee Pulley	550166
▸WC-100	Oval Sleeve Crimps (100 Per Package)	550122
– – –	Stop Sleeves (Pack of 10)	24919
– – –	Valve – Piston O-Ring	550636
– – –	Valve – Stem Washer	550284
– – –	Valve – Seat Washer	550021
– – –	Valve – Stem Head	550020
– – –	Valve – Body O-Ring	550029
– – –	Valve – Pressure Gauge	550025
– – –	Valve – Stem	550806
– – –	Valve – Stem O-Ring	550028
– – –	Valve – Conical Spring	550022
▸– – –	Valve – Piston	550805
FR-25sBC	Flow Restrictor	550235
▸– – –	Pressure Bleed Down Adaptor Assembly	551736
– – –	Dry Valve Rebuilding Kit	550037
– – –	Recharge Adaptor	550130
▸– – –	Dry Valve Hydrotest Adaptor	552182

VIKING FIRE PROTECTION INC. 3005 Pitfield boulevard Saint-Laurent, Québec, Canada H4S 1H4
Tel.: 514.332.5110 Fax: 514.332.6260 info@vikingfire.ca

CHAPTER 3

DESIGN

TABLE 3-1

Total Flooding Nozzle Protection Chart

Maximum Dimensions in feet/nozzle for one (1) Model NF-ABC

Side 1 (ft.)	Nozzle Height (ft.)	Maximum Side 2 (ft.)	Side 1 (ft.)	Nozzle Height (ft.)	Maximum Side 2 (ft.)	Side 1 (ft.)	Nozzle Height (ft.)	Maximum Side 2 (ft.)	Side 1 (ft.)	Nozzle Height (ft.)	Maximum Side 2 (ft.)
3	8	16.70	7	8	15.46	11	8	12.92	15	8	7.94
	9	16.70		9	15.46		9	12.92		9	7.94
	10	16.70		10	15.46		10	11.78		10	7.94
	11	16.70		11	15.46		11	10.71		11	7.85
	12	16.70		12	15.43		12	9.82		12	7.20
	13	16.70		13	14.24		13	9.06		13	6.65
	14	16.70		14	13.22		14	8.42		14	6.17
	15	16.70		15	12.34		15	7.85		15	5.76
	16	16.70		16	11.57		16	7.36		16	5.40
	17	16.70		17	10.89		17	6.93		17	5.08
	18	16.70		18	10.29		18	6.55		18	4.80
	19	16.70		19	9.74		19	6.20		19	4.55
	20	16.70		20	9.26		20	5.89		20	4.32
4	8	16.49	8	8	14.97	12	8	12.00	16	8	5.66
	9	16.49		9	14.97		9	12.00		9	5.66
	10	16.49		10	14.97		10	10.80		10	5.66
	11	16.49		11	14.73		11	9.82		11	5.66
	12	16.49		12	13.50		12	9.00		12	5.66
	13	16.49		13	12.46		13	8.31		13	5.66
	14	16.49		14	11.57		14	7.71		14	5.66
	15	16.49		15	10.80		15	7.20		15	5.40
	16	16.49		16	10.13		16	6.75		16	5.06
	17	16.49		17	9.53		17	6.35		17	4.76
	18	16.49		18	9.00		18	6.00		18	4.50
	19	16.49		19	8.53		19	5.68		19	4.26
	20	16.20		20	8.10		20	5.40		20	4.05
5	8	16.22	9	8	14.39	13	8	10.91			
	9	16.22		9	14.39		9	10.91			
	10	16.22		10	14.39		10	9.97			
	11	16.22		11	13.09		11	9.06			
	12	16.22		12	12.00		12	8.31			
	13	16.22		13	11.08		13	7.67			
	14	16.22		14	10.29		14	7.12			
	15	16.22		15	9.60		15	6.65			
	16	16.20		16	9.00		16	6.23			
	17	15.25		17	8.47		17	5.86			
	18	14.40		18	8.00		18	5.54			
	19	13.64		19	7.58		19	5.25			
	20	12.96		20	7.20		20	4.98			
6	8	15.87	10	8	13.71	14	8	9.59			
	9	15.87		9	13.71		9	9.59			
	10	15.87		10	12.96		10	9.26			
	11	15.87		11	11.78		11	8.42			
	12	15.87		12	10.80		12	7.71			
	13	15.87		13	9.97		13	7.12			
	14	15.43		14	9.26		14	6.61			
	15	14.40		15	8.64		15	6.17			
	16	13.50		16	8.10		16	5.79			
	17	12.71		17	7.62		17	5.45			
	18	12.00		18	7.20		18	5.14			
	19	11.37		19	6.82		19	4.87			
	20	10.80		20	6.48		20	4.63			

PCI-17ABC with 1 nozzle

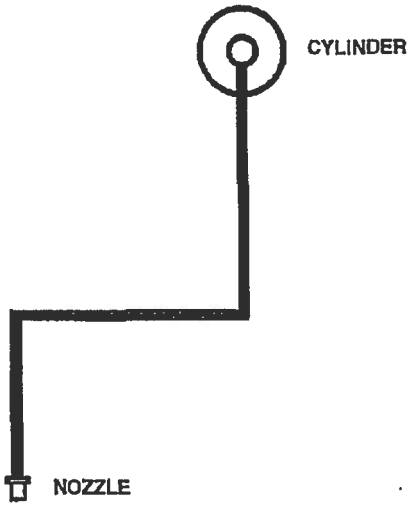

Total Flooding Piping Limits PCI-17ABC

Cylinder Size	Nozzle Quantity	Nozzle Type	Piping Section	Size	Length Maximum	Elbows Maximum
▸ PCI-17ABC	1	NF-ABC	Cylinder to Nozzle	3/4 in.	30 ft.	4

NOTE:

1. PCI-17ABC uses one (1) NF-ABC nozzle.
2. ▸ A Main/Reserve Swing Check Valve, Part No. 417788, may be located between the cylinder and T1.

PCI-35ABC with 2 nozzles

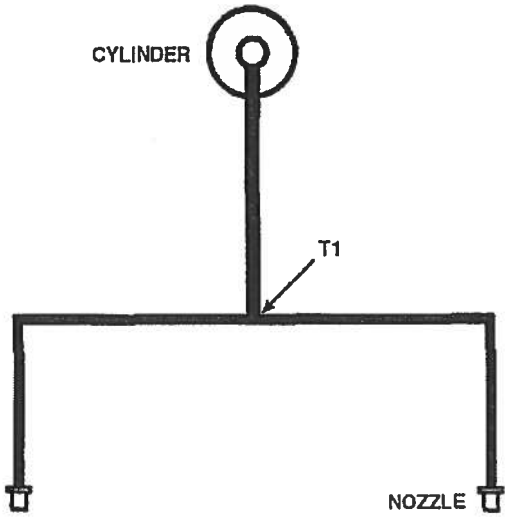

Total Flooding Piping Limits PCI-35ABC

Cylinder Size	Maximum Nozzle Quantity	Nozzle Type	Piping Section	Size	Length Maximum	Elbows Maximum
PCI-35ABC	2	NF-ABC	Cylinder to T1	3/4 in.	30 ft. (9.1 m)	4
			T1 to Nozzle	3/4 in.	9 ft. (2.7 m)	2

NOTE:

1. PCI-35ABC must always use two (2) NF-ABC nozzles.
2. System piping must be balanced. Balanced piping is that in which the difference between the shortest actual pipe length from T1 to nozzle and the longest actual pipe length from T1 to nozzle does not exceed 10% of the longest actual pipe length from T1 to nozzle. The number and type of fittings from all last tee to nozzle sections must be equal.
3. A Main/Reserve Swing Check Valve, Part No. 417788, may be located between the cylinder and T1.

PCI-70ABC with 4 nozzles

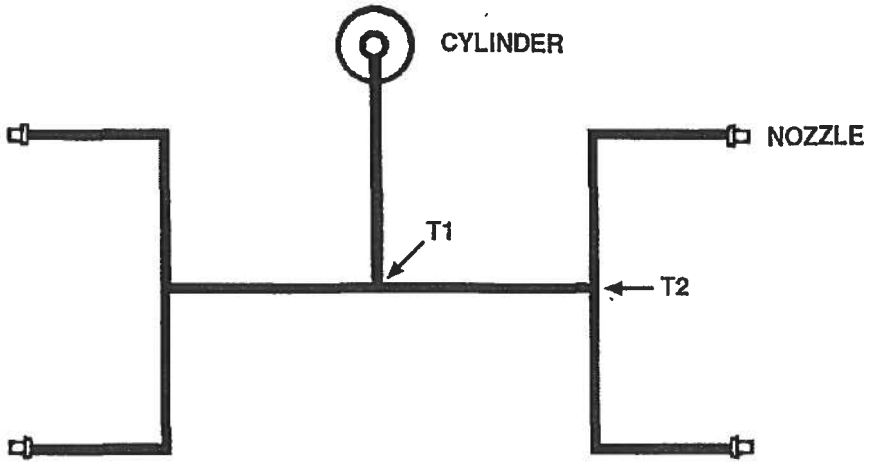

Total Flooding Piping Limits PCI-70ABC

Cylinder Size	Maximum Nozzle Quantity	Nozzle Type	Piping Section	Size	Length Maximum	Elbows Maximum
PCI-70ABC	4	NF-ABC	Cylinder to T1	1 in.	30 ft. (9.1 m)	3
			T1 to T2	1 in.	14 ft. (4.3 m)	2
			T2 to Nozzle	3/4 in.	9 ft. (2.7 m)	2

NOTE:

1. PCI-70ABC must always use four (4) NF-ABC nozzles.
2. System piping must be balanced. Balanced piping is that in which the difference between the shortest actual pipe length from T1 to nozzle and the longest actual pipe length from T1 to nozzle does not exceed 10% of the longest actual pipe length from T1 to nozzle. T2 to nozzle on the same branch must not exceed 10% of each other. The number and type of fittings from all last tee to nozzle sections must be equal.
3. A Main/Reserve Swing Check Valve, Part No. 417788, may be located between the cylinder and T1.

Detector Placement.

Thermal detectors are required in all hazard areas protected by the PYRO-CHEM Industrial Fire Suppression Systems if automatic system operation is required. Either mechanical or electrical thermal detectors can be used for automatic system operation. Mechanical detectors (fusible links) are used in conjunction with the PYRO-CHEM Models MCH3 and NMCH3 control devices. Electrical detectors are used in conjunction with the PYRO-CHEM Models ECH3-24 and ECH3-120 Control Heads.

TOTAL FLOODING (DETECTOR SPACING) – THERMAL

Ceiling Height	Spacing
Up to 14 ft. (4.2 m) Height	15 ft. (4.5 m) maximum between detectors 7 ft. 6 in. (2.3 m) max. from wall 225 sq. ft. (20.9 sq. m) max. coverage per detector
Greater than 14 ft. (4.2 m) up to 20 ft. (6.1 m) height	13 ft. (3.9 m) maximum between detectors 6 ft. 6 in. (1.9 m) max. from wall 169 sq. ft. (15.7 sq. m) max. coverage per detector
Greater than 20 ft. (6.9 m) up to 24 ft. (7.3 m)	11 ft. (3.4 m) max. between detectors 5 ft. 6 in. (1.7 m) max. from wall 121 sq. ft. (11.2 sq. m) max. coverage per detector
Greater than 24 ft. (7.3 m) up to 30 ft. (9.1 m)	9 ft. (2.7 m) max. between detectors 4 ft. 6 in. (1.4 m) max. from wall 81 sq. ft. (7.5 sq. m) max. coverage per detector

NOTE: For sloped ceiling (peaked type or shed type) installations, refer to NFPA-72, "National Fire Alarm Code" for detailed spacing requirements.

LOCAL APPLICATION – OVERHEAD (DETECTOR SPACING) – Maximum spacing per detector is 100 ft.^{2} (9.3 m^2) or 5 ft. (1.5 m) from edge of hazard and 10 ft. (3.1 m) between detectors. When detectors are mounted below the ceiling in an open area, heat traps are recommended.

LOCAL APPLICATION – TANKSIDE (DETECTOR SPACING) – Detectors can be located either near the inner tank wall and flammable liquid surface or above the tank. If located above the tank, the rules for local application overhead would apply. If located on the tank wall, the detectors can be mounted horizontally or vertically in the freeboard area, but must be protected from damage during normal working operations. The maximum spacing per detector is 5 ft. (1.5 m) from edge of hazard and 10 ft. (3.1 m) between detectors.

A temperature survey must be performed to determine the maximum ambient temperature of the hazard survey. See Temperature Chart in Chapter 2 – Components.

TOTAL FLOODING (DETECTOR SPACING) – FUSIBLE LINKS

Ceiling Height	Spacing
Up to 14 ft. (4.2 m) Height	10 ft. (3.0 m) maximum detectors 5 ft. (1.5 m) max. from a wall* 100 sq. ft. (9.2 sq. m) max. coverage per detector
Greater than 14 ft. (4.2 m) up to 20 ft. (6.1 m) height	8 ft. (2.4 m) max. between detectors 4 ft. (1.2 m) max. from wall 64 sq. ft. (5.9 sq. m) max. coverage per detector

NOTE: For sloped ceiling (peaked type or shed type) installations, refer to NFPA-72, "National Fire Alarm Code" for detailed spacing requirements.

LOCAL APPLICATION – OVERHEAD (DETECTOR SPACING) – Maximum spacing per fusible link detector is 36 ft.^{2} (3.3 m^2) or 3 ft. (.9 m) from edge of hazard and 6 ft. (1.8 m) between fusible link detectors.

When a detector(s) is mounted more than 1 ft. (.3 m) below ceiling or in an open area, heat trap(s) is recommended. Detectors should be mounted overhead at nozzle height or as close to the hazard as possible without interference, not to exceed 10 ft. (3 m).

Detectors should not be located where they will be susceptible to damage during the normal work operation.

LOCAL APPLICATION – TANKSIDE (DETECTOR SPACING) – Detectors can be located either near the inner tank wall and flammable liquid surface or above the tank. If located above the tank, the rules for local application overhead would apply. If located on the tank wall, the detectors can be mounted horizontally or vertically in the freeboard area but must be protected from damage during normal working operation. Detectors should be located at a maximum spacing per detector of 3 ft. (.9 m) from edge of hazard and 6 ft. (1.8 m) between detectors on the long side of the tank.

*For 14 ft. (4.3 m) wide booths with maximum height of 12 ft. (3.7 m), the detector location off the side wall can be a maximum of 7 ft. (2.1 m).

VIKING FIRE PROTECTION INC. 3005 | Pitfield boulevard | Saint-Laurent, Québec, Canada | H4S 1H4
Tel.: 514.332.5110 Fax: 514.332.6260 info@vikingfire.ca

CHAPTER 4

INSTALLATION

CHAPTER IV
SYSTEM INSTALLATION

This chapter will detail the basic information necessary for proper installation of the PYRO-CHEM Industrial Fire Suppression System. However, before attempting any installation it is necessary to attend a Factory Certification Training Class and become Certified to install the PYRO-CHEM Industrial Fire Suppression System.

Pipe and fittings for the discharge piping, conduit (EMT), pipe straps, pipe hangers, mounting bolts, and other miscellaneous equipment are not furnished as part of the PYRO-CHEM Industrial Fire Suppression System. These items must be furnished by the installer.

Before attempting any installation, unpack the entire system and check that all necessary parts are on hand. Inspect parts for damage. Verify that cylinder pressure is within the acceptable range as shown on the gauge.

CYLINDER INSTALLATION

The cylinder and valve assembly is shipped with an anti-recoil plug in the valve discharge port.

> **CAUTION**
> The anti-recoil plug must remain in the valve discharge port until the discharge piping is connected to the valve.

The cylinder must be mounted vertically with the discharge port facing either left or right. The Models PCI-17 and PCI-25 cylinders must be mounted using a Model MB-15 Mounting Bracket Kit. The Model PCI-35, PCI-50, PCI-70, and PCI-cylinders must be mounted using a Model MB-1 Mounting Bracket Kit.

The bracket must be securely anchored to the wall using bolts or lag screws. The wall to which the bracket is attached must be sufficiently strong to support the cylinder. The bracket should never be fastened to dry wall or similar material. If this type of wall is encountered, studs must be located and the bracket fastened to them. See Figure 4-1.

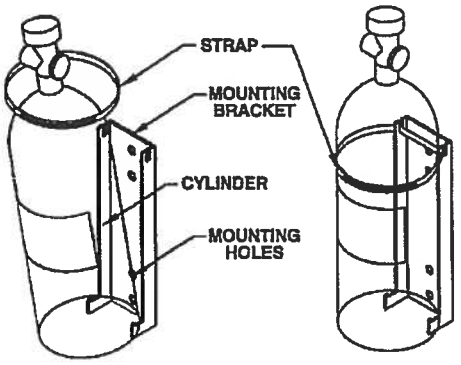

Figure 4-1. Cylinder and Mounting Bracket Installation.
002871PC

CONTROL HEAD INSTALLATION

1. Single Cylinder Installations.

For single cylinder system installations the Model MCH3/ECH3/NMCH3 Control Head can be installed directly onto the cylinder valve. When the control head is properly aligned in the desired position, tighten the knurled locking ring to secure the assembly. See Figure 4-2.

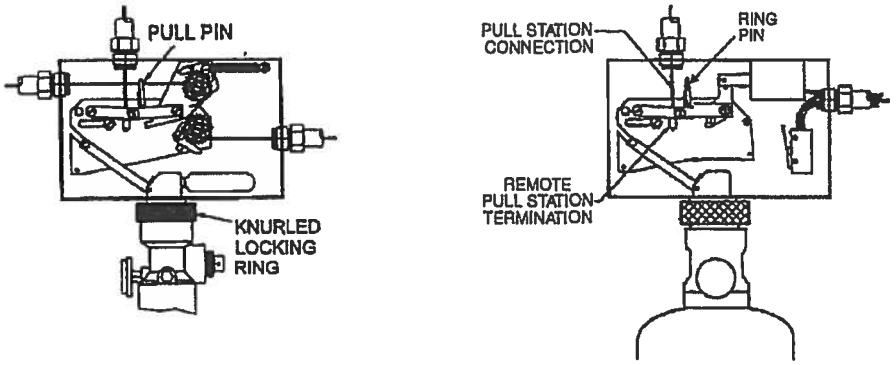

Figure 4-2. Single Cylinder Installation Using Model MCH3/ECH3/NMCH3 Control Head
002872PC/003647PC

FUSIBLE LINK DETECTOR INSTALLATION

Fusible links are always used in conjunction with the Model MCH3 Mechanical Control Head. After mounting the cylinder and control head, the fusible link line can be installed. The first step to installing the fusible link line is to install the detector bracket(s). These brackets must be installed in the plenum area, hazard area, and in each duct. See Chapter III for detector placement guidelines.

Note: Only ML-style Fusible Links can be used.

Connect the fusible link brackets together using 1/2 in. conduit and the conduit connectors supplied in the detector kit (Model FLK-1/1A). A PYRO-CHEM corner pulley must be used whenever a change in conduit direction is necessary. The conduit is connected to the control head through a knockout in the upper left-side corner.

In general, fusible links centered in the detector brackets are connected in series using 1/16 in. diameter stainless steel cable. The spring plate in the control head maintains tension on this series of fusible links. If the tension is released for any reason (i.e., a fusible link separates), the control head will operate and actuate the system. Maximum limitations for the fusible link detection line are as follows:

Fusible links can be installed with or without fusible link hangers (see Chapter II for description).

Fusible Link Line Limitations When Used With Model MCH3 and NMCH3 Control Heads and Part No. 415670 and 423250 Pulley Elbows	
Maximum # of Detectors:	20
Maximum length of cable:	150 ft. (45.7 m)
Maximum # of pulleys:	40

1. Fusible Link Installation Without Hangers.

Begin installing links at the terminal bracket. The link is connected to the far side of the terminal bracket using an "S" hook. The "S" hook must be crimped closed after the link is installed. A tight loop is then made in the cable and secured by the crimp provided. This loop is connected to the other side of the terminal link (see Figure 4-6) and the cable fed through the conduit to the next bracket. The cable proceeding from the terminal link will be used to connect the series links (see Figure 4-7). Series links must be centered in their detector brackets.

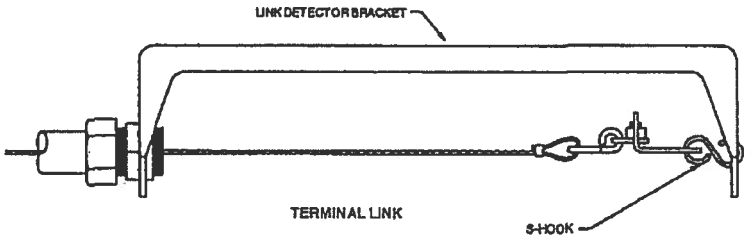

Figure 4-6. Terminal Link Installation.

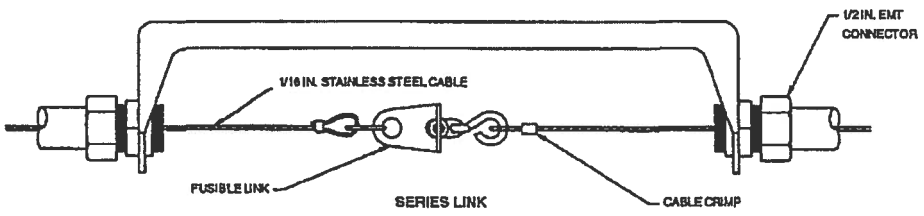

Figure 4-7. Series Link Installation.

After the last link in the series is connected, the cable should be fed through the conduit back to the control head. Thread the cable through the hole in the fusible link ratchet wheel. The line must then be crimped, and the crimp positioned inside the center of the ratchet wheel.

NOTE

Crimps must always be used in conjunction with two (2) cable lengths. Loops are the accepted method of connecting the cable to mechanical components. The crimp must never be used on a single cable. Exception: Single cable crimp allowed in detection and gas valve ratchet wheel using stop sleeve, Part No. 26317 (packages of 10: Part No. 24919).

The fusible link line can now be put into a set position by applying tension to the fusible link line. This is accomplished by using a 1/2 in. hex wrench on the fusible link line ratchet wheel. The ratchet wheel will be ratcheted in a clockwise direction until the spring plate makes contact with the top of the control head box. The fusible link line is now in a set position. See Figure 4-8.

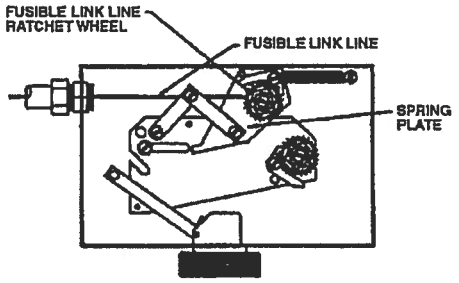

Figure 4-8. Fusible Link Line Termination.
002876PC

2. Fusible Link Installation Using Model FLH-1 Fusible Link Hangers.

Beginning at the control head, feed the stainless steel cable through the conduit and brackets to the terminal bracket in one continuous length. Allow approximately 2.5 in. (6.4 cm) of slack at each bracket for the installation of the Fusible Link Hangers. At the terminal link, a tight loop is made in the cable and secured by the crimp provided. The cable is attached to the far side of the terminal bracket using an "S" hook. The "S" hook must be crimped closed after the cable is installed. See Figure 4-9.

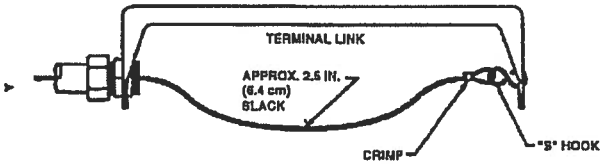

Figure 4-9. Terminal Bracket Connection.
002877PC

Begin installing the Fusible Link Hangers at the terminal bracket and work toward the control head. Loop the cable through the oval opening in the hanger and hook the fusible link on the loop. See Figure 4-10.

Note: Only ML-style Fusible Links can be used

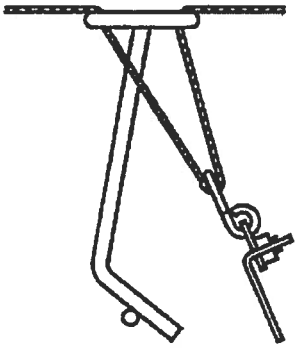

Figure 4-10. Fusible Link Connection.
002878PC

Hook the bottom of the link onto the bottom leg of the hanger. See Figure 4-11.

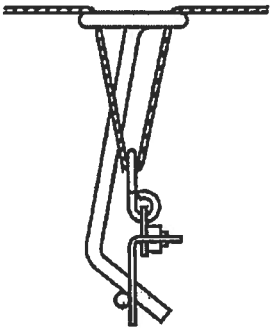

Figure 4-11. Fusible Link/Hanger Connection.
002879PC

Center the hanger/link in the fusible link bracket by sliding it along the link line. This is easily accomplished before any tension is applied to the link line. Repeat this procedure for all fusible links.

After the last hanger/link in the series is connected, the cable should be fed through the hole in the fusible link ratchet wheel. The line must then be crimped, and the crimp positioned inside the center of the ratchet wheel.

NOTE

Crimps must always be used in conjunction with two (2) cable lengths. Loops are the accepted method of connecting the cable to mechanical components. The crimp must never be used on a single cable. Exception: Single cable crimp allowed in detection and gas valve ratchet wheel using stop sleeve, Part No. 26317 (packages of 10: Part No. 24919).

The fusible link line can now be put into a set position by applying tension to the fusible link line. This is accomplished by using a 1/2 in. hex wrench on the fusible link line ratchet wheel. The ratchet wheel will be ratcheted in a clockwise direction until the spring plate makes contact with the top of the control head box. The fusible link line is now in a set position. See Figure 4-8. Check to ensure that the fusible link hanger(s) remain centered in the bracket after the fusible link line is set. See Figure 4-12.

THERMAL DETECTOR INSTALLATION

Thermal detectors are always used in conjunction with the Model ECH3 Electrical Control Head. After mounting the cylinder and control head, the thermal detector(s) can be installed. See Chapter III for detector placement guidelines. Follow the instructions included with the detector for proper detector mounting procedures.

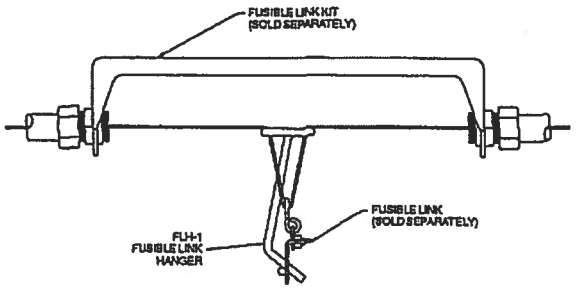

Figure 4-12. Fusible Link/Hanger in Set Position
002850PC

SETTING THE CONTROL HEAD

1. Model MCH3/NMCH3 Mechanical Control Head.

Once the fusible link line is set, the control head can be placed in the set position. To set the control head, the slide plate is moved from right to left, ensuring the bolt extending from the cam arm is in the slot provided in the slide plate. Continue moving the slide plate to the left until the latching arm is in the locked position. Insert the pull pin into the hole in the slide plate above the latching arm. This will lock the control head in the set position, eliminating accidental actuation during the rest of the installation procedure. See Figure 4-13.

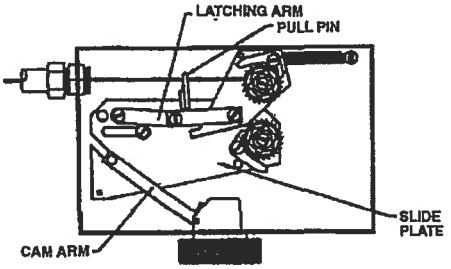

Figure 4-13. Control Head in Set Position.
002880PC

2. Model ECH3 Electrical Control Head.

Once the thermal detectors have been installed, the control head can be placed in the set position. To set the control head, the slide plate is moved from right to left, ensuring the bolt extending from the cam arm is in the slot provided in the slide plate. Continue moving the slide plate to the left until the latching arm is in the locked position. Insert the pull pin into the hole in the slide plate above the latching arm. This will lock the control head in the set position, eliminating accidental actuation during the rest of the installation procedure.

Once the Model ECH Electrical Control Head is in the set position, it can be connected to the detection/actuation circuit.

NOTE

No electrical connections shall be made inside the control head. All electrical wiring shall exit the control head through the knock-out on the side of the box. All electrical connections must be made in an approved electrical box.

Connect one of the black wires on the solenoid in the control head to the red wire of the Model MS-SPDT Micro Switch. The brown wire from the micro switch is then connected to one side of the first thermal detector in series. Connect the other side of the first thermal detector in series and the remaining black wire on the solenoid in the control head to the appropriate power source after installing the Model SM-24/120 Solenoid Monitor.

CAUTION

The solenoid must never be wired "hot" (not through the micro-switch). If wired this way, the non-field replaceable solenoid will be damaged and the complete control head will require replacement.

NOTE

A Model SM-24/120 Solenoid Monitor must always be used with an Electrical Control Head to supervise the actuation/detection circuit.

The Model ECH3-24 Electrical Control Head requires a UL Listed 24VDC power supply with a minimum 2A rating. The Model ECH3-120 Electrical Control Head requires a 1A, 120VAC power supply.

SOLENOID MONITOR INSTALLATION

1. Solenoid Monitor Installation In Detection Circuit.

After installing the thermal detectors and the control head, the Model SM-120/24 Solenoid Monitor can be installed. The Solenoid Monitor is connected to the wires leading from the last thermal detector. It should be mounted in a location where it can be readily observed.

The Solenoid Monitor is an end-of-line device that supervises the actuation/detection circuit. It is comprised of a push-type switch with a built-in indicator light, a plug-type relay, a relay socket, and a cover plate. The light, when illuminated, indicates that the detection/actuation circuit is in the normal condition. The Solenoid Monitor also provides two sets of dry contacts. The Solenoid Monitor's cover plate is used to mount the Solenoid Monitor in a standard 6 in. x 4 in. x 3 in. deep electrical box (See **Figure 4-14**).

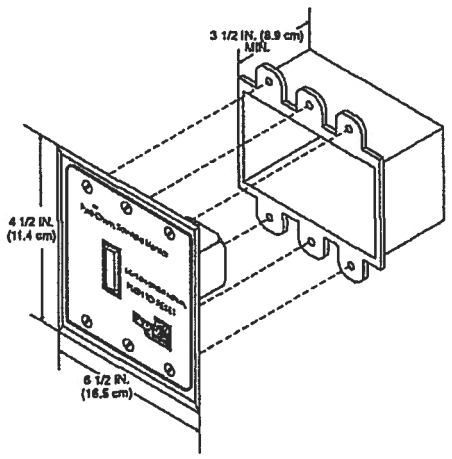

Figure 4-14. Solenoid Monitor Installation.
002881PC

All wire for circuits using the Model SM-24 shall be 18 gauge minimum, or as required by local code. All wire for circuits using the Model SM-120 shall be 14 gauge minimum, or as required by local code. The basic wiring diagram for both the Model SM-24 and Model SM-120 is shown in **Figure 4-14.1.**

After the Solenoid Monitor has been installed, the detection/actuation circuit can be connected to the appropriate power source and energized. To energize the detector/actuation circuit, depress the switch on the Solenoid Monitor. The light will illuminate to indicate that the circuit is properly installed. If the light fails to illuminate, the wiring must be checked.

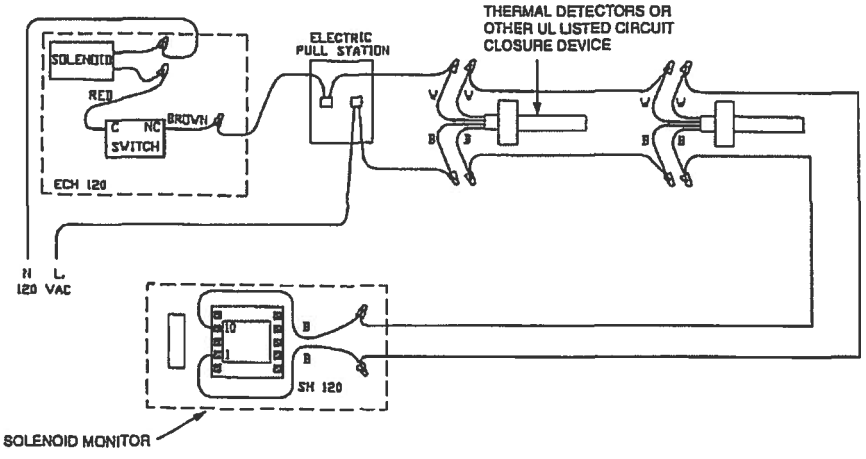

Figure 4-14.1. Wiring Diagram, Solenoid.
002882PC

2. Solenoid Monitor When Used As A Reset Relay

The Model SM-24/120 can be used as a reset relay when required. A reset relay is required whenever an electrical gas shut-off valve is used in conjunction with the Pyro-Chem Booth Industrial Fire Suppression System. For typical wiring connections, see Figure 4-15.

REMOTE PULL STATION INSTALLATION

1. Model RPS-M.

The Model RPS-M Remote Mechanical Pull Station is used for remote mechanical actuation of the Model MCH3/ECH3/NMCH3 Control Head. It is to be located near an exit in the path of egress from the hazard area no more than 4 ft. (1.2 m) above the floor.

NOTE

A model RPS-M remote mechanical pull station must be used for manual actuation of a Model NMCH3 releasing device.

The Pull Station can be surface mounted or recessed. It is connected to the control head using 1/16 in. diameter stainless steel cable. The cable enters the pull station box from the bottom, top, either side, or back. The cable enters the control head through the top-center knockout. The cable must be enclosed in 1/2 in. conduit with a PYRO-CHEM corner pulley at each change in conduit direction. Maximum limitations for the Model RPS-M Remote Mechanical Pull Station are as follows:

Model RPS-M Cable Run Limitations When Used With Model MCH3, ECH3, and NMCH3 Control Heads and Part No. 415670 and 423250 Pulley Elbows	
Maximum length of cable:	150 ft. (45.7 m)
Maximum # of pulleys:	40

After mounting the pull station box and conduit, feed the stainless steel cable from the control head, through the conduit, and into the pull station box. Insert the bushing into the pull station's cover plate and secure it with the locknut provided. Feed the cable through the bushing and into the pull handle ensuring that the cable fully crosses the set screw hole. Fasten the cable to the pull handle with the set screw (see Figure 4-16).

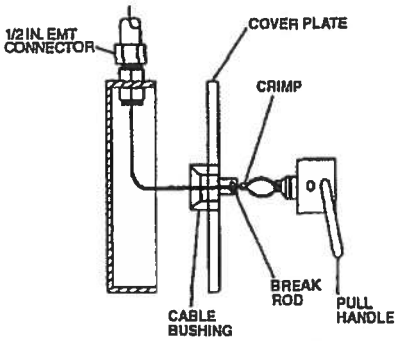

Figure 4-16. Model RPS-M Remote Pull Station Installation.

002884PC

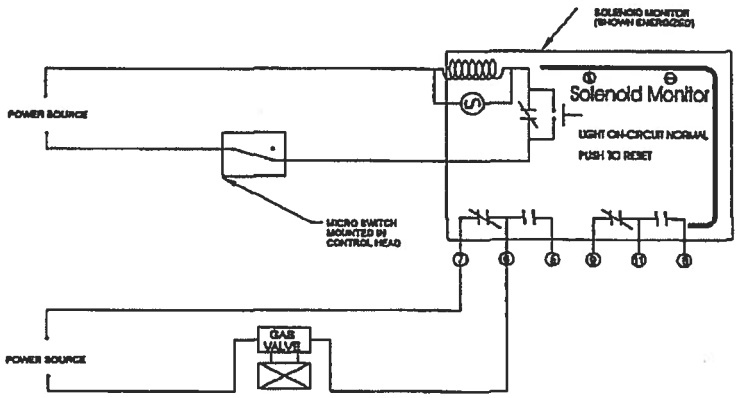

Figure 4-15. Solenoid Monitor Wiring With Electrical Gas Shut-off Valve.

002883PC

NOTE

Crimps must always be used in conjunction with two (2) cable lengths. Loops are the accepted method of connecting the cable to mechanical components. The crimp must never be used on a single cable. Exception: Single cable crimp allowed in detection and gas valve ratchet wheel using stop sleeve, Part No. 26317 (packages of 10: Part No. 24919).

Cut and thread the cable through the hole in the latching arm of the control head and pull the cable tight. Crimp the cable 6 in. (15.2 cm) below the latching arm.

Pull the pull handle until the crimp touches the latching arm. Coil the excess cable in the pull box and attach the cover plate with the four screws provided. Insert the pull handle into the cover plate and insert the pull pin through the bushing and the pull handle. Secure the pull pin with the nylon tie provided. See Figure 4-17.

2. Model RPS-E2.

The Model RPS-E2 remote electrical pull station is used for remote actuation of the Model ECH3 Control Head. It is to be located near an exit in the path of egress from the hazard area no more than 4 ft. (1.2 m) above the floor. The Model RPS-E2 is installed in the detection/actuation circuit and wired in accordance with the instructions included. See Figure 4-14.1 for typical circuit wiring.

GAS SHUT-OFF VALVE INSTALLATION

1. Mechanical Gas Shut-Off Valve Installation.

The Model MCH3/NMCH3 Control Head is used to operate the mechanical gas shut-off valve. This valve is located in the fuel gas supply line. The valve body has an arrow which indicates direction of gas flow through the valve. The gas shut-off valve is spring loaded and requires five pounds of force to hold it open. This force is supplied by a 1/16 in. diameter stainless steel cable that is connected to the control head. After the valve is installed in the gas line, 1/2 in. conduit must be run from the top center knockout of the gas valve box to the lower right-hand knockout in the control head. A PYRO-CHEM corner pulley is used wherever a change in conduit direction is required.

Gas Valve Cable Run Limitations When Used With Model NMCH3 or MCH3 Control Heads and Part No. 415670 and 423250 Pulley Elbows	
Maximum length of cable:	100 ft. (30.5 m)
Maximum # of pulleys:	30

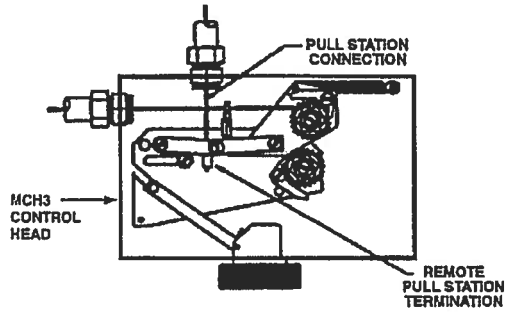

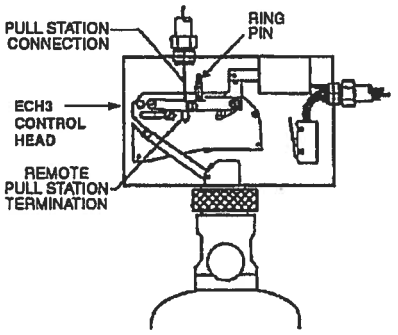

Figure 4-17. Model RPS-M Remote Pull Station Termination.

002885PC/003647PC

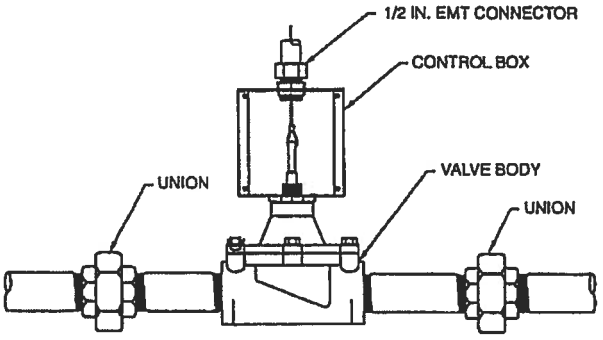

Figure 4-18. Gas Valve Installation.

002886PC

Remove the gas valve cover and thread the stainless steel cable through the conduit back to the control head. Thread the cable through the hole in the gas valve ratchet wheel. The line must then be crimped, and the crimp positioned inside the center of the ratchet wheel.

At the gas valve, loop the cable through the valve stem and secure it with the crimp provided (see Figure 4-18).

▸ Note: See Chapter 2 – Components for maximum dimen-
▸ sion to extend valve stem.

The gas valve line can now be put into a set position by applying tension to the gas valve line. This is accomplished by using a 1/2 in. hex wrench on the gas valve ratchet wheel. The ratchet wheel will be ratcheted in a clockwise direction until the gas valve is fully open. Secure the gas valve cover plate to the gas valve box with the four (4) screws provided. The gas valve line is now in a set position. See Figure 4-19.

CAUTION

Overtightening the gas valve may cause the system not to actuate.

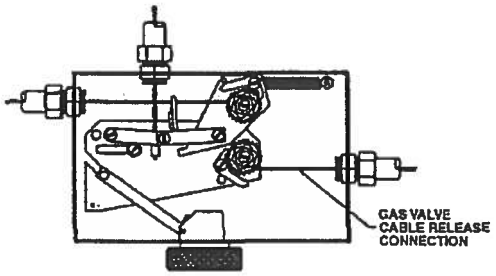

Figure 4-19. Gas Valve Line Termination.
002887PC

2. Electrical Gas Shut-Off Valve Installation.

The Model MCH3/ECH3/NMCH3 Control Head is used to operate the electrical gas shut-off valve. This valve is located in the fuel gas supply line. The valve body has an arrow which indicates direction of gas flow through the valve. A reset relay must always be used with an electrical gas shut-off valve. For proper wiring of the electrical gas shut-off valve, see Figure 4-15.

TEE PULLEY INSTALLATION

The Model TP-1 Tee Pulley is used to connect two (2) mechanical gas valves or two (2) remote mechanical pull stations to a single control head. The cable proceeding from the control head must always enter the branch of the tee pulley. See Figure 4-20.

A tee pulley that is used to close two (2) gas valves can only be used to close gas valves with similar stem travel. Gas valves from 3/4 in. up to 1 1/2 in. can be used on the same tee pulley. A 2 in. gas valve can be used only with another 2 in. gas valve. Gas valves from 2 1/2 in. up to 3 in. can be used on the same tee pulley. As an example, using a 3/4 in. gas valve with a 3 in. gas valve will not allow the 3 in. valve to fully open.

CAUTION

The tee pulley must never be used to connect multiple fusible link lines to a single control head.

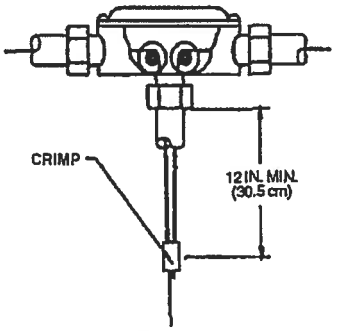

Figure 4-20. Tee Pulley Installation.
002888PC

MICRO SWITCH INSTALLATION

See NFPA 72, "National Fire Alarm Code," Initiating Devices section, for the correct method of wiring connection to the fire alarm panel.

The Model MS-SPDT, MS-DPDT, MS-3PDT, or MS-4PDT Micro Switch is available for use where an electrical output is required. These switches can be field installed in the control head. See Figure 4-21 and Figure 4-22 and refer to Instruction Sheet, Part No. 551159, included with switch shipping assembly, for detailed mounting instructions.

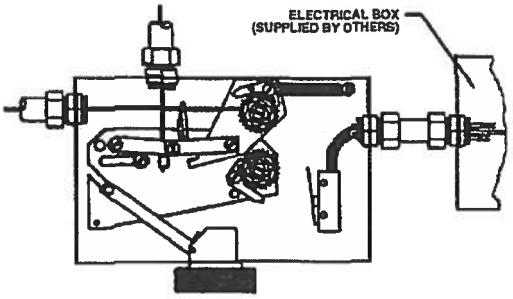

Figure 4-21. Micro Switch Installation in Model MCH3/NMCH3 Control Head.
002889PC

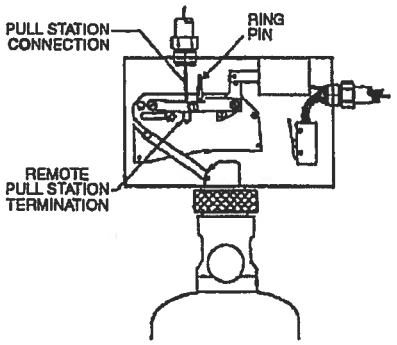

Figure 4-22. Micro Switch Installation in Model ECH3 Control Head.
003647PC

NOTE

The Model ECH3 Control Head is supplied with a Model MS-DPDT Micro Switch. This switch can be used in the actuation/detection circuit and for electrical output.

These switches may be used to provide an electrical signal to the main breaker and/or operate electrical accessories provided the rating of the switch is not exceeded. Wiring connections are shown in **Figure 4-23.** The contact ratings for the switches are as follows:

Contact Ratings For Micro Switches
21 amps, 1 HP, 125, 250, 277 VAC
or 2 HP, 250, 277 VAC

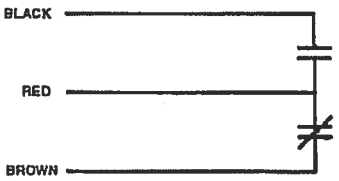

Figure 4-23. Wiring Diagram For Model MS-SPDT Micro Switch.
002863PC

The Alarm Initiating Switch, Part No. 550077, must be used ▸ to close a supervised alarm circuit to the building main fire alarm panel when the control head actuates. This will signal the fire alarm panel that there was a system actuation in the hazard area. This switch can be field installed in the control head. Refer to Instruction Sheet, Part No. 550081, included with the switch shipping assembly, for detailed mounting instructions. Wiring connections are shown in **Figure 4-24.** The switch is rated at 50mA, 28VDC.

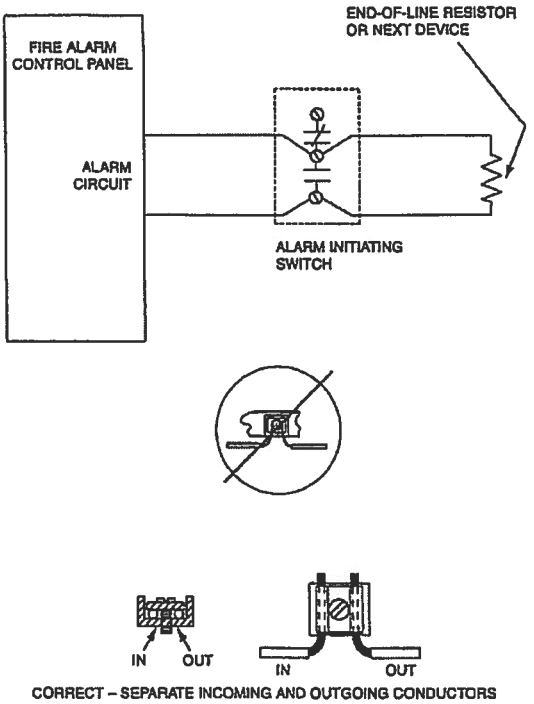

Figure 4-24. Wiring Diagram for Alarm Initiating Switch.
004891/004905

PIPE AND NOZZLE INSTALLATION

General Piping Requirements

1. Use Schedule 40 black iron (if used in a relatively non-corrosive atmosphere), galvanized, chrome-plated, or stainless steel pipe conforming to ASTM A120, A53, or A106. Fittings must be a minimum of 150 lb. Class. However, the PCI 35, 50, and 70 lb. cylinders must have a minimum of two (2) nozzles per cylinder to utilize the 150 lb. Class fittings. If the PCI 35, 50, or 70 lb. cylinder has one (1) nozzle, then a 300 lb. Class fitting must be used. The remaining Monarch cylinders have no limitations for the 150 lb. Class fittings. Distribution pipe sizes are 3/4 in. or 1 in. depending on number of nozzles.
2. Pipe unions are acceptable.
3. Use reducing tees for all pipe splits.
4. Reducing bushings are not acceptable.
5. Cast iron pipe and fittings are not acceptable.
6. **Pipe thread sealant or pipe joint compound is not allowed for distribution piping.**
7. Bell Reducer or any non-restrictive fittings are allowed.
8. Before assembling the pipe and fittings, make certain all ends are carefully reamed and blown clear of chips and scale. Inside of pipe and fittings must be free of oil and dirt.

9. If Teflon tape is used on threaded ends, start at the second male thread and wrap the tape clockwise around the threads, away from the pipe opening.

10. All system piping must comply with Section A-5-9.1 of NFPA-17.

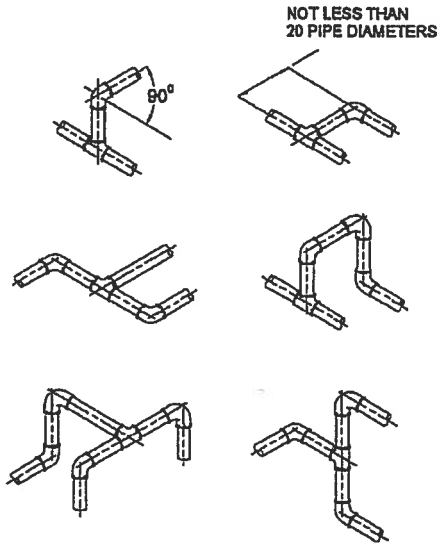

Figure 4-25. Acceptable Piping Methods.
002965PC

CAUTION

Do not apply Teflon tape to cover or overlap the pipe opening, as the pipe and nozzles could become blocked and prevent the proper flow of agent.

TEE POSITIONING

In order to obtain equal distribution at a tee, the dry chemical must enter the side port of the tee and exit through the two end ports. See Figure 4-26.

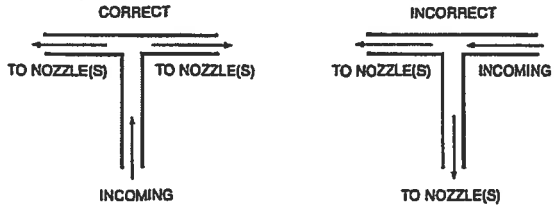

Figure 4-26. Tee Positioning
003126

Hanger/Support Installation

The hanger/supports must be installed in conjunction with the pipe and fittings. The spacing requirements for hangers/supports depend on the pipe size being utilized; refer to the Spacing Guidelines Chart.

PIPE HANGER SPACING GUIDELINES CHART

Distribution Pipe Size	Maximum Spacing Distance Hanger to Hanger	
in.	ft.	m
1/4	4	(1.2)
1/2	6	(1.8)
3/4	8	(2.4)
1	12	(3.6)

Other factors that influence hanger/support spacing are:

- Hanger/Support must be placed within 1 ft. (0.3 m) of the discharge nozzle.

Hanger/Support must be placed between elbows when distance is greater than 2 ft. (0.6 m).

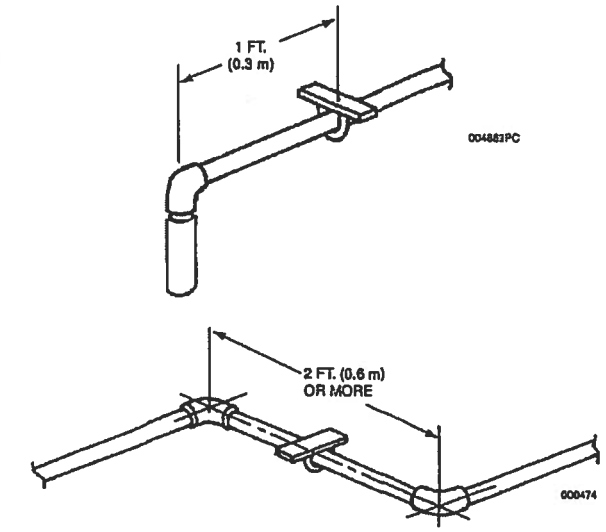

Figure 4-27. Hanger/Support.

MAIN/RESERVE SYSTEM

When a reserve system is being utilized, two 1 in. swing check valves, Part No. 417788, must be installed in the distribution piping network. They should be positioned as close as possible to the "Y" fitting joining the piping from the main and reserve tanks to one common supply pipe. See Figure 4-28. Note: Make certain to install swing check valves in the direction of dry chemical flow as shown with an arrow stamped on the valve body.

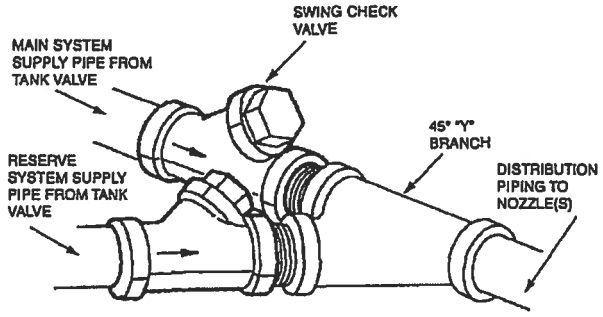

Figure 4-28. Main/Reserve System.

PRESSURE SWITCH INSTALLATION

The Model PS-SPDT-X Pressure Switch is available for use when an electrical output is required. It must be installed in the discharge piping within 12 in. (30.5 cm) of the valve discharge port as shown in Figure 4-29. An inline tee is used for the installation. The switch is isolated from the chemical by a 12 in. to 15 in. (30.5 to 38.1 cm) column of air in the form of a vertical pipe nipple. The switch is then mounted at the top of this nipple.

NOTE

Piping for pressure switch must be included in total cylinder to T1 piping limitations. The fitting used to connect the pressure switch to the distribution piping counts as one (1) elbow in that section.

As an alternate, the switch may be connected directly to the copper tubing of a remotely mounted control head or a PAC cylinder. The PS-SPDT-X counts as one cylinder in this section, and the limitations on copper tubing and/or pipe previously stated in this manual apply.

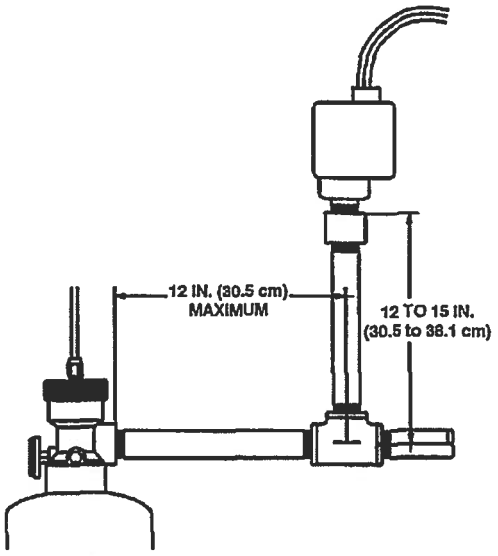

Figure 4-29. Pressure Switch Installation.

SYSTEM CHECKOUT AFTER INSTALLATION

1. Model MCH3 Mechanical Control Head.

Before putting the system into service, all components must be checked for proper operation. During this checkout, assure that the carbon dioxide pilot cartridge is not installed in the control head actuator. Remove the pull pin from the hole in the slide plate.

To check satisfactory operation of the control head, cut the terminal link or the "S" hook holding the link. This will relieve all tension on the fusible link line and operate the control head. The slide plate will move fully to the right. The gas valve cable will be released, causing the gas valve to close. Any auxiliary equipment connected to the dry contacts of the solenoid monitor and/or the Micro Switch in the control head will operate.

If any of these events fail to occur, the problem must be investigated and repaired.

Repair the terminal link and put the fusible link line back into the set position. This is accomplished by using a 1/2 in. hex wrench on the fusible link line ratchet wheel. The ratchet wheel will be ratcheted in a clockwise direction until the spring plate makes contact with the top of the control head box.

VIKING FIRE PROTECTION INC. 3005 | Pitfield boulevard | Saint-Laurent, Québec, Canada | H4S 1H4
Tel.: 514.332.5110 Fax: 514.332.6260 info@vikingfire.ca

CHAPTER 5

MAINTENANCE

CHAPTER V
SYSTEM MAINTENANCE

GENERAL

This chapter will detail the basic information necessary for proper maintenance of the PYRO-CHEM Industrial Fire Suppression System. However, before attempting any system maintenance, it is necessary to attend a Factory Certification Training Class and become Certified to Install and maintain the PYRO-CHEM Industrial Fire Suppression System.

MAINTENANCE AFTER SYSTEM DISCHARGE

1. System Cleanup.

The hazard area cleanup after a system discharge is very basic. The dry chemical agent should be cleaned up by either sweeping or vacuuming. Residual dry chemical should be wiped off effected surfaces with a damp cloth.

2. System Cylinder Recharge.

CAUTION

Protective eye goggles and protective footwear must be worn when performing system maintenance.

1. Remove the cylinder from the control head or pneumatic adaptors and inspect for visual damage. If there is any damage the cylinder must be hydrostatically tested before being refilled. If there is no damage, the cylinder can be recharged.
2. Reset all pneumatic actuators (Models PDA-D2) by depressing the check valve on top and relieving the pressure. Remove the pneumatic actuator or control head from the valve and use any 1/4-20 UN screw or bolt to screw into the top of the piston. Pull up on the piston until the piston is flush with the top of the valve body and remove the screw or bolt from the piston.
3. Remove the valve and siphon tube assembly from the cylinder and unscrew the siphon tube from the valve.
4. Inspect the valve to make sure no mechanical damage has occurred. If there is evidence of any damage to the seals, rebuild the valve using the Dry Valve Rebuilding Kit (PYRO-CHEM Part Number 550037).
5. Screw the siphon tube back into the valve.
6. Refill the cylinder with agent. Use the table below for easy reference.

Cylinder	Recharge
PCI-15ABC	12.5 lb. ABC (Part No. 550170)
PCI-17ABC	17 lb. ABC (Part No.550170)
PCI-25sBC	25 lb. BC (Part No.550162)
PCI-25sABC	25 lb. ABC (Part No.550170)
PCI-35ABC	35 lb. ABC (Part No.550170)
PCI-50sBC	50 lb. BC (Part No.550162)
PCI-50sABC	50 lb. ABC (Part No.550170)
PCI-70ABC	70 lb. ABC (Part No.550170)

The Model RC-50ABC (Part No. 550170) is a 50 lb. pail of ABC dry chemical recharge agent available from PYRO-CHEM. The Model RC-50BC (Part No. 550162) is a 50 lb. pail of BC dry chemical recharge agent available from PYRO-CHEM.

7. Insert the siphon tube into the cylinder, and screw the valve onto the cylinder. Make sure that the valve is screwed completely into the cylinder.
8. Attach the Recharge Adaptor (PYRO-CHEM Part No. 550130) to the discharge port of the valve. The adaptor O-ring should be completely inside the discharge port. Attach a source of dry nitrogen to the adaptor.

   Charge the cylinder with dry nitrogen to 350 psi at 70°F.

NOTE

1. The pressure gauge attached to the cylinder valve should not be used to determine when the charging pressure has been reached. A pressure regulator should be used.
2. Higher pressure may be needed during the initial charging stage to blow the agent out of the siphon tube. Secure the cylinder during this stage, as it may jump as the agent is blown from the siphon tube.

9. Slowly disconnect the nitrogen source from the Recharge Adaptor. The cylinder valve will close when the Recharge Adaptor is depressurized. When the valve is closed and the nitrogen source is disconnected from the Recharge Adaptor, remove the recharge adaptor from the valve discharge port. Immediately screw the recoil preventer into the discharge port.

CAUTION

The recoil preventer must remain in the valve discharge port until the cylinder is attached to the piping network.

10. Reinstall the cylinder to the piping network. Reattach the control head or pneumatic adaptor.

3. Piping and Nozzles.

Piping should be blown out with air or dry nitrogen. Nozzle blow off caps should be replaced.

4. System Reset.

All fusible links should be replaced. The fusible link line can now be put into a set position by applying tension to the fusible link line. This is accomplished by using a 1/2 in. hex wrench on the fusible link line ratchet wheel. The ratchet wheel will be ratcheted in a clockwise direction until the spring plate makes contact with the top of the control head box. The fusible link line is now in a set position.

After setting the fusible link line, the system can be put back into service by following the SYSTEM CHECKOUT AFTER INSTALLATION Section of Chapter IV.

REGULAR SYSTEM MAINTENANCE

1. Six (6) Month Maintenance.

1. Check that the hazard has not changed.
2. Check that all nylon ties are in place and the system has not been tampered with.
3. Check the entire system for mechanical damage.
4. Check the solenoid monitor.
5. Disconnect the control head or pneumatic tubing from each agent cylinder. Remove the carbon dioxide pilot cartridge and exercise the control head to ensure it is functioning properly. Make sure the gas shut-off valve and the remote pull station are functioning properly.

NOTE

Before continuing, remove the cover from the control head and insert the pull pin in the hole in the slide plate above the latching arm. This will secure the system, preventing accidental discharge.

6. Inspect fusible link detectors for excessive grease buildup. Clean or replace links if necessary. Visually inspect thermal detectors.

NOTE

Methods and frequency of inspection, testing and maintenance of detectors should be in accordance with NFPA-72.

7. Reinstall the carbon dioxide pilot cartridge and replace the control head cover and nylon tie.

CAUTION

Before screwing the carbon dioxide pilot cartridge into the actuator, ensure that the actuator has an O-ring installed.

8. Inspect the cylinder pressure. Tap the gauge lightly to ensure the needle is moving freely. If the gauge shows a loss in pressure indicated by the needle being below the green band, the tank should be removed and recharged per the SYSTEM CYLINDER RECHARGE section of Chapter V (System Maintenance) in this manual.

2. Annual Maintenance.

1. Inspect as per six (6) month maintenance instructions.
2. Disconnect and remove the discharge piping from the system. Using air or nitrogen, blow out the discharge piping. Replace all nozzle caps.
3. Fixed temperature sensing elements of the fusible alloy type shall be replaced at least annually or more frequently, if necessary, to assure proper operation of the system.
4. Test thermal detectors and remote pull station per SYSTEM CHECKOUT AFTER INSTALLATION section located in Chapter IV (System Installation) of this manual. Per NFPA 72, two (2) or more detectors per circuit should be tested. Note individual detector location and date of testing. Within 5 years, all detectors in system must be tested.
5. Replace the carbon dioxide pilot cartridge, recording the date of installation on the cartridge with a felt-tipped marker.

CAUTION

Before screwing the carbon dioxide pilot cartridge into the actuator, ensure that the actuator has an O-ring installed.

3. Six (6) Year Maintenance.

1. Inspect as per annual maintenance instructions.
2. Examine the dry chemical. If there is evidence of caking, the dry chemical shall be discarded.

4. Hydrostatic Testing.

The dry chemical agent cylinder(s) and pneumatic cylinder(s) shall be hydrostatically tested at least every twelve (12) years as per NFPA-17.

NOTE

Refer to NFPA-17 for additional maintenance requirements.

AGNICO EAGLE

Vendor Document Status

1 ☐ Proceed to next submission and status.

2 ☐ Proceed with exceptions as noted to next submission and status.

3 ☐ Do not proceed.
Revise as noted and resubmit next submission and status.

4 ☑ Complete, no further submission required.

By: Jean-Francois Tremblay Date: 2017-05-02

Review and authorization to fabricate are only for general conformance with the design concept of the Project as expressed in the Contract Documents. Sole responsibility for the accuracy and completeness of this document, including but not limited to dimensions and quantities, remains with the Supplier/Contractor. Agnico Eagle does not warrant the accuracy or completeness of any of the information contained herein, nor does Agnico Eagle authorize or approve any construction means, methods, techniques, sequences or any safety precautions or procedures.

Agnico Eagle No. 6515-C-270-007-141-TES-0015 R: Sub001

DOCUMENT FOR INFORMATION



Fuel Tanks Piping

Supply and Installation



AGNICO EAGLE

Punchlist

Document Number : AEM-GE-ITR-003

Contract Number : C22466T / C22498E

Equipment/System description:

ITEM No	DESCRIPTION	CAT 1	CAT 2	CAT 3	COMMENTS	COMPLETED
1						
2						
3						
4						
5						
6						
7						
8						
9						
10						
11						
12						
13						
14						
15						
16						
17						
18						
19						
20						

CAT 1 = Effects commissioning
CAT 2 = Effects operation
CAT 3 = Post operation

TO BE VALIDATED

AT A LATER DATE

AGNICO EAGLE

Vendor Document Status

1 ☐ Proceed to next submission and status.

2 ☐ Proceed with exceptions as noted to next submission and status.

3 ☐ Do not proceed.
Revise as noted and resubmit next submission and status.

4 ☑ Complete, no further submission required.

By: Jean-Francois Tremblay Date: 2017-05-02

Review and authorization to fabricate are only for general conformance with the design concept of the Project as expressed in the Contract Documents. Sole responsibility for the accuracy and completeness of this document, including but not limited to dimensions and quantities, remains with the Supplier/Contractor. Agnico Eagle does not warrant the accuracy or completeness of any of the information contained herein, nor does Agnico Eagle authorize or approve any construction means, methods, techniques, sequences or any safety precautions or procedures.

Agnico Eagle No. 6515-C-270-007-141-TES-0016 R: Sub001

DOCUMENT FOR INFORMATION

Date: _____

To: _____

Project No: _____

Contract No: _____

Contract Title: _____

Contractor: _____

We, _____ (Contractor's Name), the Contractor for the above described contract, hereby certify that we have reviewed the Contract Documents pertaining to:

Contract No.: _____

Contract Name: _____

Partial Completion Certificates: _____

and having physically inspected the Work performed, do hereby file claim for a notice of Final Completion.

I do declare that I am, _____ (Responsible's Name), HAVING AUTHORITY FROM MY COMPANY TO PETITION FOR THE ABOVE REFERRED TO FINAL COMPLETION NOTICE.

Signature: _____

Name: _____

Title: _____

SECTION
AS-BUILTS DRAWINGS

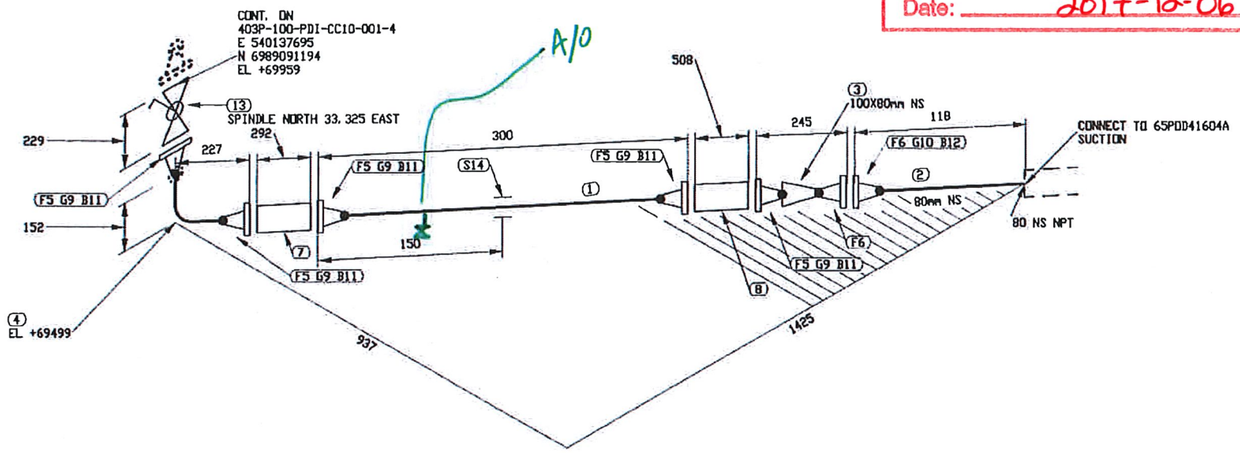

PROMEC
AS-BUILT
Signature:
Date: 2017-12-06

FABRICATION DRAWINGS BASED ON WSP CERTIFIED ENGINEERING

LISTE DE MATERIEL

No	QTE	DIA	MATERIEL/CATALOGUE	DESCRIPTION
1	150 MM	100	A 333 Gr. 6	SCH STD, SMLS PIPE
2	50 MM	80	A 333 Gr. 6	SCH STD, SMLS PIPE PDExTDE
3	1	100X80	A 420 Gr. WPL6	SCH STD x 80, BW CONC RED
4	1	100	A 420 Gr. WPL6	SCH STD, BW LR 90 DEG ELBOW
5	5	100	A 350 Gr. LF2	CL 150, SCH STD, RF, WN FLANGE
6	2	80	A 350 Gr. LF2	CL 150, SCH STD, RF, WN FLANGE
7	1	100		CL 150, BASKET STRAINER
8	1	100		CL 150, SINGLE BRAIDED HOSE ASSEMBLY
9	5	100	ASME B16.20	CL 150, GARLOCK 5500, RING TYPE GASKET 1/8" THK
10	1	80	ASME B16.20	CL 150, GARLOCK 5500, RING TYPE GASKET 1/8" THK
11	40	16	A 193 B7/A 194 2H	CL 150, 8 - 15.875 X 90 STUD BOLTS c/w TWO HEAVY HEX NUTS
12	4	16	A 193 B7/A 194 2H	CL 150, 4 - 15.875 X 90 STUD BOLTS c/w TWO HEAVY HEX NUTS
13	1	100	BA-31	CL 150, RF, BALL VALVE
14	1	100		PIPE SUPPORT AS PER DETAIL 4, DWG# 65-403-270-200

PERMIT TO PRACTICE
LE GROUPE ULTRAGEN LTÉE
Signature
Date JUL 1 / 2017
PERMIT NUMBER: P 1180
NT/NU Association of Professional Engineers and Geoscientists

REGISTERED PROFESSIONAL ENGINEER
D. TRUONG
LICENSEE
NT/NU
2017/07/14

No.	DATE	REVISION	QVN / PAR / APP.
0	2017/06/30	ISSUED FOR CONSTRUCTION	

CLIENT: AGNICO EAGLE

NUQSANA-PROMEC MINING

ultragen
CONSULTANT PROJECT NO. 591700

SCEAU PROFESSIONNEL

CONC.: KHV
DATE: 2017/05/29
DESSINÉ PAR: KVE
DATE: 2017/05/29
VÉR. PAR:
DATE:
APP.:
DATE:
ÉCHELLE: AUCUNE

PROJET: AGNICO EAGLE - MELIADINE DIVISION
403P - COMBUSTIBLE

TITRE: PORTAIL #1
FABRICATION ISOMETRIC
FUEL FROM TRUCK UNLOADING TO 65PDD41604A/B

No PROJET	No DESSIN	PAGES	RÉV.
6515	403P-100-PDI-CC10-001	5/6	0

403P-MN-01

NO. DE CONDUITE		SPECIFICATION	PRODUIT	SYSTEME REVETEMENT	CODE DE COULEUR	ISOLATION ET TRACAGE	EPAISS. D'ISOLATION		
403P-100-PDI-CC10-001		CC10	PDI					65-403-270-200	PIPE SUPPORT DETAILS
PRESSION D'OPERATION	TEMPERATURE D'OPERATION	PRESSION DE CONCEPTION	TEMPERATURE DE CONCEPTION	PRESSION D'ESSAI	CLASSE D'INSPECTION	CODE DE SERVICE	TRAITEMENT THERMIQUE	65-403-205-200	P&ID
PSIG	°F	PSIG	°F	PSIG				No. DESSIN	DESSINS DE REFERENCE

FICHIER: M:\Agnico\Meliadine\591700 (Fuel Distribution)\05. Dessins\02. Tuyauterie\02. Isometriques\02. Portail 1\403P-100-PDI-CC10-001-5.DWG

IMPRIMÉ LE: Jun 30, 2017, 8:19am

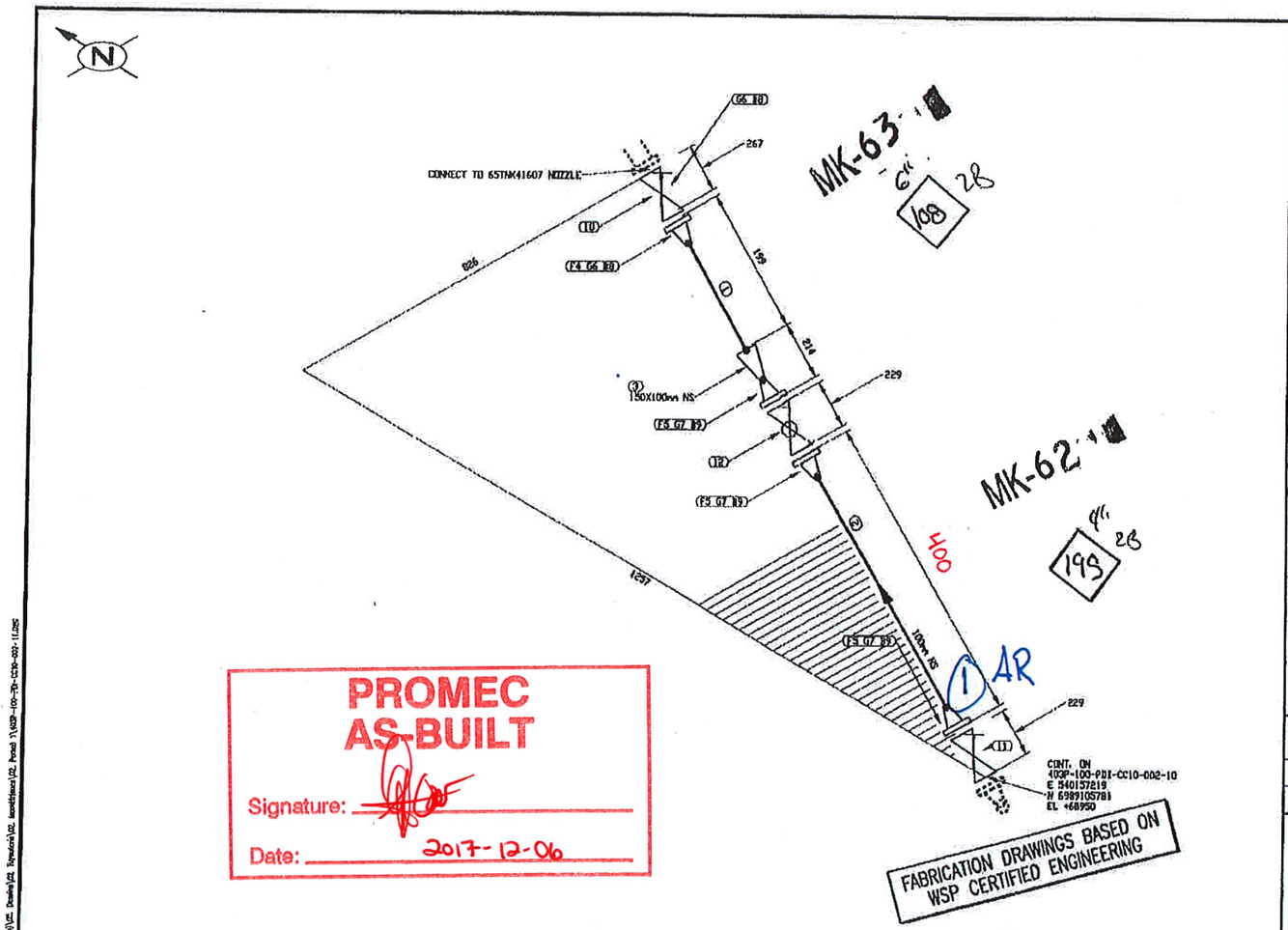

PROMEC
AS-BUILT
Signature:
Date: 2017-12-06

JQ2216.6
Pt-GMAW AC-001
Pt a Pl A6

LISTE DE MATERIEL

No	QTE	DIA	MATERIEL/CATALOGUE	DESCRIPTION
1	111 MM	150	A 333 Gr. 6	SCH STD, SNLS PIPE
2	200 MM	100	A 333 Gr. 6	SCH STD, SNLS PIPE
3	1	150X100	A 420 Gr. WPL6	SCH STD, BW CONC RED
4	1	150	A 350 Gr. LF2	CL 150, SCH STD, RF, WN FLANGE
5	3	100	A 350 Gr. LF2	CL 150, SCH STD, RF, WN FLANGE
6	2	150	ASME B16.20	CL 150, GARLOCK 5500, RING TYPE GASKET 1/8" THK
7	3	100	ASME B16.20	CL 150, GARLOCK 5500, RING TYPE GASKET 1/8" THK
8	16	19	A 193 B7/A 194 2H	CL 150, 8 - 19.05 X 100 STUB BOLTS c/w TWO HEAVY HEX NUTS
9	24	16	A 193 B7/A 194 2H	CL 150, 8 - 15.875 X 90 STUB BOLTS c/w TWO HEAVY HEX NUTS
10	1	150	GA-10	CL 150, RF, GATE VALVE
11	1	100	GA-10	CL 150, RF, GATE VALVE
12	1	100	XA-31	CL 150, RF, BALL VALVE

CONTRAT UF
21.06 X20

REÇU le
03 JUIL. 2017
Rép: _____

EN ATELIER LE
04 JUIL. 2017
par: BS

No.	DATE	REVISION	QVN / PAR / APP.
0	2017/06/30	ISSUED FOR CONSTRUCTION	

CLIENT: AGNICO EAGLE

NUQSANA PROMEC MINING

ultragen
CONSULTANT PROJECT NO. 591700

SCEAU PROFESSIONNEL

CONC.: KHV
DATE: 2017/06/28
DESSINÉ PAR: KVE
DATE: 2017/06/28
VÉR. PAR:
DATE:
APP.:
DATE:
ÉCHELLE: AUCUNE

PROJET: AGNICO EAGLE - MELIADINE DIVISION
403P - COMBUSTIBLE

TITRE: PORTAIL #1
FABRICATION ISOMETRIC
FUEL FROM 65PDD41604A/B TO 65TNK41607 & 65TNK41608

No PROJET	No DESSIN	PAGES	REV.
6515	403P-100-PDI-CC10-002	11/12	0

NO. DE CONDUITE		SPECIFICATION	PRODUIT	SYSTEME REVETEMENT	CODE DE COULEUR	ISOLATION ET TRACAGE	EPAISS. D'ISOLATION		
403P-100-PDI-CC10-002		CC10	PDI					65-403-270-200	PIPE SUPPORT DETAILS
PRESSION D'OPERATION	TEMPERATURE D'OPERATION	PRESSION DE CONCEPTION	TEMPERATURE DE CONCEPTION	PRESSION D'ESSAI	CLASSE D'INSPECTION	CODE DE SERVICE	TRAITEMENT THERMIQUE	65-403-205-200	P&ID
PSIG	°F	N/A PSIG	10 à 15 °F	N/A PSIG		D-31.3		No. DESSIN	DESSINS DE REFERENCE

Fluide Diesel Eng 5% RX

U-F.

403P-MN-01, 403P-MN-02

PROMEC
AS-BUILT
Signature:
Date: 2017-12-06

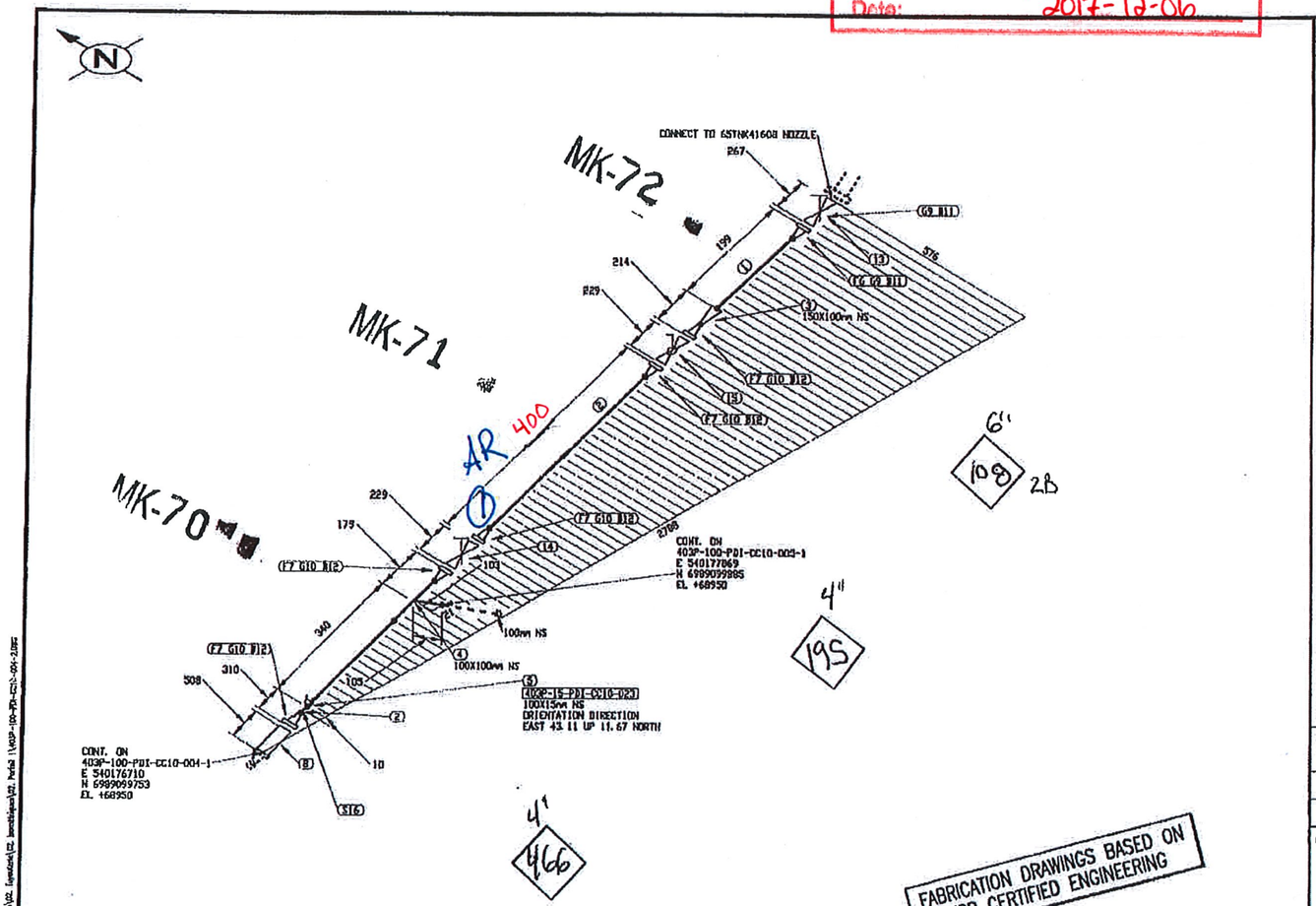

FABRICATION DRAWINGS BASED ON WSP CERTIFIED ENGINEERING

LISTE DE MATERIEL

No	QTE	DIA	MATERIEL/CATALOGUE	DESCRIPTION
1	112 KM	150	A 333 Gr. 6	SCH STD, SMLS PIPE
2	671 KM	100	A 333 Gr. 6	SCH STD, SMLS PIPE
3	1	150X100	A 420 Gr. WPL6	SCH STD, BW CONC RED
4	1	100X100	A 420 Gr. WPL6	SCH STD, BW STRAIGHT TEE
5	1	100X15	A 350 Gr. LF2	CL 3000, THREDOLET
6	1	150	A 350 Gr. LF2	CL 150, SCH STD, RF, WN FLANGE
7	5	100	A 350 Gr. LF2	CL 150, SCH STD, RF, WN FLANGE
8	1	100		CL 150, SINGLE BRAIDED HOSE ASSEMBLY
9	2	150	ASME B16.20	CL 150, GARLOCK 5500, RING TYPE GASKET 1/8" THK
10	5	100	ASME B16.20	CL 150, GARLOCK 5500, RING TYPE GASKET 1/8" THK
11	16	19	A 193 B7/A 194 2H	CL 150, 8 - 19.05 X 100 STUD BOLTS c/w TWO HEAVY HEX NUTS
12	40	16	A 193 B7/A 194 2H	CL 150, 8 - 15.875 X 90 STUD BOLTS c/w TWO HEAVY HEX NUTS
13	1	150	GA-10	CL 150, RF, GATE VALVE
14	1	100	GA-10	CL 150, RF, GATE VALVE
15	1	100	BA-31	CL 150, RF, BALL VALVE
16	1	100		PIPE SUPPORT AS PER DETAIL 3, DWG 65-403-270-200

CONTRAT UF
21.06X20

REÇU le
03 JUIL. 2017
Rép:

No.	DATE	REVISION	QVN / PAR / APP.
0	2017/06/30	ISSUED FOR CONSTRUCTION	

CLIENT: AGNICO EAGLE

NUQSANA PROMEC MINING

ultragen

CONSULTANT PROJECT NO. 591700

SCEAU PROFESSIONNEL

CONC.: KHV DATE: 2017/05/29
DESSINÉ PAR: XVE DATE: 2017/05/29
VÉR. PAR: DATE:
APP.: DATE:
ÉCHELLE: AUCUNE

PROJET: AGNICO EAGLE - MELIADINE DIVISION
403P - COMBUSTIBLE

TITRE: PORTAIL #1
FABRICATION ISOMETRIC
FUEL FROM 403P-100-PDI-CC10-002 TO 65TNK41608 LOADING NOZZLE

No PROJET	No DESSIN	PAGES	REV.
6515	403P-100-PDI-CC10-004	2/2	0

403P-MN-01

NO. DE CONDUITE		SPECIFICATION	PRODUIT	SYSTEME REVETEMENT	CODE DE COULEUR	ISOLATION ET TRACAGE	EPAISS. D'ISOLATION		
403P-100-PDI-CC10-004		CC10	PDI					65-403-270-200	PIPE SUPPORT DETAILS
PRESSION D'OPERATION	TEMPERATURE D'OPERATION	PRESSION DE CONCEPTION	TEMPERATURE DE CONCEPTION	PRESSION D'ESSAI	CLASSE D'INSPECTION	CODE DE SERVICE	TRAITEMENT THERMIQUE	65-403-205-200	P&ID
PSIG	°F	NA PSIG	la NG °F	N/A PSIG		631.3		No. DESSIN	DESSINS DE REFERENCE

JQ2216.6
PT GMAW-AC-001 R6
P1 a P1

Fluid Dread End : 5% Rx

U-F.

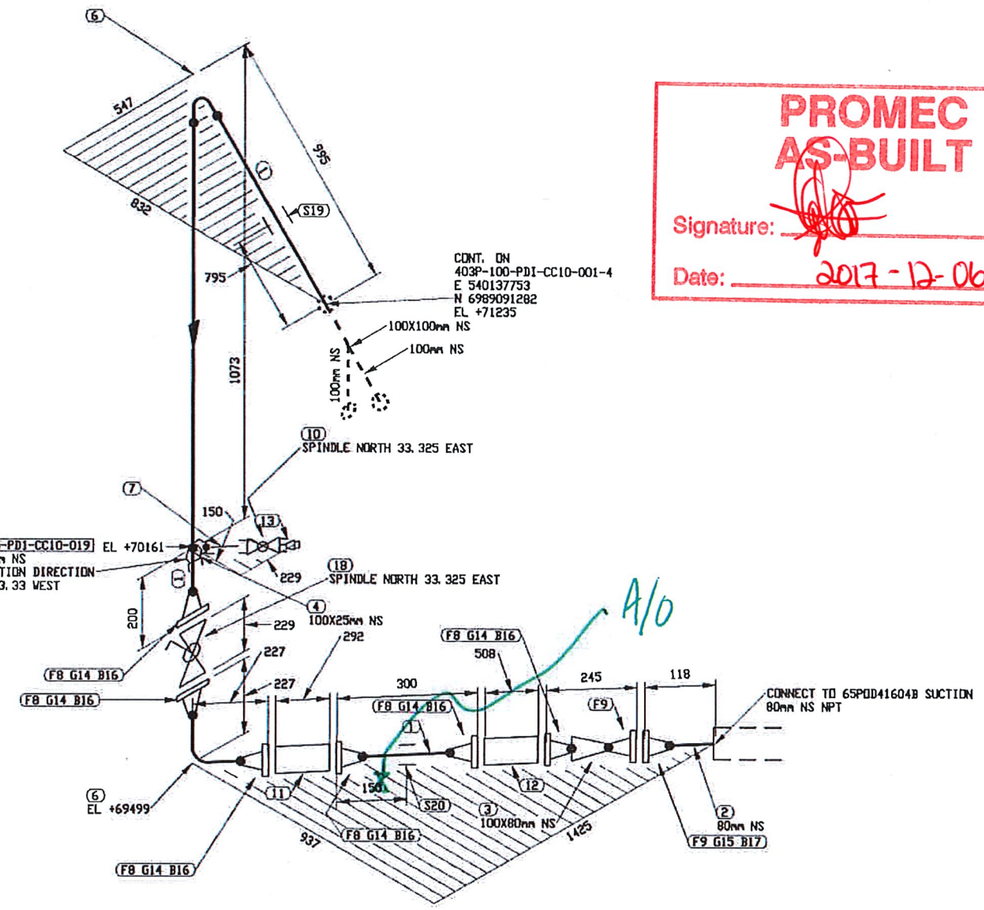

PROMEC
AS-BUILT
Signature: _____
Date: 2017-12-06

FABRICATION DRAWINGS BASED ON
WSP CERTIFIED ENGINEERING

LISTE DE MATERIEL

No	QTE	DIA	MATERIEL/CATALOGUE	DESCRIPTION
1	2039 MM	100	A 333 Gr. 6	SCH STD, SMLS PIPE
2	50 MM	80	A 333 Gr. 6	SCH STD, SMLS PIPE PDExTDE
3	1	100X80	A 420 Gr. WPL6	SCH STD x 80, BW CONC RED
4	1	100X25	A 350 Gr. LF2	CL 3000, SOCKOLET
5	1	100X15	A 350 Gr. LF2	CL 3000, THREDOLET
6	2	100	A 420 Gr. WPL6	SCH STD, BW LR 90 DEG ELBOW
7	1	25	A 333 Gr. 6	SCH 80, NIPPLE x 75mm LG PDExTDE
8	6	100	A 350 Gr. LF2	CL 150, SCH STD, RF, WN FLANGE
9	2	80	A 350 Gr. LF2	CL 150, SCH STD, RF, WN FLANGE
10	1	25	BA-32	CL 600, THRD, BALL VALVE
11	1	100		CL 150, BASKET STRAINER
12	1	100		CL 150, SINGLE BRAIDED HOSE ASSEMBLY
13	1	25	A 350 Gr. LF2	MNPT SOLID STL BULL PLUG
14	6	100	ASME B16.20	CL 150, GARLOCK 5500, RING TYPE GASKET 1/8" THK
15	1	80	ASME B16.20	CL 150, GARLOCK 5500, RING TYPE GASKET 1/8" THK
16	48	16	A 193 B7/A 194 2H	CL 150, 8 - 15.875 X 90 STUD BOLTS c/w TWO HEAVY HEX NUTS
17	4	16	A 193 B7/A 194 2H	CL 150, 4 - 15.875 X 90 STUD BOLTS c/w TWO HEAVY HEX NUTS
18	1	100	BA-31	CL 150, RF, BALL VALVE
19	1	100		PIPE SUPPORT BY CONTRACTOR
20	1	100		PIPE SUPPORT AS PER DETAIL 4, DWG: 65-403-270-200

PERMIT TO PRACTICE
LE GROUPE ULTRAGEN LTÉE
Signature _____
Date JUL 14 2017
PERMIT NUMBER: P 1180
NT/NU Association of Professional Engineers and Geoscientists

REGISTERED PROFESSIONAL ENGINEER
D TRUONG
LICENSEE
NT/NU
2017/07/14

No.	DATE	REVISION	
0	2017/06/30	ISSUED FOR CONSTRUCTION	QVN / PAR / APP.

CLIENT: AGNICO EAGLE

NUQSANA-PROMEC MINING

ultragen

CONSULTANT PROJECT NO. 591700

SCEAU PROFESSIONNEL

CONC.: KHV
DATE: 2017/05/29
DESSINÉ PAR: KVE
DATE: 2017/05/29
VÉR. PAR:
DATE:
APP.:
DATE:
ÉCHELLE: AUCUNE

PROJET: AGNICO EAGLE - MELIADINE DIVISION
403P - COMBUSTIBLE

TITRE: PORTAIL #1
FABRICATION ISOMETRIC
FUEL FROM TRUCK UNLOADING TO 65POD41604B

No PROJET	No DESSIN	PAGES	RÉV.
6515	403P-100-PDI-CC10-006	1/1	0

403P-MN-01

NO. DE CONDUITE		SPECIFICATION	PRODUIT	SYSTEME REVETEMENT	CODE DE COULEUR	ISOLATION ET TRACAGE	EPAISS. D'ISOLATION		
403P-100-PDI-CC10-006		CC10	PDI					65-403-270-200	PIPE SUPPORT DETAILS
PRESSION D'OPERATION	TEMPERATURE D'OPERATION	PRESSION DE CONCEPTION	TEMPERATURE DE CONCEPTION	PRESSION D'ESSAI	CLASSE D'INSPECTION	CODE DE SERVICE	TRAITEMENT THERMIQUE	65-403-205-200	P&ID
PSIG	°F	PSIG	°F	PSIG				No. DESSIN	DESSINS DE REFERENCE

FICHIER: N:\Ag

IMPRIMÉ LE: Jun 30, 2017, 9:21am

\Meridian\591700 (Fuel Distribution)\05. Dessins\02. Tuyauterie\02. Isométriques\02. Portail 1\403P-100-PDI-CC10-006-1.DWG

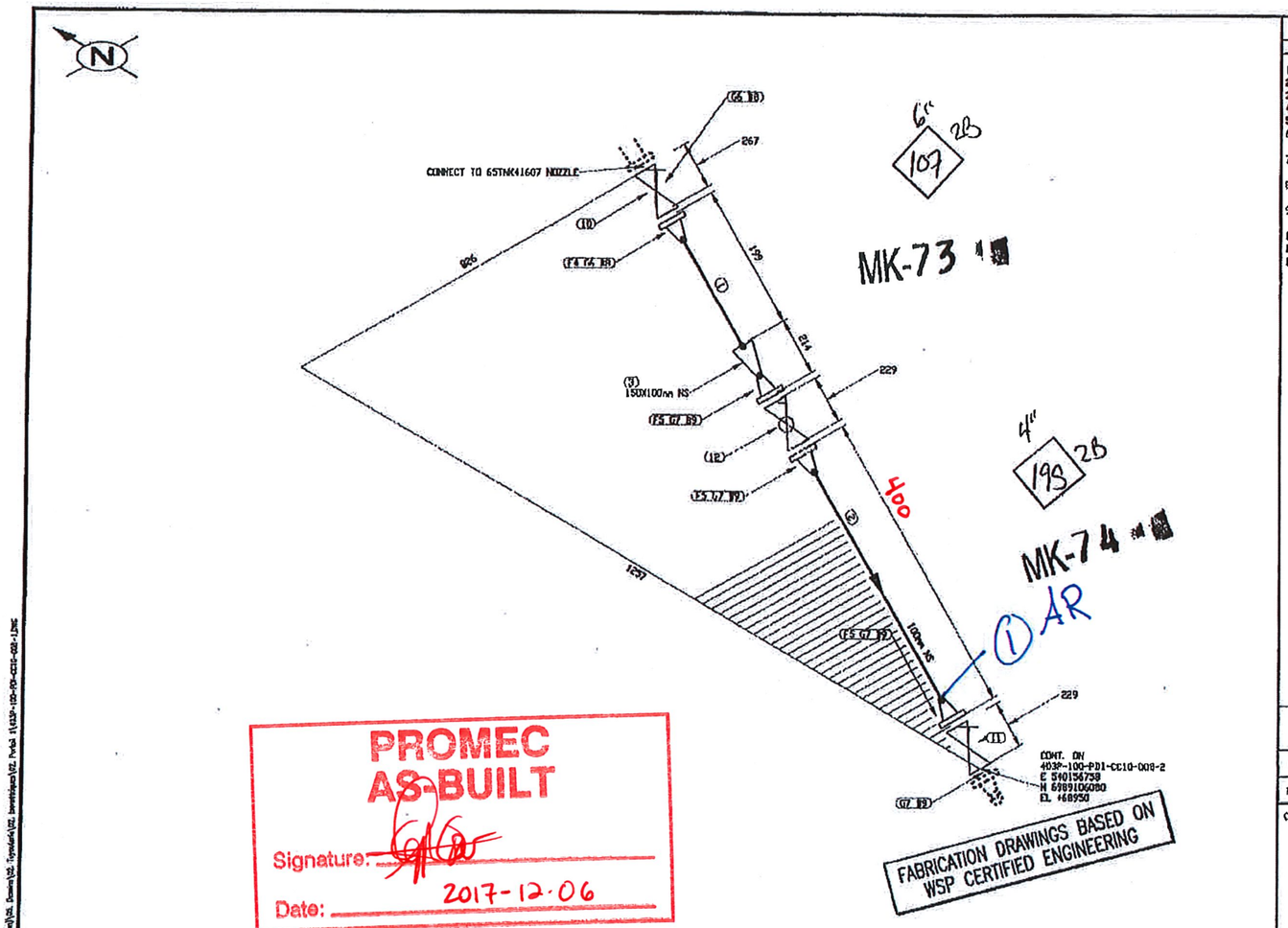

LISTE DE MATERIEL

No	QTE	GRA	MATERIEL/CATALOGUE	DESCRIPTION
1	111 MM	150	A 333 Gr. 6	SCH STD, SMLS PIPE
2	200 MM	100	A 333 Gr. 6	SCH STD, SMLS PIPE
3	1	150X100	A 403 Gr. WPL6	SCH STD, BW CONC RED
4	1	150	A 350 Gr. LF2	CL 150, SCH STD, RF, WN FLANGE
5	3	100	A 350 Gr. LF2	CL 150, SCH STD, RF, WN FLANGE
6	2	150	ASME B16.20	CL 150, GARLOCK 9500, RING TYPE GASKET 1/8" THK
7	4	100	ASME B16.20	CL 150, GARLOCK 9500, RING TYPE GASKET 1/8" THK
8	16	19	A 193 B7/A 194 2H	CL 150, 8 - 19.05 X 100 STUD BOLTS c/w TWO HEAVY HEX NUTS
9	32	16	A 193 B7/A 194 2H	CL 150, 8 - 15.875 X 90 STUD BOLTS c/w TWO HEAVY HEX NUTS
10	1	150	GA-10	CL 150, RF, GATE VALVE
11	1	100	GA-10	CL 150, RF, GATE VALVE
12	1	100	BA-31	CL 150, RF, BALL VALVE

CONTRAT UF
21.06x20

REÇU le
03 JUIL. 2017
Rép:

EN ATELIER LE
04 JUIL. 2017
par: BS

PROMEC
AS-BUILT
Signature:
Date: 2017-12-06

No. DE CONDUITE		SPECIFICATION	PRODUIT	SYSTEME REVETEMENT	CODE DE COULEUR	ISOLATION ET TRAÇAGE	EPAISS. D'ISOLATION		
403P-100-PDI-CC10-008		CC10	PDI					65-403-270-200	PIPE SUPPORT DETAILS
PRESSION D'OPERATION	TEMPERATURE D'OPERATION	PRESSION DE CONCEPTION	TEMPERATURE DE CONCEPTION	PRESSION D'ESSAI	CLASSE D'INSPECTION	CODE DE SERVICE	TRAITEMENT THERMIQUE	65-403-205-200	P&ID
PSIG	°F	N/A PSIG	10 à 15 °F	N/A PSIG		D31.3		No. DESSIN	DESSINS DE REFERENCE

0	2017/06/30	ISSUED FOR CONSTRUCTION	OVN
No.	DATE	REVISION	PAR APP.

CLIENT: AGNICO EAGLE

NUQSANA PROMEC MINING

ultragen
CONSULTANT PROJECT NO. 591700

SCEAU PROFESSIONNEL

CONC.: KHV DATE: 2017/05/29
DESSINE PAR: KVE DATE: 2017/05/29
VERI. PAR: DATE:
APP.: DATE:
ECHELLE: AUCUNE

PROJET: AGNICO EAGLE - MELIADINE DIVISION
403P - COMBUSTIBLE

TITRE: PORTAIL #1
FABRICATION ISOMETRIC
FUEL FROM 65TNK41607 UNLOADING NOZZLE TO 65PDD41603B

No PROJET	No DESSIN	PAGES	REV.
6515	403P-100-PDI-CC10-008	1/10	0

403P-MN-01

ROGER, N:\Vsno Data\Workspaces\Piping (Plant Workspace)\20_Drawings\20_Piping\Iso\Fab, Portal 11\403P-100-PDI-CC10-008-1.DWG
Modified: Jun 30, 2017, 9:38am

JG2216.6
Pt GMAW Action
P.V.a.P.

Fluide : Diesel End : 5% RX

U - F.

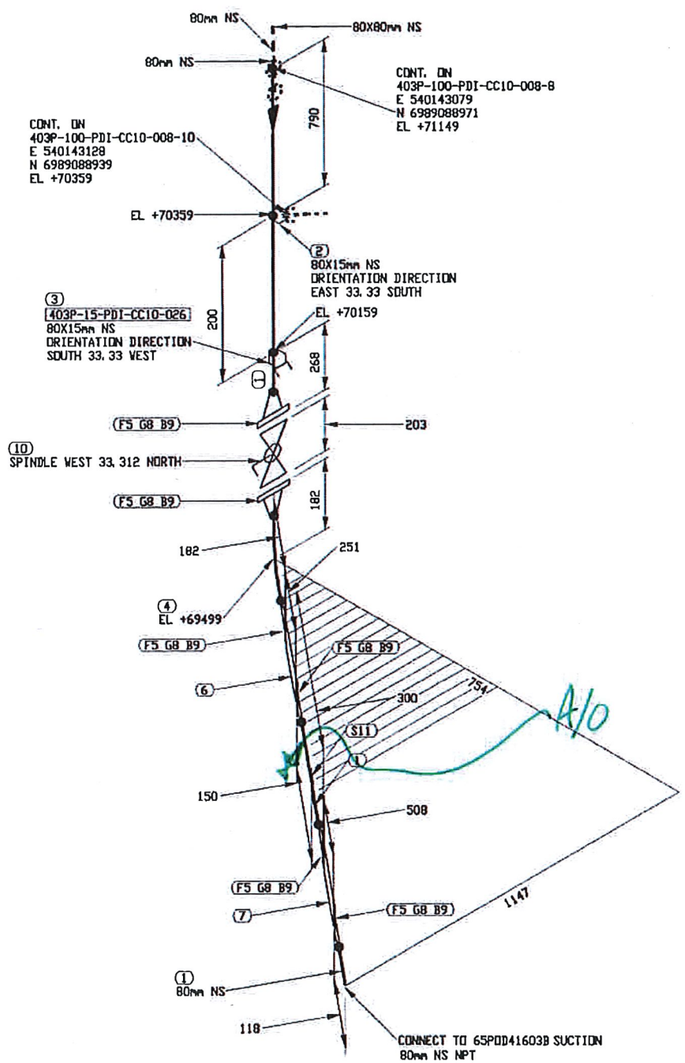

PROMEC
AS-BUILT
Signature:
Date: 2017-12-06

FABRICATION DRAWINGS BASED ON
WSP CERTIFIED ENGINEERING

LISTE DE MATERIEL

No	QTE	DIA	MATERIEL/CATALOGUE	DESCRIPTION
1	1403 MM	80	A 333 Gr. 6	SCH STD, SMLS PIPE PDExTDE
2	1	80X15	A 350 Gr. LF2	CL 3000, SOCKOLET
3	1	80X15	A 350 Gr. LF2	CL 3000, THREDOLET
4	1	80	A 420 Gr. WPL6	SCH STD, BW LR 90 DEG ELBOW
5	6	80	A 350 Gr. LF2	CL 150, SCH STD, RF, WN FLANGE
6	1	80		CL 150, BASKET STRAINER
7	1	80		CL 150, SINGLE BRAIDED HOSE ASSEMBLY
8	6	80	ASME B16.20	CL 150, GARLOCK 5500, RING TYPE GASKET 1/8" THK
9	24	16	A 193 B7/A 194 2H	CL 150, 4 - 15.875 X 90 STUD BOLTS c/w TWO HEAVY HEX NUTS
10	1	80	BA-31	CL 150, RF, BALL VALVE
11	1	80		PIPE SUPPORT AS PER DETAIL 4, DWG 65-403-270-200

PERMIT TO PRACTICE
LE GROUPE ULTRAGEN LTÉE
Signature
Date JUL 14 2017
PERMIT NUMBER: P 1180
NT/NU Association of Professional Engineers and Geoscientists

REGISTERED PROFESSIONAL ENGINEER
D. TRUONG
LICENSEE
NT/NU
2017/07/14

No.	DATE	REVISION	QVN / PAR / APP.
0	2017/06/30	ISSUED FOR CONSTRUCTION	

CLIENT: AGNICO EAGLE

NUQSANA-PROMEC MINING

ultragen

CONSULTANT PROJECT NO. 591700

SCEAU PROFESSIONNEL

CONC.: KHV
DATE: 2017/05/29
DESSINÉ PAR: KVE
DATE: 2017/05/29
VÉR. PAR:
DATE:
APP.:
DATE:
ÉCHELLE: AUCUNE

PROJET: AGNICO EAGLE - MELIADINE DIVISION
403P - COMBUSTIBLE

TITRE: PORTAIL #1
FABRICATION ISOMETRIC
FUEL FROM 65TNK41607 UNLOADING NOZZLE TO 65PDD41603B

No PROJET	No DESSIN	PAGES	RÉV.
6515	403P-100-PDI-CC10-008	9/10	0

403P-MN-01

NO. DE CONDUITE		SPECIFICATION	PRODUIT	SYSTEME REVETEMENT	CODE DE COULEUR	ISOLATION ET TRACAGE	EPAISS. D'ISOLATION		
403P-100-PDI-CC10-008		CC10	PDI					65-403-270-200	PIPE SUPPORT DETAILS
PRESSION D'OPERATION	TEMPERATURE D'OPERATION	PRESSION DE CONCEPTION	TEMPERATURE DE CONCEPTION	PRESSION D'ESSAI	CLASSE D'INSPECTION	CODE DE SERVICE	TRAITEMENT THERMIQUE	65-403-205-200	P&ID
PSIG	°F	PSIG	°F	PSIG				No. DESSIN	DESSINS DE REFERENCE

FICHIER: N:\Agr \Meliadine\591700 (Fuel Distribution)\05. Dessins\02. Tuyauterie\02. Isométriques\02. Portail 1\403P-100-PDI-CC10-008-3.DWG

IMPRIMÉ LE: Jun 30, 2017, 10:02am

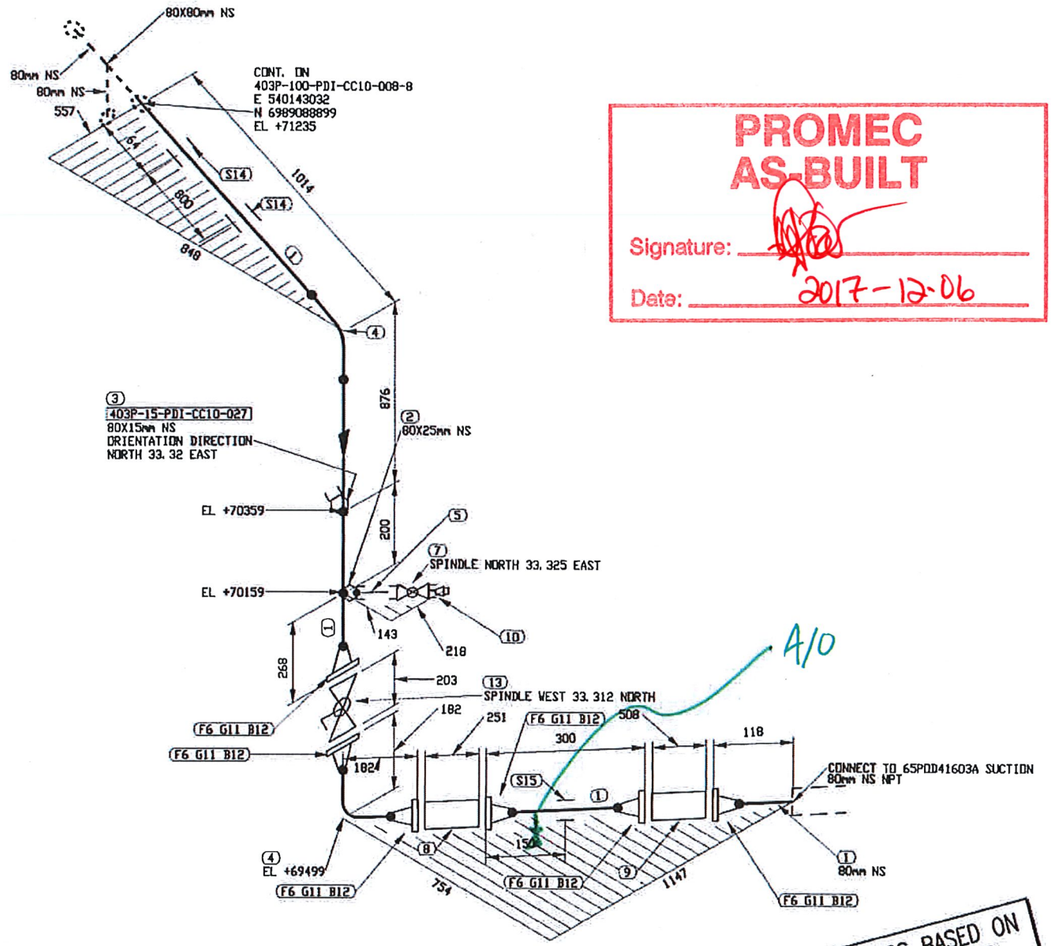

PROMEC
AS-BUILT
Signature:
Date: 2017-12-06

FABRICATION DRAWINGS BASED ON
WSP CERTIFIED ENGINEERING

LISTE DE MATERIEL

No	QTE	DIA	MATERIEL/CATALOGUE	DESCRIPTION
1	2275 MM	80	A 333 Gr. 6	SCH STD, SMLS PIPE PDExTDE
2	1	80X25	A 350 Gr. LF2	CL 3000, SOCKOLET
3	1	80X15	A 350 Gr. LF2	CL 3000, THREDOLET
4	2	80	A 420 Gr. WPL6	SCH STD, BW LR 90 DEG ELBOW
5	1	25	A 333 Gr. 6	SCH 80, NIPPLE x 75mm LG PDExTDE
6	6	80	A 350 Gr. LF2	CL 150, SCH STD, RF, WN FLANGE
7	1	25	BA-32	CL 600, THRD, BALL VALVE
8	1	80		CL 150, BASKET STRAINER
9	1	80		CL 150, SINGLE BRAIDED HOSE ASSEMBLY
10	1	25	A 350 Gr. LF2	MNPT SOLID STL BULL PLUG
11	6	80	ASME B16.20	CL 150, GARLOCK 5500, RING TYPE GASKET 1/8" THK
12	24	16	A 193 B7/A 194 2H	CL 150, 4 - 15.875 X 90 STUD BOLTS c/w TWO HEAVY HEX NUTS
13	1	80	BA-31	CL 150, RF, BALL VALVE
14	2	80		PIPE SUPPORT BY CONTRACTOR
15	1	80		PIPE SUPPORT AS PER DETAIL 4, DWG 65-403-270-200

PERMIT TO PRACTICE
LE GROUPE ULTRAGEN LTÉE
Signature
Date JUL 16 2017
PERMIT NUMBER: P 1180
NT/NU Association of Professional Engineers and Geoscientists

REGISTERED PROFESSIONAL ENGINEER
D. TRUONG
LICENSEE
NT/NU
2017/07/14

No.	DATE	REVISION	
0	2017/06/30	ISSUED FOR CONSTRUCTION	QVN / PAR / APP.

CLIENT: AGNICO EAGLE

NUQSANA-PROMEC MINING

ultragen
CONSULTANT PROJECT NO. 591700

SCEAU PROFESSIONNEL

CONC.: KHV
DATE: 2017/05/29
DESSINÉ PAR: KVE
DATE: 2017/05/29
VÉR. PAR:
DATE:
APP.:
DATE:
ÉCHELLE: AUCUNE

PROJET: AGNICO EAGLE - MELIADINE DIVISION
403P - COMBUSTIBLE

TITRE: PORTAIL #1
FABRICATION ISOMETRIC
DIESEL FROM 403P-100-PDI-CC10-008 TO 65P0D41603A

No PROJET	No DESSIN	PAGES	RÉV.
6515	403P-80-PDI-CC10-010	1/1	0

NO. DE CONDUITE		SPECIFICATION	PRODUIT	SYSTEME REVETEMENT	CODE DE COULEUR	ISOLATION ET TRACAGE	EPAISS. D'ISOLATION		
403P-80-PDI-CC10-010		CC10	PDI					65-403-270-200	PIPE SUPPORT DETAILS
PRESSION D'OPERATION	TEMPERATURE D'OPERATION	PRESSION DE CONCEPTION	TEMPERATURE DE CONCEPTION	PRESSION D'ESSAI	CLASSE D'INSPECTION	CODE DE SERVICE	TRAITEMENT THERMIQUE	65-403-205-200	P&ID
PSIG	°F	PSIG	°F	PSIG				No. DESSIN	DESSINS DE REFERENCE

403P-MN-01

FICHIER: N:\Vgn\Meliadine\591700 (Fuel Distribution)\05. Dessins\02. Tuyauterie\02. Isométriques\02. Portail 1\403P-80-PDI-CC10-010-1.DWG

IMPRIMÉ LE: Jun 30, 2017, 10:32am

PROMEC
AS-BUILT
Signature:
Date: 2017-12-06

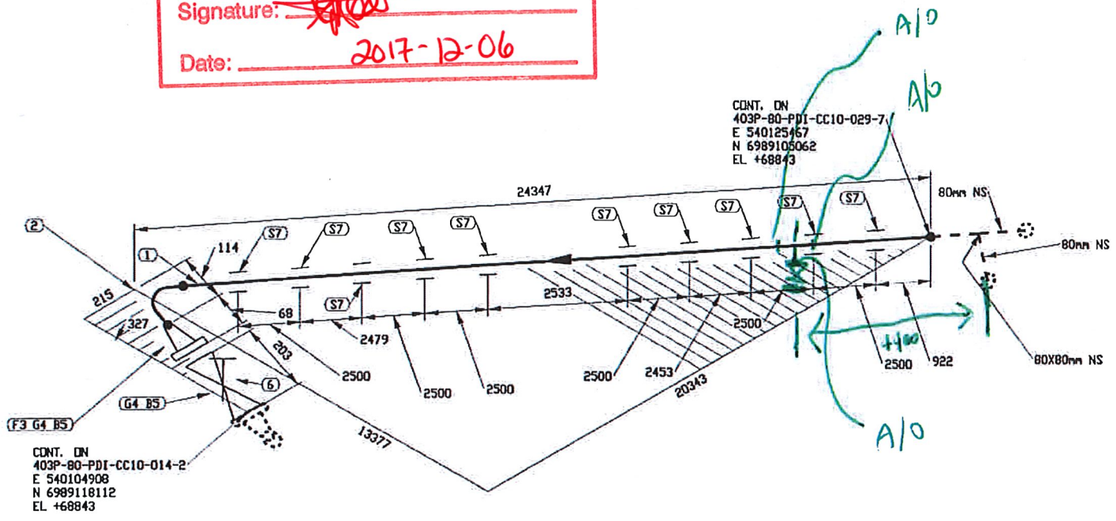

4.400
entre le 2 te

FABRICATION DRAWINGS BASED ON
WSP CERTIFIED ENGINEERING

LISTE DE MATERIEL

No	QTE	DIA	MATERIEL/CATALOGUE	DESCRIPTION
1	24233 MM	80	A 333 Gr. 6	SCH STD, SMLS PIPE
2	1	80	A 420 Gr. WPL6	SCH STD, BW LR 90 DEG ELBOW
3	1	80	A 350 Gr. LF2	CL 150, SCH STD, RF, WN FLANGE
4	2	80	ASME B16.20	CL 150, GARLOCK 5500, RING TYPE GASKET 1/8" THK
5	8	16	A 193 B7/A 194 2H	CL 150, 4 - 15.875 X 90 STUD BOLTS c/w TWO HEAVY HEX NUTS
6	1	80	GA-10	CL 150, RF, GATE VALVE
7	10	80		PIPE SUPPORT AS PER DETAIL 3, DWG: 65-403-270-200

PERMIT TO PRACTICE
LE GROUPE ULTRAGEN LTÉE
Signature
Date JUL 1 4 2017
PERMIT NUMBER: P 1180
NT/NU Association of Professional Engineers and Geoscientists

REGISTERED PROFESSIONAL ENGINEER
D. TRUONG
LICENSEE
NT/NU
2017/07/14

No.	DATE	REVISION	QVN / PAR / APP.
0	2017/06/30	ISSUED FOR CONSTRUCTION	

CLIENT:
AGNICO EAGLE

NUQSANA-PROMEC MINING

ultragen
CONSULTANT PROJECT NO. 591700

SCEAU PROFESSIONNEL

CONC.: KHV
DATE: 2017/05/29
DESSINÉ PAR: KVE
DATE: 2017/05/29
VÉR. PAR:
DATE:
APP.:
DATE:
ÉCHELLE: AUCUNE

PROJET: AGNICO EAGLE - MELIADINE DIVISION
403P - COMBUSTIBLE

TITRE: PORTAIL #1
FABRICATION ISOMETRIC
FUEL FROM 403P-80-PDI-CC10-029 TO 65TNK41610

No PROJET	No DESSIN	PAGES	RÉV.
6515	403P-80-PDI-CC10-014	1/2	0

NO. DE CONDUITE		SPECIFICATION	PRODUIT	SYSTEME REVETEMENT	CODE DE COULEUR	ISOLATION ET TRACAGE	EPAISS. D'ISOLATION		
403P-80-PDI-CC10-014		CC10	PDI	no	-			65-403-270-200	PIPE SUPPORT DETAILS
PRESSION D'OPERATION	TEMPERATURE D'OPERATION	PRESSION DE CONCEPTION	TEMPERATURE DE CONCEPTION	PRESSION D'ESSAI	CLASSE D'INSPECTION	CODE DE SERVICE	TRAITEMENT THERMIQUE	65-403-205-200	P&ID
PSIG	°F	PSIG	°F	PSIG				No. DESSIN	DESSINS DE REFERENCE

403P-MN-01

FICHIER: W:\Agn\Meliadine\591700 (Fuel Distribution)\05. Dessins\02. Tuyauterie\02. Isométriques\02. Portail 1\403P-80-PDI-CC10-014-1.DWG

IMPRIMÉ LE: Jun 29, 2017, 4:41pm

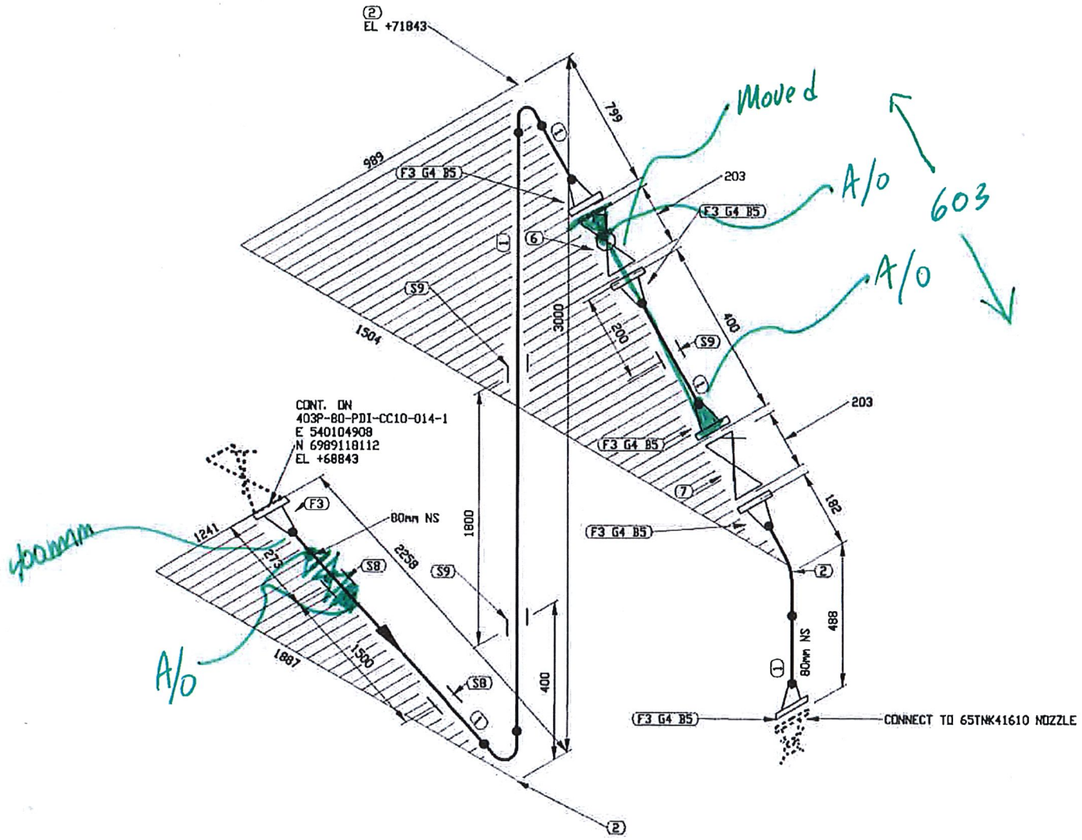

LISTE DE MATERIEL				
No	QTE	DIA	MATERIEL/CATALOGUE	DESCRIPTION
1	6033 MM	80	A 333 Gr. 6	SCH STD, SMLS PIPE
2	3	80	A 420 Gr. WPL6	SCH STD, BW LR 90 DEG ELBOW
3	6	80	A 350 Gr. LF2	CL 150, SCH STD, RF, WN FLANGE
4	5	80	ASME B16.20	CL 150, GARLOCK 5500, RING TYPE GASKET 1/8" THK
5	20	16	A 193 B7/A 194 2H	CL 150, 4 - 15.875 X 90 STUD BOLTS c/w TWO HEAVY HEX NUTS
6	1	80	BA-31	CL 150, RF, BALL VALVE
7	1	80	GA-10	CL 150, RF, GATE VALVE
8	2	80		PIPE SUPPORT AS PER DETAIL 3, DWG 65-403-270-200
9	3	80		PIPE SUPPORT BY CONTRACTOR

PERMIT TO PRACTICE
LE GROUPE ULTRAGEN LTÉE
Signature
Date JUL 16 2017
PERMIT NUMBER: P 1180
NT/NU Association of Professional Engineers and Geoscientists

REGISTERED PROFESSIONAL ENGINEER
D. TRUONG
LICENSEE
NWT/NU
2017/07/14

PROMEC
AS-BUILT
Signature:
Date: 2017-12-06

FABRICATION DRAWINGS BASED ON WSP CERTIFIED ENGINEERING

No.	DATE	REVISION	QVN / PAR / APP.
0	2017/06/30	ISSUED FOR CONSTRUCTION	QVN

CLIENT: AGNICO EAGLE

NUQSANA-PROMEC MINING

ultragen

CONSULTANT PROJECT NO. 591700

NO. DE CONDUITE		SPECIFICATION	PRODUIT	SYSTEME REVETEMENT	CODE DE COULEUR	ISOLATION ET TRACAGE	EPAISS. D'ISOLATION		
403P-80-PDI-CC10-014		CC10	PDI		-			65-403-270-200	PIPE SUPPORT DETAILS
PRESSION D'OPERATION	TEMPERATURE D'OPERATION	PRESSION DE CONCEPTION	TEMPERATURE DE CONCEPTION	PRESSION D'ESSAI	CLASSE D'INSPECTION	CODE DE SERVICE	TRAITEMENT THERMIQUE	65-403-205-200	P&ID
PSIG	°F	PSIG	°F	PSIG				No. DESSIN	DESSINS DE REFERENCE

SCEAU PROFESSIONNEL

CONC.: KHV
DATE: 2017/05/29
DESSINÉ PAR: KVE
DATE: 2017/05/29
VÉR. PAR:
DATE:
APP.:
DATE:
ÉCHELLE: AUCUNE

PROJET: AGNICO EAGLE - MELIADINE DIVISION
403P - COMBUSTIBLE

TITRE: PORTAIL #1
FABRICATION ISOMETRIC
FUEL FROM 403P-80-PDI-CC10-029 TO 65TNK41610

No PROJET	No DESSIN	PAGES	REV.
6515	403P-80-PDI-CC10-014	2/2	0

403P-MN-01

FICHIER: W:\Agn\Meliadine\591700 (Fuel Distribution)\05. Dessins\02. Isométriques\02. Portail 1\403P-80-PDI-CC10-014-2.DWG

IMPRIMÉ LE: Jun 29, 2017, 4:42pm

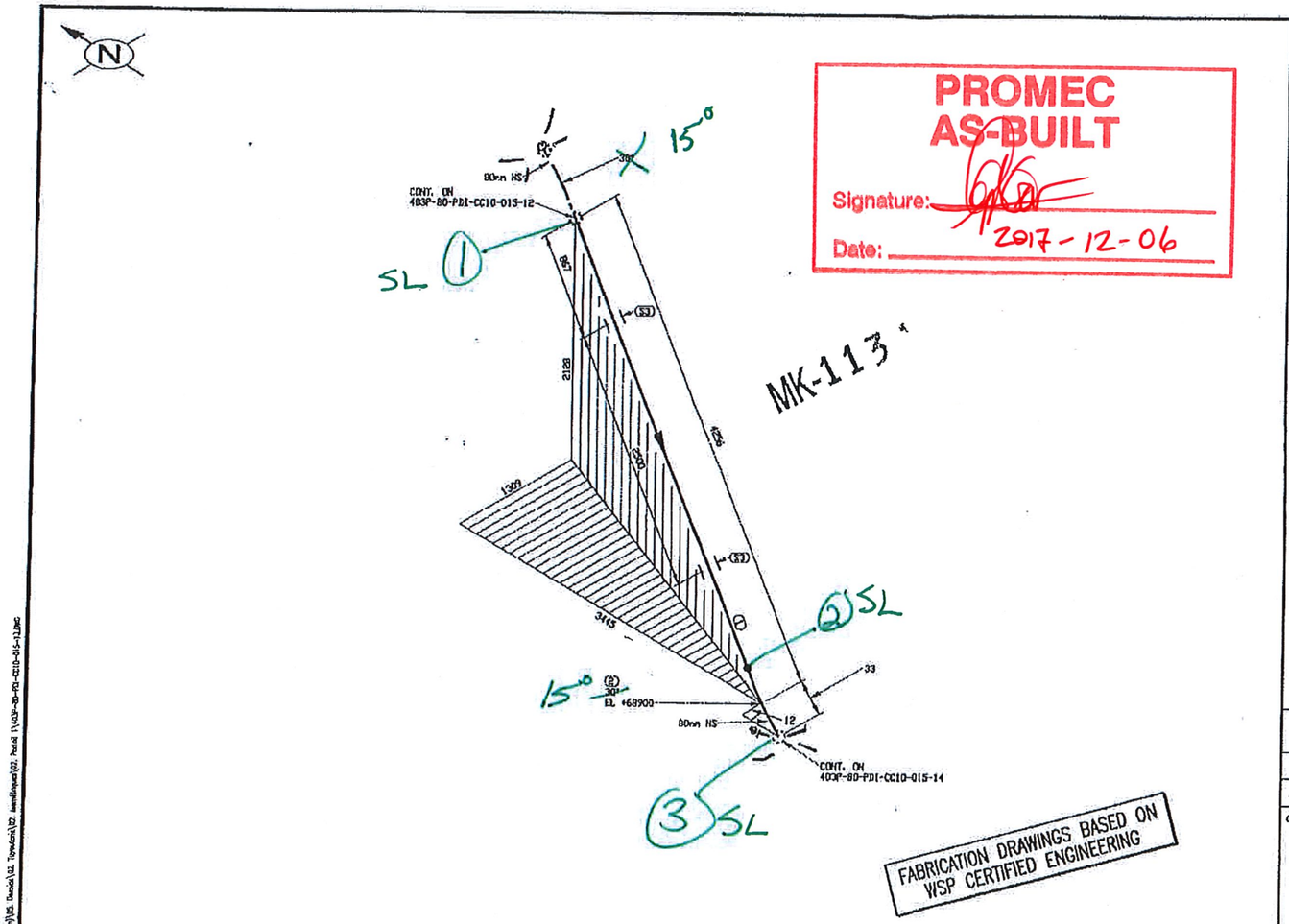

PROMEC
AS-BUILT
Signature:
Date: 2017-12-06

FABRICATION DRAWINGS BASED ON
WSP CERTIFIED ENGINEERING

LISTE DE MATERIEL

No	QTE	UM	MATERIEL/CATALOGUE	DESCRIPTION
1	4223 MM	BD	A 333 Gr. 6	SCH STD, SMLS PIPE
2	1	BD	A 420 Gr. WPL6	SCH STD, BW LR 45 DEG ELBOW TRIM TO 30.00
3	2	BD		PIPE SUPPORT AS PER DETAIL 3, DWG: 65-403-270-200

CONTRAT UF
21.06 X20

REÇU le
03 JUIL. 2017
Rép:

No.	DATE	REVISION	QVN / PAR / APP.
0	2017/06/30	ISSUED FOR CONSTRUCTION	QVN

CLIENT:

AGNICO EAGLE

NUQSANA PROMEC MINING

ultragen

CONSULTANT PROJECT NO. 591700

EN ATELIER LE
04 JUIL. 2017
par :

NO. DE CONDUITE		SPECIFICATION	PRODUIT	SYSTEME REVETEMENT	CODE DE COULEUR	ISOLATION ET TRACAGE	EPAISS. D'ISOLATION		
403P-80-PDI-CC10-015		CC10	PDI		-			65-403-270-200	PIPE SUPPORT DETAILS
PRESSION D'OPERATION	TEMPERATURE D'OPERATION	PRESSION DE CONCEPTION	TEMPERATURE DE CONCEPTION	PRESSION D'ESSAI	CLASSE D'INSPECTION	CODE DE SERVICE	TRAITEMENT THERMIQUE	65-403-205-200	P&ID
— PSIG	— °F	— PSIG	10 à 15 °F	— PSIG	5% RX	B31.3	—	No. DESSIN	DESSINS DE REFERENCE

SCEAU PROFESSIONNEL

CONC.: KHV
DATE: 2017/05/28
DESSINÉ PAR: KVE
DATE: 2017/05/28
VER. PAR:
DATE:
APP.:
DATE:
ÉCHELLE: AUCUNE

PROJET: AGNICO EAGLE - MELIADINE DIVISION
403P - COMBUSTIBLE

TITRE: PORTAIL #1
FABRICATION ISOMETRIC
FUEL FROM 403P-80-PDI-CC10-014 TO 65TNK41611

No PROJET	No DESSIN	PAGES	REV.
6515	403P-80-PDI-CC10-015	13/19	0

403P-MN-01

JG2216-6
pt G-MAW PL-001
P1 a P1 R6

U-F

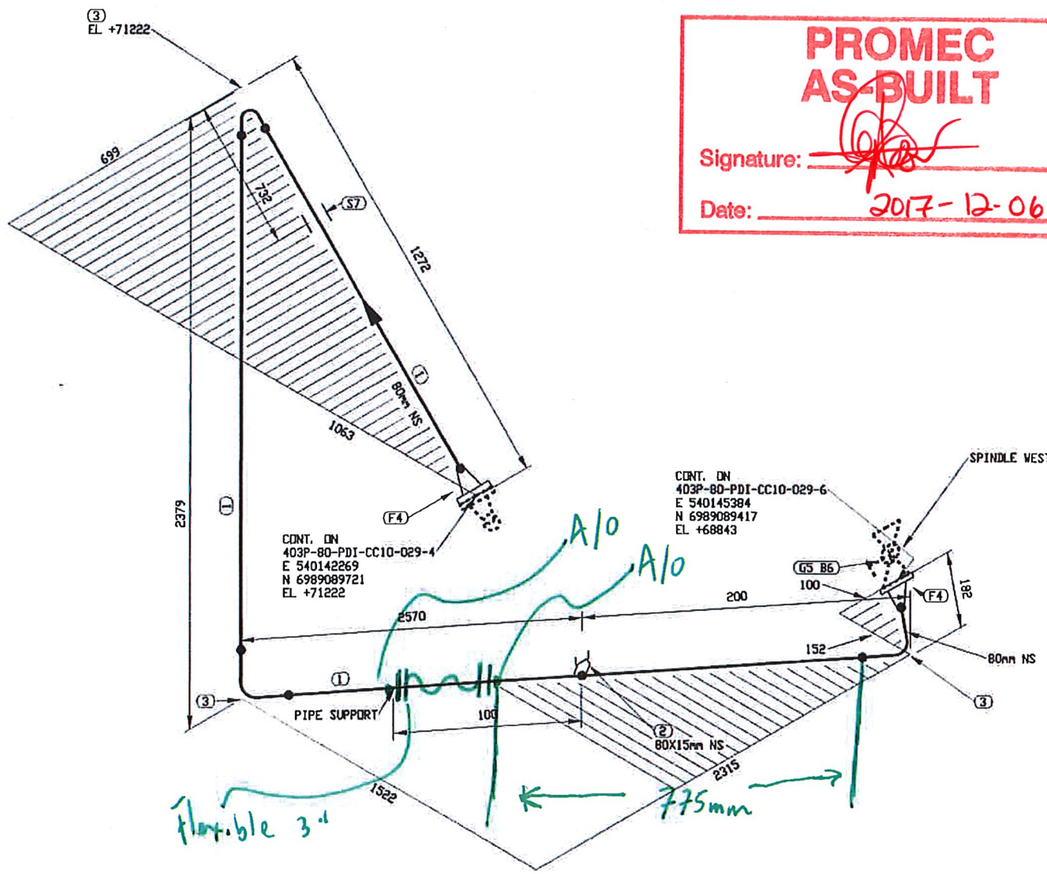

PROMEC AS-BUILT

Signature:

Date: 2017-12-06

FABRICATION DRAWINGS BASED ON WSP CERTIFIED ENGINEERING

LISTE DE MATERIEL

No	QTE	DIA	MATERIEL/CATALOGUE	DESCRIPTION
1	5783 MM	80	A 333 Gr. 6	SCH STD, SMLS PIPE
2	1	80X15	A 350 Gr. LF2	CL 3000, THREDOLET
3	3	80	A 420 Gr. WPL6	SCH STD, BW LR 90 DEG ELBOW
4	2	80	A 350 Gr. LF2	CL 150, SCH STD, RF, WN FLANGE
5	1	80	ASME B16.20	CL 150, GARLOCK 5500, RING TYPE GASKET 1/8" THK
6	4	16	A 193 B7/A 194 2H	CL 150, 4 - 15.875 X 90 STUD BOLTS c/w TWO HEAVY HEX NUTS
7	1	80		PIPE SUPPORT AS PER DETAIL 3, DWG: 65-403-270-200

PERMIT TO PRACTICE
LE GROUPE ULTRAGEN LTÉE
Signature
Date JUL 14 2017
PERMIT NUMBER: P 1180
NT/NU Association of Professional Engineers and Geoscientists

REGISTERED PROFESSIONAL ENGINEER
D. TRUONG
LICENSEE
NT/NU
2017/07/14

No.	DATE	REVISION	APP.
0	2017/06/30	ISSUED FOR CONSTRUCTION	QVN

CLIENT: AGNICO EAGLE

NUQSANA-PROMEC MINING

ultragen

CONSULTANT PROJECT NO. 591700

SCEAU PROFESSIONNEL

CONC.: KHV
DATE: 2017/05/29
DESSINÉ PAR: KVE
DATE: 2017/05/29
VÉR. PAR:
DATE:
APP.:
DATE:
ÉCHELLE: AUCUNE

PROJET: AGNICO EAGLE - MELIADINE DIVISION
403P - COMBUSTIBLE

TITRE: PORTAIL #1
FABRICATION ISOMETRIC
FUEL FROM 65PDD41603A/B TO 65TNK41609/10/11

No PROJET	No DESSIN	PAGES	RÉV.
6515	403P-80-PDI-CC10-029	5/10	0

403P-MN-01

NO. DE CONDUITE		SPECIFICATION	PRODUIT	SYSTEME REVETEMENT	CODE DE COULEUR	ISOLATION ET TRACAGE	EPAISS. D'ISOLATION		
403P-80-PDI-CC10-029		CC10	PDI		-			65-403-270-200	PIPE SUPPORT DETAILS
PRESSION D'OPERATION	TEMPERATURE D'OPERATION	PRESSION DE CONCEPTION	TEMPERATURE DE CONCEPTION	PRESSION D'ESSAI	CLASSE D'INSPECTION	CODE DE SERVICE	TRAITEMENT THERMIQUE	65-403-205-200	P&ID
PSIG	°F	PSIG	°F	PSIG				No. DESSIN	DESSINS DE REFERENCE

FICHIER: W:\Agnico\Meliadine\591700 (Fuel Distribution)\05. Dessins\02. Tuyauterie\02. Isométriques\02. Portail 1\403P-80-PDI-CC10-029-5.DWG

IMPRIMÉ LE: Jun 29, 2017, 3:54pm

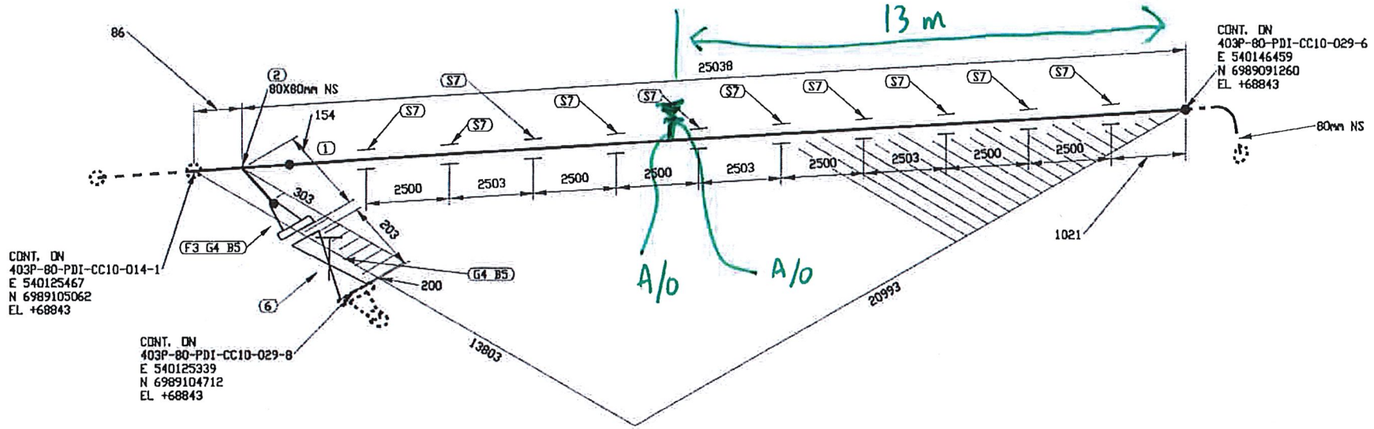

PROMEC
AS-BUILT
Signature:
Date: 2017-12-06

FABRICATION DRAWINGS BASED ON WSP CERTIFIED ENGINEERING

LISTE DE MATERIEL

No	QTE	DIA	MATERIEL/CATALOGUE	DESCRIPTION
1	24953 MM	80	A 333 Gr. 6	SCH STD, SMLS PIPE
2	1	80X80	A 420 Gr. WPL6	SCH STD, BW STRAIGHT TEE
3	1	80	A 350 Gr. LF2	CL 150, SCH STD, RF, WN FLANGE
4	2	80	ASME B16.20	CL 150, GARLOCK 9500, RING TYPE GASKET 1/8" THK
5	8	16	A 193 B7/A 194 2H	CL 150, 4 - 15.875 X 90 STUD BOLTS c/w TWO HEAVY HEX NUTS
6	1	80	GA-10	CL 150, RF, GATE VALVE
7	10	80		PIPE SUPPORT AS PER DETAIL 3, DWG: 65-403-270-200

PERMIT TO PRACTICE
LE GROUPE ULTRAGEN LTÉE
Signature
Date JUL 14 2017
PERMIT NUMBER: P 1180
NT/NU Association of Professional Engineers and Geoscientists

REGISTERED PROFESSIONAL ENGINEER
D. TRUONG
LICENSEE
NT/NU
2017/07/14

No.	DATE	REVISION	APP.
0	2017/06/30	ISSUED FOR CONSTRUCTION	QVN / PAR

CLIENT: AGNICO EAGLE

NUQSANA-PROMEC MINING

ultragen

CONSULTANT PROJECT NO. 591700

SCEAU PROFESSIONNEL

CONC.: KHV
DATE: 2017/05/29
DESSINÉ PAR: KVE
DATE: 2017/05/29
VÉR. PAR:
DATE:
APP.:
DATE:
ÉCHELLE: AUCUNE

PROJET: AGNICO EAGLE - MELIADINE DIVISION
403P - COMBUSTIBLE

TITRE: PORTAIL #1
FABRICATION ISOMETRIC
FUEL FROM 65PDD41603A/B TO 65TNK41609/10/11

No PROJET	No DESSIN	PAGES	REV.
6515	403P-80-PDI-CC10-029	7/10	0

NO. DE CONDUITE	SPECIFICATION	PRODUIT	SYSTEME REVETEMENT	CODE DE COULEUR	ISOLATION ET TRACAGE	EPAISS. D'ISOLATION		
403P-80-PDI-CC10-029	CC10	PDI		–			65-403-270-200	PIPE SUPPORT DETAILS
PRESSION D'OPERATION / TEMPERATURE D'OPERATION	PRESSION DE CONCEPTION	TEMPERATURE DE CONCEPTION	PRESSION D'ESSAI	CLASSE D'INSPECTION	CODE DE SERVICE	TRAITEMENT THERMIQUE	65-403-205-200	P&ID
PSIG / °F	PSIG	°F	PSIG				No. DESSIN	DESSINS DE REFERENCE

403P-MN-01

FICHIER: W:\Agnico\Meliadine\591700 (Fuel Distribution)\05. Dessins\02. Tuyauterie\02. Isométriques\02. Portail 1\403P-80-PDI-CC10-029-7.DWG

IMPRIMÉ LE: Jun 29, 2017, 4:12pm

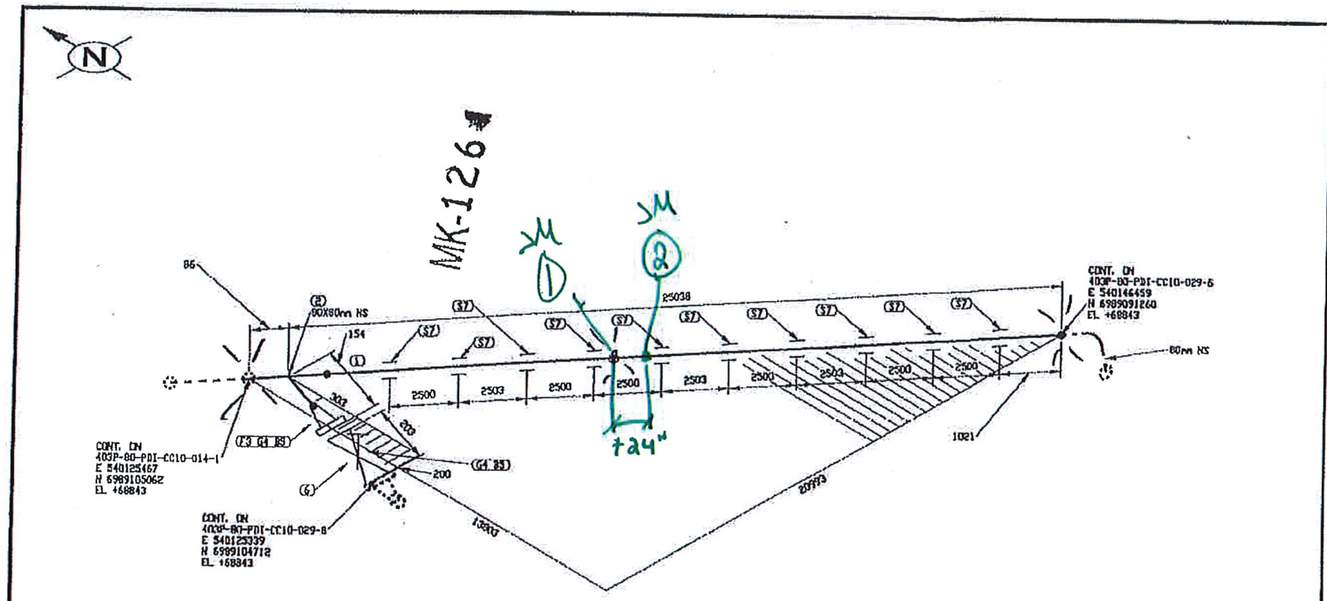

PROMEC
AS-BUILT
Signature:
Date: 2017-12-06

FABRICATION DRAWINGS BASED ON
WSP CERTIFIED ENGINEERING

LISTE DE MATERIEL

No	QTE	DIA	MATERIEL/CATALOGUE	DESCRIPTION
1	24953 MM	80	A 333 Gr. 6	SCH STD, SMLS PIPE
2	1	80X80	A 420 Gr. WPL6	SCH STD, BW STRAIGHT TEE
3	1	80	A 350 Gr. LF2	CL 150, SCH STD, RF, WN FLANGE
4	2	80	ASME B16.20	CL 150, GARLOCK 5500, RING TYPE GASKET 1/8" THK
5	8	16	A 193 B7/A 194 2H	CL 150, 4 - 15.875 X 90 STUD BOLTS c/w TWO HEAVY HEX NUTS
6	1	80	GA-10	CL 150, RF, GATE VALVE
7	10	80		PIPE SUPPORT AS PER DETAIL 3, DWG 65-403-270-200

CONTRAT UF
21.06 X20

REÇU le
03 JUIL. 2017
Rép:

EN ATELIER LE
04 JUIL. 2017
par:

No.	DATE	REVISION	PAR	APP.
0	2017/06/30	ISSUED FOR CONSTRUCTION	QVN	

CLIENT: AGNICO EAGLE

NUQSANA PROMEC MINING

ultragen

CONSULTANT PROJECT NO. 591700

SCEAU PROFESSIONNEL

CONC.: KHV
DATE: 2017/06/28
DESSINÉ PAR: KVE
DATE: 2017/05/29
VÉR. PAR:
DATE:
APP.:
DATE:
ÉCHELLE: AUCUNE

PROJET: AGNICO EAGLE - MELIADINE DIVISION
403P - COMBUSTIBLE

TITRE: PORTAIL #1
FABRICATION ISOMETRIC
FUEL FROM 65PDD41603A/B TO 65TNK41609/10/11

No PROJET	No DESSIN	PAGES	RÉV.
6515	403P-80-PDI-CC10-029	7/10	0

403P-MN-01

NO. DE CONDUITE		SPECIFICATION	PRODUIT	SYSTEME REVETEMENT	CODE DE COULEUR	ISOLATION ET TRACAGE	EPAISS D'ISOLATION		
403P-80-PDI-CC10-029		CC10	PDI		-			65-403-270-200	PIPE SUPPORT DETAILS
PRESSION D'OPERATION	TEMPERATURE D'OPERATION	PRESSION DE CONCEPTION	TEMPERATURE DE CONCEPTION	PRESSION D'ESSAI	CLASSE D'INSPECTION	CODE DE SERVICE	TRAITEMENT THERMIQUE	65-403-205-200	P&ID
— PSIG	— °F	— PSIG	10 à 15 °F	— PSIG	56 RX	B31.3	—	No. DESSIN	DESSINS DE REFERENCE

JQ2216.6
Pt GMAW DC-001
Pt a Pl R6

Fluide Diesel

U-F

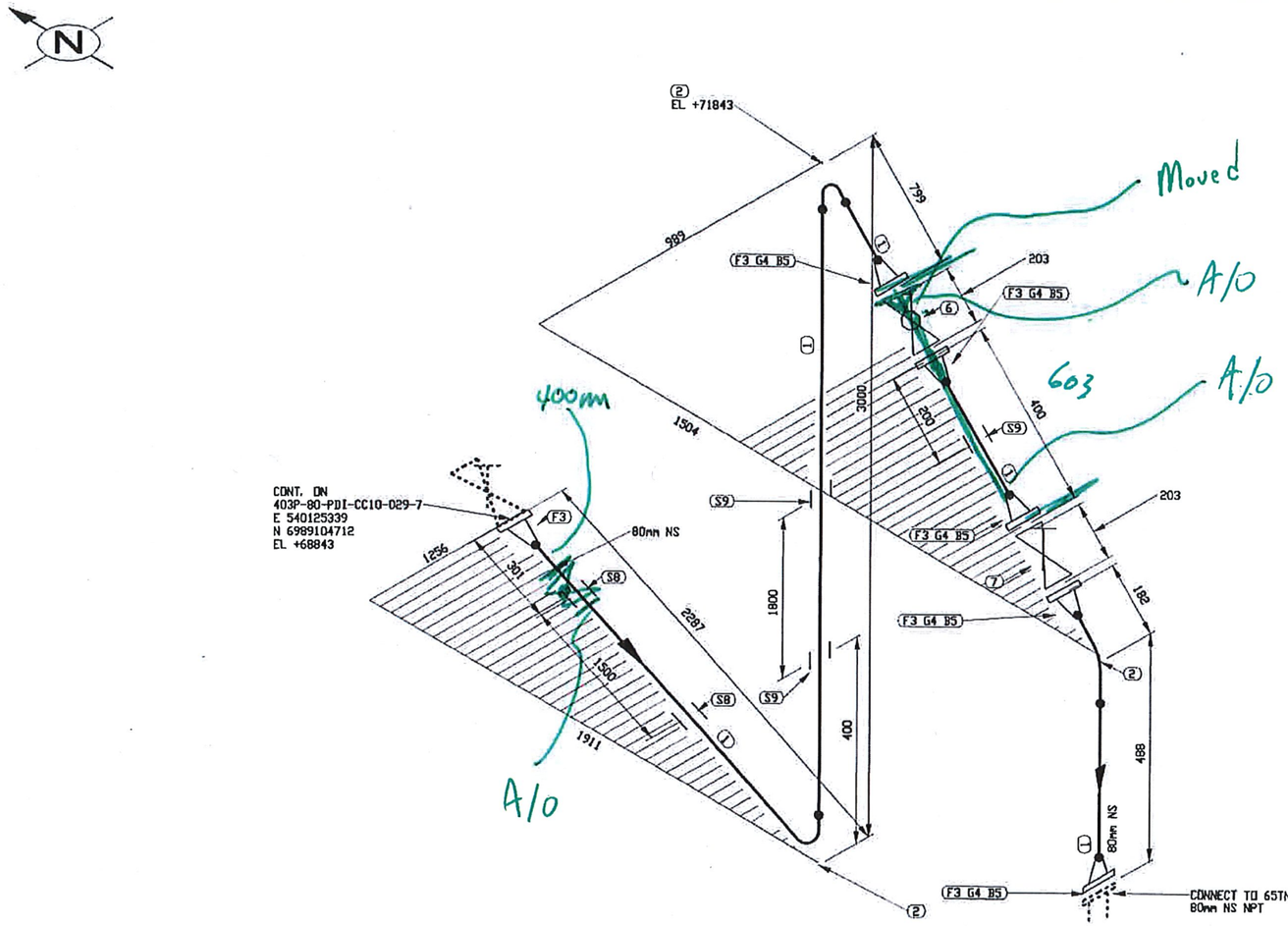

PROMEC
AS-BUILT
Signature:
Date: 2017-12-06

FABRICATION DRAWINGS BASED ON
WSP CERTIFIED ENGINEERING

LISTE DE MATERIEL

No	QTE	DIA	MATERIEL/CATALOGUE	DESCRIPTION
1	5922 MM	80	A 333 Gr. 6	SCH STD, SMLS PIPE POEXTDE
2	3	80	A 420 Gr. WPL6	SCH STD, BW LR 90 DEG ELBOW
3	6	80	A 350 Gr. LF2	CL 150, SCH STD, RF, WN FLANGE
4	5	80	ASME B16.20	CL 150, GARLOCK 5500, RING TYPE GASKET 1/8" THK
5	20	16	A 193 B7/A 194 2H	CL 150, 4 - 15.875 X 90 STUD BOLTS c/w TWO HEAVY HEX NUTS
6	1	80	BA-31	CL 150, RF, BALL VALVE
7	1	80	GA-10	CL 150, RF, GATE VALVE
8	2	80		PIPE SUPPORT AS PER DETAIL 3, DWG 65-403-270-200
9	3	80		PIPE SUPPORT BY CONTRACTOR

PERMIT TO PRACTICE
LE GROUPE ULTRAGEN LTÉE
Signature
Date JUL 14 2017
PERMIT NUMBER: P 1180
NT/NU Association of Professional Engineers and Geoscientists

REGISTERED PROFESSIONAL ENGINEER
D. TRUONG
LICENSEE
NT/NU
2017/07/14

No.	DATE	REVISION	QVN / PAR / APP.
0	2017/06/30	ISSUED FOR CONSTRUCTION	

CLIENT: AGNICO EAGLE

NUQSANA-PROMEC MINING

ultragen

CONSULTANT PROJECT NO. 591700

SCEAU PROFESSIONNEL

CONC.: KHV
DATE: 2017/08/29
DESSINÉ PAR: KVE
DATE: 2017/08/29
VÉR. PAR:
DATE:
APP.:
DATE:
ÉCHELLE: AUCUNE

PROJET: AGNICO EAGLE - MELIADINE DIVISION
403P - COMBUSTIBLE

TITRE: PORTAIL #1
FABRICATION ISOMETRIC
FUEL FROM 65POD41603A/B TO 65TNK41609/10/11

No PROJET	No DESSIN	PAGES	RÉV.
6515	403P-80-PDI-CC10-029	8/10	0

403P-MN-01

NO. DE CONDUITE		SPECIFICATION	PRODUIT	SYSTEME REVETEMENT	CODE DE COULEUR	ISOLATION ET TRACAGE	EPAISS. D'ISOLATION		
403P-80-PDI-CC10-029		CC10	PDI		-			65-403-270-200	PIPE SUPPORT DETAILS
PRESSION D'OPERATION	TEMPERATURE D'OPERATION	PRESSION DE CONCEPTION	TEMPERATURE DE CONCEPTION	PRESSION D'ESSAI	CLASSE D'INSPECTION	CODE DE SERVICE	TRAITEMENT THERMIQUE	65-403-205-200	P&ID
PSIG	°F	PSIG	°F	PSIG				No. DESSIN	DESSINS DE REFERENCE

FICHIER: W:\Vyan\Meliadine\591700 (Fuel Distribution)\05. Dessins\02. Tuyauterie\02. Isométriques\02. Portail 1\403P-80-PDI-CC10-029-8.DWG

IMPRIMÉ LE: Jun 30, 2017, 8:00am

AGNICO EAGLE

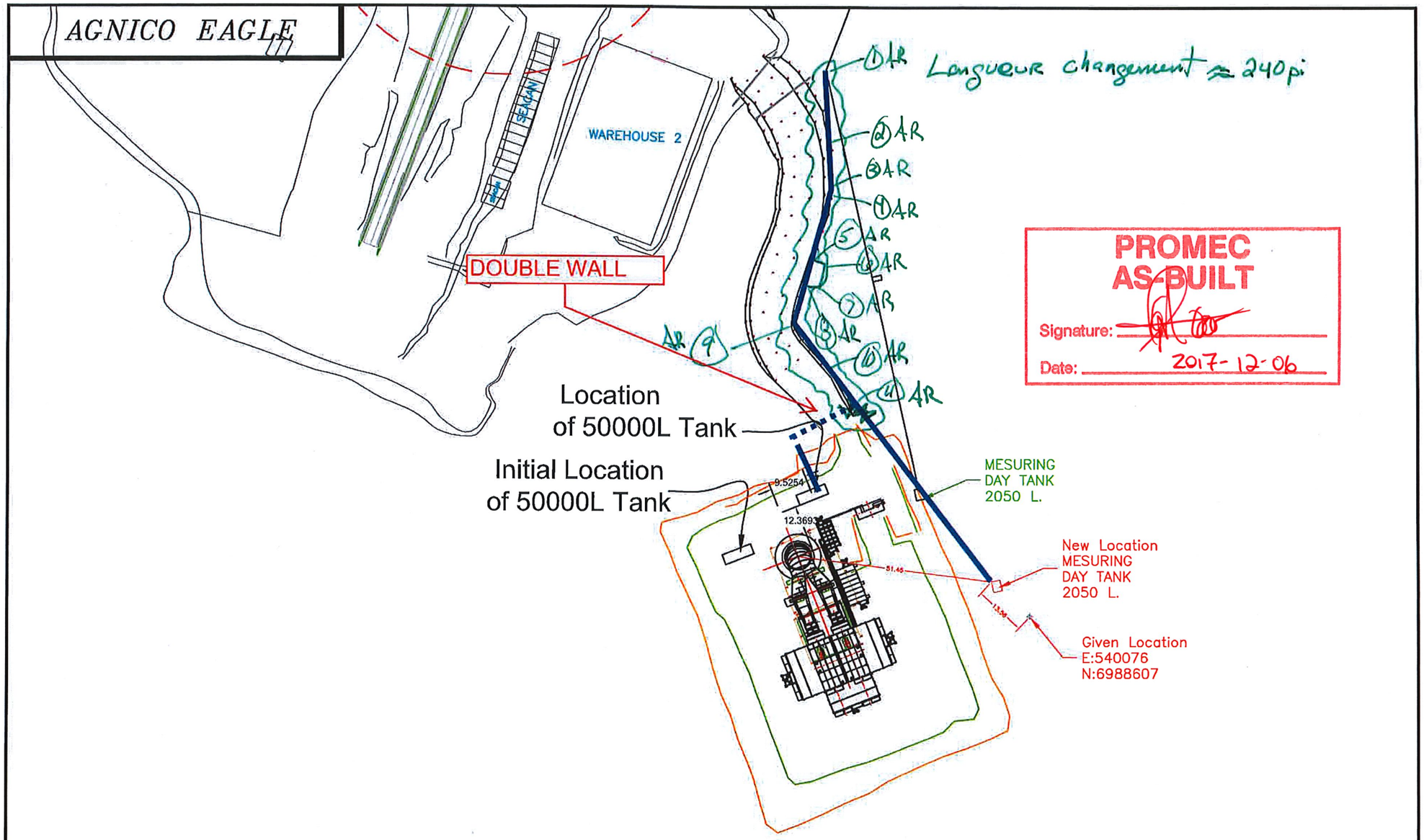

PROMEC
AS-BUILT
Signature:
Date: 2017-12-06

HAMELARPENTAGE

Système de Coord.: NAD83 UTM15	444 - Ventilation Intake Measuring Day Tank Location		Dessine par: JF Landreville
Echelle: n.t.s.			Approuve par: Hamel Arp
No plan: 444 – Proposed Fuel Tank Location		Date des travaux : tbd	Date d'envoi : 2017–11–02

SECTION

WELD MAP

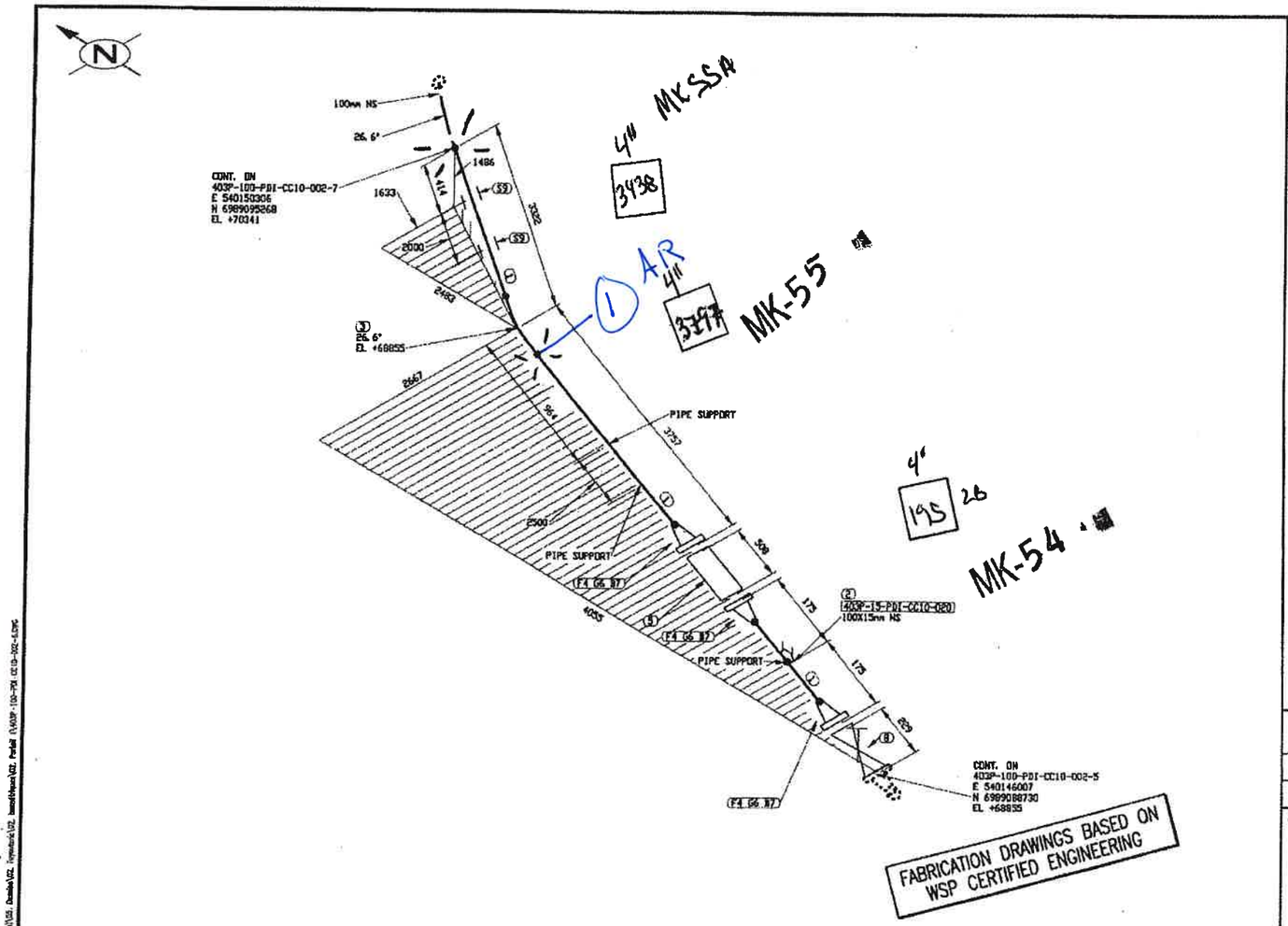

FABRICATION DRAWINGS BASED ON WSP CERTIFIED ENGINEERING

A 44 B 97 C 36

LISTE DE MATERIEL

No	QTE	DIA	MATERIEL/CATALOGUE	DESCRIPTION
1	6981 MM	100	A 333 Gr. 6	SCH STD, SMLS PIPE
2	1	100X15	A 350 Gr. LF2	CL 3000, THREDOLET
3	1	100	A 420 Gr. WPL6	SCH STD, BW LR 45 DEG ELBOW TRIM TO 26.57
4	3	100	A 350 Gr. LF2	CL 150, SCH STD, RF, WN FLANGE
5	3	100		CL 150, SINGLE BRAIDED HOSE ASSEMBLY
6	24	100	ASME B16.20	CL 150, GARLOCK 5500, RING TYPE GASKET 1/8" THK
7	32	16	A 193 B7/A 194 2H	CL 150, 8 - 15.875 X 90 STUD BOLTS c/w TWO HEAVY HEX NUTS
8	1	100	GA-10	CL 150, RF, GATE VALVE
9	2	100		PIPE SUPPORT AS PER DETAIL 3, DWG 65-403-270-200

CONTRAT UF
21.06 X 20

REÇU le
03 JUIL. 2017
Rép: _____

EN ATELIER LE
04 JUIL. 2017
par: _____

No.	DATE	REVISION	QVN / PAR / APP.
0	2017/06/30	ISSUED FOR CONSTRUCTION	QVN

CLIENT:

AGNICO EAGLE

NUQSANA PROMEC MINING

ultragen

CONSULTANT PROJECT NO. 591700

SCEAU PROFESSIONNEL

CONC.: KHV
DATE: 2017/06/29
DESSINE PAR: KVE
DATE: 2017/06/29
VER. PAR:
DATE:
APP.:
DATE:
ECHELLE: AUCUNE

PROJET: AGNICO EAGLE - MELIADINE DIVISION
403P - COMBUSTIBLE

TITRE: PORTAIL #1
FABRICATION ISOMETRIC
FUEL FROM 65POD41604A/B TO 65TNK41607 & 65TNK41608

No PROJET	No DESSIN	PAGES	REV.
6515	403P-100-PDI-CC10-002	6/12	0

403P-MN-01, 403P-MN-02

NO. DE CONDUITE		SPECIFICATION	PRODUIT	SYSTEME REVETEMENT	CODE DE COULEUR	ISOLATION ET TRACAGE	EPAISS. D'ISOLATION		
403P-100-PDI-CC10-002		CC10	PDI					65-403-270-200	PIPE SUPPORT DETAILS
PRESSION D'OPERATION	TEMPERATURE D'OPERATION	PRESSION DE CONCEPTION	TEMPERATURE DE CONCEPTION	PRESSION D'ESSAI	CLASSE D'INSPECTION	CODE DE SERVICE	TRAITEMENT THERMIQUE	65-403-205-200	P&ID
PSIG	°F	N/A PSIG	10 à 15 °F	N/A PSIG		B31.3		No DESSIN	DESSINS DE REFERENCE

Fluide Diesel End 5% RX

JG2216.6
PT G-MAW AC001 R206
P1 à P1

U-F

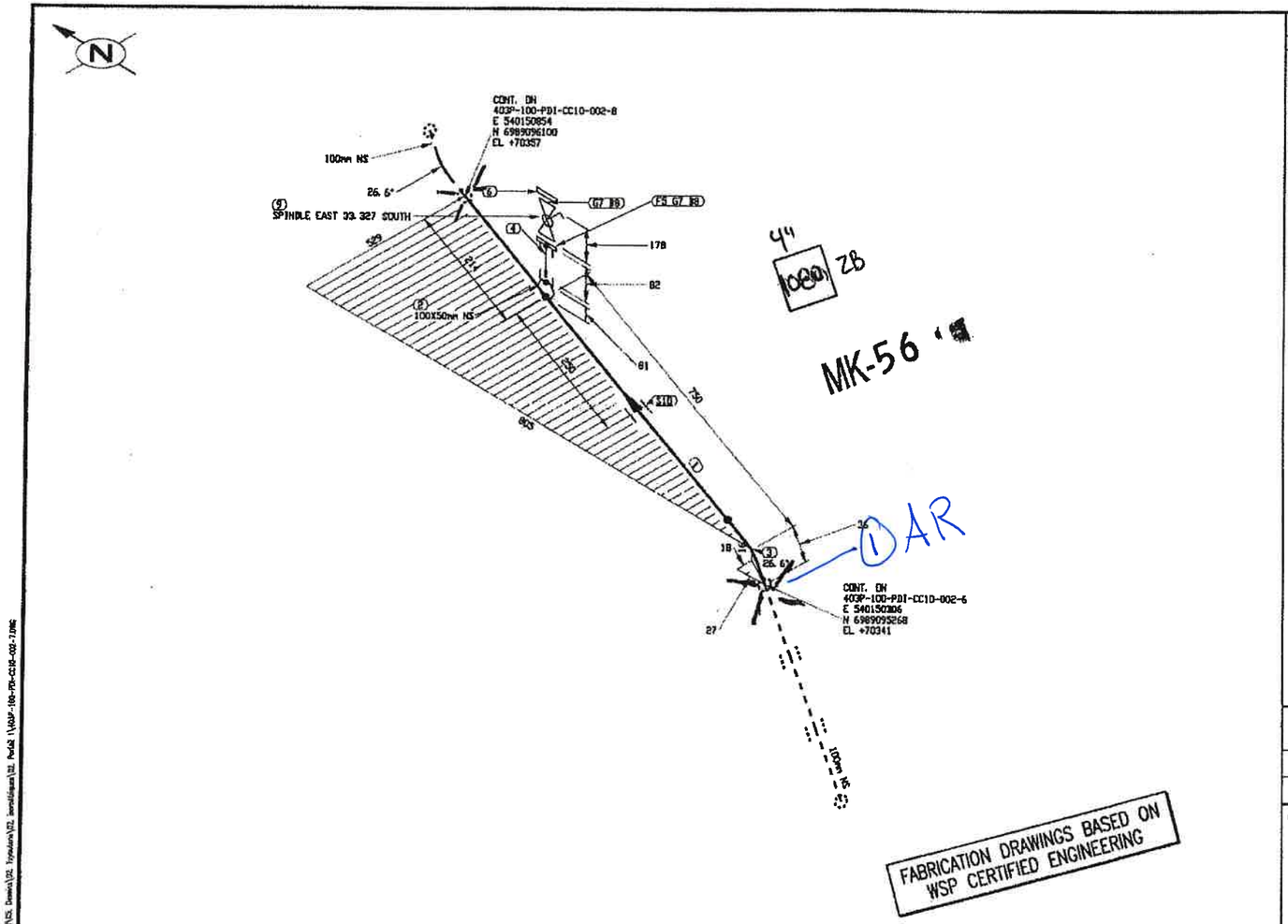

44
1080 ZB

MK-56

① AR

FABRICATION DRAWINGS BASED ON WSP CERTIFIED ENGINEERING

A=44 B=97 C36

LISTE DE MATERIEL

No	QTE	DIA	MATERIEL/CATALOGUE	DESCRIPTION
1	928 MM	100	A 333 Gr. 6	SCH STD, SMLS PIPE
2	1	100X50	A 350 Gr. LF2	CL 3000, SOCKOLET
3	1	100	A 420 Gr. WPL6	SCH STD, BW LR 45 DEG ELBOW TRIM TO 26.57
4	1	50	A 333 Gr. 6	SCH 80, NIPPLE x 75mm LG PDE
5	1	50	A 350 Gr. LF2	CL 150, SCH 80, RF, SW FLANGE
6	1	50	A 350 Gr. LF2	CL 150, RF, BLIND FLANGE
7	2	50	ASME B16.20	CL 150, GARLOCK 5500, RING TYPE GASKET 1/8" THK
8	8	16	A 193 B7/A 194 2H	CL 150, 4 - 15.875 X 85 STUD BOLTS c/w TWO HEAVY HEX NUTS
9	1	50	BA-31	CL 150, RF, BALL VALVE
10	1	100		PIPE SUPPORT AS PER DETAIL 3, DWG 65-403-270-200

EN ATELIER LE
04 JUIL. 2017

CONTRAT UF
21,06 X20

REÇU le
03 JUIL. 2017
Rép: _____

No.	DATE	REVISION	PAR / APP.
0	2017/06/30	ISSUED FOR CONSTRUCTION	QVN

CLIENT: AGNICO EAGLE

NUQSANA PROMEC MINING

ultragen

CONSULTANT PROJECT NO. 591700

SCEAU PROFESSIONNEL

CONC.: KHV DATE: 2017/05/25
DESSINÉ PAR: KVE DATE: 2017/05/25
VÉR. PAR: DATE:
APP.: DATE:
ÉCHELLE: AUCUNE

PROJET: AGNICO EAGLE - MELIADINE DIVISION
403P - COMBUSTIBLE

TITRE: PORTAIL #1
FABRICATION ISOMETRIC
FUEL FROM 65POD41604A/B TO 65TNK41607 & 65TNK41608

No PROJET	No DESSIN	PAGES	RÉV.
6515	403P-100-PDI-CC10-002	7/12	0

403P-MN-01, 403P-MN-02

NO. DE CONDUITE		SPECIFICATION	PRODUIT	SYSTEME REVETEMENT	CODE DE COULEUR	ISOLATION ET TRACAGE	EPAISS. D'ISOLATION		
403P-100-PDI-CC10-002		CC10	PDI					65-403-270-200	PIPE SUPPORT DETAILS
PRESSION D'OPERATION	TEMPERATURE D'OPERATION	PRESSION DE CONCEPTION	TEMPERATURE DE CONCEPTION	PRESSION D'ESSAI	CLASSE D'INSPECTION	CODE DE SERVICE	TRAITEMENT THERMIQUE	65-403-205-200	P&ID
PSIG	°F	N/A PSIG	10 à 15 °F	N/A PSIG		B31.3		No. DESSIN	DESSINS DE REFERENCE

JQ2216.6
PtG-MAW AC-001 R6
P1 à P1

Fluide Diesel End 5% Rx

U-F.

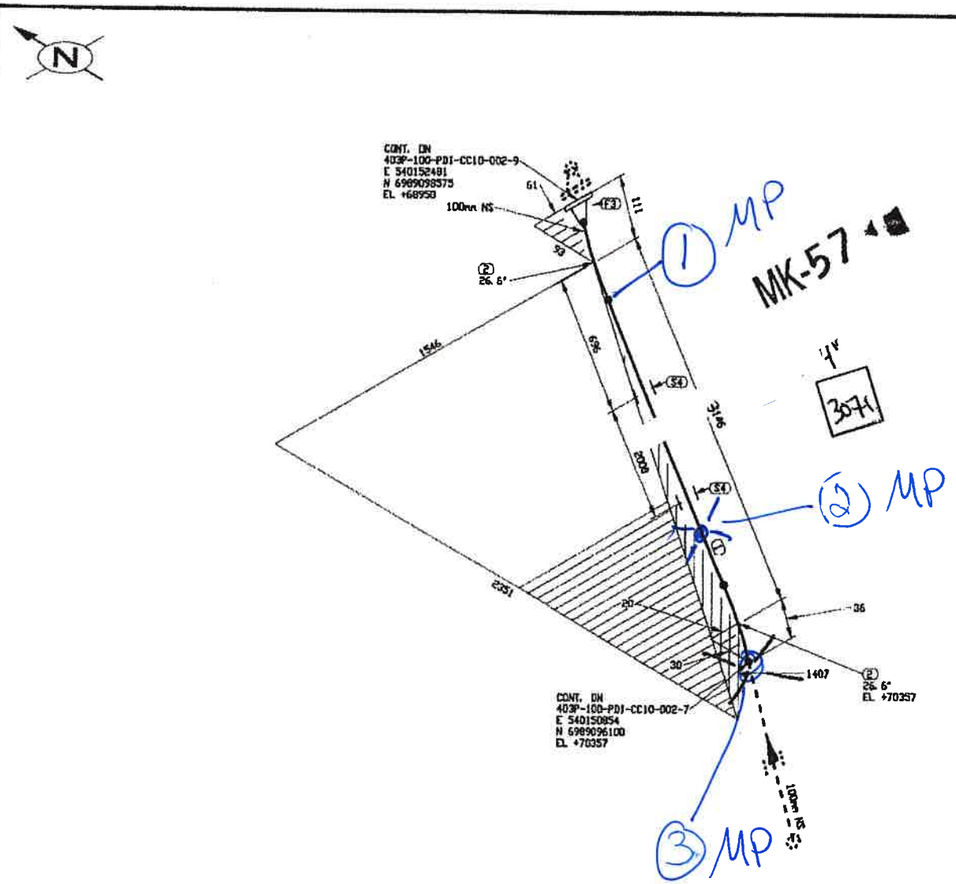

FABRICATION DRAWINGS BASED ON WSP CERTIFIED ENGINEERING

LISTE DE MATERIEL

No	QTE	D/A	MATERIEL/CATALOGUE	DESCRIPTION
1	3074 MM	100	A 333 Gr. 6	SCH STD, SMLS PIPE
2	2	100	A 420 Gr. WPL6	SCH STD, BW LR 45 DEG ELBOW TRIM TO 26.57
3	1	100	A 350 Gr. LF2	CL 150, SCH STD, RF, WN FLANGE
4	2	100	SUPAG-DN100	PIPE SUPPORT AS PER DETAIL 3, DWG 65-403-270-200

A 44 B 97 C 36

CONTRAT UF
21.06 X 20

EN ATELIER LE
04 JUIL. 2017
par : BS

REÇU le
03 JUIL. 2017
Rép: _____

No.	DATE	REVISION	PAR / APP.
0	2017/06/30	ISSUED FOR CONSTRUCTION	QVN

CLIENT: AGNICO EAGLE

NUQSANA PROMEC MINING

ultragen

CONSULTANT PROJECT NO. 591700

SCEAU PROFESSIONNEL

CONC.: KHV
DATE: 2017/06/29
DESSINÉ PAR: KVE
DATE: 2017/06/29
VER. PAR:
DATE:
APP.:
DATE:
FOURNIE: AUCUNE

PROJET: AGNICO EAGLE - MELIADINE DIVISION
403P - COMBUSTIBLE

TITRE: PORTAIL #1
FABRICATION ISOMETRIC
FUEL FROM 65PDD41604A/B TO 65TNK41607 & 65TNK41608

No PROJET	No DESSIN	PAGES	REV.
6515	403P-100-PDI-CC10-002	8/12	0

403P-MN-01, 403P-MN-02

NO. DE CONDUITE		SPECIFICATION	PRODUIT	SYSTEME REVETEMENT	CODE DE COULEUR	ISOLATION ET TRAÇAGE	EPAISS. D'ISOLATION		
403P-100-PDI-CC10-002		CC10	PDI					65-403-270-200	PIPE SUPPORT DETAILS
PRESSION D'OPERATION	TEMPERATURE D'OPERATION	PRESSION DE CONCEPTION	TEMPERATURE DE CONCEPTION	PRESSION D'ESSAI	CLASSE D'INSPECTION	CODE DE SERVICE	TRAITEMENT THERMIQUE	65-403-205-200	P&ID
PSIG	°F	N/A PSIG	10 à 15 °F	N/A PSIG		B363		No. DESSIN	DESSINS DE REFERENCE

Fluide Diesel End 5% Rx

JQ2216.6
PT GMAW AC-001
P1 à P1 R6

U-F.

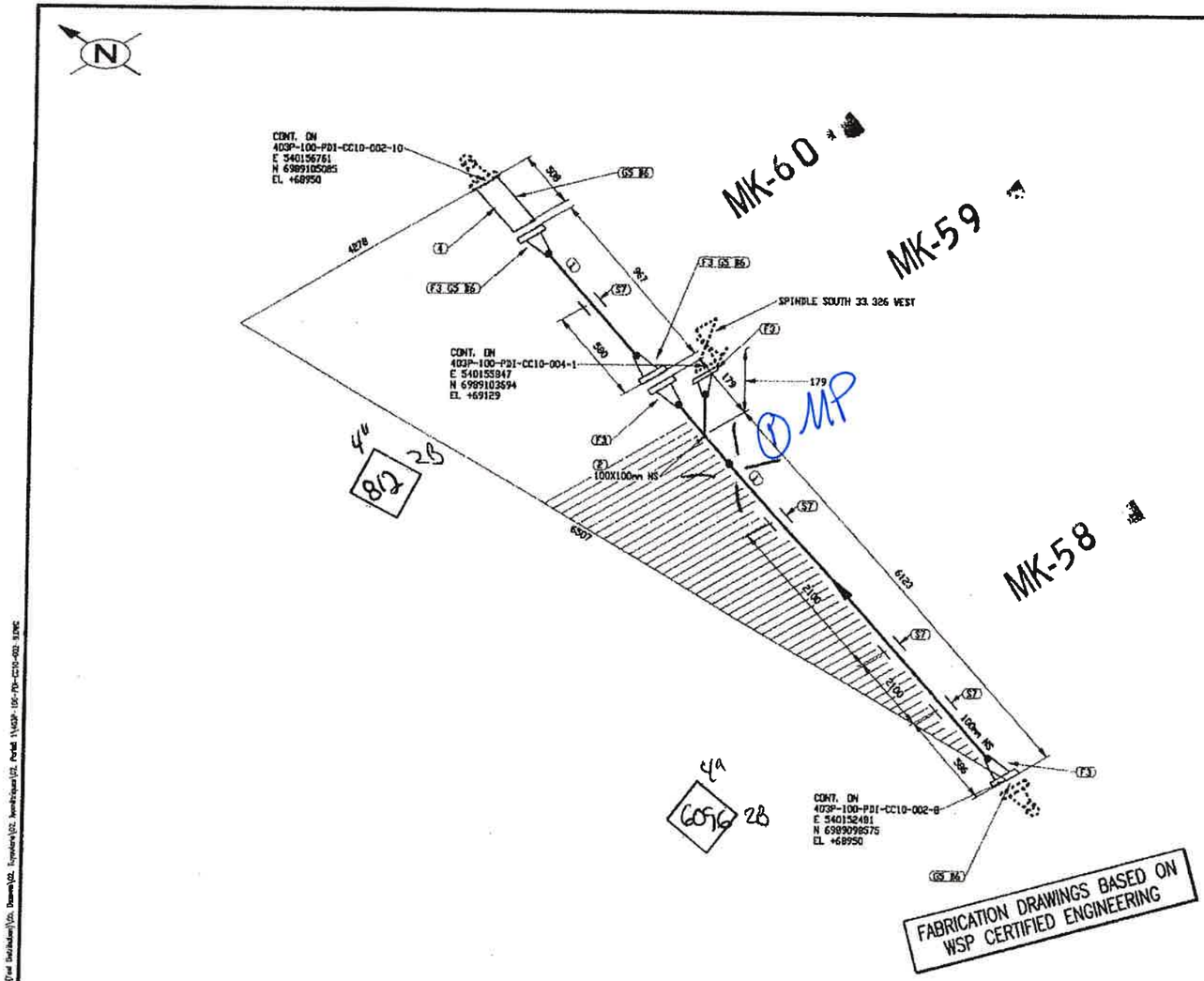

FABRICATION DRAWINGS BASED ON WSP CERTIFIED ENGINEERING

LISTE DE MATERIEL

No	QTE	DIA	MATERIEL/CATALOGUE	DESCRIPTION
1	6762 MM	100	A 333 Gr. 6	SCH STD, SMLS PIPE
2	1	100X100	A 420 Gr. WPL6	SCH STD, BW STRAIGHT TEE
3	5	100	A 350 Gr. LF2	CL 150, SCH STD, RF, WN FLANGE
4	1	100		CL 150, SINGLE BRAIDED HOSE ASSEMBLY
5	4	100	ASME B16.20	CL 150, GARLOCK 5500, RING TYPE GASKET 1/8" THK
6	32	16	A 193 B7/A 194 2H	CL 150, 8 - 15.875 X 90 STUD BOLTS c/w TWO HEAVY HEX NUTS
7	4	100	SUPAG-DN100	PIPE SUPPORT AS PER DETAIL 3, DWG 65-403-270-200

CONTRAT UF
21.06 X20

REÇU le
03 JUIL. 2017
Rép: _____

EN ATTENDRE LE
04 JUIL. 2017
par: _____

No.	DATE	REVISION	PAR / APP.
0	2017/06/30	ISSUED FOR CONSTRUCTION	QVN

CLIENT: AGNICO EAGLE

NUQSANA PROMEC MINING

ultragen

CONSULTANT PROJECT NO. 591700

SCEAU PROFESSIONNEL

CONC.: KHV
DATE: 2017/06/29
DESSINÉ PAR: KVE
DATE: 2017/06/29
VER. PAR:
DATE:
APP.:
DATE:
ECHELLE: AUCUNE

PROJET: AGNICO EAGLE - MELIADINE DIVISION
403P - COMBUSTIBLE

TITRE: PORTAIL #1
FABRICATION ISOMETRIC
FUEL FROM 65POD41604A/B TO 65TNK41607 & 65TNK41608

No PROJET	No DESSIN	PAGES	REV.
6515	403P-100-PDI-CC10-002	9/12	0

NO. DE CONDUITE		SPECIFICATION	PRODUIT	SYSTEME REVETEMENT	CODE DE COULEUR	ISOLATION ET TRACAGE	EPAISS. D'ISOLATION		
403P-100-PDI-CC10-002		CC10	PDI					65-403-270-200	PIPE SUPPORT DETAILS
PRESSION D'OPERATION	TEMPERATURE D'OPERATION	PRESSION DE CONCEPTION	TEMPERATURE DE CONCEPTION	PRESSION D'ESSAI	CLASSE D'INSPECTION	CODE DE SERVICE	TRAITEMENT THERMIQUE	65-403-205-200	P&ID
PSIG	Y	N/A PSIG	10 à 15 F	N/A PSIG		B31.3		No. DESSIN	DESSINS DE REFERENCE

Fluide Diesel Cal 5% Ry

JQ2216.6
PT-GMAW-AC001 Rev6
P1 à P1

403P-MN-01, 403P-MN-02

U-F.

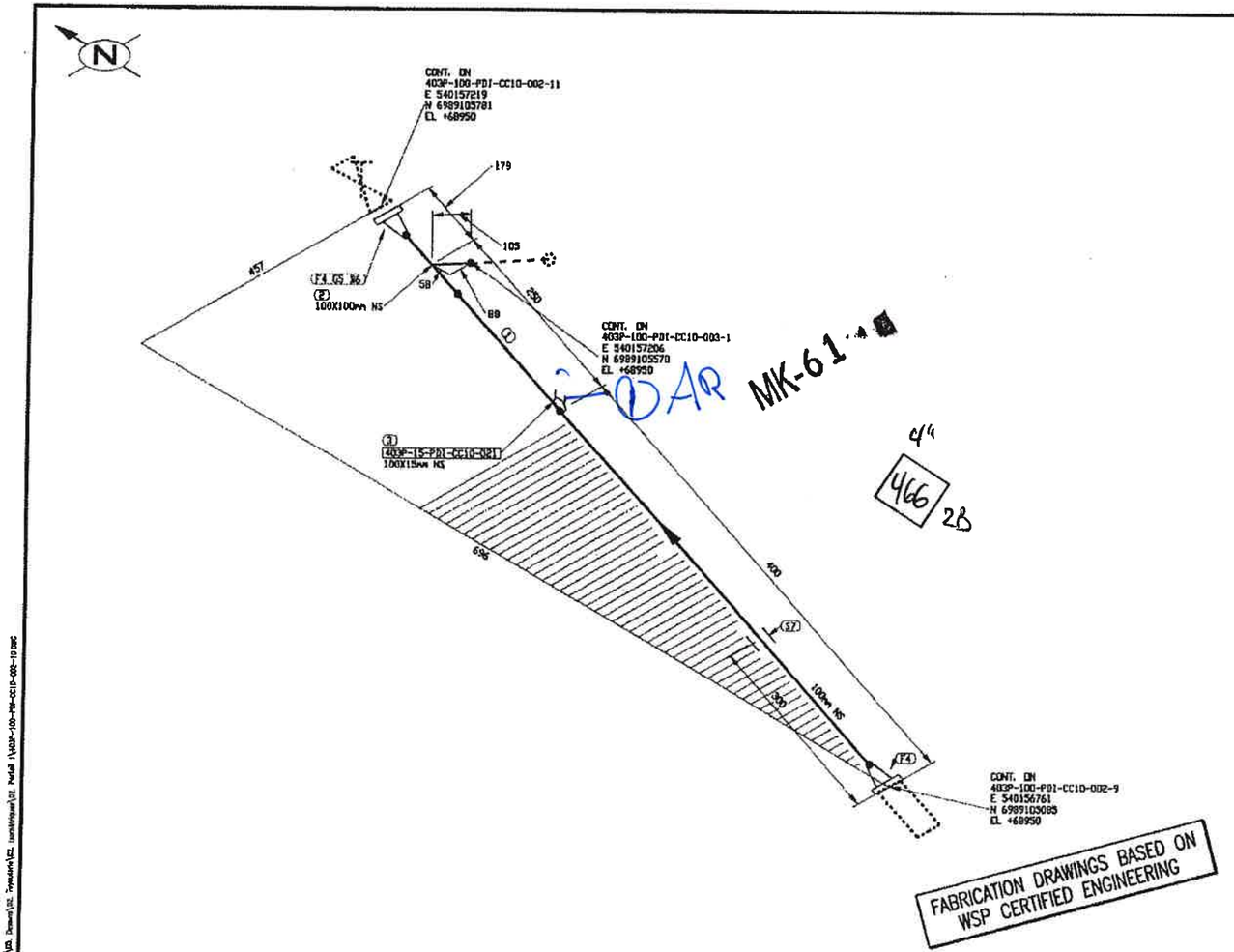

DAR MK-61

4"
466
2B

FABRICATION DRAWINGS BASED ON WSP CERTIFIED ENGINEERING

LISTE DE MATERIEL

No	QTE	DIA	MATERIEL/CATALOGUE	DESCRIPTION
1	470 MM	100	A 333 Gr. 6	SCH STD, SMLS PIPE
2	1	100X100	A 420 Gr. WPL6	SCH STD, BW STRAIGHT TEE
3	1	100X15	A 350 Gr. LF2	CL 3000, THREDOLET
4	2	100	A 350 Gr. LF2	CL 150, SCH STD, RF, WN FLANGE
5	1	100	ASME B16.20	CL 150, GARLOCK 5500, RING TYPE GASKET 1/8" THK
6	8	16	A 193 B7/A 194 2H	CL 150, 8 - 15.875 X 90 STUB BOLTS c/w TWO HEAVY HEX NUTS
7	1	100		PIPE SUPPORT AS PER DETAIL 3, DWG 65-403-270-200

CONTRAT UF
21.06 X20

REÇU le
03 JUIL. 2017
Rép: _____

EN ATELIER LE
04 JUIL. 2017
par: BS

No.	DATE	REVISION	QVN / PAR / APP.
0	2017/06/30	ISSUED FOR CONSTRUCTION	QVN

CLIENT: AGNICO EAGLE

NUQSANA PROMEC MINING

ultragen

CONSULTANT PROJECT NO. 591700

SCEAU PROFESSIONNEL

CONC.: KHV
DATE: 2017/05/29
DESSINÉ PAR: KVE
DATE: 2017/05/29
VER. PAR:
DATE:
APP.:
DATE:
ÉCHELLE: AUCUNE

PROJET: AGNICO EAGLE - MELIADINE DIVISION
403P - COMBUSTIBLE

TITRE: PORTAIL #1
FABRICATION ISOMETRIC
FUEL FROM 65PDD41604A/B TO 65TNK41607 & 65TNK41608

No PROJET	No DESSIN	PAGES	REV.
6515	403P-100-PDI-CC10-002	10/12	0

NO. DE CONDUITE		SPECIFICATION	PRODUIT	SYSTEME REVETEMENT	CODE DE COULEUR	ISOLATION ET TRACAGE	EPAISS D'ISOLATION		
403P-100-PDI-CC10-002		CC10	PDI					65-403-270-200	PIPE SUPPORT DETAILS
PRESSION D'OPERATION	TEMPERATURE D'OPERATION	PRESSION DE CONCEPTION	TEMPERATURE DE CONCEPTION	PRESSION D'ESSAI	CLASSE D'INSPECTION	CODE DE SERVICE	TRAITEMENT THERMIQUE	65-403-205-200	P&ID
PSIG	°F	N/A PSIG	10 x 5 °F	N/A PSIG		B31.3		No. DESSIN	DESSINS DE REFERENCE

JQ2216.6
PT-G-MAW-HC-001 REV 6
P1 a P1

Fluide: Diesel End: 5% Rx

U-F

403P-MN-01, 403P-MN-02

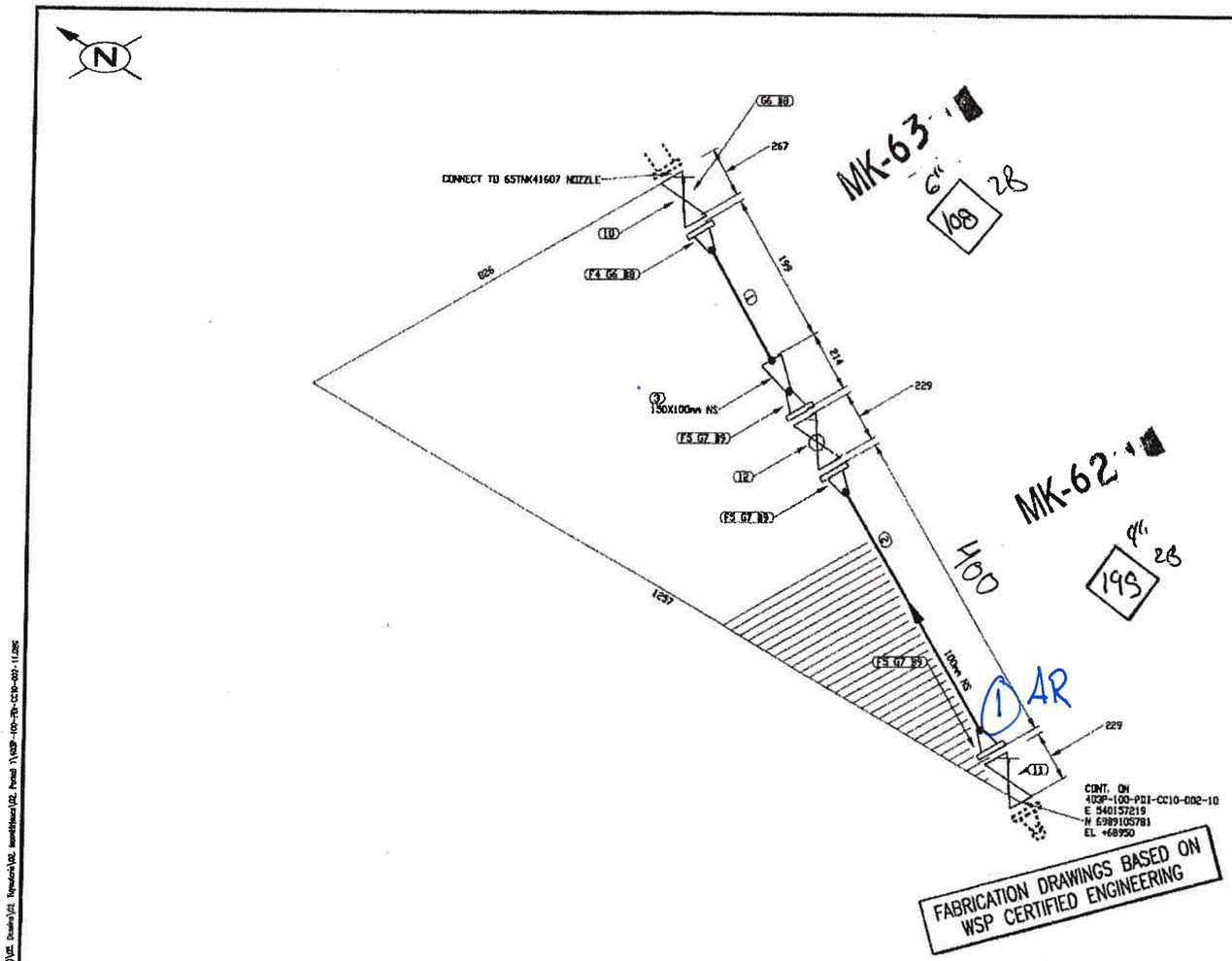

LISTE DE MATERIEL

No	QTE	DIA	MATERIEL/CATALOGUE	DESCRIPTION
1	111 MM	150	A 333 Gr. 6	SCH STD, SMLS PIPE
2	200 MM	100	A 333 Gr. 6	SCH STD, SMLS PIPE
3	1	150X100	A 420 Gr. WPL6	SCH STD, BW CONC RED
4	1	150	A 350 Gr. LF2	CL 150, SCH STD, RF, WN FLANGE
5	3	100	A 350 Gr. LF2	CL 150, SCH STD, RF, WN FLANGE
6	2	150	ASME B16.20	CL 150, GARLOCK 5500, RING TYPE GASKET 1/8" THK
7	3	100	ASME B16.20	CL 150, GARLOCK 5500, RING TYPE GASKET 1/8" THK
8	16	19	A 193 B7/A 194 2H	CL 150, 8 - 19.05 X 100 STUD BOLTS c/w TWO HEAVY HEX NUTS
9	24	16	A 193 B7/A 194 2H	CL 150, 8 - 15.875 X 90 STUD BOLTS c/w TWO HEAVY HEX NUTS
10	1	150	GA-10	CL 150, RF, GATE VALVE
11	1	100	GA-10	CL 150, RF, GATE VALVE
12	1	100	XA-31	CL 150, RF, BALL VALVE

CONTRAT UF
21 06 X20

REÇU le
03 JUIL. 2017
Rép: _____

EN ATELIER LE
04 JUIL. 2017
par: BS

No.	DATE	REVISION	APP.
0	2017/06/30	ISSUED FOR CONSTRUCTION	QVN / PAR

CLIENT: AGNICO EAGLE

NUQSANA PROMEC MINING

ultragen
CONSULTANT PROJECT NO. 591700

SCEAU PROFESSIONNEL

CONC.: KHV
DATE: 2017/06/28
DESSINE PAR: KVE
DATE: 2017/06/28
VER. PAR:
DATE:
APP.:
DATE:
ÉCHELLE: AUCUNE

PROJET: AGNICO EAGLE - MEL IADINE DIVISION
403P - COMBUSTIBLE

TITRE: PORTAIL #1
FABRICATION ISOMETRIC
FUEL FROM 65PUD41604A/B TO 65TNK41607 & 65TNK41608

No PROJET	No DESSIN	PAGES	RÉV.
6515	403P-100-PDI-CC10-002	11/12	0

403P-MN-01, 403P-MN-02

No. DE CONDUITE		SPECIFICATION	PRODUIT	SYSTEME REVETEMENT	CODE DE COULEUR	ISOLATION ET TRACAGE	EPAISS. D'ISOLATION		
403P-100-PDI-CC10-002		CC10	PDI					65-403-270-200	PIPE SUPPORT DETAILS
PRESSION D'OPERATION	TEMPERATURE D'OPERATION	PRESSION DE CONCEPTION	TEMPERATURE DE CONCEPTION	PRESS-ON D'ESSAI	CLASSE D'INSPECTION	CODE DE SERVICE	TRAITEMENT THERMIQUE	65-403-205-200	P&ID
PSIG	°F	N/A PSIG	10 a 15 °F	N/A PSIG		P-31.3		No. DESSIN	DESSINS DE REFERENCE

IMPRIMÉ LE: Jun 30, 2017, 8:55am

Fluide Diesel Ext 3% RX

U-F

JG221C-L
PT-GMAW/FCAW-00
P1 à P1 R6

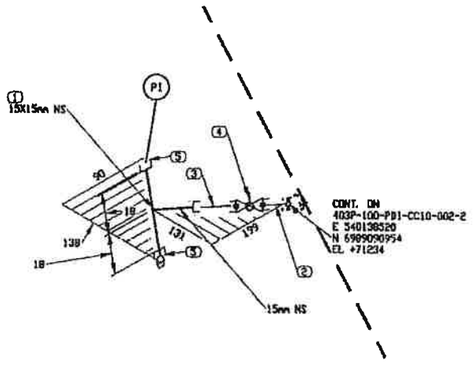

LISTE DE MATERIEL

No	QTE	DIA	MATERIEL/CATALOGUE	DESCRIPTION
1	1	15X15	A 350 Gr. LF2	CL 3000, THRD STRAIGHT TEE
2	1	15	A 333 Gr. 6	SCH 80, NIPPLE x 75mm LG PBE
3	1	15	A 333 Gr. 6	SCH 80, NIPPLE x 75mm LG PExTOE
4	1	15	3A-29	CL 600, SW, BALL VALVE
5	2	15	A 350 Gr. LF2	MNPT SOLID STL BALL PLUG

CONTRAT UF
21.06X20

REÇU le
03 JUIL. 2017
Rép:

EN ATELIER LE
04 JUIL. 2017
par: BS

FABRICATION DRAWINGS BASED ON WSP CERTIFIED ENGINEERING

JQ2216.6
PT-GMAW-AC-CC10
P1 à P1

No.	DATE	REVISION	
0	2017/06/30	ISSUED FOR CONSTRUCTION	OVN / PAR / APP.

CLIENT: AGNICO EAGLE

NUQSANA-PROMEC MINING

ultragen

CONSULTANT PROJECT NO. 591700

SCEAU PROFESSIONNEL

CONC.: KHV DATE: 2017/06/29
DESSINE PAR: KVE DATE: 2017/06/29
VER. PAR: DATE:
APP.: DATE:
ÉCHELLE: AUCUNE

PROJET: AGNICO EAGLE - MEADOWBANK DIVISION 403P - COMBUSTIBLE

TITRE: PORTAIL #1 FABRICATION ISOMETRIC FUEL FROM 65PDI41604A/B TO 65TNK41607 & 65TNK41608

No PROJET	No DESSIN	PAGE	REV.
6515	403P-100-PDI-CC10-002	12/12	0

403P-MN-01, 403P-MN-02

NO DE CONDUITE		SPECIFICATION	PRODUIT	SYSTEME REVETEMENT	CODE DE COULEUR	ISOLATION ET TRACAGE	EPAISS. D'ISOLATION		
403P-100-PDI-CC10-002		CC10	PDI					65-403-270-200	PIPE SUPPORT DETAILS
PRESSION D'OPERATION	TEMPERATURE D'OPERATION	PRESSION DE CONCEPTION	TEMPERATURE DE CONCEPTION	PRESSION D'ESSAI	CLASSE D'INSPECTION	CODE DE SERVICE	TRAITEMENT THERMIQUE	65-403-205-200	P&ID
PSIG	°F	N/A PSIG	10 à 17 °F	N/A PSIG		D31.3		No. DESSIN	DESSINS DE REFERENCE

Fluide Diesel End 5% RX

U-F.

IMPRIMÉ LE: Jun 30 2017, 8:59am
POSER: Kyrylo Ivanchenko\Desktop\403P-100-PDI-CC10-002-2.dwg

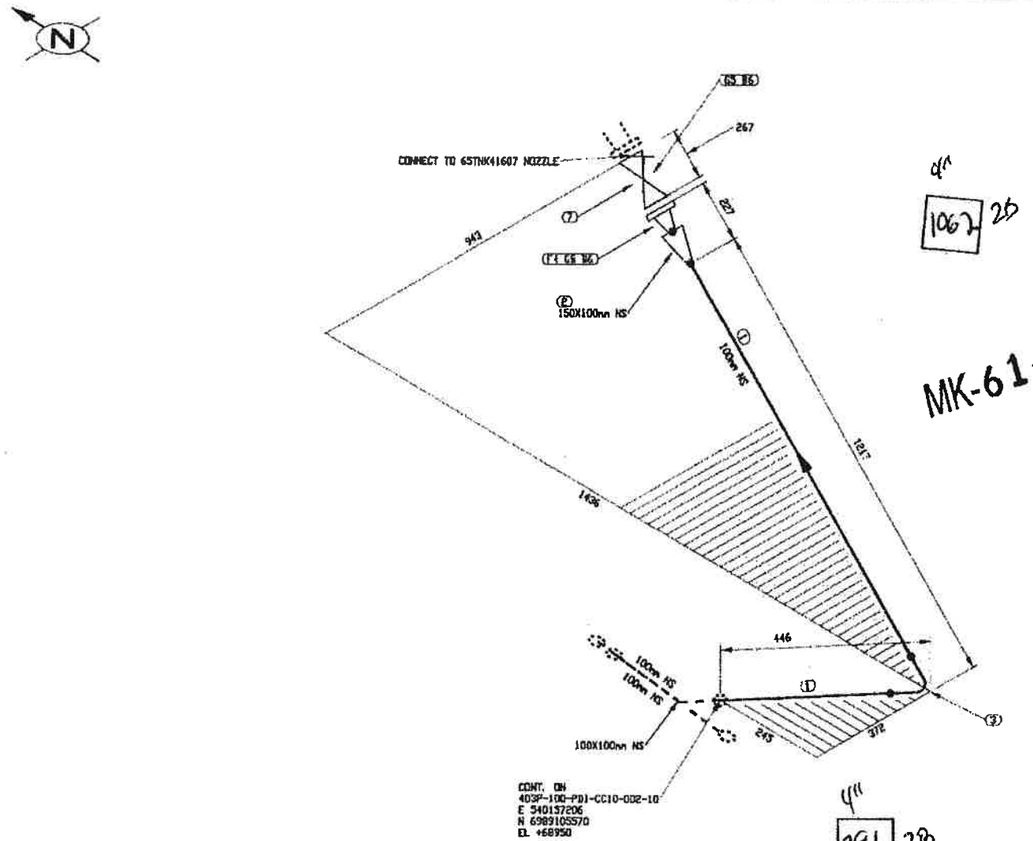

4"
1062 2B

MK-61

4"
291 2B

FABRICATION DRAWINGS BASED ON WSP CERTIFIED ENGINEERING

LISTE DE MATERIEL

No	QTE	DIA	MATERIEL/CATALOGUE	DESCRIPTION
1	1359 MM	100	A 333 Gr. 6	SCH STD, SMLS PIPE
2	1	150X100	A 420 Gr. VPL6	SCH STD, BV CONC RED
3	1	100	A 420 Gr. VPL6	SCH STD, BV LR 90 DEG ELBOW
4	1	150	A 350 Gr. LF2	CL 150, SCH STD, RF, WN FLANGE
5	2	150	ASME B16.20	CL 150, GARLOCK 5500, RING TYPE GASKET 1/8" THK
6	16	19	A 193 B7/A 194 2H	CL 150, 8 - 19.05 X 100 STUD BOLTS c/w TWO HEAVY HEX NUTS
7	1	150	GA-10	CL 150, RF, GATE VALVE

CONTRAT UF
21.06 X 20

REÇU le
03 JUIL. 2017
Rép: _____

EN ATELIER LI
04 JUIL. 2017
par: BS

No.	DATE	REVISION	QVN / PAR / APP.
0	2017/06/30	ISSUED FOR CONSTRUCTION	QVN

CLIENT: AGNICO EAGLE

NUQSANA PROMEC MINING

ultragen

CONSULTANT PROJECT NO. 591700

SCEAU PROFESSIONNEL

CONC.: KHV DATE: 2017/06/29
DESSINÉ PAR: KVE DATE: 2017/06/29
VER. PAR: DATE:
APP.: DATE:
ECHELLE: AUCUNE

PROJET: AGNICO EAGLE - MELIADINE DIVISION
403P - COMBUSTIBLE

TITRE: PORTAIL #1
FABRICATION ISOMETRIC
FUEL FROM 65PDD41607 TO LOADING NOZZLE

No PROJET	No DESSIN	PAGES	REV.
6515	403P-100-PDI-CC10-003	1/1	0

NO. DE CONDUITE		SPECIFICATION	PRODUIT	SYSTEME REVETEMENT	CODE DE COULEUR	ISOLATION ET TRACAGE	EPAISS. D'ISOLATION		
403P-100-PDI-CC10-003		CC10	PDI					65-403-270-200	PIPE SUPPORT DETAILS
PRESSION D'OPERATION	TEMPERATURE D'OPERATION	PRESSION DE CONCEPTION	TEMPERATURE DE CONCEPTION	PRESSION D'ESSAI	CLASSE D'INSPECTION	CODE DE SERVICE	TRAITEMENT THERMIQUE	65-403-205-200	P&ID
PSIG	°F	N/A PSIG	10 à 15 °F	N/A PSIG		B31.3		No. DESSIN	DESSINS DE REFERENCE

JQ2216.6
PT GMAW AG001R6
P1 à P1

Fluide Diesel End 5% RX

U-F

403P-MN-01

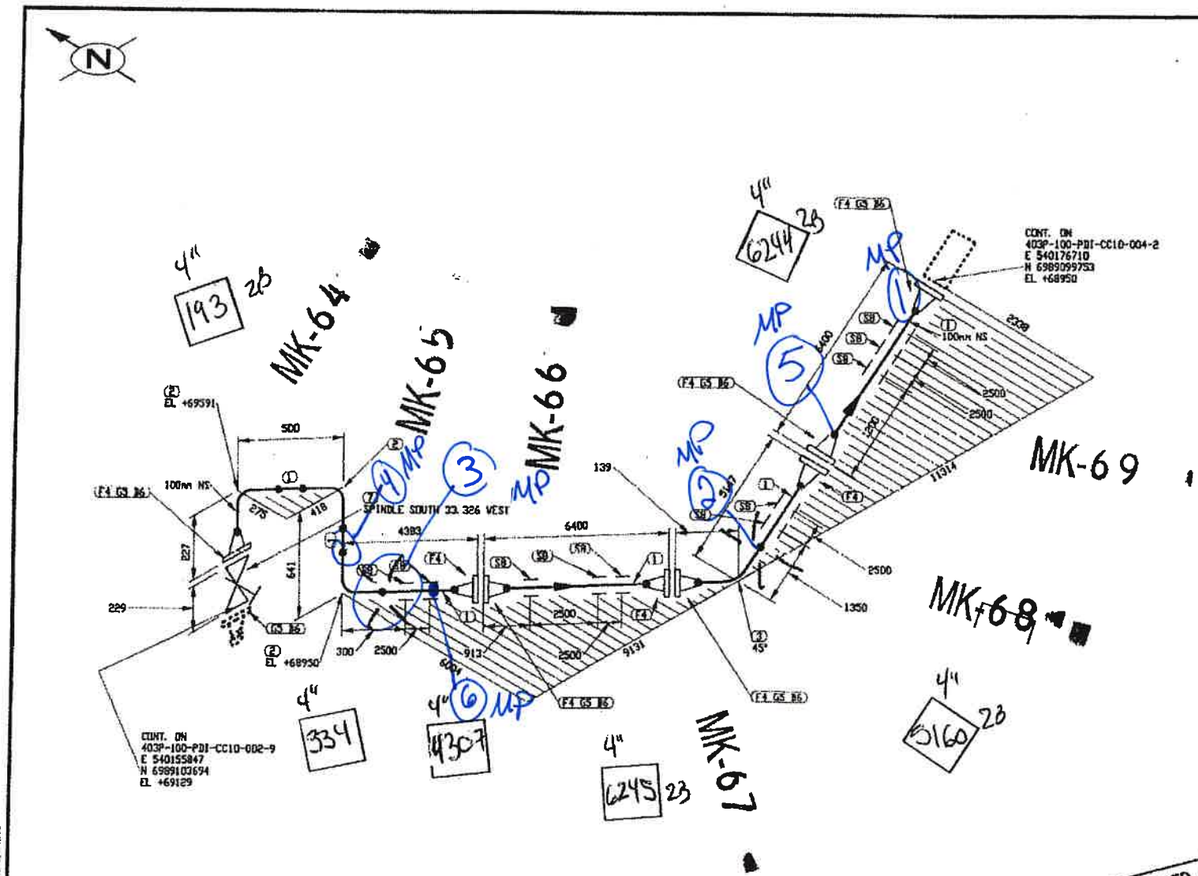

FABRICATION DRAWINGS BASED ON WSP CERTIFIED ENGINEERING

LISTE DE MATERIEL

No	QTE	DIA	MATERIEL/CATALOGUE	DESCRIPTION
1	22199 MM	100	A 333 Gr. 6	SCH STD, SMLS PIPE
2	3	100	A 420 Gr. WPL6	SCH STD, BW LR 90 DEG ELBOW
3	1	100	A 420 Gr. WPL6	SCH STD, BW LR 45 DEG ELBOW
4	8	100	A 350 Gr. LF2	CL 150, SCH STD, RF, WN FLANGE
5	6	100	ASME B16.20	CL 150, GARLOCK 9500, RING TYPE GASKET 1/8" THK
6	48	16	A 193 B7/A 194 2H	CL 150, 8 - 15.875 X 90 STUD BOLTS c/w TWO HEAVY HEX NUTS
7	1	100	GA-10	CL 150, RF, GATE VALVE
8	10	100		PIPE SUPPORT AS PER DETAIL 3, DWG 65-403-270-200

CONTRAT UF
21.06.20

REÇU le
03 JUIL. 2017
Rép: _____

EN ATELIER LE
04 JUIL. 2017
par: _____

No.	DATE	REVISION	OVN / PAR / APP.
0	2017/06/30	ISSUED FOR CONSTRUCTION	

CLIENT: AGNICO EAGLE

NUQSANA PROMEC MINING

ultragen

CONSULTANT PROJECT NO. 591700

SCEAU PROFESSIONNEL

CONC.: KHV
DATE: 2017/06/29
DESSINÉ PAR: KVE
DATE: 2017/05/29
VÉR. PAR:
DATE:
APP.:
DATE:
ÉCHELLE: AUCUNE

PROJET: AGNICO EAGLE - MEADOWBANK DIVISION
403P - COMBUSTIBLE

TITRE: PORTAIL #1
FABRICATION ISOMETRIC
FUEL FROM 403P-100-PDI-CC10-002 TO 65TNK41608 LOADING NOZZLE

No PROJET	No DESSIN	FEUILLE	REV.
6515	403P-100-PDI-CC10-004	1/2	0

403P-MAS-01

NO. DE CONDUITE		SPÉCIFICATION	PRODUIT	SYSTÈME REVÊTEMENT	CODE DE COULEUR	ISOLATION ET TRAÇAGE	ÉPAISS. D'ISOLATION		
403P-100-PDI-CC10-004		CC10	PDI					65-403-270-200	PIPE SUPPORT DETAILS
PRESSION D'OPÉRATION	TEMPÉRATURE D'OPÉRATION	PRESSION DE CONCEPTION	TEMPÉRATURE DE CONCEPTION	PRESSION D'ESSAI	CLASSE D'INSPECTION	CODE DE SERVICE	TRAITEMENT THERMIQUE	65-403-205-200	P&ID
PSIG	°F	NA PSIG	10 à 15 °F	NA PSIG		B31.3		No. DESSIN	DESSINS DE RÉFÉRENCE

Fluide Diesel Cnd: 5% RX

J6221C-6
PI-GMAW-QC-001 RG
P1 à P1

U-F

TRACÉS: C:\Users\kvoc-wsp.com\Documents\Meadow_Bank\403P-100-PDI-CC10-004-1.DWG
IMPRIMÉ LE: Jun 30, 2017, 8:33am

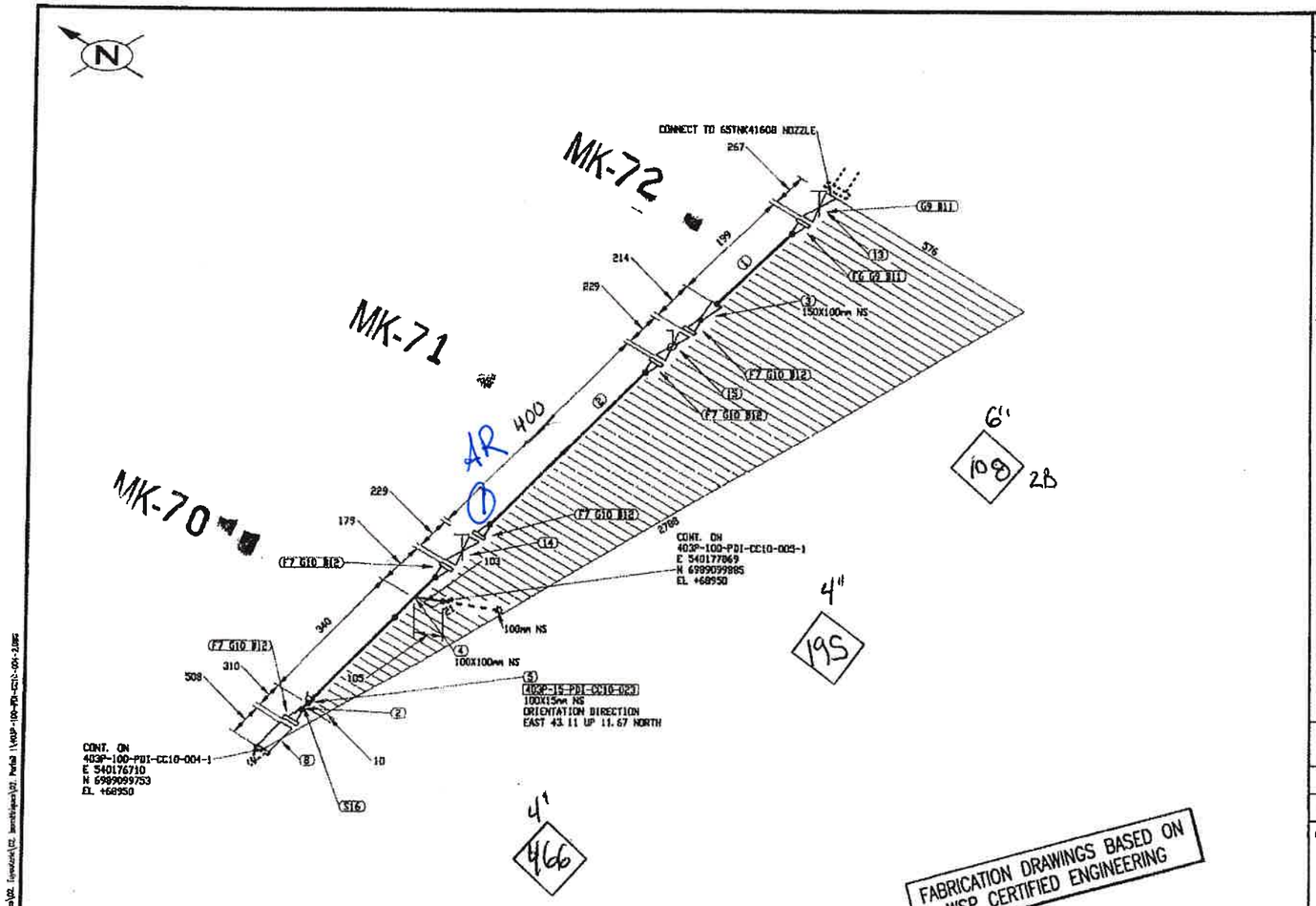

FABRICATION DRAWINGS BASED ON WSP CERTIFIED ENGINEERING

LISTE DE MATERIEL

No	QTE	DIA	MATERIEL/CATALOGUE	DESCRIPTION
1	112 MM	150	A 333 Gr. 6	SCH STD, SMLS PIPE
2	671 MM	100	A 333 Gr. 6	SCH STD, SMLS PIPE
3	1	150X100	A 420 Gr. WPL6	SCH STD, BV CONC RED
4	1	100X100	A 420 Gr. WPL6	SCH STD, BV STRAIGHT TEE
5	1	100X15	A 350 Gr. LF2	CL 3000, THREDOLET
6	1	150	A 350 Gr. LF2	CL 150, SCH STD, RF, WN FLANGE
7	5	100	A 350 Gr. LF2	CL 150, SCH STD, RF, WN FLANGE
8	1	100		CL 150, SINGLE BRAIDED HOSE ASSEMBLY
9	2	150	ASME B16.20	CL 150, GARLOCK 5500, RING TYPE GASKET 1/8" THK
10	5	100	ASME B16.20	CL 150, GARLOCK 5500, RING TYPE GASKET 1/8" THK
11	16	19	A 193 B7/A 194 2H	CL 150, 8 - 19.05 X 100 STUD BOLTS c/w TWO HEAVY HEX NUTS
12	40	16	A 193 B7/A 194 2H	CL 150, 8 - 15.875 X 90 STUD BOLTS c/w TWO HEAVY HEX NUTS
13	1	150	GA-10	CL 150, RF, GATE VALVE
14	1	100	GA-10	CL 150, RF, GATE VALVE
15	1	100	BA-31	CL 150, RF, BALL VALVE
16	1	100		PIPE SUPPORT AS PER DETAIL 3, DWG 65-403-270-200

CONTRAT UF
21.06X20

REÇU le
03 JUIL. 2017
Rép: _____

No.	DATE	REVISION	PAR / APP.
0	2017/06/30	ISSUED FOR CONSTRUCTION	QVN

CLIENT: AGNICO EAGLE

NUQSANA PROMEC MINING

ultragen

CONSULTANT PROJECT NO. 591700

SCEAU PROFESSIONNEL

CONC.: KHV
DATE: 2017/05/29
DESSINÉ PAR: XVE
DATE: 2017/05/29
VÉR. PAR:
DATE:
APP.:
DATE:
ÉCHELLE: AUCUNE

PROJET: AGNICO EAGLE - MELIADINE DIVISION
403P - COMBUSTIBLE

TITRE: PORTAIL #1
FABRICATION ISOMETRIC
FUEL FROM 403P-100-PDI-CC10-002 TO 65TNK41608 LOADING NOZZLE

No PROJET	No DESSIN	PAGES	REV.
6515	403P-100-PDI-CC10-004	2/2	0

403P-MN-01

NO. DE CONDUITE		SPECIFICATION	PRODUIT	SYSTEME REVETEMENT	CODE DE COULEUR	ISOLATION ET TRACAGE	EPAISS. D'ISOLATION		
403P-100-PDI-CC10-004		CC10	PDI					65-403-270-200	PIPE SUPPORT DETAILS
PRESSION D'OPERATION	TEMPERATURE D'OPERATION	PRESSION DE CONCEPTION	TEMPERATURE DE CONCEPTION	PRESSION D'ESSAI	CLASSE D'INSPECTION	CODE DE SERVICE	TRAITEMENT THERMIQUE	65-403-205-200	P&ID
PSIG	°F	NA PSIG	la NG °F	N/A PSIG		131.3		No. DESSIN	DESSINS DE REFERENCE

JQ2216.6
PT GMAW-PAC-001 RC
P1 a P1

Fluid Dread End : 5% Rx

U-F.

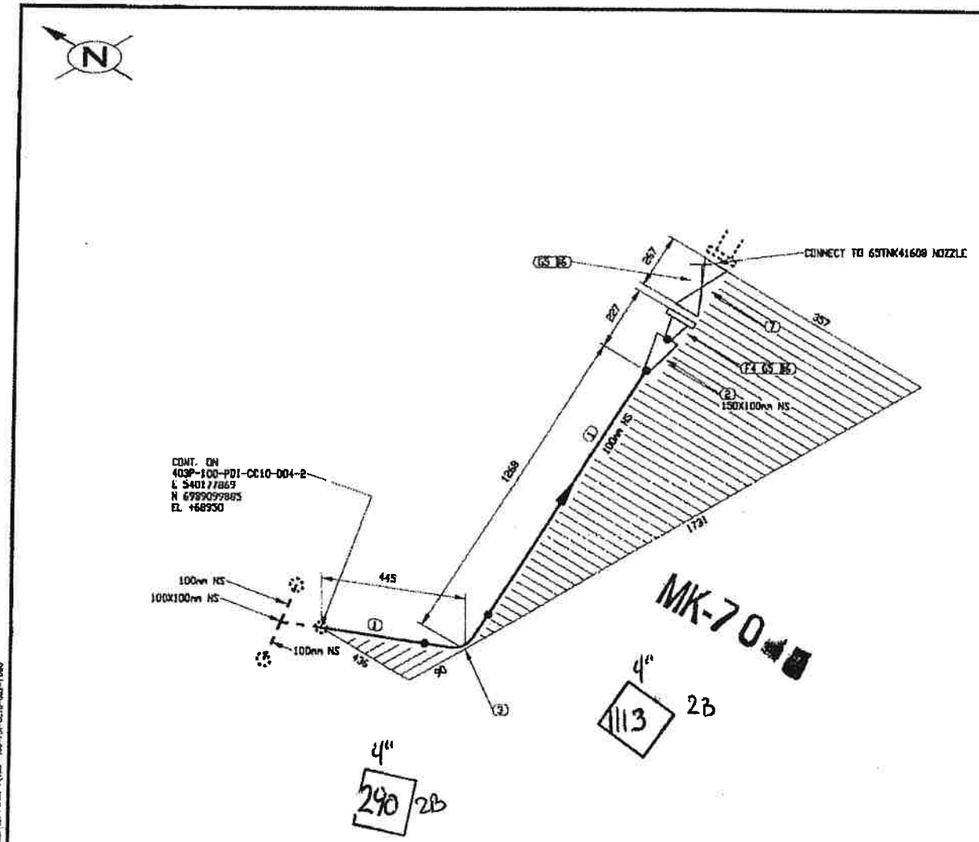

FABRICATION DRAWINGS BASED ON WSP CERTIFIED ENGINEERING

LISTE DE MATERIEL

No	QTE	DIA	MATERIEL/CATALOGUE	DESCRIPTION
1	1409 MM	100	A 333 Gr. 6	SCH STD, SMLS PIPE
2	1	150X100	A 420 Gr. WPL6	SCH STD, BW CONC RED
3	1	100	A 420 Gr. WPL6	SCH STD, BW LR 90 DEG ELBOW
4	1	150	A 350 Gr. LF2	CL 150, SCH STD, RF, WN FLANGE
5	2	150	ASME B16.20	CL 150, GARLOCK 5500, RING TYPE GASKET 1/8" THK
6	16	19	A 193 B7/A 194 2H	CL 150, 8 - 19.05 X 100 STUD BOLTS c/w TWO HEAVY HEX NUTS
7	1	150	GA-10	CL 150, RF, GATE VALVE

CONTRAT UF
21.06 X20

REÇU le
03 JUIL. 2017
Rép: _____

EN ATELIER LE
04 JUIL. 2017
par: BS

No.	DATE	REVISION	QVN / PAR / APP.
0	2017/06/30	ISSUED FOR CONSTRUCTION	

CLIENT: AGNICO EAGLE

NUQSANA PROMEC MINING

ultragen

CONSULTANT PROJECT NO. 591700

SCEAU PROFESSIONNEL

CONC.: KHV
DATE: 2017/06/29
DESSINÉ PAR: KVE
DATE: 2017/06/29
VER. PAR:
DATE:
APP.:
DATE:
ÉCHELLE: AUCUNE

PROJET: AGNICO EAGLE - MELIADINE DIVISION
403P - COMBUSTIBLE

TITRE: PORTAIL #1
FABRICATION ISOMETRIC
FUEL FROM 403P-100-PDI-CC10-004 TO 65TNK41608 LOADING NOZZLE

No PROJET	No DESSIN	PAGES	REV.
6515	403P-100-PDI-CC10-005	1/1	0

403P-MN-01

NO. DE CONDUITE		SPECIFICATION	PRODUIT	SYSTEME REVETEMENT	CODE DE COULEUR	ISOLATION ET TRACAGE	EPAISS. D'ISOLATION		
403P-100-PDI-CC10-005		CC10	PDI					65-403-270-200	PIPE SUPPORT DETAILS
PRESSION D'OPERATION	TEMPERATURE D'OPERATION	PRESSION DE CONCEPTION	TEMPERATURE DE CONCEPTION	PRESSION D'ESSAI	CLASSE D'INSPECTION	CODE DE SERVICE	TRAITEMENT THERMIQUE	65-403-205-200	P&ID
PSIG	°F	N/A PSIG	10 C 15°	N/A PSIG		B31-3		No. DESSIN	DESSINS DE REFERENCE

JQ2216.6
PT-GMAW-AC-001 R6
P1 a P1

Fluide diesel - End: 5% RY

U-F.

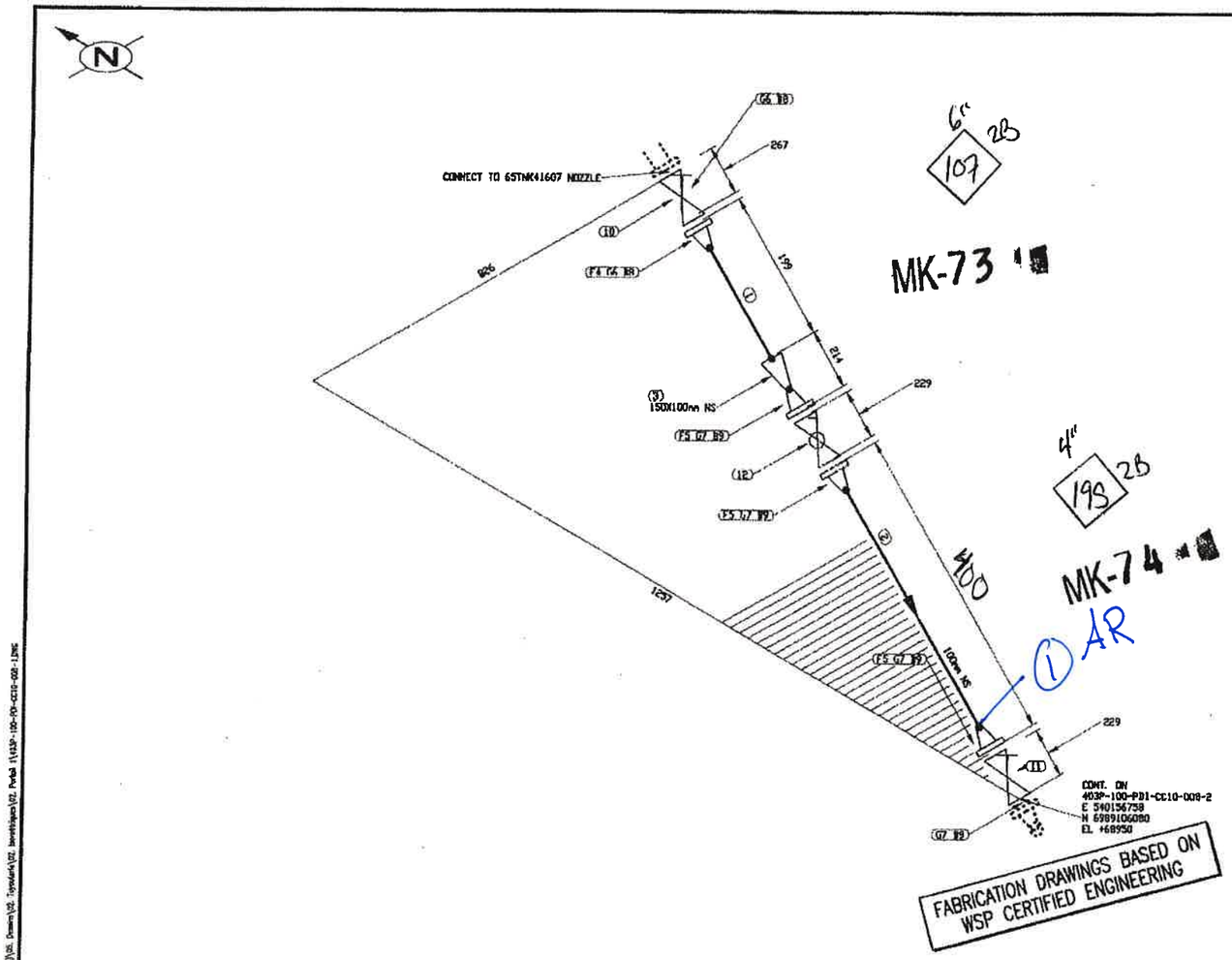

LISTE DE MATERIEL

No	QTE	DIA	MATERIEL/CATALOGUE	DESCRIPTION
1	111 MM	150	A 333 Gr. 6	SCH STD, SMLS PIPE
2	200 MM	100	A 333 Gr. 6	SCH STD, SMLS PIPE
3	1	150X100	A 420 Gr. WPL6	SCH STD, BW CONC RED
4	1	150	A 350 Gr. LF2	CL 150, SCH STD, RF, WN FLANGE
5	3	100	A 350 Gr. LF2	CL 150, SCH STD, RF, WN FLANGE
6	2	150	ASME B16.20	CL 150, GARLOCK 5500, RING TYPE GASKET 1/8" THK
7	4	100	ASME B16.20	CL 150, GARLOCK 5500, RING TYPE GASKET 1/8" THK
8	16	19	A 193 B7/A 194 2H	CL 150, 8 - 19.05 X 100 STUD BOLTS c/w TWO HEAVY HEX NUTS
9	32	16	A 193 B7/A 194 2H	CL 150, 8 - 15.875 X 90 STUD BOLTS c/w TWO HEAVY HEX NUTS
10	1	150	GA-10	CL 150, RF, GATE VALVE
11	1	100	GA-10	CL 150, RF, GATE VALVE
12	1	100	BA-31	CL 150, RF, BALL VALVE

CONTRAT UF
21.06.20

REÇU le
03 JUIL. 2017
Rép: ----------

EN ATELIER LE
04 JUIL. 2017
par: BS

No.	DATE	REVISION	APP.
0	2017/06/30	ISSUED FOR CONSTRUCTION	QVN

CLIENT: AGNICO EAGLE

NUQSANA PROMEC MINING

ultragen

CONSULTANT PROJECT NO. 591700

SCEAU PROFESSIONNEL

CONC.: KHV DATE: 2017/06/29
DESSINE PAR: KVE DATE: 2017/06/29
VER. PAR: DATE:
APP.: DATE:
ECHELLE: AUCUNE

PROJET: AGNICO EAGLE - MELIADINE DIVISION
403P - COMBUSTIBLE

TITRE: PORTAIL #1
FABRICATION ISOMETRIC
FUEL FROM 65TNK41607 UNLOADING NOZZLE TO 65PUD41603B

No PROJET	No DESSIN	PAGES	REV.
6515	403P-100-PDI-CC10-008	1/10	0

403P-MN-01

NO. DE CONDUITE		SPECIFICATION	PRODUIT	SYSTEME REVETEMENT	CODE DE COULEUR	ISOLATION ET TRAÇAGE	EPAISS. D'ISOLATION		
403P-100-PDI-CC10-008		CC10	PDI					65-403-270-200	PIPE SUPPORT DETAILS
PRESSION D'OPERATION	TEMPERATURE D'OPERATION	PRESSION DE CONCEPTION	TEMPERATURE DE CONCEPTION	PRESSION D'ESSAI	CLASSE D'INSPECTION	CODE DE SERVICE	TRAITEMENT THERMIQUE	65-403-205-200	P&ID
PSIG	°F	N/A PSIG	10°&15 °F	N/A PSIG		B31.3		No. DESSIN	DESSINS DE REFERENCE

Fluide : Diesel End : 5% Rx

U-F.

JQ2216.6
Pt GMAW Action
Pl a Pl

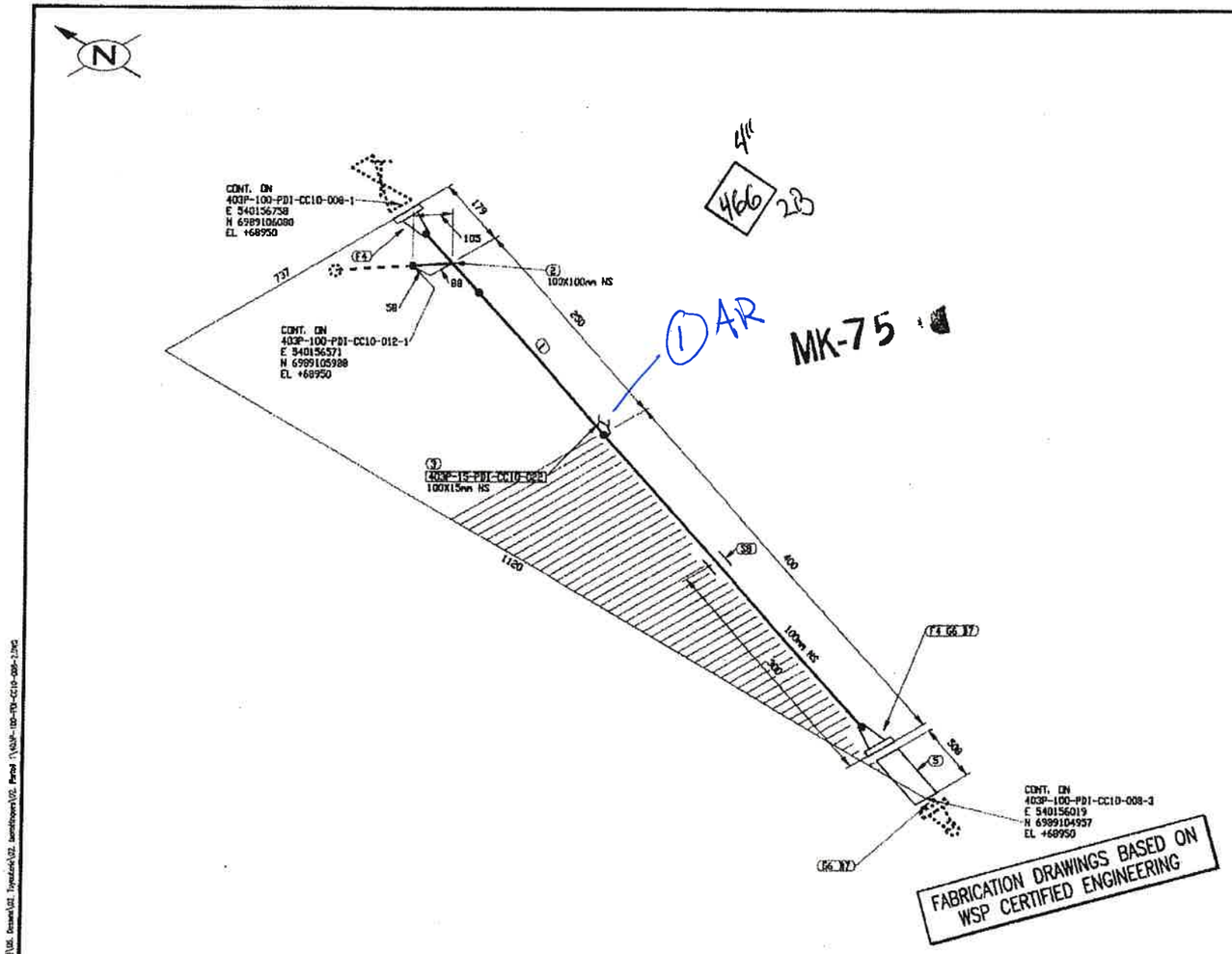

FABRICATION DRAWINGS BASED ON WSP CERTIFIED ENGINEERING

LISTE DE MATERIEL

No	QTE	DIA	MATERIEL/CATALOGUE	DESCRIPTION
1	470 MM	100	A 333 Gr. 6	SCH STD, SMLS PIPE
2	1	100X100	A 420 Gr. WPL6	SCH STD, BW STRAIGHT TEE
3	1	100X15	A 350 Gr. LF2	CL 3000, THREDOLET
4	2	100	A 350 Gr. LF2	CL 150, SCH STD, RF, WN FLANGE
5	1	100		CL 150, SINGLE BRAIDED HOSE ASSEMBLY
6	2	100	ASME B16.20	CL 150, GARLOCK 5500, RING TYPE GASKET 1/8" THK
7	16	16	A 193 B7/A 194 2H	CL 150, 8 - 15.875 X 90 STUD BOLTS c/w TWO HEAVY HEX NUTS
8	1	100		PIPE SUPPORT AS PER DETAIL 3, DWG 65-403-270-200

CONTRAT UF
21.06 X20

REÇU le
03 JUIL. 2017
Rép: _____

EN ATELIER LE
04 JUIL. 2017
par: BZ

No.	DATE	REVISION	PAR	APP.
0	2017/06/30	ISSUED FOR CONSTRUCTION	QVN	

CLIENT:

AGNICO EAGLE

NUQSANA PROMEC MINING

ultragen

CONSULTANT PROJECT NO. 591700

SCEAU PROFESSIONNEL

CONC.: KHV
DATE: 2017/05/28
DESSINÉ PAR: KVE
DATE: 2017/05/28
VÉR. PAR:
DATE:
APP.:
DATE:
ÉCHELLE: AUCUNE

PROJET: AGNICO EAGLE - MELIADINE DIVISION
403P - COMBUSTIBLE

TITRE: PORTAIL #1
FABRICATION ISOMETRIC
FUEL FROM 65TNK41607 UNLOADING NOZZLE TO 65POD41603B

No PROJET	No DESSIN	PAGES	REV.
6515	403P-100-PDI-CC10-008	2/10	0

403P-MN-01

NO. DE CONDUITE		SPECIFICATION	PRODUIT	SYSTEME REVETEMENT	CODE DE COULEUR	ISOLATION ET TRACAGE	EPAISS D'ISOLATION		
403P-100-PDI-CC10-008		CC10	PDI					65-403-270-200	PIPE SUPPORT DETAILS
PRESSION D'OPERATION	TEMPERATURE D'OPERATION	PRESSION DE CONCEPTION	TEMPERATURE DE CONCEPTION	PRESSION D'ESSAI	CLASSE D'INSPECTION	CODE DE SERVICE	TRAITEMENT THERMIQUE	65-403-205-200	P&ID
PSIG	°F	N/A PSIG	10 à 15 °F	N/A PSIG		B31.3		No. DESSIN	DESSINS DE REFERENCE

JQ2216.6
PT GMAW AC-001
P1 a P1

Fluid Diesel Ende: 5% Rx

U-F

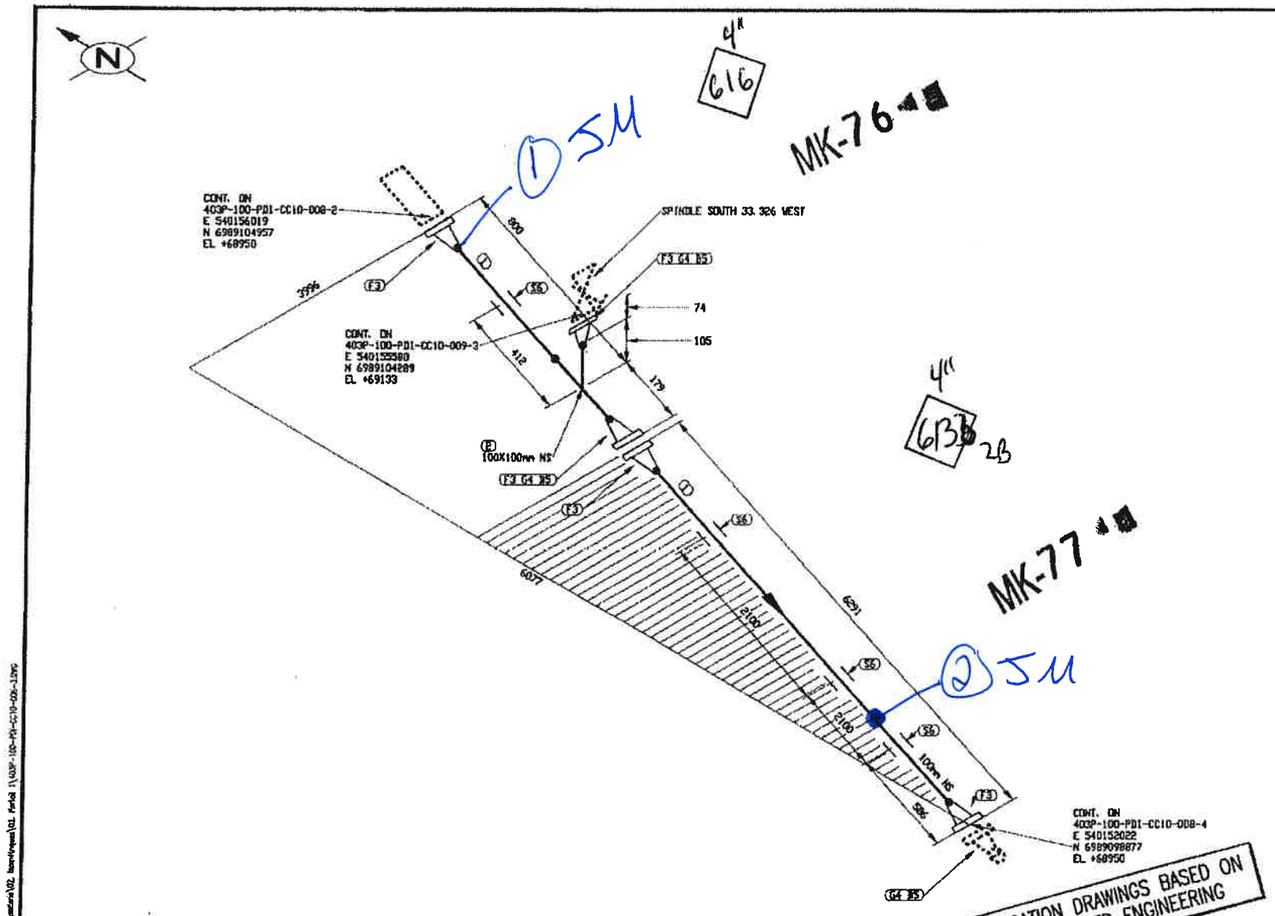

LISTE DE MATERIEL

No	QTE	DIA	MATERIEL/CATALOGUE	DESCRIPTION
1	6761 MM	100	A 333 Gr. 6	SCH STD, SMLS PIPE
2	1	100X100	A 420 Gr. WPL6	SCH STD, BW STRAIGHT TEE
3	5	100	A 350 Gr. LF2	CL 150, SCH STD, RF, WN FLANGE
4	3	100	ASME B16.20	CL 150, GARLOCK 9500, RING TYPE GASKET 1/8" THK
5	24	16	A 193 B7/A 194 2H	CL 150, Ø - 15.875 X 90 STUB BOLTS c/w TWO HEAVY HEX NUTS
6	4	100		PIPE SUPPORT AS PER DETAIL 3, DWG 65-403-270-200

CONTRAT UI
21.06X20

REÇU le
03 JUIL. 2017
Rép:

EN ATELIER LE
04 JUIL. 2017
par:

No.	DATE	REVISION	
0	2017/06/30	ISSUED FOR CONSTRUCTION	QVN

CLIENT:
AGNICO EAGLE

NUQSANA PROMEC MINING
Ultragen
CONSULTANT PROJECT NO. 591700

SCEAU PROFESSIONNEL

CONC.: KVV
DATE: 2017/06/29
DESSINÉ PAR: KVE
DATE: 2017/06/29
VÉR. PAR:
DATE:
APP.:
DATE:
ÉCHELLE: AUCUNE

PROJET: AGNICO EAGLE - MELIADINE DIVISION
403P - COMBUSTIBLE

TITRE: PORTAIL #1
FABRICATION ISOMETRIC
FUEL FROM 65TNK41607 UNLOADING NOZZLE TO 65PUD41603B

No PROJET	No DESSIN	PAGES	REV.
6515	403P-100-PDI-CC10-008	3/10	0

403P-MN-01

NO. DE CONDUITE		SPECIFICATION	PRODUIT	SYSTEME REVETEMENT	CODE DE COULEUR	ISOLATION ET TRACAGE	EPAISS D'ISOLATION		
403P-100-PDI-CC10-008		CC10	PDI					65-403-270-200	PIPE SUPPORT DETAILS
PRESSION D'OPERATION	TEMPERATURE D'OPERATION	PRESSION DE CONCEPTION	TEMPERATURE DE CONCEPTION	PRESSION D'ESSAI	CLASSE D'INSPECTION	CODE DE SERVICE	TRAITEMENT THERMIQUE	65-403-205-200	P&ID
PSIG	°F	N/A PSIG	100 à 15 °F	131A PSIG		B31.3		No. DESSIN	DESSINS DE REFERENCE

IMPRIMÉ LE: Avr 30 2017, 10:10am

Flow Dia Diesel Cnd = 5% RX

U - F

JQ2216.6
G-MAW-AC-001
P1 à P1

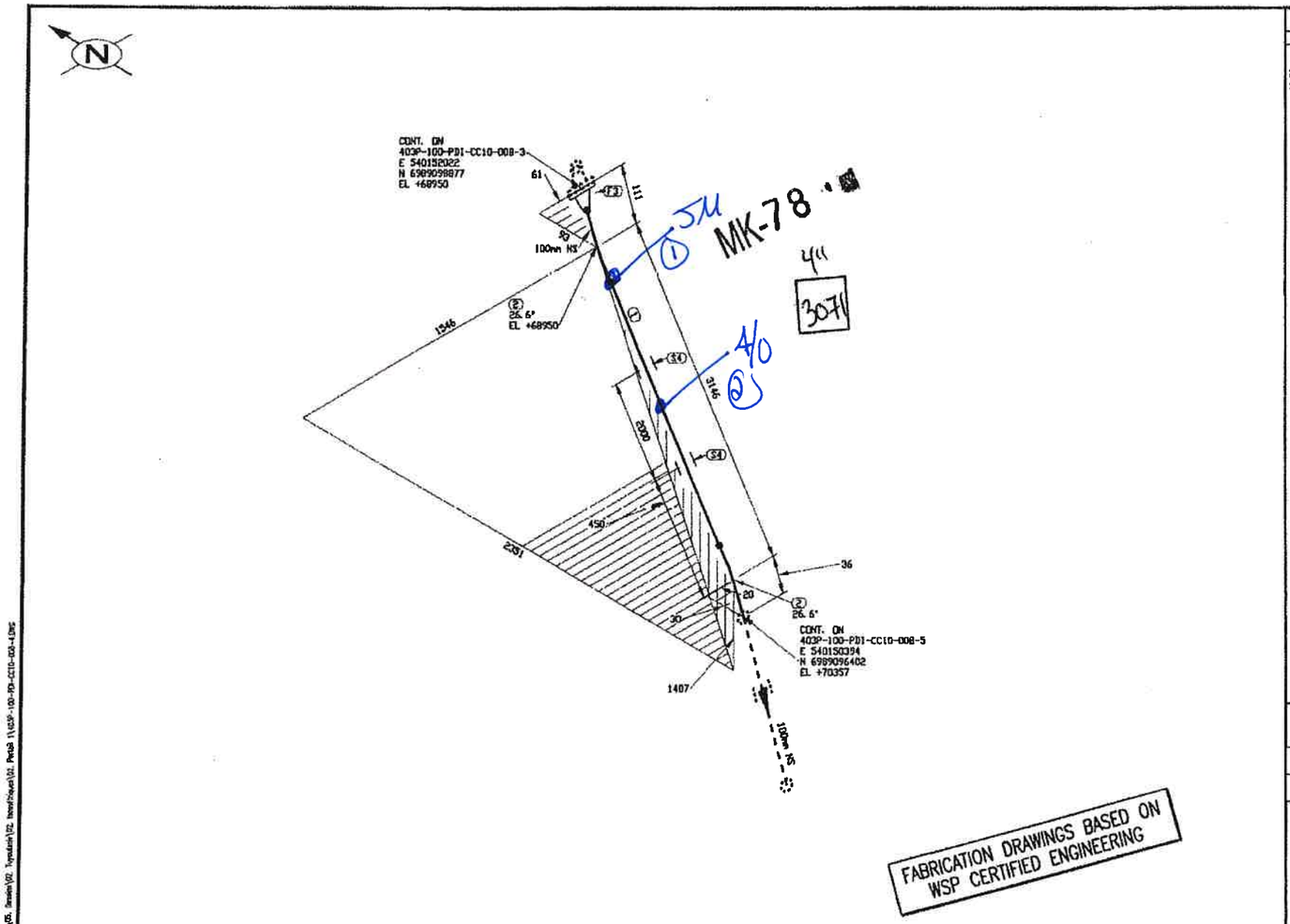

FABRICATION DRAWINGS BASED ON WSP CERTIFIED ENGINEERING

JQ2216.6
PT GMAW AC-001
P1 a P1 RG

A = 44 B = 97 C = 36

LISTE DE MATERIEL

No	QTE	DIA	MATERIEL/CATALOGUE	DESCRIPTION
1	3074 MM	100	A 333 Gr. 6	SCH STD, SMLS PIPE
2	2	100	A 420 Gr. WPL6	SCH STD, BW LR 45 DEG ELBOW TRIM TO 26.57
3	1	100	A 350 Gr. LF2	CL 150, SCH STD, RF, WN FLANGE
4	2	100		PIPE SUPPORT AS PER DETAIL 3, DWG: 65-403-270-200

CONTRAT UF
21.06 X20

EN ATELIER LE
04 JUIL. 2017
par : BS

REÇU le
03 JUIL. 2017
Rép:

No.	DATE	REVISION	QVN / PAR / APP.
0	2017/06/30	ISSUED FOR CONSTRUCTION	

CLIENT: AGNICO EAGLE

NUQSANA PROMEC MINING

ultragen

CONSULTANT PROJECT NO. 591700

EN ATELIER LE
04 JUIL. 2017
par : BS

SCEAU PROFESSIONNEL

CONC.: KHV
DATE: 2017/06/29
DESSINE PAR: KVE
DATE: 2017/06/29
VER. PAR:
DATE:
APP.:
DATE:
ÉCHELLE: AUCUNE

PROJET: AGNICO EAGLE - MELIADINE DIVISION
403P - COMBUSTIBLE

TITRE: PORTAIL #1
FABRICATION ISOMETRIC
FUEL FROM 65TNK41607 UNLOADING NOZZLE TO 65POD41603B

No PROJET	No DESSIN	PAGES	REV.
6515	403P-100-PDI-CC10-008	4/10	0

NO. DE CONDUITE		SPECIFICATION	PRODUIT	SYSTEME REVETEMENT	CODE DE COULEUR	ISOLATION ET TRACAGE	EPAISS. D'ISOLATION		
403P-100-PDI-CC10-008		CC10	PDI					65-403-270-200	PIPE SUPPORT DETAILS
PRESSION D'OPERATION	TEMPERATURE D'OPERATION	PRESSION DE CONCEPTION	TEMPERATURE DE CONCEPTION	PRESSION D'ESSAI	CLASSE D'INSPECTION	CODE DE SERVICE	TRAITEMENT THERMIQUE	65-403-205-200	P&ID
PSIG	°F	N/A PSIG	60°C °F	N/A PSIG		B31.3		No. DESSIN	DESSINS DE REFERENCE

Diesel

403P-MN-01

U-F

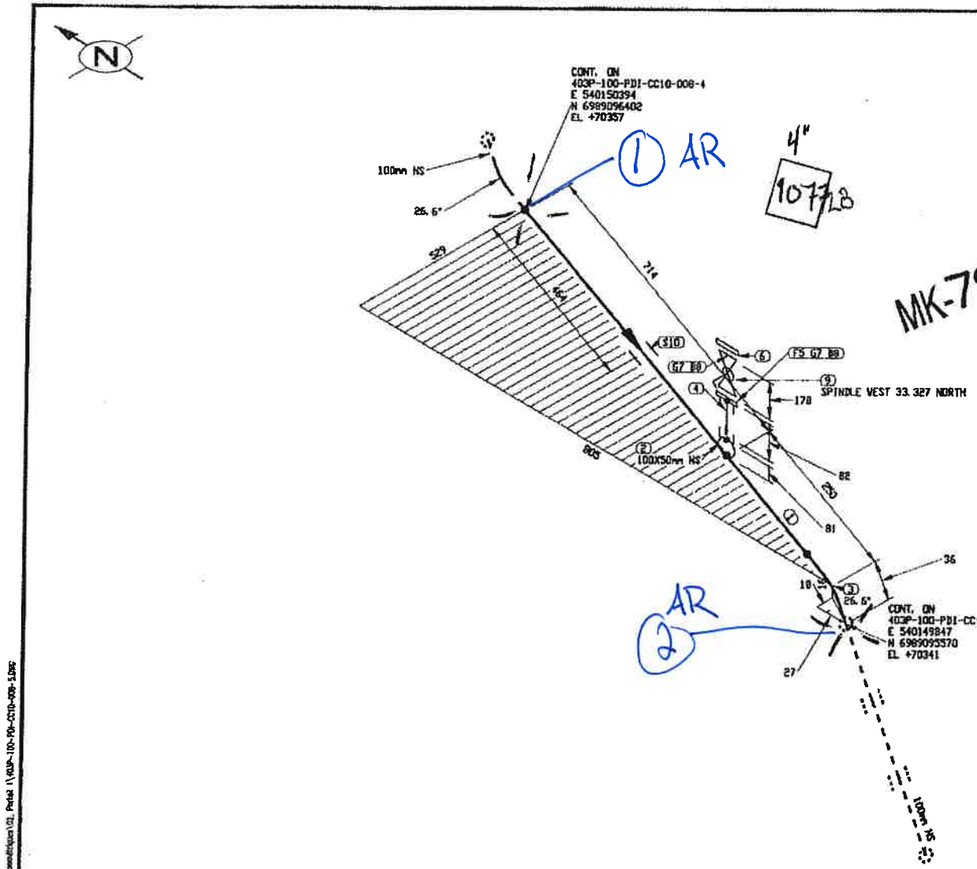

FABRICATION DRAWINGS BASED ON WSP CERTIFIED ENGINEERING

LISTE DE MATERIEL

No	QTE	DIA	MATERIEL/CATALOGUE	DESCRIPTION
1	928 MM	100	A 333 Gr. 6	SCH STD, SMLS PIPE
2	1	100X50	A 350 Gr. LF2	CL 3000, SOCKOLET
3	1	100	A 420 Gr. WPL6	SCH STD, BW LR 45 DEG ELBOW TRIM TO B6.37
4	1	50	A 333 Gr. 6	SCH 80, NIPPLE x 75mm LG PBE
5	1	50	A 350 Gr. LF2	CL 150, SCH 80, RF, SW FLANGE
6	1	50	A 350 Gr. LF2	CL 150, RF, BLIND FLANGE
7	2	50	ASME B16.20	CL 150, GARLOCK 5500, RING TYPE GASKET 1/8" THK
8	8	16	A 193 B7/A 194 2H	CL 150, 4 - 15 875 X 65 STUD BOLTS c/w TWO HEAVY HEX NUTS
9	1	50	BA-31	CL 150, RF, BALL VALVE
10	1	100		PIPE SUPPORT AS PER DETAIL 3, DWG 65-403-270-200

CONTRAT UF
21.06X20

REÇU le
03 JUIL. 2017
Rép:

EN ATELIER LE
04 JUIL. 2017
par: BS

No.	DATE	REVISION	QVN / PAR / APP.
0	2017/06/30	ISSUED FOR CONSTRUCTION	QVN

CLIENT: AGNICO EAGLE

NUQSANA PROMEC MINING

ultragen

CONSULTANT PROJECT NO. 591700

SCEAU PROFESSIONNEL

CONC.: KHV
DATE: 2017/06/29
DESSINE PAR: KVE
DATE: 2017/06/29
VER. PAR:
DATE:
APP.:
DATE:
ÉCHELLE: AUCUNE

PROJET: AGNICO EAGLE - MELIADINE DIVISION
403P - COMBUSTIBLE

TITRE: PORTAIL #1
FABRICATION ISOMETRIC
FUEL FROM 65TNK41607 UNLOADING NOZZLE TO 65POD41603B

No PROJET	No DESSIN	PAGES	REV.
6515	403P-100-PDI-CC10-008	5/10	0

403P-MN-01

NO. DE CONDUITE		SPECIFICATION	PRODUIT	SYSTEME REVETEMENT	CODE DE COULEUR	ISOLATION ET TRACAGE	EPAISS. D'ISOLATION		
403P-100-PDI-CC10-008		CC10	PDI					65-403-270-200	PIPE SUPPORT DETAILS
PRESSION D'OPERATION	TEMPERATURE D'OPERATION	PRESSION DE CONCEPTION	TEMPERATURE DE CONCEPTION	PRESSION D'ESSAI	CLASSE D'INSPECTION	CODE DE SERVICE	TRAITEMENT THERMIQUE	65-403-205-200	P&ID
PSIG	°F	N/A PSIG	60 à 75 °F	N/A PSIG		B31.3		No. DESSIN	DESSINS DE REFERENCE

IMPRIMÉ LE: Jeu 29, 2017, 9:46am

Fluide Diesel Conf 5% RX

U-F

JQ2216.6
GMAW
P to PI

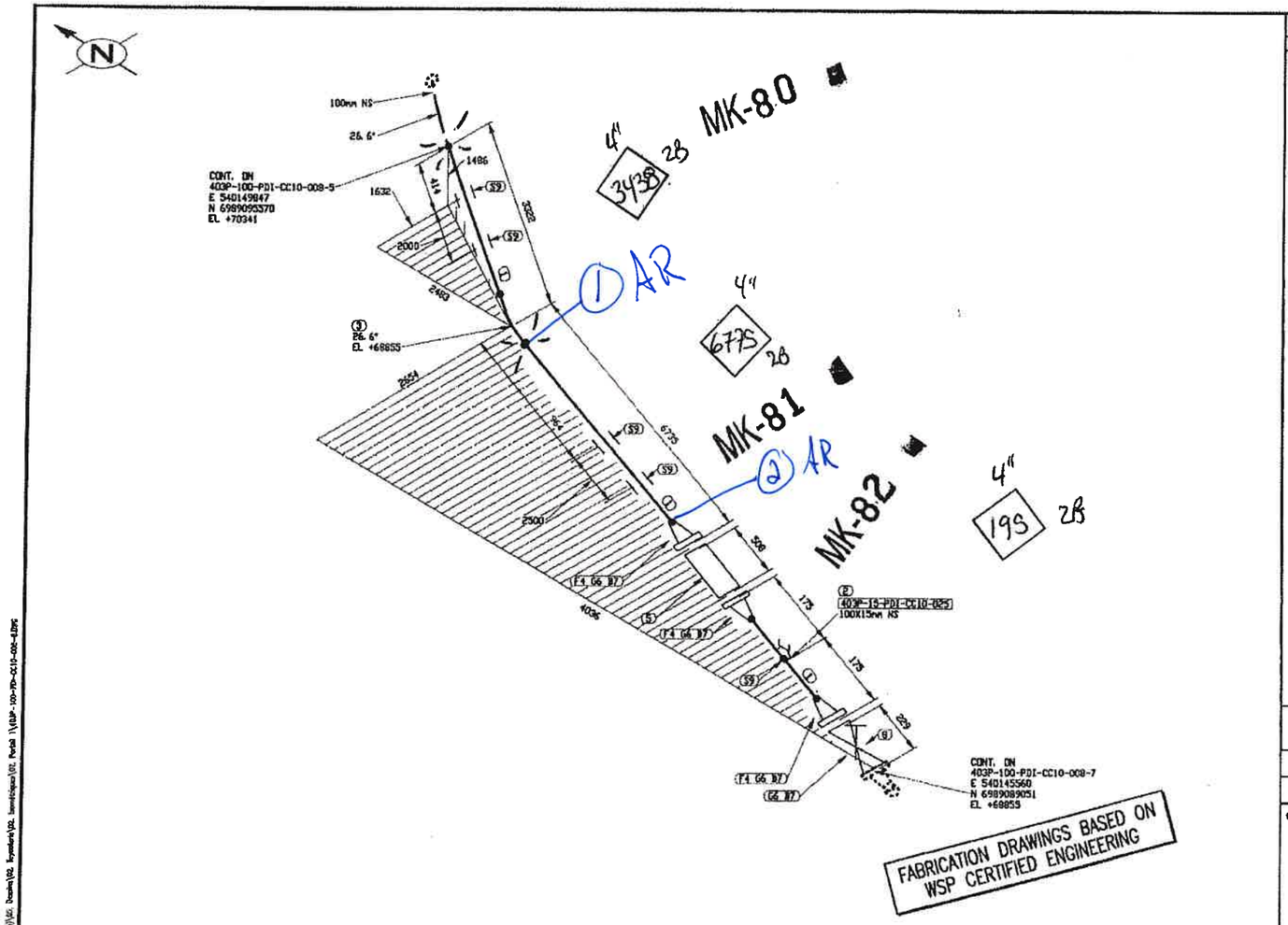

LISTE DE MATERIEL

No	QTE	DIA	MATERIEL/CATALOGUE	DESCRIPTION
1	6952 MM	100	A 333 Gr. 6	SCH STD, SMLS PIPE
2	1	100X15	A 350 Gr. LF2	CL 3000, THREDOLET
3	2	100	A 420 Gr. WPL6	SCH STD, BW LR 45 DEG ELBOW TRIM TO 26.57
4	3	100	A 350 Gr. LF2	CL 150, SCH STD, RF, WN FLANGE
5	1	100		CL 150, SINGLE BRAIDED HOSE ASSEMBLY
6	4	100	ASME B16.20	CL 150, GARLOCK 5500, RING TYPE GASKET 1/8" THK
7	32	16	A 193 B7/A 194 2H	CL 150, 8 - 15.875 X 90 STUD BOLTS c/w TWO HEAVY HEX NUTS
8	1	100	GA-10	CL 150, RF, GATE VALVE
9	5	100		PIPE SUPPORT AS PER DETAIL 3, DWG: 65-403-270-200

CONTRAT U
21.06X20

REÇU le
03 JUIL. 2017
Rép: _____

EN ATELIER LE
04 JUIL. 2017
par: [signature]

No.	DATE	REVISION	QVN / PAR / APP.
0	2017/06/30	ISSUED FOR CONSTRUCTION	

CLIENT: AGNICO EAGLE

NUQSANA PROMEC MINING

ultragen

CONSULTANT PROJECT NO. 591700

SCEAU PROFESSIONNEL

CONC.: KHV
DATE: 2017/05/28
DESSINÉ PAR: KVE
DATE: 2017/05/28
VER. PAR:
DATE:
APP.:
DATE:
ÉCHELLE: AUCUNE

PROJET: AGNICO EAGLE - MELIADINE DIVISION
403P - COMBUSTIBLE

TITRE: PORTAIL #1
FABRICATION ISOMETRIC
FUEL FROM 65TNK41607 UNLOADING NOZZLE TO 65PDD41603B

No PROJET	No DESSIN	PAGES	RÉV.
6515	403P-100-PDI-CC10-008	6/10	0

NO. DE CONDUITE		SPECIFICATION	PRODUIT	SYSTEME REVETEMENT	CODE DE COULEUR	ISOLATION ET TRACAGE	EPAISS. D'ISOLATION		
403P-100-PDI-CC10-008		CC10	PDI					65-403-270-200	PIPE SUPPORT DETAILS
PRESSION D'OPERATION	TEMPERATURE D'OPERATION	PRESSION DE CONCEPTION	TEMPERATURE DE CONCEPTION	PRESSION D'ESSAI	CLASSE D'INSPECTION	CODE DE SERVICE	TRAITEMENT THERMIQUE	65-403-205-200	P&ID
PSIG	°F	N/A PSIG	10 à 15 °F	N/A PSIG		B31.3		No. DESSIN	DESSINS DE REFERENCE

JQ2216.6
PT G-MAW AC-001
P1 a P1 #6

Fluide Diesel

U-F.

403P-MN 01

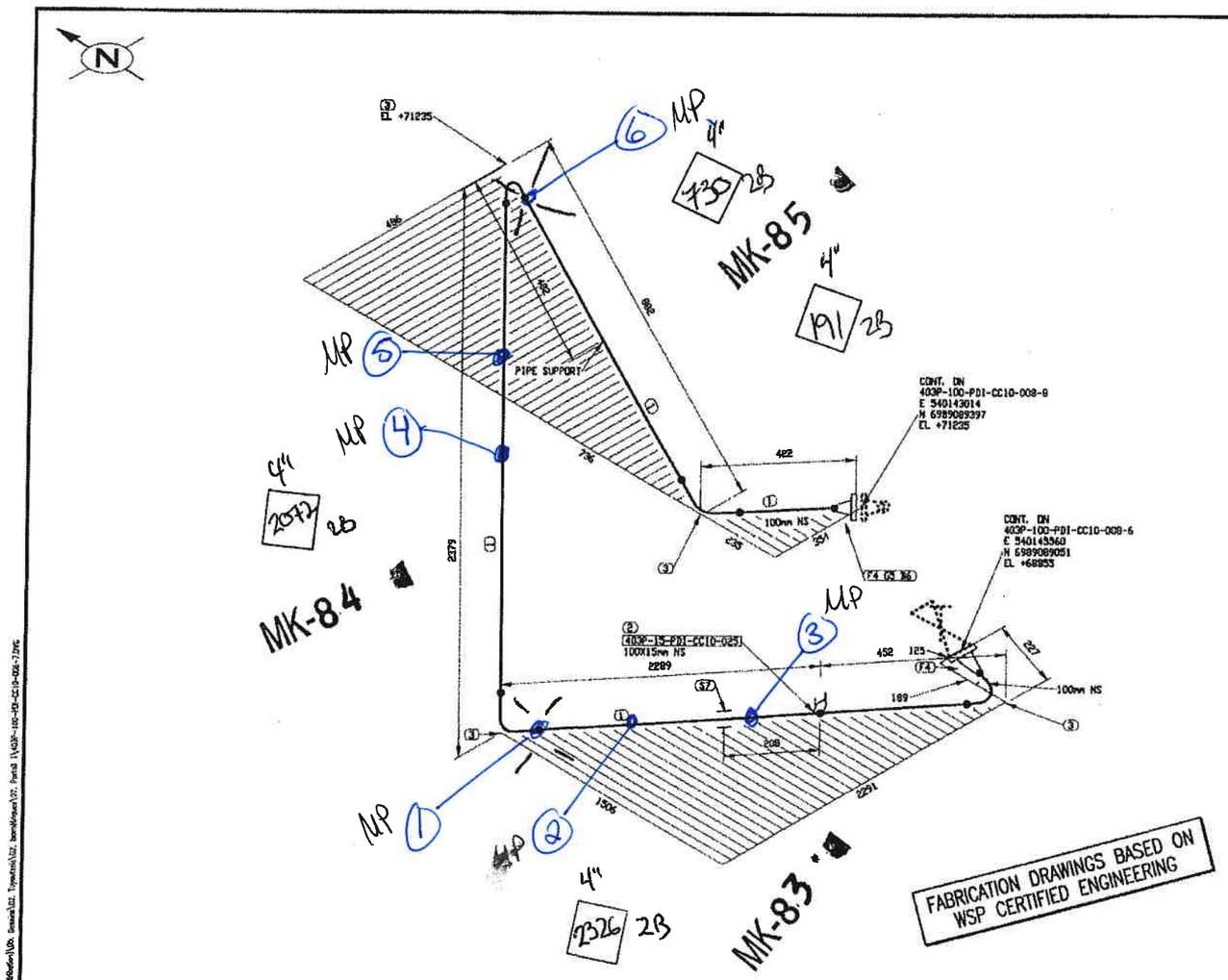

FABRICATION DRAWINGS BASED ON WSP CERTIFIED ENGINEERING

LISTE DE MATÉRIEL

No	QTE	DIA	MATERIEL/CATALOGUE	DESCRIPTION
1	5285 MM	100	A 333 Gr. 6	SCH STD, SMLS PIPE
2	1	100X15	A 350 Gr. LF2	CL 3000, THREDOLET
3	4	100	A 420 Gr. WPL6	SCH STD, BW LR 90 DEG ELBOW
4	2	100	A 350 Gr. LF2	CL 150, SCH STD, RF, WN FLANGE
5	1	100	ASME B16.20	CL 150, GARLOCK 9300, RING TYPE GASKET 1/8" THK
6	8	16	A 193 B7/A 194 2H	CL 150, 8 - 15.875 X 90 STUD BOLTS c/w TWO HEAVY HEX NUTS
7	1	100		PIPE SUPPORT AS PER DETAIL 3, DWG 65-403-270-200

CONTRAT U
21.06X20

REÇU le
03 JUIL. 2017
Rép:

EN ATELIER LE
04 JUIL. 2017
par:

No.	DATE	REVISION	APP.
0	2017/06/30	ISSUED FOR CONSTRUCTION	QVN / PAR

CLIENT: AGNICO EAGLE

NUQSANA PROMEC MINING

ultragen

CONSULTANT PROJECT No. 591700

SCEAU PROFESSIONNEL

CONC.: KHV DATE: 2017/05/26
DESSINE PAR: KVE DATE: 2017/06/26
VER. PAR: DATE:
APP.: DATE:
ECHELLE: AUCUNE

PROJET: AGNICO EAGLE - MEL1ADINE DIVISION 403P - COMBUSTIBLE

TITRE: PORTAIL #1 FABRICATION ISOMETRIC FUEL FROM 65TNK41607 UNLOADING NOZZLE TO 65PUD41603B

No PROJET	No DESSIN	PAGES	REV.
6515	403P-100-PDI-CC10-008	7/10	0

NO. DE CONDUITE		SPECIFICATION	PRODUIT	SYSTEME REVETEMENT	CODE DE COULEUR	ISOLATION ET TRACAGE	EPAISS. D'ISOLATION		
403P-100-PDI-CC10-008		CC10	PDI					65-403-270-200	PIPE SUPPORT DETAILS
PRESSION D'OPERATION	TEMPERATURE D'OPERATION	PRESSION DE CONCEPTION	TEMPERATURE DE CONCEPTION	PRESSION D'ESSAI	CLASSE D'INSPECTION	CODE DE SERVICE	TRAITEMENT THERMIQUE	65-403-205-200	P&ID
PSIG	°F	NA PSIG	10 à 15 °F	NA PSIG		B31.3		No. DESSIN	DESSINS DE REFERENCE

SAVED LE Jun 30, 2017 11:00am

Fluid Diesel Cnd = 5% Rx

U - F

JG2216-6
PT GMAW-AC-01
P1 a P1 R6

4-03P-100-PDI-CC10-008-7.DWG

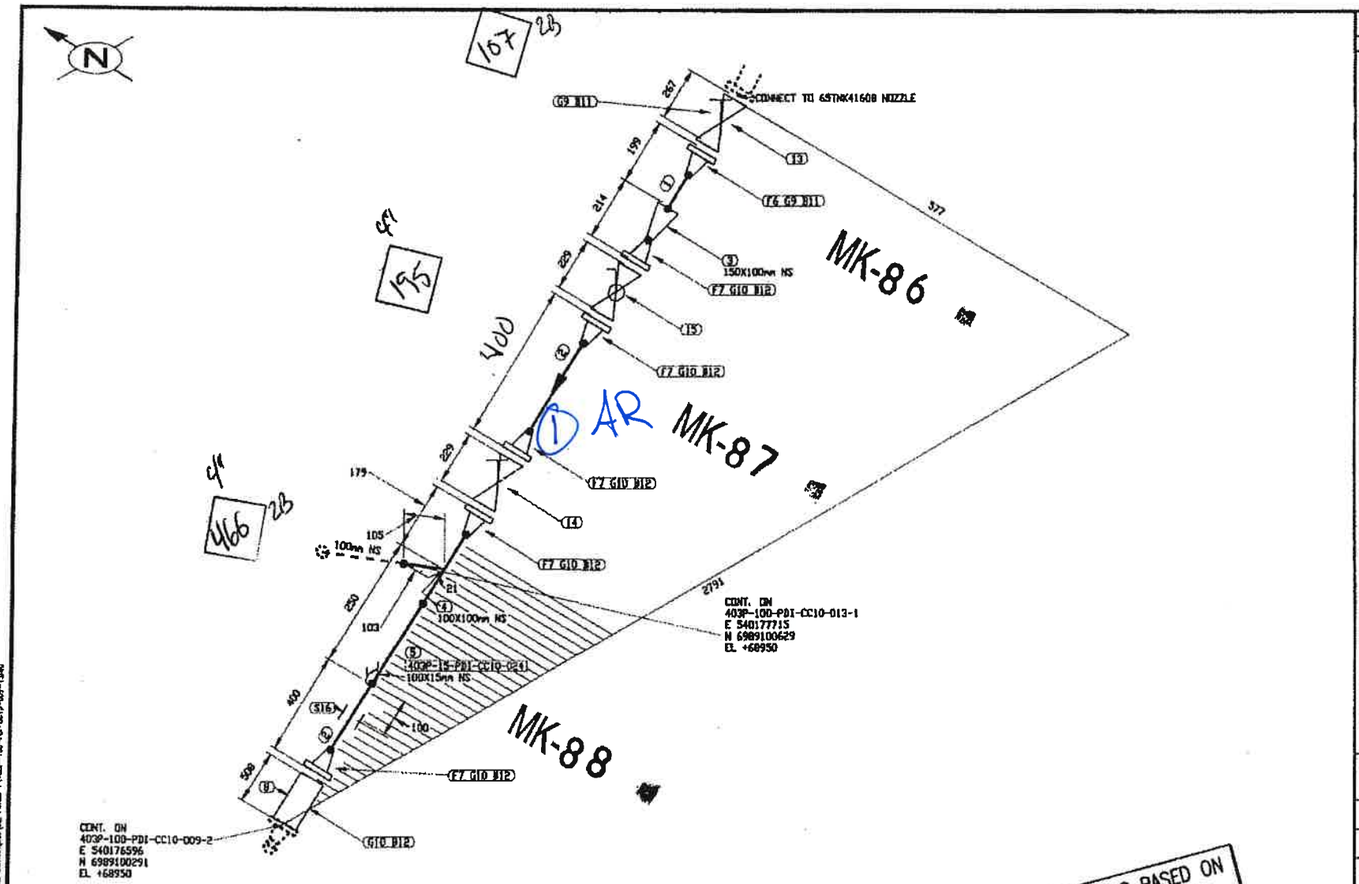

FABRICATION DRAWINGS BASED ON WSP CERTIFIED ENGINEERING

LISTE DE MATERIEL

No	QTE	DIA	MATERIEL/CATALOGUE	DESCRIPTION
1	112 MM	150	A 333 Gr. 6	SCH STD, SMLS PIPE
2	671 MM	100	A 333 Gr. 6	SCH STD, SMLS PIPE
3	1	150X100	A 420 Gr. WPL6	SCH STD, BW CONC RED
4	1	100X100	A 420 Gr. WPL6	SCH STD, BW STRAIGHT TEE
5	1	100X15	A 350 Gr. LF2	CL 3000, THREDOLET
6	1	150	A 350 Gr. LF2	CL 150, SCH STD, RF, WN FLANGE
7	5	100	A 350 Gr. LF2	CL 150, SCH STD, RF, WN FLANGE
8	1	100		CL 150, SINGLE BRAIDED HOSE ASSEMBLY
9	2	150	ASME B16.20	CL 150, GARLOCK 5500, RING TYPE GASKET 1/8" THK
10	6	100	ASME B16.20	CL 150, GARLOCK 5500, RING TYPE GASKET 1/8" THK
11	16	19	A 193 B7/A 194 2H	CL 150, 8 - 19.05 X 100 STUD BOLTS c/w TWO HEAVY HEX NUTS
12	48	16	A 193 B7/A 194 2H	CL 150, 8 - 15.875 X 90 STUD BOLTS c/w TWO HEAVY HEX NUTS
13	1	150	GA-10	CL 150, RF, GATE VALVE
14	1	100	GA-10	CL 150, RF, GATE VALVE
15	1	100	BA-31	CL 150, RF, BALL VALVE
16	1	100		PIPE SUPPORT AS PER DETAIL 3, DWG 65-403-270-200

CONTRAT U
21.06X20

REÇU le
03 JUIL. 2017
Rép: _____

EN ATELIER LE
04 JUIL. 2017
par: [signature]

No.	DATE	REVISION	QVN / PAR / APP.
0	2017/06/30	ISSUED FOR CONSTRUCTION	

CLIENT:

AGNICO EAGLE

NUQSANA PROMEC MINING

ultragen

CONSULTANT PROJECT NO. 591700

SCEAU PROFESSIONNEL

CONC.: KHV
DATE: 2017/05/29
DESSINÉ PAR: KVE
DATE: 2017/05/29
VER. PAR:
DATE:
APP.:
DATE:
ÉCHELLE: AUCUNE

PROJET: AGNICO EAGLE - MELIADINE DIVISION
403P - COMBUSTIBLE

TITRE: PORTAIL #1
FABRICATION ISOMETRIC
FUEL FROM 65TNK41608 UNLOADING NOZZLE TO 403P-100-PDI-CC10-008

No PROJET	No DESSIN	PAGES	REV.
6515	403P-100-PDI-CC10-009	1/3	0

NO. DE CONDUITE		SPECIFICATION	PRODUIT	SYSTEME REVETEMENT	CODE DE COULEUR	ISOLATION ET TRACAGE	EPAISS. D'ISOLATION		
403P-100-PDI-CC10-009		CC10	PDI					65-403-270-200	PIPE SUPPORT DETAILS
PRESSION D'OPERATION	TEMPERATURE D'OPERATION	PRESSION DE CONCEPTION	TEMPERATURE DE CONCEPTION	PRESSION D'ESSAI	CLASSE D'INSPECTION	CODE DE SERVICE	TRAITEMENT THERMIQUE	65-403-205-200	P&ID
PSIG	°F	NA PSIG	14.615 °F	MA PSIG		B31.3		No. DESSIN	DESSINS DE REFERENCE

403P-MN-01

JQ2216.6
RT G-MAW-AL001
P1 a P1 AG

Fluide Diesel - Ind 5% Rx

U-F.

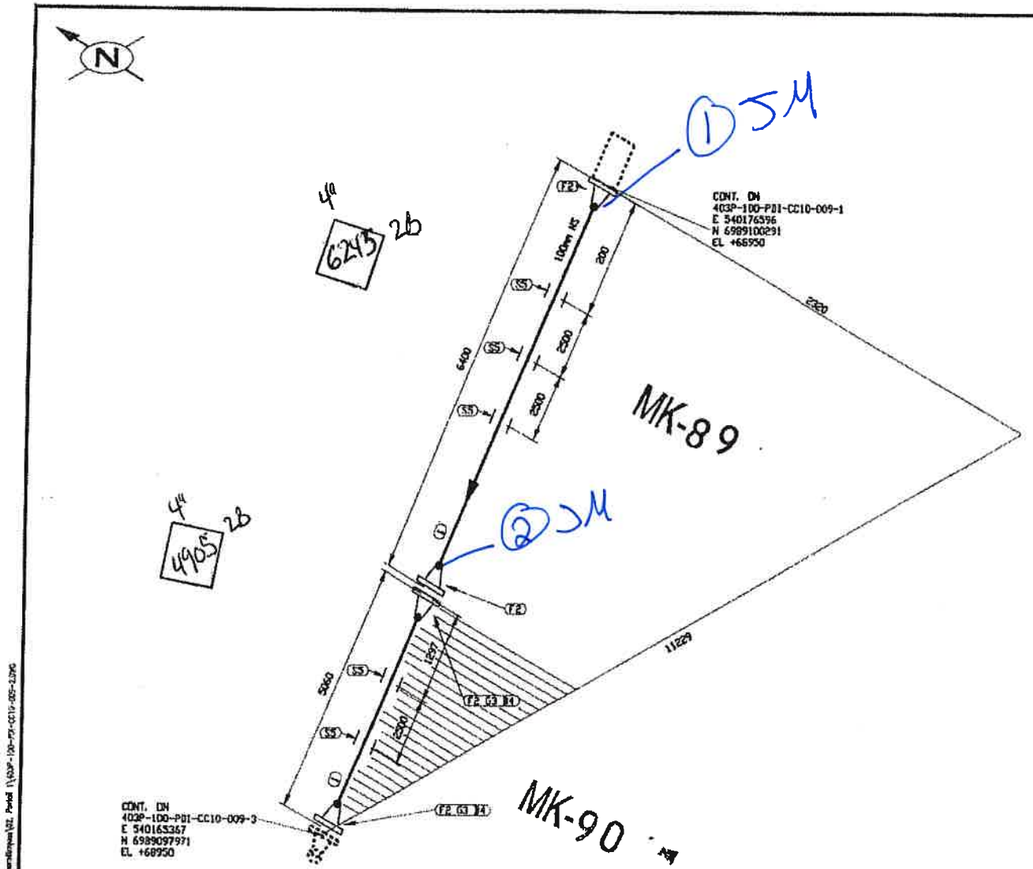

FABRICATION DRAWINGS BASED ON WSP CERTIFIED ENGINEERING

LISTE DE MATERIEL

No	QTE	DIA	MATERIEL/CATALOGUE	DESCRIPTION
1	11161 MM	100	A 333 Gr. 6	SCH STD, SMLS PIPE
2	4	100	A 350 Gr. LF2	CL 150, SCH STD, RF, WN FLANGE
3	2	100	ASME B16.20	CL 150, GARLOCK 3500, RING TYPE GASKET 1/8" THK
4	16	16	A 193 B7/A 194 2H	CL 150, 8 - 15.875 X 90 STUD BOLTS c/w TWO HEAVY HEX NUTS
5	5	100		PIPE SUPPORT AS PER DETAIL 3, DWG 65-403-270-200

CONTRAT U
21.06.20

REÇU le
03 JUIL. 2017
Rép: _____

EN ATELIER LE
04 JUIL. 2017
par: BS

No.	DATE	REVISION	
0	2017/06/30	ISSUED FOR CONSTRUCTION	QVN
			PAR
			APP.

CLIENT: AGNICO EAGLE

NUQSANA PROMEC MINING

ultragen

CONSULTANT PROJECT NO. 591700

SCEAU PROFESSIONNEL

CONC.: KHV
DATE: 2017/05/29
DESSINÉ PAR: KVE
DATE: 2017/05/29
VÉR. PAR:
DATE:
APP.:
DATE:
ÉCHELLE: AUCUNE

PROJET: AGNICO EAGLE - MEL1ADINE DIVISION
403P - COMBUSTIBLE

TITRE: PORTAIL #1
FABRICATION ISOMETRIC
FUEL FROM 65TNK41608 UNLOADING NOZZLE TO 403P-100-PDI-CC10-008

No PROJET	No DESSIN	PAGES	REV.
6515	403P-100-PDI-CC10-009	2/3	0

403P-MAT-01

NO. DE CONDUITE		SPÉCIFICATION	PRODUIT	SYSTÈME REVÊTEMENT	CODE DE COULEUR	ISOLATION ET TRAÇAGE	ÉPAISS. D'ISOLATION		
403P-100-PDI-CC10-009		CC10	PDI					65-403-270-200	PIPE SUPPORT DETAILS
PRESSION D'OPÉRATION	TEMPÉRATURE D'OPÉRATION	PRESSION DE CONCEPTION	TEMPÉRATURE DE CONCEPTION	PRESSION D'ESSAI	CLASSE D'INSPECTION	CODE DE SERVICE	TRAITEMENT THERMIQUE	65-403-205-200	P&ID
PSIG	°F	NA PSIG	140 °F	NA PSIG		B31.3		No. DESSIN	DESSINS DE RÉFÉRENCE

JQ221C-6
GMAW
P1aP1

Fluide Diesel Cat 5% AX

U-F.

Plotted: Jun 30, 2017, 12:24pm
File: S:\Projet Engr\Modèles\181720 (Fuel Distribution)\05. Dessins\01. Isométriques\02. Portail 1\403P-100-PDI-CC10-009-1.dwg

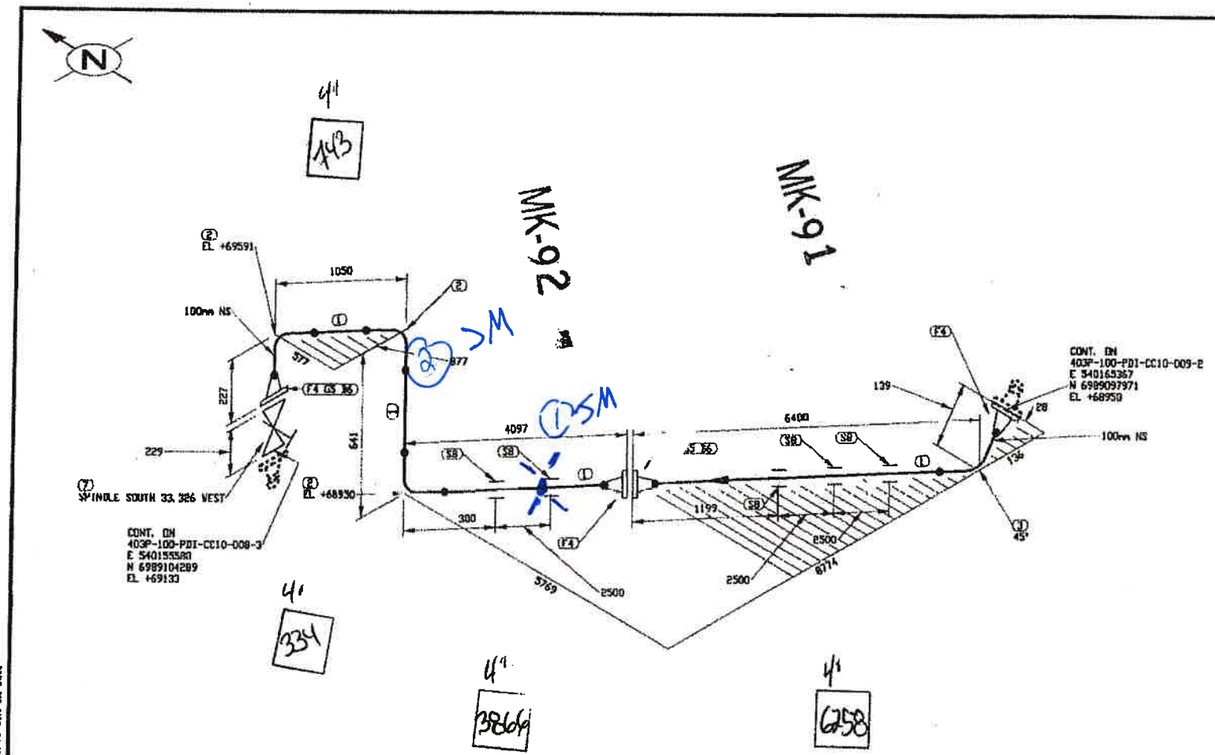

No.	QTE	DIA	MATERIEL/CATALOGUE	DESCRIPTION
1	11216 MM	100	A 333 Gr. 6	SCH STD, SMLS PIPE
2	3	100	A 420 Gr. WPL6	SCH STD, BW LR 90 DEG ELBOW
3	1	100	A 420 Gr. WPL6	SCH STD, BW LR 45 DEG ELBOW
4	4	100	A 350 Gr. LF2	CL 150, SCH STD, RF, WN FLANGE
5	2	100	ASME B16.20	CL 150, GARLOCK 9300, RING TYPE GASKET 1/8" THK
6	16	16	A 193 B7/A 194 2H	CL 150, 8 - 15.875 X 90 STUD BOLTS c/w TWO HEAVY HEX NUTS
7	1	100	GA-10	CL 150, RF, GATE VALVE
8	5	100		PIPE SUPPORT AS PER DETAIL 3, DWG 65-403-270-200

CONTRAT : 21.06 X20

REÇU le 03 JUIL. 2017 Rép:

EN ATELIER LE 04 JUIL. 2017 par: BS

FABRICATION DRAWINGS BASED ON WSP CERTIFIED ENGINEERING

No.	DATE	REVISION	QVN / PAR / APP.
0	2017/06/30	ISSUED FOR CONSTRUCTION	

CLIENT: AGNICO EAGLE

NUQSANA PROMEC MINING

ultragen

CONSULTANT PROJECT NO. 591700

SCEAU PROFESSIONNEL

CONC.: KHV
DATE: 2017/06/29
DESSINE PAR: KVE
DATE: 2017/06/29
VÉR. PAR:
DATE:
APP.:
DATE:
ÉCHELLE: AUCUNE

PROJET: AGNICO EAGLE - MEL IADINE DIVISION
403P - COMBUSTIBLE

TITRE: PORTAIL #1
FABRICATION ISOMETRIC
FUEL FROM 65TNK41608 UNLOADING NOZZLE TO 403P-100-PDI-CC10-008

No PROJET	No DESSIN	PAGES	REV.
6515	403P-100-PDI-CC10-009	3/3	0

403P-MN-01

NO. DE CONDUITE		SPECIFICATION	PRODUIT	SYSTEME REVETEMENT	CODE DE COULEUR	ISOLATION ET TRACAGE	EPAISS. D'ISOLATION		
403P-100-PDI-CC10-009		CC10	PDI					65-403-270-200	PIPE SUPPORT DETAILS
PRESSION D'OPERATION	TEMPERATURE D'OPERATION	PRESSION DE CONCEPTION	TEMPERATURE DE CONCEPTION	PRESSION D'ESSAI	CLASSE D'INSPECTION	CODE DE SERVICE	TRAITEMENT THERMIQUE	65-403-205-200	P&ID
PSG	°F	N/A PSG	140 à 15 °F	N/A PSG		B31.3		No DESSIN	DESSINS DE REFERENCE

FICHIER: N:\Projets Engs\Vista\dwg\345\2200 (Final Distribution)\05 Dessins\102 Tuyauterie\102_Isométriques\102_Petrole 1\403P-100-PDI-CC10-009-3.DWG

IMPRIMÉ LE: Jun 30, 2017, 10:27:cm

JQ2216.6
GMAW AC
P1 à P1
RG

Fluide Diesel End 50/0 LX

U - F

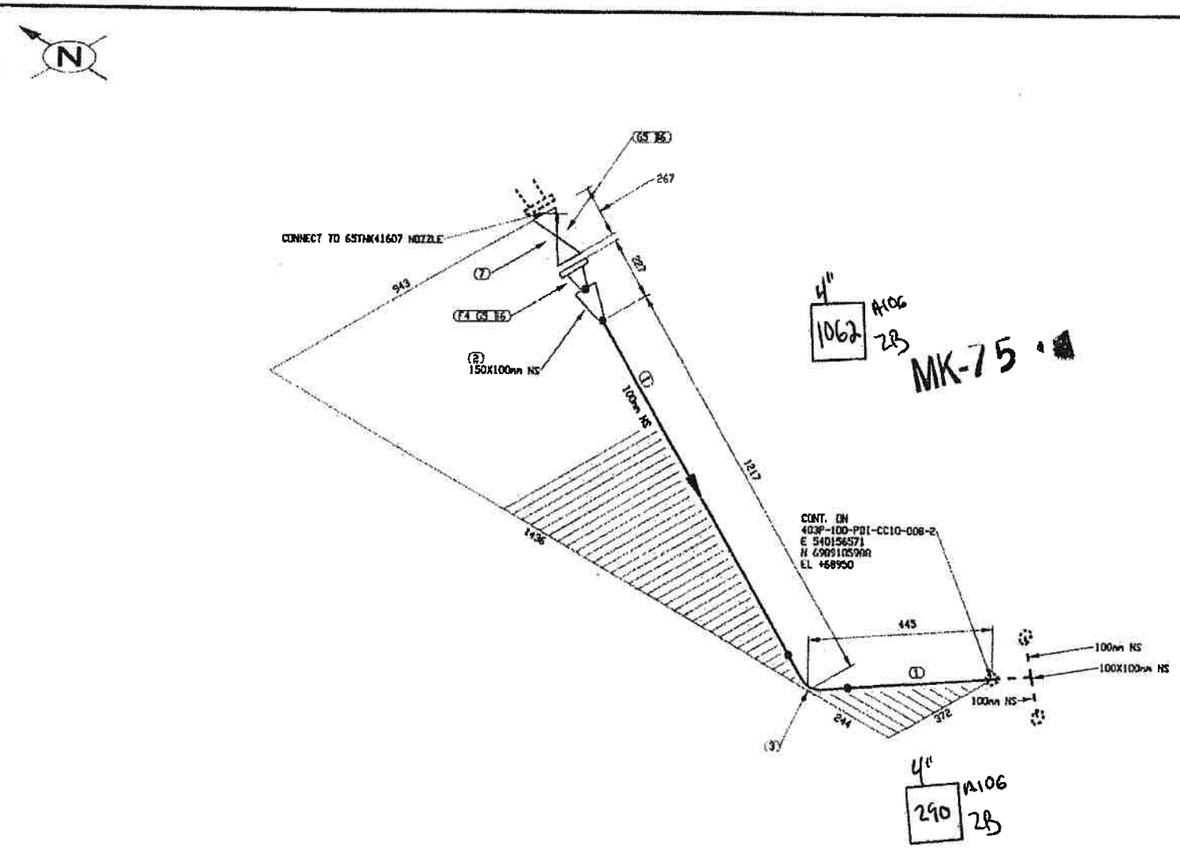

FABRICATION DRAWINGS BASED ON WSP CERTIFIED ENGINEERING

LISTE DE MATERIEL

No	QTE	DIA	MATERIEL/CATALOGUE	DESCRIPTION
1	1358 MM	100	A 333 Gr. 6	SCH STD, SMLS PIPE
2	1	150X100	A 420 Gr. WPL6	SCH STD, BW CONC RED
3	1	100	A 420 Gr. WPL6	SCH STD, BW LR 90 DEG ELBOW
4	1	150	A 350 Gr. LF2	CL 150, SCH STD, RF, WN FLANGE
5	2	150	ASME B16.20	CL 150, GARLOCK 5500, RING TYPE GASKET 1/8" THK
6	16	19	A 193 B7/A 194 2H	CL 150, 8 - 19.05 X 100 STUD BOLTS c/w TWO HEAVY HEX NUTS
7	1	150	GA-10	CL 150, RF, GATE VALVE

CONTRAT UF
21.06 X20

REÇU le
03 JUIL. 2017
Rép: _____

EN ATELIER LE
04 JUIL. 2017
par: BS

No.	DATE	REVISION	PAR / APP.
0	2017/06/30	ISSUED FOR CONSTRUCTION	QVN

CLIENT:

AGNICO EAGLE

NUQSANA PROMEC MINING

ultragen

CONSULTANT PROJECT NO. 591700

SCEAU PROFESSIONNEL

CONC.: KHV
DATE: 2017/06/30
DESSINÉ PAR: KVE
DATE: 2017/06/28
VÉR. PAR:
DATE:
APP.:
DATE:
ÉCHELLE: AUCUNE

PROJET: AGNICO EAGLE - MELIADINE DIVISION
403P - COMBUSTIBLE

TITRE: PORTAIL #1
FABRICATION ISOMETRIC
FUEL FROM 65TNK-41607 NOZZLE TO 403P-100-PDI-CC10-008

No PROJET	No DESSIN	PAGES	REV.
6515	403P-100-PDI-CC10-012	1/1	0

NO. DE CONDUITE		SPECIFICATION	PRODUIT	SYSTEME REVETEMENT	CODE DE COULEUR	ISOLATION ET TRACAGE	EPAISS. D'ISOLATION		
403P-100-PDI-CC10-012		CC10	PDI					65-403-270-200	PIPE SUPPORT DETAILS
PRESSION D'OPERATION	TEMPERATURE D'OPERATION	PRESSION DE CONCEPTION	TEMPERATURE DE CONCEPTION	PRESSION D'ESSAI	CLASSE D'INSPECTION	CODE DE SERVICE	TRAITEMENT THERMIQUE	65-403-205-200	P&ID
PSIG	°F	NA PSIG	10 à 15 °F	N/A PSIG		B31.3		No. DESSIN	DESSINS DE REFERENCE

JQ2216.6
Pt GMAWAC-001
P1 a P1 R6

Flush Diesel End 5% Rx

U-F.

403P-MN-01

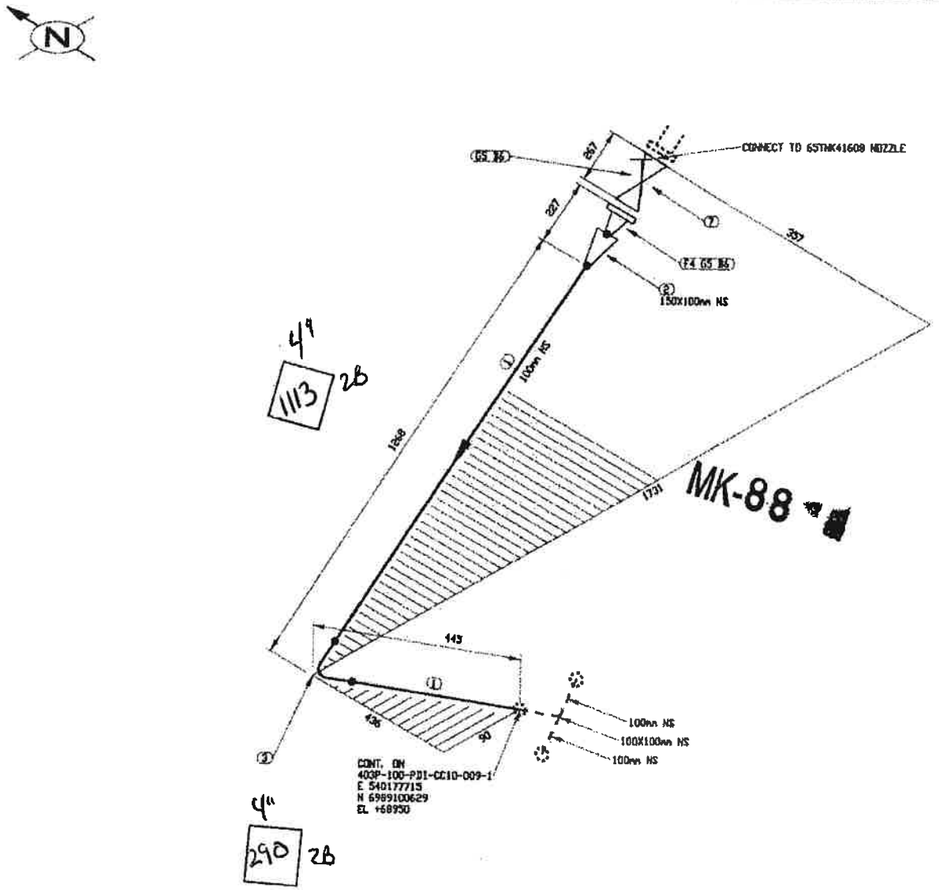

FABRICATION DRAWINGS BASED ON WSP CERTIFIED ENGINEERING

LISTE DE MATERIEL

No	QTE	D/A	MATERIEL/CATALOGUE	DESCRIPTION
1	1409 MM	100	A 333 Gr. 6	SCH STD, SMLS PIPE
2	1	150X100	A 420 Gr. VPL6	SCH STD, BW CONC RED
3	1	100	A 420 Gr. VPL6	SCH STD, BW LR 90 DEG ELBOW
4	1	150	A 350 Gr. LF2	CL 150, SCH STD, RF, WN FLANGE
5	2	150	ASME B16.20	CL 150, GARLOCK 5500, RING TYPE GASKET 1/8" THK
6	16	19	A 193 B7/A 194 2H	CL 150, 8 - 19.05 X 100 STUD BOLTS c/w TWO HEAVY HEX NUTS
7	1	150	GA-10	CL 150, RF, GATE VALVE

CONTRAT UF
21.06X20

REÇU le
03 JUIL. 2017
Rép: _____

ENATELIER I
04 JUIL. 2017
par : BS

No.	DATE	REVISION	QVN / PAR / APP.
0	2017/06/30	ISSUED FOR CONSTRUCTION	QVN

CLIENT: AGNICO EAGLE

NUQSANA PROMEC MINING

ultragen

CONSULTANT PROJECT NO. 591700

SCEAU PROFESSIONNEL

CONC.: KHV DATE: 2017/05/29
DESSINE PAR: KVE DATE: 2017/05/29
VER. PAR: DATE:
APP.: DATE:
ÉCHELLE: AUCUNE

PROJET: AGNICO EAGLE - MELIADINE DIVISION
403P - COMBUSTIBLE

TITRE: PORTAIL #1
FABRICATION ISOMETRIC
FUEL FROM 65TNK41608 TO 403P-100-PDI-CC10-009

No PROJET	No DESSIN	PAGES	RÉV.
6515	403P-100-PDI-CC10-013	1/1	0

NO. DE CONDUITE		SPECIFICATION	PRODUIT	SYSTEME REVETEMENT	CODE DE COULEUR	ISOLATION ET TRACAGE	EPAISS. D'ISOLATION		
403P-100-PDI-CC10-013		CC10	PDI					65-403-270-200	PIPE SUPPORT DETAILS
PRESSION D'OPERATION	TEMPERATURE D'OPERATION	PRESSION DE CONCEPTION	TEMPERATURE DE CONCEPTION	PRESSION D'ESSAI	CLASSE D'INSPECTION	CODE DE SERVICE	TRAITEMENT THERMIQUE	65-403-205-200	P&ID
— PSIG	— °F	NA PSIG	10 à 15 °F	NA PSIG	5% RX	B31.3		No. DESSIN	DESSINS DE REFERENCE

Fluide Diesel

JQ2216.6
Pt GMAW AC 1001 RC
P1 à P1

403P-MN-01

U-F

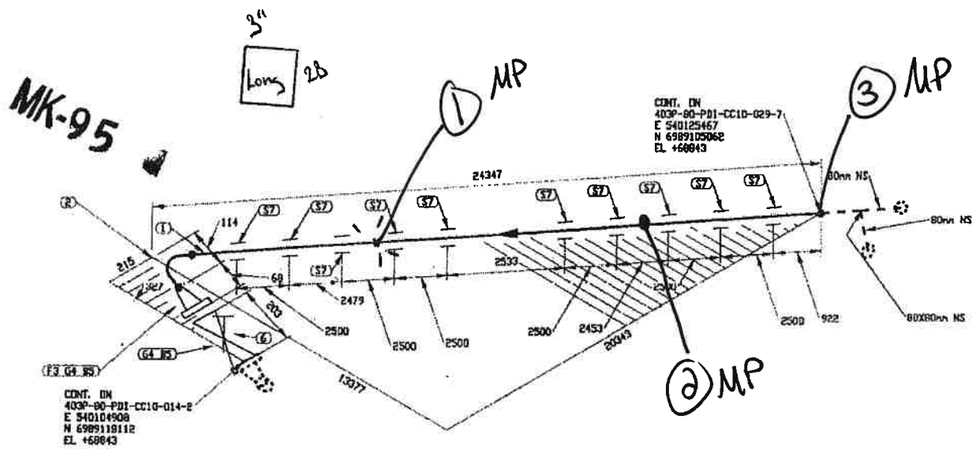

No	QTE	DIA	MATERIEL/CATALOGUE	DESCRIPTION
1	24233 MM	80	A 333 Gr. 6	SCH STD, SMLS PIPE
2	1	80	A 420 Gr. WPL6	SCH STD, BW LR 90 DEG ELBOW
3	1	80	A 350 Gr. LF2	CL 150, SCH STD, RF, WN FLANGE
4	2	80	ASME B16.20	CL 150, GARLOCK 9500, RING TYPE GASKET 1/8" THK
5	8	16	A 193 B7/A 194 2H	CL 150, 4 - 13.875 X 90 STUD BOLTS c/w TWO HEAVY HEX NUTS
6	1	80	GA-10	CL 150, RF, GATE VALVE
7	10	80		PIPE SUPPORT AS PER DETAIL 3, DWG 65-403-270-200

CONTRAT
21.06X20

REÇU le
03 JUIL. 2017
Rép: _____

EN ATELIER LE
04 JUIL. 2017
par: B7

No.	DATE	REVISION	QVN / PAR / APP.
0	2017/06/30	ISSUED FOR CONSTRUCTION	QVN

FABRICATION DRAWINGS BASED ON WSP CERTIFIED ENGINEERING

JQ2216.6
PT GMMW MCOOL
PI a PI HT

CLIENT: AGNICO EAGLE

NUQSANA PROMEC MINING

Ultragen

CONSULTANT PROJECT NO. 591700

SCEAU PROFESSIONNEL

CONC.: KHV DATE: 2017/06/29
DESSINÉ PAR: KVE DATE: 2017/06/29
VÉR. PAR: DATE:
APP.: DATE:
ÉCHELLE: AUCUNE

PROJET: AGNICO EAGLE - MELIADINE DIVISION
403P - COMBUSTIBLE

TITRE: PORTAIL #1
FABRICATION ISOMETRIC
FUEL FROM 403P-80-PDI-CC10-029 TO 65TNK41610

No PROJET	No DESSIN	PAGES	REV.
6515	403P-80-PDI-CC10-014	1/2	0

NO. DE CONDUITE		SPECIFICATION	PRODUIT	SYSTEME REVETEMENT	CODE DE COULEUR	ISOLATION ET TRAÇAGE	EPAISS. D'ISOLATION		
403P-80-PDI-CC10-014		CC10	PDI	P10	-			65-403-270-200	PIPE SUPPORT DETAILS
PRESSION D'OPERATION	TEMPERATURE D'OPERATION	PRESSION DE CONCEPTION	TEMPERATURE DE CONCEPTION	PRESSION D'ESSAI	CLASSE D'INSPECTION	CODE DE SERVICE	TRAITEMENT THERMIQUE	65-403-205-200	P&ID
— PSG	— °F	N/A PSG	10 à 15°F	N/A PSG	5% RX	B31.3		No. DESSIN	DESSINS DE REFERENCE

Fluide Diesel

U-F

TRACE: N:\Agnico Eagle\Meliadine\591700 (Fuel Lines)\...
IMPRIMÉ LE: Jun 28, 2017 4:41pm
403P-80-PDI-CC10-014-1.DWG
403P-P-N-10-01

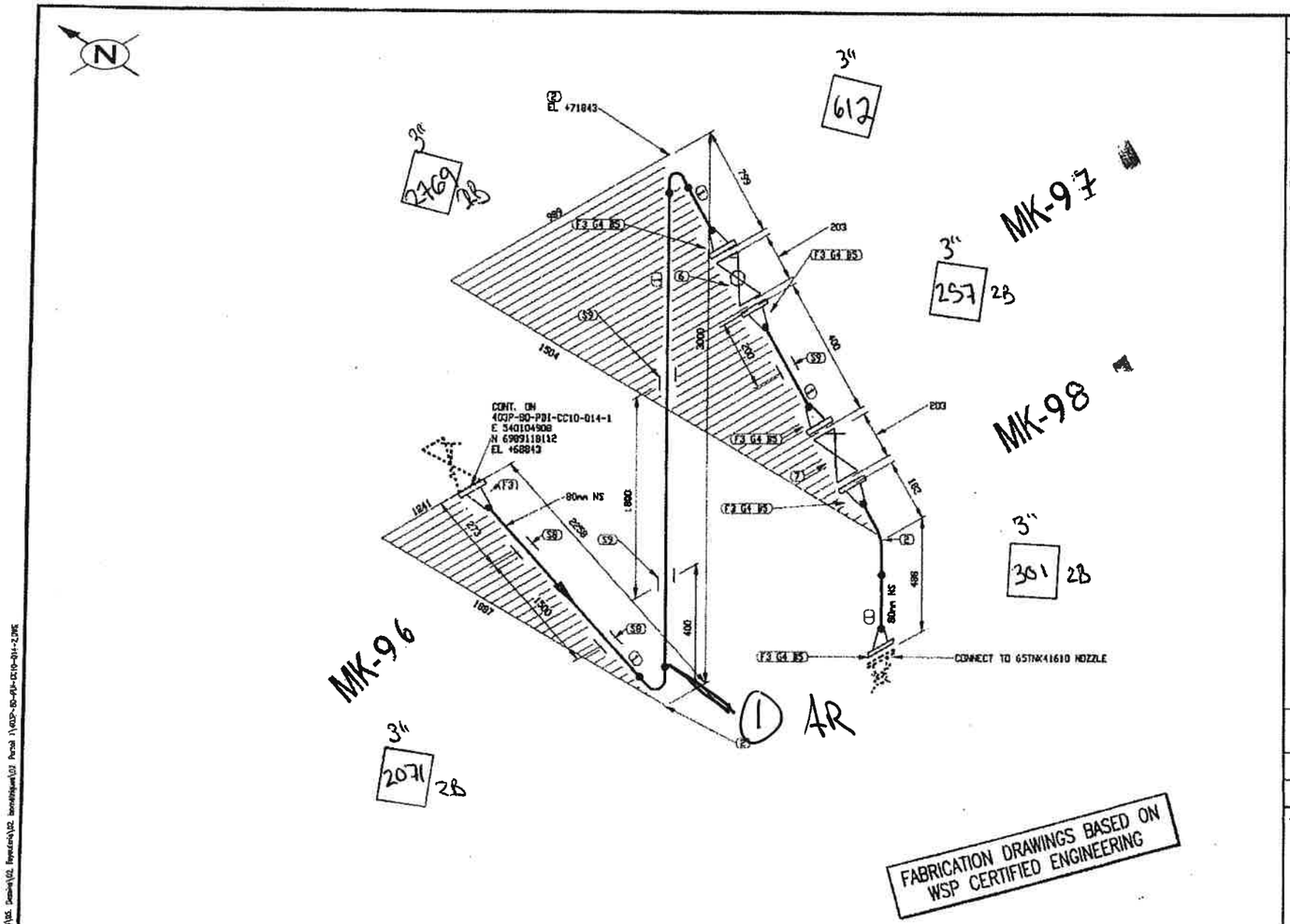

FABRICATION DRAWINGS BASED ON WSP CERTIFIED ENGINEERING

LISTE DE MATERIEL

No	QTE	DIA	MATERIEL/CATALOGUE	DESCRIPTION
1	6033 MM	80	A 333 Gr. 6	SCH STD, SMLS PIPE
2	3	80	A 420 Gr. WPL6	SCH STD, BV LR 90 DEG ELBOW
3	6	80	A 350 Gr. LF2	CL 150, SCH STD, RF, WN FLANGE
4	5	80	ASME B16.20	CL 150, GARLOCK 5500, RING TYPE GASKET 1/8" THK
5	20	16	A 193 B7/A 194 2H	CL 150, 4 - 15.875 X 90 STUD BOLTS c/w TWO HEAVY HEX NUTS
6	1	80	BA-31	CL 150, RF, BALL VALVE
7	1	80	GA-10	CL 150, RF, GATE VALVE
8	2	80		PIPE SUPPORT AS PER DETAIL 3, DWG 65-403-270-200
9	3	80		PIPE SUPPORT BY CONTRACTOR

CONTRAT UF
21.06X20

REÇU le
03 JUIL. 2017
Rép: _____

EN ATELIER
04 JUIL. 2017
par: BS

No.	DATE	REVISION	QVN / PAR / APP.
0	2017/06/30	ISSUED FOR CONSTRUCTION	QVN

CLIENT: AGNICO EAGLE

NUQSANA PROMEC MINING

ultragen

CONSULTANT PROJECT NO. 591700

SCEAU PROFESSIONNEL

CONC.: KHV
DATE: 2017/05/29
DESSINE PAR: KVE
DATE: 2017/05/29
VÉR. PAR:
DATE:
APP.:
DATE:
ÉCHELLE: AUCUNE

PROJET: AGNICO EAGLE - MELIADINE DIVISION
403P - COMBUSTIBLE

TITRE: PORTAIL #1
FABRICATION ISOMETRIC
FUEL FROM 403P-80-PDI-CC10-029 TO 65TNK41610

No PROJET	No DESSIN	PAGES	REV.
6515	403P-80-PDI-CC10-014	2/2	0

NO. DE CONDUITE		SPECIFICATION	PRODUIT	SYSTEME REVETEMENT	CODE DE COULEUR	ISOLATION ET TRACAGE	EPAISS. D'ISOLATION		
403P-80-PDI-CC10-014		CC10	PDI		-			65-403-270-200	PIPE SUPPORT DETAILS
PRESSION D'OPERATION	TEMPERATURE D'OPERATION	PRESSION DE CONCEPTION	TEMPERATURE DE CONCEPTION	PRESSION D'ESSAI	CLASSE D'INSPECTION	CODE DE SERVICE	TRAITEMENT THERMIQUE	65-403-205-200	P&ID
— PSIG	— °F	NA PSIG	10 ~~à 15~~ °F	NA PSIG	5% Rx	B 31.3	—	No DESSIN	DESSINS DE REFERENCE

Fluide Diesel

JQ2216.6
GMAW
P1 à P1

403P-MN-01

U-F

MK-101

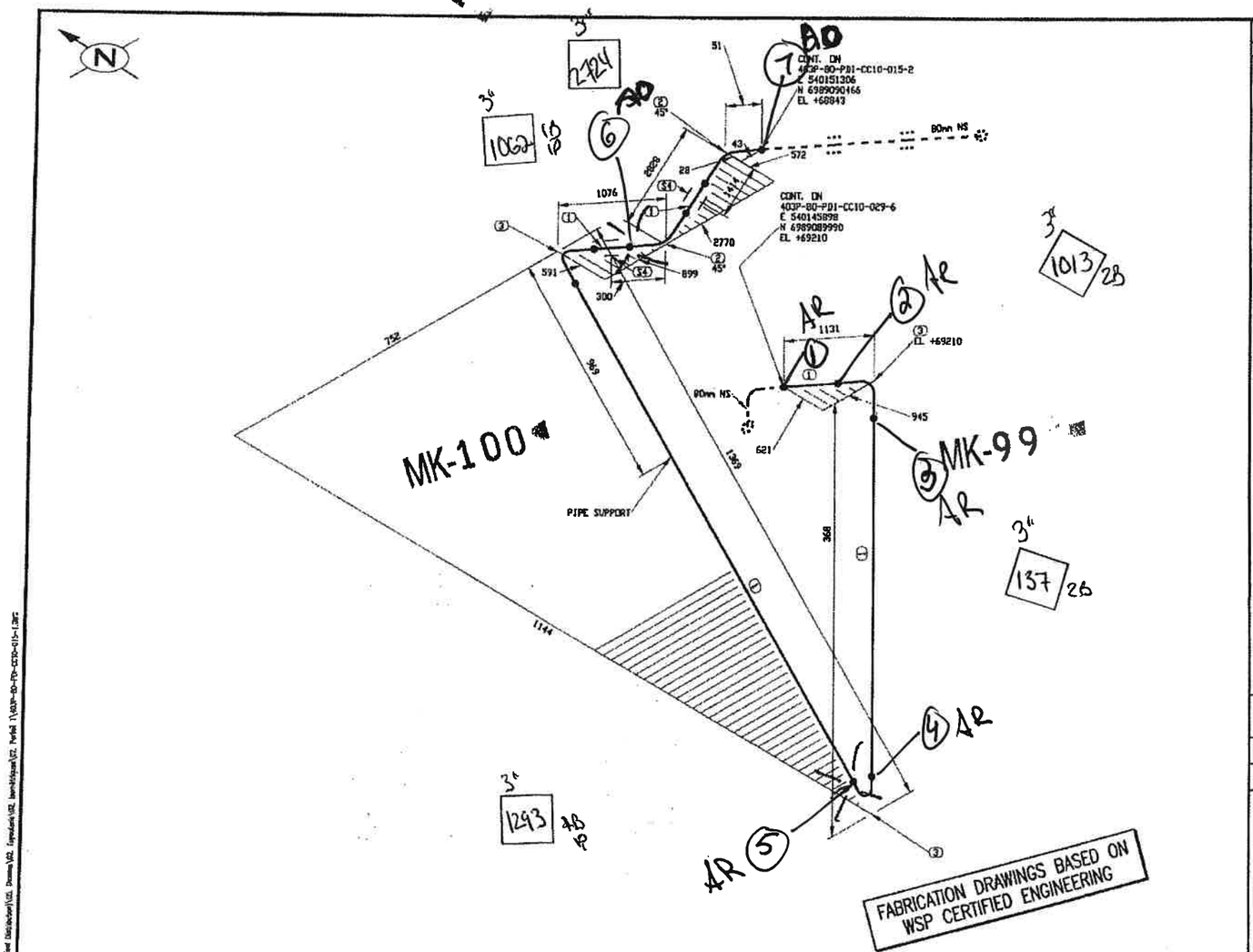

No	QTE	DIA	MATERIEL/CATALOGUE	DESCRIPTION
1	3934 MM	80	A 333 Gr. 6	SCH STD, SMLS PIPE
2	2	80	A 420 Gr. WPL6	SCH STD, BW LR 45 DEG ELBOW
3	3	80	A 420 Gr. WPL6	SCH STD, BW LR 90 DEG ELBOW
4	2	80	SUPAG-DN80	PIPE SUPPORT AS PER DETAIL 3, DWG 65-403-270-200

CONTRAT UF
21.06X20

REÇU le
03 JUIL. 2017
Rép: _____

No.	DATE	REVISION	QVN / PAR / APP.
0	2017/06/30	ISSUED FOR CONSTRUCTION	QVN

CLIENT: AGNICO EAGLE

NUQSANA PROMEC MINING

ultragen

CONSULTANT PROJECT NO. 591700

SCEAU PROFESSIONNEL

CONC.: KHV
DATE: 2017/06/29
DESSINÉ PAR: KVE
DATE: 2017/06/29
VÉR. PAR:
DATE:
APP.:
DATE:
ÉCHELLE: AUCUNE

PROJET: AGNICO EAGLE - MELIADINE DIVISION
403P - COMBUSTIBLE

TITRE: PORTAIL #1
FABRICATION ISOMETRIC
FUEL FROM 403P-80-PDI-CC10-014 TO 65TM41611

No PROJET	No DESSIN	PAGES	REV.
6515	403P-80-PDI-CC10-015	1/19	0

403P-MN-01

NO. DE CONDUITE		SPECIFICATION	PRODUIT	SYSTEME REVETEMENT	CODE DE COULEUR	ISOLATION ET TRACAGE	EPAISS. D'ISOLATION		
403P-80-PDI-CC10-015		CC10	PDI		-			65-403-270-200	PIPE SUPPORT DETAILS
PRESSION D'OPERATION	TEMPERATURE D'OPERATION	PRESSION DE CONCEPTION	TEMPERATURE DE CONCEPTION	PRESSION D'ESSAI	CLASSE D'INSPECTION	CODE DE SERVICE	TRAITEMENT THERMIQUE	65-403-205-200	P&ID
— PSIG	— °F	N/A PSIG	100 à 150°F	N/A PSIG	5%Rx	B31.3	—	No. DESSIN	DESSINS DE REFERENCE

TRACÉ: N:\Kyrnos Corp\Validation\591700 (Prod Database)\02. Données\02. Ingénierie\02E. Portail 1\403P-80-PDI-CC10-015-1.dwg
IMPRIMÉ LE: Jun 29, 2017, 3:23pm

JG2216.6
1+ GMAW No 001
P1 à P1
Rép

Fluide Diesel

U-F.

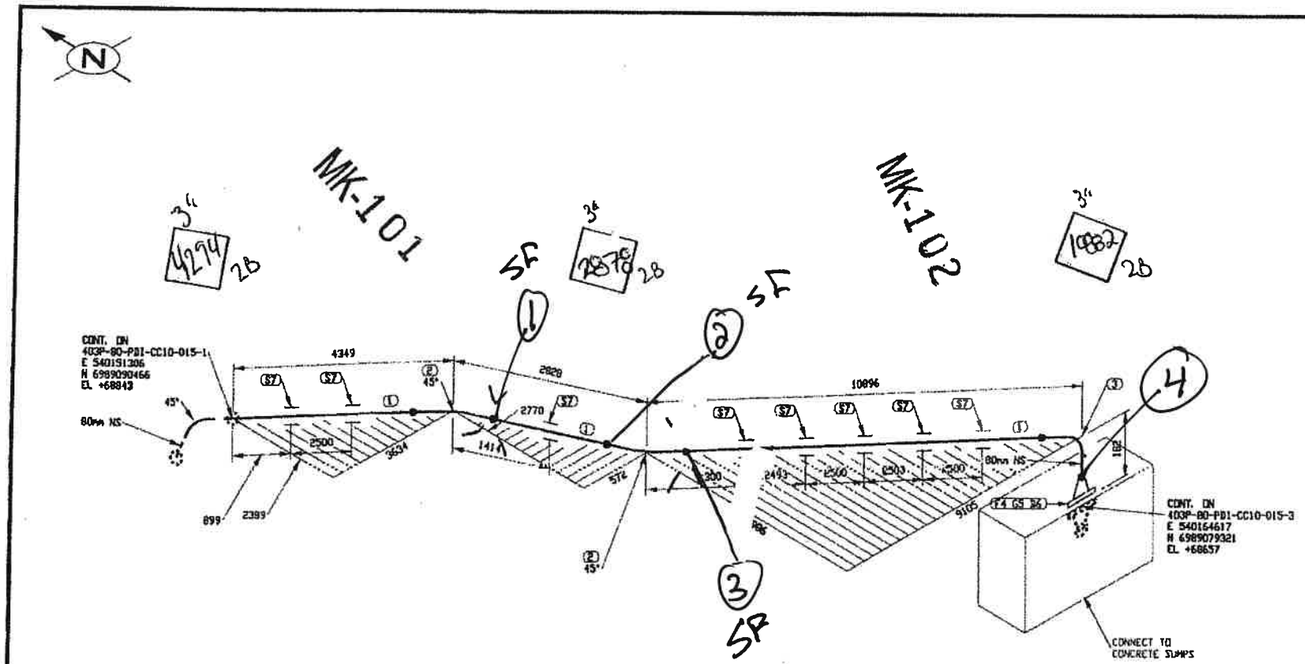

FABRICATION DRAWINGS BASED ON WSP CERTIFIED ENGINEERING

LISTE DE MATERIEL

No	QTE	DIA	MATERIEL/CATALOGUE	DESCRIPTION
1	17755 MM	80	A 333 Gr. 6	SCH STD, SMLS PIPE
2	2	80	A 420 Gr. WPL6	SCH STD, BW LR 45 DEG ELBOW
3	1	80	A 420 Gr. WPL6	SCH STD, BW LR 90 DEG ELBOW
4	1	80	A 350 Gr. LF2	CL 150, SCH STD, RF, WN FLANGE
5	1	80	ASME B16.20	CL 150, GARLOCK 3500, RING TYPE GASKET 1/8" THK
6	4	16	A 193 B7/A 194 2H	CL 150, 4 - 15.875 X 90 STUD BOLTS c/w TWO HEAVY HEX NUTS
7	8	80		PIPE SUPPORT AS PER DETAIL 3, DWG 65-403-270-200

CONTRAT UF
21.06X20

REÇU le
03 JUIL. 2017
Rép: _____

ENATELIER LE
04 JUIL. 2017
par: BS

No.	DATE	REVISION	APP.
0	2017/06/30	ISSUED FOR CONSTRUCTION	QVN

CLIENT: AGNICO EAGLE

NUQSANA PROMEC MINING

Ultragen

CONSULTANT PROJECT NO. 591700

SCEAU PROFESSIONNEL

CONC.: KHV
DATE: 2017/05/29
DESSINÉ PAR: RVE
DATE: 2017/05/29
VÉR. PAR:
DATE:
APP.:
DATE:
ÉCHELLE: AUCUNE

PROJET: AGNICO EAGLE - MELIADINE DIVISION
403P - COMBUSTIBLE

TITRE: PORTAIL #1
FABRICATION ISOMETRIC
FUEL FROM 403P-80-PDI-CC10-014 TO 65TNK41611

No PROJET	No DESSIN	PAGES	REV.
6515	403P-80-PDI-CC10-015	2/19	0

403P MN-01

NO. DE CONDUITE		SPÉCIFICATION	PRODUIT	SYSTÈME REVÊTEMENT	CODE DE COULEUR	ISOLATION ET TRAÇAGE	ÉPAISS. D'ISOLATION		
403P-80-PDI-CC10-015		CC10	PDI		-			65-403-270-200	PIPE SUPPORT DETAILS
PRESSION D'OPÉRATION	TEMPÉRATURE D'OPÉRATION	PRESSION DE CONCEPTION	TEMPÉRATURE DE CONCEPTION	PRESSION D'ESSAI	CLASSE D'INSPECTION	CODE DE SERVICE	TRAITEMENT THERMIQUE	65-403-205-200	P&ID
— PSIG	— °F	— PSIG	180/65 °F	N/A PSIG	5900 LX 6531.3		—	No. DESSIN	DESSINS DE RÉFÉRENCE

Fluide Diesel

U-F.

JG2216.6
PX GMAW/SC001
P1 à P1 RC

SCADA: N:\Projets Engrg\Meliadine\Util\205 (Final Distribution)\05. Dessins\02. Ingénierie\02. Isométriques\02. Portail 1\403P-80-PDI-CC10-015.DWG
Dernière SE: Jun 29, 2017 3:30pm

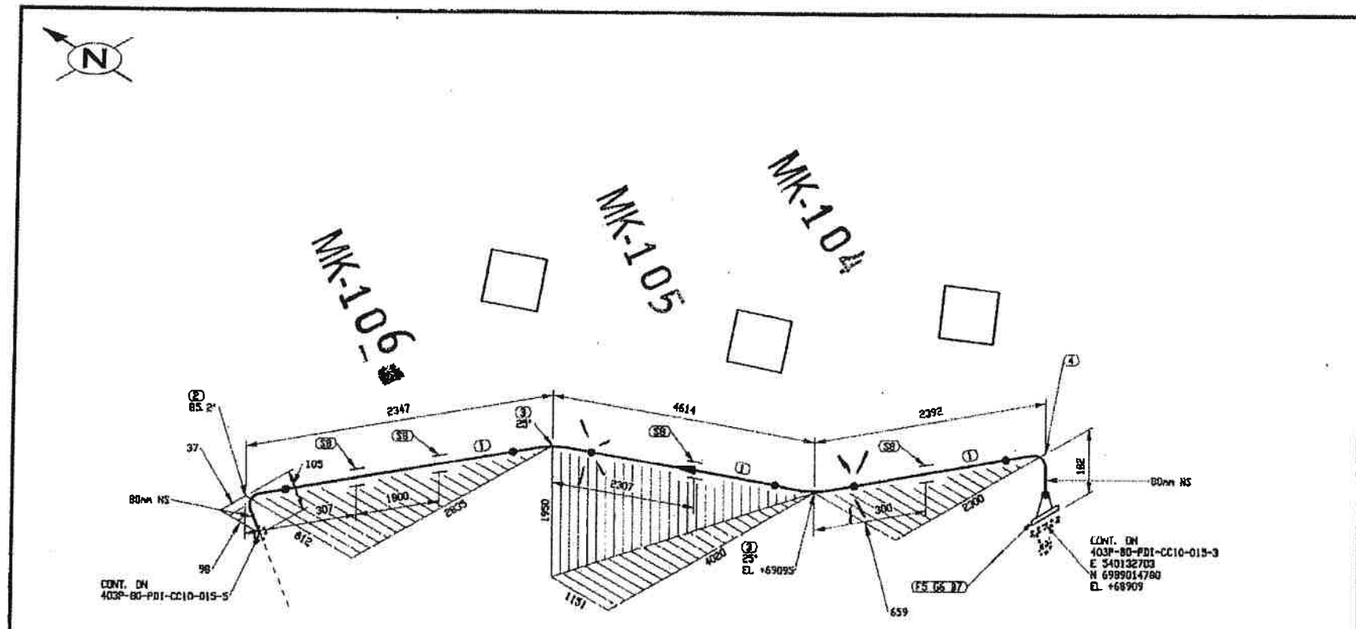

FABRICATION DRAWINGS BASED ON WSP CERTIFIED ENGINEERING

LISTE DE MATERIEL

No	QTE	DIA	MATERIEL/CATALOGUE	DESCRIPTION
1	9627 MM	80	A 333 Gr. 6	SCH STD, SMLS PIPE
2	1	80	A 420 Gr. VPL6	SCH STD, BW LR 90 DEG ELBOW TRIM TO 85.18
3	2	80	A 420 Gr. VPL6	SCH STD, BW LR 45 DEG ELBOW TRIM TO 25.00
4	1	80	A 420 Gr. VPL6	SCH STD, BW LR 90 DEG ELBOW
5	1	80	A 350 Gr. LF2	CL 150, SCH STD, RF, WN FLANGE
6	1	80	ASME B16.20	CL 150, GARLOCK 5500, RING TYPE GASKET 1/8" THK
7	4	16	A 193 B7/A 194 2H	CL 150, 4 - 15.875 X 90 STUD BOLTS c/w TWO HEAVY HEX NUTS
8	4	80		PIPE SUPPORT AS PER DETAIL 3, DWG 65-403-270-200

CONTRAT UF
2106X20

REÇU le
03 JUIL. 2017
Rép: _____

EN ATELIER
04 JUIL. 2017
par: BS

No.	DATE	REVISION	QVN / PAR / APP.
0	2017/06/30	ISSUED FOR CONSTRUCTION	

CLIENT: AGNICO EAGLE

NUQSANA PROMEC MINING

ultragen

CONSULTANT PROJECT NO. 591700

SCEAU PROFESSIONNEL

NO. DE CONDUITE		SPECIFICATION	PRODUIT	SYSTEME REVETEMENT	CODE DE COULEUR	ISOLATION ET TRACAGE	EPAISS. D'ISOLATION		
403P-80-PDI-CC10-015		CC10	PDI		-			65-403-270-200	PIPE SUPPORT DETAILS
PRESSION D'OPERATION	TEMPERATURE D'OPERATION	PRESSION DE CONCEPTION	TEMPERATURE DE CONCEPTION	PRESSION D'ESSAI	CLASSE D'INSPECTION	CODE DE SERVICE	TRAITEMENT THERMIQUE	65-403-205-200	P&ID
— PSIG	— °F	NA PSIG	1a à 15 °F	NA PSIG	5% RX	B31.3	—	No DESSIN	DESSINS DE REFERENCE

DONC.: KHV
DATE: 2017/05/29
DESSINÉ PAR: KVE
DATE: 2017/05/29
VÉR. PAR:
DATE:
APP.:
DATE:
ÉCHELLE: AUCUNE

PROJET: AGNICO EAGLE - MELIADINE DIVISION
403P - COMBUSTIBLE

TITRE: PORTAIL #1
FABRICATION ISOMETRIC
FUEL FROM 403P-80-PDI-CC10-014 TO 65TNK41611

No PROJET	No DESSIN	PAGES	REV.
6515	403P-80-PDI-CC10-015	4/19	0

403P-MN-01

JQ2216.6
Pt GMAW MC001
Pl a Pl 16

Fluide diesel

U-F.

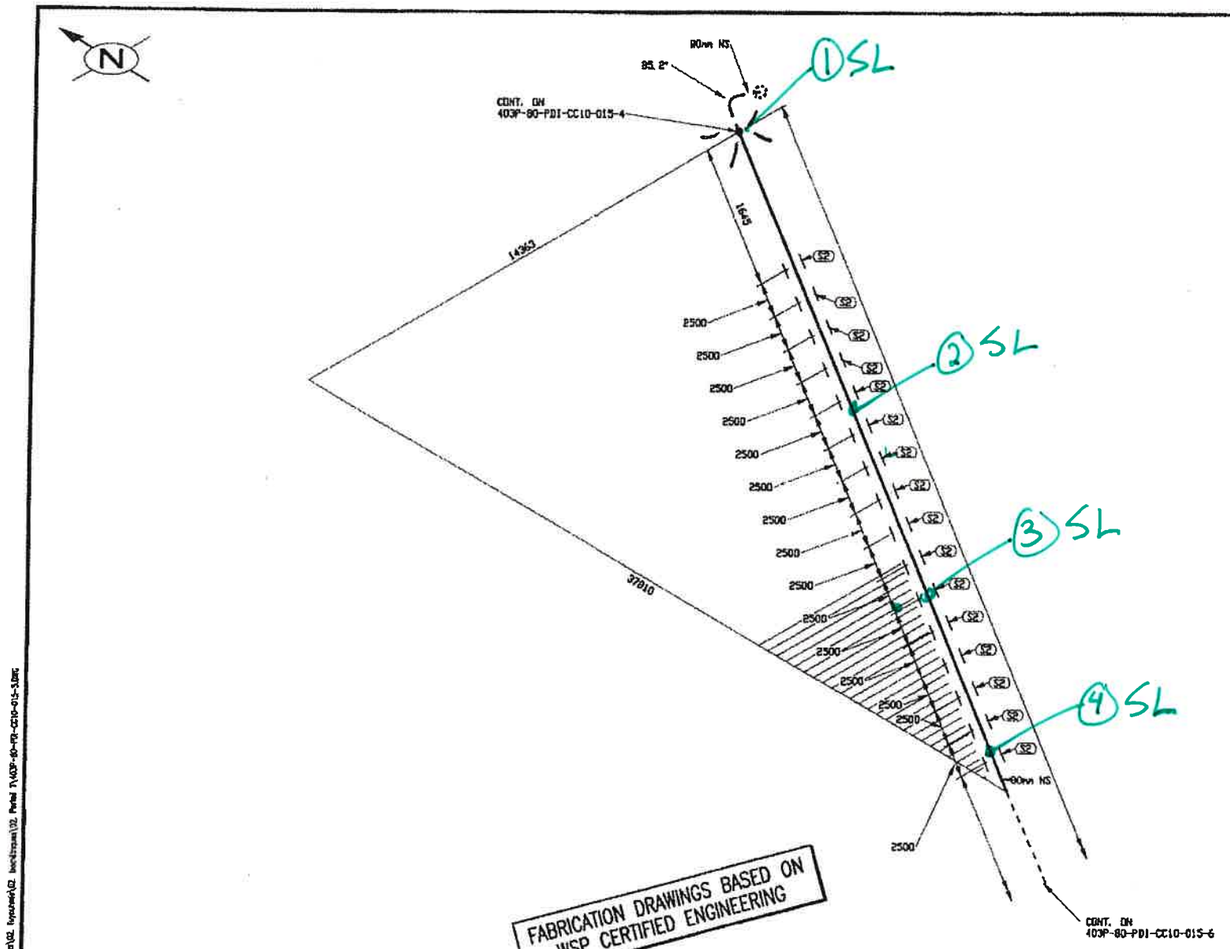

FABRICATION DRAWINGS BASED ON WSP CERTIFIED ENGINEERING

LISTE DE MATERIEL

No	QTE	DIA	MATERIEL/CATALOGUE	DESCRIPTION
1	40395 MM	80	A 333 Gr. 6	SCH STD, SMLS PIPE
2	16	80		PIPE SUPPORT AS PER DETAIL 3, DWG 65-403-270-200

CONTRAT U
21.06.X20

REÇU le
03 JUIL. 2017
Rép:

ENATELIER LE
04 JUIL. 2017
par: BS

No.	DATE	REVISION	QVN / PAR / APP.
0	2017/06/30	ISSUED FOR CONSTRUCTION	QVN

CLIENT: AGNICO EAGLE

NUQSANA PROMEC MINING

ultragen

CONSULTANT PROJECT No. 591700

SCEAU PROFESSIONNEL

CONC.: KVN
DATE: 2017/05/29
DESSINE PAR: KVE
DATE: 2017/05/29
VÉR. PAR:
DATE:
APP.:
DATE:
ÉCHELLE: AUCUNE

PROJET: AGNICO EAGLE - MELIADINE DIVISION
403P - COMBUSTIBLE

TITRE: PORTAIL #1
FABRICATION ISOMETRIC
FUEL FROM 403P-80-PDI-CC10-014 TO 65TNK41611

No PROJET	No DESSIN	PAGES	REV.
6515	403P-80-PDI-CC10-015	5/19	0

NO. DE CONDUITE		SPECIFICATION	PRODUIT	SYSTEME REVETEMENT	CODE DE COULEUR	ISOLATION ET TRACAGE	EPAISS. D'ISOLATION		
403P-80-PDI-CC10-015		CC10	PDI		-			65-403-270-200	PIPE SUPPORT DETAILS
PRESSION D'OPERATION	TEMPERATURE D'OPERATION	PRESSION DE CONCEPTION	TEMPERATURE DE CONCEPTION	PRESSION D'ESSAI	CLASSE D'INSPECTION	CODE DE SERVICE	TRAITEMENT D'HERMAUGE	65-403-205-200	P&ID
— PSIG	— °F	— PSIG	10 à 55 °F	N/A PSIG	5% EX B31.3		—	No. DESSIN	DESSINS DE REFERENCE

Fluide Diesel

U-F

JQ2216.6
PT GMAW ACCOI
P1 à P1 FF

IMPRIMÉ LE: Jun 29, 2017, 5:33pm
TCM2L: H:\Projets Eng\Validation\591700 (Fuel Distribution)\02. Dessins\02. Isométriques\02. Portail FV\403P-80-PDI-CC10-015-5.DWG

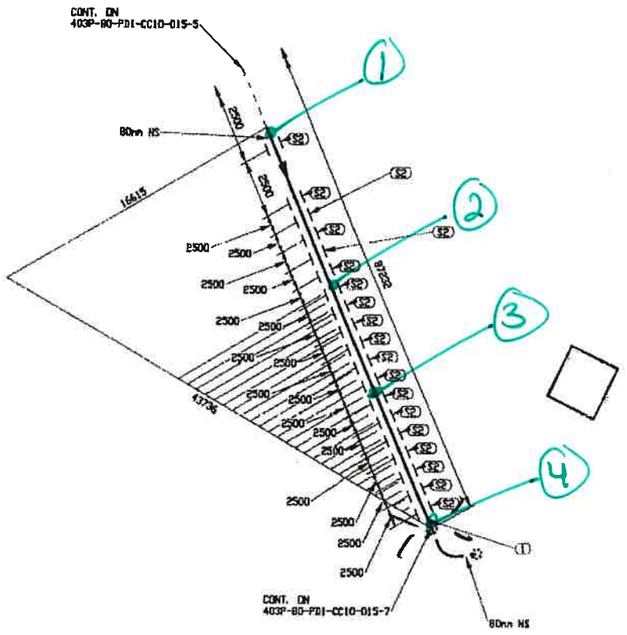
CONT. ON
403P-80-PDI-CC10-015-5
80mm HS
16419
43736
2500
2500
2500

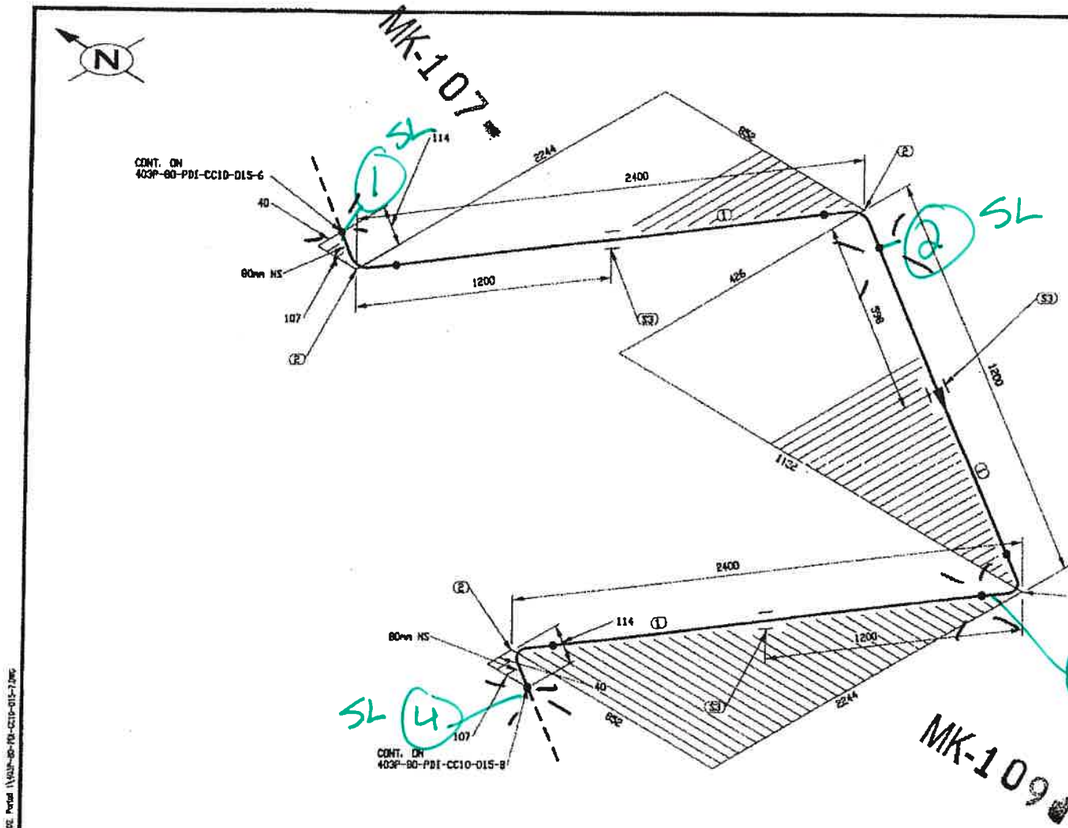

FABRICATION DRAWINGS BASED ON WSP CERTIFIED ENGINEERING

LISTE DE MATERIEL

No	QTE.	DIA	MATERIEL/CATALOGUE	DESCRIPTION
1	5316 MM	80	A 333 Gr. 6	SCH STD, SMLS PIPE
2	4	80	A 420 Gr. WPL6	SCH STD, BW LR 90 DEG ELBOW
3	3	80		PIPE SUPPORT AS PER DETAIL 3, BWG 65-403-270-200

CONTRAT U.
21.06X20

REÇU le
03 JUIL. 2017
Rép: _____

No.	DATE	REVISION	APP.
0	2017/06/30	ISSUED FOR CONSTRUCTION	QVN

CLIENT: AGNICO EAGLE

NUQSANA PROMEC MINING

ultragen

CONSULTANT PROJECT NO. 591700

SCEAU PROFESSIONNEL

CONC.: KHV DATE: 2017/06/29
DESSINE PAR: KVE DATE: 2017/06/29
VERI. PAR: DATE:
APP.: DATE:
ECHELLE: AUCUNE

PROJET: AGNICO EAGLE - MELIADINE DIVISION
403P - COMBUSTIBLE

TITRE: PORTAIL #1
FABRICATION ISOMETRIC
FUEL FROM 403P-80-PDI-CC10-014 TO 65TNK41611

No PROJET	No DESSIN	PAGES	REV.
6515	403P-80-PDI-CC10-015	7/19	0

403P-MN-01

NO. DE CONDUITE		SPECIFICATION	PRODUIT	SYSTEME REVETEMENT	CODE DE COULEUR	ISOLATION ET TRACAGE	EPAISS. D'ISOLATION		
403P-80-PDI-CC10-015		CC10	PDI		-			65-403-270-200	PIPE SUPPORT DETAILS
PRESSION D'OPERATION	TEMPERATURE D'OPERATION	PRESSION DE CONCEPTION	TEMPERATURE DE CONCEPTION	PRESSION D'ESSAI	CLASSE D'INSPECTION	CODE DE SERVICE	TRAITEMENT THERMIQUE	65-403-205-200	P&ID
— PSIG	— °F	[illegible] PSIG	140 à 15 °F	— PSIG	5962X	B31.3	—	No DESSIN	DESSINS DE REFERENCE

TRACE LE: Jun 29 2017, 5:35pm

EN ATELIER LE
04 JUIL. 2017
par: _____

JQ2216.6
PT GMAW NC001
P1 à P1 R6

U-F.

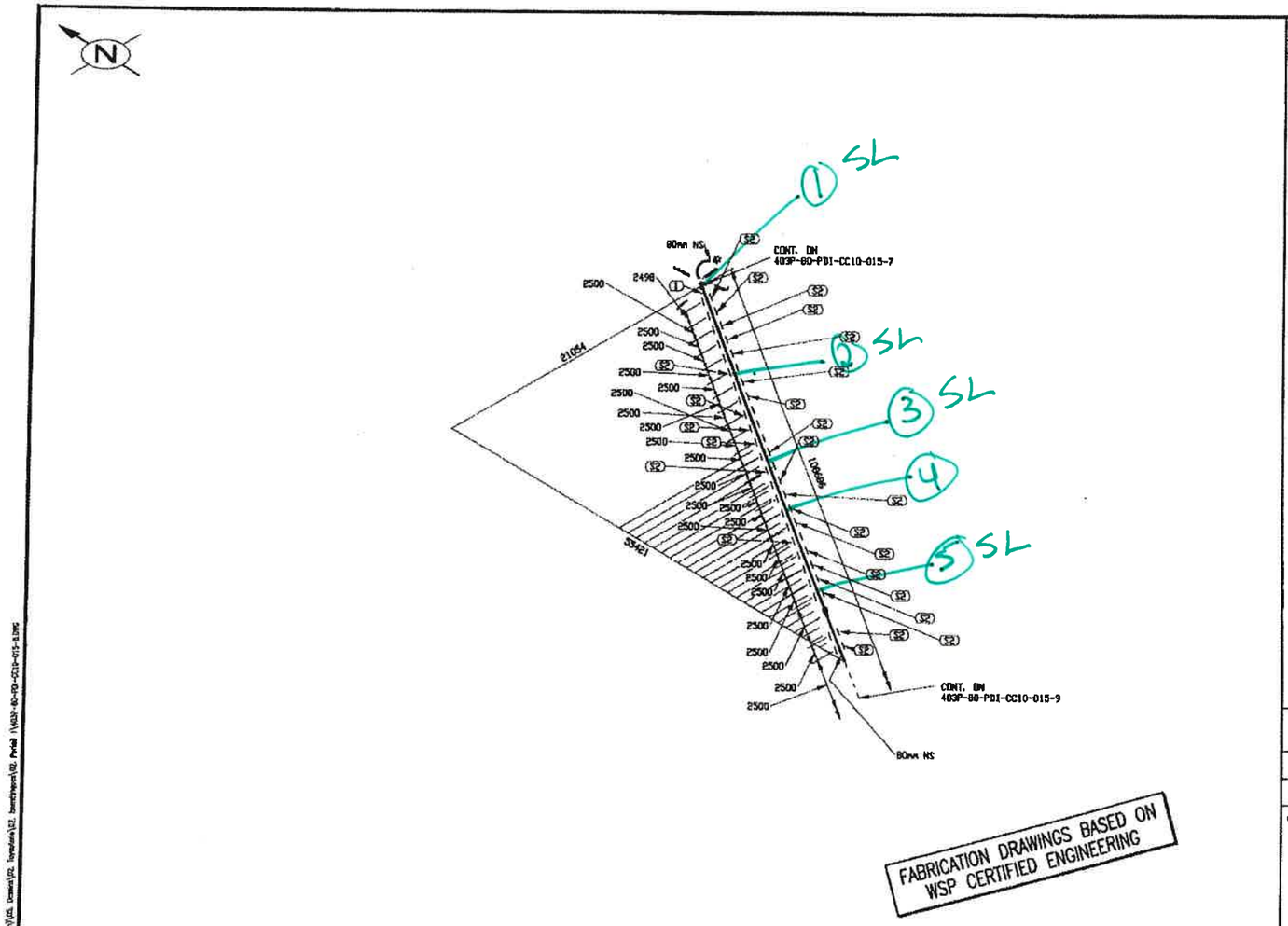

FABRICATION DRAWINGS BASED ON WSP CERTIFIED ENGINEERING

LISTE DE MATERIEL

No	QTE	DIA	MATERIEL/CATALOGUE	DESCRIPTION
1	59286 HH	80	A 333 Gr. 6	SCH STD, SMLS PIPE
2	24	80		PIPE SUPPORT AS PER DETAIL 3, DWG 65-403-270-200

CONTRAT UF
21.06 X20

EN ATELIER LE
04 JUIL. 2017
par :

REÇU le
03 JUIL. 2017
Rép:

No.	DATE	REVISION	QVN / FAR / APP.
0	2017/06/30	ISSUED FOR CONSTRUCTION	

CLIENT: AGNICO EAGLE

NUQSANA PROMEC MINING

ultragen

CONSULTANT PROJECT NO. 591700

SCEAU PROFESSIONNEL

CONC.: KHV DATE: 2017/05/29
DESSINÉ PAR: KVE DATE: 2017/05/29
VÉR. PAR: DATE:
APP.: DATE:
ÉCHELLE: AUCUNE

PROJET: AGNICO EAGLE - MELIADINE DIVISION
403P - COMBUSTIBLE

TITRE: PORTAIL #1
FABRICATION ISOMETRIC
FUEL FROM 403P-80-PDI-CC10-014 TO 65TNK41611

No PROJET	No DESSIN	PAGES	REV.
6515	403P-80-PDI-CC10-015	8/19	0

NO. DE CONDUITE		SPECIFICATION	PRODUIT	SYSTEME REVETEMENT	CODE DE COULEUR	ISOLATION ET TRACAGE	EPAISS. D'ISOLATION		
403P-80-PDI-CC10-015		CC10	PDI		-			65-403-270-200	PIPE SUPPORT DETAILS
PRESSION D'OPERATION	TEMPERATURE D'OPERATION	PRESSION DE CONCEPTION	TEMPERATURE DE CONCEPTION	PRESSION D'ESSAI	CLASSE D'INSPECTION	CODE DE SERVICE	TRAITEMENT THERMIQUE	65-403-205-200	P&ID
— PSIG	— °F	NA PSIG	10 à 15 °F	— PSIG	5%R	B31.3	—	No. DESSIN	DESSINS DE REFERENCE

Pt JQ2216.6 AC 001
GMAW RC
P1 a P1

Fluide Diesel

U-F.

403P-MN-01

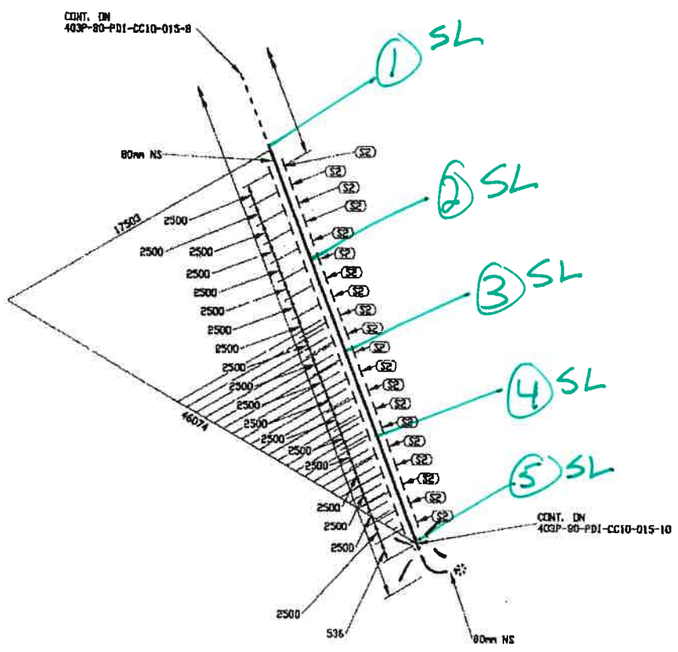
CONT. ON
403P-80-PDI-CC10-015-8
80mm NS
17593
2500
2500
2500

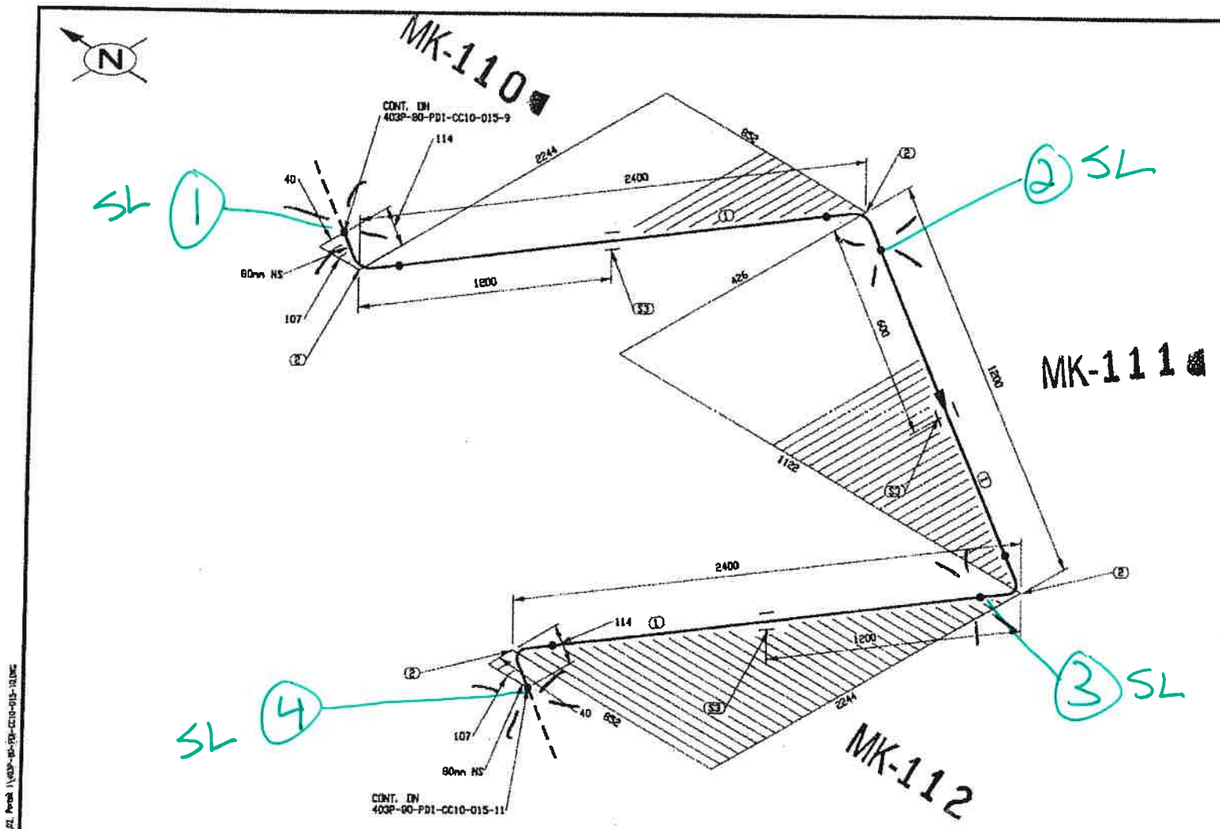

FABRICATION DRAWINGS BASED ON WSP CERTIFIED ENGINEERING

LISTE DE MATERIEL

No	QTE	DIA	MATERIEL/CATALOGUE	DESCRIPTION
1	5316 MM	80	A 333 Gr. 6	SCH STD, SMLS PIPE
2	4	80	A 420 Gr. WPL6	SCH STD, BW LR 90 DEG ELBOW
3	2	80		PIPE SUPPORT AS PER DETAIL 3, DWG 65-403-270-200

CONTRAT UF
21.06x20

REÇU le
03 JUIL. 2017
Rép: _____

EN ATELIER LE
04 JUIL. 2017
par : BS

No.	DATE	REVISION	PAR / APP.
0	2017/06/30	ISSUED FOR CONSTRUCTION	QVN

CLIENT: AGNICO EAGLE

NUQSANA PROMEC MINING

Ultragen

CONSULTANT PROJECT No. 591700

SCEAU PROFESSIONNEL

CONC.: KHV DATE: 2017/06/29
DESSINÉ PAR: KVE DATE: 2017/06/29
VÉR. PAR: DATE:
APP.: DATE:
ÉCHELLE: AUCUNE

PROJET: AGNICO EAGLE - MEL1ADINE DIVISION
403P - COMBUSTIBLE

TITRE: PORTAIL #1
FABRICATION ISOMETRIC
FUEL FROM 403P-80-PDI-CC10-014 TO 65TNK41611

No PROJET	No DESSIN	PAGES	RÉV.
6515	403P-80-PDI-CC10-015	10/19	0

4C3P-MN-01

NO. DE CONDUITE		SPÉCIFICATION	PROCÉDÉ	SYSTÈME REVÊTEMENT	CODE DE COULEUR	ISOLATION ET TRAÇAGE	ÉPAISS. D'ISOLATION		
403P-80-PDI-CC10-015		CC10	PDI		-			65-403-270-200	PIPE SUPPORT DETAILS
PRESSION D'OPÉRATION	TEMPÉRATURE D'OPÉRATION	PRESSION DE CONCEPTION	TEMPÉRATURE DE CONCEPTION	PRESSION D'ESSAI	CLASSE D'INSPECTION	CODE DE SERVICE	TRAITEMENT THERMIQUE	65-403-205-200	P&ID
— PSIG	— °F	— PSIG	10 à 120°F	— PSIG	5% RX	B31.3	—	No. DESSIN	DESSINS DE RÉFÉRENCE

APPROVED: Jun 29, 2017 5:37pm

FOLDER: K:\Projets Capex\Validation\591700_Shell Distribution\05_Drawing\02_Fabrication\02_Isométriques\Fuel 1\403P-80-PDI-CC10-015-1(2).dwg

JQ2216.6
Pt GMAW
P1 à P1

Fluide Diesel

U-F.

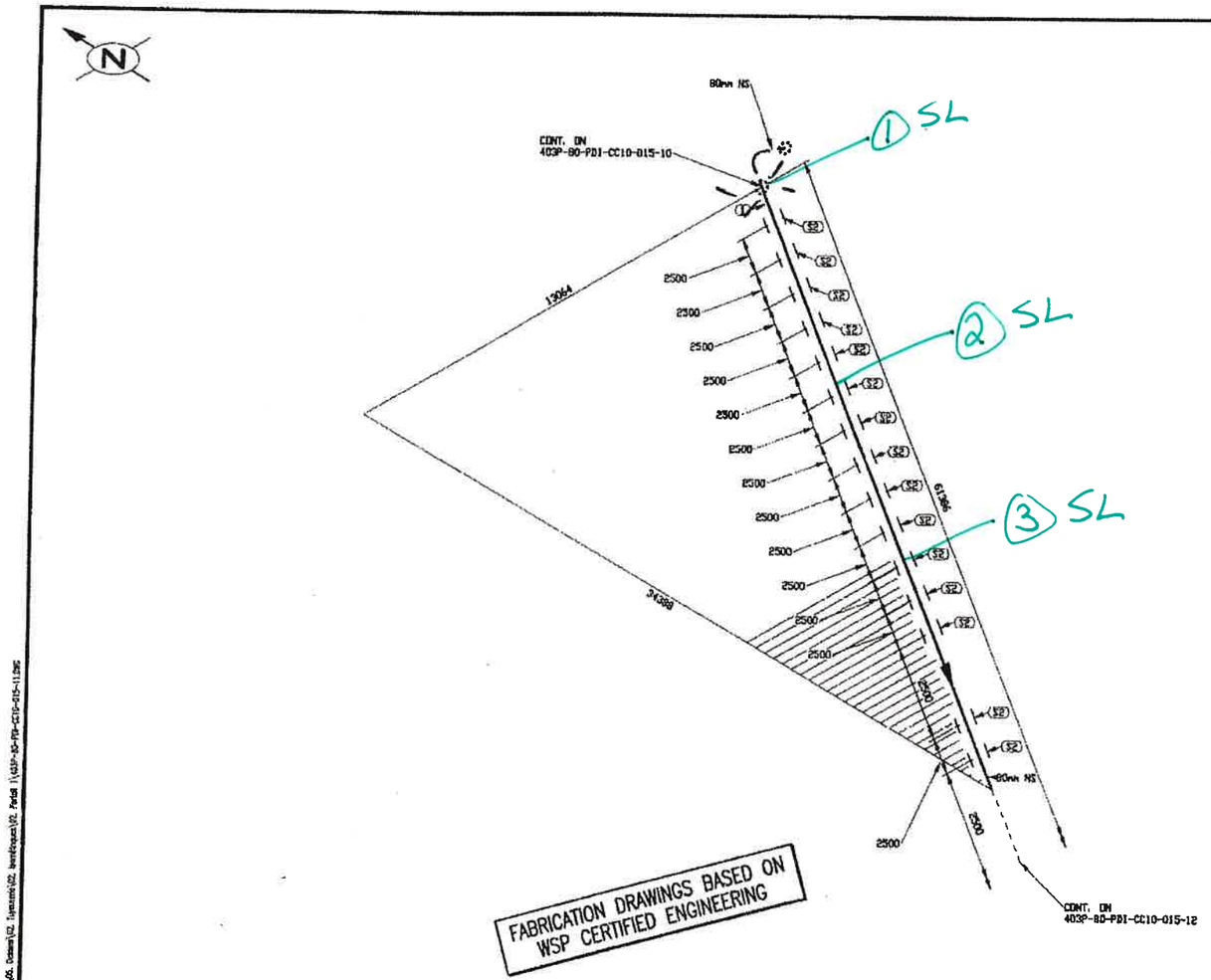

LISTE DE MATERIEL

No	QTE	DIA	MATERIEL/CATALOGUE	DESCRIPTION
1	36786 MM	80	A 333 Gr. 6	SCH STD, SMLS PIPE
2	15	80		PIPE SUPPORT AS PER DETAIL 3, DWG 65-403-270-200

CONTRAT UF
21.06×20

REÇU le
03 JUIL. 2017
Rép:

EN ATELIER LE
04 JUIL. 2017
par:

No.	DATE	REVISION	PAR	APP.
0	2017/06/30	ISSUED FOR CONSTRUCTION	QVN	

CLIENT: AGNICO EAGLE

NUQSANA PROMEC MINING

ultragen

CONSULTANT PROJECT No. 591700

SCEAU PROFESSIONNEL

CONC.: KHV DATE: 2017/06/30
DESSINÉ PAR: KVE DATE: 2017/06/29
VÉR. PAR: DATE:
APP.: DATE:
ÉCHELLE: AUCUNE

PROJET: AGNICO EAGLE - MELIADINE DIVISION
403P - COMBUSTIBLE

TITRE: PORTAIL #1
FABRICATION ISOMETRIC
FUEL FROM 403P-80-PDI-CC10-014 TO 65TNK41611

No PROJET	No DESSIN	PAGES	REV.
6515	403P-80-PDI-CC10-015	11/19	0

403P-NN-101

NO. DE CONDUITE	SPECIFICATION	PRODUIT	SYSTEME REVETEMENT	CODE DE COULEUR	ISOLATION ET TRACAGE	EPAISS. D'ISOLATION		
403P-80-PDI-CC10-015	CC10	PDI		-			65-403-270-200	PIPE SUPPORT DETAILS
PRESSION D'OPERATION	TEMPERATURE D'OPERATION	PRESSION DE CONCEPTION	TEMPERATURE DE CONCEPTION	PRESSION D'ESSAI	CLASSE D'INSPECTION	CODE DE SERVICE	TRAITEMENT THERMIQUE	65-403-205-200	P&ID
— PSIG	— °F	— PSIG	10 G17 °F	— PSIG	5%RX	B31.3	—	No DESSIN	DESSINS DE REFERENCE

IMPRIMÉ LE: Jun 29, 2017, 5:38pm

FICHIER: X:\Xpres Data\Modèles\591700 (Field Distribution)\DAL Dessins\02. Isométriques\02. Portail 1\403P-80-PDI-CC10-015-11.DWG

JG2216.6
GMAW/AC
P1 & P1 R6

Fluide Ducyl

U-F

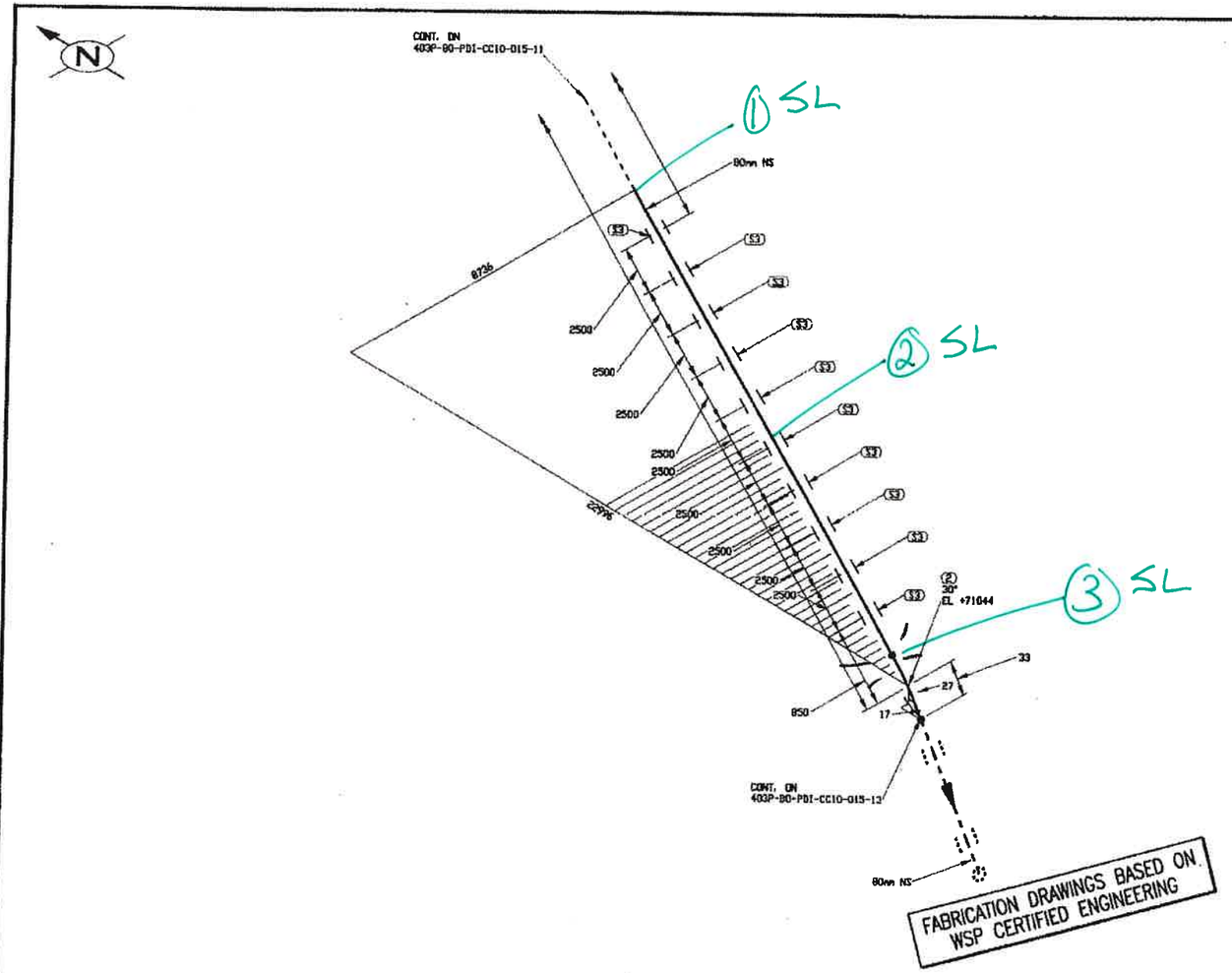

FABRICATION DRAWINGS BASED ON WSP CERTIFIED ENGINEERING

LISTE DE MATERIEL

No	QTE	DIA	MATERIEL/CATALOGUE	DESCRIPTION
1	24567 MM	80	A 333 Gr. 6	SCH STD, SMLS PIPE
2	1	80	A 420 Gr. VPL6	SCH STD, BW LR 45 DEG ELBOW TRIM TO 30.00
3	10	80		PIPE SUPPORT AS PER DETAIL 3, DWG 65-403-270-200

CONTRAT UF
21.06 X20

REÇU le
03 JUIL. 2017
Rép: _____

No.	DATE	REVISION	PAR	APP.
0	2017/06/30	ISSUED FOR CONSTRUCTION	QVN	

CLIENT:

AGNICO EAGLE

NUQSANA PROMEC MINING

ultragen

CONSULTANT PROJECT NO. 591700

SCEAU PROFESSIONNEL

CONC.: KHV
DATE: 2017/05/28
DESSINÉ PAR: KVE
DATE: 2017/05/29
VÉR. PAR:
DATE:
APP.:
DATE:
ÉCHELLE: AUCUNE

PROJET: AGNICO EAGLE - MELIADINE DIVISION
403P - COMBUSTIBLE

TITRE: PORTAIL #1
FABRICATION ISOMETRIC
FUEL FROM 403P-80-PDI-CC10-014 TO 65TNK41611

No PROJET	No DESSIN	PAGES	REV.
6515	403P-80-PDI-CC10-015	12/19	0

NO. DE CONDUITE		SPECIFICATION	PRODUIT	SYSTEME REVETEMENT	CODE DE COULEUR	ISOLATION ET TRACAGE	EPAISS. D'ISOLATION		
403P-80-PDI-CC10-015		CC10	PDI		-			65-403-270-200	PIPE SUPPORT DETAILS
PRESSION D'OPERATION	TEMPERATURE D'OPERATION	PRESSION DE CONCEPTION	TEMPERATURE DE CONCEPTION	PRESSION D'ESSAI	CLASSE D'INSPECTION	CODE DE SERVICE	TRAITEMENT THERMIQUE	65-403-205-200	P&ID
— PSIG	— °F	— PSIG	10 à 15 °F	— PSIG	5% fx	D31.3	—	No. DESSIN	DESSINS DE REFERENCE

Fluide Diesel

EN ATELIER LE
04 JUIL. 2017
par: [signature]

JQ2216.6 AC-001
GMAW
P1 à P1

U-F.

403P MN-01

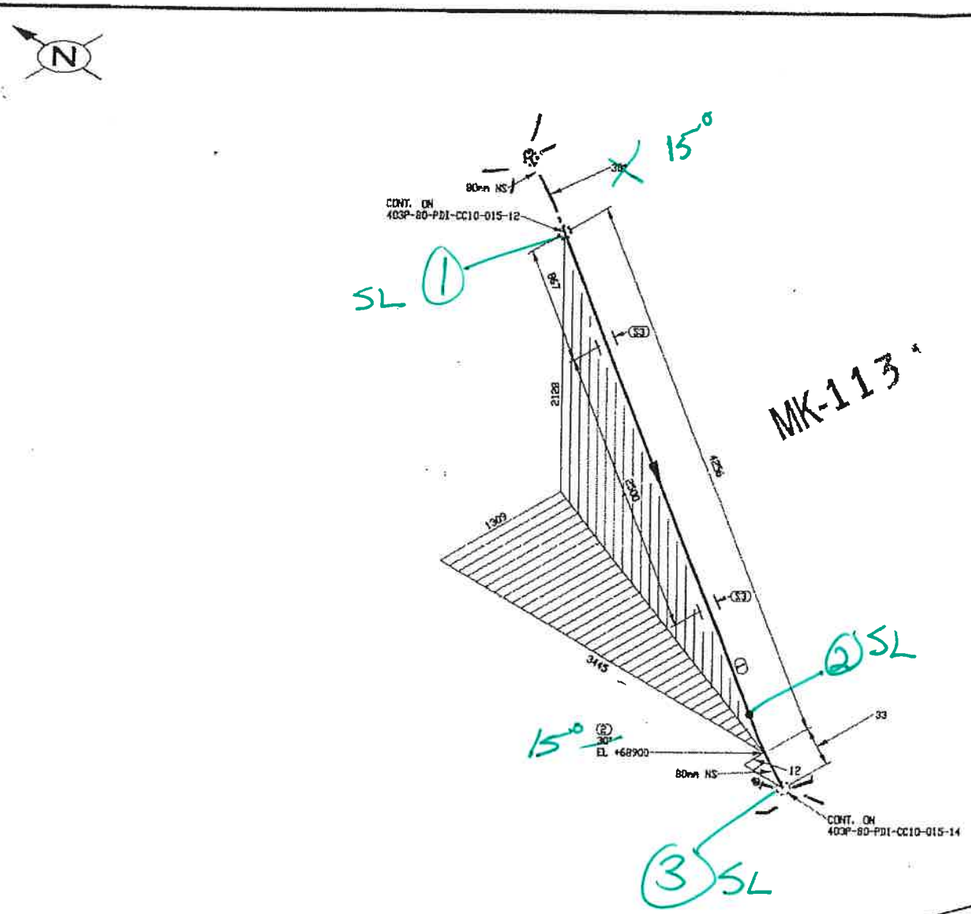

FABRICATION DRAWINGS BASED ON WSP CERTIFIED ENGINEERING

LISTE DE MATERIEL

No	QTE	DIA	MATERIEL/CATALOGUE	DESCRIPTION
1	4223 MM	80	A 333 Gr. 6	SCH STD, SMLS PIPE
2	1	80	A 420 Gr. WPL6	SCH STD, BW LR 45 DEG ELBOW TRIM TO 30.00
3	2	80		PIPE SUPPORT AS PER DETAIL 3, DWG 65-403-270-200

CONTRAT UF
21.06 X 20

REÇU le
03 JUIL. 2017
Rép: _____

No.	DATE	REVISION	PAR / APP.
0	2017/06/30	ISSUED FOR CONSTRUCTION	QVN

CLIENT:

AGNICO EAGLE

NUQSANA PROMEC MINING

ultragen

CONSULTANT PROJECT NO. 591700

EN ATELIER LE
04 JUIL. 2017
par : BS

NO. DE CONDUITE		SPECIFICATION	PRODUIT	SYSTEME REVETEMENT	CODE DE COULEUR	ISOLATION ET TRACAGE	EPAISS. D'ISOLATION		
403P-80-PDI-CC10-015		CC10	PDI		-			65-403-270-200	PIPE SUPPORT DETAILS
PRESSION D'OPERATION	TEMPERATURE D'OPERATION	PRESSION DE CONCEPTION	TEMPERATURE DE CONCEPTION	PRESSION D'ESSAI	CLASSE D'INSPECTION	CODE DE SERVICE	TRAITEMENT THERMIQUE	65-403-205-200	P&ID
— PSIG	— °F	— PSIG	10 à 15 °F	— PSIG	5% RX	B31.3	—	No. DESSIN	DESSINS DE REFERENCE

SCEAU PROFESSIONNEL

CONC.: KHV
DATE: 2017/05/29
DESSINÉ PAR: KVE
DATE: 2017/05/29
VER. PAR:
DATE:
APP.:
DATE:
ECHELLE: AUCUNE

PROJET: AGNICO EAGLE - MELIADINE DIVISION
403P - COMBUSTIBLE

TITRE: PORTAIL #1
FABRICATION ISOMETRIC
FUEL FROM 403P-80-PDI-CC10-014 TO 65TNK41611

No PROJET	No DESSIN	PAGES	REV.
6515	403P-80-PDI-CC10-015	13/19	0

403P-MN-01

JQ2216-6
pt GMAW AC-001
P1 a P1 R6

U-F

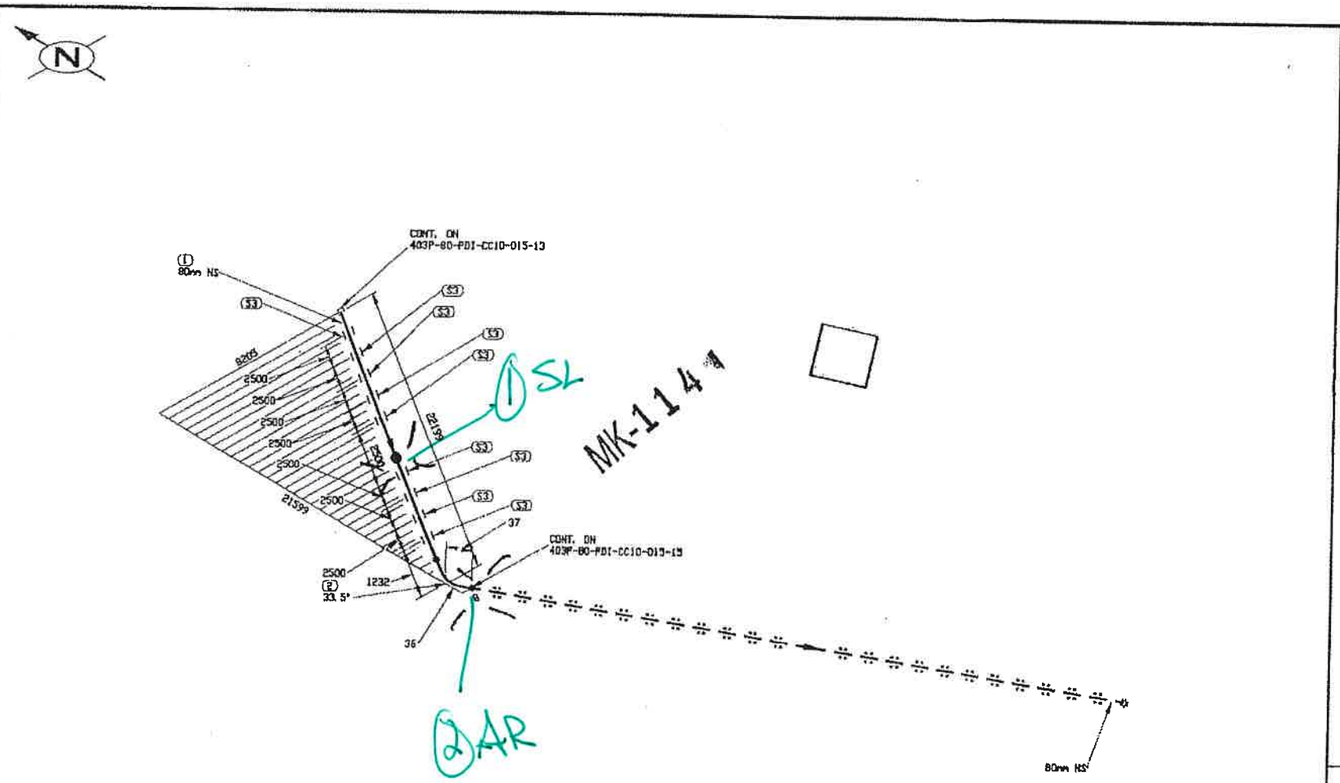

FABRICATION DRAWINGS BASED ON WSP CERTIFIED ENGINEERING

LISTE DE MATERIEL

No	QTE	DIA	MATERIEL/CATALOGUE	DESCRIPTION
1	22162 MM	80	A 333 Gr. 6	SCH STD, SNLS PIPE
2	1	80	A 420 Gr. WPL6	SCH STD, BW LR 45 DEG ELBOW TRIM TO 33.52
3	9	80		PIPE SUPPORT AS PER DETAIL 3, DWG: 65-403-270-200

CONTRAT UF
21.06 X20

REÇU le
03 JUIL. 2017
Rép:

No.	DATE	REVISION	QVN / PAR / APP.
0	2017/06/30	ISSUED FOR CONSTRUCTION	QVN

CLIENT:

AGNICO EAGLE

NUQSANA PROMEC MINING

ultragen

CONSULTANT PROJECT NO. 591700

SCEAU PROFESSIONNEL

CONC.: KHV
DATE: 2017/06/29
DESSINÉ PAR: KVE
DATE: 2017/06/29
VÉR. PAR:
DATE:
APP.:
DATE:
ÉCHELLE: AUCUNE

PROJET: AGNICO EAGLE - MELIADINE DIVISION
403P - COMBUSTIBLE

TITRE: PORTAIL #1
FABRICATION ISOMETRIC
FUEL FROM 403P-80-PDI-CC10-014 TO 65TNK41611

No PROJET	No DESSIN	PAGES	REV.
6515	403P-80-PDI-CC10-015	14/19	0

NO. DE CONDUITE		SPECIFICATION	PRODUIT	SYSTEME REVETEMENT	CODE DE COULEUR	ISOLATION ET TRACAGE	EPAISS. D'ISOLATION		
403P-80-PDI-CC10-015		CC10	PDI		-			65-403-270-200	PIPE SUPPORT DETAILS
PRESSION D'OPERATION	TEMPERATURE D'OPERATION	PRESSION DE CONCEPTION	TEMPERATURE DE CONCEPTION	PRESSION D'ESSAI	CLASSE D'INSPECTION	CODE DE SERVICE	TRAITEMENT THERMIQUE	65-403-205-200	P&ID
— PSIG	— °F	— PSIG	10 à 15 °F	— PSIG	5% RX	B31.3	—	No DESSIN	DESSINS DE REFERENCE

JQ2216.6
Pt G-MAW K1001
P1 a P1 R6

ENATELIER LE
04 JUIL. 2017
par: BD

403P-MN-01

Fluide Diesel

U-F.

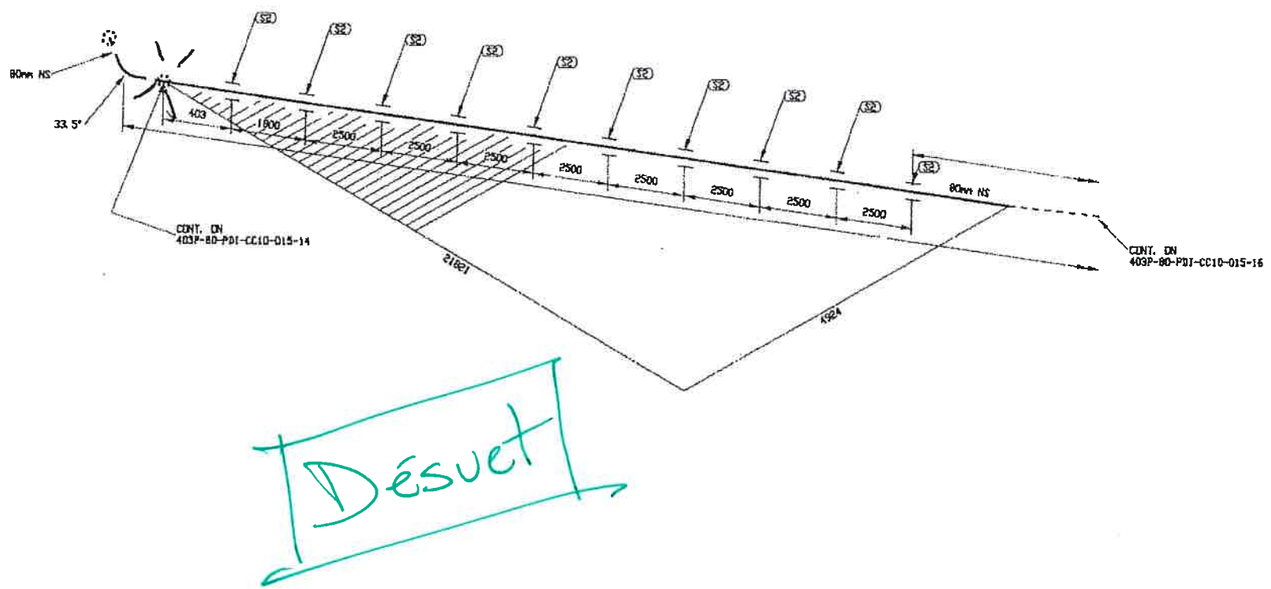

LISTE DE MATERIEL				
No	QTE	DIA	MATERIEL/CATALOGUE	DESCRIPTION
1	23453 MM	80	A 333 Gr. 6	SCH STD, SMLS PIPE
2	10	80		PIPE SUPPORT AS PER DETAIL 3, DWG: 65-403-270-200

CONTRAT UF
21.06 X20

REÇU le
03 JUIL. 2017
Rép: _____

FABRICATION DRAWINGS BASED ON WSP CERTIFIED ENGINEERING

No.	DATE	REVISION	QVN / PAR / APP.
0	2017/06/30	ISSUED FOR CONSTRUCTION	QVN

CLIENT: AGNICO EAGLE

NUQSANA PROMEC MINING

ultragen

CONSULTANT PROJECT NO. 591700

SCEAU PROFESSIONNEL

CONC.: KHV DATE: 2017/06/29
DESSINÉ PAR: KVE DATE: 2017/06/29
VER. PAR: DATE:
APP.: DATE:
ECHELLE: AUCUNE

PROJET: AGNICO EAGLE - MELIADINE DIVISION
403P - COMBUSTIBLE

TITRE: PORTAIL #1
FABRICATION ISOMETRIC
FUEL FROM 403P-80-PDI-CC10-014 TO 65TNK41611

No PROJET	No DESSIN	PAGES	REV.
6515	403P-80-PDI-CC10-015	15/19	0

403P-MIN-PI

EN ATELIER LE
04 JUIL. 2017
par: BD

NO. DE CONDUITE		SPECIFICATION	PRODUIT	SYSTEME REVETEMENT	CODE DE COULEUR	ISOLATION ET TRAÇAGE	EPAISS. D'ISOLATION		
403P-80-PDI-CC10-015		CC10	PDI		-			65-403-270-200	PIPE SUPPORT DETAILS
PRESSION D'OPERATION	TEMPERATURE D'OPERATION	PRESSION DE CONCEPTION	TEMPERATURE DE CONCEPTION	PRESSION D'ESSAI	CLASSE D'INSPECTION	CODE DE SERVICE	TRAITEMENT THERMIQUE	65-403-205-200	P&ID
— PSIG	— °F	— PSIG	10 à 15°	— PSIG	5% RX	B31.3	—	No. DESSIN	DESSINS DE REFERENCE

Fluides Divers

U-F

JG221C-L
pt GMAW ASC01
pt a PI & G

FICHIER: N:\Agnico Eagle\Meliadine\Isométrie\Fuel Distribution\05. Drawing\01. Isométrique\02. Portail 1\403P-80-PDI-CC10-015-15.DWG
DERNIÈRE LE: Jun 29, 2017, 5:43pm

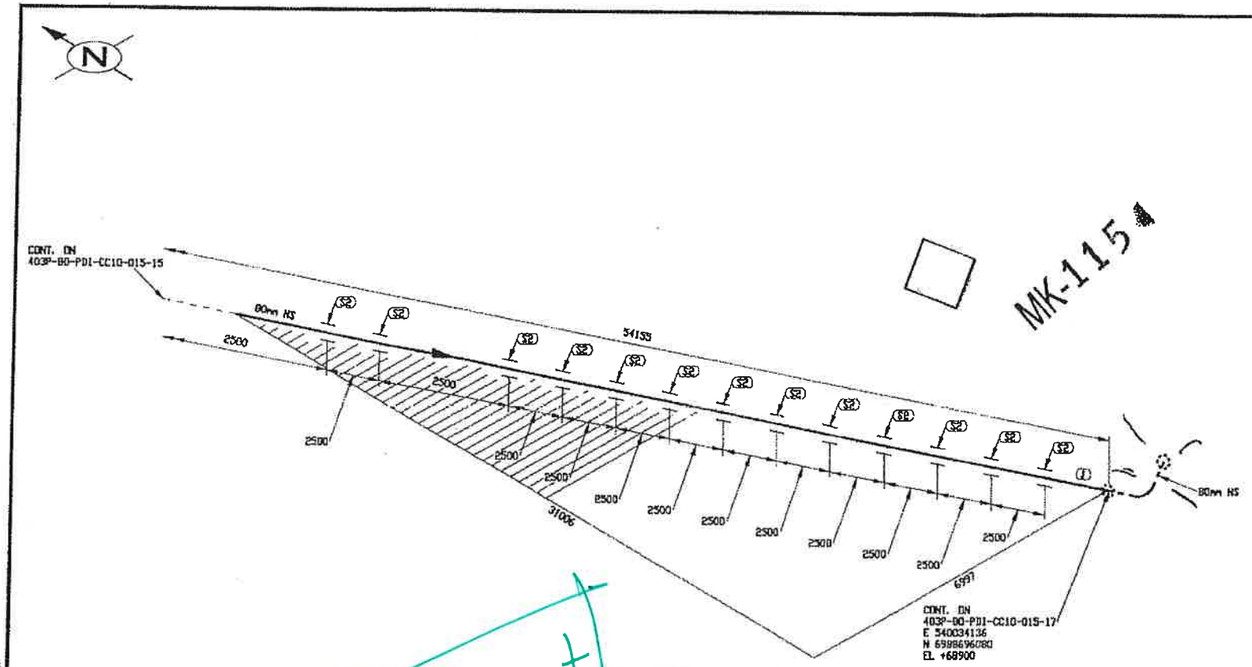

Désuet

FABRICATION DRAWINGS BASED ON WSP CERTIFIED ENGINEERING

LISTE DE MATERIEL

No	QTE	DIA	MATERIEL/CATALOGUE	DESCRIPTION
1	31786 MM	80	A 333 Gr. 6	SCH STD, SMLS PIPE
2	13	80		PIPE SUPPORT AS PER DETAIL 3, DWG 65-403-270-200

CONTRAT UP
21.06 X20

REÇU le
03 JUIL. 2017
Rép:

EN ATELIER LE
04 JUIL. 2017
par:

No.	DATE	REVISION	QVN / PAR / APP.
0	2017/06/30	ISSUED FOR CONSTRUCTION	QVN

CLIENT: AGNICO EAGLE

NUQSANA PROMEC MINING

Ultragen

CONSULTANT PROJECT NO. 591700

SCEAU PROFESSIONNEL

CONC.: KHV
DATE: 2017/06/29
DESSINÉ PAR: KVE
DATE: 2017/06/29
VÉR. PAR:
DATE:
APP.:
DATE:
ÉCHELLE: AUCUNE

PROJET: AGNICO EAGLE - MELIADINE DIVISION
403P - COMBUSTIBLE

TITRE: PORTAIL #1
FABRICATION ISOMETRIC
FUEL FROM 403P-80-PDI-CC10-014 TO 65TNK41611

No PROJET	No DESSIN	PAGES	REV.
6515	403P-80-PDI-CC10-015	16/19	0

403P-MN-01

NO. DE CONDUITE		SPÉCIFICATION	FLUIDE	SYSTÈME REVÊTEMENT	CODE DE COULEUR	ISOLATION ET TRAÇAGE	ÉPAISS. D'ISOLATION		
403P-80-PDI-CC10-015		CC10	PDI		–			65-403-270-200	PIPE SUPPORT DETAILS
PRESSION D'OPÉRATION	TEMPÉRATURE D'OPÉRATION	PRESSION DE CONCEPTION	TEMPÉRATURE DE CONCEPTION	PRESSION D'ESSAI	CLASSE D'INSPECTION	CODE DE SERVICE	TRAITEMENT THERMIQUE	65-403-205-200	P&ID
— PSIG	— °F	— PSIG	10 5/8 °F	— PSIG	5% RX	B31.3	—	No. DESSIN	DESSINS DE RÉFÉRENCE

Fluide Diesel

U-F

PT
J02216.6
GMAW PC-01
P1 à P1
1-6

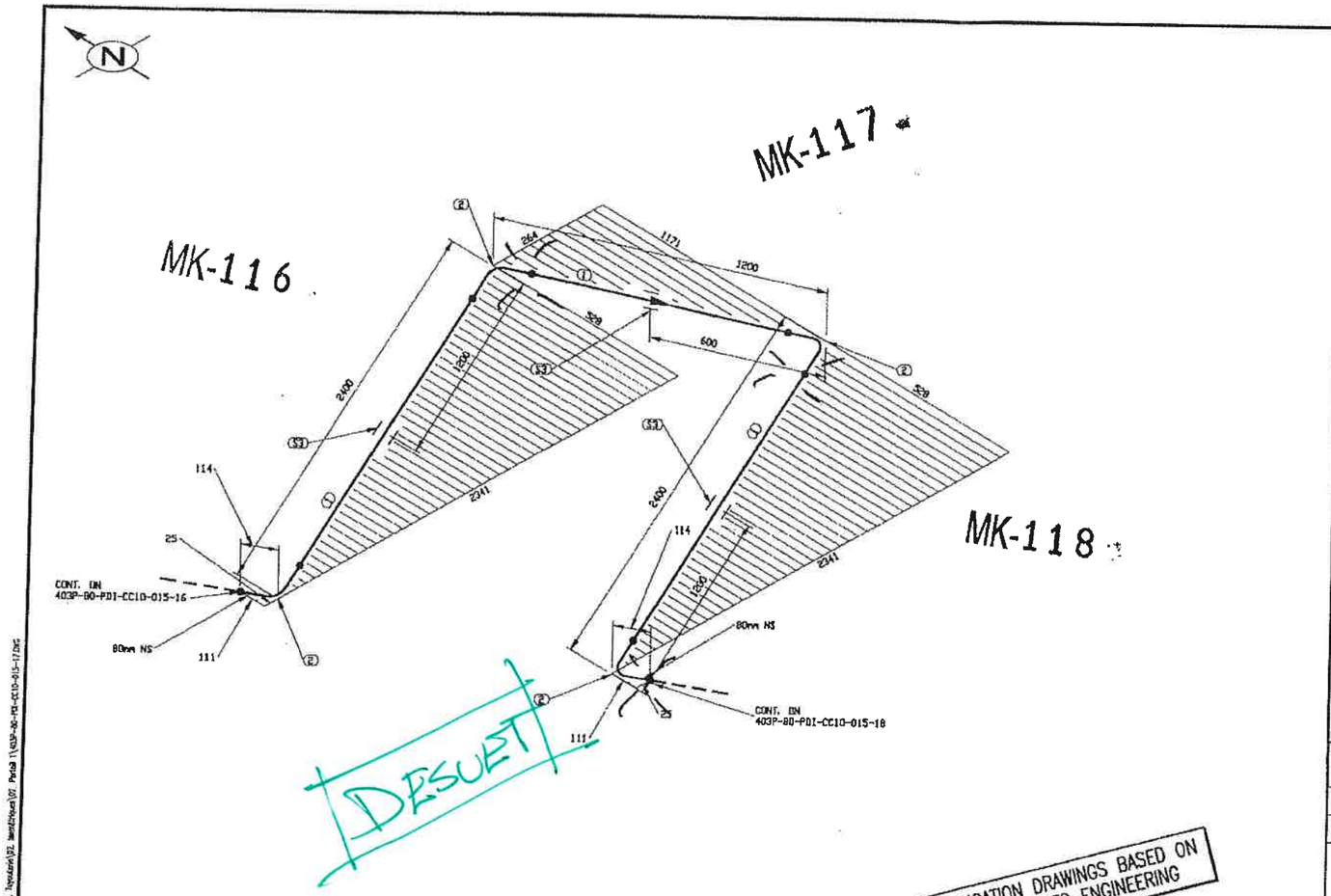

FABRICATION DRAWINGS BASED ON WSP CERTIFIED ENGINEERING

LISTE DE MATERIEL

No	QTE	D'A	MATERIEL/CATALOGUE	DESCRIPTION
1	5316 MM	80	A 333 Gr. 6	SCH STD, SMLS PIPE
2	4	80	A 420 Gr. WPL6	SCH STD, BW LR 90 DEG ELBOW
3	3	80		PIPE SUPPORT AS PER DETAIL 3, DWG: 65-403-270-200

CONTRAT UF
21.06 X20

REÇU le
03 JUIL. 2017
Rép: _____

EN ATELIER LE
04 JUIL. 2017
par: [signature]

No.	DATE	REVISION	PAR / APP.
0	2017/06/30	ISSUED FOR CONSTRUCTION	QVN

CLIENT:

AGNICO EAGLE

NUQSANA PROMEC MINING

ultragen

CONSULTANT PROJECT NO. 591700

SCEAU PROFESSIONNEL

CONC.: KHV
DATE: 2017/06/28
DESSINÉ PAR: KVE
DATE: 2017/06/28
VÉR. PAR:
DATE:
APP.:
DATE:
ÉCHELLE: AUCUNE

PROJET: AGNICO EAGLE - MELIADINE DIVISION
403P - COMBUSTIBLE

TITRE: PORTAIL #1
FABRICATION ISOMETRIC
FUEL FROM 403P-80-PDI-CC10-014 TO 65TNK41611

No PROJET	No DESSIN	PAGES	REV.
6515	403P-80-PDI-CC10-015	17/19	0

NO. DE CONDUITE		SPECIFICATION	PRODUIT	SYSTEME REVETEMENT	CODE DE COULEUR	ISOLATION ET TRACAGE	EPAISS. D'ISOLATION		
403P-80-PDI-CC10-015		CC10	PDI		–			65-403-270-200	PIPE SUPPORT DETAILS
PRESSION D'OPERATION	TEMPERATURE D'OPERATION	PRESSION DE CONCEPTION	TEMPERATURE DE CONCEPTION	PRESSION D'ESSAI	CLASSE D'INSPECTION	CODE DE SERVICE	TRAITEMENT THERMIQUE	65-403-205-200	P&ID
— PSIG	— °F	— PSIG	10 à 15 °F	— PSIG	5% RX	B31.3		No. DESSIN	DESSINS DE REFERENCE

JQ2216.6
Pt GMAW 1c-00
Pl à Pl 46

Fluide Diesel

U-F

403P MN-01

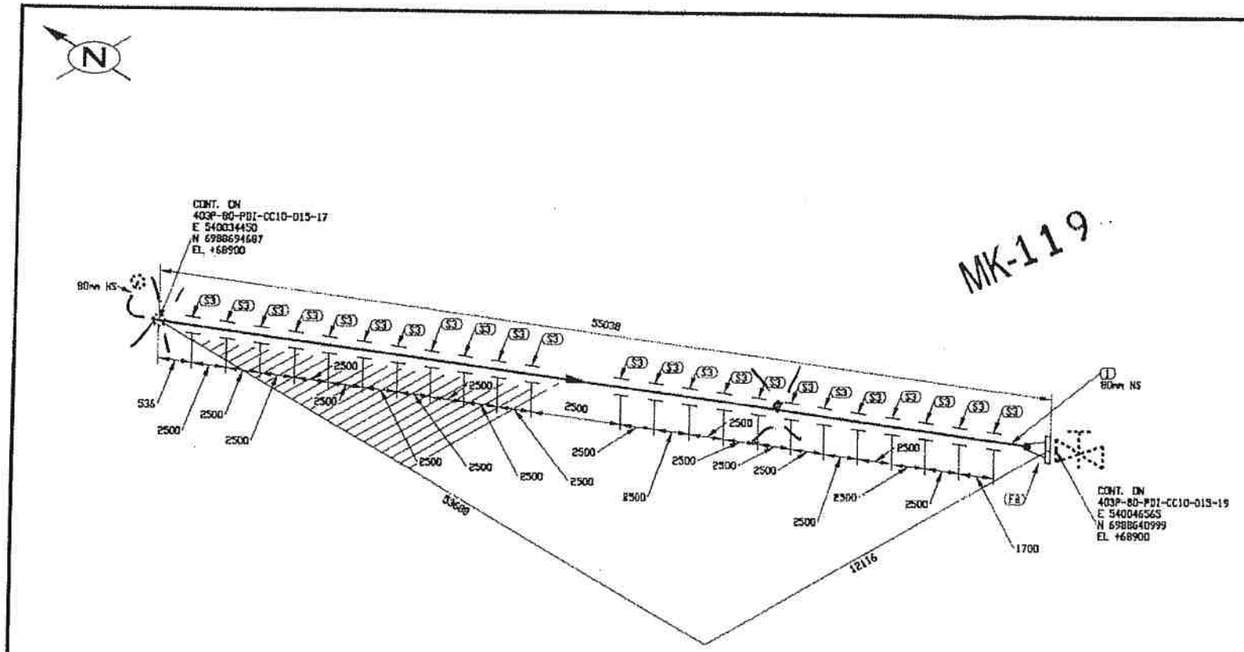

MK-119

DÉSUET

FABRICATION DRAWINGS BASED ON WSP CERTIFIED ENGINEERING

LISTE DE MATERIEL

No	QTE	DIA	MATERIEL/CATALOGUE	DESCRIPTION
1	54970 MM	80	A 333 Gr. 6	SCH STD, SMLS PIPE
2	1	80	A 350 Gr. LF2	CL 150, SCH STD, RF, WN FLANGE
3	23	80		PIPE SUPPORT AS PER DETAIL 3, DWG 65-403-270-200

CONTRAT UF
21.06 X20

REÇU le
03 JUIL. 2017
Rép: _____

EN ATELIER LE
04 JUIL. 2017
par: [signature]

No.	DATE	REVISION	PAR / APP.
0	2017/06/30	ISSUED FOR CONSTRUCTION	QVN

CLIENT: AGNICO EAGLE

NUQSANA PROMEC MINING

ultragen

CONSULTANT PROJECT NO. 591700

SCEAU PROFESSIONNEL

CONC.: KHV
DATE: 2017/06/29
DESSINÉ PAR: KVE
DATE: 2017/06/29
VÉR. PAR:
DATE:
APP.:
DATE:
ÉCHELLE: AUCUNE

PROJET: AGNICO EAGLE - MELIADINE DIVISION
403P - COMBUSTIBLE

TITRE: PORTAIL #1
FABRICATION ISOMETRIC
FUEL FROM 403P-80-PDI-CC10-014 TO 65TNK41611

No PROJET	No DESSIN	PAGES	REV.
6515	403P-80-PDI-CC10-015	18/19	0

NO. DE CONDUITE		SPECIFICATION	PRODUIT	SYSTEME REVETEMENT	CODE DE COULEUR	ISOLATION ET TRACAGE	EPAISS. D'ISOLATION		
403P-80-PDI-CC10-015		CC10	PDI		-			65-403-270-200	PIPE SUPPORT DETAILS
PRESSION D'OPERATION	TEMPERATURE D'OPERATION	PRESSION DE CONCEPTION	TEMPERATURE DE CONCEPTION	PRESSION D'ESSAI	CLASSE D'INSPECTION	CODE DE SERVICE	TRAITEMENT THERMIQUE	65-403-205-200	P&ID
— PSIG	— °F	— PSIG	10 à 15 °F	— PSIG	5% RX	B31.3	—	No. DESSIN	DESSINS DE REFERENCE

JQ2216.6
Pt GMAW AC 800
P1 à P1 L6

Fluide Diesel

U-F.

403P-MN-01

AGNICO EAGLE

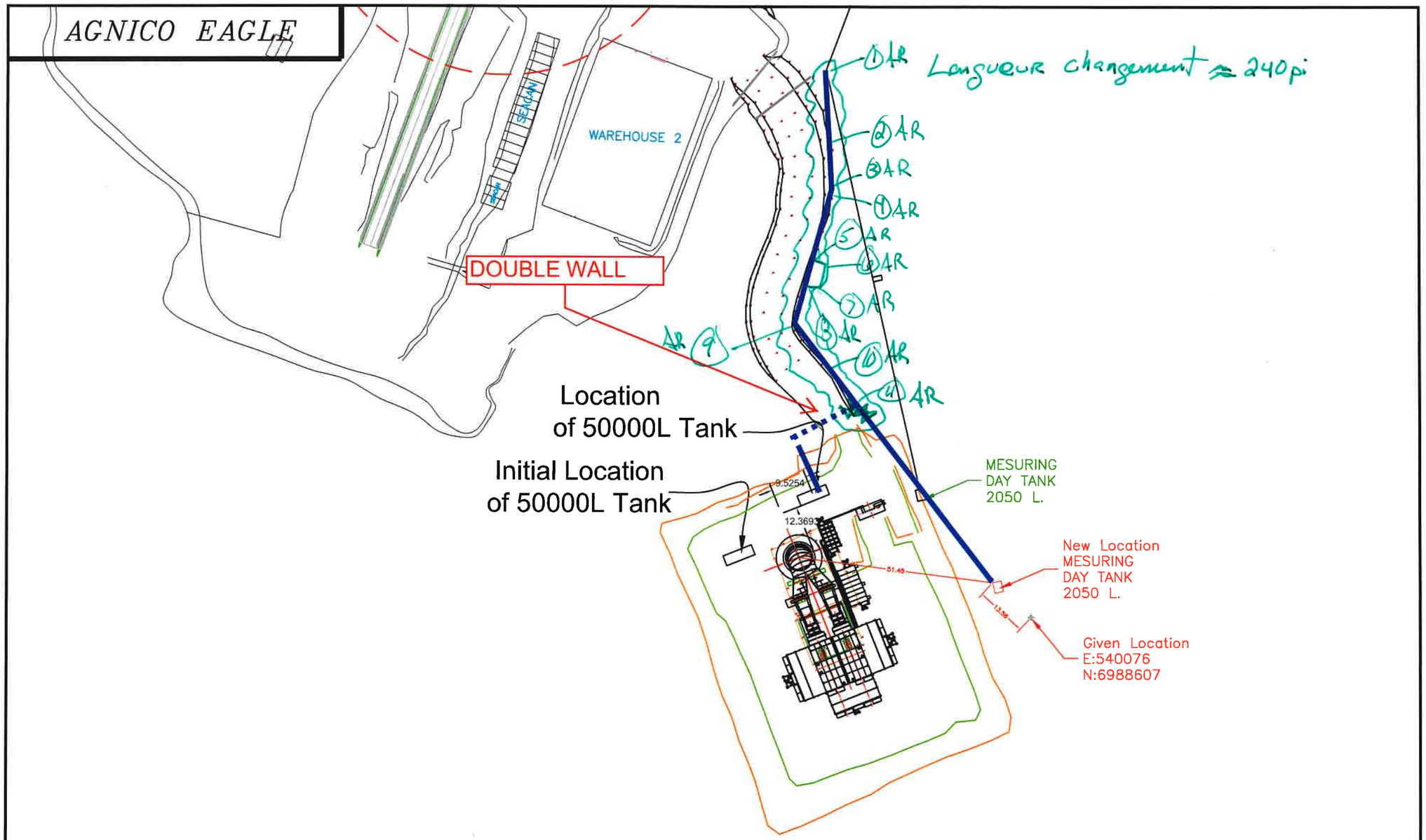

1AR Longueur changement ≈ 240pi

2AR

3AR

4AR

5AR

6AR

7AR

8AR

9AR

10AR

11AR

HAMELARPENTAGE

Système de Coord.: NAD83 UTM15	444 - Ventilation Intake Measuring Day Tank Location		Dessine par: JF Landreville
Echelle: n.t.s.			Approuve par: Hamel Arp
No plan: 444 – Proposed Fuel Tank Location		Date des travaux : tbd	Date d'envoi : 2017-11-02

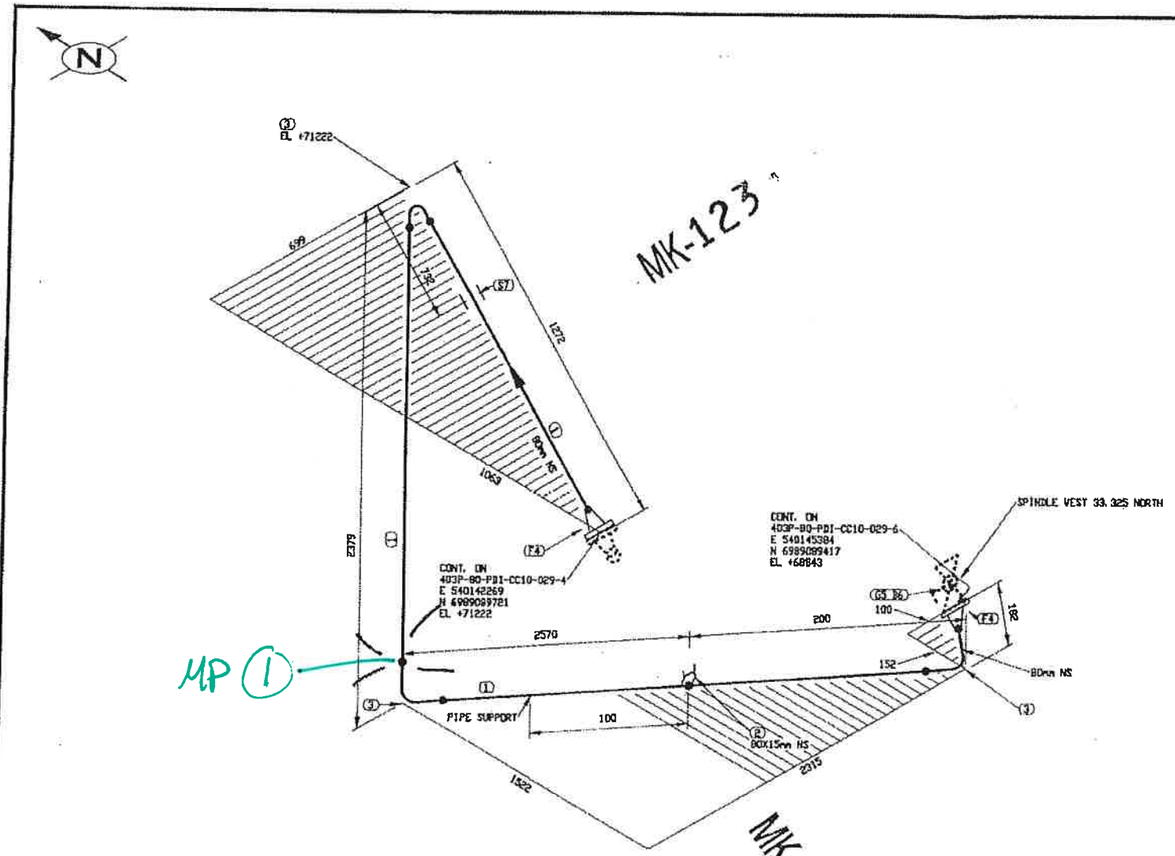

FABRICATION DRAWINGS BASED ON WSP CERTIFIED ENGINEERING

LISTE DE MATERIEL

No	QTE	DIA	MATERIEL/CATALOGUE	DESCRIPTION
1	5783 MM	80	A 333 Gr. 6	SCH STD, SMLS PIPE
2	1	80X15	A 350 Gr. LF2	CL 3000, THREDOLET
3	3	80	A 420 Gr. WPL6	SCH STD, BV LR 90 DEG ELBOW
4	2	80	A 350 Gr. LF2	CL 150, SCH STD, RF, WN FLANGE
5	1	80	ASME B16.20	CL 150, GARLOCK 5500, RING TYPE GASKET 1/8" THK
6	4	16	A 193 B7/A 194 2H	CL 150, 4 - 15.875 X 90 STUD BOLTS c/w TWO HEAVY HEX NUTS
7	1	80		PIPE SUPPORT AS PER DETAIL 3, DWG 65-403-270-200

CONTRAT UF
21.06 X 20

REÇU le
03 JUIL. 2017
Rép: _____

EN ATELIER LE
04 JUIL. 2017
par : BS.

No.	DATE	REVISION	QVN / PAR / APP.
0	2017/06/30	ISSUED FOR CONSTRUCTION	

CLIENT: AGNICO EAGLE

NUQSANA PROMEC MINING

ultragen

CONSULTANT PROJECT NO. 591700

SCEAU PROFESSIONNEL

CONC.: KHV
DATE: 2017/06/29
DESSINÉ PAR: KVE
DATE: 2017/06/29
VÉR. PAR:
DATE:
APP.:
DATE:
ÉCHELLE: AUCUNE

PROJET: AGNICO EAGLE - MELIADINE DIVISION
403P - COMBUSTIBLE

TITRE: PORTAIL #1
FABRICATION ISOMETRIC
FUEL FROM 65PDD41603A/B TO 65TNK41609/10/11

No PROJET	No DESSIN	PAGES	REV.
6515	403P-80-PDI-CC10-029	5/10	0

NO. DE CONDUITE		SPECIFICATION	PRODUIT	SYSTEME REVETEMENT	CODE DE COULEUR	ISOLATION ET TRACAGE	EPAISS. D'ISOLATION		
403P-80-PDI-CC10-029		CC10	PDI		-			65-403-270-200	PIPE SUPPORT DETAILS
PRESSION D'OPERATION	TEMPERATURE D'OPERATION	PRESSION DE CONCEPTION	TEMPERATURE DE CONCEPTION	PRESSION D'ESSAI	CLASSE D'INSPECTION	CODE DE SERVICE	TRAITEMENT THERMIQUE	65-403-205-200	P&ID
— PSIG	— °F	— PSIG	10 à 15 °F	— PSIG	5%	B31.3	—	No. DESSIN	DESSINS DE REFERENCE

JQ2216.6
Pt GMAW AC
P1 à P1 001
R6

Fluide Diesel

U-F.

403P-MN-01

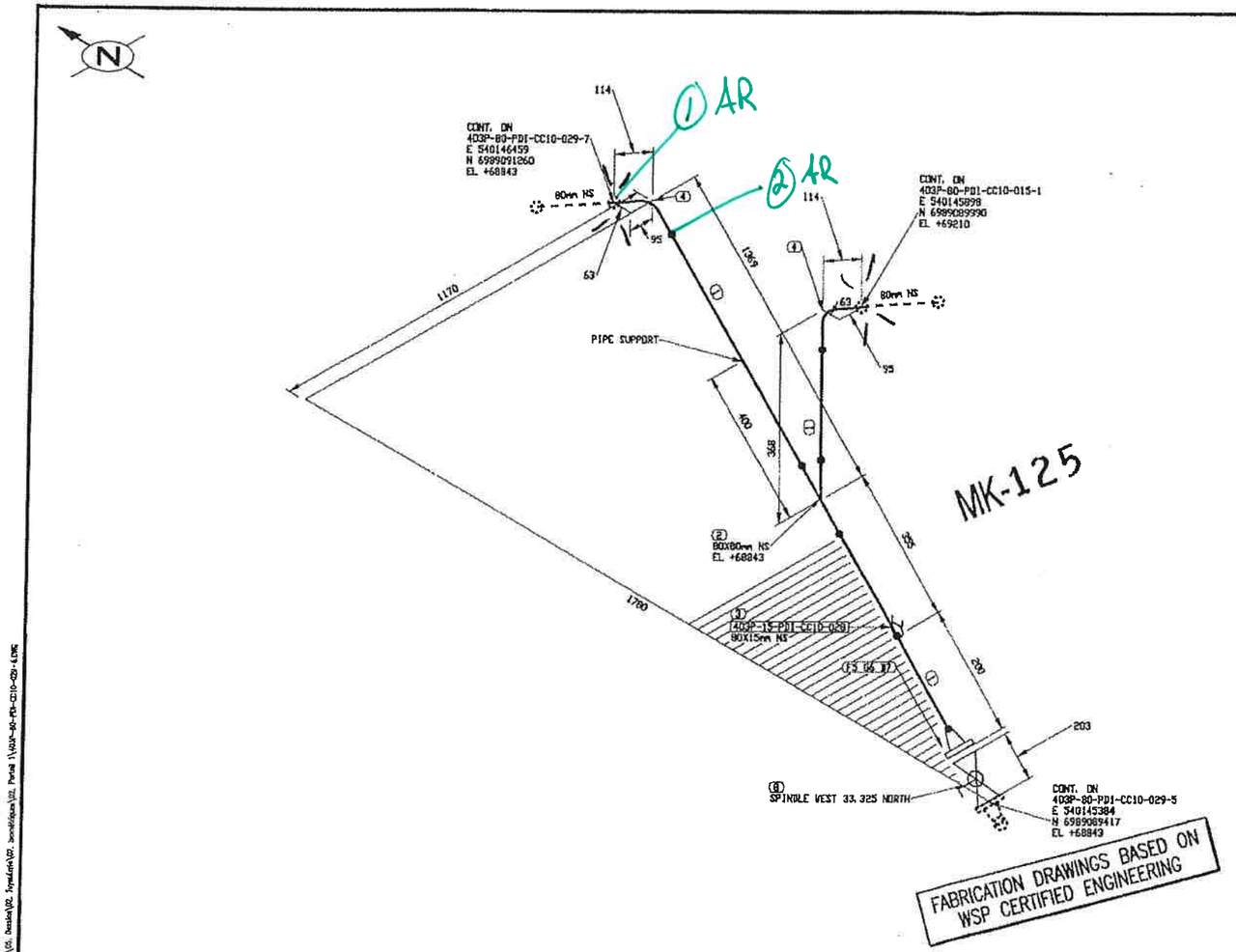

LISTE DE MATERIEL

No.	QTE	DIA	MATERIEL/CATALOGUE	DESCRIPTION
1	1738 MM	80	A 333 Gr. 6	SCH STD, SMLS PIPE
2	1	80X80	A 420 Gr. WPL6	SCH STD, BW STRAIGHT TEE
3	1	80X15	A 350 Gr. LF2	CL 3000, THREDOLET
4	2	80	A 420 Gr. WPL6	SCH STD, BW LR 90 DEG ELBOW
5	1	80	A 350 Gr. LF2	CL 150, SCH STD, RF, WN FLANGE
6	1	80	ASME B16.20	CL 150, GARLOCK 5500, RING TYPE GASKET 1/8" THK
7	4	16	A 193 B7/A 194 2H	CL 150, 4 - 15.875 X 90 STUD BOLTS c/w TWO HEAVY HEX NUTS
8	1	80	BA-31	CL 150, RF, BALL VALVE

CONTRAT UF
21 06 X26

REÇU le
03 JUIL. 2017
Rép:

EN ATELIER LE
04 JUIL. 2017
par:

No.	DATE	REVISION	QVN / PAR / APP.
0	2017/06/30	ISSUED FOR CONSTRUCTION	

CLIENT: AGNICO EAGLE

NUQSANA-PROMEC MINING

ultragen

CONSULTANT PROJECT NO. 591700

SCEAU PROFESSIONNEL

CONC.: KHV DATE: 2017/05/29
DESSINÉ PAR: KVE DATE: 2017/05/29
VER. PAR: DATE:
APP.: DATE:
ECHELLE: AUCUNE

PROJET: AGNICO EAGLE - MEL1ADINE DIVISION
403P - COMBUSTIBLE

TITRE: PORTAIL #1
FABRICATION ISOMETRIC
FUEL FROM 65PDD41603A/B TO 65TNK41609/10/11

No PROJET	No DESSIN	PAGES	REV.
6515	403P-80-PDI-CC10-029	6/10	0

NO. DE CONDUITE		SPECIFICATION	PRODUIT	SYSTEME REVETEMENT	CODE DE COULEUR	ISOLATION ET TRAÇAGE	EPAISS. D'ISOLATION		
403P-80-PDI-CC10-029		CC10	PDI		-			65-403-270-200	PIPE SUPPORT DETAILS
PRESS-ON D'OPERATION	TEMPERATURE D'OPERATION	PRESSION DE CONCEPTION	TEMPERATURE DE CONCEPTION	PRESS-ON D'ESSAI	CLASSE D'INSPECTION	CODE DE SERVICE	TRAITEMENT THERMIQUE	65-403-205-200	P&ID
— PSIG	— °F	— PSIG	194°F	— PSIG	5% RX	B31.3	—	No. DESSIN	DESSINS DE REFERENCE

IMPRIMÉ LE: Jun 29, 2017, 3:55pm

10-NN-403P-01

JG221C-6
Pt Gmdw AG-001
Pt a Pl RG

Fluide Diesel

U-F

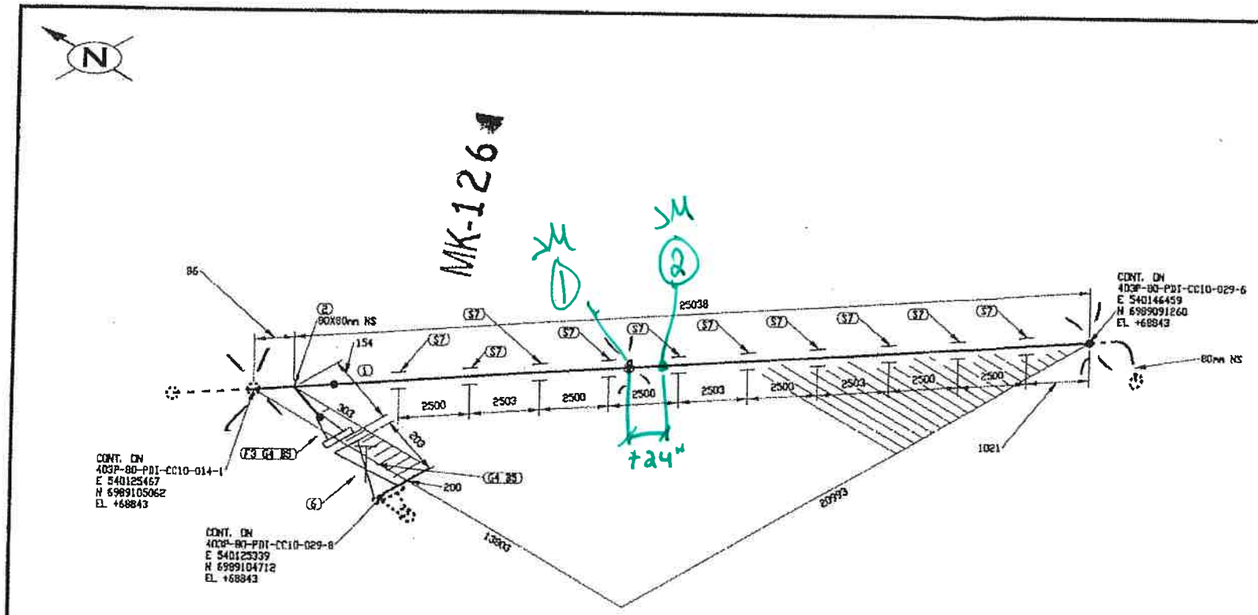

No	QTE	DIA	MATERIEL/CATALOGUE	DESCRIPTION
1	24953 MM	80	A 333 Gr. 6	SCH STD, SMLS PIPE
2	1	80X80	A 420 Gr. WPL6	SCH STD, BW STRAIGHT TEE
3	1	80	A 350 Gr. LF2	CL 150, SCH STD, RF, WN FLANGE
4	2	80	ASME B16.20	CL 150, GARLOCK 3500, RING TYPE GASKET 1/8" THK
5	8	16	A 193 B7/A 194 2H	CL 150, 4 - 15.875 X 90 STUD BOLTS c/w TWO HEAVY HEX NUTS
6	1	80	GA-10	CL 150, RF, GATE VALVE
7	10	80		PIPE SUPPORT AS PER DETAIL 3, DWG 65-403-270-200

CONTRAT UF
21.06.20

REÇU le
03 JUIL. 2017
Rép:

EN ATELIER LE
04 JUIL. 2017
par:

FABRICATION DRAWINGS BASED ON WSP CERTIFIED ENGINEERING

No.	DATE	REVISION	APP.
0	2017/06/30	ISSUED FOR CONSTRUCTION	QVN

CLIENT: AGNICO EAGLE

NUQSANA-PROMEC MINING

ultragen

CONSULTANT PROJECT NO. 591700

SCEAU PROFESSIONNEL

CONC.: KHV
DATE: 2017/06/29
DESSINÉ PAR: KVE
DATE: 2017/05/29
VÉR. PAR:
DATE:
APP.:
DATE:
ÉCHELLE: AUCUNE

PROJET: AGNICO EAGLE - MELIADINE DIVISION
403P - COMBUSTIBLE

TITRE: PORTAIL #1
FABRICATION ISOMETRIC
FUEL FROM 65PDD41603A/B TO 65TNK41609/10/11

No PROJET	No DESSIN	PAGES	REV.
6515	403P-80-PDI-CC10-029	7/10	0

403P-MN-01

NO. DE CONDUITE	SPECIFICATION	PRODUIT	SYSTEME REVETEMENT	CODE DE COULEUR	ISOLATION ET TRACAGE	EPAISS D'ISOLATION		
403P-80-PDI-CC10-029	CC10	PDI		-			65-403-270-200	PIPE SUPPORT DETAILS
PRESSION D'OPERATION / TEMPERATURE D'OPERATION	PRESSION DE CONCEPTION / TEMPERATURE DE CONCEPTION	PRESSION D'ESSAI	CLASSE D'INSPECTION	CODE DE SERVICE	TRAITEMENT THERMIQUE	65-403-205-200	P&ID	
PSIG / °F	PSIG / 100°F	PSIG	5% RX	B31.3	—	No. DESSIN	DESSINS DE REFERENCE	

Fluide Diesel

U-F

JQ2216.6
Pt GMAW DC 001
Pt a Pl AC

Autodesk Vault Portal 11\AUP-80-PDI-CC10-029-7.DWG
Jeudi, August 29, 2019, 1:17:27 pm

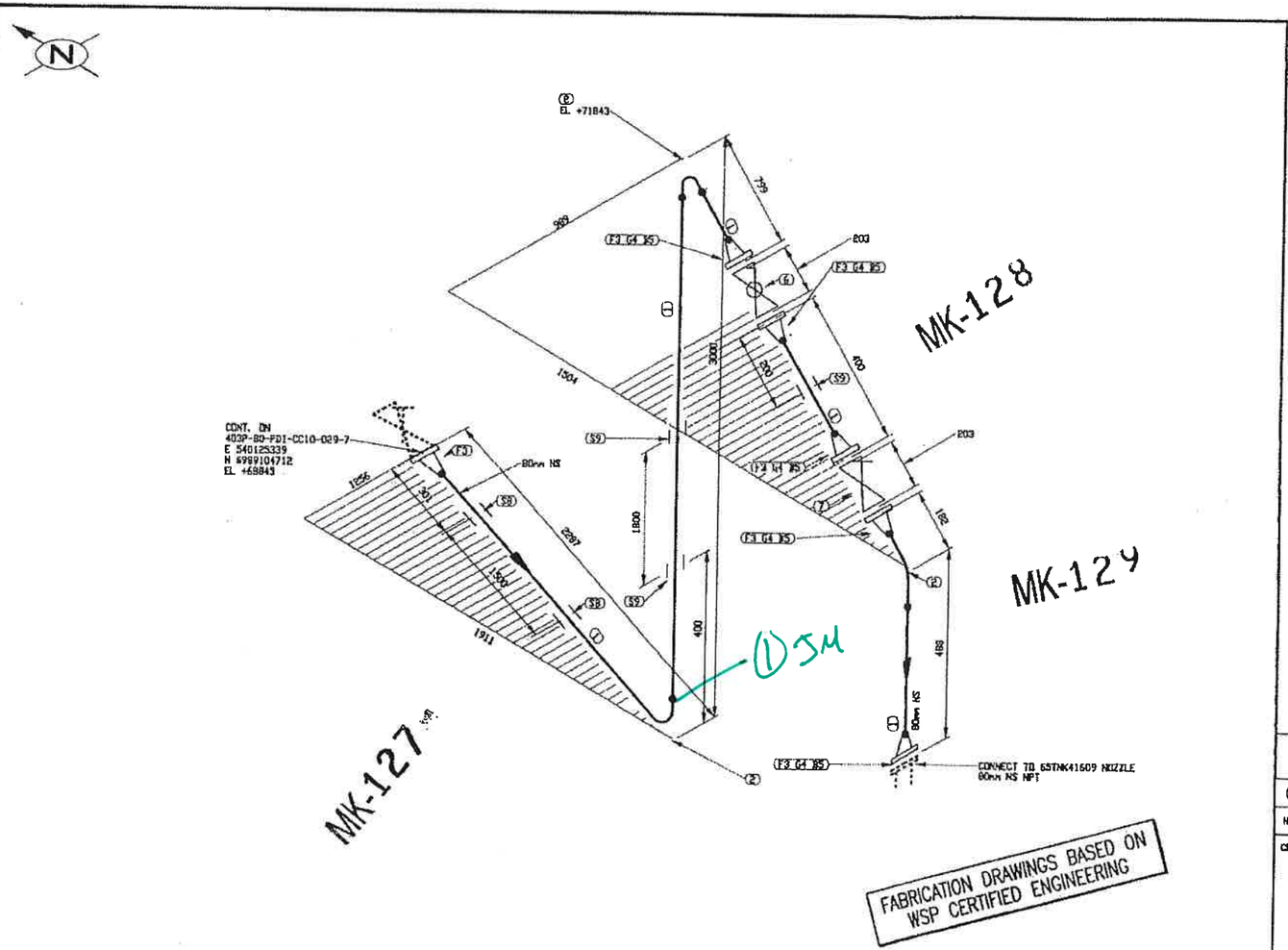

FABRICATION DRAWINGS BASED ON WSP CERTIFIED ENGINEERING

LISTE DE MATERIEL

No	QTE	DIA	MATERIEL/CATALOGUE	DESCRIPTION
1	S922 MM	80	A 333 Gr. 6	SCH STD, SMLS PIPE POEXTOE
2	3	80	A 420 Gr. WPL6	SCH STD, BW LR 90 DEG ELBOW
3	6	80	A 350 Gr. LF2	CL 150, SCH STD, RF, WN FLANGE
4	5	80	ASME B16.20	CL 150, GARLOCK 5500, RING TYPE GASKET 1/8" THK
5	20	16	A 193 B7/A 194 2H	CL 150, 4 - 15.875 X 90 STUD BOLTS c/w TWO HEAVY HEX NUTS
6	1	80	BA-31	CL 150, RF, BALL VALVE
7	1	80	GA-10	CL 150, RF, GATE VALVE
8	2	80		PIPE SUPPORT AS PER DETAIL 3, DWG: 65-403-270-200
9	3	80		PIPE SUPPORT BY CONTRACTOR

CONTRAT UF
21.06 X 20

REÇU le
03 JUIL. 2017
Rép: _____

EN ATELIER LE
04 JUIL. 2017
par: BS

No.	DATE	REVISION	QVN / PAR / APP.
0	2017/06/30	ISSUED FOR CONSTRUCTION	QVN

CLIENT: AGNICO EAGLE

NUQSANA PROMEC MINING

ultragen

CONSULTANT PROJECT NO. 591700

SCEAU PROFESSIONNEL

CONC.: KHV
DATE: 2017/05/28
DESSINE PAR: KVE
DATE: 2017/05/28
VÉR. PAR:
DATE:
APP.:
DATE:
ÉCHELLE: AUCUNE

PROJET: AGNICO EAGLE - MELIADINE DIVISION
403P - COMBUSTIBLE

TITRE: PORTAIL #1
FABRICATION ISOMETRIC
FUEL FROM 65PD041603A/B TO 65TNK41609/10/11

No PROJET	No DESSIN	PAGES	RÉV.
6515	403P-80-PDI-CC10-029	8/10	0

NO. DE CONDUITE		SPECIFICATION	PRODUIT	SYSTEME REVETEMENT	CODE DE COULEUR	ISOLATION ET TRACAGE	EPAISS. D'ISOLATION		
403P-80-PDI-CC10-029		CC10	PDI		-			65-403-270-200	PIPE SUPPORT DETAILS
PRESSION D'OPERATION	TEMPERATURE D'OPERATION	PRESSION DE CONCEPTION	TEMPERATURE DE CONCEPTION	PRESSION D'ESSAI	CLASSE D'INSPECTION	CODE DE SERVICE	TRAITEMENT THERMIQUE	65-403-205-200	P&ID
— PSIG	— °F	— PSIG	10 à 15 °F	— PSIG	5% RX	B31.3	—	No. DESSIN	DESSINS DE REFERENCE

JQ2216.6
G-MAW
P1 a P1

Fluide Diesel

U-F.

403P-MN-01

APPENDIX F

Inspection Report – Portal #1 Fuel Modules Quality Control Documents

AGNICO EAGLE

Vendor Document Status

1 ☐ **Proceed to next submission and status.**

2 ☐ **Proceed with exceptions as noted to next submission and status.**

3 ☐ **Do not proceed.**
Revise as noted and resubmit next submission and status.

4 ☐ **Complete, no further submission required.**

By: **Date:**

Review and authorization to fabricate are only for general conformance with the design concept of the Project as expressed in the Contract Documents. Sole responsibility for the accuracy and completeness of this document, including but not limited to dimensions and quantities, remains with the Supplier/Contractor. Agnico Eagle does not warrant the accuracy or completeness of any of the information contained herein, nor does Agnico Eagle authorize or approve any construction means, methods, techniques, sequences or any safety precautions or procedures.

Agnico Eagle No. 6515-C-270-007-141-QCR-0004 **R:** Sub001

DOCUMENT FOR INFORMATION

GROUPE PROMEC INC.

22466T / 22498E

FUEL MODULES

AGNICO EAGLE

MÉLIADINE

6515-C-270-007

TABLE OF CONTENT

SECTION 1 – INSPECTION AND TEST PLAN

SECTION 1.1 – ITP-003 - FUEL FARM – RANKIN INLET #
SECTION 1.2 – PROCEDURES SUBMITTED AND APPROVED #
SECTION 1.3 – DRAWINGS INDEX (IFC) LATEST REVISION #

SECTION 2 – SPECIFIC

SECTION 2.1 – NON-CONFORMANCE REPORT & LOG – AEM-GE-ITR-002 / AEM-GE-LOG-002 #
SECTION 2.2 – INSPECT MATERIAL/EQUIPMENT FOR DAMAGES OR DEFICIENCIES #
SECTION 2.3 – INSPECTION DEFICIENCY REPORT & LOG – AEM-GE-ITR-005 / AEM-GE-LOG-004 #

SECTION 3 – ELECTRICAL AND INSTRUMENTATION

SECTION 3.1 – ALL CERTIFIED TEST RECORDS, FIRE ALARM CERT'S – VENDOR DOCUMENTS #
SECTION 3.2 – ELECTRICAL EQUIPMENT INSTALLATION INSPECTION RECORD #
SECTION 3.3 – DISTRIBUTION PANEL INSPECTION & TEST RECORD #
SECTION 3.4 – DISTRIBUTION TRANSFORMER FIELD INSPECTION TEST RECORD #
SECTION 3.5 – PCR INSTALLATION AND INSPECTION #
SECTION 3.6 – HEATING DEVICE INSTALLATION RECORD #
SECTION 3.7 – CABLE TRAY INSPECTION RECORD #
SECTION 3.8 – POWER/CONTROL CABLES INSTALLATION TEST RECORD #
SECTION 3.9 – LOW VOLTAGE CABLE INSTALLATION TEST RECORD #
SECTION 3.10 – INSTRUMENT CABLE INSTALLATION TEST RECORD #
SECTION 3.11 – GROUNDING SYSTEM INSTALLATION INSPECTION AND TEST RECORD #
SECTION 3.12 – BRANCH CCT TEST RECORD, LIGHT, RECEPTACLES, HEATERS, ETC #
SECTION 3.13 – FIRE ALARM PANEL AND DEVICE INSTALLATION RECORD #
SECTION 3.14 – INSTRUMENTATION INSTALLATION TEST RECORD (POWERED INSTRUMENTS) #
SECTION 3.15 – INSTRUMENTATION INSTALLATION TEST RECORD (NON-POWERED INSTRUMENTS) #
SECTION 3.16 – MOTOR/INSTALL/MEGGER/ROTATION TEST AND POLARIZATION RECORDS #
SECTION 3.17 – INSTRUMENT LOOP TEST (PRE-COMMISSIONING / COMMISSIONING ACTIVITY) #

SECTION 4 – FINAL TURNOVER

SECTION 4.1 – CONSTRUCTION COMPLETION (JOINT WALKDOWN PUNCHLIST) #
SECTION 4.2 – FINAL ACCEPTANCE OF TURNOVER PACKAGE #
SECTION 4.3 – DECLARATION OF COMPLETION #
SECTION 4.4 – AS-BUILT DRAWINGS #

AGNICO EAGLE

Vendor Document Status

1 ☐ Proceed to next submission and status.

2 ☐ Proceed with exceptions as noted to next submission and status.

3 ☐ Do not proceed.
Revise as noted and resubmit next submission and status.

4 ☒ Complete, no further submission required.

By: LUC SÉNÉCAL Date: 2017-07-10

Review and authorization to fabricate are only for general conformance with the design concept of the Project as expressed in the Contract Documents. Sole responsibility for the accuracy and completeness of this document, including but not limited to dimensions and quantities, remains with the Supplier/Contractor. Agnico Eagle does not warrant the accuracy or completeness of any of the information contained herein, nor does Agnico Eagle authorize or approve any construction means, methods, techniques, sequences or any safety precautions or procedures.

Agnico Eagle No. 6515-C-270-007-141-TES-0007 R: Sub002

DOCUMENT FOR INFORMATION

Inspection and Testing Plan

NUQSANA PROMEC MINING

AGNICO EAGLE

Contract title:	Meliadine Fuel Tanks Piping Supply and Installation	**ITP #**	**AEM-ITP-003**
Contract number:	6515-C-270-007	**Area**	**rankin inlet**
Promec Ref.:	C22498E	**System**	**ALL**
		Discipline	**Electrical Instrumentation**
Approved on :	_____	**Approval Signature**	
Approved by:	_____		

Updated on: 2017-04-26

Legend

H - Hold
W - Witness
I - Inspect
R - Review

Activity No. and CDRL Code	Activity Description (Per Scope of Work)	Responsibility Contractor and/or Sub	Acceptance Criteria (Specifications, Drawings, Industry Code, Regulatory Authority, Manufacturers O&M manual, Controlling Procedure, Quality/Engineering Bulletins, Other/ Site Quality Plan, Contractor Quality Manuals, etc.)	Verification Point				Verification Document(s) 1. List ONLY the Form(s) applicable to installation. 2. ▲ Commissioning Required Document
				Contractor		Client		
				H W I R	Initials & Date	H W I R	Initials & Date	
1.0	**GENERAL**							
1.1	Inspection and Test Plan	Promec / CLIENT		H/R				Approved ITP
1.2	Document review (Acquire and review all applicable documentation)	Promec / CLIENT	Quality Plan	H/R				
1.3	Procedures Submitted and Approved (Cable Installation, Testing, etc.)	Promec / CLIENT	Quality Plan	H/R				All Applicable Approved Procedures
1.4	Drawing Index (IFC) to Latest Revision	Promec	Quality Plan	I/R				VDRL
2.0	**ITP SPECIFIC**							
2.1	Non-Conformance Report & Log (Both CLIENT & Contractor Issued)	Promec / CLIENT	Quality Plan	H/R				AEM-GE-ITR-002 (Non-Conformance Report) ▲ AEM-GE-LOG-002 (Non-Conformance Log)
2.2	Inspect Material/Equipment for Damages or Deficiencies	Promec	Quality Plan	I/R				AEM-GE-ITR-005 (Inspection Deficiency Report) ▲ AEM-GE-LOG-004 (Inspection Deficiency Log)

Inspection and Testing Plan

NUQSANA PROMEC MINING

AGNICO EAGLE

Contract title: Meliadine Fuel Tanks Piping Supply and Installation
Contract number: 6515-C-270-007
Promec Ref.: C22498E

Approved on : _____
Approved by: _____

Approval Signature

ITP # AEM-ITP-003
Area rankin inlet
System ALL
Discipline Electrical Instrumentation

Updated on: 2017-04-26

Legend
H - Hold
W - Witness
I - Inspect
R - Review

Activity No. and CDRL Code	Activity Description (Per Scope of Work)	Responsibility Contractor and/or Sub	Acceptance Criteria (Specifications, Drawings, Industry Code, Regulatory Authority, Manufacturers O&M manual, Controlling Procedure, Quality/Engineering Bulletins, Other/ Site Quality Plan, Contractor Quality Manuals, etc.)	Verification Point				Verification Document(s) 1. List ONLY the Form(s) applicable to installation. 2. ▲ Commissioning Required Document
				Contractor		Client		
				H W I R	Initials & Date	H W I R	Initials & Date	
3.0	**Electrical & Instrumentation**							
3.1	All Certified Test Records • Fire Alarm Cert's - (Engineer's Stamp; Vendor Test Documents) • CSA Approval Documentation	Promec / CLIENT	AEM-IN-PRO-001 (Instrumentation Installation and Testing Procedure)	I/R				▲Third Party Document
3.2	Electrical Equipment Installation Inspection Record	Promec / CLIENT	AEM-EL-PRO-004 (Electrical Apparatus Equipment and Support Installation Procedure)	W/R				AEM-EL-ITR-001 (General Report)
3.3	Distribution Panel Inspection & Test Record	Promec / CLIENT	AEM-EL-PRO-004 (Electrical Apparatus Equipment and Support Installation Procedure)	W/R				AEM-EL-ITR-001 (General Report)
3.4	Distribution Transformer Field Inspection Test Record	Promec / CLIENT	AEM-EL-PRO-004 (Electrical Apparatus Equipment and Support Installation Procedure)	W/R				AEM-EL-ITR-001 (General Report)
3.5	PCR Installation and Inspection	Promec / CLIENT	AEM-IN-PRO-001 (Instrumentation Installation and Testing Procedure)	W/R				AEM-IN-ITR-005A (PCR Panel Report)
3.6	Heating Device Installation Record	Promec / CLIENT	AEM-EL-PRO-004 (Electrical Apparatus Equipment and Support Installation Procedure)	I/R				AEM-EL-ITR-002 (Heating Unit Report)
3.7	Cable tray Inspection Record	Promec / CLIENT	AEM-EL-PRO-003 (Cable Tray Installation Procedure)	I/R				AEM-GE-ITR-006 (Miscellaneous Field Report)
3.8	Power/Control Cables Installation Test Record	Promec / CLIENT	AEM-EL-PRO-001 (Cable Installation and Testing Procedure)	W/R				AEM-EL-ITR-003 (Megger Cable Report) AEM-EL-ITR-004 (Continuity Test Report)
3.9	Low Voltage Cable Installation Test Record	Promec / CLIENT	AEM-EL-PRO-001 (Cable Installation and Testing Procedure)	W/R				AEM-EL-ITR-003 (Megger Cable Report)

Inspection and Testing Plan

NUQSANA PROMEC MINING

AGNICO EAGLE

Contract title: Meliadine Fuel Tanks Piping Supply and Installation
Contract number: 6515-C-270-007
Promec Ref.: C22498E

Approved on : _____
Approved by: _____

Approval Signature

ITP # AEM-ITP-003
Area rankin inlet
System ALL
Discipline Electrical Instrumentation

Updated on: 2017-04-26

Legend
H - Hold
W - Witness
I - Inspect
R - Review

Activity No. and CDRL Code	Activity Description (Per Scope of Work)	Responsibility Contractor and/or Sub	Acceptance Criteria (Specifications, Drawings, Industry Code, Regulatory Authority, Manufacturers O&M manual, Controlling Procedure, Quality/Engineering Bulletins, Other/ Site Quality Plan, Contractor Quality Manuals, etc.)	Verification Point				Verification Document(s) 1. List ONLY the Form(s) applicable to installation. 2. ▲ Commissioning Required Document
				Contractor		Client		
				H W I R	Initials & Date	H W I R	Initials & Date	
3.10	Instrument Cable Installation Test Record	Promec / CLIENT	AEM-EL-PRO-001 (Cable Installation and Testing Procedure)	I/R				AEM-EL-ITR-004 (Continuity Test Report)
3.11	Grounding System (Grid & Pile Grounds) Installation Inspection and Test Record	Promec / CLIENT	AEM-EL-PRO-002 (Grounding Installation and Testing Procedure)	H/R				AEM-GE-ITR-006 (Miscellaneous Field Report)
3.12	Branch cct Test Record (Lights, Receptacles, Heaters, etc.)	Promec / CLIENT	(Instrumentation Installation and Testing Procedure)	I/R				AEM-EL-ITR-001 (General Report)
3.13	Fire Alarm Panel and Device Installation Record	Promec / CLIENT	(Instrumentation Installation and Testing Procedure)	I/R				AEM-EL-ITR-001 (General Report)
3.14	Instrumentation Installation Test Record (Powered Instruments)	Promec / CLIENT	(Instrumentation Installation and Testing Procedure)	W/I/R				AEM-IN-ITR-003A (Level Transmitter) AEM-IN-ITR-004C (Pressure Switch) AEM-IN-ITR-006A (On/Off Valve) AEM-IN-ITR-001B (Flow Switch) AEM-IN-ITR-001C (Flow Transmitter) AEM-IN-ITR-002A (Push Button Station) AEM-IN-ITR-007 (Miscellaneous Instruments)
3.15	Instrumentation Installation Test Record (Non-powered instruments)	Promec / CLIENT	AEM-IN-PRO-001 (Instrumentation Installation and Testing Procedure)	I/R				AEM-IN-ITR-004A (Pressure Indicator) AEM-IN-ITR-004B (Pressure Safety Valve)

Inspection and Testing Plan

NUQSANA PROMEC MINING

AGNICO EAGLE

Contract title:	Meliadine Fuel Tanks Piping Supply and Installation	**ITP #**	**AEM-ITP-003**
Contract number:	6515-C-270-007	**Area**	**rankin inlet**
Promec Ref.:	C22498E	**System**	**ALL**
		Discipline	**Electrical Instrumentation**
Approved on :			
Approved by:			

Approval Signature

Updated on: 2017-04-26

Legend

H - Hold
W - Witness
I - Inspect
R - Review

Activity No. and CDRL Code	Activity Description (Per Scope of Work)	Responsibility Contractor and/or Sub	Acceptance Criteria (Specifications, Drawings, Industry Code, Regulatory Authority, Manufacturers O&M manual, Controlling Procedure, Quality/Engineering Bulletins, Other/ Site Quality Plan, Contractor Quality Manuals, etc.)	Verification Point				Verification Document(s) 1. List ONLY the Form(s) applicable to installation. 2. ▲ Commissioning Required Document
				Contractor		Client		
				H W I R	Initials & Date	H W I R	Initials & Date	
3.16	Motor/Install/Megger/Rotation Test and Polarization Records	Promec / CLIENT	AEM-EL-PRO-004 (Electrical Apparatus Equipment and Support Installation Procedure)	W/R				AEM-EL-ITR-005 (Motor Report)
3.17	Instrument Loop Test (Pre-Commissioning / Commissioning Activity	Promec / CLIENT	(Instrumentation Installation and Testing Procedure)	I/R				AEM-GE-ITR-006 (Miscellaneous Field Report)
4.0	**FINAL TURNOVER**							
4.1	Construction Completion (Contractor Punchlist & Joint Walkdown Punchlist)	Promec / CLIENT	Quality Plan	H/R				▲ AEM-GE-ITR-003 (Punchlist)
4.2	Final Acceptance of Turnover Package	Promec / CLIENT	Quality Plan	H/R				Signed ITP History Docket
4.3	Declaration of Completion	Promec	Quality Plan	H/R				AEM-GE-ITR-004 (Notice of Final Completion)
4.4	As-Built Drawings	Promec	Quality Plan	H/R				All Required As-Built Drawings
END								

PROMEC's Representatives			CLIENT's Representative	
QA/QC	Project Manager			
Name	Name		Name	
Signature	Signature	Date	Signature	Date

AGNICO EAGLE

Vendor Document Status

1 ☐ Proceed to next submission and status.

2 ☐ Proceed with exceptions as noted to next submission and status.

3 ☐ Do not proceed.
Revise as noted and resubmit next submission and status.

4 ☒ Complete, no further submission required.

By: LUC SÉNÉCAL Date: 2017-07-10

Review and authorization to fabricate are only for general conformance with the design concept of the Project as expressed in the Contract Documents. Sole responsibility for the accuracy and completeness of this document, including but not limited to dimensions and quantities, remains with the Supplier/Contractor. Agnico Eagle does not warrant the accuracy or completeness of any of the information contained herein, nor does Agnico Eagle authorize or approve any construction means, methods, techniques, sequences or any safety precautions or procedures.

Agnico Eagle No. 6515-C-270-007-141-TES-0001 R: Sub002

DOCUMENT FOR INFORMATION

Agnico-Eagle Mines Ltd.

Contract no. 6515-C-270-007

Cable Installation and Testing Procedure

AEM-EL-PRO-001

Area No.: All

System No.: All

PROMEC Approvals

Prepared by:	Stéphane Doré	**Signature:**		**Date:**	2017-04-25
Verified by:	Jonathan Roy	**Signature:**		**Date:**	2017-04-25
Approved by:	Éric Poulin	**Signature:**		**Date:**	2017-04-25.

CLIENT Approvals

Verified by:		**Signature:**		**Date:**	
Approved by:		**Signature:**		**Date:**	

Table of Contents

Page

1. SCOPE 3
   1.1 Covered Sections 3
2. EXECUTION 3
   2.1 Inspection and Preparation 3
   2.2 Installation Requirements 3
   2.3 Inspection and Test Requirements 4

APPENDIX A – ALL APPLICABLE ITRs & LOG

1. SCOPE

The procedure is to establish the cable installation and testing procedure.

1.1 Covered Sections

- Medium Voltage and 1 000 V Power Cables.
- 600 V Control Cables.
- 300 V Instrumentation Cables.

2. EXECUTION

2.1 Inspection and Preparation

- Installation of raceways and supports shall be completed before installing cables.
- Conduits shall be tested for obstructions by pulling a mandrel or other approved object through the conduit. Obstructions shall be cleared with a cutting mandrel or other approved means.

2.2 Installation Requirements

- Cables shall be handled carefully when unreeling to avoid damage due to kinking or otherwise bending to radius less than the Manufacturer's or Electrical Code minimum recommended bending radius.
- Cables shall not be laid on rough ground or dragged over sharp objects.
- Cable Installation in Raceways:
  - Cable reels to be set as close as practical to the raceway entrance, and train the cable as directly as possible to the entrance with minimal bending.
  - A protector is to be used at the raceway entrance to protect the cable jacket.
  - For installation of multiple cables in a conduit, all cables are to be pulled simultaneously.
  - Cable installation to be performed so that no undue stress is placed upon the insulation and coverings when they are drawn through conduits or otherwise handled.
  - Cables to be neatly installed avoiding crosses as much as practical.
  - Cables to be supported clear of the tray lip where they exit the tray.
  - Cables to be anchored in place vertically at 1.0 m maximum intervals, and at each bend within 0.3 m of the change in direction at both sides of the bend with appropriate fasteners.
  - A barrier shall be provided to separate power and control cables for installations where they share a common cable tray. Fireproof sheeting shall be provided to separate power and control cables at tee or cross junctions.
- Installation Cables in Boxes and Cabinets:
  - Open wiring to be arranged in a neat and orderly manner.

- Groups of cables to be spaced and supported.
- Slack wire will be left in all junction boxes, pull boxes, and other places so that wires are not drawn tight against conduit and bushings or short radius corners and the insulation eventually damaged by being squeezed between conductor and other objects.

- The cable shall not be bended either temporarily during installation or permanently to a radius less than the Manufacturer's recommended minimum bending radius.
  - Cable Termination Instructions:
    - Leave each conductor of a cable long enough to reach the most distant terminal point in the equipment being installed. Loop and tie the conductors in a bundle.
    - Strip cable jackets only as far back as needed to accommodate the termination of the conductors.
    - Slack wire to be left at all terminal connections so that stress is not placed on terminal studs and other connections.
    - Control and Instrumentation Cables:
      - All shields on the shielded cables to be kept floating at the transducer and final control element ends (thermocouples, transmitters, analyzers, etc.) and to be terminated and grounded in DCS cabinets.
      - Motor terminal wiring to be bolted together with the ring tongue type terminals and tin plated bolts of the approximate size.
  - Cable Penetration Sealing: Fire stopping seal penetrations shall be in accordance with Client specifications.
  - Tagging of Cables Installations:
    - Identify all cables in accordance with attached cable tagging procedure.
    - Affix cable identification tags at each termination as close to the termination as possible, and at pull boxes, manholes or other points of access.
    - Individual conductor identification products may be slip-on, or heat shrink. Identification information to be typed or printed with indelible ink.
    - Single conductor cables shall be color coded and comply with the Canadian Electrical Code CSA C22.1-06, Article 4-036.

2.3 Inspection and Test Requirements

Installed power cables shall be inspected and tested, including continuity and insulation (Megger) of all cables, in accordance with applicable codes and standards.

Installed control shall be inspected and tested, including continuity, in accordance with applicable codes and standards.

Appendix A

ALL APPLICABLE ITRs & LOGs

AGNICO EAGLE

Vendor Document Status

1 ☐ Proceed to next submission and status.

2 ☐ Proceed with exceptions as noted to next submission and status.

3 ☐ Do not proceed.
Revise as noted and resubmit next submission and status.

4 ■ Complete, no further submission required.

By: LUC SÉNÉCAL Date: 2017-07-10

Review and authorization to fabricate are only for general conformance with the design concept of the Project as expressed in the Contract Documents. Sole responsibility for the accuracy and completeness of this document, including but not limited to dimensions and quantities, remains with the Supplier/Contractor. Agnico Eagle does not warrant the accuracy or completeness of any of the information contained herein, nor does Agnico Eagle authorize or approve any construction means, methods, techniques, sequences or any safety precautions or procedures.

Agnico Eagle No. 6515-C-270-007-141-TES-0003 R: Sub002

DOCUMENT FOR INFORMATION

Agnico-Eagle Mines Ltd.

Contract no. 6515-C-270-007

Grounding Installation and Testing Procedure

AEM-EL-PRO-002

Area No.: All

System No.: All

PROMEC Approvals

Prepared by:	Stéphane Doré	**Signature:**		**Date:**	2017-04-25
Verified by:	Jonathan Roy	**Signature:**		**Date:**	2017-04-25
Approved by:	Éric Poulin	**Signature:**		**Date:**	2017-04-25.

CLIENT Approvals

Verified by:		**Signature:**		**Date:**	
Approved by:		**Signature:**		**Date:**	

TABLE OF CONTENTS

1. GENERAL 3
   1.1 Introduction 3
   1.2 References 3
   1.3 Design requirements 4
2. PRODUCTS 4
   2.1 Materials 4
3. EXECUTION 4
   3.1 Installation 4
   3.2 Inspection and tests 7

1. GENERAL

1.1 Introduction

- The purpose of electrical ground testing is to determine the effectiveness of the grounding medium with respect to true ground (earth). Most electrical systems do not rely on the earth to carry load current (this is done by the system conductors) but earth may provide the return path for fault currents, and for safety, all electrical equipment frames are connected to ground.
- During resistance testing, precautions shall be taken to ensure personnel safety. For example the test cable area shall be barricaded and testing personnel shall wear adequate PPE when handling test probes.
- All tests shall be documented and submitted to Owner's representative.
- Weather conditions (e.g. temperature and humidity) can have a considerable effect on resistance readings. Hence, it is important that weather conditions be documented for every resistance test.
- In general, the lower the ground resistance, the safer the system is considered to be. Where the resistance is unsatisfactory, those components of the circuit causing unsatisfactory readings shall be repaired or replaced until the resistance meets the minimum requirements.

1.2 References

- Canadian and National electrical code requirements.
- IEEE Standard IEEE-80 and 81
- IEEE 142, Recommended Practice for grounding of Industrial and Commercial Power Systems.
- International Electrical Testing Association Inc. (NETA).

1.3 Design requirements

- Ground electrical equipment in accordance with ANSI/ IEEE Standard 142, IEEE Standard 80 and the requirements of this Section.
- Design shall be such that acceptable levels of step and touch potential are not exceeded either for exposure to plant personnel or for external exposure via transfer potentials.
- The grounding system consists of a number of above ground interconnected conductors to provide a network to which all equipment and metallic structures are connected, either directly or by interconnecting cables. Bond the ground system to the main plant ground grid system at places designated on the Drawings.

2. PRODUCTS

2.1 Materials

- Bare Cable: Uninsulated, stranded, tinned copper cable of adequate size for station and substation ground grids, for connection of electrical and other equipment to the grounding grid and for running along the top of underground ductbanks.
- Insulated Cable: Soft drawn copper, Class B stranding with green colored insulation (if required).
- All ground connection will be bolted or compress type.
- Furnish all connectors, clamps, anchors, fittings, etc., made of copper or copper-alloy.

3. EXECUTION

3.1 Installation

- Install products in accordance with manufacturer's instructions.
- Equipment Safety Grounding
  a. Clamp the ground conductor running on building steel to the flanges of the steel and provide access for connecting equipment ground taps.
  b. If ground conductor is installed along the cable trays as a continuous conductor, clamp the ground cable to the outside of the trays side rail with

appropriate cable tray clamps. Run the cable on the top power tray wherever possible. The cable may be run along control trays in runs that do not have power trays. Do not run ground cables on any instrument trays.

c. For motors remote from the ground grid, run a bare ground cable with the duct bank or tray connecting the motor frame to the station ground grid.

d. Provide all enclosures of electrical distribution or control equipment with a visible grounding cable connection between the enclosure and the station grounding system.

e. Provide grounding cable taps to electrical equipment not shown on the Drawings sized to meet the requirements of the CSA C.22.1-02.

f. Regardless of any regulatory body, no conductor smaller than 6 is permitted for an exposed ground circuit except for grounding instrument cases and secondary circuits of instrument transformers where 16 will be permitted.

g. For equipment requiring grounding, provide a means for attachment of a ground cable to the enclosure. The grounding means may be a tapped hole in the enclosure with a matching bolt and a appropriate lug for copper cable. Hold-down bolts are not to be used for attaching grounding cables.

h. Provide "packaged" or "skid-mounted" equipment with single-point connection to ground grid.

i. Ground all metallic conduits above ground and underground in accordance with the requirements of the CSA C.22.1-02.

j. Install the cable trays electrically continuous to meet the requirements of Article CSA C.22.1-02.. Install a bonding jumper in the gaps in the tray runs to provide continuity.

- Circuit Grounding
  a. Power circuits to include a circuit ground conductor terminated appropriately at source end ground bus connection and at the load.
  b. Size the circuit ground conductor in accordance with the CSA C.22.1-02.

- Terminal Connections:
  a. Provide connections of ground conductors to cable trays and conduit with copper clamps or straps or by grounding bushings. Remove non-conductive protective coatings such as paint, mill scales, oil, grease, oxides, or enamel

on the conduit fittings from the threads or contact surfaces before attaching grounding connection. After ground connection is attached, cover any remaining exposed bare metal with a coating matching the original coating.

b. Above grade connections to equipment to be made using compression type connectors and bolted terminals.

c. Below grade connections, cable-to-cable or cable-to-ground rods and cable-to-structural steel to be made using compression lug.

d. Ground connections to piping to be generally "U clamp".

e. Connections of ground conductors to columns and similar structures to be welded.

f. Ground all cable shielding in accordance with the manufacturer's recommendations, or as directed by Owner.

g. Provide connections of ground conductors to equipment by means of a lug which shall be compressed on the cable end. Bolt the lug to the equipment frame using holes or terminals provided by the equipment manufacturer for this purpose. Where no such provisions are made, drill suitable holes in locations designated by Owner. Hold-down bolts are not to be used for ground connections. Ground connections to motors to be bolted directly to motor frame, and not to sole plates or supporting structures. At all bolted connections, scrape the joining surfaces clean and coat with NO-OX-ID, or equal compound.

- Control Cabinets Safety Ground

a. Connect all metal control cabinets to the ground buses. Insulate wires for connections between individual devices and the ground bus. Provide individual ground connections for each device; no looping permitted.

b. Do not make ground bus splice points coincident with the bolts which support the copper ground bus. Provide connections to the copper ground bus such that it is not necessary to open neither the ground bus nor any other connection to the bus to remove any ground connection. Separate bolted connections to the ground bus from the support and joint bolts.

- Control Cabinet Instrument Ground System:
  a. Install an instrument ground system, conform to Client standard and engineering drawings
  b. Install the instrument ground system in the following manner
     I. Connect the main and branch insulated ground conductors to instrument ground bus.
     II. Clearly label the instrument ground bus.
     III. Ensure that no loops are in the instrument ground system.
  c. "Reference" Distributed Control System (DCS) dc power "common" terminations and analog I/O field wiring shields to the instrument ground bus provided in each DCS enclosure. Provide all instruments and instrument cables with shields attached to only this instrument ground. Tape or insulate shielded cable with sleeves to prevent accidental grounding or touching of shields. Do not ground field ends.

3.2 Inspection and tests

- Visual and mechanical inspection: Check and inspect the installation to ensure that the grounding system has been built as per the engineering design. Ensure all connections to electrodes and ground cable are tight and secure.
- Ground resistance testing is needed after installation of the grounding system, typically five ohms for commercial and small industrial sites and one ohm for utility & transmission substation grounds and large industrial plant substation grounds.
- Follow the recommended manufacturer or designer grounding resistance levels specified. In general – all efforts shall be targeted toward achievement of minimum grounding resistance.

AGNICO EAGLE

Vendor Document Status

1 ☐ Proceed to next submission and status.

2 ☐ Proceed with exceptions as noted to next submission and status.

3 ☐ Do not proceed.
Revise as noted and resubmit next submission and status.

4 ☒ Complete, no further submission required.

By: LUC SÉNÉCAL Date: 2017-07-10

Review and authorization to fabricate are only for general conformance with the design concept of the Project as expressed in the Contract Documents. Sole responsibility for the accuracy and completeness of this document, including but not limited to dimensions and quantities, remains with the Supplier/Contractor. Agnico Eagle does not warrant the accuracy or completeness of any of the information contained herein, nor does Agnico Eagle authorize or approve any construction means, methods, techniques, sequences or any safety precautions or procedures.

Agnico Eagle No. 6515-C-270-007-141-TES-0005 R: Sub002

DOCUMENT FOR INFORMATION

Agnico-Eagle Mines Ltd.

Contract no. 6515-C-270-007

Electrical Apparatus, Equipment & Supports Installation Procedure

AEM-EL-PRO-004

Area No.: All

System No.: All

PROMEC Approvals

Prepared by:	Stéphane Doré	**Signature:**		**Date:**	2017-04-25
Verified by:	Jonathan Roy	**Signature:**		**Date:**	2017-04-25
Approved by:	Éric Poulin	**Signature:**		**Date:**	2017-04-25.

CLIENT Approvals

Verified by:		**Signature:**		**Date:**	
Approved by:		**Signature:**		**Date:**	

Table of Contents

Page

1. PURPOSE 3
   1.1 Submittals 3
2. EXECUTION 3
   2.1 Installation 3
      2.1.1 GENERAL 3
      2.1.2 EQUIPMENT 4
   2.2 Personnel requirements 5
   2.3 Inspection and test requirements 5
   2.4 Adjustment and Cleaning 5
   2.5 Corrosion Protection/Coatings 5

APPENDIX A – ALL APPLICABLE ITRs & LOG

1. PURPOSE

The procedure is to establish the electrical apparatus, equipment and supports installation procedure.

1.1 Submittals

The following drawings, information and data will be submitted:

- As-built drawings showing final setting dimensions where different from the design drawings.
- As-built drawings of all relative installation drawings.

2. EXECUTION

2.1 Installation

2.1.1 GENERAL

- Install all equipment in a neat manner using qualified trade persons in complete accordance with the Drawings and the equipment manufacturers instructions and recommendations.
- Fabricate and install any necessary temporary steel supports, brackets and anchors required for equipment erection or installation. Design of such supports, brackets, and anchors are subject to engineers' approval. Upon completion, remove all temporary supports, sand smooth, prime and paint welds on permanent plant structures, grout temporary anchor holes left in concrete and return the area to the originally installed condition.
- Prior to setting equipment:
  - Inspect equipment foundations for correctness in location, level, location of center lines, anchor bolt omissions, and height.
  - Uniformly roughen foundation surfaces.
  - Inspect all anchor bolts for straightness and damaged threads.
  - Straighten bent anchor bolts using acceptable methods.
  - Rerun bolts with damaged threads using suitable dies.
  - Clean and oil anchor bolts.
- Install all items shipped loose with equipment.
- Mount items with appropriate hardware.
- Provide additions and modifications to structural steel, grating, or floor steel required to completely install the equipment.
- Fabricate racks and supports for miscellaneous enclosures, boxes, cabinets and housings from rolled steel shapes, bars, rods, etc. of standard section and/or from strut material with accessory members and fittings.

- Use proper and adequate handling equipment and rigging at all times and inspect such equipment frequently. Lift electronic cabinets with the use of slings; do not use lifting eyes. Obtain exact weights and dimensions from approved manufacturers drawings or manufacturers representatives to ensure the use of adequate handling equipment.
- Welding
  - Perform in accordance with welding procedure
- Do not remove protective covers on flanges, pipe, or conduit connections until these connections are to be made.
- Fabrication and placing of shims:
  - Place shims, equipment baseplate, bedplates and soleplates as required for a minimum of 25 mm of grout such that shim pack thickness is no greater than 6 mm and no less than 3 mm for shims between the equipment and the top of the mounting plate.
  - Cut down and refinish where required, the tops of baseplate, soleplates, or rough foundations to allow for grouting.
  - Install shims of the required size, thickness and quality at the appropriate locations so there will be no deflection, deformation, or strain induced into the equipment bedplate or soleplate.
  - When the supporting structural steel frame is not level, taper the bottom shims to provide a level top bearing surface. Use a minimum number of shims at all times.
  - Wherever possible, place shims while the bedplate or equipment is in a jacked-up position using jacking or levelling nuts where provided or other means as necessary. Driving of shims to achieve a level top bearing surface is not permitted.

2.1.2 EQUIPMENT

- General
  - Set stationary equipment such as switchgear, motor control centers, and skid mounted equipment in a true vertical and horizontal plane and set anchor bolts evenly as required.
  - Tighten gasketed joints evenly around the entire gasketed area to insure uniform contact pressure.
  - Install wiring in conformance with connection diagrams, including jumpers where shown on terminal blocks. Install and terminate all wiring in accordance with Promec's procedure No. AEM-EL-PRO-001.
  - Install grounding systems and lightning protection in accordance with Promec's procedure No. AEM-EL-PRO-002.
  - Install cable tray system in accordance with Promec's procedure No. AEM-EL-PRO-003.
  - Install and terminate all cable in accordance with Promec's procedure No. AEM-EL-PRO-001.
- Panel boards and Transformers
  - Mount panel boards and transformers as specified in Client standards.

- Cabinets and Free Standing Panel boards
  - Handle, assemble, and maintain cabinets and free standing panels according to manufacturer's recommended procedures and documentation requirements.
  - Place cabinets and free standing panels immediately in their final positions, as shown on the drawing's temporary storage locations shall not be considered.
  - Wire cabinets and free standing panels in accordance with electrical wiring diagrams including jumpers shown on terminal blocks.

2.2 Personnel requirements

Provide qualified manufacturer's representatives for technical assistance as required.

2.3 Inspection and test requirements

- CEM Cabinets
  - Thoroughly inspect, clean, and remove all foreign matter, dust, debris, dirt, etc. from equipment cubicles, compartments and insulators.
- Transformers
  - Megger all winding terminals (maximum 1 kV) in accordance with manufacturer's requirements and provide results to Client for review.
- Construction Checkout
  - Perform and document all inspections and test activities in accordance with manufacturer's recommendations.

2.4 Adjustment and Cleaning

Remove any protective, non-permanent coatings applied by the equipment manufacturer.

Clean external surfaces of all equipment and materials of dirt, grease, oil, loose rust.

2.5 Corrosion Protection/Coatings

Following installation, touch-up all scratched or marred areas of manufacturer's primed or finished paint. Use the same paint as manufacturer's original finish or prime paint with surface preparation and paint application in accordance with the manufacturer's requirements.

Appendix A

ALL APPLICABLE ITRs & LOGs

AGNICO EAGLE

Vendor Document Status

1 ☐ Proceed to next submission and status.

2 ☐ Proceed with exceptions as noted to next submission and status.

3 ☐ Do not proceed.
Revise as noted and resubmit next submission and status.

4 ☑ Complete, no further submission required.

By: JEAN-FRANCOIS TREMBLAY JG Date: 2017-05-16

Review and authorization to fabricate are only for general conformance with the design concept of the Project as expressed in the Contract Documents. Sole responsibility for the accuracy and completeness of this document, including but not limited to dimensions and quantities, remains with the Supplier/Contractor. Agnico Eagle does not warrant the accuracy or completeness of any of the information contained herein, nor does Agnico Eagle authorize or approve any construction means, methods, techniques, sequences or any safety precautions or procedures.

Agnico Eagle No. 6515-C-270-007-141-TES-0006 R: Sub001

DOCUMENT FOR INFORMATION

Agnico-Eagle Mines Ltd.

Contract no. 6515-C-270-007

Instrumentation Installation and Testing Procedure

AEM-IN-PRO-001

Area No.: All

System No.: All

PROMEC Approvals

Prepared by:	Stéphane Doré	**Signature:**		**Date:**	2017-04-25
Verified by:	Jonathan Roy	**Signature:**		**Date:**	2017-04-25
Approved by:	Éric Poulin	**Signature:**		**Date:**	2017-04-25

CLIENT Approvals

Verified by:		**Signature:**		**Date:**	
Approved by:		**Signature:**		**Date:**	

Table of Contents

Page

1 SCOPE 3

2 PRODUCTS 3

2.1 Materials 3

2.2 Inspection and Test Requirements 3

2.3 Cleaning 4

2.4 Corrosion Protection/Coatings 4

3 EXECUTION 4

3.1 Installation 4

3.1.1 General 4

3.1.2 Installation of Locally Mounted Equipment 4

3.1.3 Installation of Instrument Racks and Stands 5

3.1.4 Connection of Equipment and Devices 5

3.1.5 Flow Meter Tubing 5

3.2 Inspection and Test Requirements 6

3.2.1 General 6

APPENDIX A – ALL APPLICABLE ITRs & LOG

1 SCOPE

This procedure includes:

- Installation of:
  - Field instruments
  - Field instrument racks and stands
- Installation of package equipment loose instruments.
- Installation of package equipment sensing tubing up to local control panel.
- Installation of specialty instruments.

2 PRODUCTS

2.1 Materials

- Instruments: As identified in the Instrument List. The Instrument List is a listing of instruments to be installed after:
  - Promec shall furnish all materials required for complete installation of control and instrumentation devices. Provide all tools and equipment required for the installation.
  - Promec shall furnish instruments, control devices and instrument racks, stands, and enclosures.
  - Promec shall provide all calibration equipment as required in Sections 2.2 of this specification.
  - Promec shall furnish nameplates for all control and instrumentation equipment furnished or installed under these specifications, unless already provided. Nameplates shall be either of laminated phenolic (white background with black letters) or stainless steel. Engrave or stamp the nameplates with the Instrument Tag Numbers per the Instrument List. Attach phenolic type nameplates to control and instrumentation equipment by machine screws or stainless steel wire.

2.2 Inspection and Test Requirements

- Promec shall obtain the instruments from the receiving warehouse which has inspected them for obvious shipping damage and manufacturing defects. Promec will also inspect instruments for obvious shipping damage and manufacturing defects when they receive them. Each instrument will have been calibrated by the manufacturer. Vendor calibration report will be review by Promec for each instrument. The calibration of each instrument will be checked by Promec prior to installation.
- Promec shall use qualified and experienced personnel to perform adjustments and tests. Perform adjustments and tests as many times as necessary to assure proper operation of equipment and systems and quality of materials and workmanship.

2.3 Cleaning

- Promec shall clean and remove any protective non-permanent, coatings applied by manufacturers. Clean equipment and material external surfaces of all dirt, grease, oil, loose rust, and other foreign material.

2.4 Corrosion Protection/Coatings

- Following installation, Promec shall touch-up all scratched or marred areas of Manufacturer's prime or finish painting. Promec shall use paint the same as Manufacturer's original finish or prime paint with surface preparation and paint application in accordance with the Manufacturer's requirements.
- Threads shall not be painted
- Stainless steel and other corrosion-resisting surfaces: do not paint.
- Machined surfaces: do not paint.
- Omit paint at all areas: before field welding.

3 EXECUTION

3.1 Installation

3.1.1 GENERAL

- Install all controls and instrumentation in accordance with the requirements of this Section. Any installation procedures not specified herein shall be done in accordance with the manufacturer's recommendations and good engineering practice.
- Promec shall utilize experienced workers for installation of all controls and instrumentation, tubing, and piping.
- Promec shall furnish all necessary craft personnel, supervision and scheduling required for the completion of instrument installation within the Owner's schedule.

3.1.2 INSTALLATION OF LOCALLY MOUNTED EQUIPMENT

- In addition to the installation requirements indicated on the drawings, the manufacturer's submittals, and the Instrument List, the requirements specified herein apply.
- Install all instruments and associated devices shall be installed in easily accessible locations for maintenance, calibration, and replacement. Take special care to assure that indicator type instruments are easily readable from the nearest accessible floor or platform elevation.
- Solenoid valves and control loop accessories not located in enclosures or mounted on valves shall be mounted in easily accessible protected locations near the components with which they are associated.
- All pressure gages (indicators) shall be installed bear the process connections, unless otherwise on the drawings and locate where easily read.
- Pressure switches not mounted in enclosures shall be installed on a wall or building column, or on pipe stands, near the piping or duct to which they are connected and mount to permit ease of adjustment.

- All brackets, stands, supports, and other miscellaneous hardware shall be provided as required for mounting devices.
- Level transmitters, level controllers, and level switches of the displacer or float type shall be installed on vessel instrument piping columns as indicated on the piping detail drawings for that vessel. Top works of transmitters, controllers, and switches shall be provided as to positions which provide convenient access for operation and maintenance; perform prior to installation of tubing and wiring to the devices.
- Sight flow glasses shall be installed for maximum visibility.

3.1.3 Installation of Instrument Racks and Stands

- Freestanding racks, stands, and enclosures to the floor shall be attached to concrete equipment bases or supporting steel, at locations indicated on the drawings. Shim shall be provided for proper alignment before bolting to the floor or grouting.
- Non-freestanding racks and enclosures shall be mounted in accessible locations on columns and walls. Brackets shall be fabricated as required to install the racks and enclosures in a workmanlike manner.
- Rough edges and welds on all fabricated supports shall be grinded smooth; surfaces shall be finished with coating.
- Racks shall be located to provide the shortest reasonable instrument impulse line lengths for each of the instruments mounted thereupon.

3.1.4 Connection of Equipment and Devices

- Design pressure and maximum process temperature shall be limited below manufacturer's specified data for all instruments.
- After flow instrument installation, Promec shall verify the high and low sides of the instrument with respect to the direction of flow.
- When reservoir tees are required, bent pipe shall be used between the root valve and the tee unless there is a space limitation. Fittings may be used if space is limited.
- Reservoir tees to be installed on vertical lines shall be mounted at or above the process line connection. These reservoir tees shall be mounted at the same elevation.
- Reservoir tees shall be provide for each reference leg for differential pressure transmitter used to measure level on the steam drums, deaerator storage tank, or any tank containing both liquid and vapour. Reservoir tees shall be provided on all steam flow and pressure applications to insure complete fill of the sensing line during operation. Reservoir tees must not be insulated. A filling connection shall be provided on the reservoir tees for initial filling of the sensing line.

3.1.5 Flow Meter Tubing

- Process sensing connections shall be provided between flow indicators, transmitters, controllers, or switches and shutoff valves on the main piping in accordance with the Drawings.
- Where tubing is run in open type trays, covers shall be installed wherever the trays pass through an open area where it is possible that the tubes can be damaged from falling objects.

3.2 Inspection and Test Requirements

3.2.1 GENERAL

- Pre-operational adjustments, material and equipment tests shall be made as specified and as required by governing codes, regulations, manufacturers' recommendations, and good construction methods.
- Instrument functional loop checkout shall be made to resolve any discrepancies and correct any field problems which arise in the scope of work.
- Assemble, test, and adjust, as required, for correct and reliable operation the control and instrument equipment (including gages, switches, thermostats, and other devices) which are a part of major equipment.

Appendix A

ALL APPLICABLE ITRs & LOGs

AGNICO EAGLE

Vendor Document Status

1 ☐ Proceed to next submission and status.

2 ☐ Proceed with exceptions as noted to next submission and status.

3 ☐ Do not proceed.
Revise as noted and resubmit next submission and status.

4 ☒ Complete, no further submission required.

By: LUC SÉNÉCAL Date: 2017-07-10

Review and authorization to fabricate are only for general conformance with the design concept of the Project as expressed in the Contract Documents. Sole responsibility for the accuracy and completeness of this document, including but not limited to dimensions and quantities, remains with the Supplier/Contractor. Agnico Eagle does not warrant the accuracy or completeness of any of the information contained herein, nor does Agnico Eagle authorize or approve any construction means, methods, techniques, sequences or any safety precautions or procedures.

Agnico Eagle No. 6515-C-270-007-141-TES-0008 R: Sub002

DOCUMENT FOR INFORMATION

Agnico-Eagle Mines Ltd.

Contract no. 6515-C-270-007

Cable Tray Installation Procedure

AEM-EL-PRO-003

Area No.: All

System No.: All

PROMEC Approvals

Prepared by:	Stéphane Doré	**Signature:**		**Date:**	2017-04-25
Verified by:	Jonathan Roy	**Signature:**		**Date:**	2017-04-25
Approved by:	Éric Poulin	**Signature:**		**Date:**	2017-04-25

CLIENT Approvals

Verified by:		**Signature:**		**Date:**	
Approved by:		**Signature:**		**Date:**	

Table of Contents

Page

1. GENERAL 3
   1.1 SECTION INCLUDES 3
2. EXECUTION 3
   2.1 INSPECTION AND PREPARATION 3
   2.2 INSTALLATION REQUIREMENTS 3
   2.3 INSPECTION AND TEST REQUIREMENTS 4
   2.4 CORROSION PROTECTION/COATINGS 4

1. GENERAL

1.1 Section Includes

- Cable Tray, Fittings, and Accessories.
- Hangers and Supports.

2. EXECUTION

2.1 Inspection and Preparation

- Before installation, inspect cable trays and fittings and clean off all dirt, cuttings, and other foreign material. Cut ends of the trays to be filed or ground to remove burrs and sharp edges, and coated to prevent rust.

2.2 Installation Requirements

- All Electrical Installations: in accordance with CSA Standard C22.1-06.
- In general, provide a recommended minimum vertical spacing between trays of 250 mm measured from the bottom of the upper tray to the top of the lower tray. Maintain minimum of 230 mm clearance between the top of the tray and beams, pipes, etc. for parallel runs, and 75 mm minimum for crossing runs. (Trays to be installed by others).
- Cut cable tray to size by use of a hack saw, or other approved tool. Do not flame cut trays or their accessories.
- Align cable trays carefully and level plumb and true. Secure the runs with at least two smooth head bolts at each support bracket.
- Supports for cable tray runs to be the cantilever or the trapeze type, fabricated of threaded rod, strut, and/or steel members and accessories. The support member is in contact with the cable tray and shall be approximately 75 mm longer than the width of the cable tray that it supports.
- Support cable trays at all bends, tees, dropouts, crossovers, risers, etc. as recommended by CSA Standard C22.2, No. 126.1-02.
- Fasten supports to building steel by means of beam clamps. Fasten supports to concrete by inserts or drilled-in anchors. Provide supports capable of supporting the ultimate tray loading capacity.

2.3 Inspection and Test Requirements

- Perform inspections and tests normally used either in installation, construction processes or as called for by the applicable codes and standards.
- Upon completion of cable tray installation, inspect the interior surfaces of the tray run for any burrs or rough edges that could result in cable damage during cable installation. Remove burrs and rough edges.

2.4 Corrosion Protection/Coatings

- Where the galvanizing of cable tray supports is damaged, repair by the application of appropriate galvanizing repair paints.

Control System Description

Rankin Inlet Tank Farm – 65PLC11601

AGNICO EAGLE

Vendor Document Status

1 ☐ Proceed to next submission and status.

2 ☐ Proceed with exceptions as noted to next submission and status.

3 ☐ Do not proceed. Revise as noted and resubmit next submission and status.

4 ☑ Complete, no further submission required.

Sébastien Perron Instrumentation Date: 28/09/2017

Review and authorization to fabricate are only for general conformance with the design concept of the Project as expressed in the Contract Documents. Sole responsibility for the accuracy and completeness of this document, including but not limited to dimensions and quantities, remains with the Supplier/Contractor. Agnico Eagle does not warrant the accuracy or completeness of any of the information contained herein, nor does Agnico Eagle authorize or approve any construction means, methods, techniques, sequences or any safety precautions or procedures.

Agnico Eagle No. 6515-C-270-007-280-GNS-0001 R: Sub003

DOCUMENT FOR INFORMATION

AGNICO EAGLE - MELIADINE DIVISION

Rankin Inlet, Nunavut

Project No: 591700

Prepared by: G. Gagnon, Eng.

Approved by: D. Carrier, Eng.

Document No: ULT-591700-CSD-001

Date: Sept 12, 2017

Revision: 1

REGISTERED PROFESSIONAL ENGINEER
13627
D. CARRIER
LICENSEE
NT/NU

Sept 12/2017

PERMIT TO PRACTICE
LE GROUPE ULTRAGEN LTÉE
Signature
Date SEP 12 2017
PERMIT NUMBER: P 1180
NT/NU Association of Professional Engineers and Geoscientists

REVISION INDEX

Rev	Prepared by	Reviewed by	Approved by	Date	Pages Revised / Remarks	Issued for
PA	G. GAGNON	E. LAROUCHE	D. CARRIER	2017/05/18		FOR REVIEW
0	G. GAGNON	E. LAROUCHE	D. CARRIER	2017/06/20		FOR CONSTRCUTION
1	D .CARRIER	E. LAROUCHE	D. CARRIER	2017/09/12		FOR START-UP

D. CARRIER, Eng. OIQ – 40308 / NAPEQ – L3627

Sept 12/2017
Date

INDEX

INDEX 3
1 Overview 4
2 PLC 4
3 I/O cards 4
4 Human-Machine Interface (HMI) 5
5 Flow controller 5
6 Ground proving and overfill prevention device 5
7 Motorized Operated Valve (MOV) 5
8 Communication 6
9 Ethernet switches 6
10 Software 6
10.1 PLC Programming 6
10.2 HMI Programming 6
10.3 PLC – Microload Controller exchange 6
11 Functional Description 7
11.1 Truck Loading 7
11.2 Main tanks loading 11
11.3 Alarms transmission 11

1 Overview

The control system at Rankin Inlet tank farm consists of the following components:

- PLC cabinet located in the operator room with a HMI touchscreen for operation.
- Flow Controller Smith Meter located in the operator room.
- A flow control kit including one flow valve, one flow meter and one temperature probe connected to the Flow Controller to measure the transferred quantity per transaction.
- Two Variable Frequency Drive (VFD), one per transfer pumps (2).
- Scully Module with plug to allow truck ground proving and truck overfill prevention.
- Radar level transmitters and temperature transmitters for monitoring the diesel tanks (2).
- Motorized Operated Valve (MOV) to allow the transfer between tanks and truck.
- E-stops (3) located in the truck area, inside the pumping station and inside the operator room.
- Strobe light on each diesel tank and one common horn on the pumping station to indicate high level tank.

2 PLC

2.1.1 One PLC for the Rankin Inlet tank farm diesel distribution.
Manufacturer: Schneider, Model: BMEP582040

3 I/O cards

3.1.1 PLC Input and outputs cards connected to field devices are as following:

Module	Manufacturer	Model
32 digital inputs module (120 Vac)	Schneider	BMXDDI3202K
32 digital outputs module	Schneider	BMXDDO3202K
8 analog inputs module (4 -20 mA)	Schneider	BMXAMI0810
Ethernet backplane card	Schneider	BMENOC0321

4 Human-Machine Interface (HMI)

4.1.1 One Touch screen HMI mounted in front of the PLC cabinet to monitor and control the transferred quantity from diesel tanks to tanker truck.
Manufacturer: Schneider, Model: HMIDT732 / HMIG3U

5 Flow controller

5.1.1 One Microload Flow controller c/w one flow meter, one digital flow valve and one RTD temperature to control the transferred quantity.

Instrument	Manufacturer	Model
Flow controller	FCM	Smith Meter ML-XP-STD-1, Microload
Flow valve (Digital pre-set valve) with two 120 Vac solenoids	TCS	OCV 115-3
Flow meter (positive displacement type)	TCS	700-40SP4DX
Pulse transmitter for flowmeter	TCS	DMP-100-3
RTD temperature sensor	FMC	TP-W-3C-2.5

6 Ground proving and overfill prevention device

6.1.1 A Scully module located beside the truck loading arm to connect to the tanker truck using a plug assembly. The 10-pins plug assembly allows the monitoring of up to 8 high level sensors and monitors the static ground verification on the tanker truck.
Manufacturer: Scully, Model: Intellitrol IC-OG, plug model: SC-8A

7 Motorized Operated Valve (MOV)

7.1.1 One MOV per vertical tank to control the tanks outlets. These valves are powered at 120 Vac and are controlled through 120 Vac output PLC cards. With one output configuration for the open command, it closes automatically when off. Open position, close position and fault status are monitored by the PLC.
Actuator Manufacturer: Rotork, Model: IQT500

Valve Manufacturer: M.A Stewart, Model: F-150-CSF-SS-FS-N

8 Communication

8.1.1 Ethernet TCP/IP is used for communication between the PLC, the HMI, the flow controller and the VFDs.

9 Ethernet switches

9.1.1 One Ethernet switch inside the PLC cabinet connected to the PLC Ethernet communication card, dedicated for the HMI and the plant Ethernet network.
Manufacturer: Schneider, Model: TCSESM083F2CSO

9.1.2 One Ethernet switch inside the PLC cabinet connected to the PLC CPU Ethernet port, dedicated for Microload controllers and VFDs.
Manufacturer: Schneider, Model: TCSESM083F1CSO

10 Software

10.1 PLC Programming

10.1.1 Schneider Unity Pro software, version 11 is the PLC programming software for the Schneider M580 PLC.

10.2 HMI Programming

10.2.1 Vijeo Designer software, version 6.2 is the HMI touch screen programming software.

10.3 PLC – Microload Controller exchange

10.3.1 The communication protocol used to transfer data between the PLC and the Microload controller is Ethernet Modbus TCP/IP (Accumulated volume, Pre-set volume, Flow rate, etc). The Microload keypad is disabled, all controls are done through the PLC.

11 Functional Description

11.1 Truck Loading

1. At the truck area

    a. Connect the Scully Intellitrol plug to the tanker truck to allow ground proving and truck overfill prevention, then attach the loading arm to the truck.

    b. Green Bar indicator is ON steady on the Scully Intellitrol Module when the plug is properly connected and the ground contact is made. Red Bar indicator ON means Scully not ready or no lights ON means no power. The Intellitrol also monitors the truck compartment levels, if one or many compartments LED are ON that indicates a faulty level sensor.

    c. The Scully Intellitrol switch interlocks the 120 Vac power to the flow control valve. In case of high level in tanker truck or loss of truck grounding contact, the 120 Vac power is removed from the flow control valve and the valve closes. The fault status is wired to PLC through interposing relay to prevent any loading operation. The running sequence is then paused and equipment are stopped and valves closed.

    d. The Scully Intellitrol can be bypassed with a bypass key held against the side of the Intellitrol for 10 to 30 seconds. When in bypassed mode, the Intellitrol Bar indicator will blink green.
        - The maximum bypass time is settable from 15 to 60 minutes.
        - Bypass operation automatically ends when the vehicle is disconnected.
        - A faulty sensor can only be bypassed at initial truck hookup.
        - A sensor wet during loading can never be bypassed.

2. At the pumping station operator room – Logging to the system

    a. Two levels of user security are available at the HMI;

        i. Operator username and PIN number 1111.

        ii. Maintenance username and PIN number 2222.

    b. At the operator security level, the truck loading sequence is fully automatic and there is no bypassed or manual mode available.

c. At the maintenance security level, the Microload controller could be bypassed and manual mode are available for the VFD and the motorized valves.

d. The security level is logout automatically after a predefined time of inactivity, to prevent the unauthorized use of the HMI.

3. Truck loading sequence

a. The HMI contents three main screens;

i. **Loading graphic screen** for visualisation including; tank levels, tank temperatures, Pumps status, MOV status, Scully status and the Microload bypass button.

ii. **Loading sequence screen** for sequence operation; Start, Pause and Stop loading sequence, tank's selection, truck load, sequence status, loading flow and load totalizer.

iii. **Alarm page** with active alarms in red and clear alarms in green. The clear all alarm button is active only with maintenance security level access.

b. To start the truck loading sequence the following actions shall be done:

i. Select one of the two main tanks. There is always one tank selected, make sure this is the right tank before starting the sequence.

ii. Enter the truck load to fill. A predefined load value is set at each transaction and could be modified as required.

iii. Verify the sequence is 'Ready to Start' in the sequence banner status. If not then other alarms texts will show the issues that need to be resolved prior to start the sequence.

iv. Press the START button to start the loading.

c. The sequence status shows 'Ready to start' if all conditions are met for the automatic loading sequence. Otherwise the status will show 'Not Ready' in red with the following alarms messages:

i. **Scully fault:** The Scully unit is faulty, ground contact or truck levels are in fault.

ii. **Equipment fault:** The pumps or the valves are not available; either in fault or in manual mode.

iii. **Tank low level:** The selected tank reached the low level.

d. There are three control buttons for the automatic sequence:

i. **START:** starts the sequence.

ii. **PAUSE:** pauses the sequence, the valves close, the pumps stop and the transaction is on hold, and wait for a restart (START) or a complete stop (STOP). This function allows the truck driver to hold the sequence to do visual checks.

iii. **STOP:** stops the sequence and ends the transaction through the Microload unit.

e. The START button starts the loading sequence and the PLC does an estimated time for the loading based on the truck load and pump flow. It generates an alarm if the time expires before the end of the sequence, meaning there is an issue with the system.

f. The sequence stops automatically once the truck load is reached. If the sequence stops on a fault, the sequence moves to the pause state, allowing the operator to clear the fault and restart or to stop the sequence. If no action is done, the sequence stops after the pause time expired.

g. The sequence starts by opening the selected tank's motorized valve and ramps up one of the VFD.

h. Pumps will run alternatively based on running hours accumulated, if both are available in auto mode before starting the sequence. The pumps have a selector AUTO/MANUAL on their HMI popup, this function is available only with the maintenance security access. If one pump does not start, a fault will be generated on the HMI and the other pump will start automatically. If one pump is in AUTO mode and the other in MAUAL mode, only the pump in AUTO mode will be used. If both pumps are in MANUAL mode, the sequence will not start. If none of the pumps start, the motorized valve closes, and the sequence goes to pause. Alarms are generated on the HMI.

i. The PLC sends a "Remote Start" to the Microload unit with the truck load. The Microload starts the loading control by opening the flow valve and monitoring the accumulated volume.

j. The truck load, the accumulated volume and flow rate are shown on the sequence screen. The data exchange with the Microload controller and the PLC is polled through Modbus link. At the end of transaction, the accumulated value and the truck load stay on the screen until a new transaction. The total of all fuel dispensed is totalized in PLC memory. This value is available and resettable in the PLC only, not on the HMI.

k. The loading sequence stops under the following conditions:

- Tanker truck is full OR;
- The estimated loading time is expired (meaning there is an issued with the truck level) OR;
- The Microload faults OR;
- Scully fault (grounding contact or high level) OR;
- MOV faults on open position OR;
- Fault on VFD pump OR;
- PAUSE or STOP buttons sequence are activated.

When the sequence stops, the pump stops, the MOV closes, the remote stop is set to Microload controller, and the flow valve closes. The status of the loading sequence is shown on the sequence screen.

l. The truck load is a pre-set value in the PLC based on one type of tanker truck. If more than one tanker truck capacity models are used, a pre-set selection could be added to facilitate trucker entries. To be defined on site.

m. The sequence could not start if there is a low low level in the main tank selected. But if the sequence is running when the low low level appears, the sequence will complete the loading. The low low level will be set to support one tanker truck load above the piping intake.

n. On the stop sequence, the pump stops first and then the motorized valve at the selected tank closes.

o. The valves positions and the pumps status are shown on the graphic screen.

p. There are three emergency push buttons, one on the PLC cabinet, one in the pump house and one at the truck area, and they are hardwired to the emergency relay inside the PLC cabinet. The emergency relay contacts stop the VFD pumps through VFD input (DIL and 24V) and remove the power to the flow valve. The emergency relay status is wired back to the PLC, to close the MOVs and set the "remote stop" command to the Microload controller.

q. Pumps interlocks – Starting conditions

- Scully contact through the truck plug (must be connected)
- Minimum level of diesel in the selected main tank (above low low level)

r. Process interlocks – Running conditions that can be bypassed

- Microload Controller ready and running. The bypass confirmation of the controller is available only through the maintenance security level. If the bypass valve is opened, it shall be confirmed on the HMI, to ensure proper functionality.

s. Safety trip conditions

- Emergency stop buttons

4. Maintenance mode

a. The maintenance mode is accessible by logging as maintenance username with the proper password.

b. The user in maintenance mode could access the motors and valves popups. The functionalities in popups allow individual control of the equipment; AUTO/MANUAL mode, START/STOP and feedback status.

c. In MANUAL mode, the user could take control of every equipment to manually operate them without interlock except for the E-Stops. The user is fully responsible of the equipment when running them in manual.

d. A maintenance mode banner is displayed in the graphic and sequence screens to identify that this mode is active.

e. The Microload bypass button is accessible in maintenance mode only.

f. The automatic loading sequence could not run in maintenance mode. Equipment left in manual mode does not return in auto mode automatically, the user is responsible to return them in auto mode to allow the automatic sequence to work properly.

11.2 Main tanks loading

1. Overfill protection of tank during refueling from the marine line
    i. Overfill alarm is composed of one strobe light on each tank and one common horn installed on the pumping container.
    ii. When 90% of a tank capacity is reached, an overfill alarm is activated, turning on the tank strobe light and the horn.
    iii. The horn stops once the alarm is acknowledged.

11.3 Alarms transmission

- At least 4 type of alarms are wired from PLC to Fire Alarm System
- Overfill alarm on tanks
- Emergency stop activated
- Temperature alarm
- Pumps and valves malfunction alarms

NO. DESSIN
DRAWING NO. 65-416-275-200_R1

FORMAT ANSI B-11x17

POUR CONSTRUCTION
FOR CONSTRUCTION
AGNICO EAGLE
DATE : 2017-08-02

FROM PORTAL ELECTRICAL ROOM

3C 250MCM ALU
TECK 1kV

65DIS41601
200A
200A

65DIS41601-P1
3c-3/0 AWG RW90
EMT 63mmØ

SPLITTER TROUGH 600 V
65SPB41601
FUEL FARM

600 V, 225 A

1	2	3	4	5	6	7	8
3c-6AWG RW90 EMT 35mmØ	3c-6AWG RW90 EMT 35mmØ	3c-6AWG RW90 EMT 35mmØ	3c-6AWG RW90 EMT 35mmØ	3c-6AWG RW90 EMT 35mmØ	3c-10AWG RW90 EMT 21mmØ	3c-6AWG RW90 EMT 35mmØ	3c-10AWG RW90 EMT 21mmØ
65SPB41601-01	65SPB41601-02	65SPB41601-03	65SPB41601-04	65SPB41601-05	65SPB41601-06	65SPB41601-07	65SPB41601-08
60A / 40A	60A / 40A	60A / 40A	60A / 40A	60A / 40A	30A / 15A	60A / 60A	30A / 20A
65SPB41601-01-P1 3c-8AWG TECK 1kV	65SPB41601-02-P1 3c-8AWG TECK 1kV	65SPB41601-03-P1 3c-8AWG TECK 1kV	65SPB41601-04-P1 3c-8AWG TECK 1kV	65SPB41601-05-P1 3c-8AWG RW90 EMT 27mmØ	65SPB41601-06-P1 3c-12AWG RW90 EMT 21mmØ	TBC ON HOLD	65SPB41601-08-P1 3c-12AWG TECK 1kV
65VSD41603A	65VSD41603B	65VSD41604A	65VSD41604B			65SPB41601-07-P1 3c-6AWG RW90 EMT 35mmØ	30A
VSD	VSD	VSD	VSD				DEF CONTAINER
65VSD41603A-P1 3c-8AWG TECK 1kV	65VSD41603B-P1 3c-8AWG TECK 1kV	65VSD41604A-P1 3c-8AWG TECK 1kV	65VSD41604B-P1 3c-8AWG TECK 1kV				65SPB41601-08-P1A 3c-12AWG RW90 EMT 21mmØ

65TRF41601
600V-120/208V
30kVA

65TRF41601-P1
4c-3/0 AWG RW90
EMT 63mmØ

PUMPING STATION

JUNCTION BOX

30A XA XA
NOTE 1

3C 10AWG
TECK 1KV

120/208V, 30CCT
DISTR. PANEL
65DPS41601

JUNCTION BOX

65SPB41601-06-P1A
3c-12AWG RW90
EMT 21mmØ

5kW

AIR HEATER
ELECTRICAL ROOM
65HEA41601

65SPB41601-06-P1B
3c-12AWG RW90
EMT 21mmØ

5kW

AIR HEATER
ELECTRICAL ROOM
65HEA41602

65SPB41603, 600V
FUEL FARM

600 V, 100A | 1 | 2

3c-6AWG RW90 EMT 35mmØ
65SPB41603-01
60A / 60A

3c-12AWG RW90 EMT 35mmØ
65SPB41603-02
30A / 15A

NUNA GARAGE
45kVA XFO

SEE PAGE D-CP1

65TRF41602
600V-120/208V
15kVA

65TRF41602-P1
4c-6AWG RW90 EMT 21mmØ
60A

65TRF41602-P1
4c-6AWG RW90 EMT 21mmØ
15A XA XA

120/208V
DISTR. PANEL
65DPS41602

M FUEL PUMP #3A 15HP 65POD41603A
M FUEL PUMP #3B 15HP 65POD41603B
M FUEL PUMP #4A 15HP 65POD41604A
M FUEL PUMP #4B 15HP 65POD41604B
2kW AIR HEATER OPERATOR ROOM 65HEA41605

NOTE:

1. SUPPLY, INSTALL AND CONNECT ALL BREAKERS, CABLES FOR DEF CONTAINER PUMP, LIGHTING AND SERVICES.

WSP
1075, 3e AVENUE EST
VAL-D'OR (QUÉBEC) CANADA J9P 0J7
TÉL. : 819 825-4274 | TÉLÉC. : 819 824-1514 | WWW.WSPGROUP.COM

Ref. 151-06440-40

TITRE / TITLE	# DWG	REV	DESCRIPTION	DATE	PAR BY
_	_				
_	_				
_	_				
_	_	1	ISSUED FOR CONSTRUCTION	2017-08-02	
600V DISTRIBUTION - PORTAIL #1 SINGLE LINE DIAGRAM	65-403-275-200	0	ISSUED FOR CONSTRUCTION	2017-07-11	F.M.G.

DESSINS EN RÉFÉRENCE / REFERENCE DRAWINGS

REVISIONS

AGNICO EAGLE

DESSINÉ PAR DRAWN BY	F. MONDERIE, Tech.	DATE 2017-02-01
VÉRIFIÉ PAR CHECKED BY	R. HÉNAULT, tech	2017-02-01
APPROUVÉ PAR APPROVED BY	LUC SÉNÉCAL, P.Eng.	2017-07-11
No. PROJET PROJECT NO.	6515	
DATE	2016-09-06	

L'INFORMATION CI-CONTENUE EST LA PROPRIÉTÉ DE AGNICO EAGLE LTÉE ET DOIT ÊTRE RETOURNÉE SUR DEMANDE. SANS AUTORISATION ÉCRITE PRÉALABLE, TOUTE TRANSMISSION DE COPIE(S) À AUTRUI ET TOUTE UTILISATION AUTRE QUE CELLE POUR LAQUELLE L'INFORMATION EST PRÊTÉE SONT INTERDITES.
© AGNICO EAGLE LTÉE

THE INFORMATION HERE ON IS THE PROPERTY OF AGNICO EAGLE LTD. AND MUST BE RETURNED UPON REQUEST. WITHOUT WRITTEN PERMISSION, ANY COPYING TRANSMITTAL TO OTHERS AND ANY USE EXCEPT THAT FOR WHICH IT IS LOANED ARE PROHIBITED.
© AGNICO EAGLE LTD.

TITRE / TITLE
AGNICO EAGLE - MELIADINE DIVISION
416 - FUEL TANK FARM
275 - POWER ELECTRICAL
600V DISTRIBUTION - PORTAL #1
SINGLE LINE DIAGRAM

ÉCHELLE/ SCALE	FICHIER FILE	REVISION	FEUILLE/SHT
NONE	65-416-275-200_R1.DWG	1	1 / 1

No. DESSIN/ DRAWING NO. 65-416-275-200

AE-CART-ANSI B

\\CaVdo1Dat01\Projet_15X-XXXX-XX\151-06440-40\01-COMM\Envoyé_AEM\WSP-AEM-151-06440-40-649 (116 and 416 changing equipment number)\65-416-275-200_R1.dwg-2017-08-03 10:48:43

NO. DESSIN
DRAWING NO. 65-416-275-202_R1

FORMAT ARCHD

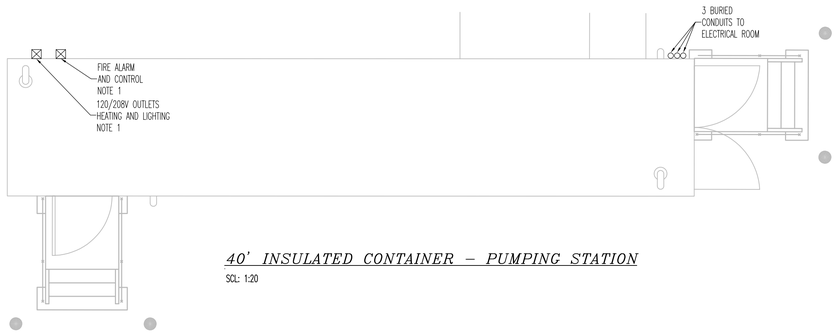

40' INSULATED CONTAINER – PUMPING STATION

SCL: 1:20

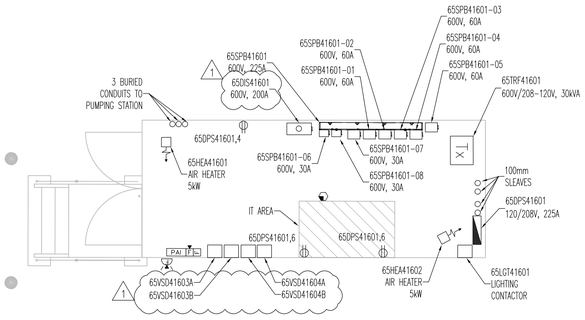

20' INSULATED CONTAINER – ELECTRICAL ROOM

SCL: 1:20

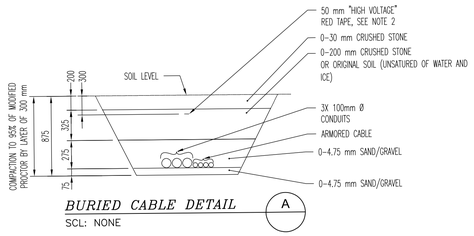

BURIED CABLE DETAIL A

SCL: NONE



PLAN VIEW

SCL: 1:150

POUR CONSTRUCTION
FOR CONSTRUCTION
AGNICO EAGLE DATE : 2017-08-02

PLAN CLÉ
KEY PLAN

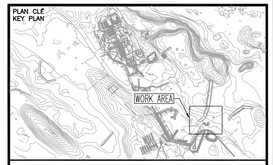

WSP
1075, 3e AVENUE EST
VAL-D'OR (QUÉBEC) CANADA J9P 0J7
TÉL. : 819 825-4274 | TÉLÉC. : 819 824-1514 | WWW.WSPGROUP.COM

Ref. 151-06440-40

NOTES GÉNÉRALES / GENERAL NOTES

1. THE PUMPING STATION CONTAINER COMES PREWIRED WITH THOSE JONCTION BOXES. ELECTRICAL CONTRACTOR SHALL CONNECT THOSE JONCTION BOXES TO THE RIGHT SERVICES IN THE ELECTRICAL CONTAINER. ALL CABLES BETWEEN CONTAINERS SHALL BE TECK TYPE AND INSTALLED BURIED IN TRENCH. INSTALL 3X 100mm Ø CONDUITS FOR FUTURE CABLES.
2. THE RED TAPES SHALL BE INSTALLED ABOVE THE WOODEN PLANKS AND FOLLOW ALL THE BURIED PART OF THEM.
3. LIGHTING AND SERVICES CABLES FOR TANKS MUST BE INSTALLED USING PIPING RACKS. PIPING RACKS ARE SUPPLIED AND INSTALLED BY OTHER (SEE TYPICAL DETAIL ON DRAWING 65-416-285-200)

- THE LOCATION OF PIPING IS APPROXIMATE AND SHALL BE COORDINATE WITH OTHER CONTRACTORS

L'INFORMATION CI-CONTENUE EST LA PROPRIÉTÉ DE AGNICO EAGLE LTÉE ET DOIT ÊTRE RETOURNÉE SUR DEMANDE, SANS AUTORISATION ÉCRITE PRÉALABLE, TOUTE TRANSMISSION DE COPIE(S) À AUTRUI ET TOUTE UTILISATION AUTRE QUE CELLE POUR LAQUELLE L'INFORMATION EST PRÊTÉE SONT INTERDITES. © AGNICO EAGLE LTÉE.

THE INFORMATION HERE ON IS THE PROPERTY OF AGNICO EAGLE LTD, AND MUST BE RETURNED UPON REQUEST, WITHOUT WRITTEN PERMISSION, ANY COPYING TRANSMITTAL TO OTHERS AND ANY USE EXCEPT THAT FOR WHICH IT IS LOANED ARE PROHIBITED. © AGNICO EAGLE LTD.

DESSINS EN RÉFÉRENCE / REFERENCE DRAWINGS

TITRE / TITLE	# DWG
FUEL FARM – PORTAL #1	65-403-275-202
LEGEND, TABLES & DETAILS	65-416-285-200
LEGEND, TABLES, PANELS & DETAILS	65-416-275-204

AGNICO EAGLE

REV.	DATE	DESCRIPTION	PAR/BY	APP.	CLIENT
1	2017-08-02	ISSUED FOR CONSTRUCTION	R.H.	S.P.D.	
0	2017-07-11	ISSUED FOR CONSTRUCTION	F.M.G.	L.S.	

REVISIONS

TITRE / TITLE

AGNICO EAGLE – MELIADINE DIVISION
416 – FUEL TANK FARM
275 – POWER ELECTRICAL
EQUIPMENT LAYOUT AND DETAIL
PLAN VIEW
FUEL FARM – PORTAL #1

DESSINÉ PAR / DRAWN BY	FANNIE MONDERIE, Tech.	DATE 2017-02-01
VÉRIFIÉ PAR / CHECKED BY	RÉMI HÉNAULT, Tech.	2017-02-01
APPROUVÉ PAR / APPROVED BY	LUC SÉNÉCAL, P.Eng.	2017-07-11
ÉCHELLE / SCALE	INDICATED	DATE 2016-09-06
NO. DESSIN / DRAWING NO.	65-416-275-202	
NO. PROJET / PROJECT NO.	6515	REVISION 1
		FEUILLE / SHT 1 / 1

AE-CART-ARCH D

\\CaVdo1Dat01\Projet_15X-XXXX-XX\151-06440-40\01-COMM\Envoyé_AEM\WSP-AEM-151-06440-40-649 (116 and 416 changing equipment number)\65-416-275-202_R1.dwg-2013-02-19 14:03:29

FILE NO. 65-416-275-202_R1.dwg

NO. DESSIN
DRAWING NO. 65-416-275-204_R0

FORMAT ARCHD

EQUIPMENT LIST

ARTICLE NUMBER	SYMBOL	DESCRIPTION	MANU.	TYPE	NOTE
30	XB	CONNECTION – CROSS CONNECTOR COMPRESSION CROSS CONNECTOR FOR TWO HORIZONTAL CONDUCTORS ON THE SAME PLANE. CABLE SIZE: 4/0AWG.	BURNDY	YGL-C	
31	GT	ROD AND GROUNDING ROD CONNECTOR STEEL ROD COATED WITH COPPER. COMPRESSION CONNECTOR FOR GROUNDING ROD. ROD DIAMETER: 0.020M, ROD LENGTH: 3M CABLE SIZE: 4/0AWG.	BURNDY	YGLR-C	
32	TA	CONNECTION – TAP COMPRESSION CONNECTION FOR GROUNDING TAP OR LAP SPLICE. CABLE SIZE: 4/0AWG.	BURNDY	YGHP-C	
33	–	GROUND ROD TAP CONNECTOR – HYTAIL FOR CONNECTION TO GROUNDING ROD, HEAVY DUTY. ROD SIZE: 4/0AWG CABLE SIZE: 4/0AWG	BURNDY	YGHR	
34	–	COMPRESSION CONNECTION – GROUND PLATES HEAVY DUTY, CONSTRUCTION SITE RESISTANT CABLE SIZE: 4/0AWG.	BURNDY	YGF	
35	PT	CONNECTION – PARALLEL HORIZONTAL CONDUCTORS COMPRESSED CONNECTOR FOR TWO PARALLEL HORIZONTAL CONDUCTIONS. CABLE SIZE: 4/0AWG TAP CABLE SIZE: 4/0AWG.	BURNDY	YGHC	
36	VS	CONNECTION – STRUCTURE CONNECTION USED FOR VERTICAL STEEL SURFACE, BEAM OR STRUCTURAL STEEL. GSTUD CABLE SIZE: 4/0AWG.	BURNDY	GSTUD-HY	
37	LA	CONNECTION – HEAVY DUTY TERMINALS HEAVY DUTY TERMINALS DESIGNED TO CARRY SHORT CIRCUIT LOAD AND WITHSTAND HIGH MECHANICAL STRESS. CABLE SIZE: 4/0AWG.	BURNDY	YGHA	
38	VS2	CONNECTION – STRUCTURE CONNECTION USED FOR VERTICAL STEEL SURFACE (STRUCTURAL BEAMS) CABLE SIZE: 4/0AWG	BURNDY	YGIB	EVERY BURNDY YGIB CONNECTION (VSS) MUST BE COMBINED WITH A YGHA HEAVY DUTY TERMINAL (LAS) AND 2 NUTS OF ADEQUATE SIZE FOR THE TERMINAL.
39		GROUNDING PLATE PREFABRICATED COPPER GROUNDING PLATE WITH ONE PIGTAIL, WIRE GUAGE: #4/0AWG, PLATE SIZE: 610mmX610mm, THICKNESS : 6.35mm	PENTAIR	GPECEEK0242Q008	
40	CP	CONNECTION – PIPE MECHANICAL GROUNDING CONNECTOR CONDUCTOR TO PIPE CABLE SIZE: 4/0AWG.	BURNDY	GAR3903BU GAR3904BU GAR3905BU GAR3906BU	1"¼ TO 2" (30MM TO 52MM) PIPE 2"½ TO 3"½ (65MM TO 85MM) PIPE 4" TO 5" (102MM TO 127MM) PIPE 6" (150MM) PIPE
41	○	CABLE TRAY CONNECTOR CABLE TRAY GROUNDING CLAMP. FOR CABLE SIZE 4/0AWG.	THOMAS & BETTS	GTC24P	
42		BONDING JUMPER PREFABRICATED COPPER JUMPER, FOR EXPANSION JOINTS AND ADJUSTABLE JOINTS.	THOMAS & BETTS	FBE12-1	
		COPPER GROUNDING CONDUCTOR, 4/0 AWG, BARE, FLEXIBLE, TINNED, 19 STRANDS (ASTM STANDARS B8 AND B33).	PHILLIPS CABLES		
	5M	COPPER CONDUCTOR, IDENTICAL CHARACTERISTICS FOR FUTURE CONNECTIONS. THE LENGTH TO RESERVE IS SPECIFIED ON THE SYMBOL.	PHILLIPS CABLES		

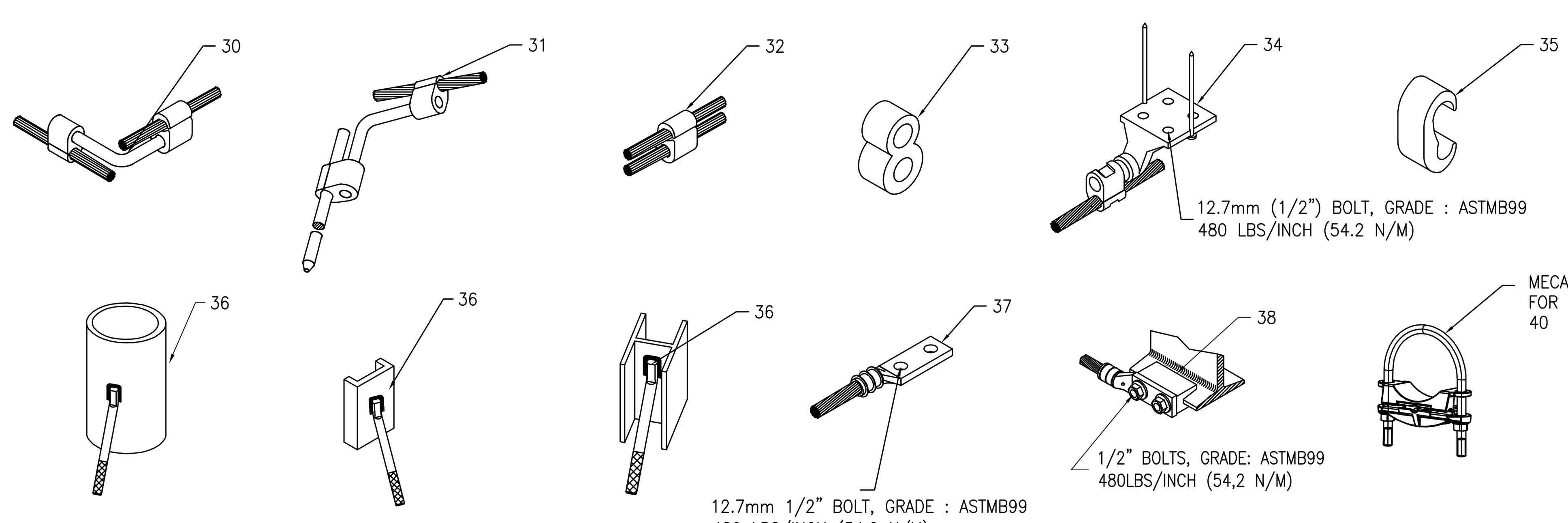

CONNECTOR TYPES – BURNDY

SCL: NONE
USABLE TYPES WHEN THE SYSTEM IS BURIED OR NOT

ELECTRICAL LEGEND

SERVICES AND DISTRIBUTION

- FUSED SAFETY SWITCH
- Tx TRANSFORMER
- SURFACE MOUNTED DISTRIBUTION PANEL, 120/208V
- SURFACE MOUNTED DISTRIBUTION PANEL, 347/600V
- THREE PHASE MOTOR, (CAPACITY INDICATED)
- CABLE TRAY
- ELECTRIC HEATER
- 15A., 120V. DUPLEX RECEPTACLE
- BACKUP GENERATOR RECEPTACLE
- JUNCTION BOX

DETECTION & FIRE ALARM

- ADDRESSABLE SMOKE DETECTOR
- F MANUAL FIRE PULL STATION
- F FIRE ALARM HORN
- END OF LINE RESISTOR
- PAI MAIN FIRE ALARM PANEL
- F WALL MOUNTED VISUAL FIRE ALARM AND HORN

ELECTRICAL EQUIPMENT

NO. EQUIP	MANUFACTURER	CATALOG NUMBER	MOUNTING	DESCRIPTION
65SPB41601 65SPB41602	BEL	T6203 TGR200	SURF.	SPLITTER TROUGH, 347/600V, 3ph, 3 WIRES, 225A COPPER BUSSING, NEMA 1 ENCLOSURE
65DPS41601 65DPS41602	SCHNEIDER ELECTRIC	NQ430L2C	SURF.	SERVICES PANEL, 120/208V, 3ph, 4 WIRES, 125A COPPER BUSSING, 30 SINGLE POLE CIRCUIT BREAKERS, NEMA 1 ENCLOSURE
65TRF41601 65TRF41603	SCHNEIDER ELECTRIC	EE30T65HCU	SURF.	TRANSFORMER 600-120/208V, 30kVA, COPPER WINDINGS
65TRF41602 65TRF41604	SCHNEIDER ELECTRIC	EE15T65HCU	SURF.	TRANSFORMER 600-120/208V, 15kVA, COPPER WINDINGS
65DIS41601 65DIS41602	SCHNEIDER ELECTRIC	CH364	SURF.	HEAVY DUTY FUSED SAFETY SWITCH 600V, 3ph, 200A, FUSES 200A, NEMA 1 ENCLOSURE
65SPB41601-01 65SPB41602-01	SCHNEIDER ELECTRIC	CH362	SURF.	HEAVY DUTY FUSED SAFETY SWITCH 600V, 3ph, 60A, NEMA 1 ENCLOSURE
65SPB41601-02 65SPB41602-02	SCHNEIDER ELECTRIC	CH362	SURF.	HEAVY DUTY FUSED SAFETY SWITCH 600V, 3ph, 60A, NEMA 1 ENCLOSURE
65SPB41601-03 65SPB41602-03	SCHNEIDER ELECTRIC	CH362	SURF.	HEAVY DUTY FUSED SAFETY SWITCH 600V, 3ph, 60A, NEMA 1 ENCLOSURE
65SPB41601-04 65SPB41602-04	SCHNEIDER ELECTRIC	CH362	SURF.	HEAVY DUTY FUSED SAFETY SWITCH 600V, 3ph, 60A, NEMA 1 ENCLOSURE
65SPB41601-05 65SPB41602-05	SCHNEIDER ELECTRIC	CH362	SURF.	HEAVY DUTY FUSED SAFETY SWITCH 600V, 3ph, 60A, NEMA 1 ENCLOSURE
65SPB41601-06 65SPB41602-06	SCHNEIDER ELECTRIC	CH361	SURF.	HEAVY DUTY FUSED SAFETY SWITCH 600V, 3ph, 30A, NEMA 1 ENCLOSURE
65SPB41601-07 65SPB41602-07	SCHNEIDER ELECTRIC	CH362	SURF.	HEAVY DUTY FUSED SAFETY SWITCH 600V, 3ph, 60A, NEMA 1 ENCLOSURE
65SPB41601-08 65SPB41602-08	SCHNEIDER ELECTRIC	CH361	SURF.	HEAVY DUTY FUSED SAFETY SWITCH 600V, 3ph, 30A, NEMA 1 ENCLOSURE
65LGT41601 65LGT41602	SCHNEIDER ELECTRIC	8903 LG40 V02	SURF.	LIGHTING CONTACTOR C/W NEMA1 ENCLOSURE, SELECTOR MAN-OFF-AUTO, GREEN INDICATOR LAMP.
65HEA41601 65HEA41602 65HEA41603 65HEA41604	OUELLET	OAS05036 & OAS-DIS40 & OAS-T	SURF.	ELECTRIC HEATER, 600V, 3PH, 5kW WITH THERMOSTAT AND DISCONNECT SWITCH.
65VSD41601 65VSD41602 65VSD41603 65VSD41604	ABB	ACS880 R5	SURF.	VARIABLE SPEED DRIVE

C.-M. = CEILLING-MOUNTED
BUILT = BUILT-IN
SURF. = SURFACE
SUSP. = SUSPENED
H.G. = HEIGHT GIVENT TO THE SITE
SUP. = MOUNTED ON SUPPORT
V.D.P. = SEE DETAIL ON DRAWING

FIRE DETECTION EQUIPMENT

TYPE	MANUFACTURER	CATALOG NUMBER	MOUNTING	DESCRIPTION
PAI	NOTIFIER	NFS-320C & E-1218 & NCM-W & NFN-GW-WM-3	SURF.	FIRE ALARM PANEL FOR SMALL BUILDING WITH NETWORK CARD AND IP CARD
F	NOTIFIER	NBG-12LX	SURF.	ADDRESSABLE TWO-STAGE MANUAL STATION ENGLISH/FRENCH
	NOTIFIER	FAPT-851A & B210LPA	H.D.	LOW PROFILE INTELLIGENT MULTI-SENSOR DETECTOR
F	NOTIFIER	HRA	SURF.	INDOOR RED HORN
F	NOTIFIER	P2RJKA-B	SURF.	WATERPROOF STROBES

BUILT = BUILT-IN
SURF. = SURFACE
H.G. = HEIGHT GIVEN ON SITE

PANEL No. : 65DPS41601 - PORTAIL #1

Tension:	120 208 Volts	Enclosure type	NEMA 1
Powered by:	TRANSFORMER 30kVA	Main breaker:	-
Installation:	SURFACE	No. of circuits:	30 CCTs
Location:	ELECTRICAL ROOM CONTAINER	Bars:	225 A
Type:	NQ430L2C	Ampacity:	10 kA

Local and description	TYPE REF	QTY	WATTS	BREAK. TYPE	BREAK. AMP	CT #		CT #	BREAK. AMP	BREAK. TYPE	WATTS	TYPE QTY	REF	Local and description
L.OUTDOOR TANKS	L	9	540	L	15	1	A	2	15		120	1	P	OUTLET PUMPING STATION
L.OUTDOOR	L	8	480	L	15	3	B	4	15		120	1	P	OUTLET ELECTRICAL ROOM
L.PUMPING STATION	L	4	240	L	15	5	C	6	15		480	2	P	OUTLET IT AREA
L.ELECTRICAL ROOM	L	5	300	L	15	7	A	8	15	S				
L.EMERGENCY BAT.	L	1	120	L	15	9	B	10	15	S				
				S	15	11	C	12	15	S				
				S	20	13	A	14	15	S				
				S	20	15	B	16	20	S				
						17	C	18	20	S				
						19	A	20						
						21	B	22						
						23	C	24						
						25	A	26						
						27	B	28						
						29	C	30						

TYPE (REF)	Total(W)	Qty
(L) Lighting	1680	5
(P) Outlet	720	3
(H) Heating	0	0
(M) Motors	0	0
(W) Water heater	0	0
(O) Others	0	0

TYPE (REF)	Qty (ref)
(S) Spare	5

	Watts	Amp
Phase A	960	8.00
Phase B	720	6.00
Phase C	720	6.00
Total R	2400	6.66

PANEL No. : 65DPS41602 - INDUSTRIAL SITE

Tension:	120 208 Volts	Enclosure type	NEMA 1
Powered by:	TRANSFORMER 30kVA	Main breaker:	-
Installation:	SURFACE	No. of circuits:	30 CCTs
Location:	ELECTRICAL ROOM CONTAINER	Bars:	225 A
Type:	NQ430L2C	Ampacity:	10 kA

Local and description	TYPE REF	QTY	WATTS	BREAK. TYPE	BREAK. AMP	CT #		CT #	BREAK. AMP	BREAK. TYPE	WATTS	TYPE QTY	REF	Local and description
L.OUTDOOR TANKS	L	10	600	L	15	1	A	2	15		120	1	P	OUTLET PUMPING STATION
L.OUTDOOR	L	5	300	L	15	3	B	4	15		120	1	P	OUTLET ELECTRICAL ROOM
L.PUMPING STATION	L	4	240	L	15	5	C	6	15		480	2	P	OUTLET IT AREA
L.ELECTRICAL ROOM	L	5	300	L	15	7	A	8	15	S				
L.EMERGENCY BAT.	L	1	120	L	15	9	B	10	15	S				
				S	15	11	C	12	15	S				
				S	20	13	A	14	15	S				
				S	20	15	B	16	20	S				
						17	C	18	20	S				
						19	A	20						
						21	B	22						
						23	C	24						
						25	A	26						
						27	B	28						
						29	C	30						

TYPE (REF)	Total(W)	Qty
(L) Lighting	1560	5
(P) Outlet	720	3
(H) Heating	0	0
(M) Motors	0	0
(W) Water heater	0	0
(O) Others	0	0

TYPE (REF)	Qty (ref)
(S) Spare	5

	Watts	Amp
Phase A	1020	8.50
Phase B	540	4.50
Phase C	720	6.00
Total R	2280	6.33

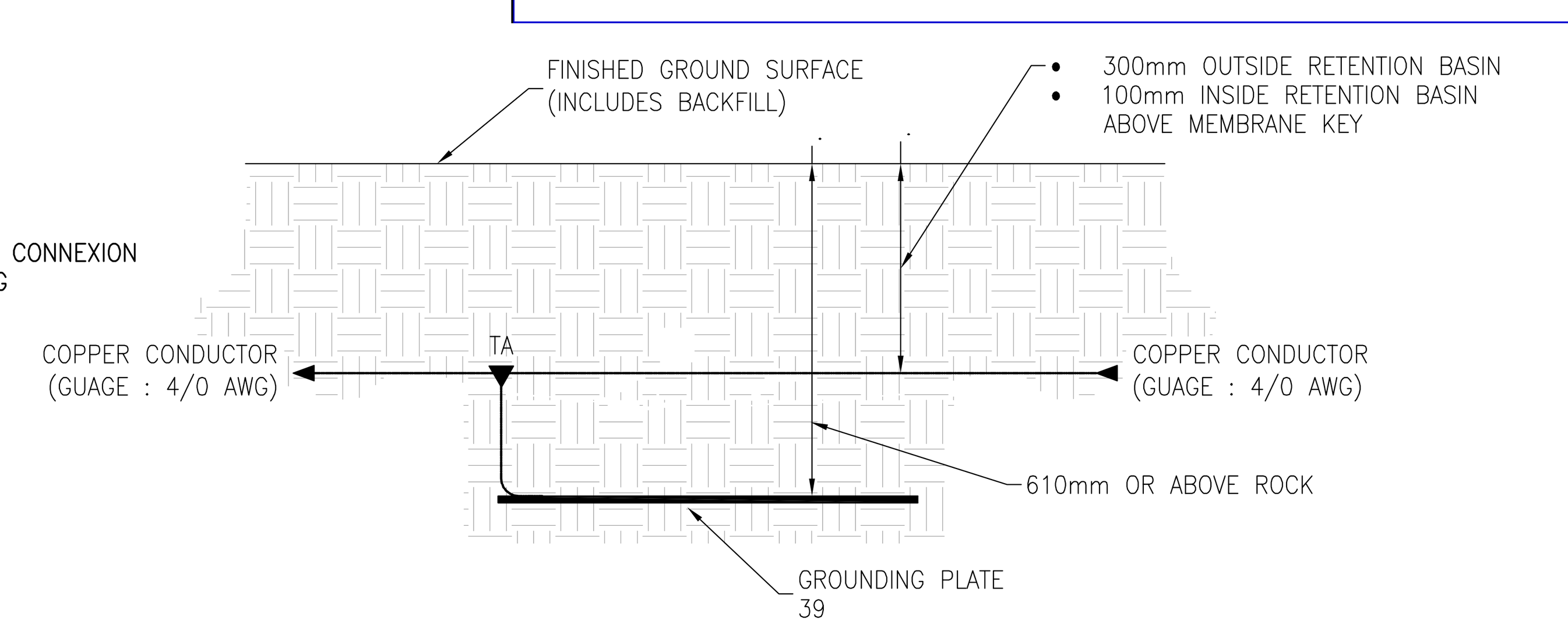

TYPICAL INSTALLATION – GROUNDING PLATE AND GROUNDING CONDUCTOR

SCL: 1:20

POUR CONSTRUCTION
FOR CONSTRUCTION
AGNICO EAGLE DATE : 2017-07-13

PLAN CLÉ
KEY PLAN

WSP
1075, 3e AVENUE EST
VAL-D'OR (QUÉBEC) CANADA J9P 0J7
TÉL. : 819 825-4274 | TÉLÉC. : 819 824-1514 | WWW.WSPGROUP.COM
Ref. 151-06440-40

NOTES GÉNÉRALES / GENERAL NOTES

L'INFORMATION CI-CONTENUE EST LA PROPRIÉTÉ DE AGNICO EAGLE LTÉE ET DOIT ÊTRE RETOURNÉE SUR DEMANDE. SANS AUTORISATION ÉCRITE PRÉALABLE, TOUTE TRANSMISSION DE COPIE(S) À AUTRUI ET TOUTE UTILISATION AUTRE QUE CELLE POUR LAQUELLE L'INFORMATION EST PRÊTÉE SONT INTERDITES. © AGNICO EAGLE LTÉE

THE INFORMATION HERE ON IS THE PROPERTY OF AGNICO EAGLE LTD. AND MUST BE RETURNED UPON REQUEST. WITHOUT WRITTEN PERMISSION, ANY COPYING TRANSMITTAL TO OTHERS AND ANY USE EXCEPT THAT FOR WHICH IT IS LOANED ARE PROHIBITED. © AGNICO EAGLE LTD.

DESSINS EN RÉFÉRENCE / REFERENCE DRAWINGS

TITRE / TITLE	# DWG
–	–
–	–
–	–
–	–
–	–
LEGEND, TABLES, PANELS & DETAILS	65-403-275-204

AGNICO EAGLE

REV.	DATE	DESCRIPTION	PAR/BY	APP.	CLIENT
0	2017-07-13	ISSUED FOR CONSTRUCTION	F.M.G.	L.S.	

REVISIONS

TITRE / TITLE
AGNICO EAGLE – MELIADINE DIVISION
416 – FUEL TANK FARM
275 – POWER ELECTRICAL
LEGEND, TABLES, PANELS & DETAILS

		DATE
DESSINÉ PAR / DRAWN BY	FANNIE MONDERIE, Tech.	2017-02-01
VERIFIÉ PAR / CHECKED BY	RÉMI HÉNAULT, Tech.	2017-02-01
APPROUVÉ PAR / APPROVED BY	LUC SÉNÉCAL, P.Eng.	2017-07-13
ÉCHELLE / SCALE	INDICATED	DATE 2016-09-06

NO. DESSIN / DRAWING NO. 65-416-275-204

NO. PROJET / PROJECT NO. 6515 — REVISION 0 — FEUILLE / SHT 1/1

AE-CART-ARCH D

FILE NO. 65-416-275-204_R0.dwg

P:\2015\1\151-06440-40 Dossier officiel sur serveur VD\Industriel\03-TECH_ORANGE\Dessin\Dessin_Emis\65-416-275-204_R0.dwg-2017-07-12 16:59:49

NO. DESSIN
DRAWING NO. 65-416-275-205_R0

FORMAT ARCHD

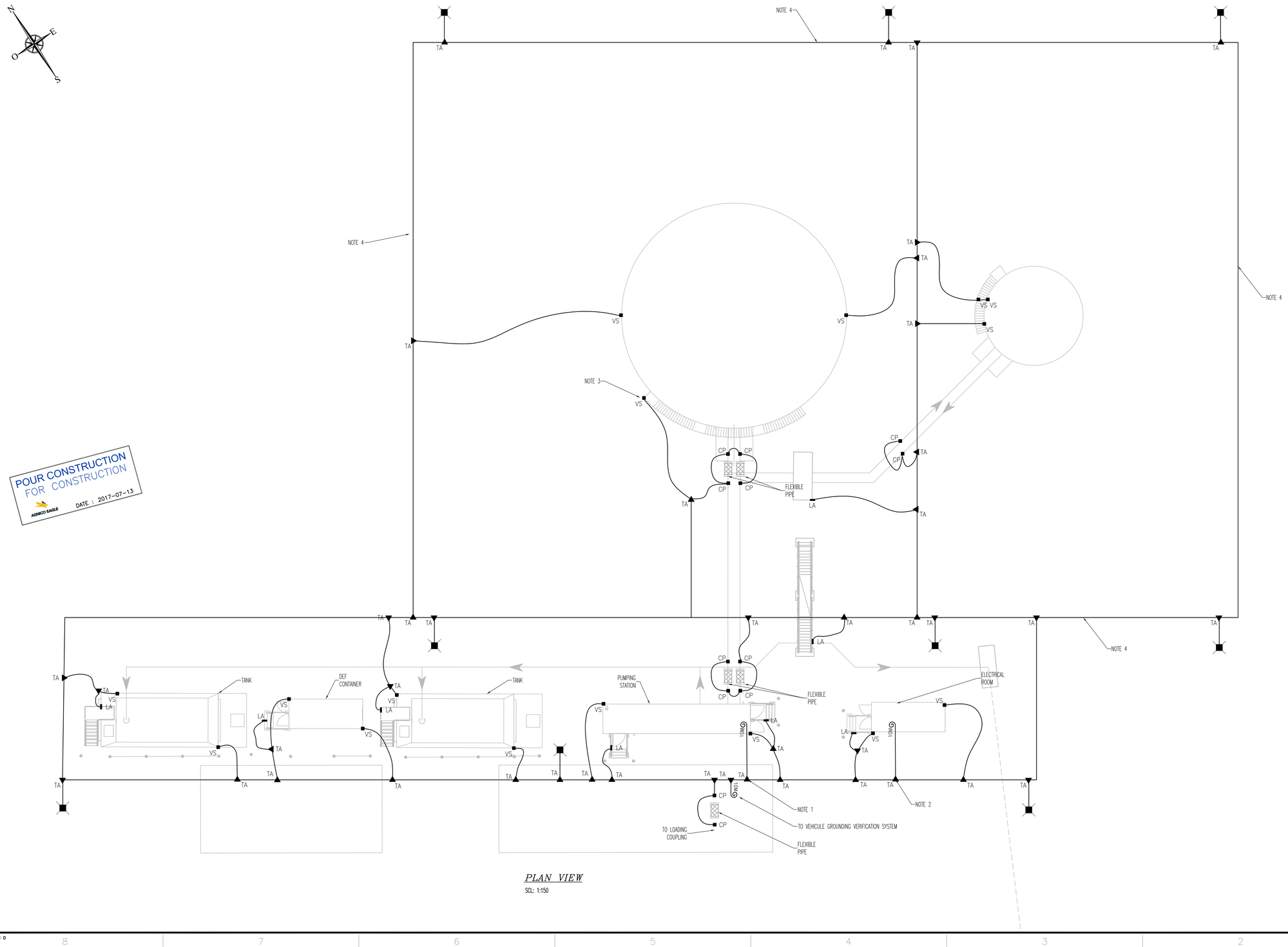

POUR CONSTRUCTION
FOR CONSTRUCTION
AGNICO EAGLE DATE : 2017-07-13

PLAN VIEW
SCL: 1:150

PLAN CLÉ
KEY PLAN

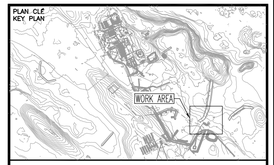

WSP
1075, 3e AVENUE EST
VAL-D'OR (QUÉBEC) CANADA J9P 0J7
TÉL. : 819 825-4274 | TÉLÉC. : 819 824-1514 | WWW.WSPGROUP.COM

Ref. 151-06440-40

NOTES GÉNÉRALES / GENERAL NOTES

1. GROUND EQUIPMENT INSIDE THE PUMPING STATION AT THE CONNECTION POINT.
2. GROUND THE MAIN SAFETY SWITCH IN THE ELECTRICAL ROOM CONTAINER.
3. GROUND THE STAIRWELL OF THE TANK.
4. GROUNDING CONDUCTOR SHALL BE INSTALLED BURIED IN DIKE.

- GROUND ALL THE PROTECTION BOLLARDS.
- GROUND ALL METALLIC ELEMENTS IN THE RETENTION BASIN AREA AND IN TRUCK LOADING AREA.
- THE LOCATION OF THE GROUND CONNECTIONS AND CONDUCTORS ARE APROXIMATIVE AND SHALL BE COORDINATED WITH OTHER CONTRACTORS.
- THE LOCATION OF CONTAINERS SHALL BE COORDINATED WITH OTHER CONTRACTORS.
- INSTALL A 4/0 AWG GROUNDING CONDUCTOR INSIDE AND OVER THE ENTIRE LENGHT OF THE CABLE TRAY

L'INFORMATION CI-CONTENUE EST LA PROPRIÉTÉ DE AGNICO EAGLE LTÉE ET DOIT ÊTRE RETOURNÉE SUR DEMANDE, SANS AUTORISATION ÉCRITE PRÉALABLE, TOUTE TRANSMISSION DE COPIE(S) À AUTRUI ET TOUTE UTILISATION AUTRE QUE CELLE POUR LAQUELLE L'INFORMATION EST PRÊTÉE SONT INTERDITES. © AGNICO EAGLE LTÉE.

THE INFORMATION HERE ON IS THE PROPERTY OF AGNICO EAGLE LTD. AND MUST BE RETURNED UPON REQUEST, WITHOUT WRITTEN PERMISSION, ANY COPYING TRANSMITTAL TO OTHERS AND ANY USE EXCEPT THAT FOR WHICH IT IS LOANED ARE PROHIBITED. © AGNICO EAGLE LTD.

DESSINS EN RÉFÉRENCE / REFERENCE DRAWINGS

TITRE / TITLE	# DWG
FUEL FARM – PORTAIL #1	65-403-275-205
CABLE TRAY PLAN	65-416-285-201
LEGEND, TABLES, PANELS & DETAILS	65-416-275-204

AGNICO EAGLE

REV.	DATE	DESCRIPTION	PAR/BY	APP.	CLIENT
0	2017-07-13	ISSUED FOR CONSTRUCTION	F.M.G.	L.S.	

REVISIONS

TITRE / TITLE

AGNICO EAGLE – MELIADINE DIVISION
416 – FUEL TANK FARM
275 – POWER ELECTRICAL
GROUNDING LAYOUT
PLAN VIEW
FUEL FARM – PORTAIL #1

DESSINÉ PAR / DRAWN BY	FANNIE MONDERIE, Tech.	DATE 2016-10-14
VÉRIFIÉ PAR / CHECKED BY	RÉMI HÉNAULT, Tech.	2016-10-14
APPROUVÉ PAR / APPROVED BY	LUC SÉNÉCAL, P.Eng.	2017-07-13
ÉCHELLE / SCALE	INDICATED	DATE 2016-09-06

NO. DESSIN / DRAWING NO. 65-416-275-205

NO. PROJET / PROJECT NO.	REVISION	FEUILLE / SHT
6515	0	1 / 1

AE-CART-ARCH D

P:\2015\1\151-06440-40 Dossier officiel sur serveur VD\Industriel\03-TECH_ORANGE\Dessin\Dessin_Emis\65-416-275-205_R0.dwg-2013-02-19 14:03:29

FILE NO. 65-416-275-205_R0.dwg

NO. DESSIN
DRAWING NO. 65-416-275-207_R0

FORMAT ARCHD

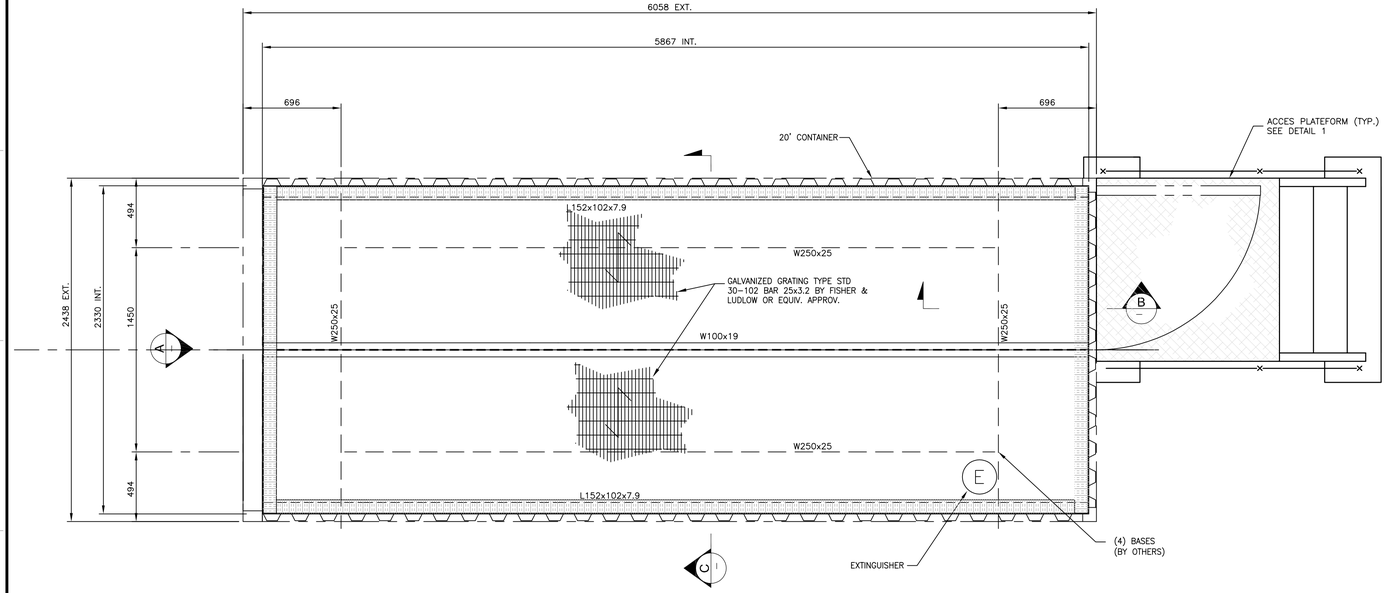

20' CONTAINER
ELECTRICAL ROOM FLOOR 1
SCL: 1:20

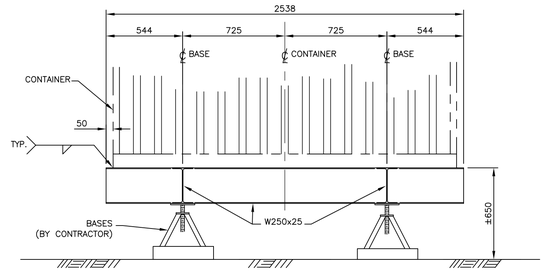

VIEW A
SCALE: 1:20

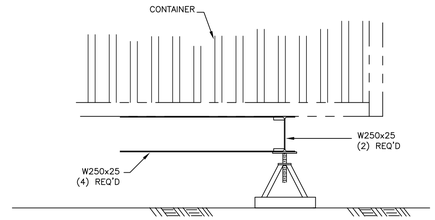

VIEW B
SCALE: 1:20

-20' STANDARD CONTAINER (WOOD FLOOR REPLACED BY STEEL BY SUPPLIER)
-GRATING IS BOLTED (WELDING IS NOT PERMITTED)
-LEVELLING SHIMS MUST BE INSTALLED ON L152x102X7.9
-GRATING SECTION 300mm LARGE (INSTALLED ON CIRCULATION AREA)
-CONTAINER FLOOR MUST HAVE A SLIGHT SLOPE TO ACCESS DOORS

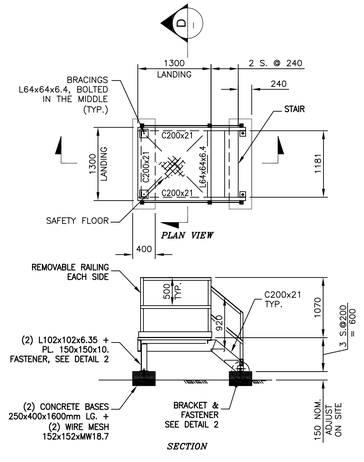

CONTAINER CATWALK 1
SCALE: 1:50
QTY: 6

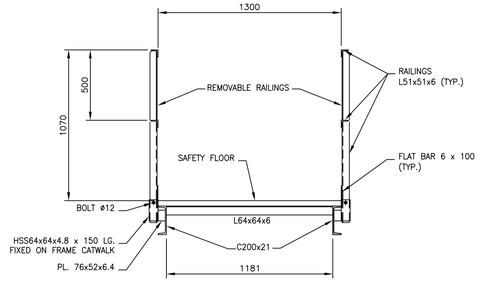

SECTION D
SCALE: 1:20

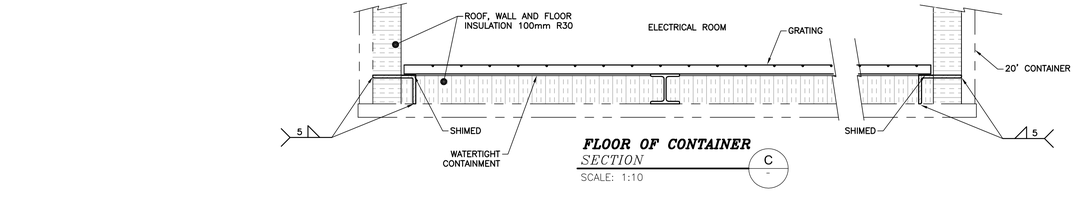

FLOOR OF CONTAINER
SECTION C
SCALE: 1:10

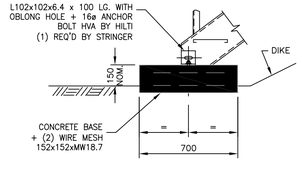

DETAIL 2
SCALE: 1:20

POUR CONSTRUCTION
FOR CONSTRUCTION
AGNICO EAGLE
DATE : 2017-07-13

PLAN CLÉ
KEY PLAN

WSP
1075, 3e AVENUE EST
VAL-D'OR (QUÉBEC) CANADA J9P 0J7
TEL. : 819 825-4274 | TÉLÉC. : 819 824-1514 | WWW.WSPGROUP.COM
Ref. 151-06440-40

NOTES GENERALES / GENERAL NOTES

CATWALK, RAILINGS AND STAIRS ARE ASSEMBLED AND BOLTED ON SITE.

DEAD LOAD = 0.5 Kpa
LIVE LOAD = 4.8 Kpa
FLÈCHE MAXIMUM = L/300

MATERIAL

GRATING OF LANDING

GRIP SPAN SAFETY GRATING, GALVANIZED STEEL, (D-51215-G, 5 DIAMONDS, Ga 2,7mm, 38.1mm DEEP) BY FISHER LUDLOW OR APPROVED EQUIVALENT, MAX. 300mm WIDTH EXCEPT WHEN INDICATED DIFFERENTLY.

STAIR

GRIP SPAN SAFETY GRATING, GALVANIZED STEEL, (D-41215-G, 4 DIAMONDS, Ga 2,7mm, 38.1mm DEEP) BY FISHER LUDLOW OR APPROVED EQUIVALENT, MAX. 241mm WIDTH EXCEPT WHEN INDICATED DIFFERENTLY.

L'INFORMATION CI-CONTENUE EST LA PROPRIÉTÉ DE AGNICO EAGLE LTÉE ET DOIT ÊTRE RETOURNÉE SUR DEMANDE, SANS AUTORISATION CONTRE PRÉAVIS, TOUTE TRANSMISSION DE COPIE(S) À AUTRUI ET TOUTE UTILISATION AUTRE QUE CELLE POUR LAQUELLE L'INFORMATION EST PRÊTÉE SONT INTERDITES. © AGNICO EAGLE LTÉE.

THE INFORMATION HERE ON IS THE PROPERTY OF AGNICO EAGLE LTD, AND MUST BE RETURNED UPON REQUEST, WITHOUT WRITTEN PERMISSION, ANY COPYING TRANSMITTAL TO OTHERS AND ANY USE EXCEPT THAT FOR WHICH IT IS LOANED ARE PROHIBITED. © AGNICO EAGLE LTD.

DESSINS EN REFERENCE / REFERENCE DRAWINGS

TITRE / TITLE	# DWG
ELECTRICAL ROOM MODIFICATIONS & ADDITIONS AT THE CONTAINERS	65-403-275-207

AGNICO EAGLE

REV.	DATE	DESCRIPTION	PAR/BY	APP.	CLIENT
0	2017-07-13	ISSUED FOR CONSTRUCTION	F.M.G.	L.S.	

REVISIONS

TITRE / TITLE
AGNICO EAGLE – MELIADINE DIVISION
416 – FUEL TANK FARM
275 – POWER ELECTRICAL
ELECTRICAL ROOM
MODIFICATIONS & ADDITIONS AT THE CONTAINERS

DESSINÉ PAR / DRAWN BY	RÉMI HÉNAULT, Tech.	DATE 2017-02-01
VÉRIFIÉ PAR / CHECKED BY	RÉMI HÉNAULT, Tech.	2017-02-01
APPROUVÉ PAR / APPROVED BY	LUC SÉNÉCAL, P. Eng.	2017-07-13
ÉCHELLE / SCALE	INDICATED	DATE 2016-09-07
NO. DESSIN / DRAWING NO.	65-416-275-207	
NO. PROJET / PROJECT NO.	6515	REVISION 0 — FEUILLE / SHT 1 / 1

AE-CART-ARCH D

P:\2015\1\151-06440-40 Dossier officiel sur serveur VD\Industriel\03-TECH_ORANGE\Dessin\Dessin_Emis\65-416-275-207_R0.dwg

FILE NO. 65-416-275-207_R0.dwg

NO. DESSIN
DRAWING NO. 65-416-285-200_R0

FORMAT ARCHD

ELECTRICAL LEGEND (DIV. 16)

LIGHTING FIXTURES

- CEILING MOUNTED LUMINAIRE OR IN CANOPY
- WALL MOUNTED LUMINAIRE
- EMERGENCY BATTERY WITH 2 HEADS LIGHT
- A PDx,yy / o — (A): INDICATES TYPE-SEE LIGHTING SCHEDULE; PDx: INDICATES ELECTRICAL PANEL; x: INDICATES CIRCUIT NUMBER; o: INDICATES CONCTROL SWITCH

LIGHTING CONTROL

- S_a — 15A, 1P, 120V, WALL SWITCH; "a" INDICATES FIXTURES CONTROLLED
- S_{3a} — "3" INDICATES A THREE-WAY SWITCH
- S_{4a} — "4" INDICATES A FOUR-WAY SWITCH
- (CP) — PHOTOCELL

LUMINAIRES

TYPE	MANUFACTURER	CATALOGUE NUMBER	MOUNTING TYPE	HEIGHT	INPUT POWER (W)	LAMP	COLOR	VOLTAGE	DESCRIPTION
L1	DIALIGHT	HZDW(C2G & HZXW7	SUSP.	IND.	60	LED	5650K	120	OUTDOOR PENDANT AREA LIGHT C/W ACCESSORIES
U1	LUMACELL	RGS 36W 2 LD1	SURF.	2200mm	120	LED	5000K	120	EMERGENCY BATTERY UNITS COMBINE WITH 2 HEADS LIGHT
(CP)	PRECISION MULTI CONTROLS	ST-158P	SURF.	H.G.S.	–	–	–	120	AJUSTABLE PHOTOELECTRIC CELL

SUSP. = SUSPENDED — FLUO = FLUORESCENT — IND. = INDICATED ON PLAN
REC. = RECESSED — LED = LIGHT EMITTING DIODE — H.G.S. = HEIGHT WILL BE GIVEN ON SITE

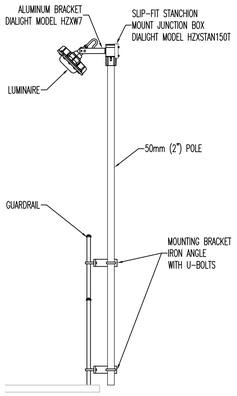

TYPICAL LUMINAIRE INSTALLATION
MOUNTED ON GUARDRAIL
SCL: NONE

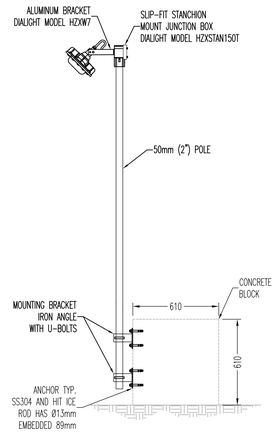

TYPICAL LUMINAIRE INSTALLATION
MOUNTED ON CONCRETE SUPPORT
SCL: NONE

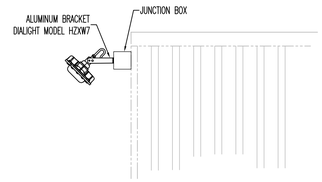

TYPICAL LUMINAIRE INSTALLATION
MOUNTED ON CONTAINER
SCL: NONE

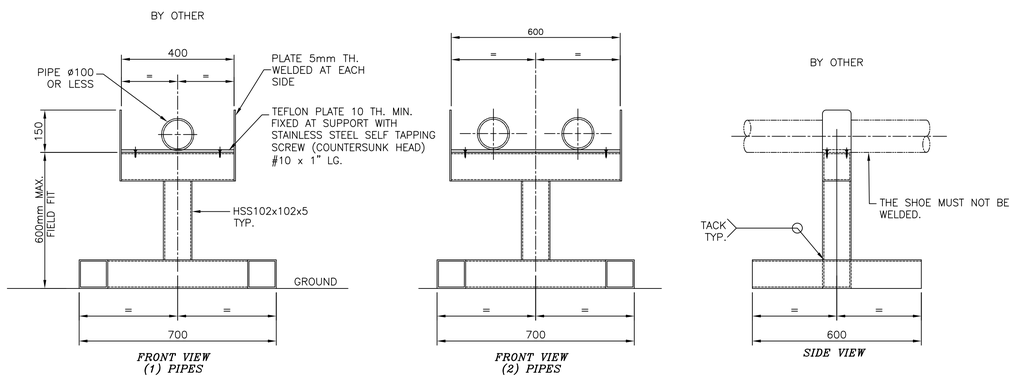

NOTE:
1. GROUND FOR THE SUPPORT TO BE FLAT AND STABLE. PAD WITH NATURAL GRANULAR BACKILL IF NEEDED.

TYPICAL PIPPING SUPPORT INSTALLATION
SCL: NONE

POUR CONSTRUCTION
FOR CONSTRUCTION
AGNICO EAGLE
DATE : 2017-07-13

PLAN CLÉ
KEY PLAN

WSP
1075, 3e AVENUE EST
VAL-D'OR (QUÉBEC) CANADA J9P 0J7
TÉL. : 819 825-4274 | TÉLÉC. : 819 824-1514 | WWW.WSPGROUP.COM

Ref. 151-06440-40

NOTES GÉNÉRALES / GENERAL NOTES

L'INFORMATION CI-CONTENUE EST LA PROPRIÉTÉ DE AGNICO EAGLE LTÉE ET DOIT ÊTRE RETOURNÉE SUR DEMANDE, SANS AUTORISATION ÉCRITE PRÉALABLE, TOUTE TRANSMISSION DE COPIE(S) À AUTRUI ET TOUTE UTILISATION AUTRE QUE CELLE POUR LAQUELLE L'INFORMATION EST PRÊTÉE, SONT INTERDITES. © AGNICO EAGLE LTÉE.

THE INFORMATION HERE ON IS THE PROPERTY OF AGNICO EAGLE LTD. AND MUST BE RETURNED UPON REQUEST, WITHOUT WRITTEN PERMISSION, ANY COPY(NG) TRANSMITTAL TO OTHERS AND ANY USE EXCEPT THAT FOR WHICH IT IS LOANED ARE PROHIBITED.
© AGNICO EAGLE LTD.

DESSINS EN RÉFÉRENCE / REFERENCE DRAWINGS

TITRE / TITLE	# DWG
–	–
–	–
–	–
–	–
–	–
LEGEND, TABLE & INSTALLATION DETAILS	65-403-285-200

AGNICO EAGLE

REV.	DATE	DESCRIPTION	PAR/BY	APP.	CLIENT
0	2017-07-13	ISSUED FOR CONSTRUCTION	F.M.G.	L.S.	

REVISIONS

TITRE / TITLE
AGNICO EAGLE – MELIADINE DIVISION
416 – FUEL TANK FARM
285 – LIGHTING & SERVICES
LIGHTING
LEGEND, TABLE & INSTALLATION DETAILS

DESSINÉ PAR / DRAWN BY	FANNIE MONDERIE, Tech.	DATE 2016-10-14
VERIFIÉ PAR / CHECKED BY	RÉMI HÉNAULT, Tech.	2016-10-14
APPROUVÉ PAR / APPROVED BY	LUC SÉNÉCAL, P.Eng.	2017-07-13
ÉCHELLE / SCALE	INDICATED	DATE 2016-09-06

NO. DESSIN / DRAWING NO. 65-416-285-200

NO. PROJET / PROJECT NO.	REVISION	FEUILLE / SHT
6515	0	1 / 1

AE-CART-ARCH D

P:\2015\1\151-06440-40 Dossier officiel sur serveur VD\Industriel\03-TECH_ORANGE\Dessin\Dessin_Emis\65-416-285-200_R0.dwg-2017-07-12 15:10:48

FILE NO. 65-416-285-200_R0.dwg

NO. DESSIN
DRAWING NO. 65-416-285-201_R0

FORMAT ARCHD



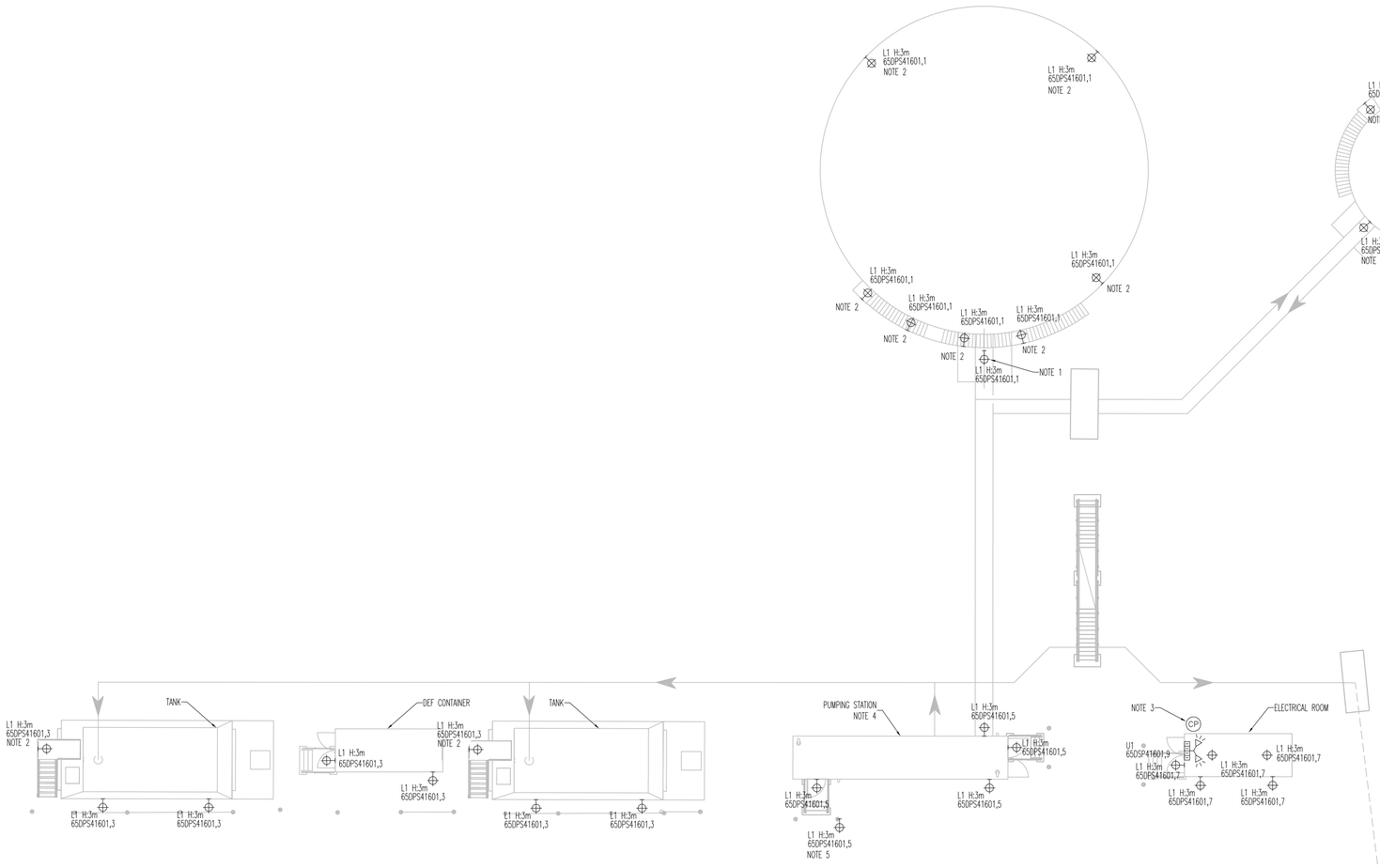

PLAN VIEW
SCL: 1:150

POUR CONSTRUCTION
FOR CONSTRUCTION
AGNICO EAGLE
DATE : 2017-07-13

PLAN CLÉ
KEY PLAN

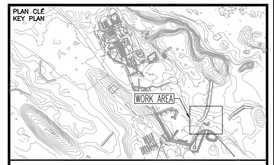

WSP
1075, 3e AVENUE EST
VAL-D'OR (QUÉBEC) CANADA J9P 0J7
TÉL. : 819 825-4274 | TÉLÉC. : 819 824-1514 | WWW.WSPGROUP.COM

Ref. 151-06440-40

NOTES GÉNÉRALES / GENERAL NOTES

1. INSTALL THIS LUMINAIRE NEAR VALVES AND INSTALL THE LUMINAIRE'S POLE ON CONCRETE SUPPORT. REFER TO TYPICAL INSTALLATION ON PLAN 65-416-285-200.
2. INSTALL THE LUMINAIRE'S POLE ON THE GUARDRAIL. REFER TO TYPICAL INSTALLATION ON PLAN 65-416-285-200.
3. CONNECT THIS PHOTOELECTRIC CELL TO THE LIGHTING CONTACTOR IN ELECTRICAL ROOM. THIS LIGHTING CONTACTOR WILL CONTROL ALL OF THE LIGHTING SHOWN ON THIS DRAWING.
4. THE PUMPING STATION CONTAINER COMES PREWIRED WITH INDOOR LIGHTING AND SERVICES PREINSTALLED. SEE NOTE 1 ON PLAN 65-416-275-202.
5. INSTALL LUMINAIRE ON CONCRETE CLOSE TO THE LOADING ARM (50 LUX IS REQUIRED AT THE CONNECTION POINT)

L'INFORMATION CI-CONTENUE EST LA PROPRIÉTÉ DE AGNICO EAGLE LTÉE ET DOIT ÊTRE RETOURNÉE SUR DEMANDE. SANS AUTORISATION ÉCRITE PRÉALABLE, TOUTE TRANSMISSION DE COPIE(S) À AUTRUI ET TOUTE UTILISATION AUTRE QUE CELLE POUR LAQUELLE L'INFORMATION EST PRÊTÉE SONT INTERDITES. (C) AGNICO EAGLE LTÉE.

THE INFORMATION HEREIN ON IS THE PROPERTY OF AGNICO EAGLE LTD. AND MUST BE RETURNED UPON REQUEST. WITHOUT WRITTEN PERMISSION, ANY COPYING TRANSMITTAL TO OTHERS AND ANY USE EXCEPT THAT FOR WHICH IT IS LOANED ARE PROHIBITED. (C) AGNICO EAGLE LTD.

DESSINS EN RÉFÉRENCE / REFERENCE DRAWINGS

TITRE / TITLE	# DWG
FUEL FARM – PORTAIL #1	65-403-285-201
LEGEND, TABLES, PANELS & DETAILS	65-416-275-204
LEGEND, TABLES & DETAILS	65-416-285-200

AGNICO EAGLE

REV.	DATE	DESCRIPTION	PAR/BY	APP.	CLIENT.
0	2017-07-13	ISSUED FOR CONSTRUCTION	F.M.G.	L.S.	

REVISIONS

TITRE / TITLE
AGNICO EAGLE – MELIADINE DIVISION
416 – FUEL TANK FARM
285 – LIGHTING & SERVICES
LIGHTING
PLAN VIEW
FUEL FARM – PORTAIL #1

DESSINÉ PAR / DRAWN BY	FANNIE MONDERIE, Tech.	DATE 2016-10-14
VÉRIFIÉ PAR / CHECKED BY	RÉMI HÉNAULT, Tech.	2016-10-14
APPROUVÉ PAR / APPROVED BY	LUC SÉNÉCAL, P.Eng.	2017-07-13
ÉCHELLE / SCALE	INDICATED	DATE 2016-09-06

NO. DESSIN / DRAWING NO. 65-416-285-201

NO. PROJET / PROJECT NO.	REVISION	FEUILLE / SHT
6515	0	1 / 1

AE-CART-ARCH D

P:\2015\1\151-06440-40 Dossier officiel sur serveur VD\Industriel\03-TECH_ORANGE\Dessin\Dessin_Emis\65-416-285-201_R0.dwg-2013-02-19 14:03:29

FILE NO. 65-416-285-201_R0.dwg

NO. DESSIN DRAWING NO. 65-ULT-416-EL-002

FORMAT ARCHD

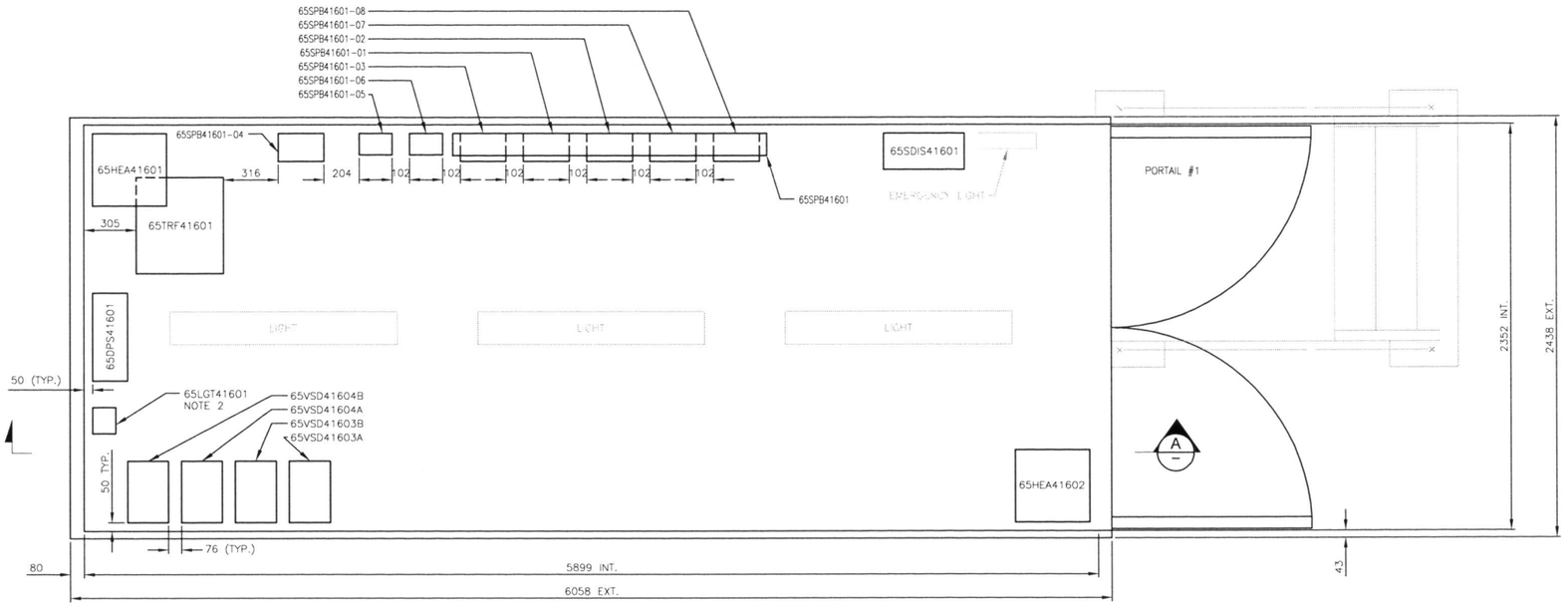

PLAN VIEW 1

SCALE: 1:16

PORTAIL #1 ELECTRICAL ROOM

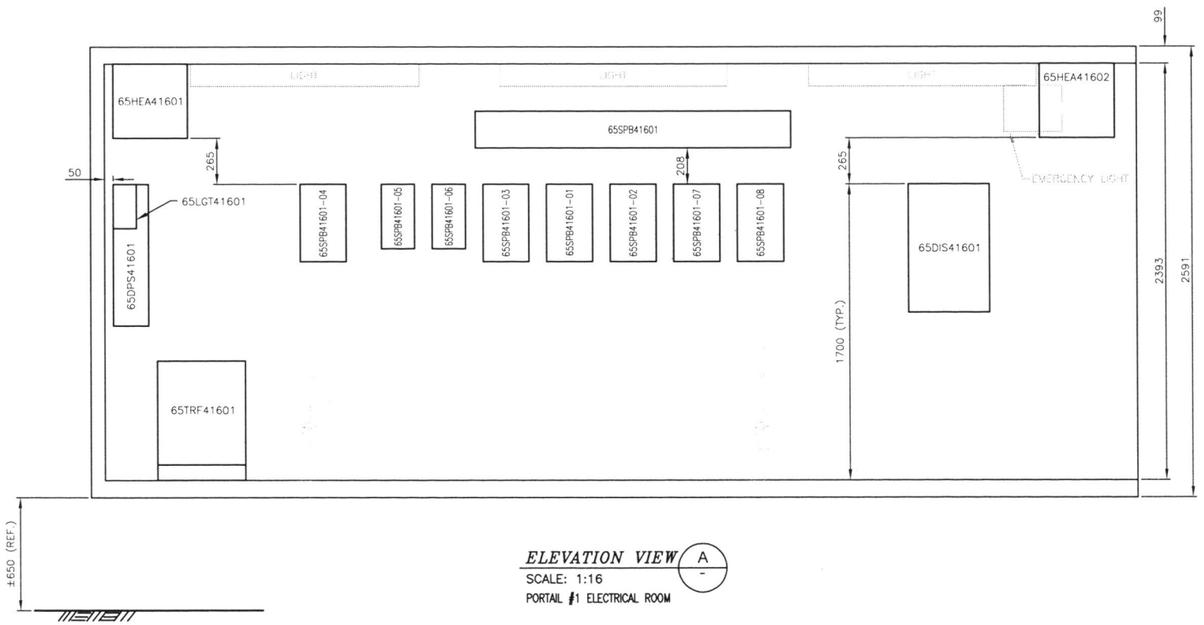

ELEVATION VIEW A

SCALE: 1:16

PORTAIL #1 ELECTRICAL ROOM

PERMIT TO PRACTICE
LE GROUPE ULTRAGEN LTÉE
Signature
Date SEP 26 2017
PERMIT NUMBER: P 1180
NT/NU Association of Professional Engineers and Geoscientists

REGISTERED PROFESSIONAL ENGINEER
13627
D. CARRIER
LICENSEE
NT/NU
SEP 26 2017

PLAN CLE
KEY PLAN

NOTES GENERALES / GENERAL NOTES

1. HEATER UNITS ARE CEILING MOUNTED.
2. TOP OF LIGHTING CONTACTOR PANEL IS 1700MM FROM FINISH FLOOR.
3. FOR EQUIPMENT IDENTIFICATION REFER TO THE MATERIAL LIST.

ISSUED FOR CONSTRUCTION
ultragen DATE: SEPT 2017

DESSINS EN REFERENCE / REFERENCE DRAWINGS

TITRE / TITLE	# DWG
LIGHTING AND SERVICES LAYOUT ER-416P	65-ULT-416-EL-005
GROUNDING LAYOUT ER-416P	65-ULT-416-EL-004
FLOOR OPENING ER-416P	65-ULT-416-EL-003
MATERIAL LIST	ULT-591700-EL-ML-001

AGNICO EAGLE

REV.	DATE	DESCRIPTION	PAR/BY	APP.	CLIENT
2	2017-09-20	ISSUED FOR CONSTRUCTION	S.G.	D.C.	
1	2017-08-04	UPDATE AREA & TAG NUMBER	S.G.	D.C.	
0	2017-06-12	ISSUED FOR CONSTRUCTION	S.G.	D.C.	
PA	2017-05-15	ISSUED FOR REVIEW	M.T.	D.C.	

REVISIONS

NUQSANA PROMEC MINING

ultragen

NO. PROJET PROJECT NO. 591700

TITRE / TITLE
AGNICO EAGLE – MELIADINE DIVISION
416 – FUEL TANK FARM
FUEL DISTRIBUTION
PORTAL #1 ELECTRICAL ROOM
ELECTRICAL EQUIPMENT LAYOUT

DESSINE PAR DRAWN BY	RISHI SHRESTHA	DATE 2017-05-15
VERIFIE PAR CHECKED BY	MARC TREMBLAY	2017-05-15
APPROUVE PAR APPROVED BY	DANIEL CARRIER	2017-05-15
ECHELLE SCALE	1:16	DATE 2017-05-15

NO. DESSIN DRAWING NO. 65-ULT-416-EL-002

NO. PROJET PROJECT NO.	REVISION	FEUILLE / SHT
6515	2	1/1

AE-CART-ARCH D

P:\1. ANNEE 2017 ACTIFS\PROMEC\5917\00\ELECTRICITE\Dessins\Dessins de travail\65-ULT-416-EL-002.dwg

FILE NO.

NO. DESSIN DRAWING NO. 65-ULT-416-EL-003

FORMAT ARCHD

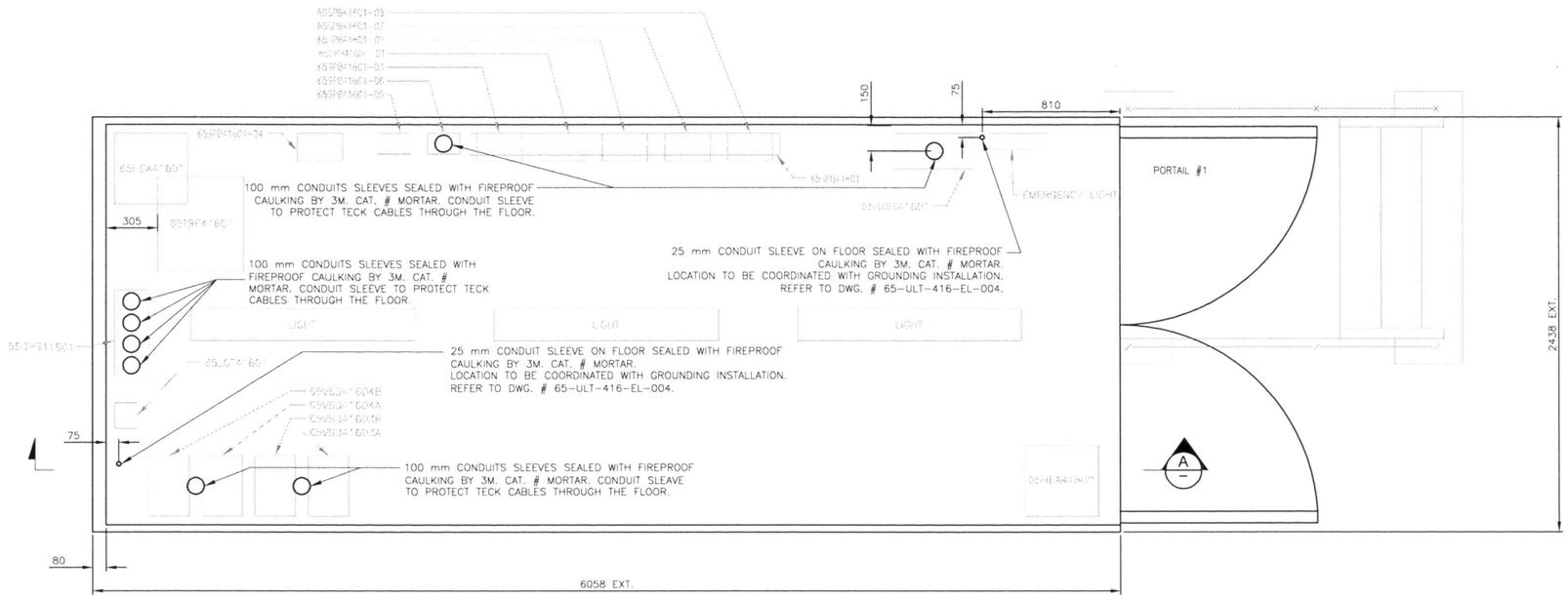

PLAN VIEW (1 / -)
SCALE: 1:16
PORTAIL #1 ELECTRICAL ROOM

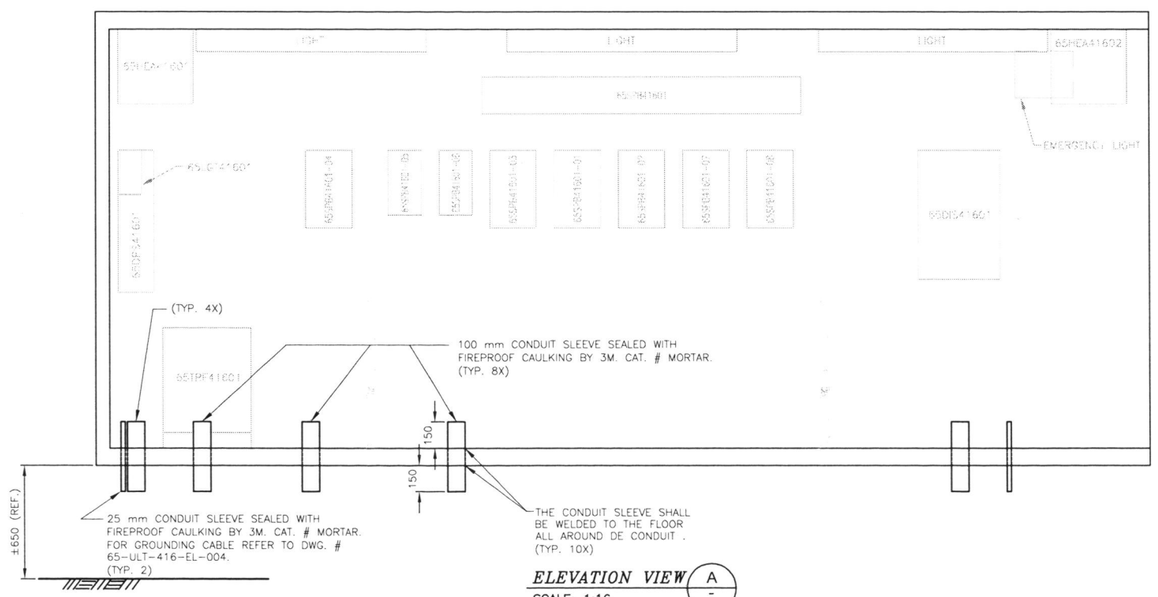

ELEVATION VIEW (A / -)
SCALE: 1:16
PORTAIL #1 ELECTRICAL ROOM

PERMIT TO PRACTICE
LE GROUPE ULTRAGEN LTÉE
Signature
Date SEP 2 6 2017
PERMIT NUMBER: P 1180
NT/NU Association of Professional Engineers and Geoscientists

REGISTERED PROFESSIONAL ENGINEER
13627
D. CARRIER
LICENSEE
NT/NU
SEP 2 6 2017

PLAN CLE
KEY PLAN

NOTES GENERALES / GENERAL NOTES

1. USE TIP AT EACH ENDS OF THE CONDUITS SLEEVES.

ISSUED FOR CONSTRUCTION
ultragen DATE: SEPT 2017

DESSINS EN REFERENCE / REFERENCE DRAWINGS

TITRE / TITLE	# DWG
ELECTRICAL EQUIPMENT LAYOUT ER-416P	65-ULT-416-EL-002
GROUNDING LAYOUT ER-416P	65-ULT-416-EL-004

AGNICO EAGLE

REV.	DATE	DESCRIPTION	PAR/BY	APP.	CLIENT
2	2017-09-20	ISSUED FOR CONSTRUCTION	S.G.	D.C.	
1	207-08-04	UPDATE AREA & TAG NUMBER	S.G.	D.C.	
0	2017-06-12	ISSUED FOR CONSTRUCTION	S.G.	D.C.	
PA	2017-05-15	ISSUED FOR REVIEW	S.G.	D.C.	

REVISIONS

NUQSANA PROMEC MINING
ultragen
NO. PROJET PROJECT NO. 591700

TITRE / TITLE
AGNICO EAGLE – MEADOWBANK DIVISION
416 – FUEL TANK FARM (A)
FUEL DISTRIBUTION
PORTAIL #1 ELECTRICAL ROOM
FLOOR OPENINGS

DESSINE PAR DRAWN BY	RISHI SHRESTHA	DATE 2017-05-15
VERIFIE PAR CHECKED BY	STEPHANIE GRIMARD	2017-05-15
APPROUVE PAR APPROVED BY	DANIEL CARRIER	2017-05-15
ECHELLE SCALE	1:16	DATE 2017-05-15

NO. DESSIN DRAWING NO. 65-ULT-416-EL-003

NO. PROJET PROJECT NO.	REVISION	FEUILLE / SHT
6515	2	1 / 1

AE-CART-ARCH D

NO. DESSIN DRAWING NO. 65-ULT-416-EL-004

FORMAT ARCHD

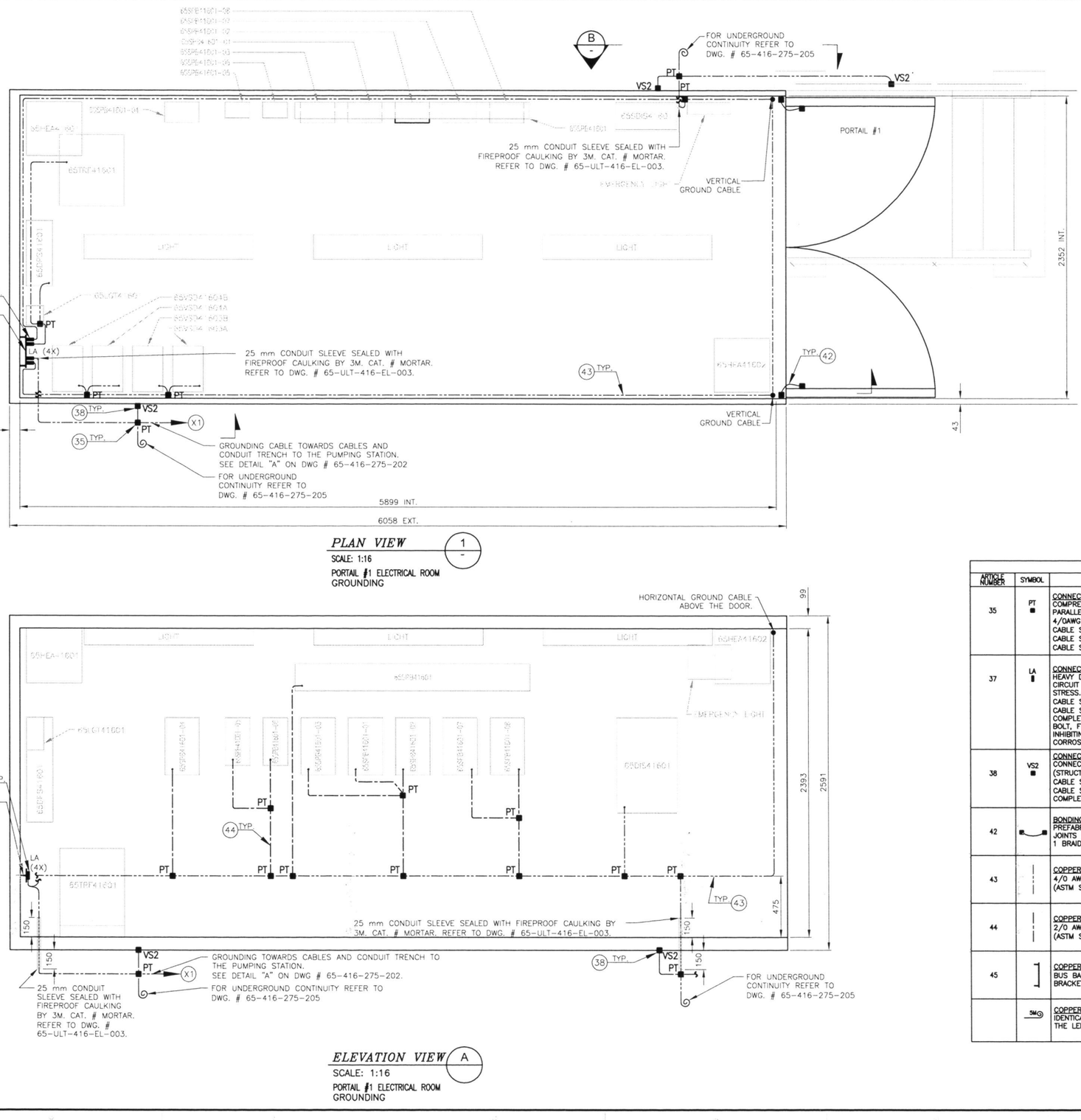

NO. DESSIN
DRAWING NO. 65-ULT-416-EL-005

FORMAT ARCHD

MATERIAL LIST					
TYPE	MANUFACTURER	CATALOGUE NUMBER	INPUT POWER (W)	VOLTAGE	DESCRIPTION
F1	PACO	PUNC-4-48-LED-50-40-MVOLT	48	120	LUMINAIRE: WEATHERPROOF, DUST PROOF, SURFACE, MOUNT FIBERGLASS LUMINAIRE, IP67, NSF, 48W, 120-277VAC, 5120 LUMENS C/W ACCESSORIES
⏚	HUBBEL	HBL5262W	120	120	RECEPTACLE: 15A, 125V, 5-15R, 2 POLES
U1	LUMACELL	RSSMWCLD1	36	120	EMERGENCY LIGHTING WITH BATERY UNIT C/W CHARGER AND BATERIES (FACTORY WHITE COLOUR,120/347VAC, 2 PHASES M316 DEL, 6V 4W)

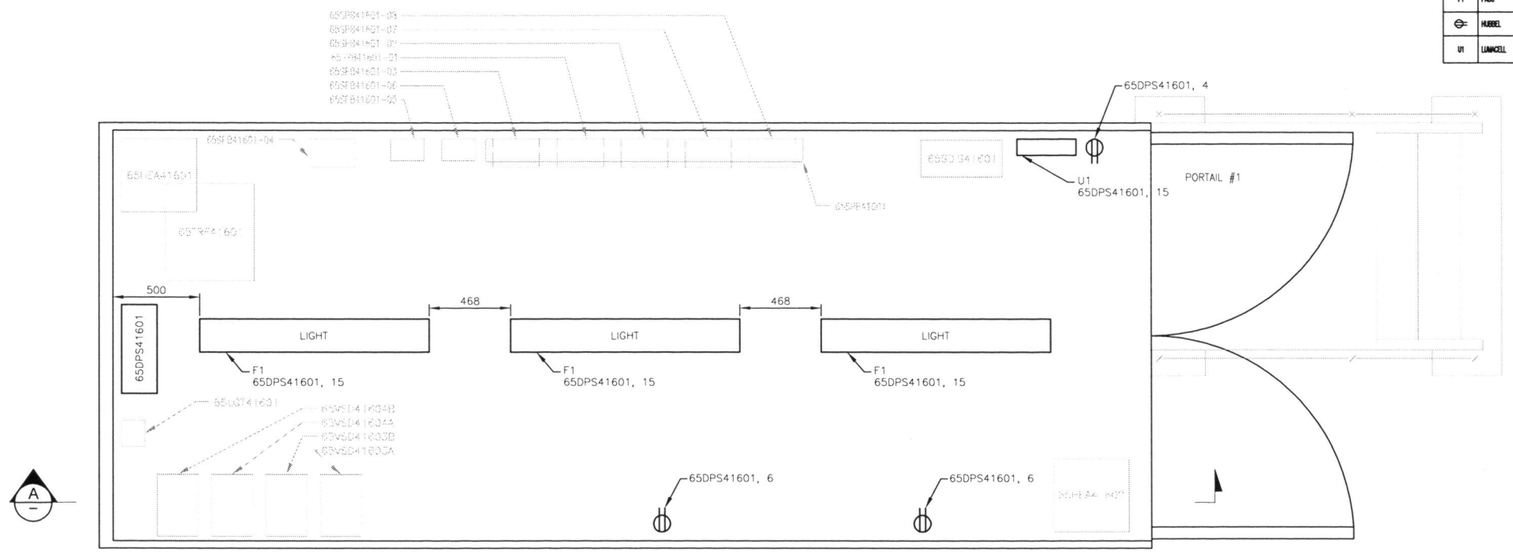

PLAN VIEW (1)
SCALE: 1:16
PORTAIL #1 ELECTRICAL ROOM
LIGHTING AND SERVICES

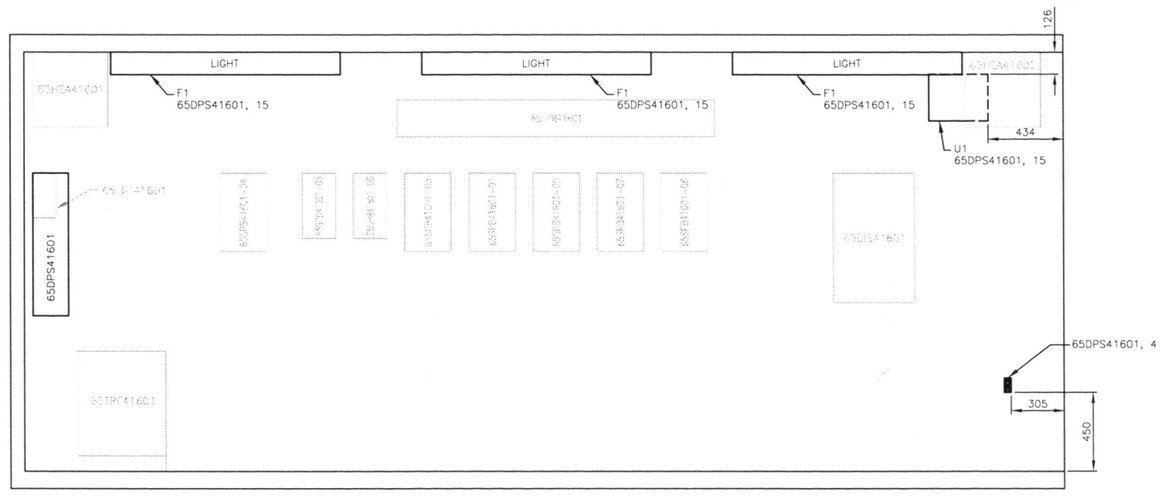

ELEVATION VIEW (A)
SCALE: 1:16
PORTAIL #1 ELECTRICAL ROOM
LIGHTING AND SERVICES

PERMIT TO PRACTICE
LE GROUPE ULTRAGEN LTÉE
Signature
Date SEP 2 8 2017
PERMIT NUMBER: P 1180
NT/NU Association of Professional Engineers and Geoscientists

REGISTERED PROFESSIONAL ENGINEER
13627
D. CARRIER
LICENSEE
NT/NU
SEP 2 6 2017

PLAN CLE
KEY PLAN

NOTES GENERALES / GENERAL NOTES

ISSUED FOR CONSTRUCTION
Ultragen DATE: SEPT 2017

DESSINS EN REFERENCE / REFERENCE DRAWINGS

TITRE / TITLE	# DWG
65DPS11601 PANEL SCHEDULE IN E-ROOM	65-ULT-416-EL-012
ELECTRICAL EQUIPMENT LAYOUT E-ROOM	65-ULT-416-EL-002
EQUIPMENT LAYOUT AND DETAIL	65-416-275-202
MATERIAL LIST	ULT-591700-EL-ML-001

AGNICO EAGLE

REV.	DATE	DESCRIPTION	PAR/BY	APP.	CLIENT
2	2017-09-20	ISSUED FOR CONSTRUCTION	S.G.	D.C.	
1	2017-06-04	UPDATE AREA & TAG NUMBER	N.S.	D.C.	
0	2017-06-12	ISSUED FOR CONSTRUCTION	S.G.	D.C.	
PA	2017-05-15	ISSUED FOR REVIEW	M.T.	D.C.	

REVISIONS

NUQSANA PROMEC MINING
ultragen
NO. PROJET PROJECT NO. 591700

TITRE / TITLE
AGNICO EAGLE – MEL1ADINE DIVISION
416 – FUEL TANK FARM (A)
FUEL DISTRIBUTION
PORTAIL #1 ELECTRICAL ROOM
LIGHTING AND SERVICES

DESSINÉ PAR DRAWN BY	MARC TREMBLAY	DATE 2017-05-15
VERIFIÉ PAR CHECKED BY	STEPHANIE GRIMARD	2017-05-15
APPROUVÉ PAR APPROVED BY	DANIEL CARRIER	2017-05-15
ÉCHELLE SCALE	1:16	DATE 2017-05-15

NO. DESSIN DRAWING NO. 65-ULT-416-EL-005

NO. PROJET PROJECT NO.	REVISION	FEUILLE / SHT
6515	2	1/1

AE-CART-ARCH D

NO. DESSIN DRAWING NO. 65-ULT-416-EL-007

FORMAT ARCHD

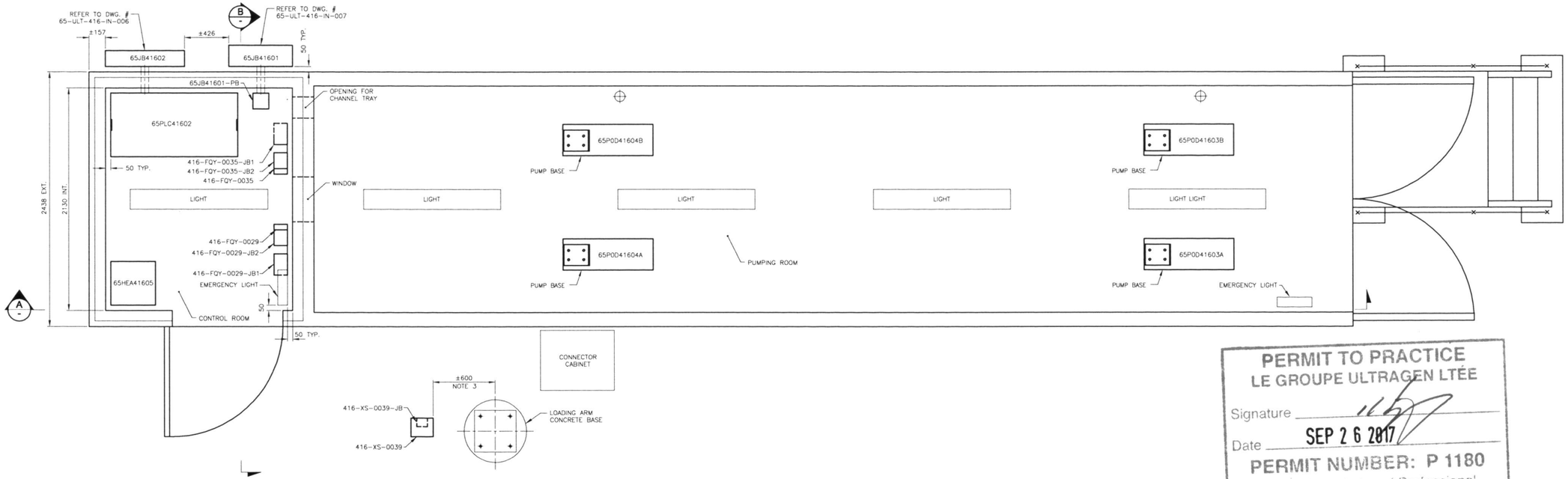

1 *PLAN VIEW*
SCALE: 1:20
PORTAIL #1 PUMPING STATION
ELECTRICAL EQUIPMENT LAYOUT

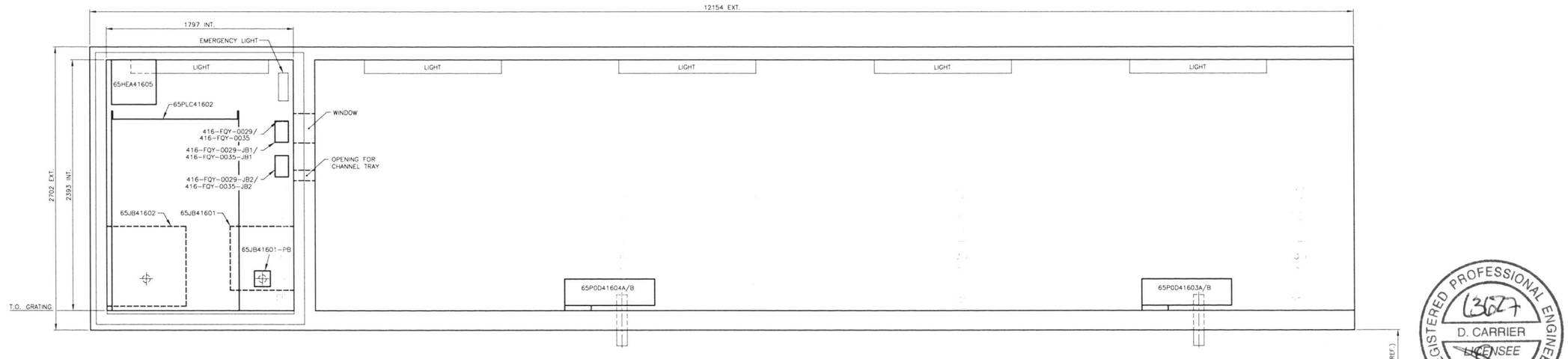

A *ELEVATION*
SCALE: 1:20
PORTAIL #1 PUMPING STATION
ELECTRICAL EQUIPMENT LAYOUT

PERMIT TO PRACTICE
LE GROUPE ULTRAGEN LTÉE
Signature
Date SEP 2 6 2017
PERMIT NUMBER: P 1180
NT/NU Association of Professional Engineers and Geoscientists

PLAN CLE
KEY PLAN

NOTES GENERALES / GENERAL NOTES

1. HEATER UNITS ARE CEILING MOUNTED.
2. FOR EQUIPMENT IDENTIFICATION REFER TO THE MATERIAL LIST.
3. SUPPORT FOR "SCULLY" UNIT AND ITS JUNCTION BOX WITH PROFILE AT THE LOADING ARM CONCRETE BASE, TO BE "CANSTRUT" TYPE. COORDINATE THE POSITION TO AVOID INTERFERENCE WITH THE LOADING ARM MOVEMENT.

ISSUED FOR CONSTRUCTION
ultragen DATE: SEPT 2017

DESSINS EN REFERENCE / REFERENCE DRAWINGS

TITRE / TITLE	# DWG
LIGHTING AND SERVICES LAYOUT	65-ULT-416-EL-010
GROUNDING LAYOUT PUMPING STATION	65-ULT-416-EL-009
FLOOR AND WALL OPENING	65-ULT-416-EL-008
MATERIAL LIST	ULT-591700-EL-ML-001

AGNICO EAGLE

REV.	DATE	DESCRIPTION	PAR/BY	APP.	CLIENT
2	2017-09-20	ISSUED FOR CONSTRUCTION	S.G.	D.C.	
1	2017-06-04	UPDATE AREA & TAG NUMBER	N.S.	D.C.	
0	2017-06-12	ISSUED FOR CONSTRUCTION	S.G.	D.C.	
PA	2017-05-18	ISSUED FOR REVIEW	S.G.	D.C.	

REVISIONS

NUQSANA PROJEC MINING — ultragen — NO. PROJET PROJECT NO. 591700

TITRE / TITLE
AGNICO EAGLE – MEL/ADINE DIVISION
416 – FUEL TANK FARM (A)
FUEL DISTRIBUTION
PORTAL #1 PUMPING STATION
ELECTRICAL EQUIPMENT LAYOUT

DESSINE PAR DRAWN BY	RISHI SHRESTHA	DATE 2017-05-18
VERIFIE PAR CHECKED BY	STEPHANE GRIMARD	2017-05-18
APPROUVE PAR APPROVED BY	DANIEL CARRIER	2017-05-18
ECHELLE SCALE	1:20	DATE 2017-05-18

REGISTERED PROFESSIONAL ENGINEER 13627 D. CARRIER LICENSEE NT/NU SEP 1 6 2017

NO. DESSIN DRAWING NO. 65-ULT-416-EL-007

NO. PROJET PROJECT NO.	REVISION	FEUILLE / SHT
6515	2	1 / 2

AE-CART-ARCH D

NO. DESSIN DRAWING NO. 65-ULT-416-EL-007

FORMAT ARCHD

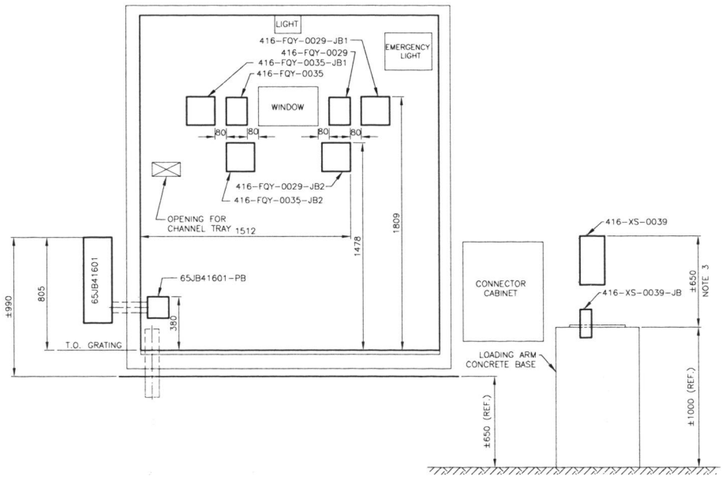

ELEVATION B

SCALE: 1:20

PORTAIL #1 PUMPING STATION
ELECTRICAL EQUIPMENT LAYOUT

PLAN CLE
KEY PLAN

NOTES GENERALES / GENERAL NOTES

1. FOR NOTES SEE SHEET 1 OF 2.

ISSUED FOR CONSTRUCTION
Ultragen DATE: SEPT 2017

DESSINS EN REFERENCE / REFERENCE DRAWINGS

TITRE / TITLE	# DWG
LIGHTING AND SERVICES LAYOUT	65-ULT-416-EL-010
GROUNDING LAYOUT PUMPING STATION	65-ULT-416-EL-009
FLOOR AND WALL OPENING	65-ULT-416-EL-008
MATERIAL LIST	ULT-591700-EL-ML-001

AGNICO EAGLE

REV.	DATE	DESCRIPTION	PAR/RH	APP.	CLIENT
2	2017-09-20	ISSUED FOR CONSTRUCTION	S.G.	D.C.	
1	2017-08-04	UPDATE AREA & TAG NUMBER	N.S.	D.C.	
0	2017-06-12	ISSUED FOR CONSTRUCTION	S.G.	D.C.	
PA	2017-05-18	ISSUED FOR REVIEW	S.G.	D.C.	

REVISIONS

NUQSANA PROMEC MINING

ultragen

NO. PROJET PROJECT NO. 591700

TITRE / TITLE
AGNICO EAGLE – MEL1ADINE DIVISION
416 – FUEL TANK FARM
FUEL DISTRIBUTION
PORTAIL #1 PUMPING STATION
ELECTRICAL EQUIPMENT LAYOUT

DESSINE PAR DRAWN BY	RISHI SHRESTHA	DATE 2017-05-18
VERIFIE PAR CHECKED BY	STÉPHANE GRIMARD	2017-05-18
APPROUVE PAR APPROVED BY	DANIEL CARRIER	2017-05-18
ECHELLE SCALE	1:20	DATE 2017-05-18

NO. DESSIN DRAWING NO. 65-ULT-416-EL-007

NO. PROJET PROJECT NO.	REVISION	FEUILLE / SHT
6515	2	2 / 2

PERMIT TO PRACTICE
LE GROUPE ULTRAGEN LTÉE
Signature
Date SEP 26 2017
PERMIT NUMBER: P 1180
NT/NU Association of Professional Engineers and Geoscientists

REGISTERED PROFESSIONAL ENGINEER
13677
D. CARRIER
LICENSEE
NT/NU
SEP 26 2017

AE-CART-ARCH D

NO. DESSIN DRAWING NO. 65-ULT-416-EL-008

FORMAT ARCHD

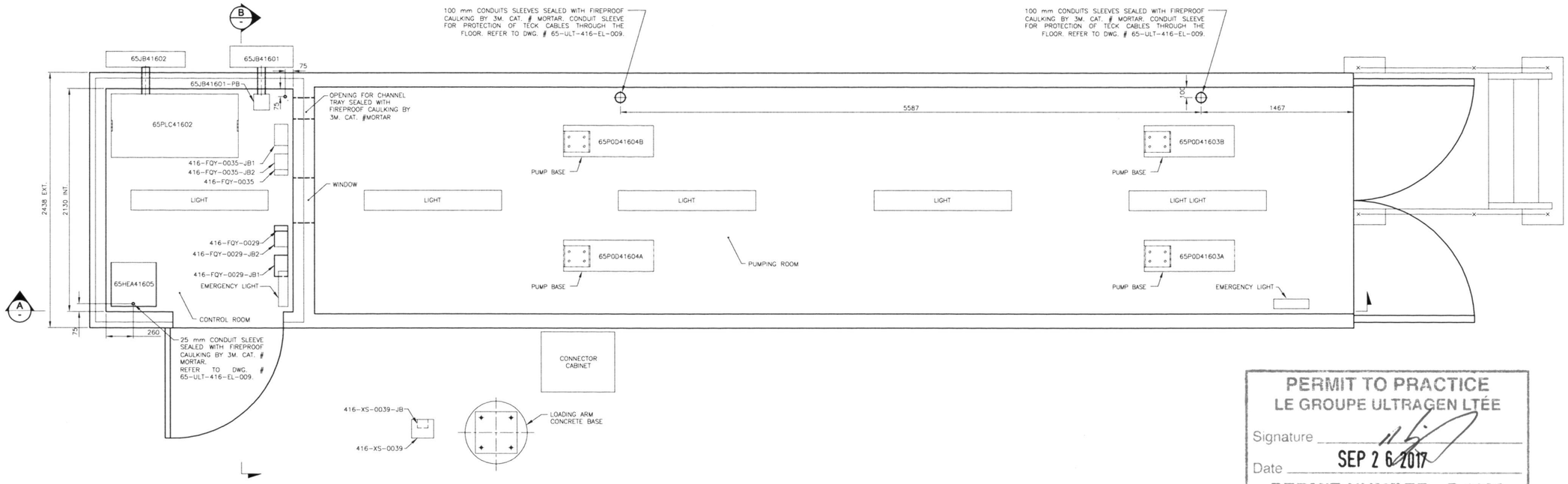

1 — *PLAN VIEW*
SCALE: 1:20
PORTAIL #1 PUMPING STATION
ELECTRICAL EQUIPMENT LAYOUT

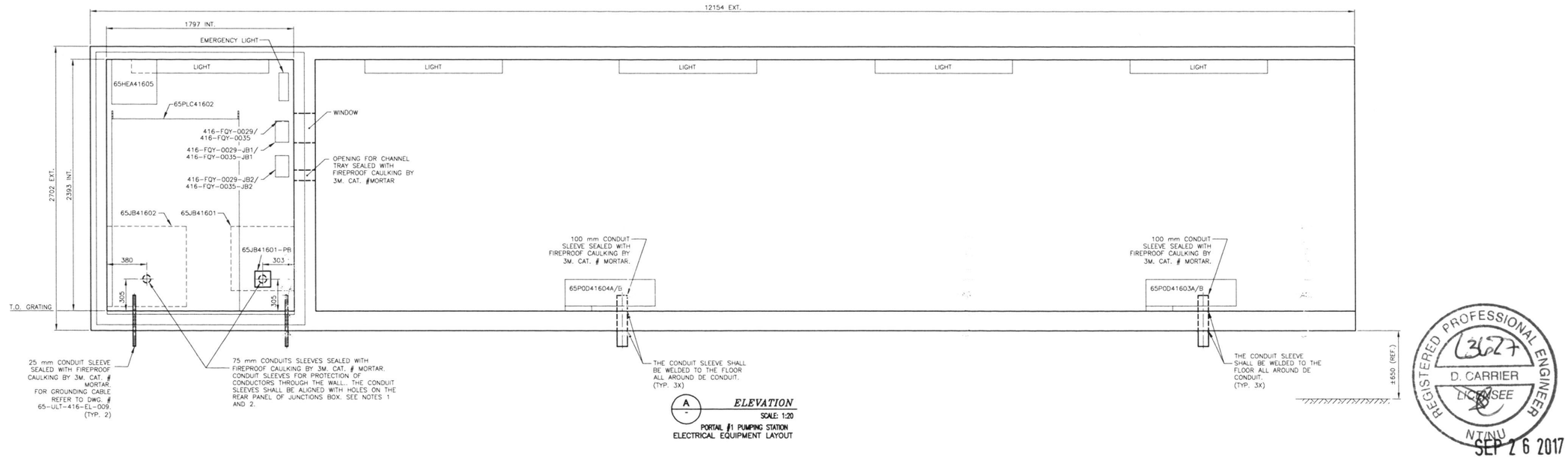

A — *ELEVATION*
SCALE: 1:20
PORTAIL #1 PUMPING STATION
ELECTRICAL EQUIPMENT LAYOUT

PERMIT TO PRACTICE
LE GROUPE ULTRAGEN LTÉE
Signature
Date SEP 2 6 2017
PERMIT NUMBER: P 1180
NT/NU Association of Professional Engineers and Geoscientists

REGISTERED PROFESSIONAL ENGINEER 13627 D. CARRIER LICENSEE NT/NU
SEP 2 6 2017

PLAN CLE
KEY PLAN

NOTES GENERALES / GENERAL NOTES

1. PULL BOX 65JB41601-PB LINKED WITH CONDUIT SLEEVE TO JUNCTION BOX 65JB41601. THE CABLES INSIDE CONTROL ROOM END AT THE PULL BOX.
2. CABINET 65PLC41602 LINKED WITH CONDUIT SLEEVE TO JUNCTION BOX 65JB41602.
3. USE TIP AT EACH END OF THE CONDUIT SLEEVES.

ISSUED FOR CONSTRUCTION
ultragen DATE: SEPT 2017

DESSINS EN REFERENCE / REFERENCE DRAWINGS

TITRE / TITLE	# DWG
ELECTRICAL EQUIPMENT LAYOUT	65-ULT-416-EL-007
GROUNDING LAYOUT PUMPING STATION	65-ULT-416-EL-009

AGNICO EAGLE

REV.	DATE	DESCRIPTION	PAR/BY	APP.	CLIENT
2	2017-09-20	ISSUED FOR CONSTRUCTION	S.G.	D.C.	
1	2017-08-04	UPDATE AREA & TAG NUMBER	N.S.	D.C.	
0	2017-06-12	ISSUED FOR CONSTRUCTION	S.G.	D.C.	
PA	2017-05-18	ISSUED FOR REVIEW	S.G.	D.C.	

REVISIONS

NUQSANA PROMEC MINING — ultragen

NO. PROJET PROJECT NO. 591700

TITRE / TITLE
AGNICO EAGLE – MEADOWBANK DIVISION
416 – FUEL TANK FARM A
FUEL DISTRIBUTION
PORTAL #1 PUMPING STATION
FLOOR AND WALL OPENINGS

DESSINE PAR DRAWN BY	RISHI SHRESTHA	DATE 2017-05-18
VERIFIE PAR CHECKED BY	STÉPHANE GRIMARD	2017-05-18
APPROUVE PAR APPROVED BY	DANIEL CARRIER	2017-05-18
ECHELLE SCALE	1:20	DATE 2017-05-18

NO. DESSIN DRAWING NO. 65-ULT-416-EL-008

NO. PROJET PROJECT NO.	REVISION	FEUILLE / SHT
6515	2	1 / 2

AE-CART-ARCH D

NO. DESSIN DRAWING NO. 65-ULT-416-EL-008

FORMAT ARCHD

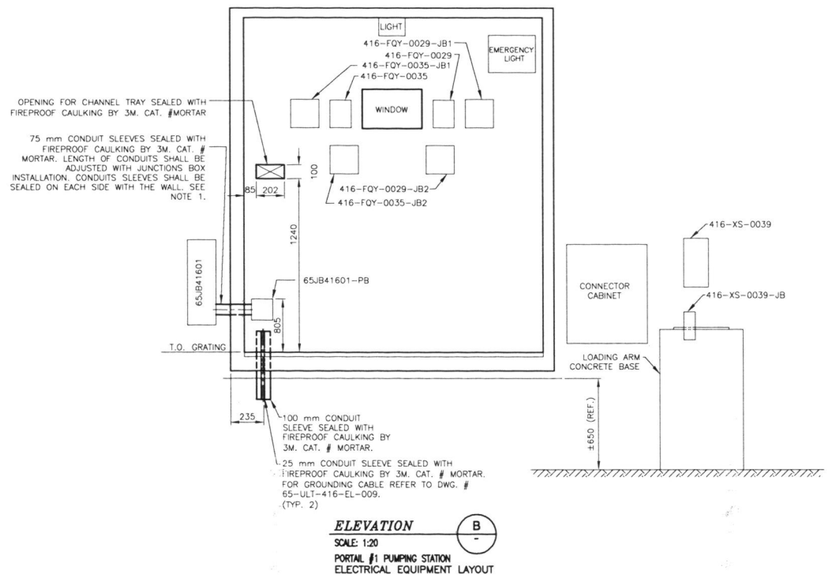

ELEVATION B

SCALE: 1:20

PORTAL #1 PUMPING STATION
ELECTRICAL EQUIPMENT LAYOUT

PERMIT TO PRACTICE
LE GROUPE ULTRAGEN LTÉE
Signature
Date SEP 26 2017
PERMIT NUMBER: P 1180
NT/NU Association of Professional Engineers and Geoscientists

REGISTERED PROFESSIONAL ENGINEER
L3627
D. CARRIER
LICENSEE
NT/NU
SEP 26 2017

PLAN CLE
KEY PLAN

NOTES GENERALES / GENERAL NOTES

1. FOR NOTES SEE SHEET 1 OF 2.

ISSUED FOR CONSTRUCTION
Ultragen DATE: SEPT 2017

DESSINS EN REFERENCE / REFERENCE DRAWINGS

TITRE / TITLE	# DWG
ELECTRICAL EQUIPMENT LAYOUT	65-ULT-416-EL-007
GROUNDING LAYOUT PUMPING STATION	65-ULT-416-EL-009

AGNICO EAGLE

REV.	DATE	DESCRIPTION	PAR/BY	APP.	CLIENT
2	2017-09-20	ISSUED FOR CONSTRUCTION	S.G.	D.C.	
1	2017-06-04	UPDATE AREA & TAG NUMBER	N.S.	D.C.	
0	2017-06-12	ISSUED FOR CONSTRUCTION	S.G.	D.C.	
PA	2017-05-18	ISSUED FOR REVIEW	S.G.	D.C.	

REVISIONS

NUQSANA PRONEC MINING

ultragen

NO. PROJET PROJECT NO. 591700

TITRE / TITLE
AGNICO EAGLE – MEADOWBANK DIVISION
416 – FUEL TANK FARM
FUEL DISTRIBUTION
PORTAL #1 PUMPING STATION
FLOOR AND WALL OPENINGS

DESSINÉ PAR DRAWN BY	RISHI SHRESTHA	DATE 2017-05-18
VÉRIFIÉ PAR CHECKED BY	STÉPHANE GRIMARD	2017-05-18
APPROUVÉ PAR APPROVED BY	DANIEL CARRIER	2017-05-18
ÉCHELLE SCALE	1:20	DATE 2017-05-18

NO. DESSIN DRAWING NO. 65-ULT-416-EL-008

NO. PROJET PROJECT NO.	REVISION	FEUILLE / SHT
6515	2	2 / 2

AE-CART-ARCH D

NO. DESSIN / DRAWING NO. 65-ULT-416-EL-009

FORMAT ARCHD

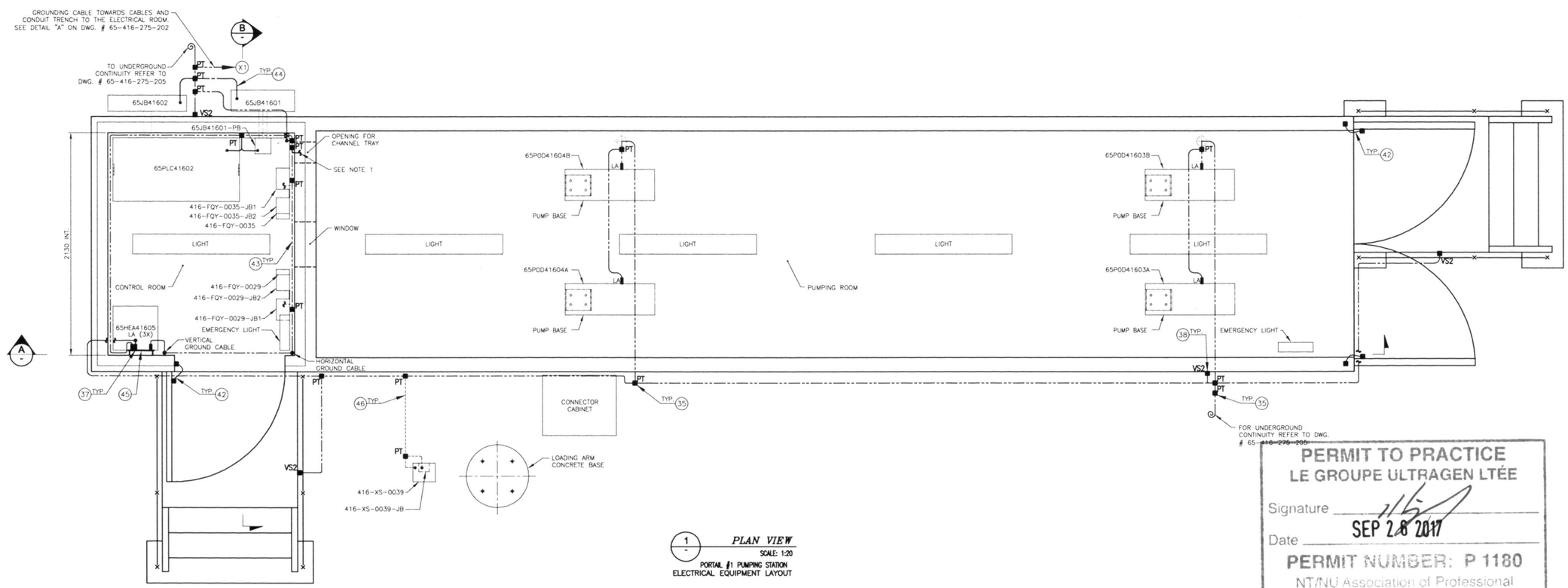

1 — PLAN VIEW
SCALE: 1:20
PORTAIL #1 PUMPING STATION
ELECTRICAL EQUIPMENT LAYOUT

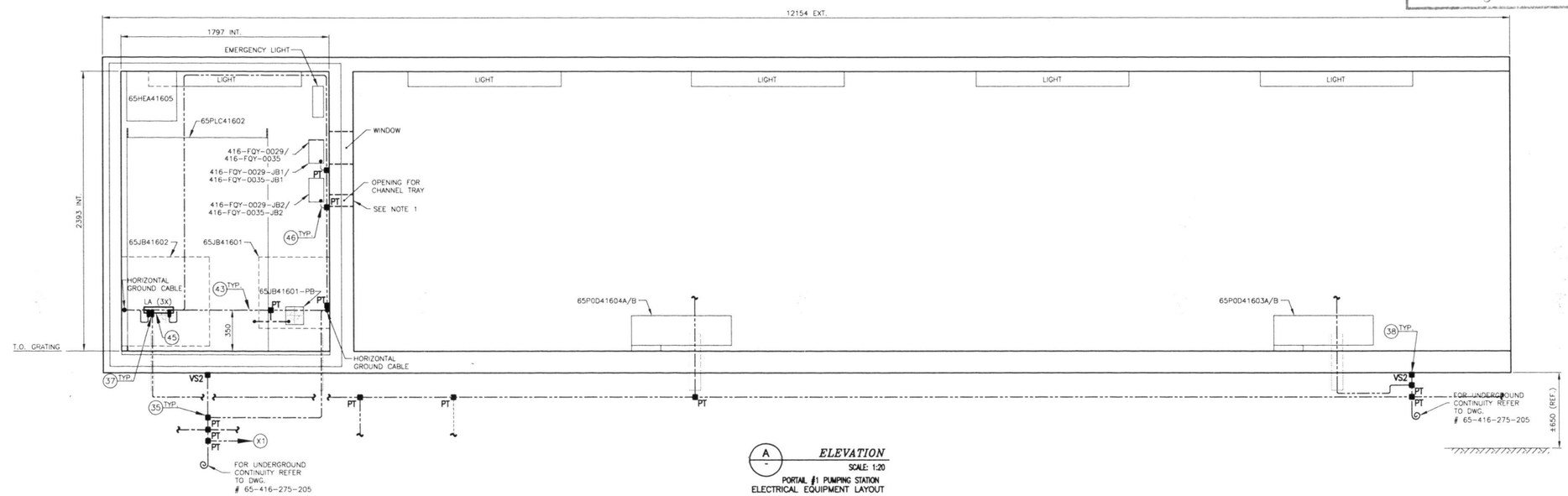

A — ELEVATION
SCALE: 1:20
PORTAIL #1 PUMPING STATION
ELECTRICAL EQUIPMENT LAYOUT

PERMIT TO PRACTICE
LE GROUPE ULTRAGEN LTÉE
Signature
Date SEP 26 2017
PERMIT NUMBER: P 1180
NT/NU Association of Professional Engineers and Geoscientists

REGISTERED PROFESSIONAL ENGINEER
L3627
D. CARRIER
LICENSEE
NT/NU
SEP 2 6 2017

PLAN CLÉ / KEY PLAN

NOTES GENERALES / GENERAL NOTES

1. INSTALL COPPER GROUNDING CABLE 2/0 AWG MINIMUM, BARE, FLEXIBLE, TINNED, 19 STRANDS IN EACH CHANNEL TRAY. CONNECT CABLE WITH CONNECTION TYPE "YGHC" (ARTICLE NUMBER 35). CONNECT CABLE AT EACH SECTION OF CHANNEL TRAY WITH CONNECTION TYPE "GTC24P" (ARTICLE NUMBER 41). FOR CHANNEL TRAY INSTALLATION REFER TO DRAWING #65-ULT-416-EL-011.

ISSUED FOR CONSTRUCTION
ultragen DATE: SEPT 2017

DESSINS EN REFERENCE / REFERENCE DRAWINGS

TYPE / TITLE	# DWG
MODIF. & ADDITIONS OF THE CONTAINERS	65-416-245-200
SINGLE LINE DIAGRAM	65-416-275-200
EQUIPMENT LAYOUT DETAIL AND SERVICES PANEL PLAN VIEW	65-416-275-202
GROUNDING LAYOUT PLAN VIEW	65-416-275-205
LEGEND, TABLES AND DETAILS	65-416-275-204

AGNICO EAGLE

REV.	DATE	DESCRIPTION	PAR/BY	APP.	CLIENT
2	2017-09-20	ISSUED FOR CONSTRUCTION	S.G.	D.C.	
1	2017-08-04	UPDATE AREA & TAG NUMBER	M.S.	D.C.	
0	2017-06-12	ISSUED FOR CONSTRUCTION	S.G.	D.C.	
PA	2017-05-18	ISSUED FOR REVIEW	S.G.	D.C.	

REVISIONS

NUQSANA PROMEC MINING — ultragen

NO. PROJET / PROJECT NO. 591700

TITRE / TITLE
AGNICO EAGLE – MEADOWBANK DIVISION
416 – FUEL TANK FARM (A)
FUEL DISTRIBUTION
PORTAIL #1 PUMPING STATION
GROUNDING

DESSINÉ PAR / DRAWN BY	RISHI SHRESTHA	DATE 2017-05-18
VÉRIFIÉ PAR / CHECKED BY	STÉPHANE GRIMARD	2017-05-18
APPROUVÉ PAR / APPROVED BY	DANIEL CARRIER	2017-05-18
ÉCHELLE / SCALE	1:20	DATE 2017-05-18

NO. DESSIN / DRAWING NO. 65-ULT-416-EL-009

NO. PROJET / PROJECT NO.	REVISION	FEUILLE / SHT
6515	2	1 / 2

AE-CART-ARCH D

P:\1. ANNÉE 2017 ACTIFS\PROMEC\5917\07\ELECTRICITÉ\Dessins\Dessins de travail\65-ULT-416-EL-009.dwg

FILE NO. ENTRÉ ORIENTÉ

NO. DESSIN DRAWING NO. 65-ULT-416-EL-009

FORMAT ARCHD

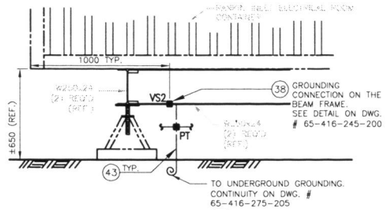

ELEVATION C

SCALE: 1:20

PORTAIL #1 PUMPING STATION GROUNDING

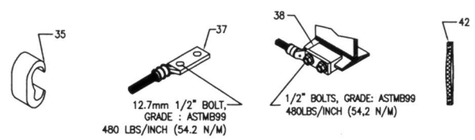

CONNECTOR TYPES – BURNDY AND THOMAS & BETTS

SCALE: NTS

USABLE TYPES WHEN THE SYSTEM IS BURIED OR NOT

EQUIPMENT LIST					
ARTICLE NUMBER	SYMBOL	DESCRIPTION	MANU.	TYPE	NOTE
35	PT ■	CONNECTION – PARALLEL HORIZONTAL CONDUCTORS COMPRESSED CONNECTOR FOR TWO PARALLEL HORIZONTAL CONDUCTORS. CABLE SIZE: 2/0AWG, TAP CABLE SIZE: 2/0AWG CABLE SIZE: 4/0AWG, TAP CABLE SIZE: 2/0AWG CABLE SIZE: 4/0AWG, TAP CABLE SIZE: 4/0AWG	BURNDY	YGHC26C26 YGHC29C26 YGHC29C29	
37	LA ▮	CONNECTION – HEAVY DUTY TERMINALS HEAVY DUTY TERMINALS DESIGNED TO CARRY SHORT CIRCUIT LOAD AND WITHSTAND HIGH MECHANICAL STRESS. CABLE SIZE: 2/0AWG CABLE SIZE: 4/0 AWG COMPLETE WITH NON-CORROSIVE HARDWARE SUCH AS: BOLT, FLAT WASHER, LOCKWASHERS, NUTS AND INHIBITING COMPOUNDS TO PREVENT OXIDATION OR CORROSION.	BURNDY	YGHA26-2N YGHA28-2N	
38	VS2 ■	CONNECTION – STRUCTURE CONNECTION USED FOR VERTICAL STEEL SURFACE (STRUCTURAL BEAMS) CABLE SIZE 4/0AWG ON CONTAINER BEAM FRAME. CABLE SIZE 4/0AWG ON CHANNEL OF CATWALK. COMPLETE WITH HARDWARE	BURNDY	YGIBW28-338-2N YGIBS28-400-2N TMHG-42	EVERY BURNDY YGIB CONNECTION (VS2) MUST BE COMBINED WITH A YGHA HEAVY DUTY TERMINAL (LA) AND 2 NUTS OF ADEQUATE SIZE FOR THE TERMINAL.
41	○	CABLE TRAY CONNECTOR CABLE TRAY GROUNDING CLAMP. FOR CABLE SIZE 4/0AWG.	THOMAS & BETTS	GTC24P	
42	■‿■	BONDING JUMPER PREFABRICATED COPPER JUMPER, FOR EXPANSION JOINTS AND ADJUSTABLE JOINTS 1 BRAIDS AND 2 BOLTS HOLD BY CONNECTION.	THOMAS & BETTS	FBE12-1	
43	⋮	COPPER GROUNDING CONDUCTOR, 4/0 AWG, BARE, FLEXIBLE, TINNED, 19 STRANDS (ASTM STANDARDS B8 AND B33).	PHILLIPS CABLES		
44	⋮	COPPER GROUNDING CONDUCTOR, 2/0 AWG, BARE, FLEXIBLE, TINNED, 19 STRANDS (ASTM STANDARDS B8 AND B33).	PHILLIPS CABLES		
45	]	COPPER BUS BAR BUS BAR 254(10") X 102(4") X 6(0.25") BRACKETS AND ISOLATORS INCLUDED	BURNDY	BBB-14410C	
46	⋮	COPPER GROUNDING CONDUCTOR, 6 AWG, GREEN INSULATION, FLEXIBLE, 7 STRANDS (ASTM STANDARDS B8 AND B33).	PHILLIPS CABLES		
	5M◎	COPPER CONDUCTOR, IDENTICAL CHARACTERISTICS FOR FUTURE CONNECTIONS. THE LENGTH TO RESERVE IS SPECIFIED ON THE SYMBOL.	PHILLIPS CABLES		

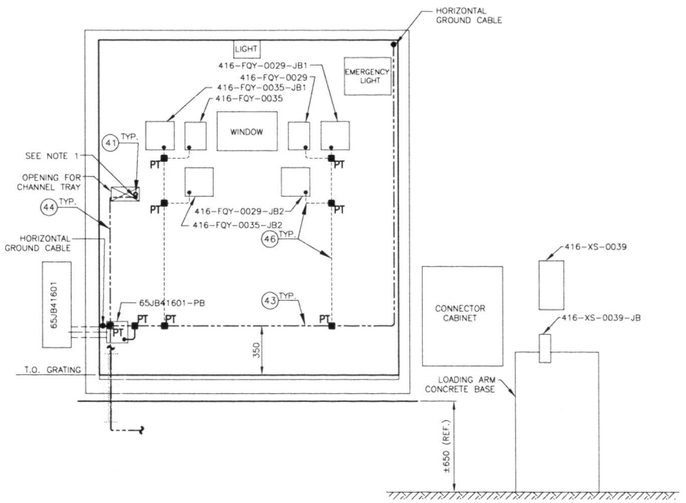

ELEVATION B

SCALE: 1:20

PORTAIL #1 PUMPING STATION
ELECTRICAL EQUIPMENT LAYOUT

PERMIT TO PRACTICE
LE GROUPE ULTRAGEN LTÉE
Signature
Date SEP 26 2017
PERMIT NUMBER: P 1180
NT/NU Association of Professional Engineers and Geoscientists

REGISTERED PROFESSIONAL ENGINEER
L3677
D. CARRIER
LICENSEE
NT/NU
SEP 26 2017

PLAN CLÉ
KEY PLAN

NOTES GENERALES / GENERAL NOTES

1. FOR NOTES SEE SHEET 1 OF 2.

ISSUED FOR CONSTRUCTION
Ultragen DATE: SEPT 2017

DESSINS EN REFERENCE / REFERENCE DRAWINGS

TITRE / TITLE	# DWG
MODIF. & ADDITIONS OF THE CONTAINERS	65-416-245-200
SINGLE LINE DIAGRAM	65-416-275-200
EQUIPMENT LAYOUT DETAIL AND SERVICES PANEL PLAN VIEW	65-416-275-202
GROUNDING LAYOUT PLAN VIEW	65-416-275-205
LEGEND, TABLES AND DETAILS	65-416-275-204

AGNICO EAGLE

REV.	DATE	DESCRIPTION	PAR/BY	APP.	CLIENT
2	2017-09-20	ISSUED FOR CONSTRUCTION	S.G.	D.C.	
1	2017-06-04	UPDATE AREA & TAG NUMBER	N.S.	D.C.	
0	2017-06-12	ISSUED FOR CONSTRUCTION	S.G.	D.C.	
PA	2017-05-18	ISSUED FOR REVIEW	S.G.	D.C.	

REVISIONS

NUQSANA PROMEC MINING

ultragen

NO. PROJET PROJECT NO. 591700

TITRE / TITLE
AGNICO EAGLE – MEL/ADINE DIVISION
416 – FUEL TANK FARM (A)
FUEL DISTRIBUTION
PORTAIL #1 PUMPING STATION
GROUNDING

DESSINÉ PAR DRAWN BY	RISHI SHRESTHA	DATE 2017-05-18
VERIFIÉ PAR CHECKED BY	STEPHANIE GRIMARD	2017-05-18
APPROUVÉ PAR APPROVED BY	DANIEL CARRIER	2017-05-18
ÉCHELLE SCALE	1:20	DATE 2017-05-18

NO. DESSIN DRAWING NO. 65-ULT-416-EL-009

NO. PROJET PROJECT NO.	REVISION	FEUILLE / SHT
6515	2	2 / 2

AE-CART-ARCH D

NO. DESSIN DRAWING NO. 65-ULT-416-EL-010

FORMAT ARCHD

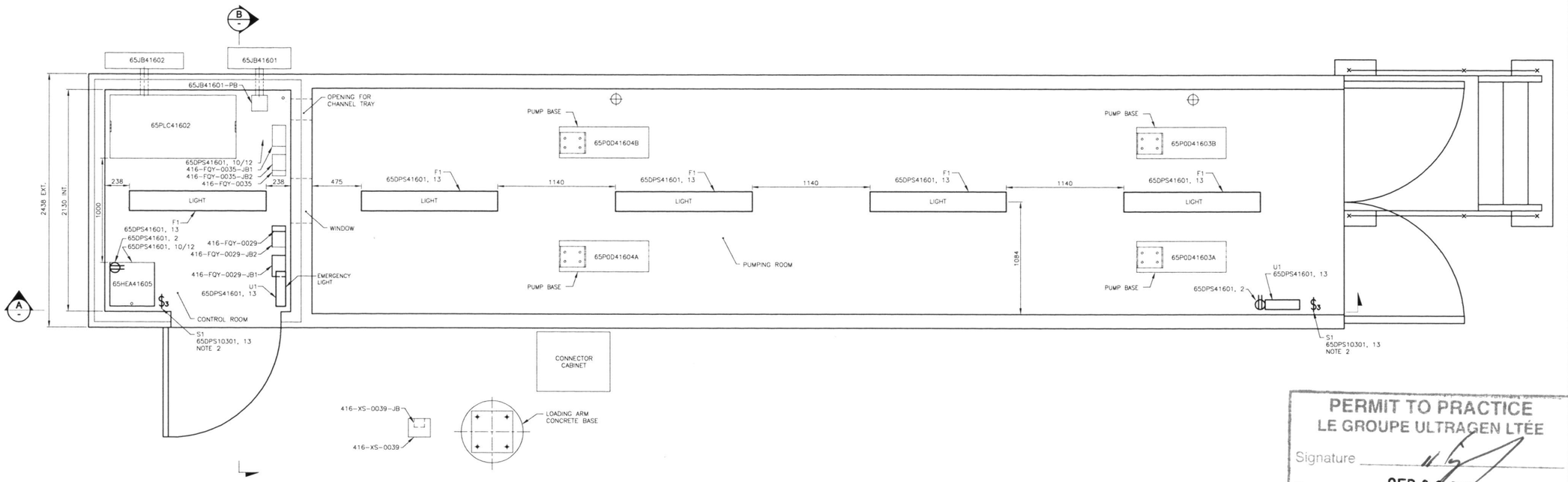

1 — *PLAN VIEW*
SCALE: 1:20
PORTAIL #1 PUMPING STATION
ELECTRICAL EQUIPMENT LAYOUT

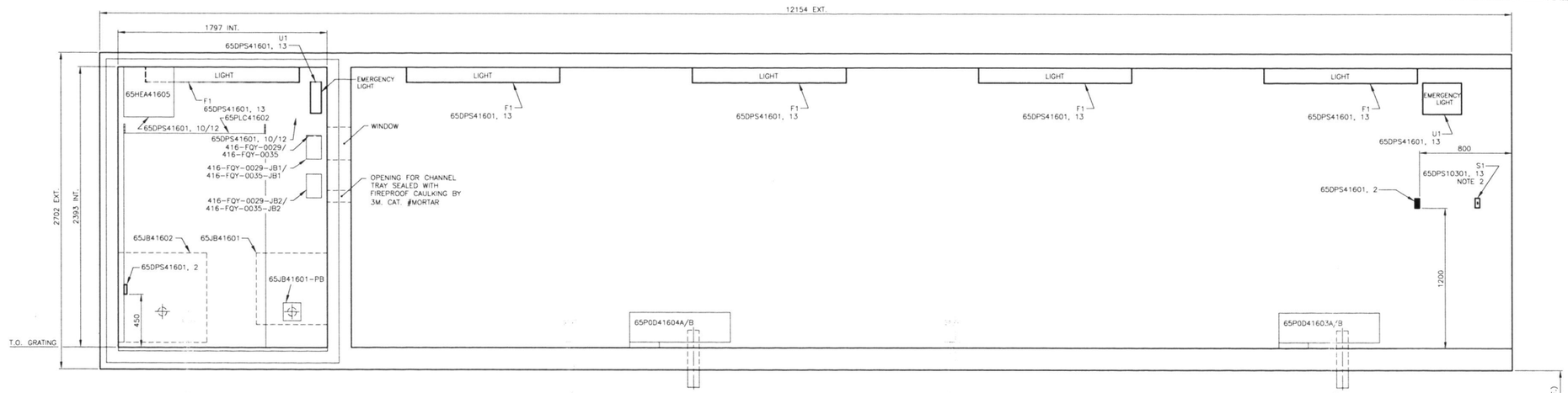

A — *ELEVATION*
SCALE: 1:20
PORTAIL #1 PUMPING STATION
ELECTRICAL EQUIPMENT LAYOUT

PERMIT TO PRACTICE
LE GROUPE ULTRAGEN LTÉE
Signature
Date SEP 26 2017
PERMIT NUMBER: P 1180
NT/NU Association of Professional Engineers and Geoscientists

REGISTERED PROFESSIONAL ENGINEER
13677
D. CARRIER
LICENSEE
NT/NU
SEP 26 2017

PLAN CLE
KEY PLAN

NOTES GENERALES / GENERAL NOTES

ISSUED FOR CONSTRUCTION
ultragen DATE: SEPT 2017

DESSINS EN REFERENCE / REFERENCE DRAWINGS

TITRE / TITLE	# DWG
65DPS41601 PANEL SCHEDULE IN E-ROOM	65-ULT-416-EL-012
ELECTRICAL EQUIPMENT LAYOUT E-ROOM	65-ULT-416-EL-002
ELECTRICAL EQUIPMENT LAYOUT	65-ULT-416-EL-007
MATERIAL LIST	ULT-591700-EL-ML-001

AGNICO EAGLE

REV.	DATE	DESCRIPTION	PAR/BY	APP.	CLIENT
2	2017-09-20	ISSUED FOR CONSTRUCTION	S.G.	D.C.	
1	2017-08-04	UPDATE AREA & TAG NUMBER	N.S.	D.C.	
0	2017-06-12	ISSUED FOR CONSTRUCTION	S.G.	D.C.	
PA	2017-05-18	ISSUED FOR REVIEW	S.G.	D.C.	

REVISIONS

NUQSANA PROMEC MINING
ultragen
NO. PROJET PROJECT NO. 591700

TITRE / TITLE
AGNICO EAGLE – MEADOWBANK DIVISION
416 – FUEL TANK FARM A
FUEL DISTRIBUTION
PORTAL #1 PUMPING STATION
LIGHTING AND SERVICES

DESSINE PAR DRAWN BY	RISHI SHRESTHA	DATE 2017-05-18
VERIFIE PAR CHECKED BY	STÉPHANE GRIMARD	2017-05-18
APPROUVE PAR APPROVED BY	DANIEL CARRIER	2017-05-18

ECHELLE SCALE 1:20 — DATE 2017-05-18

NO. DESSIN DRAWING NO. 65-ULT-416-EL-010

NO. PROJET PROJECT NO.	REVISION	FEUILLE / SHT
6515	2	1 / 2

AE-CART-ARCH D

P:\1. ANNÉE 2017 ACTIFS\PROMEC\5917\00\ELECTRICITE\Dessins\Dessins de travail\65-ULT-416-EL-010.dwg

FILE NO.

NO. DESSIN DRAWING NO. 65-ULT-416-EL-010

FORMAT ARCHD

MATERIAL LIST

TYPE	MANUFACTURER	CATALOGUE NUMBER	INPUT POWER (W)	VOLTAGE	DESCRIPTION
F1	PACO	PWC-A-48-LED-50-40-MVOLT	48	120	LUMINAIRE: WEATHERPROOF, DUST PROOF, SURFACE, MOUNT FIBERGLASS LUMINAIRE, IP67, NSF, 48W, 120-277VAC, 5120 LUMENS C/W ACCESSORIES
⊖=	HUBBEL	HBL5262W	120	120	RECEPTACLE: 15A, 125V, 5-15R, 2 POLES
U1	LUMACELL	RCS30WCLDI	36	120	EMERGENCY LIGHTING WITH BATTERY UNIT C/W CHARGER AND BATTERIES (FACTORY WIRE COLOUR,120/347VAC, 2 PHASES WITH RED, W 4W)
$3	HUBBEL	CS315W	-	120	THREE WAY SWITCH FOR LIGHTING, 15A, 120-277VAC

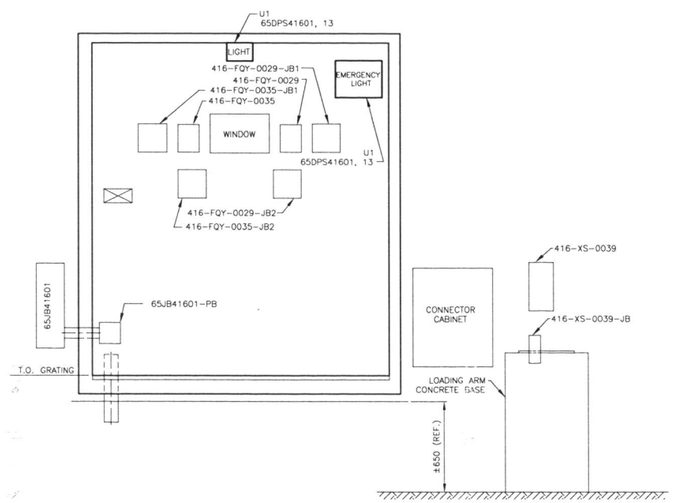

ELEVATION B

SCALE: 1:20

PORTAIL #1 PUMPING STATION
ELECTRICAL EQUIPMENT LAYOUT

PERMIT TO PRACTICE
LE GROUPE ULTRAGEN LTÉE
Signature
Date SEP 26 2017
PERMIT NUMBER: P 1180
NT/NU Association of Professional Engineers and Geoscientists

REGISTERED PROFESSIONAL ENGINEER
L3627
D. CARRIER
LICENSEE
NT/NU
SEP 26 2017

PLAN CLE
KEY PLAN

NOTES GENERALES / GENERAL NOTES

ISSUED FOR CONSTRUCTION
Ultragen DATE: SEPT 2017

DESSINS EN REFERENCE / REFERENCE DRAWINGS

TITRE / TITLE	# DWG
65DPS41601 PANEL SCHEDULE IN E-ROOM	65-ULT-416-EL-012
ELECTRICAL EQUIPMENT LAYOUT E-ROOM	65-ULT-416-EL-002
ELECTRICAL EQUIPMENT LAYOUT	65-ULT-416-EL-007
MATERIAL LIST	ULT-591700-EL-ML-001

AGNICO EAGLE

REV.	DATE	DESCRIPTION	PAR/BY	APP.	CLIENT
2	2017-09-20	ISSUED FOR CONSTRUCTION	S.G.	D.C.	
1	2017-08-04	UPDATE AREA & TAG NUMBER	N.S.	D.C.	
0	2017-06-12	ISSUED FOR CONSTRUCTION	S.G.	D.C.	
PA	2017-05-18	ISSUED FOR REVIEW	S.G.	D.C.	

REVISIONS

NUQSANA PROMEC MINING

ultragen

NO. PROJET PROJECT NO. 591700

TITRE / TITLE
AGNICO EAGLE – MEADOWBANK DIVISION
416 – FUEL TANK FARM A
FUEL DISTRIBUTION
PORTAL #1 PUMPING STATION
LIGHTING AND SERVICES

DESSINÉ PAR DRAWN BY	RISHI SHRESTHA	DATE 2017-05-18
VÉRIFIÉ PAR CHECKED BY	STÉPHANE GRIMARD	2017-05-18
APPROUVÉ PAR APPROVED BY	DANIEL CARRIER	2017-05-18
ÉCHELLE SCALE	1:20	DATE 2017-05-18

NO. DESSIN DRAWING NO. 65-ULT-416-EL-010

NO. PROJET PROJECT NO.	REVISION	FEUILLE / SHT
6515	2	2 / 2

AE-CART-ARCH D

P:\1. ANNEE 2017 ACTIFS\PROMEC\5917\007\ELECTRICITE\Dessins\Dessins de travail\65-ULT-416-EL-010.dwg

FILE NO. ENTRY DETAILS

NO. DESSIN DRAWING NO. 65-ULT-416-EL-011

FORMAT ARCHD

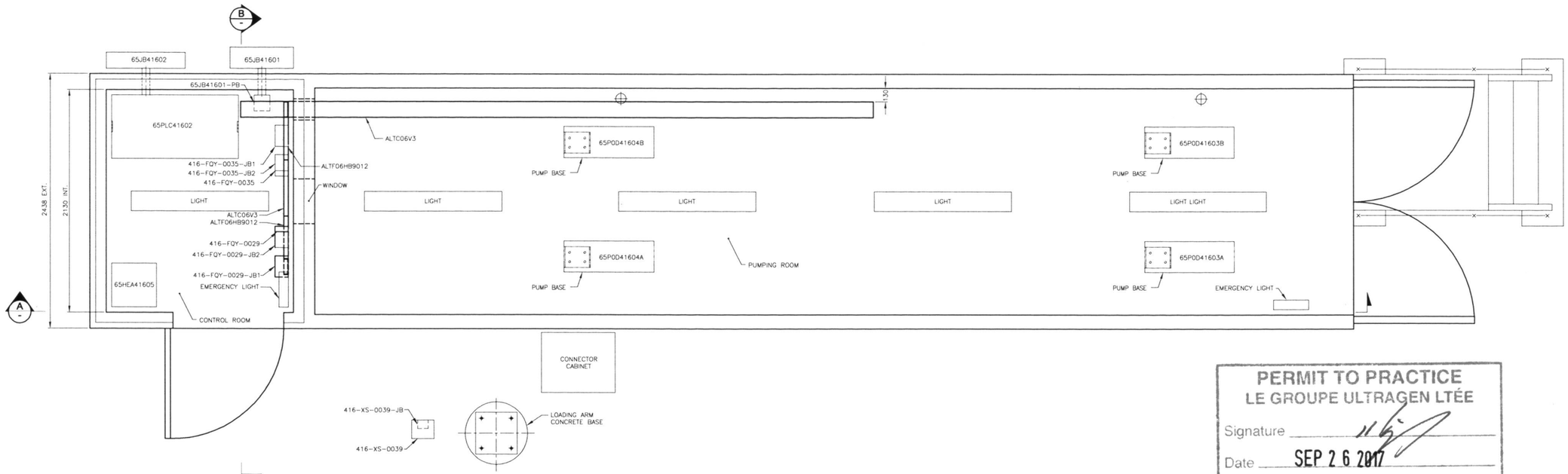

1 PLAN VIEW
SCALE: 1:20
PORTAIL #1 PUMPING STATION
ELECTRICAL EQUIPMENT LAYOUT

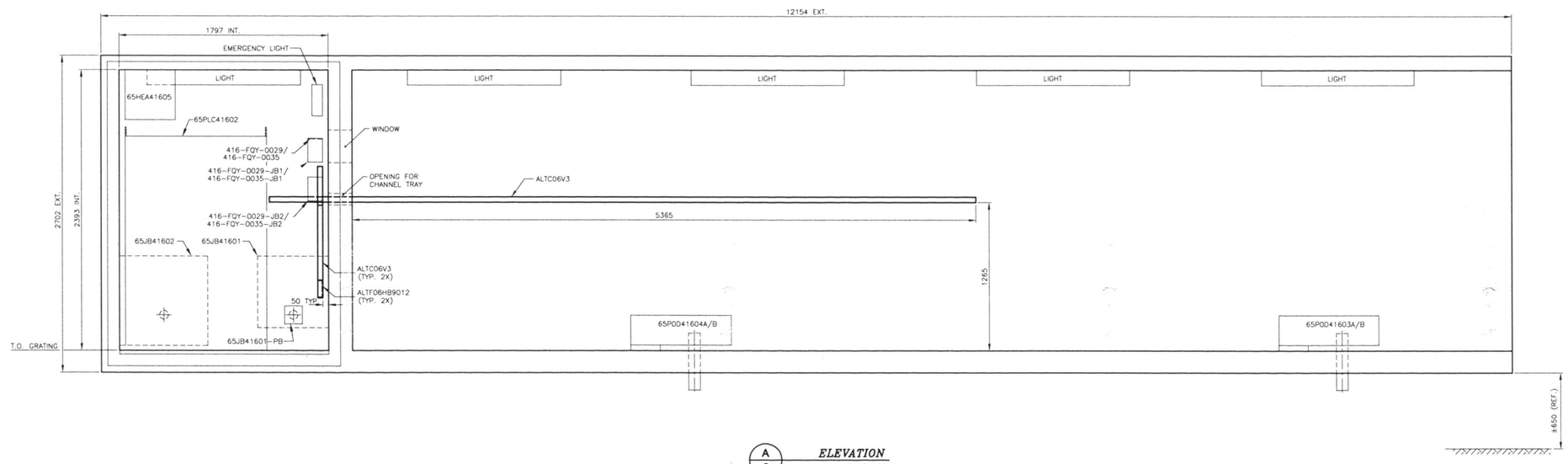

A ELEVATION
SCALE: 1:20
PORTAIL #1 PUMPING STATION
ELECTRICAL EQUIPMENT LAYOUT

PERMIT TO PRACTICE
LE GROUPE ULTRAGEN LTÉE
Signature
Date SEP 2 6 2017
PERMIT NUMBER: P 1180
NT/NU Association of Professional Engineers and Geoscientists

REGISTERED PROFESSIONAL ENGINEER
L3627
D. CARRIER
LICENSEE
NT/NU
SEP 2 6 2017

PLAN CLE
KEY PLAN

NOTES GENERALES / GENERAL NOTES

1. ALL CHANNEL TRAY ITEMS ARE IDENTIFIED WITH THOMAS & BETTS CATALOG NUMBER.
2. FOR CHANNEL TRAY GROUNDING REFER TO DRAWING #65-ULT-416-EL-009.
3. INSTALL ALL CHANNEL TRAY WITH CHANNEL PROFILE TYPE "CANSTRUT" BY THOMAS & BETTS. CAT. # A1200-AL COMPLETE WITH MISCELLANEOUS HARDWARE.

ISSUED FOR CONSTRUCTION
ultragen DATE: SEPT 2017

DESSINS EN REFERENCE / REFERENCE DRAWINGS

TITRE / TITLE	# DWG
ELECTRICAL EQUIPMENT LAYOUT	65-ULT-416-EL-007
GROUNDING LAYOUT PUMPING STATION	65-ULT-416-EL-009

AGNICO EAGLE

REV.	DATE	DESCRIPTION	PAR/BY	APP.	CLIENT
2	2017-09-20	ISSUED FOR CONSTRUCTION	S.G.	D.C.	
1	2017-08-04	UPDATE AREA & TAG NUMBER	N.S.	D.C.	
0	2017-06-12	ISSUED FOR CONSTRUCTION	S.G.	D.C.	
PA	2017-05-18	ISSUED FOR REVIEW	S.G.	D.C.	

REVISIONS

NUQSANA PROMEC MINING
ultragen
NO. PROJET PROJECT NO. 591700

TITRE / TITLE
AGNICO EAGLE – MELIADINE DIVISION
416 – FUEL TANK FARM
FUEL DISTRIBUTION
PORTAL #1 PUMPING STATION
CHANNEL TRAY LAYOUT

DESSINE PAR DRAWN BY	RISHI SHRESTHA	DATE 2017-05-18
VERIFIE PAR CHECKED BY	STÉPHANE GRIMARD	2017-05-18
APPROUVE PAR APPROVED BY	DANIEL CARRIER	2017-05-18
ECHELLE SCALE	1:20	DATE 2017-05-18

NO. DESSIN DRAWING NO. 65-ULT-416-EL-011

NO. PROJET PROJECT NO.	REVISION	FEUILLE / SHT
6515	2	1/2

AE-CART-ARCH D

P:\1. ANNÉE 2017 ACTIFS\PROMEC\5917\00\ELECTRICITE\Dessins\Dessins de travail\65-ULT-416-EL-011.dwg

FILE NO. [illegible]

NO. DESSIN
DRAWING NO. 65-ULT-416-EL-011

FORMAT ARCHD

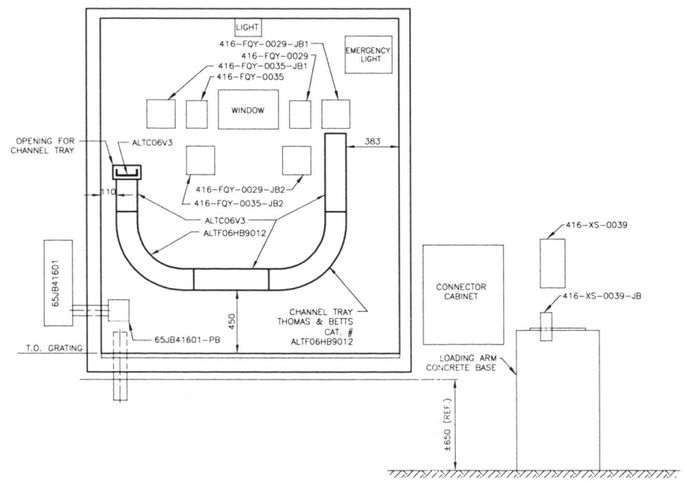

ELEVATION B

SCALE: 1:20

PORTAIL #1 PUMPING STATION
ELECTRICAL EQUIPMENT LAYOUT

PERMIT TO PRACTICE
LE GROUPE ULTRAGEN LTÉE
Signature
Date SEP 26 2017
PERMIT NUMBER: P 1180
NT/NU Association of Professional Engineers and Geoscientists

REGISTERED PROFESSIONAL ENGINEER
13627
D. CARRIER
LICENSEE
NT/NU
SEP 26 2017

PLAN CLE
KEY PLAN

NOTES GENERALES / GENERAL NOTES

1. FOR NOTES SEE SHEET 1 OF 2.

ISSUED FOR CONSTRUCTION
ultragen DATE: SEPT 2017

DESSINS EN REFERENCE / REFERENCE DRAWINGS

TITRE / TITLE	# DWG
ELECTRICAL EQUIPMENT LAYOUT	65-ULT-416-EL-007
GROUNDING LAYOUT PUMPING STATION	65-ULT-416-EL-009

AGNICO EAGLE

REV.	DATE	DESCRIPTION	PAR/BY	APP.	CLIENT
2	2017-09-20	ISSUED FOR CONSTRUCTION	S.G.	D.C.	
1	2017-06-04	UPDATE AREA & TAG NUMBER	N.S.	D.C.	
0	2017-06-12	ISSUED FOR CONSTRUCTION	S.G.	D.C.	
PA	2017-05-18	ISSUED FOR REVIEW	S.G.	D.C.	

REVISIONS

NUQSANA PROMEC MINING
ultragen
NO. PROJET PROJECT NO. 591700

TITRE / TITLE
AGNICO EAGLE – MEL/ADINE DIVISION
416 – FUEL TANK FARM
FUEL DISTRIBUTION
PORTAL #1 PUMPING STATION
CHANNEL TRAY LAYOUT

DESSINE PAR DRAWN BY	RISHI SHRESTHA	DATE 2017-05-18
VERIFIE PAR CHECKED BY	STÉPHANE GRIMARD	2017-05-18
APPROUVE PAR APPROVED BY	DANIEL CARRIER	2017-05-18
ECHELLE SCALE 1:20	DATE	2017-05-18

NO. DESSIN DRAWING NO. 65-ULT-416-EL-011

NO. PROJET PROJECT NO.	REVISION	FEUILLE / SHT
6515	2	2 / 2

AE-CART-ARCH D

Source:	120 / 208	Volts	
Feeder from / Single line diagram:			65TRF41601 / 65-416-275-200
Mounting:			SURFACE
Location:			ELECTRICAL ROOM 416 (PORTAL #1)
Manufacturer / Catalog No.:			SQUARE-D (SCHNEIDER) / NQ430L2C
Breaker type:			QOB

Enclosure type:	NEMA 1
Main breaker.:	NONE
No. of circuits:	30 CCTs
Bars:	225 A
Short circuit Ampacity:	10 kA
Power:	30 kVA

DESCRIPTION	CABLE AWG	TYPE REF	TYPE QTY	WATTS	BREAK. TYPE	BREAK. AMP	CT #		CT #	BREAK. AMP	BREAK. TYPE	WATTS	TYPE QTE	TYPE REF	CABLE AWG	DESCRIPTION
LIGHTING FIXTURES TANK #3 AND #6	12	L	10	690		15	1	A	2	15		240	2	O	12	OUTLET PUMPING STATION & OPERATION ROOM 416 (PORTAL #1)
							3	B	4	15		120	1	O	12	OUTLET ELECTRICAL ROOM 416
LIGHTING FIXTURES OUTSIDE ELECTRICAL ROOM/OUTSIDE PUMPING STATION	12	L	7	483		15	5	C	6	15		240	2	O	12	OUTLET ELECTRICAL ROOM IT AREA 416
							7	A	8	15		400	1	I	12	PLC/HMI/IO CARDS IN OPERATION ROOM CABINET 65PLC41601
LIGHTING FIXTURES TANK LIGHT AND HEAVY VEHICULE LOADING, CONTAINERIZED DEF PORTAL #1	12	L	8	552		15	9	B	10	30		2000	1	H	6	HEATING IN OPERATION ROOM 416 65HEA41605
							11	C	12							
LIGHTING AND EMERGENCY LIGHTING PUMPING STATION & OPERATION ROOM 416	12	L	7	312		15	13	A	14	15		200	1	I	12	LIGHT VEHICULE GASBOY - CONTROL 416-FQY-0049
LIGHTING AND EMERGENCY LIGHTING ELECTRICAL ROOM 416	12	L	4	180		15	15	B	16	15		200	1	I	12	PLC CABINET 65PLC41601 OUTLET UTILITY IN OPERATION ROOM
LIGHTING CONTACTOR CONTROL FEEDER	12	L	1	37		15	17	C	18	15		100	1	I	12	INSTRUMENT (65-ULT-416-IN-013)
MOTORIZED OPERATOR VALVES FEEDER 416-FV-0014/0016 (65-ULT-416-IN-013)	10	I	2	888		15	19	A	20	15		888	2	I	12	MOTORIZED OPERATOR VALVES FEEDER 416-FV-0004/0006 (65-ULT-416-IN-013)
HEAVY VEHICULE GASBOY -MOTOR (1 1/2 HP) 416-FQY-0044	12	I	1	1120		15	21	B	22	15		444	2	I	12	MOTORIZED OPERATOR VALVES FEEDER 416-FV-0043 (65-ULT-416-IN-013)
							23	C	24	15		444	2	I	10	MOTORIZED OPERATOR VALVES FEEDER 416-FV-0048 (65-ULT-416-IN-013)
HEAVY VEHICULE GASBOY - CONTROL 416-FQY-0044	12	I	1	200		15	25	A	26	15		560	1	I	12	LIGHT VEHICULE GASBOY - MOTOR (3/4 HP) 416-FQY-0049
						15	27	B	28	15						
						15	29	C	30	15						

TYPE (REF)	(W) total	Qte
(L) Lighting	2254	37
(O) Outlet	600	5
(H) Heating	2000	1
(I) Instrument	5444	15

BREAKER TYPE	Qte (ref)
(L) SPARE	0
(S) SPACE	0
(G) DDFT BREAKER (30mA)	0

	Watts
Phase A	4274,5
Phase B	3125
Phase C	2898,5
Total	10298

REGISTERED PROFESSIONAL ENGINEER
367
D. CARRIER
LICENSEE
NT/NU
SEP 2 6 2017

NOTES:
1. SEE LIGHTING DIAGRAM FOR DETAILS OF CABLE SIZE DWG #65-ULT-416-EL-013.

REV.	DATE	DESCRIPTION	PAR	VER.	APP.
2	2017-09-20	ISSUED FOR CONSTRUCTION	S. GRIMARD	D.CARRIER	D.CARRIER
1	2017-08-04	UPDATE AREA & TAG NUMBER	N.SALDAN	D.CARRIER	D.CARRIER
0	2017-06-12	ISSUED FOR CONSTRUCTION	SG 111891	DC 40308	DC 40308
PA	2017-05-16	ISSUED FOR REVIEW	MT 5029941	SG 111891	DC 40308

AGNICO EAGLE
NUQSANA PROMEC MINING
ultragen

416 - FUEL TANK FARM
PORTAL #1 ELECTRICAL ROOM
PANEL SCHEDULE 65DPS41601

UNITÉ: - | DATE: 2017-05-16 | REV: 2
DESS: MT 5029941 | 65-ULT-416-EL-012

PERMIT TO PRACTICE
LE GROUPE ULTRAGEN LTÉE
Signature
Date SEP 2 6 2017
PERMIT NUMBER: P 1180
NT/NU Association of Professional Engineers and Geoscientists

TANK LIGHT AND HEAVY VEHICULE LOADING,
CONTAINERIZED DEF PORTAL #1

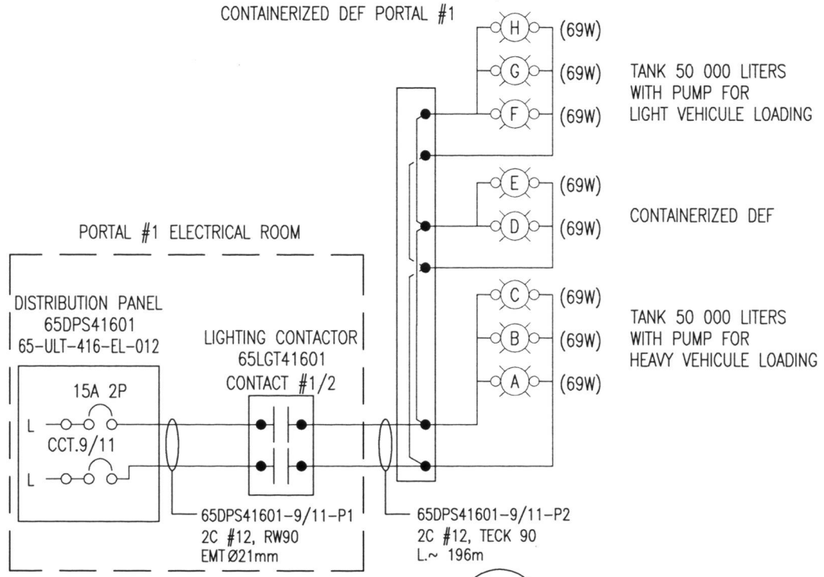

WIRING DIAGRAM 1
INTERCONNECTION

OUTSIDE PUMPING STATION AND ELECTRICAL ROOM PORTAL #1

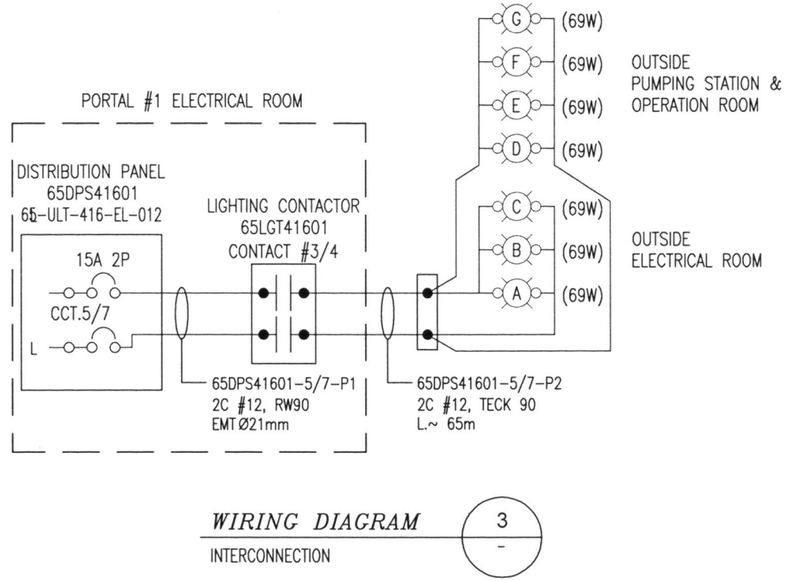

WIRING DIAGRAM 3
INTERCONNECTION

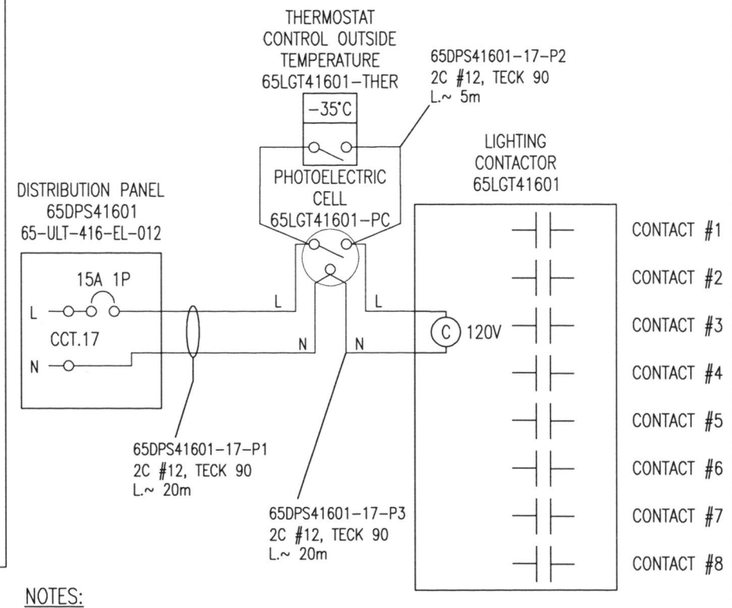

TANK #3 AND #6 PORTAIL #1

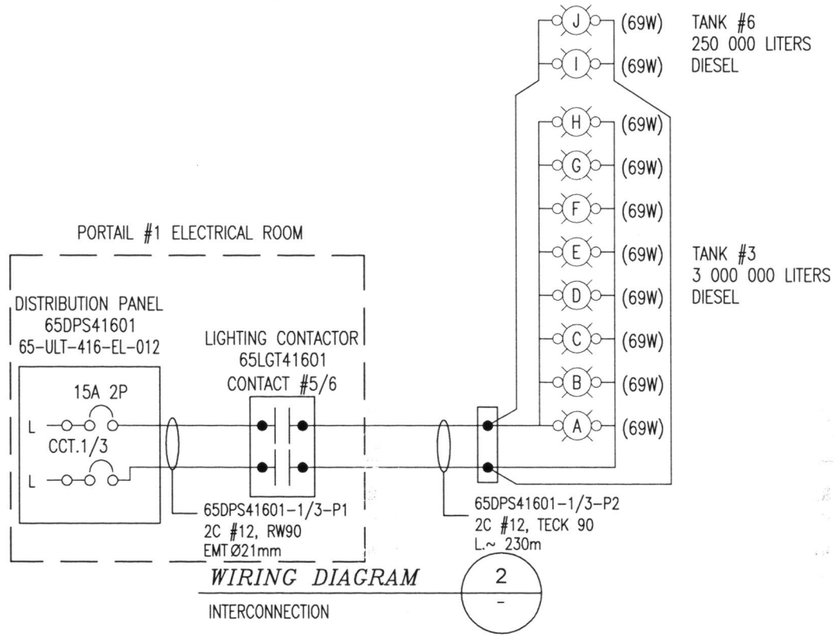

WIRING DIAGRAM 2
INTERCONNECTION

NOTES:

1. REFER TO THE DWG #65-416-285-201 FOR THE LIGHTING LAYOUT OF THE RANKIN INLET.
2. THE LIGHTING IDENTIFICATION AROUND THE TANKS ON THIS DRAWING STARTS FROM THE GROUND TO THE TOP OF THE TANK (A TO H AND I TO J).

No.	DATE	REVISION	BY / APP.
2	2017-09-20	ISSUED FOR CONSTRUCTION	S.G. / D.C.
1	2017-08-04	UPDATE AREA & TAG NUMBER	N.S. / D.C.
0	2017-06-12	ISSUED FOR CONSTRUCTION	S.G. / D.C.
PA	2017-05-15	ISSUED FOR REVIEW	M.T. / D.C.

PERMIT TO PRACTICE
LE GROUPE ULTRAGEN LTÉE
Signature
Date SEP 26 2017
PERMIT NUMBER: P 1180
NT/NU Association of Professional Engineers and Geoscientists

REGISTERED PROFESSIONAL ENGINEER
D. CARRIER
LICENSEE
NT/NU
SEP 26 2017

ISSUED FOR CONSTRUCTION
ultragen DATE: SEPT 2017

CLIENT: AGNICO EAGLE

NUQSANA-PROMEC MINING

ultragen
CONSULTANT PROJECT NO. 591700

DESIGNED BY: MARC TREMBLAY	PROJECT: AGNICO EAGLE – MEADOWBANK DIVISION 416 – FUEL TANK FARM /2
DATE: 2017-05-15	
DRAWN BY: MARC TREMBLAY	TITLE: FUEL DISTRIBUTION PORTAL #1 LIGHTING DIAGRAM
DATE: 2017-05-15	
CHECKED BY: STEPHANE GRIMARD	
DATE: 2017-05-15	
APPROVED BY: DANIEL CARRIER	
DATE: 2017-05-15	
SCALE: NONE	

PROJECT No.	DRAWING NO.	REV.
6515	65-ULT-416-EL-013	2

NO. DESSIN DRAWING NO. 65-ULT-416-IN-001 (CABINET LAYOUT)

FORMAT ARCH D

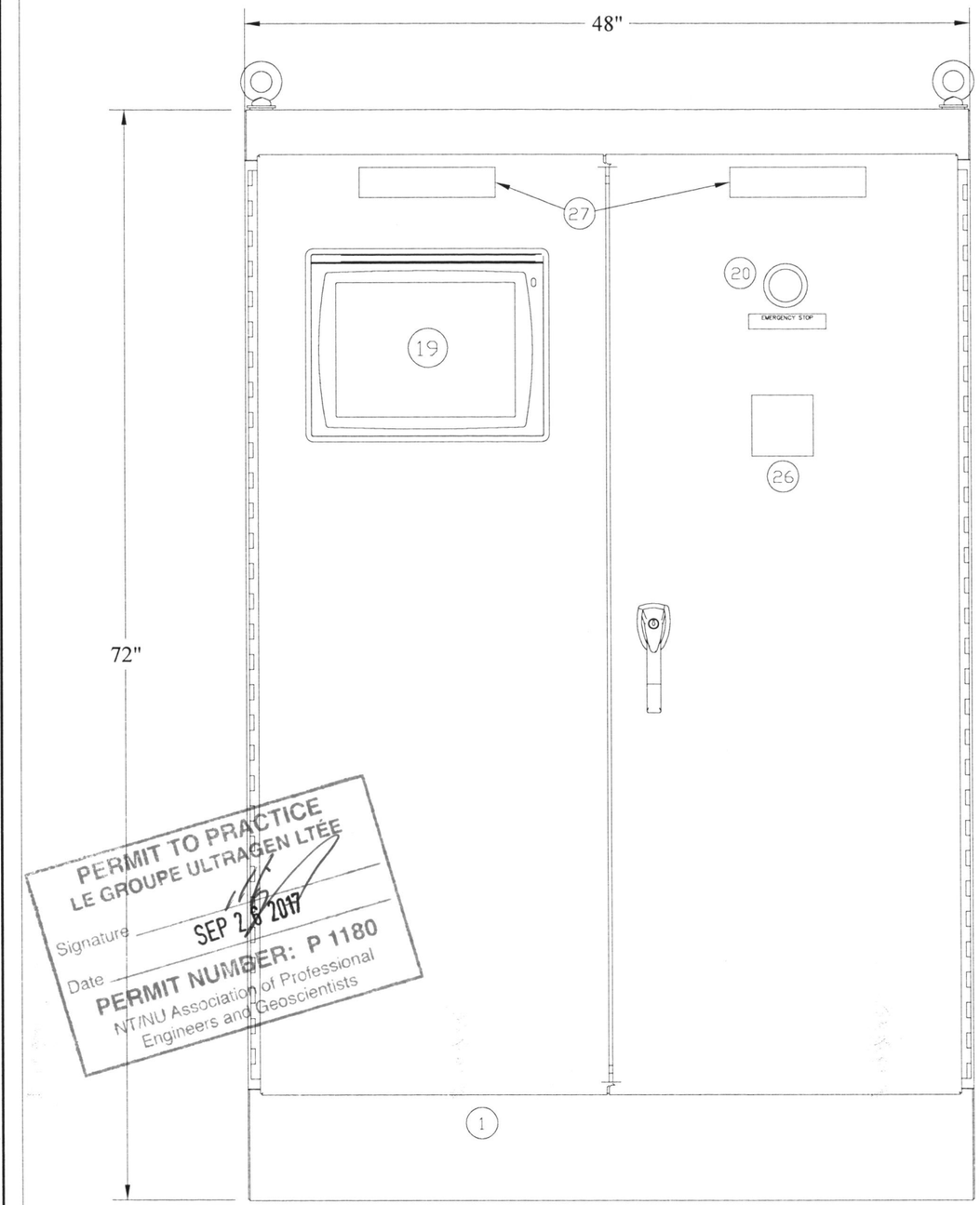

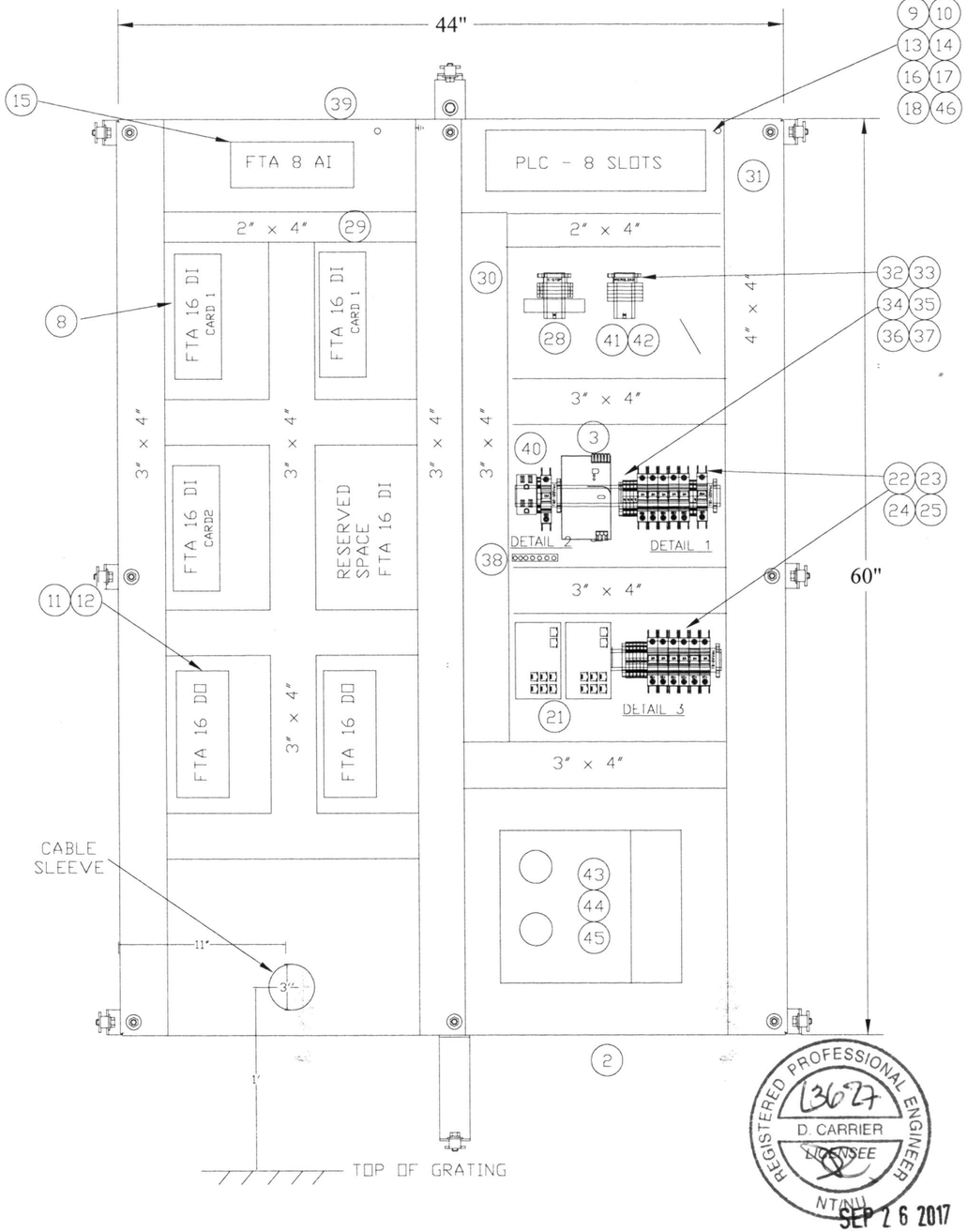

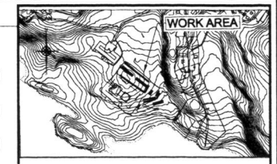

NOTES GENERALES / GENERAL NOTES

ISSUED FOR CONSTRUCTION
ultragen DATE: SEPT 2017

DESSINS EN REFERENCE / REFERENCE DRAWINGS

TITRE / TITLE	# DWG
PLC CABINET BOM	65-ULT-416-N-002

AGNICO EAGLE

REV.	DATE	DESCRIPTION	PAR/BY	APP.	CLIENT
5	2017-09-20	FOR CONSTRUCTION	EL	DC	
4	2017-08-14	UPDATE AREA & TAG NUMBER	EL	DC	
3	2017-06-12	FOR CONSTRUCTION	EL	DC	
2	2017-05-18	FOR CONSTRUCTION	EL	DC	
1	2017-05-10	FOR CONSTRUCTION	EL	DC	
0	2017-05-08	FOR CONSTRUCTION	EL	DC	

REVISIONS

NUQSANA-PROMEC MINING

ultragen

NO. PROJET PROJECT NO. 591700

TITRE / TITLE
AGNICO EAGLE – MEL IDINE DIVISION
416 – FUEL TANK FARM
FUEL DISTRIBUTION
CABINET LAYOUT
MAIN PLC CABINET

DESSINE PAR DRAWN BY	ERIC LAROUCHE	DATE 2017-04-11
VERIFIE PAR CHECKED BY	DANIEL CARRIER	2017-04-11
APPROUVE PAR APPROVED BY	DANIEL CARRIER	2017-04-11
ECHELLE SCALE	NTS	DATE 2017-04-11

NO. DESSIN DRAWING NO. 65-ULT-416-IN-001

NO. PROJET PROJECT NO.	REVISION	FEUILLE / SHT
6515	5	1 / 1

PERMIT TO PRACTICE
LE GROUPE ULTRAGEN LTÉE
Signature
Date SEP 26 2017
PERMIT NUMBER: P 1180
NT/NU Association of Professional Engineers and Geoscientists

REGISTERED PROFESSIONAL ENGINEER
13627
D. CARRIER
LICENSEE
NT/NU
SEP 26 2017

AE-CART-ARCH D

P:\T. ANNÉE 2017 ACTIFS\PROMEC\591700\00\INSTRUMENTATION\Plans et devis\Dessins\65-ULT-416-IN-001 (CABINET LAYOUT).dwg

FILE NO. 65-ULT-416-IN-001 (CABINET LAYOUT).dwg

NO. DESSIN / DRAWING NO. 65-ULT-416-IN-002 (BOM)

FORMAT ARCH D

ITEM	QUANTITY PORTAIL #1	QUANTITY INDUSTRIAL SITE	DESCRIPTION	MANUFACTURER	MODEL
1	1	1	CABINET 72H, 48W, 24D NEMA 12 WITH BASE FREESTANDING	Hammond	1418ZW24
2	1	1	INNER MOUNTING PANEL FOR CABINET	Hammond	72ZWFW
3	1	1	POWER SUPPLY 24VDC 5 AMP	Schneider	ABL8RPS24050
4	1	1	BACKPLANE 8 SLOTS	Schneider	BMEXBP0800
5	1	1	POWER SUPPLY PLC	Schneider	BMXCPS3500
6	1	1	PLC PROCESSOR	Schneider	BMEP582040
7	1	1	64 DIGITAL INPUT PLC CARD	Schneider	BMXDDI6402K
8	3	3	FTA 16 DIGITAL INPUT	Schneider	ABE7S16E2F0
9	2	2	CABLE 3 METERS FOR DIGITAL INPUT CARD	Schneider	BMXFCC303
10	1	1	32 DIGITAL OUTPUT PLC CARD	Schneider	BMXDDO3202K
11	2	2	FTA 16 DIGITAL OUTPUT	Schneider	ABE7R16T210
12	32	32	RELAY FOR DIGITAL OUTPUT CARD	Schneider	ABR7S21
13	1	1	CABLE 3 METERS FOR DIGITAL OUTPUT	Schneider	BMXFCC303
14	1	1	8 ANALOG INPUT PLC CARD	Schneider	BMXAMI0810
15	1	1	FTA 8 ANALOG INPUT	Schneider	ABE7CPA31
16	1	1	CABLE 1.5METERS FOR ANALOG INPUT	Schneider	BMXFTA150
17	1	1	HIGH SPEED COUNTER MODULE	Schneider	BMXEHC0800
18	1	1	REMOVABLE CAGE CLAMP	Schneider	BMXFTB2000
19	1	1	PANEL VIEW HMI 15 INCH 24VDC WITH PREMIUM BOX	Schneider	HMIDT732 / HMIG3U
20	1	1	PANEL MOUNTED BUTTON	Schneider	XB4BS8444
21	2	2	ETHERNET TCP/IP SWITCH -7 COPPER / 1 FIBER	Schneider	TCSESM083F1CS0
22	10	10	120VAC/24VDC CIRCUIT BREAKER 2A	Schneider	GB2CB07
23	1	1	120VAC/24VDC CIRCUIT BREAKER 5A	Schneider	GB2CB10
24	1	1	120VAC/24VDC CIRCUIT BREAKER 15A	Schneider	GB2CB21
25	1	1	120VAC/24VDC CIRCUIT BREAKER 20A	Schneider	GB2CB22
26	1	1	RED LAMICOID WITH WHITE LETTERS - 4" x 4"	65-ULT-416-IN-004/005 FOR DETAIL	-
27	2	2	WHITE LAMICOID WITH BLACK LETTERS - 2" x 9"	65-ULT-416-IN-004/005 FOR DETAIL	-
28	1	1	SAFETY RELAY FOR EMERGENCY STOP 7 CO -120Vac	Allen-Bradley	440R-G23215
29	1	1	RACEWAY INSIDE CABINET 2" x 4", 6 FEET LENGTH	Panduit	G2X4LG6
30	2	2	RACEWAY INSIDE CABINET 3" x 4", 6 FEET LENGTH	Panduit	G3X4LG6
31	3	3	RACEWAY INSIDE CABINET 4" x 4", 6 FEET LENGTH	Panduit	G4X4LG6
32	1	1	TS-35 DIN MOUNTING RAIL, 7.5MM, 2 METERS LONG	Weidmuller	514500000
33	12	12	RAIL SUPPORT 1"	Weidmuller	7924270030
34	12	12	END COVER FOR TS-35	Weidmuller	38356
35	6	6	GROUP MARKER CARRIER	Weidmuller	29246
36	35	35	TERMINAL BLOCK WDU 4	Weidmuller	102010
37	70	70	MARKER	Weidmuller	051796/160772/051530
38	1	1	GROUNDING BAR 7 TERMINALS	Schneider	PK7GTA
39	1	1	120V FLUORESCENT CABINET LIGHT	Schneider	NSYLAMCU
40	1	1	120V 15A OUTLET DIN RAIL	Allen-Bradley	1492-REC15G
41	0	0	TERMINAL BLOCK 12VDC RELAY	Weidmuller	112275
42	5	5	TERMINAL BLOCK 120Vac RELAY	Weidmuller	112283
43	1	1	FIBER OPTIC PATCH PANEL 24 FIBERS	Panduit	FWME2
44	2	2	LC DUPLEX SINGLE MODE ADAPTER (12 FIBERS)	Panduit	FAP12WBUDLCZ
45	2	2	FIBER OPTIC PATCH CORD LC TO SC	Panduit	F92ENSNLNSNM002
46	1	1	ETHERNET MODULE M580 - 3 SUBNETS	Schneider	BMENOC0321

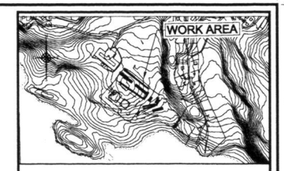

NOTES GENERALES / GENERAL NOTES

ISSUED FOR CONSTRUCTION
Ultragen DATE: SEPT 2017

PERMIT TO PRACTICE
LE GROUPE ULTRAGEN LTÉE
Signature
Date SEP 2 6 2017
PERMIT NUMBER: P 1180
NT/NU Association of Professional Engineers and Geoscientists

REGISTERED PROFESSIONAL ENGINEER
13677
D. CARRIER
LICENSEE
NT/NU
SEP 2 6 2017

DESSINS EN REFERENCE / REFERENCE DRAWINGS

TITRE / TITLE	# DWG
PLC CABINET LAYOUT	65-ULT-416-IN-001

AGNICO EAGLE

REV.	DATE	DESCRIPTION	PAR/BY	APP.	CLIENT
5	2017-09-19	FOR CONSTRUCTION	EL	DC	
4	2017-08-14	UPDATE AREA & TAG NUMBER	EL	DC	
3	2017-06-13	FOR CONSTRUCTION	EL	DC	
2	2017-05-18	FOR CONSTRUCTION	EL	DC	
1	2017-05-10	FOR CONSTRUCTION	EL	DC	
0	2017-05-08	FOR CONSTRUCTION	EL	D.C.	

REVISIONS

NUOSANA PROMEC MINING
Ultragen
NO. PROJET / PROJECT NO. 591700

TITRE / TITLE
AGNICO EAGLE – MEADOWBANK DIVISION
416 – FUEL TANK FARM (5)
FUEL DISTRIBUTION
BILL OF MATERIAL
MAIN PLC CABINET

DESSINE PAR / DRAWN BY	ERIC LAROUCHE	DATE 2017-04-11
VERIFIE PAR / CHECKED BY	DANIEL CARRIER	2017-04-11
APPROUVE PAR / APPROVED BY	DANIEL CARRIER	2017-04-11
ECHELLE / SCALE	NTS	DATE 2017-04-11
NO. DESSIN / DRAWING NO.	65-ULT-416-IN-002	
NO. PROJET / PROJECT NO.	6515	REVISION 5
		FEUILLE / SHT 1 / 1

AE-CART-ARCH D

P:\1. ANNEE 2017 ACTIFS\PROMEC\5917\00\INSTRUMENTATION\Plans et devis\Dessins\65-ULT-416-IN-002 (BOM).dwg

FILE NO. 65-ULT-416-IN-002 (BOM).dwg

NO. DESSIN DRAWING NO. 65-ULT-416-IN-004 (E-STOP & COMM)

FORMAT ARCH D

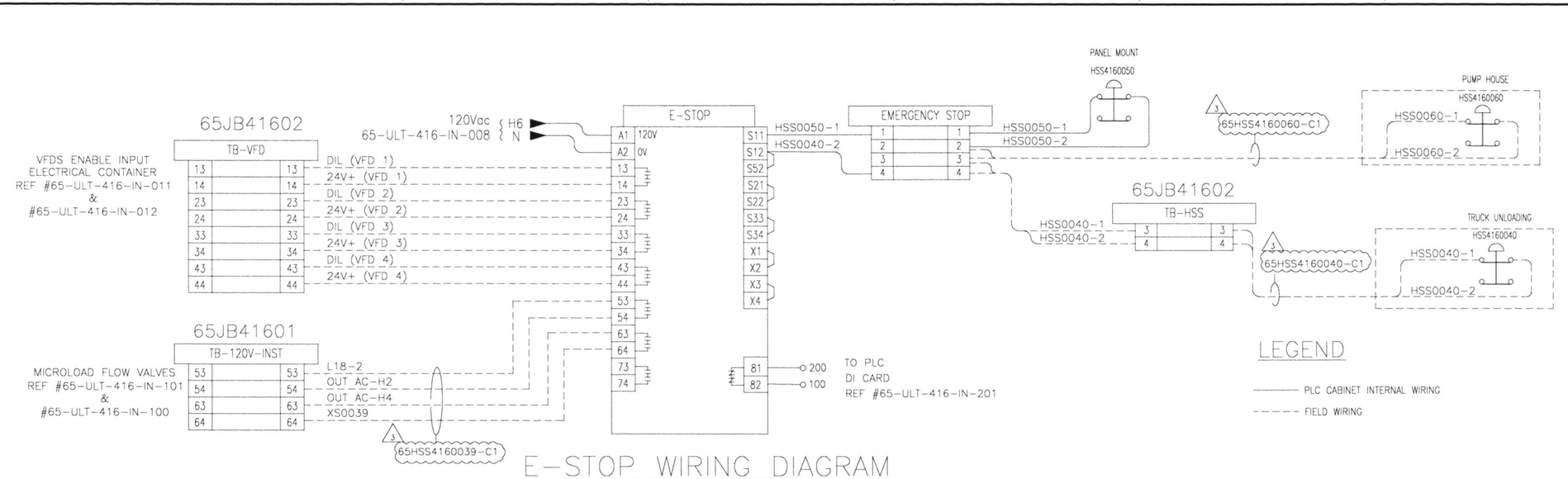

E-STOP WIRING DIAGRAM

PLC BASEPLATE & COMMUNICATION

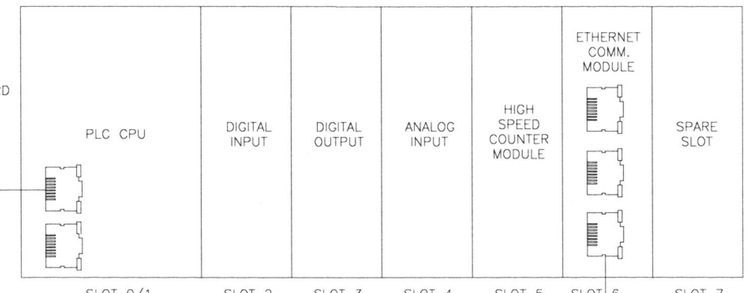

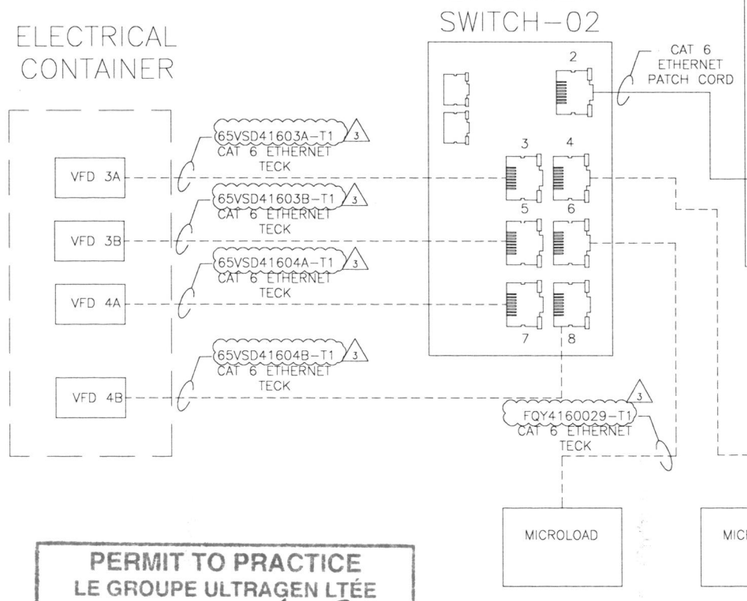

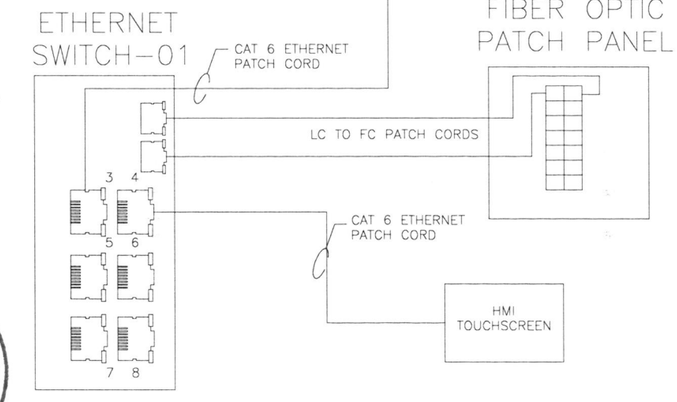

LAMICOID PLATE
BOM ITEM #26
SCALE = 1/2

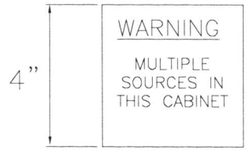

LAMICOID PLATE
BOM ITEM #27
SCALE = 1/2

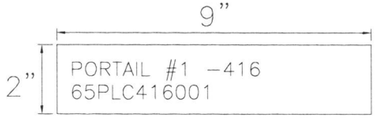

PERMIT TO PRACTICE
LE GROUPE ULTRAGEN LTÉE
Signature
Date SEP 2 6 2017
PERMIT NUMBER: P 1180
NT/NU Association of Professional Engineers and Geoscientists

REGISTERED PROFESSIONAL ENGINEER
13677
D. CARRIER
LICENSEE
NT/NU
SEP 2 6 2017

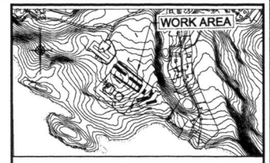

NOTES GENERALES / GENERAL NOTES

ISSUED FOR CONSTRUCTION
ultragen DATE: SEPT 2017

DESSINS EN REFERENCE / REFERENCE DRAWINGS

TITRE / TITLE	# DWG
PLC CABINET LAYOUT	65-ULT-416-IN-001

AGNICO EAGLE

REV.	DATE	DESCRIPTION	PAR/BY	APP.	CLIENT
3	2017-09-20	FOR CONSTRUCTION	E.L.	D.C.	
2	2017-08-14	UPDATE AREA & TAG NUMBER	E.L.	D.C.	
1	2017-06-09	FOR CONSTRUCTION	E.L.	D.C.	
0	2017-05-15	FOR CONSTRUCTION	E.L.	D.C.	

REVISIONS

NUNAVA PROMEC MINING

ultragen

NO. PROJET PROJECT NO. 591700

TITRE / TITLE
AGNICO EAGLE – MEADOWBANK DIVISION
416 – FUEL TANK FARM 3
FUEL DISTRIBUTION (PORTAL #1)
WIRING DETAIL
EMERGENCY STOP & COMMUNICATION

DESSINE PAR DRAWN BY	ERIC LAROUCHE	DATE 2017-04-11
VERIFIE PAR CHECKED BY	DANIEL CARRIER	2017-04-11
APPROUVE PAR APPROVED BY	DANIEL CARRIER	2017-04-11
ECHELLE SCALE	NTS	DATE 2017-04-11

NO. DESSIN DRAWING NO. 65-ULT-416-IN-004

NO. PROJET PROJECT NO.	REVISION	FEUILLE / SHT
6515	3	1 / 1

AE-CART-ARCH D

P:\1. ANNÉE 2017 ACTIFS\PROMEC\591.7\001\INSTRUMENTATION\Plans et devis\Dessins\65-ULT-416-IN-004 (E-STOP & COMM).dwg

FILE NO. 65-ULT-416-IN-004 (E-STOP & COMM).dwg

NO. DESSIN DRAWING NO. 65-ULT-416-IN-006 (JB INST LAYOUT)

FORMAT ARCHD

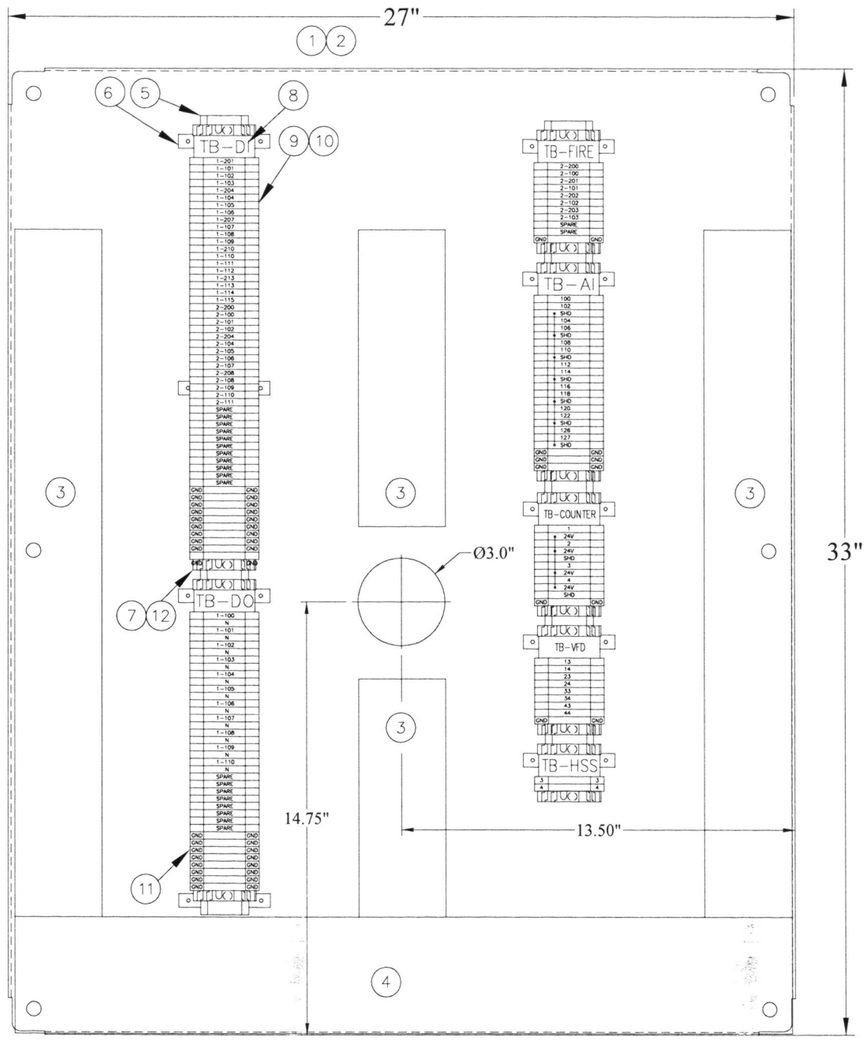

ITEM	QUANTITY PORTAIL #1	DESCRIPTION	MANUFACTURER	MODEL
1	1	WALLMOUNT ENCLOSURE 36H, 30W, 8D TYPE 4X ALUMINIUM	Hammond	1418N4ALM8
2	1	INNER MOUNTING PANEL FOR ENCLOSURE	Hammond	INCLUDED (ITEM 1)
3	1	RACEWAY INSIDE CABINET 3" x 4", 6 FEET LENGTH	Panduit	G3X4LG6
4	1	RACEWAY INSIDE CABINET 4" x 4", 6 FEET LENGTH	Panduit	G4X4LG6
5	1	TS-35 DIN MOUNTING RAIL, 7.5MM, 2 METERS LONG	Weidmuller	514500000
6	6	RAIL SUPPORT 1"	Weidmuller	7924270030
7	14	END COVER FOR TS-35	Weidmuller	38356
8	7	GROUP MARKER CARRIER	Weidmuller	29246
9	125	TERMINAL BLOCK WDU 4	Weidmuller	102010
10	250	MARKER	Weidmuller	051796/160772/051530
11	22	GROUND TERMINAL YELLOW/GREEN	Weidmuller	10101
12	7	END PLATE	Weidmuller	10500

PERMIT TO PRACTICE
LE GROUPE ULTRAGEN LTÉE
Signature
Date SEP 2 6 2017
PERMIT NUMBER: P 1180
NT/NU Association of Professional Engineers and Geoscientists

REGISTERED PROFESSIONAL ENGINEER
L3627
D. CARRIER
LICENSEE
NT/NU SEP 2 6 2017

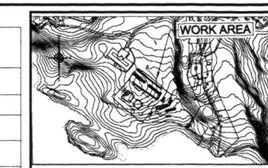

NOTES GENERALES / GENERAL NOTES

ISSUED FOR CONSTRUCTION
Ultragen DATE: SEPT 2017

DESSINS EN REFERENCE / REFERENCE DRAWINGS

TITRE / TITLE	# DWG
TB-DI INTERCONNECTION	65-ULT-416-IN-201
TB-DO INTERCONNECTION	65-ULT-416-IN-200
TB-FIRE INTERCONNECTION	65-ULT-416-IN-200
TB-VFD 1&2 INTERCONNECTION	65-ULT-416-IN-011
TB-VFD 3&4 INTERCONNECTION	65-ULT-416-IN-012
TB-HSS INTERCONNECTION	65-ULT-416-IN-004
TB-AI INTERCONNECTION	65-ULT-416-IN-203
TB-COUNTER INTERCONNECTION	65-ULT-416-IN-204

AGNICO EAGLE

REV.	DATE	DESCRIPTION	PAR/BY	APP.	CLIENT
3	2017-09-19	FOR CONSTRUCTION	E.L.	D.C.	
2	2017-08-14	UPDATE AREA & TAG NUMBER	E.L.	D.C.	
1	2017-06-30	FOR CONSTRUCTION	E.L.	D.C.	
0	2017-05-15	FOR CONSTRUCTION	EL	DC	

REVISIONS

NUQSANA-PROMEC MINING
ultragen
NO. PROJET PROJECT NO. 591700

TITRE / TITLE
AGNICO EAGLE – MELIADINE DIVISION
416 – FUEL TANK FARM
FUEL DISTRIBUTION (PORTAL #1)
CABINET LAYOUT
JUNCTION BOX INSTRUMENTATION
65JB41602

DESSINE PAR DRAWN BY	ERIC LAROUCHE	DATE 2017-04-19
VERIFIE PAR CHECKED BY	DANIEL CARRIER	2017-04-19
APPROUVE PAR APPROVED BY	DANIEL CARRIER	2017-04-19
ECHELLE SCALE	NTS	DATE 2017-04-19

NO. DESSIN DRAWING NO. 65-ULT-416-IN-006

NO. PROJET PROJECT NO.	REVISION	FEUILLE / SHT
6515	3	1 / 1

AE-CART-ARCH D

P:\1. ANNÉE 2017 ACTIFS\PROMEC\5917\00\INSTRUMENTATION\Plans et devis\Dessins\65-ULT-416-IN-006 (JB INST LAYOUT).dwg

FILE NO. (Next Next)

NO. DESSIN, DRAWING NO. 65-ULT-416-IN-007 (JB 120V LAYOUT)

FORMAT ARCHD

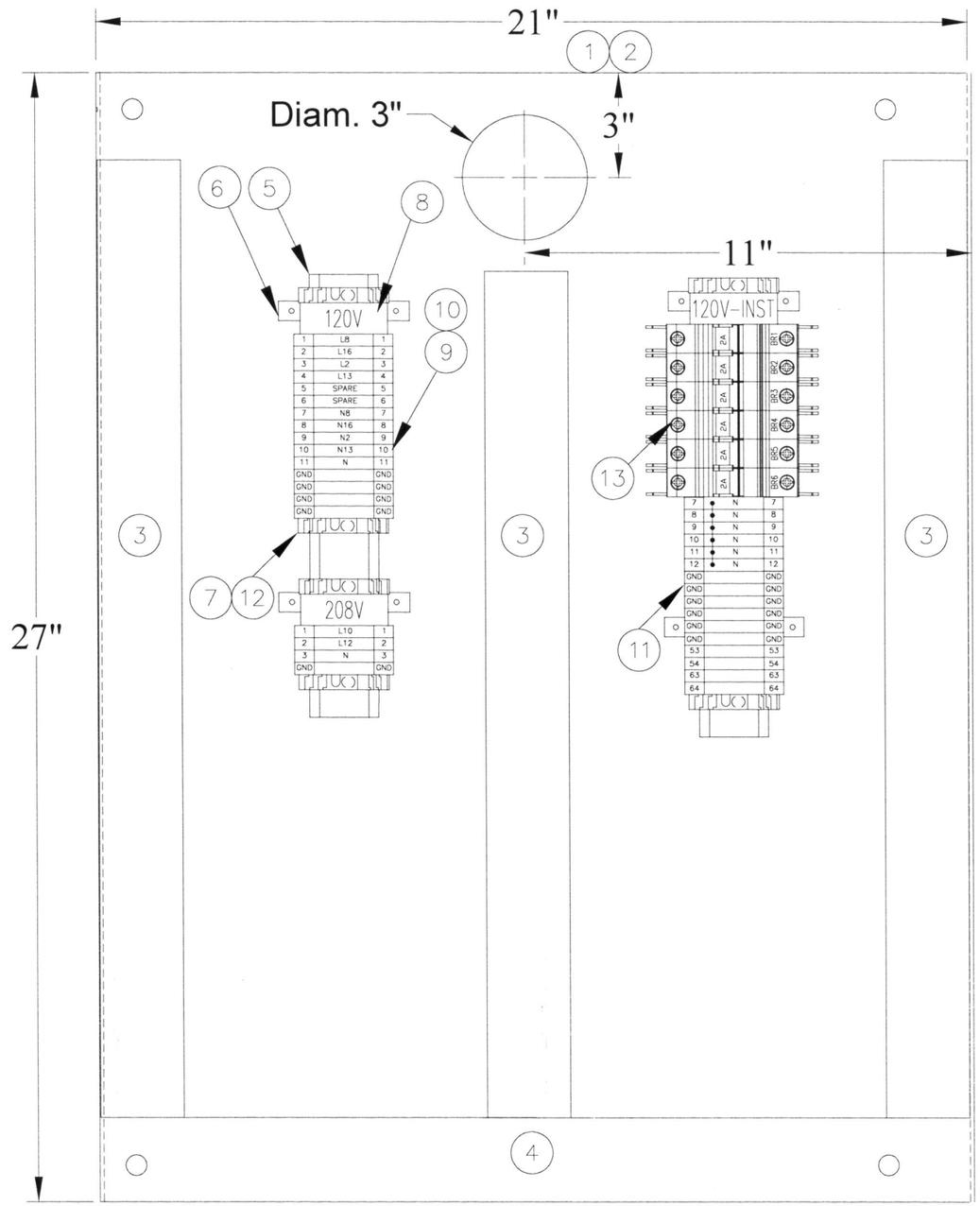

ITEM	QUANTITY PORTAIL #1	DESCRIPTION	MANUFACTURER	MODEL
1	1	WALLMOUNT ENCLOSURE 30H, 24W, 8D TYPE 4X ALUMINIUM	Hammond	1418N4ALK8
2	1	INNER MOUNTING PANEL FOR ENCLOSURE	Hammond	INCLUDED (ITEM 1)
3	1	RACEWAY INSIDE CABINET 2" x 4", 6 FEET LENGTH	Panduit	G2X4LG6
4	1	RACEWAY INSIDE CABINET 3" x 4", 6 FEET LENGTH	Panduit	G3X4LG6
5	1	TS-35 DIN MOUNTING RAIL, 7.5MM, 2 METERS LONG	Weidmuller	514500000
6	6	RAIL SUPPORT 1"	Weidmuller	7924270030
7	6	END BRACKET FOR TS-35	Weidmuller	38356
8	3	GROUP MARKER CARRIER	Weidmuller	29246
9	28	TERMINAL BLOCK WDU 6	Weidmuller	10202
10	56	MARKER	Weidmuller	051796/160772/051530
11	12	GROUND TERMINAL YELLOW/GREEN	Weidmuller	10102
12	4	END PLATE	Weidmuller	10500
13	6	120VAC/24VDC CIRCUIT BREAKER 2A	Weidmuller	GB2CB07

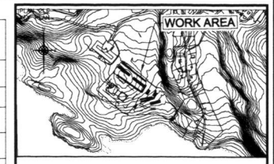

NOTES GENERALES / GENERAL NOTES

ISSUED FOR CONSTRUCTION
ultragen DATE: SEPT 2017

DESSINS EN REFERENCE / REFERENCE DRAWINGS

TITRE / TITLE	# DWG
65JB41601, 120Vac INTERCONNECTION	65-ULT-416-IN-013

AGNICO EAGLE

REV.	DATE	DESCRIPTION	PAR/BY	APP.	CLIENT
3	2017-09-19	FOR CONSTRUCTION	E.L.	D.C.	
2	2017-08-14	UPDATE AREA & TAG NUMBER	E.L.	D.C.	
1	2017-06-09	FOR CONSTRUCTION	E.L.	D.C.	
0	2017-05-16	FOR CONSTRUCTION	E.L.	D.C.	

REVISIONS

NUQSANA PROMEC MINING | ultragen

NO. PROJET / PROJECT NO. 591700

TITRE / TITLE
AGNICO EAGLE – MEL/ADINE DIVISION
416 – FUEL TANK FARM 3
FUEL DISTRIBUTION (PORTAL #1)
CABINET LAYOUT
JUNCTION BOX 120V
65JB41601

DESSINE PAR / DRAWN BY	ERIC LAROUCHE	DATE 2017-04-19
VERIFIE PAR / CHECKED BY	DANIEL CARRIER	2017-04-19
APPROUVE PAR / APPROVED BY	DANIEL CARRIER	2017-04-19
ECHELLE / SCALE	NTS	DATE 2017-04-19

NO. DESSIN / DRAWING NO. 65-ULT-416-IN-007

NO. PROJET / PROJECT NO.	REVISION	FEUILLE / SHT
6515	3	1 / 1

PERMIT TO PRACTICE
LE GROUPE ULTRAGEN LTÉE
Signature
Date SEP 2 6 2017
PERMIT NUMBER: P 1180
NT/NU Association of Professional Engineers and Geoscientists

REGISTERED PROFESSIONAL ENGINEER
L3627
D. CARRIER
LICENSEE
NT/NU
SEP 2 6 2017

AE-CART-ARCH D

P:\1. ANNÉE 2017 ACTIFS\PROMEC\5917\00\INSTRUMENTATION\Plans et devis\Dessins\65-ULT-416-IN-007 (JB 120V LAYOUT).dwg

FILE NO. 65-ULT-416-IN-007 (JB 120V LAYOUT).dwg

NO. DESSIN
DRAWING NO. 65-ULT-416-IN-008 (DISTRIBUTION)

FORMAT ARCH D

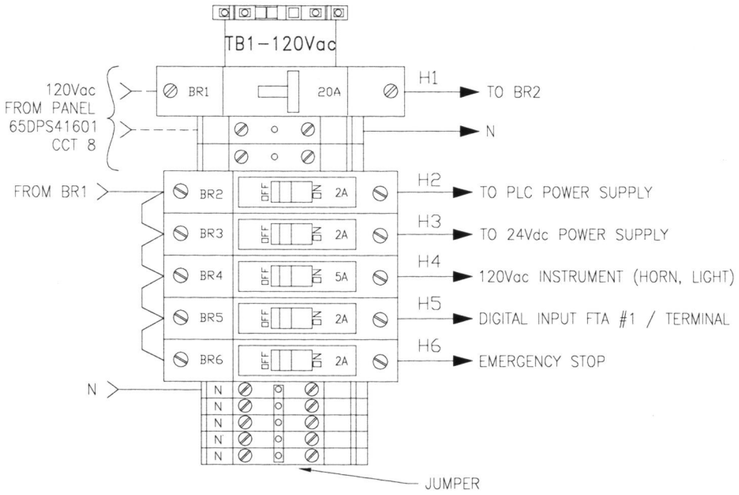

DETAIL #1

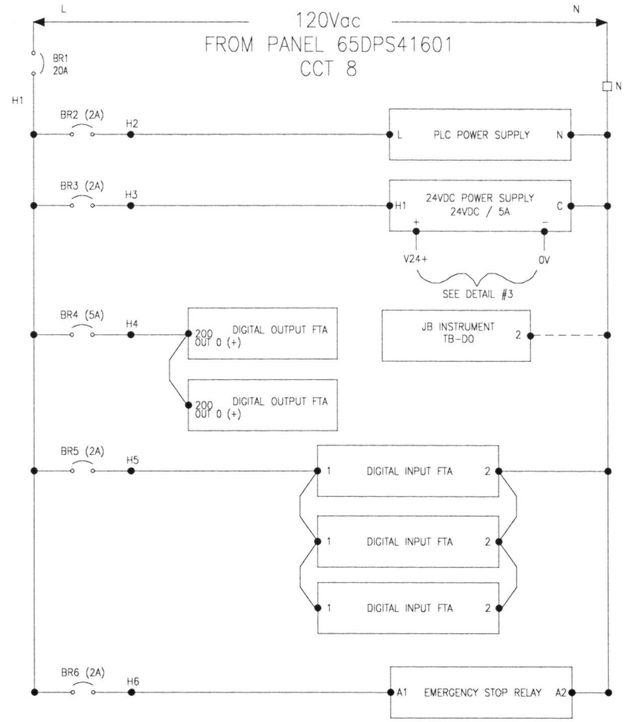

DETAIL #1 SCHEMATIC DIAGRAM

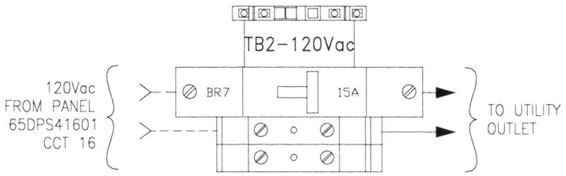

DETAIL #2

LEGEND

——— PLC CABINET INTERNAL WIRING

- - - - - FIELD WIRING

DETAIL #1, #2, #3 FROM PLC CABINET LAYOUT DWG # 65-ULT-416-IN-001

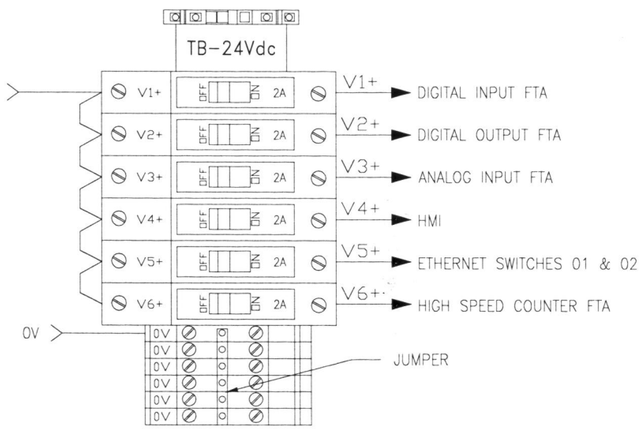

DETAIL #3

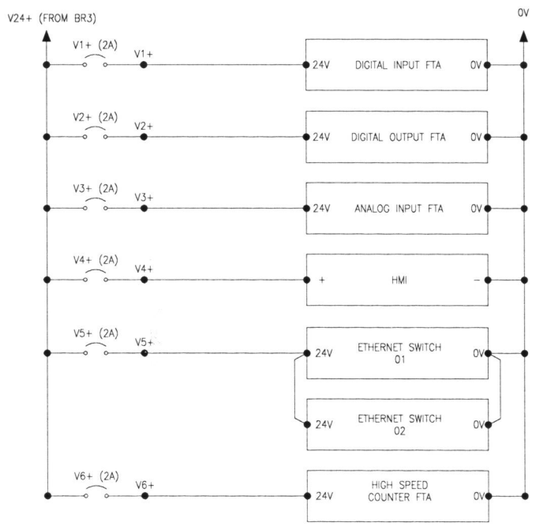

DETAIL #1 SCHEMATIC DIAGRAM

PERMIT TO PRACTICE
LE GROUPE ULTRAGEN LTÉE
Signature
Date SEP 26 2017
PERMIT NUMBER: P 1180
NT/NU Association of Professional Engineers and Geoscientists

REGISTERED PROFESSIONAL ENGINEER
L3627
D. CARRIER
LICENSEE
NT/NU
SEP 26 2017

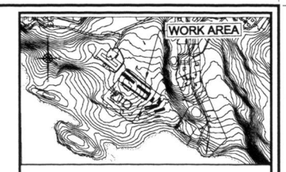

NOTES GENERALES / GENERAL NOTES

ISSUED FOR CONSTRUCTION
LAbrecque DATE: SEPT 2017

DESSINS EN REFERENCE / REFERENCE DRAWINGS

TITRE / TITLE	# DWG
PLC CABINET LAYOUT	65-ULT-416-IN-001

AGNICO EAGLE

REV.	DATE	DESCRIPTION	PAR/BY	APP.	CLIENT
3	2017-09-19	FOR CONSTRUCTION	E.L.	D.C.	
2	2017-08-14	UPDATE AREA & TAG NUMBER	E.L.	D.C.	
1	2017-07-05	FOR CONSTRUCTION	E.L.	D.C.	
0	2017-05-15	FOR CONSTRUCTION	E.L.	D.C.	

REVISIONS

NUQSANA PROMEC MINING
ultragen
NO. PROJET PROJECT NO. 591700

TITRE / TITLE
AGNICO EAGLE – MEADOWBANK DIVISION
416 – FUEL TANK FARM 3
FUEL DISTRIBUTION (PORTAL #1)
120Vac / 24Vdc DISTRIBUTION
MAIN PLC CABINET

DESSINÉ PAR DRAWN BY	ERIC LAROUCHE	DATE 2017-04-11
VERIFIÉ PAR CHECKED BY	DANIEL CARRIER	2017-04-11
APPROUVÉ PAR APPROVED BY	DANIEL CARRIER	2017-04-11
ÉCHELLE SCALE	NTS	DATE 2017-04-11

NO. DESSIN DRAWING NO. 65-ULT-416-IN-008

NO. PROJET PROJECT NO.	REVISION	FEUILLE / SHT
6515	3	1 / 1

AE-GART-ARCH D

P:\1 ANNEE 2017 ACTIFS\PROMEC\591700\INSTRUMENTATION\Plans et devis\Dessins\65-ULT-416-IN-008 (DISTRIBUTION).dwg

FILE NO. 65-ULT-416-IN-008 (DISTRIBUTION).dwg

NO. DESSIN DRAWING NO. 65-ULT-416-IN-011 (VFD)-416-IN-105

FORMAT ARCHD

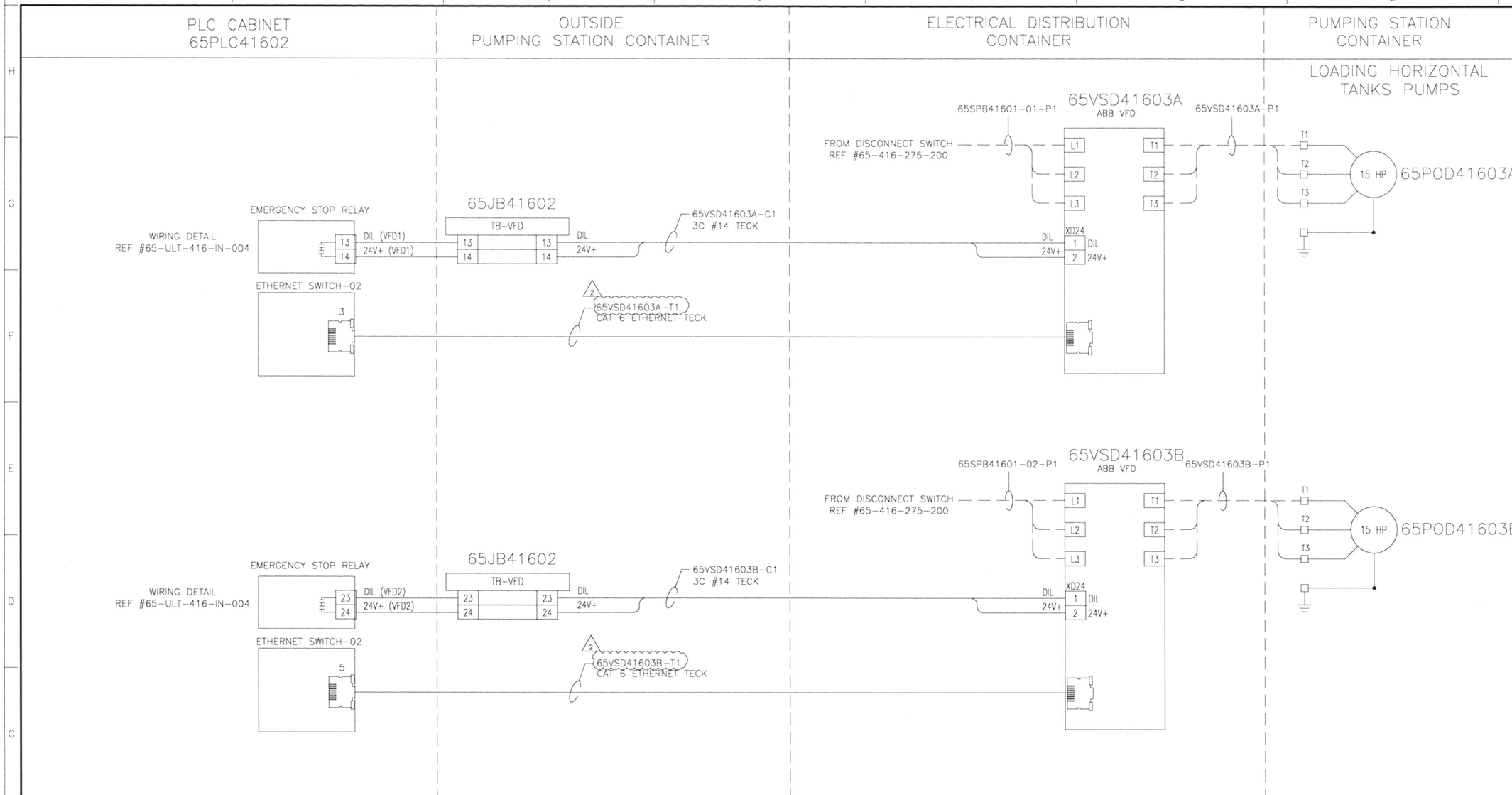

MOTOR SCHEMATIC

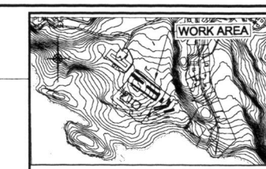

NOTES GENERALES / GENERAL NOTES

ISSUED FOR CONSTRUCTION
ultragen DATE: SEPT 2017

DESSINS EN REFERENCE / REFERENCE DRAWINGS

TITRE / TITLE	# DWG
PLC CABINET LAYOUT	65-ULT-416-IN-001

AGNICO EAGLE

REV.	DATE	DESCRIPTION	PAR/BY	APP.	CLIENT
2	2017-09-19	FOR CONSTRUCTION	E.L.	D.C.	
1	2017-08-14	UPDATE AREA & TAG NUMBER	E.L.	D.C.	
0	2017-06-30	FOR CONSTRUCTION	E.L.	D.C.	
PA	2017-06-13	FOR COMMENTS	E.L.	D.C.	

REVISIONS

NUQSANA PROMEC MINING

ultragen

NO. PROJET PROJECT NO. 591700

TITRE / TITLE
AGNICO EAGLE – MELIADINE DIVISION
416 – FUEL TANK FARM
FUEL DISTRIBUTION (PORTAL #1)
VFD SCHEMATIC WIRING DETAIL
65VSD41603A/65VSD41602

DESSINE PAR DRAWN BY	ERIC LAROUCHE	DATE 2017-06-08
VERIFIE PAR CHECKED BY	DANIEL CARRIER	2017-06-08
APPROUVE PAR APPROVED BY	DANIEL CARRIER	2017-06-08
ECHELLE SCALE	NTS	DATE 2017-06-08

NO. DESSIN DRAWING NO. 65-ULT-416-IN-011

NO. PROJET PROJECT NO.	REVISION	FEUILLE / SHT
6515	2	1 / 1

PERMIT TO PRACTICE
LE GROUPE ULTRAGEN LTÉE
Signature
Date SEP 2 6 2017
PERMIT NUMBER: P 1180
NT/NU Association of Professional Engineers and Geoscientists

REGISTERED PROFESSIONAL ENGINEER
L3627
D. CARRIER
LICENSEE
NT/NU
SEP 2 6 2017

AE-CART-ARCH D

P:\1. ANNEE 2017 ACTIFS\PROMEC\5917\00\INSTRUMENTATION\Plans et devis\Dessins\65-ULT-416-IN-011 (VFD).dwg

FILE NO. 65-ULT-416-IN-011 (VFD).dwg

NO. DESSIN DRAWING NO. 65-ULT-416-IN-012 (VFD)-416-IN-105

FORMAT ARCH D

PLC CABINET
65PLC41602

OUTSIDE
PUMPING STATION CONTAINER

ELECTRICAL DISTRIBUTION
CONTAINER

PUMPING STATION
CONTAINER

UNLOADING TRUCK PUMPS

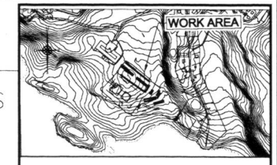

65VSD41604A
ABB VFD

65SPB41601-03-P1

65VSD41604A-P1

FROM DISCONNECT SWITCH
REF #65-416-275-200

L1 L2 L3 — T1 T2 T3

T1 T2 T3 — 15 HP — 65POD41604A

XD24
1 DIL
2 24V+

DIL
24V+

EMERGENCY STOP RELAY

WIRING DETAIL
REF #65-ULT-416-IN-004

33 DIL (VFD3)
34 24V+ (VFD3)

65JB41602
TB-VFD

33 — 33 DIL
34 — 34 24V+

65VSD41604A-C1
3C #14 TECK

ETHERNET SWITCH-02

7

2
65VSD41604A-T1
CAT 6 ETHERNET TECK

65VSD41604B
ABB VFD

65SPB41601-04-P1

65VSD41604B-P1

FROM DISCONNECT SWITCH
REF #65-416-275-200

L1 L2 L3 — T1 T2 T3

T1 T2 T3 — 15 HP — 65POD41604B

XD24
1 DIL
2 24V+

DIL
24V+

EMERGENCY STOP RELAY

WIRING DETAIL
REF #65-ULT-416-IN-004

43 DIL (VFD4)
44 24V+ (VFD4)

65JB41602
TB-VFD

43 — 43 DIL
44 — 44 24V+

65VSD41604B-C1
3C #14 TECK

ETHERNET SWITCH-02

8

2
65VSD41604B-T1
CAT 6 ETHERNET TECK

MOTOR SCHEMATIC

PERMIT TO PRACTICE
LE GROUPE ULTRAGEN LTÉE
Signature
Date SEP 2 6 2017
PERMIT NUMBER: P 1180
NT/NU Association of Professional Engineers and Geoscientists

REGISTERED PROFESSIONAL ENGINEER
L3627
D. CARRIER
LICENSEE
NT/NU
SEP 2 6 2017

NOTES GENERALES / GENERAL NOTES

ISSUED FOR CONSTRUCTION
ultragen DATE: SEPT 2017

DESSINS EN REFERENCE / REFERENCE DRAWINGS

TITRE / TITLE	# DWG
PLC CABINET LAYOUT	65-ULT-416-IN-001

AGNICO EAGLE

REV.	DATE	DESCRIPTION	PAR/BY	APP.	CLIENT
2	2017-09-19	FOR CONSTRUCTION	E.L.	D.C.	
1	2017-08-14	UPDATE AREA & TAG NUMBER	E.L.	D.C.	
0	2017-06-30	FOR CONSTRUCTION	E.L.	D.C.	
PA	2017-06-13	FOR COMMENTS	E.L.	D.C.	

REVISIONS

NUQSAHA PROJECT MINING
ultragen
NO. PROJET PROJECT NO. 591700

TITRE / TITLE
AGNICO EAGLE – MEADOWBANK DIVISION
416 – FUEL TANK FARM 2
FUEL DISTRIBUTION (PORTAL #1)
VFD SCHEMATIC WIRING DETAIL
65VSD41603/65VSD41604

DESSINE PAR DRAWN BY	ERIC LAROUCHE	DATE 2017-06-08
VERIFIE PAR CHECKED BY	DANIEL CARRIER	2017-06-08
APPROUVE PAR APPROVED BY	DANIEL CARRIER	2017-06-08
ECHELLE SCALE	NTS	DATE 2017-06-08

NO. DESSIN DRAWING NO. 65-ULT-416-IN-012

NO. PROJET PROJECT NO.	REVISION	FEUILLE / SHT
6515	2	1 / 1

AE-CART-ARCH D

P:\1. ANNEE 2017 ACTIFS\PROMEC\591700\00\INSTRUMENTATION\Plans et devis\Dessins\65-ULT-416-IN-012 (VFD).dwg

FILE NO. 65-ULT-416-IN-012 (VFD).dwg

NO. DESSIN DRAWING NO. 65-ULT-416-IN-013 (DISTRIBUTION BJ 120)

FORMAT ARCH D

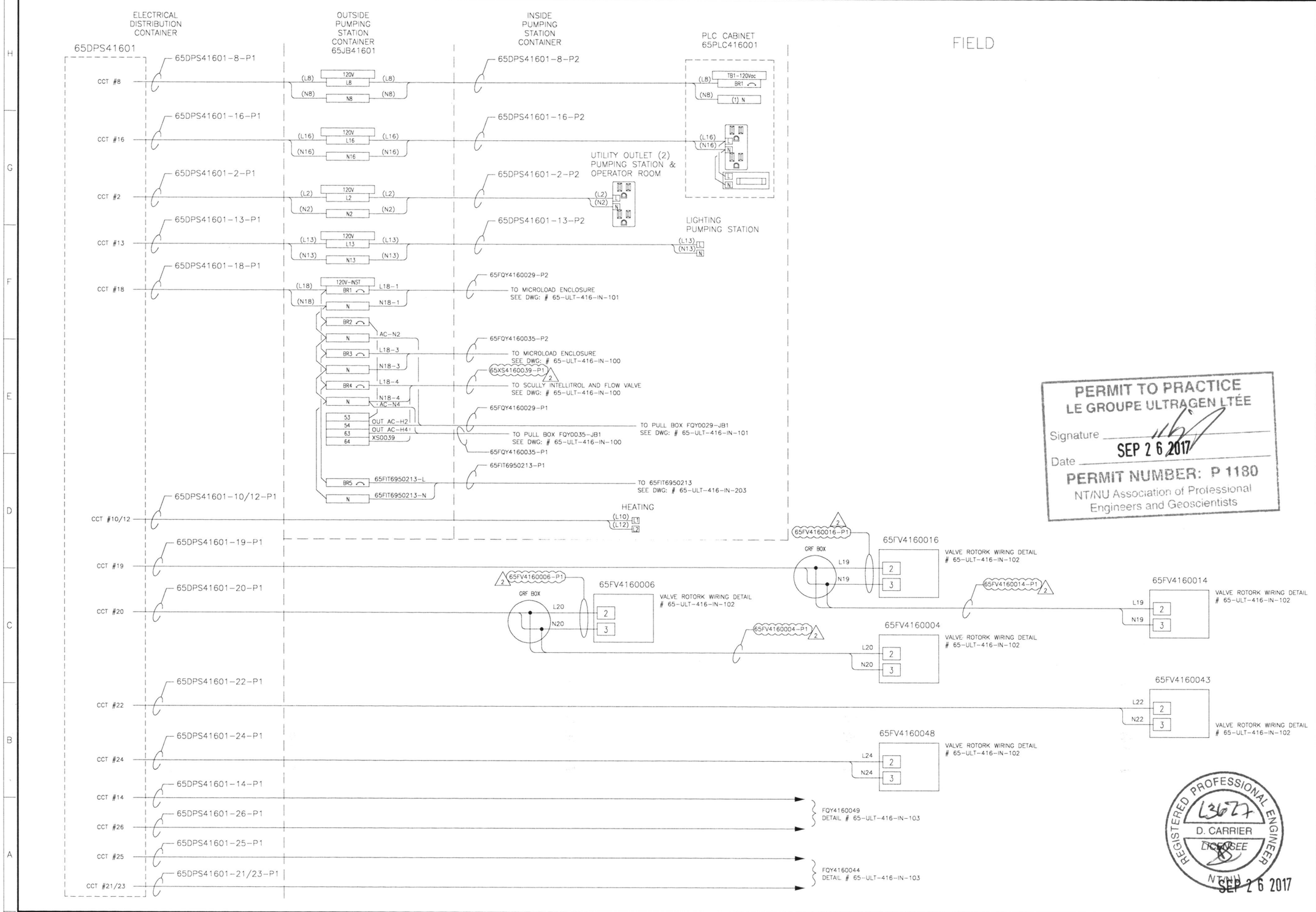

PERMIT TO PRACTICE
LE GROUPE ULTRAGEN LTÉE
Signature
Date SEP 2 6 2017
PERMIT NUMBER: P 1180
NT/NU Association of Professional Engineers and Geoscientists

REGISTERED PROFESSIONAL ENGINEER L3677 D. CARRIER LICENSEE NT/NU SEP 2 6 2017

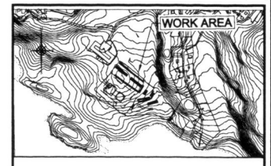

NOTES GENERALES / GENERAL NOTES

ISSUED FOR CONSTRUCTION ultragen DATE: SEPT 2017

DESSINS EN REFERENCE / REFERENCE DRAWINGS

TITRE / TITLE	# DWG
PLC CABINET LAYOUT	65-ULT-416-IN-001

AGNICO EAGLE

REV.	DATE	DESCRIPTION	PAR/BY	APP.	CLIENT
2	2017-09-19	FOR CONSTRUCTION	E.L.	D.C.	
1	2017-08-14	UPDATE AREA & TAG NUMBER	E.L.	D.C.	
0	2017-06-30	FOR CONSTRUCTION	E.L.	D.C.	
PA	2017-06-13	FOR COMMENTS	E.L.	D.C.	

REVISIONS

NUQSANA PROMEC MINING — ultragen

NO. PROJECT PROJECT NO. 591700

TITRE / TITLE
AGNICO EAGLE – MEL1ADINE DIVISION
416 – FUEL TANK FARM (2)
FUEL DISTRIBUTION (PORTAL #1)
INTERCONNECTION
65JB41601 – 120Vac DISTRIBUTION

DESSINE PAR DRAWN BY	ERIC LAROUCHE	DATE 2017-06-06
VERIFIE PAR CHECKED BY	DANIEL CARRIER	2017-06-06
APPROUVE PAR APPROVED BY	DANIEL CARRIER	2017-06-06
ECHELLE SCALE	NTS	DATE 2017-06-06
NO. DESSIN DRAWING NO.	65-ULT-416-IN-013	
NO. PROJET PROJECT NO.	6515	REVISION 2
FEUILLE / SHT	1 / 1	

AC-CART-ARCH D

P:\1. ANNÉE 2017 ACT#S\PROMEC\5917\00\INSTRUMENTATION\Plans et devis\Dessins\65-ULT-416-IN-013 (DISTRIBUTION BJ 120).dwg

FILE NO. 65-ULT-416-IN-013 (DISTRIBUTION BJ 120).dwg

NO. DESSIN / DRAWING NO. 65-ULT-416-IN-100-416-IN-105

ABB7S21 — FORMAT ARCH D

PUMPING STATION

OPERATOR ROOM

TRUCK AREA

65FQY4160035-C2
4PR #18
→ TO PLC CABINET 65PLC416001
SEE DWG # 65-ULT-416-IN-200

MICROLOAD ENCLOSURE (MACF BOARD)
VOLTAGE SELECTOR SW.
SET AT 115V
TB1 L 18-3 / N N18-3 / G
65FQY4160035-P2
3c #14

65JB41601 SEE DWG #65-ULT-416-IN-007
L18-3 — 120V-INST — BR3 — L18
N18-3 — N — N18
L18-4 — BR4
AC-N4
N18-4 — N
OUT AC-H4 — XS0039 63/64 — OUT AC-H4 XS0039
FROM PANEL 65DPS41601
CIRC #18
SEE DWG:
65-ULT-416-EL-012
65HSS4160039-C1
6c #14
65PLC416001 63 / 64 E-STOP
SEE DWG:
65-ULT-416-IN-004
65XS4160039-P1
8c #14

65TE4160035-C1
2PR #18
TE 0035: RED TE0035-R+ / RED TE0035-S+ / BLK TE0035-S- / BLK TE0035-R-

PULL BOX
(DC SIGNAL)
FQY0035-JB2

65FT4160035-C1
2PR #18
FT 0035: GND COM / VIN +12VDC / ChA FT0035-A+ / ChB FT0035-B+

MICROLOAD ENCLOSURE COVER (MNET BOARD)
CN3: 1 RTD+ TE0035-R+ / 2 SIG+ TE0035-S+ / 3 SIG- TE0035-S- / 4 RTD- TE0035-R- / 5 SH
FQY 0035
CN8 RJ45
65FQY4160035-T1
CAT 6
→ TO PLC CABINET 65PLC416001
SEE DWG # 65-ULT-416-IN-004

CN4:
(2) XS0035A — 1 IN (DC) #1+ / 2 COM IN (DC) #1- } R. START
(3) XS0035B — 3 IN (DC) #2+ / 4 IN (DC) #2- } R. STOP
5 IN (DC) #3+ / 6 IN (DC) #3-
7 PULSE OUT + / 8 PULSE OUT -
WARNING:
TERMINAL BLOCKS ON THE MICROLOAD BOARD ARE DISCONNECTABLE BUT THEY ARE NOT KEYED.

CN7:
OUT (AC) #3 6 FY0035A
OUT (AC) #4 5 FY0035B
OUT (AC) #5 4
OUT (AC) #6 3
N.C. 2
OUT AC HOT 1 OUT AC-H4

CN5: 1 PULSE A+ / 2 PULSE A- / 3 / 4 / 5 PULSE SH / 6 PULSE B+ / 7 PULSE B- / 8 / 9 / 10 OUT DC #1+ / 11 OUT DC #1- / 12 OUT DC #2+ / 13 OUT DC #2- / 14 COM
CN6: 1 / 2 +12 VDC / 3 COM / 4 / 5
FT0035-A+ / FT0035-B+
2c / 1
(1) FQY0035-12V
+12VDC
COM

SCULLY ST-47
C — N18-4 — L18-4 — XS0039
TB1 N L
XS 0039
TB2 1 2 3
65XS4160039-C2
2c #14 IN SEALED CONDUIT

SC-47CC/CLMP
TB1
PLUG 1 1 / PLUG 2 2 / PLUG 3 3 / PLUG 4 4 / PLUG 5 5 / PLUG 6 6 / PLUG 7 7 / PLUG 8 8
BLK — PLUG 9 9 — BLK
WHT — PLUG 10 10 — WHT
PLUG 11 11 / PLUG 12 12
560 Ω 1/4 W
65XS4160039-C3
FLEXIBLE CABLE
INCLUDED WITH SCULCON
TRUCK CLAMP

ORF BOX
FY0035A: S L AC-N4 / N
FY0035B: S L AC-N4 / N
FY 0035A UPSTREAM — FO
FY 0035B DOWNSTREAM — FC
FCV 0035 — FC
65FCV4160035-C1
3c #14

PULL BOX (120 Vac)
FQY0035-JB1
FY0035A
FY0035B
AC-N4
OUT AC-H4

65PLC416001
CR-XS0039 (120Vac)
65XS4160039-C1
3c #14
OUT AC-H4 A1
AC-N4 A2
SCULLY OK TO PLC INPUT
SEE DWG.
65-ULT-416-IN-201

65FQY4160035-P1
3c #14

PERMIT TO PRACTICE
LE GROUPE ULTRAGEN LTÉE
Signature
Date SEP 2 6 2017
PERMIT NUMBER: P 1180
NT/NU Association of Professional Engineers and Geoscientists

REGISTERED PROFESSIONAL ENGINEER — 13677 — D. CARRIER — LICENSEE — NT/NU
SEP 2 6 2017

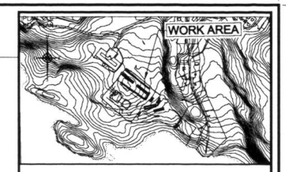

NOTES GENERALES / GENERAL NOTES

NOTES:

1. ALL AC WIRING MUST BE ROUTED INTO MICROLOAD THROUGH THE KNOCK OUT ENTRIES (2) LOCATED ON BOTH SIDE OF THE HOUSING.
2. ALL ETHERNET AND DC WIRING MUST BE ROUTED INTO MICROLOAD THROUGH THE KNOCKOUT ENTRIES (2) LOCATED IN THE BOTTOM OF THE HOUSING.

ISSUED FOR CONSTRUCTION
ultragen DATE: SEPT 2017

DESSINS EN REFERENCE / REFERENCE DRAWINGS

TITRE / TITLE	# DWG
PLC CABINET LAYOUT	65-ULT-416-IN-001

AGNICO EAGLE

REV.	DATE	DESCRIPTION	PAR/BY	APP.	CLIENT
2	2017-09-19	FOR CONSTRUCTION	E.L.	D.C.	
1	2017-08-14	UPDATE AREA & TAG NUMBER	E.L.	D.C.	
0	2017-06-30	FOR CONSTRUCTION	E.L.	D.C.	
PA	2017-06-13	FOR COMMENTS	E.L.	D.C.	

REVISIONS

NUQSANA PROJECT MINING — ultragen

NO. PROJET / PROJECT NO. 591700

TITRE / TITLE
AGNICO EAGLE – MEL1ADINE DIVISION
416 – FUEL TANK FARM 2
FUEL DISTRIBUTION (PORTAL #1)
UNLOADING TRUCK
MICROLOAD INTERCONNECTION
65FQY4160035

DESSINE PAR / DRAWN BY	ERIC LAROUCHE	DATE 2017-06-08
VERIFIE PAR / CHECKED BY	DANIEL CARRIER	2017-06-08
APPROUVE PAR / APPROVED BY	DANIEL CARRIER	2017-06-08
ECHELLE / SCALE	NTS	DATE 2017-06-08

NO. DESSIN / DRAWING NO. 65-ULT-416-IN-100

NO. PROJET / PROJECT NO.	REVISION	FEUILLE / SHT
6515	2	1 / 1

AE-GART-ARCH D

P:\1. ANNEE 2017 ACTIFS\PROMEC\591700\INSTRUMENTATION\Plans et devis\Dessins\65-ULT-416-IN-100.dwg

FILE NO. 65-ULT-416-IN-100.dwg

NO. DESSIN DRAWING NO. 65-ULT-416-IN--101 (SMITH)-416-IN-105

FORMAT ARCHD

ABRZS21

PUMPING STATION

OPERATOR ROOM

TRUCK AREA

65FQY4160029-C2
4PR #18
→ TO PLC CABINET 65PLC416001
SEE DWG # 65-ULT-416-IN-200

MICROLOAD ENCLOSURE (MACF BOARD)
VOLTAGE SELECTOR SW.
SET AT 115V
TB1 L L18-1 N N18-1 G
65FQY4160029-P2
3c #14

65JB41601 SEE DWG #65-ULT-416-IN-007
L18-1 — 120V-INST — BR1 — L18
N18-1 — N — N18
BR2
AC-N2 — N
OUT AC-H2 — 53 — L18-2 — OUT AC-H2
54
→ FROM PANEL 65DPS416001
CIRC #18
SEE DWG:
65-ULT-416-EL-012

65HSS4160039-C1
6c #14
65PLC416001
53 E-STOP
54
SEE DWG:
65-ULT-416-IN-004

2 65TE4160029-C1
2PR #18
TE 0029: RED TE0029-R+ / RED TE0029-S+ / BLK TE0029-S- / BLK TE0029-R-

2 65FT4160029-C1
2PR #18
FT 0029: GND COM / VIN +12VDC / ChA FT0029-A+ / ChB FT0029-B+

PULL BOX
(DC SIGNAL)
FQY0029-JB2

MICROLOAD ENCLOSURE COVER (MNET BOARD)
FQY 0029
CN3: 1 RTD+ / 2 SIG+ / 3 SIG- / 4 RTD- / 5 SH
TE0029-R+ / TE0029-S+ / TE0029-S- / TE0029-R-
2 65FQY4160029-T1
CAT. 5
CN8 RJ45
→ TO PLC CABINET 65PLC416001
SEE DWG # 65-ULT-416-IN-004

CN4:
(2) XS0029A
(3) XS0029B
1 IN (DC) #1+ } R. START
2 IN (DC) #1- }
3 IN (DC) #2+ } R. STOP
4 IN (DC) #2- }
5 IN (DC) #3+
6 IN (DC) #3-
7 PULSE OUT +
8 PULSE OUT -
COM

WARNING:
TERMINAL BLOCKS ON THE MICROLOAD BOARD ARE DISCONNECTABLE BUT THEY ARE NOT KEYED.

CN7:
OUT (AC) #3 6 FY0029A
OUT (AC) #4 5 FY0029B
OUT (AC) #5 4
OUT (AC) #6 3
N.C. 2
OUT AC HOT 1 OUT AC-H2

CN5: 1 PULSE A+ / 2 PULSE A- / 3 4 / 5 PULSE SH / 6 PULSE B+ / 7 PULSE B- / 8 9 10
CN6: 11 OUT DC SH / 12 OUT DC #1+ / 13 OUT DC #1- / 14 OUT DC #2+ / 15 OUT DC #2- / 1 2 3 +12 VDC / 4 COM / 5
COM
FY0029-A+
FY0029-B+
2c
(1) FQY0029-12V
+12Vdc
COM

GRF BOX
FY0029A — S L N — AC-N2
FY0029B — S L N — AC-N2
FY 0029A UPSTREAM — FO
FY 0029B DOWNSTREAM — FC
FCV 0029 — FC
2 (65FCV4160029-C1) 3c #14

PULL BOX (120 Vac)
FQY0029-JB1
FY0029A
FY0029B
OUT AC-H2
AC-N2

65FQY4160029-P1
3c #14

PERMIT TO PRACTICE
LE GROUPE ULTRAGEN LTÉE
Signature
Date SEP 2 6 2017
PERMIT NUMBER: P 1180
NT/NU Association of Professional Engineers and Geoscientists

REGISTERED PROFESSIONAL ENGINEER
L3627
D. CARRIER
LICENSEE
NT/NU
SEP 2 6 2017

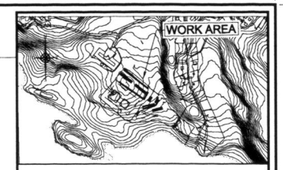

NOTES GENERALES / GENERAL NOTES

NOTES:

1. ALL AC WIRING MUST BE ROUTED INTO MICROLOAD THROUGH THE KNOCK OUT ENTRIES (2) LOCATED ON BOTH SIDE OF THE HOUSING.
2. ALL ETHERNET AND DC WIRING MUST BE ROUTED INTO MICROLOAD THROUGH THE KNOCKOUT ENTRIES (2) LOCATED IN THE BOTTOM OF THE HOUSING.

ISSUED FOR CONSTRUCTION
Ultragen DATE: SEPT 2017

DESSINS EN REFERENCE / REFERENCE DRAWINGS

TITRE / TITLE	# DWG
PLC CABINET LAYOUT	65-ULT-416-IN-001

AGNICO EAGLE

REV.	DATE	DESCRIPTION	PAR/BY	APP.	CLIENT
2	2017-09-19	FOR CONSTRUCTION	E.L.	D.C.	
1	2017-08-14	UPDATE AREA & TAG NUMBER	E.L.	D.C.	
0	2017-06-30	FOR CONSTRUCTION	E.L.	D.C.	
PA	2017-06-13	FOR COMMENTS	E.L.	D.C.	

REVISIONS

NUOSANA PROMEC MINING — Ultragen

NO. PROJET PROJECT NO. 591700

TITRE / TITLE
AGNICO EAGLE — MEL1ADINE DIVISION
416- (FUEL TANK FARM) 2
FUEL DISTRIBUTION (PORTAL #1)
LOADING HORIZONTAL TANKS
MICROLOAD INTERCONNECTION
65FQY4160029

DESSINE PAR DRAWN BY	ERIC LAROUCHE	DATE 2017-06-06
VERIFIE PAR CHECKED BY	DANIEL CARRIER	2017-06-06
APPROUVE PAR APPROVED BY	DANIEL CARRIER	2017-06-06
ECHELLE SCALE	NTS	DATE 2017-06-06
NO. DESSIN DRAWING NO.	65-ULT-416-IN-101	
NO. PROJET PROJECT NO.	6515	REVISION 2 — FEUILLE / SHT 1 / 1

AE-CART-ARCH D

P:\1- ANNÉE 2017 ACTIFS\PROMEC\5917\00\INSTRUMENTATION\Plans et devis\Dessins\65-ULT-416-IN-101 (SMITH).dwg

FILE NO. 65-ULT-416-IN-101 (SMITH).dwg

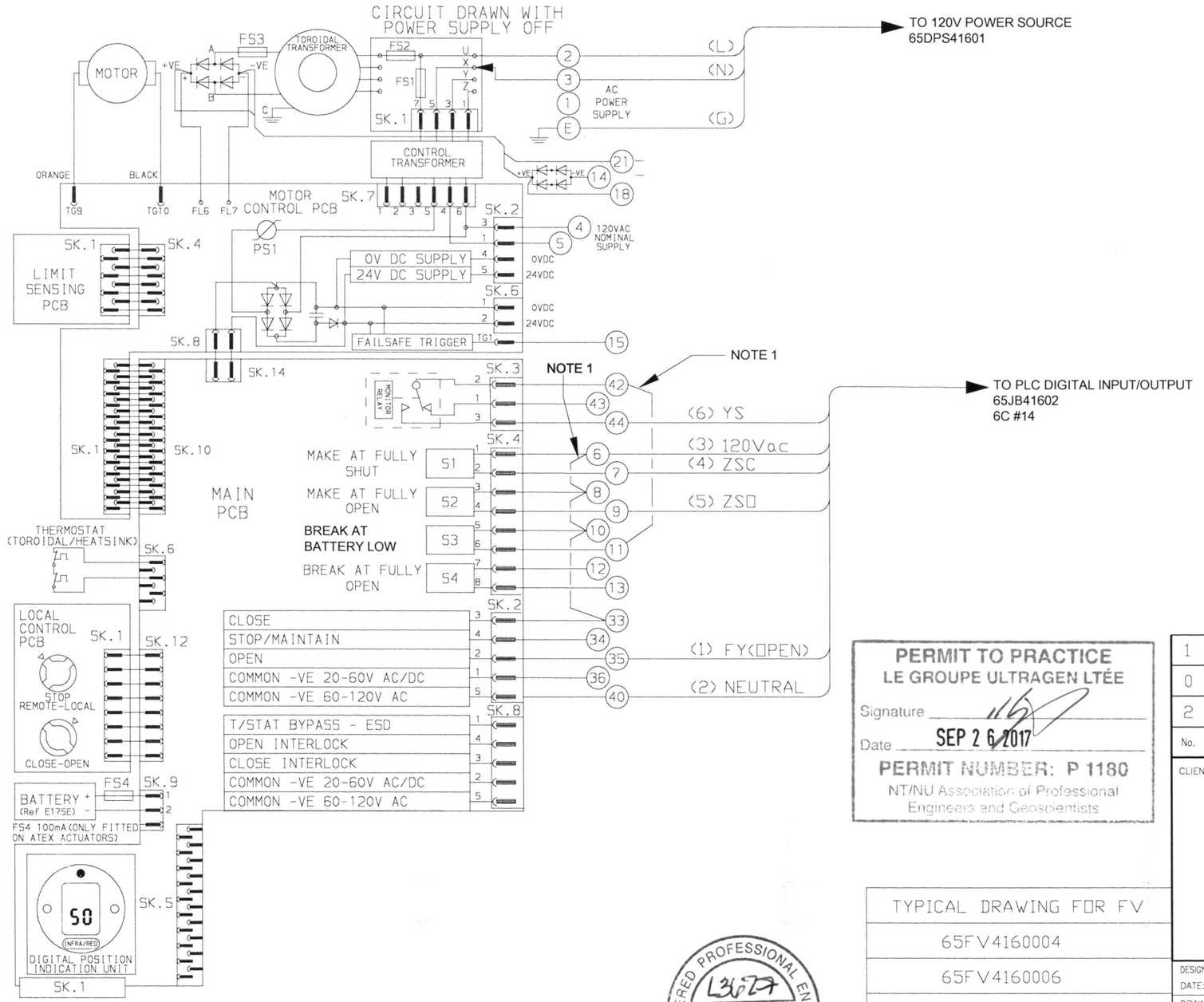

NOTE :

1. CONTRACTOR MUST INSTALL JUMPERS WIRE ON VALVE TERMINAL BLOCK

2. RELAY MONITOR SWITCH AND S3 SWITCH ARE CONNECTED IN SERIAL. THESE SWITCHES MUST BE PROGRAMMED IN FAIL SAFE MODE (CLOSED CONTACT IN NORMAL OPERATION)

3. S3 SWITCH MUST BE PROGRAMMED FOR BATTERY LOW MONITORING

4. VALVE TO BE CONFIGURED IN TWO WIRES CONTROL MODE, ENERGIZE TO OPEN, DE-ENERGIZE TO CLOSE (CONFIGURE FOR OPEN PRIORITY)

ISSUED FOR CONSTRUCTION
ultragen DATE: SEPT 2017

PERMIT TO PRACTICE
LE GROUPE ULTRAGEN LTÉE
Signature
Date SEP 2 6 2017
PERMIT NUMBER: P 1180
NT/NU Association of Professional Engineers and Geoscientists

REGISTERED PROFESSIONAL ENGINEER
L3627
D. CARRIER
LICENSEE
NT/NU
SEP 2 6 2017

TYPICAL DRAWING FOR FV
65FV4160004
65FV4160006
65FV4160014
65FV4160016
65FV4160043
65FV4160048

No.	DATE	REVISION	BY / APP.
1	2017-08-14	UPDATE AREA & TAG NUMBER	EL / DC
0	2017-06-30	ISSUED FOR CONSTRUCTION	EL / DC
2	2017-09-19	FOR CONSTRUCTION	EL / DC

CLIENT: AGNICO EAGLE

NUQSANA PROMEC MINING SERVICES INC.

ultragen Our expertise...Your success

CONSULTANT PROJECT NO. 591700

DESIGNED BY: E. LAROUCHE
DATE: 2017-06-08
DRAWN BY: R. SHRESTHA
DATE: 2017-06-08
CHECKED BY: D. CARRIER
DATE: 2017-06-08
APPROVED BY:
DATE:
SCALE: NTS

PROJECT: AGNICO EAGLE – MELIADINE DIVISION
416 – FUEL TANK FARM 2

TITLE: ROTORK MOTORIZED VALVE WIRING DIAGRAM TYPICAL DRAWING FOR 65FV416XXXX

PROJECT No.	DRAWING NO.	REV.
6515	65-ULT-416-IN-102	2

NO. DESSIN / DRAWING NO. 65-103-245-201

FORMAT ARCHD

RDR McLaren gasboy light & heavy vehicles typical wiring diagram

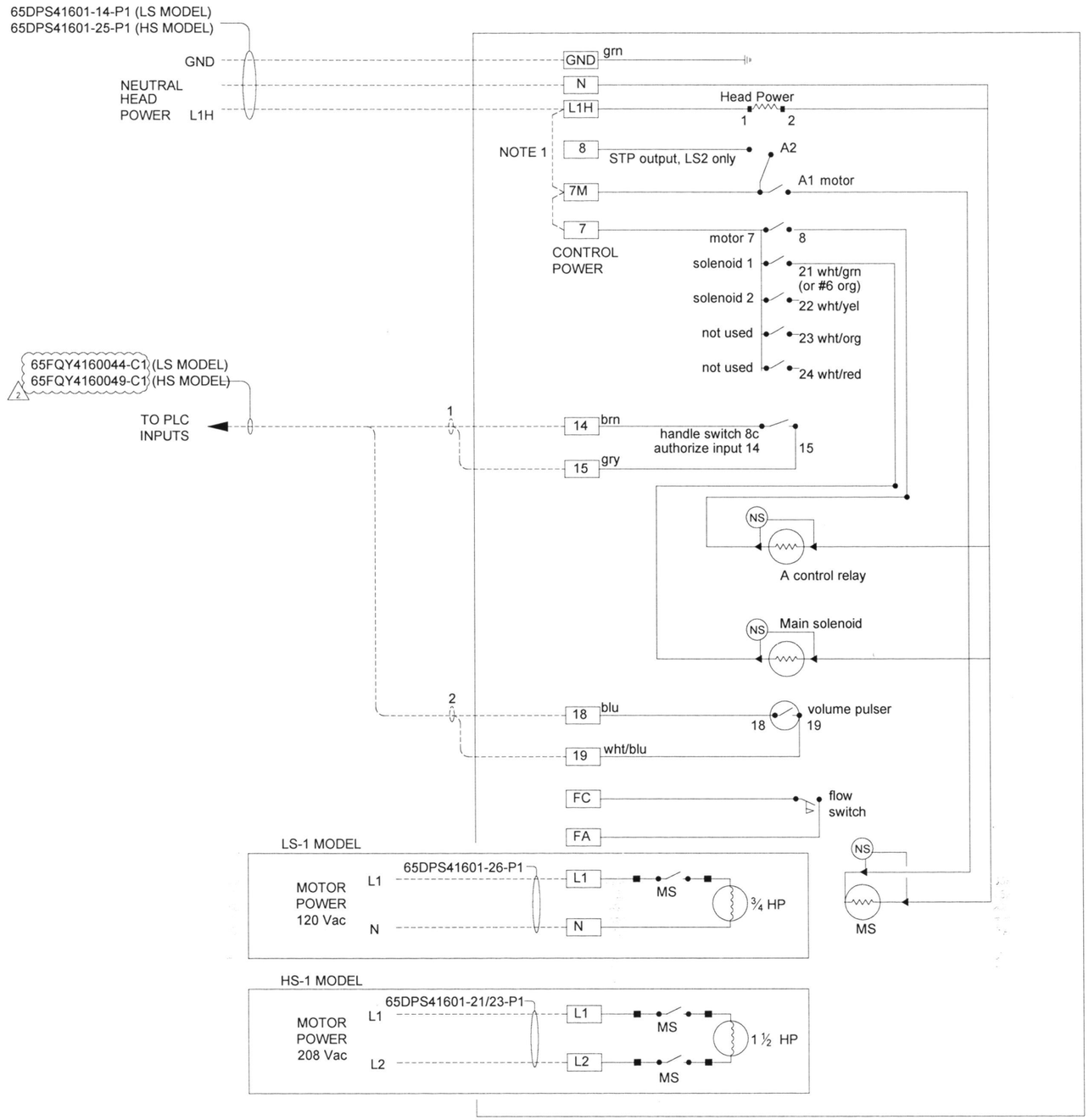

PLAN CLE
KEY PLAN

NOTES GENERALES / GENERAL NOTES

1. JUMPERS TO BE DONE BY THE CONTRACTOR

ISSUED FOR CONSTRUCTION
Ultragaz DATE: SEPT 2017

DESSINS EN REFERENCE / REFERENCE DRAWINGS

TITRE / TITLE	# DWG

PERMIT TO PRACTICE
LE GROUPE ULTRAGEN LTÉE
Signature
Date SEP 26 2017
PERMIT NUMBER: P 1180
NT/NU Association of Professional Engineers and Geoscientists

65FQY4160044-C1 (LS MODEL)
65FQY4160049-C1 (HS MODEL)

TAG NAME	MODEL
65FQY4160044	RDR-HS
65FQY4160049	RDR-LS

LEGEND:

——— INTERNAL WIRING

------ EXTERNAL WIRING BY CONTRACTOR

REGISTERED PROFESSIONAL ENGINEER
13677
D. CARRIER
LICENSEE
NT/NU
SEP 26 2017

AGNICO EAGLE

REV	DATE	DESCRIPTION	PAR/BY	APP.	CLIENT
2	2017-09-19	FOR CONSTRUCTION	E.L.	D.C.	
1	2017-08-14	UPDATE AREA & TAG NUMBER	E.L.	D.C.	
0	2017-06-30	ISSUED FOR CONSTRUCTION	E.L.	D.C.	
PA	2017-06-13	ISSUED FOR COMMENTS	EL	DC	

REVISIONS

TITRE / TITLE
AGNICO EAGLE – MEADOWBANK DIVISION
416-FUEL TANK FARM
FUEL DISTRIBUTION (PORTAL #1)
TYPICAL
McLAREN RDR LS-1 & HS-1
WIRING DIAGRAM

DESSINÉ PAR / DRAWN BY	R. SHRESTHA	DATE 2017-06-08
VERIFIÉ PAR / CHECKED BY	D. CARRIER	2017-06-08
APPROUVÉ PAR / APPROVED BY	D. CARRIER	2017-06-08
ÉCHELLE / SCALE	NTS	DATE 2017-06-08

NO. DESSIN / DRAWING NO. 65-ULT-416-IN-103

NO. PROJET / PROJECT NO.	REVISION	FEUILLE / SHT
591700	2	1 / 1

AE-CART-ARCH D

P:\1. ANNÉE 2017 ACTIFS\PROMEC\591700\00\INSTRUMENTATION\Plans et devis\Dessins\65-ULT-416-IN-103 (Pump pulse).dwg

FILE NO. 65-ULT-416-IN-103 (Pump pulse).dwg

NO. DESSIN
DRAWING NO. 65-ULT-416-IN-200 (DO CARD)

FORMAT ARCH D

BMXDDO3202K
DIGITAL OUTPUT MODULE
SLOT 3

OUTPUT	DESCRIPTION
0	YL4160003 Strobe light - 65TNK41607
1	YL4160013 Strobe light - 65TNK41608
2	YL4160042 Strobe light - Heavy Vehicule Tank
3	YL4160047 Strobe light - Light Vehicule Tank
4	YB4160003 Common horn - area 416
5	FY4160006 FY - Loading 65TNK41607
6	FY4160004 FY - Unloading 65TNK41607
7	FY4160016 FY - Loading 65TNK41608
8	FY4160014 FY - Unloading 65TNK41608
9	FY4160043 FY - Loading Heavy Vehicule Tank
10	FY4160048 FY - Loading Light Vehicule Tank
11	YS4160029A PLC set Remote start for Microload to run
12	YS4160029B PLC set Remote stop for Microload to stop
13	YS4160035A PLC set Remote start for Microload to run
14	YS4160035B PLC set Remote stop for Microload to stop
15	SPARE -
16	YA4160050A Tank Overfill Alarm to fire alarm panel
17	YA4160050B Emergency Stop activated to fire alarm panel
18	YA4160050C Temperature Alarm to fire alarm panel
19	YA4160050D Pumps and Valves Malfunction Alarm to fire alarm panel
20	SPARE -
21	SPARE -
22	SPARE -
23	SPARE -
24	SPARE -
25	SPARE -
26	SPARE -
27	SPARE -
28	SPARE -
29	SPARE -
30	SPARE -
31	SPARE -

120Vac REF:65-ULT-416-IN-008
H4 N

FTA-1
ABE7R16T210

OUT 0 (+)	200	DO-1-100
OUT 0 (-)	100	
OUT 1 (+)	201	DO-1-101
OUT 1 (-)	101	
OUT 2 (+)	202	DO-1-102
OUT 2 (-)	102	
OUT 3 (+)	203	DO-1-103
OUT 3 (-)	103	
OUT 4 (+)	204	DO-1-104
OUT 4 (-)	104	
OUT 5 (+)	205	DO-1-105
OUT 5 (-)	105	
OUT 6 (+)	206	DO-1-106
OUT 6 (-)	106	
OUT 7 (+)	207	DO-1-107
OUT 7 (-)	107	
OUT 8 (+)	208	DO-1-108
OUT 8 (-)	108	
OUT 9 (+)	209	DO-1-109
OUT 9 (-)	109	
OUT 10 (+)	210	DO-1-110
OUT 10 (-)	110	
OUT 11 (+)	211	DO-1-111
OUT 11 (-)	111	
OUT 12 (+)	212	DO-1-112
OUT 12 (-)	112	
OUT 13 (+)	213	DO-1-113
OUT 13 (-)	113	
OUT 14 (+)	214	DO-1-114
OUT 14 (-)	114	
OUT 15 (+)	215	
OUT 15 (-)	115	

V2+ 24V
0V 0V
24Vdc REF:65-ULT-416-IN-008

FTA-2
ABE7R16T210

OUT 16 (+)	200	DO-2-200
OUT 16 (-)	100	DO-2-100
OUT 17 (+)	201	DO-2-201
OUT 17 (-)	101	DO-2-101
OUT 18 (+)	202	DO-2-202
OUT 18 (-)	102	DO-2-102
OUT 19 (+)	203	DO-2-203
OUT 19 (-)	103	DO-2-103
OUT 20 (+)	204	
OUT 20 (-)	104	
OUT 21 (+)	205	
OUT 21 (-)	105	
OUT 22 (+)	206	
OUT 22 (-)	106	
OUT 23 (+)	207	
OUT 23 (-)	107	
OUT 24 (+)	208	
OUT 24 (-)	108	
OUT 25 (+)	209	
OUT 25 (-)	109	
OUT 26 (+)	210	
OUT 26 (-)	110	
OUT 27 (+)	211	
OUT 27 (-)	111	
OUT 28 (+)	212	
OUT 28 (-)	112	
OUT 29 (+)	213	
OUT 29 (-)	113	
OUT 30 (+)	214	
OUT 30 (-)	114	
OUT 31 (+)	215	
OUT 31 (-)	115	

V2+ 24V
0V 0V
24Vdc REF:65-ULT-416-IN-008

PLC CABINET 65PLC416001

65-JB-416-02
TB-DO

1-100	N	YL0003	65YL4160003-C1 → YL 0003
N	B	YL0003-N	
1-101	N	YL0013	65YL4160013-C1 → YL 0013
N	B	YL0013-N	
1-102	N	YL0042	65YL4160042-C1 → YL 0042
N	B	YL0042-N	
1-103	N	YL0047	65YL4160047-C1 → YL 0047
N	B	YL0047-N	
1-104	N	YB0003	65YB4160003-C1 → YB 0003
N	B	YB0003-N	
1-105	(1)	FY0006	PART OF 65FV4160006-C1 → FV 0006 NOTE 1
N	(2)	FY0006-N	
1-106	(1)	FY0004	PART OF 65FV4160004-C1 → FV 0004 NOTE 1
N	(2)	FY0004-N	
1-107	(1)	FY0016	PART OF 65FV4160016-C1 → FV 0016 NOTE 1
N	(2)	FY0016-N	
1-108	(1)	FY0014	PART OF 65FV4160014-C1 → FV 0014 NOTE 1
N	(2)	FY0014-N	
1-109	(1)	FY0043	PART OF 65FV4160043-C1 → FV 0043 NOTE 1
N	(2)	FY0043-N	
1-110	(1)	FY0048	PART OF 65FV4160048-C1 → FV 0048 NOTE 1
N	(2)	FY0048-N	

YS-0029A (120Vac) A1 A2 11 14 (1) 12VDC (2) XS0029A
YS-0029B (120Vac) A1 A2 11 14 (3) XS0029B
PART OF 65FQY4160029-C2 → (1) 3 CN6, (2) 1 CN4, (3) 3 CN4 → FQY 0029 PUMPING ROOM AREA

YS-0035A (120Vac) A1 A2 11 14 (1) 12VDC (2) XS0035A
YS-0035B (120Vac) A1 A2 11 14 (3) XS0035B
PART OF 65FQY4160035-C2 → (1) 3 CN6, (2) 1 CN4, (3) 3 CN4 → FQY 0035 PUMPING ROOM AREA

65-JB-416-02
TB-FIRE

2-200	(1)	YA0050A-C
2-100	(2)	YA0050A-NO
2-201	(3)	YA0050B-C
2-101	(4)	YA0050B-NO
2-202	(5)	YA0050C-C
2-102	(6)	YA0050C-NO
2-203	(7)	YA0050D-C
2-103	(8)	YA0050D-NO

65YA4160050-C1 → ELECTRICAL CONTAINER FIRE ALARM PANEL

(1) (2) (3) (4) (5) (6) (7) (8) SENSING VOLTAGE SIGNAL IN
YA 0050 A/B/C/D
TO BE DEFINED BY AGNICO-EAGLE

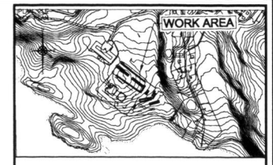

NOTES GENERALES / GENERAL NOTES

NOTE 1 : CONTRACTOR MUST INSTALL JUMPERS WIRE ON VALVE TERMINAL BLOCK
REF : 65-ULT-416-IN-102

ISSUED FOR CONSTRUCTION
ultragen DATE: SEPT 2017

DESSINS EN REFERENCE / REFERENCE DRAWINGS

TITRE / TITLE	# DWG
PLC CABINET LAYOUT	65-ULT-416-IN-001

AGNICO EAGLE

REV.	DATE	DESCRIPTION	PAR/BY	APP.	CLIENT
2	2017-09-19	FOR CONSTRUCTION	E.L.	D.C.	
1	2017-08-14	UPDATE AREA & TAG NUMBER	E.L.	D.C.	
0	2017-06-30	FOR CONSTRUCTION	E.L.	D.C.	
PA	2017-06-13	FOR COMMENTS	E.L.	D.C.	

REVISIONS

NUQSANA PROMEC MINING
ultragen
NO. PROJET PROJECT NO. 591700

TITRE / TITLE
AGNICO EAGLE – MEADOWBANK DIVISION
416 – FUEL TANK FARM 2
FUEL DISTRIBUTION (PORTAL #1)
CARD WIRING INTERCONNECTION
DIGITAL OUTPUT
SLOT 3

DESSINE PAR DRAWN BY	ERIC LAROUCHE	DATE 2017-04-11
VERIFIE PAR CHECKED BY	DANIEL CARRIER	2017-04-11
APPROUVE PAR APPROVED BY	DANIEL CARRIER	2017-04-11
ECHELLE SCALE	NTS	DATE 2017-04-11

NO. DESSIN DRAWING NO. 65-ULT-416-IN-200

NO. PROJET PROJECT NO.	REVISION	FEUILLE / SHT
6515	2	1 / 1

PERMIT TO PRACTICE
LE GROUPE ULTRAGEN LTÉE
Signature
Date SEP 2 6 2017
PERMIT NUMBER: P 1180
NT/NU Association of Professional Engineers and Geoscientists

REGISTERED PROFESSIONAL ENGINEER 13627 D. CARRIER LICENSEE NT/NU
SEP 2 6 2017

AE-CART-ARCH D

P:\1. ANNEE 2017 ACTIFS\PROMEC\5917\00\INSTRUMENTATION\Plans et devis\Dessins\65-ULT-416-IN-200 (DO CARD).dwg

FILE NO. 65-ULT-416-IN-200 (DO CARD).dwg

NO. DESSIN DRAWING NO. 65-ULT-416-IN-201 (DI CARD)

FORMAT ARCHD

BMXDDI6402K
DIGITAL INPUT MODULE
SLOT 2

INPUT	DESCRIPTION
0	HSS4160050 E-stop depressed: truck area or pumping station or PLC cabinet
1	ZSC4160006 FV close position – Loading 65TNK41607
2	ZSO4160006 FV open position – Loading 65TNK41607
3	YS4160006 FV failure – Loading 65TNK41607
4	ZSC4160004 FV close position – Unloading 65TNK41607
5	ZSO4160004 FV open position – Unloading 65TNK41607
6	YS4160004 FV failure – Unloading 65TNK41607
7	ZSC4160016 FV close position – Loading 65TNK41608
8	ZSO4160016 FV open position – Loading 65TNK41608
9	YS4160016 FV failure – Loading 65TNK41608
10	ZSC4160014 FV close position – Unloading 65TNK41608
11	ZSO4160014 FV open position – Unloading 65TNK41608
12	YS4160014 FV failure – Unloading 65TNK41608
13	ZSC4160043 FV close position – Loading Heavy Vehicule Tank
14	ZSO4160043 FV open position – Loading Heavy Vehicule Tank
15	YS4160043 FV failure – Loading Heavy Vehicule Tank
16	ZSC4160048 FV close position – Loading Light Vehicule Tank
17	ZSO4160048 FV open position – Loading Light Vehicule Tank
18	YS4160048 FV failure – Loading Light Vehicule Tank
19	XS4160039 Scully – Truck Ground proving
20	LSHH4160042 Level – Heavy vehicule Tank
21	LSH4160042 Level – Heavy vehicule Tank
22	LSL4160042 Level – Heavy vehicule Tank
23	LSLL4160042 Level – Heavy vehicule Tank
24	LSHH4160047 Level – Light vehicule Tank
25	LSH4160047 Level – Light vehicule Tank
26	LSL4160047 Level – Light vehicule Tank
27	LSLL4160047 Level – Light vehicule Tank
28	SPARE -
29	SPARE -
30	SPARE -
31	SPARE -

INPUT #32 TO 63
REF:65-ULT-416-IN-202

FTA-1
ABE7S16E2F0

IN 0 (+)	200	DI-1-200	81 E-STOP RELAY
IN 0 (-)	100	DI-1-100	82 65-ULT-416-IN-004
IN 1 (+)	201	DI-1-201	
IN 1 (-)	101	DI-1-101	
IN 2 (+)	202		
IN 2 (-)	102	DI-1-102	
IN 3 (+)	203		
IN 3 (-)	103	DI-1-103	
IN 4 (+)	204	DI-1-204	
IN 4 (-)	104	DI-1-104	
IN 5 (+)	205		
IN 5 (-)	105	DI-1-105	
IN 6 (+)	206		
IN 6 (-)	106	DI-1-106	
IN 7 (+)	207	DI-1-207	
IN 7 (-)	107	DI-1-107	
IN 8 (+)	208		
IN 8 (-)	108	DI-1-108	
IN 9 (+)	209		
IN 9 (-)	109	DI-1-109	
IN 10 (+)	210	DI-1-210	
IN 10 (-)	110	DI-1-110	
IN 11 (+)	211		
IN 11 (-)	111	DI-1-111	
IN 12 (+)	212		
IN 12 (-)	112	DI-1-112	
IN 13 (+)	213	DI-1-213	
IN 13 (-)	113	DI-1-113	
IN 14 (+)	214		
IN 14 (-)	114	DI-1-114	
IN 15 (+)	215		
IN 15 (-)	115	DI-1-115	

24Vdc REF:65-ULT-416-IN-008
V1+ 24V 24V
0V 0V 0V
3 1 H5
4 2 N
120Vac REF:65-ULT-416-IN-008

FTA-2
ABE7S16E2F0

IN 16 (+)	200	DI-2-200
IN 16 (-)	100	DI-2-100
IN 17 (+)	201	
IN 17 (-)	101	DI-2-101
IN 18 (+)	202	
IN 18 (-)	102	DI-2-102
IN 19 (+)	203	DI-2-203
IN 19 (-)	103	DI-2-103
IN 20 (+)	204	DI-2-204
IN 20 (-)	104	DI-2-104
IN 21 (+)	205	
IN 21 (-)	105	DI-2-105
IN 22 (+)	206	
IN 22 (-)	106	DI-2-106
IN 23 (+)	207	
IN 23 (-)	107	DI-2-107
IN 24 (+)	208	DI-2-208
IN 24 (-)	108	DI-2-108
IN 25 (+)	209	
IN 25 (-)	109	DI-2-109
IN 26 (+)	210	
IN 26 (-)	110	DI-2-110
IN 27 (+)	211	
IN 27 (-)	111	DI-2-111
IN 28 (+)	212	
IN 28 (-)	112	
IN 29 (+)	213	
IN 29 (-)	113	
IN 30 (+)	214	
IN 30 (-)	114	
IN 31 (+)	215	
IN 31 (-)	115	

24Vdc REF:65-ULT-416-IN-008
V1+ 24V 24V
0V 0V 0V
3 1 H5
4 2 N
120Vac REF:65-ULT-416-IN-008

PLC CABINET 65PLC416001

65-JB-416-02 TB-DI

1-201	(3)	1-201	PART OF 65FV4160006-C1 3 → 6 7 9 44 → FV 0006 NOTE 1
1-101	(4)	ZSC-0006	
1-102	(5)	ZSO-0006	
1-103	(6)	YS-0006	
1-204	(3)	1-204	PART OF 65FV4160004-C1 3 → 6 7 9 44 → FV 0004 NOTE 1
1-104	(4)	ZSC-0004	
1-105	(5)	ZSO-0004	
1-106	(6)	YS-0004	
1-207	(3)	1-207	PART OF 65FV4160016-C1 3 → 6 7 9 44 → FV 0016 NOTE 1
1-107	(4)	ZSC-0016	
1-108	(5)	ZSO-0016	
1-109	(6)	YS-0016	
1-210	(3)	1-210	PART OF 65FV4160014-C1 3 → 6 7 9 44 → FV 0014 NOTE 1
1-110	(4)	ZSC-0014	
1-111	(5)	ZSO-0014	
1-112	(6)	YS-0014	
1-213	(3)	1-213	PART OF 65FV4160043-C1 3 → 6 7 9 44 → FV 0043 NOTE 1
1-113	(4)	ZSC-0043	
1-114	(5)	ZSO-0043	
1-115	(6)	YS-0043	

65-JB-416-02 TB-DI

2-200	(3)	2-200	PART OF 65FV4160048-C1 3 → 6 7 9 44 → FV 0048 NOTE 1
2-100	(4)	ZSC-0048	
2-101	(5)	ZSO-0048	
2-102	(6)	YS-0048	

CR-XS0039(120Vac) 11 14 A1 A2 (1) OUT AC-H4 (2) AC-N2 → 65XS04160039-C1

TO MICROLOAD PULL BOX FQY0035-JB1 REF #65-ULT-416-IN-100

65-JB-416-02 TB-DI

2-204	(1)	2-204	65LS4160042-C1 3 → CRF BOX (1) (BLACK) (2) (BLACK) LSHH-0042; (3) (WHITE) (WHITE) LSH-0042; (4) (RED) (RED) LSL-0042; (5) (GREEN) (GREEN) LSLL-0042 → LS 0042
2-104	(2)	LSHH-0042	
2-105	(3)	LSH-0042	
2-106	(4)	LSL-0042	
2-107	(5)	LSLL-0042	
2-208	(1)	2-208	65LS4160047-C1 3 → CRF BOX (1) (BLACK) (2) (BLACK) LSHH-0047; (3) (WHITE) (WHITE) LSH-0047; (4) (RED) (RED) LSL-0047; (5) (GREEN) (GREEN) LSLL-0047 → LS 0047
2-108	(2)	LSHH-0047	
2-109	(3)	LSH-0047	
2-110	(4)	LSL-0047	
2-111	(5)	LSLL-0047	

PERMIT TO PRACTICE
LE GROUPE ULTRAGEN LTÉE
Signature
Date SEP 26 2017
PERMIT NUMBER: P 1180
NT/NU Association of Professional Engineers and Geoscientists

REGISTERED PROFESSIONAL ENGINEER 13627 D. CARRIER LICENSEE NT/NU SEP 26 2017

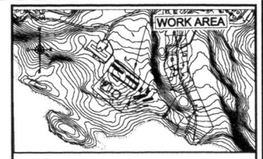

NOTES GENERALES / GENERAL NOTES

NOTE 1 : CONTRACTOR MUST INSTALL JUMPER WIRE ON VALVE TERMINAL BLOCK
REF : 65-ULT-416-102

ISSUED FOR CONSTRUCTION Ultragen DATE: SEPT 2017

DESSINS EN REFERENCE / REFERENCE DRAWINGS

TITRE / TITLE	# DWG
PLC CABINET LAYOUT	65-ULT-416-IN-001

AGNICO EAGLE

REV.	DATE	DESCRIPTION	PAR/BY	APP.	CLIENT
3	2017-09-19	FOR CONSTRUCTION	E.L.	D.C.	
2	2017-09-06	UPDATE	D.C.		
1	2017-08-14	UPDATE AREA & TAG NUMBER	E.L.	D.C.	
0	2017-06-30	ISSUED FOR CONSTRUCTION	E.L.	D.C.	
PA	2017-06-13	FOR COMMENTS	E.L.	D.C.	

REVISIONS

ultragen
NO. PROJET, PROJECT NO. 591700

TITRE / TITLE
AGNICO EAGLE – MEL1ADINE DIVISION
416 – (FUEL TANK FARM) 3
FUEL DISTRIBUTION (PORTAL #1)
CARD WIRING INTERCONNECTION
DIGITAL INPUT (120Vac)
SLOT 2

DESSINE PAR DRAWN BY	ERIC LAROUCHE	DATE 2017-04-11
VERIFIE PAR CHECKED BY	DANIEL CARRIER	2017-04-11
APPROUVE PAR APPROVED BY	DANIEL CARRIER	2017-04-11
ECHELLE SCALE	NTS	DATE 2017-04-11

NO. DESSIN DRAWING NO. 65-ULT-416-IN-201

NO. PROJET, PROJECT NO.	REVISION	FEUILLE / SHT
6515	3	1 / 1

AE-CART-ARCH D

P:\1. ANNEE 2017 ACTIFS\PROJETS\2017\20\INSTRUMENTATION\Plans et dwgs\Dessins\65-ULT-416-IN-201 (DI CARD).dwg

FILE NO. 65-ULT-416-IN-201 (DI CARD).dwg

NO. DESSIN DRAWING NO. 65-ULT-416-IN-202 (DI CARD)

FORMAT ARCH D

BMXDDI6402K
DIGITAL INPUT MODULE
SLOT 2

INPUT	DESCRIPTION
INPUT #0 TO 31 REF:65-ULT-416-IN-201	
32	SPARE -
33	SPARE -
34	SPARE -
35	SPARE -
36	SPARE -
37	SPARE -
38	SPARE -
39	SPARE -
40	SPARE -
41	SPARE -
42	SPARE -
43	SPARE -
44	SPARE -
45	SPARE -
46	SPARE -
47	SPARE -
48	SPARE -
49	SPARE -
50	SPARE -
51	SPARE -
52	SPARE -
53	SPARE -
54	SPARE -
55	SPARE -
56	SPARE -
57	SPARE -
58	SPARE -
59	SPARE -
60	SPARE -
61	SPARE -
62	SPARE -
63	SPARE -

FTA-3
ABE7S16E2F0

IN 0 (+)	200	
IN 0 (-)	100	
IN 1 (+)	201	
IN 1 (-)	101	
IN 2 (+)	202	
IN 2 (-)	102	
IN 3 (+)	203	
IN 3 (-)	103	
IN 4 (+)	204	
IN 4 (-)	104	
IN 5 (+)	205	
IN 5 (-)	105	
IN 6 (+)	206	
IN 6 (-)	106	
IN 7 (+)	207	
IN 7 (-)	107	
IN 8 (+)	208	
IN 8 (-)	108	
IN 9 (+)	209	
IN 9 (-)	109	
IN 10 (+)	210	
IN 10 (-)	110	
IN 11 (+)	211	
IN 11 (-)	111	
IN 12 (+)	212	
IN 12 (-)	112	
IN 13 (+)	213	
IN 13 (-)	113	
IN 14 (+)	214	
IN 14 (-)	114	
IN 15 (+)	215	
IN 15 (-)	115	

24Vdc REF:65-ULT-416-IN-008
V1+ → 24V
24V
0V → 0V
0V

120Vac REF:65-ULT-416-IN-008
3 → 1 → H5
4 → 2 → N

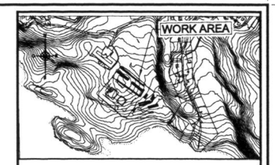

NOTES GENERALES / GENERAL NOTES

ISSUED FOR CONSTRUCTION
ultragen DATE: SEPT 2017

DESSINS EN REFERENCE / REFERENCE DRAWINGS

TITRE / TITLE	# DWG
PLC CABINET LAYOUT	65-ULT-416-IN-001

AGNICO EAGLE

REV.	DATE	DESCRIPTION	PAR/BY	APP.	CLIENT
2	2017-09-19	FOR CONSTRUCTION	E.L.	D.C.	
1	2017-08-14	UPDATE AREA & TAG NUMBER	E.L.	D.C.	
0	2017-06-30	FOR CONSTRUCTION	E.L.	D.C.	
PA	2017-06-15	FOR COMMENTS	E.L.	D.C.	

REVISIONS

ultragen

NO. PROJET PROJECT NO. 591700

TITRE / TITLE
AGNICO EAGLE – MEADOWBANK DIVISION
416 – FUEL TANK FARM
FUEL DISTRIBUTION (PORTAL #1)
CARD WIRING INTERCONNECTION
DIGITAL INPUT (120Vac) – PART 2 OF 2
SLOT 2

DESSINE PAR DRAWN BY	ERIC LAROUCHE	DATE 2017-04-11
VERIFIE PAR CHECKED BY	DANIEL CARRIER	2017-04-11
APPROUVE PAR APPROVED BY	DANIEL CARRIER	2017-04-11
ECHELLE SCALE	NTS	DATE 2017-04-11
NO. DESSIN DRAWING NO.	65-ULT-416-IN-202	
NO. PROJET PROJECT NO.	6515	REVISION 2
		FEUILLE / SHT 1 / 1

PERMIT TO PRACTICE
LE GROUPE ULTRAGEN LTÉE
Signature
Date SEP 2 6 2017
PERMIT NUMBER: P 1180
NT/NU Association of Professional Engineers and Geoscientists

REGISTERED PROFESSIONAL ENGINEER
L3627
D. CARRIER
LICENSEE
NT/NU
SEP 2 6 2017

AE-CART-ARCH D

P:\1. ANNÉE 2017 ACTIFS\PROMEC\5617\DET\INSTRUMENTATION\Plans et dessin\Dessins\65-ULT-416-IN-202 (DI CARD).dwg

FILE NO. 65-ULT-416-IN-202 (DI CARD).dwg

NO. DESSIN
DRAWING NO. 65-ULT-416-IN-203 (AI CARD)

FORMAT ARCH D

BMXAMI0810
ANALOG INPUT MODULE
SLOT 4

INPUT	DESCRIPTION
0	LIT4160003 Level 65TNK41607
1	LIT4160013 Level 65TNK41608
2	TT4160002 Temperature - 65TNK41607
3	TT4160012 Temperature - 65TNK41608
4	LIT4160042 Level - 65TNK41609
5	LIT4160047 Level - 65TNK41610
6	FIT6950213 Flow Indicator Transmitter CP-5
7	SPARE

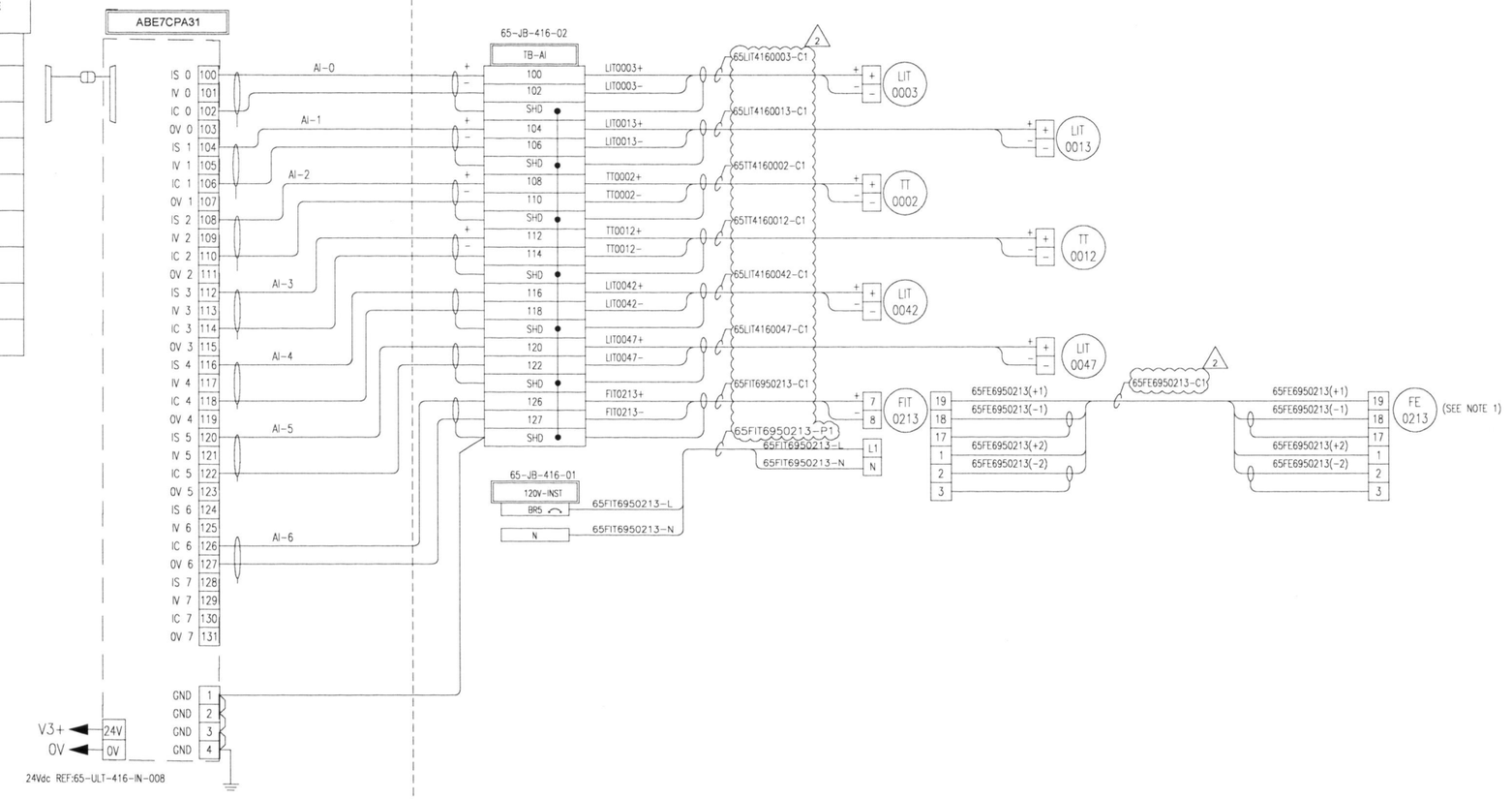

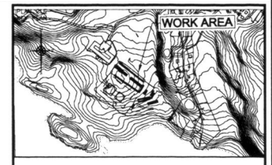

NOTES GENERALES / GENERAL NOTES

1. TRANSMITTER 65FIT6950213 ADDED BY SEBASTIEN PERRON.

ISSUED FOR CONSTRUCTION
Ultragen DATE: SEPT 2017

DESSINS EN REFERENCE / REFERENCE DRAWINGS

TITRE / TITLE	# DWG
PLC CABINET LAYOUT	65-ULT-416-IN-001

PERMIT TO PRACTICE
LE GROUPE ULTRAGEN LTÉE
Signature
Date SEP 26 2017
PERMIT NUMBER: P 1180
NT/NU Association of Professional Engineers and Geoscientists

REGISTERED PROFESSIONAL ENGINEER
L3677
D. CARRIER
LICENSEE
NT/NU
SEP 26 2017

AGNICO EAGLE

REV.	DATE	DESCRIPTION	PAR/BY	APP.	CLIENT
2	2017-09-19	FOR CONSTRUCTION	E.L.	D.C.	
1	2017-08-14	UPDATE AREA & TAG NUMBER	E.L.	D.C.	
0	2017-06-30	FOR CONSTRUCTION	E.L.	D.C.	
PA	2017-06-13	FOR COMMENTS	E.L.	D.C.	

REVISIONS

NUQSAN A-PROMEC MINING
ultragen
NO. PROJET PROJECT NO. 591700

TITRE / TITLE
AGNICO EAGLE – MEADOWBANK DIVISION
416 – FUEL TANK FARM △2
FUEL DISTRIBUTION (PORTAL #1)
CARD WIRING INTERCONNECTION
ANALOG INPUT
SLOT 4

DESSINE PAR DRAWN BY	ERIC LAROUCHE	DATE 2017-04-11
VERIFIE PAR CHECKED BY	DANIEL CARRIER	2017-04-11
APPROUVE PAR APPROVED BY	DANIEL CARRIER	2017-04-11
ECHELLE SCALE	NTS	DATE 2017-04-11

NO. DESSIN DRAWING NO. 65-ULT-416-IN-203

NO. PROJET PROJECT NO.	REVISION	FEUILLE / SHT
6515	2	1 / 1

AE-CART-ARCH D

P:\1. ANNEE 2017 ACTIFS\PROMEC\591\00\INSTRUMENTATION\Plans et devis\Dessins\65-ULT-416-IN-203 (AI CARD).dwg

FILE NO. 65-ULT-416-IN-203 (AI CARD).dwg

NO. DESSIN
DRAWING NO. 65-ULT-416-IN-204 (PULSE CARD)

FORMAT ARCH D

BMXEHC0800
HIGH SPEED COUNTER MODULE SLOT 5

INPUT	DESCRIPTION
0 AUX	YS4160044 Gasboy started from Heavy Vehicule Tank
0 MAIN	FQY4160044 Volume transferred from Heavy Vehicule Tank
1 AUX	YS4160049 Gasboy started from Light Vehicule Tank
1 MAIN	FQY4160049 Volume transferred from Light Vehicule Tank
2 AUX	SPARE
2 MAIN	SPARE
3 AUX	SPARE
3 MAIN	SPARE
4 AUX	SPARE
4 MAIN	SPARE
5 AUX	SPARE
5 MAIN	SPARE
6 AUX	SPARE
6 MAIN	SPARE
7 AUX	SPARE
7 MAIN	SPARE

PLC CABINET 65PLC416001

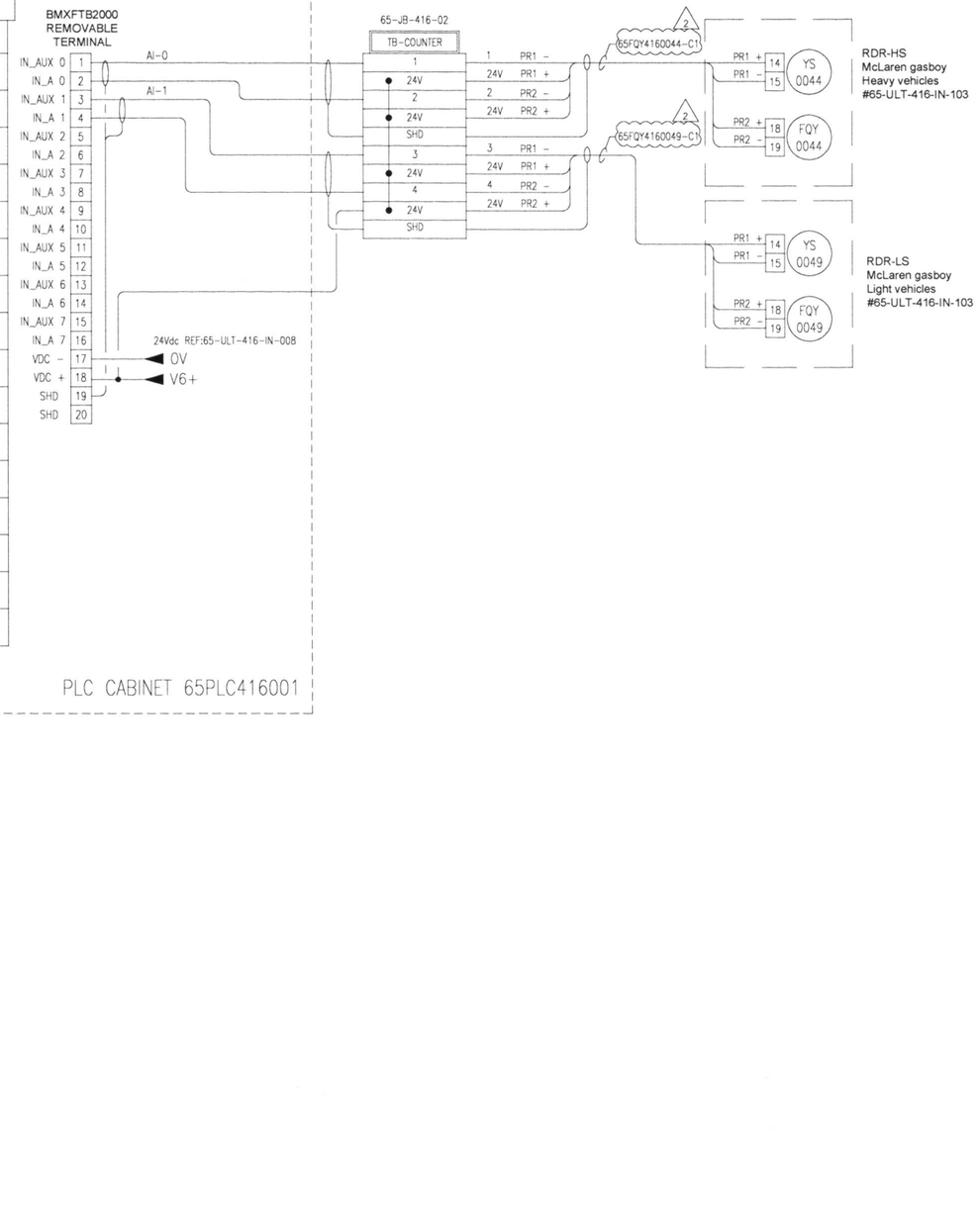

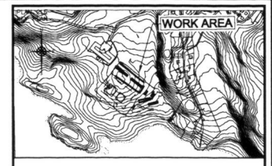

NOTES GENERALES / GENERAL NOTES

ISSUED FOR CONSTRUCTION
ultragen DATE: SEPT 2017

DESSINS EN REFERENCE / REFERENCE DRAWINGS

TITRE / TITLE	# DWG
PLC CABINET LAYOUT	65-ULT-416-IN-001

AGNICO EAGLE

REV.	DATE	DESCRIPTION	PAR/BY	APP.	CLIENT
2	2017-09-19	FOR DESCRIPTION	E.L.	D.C.	
1	2017-08-14	UPDATE AREA & TAG NUMBER	E.L.	D.C.	
0	2017-06-30	FOR CONSTRUCTION	E.L.	D.C.	
PA	2017-06-13	FOR COMMENTS	E.L.	D.C.	

REVISIONS

NUQSANA-PROMEC MINING — ultragen

NO. PROJET
PROJECT NO. 591700

TITRE / TITLE
AGNICO EAGLE – MEADOWBANK DIVISION
416 – FUEL TANK FARM 2
FUEL DISTRIBUTION (PORTAL #1)
CARD WIRING INTERCONNECTION
HIGH SPEED COUNTER MODULE
SLOT 5

DESSINE PAR DRAWN BY	ERIC LAROUCHE	DATE 2017-06-06
VERIFIE PAR CHECKED BY	DANIEL CARRIER	2017-06-06
APPROUVE PAR APPROVED BY	DANIEL CARRIER	2017-06-06
ECHELLE SCALE	NTS	DATE 2017-06-06

NO. DESSIN
DRAWING NO. 65-ULT-416-IN-204

NO. PROJET PROJECT NO.	REVISION	FEUILLE / SHT
6515	2	1 / 1

PERMIT TO PRACTICE
LE GROUPE ULTRAGEN LTÉE
Signature
Date SEP 26 2017
PERMIT NUMBER: P 1180
NT/NU Association of Professional Engineers and Geoscientists

REGISTERED PROFESSIONAL ENGINEER
L3677
D. CARRIER
LICENSEE
NT/NU
SEP 26 2017

AE-CART-ARCH D

P:\1. ANNEE 2017 ACTIFS\PROMEC\591\00\INSTRUMENTATION\Plans et devis\Dessins\65-ULT-416-IN-204 (PULSE CARD).dwg

FILE NO. 65-ULT-416-IN-204 (PULSE CARD).dwg

AGNICO EAGLE

Vendor Document Status

1 ☐ Proceed to next submission and status.

2 ☐ Proceed with exceptions as noted to next submission and status.

3 ☐ Do not proceed.
Revise as noted and resubmit next submission and status.

4 ☑ Complete, no further submission required.

By: Jean-Francois Tremblay Date: 2017-05-02

Review and authorization to fabricate are only for general conformance with the design concept of the Project as expressed in the Contract Documents. Sole responsibility for the accuracy and completeness of this document, including but not limited to dimensions and quantities, remains with the Supplier/Contractor. Agnico Eagle does not warrant the accuracy or completeness of any of the information contained herein, nor does Agnico Eagle authorize or approve any construction means, methods, techniques, sequences or any safety precautions or procedures.

Agnico Eagle No. 6515-C-270-007-141-TES-0014 R: Sub001

DOCUMENT FOR INFORMATION

NUQSANA PROMEC MINING

Agnico-Eagle Mines Ltd.
Non-Conformance Report

ITR Number : AEM-GE-ITR-002
Contract no. : C22466T / C22498E

AGNICO EAGLE

PART 1 – To be completed by Originator

ITR no. :	Supplier/Vendor/Manufacturer/Contractor :	Originator :	Date:

Equipment Identification: | **Equipment Tag No.:**

Disposition Requested: ☐ 48 Hours ☐ Other

NCR Classification: ☐ Supplier ☐ Fabrication ☐ Engineering ☐ Construction ☐

Current Status: ☐ Work Already Done ☐ Partially Done ☐ Other ____

Potential Impact (Check appropriate box and give estimate): ☐ Cost ☐ Schedule ☐ Other

Detailed Description of Non-Conformance (attach sketch, pictures, etc) :

Describe Deviation to Drawings, Specifications, Standard, Code or other Reference:

PART 2 - Disposition

* CONTRACTOR Proposed Disposition / Resolution: ☐ Use As Is ☐ Repair ☐ Rework ☐ Reject/Scrap	Concession Request No. (if applicable):	Contractors NCR No. (if applicable):

Details of Contractor Corrective Actions Proposed / Concession Request:

* Disposition: ☐ Use as Is ☐ Repair ☐ Rework ☐ Reject/Scrap	Dispositioning Party:	Signature:

Recommended Resolution / Actions:

PART 3 - Confirmation

Corrective Actions Completed By: Name: Date: Signature:	Corrective Actions Accepted by Dispositioning Party: Name: Date: Signature:
Corrective Actions Accepted by Originator: Name: Date: Signature:	**NCR Closed Out By (Area QA Coordinator)** Name: Date: Signature:

* ***Note:*** Dispositions are not to be construed as a change to any Contracts which may be affected. Prior to initiating any work which will impact the Contract terms, the Contractors must forward to AMEC written notice of all impacts, including but not limited to cost and schedule. Any work completed without a written instruction to proceed, if required, will be at the Contractor's risk.

6515-C-270-007

Fuel Tanks Piping Supply and Installation

Non-Conformance Log

Document Number : AEM-GE-LOG-002
Contract Number : C22466T / C22498E

AGNICO EAGLE

Number	Company	Description	Initiator	Date Opened	Date Closed	Progress Status
NCR-001						N/A
NCR-002						N/A
NCR-003						N/A
NCR-004						N/A
NCR-005						N/A
NCR-006						N/A
NCR-007						N/A
NCR-008						N/A
NCR-009						N/A
NCR-010						N/A
NCR-011						N/A
NCR-012						N/A
NCR-013						N/A
NCR-014						N/A
NCR-015						N/A
NCR-016						N/A
NCR-017						N/A
NCR-018						N/A
NCR-019						N/A
NCR-020						N/A
NCR-021						N/A
NCR-022						N/A
NCR-023						N/A
NCR-024						N/A
NCR-025						N/A
NCR-026						N/A
NCR-027						N/A
NCR-028						N/A
NCR-029						N/A
NCR-030						N/A
NCR-031						N/A
NCR-032						N/A
NCR-033						N/A
NCR-034						N/A
NCR-035						N/A
NCR-036						N/A
NCR-037						N/A
NCR-038						N/A
NCR-039						N/A
NCR-040						N/A

Vendor Document Status

AGNICO EAGLE

1 ☐ Proceed to next submission and status.

2 ☐ Proceed with exceptions as noted to next submission and status.

3 ☐ Do not proceed.
Revise as noted and resubmit next submission and status.

4 ☑ Complete, no further submission required.

By: Jean-Francois Tremblay Date: 2017-05-02

Review and authorization to fabricate are only for general conformance with the design concept of the Project as expressed in the Contract Documents. Sole responsibility for the accuracy and completeness of this document, including but not limited to dimensions and quantities, remains with the Supplier/Contractor. Agnico Eagle does not warrant the accuracy or completeness of any of the information contained herein, nor does Agnico Eagle authorize or approve any construction means, methods, techniques, sequences or any safety precautions or procedures.

Agnico Eagle No. 6515-C-270-007-141-TES-0019 R: Sub001

DOCUMENT FOR INFORMATION

AGNICO EAGLE

Vendor Document Status

1 ☐ Proceed to next submission and status.

2 ☐ Proceed with exceptions as noted to next submission and status.

3 ☐ Do not proceed.
Revise as noted and resubmit next submission and status.

4 ☑ Complete, no further submission required.

By: Jean-Francois Tremblay Date: 2017-05-02

Review and authorization to fabricate are only for general conformance with the design concept of the Project as expressed in the Contract Documents. Sole responsibility for the accuracy and completeness of this document, including but not limited to dimensions and quantities, remains with the Supplier/Contractor. Agnico Eagle does not warrant the accuracy or completeness of any of the information contained herein, nor does Agnico Eagle authorize or approve any construction means, methods, techniques, sequences or any safety precautions or procedures.

Agnico Eagle No. 6515-C-270-007-141-TES-0018 R: Sub001

DOCUMENT FOR INFORMATION

Agnico-Eagle Mines Ltd.
Miscellaneous Field Report

ITR Number : AEM-GE-ITR-006
Contract no. : C22466T / C22498E

SYSTEM:	TAG NO. :	
LOCATION:	AREA:	UNIT:

DATE	ACTIVITY

PROMEC DESIGNATE - SIGNATURE | TITLE | DATE

CLIENT DESIGNATE - SIGNATURE | TITLE | DATE

AGNICO EAGLE

Vendor Document Status

1 ☐ Proceed to next submission and status.

2 ☐ Proceed with exceptions as noted to next submission and status.

3 ☐ Do not proceed.
Revise as noted and resubmit next submission and status.

4 ☑ Complete, no further submission required.

By: JEAN-FRANCOIS TREMBLAY Date: 2017-06-22

Review and authorization to fabricate are only for general conformance with the design concept of the Project as expressed in the Contract Documents. Sole responsibility for the accuracy and completeness of this document, including but not limited to dimensions and quantities, remains with the Supplier/Contractor. Agnico Eagle does not warrant the accuracy or completeness of any of the information contained herein, nor does Agnico Eagle authorize or approve any construction means, methods, techniques, sequences or any safety precautions or procedures.

Agnico Eagle No. 6515-C-270-007-141-TES-0030 R: Sub002

DOCUMENT FOR INFORMATION

NUQSANA PROMEC MINING

AGNICO-EAGLE MINES Ltd.
Inspection & Testing Report

ITR Number: AEM-IN-ITR-007
ITR Type: Miscellaneous Instruments
Contract No.: 6515-C-270-007

AGNICO EAGLE

Tag Number:		**Equipment/ Pipe N°:**		**System:**	
Service:		**Function:**		**Purchase Order:**	
Manufacturer:		**Model:**		**Serial Number:**	
Location Dwg :		**Reference Datasheet:**		**Installation Detail Dwg:**	
Reference Datasheet Number:					

Item N°	Inspection Points	C	NC/ NCR #	N/A	Completed By/ Date
1	INSTRUMENT TAG ATTACHED	C	NC #	N/A	Promec: CLIENT:
2	CABLE TAG ATTACHED	C	NC #	N/A	Promec: CLIENT:
3	DEVICE INSTALLED AS PER INSTALLATION DETAILS, LOCATION OR MANUFACTURER'S DRAWING	C	NC #	N/A	Promec: CLIENT:
4	EQUIPMENT ACCESSIBLE AND EASY TO MAINTAIN	C	NC #	N/A	Promec: CLIENT:
5	WIRING CORRECT AND PROPERLY LABELED	C	NC #	N/A	Promec: CLIENT:
6	CALIBRATION CERTIFICATE AVAILABLE	C	NC #	N/A	Promec: CLIENT:
7	ELECTRICAL SUPPLY COMPATIBLE WITH SOURCE	C	NC #	N/A	Promec: CLIENT:
8		C	NC #	N/A	Promec: CLIENT:
9		C	NC #	N/A	Promec: CLIENT:
10		C	NC #	N/A	Promec: CLIENT:
11		C	NC #	N/A	Promec: CLIENT:

Comments

Sign Off			
Promec Signature:		**CLIENT Signature:**	
Date:		**Date:**	

Legend					
C	Conformance	**NC**	Non Conformance	**N/A**	Not Applicable
NCR	Non Conformance Report				

AGNICO EAGLE

Vendor Document Status

1 ☐ Proceed to next submission and status.

2 ☐ Proceed with exceptions as noted to next submission and status.

3 ☐ Do not proceed.
Revise as noted and resubmit next submission and status.

4 ☑ Complete, no further submission required.

By: Jean-Francois Tremblay Date: 2017-05-02

Review and authorization to fabricate are only for general conformance with the design concept of the Project as expressed in the Contract Documents. Sole responsibility for the accuracy and completeness of this document, including but not limited to dimensions and quantities, remains with the Supplier/Contractor. Agnico Eagle does not warrant the accuracy or completeness of any of the information contained herein, nor does Agnico Eagle authorize or approve any construction means, methods, techniques, sequences or any safety precautions or procedures.

Agnico Eagle No. 6515-C-270-007-141-TES-0017 R: Sub001

DOCUMENT FOR INFORMATION

Agnico-Eagle Mines Ltd.
Inspection Deficiency Report

ITR Number : AEM-GE-ITR-005
Contract no. : C22466T / C22498E

Area:	CWP No:
Equipment Tag No:	Inspection Deficiency Report No:
Date:	Page_____ of _____
Reference Drawings:	
Reference Photos:	
Description of Deficiency:	
Suggested Solution:	
Engineering Contact Made: Yes ☐ No ☐ Name:	
Course of Action:	
Engineering Follow-up Required: Yes ☐ No ☐ Date Required:	

Promec's Representative Print Name		Client's Representative Print Name	
Promec's Representative Signature	Date	Client's Representative Signature	Date

6515-C-270-007

Fuel Tanks Piping Supply and Installation

Inspection Deficiency Log

Document Number : AEM-GE-LOG-004
Contract Number : C22466T / C22984E

NUQSANA PROMEC MINING

AGNICO EAGLE

Number	Description	Initiator	Dept.	Date	Contract No.		Progress Status
Deficiency-001						N/A	
Deficiency-002						N/A	
Deficiency-003						N/A	
Deficiency-004						N/A	
Deficiency-005						N/A	
Deficiency-006						N/A	
Deficiency-007						N/A	
Deficiency-008						N/A	
Deficiency-009						N/A	
Deficiency-010						N/A	
Deficiency-011						N/A	
Deficiency-012						N/A	
Deficiency-013						N/A	
Deficiency-014						N/A	
Deficiency-015						N/A	
Deficiency-016						N/A	
Deficiency-017						N/A	
Deficiency-018						N/A	
Deficiency-019						N/A	
Deficiency-020						N/A	
Deficiency-021						N/A	
Deficiency-022						N/A	
Deficiency-023						N/A	
Deficiency-024						N/A	
Deficiency-025						N/A	
Deficiency-026						N/A	
Deficiency-027						N/A	
Deficiency-028						N/A	
Deficiency-029						N/A	
Deficiency-030						N/A	
Deficiency-031						N/A	
Deficiency-032						N/A	
Deficiency-033						N/A	
Deficiency-034						N/A	
Deficiency-035						N/A	
Deficiency-036						N/A	
Deficiency-037						N/A	
Deficiency-038						N/A	
Deficiency-039						N/A	
Deficiency-040						N/A	

AGNICO EAGLE

Vendor Document Status

1 ☐ Proceed to next submission and status.

2 ☐ Proceed with exceptions as noted to next submission and status.

3 ☐ Do not proceed.
Revise as noted and resubmit next submission and status.

4 ☑ Complete, no further submission required.

By: JEAN-FRANCOIS TREMBLAY Date: 2017-05-16

Review and authorization to fabricate are only for general conformance with the design concept of the Project as expressed in the Contract Documents. Sole responsibility for the accuracy and completeness of this document, including but not limited to dimensions and quantities, remains with the Supplier/Contractor. Agnico Eagle does not warrant the accuracy or completeness of any of the information contained herein, nor does Agnico Eagle authorize or approve any construction means, methods, techniques, sequences or any safety precautions or procedures.

Agnico Eagle No. 6515-C-270-007-141-TES-0020 R: Sub001

DOCUMENT FOR INFORMATION

AGNICO EAGLE

Vendor Document Status

1	☐ Proceed to next submission and status.
2	☐ Proceed with exceptions as noted to next submission and status.
3	☐ Do not proceed. Revise as noted and resubmit next submission and status.
4	☒ Complete, no further submission required.

By: 2017-05-31 Date:

Review and authorization to fabricate are only for general conformance with the design concept of the Project as expressed in the Contract Documents. Sole responsibility for the accuracy and completeness of this document, including but not limited to dimensions and quantities, remains with the Supplier/Contractor. Agnico Eagle does not warrant the accuracy or completeness of any of the information contained herein, nor does Agnico Eagle authorize or approve any construction means, methods, techniques, sequences or any safety precautions or procedures.

Agnico Eagle No. 6515-C-270-007-275-SSS-0020 R: Sub001

DOCUMENT FOR INFORMATION

VIKING
PROTECTION INCENDIE VIKING INC.
3005 | boulevard Pitfield | Saint-Laurent, Québec, Canada | H4S 1H4
Tél. **514.332.5110** Télec : 514.332.5063 info@vikingfire.ca

Shop Drawings

Prepared for:
Constr. Promec

Notifier Fire Alarm system
Purchase Order: 61116
Our Project #: TMC-XXXXX
Meliadine Fuel Farm

Prepared by: **Joëlle-Ann Forget**
Sales Représentative: Pierre Noël

May 6, 2017

1 copy by email for **APPROBATION**

	MODEL NUMBER	
1	NFS-320C	NFS-320C, 120VAC NOIR
2	ACM-24AT	ANNONCIATEUR À DEL (24)+INTERRUPTEUR
3	NFN-GW-EM-3	NFN GATEWAY EMBEDDED
4	800BAT1218	BATTERIE 12volts 18amps
6	ISO-6A	CARTE DE 6 ISOLATEURS INCORP.ULC
7	NBG-12LX	STATION MANUEL, 1 ÉTAPE, ADRESSABLE FLASHSCAN
8	SB-10	BOÎTIER DE SURFACE POUR SÉRIENBG
9	FAPT-851A	DÉTECTEUR PHOTO/THERM. FLASHSCAN (TÊTE)
10	B210LPA	BASE DE MONTAGE DE DETECTAVEC BRIDE, ULC
11	FRM-1A	MODULE ADRESSABLE (RELAIS) FLASHSCAN
12	P2RKA-B	KLX STRO.MONT MUR, 2 FILS STND, ROUGE,EXT,BILINGUE
13	HRA	KLAXON, 2 FILS 12/24 VDC. ROUGE, MURALE
14	HRKA	KLAXON, 2 FILS 12/24 VDC.ROUGE,MUR,EPP MAUV.TEMPS
15	SBBR	BOÎTIER DE SURFACE ROUGE POURHP, ET1070/ET1080,E7
16	EOL-CR	PLAQUE DE FIN DE LIGNE MÉTAL ROUGE
17	FDM-1A	MODULE ADRESSABLE DOUBLE ENTRÉES (GICLEUR).
18	NBG-12L	STATION MANUEL, 2 ÉTAPES C/A SERRURE, ROUGE
19	STI-13410FR	RED STI UNIVERSAL STOPPERSTI-13410-FR
20	CR-135MP	DÉTECT. THERM. 135°F THERMO.& FIXE/ANTI-HUMIDITÉ

VIKING
PROTECTION INCENDIE VIKING INC.
3005 | boulevard Pitfield | Saint-Laurent, Québec, Canada | H4S 1H4
Tél. 514.332.5110 Télec : 514.332.5063 info@vikingfire.ca

Basic installation guide

Control panel
A maximum distance of 1728mm (5'-8") must separate the top of the control panel and the finished floor surface.

For built in panels, please refer to the following examples for the minimal distance required between the finished wall (gyproc) and the exterior box.

Fire alarm panel	Minimal distance
NFS-320C-FR	1" (25mm)
NFW-50C-FR (Firewarden)	1" (25mm)
NFW2-100C-FR (Firewarden)	1" (25mm)
SBB-A4 (NFS-640 & NFS-3030)	1" (25mm)
SBB-B4 (NFS-640 & NFS-3030)	1" (25mm)
SBB-C4 (NFS-640 & NFS-3030)	1" (25mm)
SBB-D4 (NFS-640 & NFS-3030)	1" (25mm)

There must be a minimum distance in front of the control panel, equal to the width of the control panel, left in front of it.

Manual pull station
Installation height of **1200mm (47")** from the middle of the component and the level of the finished floor **for buildings with elevators.** As requested in the CNB2010 art. 3.8.1.5 (Required by the Régie du Bâtiment)

Installation height between 1200mm (47") and 1400mm (53") from the middle of the component and the level of the finished floor for buildings without elevators

Fire fighter handset
Installation height between 1350mm (53") and 1500mm (60") from the middle of the component and the level of the finished floor.

Detectors (smoke or heat)
A minimum clearance of 450mm (18") must be provided underneath and around the detectors.

The detectors must be installed at a minimum of 450mm (18") from all electrical supply line and air discharge.

Mini horn with silence button
Installation height of **1200mm (47")** from the middle of the component and the level of the finished floor **for buildings with elevators.** As requested in the CNB2005 art. 3.8.1.5 (Required by the Régie du Bâtiment)

Installation height between 1200mm (47") and 1400mm (53") from the middle of the component and the level of the finished floor for buildings without elevators

Audible and visual device
Installation height between 2000mm and 2400mm from the middle of the component and the level of the finished floor.

NFS-320C

Intelligent Addressable Fire Alarm System

NOTIFIER® by Honeywell

Intelligent Fire Alarm Control Panels

General

The NFS-320C intelligent Fire Alarm Control Panel is part of the ONYX® Series of Fire Alarm Controls from NOTIFIER.

In stand-alone or network configurations, ONYX Series products meet virtually every application requirement.

The NFS-320C's modular design makes system planning easier. The panel can be configured with just a few devices for small building applications, or networked with many devices to protect a large campus or a high-rise office block. Simply add additional peripheral equipment to suit the application. For example, certain geographic regions such as Canada have specific LED annunciation requirements. To provide up to 48 zones/points in the same cabinet, add an optional ACM Series annunciator (sold separately).

Features

- Listed to Standard ULC-S527-99.
- Certified for seismic applications when used with the appropriate seismic mounting kit.
- Approved for Marine applications when used with listed compatible equipment. *See DN-60688.*
- One isolated intelligent Digital Communications Loop (DCL) Style 4, 6 or 7.
- Up to 159 detectors and 159 modules per SLC; 318 devices maximum.
  - Detectors can be any mix of ion, photo, thermal, or multisensor.
  - Modules include addressable pull stations, normally open contact devices, two-wire smoke detectors, notification, or relay.
- Standard 80-character display.
- Network options:
  - High-speed network for up to 200 nodes (NFS2-3030, NFS2-640, NFS-320(C), NFS-320SYS, NCA-2, DVC-EM, ONYXWorks, NFS-3030, NFS-640, and NCA).
  - Standard network for up to 103 nodes (NFS2-3030, NFS2-640, NFS-320(C), NFS-320SYS, NCA-2, DVC-EM, ONYXWorks, NCS, NFS-3030, NFS-640, NCA, AFP-200, AFP-300/400, AFP-1010, and AM2020). Up to 54 nodes when DVC-EM is used in network paging.
- 6.0 A power supply with four Class A/B built-in Notification Appliance Circuits (NAC). Selectable System Sensor, S, or Gentex strobe synchronization.
- Built-in Alarm, Trouble, Security, and Supervisory relays.
- VeriFire® Tools online or offline programming utility. Upload/Download, save, store, check, compare, and simulate panel databases. Upgrade panel firmware.
- Autoprogramming and Walk Test reports.
- Optional universal 318-point DACT.
- 80-character remote annunciators (up to 32).
- EIA-485 annunciators, including custom graphics.
- Printer interface (80-column and 40-column printers).
- History file with 800-event capacity in nonvolatile memory, plus separate 200-event alarm-only file.
- Alarm Verification selection per point, with automatic counter.
- Presignal/Positive Alarm Sequence (PAS).
- Silence inhibit and Auto Silence timer options.

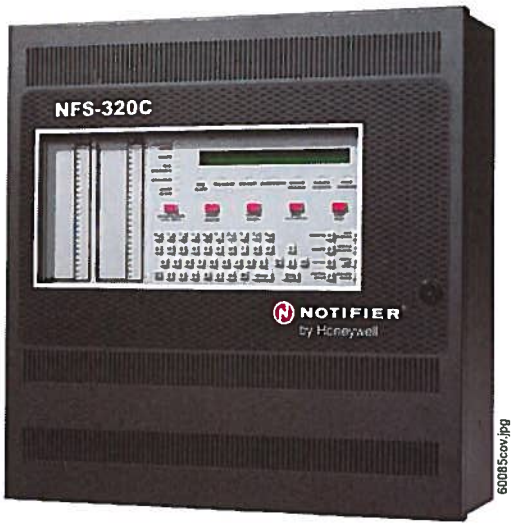

NFS-320C

- March time / temporal / Canadian two-stage coding, 20 ppm and temporal / strobe synchronization.
- Field-programmable on panel or on PC, with VeriFire Tools program check, compare, simulate.
- Full QWERTY keypad.
- Battery charger supports 18 – 200 AH batteries.
- Non-alarm points for lower priority functions.
- Remote ACK/Signal Silence/System Reset/Drill via monitor modules.
- Automatic time control functions, with holiday exceptions.
- Surface Mount Technology (SMT) electronics.
- Extensive, built-in transient protection.
- Powerful Boolean logic equations.

FLASHSCAN® INTELLIGENT FEATURES

- Polls up to 318 devices in less than two seconds.
- Activates up to 159 outputs in less than five seconds.
- Multicolor LEDs blink device address during Walk Test.
- Fully digital, high-precision protocol (U.S. Patent 5,539,389).
- Manual sensitivity adjustment — up to nine levels (see individual device information for available settings).
- Pre-alarm ONYX intelligent sensing — up to nine levels.
- Day/Night automatic sensitivity adjustment.
- Sensitivity windows:
  - **Ion –** 0.5 to 2.5%/foot obscuration.
  - **Photo –** 0.5 to 2.35%/foot obscuration.
  - **Laser (VIEW®) –** 0.02 to 2.0%/foot obscuration.
  - **Acclimate Plus™ –** 0.5 to 4.0%/foot obscuration.
  - **IntelliQuad –** 1.0 to 4.0%/foot obscuration.
  - **IntelliQuad™ PLUS –** 1.0 to 4.0%/foot obscuration
- Drift compensation (U.S. Patent 5,764,142).
- Degraded mode: In the unlikely event that the FACP's microprocessor fails, FlashScan detectors revert to degraded operation and can activate the NAC circuits and alarm relay.

Each of the four built-in panel circuits includes a Disable/Enable switch for this feature.

- Multi-detector algorithm involves nearby detectors in alarm decision (U.S. Patent 5,627,515).
- Automatic detector sensitivity testing (NFPA-72 compliant).
- Maintenance alert (two levels).
- Self-optimizing pre-alarm.

FSL-751A VIEW (VERY INTELLIGENT EARLY WARNING) SMOKE DETECTION TECHNOLOGY

- Advanced ONYX intelligent sensing algorithms differentiate between smoke and non-smoke signals (U.S. Patent 5,831,524).
- Addressable operation pinpoints the fire location.
- Early warning performance comparable to the best aspiration systems at a fraction of the lifetime cost.

FAPT-851A ACCLIMATE PLUS LOW-PROFILE INTELLIGENT MULTI-SENSOR

- Detector automatically adjusts sensitivity levels without operator intervention or programming. Sensitivity increases with heat.
- Microprocessor-based technology; combination photo and thermal technology.
- Low-temperature warning signal at 40°F ± 5°F (4.44°C ± 2.77°C).

FSC-851 INTELLIQUAD ADVANCED MULTI-CRITERIA DETECTOR

- Detects all four major elements of a fire (smoke, heat, CO, and flame).
- Automatic drift compensation of smoke sensor and CO cell.
- High nuisance-alarm immunity.

INTELLIGENT FAAST® DETECTORS FSA-5000A, FSA-8000A, AND FSA-20000A

- Connects directly to the SLC loop of compatible ONYX series panels.
- Provides five event thresholds that can be individually programmed with descriptive labels for control-by-event programming; uses five detector addresses.
- Uses patented particle separator and field-replaceable filter to remove contaminants.
- Advanced algorithms reject common nuisance conditions
- FSA-5000A covers 5,000 square feet through one pipe.
- FSA-8000A covers 8,000 square feet through one pipe.
- FSA-20000A covers 28,800 square feet through one to four pipes.

FCO-851A INTELLIQUAD™ PLUS ADVANCED MULTI-CRITERIA FIRE/CO DETECTOR

- Detects all four major elements of a fire.
- Separate signal for life-safety CO detection.
- Optional addressable sounder base for Temp-3 (fire) or Temp-4(CO) tone.
- Automatic drift compensation of smoke sensor and CO cell.
- High nuisance-alarm immunity.

RELEASING FEATURES

- Ten independent hazards.
- Sophisticated cross-zone (three options).
- Delay timer and Discharge timers (adjustable).
- Abort (four options).
- Low-pressure CO_2 listed.

Sample System Options

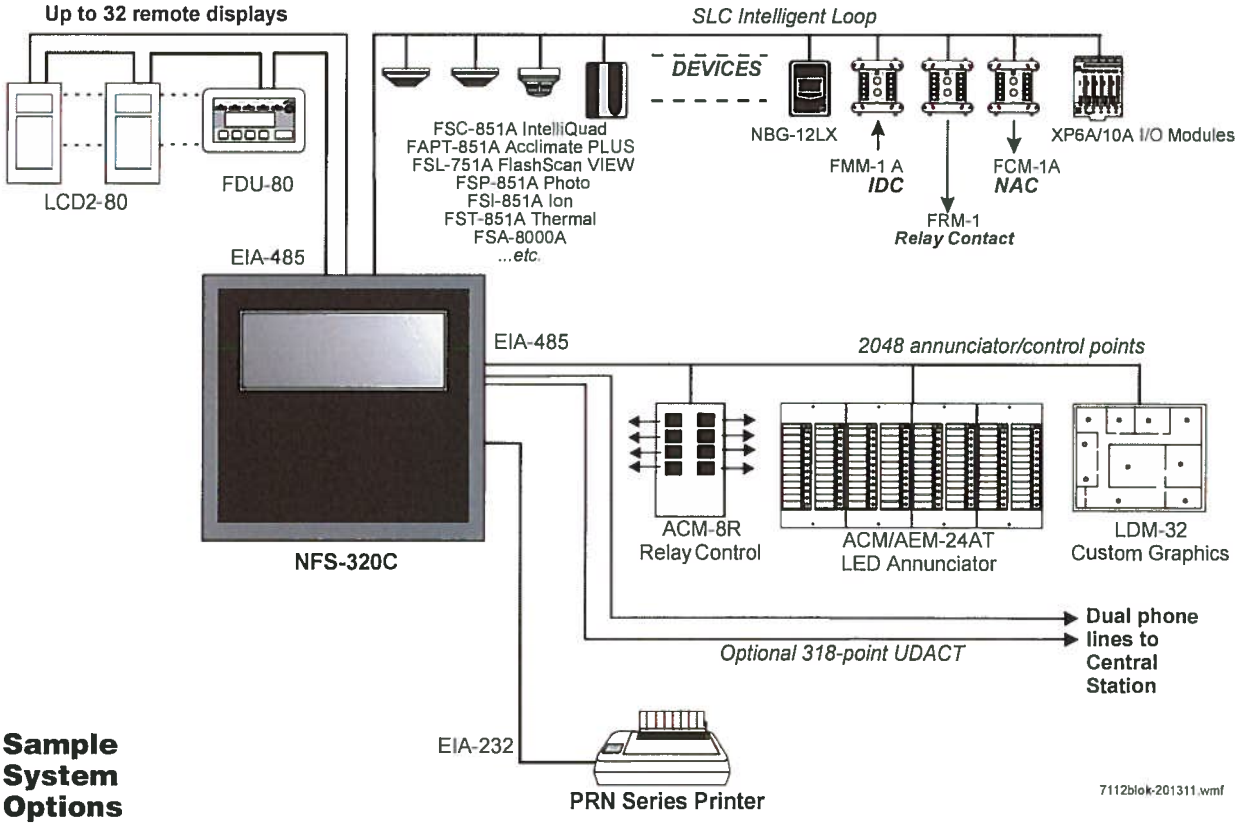

VOICE FEATURES

- Integrates with FirstCommand Series. *See DN-60772. Note: Only NFC-50/100 and NFC-LOC are approved for Canadian applications.*

HIGH-EFFICIENCY OFFLINE SWITCHING

3.0 A POWER SUPPLY (6.0 A IN ALARM)

- 120 VAC.
- Displays battery current/voltage on panel (with display).

FlashScan, Exclusive World-Leading Detector Protocol

At the heart of the NFS-320C is a set of detection devices and device protocol — FlashScan (U.S. Patent 5,539,389). FlashScan is an all-digital protocol that gives superior precision and high noise immunity.

In addition to providing quick identification of an active input device, this protocol can also activate many output devices in a fraction of the time required by competitive protocols. This high speed also allows the NFS-320C to have the largest device per loop capacity in the industry — 318 points — yet every input and output device is sampled in less than two seconds. The microprocessor-based FlashScan detectors have bicolor LEDs that can be coded to provide diagnostic information, such as device address during Walk Test.

ONYX Intelligent Sensing

Intelligent sensing is a set of software algorithms that provides the NFS-320C with industry-leading smoke detection capability. These complex algorithms require many calculations on each reading of each detector, and are made possible by the high-speed microcomputer used by the NFS-320C.

Drift Compensation and Smoothing: Drift compensation allows the detector to retain its original ability to detect actual smoke, and resist false alarms, even as dirt accumulates. It reduces maintenance requirements by allowing the system to automatically perform the periodic sensitivity measurements required by NFPA 72. Smoothing filters are also provided by software to remove transient noise signals, such as those caused by electrical interference.

Maintenance Warnings: When the drift compensation performed for a detector reaches a certain level, the performance of the detector may be compromised, and special warnings are given. There are three warning levels: (1) Low Chamber value; (2) Maintenance Alert, indicative of dust accumulation that is near but below the allowed limit; (3) Maintenance Urgent, indicative of dust accumulation above the allowed limit.

Sensitivity Adjust: Nine sensitivity levels are provided for alarm detection. These levels can be set manually, or can change automatically between day and night. Nine levels of pre-alarm sensitivity can also be selected, based on predetermined levels of alarm. Pre-alarm operation can be latching or self-restoring, and can be used to activate special control functions.

Self-Optimizing Pre-Alarm: Each detector may be set for "Self-Optimizing" pre-alarm. In this special mode, the detector "learns" its normal environment, measuring the peak analog readings over a long period of time, and setting the pre-alarm level just above these normal peaks.

Cooperating Multi-Detector Sensing: A patented feature of ONYX intelligent sensing is the ability of a smoke sensor to consider readings from nearby sensors in making alarm or pre-alarm decisions. Without statistical sacrifice in the ability to resist false alarms, it allows a sensor to increase its sensitivity to actual smoke by a factor of almost two to one.

Field Programming Options

Autoprogram is a timesaving feature. The FACP "learns" what devices are physically connected and automatically loads them in the program with default values for all parameters. Requiring less than one minute to run, this routine allows the user to have almost immediate fire protection in a new installation, even if only a portion of the detectors are installed.

Keypad Program Edit (with KDM-R2) The NFS-320C, like all NOTIFIER intelligent panels, has the exclusive feature of program creation and editing capability from the front panel keypad, ***while continuing to provide fire protection***. The architecture of the NFS-320C software is such that each point entry carries its own program, including control-by-event links to other points. This allows the program to be entered with independent per-point segments, while the NFS-320C simultaneously monitors other (already installed) points for alarm conditions.

VeriFire® Tools is an offline programming and test utility that can greatly reduce installation programming time, and increase confidence in the site-specific software. It is Windows®-based and provides technologically advanced capabilities to aid the installer. The installer may create the entire program for the NFS-320C in the comfort of the office, test it, store a backup file, then bring it to the site and download from a laptop into the panel.

Placement of Equipment in Chassis and Cabinet

The following guidelines outline the NFS-320C's flexible system design.

Wiring: When designing the cabinet layout, consider separation of power-limited and non-power-limited wiring as discussed in the *NFS-320/C/E Installation Manual*.

It is critical that all mounting holes of the NFS-320C are secured with a screw or standoff to ensure continuity of Earth Ground.

Networking: If networking two or more control panels, each unit requires a Network Communication Module or High-Speed Network Communication Module (HS-NCM can support two nodes; see "Networking Options" on page 5). These modules can be installed in any option board position (see manual), and additional option boards can be mounted in front of them.

KDM-R2 Controls and Indicators

Program Keypad: QWERTY type (keyboard layout).

12 LED Indicators: Power; Fire Alarm; Pre-Alarm; Security; Supervisory; System Trouble; Signals Silenced; Points Disabled; Control Active; Abort; Pre-Discharge; Discharge.

Keypad Switch Controls: Acknowledge/Scroll Display; Signal Silence; Drill; System Reset; Lamp Test.

LCD Display: 80 characters (2 x 40) with long-life LED backlight.

Product Line Information

- "Configuration Guidelines" on page 4
- "Main System Components" on page 4
- "Networking Options" on page 5
- "Auxiliary Power Supplies and Batteries" on page 4
- "Audio Options" on page 4
- "Compatible Devices, EIA-232 Ports" on page 4
- "Compatible Devices, EIA-485 Ports" on page 4
- "Compatible Intelligent Devices" on page 4
- "Enclosures, Chassis, and Dress Plates" on page 5
- "Other Options" on page 5

Configuration Guidelines

The NFS-320C system ships assembled; description and some options follow. See "Enclosures, Chassis, and Dress Plates" on page 5 for information about mounting peripherals.

***NOTE:** Stand-alone and network systems require a main display. On stand-alone systems, the panel's keypad provides the required display. On network systems (two or more networked fire panel nodes), at least one NCA-2, NCS, or ONYXWorks annunciation device is required. For NCA-2, see DN-7047.*

Main System Components

NFS-320C: The standard, factory-assembled NFS-320C system includes the following components: one control panel mounted on chassis (120 V operation — ships with grounding cable, battery interconnect cables, and document kit); one integral power supply mounted to the control panel; one primary display KDM-R2 keypad/display; and one cabinet for surface or semi-flush mounting. *Purchase batteries separately. One or two option boards may be mounted to the NFS-320 cabinet, with one visible to the left of the display and one inside; additional option boards can be used in remote cabinets. See Canadian applications manual addendum 52747.*

NFS-320CR: Same as NFS-320C but in red enclosure.

NFS-320C-FR: Same as NFS-320C but in French language.

TR-320: Trim ring for the NFS-320C cabinet.

Auxiliary Power Supplies and Batteries

ACPS-610: 6.0 A or 10.0 A addressable charging power supply. *See DN-60244.*

FCPS-24S6C/8C: Remote 6 A and 8 A power supplies. See DN-6297. For use only as a NAC expander.

BAT Series: Batteries. NFS-320 uses two 12 volt, 18 to 200 AH batteries. *See DN-6933.*

Audio Options

NFC-50/100: 25 watt, 25 VRMS, emergency Voice Evacuation Control Panel (VECP) with integral commercial microphone, digital message generator, and Class A or Class B speaker circuits. *See DN-60772.*

Compatible Devices, EIA-232 Ports

PRN-6: 80-column printer. *See DN-6956.*

PRN-7: 80-column printer. *See DN-60897*

VS4095/5: Keltron printer, 40-column, 24 V. Mounted in external backbox. *See DN-3260.* (Not ULC-listed.)

DPI-232: Direct Panel Interface, specialized modem for extending serial data links to remotely located FACPs and/or peripherals; mount on NFS-320 chassis. *See DN-6870.*

Compatible Devices, EIA-485 Ports

ACM-24AT: ONYX Series ACS annunciator – up to 96 points of annunciation with Alarm or Active LED, Trouble LED, and switch per circuit. Active/Alarm LEDs can be programmed (by powered-up switch selection) by point to be red, green, or yellow; the Trouble LED is always yellow. *See DN-6862.*

AEM-24AT: Same LED and switch capabilities as ACM-24AT, expands the ACM-24AT to 48, 72, or 96 points. *See DN-6862.*

ACM-48A: ONYX Series ACS annunciator – up to 96 points of annunciation with Alarm or Active LED per circuit. Active/Alarm LEDs can be programmed (by powered-up switch selection) in groups of 24 to be red, green, or yellow. Expandable to 96 points with one AEM-48A. *See DN-6862.*

AEM-48A: Same LED capabilities as ACM-48A, expands the ACM-48A to 96 points. *See DN-6862.*

ACM-8R: Remote Relay Module with eight Form-C contacts. Can be located up to 6,000 ft. (1828.8 m) from panel on four wires. *See DN-3558.*

LCD-80: ACS mode. 80-character, backlit LCD display. Mounts up to 6,000 ft. (1828.8 m) from panel. Up to 32 per FACP. *See LCD-80/LCD-80TM (DN-3198).*

FDU-80: Terminal mode. 80-character, backlit LCD display. Mounts up to 6,000 ft. (1828.8 m) from panel. Up to 32 per FACP. Not for use as a primary display in Canada. *See FDU-80 (DN-6820).*

LCD2-80: Terminal and ACS mode. 80-character, backlit LCD display. Mounts up to 6,000 ft. (1828.8 m) from panel. Up to 32 per FACP. Not for use as primary display in Canadian applications. *See DN-60548.*

LDM: Lamp Driver Modules LDM-32, LDM-E32, and LDM-R32; remote custom driver modules. *See DN-0551.*

SCS: Smoke control stations SCS-8, SCE-8, with lamp drivers SCS-8L, SCE-8L; eight (expandable to 16) circuits (HVAC only). *See DN-4818.*

TM-4: Transmitter Module. Includes three reverse-polarity circuits and one municipal box circuit; mount on NFS-320C chassis or remotely. *See DN-6860.*

UDACT-2: Universal Digital Alarm Communicator Transmitter, 636 channel. *See DN-60686.*

UZC-256: Programmable Universal Zone Coder provides positive non-interfering successive zone coding. Microprocessor-controlled, field-programmable from IBM®-compatible PCs (requires optional programming kit). Mounts in BB-UZC or other compatible chassis (purchased separately). *See DN-3404.*

Compatible Intelligent Devices

FSA-5000A: Intelligent FAAST® XS Fire Alarm Aspiration Sensing Technology. Intelligent aspirating smoke detector for applications up to 5,000 sq.ft., with ULC listing.

FSA-8000A: Intelligent FAAST® XM Fire Alarm Aspiration Sensing Technology. Intelligent aspirating smoke detector for applications up to 8,000 sq.ft., with ULC listing. *See DN-60792.*

FSA-20000A: Intelligent FAAST® XT Fire Alarm Aspiration Sensing Technology. Intelligent aspirating smoke detector for applications up to 28,800 sq.ft., with ULC listing. *See* DN-60849.

FSB-200A: Intelligent beam smoke detector. *See DN-6985.*

FSB-200SA: Intelligent beam smoke detector with integral sensitivity test. *See DN-6895.*

FSC-851A: FlashScan IntelliQuad Advanced Multi-Criteria Detector. *See DN-60412.*

FCO-851A: FlashScan IntelliQuad PLUS Advanced Multi-Criteria Fire/CO Detector. *See DN-60689.*

FSI-851A: Low-profile FlashScan ionization detector. *See DN-6934.*

FSP-851A: Low-profile FlashScan photoelectric detector. *See DN-6935.*

FSP-851TA: Low-profile FlashScan photoelectric detector with 135°F (57°C) thermal. *See DN-6935.*

FSP-851RA: Remote-test capable photoelectric detector for use with DNR(W) duct detector housings. *See DN-6935.*

FST-851A: FlashScan thermal detector 135°F (57°C). *See DN-6936.*

FST-851RA: FlashScan thermal detector 135°F (57°C) with rate-of-rise. *See DN-6936.*

FST-851HA: FlashScan 190°F (88°C) high-temperature thermal detector. *See DN-6936.*

FAPT-851A: FlashScan Acclimate Plus low-profile multi-sensor detector. *See DN-6937.*

FSL-751A: FlashScan VIEW laser photo detector. *See DN-6886.*

DNR: InnovairFlex low-flow non-relay duct-detector housing (order FSP-851A/FSP-851RA separately). Replaces FSD-751PL/FSD-751RPL. *See DN-60429.*

DNRW: Same as above with NEMA-4 rating, watertight. *See DN-60429.*

B224RBA: Low-profile relay base. See DN-60054.

B224BIA: Isolator base for low-profile detectors. See DN-60054.

B210LPA: Low-profile base. Standard U.S. style. Replaces B710LPA. See DN-60054.

B501A: European-style, 4" (10.16 cm) base. See DN-60054.

B200SA: Intelligent programmable sounder base, capable of producing a variety of tone patterns including ANSI Temporal 3. Compatible with sychronization protocol. *See DN-60054.*

B200SCOA: Based on B200SA, with added CO detector markings in English/French.

B200SRA: Sounder base, Temporal 3 or Continuous tone. See DN-60054.

FMM-1A: FlashScan monitor module. *See DN-6720.*

FDM-1A: FlashScan dual monitor module. *See DN-6720.*

FZM-1A: FlashScan two-wire detector monitor module. *See DN-6720.*

FMM-101A: FlashScan miniature monitor module. *See DN-6720.*

FCM-1A: FlashScan control module. *See DN-6724.*

FCM-1-RELA: FlashScan releasing control module. *See DN-60390.*

FRM-1A: FlashScan relay module. *See DN-6724.*

FDRM-1A: FlashScan dual monitor/dual relay module. *See DN-60709.*

NBG-12LX: Manual pull station, addressable. *See DN-6726.*

N-MPS series: Manual pull stations, addressable and conventional. For use in Canada only. *See DN-5497.*

FM-955: Addressable pull station with two FMM-101A modules.

FM-9551: Addressable pull station with one FMM-101A module.

FM-955-20C: Addressable pull station with two open contacts.

FM-9551S20C: Addressable pull station with one open and one closed extra contacts.

ISO-XA: Isolator module. *See DN-2243.*

ISO-6A: Six Fault isolator module. *See* DN-60844.

XP6-CA: FlashScan six-circuit supervised control module. *See DN-6924.*

XP6-MAA: FlashScan six-zone interface module; connects intelligent alarm system to two-wire conventional detection zone. *See DN-6925.*

XP6-RA: FlashScan six-relay (Form-C) control module. *See DN-6926.*

XP10-MA: FlashScan ten-input monitor module. *See DN-6923.*

SLC-IM: SLC integration module, for VESDAnet detectors. *See DN-60755*

Networking Options

NCM-W, NCM-F: Standard Network Communications Modules. Wire and multi-mode fiber versions available. *See DN-6861.*

HS-NCM-W/MF/SF/WMF/WSF/MFSF: High-speed Network Communications Modules that can connect to two nodes. Wire, single-mode fiber, multi-mode fiber, and media conversion models are available. *See DN-60454.*

RPT-W, RPT-F, RPT-WF: Standard-network repeater board with wire connection (RPT-W), multi-mode fiber connection (RPT-F), or allowing a change in media type between wire and fiber (RPT-WF). Not used with high-speed networks. *See DN-6971.*

ONYXWorks: UL-listed graphics PC workstation, software, and computer hardware. *See DN-7048 for specific part numbers.*

NFN-GW-EM-3: NFN Gateway, embedded. *See DN-60499.*

NWS-3: NOTI•FIRE•NET™ Web Server. *See DN-6928.*

CAP-GW: Common Alerting Protocol Gateway. *See DN-60756.*

VESDA-HLI-GW: VESDAnet high-level interface gateway. *See DN-60753.*

LEDSIGN-GW: UL-listed sign gateway. Interfaces with classic and high-speed NOTI•FIRE•NET networks through the NFN Gateway. *See DN-60679.*

OAX2-24V: UL-listed LED sign, used with LEDSIGN-GW. *See DN-60679.*

Enclosures, Chassis, and Dress Plates

CAB-BM Marine System: Protects equipment in shipboard and waterfront applications. Also order **BB-MB** for systems using 100 AH batteries. For a full list of required and optional equipment, see *DN-60688.*

NFS-LBB: Battery Box (required for batteries over 26 AH).

NFS-LBBR: Same as above, but red.

BB-UZC: Backbox for housing the UZC-256. Required for NFS-320 applications, black. For red, order BB-UZC-R.

SEISKIT-320/B26: Seismic mounting kit. Required for seismic-certified applications with NFS-320C and BB-26. Includes battery bracket for two 26 AH batteries.

SEISKIT-LBB: Seismic kit for the NFS-LBB. Includes battery bracket for two 55 AH batteries.

Other Options

411 Series: Slave Digital Alarm Communicator Transmitters. *See DN-6619.*

IPGSM-4GC: Internet and Digital Cellular Fire Alarm Communicator. Provides selectable configurable paths: cellular only, IP only, or IP primary with cellular backup. Connects to the primary and secondary ports of a DACT. *See DH-60769.*

NFS-320-RB: Replacement board with central processing unit *NOTE: Keypad must be removed before shipping old unit out for repair.*

NFS-320-RBC-FR: Replacement board with central processing unit, Canadian French. *NOTE: Keypad must be removed before shipping old unit out for repair.*

***NOTE:** For other options including compatibility with retrofit equipment, refer to the panel's installation manual, the SLC manual (for intelligent DCL equipment), and the Device Compatibility Document.*

System Specifications

System Capacity

- Intelligent Digital Communications Loop (DCL) 1
- Intelligent detectors 159
- Addressable monitor/control modules 159
- Programmable internal hardware and output circuits 4
- Programmable software zones 99
- Special programming zones 14
- LCD annunciators per FACP 32
- ACS annunciators per FACP ..... 32 addresses x 64 points

Specifications

- Primary input power: 120 VAC, 50/60 Hz, 5.0 A.
- Current draw (standby/alarm):
  - NFS-320C board: 0.250 A. Add 0.035 A for each NAC in use.
  - KDM-R2 (Backlight on): 0.100 A.
- Total output 24 V power: 6.0 A in alarm.

***NOTE:** The power supply has a total of 6.0 A of available power. This is shared by all internal circuits.*

- Standard notification circuits (4): 1.5 A each.

- Resettable regulated 24V power: 1.25 A.
- Two non-resettable regulated 24V power outputs. One at 1.25 A and the other at 0.50 A.
- Non-resettable 5V power: 0.15 A.
- Battery charger range: 18 AH – 200 AH. Use separate cabinet for batteries over 26 AH.
- Float rate: 27.6 V.

Cabinet Specifications

- NFS-320C cabinet dimensions:
  - Backbox: 18.12 in. (46.025 cm) width; 18.12 in. (46.025 cm) height; 5.81 in. (14.76 cm) depth.
  - Door: 18.187 in. (46.195 cm) width; 18.40 in. (46.736 cm) height; 0.75 in. (1.905 cm) depth.

When using trim ring TR-320, mount backbox with at least 1 inch (2.54 cm) between wall surface and front of backbox, to allow door to open fully past the trim ring. The TR-320 molding width is 0.905 in. (2.299 cm).

Shipping Weight

- NFS-320C: 37 lb (16.78 kg) *without batteries.*

Temperature and Humidity Ranges

This system meets NFPA requirements for operation at 0 – 49°C and at a relative humidity 93% ± 2% RH (noncondensing) at 32°C ± 2°C. However, the useful life of the system's standby batteries and the electronic components may be adversely affected by extreme temperature ranges and humidity. Therefore, it is recommended that this system and its peripherals be installed in an environment with a normal room temperature of 15 – 27°C.

Agency Listings and Approvals

The listings and approvals below apply to the basic NFS-320C control panel. In some cases, certain modules may not be listed by certain approval agencies, or listing may be in process. Consult factory for latest listing status.

- **UL/ULC Listed:** S635 (UOJC).
- **FM Approved.**
- **CSFM:** 7165-0028:0243.
- **Fire Dept. of New York:** COA #6121.

Marine Applications: Marine approved systems must be configured using components itemized in this document. (See Main System Components, in "Product Line Information.) Specific connections and requirements for those components are described in the installation document, PN 54756. When these requirements are followed, systems are approved by the following agencies:

- **US Coast Guard:** 161.002/50/0, 161.002/55/0 (Standard 46 CFR and 161.002).
- **Lloyd's Register:** 11/600013 (ENV 3 category).
- **American Bureau of Shipping.**

NOTE: *For information on marine applications, see DN-60688.*

Standards

The NFS-320C complies with the following ULC Standards and NFPA 72, International Building Code (IBC), and California Building Code (CBC) Fire Alarm Systems requirements:

- **ULC-S527-99.**
- **LOCAL** (Automatic, Manual, Waterflow and Sprinkler Supervisory).
- **AUXILIARY** (Automatic, Manual and Waterflow) (requires TM-4).
- **REMOTE STATION** (Automatic, Manual, Waterflow and Sprinkler Supervisory) (requires TM-4).
- **PROPRIETARY** (Automatic, Manual, Waterflow and Sprinkler Supervisory). *Not applicable for FM.*
- **CENTRAL STATION** (Automatic, Manual, Waterflow and Sprinkler Supervisory) (requires DACT).
- **EMERGENCY VOICE/ALARM.**
- **IBC 2012, IBC 2009, IBC 2006, IBC 2003, IBC 2000** (Seismic).
- **CBC 2007** (Seismic).

NOTI•FIRE•NET™, **IntelliQuad™**, and **ONYXWorks™** are trademarks; and **Acclimate® Plus™**, **FirstCommand®**, **FlashScan®**, **Intelligent FAAST®**, **NOTIFIER®**, **ONYX®**, **VeriFire® Tools**, and **VIEW®** are registered trademarks of Honeywell International Inc. **Microsoft®** and **Windows®** are registered trademarks of Microsoft Corporation. **IBM®** is a registered trademark of IBM Corporation.
©2016 by Honeywell International Inc. All rights reserved. Unauthorized use of this document is strictly prohibited.

ISO 9001 CERTIFIED
ENGINEERING & MANUFACTURING QUALITY SYSTEMS

This document is not intended to be used for installation purposes. We try to keep our product information up-to-date and accurate. We cannot cover all specific applications or anticipate all requirements. All specifications are subject to change without notice.

For more information, contact Notifier.
(888) 289-1114
10 Whitmore Road
Woodbridge, Ontario LZL 7Z4
www.notifier.com

ACS Series Annunciators

ONYX® Series

ACM/~~AEM-~~24AT, ACM/AEM-48A

NOTIFIER® by Honeywell

Annunciator Control Systems

General

The ONYX® Series ACS Annunciators provide a modular line of products for annunciation and control of the NOTIFIER ONYX® Series Intelligent Fire Alarm Control Panels, Network Control Annunciators, and NOTIFIER's legacy addressable panels. The ACS line provides arrays of LEDs to indicate point status and, in some versions, switches to control the state of output circuits. These ACS units use a serial interface and may be located at distances of up to 6,000 feet (1,828.8 meters) from the panel.

Features

- Speaker control mode for use with XPIQ and the following panels: NFS2-3030, NFS2-640, NFS-320(C) and NFS-320SYS. Enables the ACS to control operation of groups of multi-channels mapped to groups of multi-speakers.
- Compatible with existing annunciators.
- Color-programmable LEDs.
- On-board end-of-line resistors can be enabled/disabled by setting a switch.
- Alarm/Circuit On and Trouble LED per-point thxoption or more dense Alarm-only option.
- Touch-pad control switch option for remote control of system relays; or silence, reset, and evacuate.
- LEDs may be programmed to display status of indicating circuits or control relays as well as system status conditions.
- System Trouble LED indicator.
- On-Line/Power LED indicator.
- Alarm and trouble resound with flash of new conditions.
- Local sounder for both alarm and trouble conditions with silence/acknowledge button (program options).
- May be powered by 24 VDC from the panel or by remote power supplies.
- Microprocessor-controlled electronics, fully supervised.
- Slip-in custom labels, lettered with standard typewriter or LabelEase program.
- Plug-in terminal blocks for ease of installation and service.

Construction

The ACS modules are provided in two basic controller modules, each with its expander module. The ACM-24AT provides 24 annunciation and control points per module, each with a red, green, or yellow Alarm/Circuit On LED, a yellow Trouble LED, and a touch-key switch. The ACM-48A provides 48 annunciation points per module, each with a red, green, or yellow Alarm/Circuit On LED (for annunciating control relays, the LED indicates ON/OFF).

On the ACM-24AT, each LED point is individually color-programmable. On ACM-48A, each column of 24 LED points can be color-configured using a DIP switch.

Temperature and humidity ranges: This system meets NFPA requirements for operation at 0°C to 49°C (32°F to 120°F); and at a relative humidity (noncondensing) of 85% at 30°C (86°F) per NFPA, and 93% ± 2% at 32°C ± 2°C (89.6°F ± 1.1°F) per ULC. However, the useful life of the system's standby batteries and the electronic components may be adversely affected by extreme temperature ranges and humidity. Therefore, it is recommended that this system and all peripherals be installed in an environment with a nominal room temperature of 15°C to 27°C (60°F to 80°F).

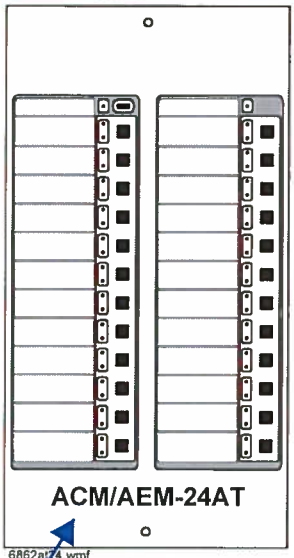

6862at24.wmf

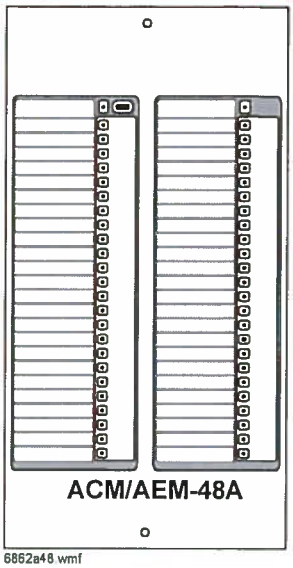

6862a48.wmf

Installation

The ACS Series annunciator and control subsystems use modular hardware assemblies which allow the custom configuration of the annunciator panel to fit the individual job requirements.

Standard backboxes and mounting hardware schemes, including special remote cabinets, allow the annunciators to be constructed and configured with other system components.

When used with the NFS2-3030, NFS2-640, NFS-320 or legacy panels, the ACS modules can be used for manual selection of speaker and telephone circuits. In this application, they are typically mounted in the main control near the microphone and telephone handset.

For remote annunciation applications, the modules are typically mounted in special ABF or ABS boxes. Control switch key locks (AKS-1B) are available.

Communication between the ACS Series annunciators and the host Fire Alarm Control Panel is made through an EIA-485 multi-drop loop, eliminating the need for costly wiring schemes. Four wires are required, two for the EIA-485 communications (twisted pair), and two for 24 VDC regulated power.

Retrofit of ACS Series annunciators into existing systems is easily accomplished. Software may require upgrading, and some legacy panels may require an interface board.

All field-wiring terminations use removable, compression-type terminal blocks for ease of installation, wiring, and circuit testing.

Operation

The ACS Series annunciator and control system provides the NOTIFIER system with up to 32 remote serially connected annunciators, each with a capacity of 96 points, for a total capacity of ***3072 points*** (subject to the capability of the FACP). The NFS2-3030 and NCA-2 are capable of using the full 96 points.

Local or remote power supplies and serial communications allow the ACS to be located virtually anywhere in the protected premises.

On NFS-320, NFS2-640, NFS2-3030, NCA-2 and the legacy panels, system alarm and/or trouble conditions may be annunciated on a per-point basis, or in a grouped or zone configuration.

Control of system operational controls, such as Signal Silence, System Reset, and local annunciation controls (such as Local Acknowledge and Lamp Test) may be accomplished through the module's rubber keypad.

Product Line Information

ACM-24AT: *(see figure)* The Annunciator Control Module-24AT contains 24 color-programmable (red/green/yellow) Active and 24 yellow Trouble LEDs, 24 momentary touch-pad switches, a System Trouble LED, an On-Line/Power LED, and a local piezo sounder with a silence/acknowledge switch for audible indication of alarm and trouble conditions. Includes instructions. 8.375" (21.27 cm) high; 4.375" (11.11 cm) wide.

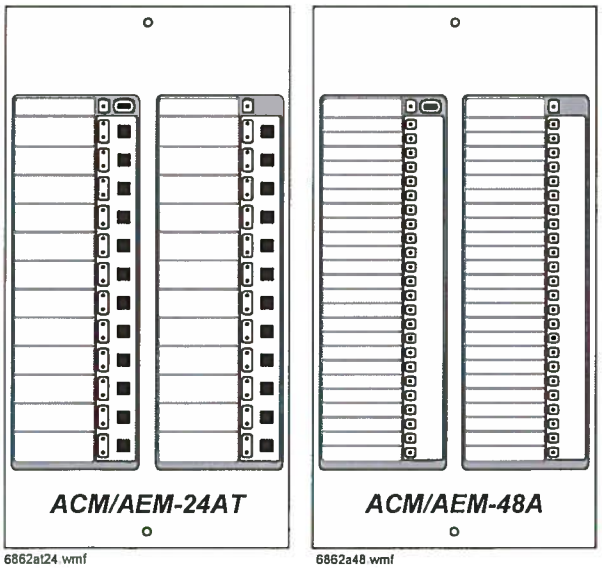

6862at24.wmf 6862a48.wmf

AEM-24AT: The Annunciator Expander Module-24AT expands the ACM-24AT by 24 system points. The AEM-24AT is identical in size and in frontal appearance to the ACM-24AT. Up to three of these expander modules can be supported by an ACM-24AT, for a maximum of 96 system points. 8.375" (21.27 cm) high; 4.375" (11.11 cm) wide. ***NOTE:*** *The AEM-24AT* ***cannot*** *be used to expand the ACM-48A.*

ACM-48A: *(see figure)* The Annunciator Control Module-48A contains 48 color-programmable (red/green/yellow) Active LEDs, a System Trouble LED, an On-Line/Power LED, and a local piezo sounder with a Silence/Acknowledge switch for audible indication of alarm and trouble conditions. Includes instructions. 8.375" (21.27 cm) high; 4.375" (11.11 cm) wide.

AEM-48A: The Annunciator Expander Module-48A expands the ACM-48A by 48 system points. The AEM-48A is identical in frontal appearance to the ACM-48A. One expander module can be supported by an ACM-48A, providing a maximum of 96 points (subject to the capability of the FACP). 8.375" (21.27 cm) high; 4.375" (11.11 cm) wide. ***NOTE:*** *The AEM-48A* ***cannot*** *be used to expand the ACM-24AT.*

ABS-1B: *(see figure)* The Annunciator Surface Box-1B (black) provides for the remote mounting of one annunciator module in a surface-mount enclosure. Knockouts are provided for use with 1/2" (1.27 cm) conduit. The annunciator mounts directly to the ABS-1B without a dress plate. 8.5" (21.59 cm) high x 4.5" (11.43 cm) wide x 2" (5.08 cm) deep. ***NOTE:*** *The ABS-1B will not support the installation of the AKS-1B Annunciator Key Switch.*

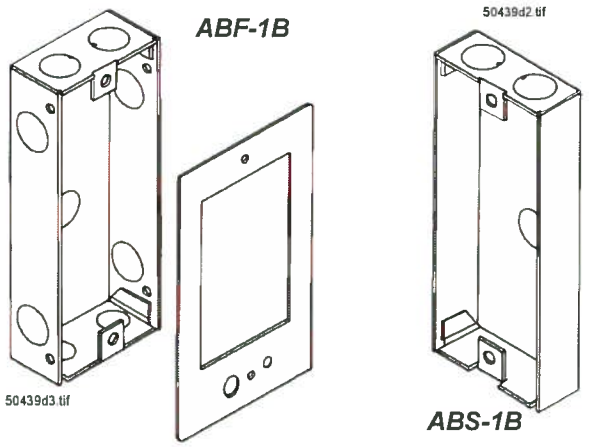

ABS-1TB: The ABS-1TB is an attractive surface-mount backbox for mounting one ACS Series Annunciator. Unlike the ABS-1B, the ABS-1TB has an increased depth that allows mounting of the AKS-1B Annunciator Key Switch. Black, 9.938" (25.24 cm) high x 4.625" (11.75 cm) wide x 2.5" (6.35 cm) deep. ***NOTE:*** *An earlier gray model, ABS-1TB, will not accommodate the ACM/AEM-24AT or ACM/AEM-48A. The slightly deeper ABS-1TB will accommodate both the ACM/AEM-24AT or ACM/AEM-48A models and the ACM-16AT/ACM-32A Series (see DN-0524).*

ABS-2B: The Annunciator Surface Box-2B (black) provides for the surface mounting of one ACM-24AT/AEM-24AT combination or one ACM-48A/AEM-48A combination. Knockouts are provided for use with 1/2" (1.27 cm) conduit. The annunciators mount directly to the ABS-2B without a dress plate. 8.5" (21.59 cm) high x 8.92" (22.66 cm) wide x 2" (5.08 cm) deep. ***NOTE:*** *The ABS-2B will not support the installation of the AKS-1B Annunciator Key Switch.*

ABF-1B: *(see figure)* The Annunciator Flush Box-1B (black) provides for the remote mounting of a single annunciator module in a flush-mount enclosure. Knockouts are provided for use with 1/2" (1.27 cm) conduit. The ABF-1B includes a painted black metal trim plate [11" (27.94 cm) high x 6.25" (15.875 cm) wide], mounting hardware, and an adhesive-backed annunciator label for the dress plate. 9.938" (25.24 cm) high x 4.625" (11.75 cm) wide x 2.5" (6.35 cm) deep.

ABF-2B: The Annunciator Flush Box-2B (black) provides for the flush mounting of two annunciator modules. Includes a painted black metal trim plate [11" (27.94 cm) high x 10.625" (26.99 cm) wide] and adhesive-backed annunciator label. 9.938" (25.24 cm) high x 9.188" (23.34 cm) wide x 3.75" (9.525 cm) deep.

ABF-4B: *(see figure)* The Annunciator Flush Box-4B (black) provides for the remote mounting of one to four annunciator modules. Knockouts are provided for use with 1/2" (1.27 cm) conduit. The flush-mounted ABF-4B includes a painted black metal trim plate [11" (27.94 cm) high x 19.375" (49.21 cm)

wide] and an annunciator label. 9.938" (25.24 cm) high x 17.75" (45.09 cm) wide x 2.5" (6.35 cm) deep.

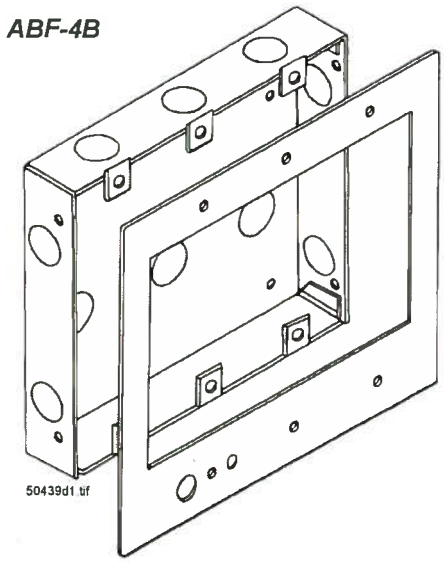

ABF-1DB, ABF-2DB, ABS-4D: The ABF-1DB, ABF-2DB and ABS-4D are semi-flush-mount backboxes for ACS Series Annunciators. The ABF-1DB mounts one annunciator module; the ABF-2DB mounts two modules; the ABS-4D mounts up to four modules. The ABS-4D Series can also accomodate the NCA-2 network annunciator, using the NCA-2 Retro Kit (NCA-2Retro); the NCA-2 is mounted in the center position with a blank plate (BMP-1) mounted on each side. Black with an attracted smoked glass door and keylock. The **ABS-4D** is hinged on the bottom for stability.

- **DIMENSIONS, ABF-1DB:** ***Box only:*** 9.938" (25.24 cm) high x 4.625" (11.75 cm) wide x 2.5" (6.35 cm) deep. ***Door:*** 11" (27.94 cm) high x 6" (15.24 cm) wide x 0.75" (1.9 cm) deep.
- **DIMENSIONS, ABF-2DB:** ***Box only:*** 9.938" (25.24 cm) high x 9.188" (23.34 cm) wide x 3.75" (9.525 cm) deep. ***Door:*** 11" (27.94 cm) high x 10.375" (26.35 cm) wide x 0.75" (1.9 cm) deep.
- **DIMENSIONS, ABS-4D:** ***Box only:*** 11.97" (30.40 cm) high x 19.87" (50.47cm) wide x 3.50" (8.89 cm) deep. ***Door:*** 11.97" (30.40 cm) high x 19.87" (50.47 cm) wide x 1.25" (3.18 cm) deep.

ADP-4B: The Annunciator Dress Panel-4B (black) provides for the cabinet mounting of one to four modules. The ADP-4B hinge-mounts to the CAB-4 Series cabinet. Modules mount directly to threaded studs on the dress panel.

DP-DISP: (see figure) The Dress Panel-Display allows one to four modules to be mounted in the ***top row*** of the CAB-4 Series backbox. Modules mount directly to threaded studs on the DP-DISP.

DP-DISP2: NFS2-640 Dress Panel accomodates up to two annunciator modules (no expanders).

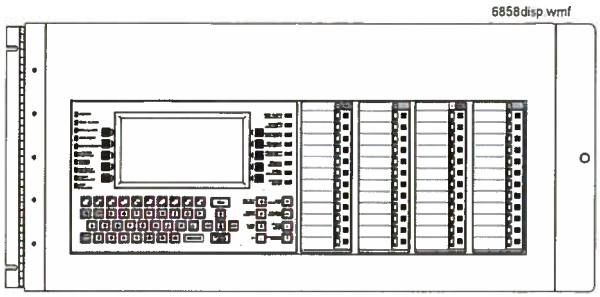

DP-DISP Dress Panel with NCA-2 Network Control Annunciator in left two positions, and two ACM-24AT Annunciators at right.

BMP-1: Annunciator Blank Module is a flat black dress plate that covers unused module positions in the annunciator back-box or in the ADP-4B. 8.375" (21.27 cm) high x 4.375" (11.11 cm) wide. Studs for a variety of module mounting options are available.

AKS-1B**:** The Annunciator Key Switch-1B (black) provides access security for the control switches on the ACM/AEM-24AT. The key switch kit includes a key and hardware for mounting to the ABF-1B. Also included is an adhesive-backed annunciator label for use with the key switch/dress plate assembly. ***NOTE:*** *The AKS-1B can only be employed with the ABS-1TB.*

Agency Listings and Approvals

The listings and approvals below apply to the ACM/AEM-24AT and the ACM/AEM-48A. In some cases, certain modules or applications may not be listed by certain approval agencies, or listing may be in process. Consult factory for latest listing status.

- **UL**: S635
- **ULC**: S635
- **FDNY:** COA #6067 (NFS2-640), COA #6065 (NFS2-3030)
- **CSFM**: 7120-0028:0156, 7165-0028:0243, 7165-0028:0224
- **FM** approved

ONYX® and **NOTIFIER®** are registered trademarks of Honeywell International Inc.
©2011 by Honeywell International Inc. All rights reserved. Unauthorized use of this document is strictly prohibited.

ISO 9001 CERTIFIED
ENGINEERING & MANUFACTURING
QUALITY SYSTEMS

This document is not intended to be used for installation purposes.
We try to keep our product information up-to-date and accurate.
We cannot cover all specific applications or anticipate all requirements.
All specifications are subject to change without notice.



Made in the U.S. A.

For more information, contact Notifier. Phone: (203) 484-7161, FAX: (203) 484-7118.
www.notifier.com

ONYXWorks® NFN

Embedded Gateway-3

NOTIFIER® by Honeywell

Network Systems

General

The NOTI•FIRE•NET™ Gateway is an intelligent gateway interface for the ONYXWorks® fire monitoring workstation. This gateway facilitates complete monitoring and control of a NOTI•FIRE•NET™ network. In addition, it supports full panel programming and network diagnostics.

The embedded gateway is a standalone version and is equipped with IP capability thus enabling ONYX® Series users to monitor multiple sites over an Ethernet network without the need for remote workstations.

Features

- Enables ONYX® Series workstation to monitor alarm, pre-alarm, trouble, disabled events, etc. for NFN fire alarm control panels.
- ONYXWorks® supports up to 50 intelligent gateways.
- Compatible with standard and high speed NOTI•FIRE•NET™ network.
- Adds acknowledge, silence, reset, enable/disable, and activate/deactivate control capability to the workstation.
- Supports fire alarm control panel programming upload/downloads and modifications.
- Embedded gateway allows remote IP connections and increases scalability of network.
- Supervised IP connections for remote workstations and gateways.
- Multiple workstations can access the gateway at the same time.
- Gateway redundancy for network survivability.

Compatibility

The NOTI•FIRE•NET™ Gateway is compatible with ONYXWorks® and ONYX FirstVision and interfaces to NOTI•FIRE•NET™ version 5.0 and higher, as well as a high speed NOTI•FIRE•NET™ network for the following panels and devices:

- ONYX Series
- AM2020/AFP1010 (version 5.0 SIB-NET)
- AFP-200 (version 5.0 NAM)
- AFP-300/AFP-400 (version 5.0 NAM)
- BACnet Gateway
- NCA-2/NCA Network Control Annunciator
- NOTI•FIRE•NET™Web Server

Specifications

- Power input: 24 VDC
- Input current: 450 mA @ 24 VDC (without NCM).
- Operating temperature: 0°C to 49°C (32°F to 120°F).
- Direct connection to NFS2-640, NFS-640, NFS-320, NFS2-3030, and NFS-3030 fire alarm control panels. NCM required for connection to NOTI•FIRE•NET™, and HS-NCM for connection to high-speed network. (See data sheets DN-6861 and DN-60454.)

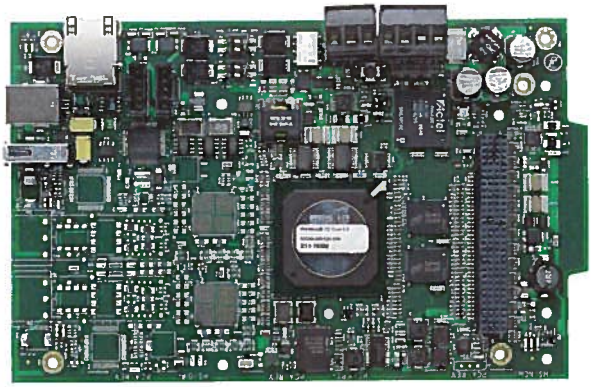

NFN-GW-EM-3

Standards and Codes

The NOTI•FIRE•NET™ Gateway complies with the following UL/ULC Standards and NFPA 72 Fire Alarm Systems requirements:

- UL 864
- UL 1076
- UL 2017
- ULC S559-04
- ULC S527-99

Listings and Approvals

These listings and approvals apply to the modules specified in this document. In some cases, certain modules or applications may not be listed by certain approval agencies, or listing may be in process. Consult factory for latest listing status.

- **UL / ULC:** S5697
- **FM Approved**
- **CSFM:** 7300-1525:103
- **MEA:** 286-07-E
- **FDNY:** COA #6041

Ordering Information

NFN-GW-EM-3: NOTI•FIRE•NET™ Gateway, embedded. Includes PC board, NUP to NUP cable (75577), USB Cable (75665) and NFN Configuration.

Additional EMBEDDED VERSION Gateway required components:

- NCM for connection to NOTI•FIRE•NET™.
- HS-NCM for connection to high speed NOTI•FIRE•NET™.
- IBM®-compatible PC with Windows® XP.
- Standard Ethernet network cable with RJ45 to RJ45 connectors.
- ONYXWorks Workstation V3.12 or above .
- NFN Network Version 5.0 or above.
- Verifire Tools Version 5.71 or above.

Remote Monitoring

NFN-GW-EM-3

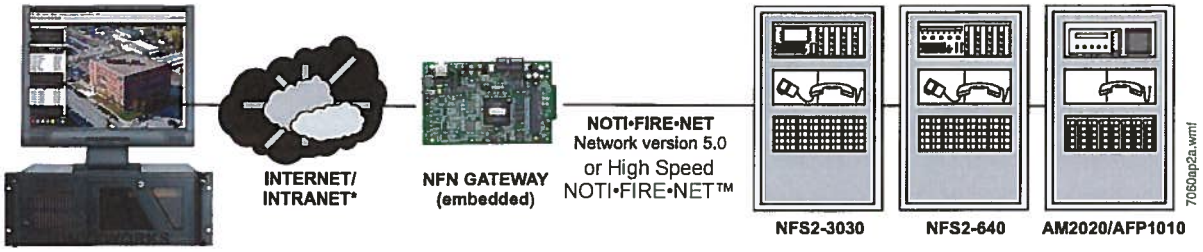

* A UL Listed ethernet (TCP/IP) switch is required between a shared-IP network and the ONYXWORKS equipment. Contemporary Control Systems, Inc. (www.ctrlink.com) has several UL864 recognized switching hubs.

Firefighters' Display

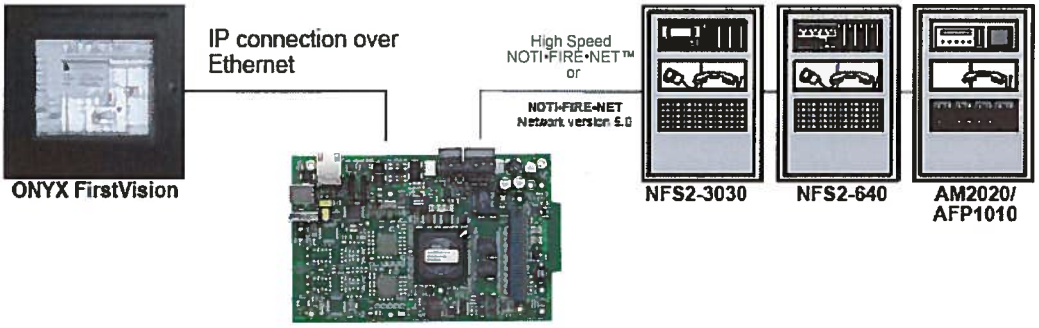

NION®, NOTIFIER®, ONYX® and ONYXWorks® are registered trademarks and NOTI•FIRE•NET™, NOTIFIY-IP™, and ONYX FirstVision™ are trademarks of Honeywell International Inc. Windows® is a registered trademark of Microsoft Corporation.
©2010 by Honeywell International Inc. All rights reserved. Unauthorized use of this document is strictly prohibited.

ISO 9001 CERTIFIED
ENGINEERING & MANUFACTURING
QUALITY SYSTEMS

This document is not intended to be used for installation purposes.
We try to keep our product information up-to-date and accurate.
We cannot cover all specific applications or anticipate all requirements.
All specifications are subject to change without notice.

Made in the U.S. A.

For more information, contact Notifier. Phone: (203) 484-7161, FAX: (203) 484-7118.
www.notifier.com

BAT Series Batteries

Sealed Lead-Acid

NOTIFIER® by Honeywell

General

BAT Series Batteries are Power Sonic brand batteries. BAT Series (or Power Sonic brand) batteries are recommended for secondary power or backup power for all NOTIFIER fire alarm control equipment.

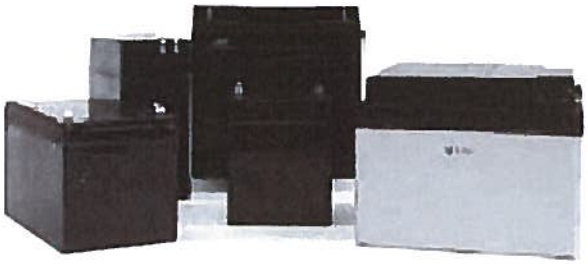

6933cov.jpg

Features

- Provide secondary power for control panels.
- Sealed and maintenance-free.
- Overcharge protected.
- Easy handling with leakproof construction.
- Ruggedly constructed, high-impact case (ABS, polystyrene, or polypropylene, depending on models).
- Long service life.
- Compact design.

Agency Listings and Approvals

The listings and approvals below apply to BAT Series Batteries. In some cases, certain modules may not be listed by certain approval agencies, or listing may be in process. Consult factory for latest listing status.

- **UL Recognized Components**: MH20845 *(Power-Sonic)*

Ordering Information

BAT-1250-BP: 10-unit bulk pack of BAT-1250 (12 V 5 AH)
BAT-1270-BP: 5-unit bulk pack of BAT-1270 (12 V 7 AH)
BAT-12120-BP: 4-unit bulk pack of BAT-12120 (12V 12 AH)
BAT-12180-BP: 2-unit bulk pack of BAT-12180 (12 V 18 AH)
BAT-12260-BP: 2-unit bulk pack of BAT-12260 (12 V 26 AH)
BAT-12550: single battery (12 V 55 AH)
BAT-121000: single battery (12 V 100 AH)

Part Number Reference & Specifications

Part Number	Power Sonic Part Number	Battery Description			DIMENSIONS									
		Nominal Voltage V	Nominal Capacity @ 20 hr. rate A.H.		Width		Depth		Height		Height over terminal		Weight	
					in.	mm	in.	mm	in.	mm	in.	mm	lb.	kg.
BAT-1250	PS-1250	12	5	sealed	3.54	90	2.76	70	4.02	102	4.21	107	4.1	1.9
BAT-1270	PS-1270	12	7	sealed	5.95	151	2.56	65	3.7	94	3.86	98	4.8	2.18
BAT-12120	PS-12120	12	12	sealed	5.95	151	3.86	98	3.7	94	3.94	100	7.92	3.59
BAT-12180	PS-12180	12	18	sealed	7.13	181	2.99	76	6.57	167	6.57	167	12.6	5.8
BAT-12260	PS-12260	12	26	sealed	6.56	167	6.97	177	4.92	125	4.92	125	17	7.71
BAT-12550	PS-12250	12	55	sealed	9.04	230	654	138	8.2	208	8.98	228	36	16.33
BAT-121000	PS-121000	12	100	sealed	12	305	6.6	168	8.2	208	8.98	228	68	30.84

Characteristic Discharge Curves

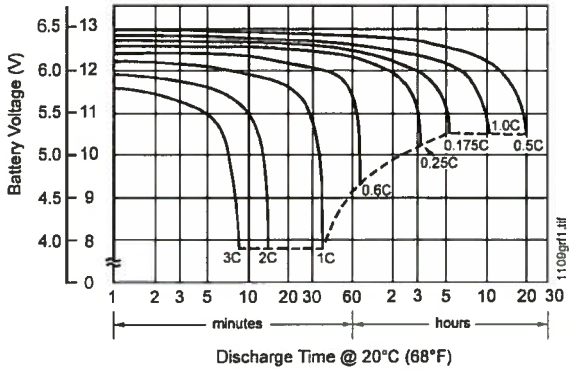

Effect of Temperature on Capacity

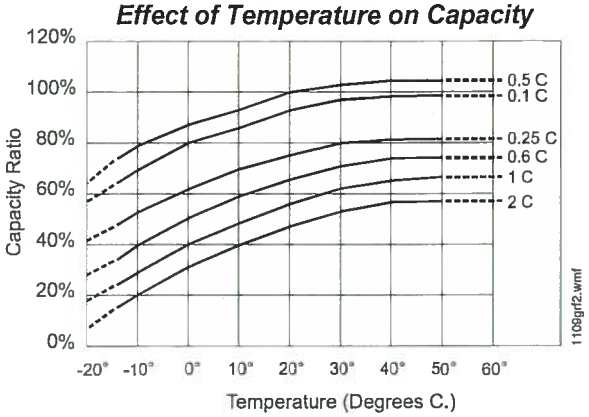

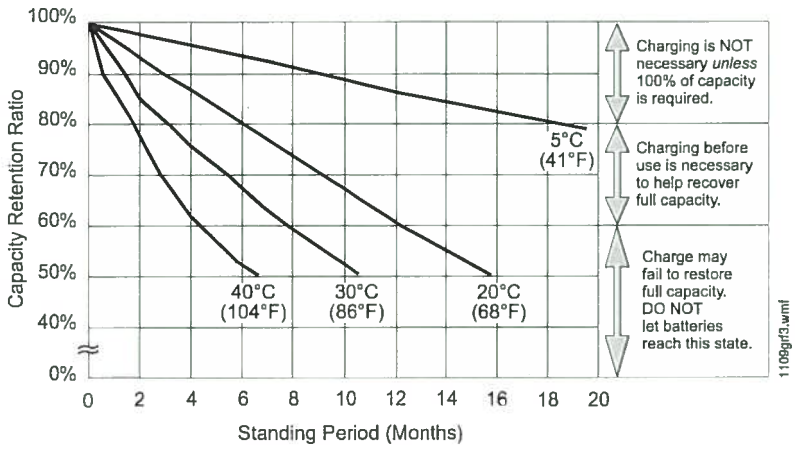

at left:
PS-121000
Shelf-Life
and Storage

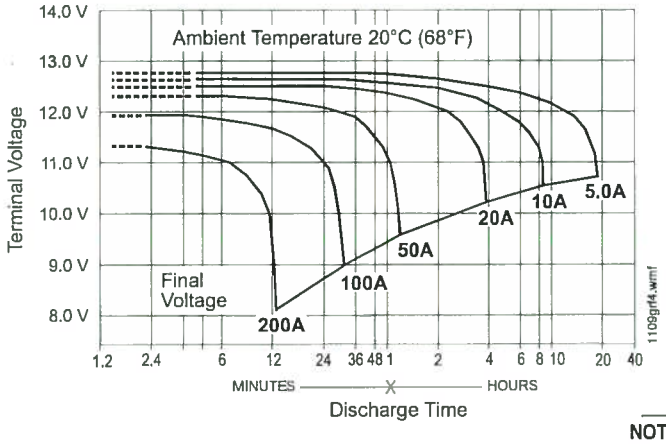

at left:
PS-121000
Discharge
Characteristics

NOTIFIER® is a registered trademark of Honeywell International Inc.
Batteries display trademarks of the manufacturer.
©2011 by Honeywell International Inc. All rights reserved. Unauthorized use of this document is strictly prohibited.

ISO 9001 CERTIFIED
ENGINEERING & MANUFACTURING QUALITY SYSTEMS

This document is not intended to be used for installation purposes.
We try to keep our product information up-to-date and accurate.
We cannot cover all specific applications or anticipate all requirements.
All specifications are subject to change without notice.

Made in the U.S.A.

For more information, contact Notifier. Phone: (203) 484-7161, FAX: (203) 484-7118.
www.notifier.com

ISO-6(A)

Six Fault Isolator Module

NOTIFIER® by Honeywell

Intelligent Addressable Devices

General

The ISO-6(A) Six Fault Isolator Module provides six equivalent circuits that will allow a portion of the communications loop to continue operating when a short circuit occurs on that loop. An amber LED indicator will blink in the normal state for each of the six inputs and will latch on during a short circuit condition. The module will automatically restore the communications loop to normal condition when the short circuit is removed.

The ISO-6 Six Isolator Module is an automatic switch that opens when the line voltage drops below four volts. Isolator modules should be spaced between groups of sensors or modules in a loop to protect the rest of the loop. If a short occurs between any two isolators, then both isolators immediately switch to an open circuit state and isolate the devices between them. The remaining units on the loop continue to fully operate.

Features

- Removable 12 to 18 AWG plug-in terminal blocks.
- Individual LED status indicators.
- Six individual, Class B isolator circuits.
- Mount up to two modules in BB-XP enclosure (optional).
- Mount up to six modules on a CHS-6 chassis in a CAB-4/CAB-3 series, EQ series, or BB-25 cabinet.
- Mounting hardware included.

Applications

The ISO-6 Fault Isolator Modules should be spaced between groups of sensors in an SLC to protect the rest of the loop. Use to isolate short circuit problems within a section of a loop so that other sections can continue to operate normally. The ISO-6 supports a maximum of 25 devices between isolators.

When more than 100 Isolator Modules are connected to an SLC loop, the address capacity of the loop is reduced by two (2) addresses for every isolator device in excess of 100.

Specifications

Normal Operating Voltage: 15-32 VDC.

Stand-By Current: 450 µA per circuit, 2.7 mA all circuits.

Maximum Current Draw: 17 mA per circuit in isolation, 102 mA with all circuits in isolation.

Temperature Range: 32° F to 120° F (0° C to 49° C).

Humidity: 10% to 85% non-condensing.

Dimensions: 6.8"H x 5.8"W x 1.0"D.

Shipping weight: 1.1 lb. (0.50 kg) including packaging.

Mounting Options: CHS-6 Chassis, BB-XP Cabinet, BB-25 Cabinet, CAB-4 Series Cabinet, EQ Series Cabinet.

Wire Gauge: 12 AWG (3.31 mm²) to 18 AWG (0.821 mm²).

Compatible Devices: See the documentation for your panel, and the *Device Compatibility Document*.

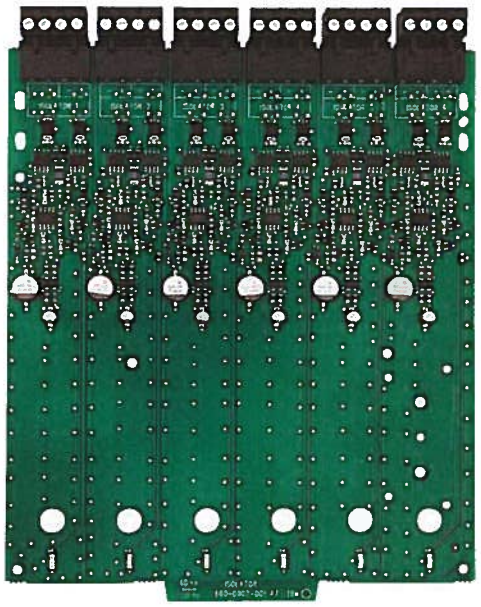

Agency Listings and Approvals

The listings and approvals below apply to ISO-6 components. In some cases, certain modules or applications may not be listed by certain approval agencies, or listing may be in process. Consult factory for latest listing status.

- **UL/ULC Listed:** S3705.
- FM Approved.
- CSFM: 7300-1653-0234.

Product Line Information

ISO-6: Six Isolator Module.

ISO-6A: ULC-listed version of ISO-6.

BB-XP: Optional cabinet for one or two modules. **Door Dimensions:** 9.234" (23.454 cm) wide (9.484" [24.089 cm] including hinges), x 12.218" (31.0337 cm) high, x 0.672" (1.7068 cm) deep. **Backbox Dimensions:** 9.0" (22.860 cm) wide (9.25" [23.495 cm] including hinges), x 12.0" (30.480 cm) high x 2.75" (6.985 cm). **Chassis Dimensions** (installed): 7.150" (18.161 cm) wide overall x 7.312" (18.5725 cm) high interior overall x 2.156" (5.4762 cm) deep overall.

BB-25: Optional cabinet for up to six modules mounted on CHS-6 chassis (below). **Door Dimensions:** 24.0" (60.96 cm) wide x 12.632" (32.0852 cm) high, x 1.25" (3.175 cm) deep, hinged at bottom. **Backbox Dimensions:** 24.0" (60.96 cm) wide x 12.550" (31.877 cm) high x 5.218" (13.2537 cm) deep.

CHS-6: Chassis, mounts up to six modules in a CAB-4 Series cabinet (see DN-6857), EQ Series cabinet (see DN-60229), or BB-25 cabinet.

Notifier® is a registered trademark of Honeywell International Inc.
©2015 by Honeywell International Inc. All rights reserved. Unauthorized use of this document is strictly prohibited.

ISO 9001 CERTIFIED ENGINEERING & MANUFACTURING QUALITY SYSTEMS

This document is not intended to be used for installation purposes.
We try to keep our product information up-to-date and accurate.
We cannot cover all specific applications or anticipate all requirements.
All specifications are subject to change without notice.

For more information, contact Notifier. Phone: (203) 484-7161, FAX: (203) 484-7118.
www.notifier.com

NBG-12LX

Addressable Manual Pull Station

NOTIFIER® by Honeywell

Intelligent/Addressable Devices

General

The Notifier NBG-12LX is a state-of-the-art, dual-action (i.e., requires two motions to activate the station) pull station that includes an addressable interface for any Notifier intelligent control panel except FireWarden series panels, and the NSP-25 panel. Because the NBG-12LX is addressable, the control panel can display the exact location of the activated manual station. This leads fire personnel quickly to the location of the alarm.

Features

- Maintenance personnel can open station for inspection and address setting without causing an alarm condition.
- Built-in bicolor LED, which is visible through the handle of the station, flashes in normal operation and latches steady red when in alarm.
- Handle latches in down position and the word "ACTIVATED" appears to clearly indicate the station has been operated.
- Captive screw terminals wire-ready for easy connection to SLC loop (accepts up to 12 AWG/3.25 mm² wire).
- Can be surface mounted (with SB-10 or SB-I/O) or semi-flush mounted. Semi-flush mount to a standard single-gang, double-gang, or 4" (10.16 cm) square electrical box.
- Smooth dual-action design.
- Meets ADAAG controls and operating mechanisms guidelines (Section 4.1.3[13]); meets ADA requirement for 5 lb. maximum activation force.
- Highly visible.
- Attractive shape and textured finish.
- Key reset.
- Includes Braille text on station handle.
- Optional trim ring (BG12TR).
- Meets UL 38, Standard for Manually Actuated Signaling Boxes.
- Up to 99 NBG-12LX stations per loop on CLIP protocol loops.
- Up to 159 NBG-12LX stations per loop on FlashScan® protocol loops.
- Dual-color LED blinks green to indicate normal on FlashScan® systems.

Construction

Shell, door, and handle are molded of durable polycarbonate material with a textured finish.

Specifications

- **Shipping Weight:** 9.6 oz. (272.15 g)
- **Normal operating voltage:** 24 VDC.
- **Maximum SLC loop voltage:** 28.0 VDC.
- **Maximum SLC loop current:** 375 µA.
- **Temperature Range:** 32°F to 120°F (0°C to 49°C)
- **Relative Humidity:** 10% to 93% (noncondensing)
- **For use indoors in a dry location**



The NBG-12LX
Addressable Manual Pull Station

Installation

The NBG-12LX will mount semi-flush into a single-gang, double-gang, or standard 4" (10.16 cm) square electrical outlet box, or will surface mount to the model SB-10 or SB-I/O surface backbox. If the NBG-12LX is being semi-flush mounted, then the optional trim ring (BG12TR) may be used. The BG12TR is usually needed for semi-flush mounting with 4" (10.16 cm) or double-gang boxes (not with single-gang boxes).

Operation

Pushing in, then pulling down on the handle causes it to latch in the down/activated position. Once latched, the word "ACTIVATED" (in bright yellow) appears at the top of the handle, while a portion of the handle protrudes from the bottom of the station. To reset the station, simply unlock the station with the key and pull the door open. This action resets the handle; closing the door automatically resets the switch.

Each manual station, on command from the control panel, sends data to the panel representing the state of the manual switch. Two rotary decimal switches allow address settings (1 – 159 on FlashScan® systems, 1 – 99 on CLIP systems).

Architectural/Engineering Specifications

Manual Fire Alarm Stations shall be non-coded, with a key-operated reset lock in order that they may be tested, and so designed that after actual Emergency Operation, they cannot be restored to normal except by use of a key. An operated station shall automatically condition itself so as to be visually detected as activated. Manual stations shall be constructed of red-colored polycarbonate material with clearly visible operating instructions provided on the cover. The word FIRE shall appear on the front of the stations in white letters, 1.00 inches (2.54 cm) or larger. Stations shall be suitable for surface mounting on matching backbox SB-10 or SB-I/O; or semi-flush mounting on a standard single-gang, double-gang, or 4"

(10.16 cm) square electrical box, and shall be installed within the limits defined by the Americans with Disabilities Act (ADA) or per national/local requirements. Manual Stations shall be Underwriters Laboratories listed.

Manual stations shall connect with two wires to one of the control panel SLC loops. The manual station shall, on command from the control panel, send data to the panel representing the state of the manual switch.. Manual stations shall provide address setting by use of rotary decimal switches.

The loop poll LED shall be clearly visible through the front of the station. The LED shall flash while in the normal condition, and stay steadily illuminated when in alarm.

Product Line Information

NBG-12LX: Dual-action addressable pull station. Includes key locking feature.

SB-10: Surface backbox; metal.

SB-I/O: Surface backbox; plastic.

BG12TR: Optional trim ring.

17021: Keys, set of two.

NY-Plate: New York City trim plate

Agency Listings and Approvals

In some cases, certain modules or applications may not be listed by certain approval agencies, or listing may be in process. Consult factory for latest listing status.

- **UL / CUL Listed:** S692 (listed for Canadian and non-Canadian applications)
- **MEA:** 67-02-E
- **CSFM:** 7150-0028:0199
- **FDNY:** COA #6038 (NFS2-640), COA #6058 (NFS2-3030)
- **BSMI:** CI313066760047
- **U.S. Coast Guard:** 161.002/23/3 (AFP-200); 161.002/27/3 (AM-2020/AFP-1010; 161.002/42/1 (NFS-640)
- **Lloyd's Register:** 02/6007 (NFS-640); 94/60004 (E2) (AFP-200); 03/60011 (E1); 07/60007 (NFS2-3030)
- **FM** Approved

Patented: U.S. Patent No. D428,351; 6,380,846; 6,314,772; 6,632,108.

Notifier® and FlashScan® are a registered trademarks of Honeywell International Inc.
©2010 by Honeywell International Inc. All rights reserved. Unauthorized use of this document is strictly prohibited.

ISO 9001 CERTIFIED
ENGINEERING & MANUFACTURING QUALITY SYSTEMS

This document is not intended to be used for installation purposes.
We try to keep our product information up-to-date and accurate.
We cannot cover all specific applications or anticipate all requirements.
All specifications are subject to change without notice.

Made in the U.S. A.

For more information, contact Notifier. Phone: (203) 484-7161, FAX: (203) 484-7118.
www.notifier.com

FAPT-851(A)

Acclimate® Plus™ Multi-Sensor
Low-Profile Intelligent Detector

NOTIFIER® by Honeywell

Intelligent/Addressable Devices

General

The Notifier FAPT-851(A) Acclimate® Plus™ detector is an intelligent, addressable, multi-sensing, low-profile detector designed for use with Notifier Notifier Onyx and CLIP series Fire Alarm Control Panels (FACPs).

The Acclimate Plus detector uses a combination of photoelectric and thermal sensing technologies to increase immunity to false alarms. Unlike traditional intelligent detectors, the Acclimate Plus detector has a microprocessor in the detector head that processes alarm data. As a result, the Acclimate Plus detector adjusts its sensitivity automatically, without operator intervention or control panel programming.

Areas where the Acclimate Plus detector is especially useful include office complexes, schools, college campuses, manufacturing and industrial facilities, and anywhere else the use of a particular area may change. The Acclimate Plus detector automatically adjusts its sensitivity to the environment.

FlashScan® (U.S. Patent 5,539,389) is a communication protocol developed to greatly enhance the speed of communication between analog intelligent devices and compatible systems. Intelligent devices communicate in a grouped fashion. If one of the devices within the group has new information, the panel's CPU stops the group poll and concentrates on single points. The net effect is response speed greater than five times that of earlier designs.

Features

- Automatically adjusts sensitivity levels without operator intervention or programming. Sensitivity increases with heat.
- Microprocessor-based, combination photo and thermal technology.
- Compatible with all Notifier Onyx and CLIP series Fire Alarm Control Panels (FACPs).
- Addressable-analog communication.
- Sleek, low-profile design.
- Two-wire SLC connection.
- Rotary, decimal addressing (1-99 on CLIP systems, 1-159 on FlashScan systems).
- Addresses can be viewed and changed without electronic programmers.
- Dual bi-color LED design provides 360° viewing angle.
- LEDs lock red when in alarm. In FlashScan, LEDs flash green in standby for normal condition.
- Built-in tamper-resistant feature.
- Constructed of off-white fire-resistant plastic, designed to commercial standards, and offers an attractive appearance.
- SEMS screws for wiring of the separate base.
- Several base options, including relay, isolator, and sounder.
- Built-in functional test switch activated by external magnet.
- Listed to UL 268.
- Capable of heat-only alarm mode, enabled by a special command from the panel. Smoke alarms are ignored.
- Low-temperature signal at 45°F +/– 10°F (7.22°C +/– 5.54°C).



FAPT-851 with B210.png

FAPT-851(A) in B210LP(A) Base

Specifications

Sensitivity: *auto-adjusting levels*: 1 to 2%/ft. and 2 to 4%/ft. with classic CLIP systems; 1 to 2, 2 to 3, and 3 to 4%/ft. with systems; *fixed-sensitivity levels:* 1, 2, and 4%/ft. with classic CLIP systems; 0.5, 1, 2, 3, and 4%/ft. with FlashScan systems.

Size: 2.0" (5.3 cm) high; base determines diameter.

- **B210LP(A):** 6.1" (15.5 cm) diameter.
- **B501(A):** 4.1" (10.4 cm) diameter.
- **B200S(A):** 6.875" (17.46 cm) diameter.
- **B200SR(A):** 6.875" (17.46 cm) diameter.
- **B224RB(A):** 6.2" (15.748 cm) diameter.

Shipping weight: 5.2 oz. (147 g).

Operating temperature: 0°C to 38°C (32°F to 100°F).

UL-Listed velocity range: 0 – 4000 ft./min. (1219.2 m/min.), suitable for installation in ducts.

Relative humidity: 10% – 93% noncondensing.

Thermal sensing rating: fixed-temperature setpoint 135°F (57°C).

ELECTRICAL SPECIFICATIONS

Voltage range: 15 – 32 volts DC peak.

Standby current (max. avg.): 300 µA.

Loop resistance: 50 ohms maximum; varies according to control panel used. Refer to panel installation manuals.

LED current (max.): 6.5 mA @ 24 VDC ("ON").

Installation

The FAPT-851(A) plug-in detector uses a separate base to simplify installation, service, and maintenance. A special tool allows maintenance personnel to plug-in and remove detectors without using a ladder. Suitable mounting base boxes include:

- 4.0" (10.16 cm) square box.
- 3.5" (8.89 cm) or 4.0" (10.16 cm) octagonal box.
- Single-gang box (except relay or isolator base).

NOTE: *The FAPT-851(A) detector has the unique ability to adjust sensitivity according to the environment, based on heat and smoke levels. Avoid installing these detectors in locations that are susceptible to rapid and high temperature changes. An example of an incorrect application would be near or in line with the output of a self-contained heater.*

Agency Listings and Approvals

These listings and approvals apply to the modules specified in this. In some cases, certain modules or applications may not be listed by certain approval agencies, or listing may be in process. *Consult factory for latest listing status.*

- **UL Listed:** S1115.
- **ULC Listed:** S1115.
- **MEA Listed:** 225-02-E.
- **FM Approved.**
- **CSFM:** 7272-0028:0206.
- **U.S. Coast Guard:** 161.002/42/1 (NFS-640); 161.002/50/0 (NFS2-640/NFS-320/NFS-320C, excluding B210LP(A)).
- **Lloyd's Register:** 11/600013 (NFS2-640, NFS-320/NFS-320C, excluding B210LP(A)).
- **Maryland State Fire Marshal:** Permit # 2122.

Ordering Information

NOTE: *"A" suffix indicates ULC Listed model.*

FAPT-851: Low-profile intelligent multi-sensor detector.

FAPT-851A: Same as FAPT-851 but with ULC Listing.

INTELLIGENT BASES

NOTE: *"A" suffix indicates ULC Listed model.*

NOTE: *For details about intelligent bases and their mounting, see DN-60054.*

B210LP(A): Plug-in detector base; standard U.S. flanged low-profile mounting base.

B210LPBP: Bulk pack of B210LP; package contains 10.

B501(A): Flangeless mounting base.

B501BP: Bulk pack of B501; package contains 10.

B200S(A): Intelligent, programmable sounder base capable of producing sound output in high or low volume with ANSI Temporal 3, ANSI Temporal 4, continuous tone, marching tone, and custom tone.

B200SR(A): Intelligent sounder base capable of producing sound output with ANSI Temporal 3 or continuous tone. Replaces B501BH series bases in retrofit applications.

B224RB(A): Relay base Screw terminals: up to 14 AWG (2.0 mm^2). Relay type Form-C. Rating: 2.0 A @ 30 VDC resistive; 0.3 A @ 110 VDC inductive; 1.0 A @ 30 VDC inductive.

B224BI(A): Isolator base. Maximum: 25 devices between isolator bases.

ACCESSORIES

F110: Retrofit flange to convert B210LP to match the B710LP profile, or to convert older high-profile bases to low-profile.

F110BP: Bulk pack of F110; package contains 15.

F210: Replacement flange for B210LP(A) base.

RA100Z(A): Remote LED annunciator. 3 – 32 VDC. Fits U.S. single-gang electrical box. Supported by B210LP(A) and B501(A) bases only.

SMB600: Surface mounting kit for use with B210LP(A).

M02-04-00: Test magnet.

M02-09-00: Test magnet with telescoping handle.

XR2B: Detector removal tool. Allows installation and/or removal of FlashScan® Series detector heads from base in high ceiling installations.

T55-127-010: Detector removal tool without pole.

XP-4: Extension pole for XR2B. Comes in three 5-foot (1.524 m) sections.

Notifier®, ONYX®, FlashScan®, and Acclimate® are registered trademarks and Acclimate Plus™ is a trademark of Honeywell International Inc.
©2011 by Honeywell International Inc. All rights reserved. Unauthorized use of this document is strictly prohibited.

ISO 9001 CERTIFIED
ENGINEERING & MANUFACTURING QUALITY SYSTEMS

This document is not intended to be used for installation purposes.
We try to keep our product information up-to-date and accurate.
We cannot cover all specific applications or anticipate all requirements.
All specifications are subject to change without notice.

Made in the U.S. A.

For more information, contact Notifier. Phone: (203) 484-7161, FAX: (203) 484-7118.
www.notifier.com

FST-851(A) Series

Intelligent Thermal (Heat) Detectors with FlashScan®

NOTIFIER® by Honeywell

Intelligent / Addressable Devices

General

Notifier FST-851(A) Series intelligent plug-in thermal detectors with integral communication has features that surpass conventional detectors. Point ID capability allows each detector's address to be set with rotary, decimal address switches, providing exact detector locations. FST-851(A) Series thermal detectors use an innovative thermistor sensing circuit to produce 135°F/57°C fixed-temperature (FST-851/A) and rate-of-rise thermal detection (FST-851R/A) in a low-profile package. FST-851H(A) provides fixed high-temperature detection at 190°F/88°C. These thermal detectors provide effective, intelligent property protection in a variety of applications. FST-851(A) Series detectors are compatible with Notifier Onyx and CLIP series Fire Alarm Control Panels (FACPs).

FlashScan® (U.S. Patent 5,539,389) is a communication protocol developed by Notifier Engineering that greatly enhances the speed of communication between analog intelligent devices and certain NOTIFIER systems. Intelligent devices communicate in a grouped fashion. If one of the devices within the group has new information, the panel's CPU stops the group poll and concentrates on single points. The net effect is response speed greater than five times that of earlier designs.

Features

- Sleek, low-profile, stylish design.
- State-of-the-art thermistor technology for fast response.
- Rate-of-rise model (FST-851R/A), 15°F (8.3°C) per minute.
- Factory preset fixed temperature at 135°F (57°C); high-temperature model fixed at 190°F (88°C).
- Addressable by device.
- Compatible with FlashScan® and CLIP protocol systems.
- Rotary, decimal addressing (1-99 on CLIP systems, 1-159 on FlashScan systems).
- Two-wire SLC connection.
- Visible LEDs "blink" every time the unit is addressed.
- 360°-field viewing angle of the visual alarm indicators (two bi-color LEDs). LEDs blink green in Normal condition and turn on steady red in Alarm.
- Integral communications and built-in device-type identification.
- Remote test feature from the panel.
- Built-in functional test switch activated by external magnet.
- Walk test with address display (an address of 121 will blink the detector LED 12-(pause)-1).
- Low standby current.
- Backward-compatible.
- Built-in tamper-resistant feature.
- Designed for direct-surface or electrical-box mounting.
- Sealed against back pressure.
- Plugs into separate base for ease of installation and maintenance. Separate base allows interchange of photoelectric, ionization and thermal sensors.
- SEMS screws for wiring of the separate base.
- Constructed of off-white fire-resistant plastic, designed to commercial standards, and offers an attractive appearance.



B210-2251.jpg

FST-851(A) in B210LP(A) Base

- 94-5V plastic flammability rating.
- Remote LED output connection to optional RA100Z(A) remote LED annunciator.
- Optional sounder, relay, and isolator bases.
- Optional flanced surface mounting kit.

Specifications

Size: 2.1" (5.3 cm) high; base determines diameter.

- **B210LP(A):** 6.1" (15.5 cm) diameter.
- **B501(A):** 4.1" (10.4 cm) diameter.
- **B200S(A):** 6.875" (17.46 cm) diameter.
- **B200SR(A):** 6.875" (17.46 cm) diameter.
- **B224RB(A):** 6.2" (15.748 cm) diameter.
- **B224BI(A):** 6.2" (15.748 cm) diameter.

Shipping weight: 4.8 oz. (137 g).

Operating temperature range: FST-851(A) Series, FST-851R(A): –20°C to 38°C (–4°F to 100°F); FST-851H(A): –20°C to 66°C (–4°F to 150°F).

Detector spacing: UL approved for 50 ft. (15.24 m) center to center. FM approved for 25 x 25 ft. (7.62 x 7.62 m) spacing.

Relative humidity: 10% – 93% noncondensing.

Thermal ratings: fixed-temperature setpoint 135°F (57°C), rate-of-rise detection 15°F (8.3°C) per minute, high temperature heat 190°F (88°C).

ELECTRICAL SPECIFICATIONS

Voltage range: 15 - 32 volts DC peak.

Standby current (max. avg.): 300 µA @ 24 VDC (one communication every 5 seconds with LED enabled).

LED current (max.): 6.5 mA @ 24 VDC ("ON").

Applications

Use thermal detectors for protection of property. For further information, go to systemsensor.com for manual I56-407-00, Applications Manual for System Smoke Detectors, which provides detailed information on detector spacing, placement, zoning, wiring, and special applications.

Installation

The FST Series plug-in intelligent thermal detectors use a separate base to simplify installation, service, and maintenance. Installation instructions are shipped with each detector. A special tool allows maintenance personnel to plug in and remove detectors without using a ladder

Mount base (all base types) on an electrical backbox which is at least 1.5" (3.81 cm) deep. For a chart of compatible junction boxes, see *DN-60054*.

***NOTE:** 1) Because of the inherent supervision provided by the SLC loop, end-of-line resistors are not required. Wiring "T-taps" or branches are permitted for Style 4 (Class "B") wiring. **2)** When using relay or sounder bases, consult the ISO-X(A) installation sheet I56-1380 for device limitations between isolator modules and isolator bases.*

Agency Listings and Approvals

These listings and approvals apply to the modules specified in this document.In some cases, certain modules or applications may not be listed by certain approval agencies, or listing may be in process. *Consult factory for latest listing status.*

- **UL Listed:** S747.
- **ULC Listed:** S6978.
- **MEA Listed:** 383-02-E.
- **FM Approved.**
- **CSFM:** 7270-0028:0196.
- **BSMI:** CI313066760025.
- **CCCF:** Certif. # 2004081801000018.
- **U.S. Coast Guard:** 161.002/42/1 (NFS-640); 161.002/50/0 (NFS2-640/NFS-320/NFS-320C, excluding B210LP(A)).
- **Lloyd's Register:** 11/600013 (NFS2-640/NFS-320/NFS-320C, excluding B210LP(A)).

Product Line Information

***NOTE:** "A" suffix indicates ULC Listed model.*

FST-851: Intelligent thermal detector. Must be mounted to one of the bases listed below.

FST-851A: Same as FST-851 but with ULC Listing.

FST-851R: Intelligent thermal detector with rate-of-rise feature.

FST-851RA: Same as FST-851R but with ULC Listing.

FST-851H: Intelligent high-temperature thermal detector.

FST-851HA: Same as FST-851H but with ULC Listing.

INTELLIGENT BASES

***NOTE:** "A" suffix indicates ULC Listed model.*

***NOTE:** For details about intelligent bases and their mounting, see DN-60054.*

B210LP(A): Standard U.S. flanged low-profile mounting base.

B210LPBP: Bulk pack of B210LP; package contains 10.

B501(A): Standard European flangeless mounting base.

B501BP: Bulk pack of B501; package contains 10.

B200S(A): Addressable Intelligent, programmable sounder base capable of producing sound output in high or low volume with ANSI Temporal 3, ANSI Temporal 4, continuous tone, marching tone, and custom tone.

B200SR(A): Intelligent sounder base capable of producing sound output with ANSI Temporal 3 or continuous tone. Replaces B501BH series bases in retrofit applications.

B224RB(A): Intelligent relay base. Screw terminals: up to 14 AWG (2.0 mm²). Relay type: Form-C. Rating: 2.0 A @ 30 VDC resistive; 0.3 A @ 110 VDC inductive; 1.0 A @ 30 VDC inductive.

B224BI(A): Intelligent isolator base. Isolates SLC from loop shorts. Maximum: 25 devices between isolator bases; see Note 2 under Installation.

ACCESSORIES

F110: Retrofit flange to convert B210LP(A) to match the B710LP(A) profile, or to convert older high-profile bases to low-profile.

F110BP: Bulk pack of F110; package contains 15.

F210: Replacement flange for B210LP(A) base.

RA100Z(A): Remote LED annunciator. 3 – 32 VDC. Fits U.S. single-gang electrical box. Supported by B210LP(A) and B501(A) bases only.

SMB600: Surface mounting kit, flanged.

M02-04-00: Test magnet.

M02-09-00: Test magnet with telescoping handle.

XR2B: Detector removal tool. Allows installation and/or removal of FlashScan® Series detector heads from base in high ceiling installations. Includes T55-127-010.

T55-127-010: Detector removal tool without pole.

XP-4: Extension pole for XR2B. Comes in three 5-foot (1.524 m) sections.

Notifier® and FlashScan® are registered trademarks of Honeywell International Inc.
©2011 by Honeywell International Inc. All rights reserved. Unauthorized use of this document is strictly prohibited.

ISO 9001 CERTIFIED
ENGINEERING & MANUFACTURING QUALITY SYSTEMS

This document is not intended to be used for installation purposes.
We try to keep our product information up-to-date and accurate.
We cannot cover all specific applications or anticipate all requirements.
All specifications are subject to change without notice.

Made in the U.S.A.

For more information, contact Notifier. Phone: (203) 484-7161, FAX: (203) 484-7118.
www.notifier.com

FCM-1(A) & FRM-1(A) Series

Control and Relay Modules

NOTIFIER® by Honeywell

Intelligent / Addressable Devices

General

FCM-1(A) Control Module: The FCM-1(A) Addressable Control Module provides Notifier intelligent fire alarm control panels a circuit for Notification Appliances (horns, strobes, speakers, etc.). Addressability allows the FCM-1(A) to be activated, either manually or through panel programming, on a select (zone or area of coverage) basis.

FRM-1(A) Relay Module: The FRM-1(A) Addressable Relay Module provides the system with a dry-contact output for activating a variety of auxiliary devices, such as fans, dampers, control equipment, etc. Addressability allows the dry contact to be activated, either manually or through panel programming, on a select basis.

FlashScan® (U.S. Patent 5,539,389) is a communication protocol developed by NOTIFIER Engineering that greatly enhances the speed of communication between analog intelligent devices. Intelligent devices communicate in a grouped fashion. If one of the devices within the group has new information, the panel CPU stops the group poll and concentrates on single points. The net effect is response speed greater than five times that of other designs.

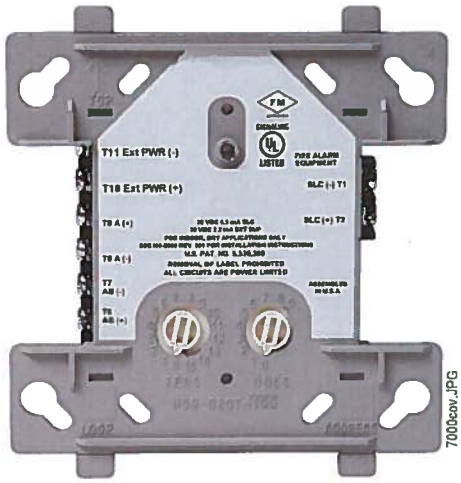

FCM-1(A)

Features

- Built-in type identification automatically identifies these devices to the control panel.
- Internal circuitry and relay powered directly by two-wire SLC loop. The FCM-1(A) module requires power (for horns, strobes, etc.), or audio (for speakers).
- Integral LED "blinks" green each time a communication is received from the control panel and turns on in steady red when activated.
- LED blink may be deselected globally (affects all devices).
- High noise immunity (EMF/RFI).
- The FCM-1(A) may be used to switch 24-volt NAC power, audio (up to 70.7 Vrms).
- Wide viewing angle of LED.
- SEMS screws with clamping plates for wiring ease.
- Direct-dial entry of address 01– 159 for FlashScan loops, 01 – 99 for CLIP mode loops.
- Speaker, and audible/visual applications may be wired for Class B or A (Style Y or Z).

Applications

The FCM-1(A) is used to switch 24 VDC audible/visual power, high-level audio (speakers). The FRM-1(A) may be programmed to operate dry contacts for applications such as door holders or Air Handling Unit shutdown, and to reset four-wire smoke detector power.

NOTE: Refer to the SLC Manual (PN 51253) for details regarding releasing applications with the FCM-1(A). Refer to the FCM-1-REL datasheet (DN-60390) for new FlashScan® releasing applications.

Construction

- The face plate is made of off-white heat-resistant plastic.
- Controls include two rotary switches for direct-dial entry of address (01-159).
- The FCM-1(A) is configured for a single Class B (Style Y) or Class A (Style Z) Notification Appliance Circuit.
- The FRM-1(A) provides two Form-C dry contacts that switch together.

Operation

Each FCM-1(A) or FRM-1(A) uses one of 159 possible module addresses on a SLC loop (99 on CLIP loops). It responds to regular polls from the control panel and reports its type and status, including the open/normal/short status of its Notification Appliance Circuit (NAC). The LED blinks with each poll received. On command, it activates its internal relay. The FCM-1(A) supervises Class B (Style Y) or Class A (Style Z) notification or control circuits.

Upon code command from the panel, the FCM-1(A) will disconnect the supervision and connect the external power supply in the proper polarity across the load device. The disconnection of the supervision provides a positive indication to the panel that the control relay actually turned ON. The external power supply is always relay isolated from the communication loop so that a trouble condition on the external power supply will never interfere with the rest of the system.

Rotary switches set a unique address for each module. The address may be set before or after mounting. The built-in TYPE CODE (not settable) will identify the module to the control panel, so as to differentiate between a module and a sensor address.

Specifications for FCM-1(A)

Normal operating voltage: 15 to 32 VDC.

Maximum current draw: 6.5 mA (LED on).

Average operating current: 350 µA direct poll, 375 µA group poll with LED flashing, 485 µA Max. (LED flashing, NAC shorted.)

Maximum NAC Line Loss: 4 VDC.

External supply voltage (between Terminals T10 and T11): Maximum (NAC): Regulated 24 VDC; Maximum (Speakers): 70.7 V RMS, 50W.

Drain on external supply: 1.7 mA maximum using 24 VDC supply; 2.2 mA Maximum using 80 VRMS supply.

Max NAC Current Ratings: For class B wiring system, the current rating is 3A; For class A wiring system, the current rating is 2A.

Temperature range: 32°F to 120°F (0°C to 49°C).

Humidity range: 10% to 93% non-condensing.

Dimensions: 4.5" (114.3 mm) high x 4" (101.6 mm) wide x 1.25" (31.75 mm) deep. Mounts to a 4" (101.6 mm) square x 2.125" (53.975 mm) deep box.

Accessories: SMB500 Electrical Box; CB500 Barrier

Specifications for FRM-1(A)

Normal operating voltage: 15 to 32 VDC.

Maximum current draw: 6.5 mA (LED on).

Average operating current: 230 µA direct poll; 255 µA group poll.

EOL resistance: not used.

Temperature range: 32°F to 120°F (0°C to 49°C).

Humidity range: 10% to 93% non-condensing.

Dimensions: 4.5" (114.3 mm) high x 4" (101.6 mm) wide x 1.25" (31.75 mm) deep. Mounts to a 4" (101.6 mm) square x 2.125" (53.975 mm) deep box.

Accessories: SMB500 Electrical Box; CB500 Barrier

Agency Listings and Approvals

In some cases, certain modules may not be listed by certain approval agencies, or listing may be in process. Consult factory for latest listing status.

- **UL:** S635
- **ULC:** S3705 (A version only)
- **FM Approved**
- **CSFM:** 7300-0028:0219
- **MEA:** 14-00-E
- **FDNY:** COA #6067, #6065

Contact Ratings for FRM-1(A)

Current Rating	Maximum Voltage	Load Description	Application
3 A	30 VDC	Resistive	Non-Coded
2 A	30 VDC	Resistive	Coded
.9 A	110 VDC	Resistive	Non-Coded
.9 A	125 VDC	Resistive	Non-Coded
.5 A	30 VDC	Inductive (L/R=5ms)	Coded
1 A	30 VDC	Inductive (L/R=2ms)	Coded
.3 A	125 VAC	Inductive (PF=0.35)	Non-Coded
1.5 A	25 VAC	Inductive (PF=0.35)	Non-Coded
.7 A	70.7 VAC	Inductive (PF=0.35)	Non-Coded
2 A	25 VAC	Inductive (PF=0.35)	Non-Coded

***NOTE:** Maximum (Speakers): 70.7 V RMS, 50 W*

Product Line Information

***NOTE:** "A" suffix indicates ULC Listed model.*

FCM-1(A): Intelligent Addressable Control Module.

FRM-1(A): Intelligent Addressable Relay Module.

A2143-20: Capacitor, required for Class A (Style Z) operation of speakers.

SMB500: Optional Surface-Mount Backbox.

CB500: Control Module Barrier — required by UL for separating power-limited and non-power limited wiring in the same junction box as FCM-1(A).

***NOTE:** For installation instructions, see the following documents:*

- *FCM-1(A) Installation document I56-1169.*
- *FRM-1(A) Installation document I56-3502.*
- *Notifier SLC Wiring Manual, document 51253.*

Notifier® and **FlashScan®** are registered trademarks of Honeywell International Inc.
©2011 by Honeywell International Inc. All rights reserved. Unauthorized use of this document is strictly prohibited.

ISO 9001 CERTIFIED ENGINEERING & MANUFACTURING QUALITY SYSTEMS

This document is not intended to be used for installation purposes.
We try to keep our product information up-to-date and accurate.
We cannot cover all specific applications or anticipate all requirements.
All specifications are subject to change without notice.

Made in the U.S. A.

For more information, contact Notifier. Phone: (203) 484-7161, FAX: (203) 484-7118.
www.notifier.com

SpectrAlert® Advance

Selectable Output Notification Appliances

NOTIFIER® by Honeywell

Audio/Visual Devices

General

SpectrAlert® Advance selectable-output horns, strobes and horn/strobes are rich with features guaranteed to cut installation times and maximize profits. The SpectrAlert Advance series of notification appliances is designed to simplify your installations, with features such as: plug-in designs, instant feedback messages to ensure correct installation of individual devices, and eleven field-selectable candela settings for wall and ceiling strobes and horn/strobes.

More specifically, when installing Advance products, first attach a universal mounting plate to a four-inch square, four-inch octagon, or double-gang junction box. The two-wire mounting plate attaches to a single-gang junction box.

Then, connect the notification appliance circuit wiring to the SEMS terminals on the mounting plate.

Finally, attach the horn, strobe, or horn/strobe to the mounting plate by inserting the product's tabs in the mounting plate's grooves. The device will rotate into position, locking the product's pins into the mounting plate's terminals. The device will temporarily hold in place with a catch until it is secured with a captured mounting screw.

SpectrAlert Advance products allow you to choose:

- 12 or 24 volts.
- 15, 15/75, 30, 75, 95, 110, 115, 135, 150, 177, or 185 candela by way of a rear-mounted slide switch and front viewing window.
- Horn tones and volume by way of a rotary switch.

The SpectrAlert Advance series includes outdoor notification appliances. Outdoor strobes and horn/strobes (two-wire and four-wire) are available for wall or ceiling. Outdoor horns are available for wall only. All System Sensor outdoor products are rated between –40°C and 66°C in wet or dry applications.

Models available:

- Indoor wall-mount: horn, strobe, 2-wire horn/strobe, 4-wire horn/strobe.
- Indoor ceiling-mount: strobe, 2-wire horn/strobe, 4-wire horn/strobe.
- Outdoor wall-mount: horn, strobe, 2-wire horn/strobe, 4-wire horn/strobe.
- Outdoor ceiling-mount: strobe, 2-wire horn/strobe, 4-wire horn/strobe.

Features

- Plug-in design.
- Same mounting plate for wall- and ceiling-mount units.
- Shorting spring on mounting plate for continuity check before installation.
- Captive mounting screw.
- Tamper-resistance capability.
- Field-selectable candela settings on wall and ceiling units: 15, 15/75, 30, 75, 95, 110, 115, 135, 150, 177, 185.
- Automatic selection of 12 or 24 volt operation at 15 and 15/75 candela.
- Outdoor wall and ceiling products.
- Outdoor products rated from –40°C and 66°C.



Indoor Ceiling Horn/Strobe



Outdoor Ceiling Strobe



Indoor Wall Horn/Strobe



Indoor Ceiling Strobe



Indoor Wall Horn



Outdoor Wall Strobe

- Outdoor products rainproof per UL50 (NEMA 3R) and weatherproof per NEMA 4X, IP56
- Minimal intrusion into the backbox.
- Horn rated at 88+ dbA at 16 volts.
- Rotary switch for tone selection.
- Three horn volume settings.
- Electrically compatible with existing SpectrAlert products.

Engineering Specifications

SpectrAlert Advance horns, strobes, and horn/strobes mount to a standard 10.16 x 10.16 x 3.81 cm backbox, 10.16 cm octagonal backbox, or a double-gang backbox. Two-wire products mount to a single-gang 5.08 x 10.16 x 4.763 cm backbox. A universal mounting plate shall be used for mounting ceiling and wall products. The notification appliance circuit wiring shall terminate at the universal mounting plate. Also, SpectrAlert Advance products, when used with the Sync•Circuit™ Module accessory, shall be powered from a non-coded notification appliance circuit output and shall operate on a nominal 12 or 24 volts. When used with the Sync•Circuit Module, 12-volt rated notification appliance circuit outputs shall operate between 9 and 17.5 volts; 24-volt rated notification appliance circuit outputs shall operate between 17 and 33 volts. Indoor SpectrAlert Advance products shall operate between 0°C and 49°C from a regulated DC, or full-wave-rectified, unfiltered power supply. Strobes and horn/strobes shall have field-selectable candela settings including 15, 15/75, 30, 75, 95, 110, 115, 135, 150, 177, 185.

STROBE

The strobe shall be a System Sensor SpectrAlert Advance Model _____ listed to CAN/ULC S5512 and shall be approved for fire protective service. The strobe shall be wired

as a primary-signaling notification appliance and comply with the Americans with Disabilities Act requirements for visible signaling appliances, flashing at 1 Hz over the strobe's entire operating voltage range. The strobe light shall consist of a xenon flash tube and associated lens/reflector system.

HORN/STROBE COMBINATION

The horn/strobe shall be a System Sensor SpectrAlert Advance Model _____ listed to CAN/ULC S5512 and shall be approved for fire protective service. The horn/strobe shall be wired as a primary-signaling notification appliance and comply with the Americans with Disabilities Act requirements for visible signaling appliances, flashing at 1 Hz over the strobe's entire operating voltage range. The strobe light shall consist of a xenon flash tube and associated lens/reflector system. The horn shall have three audibility options and an option to switch between a Temporal 3 pattern and a Non-Temporal (continuous) pattern. These options are set by a multiple position switch. On four-wire products, the strobe shall be powered independently of the sounder. The horn on horn/strobe models shall operate on a coded or non-coded power supply.

OUTDOOR PRODUCTS

SpectrAlert Advance outdoor horns, strobes and horn/strobes shall be listed for outdoor use by ULC and shall operate between –40°C and 66°C. The products shall be listed for use with a System Sensor outdoor/weatherproof backbox with half-inch and three-fourths-inch conduit entries.

SYNCHRONIZATION MODULE

The module shall be a System Sensor Sync•Circuit MDL3RA or MDL3WA listed to ULC and shall be approved for fire protective service. The module shall synchronize SpectrAlert strobes at 1 Hz and horns at Temporal 3. Also, while operating the strobes, the module shall silence the horns on horn/strobe models over a single pair of wires. The module shall mount to a 11.906 x 11.906 x 5.398 cm backbox. The module shall also control two Style Y (class B) circuits or one Style Z (Class A) circuit. The module shall synchronize multiple zones. Daisy-chaining two or more synchronization modules together will synchronize all the zones they control. The module shall not operate on a coded power supply.

Operating Specifications

- **Standard operating temperature:** 0°C to 49°C.
- **K Series operating temperature:** –40°C to 66°C.
- **Humidity range:** 10% to 93% non-condensing (indoor products).
- **Strobe flash rate:** 1 flash per second.
- **Nominal voltage:** regulated 12 VDC/FWR or regulated 24 VDC/FWR. ***NOTE:*** *Full Wave Rectified (FWR) voltage is a non-regulated, time-varying power source that is used on some power supply and panel outputs.*
- **Operating voltage range:** 8 V to 17.5 V (12 V nominal); or 16 V to 33 V (24 V nominal). ***NOTE:*** *P, S, PC, and SC products will operate at 12 V nominal only for 15 cd and 15/75 cd.*
- **Input terminal wire gauge:** 12 to 18 AWG (3.31 to 0.821 mm²).
- **Ceiling-mount dimensions (including lens):** 17.3 cm diameter x 6.4 cm deep.
- **Wall-mount dimensions (including lens):** 14.2 cm H x 11.9 cm W x 6.4 cm D.
- **Horn dimensions:** 14.2 cm H x 11.9 cm W x 3.3 cm D.

Agency Listings and Approvals

The listings and approvals below apply to SpectrAlert Advance Selectable Output Notification Devices. In some cases, certain modules may not be listed by certain approval agencies, or listing may be in process. Consult factory for latest listing status.

- **UL Listed:** S4011
- **ULC Listed:** S5512
- **FM Approved**
- **MEA:** 452-05-E
- **CSFM:** 7125-1653:0186 (indoor strobes); 7125-1653:0188 (horn strobes, chime strobes); 7135-1653:0189 (horns, chimes)

Strobe Current Draw, ULC Maximum (mA RMS)

Candela		8 – 17.5 V		16 – 33 V	
		DC	FWR	DC	FWR
Standard Candela Range	15	123	128	66	71
	15/75	142	148	77	81
	30	NA	N/A	94	96
	75	NA	NA	158	153
	95	NA	NA	181	176
	110	NA	NA	202	195
	115	NA	NA	210	205
High Candela Range	135	NA	NA	228	207
	150	NA	NA	246	220
	177	NA	NA	281	251
	185	NA	NA	286	258

Horn Current Draw, ULC Maximum (mA RMS)

Sound Pattern	dB	8 – 17.5 V		16 – 33 V	
		DC	FWR	DC	FWR
Temporal	High	57	55	69	75
Temporal	Medium	44	49	58	69
Temporal	Low	38	44	44	48
Non-temporal	High	57	56	69	75
Non-temporal	Medium	42	50	60	69
Non-temporal	Low	41	44	50	50
Coded	High	57	55	69	75
Coded	Medium	44	51	56	69
Coded	Low	40	46	52	50

Horn and Horn/Strobe Rotary Switch Setting

Setting	Repetition Rate	dB Level
1	Temporal horn	High
2	Temporal horn	Medium
3	Temporal horn	Low
4	Normal horn	High
5	Normal horn	Medium
6	Normal horn	Low
7*	Externally coded	High
8*	Externally coded	Medium
9*	Externally coded	Low

**NOTE: Settings 7, 8, and 9 are not available on 2-wire horn/strobe.*

Horn and Horn/Strobe Output (dBA)

Switch Position	Sound Pattern	dB	8 – 17.5 V		16 – 33 V	
			DC	FWR	DC	FWR
1	Temporal	High	96	93	101	99
2	Temporal	Medium	89	89	95	95
3	Temporal	Low	86	87	91	92
4	Non-temporal	High	90	86	96	93
5	Non-temporal	Medium	82	82	90	89
6	Non-temporal	Low	79	80	86	86
7*	Coded	High	90	87	96	93
8*	Coded	Medium	82	82	90	89
9*	Coded	Low	78	80	86	86

**NOTE: Settings 7, 8, and 9 are not available on 2-wire horn/strobe.*

Two-Wire Horn/Strobe, *STANDARD* Candela Range (15 – 115 cd), ULC Maximum Current Draw (mA RMS)

Input, Sound Pattern, dB Level	8 – 17.5 V		16 – 33 V						
	15	15/75	15	15/75	30	75	95	110	115
Input, Temporal, High	137	147	79	90	107	176	194	212	218
Input, Temporal, Medium	132	144	69	80	97	157	182	201	210
Input, Temporal, Low	132	143	66	77	93	154	179	198	207
Input, Non-temporal, High	141	152	91	100	116	176	201	221	229
Input, Non-temporal, Medium	133	145	75	85	102	163	187	207	216
Input, Non-temporal, Low	131	144	68	79	96	156	182	201	210
Input, Temporal, High	136	155	88	97	112	168	190	210	218
Input, Temporal, Medium	129	152	78	88	103	160	184	202	206
Input, Temporal, Low	129	151	76	86	101	160	184	194	201
Input, Non-temporal, High	142	161	103	112	126	181	203	221	229
Input, Non-temporal, Medium	134	155	85	95	110	166	189	208	216
Input, Non-temporal, Low	132	154	80	90	105	161	184	202	211

Two-Wire Horn/Strobe, *HIGH* Candela Range (135 – 185 cd), ULC Maximum Current Draw (mA RMS)

Input	16 – 33 V				Input	16 – 33 V			
	135	150	177	185		135	150	177	185
Temporal, High	245	259	290	297	Temporal, High	215	231	258	265
Temporal, Medium	235	253	288	297	Temporal, Medium	209	224	250	258
Temporal, Low	232	251	282	292	Temporal, Low	207	221	248	256
Non-temporal, High	255	270	303	309	Non-temporal, High	233	248	275	281
Non-temporal, Medium	242	259	293	299	Non-temporal, Medium	219	232	262	267
Non-temporal, Low	238	254	291	295	Non-temporal, Low	214	229	256	262

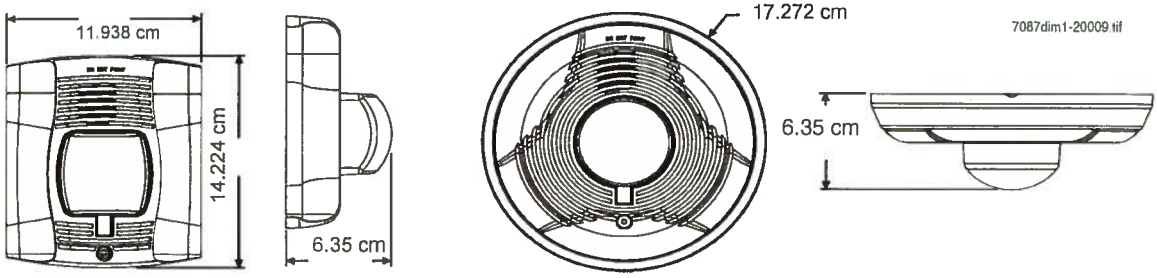

Ordering Information

Model	Description	Model	Description
WALL HORN/STROBES		*CEILING HORN/STROBES*	
P2RA	2-wire horn/strobe, standard cd, red.	PC2RKA	2-wire horn/strobe, standard cd, red, outdoor.
P2RHA	2-wire horn/strobe, high cd, red.	PC2RHKA	2-wire horn/strobe, high cd, red, outdoor.
P2RKA	2-wire horn/strobe, standard cd, red, outdoor	PC2WA	2-wire horn/strobe, standard cd, white.
P2RHKA	2-wire horn/strobe, high cd, red, outdoor.	PC2WHA	2-wire horn/strobe, high cd, white.
P2WA	2-wire horn/strobe, standard cd, white.	PC4RKA	4-wire horn/strobe, standard cd, red, outdoor.
P2WHA	2-wire horn/strobe, high cd, white.	PC4RHKA	4-wire horn/strobe, high cd, red, outdoor.
P4RA	4-wire horn/strobe, standard cd, red.	PC4WA	4-wire horn/strobe, standard cd, white.
P4RHA	4-wire horn/strobe, high cd, red.	PC4WHA	4-wire horn/strobe, high cd, white.
P4RKA	4-wire horn/strobe, standard cd, red, outdoor.	*HORNS*	
P4RHKA	4-wire horn/strobe, high cd, red, outdoor.	HRA	Horn, red.
P4WA	4-wire horn/strobe, standard cd, white.	HRKA	Horn, red, outdoor.
P4WHA	4-wire horn/strobe, high cd, white.	HWA	Horn, white.
ACCESSORIES		*WALL STROBES*	
BBS-2A	Backbox skirt, wall, red.	SRA	Strobe, standard cd, red.
BBSW-2A	Backbox skirt, wall, white.	SRHA	Strobe, high cd, red.
BBSC-2A	Backbox skirt, ceiling, red.	SRKA	Strobe, standard cd, red, outdoor.
BBSCW-2A	Backbox skirt, ceiling, white.	SRHKA	Strobe, high cd, red, outdoor.
WTPA	Flush mount, weatherproof plate, red	SWA	Strobe, standard cd, white.
WTPWA	Flush mount, weatherproof plate, white	SWHA	Strobe, high cd, white.
TR-HSA	Trim Ring, Red, package of 5	*CEILING STROBES*	
TRW-HSA	Trim Ring, White, package of 5	SCRKA	Strobe, standard cd, red, outdoor.
TRC-HSA	Trim Ring Ceiling, Red, package of 5	SCRHKA	Strobe, high cd, red, outdoor.
TRCW-HSA	Trim Ring Ceiling, White, package of 5	SCWA	Strobe, standard cd, white.
		SCWHA	Strobe, high cd, white.

NOTE: *For strobes and horn/strobes, add suffix "-F" for French or "-B" for Bilingual.*

NOTE: **"High cd" refers to strobes that include 135, 150, 177, and 185 candela settings. "Standard cd" refers to strobes that include 15, 15/75, 30, 75, 95, 110, and 115 candela settings.*

NOTE: *All outdoor models ("K(A)" suffix) include a plastic weatherproof backbox.*

NOTE: *Add "-R" to models for weatherproof replacement device (no back box included). Only for use with weatherproof outdoor flush mounting plate, WTPA and WTPWA.*

NOTE: *Add "P" to model for plain housing (No "FIRE" marking on the cover.)*

Sync•Circuit™ is a trademark and NOTIFIER® and SpectrAlert® are registered trademarks of Honeywell International Inc.
©2011 by Honeywell International Inc. All rights reserved. Unauthorized use of this document is strictly prohibited.

ISO 9001 CERTIFIED
ENGINEERING & MANUFACTURING QUALITY SYSTEMS

This document is not intended to be used for installation purposes. We try to keep our product information up-to-date and accurate. We cannot cover all specific applications or anticipate all requirements. All specifications are subject to change without notice.

For more information, contact Notifier.
(888) 289-1114
10 Whitmore Road
Woodbridge, Ontario L4L 7Z4
www.notifier.com

Audible Visible Accessories

System Sensor offers a wide range of Audible Visible (AV) accessories to enable you to meet a variety of application requirements.



Features

MP120K Mounting Plate

- Designed for both indoor and outdoor use
- Plug-in design eliminates ground faults
- Power supply that converts 120 VAC to nominal 24 V FWR
- Compatible with all two-wire SpectrAlert Advance® devices

Color Lens Attachments

- Easily turns any device into a strobe for ECS, severe weather, sprinkler activation and more
- Outdoor rated from –35°F to 151°F
- Wall- or ceiling-mount lenses available
- UL 1638 listed

WTP Weatherproof Plates

- Enables flush mounting of outdoor devices to brick, ceramic tile, concrete, and masonry brick
- Weatherproof per NEMA 3R
- For use in both indoor and outdoor applications
- For use with all K series (outdoor) products replacement -R models
- Universal mounting plate easily attaches to the weatherproof plate

Agency Listings

LISTED S4011 S3593 — 7300-1653 195 7300-1653 204 7300-1653 0222 — MEA approved 582-06-E

The **MP120K Mounting Plate** is designed to use 120 VAC to power SpectrAlert Advance horns, strobes, horn strobes, chimes, and chime strobes.

Color Lens Attachments install easily on any indoor or outdoor SpectrAlert Advance strobe devices to provide distinctive visual signaling.

WTP Series Weatherproof Plates enable installers to flush mount outdoor horns, strobes, horn strobes, speakers, and speaker strobes to a variety of wall surfaces, including brick, ceramic tile, concrete, and masonry brick. These NEMA 3R-rated plates come in red and white to suit aesthetic and functional requirements. They may be used indoors or outdoors (with outdoor devices), as required by conditions. They easily attach to the SpectrAlert Advance universal mounting plate.

Trim Rings for speakers and speaker strobes allow for additional space within the backbox. Trim rings for horns, strobes, and horn strobes allow 4-wire devices to mount to a single-gang back box.

SpectrAlert Advance Outdoor Back Boxes ensure a NEMA 4X watertight listing for AV devices. In locations where you have a hard surface to mount to, **Surface Mount Back boxes** are the best solution. If you have an exposed junction box, the **Back Box Skirts** offer an attractive solution to mask the junction box exposure. **Retrofit Plates** cover paint outlines on the wall when replacing legacy SpectrAlert Advance products.

SpectrAlert Advance DECALS are for use on our non-pad printed wall- and ceiling-mount devices. Each decal comes with AGENT, EVAC, ALERT, or FIRE label options. The **Sync•Circuit Module** synchronizes SpectrAlert Advance strobes at 1 Hz and horns and chimes at temporal 3 over a single pair of wires. Patented module technology also allows the silencing of horns or chimes on horn strobe and chime strobe models over a pair of wires. See Datasheet *A05-1007-005* for more information.

Specifications

MP120K

120 VAC mounting plate model MP120K shall be listed to UL 464 for fire protective signaling systems. The mounting plate shall power a two-wire SpectrAlert® Advance horn, strobe, horn strobe, chime or chime strobe from a 120 VAC supply converted to nominal 24 V FWR. For indoor applications, the mounting plate shall be installed in a 4x4x2 1/8 -inch junction box. For outdoor applications, the mounting plate shall be installed using the proper SpectrAlert Advance outdoor weatherproof back box and outdoor listed notification appliance.

Compatibility

MP120K may be used with any of the following products at all horn and strobe settings: P2R, P2RH, P2RK, P2RHK, P2W, P2WH, SR, SRH, SRK, SRHK, SW, SWH, PC2R, PC2RH, PC2RK, PC2RHK, PC2W, PC2WH, SCR, SCRH, SCRK, SCRHK, SCW, SCWH, HR, HRK, HW, SR-P, SW-P, SRH-P, SWH-P, P2R-P, P2W-P, P2RH-P, P2WH-P, SCR-P, SCW-P, SCRH-P, SCWH-P, PC2R-P, PC2W-P, PC2RH-P, PC2WH-P, SR-SP, SRH-SP, P2R-SP, P2RH-SP, SCW-SP, SCWH-SP, PC2W-SP, PC2WH-SP, CHR, CHW, CHSR, CHSW.

Physical/Operating Specifications

Standard Operating Temperature	–40°F to 151°F (–40°C to 66°C)
Humidity Range	10 to 93% non-condensing (indoor products)
Nominal Voltage	Regulated 120 VAC
Operating Voltage Range	96–132 VAC
Current Draw From AC Line	150 mA max.

WTP Weatherproof Plates

The SpectrAlert Advance weatherproof plate for horns, strobes, and horn strobes shall mount to 4x4x1 1/4-inch and 2x4x1 1/2-inch back boxes. The weatherproof plate for speakers and speaker strobes shall mount to 4x4x2 1/8-inch back boxes. The weatherproof plate may be installed on brick, concrete, ceramic tile, and masonry brick and must be used with System Sensor "K" series outdoor replacement models (-R). Outdoor SpectrAlert Advance products shall operate between -40°F and 151°F.

Physical Specifications

Speaker Strobe	7.25" L x 6.26" W x 3.00" D (including speaker and lens)
Speaker	7.25" L x 6.26" W x 1.30" D (including speaker)
Horn Strobe	6.90" L x 5.90" W x 2.80" D (including strobe lens)
Horn	6.90" L x 5.90" W x 1.60" D (including horn)

Note: WTP and WTPW are compatible with 4x4x11/4-inch and 2x4x11/2-inch back boxes. (Compatible with outdoor horns, horn strobes and strobes)
WTP-SP and WTP-SPW are compatible with 4x4x21/8-inch back boxes. (Compatible with outdoor speakers and speaker strobes)

Models Available for Use with the Watertight Plates:

WTP/WTPW	HRK-R
WTP/WTPW	SRK-R, SRHK-R, SWK-R, SWHK-R
WTP/WTPW	P2RK-R, P2RHK-R, P4RK-R, P2WK-R, P2WHK-R
WTP-SP	SPRK-R, SPWK-R
WTP-SPW	SPSRK-R

Note: -R models ship without the outdoor back box. The weatherproof mounting plates are designed to be used only with -R replacement models.

Specifications

Color Lens Attachments

The System Sensor SpectrAlert Advance color lens attachments shall be approved for fire protective service as listed in UL 1638. The lens attachments shall only be used with non-FIRE-printed System Sensor strobe devices. The lens shall mount to any wall- or ceiling-mount strobes and shall be rated from –35°F to 151°F.

Compatibility

Color lens attachments may be used with the following System Sensor plain (non-FIRE-printed) indoor or outdoor strobe models: SR-P, SRH-P, SW-P, SWH-P, P2R-P, P2W-P, P2WH-P, P2RK-P, P2RHK-P, SCW-P, PC2R-P, PC2W-P, PC2WH-P, SPSW-P, SPSR-P, SPSWH-P, SPSRH-P, SPSWV-P, SPSRV-P, SPSCW-P, SPSCWH-P, SPSCWV-P, SPSCWVH-P, SRK-P, SRHK-P, SWK-P, SWHK-P, P2WK-P, P2WHK-P, SPSWK-P, SPSRK-P, SW-CLR-ALERT, SCW-CLR-ALERT, SPSCW-CLRALERT.

Color Lens Installation

Installation to Wall-Mount Strobe

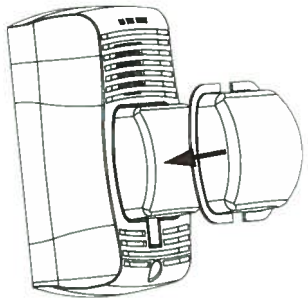

Installation to Ceiling-Mount Strobe

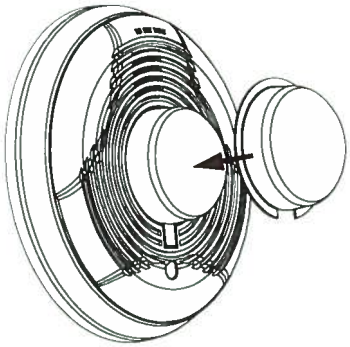

Candela Rating for UL 1638

Light output of color lenses is measured per UL 1638, on axis, and is not derated.

Strobe Output (cd)	
Candela Switch Setting	**On-Axis Candela Rating (UL1638) – All Colors**
15	15
15/75*	NA
30	30
75	75
95	95
110	110
115	115
135	135
150	150
177	177
185	185

*15/75 Candela setting not to be used with color lenses

Ordering Information

Part No.	Description
Metal Weatherproof Backboxes	
MWBBW	white, wall-mount, compatible with: SPWK-R, SPWK, SPSWK-R, SPSWK-P, SPSWK
MWBB	red, wall-mount, compatible with: SPRK-R, SPRK
MWBBCW	white, ceiling-mount, compatible with: SPCWK, SPSCWK,SPCWK-R, SPSCWK, SPSCWK-R, SPSCWHK, SPSCWHK-R
SA-WBBW	white, wall-mount, compatible with: P2WK, P2WHK, P2WHK-P, P2WK-P, SWK, SWK-P,P2WHK-R, P2WK-R, SWHK-R
SA-WBB	red, wall-mount, compatible with: P2RK, P2RK-P, P2RK-R, SRK, SRK-P, SRK-R P2RHK, P4RK, P4RHK, SRHK, HRK, P2RHK-R, P2RK-R, HRK-R, P4RHK-R, P4RK-R, SRHK-R
SA-WBBCW	white, ceiling-mount, compatible with: PC2WK, SCWK
SA-WBBW	white, wall-mount, compatible with: P2WK, P2WHK, P2WHK-P, P2WK-P, SWK, SWK-P,P2WHK-R, P2WK-R, SWHK-R

Ordering Information (continued)

Part No.	Description
Surface Mount Back Box	
SBBR	red, wall-mount, compatible with: HR, CHR, SR, SR-SP, SRH, P2R, P2R-SP, P2RH, P4R, P4RH, CHSR, P2R-P, SR-P, SRH-P
SBBW	white, wall-mount, compatible with:HW, CHW, SW, SWH, P2W, P2WH, P4W, P4W-P, CHSW, P2W-P, P2WH-P, SW-P, SWH-P, SW-ALERT, SWH-ALERT
SBBSPR	red, wall-mount, compatible with: SPR, SPRV, SPSR, SPSRH, SPSRV, SPSR-P, SPSRH-P, SPSRV-P
SBBSPW	white, wall-mount, compatible with: SPW, SPWV, SPSW, SPSWH, SPSWV, SPSW-P, SPSWH-P, SPSWV-P, SPSW-ALERT, SPSW-CLR-ALERT
SBBCR	red, ceiling-mount compatible with: SCR, SCRH, PC2R, PC2RH, PC4R, PC4RH, SPCR, SPCRV, SPSCR, SPSCRH, SPSCRV, SPSCRVH, PC2R-P
SBBCW	white, ceiling-mount, compatible with: SCW, SCWH, PC2W, PC2W-SP, PC2WH, PC4W, SPCW, SPCWV, SPSCW, SPSCWH, SPSCWV, SPSCWVH, PC2W-P, PC2WH-P, SCW-P, SPSCW-P, SPSCWH-P, SPSCWHK-P, SPSCWV-P, SPSCWVH-P, SPSCW-CLR-ALERT, SCW-CLR-ALERT
Back Box Skirts	
BBS-2	red, wall-mount, compatible with: P2R, SR, HR, CHSR, CHR, P2RH, P4R, P4RH, SRH, P2R-P, P2RH-P, P4R-P, P4RH-P, SR-P, SRH-P, SR-SP, SRH-SP, P2R-SP, P2RH-SP
BBS-SP201W	Surface-mount back-box skirt for the PF24V (ExitPoint™ Directional Sounder with Voice Messaging)
SPBBS	red, wall-mount, compatible with: SPR, SPSR, SPRV,SPSR-P,SPSRH,SPSRH-P
Colored Lenses	
LENS-B	Wall-mount, blue
LENS-R	Wall-mount, red
LENS-G	Wall-mount, green
LENS-A	Wall-mount, amber
LENS-BC	Ceiling-mount, blue
LENS-RC	Ceiling-mount, red
LENS-GC	Ceiling-mount, green
LENS-AC	Ceiling-mount, amber

Part No.	Description
Decals	
DECAL-R	red, used for non-pad-printed wall-mount devices. (10 total decals per box for 5 devices)*
DECAL-RC	red, used for non-pad-printed ceiling-mount devices. (15 total decals per box for 5 devices)*
DECAL-W	white, used for non-pad-printed wall-mount devices. (10 total decals per box) for 5 devices*
DECAL-WC	white, used for non-pad-printed ceiling-mount devices. (15 total decals per box for 5 devices)*
*All Decals include Labels: "AGENT, EVAC, ALERT & FIRE"	
Retrofit Plates (For use with horn strobe & speaker strobe devices)	
RFPW	9.5" x 7" white
RFP	9.5" x 7" red
Mounting Plate	
MP120K	120 VAC Adapter Mounting Plate
Sync Modules	
MDL3W	white, 12/24 volt Sync-Circuit module.
MDL3R	red 12/24 volt Sync-Circuit module
Trim Rings	
TR	red, wall-mount for use with speaker devices
TRC	red, ceiling-mount for use with speaker devices
TRC-HS	red, ceiling-mount for use with horn strobe devices
TRCW	white, ceiling-mount for use with speaker devices
TRCW-HS	red, ceiling-mount for use with horn strobe devices
TR-HS	red, wall-mount for use with horn strobes devices
TRW	white, wall-mount for use with speaker devices
TRW-HS	white, wall-mount for use with horn strobe devices
Watertight Plates	
WTPW	white, for use with horn, strobes & horn strobe devices
WTP	red, for use with horn, strobes & horn strobe devices
WTP-SPW	white, for use with speaker devices
WTP-SP	red, for use with speaker devices

SYSTEM SENSOR

3825 Ohio Avenue • St. Charles, IL 60174
Phone: 800-SENSOR2 • Fax: 630-377-6495
www.systemsensor.com

©2013 System Sensor.
Product specifications subject to change without notice. Visit systemsensor.com for current product information, including the latest version of this data sheet.
AVDS00403 • 7/13

EOL-CR, EOL-CW

Universal End-of-Line Device Mounting Plates

NOTIFIER® by Honeywell

General

The EOL-CR and EOL-CW Universal End-of-Line Device Mounting Plates are used, when required, to place the end-of-line device at an accessible height. The EOL-CR/-CW consists of a terminal strip mounted on a heavy gauge metallic single-gang faceplate, finished in red or white baked enamel; it fits on a standard single-gang electrical box. The end-of-line device is included with the corresponding module in the central equipment.

Architectural/Engineering Specifications

The End-of-Line Device Mounting Plate shall be model EOL-CR/-CW. It shall consist of a terminal strip, mounted on a single-gang faceplate, made of heavy-gauge metal, finished in red (EOL-CR) or white (EOL-CW), and shall fit on a standard single-gang electrical box.

Agency Listings and Approvals

The listings and approvals below apply to the EOL-CR and EOL-CW Mounting Plates for End-of-Line Devices. In some cases, certain modules or applications may not be listed by certain approval agencies, or listing may be in progress. Consult factory for latest listing status.

- **ULC Listed:** File S7547

Ordering Information

EOL-CR: End-of-line device mounting plate (red). Shipping weight 0.17 kg (6 oz.).

EOL-CW: End-of-line device mounting plate (white). Shipping weight 0.17 kg (6 oz.).



EOL-CR

©2009 by Honeywell International Inc. All rights reserved. Unauthorized use of this document is strictly prohibited.

ISO 9001 CERTIFIED
ENGINEERING & MANUFACTURING QUALITY SYSTEMS

This document is not intended to be used for installation purposes. We try to keep our product information up-to-date and accurate. We cannot cover all specific applications or anticipate all requirements. All specifications are subject to change without notice.

For more information, contact Notifier.
(888) 289-1114
10 Whitmore Road
Woodbridge, Ontario L4L 7Z4
www.notifier.com

FMM-1(A), FMM-101(A), FZM-1(A) & FDM-1(A)

Monitor Modules with FlashScan®

NOTIFIER® by Honeywell

Intelligent/Addressable Devices

General

Four different monitor modules are available for Notifier's intelligent control panels for a variety of applications. Monitor modules supervise a circuit of dry-contact input devices, such as conventional heat detectors and pull stations, or monitor and power a circuit of two-wire smoke detectors (FZM-1(A)).

FMM-1(A) is a standard-sized module (typically mounts to a 4" [10.16 cm] square box) that supervises either a Style D (Class A) or Style B (Class B) circuit of dry-contact input devices.

FMM-101(A) is a miniature monitor module a mere 1.3" (3.302 cm) H x 2.75" (6.985 cm) W x 0.5" (1.270 cm) D that supervises a Style B (Class B) circuit of dry-contact input devices. Its compact design allows the FMM-101(A) to be mounted in a single-gang box behind the device it monitors.

FZM-1(A) is a standard-sized module that monitors and supervises compatible two-wire, 24 volt, smoke detectors on a Style D (Class A) or Style B (Class B) circuit.

FDM-1(A) is a standard-sized dual monitor module that monitors and supervises two independent two-wire Style B (Class B) dry-contact initiating device circuits (IDCs) at two separate, consecutive addresses in intelligent, two-wire systems.

FlashScan® (U.S. Patent 5,539,389) is a communication protocol developed by NOTIFIER that greatly increases the speed of communication between analog intelligent devices. Intelligent devices communicate in a grouped fashion. If one of the devices within the group has new information, the panel CPU stops the group poll and concentrates on single points. The net effect is response speed greater than five times that of other designs.

FMM-1(A) Monitor Module

- Built-in type identification automatically identifies this device as a monitor module to the control panel.
- Powered directly by two-wire SLC loop. No additional power required.
- High noise (EMF/RFI) immunity.
- SEMS screws with clamping plates for ease of wiring.
- Direct-dial entry of address: 01 – 159 on FlashScan loops; 01 – 99 on CLIP loops.
- LED flashes green during normal operation (this is a programmable option) and latches on steady red to indicate alarm.

The FMM-1(A) Monitor Module is intended for use in intelligent, two-wire systems, where the individual address of each module is selected using the built-in rotary switches. It provides either a two-wire or four-wire fault-tolerant Initiating Device Circuit (IDC) for normally-open-contact fire alarm and supervisory devices. The module has a panel-controlled LED indicator. The FMM-1(A) can be used to replace MMX-1(A) modules in existing systems.

FMM-1(A) APPLICATIONS

Use to monitor a zone of four-wire smoke detectors, manual fire alarm pull stations, waterflow devices, or other normally-open dry-contact alarm activation devices. May also be used to monitor normally-open supervisory devices with special supervisory indication at the control panel. Monitored circuit may be wired as an NFPA Style B (Class B) or Style D (Class A) Initiating Device Circuit. A 47K ohm End-of-Line Resistor (provided) terminates the Style B circuit. No resistor is required for supervision of the Style D circuit.

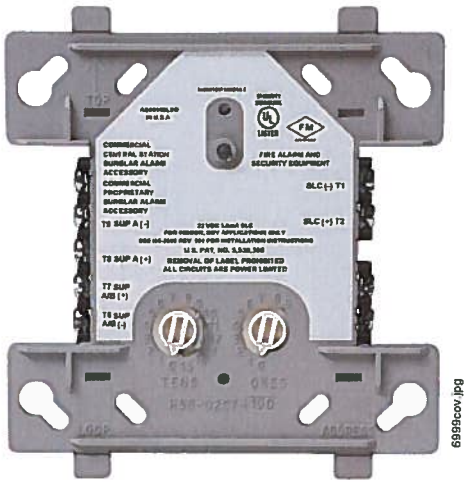

FMM-1(A) (Type H)

FMM-1(A) OPERATION

Each FMM-1(A) uses one of the available module addresses on an SLC loop. It responds to regular polls from the control panel and reports its type and the status (open/normal/short) of its Initiating Device Circuit (IDC). A flashing LED indicates that the module is in communication with the control panel. The LED latches steady on alarm (subject to current limitations on the loop).

FMM-1(A) SPECIFICATIONS

Nominal operating voltage: 15 to 32 VDC.

Maximum current draw: 5.0 mA (LED on).

Average operating current: 350 µA (LED flashing), 1 communication every 5 seconds, 47k EOL.

Maximum IDC wiring resistance: 40 ohms.

EOL resistance: 47K ohms.

Temperature range: 32°F to 120°F (0°C to 49°C).

Humidity range: 10% to 93% noncondensing.

Dimensions: 4.5" (11.43 cm) high x 4" (10.16 cm) wide x 1.25" (3.175 cm) deep. Mounts to a 4" (10.16 cm) square x 2.125" (5.398 cm) deep box.

FMM-101(A) Mini Monitor Module

- Built-in type identification automatically identifies this device as a monitor module to the panel.
- Powered directly by two-wire SLC loop. No additional power required.
- High noise (EMF/RFI) immunity.
- Tinned, stripped leads for ease of wiring.
- Direct-dial entry of address: 01 – 159 on FlashScan loops; 01 – 99 on CLIP loops.

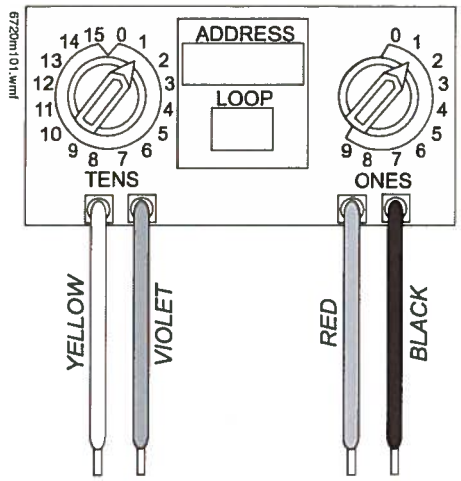

The FMM-101(A) Mini Monitor Module can be installed in a single-gang junction directly behind the monitored unit. Its small size and light weight allow it to be installed without rigid mounting. The FMM-101(A) is intended for use in intelligent, two-wire systems where the individual address of each module is selected using rotary switches. It provides a two-wire initiating device circuit for normally-open-contact fire alarm and security devices. The FMM-101(A) can be used to replace MMX-101(A) modules in existing systems.

FMM-101(A) APPLICATIONS

Use to monitor a single device or a zone of four-wire smoke detectors, manual fire alarm pull stations, waterflow devices, or other normally-open dry-contact devices. May also be used to monitor normally-open supervisory devices with special supervisory indication at the control panel. Monitored circuit/device is wired as an NFPA Style B (Class B) Initiating Device Circuit. A 47K ohm End-of-Line Resistor (provided) terminates the circuit.

FMM-101(A) OPERATION

Each FMM-101(A) uses one of the available module addresses on an SLC loop. It responds to regular polls from the control panel and reports its type and the status (open/normal/short) of its Initiating Device Circuit (IDC).

FMM-101(A) SPECIFICATIONS

Nominal operating voltage: 15 to 32 VDC.

Average operating current: 350 µA, 1 communication every 5 seconds, 47k EOL; 600 µA Max. (Communicating, IDC Shorted).

Maximum IDC wiring resistance: 40 ohms.

Maximum IDC Voltage: 11 Volts.

Maximum IDC Current: 400 µA.

EOL resistance: 47K ohms.

Temperature range: 32°F to 120°F (0°C to 49°C).

Humidity range: 10% to 93% noncondensing.

Dimensions: 1.3" (3.302 cm) high x 2.75" (6.985 cm) wide x 0.65" (1.651 cm) deep.

Wire length: 6" (15.24 cm) minimum.

FZM-1(A) Interface Module

- Supports compatible two-wire smoke detectors.
- Supervises IDC wiring and connection of external power source.
- High noise (EMF/RFI) immunity.
- SEMS screws with clamping plates for ease of wiring.
- Direct-dial entry of address: 01 – 159 on FlashScan loops, 01 – 99 on CLIP loops.
- LED flashes during normal operation; this is a programmable option.
- LED latches steady to indicate alarm on command from control panel.

The FZM-1(A) Interface Module is intended for use in intelligent, addressable systems, where the individual address of each module is selected using built-in rotary switches. This module allows intelligent panels to interface and monitor two-wire conventional smoke detectors. It transmits the status (normal, open, or alarm) of one full zone of conventional detectors back to the control panel. All two-wire detectors being monitored must be UL compatible with the module. The FZM-1(A) can be used to replace MMX-2(A) modules in existing systems.

FZM-1(A) APPLICATIONS

Use the FZM-1(A) to monitor a zone of two-wire smoke detectors. The monitored circuit may be wired as an NFPA Style B (Class B) or Style D (Class A) Initiating Device Circuit. A 3.9 K ohm End-of-Line Resistor (provided) terminates the end of the Style B or D (class B or A) circuit (maximum IDC loop resistance is 25 ohms). Install ELR across terminals 8 and 9 for Style D application.

FZM-1(A) OPERATION

Each FZM-1(A) uses one of the available module addresses on an SLC loop. It responds to regular polls from the control panel and reports its type and the status (open/normal/short) of its Initiating Device Circuit (IDC). A flashing LED indicates that the module is in communication with the control panel. The LED latches steady on alarm (subject to current limitations on the loop).

FZM-1(A) SPECIFICATIONS

Nominal operating voltage: 15 to 32 VDC.

Maximum current draw: 5.1 mA (LED on).

Maximum IDC wiring resistance: 25 ohms.

Average operating current: 300 µA, 1 communication and 1 LED flash every 5 seconds, 3.9k eol.

EOL resistance: 3.9K ohms.

External supply voltage (between Terminals T3 and T4): DC voltage: 24 volts power limited. Ripple voltage: 0.1 Vrms maximum. Current: 90 mA per module maximum.

Temperature range: 32°F to 120°F (0°C to 49°C).

Humidity range: 10% to 93% noncondensing.

Dimensions: 4.5" (11.43 cm) high x 4" (10.16 cm) wide x 1.25" (3.175 cm) deep. Mounts to a 4" (10.16 cm) square x 2.125" (5.398 cm) deep box.

FDM1(A) Dual Monitor Module

The FDM-1(A) Dual Monitor Module is intended for use in intelligent, two-wire systems. It provides two independent two-wire initiating device circuits (IDCs) at two separate, consecutive addresses. It is capable of monitoring normally open contact fire alarm and supervisory devices; or either normally open or normally closed security devices. The module has a single panel-controlled LED.

***NOTE:** The FDM-1(A) provides two Style B (Class B) IDC circuits ONLY. Style D (Class A) IDC circuits are NOT supported in any application.*

FDM-1(A) SPECIFICATIONS

Normal operating voltage range: 15 to 32 VDC.

Maximum current draw: 6.4 mA (LED on).

Average operating current: 750 µA (LED flashing).

Maximum IDC wiring resistance: 1,500 ohms.

Maximum IDC Voltage: 11 Volts.

Maximum IDC Current: 240 µA

EOL resistance: 47K ohms.

Maximum SLC Wiring resistance: 40 Ohms.

Temperature range: 32° to 120°F (0° to 49°C).

Humidity range: 10% to 93% (non-condensing).

Dimensions: 4.5" (11.43 cm) high x 4" (10.16 cm) wide x 2.125" (5.398 cm) deep.

FDM-1(A) AUTOMATIC ADDRESSING

The FDM-1(A) automatically assigns itself to two addressable points, starting with the original address. For example, if the FDM-1(A) is set to address "26", then it will automatically assign itself to addresses "26" and "27".

***NOTE:** "Ones" addresses on the FDM-1(A) are 0, 2, 4, 6, or 8 only. Terminals 6 and 7 use the first address, and terminals 8 and 9 use the second address.*

CAUTION:
Avoid duplicating addresses on the system.

Installation

FMM-1(A), FZM-1(A), and FDM-1(A) modules mount directly to a standard 4" (10.16 cm) square, 2.125" (5.398 cm) deep, electrical box. They may also be mounted to the SMB500 surface-mount box. Mounting hardware and installation instructions are provided with each module. All wiring must conform to applicable local codes, ordinances, and regulations. These modules are intended for power-limited wiring only.

The FMM-101(A) module is intended to be wired and mounted without rigid connections inside a standard electrical box. All wiring must conform to applicable local codes, ordinances, and regulations.

Agency Listings and Approvals

In some cases, certain modules may not be listed by certain approval agencies, or listing may be in process. Consult factory for latest listing status.

- **UL:** S635
- **ULC:** S635
- **FM Approved**
- **CSFM:** 7300-0028:0219
- **MEA:** 457-99-E
- **U.S. Coast Guard:**
  - 161.002/23/3 *(AFP-200: FMM-1/-101, FZM-1)*
  - 161.002/42/1 *(NFS-640: FMM-1/-101)*
- **Lloyd's Register:**
  - 03/60011/E1 *(FMM-1/-101, FZM-1)*
  - 94/60004/E2 *(AFP-200: except FDM-1)*
  - 02/60007 *(NFS-640: FDM-1)*
- **FDNY:** COA #6038 (NFS2-640, NFS-320), COA# 6058 (NFS2-3030)

Product Line Information

***NOTE:** "A" suffix indicates ULC-listed model.*

FMM-1(A): Monitor module.

FMM-101(A): Monitor module, miniature.

FZM-1(A): Monitor module, two-wire detectors.

FDM-1(A): Monitor module, dual, two independent Class B circuits.

SMB500: Optional surface-mount backbox.

***NOTE:** See installation instructions and refer to the SLC Wiring Manual, PN 51253.*

FlashScan® and NOTIFIER® are registered trademarks and FireWatch™ is a trademark of Honeywell International Inc.
©2010 by Honeywell International Inc. All rights reserved. Unauthorized use of this document is strictly prohibited.

ISO 9001 CERTIFIED
ENGINEERING & MANUFACTURING
QUALITY SYSTEMS

This document is not intended to be used for installation purposes.
We try to keep our product information up-to-date and accurate.
We cannot cover all specific applications or anticipate all requirements.
All specifications are subject to change without notice.

Made in the U.S. A.

For more information, contact Notifier. Phone: (203) 484-7161, FAX: (203) 484-7118.
www.notifier.com

NBG-12 Series

Non-Coded Conventional Manual Fire Alarm Pull Stations

NOTIFIER® by Honeywell

Conventional Initiating Devices

General

The NOTIFIER **NBG-12 Series** is a cost-effective, feature-packed series of non-coded manual fire alarm pull stations. It was designed to meet multiple applications with the installer and end-user in mind. The NBG-12 Series features a variety of models including single- and dual-action versions.

The NBG-12 Series provides an alarm initiating input signal to conventional fire alarm control panels (FACPs) such as the SFP Series, and to XP Transponders. Its innovative design, durable construction, and multiple mounting options make the NBG-12 Series simple to install, maintain, and operate.

Features

- Aesthetically pleasing, highly visible design and color.
- Attractive contoured shape and light textured finish.
- Meets ADA 5 lb. maximum pull-force.
- Meets UL 38, Standard for Manually Actuated Signaling Boxes.
- Easily operated (single- or dual-action, model dependent), yet designed to prevent false alarms when bumped, shaken, or jarred.
- PUSH IN/PULL DOWN handle latches in the down position to clearly indicate the station has been operated.
- The word "ACTIVATED" appears on top of the handle in bright yellow, further indicating operation of the station.
- Operation handle features white arrows showing basic operation direction for non-English-speaking persons.
- Braille text included on finger-hold area of operation handle and across top of handle.
- Multiple hex- and key-lock models available.
- U.S. patented hex-lock needs only a quarter-turn to lock/unlock.
- Station can be opened for inspection and maintenance without initiating an alarm.
- Product ID label viewable by simply opening the cover; label is made of a durable long-life material.
- The words "NORMAL" and "ACTIVATED" are molded into the plastic adjacent to the alarm switch (located inside).
- Four-position terminal strip molded into backplate.
- Terminal strip includes Phillips combination-head captive 8/32 screws for easy connection to Initiating Device Circuit (IDC).
- Terminal screws backed-out at factory and shipped ready to accept field wiring (up to 12 AWG/3.1 mm²).
- Terminal numbers are molded into the backplate, eliminating the need for labels.
- Switch contacts are normally open.
- Can be surface-mounted (with **SB-10** or **SB-I/O**) or semi-flush mounted. Semi-flush mount to a standard single-gang, double-gang, or 4" (10.16 cm) square electrical box.
- Backplate is large enough to overlap a single-gang backbox cutout by 1/2" (1.27 cm).
- Optional trim ring (**BG12TR**).
- Spanish versions *(FUEGO)* available (**NBG-12LSP, NBG-12LPSP**).
- Designed to replace the legacy **NBG-10** Series.
- Models packaged in attractive, clear plastic (PVC), clam-shell-style, Point-of-Purchase packages. Packaging includes a cutaway dust/paint cover in shape of pull station.



6643cov.jpg

Construction

- Cover, backplate and operation handle are all molded of durable polycarbonate material.
- Cover features white lettering and trim.
- Red color matches System Sensor's popular SpectrAlert® Advance horn/strobe series.

Operation

The NBG-12 manual pull stations provide a textured finger-hold area that includes Braille text. In addition to PUSH IN and PULL DOWN text, there are arrows indicating how to operate the station, provided for non-English-speaking people.

Pushing in and then pulling down on the handle activates the normally-open alarm switch. Once latched in the down position, the word "ACTIVATED" appears at the top in bright yellow, with a portion of the handle protruding at the bottom as a visible flag. Resetting the station is simple: insert the key or hex (model dependent), twist one quarter-turn, then open the station's front cover, causing the spring-loaded operation handle to return to its original position. The alarm switch can then be reset to its normal (non-alarm) position manually (by hand) or by closing the station's front cover, which automatically resets the switch.

Specifications

PHYSICAL SPECIFICATIONS:

pull station		SB-10	SB-I/O	WBB	WP-10
H	5.500 in. (13.97 cm)	5.500 in. (13.97 cm)	5.601 in. (14.23 cm)	4.25 in. (10.79 cm)	6.000 in. (15.24 cm)
W	4.121 in. (10.467 cm)	4.125 in. (10.478 cm)	4.222 in. (10.72 cm)	4.25 in. (10.79 cm)	4.690 in. (11.913 cm)
D	1.390 in. (3.531 cm)	1.375 in. (3.493 cm)	1.439 in. (3.66 cm)	1.75 in. (4.445 cm)	2.000 in. (5.08 cm)

6643dim2.tbl

ELECTRICAL SPECIFICATIONS:

Switch contact ratings: gold-plated; rating 0.25 A @ 30 VAC or VDC. **Auxiliary contact circuit** (Terminals 3 & 4, NBG-12LA): rated to 3.0 A @ 30 VAC or VDC.

ENGINEERING/ARCHITECTURAL SPECIFICATIONS

Manual Fire Alarm Stations shall be non-code, with a key- or hex-operated reset lock in order that they may be tested, and so designed that after actual Emergency Operation, they cannot be restored to normal except by use of a key or hex. An operated station shall automatically condition itself so as to be visually detected as activated. Manual stations shall be constructed of red colored LEXAN (or polycarbonate equivalent) with clearly visible operating instructions provided on the cover. The word **FIRE** shall appear on the front of the stations in white letters, 1.00 inches (2.54 cm) or larger.* Stations shall be suitable for surface mounting on matching backbox SB-10 or SB-I/O; or semi-flush mounting on a standard single-gang, double-gang, or 4" (10.16 cm) square electrical box, and shall be installed within the limits defined by the Americans with Disabilities Act (ADA) or per national/local requirements. Manual Stations shall be Underwriters Laboratories listed.

***NOTE:** *The words "FIRE/FUEGO" on the NBG-12LSP and NBG-12LPSP shall appear on the front of the station in white letters, approximately 3/4" (1.905 cm) high.*

Pre-Signal Models

The **NBG-12LPS** and **NBG-12LPSP** pull stations are non-coded manual pull stations which provide a FACP with two normally open alarm initiating input signals. "Pre-signal" input is activated by pushing in, then pulling down, the dual-action handle. A "general" alarm input signal can be manually activated via a momentary rocker switch mounted inside the unit. This general alarm switch can only be accessed by opening the cover with the supplied key/lock. *See diagram at right.*

Agency Listings and Approvals

The listings and approvals below apply to the NBG-12 Series pull stations. In some cases, certain modules may not be listed by certain approval agencies, or listing may be in process. Consult factory for latest listing status.

- **C(UL)US** Listed: file S692.
- **CSFM** approved: file 7150-0028:199.
- **FM** approved *(except NBG-12LPS, NBG-12LPSP).*
- **MEA** approved: file 67-02-E *(NBG-12, NBG-12L, NBG-12LOB, NBG-12LA).*
- **Lloyd's Register** type approved: file 93/60141 (E3) *(NBG-12, NBG-12L, NBG-12LA, NBG-12LOB, NBG-12S).*
- **U.S. Coast Guard** approved: files 161.002/23/3 *(AFP-200 with NBG-12, NBG-12L, NBG-12S)*; 161.002/42/1 *(NFS-640 with NBG-12, NBG-12L, NBG-12S)*; 161.002/27/3 *(AFP1010/AM2020 with NBG-12, NBG-12L, NBG-12S).*
- **Patented:** U.S. Patent No. D428,351; 6,380,846; 6,314,772; 6,632,108.

Product Line Information

NBG-12S: Single-action pull station with pigtail connections, hex lock.

NBG-12: Dual-action pull station with SPST N/O switch, screw terminal connections, ***hex lock.***

NBG-12L: Dual-action pull station with SPST N/O switch, screw terminal connections, ***key lock.***

NBG-12LSP: Same as NBG-12L with English/Spanish *(FIRE/FUEGO)* labeling.

NBG-12LPS: Dual-action pull station with pre-signal option.

NBG-12LPSP: Same as NBG-12LPS with English/Spanish *(FIRE/FUEGO)* labeling.

NBG-12LOB: Dual-action pull station with key lock, outdoor applications listings (**NBG-12LO**), and backbox. Includes **SB-I/O** indoor/outdoor backbox, and sealing gasket. Model will also mount to **WP-10** weatherproof backbox in retrofit applications.

***NOTE:** NBG-12LO not available separately;*
NBG-12LO + approved backbox = NBG-12LOB.
Outdoor applications listings apply to NBG-12LOB combination.

NBG-12LA: Dual-action pull station with key lock and annunciator contacts.

SB-10: Surface-mount backbox, metal.

SB-I/O: Surface-mount backbox, plastic. *(Included with NBG-12LOB.)*

BG12TR: Optional trim ring for semi-flush mounting.

WP-10: Outdoor use backbox.

17021: Keys, set of two. (Included with key-lock pull stations.)

17007: Hex key, 9/64". (Included with hex-lock pull stations.)

***NOTE:** For addressable NBG-12LX models, see data sheet DN-6726.*

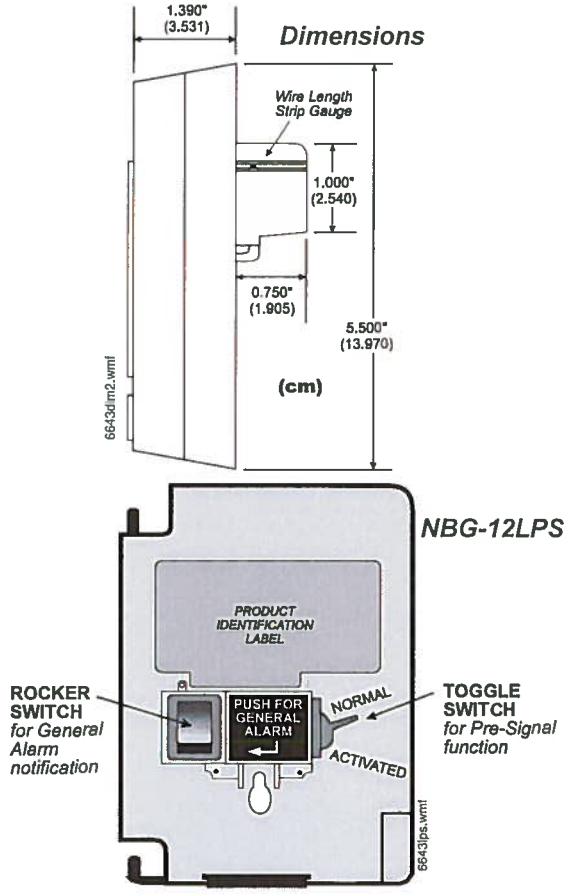

NOTIFIER®, **SpectrAlert® Advance**, and **System Sensor®** are registered trademarks of Honeywell International Inc.
©2008 by Honeywell International Inc. All rights reserved. Unauthorized use of this document is strictly prohibited.

ISO 9001 CERTIFIED
ENGINEERING & MANUFACTURING
QUALITY SYSTEMS

This document is not intended to be used for installation purposes.
We try to keep our product information up-to-date and accurate.
We cannot cover all specific applications or anticipate all requirements.
All specifications are subject to change without notice.

Made in the U.S. A.

For more information, contact Notifier. Phone: (203) 484-7161, FAX: (203) 484-7118.
www.notifier.com

polycarbonate products

STI Universal Stopper®

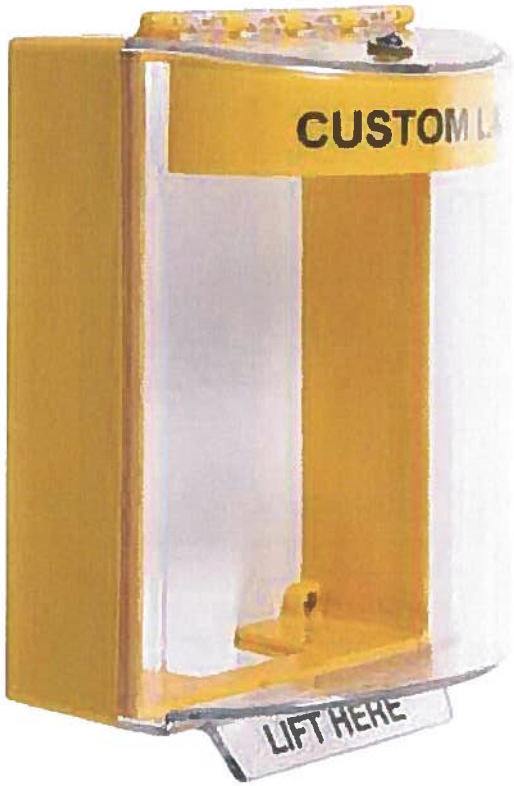

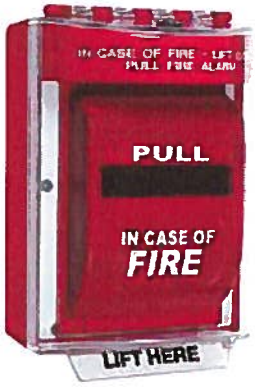

Shown with waterproof back box



Indoor/Outdoor

c UL us
ADA Compliant
See Reverse For Details

PRODUCT OVERVIEW

These indoor/outdoor low profile or dome polycarbonate covers protect devices such as dual action pull stations, keypads for entry systems, intercom stations, emergency buttons, electrical light switches, duplex plugs, etc., without restricting legitimate operation. The versatile cover offers excellent protection against physical damage (both accidental and intentional), dust and grime as well as severe environments inside and out.

Cover options: Dome or Low Profile, with or without horn, flush mount, surface mount or waterproof back box models. Maximum protrusion is 4 inches deep. Cover has the same footprint as the Mini Stopper® but accommodates most dual action pull stations.

FEATURES

- Protects against vandalism, accidental damage, dust and grime and severe environments inside and outside.
- Protects pull stations, keypads, intercom stations, emergency buttons, electrical light switches or duplex plugs.
- Cover is molded from thick, tough polycarbonate material.
- Cover available in low profile or dome shape.
- Flush frame, surface frame or waterproof back box (with sealed or open internal mounting plate), enclosed flush back box.
- Top and bottom of waterproof back box are threaded for 3/4" NPT rigid conduit.
- Sized to fit most pull stations.
- High strength continuous hinge.
- Dome models have optional relay output with 12-24 VDC power input.
- Gaskets included.
- ADA Compliant.
- Locking tab (not for use with fire pull stations).
- Dome models available with or without 105 dB horn.
- Dome models available with red, green, blue, yellow, white or black label hood/horn housing with custom or no label.
- Available for red units "In Case of Fire..." label.
- UV-stabilized to keep cover clear.
- Typical working properties of polycarbonate are -40° to 250°F (-40° to 121°C).
- No charge for custom label. (See reverse for details.)
- Three year guarantee against breakage of polycarbonate in normal use (one year on electro mechanical and electronic components).

STI Universal Stopper®

Dimensions and Technical Information

BUILD YOUR MODEL

STI-1 _ _ _ _ _ _

Cover Options

3 = Dome Cover
4 = Low Profile Cover*

*Only available with Hood/Horn option "0"

Mounting Options

0 = Flush Mount
2 = Surface Mount
3 = Enclosed Flush Back Box
4 = Enclosed Back Box & Sealed Mounting Plate**
5 = Enclosed Back Box & Opened Mounting Plate**
8 = Enclosed Back Box & European Sealed Mounting Plate**
9 = Enclosed Back Box & European Open Mounting Plate**

**all colors except NC

Hood/Horn

0 = No Label Hood (Label must start with 'N.' If Hood/Horn Option = 0 and Mounting Option = 0 or 3, the label must be NC)
1 = Label Hood without Horn**
2 = Label Hood with Horn**
3 = Label Hood with Horn & Relay**

**all colors except NC

Special Electronics

0 = None
1 = Heat (available with Mounting Options 4, 5, 8 & 9)**

**Coming soon

Housing/Horn Color & Label

Fire label	Free Custom label*
FR = Red -- Fire label	CK = Black*
No label	CB = Blue*
NK = Black	CG = Green*
NB = Blue	CR = Red*
NC = Clear	CW = White*
NG = Green	CY = Yellow*
NR = Red	*must provide custom label wording (2 lines, 20 characters per line including spaces)
NW = White	
NY = Yellow	

COVER OPTIONS - SIDE VIEW



Dome



Low Profile

MOUNTING OPTIONS



FLUSH



SURFACE



BACK BOX
Enclosed Flush



BACK BOX
With Sealed Mounting Plate



BACK BOX
With Opened Mounting Plate



BACK BOX
With European Sealed Mounting Plate



BACK BOX
With European Opened Mounting Plate

APPROVAL & WARRANTY

TESTING

· ADA Compliant

Cover option '3' only has been tested and approved or listed by:

· UL/cUL Listed No. S2466 (Type rating pending). Excludes mounting options 8 and 9.

Flush, Surface or Back Box with opened Mounting Plate
· IP Rating 56

Back Box with sealed Mounting Plate
· IP Rating 66

WARRANTY

Three year guarantee against breakage of polycarbonate in normal use (one year on electro mechanical and electronic components).

IMPORTANT NOTICE

When used on fire systems, Universal Stopper is intended for areas where the incidence of false fire alarms from manual pull stations is high or has proven to be a serious problem. Any disadvantage of the device is more than balanced when one considers the consequences of false fire alarms, especially if fire service personnel and equipment are responding to a false fire alarm when they are needed for a real fire somewhere else. Add to this the disruption to the facility when false alarms occur. If you have, or may have, a problem with false fire alarms or physical/weather damage to your fire alarm activation devices, the Universal Stopper could prove invaluable.

STI Safety Technology International, Inc.

2306 Airport Road
Waterford, Michigan
48327, USA

Tel: 248-673-9898
Fax: 248-673-1246
Toll-free: 800-888-4784
info@sti-usa.com
www.sti-usa.com

Unit 49G Pipers Road
Park Farm Industrial Estate
Redditch, Worcestershire
B98 0HU England

Tel: 44 (0) 1527 520 999
Fax: 44 (0) 1527 501 999
Free: 0800 085 1678 (UK)
www.sti-europe.com

Printed in U.S.A., © 2009 Safety Technology International, Inc.

Subject to change without notice.

Fire Detection Devices
CR/CF-MP Series
Moisture-Proof Heat Detectors



Features

- Dual Action Rate of Rise & Fixed Temperature
- Detects Rate of Ambient temperature rise of 8°C (15°F)
- Detectors operating on fixed temperatures are only available in two settings of 135°F (57°C) or 200°F (93°C)
- Clear-anodized aluminium finish

Description

The CR and CF-MP Series Moisture Proof Detectors are designed for hazardous locations and Moisture Proof applications. Each Moisture Proof detector is available in single or multiple circuits with open and/or closed contact configurations, and any of the fixed temperature settings including 135, 165, 200 and 285 degrees Farenheit.

The Moisture Proof detector is characterized by a black phenol-plastic seal plate and black and white pigtail connections. It is specified for use in high humidity environments and areas that are subject to corrosive elements or spray washing. The suffix "MP" denotes "Moisture Proof".

CR-135MP

The Model CR-135MP is a combination Rate-of-Rise and Fixed Temperature detector. A set of normally open contacts will close when the ceiling temperature increases at a (minimum) rate of 8.4°C (15°F) per minute. Closing the contacts initiates the fire alarm sequence. Independent of the rate-of-rise operation, the fixed temperature portion consists of a spring-loaded plunger retained by a fusible alloy that releases when the ceiling temperature reaches 135°F (57°C). When released, the plunger strikes the contacts and holds them closed. Spacing on an uninterrupted ceiling is 70 ft. (21.3m) for the rate-of-rise; 40 ft. (12.2m) for the fixed temperature portion.

CF-135MP

The Model CF-135MP is a Fixed Temperature Only detector. The fixed temperature portion consists of a spring-loaded plunger retained by a fusible alloy that releases when the ceiling temperature reaches 135°F (57°C). When released, the plunger strikes a normally open set of contacts and holds them closed. Spacing on an uninterrupted ceiling is 40 ft. (21.3m). The CF-135MP is identified by a black dot on its heat collector fin.

CR-200MP

The Model CR-200MP is a combination Rate-of-Rise and Fixed Temperature detector that operates in the same way as the CR-135MP, with the exception that the fixed temperature portion releases when the ceiling temperature reaches 200°F (93°C). Spacing on an uninterrupted ceiling is 70 ft. (21.3) for the rate-of-rise, and 25 ft.(7.6m) for the fixed temperature portion (a reduced spacing parameter from the CF-135MP). The CR-200MP is identified by a white dot on its heat collector fin.

CF-200MP

The Model CF-200MP is a Fixed Temperature Only detector. The fixed temperature portion releases when the ceiling temperature reaches 200°F (93°C). Spacing is 25 ft., (7.6m). The CF-200MP is identified by a black dot and a white dot on the heat collector fin.

Canada 25 Interchange Way, Vaughan (Toronto), Ontario L4K 5W3 Telephone: (905) 695-3549 Fax: (905) 660-4113 • **Web Page:** www.summit-st.net
U.S.A. 4575 Witmer Industrial Estates, Niagara Falls, NY 14305 Telephone: (866) 786-6480 Fax: (888) 660-4113 • **E-mail:** mail@summit-st.net
Catalog Number 400 • Not to be used for installation purposes.

Contact Configurations

Any Detector in the Moisture Proof Series is available in Normally Open (by far the most common) or Normally Closed, or Multiple Circuit configurations. The Model Number does not reflect the Normally Open configuration, however the letter "C" denotes Normally Closed. For example: "CR 135 C MP" describes a rate-of-rise / fixed temperature detector, fusing at 135°F., with Normally Closed contacts, assembled with the moisture proof seal plate.

Engineering Specifications

The CR & CF Series Moisture Proof detectors shall be installed in areas where corrosive elements exist or washing of walls and ceiling surfaces is commonplace. The fixed temperature portion and the rate-of-rise operation shall be determined by the ambient temperature. The Moisture Proof detectors shall be installed in areas where environmental conditions including dust, vapours, insects, etc., would cause an ionization or photoelectric type detector to initiate a false alarm.

Specifications

Contact Rating
3A @ 125 VAC 1A @ 28 VDC 0.3A @ 125 VDC 0.1A @ 250 VDC

Dimensions	
Diameter	5.25" (13.4 cm)
Height	2.0" (4.85 cm)
Weight	
0.41 lb. (330 gm)	

Ordering Information

Model Number	Description
CR-135MP	Rate of Rise & Fixed Temperature to 135°F (57°C) Moisture Proof Heat Detector
CR-200MP	Rate of Rise & Fixed Temperature to 200°F (93°C) Moisture Proof Heat Detector
CF-135MP	Fixed Temperature 135°F (57°C) Moisture Proof Heat Detector
CF-200MP	Fixed Temperature 200°F (93°C) Moisture Proof Heat Detector

Summit reserves the right to make changes at any time without notice in prices, colors, materials, components, equipment, specifications and models and also to discontinue models.
ISO 9001:2000 REGISTERED

AGNICO EAGLE

Vendor Document Status

1 ☐ Proceed to next submission and status.

2 ☐ Proceed with exceptions as noted to next submission and status.

3 ☐ Do not proceed.
Revise as noted and resubmit next submission and status.

4 ☑ Complete, no further submission required.

By: Joël Morliere Date: 2017-06-12

Review and authorization to fabricate are only for general conformance with the design concept of the Project as expressed in the Contract Documents. Sole responsibility for the accuracy and completeness of this document, including but not limited to dimensions and quantities, remains with the Supplier/Contractor. Agnico Eagle does not warrant the accuracy or completeness of any of the information contained herein, nor does Agnico Eagle authorize or approve any construction means, methods, techniques, sequences or any safety precautions or procedures.

Agnico Eagle No. 6515-C-270-007-265-SPD-0001 R: Sub001

DOCUMENT FOR INFORMATION

WSP

SHOP DRAWING
DATA SHEET

Affixing this stamp confirms that an administrative approval and/or a verification of compliance with shop drawings or specifications was made, but does not entail the liability of the author of the work or its owner with regards to this shop drawing or data sheet, for which the contractor is the sole responsible.

☑ Reviewed ☐ Reviewed as noted

☐ Rejected ☐ Filed for records

The contractor, supplier and/or sub-contractor is responsible for: comfirming and coordinating all quantities and dimensions; selecting fabrication processes and techniques of construction; coordinating his or her work with that of all other trades and performing all work in a safe and satisfactory manner.

By: J. Morliere Date: 2017/06/12

Project # 151-06440-40

Tracé par: "BOURJ26", 2017-05-05 14:46:09 (Lts: 0.25 ; Mes: 1)
P:\300-RN\643812\0000\4-Ingenierie\D-Dessins maitres\43-ST\643812-0000-43DD-0001-0.dwg
Format: Lettre/Légal Ver.: 4.2 2016-01-26

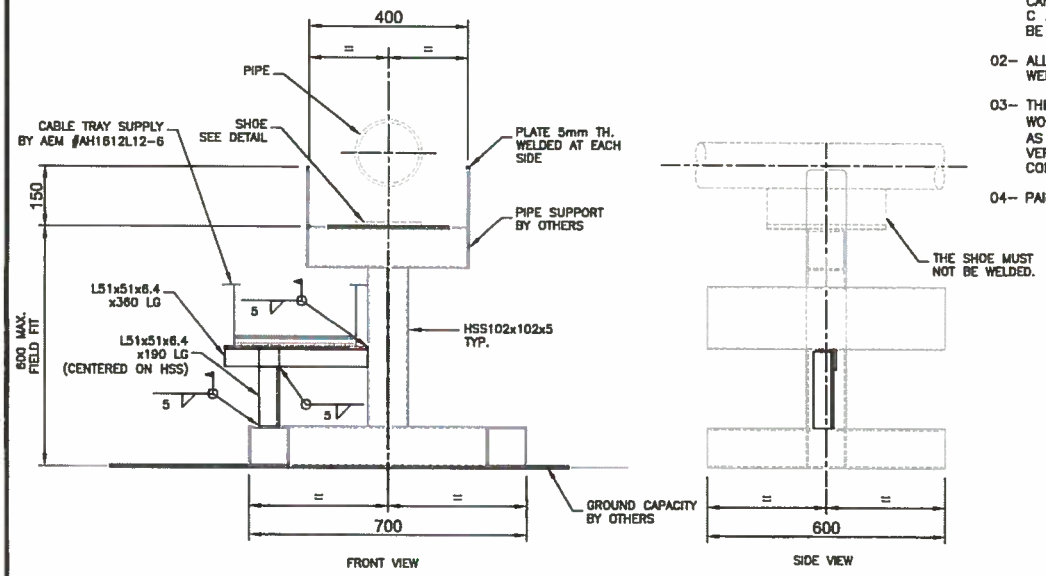

CABLE TRAY SUPPORT (1)

ÉCHELLE : 1 : 15

GENERAL NOTES

01– STRUCTURAL STEEL MUST RESPECT CRITERIA LISTED IN CAN/CSA–G40.20 AND CAN/CSA–G40.21, GRADE 350 W WITH EXCEPTION OF C AND L PROFILES WHICH ARE TOBE OF GRADE 300 W. HSS PROFILES TO BE OF ASTM 500 TYPE C GRADE 345 W.

02– ALL STRUCTURAL MEMBERS MUST BE CLEANED BY GRINDING PRIOR TO ALL WELDING WORKS.

03– THE CONTRACTOR OR SUB–CONTRACTOR MUST PROCEED WITH ALL WELDING WORKS IN ACCORDANCE WITH W59–03(R2008). HE MUST ALSO BE CERTIFIED AS PER W47.1–09(R2014). THE ENGINEER/OWNER RESERVES THE RIGHT TO VERIFY THESE CERTIFICATIONS BEFORE AS WELL AS AFTER THE PROJECT COMMENCEMENT.

04– PAINT BY OTHERS

REGISTERED PROFESSIONAL ENGINEER
M.Y DIALLO
LICENSEE
NT/NU
2017-05-05

POUR CONSTRUCTION
FOR CONSTRUCTION
SNC·LAVALIN
2017-05-05

REV.	DATE	ISSUES	BY	CHK	APP.
0	2017-05-05	ISSUED FOR CONSTRUCTION	M.LAN	M.DIA	B.CHA
A	2017-05-04	ISSUED FOR APPROVAL	M.LAN	M.DIA	B.CHA

SNC·LAVALIN
SNC-Lavalin Stavibel Inc.
150, rue Gamble Ouest
Rouyn-Noranda (Québec) J9X 2R7
Tel. : 819 764-5161 Fax : 819 797-0158
www.snclavalin.com

Client / Project : AGNICO EAGLE - MELIADINE DIVISION			
Title : 103 - COMBUSTIBLES SUPPORT SECTION			
Drawn by : Michel Lanthier, tech.	Verified by : Mohamed Diallo, ing.	Project manager : Dany Lambert, ing.	Project # : 643812-0000
Designed by : Mohamed Diallo, ing.	Approved by : Mohamed Diallo, ing.	Org. Date : 2017-05-04	Reference : -
Scale : INDICATED	Drawing # : 643812-0000-43DD-0001	Rev. : 0	

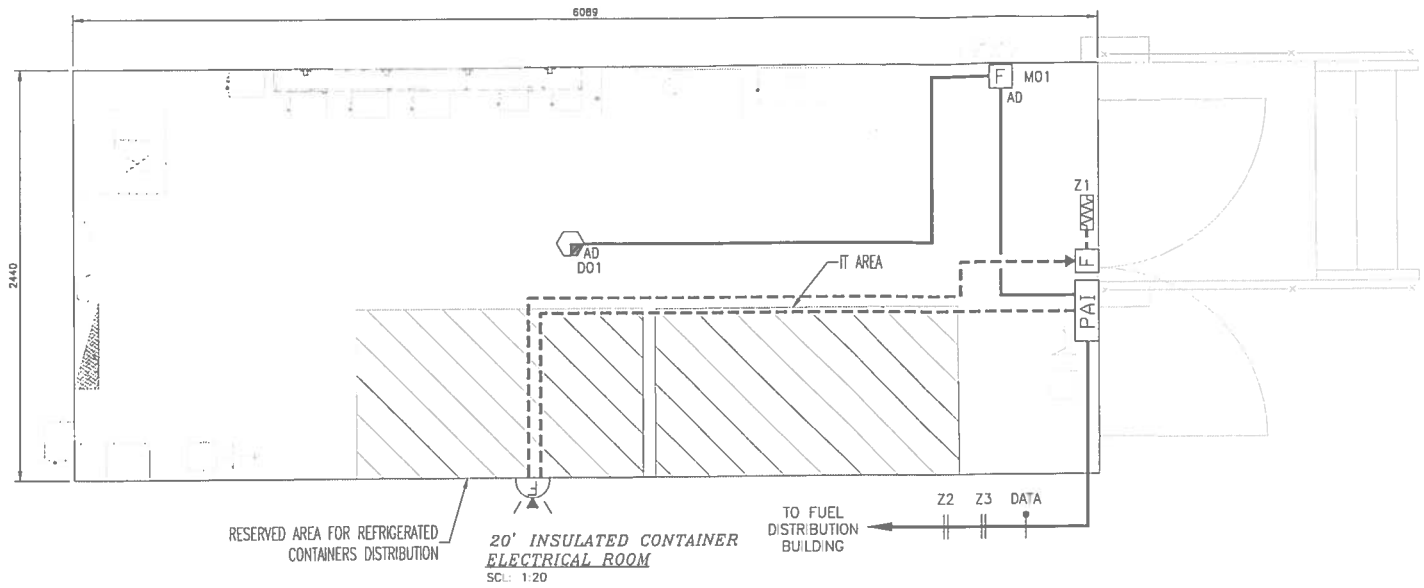

20' INSULATED CONTAINER
ELECTRICAL ROOM
SCL.: 1:20

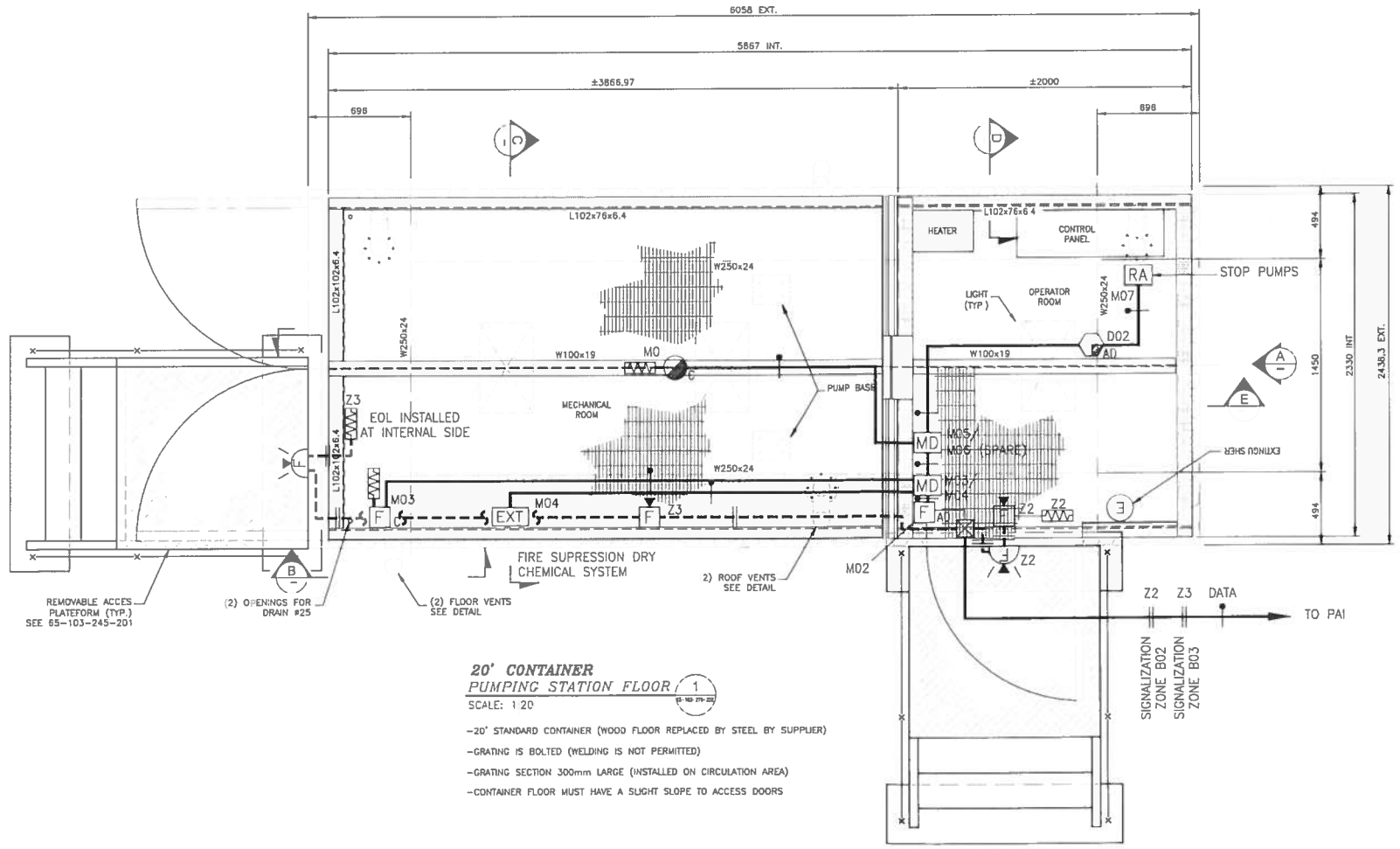

20' CONTAINER
PUMPING STATION FLOOR (1)
SCALE: 1:20

- 20' STANDARD CONTAINER (WOOD FLOOR REPLACED BY STEEL BY SUPPLIER)
- GRATING IS BOLTED (WELDING IS NOT PERMITTED)
- GRATING SECTION 300mm LARGE (INSTALLED ON CIRCULATION AREA)
- CONTAINER FLOOR MUST HAVE A SLIGHT SLOPE TO ACCESS DOORS

IMPORTANT !

THIS DRAWING IS THE PROPERTY OF VIKING FIRE PROTECTION INC. AND IS INTENDED TO BE USED FOR PURPOSES OF THIS PROJECT. THE DISTRIBUTION OR REPRODUCTION IS PROHIBITED UNLESS EXPLICITLY AUTHORIZED.

NOTES

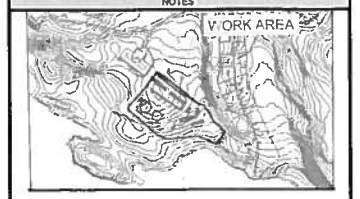

LEGEND

- PA1 — FIRE ALARM CONTROL PANEL NOTIFIER NFS-320C
- F AD — ADDRESSABLE MANUAL PULL STATION # NBG-12LX, C/W FLASH MOUNTED BACKBOX # SB-10, INSTALLATION AT 1220mm TOP.
- F C — EDPM, MANUAL PULL STATION # NBG-12L, C/W FLASH MOUNTED BACKBOX # SB-10 & PROTECTOR # ST-134STR, INSTALLATION AT 1220mm TOP.
- AD — ADDRESSABLE COMBINED SMOKE / THERMIC DETECTOR # FAPT-851A, C/W BASE MOUNTED ON OCTAGONAL BACKBOX
- RA — ADDRESSABLE RELAY MODULE # FDM-1A, MOUNTED ON BOX 4 x 4 x 2 1/8
- MD — ADDRESSABLE SUPERVISORY DOUBLE MODULE # FDM-1A, MOUNTED ON BOX 4 x 4 x 2 1/8
- C — CONVENTIONAL THERMIC DETECTOR, HUMIDITY PROOF CR-135HP, C/W BASE MOUNTED ON OCTAGONAL BACKBOX
- F — FIRE ALARM RED HORN # HRA CEILING MOUNTED ON BOX 4 x 4 x 2 1/8
- SYNCHRONIZED FIRE ALARM RED HORN/STROBE # PSRHA-R CEILING MOUNTED C/W BACKBOX
- EOLR — END OF LINE RED PLATE # EOL-CR, MOUNTED ON SAME BACKBOX
- EXT — FIRE SUPRESSION DRY CHEMICAL SYSTEM
- JUNCTION BOX
- 1 #18 AWG FOR ADDRESSABLE LOOP, FAS FT4
- 2 #14 AWG RW90 SOLID FOR SIGNALIZATION

REQUIREMENTS & APPROVALS

APPLICABLE CODES & STANDARDS				DESIGN ACCORDING TO	
☐ N.F.P.A. 72	☐ N.F.P.A. 16	■ ULC-S524		☐ N.F.P.A. 72	
☐ N.F.P.A. 14	☐ N.F.P.A. 20	☐ -		☐ F.M.	
☐ N.F.P.A. 15	☐ N.F.P.A. 24	☐ -		■ CNB-2005	

APPROVED BY	ISSUED	APPROVAL
-	-	-

ENGINEER STAMP

REVISIONS

REV.	DESCRIPTION	BY	DATE
A	EWS POUR INFORMATION	R.B.	2017-06-15

MONTREAL
3055 Pitfield Blvd
St-Laurent (Quebec) H4S 1H4
Tel.: (514) 333-0110
Fax (514) 333-4266

VIKING
VIKING FIRE PROTECTION INC

DATE	2017-06-13
DRAWN BY	R. BASSAL
CHECKED BY	P. NOEL
CONTRACT NO.	TDC10774
PROJECT	AGNICO EAGLE - MEL1ADINE DIVISION 103 COMBUSTIBLE RANKIN MONTREAL - QUÉBEC
SECTION	SCHEMA UNIFILAIRE D'ALARME INCENDIE
CONTRACT WITH	
SCALE	N/A
SHEET NO.	1 de 1
DRAWING NO.	T1077401A

AGNICO EAGLE

Vendor Document Status

1 ☐ Proceed to next submission and status.

2 ☐ Proceed with exceptions as noted to next submission and status.

3 ☐ Do not proceed.
Revise as noted and resubmit next submission and status.

4 ☑ Complete, no further submission required.

By: JEAN-FRANCOIS TREMBLAY Date: 2017-06-29

Review and authorization to fabricate are only for general conformance with the design concept of the Project as expressed in the Contract Documents. Sole responsibility for the accuracy and completeness of this document, including but not limited to dimensions and quantities, remains with the Supplier/Contractor. Agnico Eagle does not warrant the accuracy or completeness of any of the information contained herein, nor does Agnico Eagle authorize or approve any construction means, methods, techniques, sequences or any safety precautions or procedures.

Agnico Eagle No. 6515-C-270-007-141-TES-0002 R: Sub002

DOCUMENT FOR INFORMATION

NUQSANA PROMEC MINING

AGNICO-EAGLE MINES Ltd.
Inspection & Testing Report

ITR Number: AEM-EL-ITR-001
ITR Type: GENERAL
Contract No.: 6515-C-270-007

AGNICO EAGLE

Tag Number:		**Equipment/ Pipe N°:**		**System:**	
Service:		**Function:**		**Purchase Order:**	
Manufacturer:		**Model:**		**Serial Number:**	
Location Dwg :		**Reference Datasheet:**		**Installation Detail Dwg:**	
Reference Datasheet Number:					

Item N°	Inspection Points	C	NC/ NCR #	N/A	Completed By/ Date
1	DEVICE INSTALLED AS PER INSTALLATION DETAILS, LOCATION OR MANUFACTURERS DRAWINGS	C	NC #	N/A	Promec: CLIENT:
2	EQUIPMENT ACESSIBLE AND EASY TO MAINTAIN	C	NC #	N/A	Promec: CLIENT:
3	EQUIPMENT RACK OR CLAMPING DEVICE ADEQUATE (HEIGHT, SOLIDITY ETC.)	C	NC #	N/A	Promec: CLIENT:
4	GROUNDING INSTALLED AND CONNECTED	C	NC #	N/A	Promec: CLIENT:
5	TERMINAL CONNECTION CONNECTED AND TORQUED	C	NC #	N/A	Promec: CLIENT:
6	BREAKER CONNECTIONS CONNECTED AND TORQUED	C	NC #	N/A	Promec: CLIENT:
7	LUG BOLT TORQUE	C	NC #	N/A	Promec: CLIENT:
8	POWER BUS BAR BOLTED AND TORQUED	C	NC #	N/A	Promec: CLIENT:
9	GROUND BUS BAR BOLTED AND TORQUED	C	NC #	N/A	Promec: CLIENT:
10	MEGGER EQUIPMENT	C	NC #	N/A	Promec: CLIENT:
11	MEGGER CABLES	C	NC #	N/A	Promec: CLIENT:
12	HI-POT TEST	C	NC #	N/A	Promec: CLIENT:
13	PANELS IDENTIFIED	C	NC #	N/A	Promec: CLIENT:
14	UNIT DRAWER IDENTIFIED	C	NC #	N/A	Promec: CLIENT:
15	BREAKERS IDENTIFIED	C	NC #	N/A	Promec: CLIENT:
16	CABLES IDENTIFIED	C	NC #	N/A	Promec: CLIENT:
17	SEAL O RING INSTALLED (IF APPLICABLE)	C	NC #	N/A	Promec: CLIENT:
18	FUSES INSTALLED AND OF ADEQUATE SIZE	C	NC #	N/A	Promec: CLIENT:
18	VISUAL INSPECTION	C	NC #	N/A	Promec: CLIENT:
20	CLEAN / VACUUMED	C	NC #	N/A	Promec: CLIENT:

NUQSANA PROMEC MINING

AGNICO-EAGLE MINES Ltd.
Inspection & Testing Report

ITR Number: AEM-EL-ITR-001
ITR Type: GENERAL
Contract No.: 6515-C-270-007

AGNICO EAGLE

Tag Number:		Equipment/ Pipe N°:		System:	
Service:		Function:		Purchase Order:	
Manufacturer:		Model:		Serial Number:	
Location Dwg :		Reference Datasheet:		Installation Detail Dwg:	
Reference Datasheet Number:					

Item N°	Inspection Points	C	NC/ NCR #	N/A	Completed By/ Date
21	PANEL AND DOOR CLOSED AND BOLTED	C	NC # _____	N/A	Promec: CLIENT:

Comments

Sign Off			
Promec Signature:		CLIENT Signature:	
Date:		Date:	

Legend					
C	Conformance	NC	Non Conformance	N/A	Not Applicable
NCR	Non Conformance Report				

AGNICO EAGLE

Vendor Document Status

1 ☐ Proceed to next submission and status.

2 ☐ Proceed with exceptions as noted to next submission and status.

3 ☐ Do not proceed.
Revise as noted and resubmit next submission and status.

4 ☑ Complete, no further submission required.

By: JEAN-FRANCOIS TREMBLAY Date: 2017-06-29

Review and authorization to fabricate are only for general conformance with the design concept of the Project as expressed in the Contract Documents. Sole responsibility for the accuracy and completeness of this document, including but not limited to dimensions and quantities, remains with the Supplier/Contractor. Agnico Eagle does not warrant the accuracy or completeness of any of the information contained herein, nor does Agnico Eagle authorize or approve any construction means, methods, techniques, sequences or any safety precautions or procedures.

Agnico Eagle No. 6515-C-270-007-141-TES-0002 R: Sub002

DOCUMENT FOR INFORMATION

NUQSANA-PROMEC MINING

AGNICO-EAGLE MINES Ltd.
Inspection & Testing Report

ITR Number: AEM-EL-ITR-001
ITR Type: GENERAL
Contract No.: 6515-C-270-007

AGNICO EAGLE

Tag Number:		**Equipment/ Pipe N°:**		**System:**	
Service:		**Function:**		**Purchase Order:**	
Manufacturer:		**Model:**		**Serial Number:**	
Location Dwg :		**Reference Datasheet:**		**Installation Detail Dwg:**	
Reference Datasheet Number:					

Item N°	Inspection Points	C	NC/ NCR #	N/A	Completed By/ Date
1	DEVICE INSTALLED AS PER INSTALLATION DETAILS, LOCATION OR MANUFACTURERS DRAWINGS	C	NC #	N/A	Promec: CLIENT:
2	EQUIPMENT ACESSIBLE AND EASY TO MAINTAIN	C	NC #	N/A	Promec: CLIENT:
3	EQUIPMENT RACK OR CLAMPING DEVICE ADEQUATE (HEIGHT, SOLIDITY ETC.)	C	NC #	N/A	Promec: CLIENT:
4	GROUNDING INSTALLED AND CONNECTED	C	NC #	N/A	Promec: CLIENT:
5	TERMINAL CONNECTION CONNECTED AND TORQUED	C	NC #	N/A	Promec: CLIENT:
6	BREAKER CONNECTIONS CONNECTED AND TORQUED	C	NC #	N/A	Promec: CLIENT:
7	LUG BOLT TORQUE	C	NC #	N/A	Promec: CLIENT:
8	POWER BUS BAR BOLTED AND TORQUED	C	NC #	N/A	Promec: CLIENT:
9	GROUND BUS BAR BOLTED AND TORQUED	C	NC #	N/A	Promec: CLIENT:
10	MEGGER EQUIPMENT	C	NC #	N/A	Promec: CLIENT:
11	MEGGER CABLES	C	NC #	N/A	Promec: CLIENT:
12	HI-POT TEST	C	NC #	N/A	Promec: CLIENT:
13	PANELS IDENTIFIED	C	NC #	N/A	Promec: CLIENT:
14	UNIT DRAWER IDENTIFIED	C	NC #	N/A	Promec: CLIENT:
15	BREAKERS IDENTIFIED	C	NC #	N/A	Promec: CLIENT:
16	CABLES IDENTIFIED	C	NC #	N/A	Promec: CLIENT:
17	SEAL O RING INSTALLED (IF APPLICABLE)	C	NC #	N/A	Promec: CLIENT:
18	FUSES INSTALLED AND OF ADEQUATE SIZE	C	NC #	N/A	Promec: CLIENT:
18	VISUAL INSPECTION	C	NC #	N/A	Promec: CLIENT:
20	CLEAN / VACUUMED	C	NC #	N/A	Promec: CLIENT:

NUQSANA-PROMEC MINING

AGNICO-EAGLE MINES Ltd.
Inspection & Testing Report

ITR Number: AEM-EL-ITR-001
ITR Type: GENERAL
Contract No.: 6515-C-270-007

AGNICO EAGLE

Tag Number:		**Equipment/ Pipe N°:**		**System:**	
Service:		**Function:**		**Purchase Order:**	
Manufacturer:		**Model:**		**Serial Number:**	
Location Dwg :		**Reference Datasheet:**		**Installation Detail Dwg:**	
Reference Datasheet Number:					

Item N°	Inspection Points	C	NC/ NCR #	N/A	Completed By/ Date
21	PANEL AND DOOR CLOSED AND BOLTED	C	NC #_____	N/A	Promec: CLIENT:

Comments

Sign Off			
Promec Signature:		**CLIENT Signature:**	
Date:		**Date:**	

Legend					
C	Conformance	**NC**	Non Conformance	**N/A**	Not Applicable
NCR	Non Conformance Report				

AGNICO EAGLE

Vendor Document Status

1 ☐ Proceed to next submission and status.

2 ☐ Proceed with exceptions as noted to next submission and status.

3 ☐ Do not proceed.
Revise as noted and resubmit next submission and status.

4 ☑ Complete, no further submission required.

By: JEAN-FRANCOIS TREMBLAY Date: 2017-06-29

Review and authorization to fabricate are only for general conformance with the design concept of the Project as expressed in the Contract Documents. Sole responsibility for the accuracy and completeness of this document, including but not limited to dimensions and quantities, remains with the Supplier/Contractor. Agnico Eagle does not warrant the accuracy or completeness of any of the information contained herein, nor does Agnico Eagle authorize or approve any construction means, methods, techniques, sequences or any safety precautions or procedures.

Agnico Eagle No. 6515-C-270-007-141-TES-0002 R: Sub002

DOCUMENT FOR INFORMATION

NUQSANA PROMEC MINING

AGNICO-EAGLE MINES Ltd.
Inspection & Testing Report

ITR Number: AEM-EL-ITR-001
ITR Type: GENERAL
Contract No.: 6515-C-270-007

AGNICO EAGLE

Tag Number:		**Equipment/ Pipe N°:**		**System:**	
Service:		**Function:**		**Purchase Order:**	
Manufacturer:		**Model:**		**Serial Number:**	
Location Dwg :		**Reference Datasheet:**		**Installation Detail Dwg:**	
Reference Datasheet Number:					

Item N°	Inspection Points	C	NC/ NCR #	N/A	Completed By/ Date
1	DEVICE INSTALLED AS PER INSTALLATION DETAILS, LOCATION OR MANUFACTURERS DRAWINGS	C	NC #	N/A	Promec: CLIENT:
2	EQUIPMENT ACESSIBLE AND EASY TO MAINTAIN	C	NC #	N/A	Promec: CLIENT:
3	EQUIPMENT RACK OR CLAMPING DEVICE ADEQUATE (HEIGHT, SOLIDITY ETC.)	C	NC #	N/A	Promec: CLIENT:
4	GROUNDING INSTALLED AND CONNECTED	C	NC #	N/A	Promec: CLIENT:
5	TERMINAL CONNECTION CONNECTED AND TORQUED	C	NC #	N/A	Promec: CLIENT:
6	BREAKER CONNECTIONS CONNECTED AND TORQUED	C	NC #	N/A	Promec: CLIENT:
7	LUG BOLT TORQUE	C	NC #	N/A	Promec: CLIENT:
8	POWER BUS BAR BOLTED AND TORQUED	C	NC #	N/A	Promec: CLIENT:
9	GROUND BUS BAR BOLTED AND TORQUED	C	NC #	N/A	Promec: CLIENT:
10	MEGGER EQUIPMENT	C	NC #	N/A	Promec: CLIENT:
11	MEGGER CABLES	C	NC #	N/A	Promec: CLIENT:
12	HI-POT TEST	C	NC #	N/A	Promec: CLIENT:
13	PANELS IDENTIFIED	C	NC #	N/A	Promec: CLIENT:
14	UNIT DRAWER IDENTIFIED	C	NC #	N/A	Promec: CLIENT:
15	BREAKERS IDENTIFIED	C	NC #	N/A	Promec: CLIENT:
16	CABLES IDENTIFIED	C	NC #	N/A	Promec: CLIENT:
17	SEAL O RING INSTALLED (IF APPLICABLE)	C	NC #	N/A	Promec: CLIENT:
18	FUSES INSTALLED AND OF ADEQUATE SIZE	C	NC #	N/A	Promec: CLIENT:
18	VISUAL INSPECTION	C	NC #	N/A	Promec: CLIENT:
20	CLEAN / VACUUMED	C	NC #	N/A	Promec: CLIENT:

NUQSANA PROMEC MINING

AGNICO-EAGLE MINES Ltd.
Inspection & Testing Report

ITR Number: AEM-EL-ITR-001
ITR Type: GENERAL
Contract No.: 6515-C-270-007

AGNICO EAGLE

Tag Number:		**Equipment/ Pipe N°:**		**System:**	
Service:		**Function:**		**Purchase Order:**	
Manufacturer:		**Model:**		**Serial Number:**	
Location Dwg :		**Reference Datasheet:**		**Installation Detail Dwg:**	
Reference Datasheet Number:					

Item N°	Inspection Points	C	NC/ NCR #	N/A	Completed By/ Date
21	PANEL AND DOOR CLOSED AND BOLTED	C	NC #	N/A	Promec: CLIENT:

Comments

Sign Off			
Promec Signature:		**CLIENT Signature:**	
Date:		**Date:**	

Legend					
C	Conformance	**NC**	Non Conformance	**N/A**	Not Applicable
NCR	Non Conformance Report				

AGNICO EAGLE

Vendor Document Status

1 ☐ Proceed to next submission and status.

2 ☐ Proceed with exceptions as noted to next submission and status.

3 ☐ Do not proceed.
Revise as noted and resubmit next submission and status.

4 ☑ Complete, no further submission required.

By: Jean-Francois Tremblay Date: 2017-05-02

Review and authorization to fabricate are only for general conformance with the design concept of the Project as expressed in the Contract Documents. Sole responsibility for the accuracy and completeness of this document, including but not limited to dimensions and quantities, remains with the Supplier/Contractor. Agnico Eagle does not warrant the accuracy or completeness of any of the information contained herein, nor does Agnico Eagle authorize or approve any construction means, methods, techniques, sequences or any safety precautions or procedures.

Agnico Eagle No. 6515-C-270-007-141-TES-0013 R: Sub001

DOCUMENT FOR INFORMATION

NUQSANA PROMEC MINING

AGNICO-EAGLE MINES Ltd.
Inspection and Testing Report
(C22498E)

AGNICO EAGLE

Contract Title:	Fuel Tanks Piping Supply and Installation	**Contract No.:**	6515-C-270-007
Subject:	**Equipment Torque**	**ITR No.:**	**AEM-EL-ITR-006**

Torque #: _____ Calibration due Date: _____

Date: _____ By: _____

Equipment #	Power Bus Bar Torque (lbf·ft)	Ground Bus Bar Torque (lbf·ft)	Lug Torque (lbf·ft)	Photos (If applicable)

Promec's Representative Signature _____ Date _____ Client's Representative Signature _____ Date _____

AGNICO EAGLE

Vendor Document Status

1 ☐ Proceed to next submission and status.

2 ☐ Proceed with exceptions as noted to next submission and status.

3 ☐ Do not proceed.
Revise as noted and resubmit next submission and status.

4 ☑ Complete, no further submission required.

By: JEAN-FRANCOIS TREMBLAY Date: 2017-06-22

Review and authorization to fabricate are only for general conformance with the design concept of the Project as expressed in the Contract Documents. Sole responsibility for the accuracy and completeness of this document, including but not limited to dimensions and quantities, remains with the Supplier/Contractor. Agnico Eagle does not warrant the accuracy or completeness of any of the information contained herein, nor does Agnico Eagle authorize or approve any construction means, methods, techniques, sequences or any safety precautions or procedures.

Agnico Eagle No. 6515-C-270-007-141-TES-0028 R: Sub002

DOCUMENT FOR INFORMATION

NUQSANA PROMEC MINING

AGNICO-EAGLE MINES Ltd.
Inspection & Testing Report

ITR Number: AEM-IN-ITR-005A
ITR Type: PCR PANEL
Contract No.: 6515-C-270-007

AGNICO EAGLE

Tag Number:		**Equipment/ Pipe N°:**		**System:**	
Service:		**Function:**		**Purchase Order:**	
Manufacturer:		**Model:**		**Serial Number:**	
Location Dwg :		**Reference Datasheet:**		**Installation Detail Dwg:**	
Reference Datasheet Number:					

Item N°	Inspection Points	C	NC/ NCR #	N/A	Completed By/ Date
1	INSTRUMENT TAG ATTACHED	C	NC #	N/A	Promec: CLIENT:
2	CABLE TAG ATTACHED	C	NC #	N/A	Promec: CLIENT:
3	DEVICE INSTALLED AS PER INSTALLATION DETAILS, LOCATION OR MANUFACTURER'S DRAWING	C	NC #	N/A	Promec: CLIENT:
4	EQUIPMENT ACCESSIBLE AND EASY TO MAINTAIN	C	NC #	N/A	Promec: CLIENT:
5	EQUIPMENT RACK OR CLAMPING DEVICE ADEQUATE (HEIGHT, SOLIDITY ETC.)	C	NC #	N/A	Promec: CLIENT:
6	WIRING CORRECT AND PROPERLY LABELED	C	NC #	N/A	Promec: CLIENT:
7	GROUNDING INSTALLED AND CONNECTED	C	NC #	N/A	Promec: CLIENT:
8	CLEAN OUT ENCLOSURE	C	NC #	N/A	Promec: CLIENT:
9	OPENING DOOR ADEQUATE	C	NC #	N/A	Promec: CLIENT:
10	CALIBRATION CERTIFICATE AVAILABLE	C	NC #	N/A	Promec: CLIENT:
11	ELECTRICAL SUPPLY COMPATIBLE WITH SOURCE	C	NC #	N/A	Promec: CLIENT:

Comments

Sign Off			
Promec Signature:		**CLIENT Signature:**	
Date:		**Date:**	

Legend					
C	Conformance	**NC**	Non Conformance	**N/A**	Not Applicable
NCR	Non Conformance Report				

AGNICO EAGLE

Vendor Document Status

1 ☐ Proceed to next submission and status.

2 ☐ Proceed with exceptions as noted to next submission and status.

3 ☐ Do not proceed.
Revise as noted and resubmit next submission and status.

4 ☒ Complete, no further submission required.

By: LUC SÉNÉCAL Date: 2017-07-10

Review and authorization to fabricate are only for general conformance with the design concept of the Project as expressed in the Contract Documents. Sole responsibility for the accuracy and completeness of this document, including but not limited to dimensions and quantities, remains with the Supplier/Contractor. Agnico Eagle does not warrant the accuracy or completeness of any of the information contained herein, nor does Agnico Eagle authorize or approve any construction means, methods, techniques, sequences or any safety precautions or procedures.

Agnico Eagle No. 6515-C-270-007-141-TES-0009 R: Sub002

DOCUMENT FOR INFORMATION

NUQSANA PROMEC MINING

AGNICO-EAGLE MINES Ltd.
Inspection & Testing Report

ITR Number: AEM-EL-ITR-002
ITR Type: HEATING UNIT
Contract No.: 6515-C-270-007

AGNICO EAGLE

Tag Number:		**Equipment/ Pipe N°:**		**System:**	
Service:		**Function:**		**Purchase Order:**	
Manufacturer:		**Model:**		**Serial Number:**	
Location Dwg :		**Reference Datasheet:**		**Installation Detail Dwg:**	
Reference Datasheet Number:					

Item N°	Inspection Points	C	NC/ NCR #	N/A	Completed By/ Date
1	CHECK FOR PROPER SIZE OF CIRCUIT BREAKERS IN DISTRIBUTION PANEL	C	NC #	N/A	Promec: CLIENT:
2	CHECK FOR PROPER TAGGING AND LABELLING OF ALL PARTS AS SHOWN ON THE DRAWINGS	C	NC #	N/A	Promec: CLIENT:
3	CHECK FOR PROPER OPERATION OF THERMOSTATS AND/OR TEMPERATURE CONTROLLERS	C	NC #	N/A	Promec: CLIENT:
4	FINAL INSPECTION COMPLETE. DEFICIENCY LIST ITEMS CLEARED	C	NC #	N/A	Promec: CLIENT:

Comments

Sign Off			
Promec Signature:		**CLIENT Signature:**	
Date:		**Date:**	

Legend					
C	Conformance	**NC**	Non Conformance	**N/A**	Not Applicable
NCR	Non Conformance Report				

AGNICO EAGLE

Vendor Document Status

1 ☐ Proceed to next submission and status.

2 ☐ Proceed with exceptions as noted to next submission and status.

3 ☐ Do not proceed.
Revise as noted and resubmit next submission and status.

4 ☑ Complete, no further submission required.

By: Jean-Francois Tremblay Date: 2017-05-02

Review and authorization to fabricate/are only for general conformance with the design concept of the Project as expressed in the Contract Documents. Sole responsibility for the accuracy and completeness of this document, including but not limited to dimensions and quantities, remains with the Supplier/Contractor. Agnico Eagle does not warrant the accuracy or completeness of any of the information contained herein, nor does Agnico Eagle authorize or approve any construction means, methods, techniques, sequences or any safety precautions or procedures.

Agnico Eagle No. 6515-C-270-007-141-TES-0018 R: Sub001

DOCUMENT FOR INFORMATION

Agnico-Eagle Mines Ltd.
Miscellaneous Field Report

ITR Number : AEM-GE-ITR-006
Contract no. : C22466T / C22498E

SYSTEM:	TAG NO. :	
LOCATION:	AREA:	UNIT:

DATE	ACTIVITY

PROMEC DESIGNATE - SIGNATURE | TITLE | DATE

CLIENT DESIGNATE - SIGNATURE | TITLE | DATE

NUQSANA PROMEC MINING

AGNICO-EAGLE MINES Ltd.

Inspection and Testing Report

(C22498E)

AGNICO EAGLE

Contract Title: Fuel Tanks Piping Supply and Installation
Contract No.: 6515-C-270-007
Subject: Cable to Meg
ITR No.: AEM-EL-ITR-003

Tester #: MTN. 4055 SN 170617552
Date: 7-11 2017
Megger ?/Volts: 1000 Volts

Calibration due Date: 05-07-2018
By: Tres Cal

Cable ID	Origin / Destination	Phase 1/Phase 2	Phase 2/Phase 3	Phase 1/Phase 3	Phase 1 /GND	Phase 2/GND	Phase 3/GND
65 DPS41601-17-P2		OL	OL		OL	OL	
65 DPS41601-17-P3		OL	OL		OL	OL	
65 DPS41601-8-P1		OL	OL		OL	OL	
65 DPS41601-8-P2		OL	OL		OL	OL	
65 DPS 41601-16-P1		OL	OL		OL	OL	
65 DPS 41601-16-P2		OL	OL		OL	OL	
65 DPS 41601-2-P1		OL	OL		OL	OL	
65 DPS 41601-2-P2		OL	OL		OL	OL	
65 DPS 41601-18 -P1		OL	OL		OL	OL	
65 DPS41601-10/12 P1		OL	OL		OL	OL	
65 DPS41601-10/12 P2		OL	OL		OL	OL	
65 DPS41601-19-P1		OL	OL		OL	OL	
65 DPS 41601-20-P1		OL	OL		OL	OL	

Promec's Representative Signature — Date: 7-11 2017

Client's Representative Signature — Date

NUQSANA PROMEC MINING

AGNICO-EAGLE MINES Ltd.
Inspection and Testing Report
(C22498E)

AGNICO EAGLE

Contract Title:	Fuel Tanks Piping Supply and Installation	**Contract No.:**	6515-C-270-007
Subject:	Cable to Meg	**ITR No.:**	AEM-EL-ITR-003

Tester #: MTD 4055 (SN1706 17552) Calibration due Date: 05-07-2018
Date: 7-11-2017 By: tRescAL
Megger ?/Volts: 1000 Volts

Cable ID	Origin / Destination	Phase 1/Phase 2	Phase 2/Phase 3	Phase 1/Phase 3	Phase 1 /GND	Phase 2/GND	Phase 3/GND
65 DPS 41601-22 P1		OL	OL		OL	OL	
65 DSP 41601-24-P1		OL	OL		OL	OL	
65 DSP 41601-14-P1		OL	OL		OL	OL	
65 DSP 41601-26-P1		OL	OL		OL	OL	
65 DSP 41601-25-P1		OL	OL		OL	OL	
65 DPS 41601-21/23-P1		OL	OL		OL	OL	
65 DPS 41601-							

Promec's Representative Signature — Date: 7-11-2017 — Client's Representative Signature — Date

NUQSANA PROMEC MINING

AGNICO-EAGLE MINES Ltd.
Inspection and Testing Report
(C22498E)

AGNICO EAGLE

Contract Title: Fuel Tanks Piping Supply and Installation
Contract No.: 6515-C-270-007
Subject: Cable to Meg
ITR No.: AEM-EL-ITR-003

Tester #: MIO 4055 (SN170617552)
Date: 6-11-2017
Megger ?/Volts: 1000 Volts

Calibration due Date: 05-07-2018
By: tRESCAL

Cable ID	Origin / Destination	Phase 1/Phase 2	Phase 2/Phase 3	Phase 1/Phase 3	Phase 1 /GND	Phase 2/GND	Phase 3/GND
65 tRF 41601 -P1		OL	OL	OL	OL	OL	OL
65 USD 41603A -P1		OL	OL	OL	OL	OL	OL
65 USD 41603B -P1		OL	OL	OL	OL	OL	OL
65 VSD 41604 A-P1		OL	OL	OL	OL	OL	OL
65 VSD 41604 b -P1		OL	OL	OL	OL	OL	OL
65 DPS 41601 -1/3-P1		OL	OL		OL	OL	
65 DPS 41601-1/3-P2		OL	OL		OL	OL	
65 DPS 41601-5/7-P1		OL	OL		OL	OL	
65 DPS 41601 -5/7 -P2		OL	OL		OL	OL	
65 DPS 41601-08 -P1		OL	OL	OL	OL	OL	OL
65 DPS 41601-9/11- P1		OL	OL		OL	OL	
65 DPS 41601-9/11 -P2		OL	OL		OL	OL	
65 DPS 41601 -17-P1		OL	OL		OL	OL	

Promec's Representative Signature — Date: 7-11-2017

Client's Representative Signature — Date

NUQSANA PROMEC MINING

AGNICO-EAGLE MINES Ltd.
Inspection and Testing Report
(C22498E)

AGNICO EAGLE

Contract Title: Fuel Tanks Piping Supply and Installation
Contract No.: 6515-C-270-007
Subject: Cable to Meg
ITR No.: AEM-EL-ITR-003

Tester #: MTP 4055 (SN170617552)
Calibration due Date: 05-07-2018
Date: 18-08-2017
By: TRESCAL
Megger ?/Volts: 1000 Volts

Cable ID	Origin / Destination	Phase 1/Phase 2	Phase 2/Phase 3	Phase 1/Phase 3	Phase 1 /GND	Phase 2/GND	Phase 3/GND
65 DIS41601-P1		OL	OL	OL	OL	OL	OL
65 SPB41601-P1		OL	OL	OL	OL	OL	OL
65 SPB 41601-P2		OL	OL	OL	OL	OL	OL
65 SPB 41601-P3		OL	OL	OL	OL	OL	OL
65 SPB 41601-P4		OL	OL	OL	OL	OL	OL
65 SPB 41601-P5		OL	OL	OL	OL	OL	OL
65 SPB 41601-P6		OL	OL	OL	OL	OL	OL
65 SPB 41601-P7		OL	OL	OL	OL	OL	OL
65 SPB 41601-P8		OL	OL	OL	OL	OL	OL
65 SPB 41601-01-P1		OL	OL	OL	OL	OL	OL
65 SPB 41601-02-P1		OL	OL	OL	OL	OL	OL
65 SPB 41601-05-P1		OL	OL	OL	OL	OL	OL
65 SPB 41601-06-P1		OL	OL	OL	OL	OL	OL

Promec's Representative Signature — Date: 18-08-2017

Client's Representative Signature — Date

NUQSANA PROMEC MINING

AGNICO-EAGLE MINES Ltd.
Inspection and Testing Report
(C22498E)

AGNICO EAGLE

Contract Title: Fuel Tanks Piping Supply and Installation
Contract No.: 6515-C-270-007
Subject: Cable to Meg
ITR No.: AEM-EL-ITR-003

Tester #: MTP 4055 (SN170617552)
Date: 18-08-2017
Megger ?/Volts: 1000 Volts

Calibration due Date: 05-07-2018
By: tRescal

Cable ID	Origin / Destination	Phase 1/Phase 2	Phase 2/Phase 3	Phase 1/Phase 3	Phase 1 /GND	Phase 2/GND	Phase 3/GND
65 SPB 41602-06-P1A		OL	OL	OL	OL	OL	OL
65 SPB 41601-06 P1B		OL	OL	OL	OL	OL	OL
65 SPB 41601-03 P1		OL	OL	OL	OL	OL	OL
65 SPB 41601-04-P1		OL	OL	OL	OL	OL	OL
65 DPS 41601-15-P1		OL			OL	OL	
65 DPS 41601-6-P1		OL			OL	OL	

Promec's Representative Signature

18-08-2017
Date

Client's Representative Signature

Date

AGNICO EAGLE

Vendor Document Status

1 ☐ Proceed to next submission and status.

2 ☐ Proceed with exceptions as noted to next submission and status.

3 ☐ Do not proceed.
Revise as noted and resubmit next submission and status.

4 ☑ Complete, no further submission required.

By: Jean-Francois Tremblay Date: 2017-05-02

Review and authorization to fabricate are only for general conformance with the design concept of the Project as expressed in the Contract Documents. Sole responsibility for the accuracy and completeness of this document, including but not limited to dimensions and quantities, remains with the Supplier/Contractor. Agnico Eagle does not warrant the accuracy or completeness of any of the information contained herein, nor does Agnico Eagle authorize or approve any construction means, methods, techniques, sequences or any safety precautions or procedures.

Agnico Eagle No. 6515-C-270-007-141-TES-0010 R: Sub001

DOCUMENT FOR INFORMATION

NUQSANA-PROMEC MINING

AGNICO-EAGLE MINES Ltd.
Inspection and Testing Report
(C22498E)

AGNICO EAGLE

Contract Title: Fuel Tanks Piping Supply and Installation
Contract No.: 6515-C-270-007
Subject: Cable to Meg
ITR No.: AEM-EL-ITR-003

Tester #: _____
Date: _____
Megger ?/Volts: _____

Calibration due Date: _____
By: _____

Cable ID	Origin / Destination	Phase 1/Phase 2	Phase 2/Phase 3	Phase 1/Phase 3	Phase 1 /GND	Phase 2/GND	Phase 3/GND

Promec's Representative Signature _____ Date _____

Client's Representative Signature _____ Date _____

Contract Title:	Fuel Tanks Piping Supply and Installation	**Contract No.:**	6515-C-270-007
Subject:	Cable to Meg	**ITR No.:**	AEM-EL-ITR-003

AGNICO EAGLE

Vendor Document Status

1 ☐ Proceed to next submission and status.

2 ☐ Proceed with exceptions as noted to next submission and status.

3 ☐ Do not proceed.
Revise as noted and resubmit next submission and status.

4 ☑ Complete, no further submission required.

By: Jean-Francois Tremblay Date: 2017-05-02

Review and authorization to fabricate are only for general conformance with the design concept of the Project as expressed in the Contract Documents. Sole responsibility for the accuracy and completeness of this document, including but not limited to dimensions and quantities, remains with the Supplier/Contractor. Agnico Eagle does not warrant the accuracy or completeness of any of the information contained herein, nor does Agnico Eagle authorize or approve any construction means, methods, techniques, sequences or any safety precautions or procedures.

Agnico Eagle No. 6515-C-270-007-141-TES-0011 R: Sub001

DOCUMENT FOR INFORMATION

NUQSANA-PROMEC MINING

AGNICO-EAGLE MINES Ltd.
Inspection and Testing Report
(C22498E)

AGNICO EAGLE

Contract Title: Fuel Tanks Piping Supply and Installation
Contract No.: 6515-C-270-007
Subject: Continuity Test
ITR No.: AEM-EL-ITR-004

Cable ID	Description	Continuity	Visual	Ident. Origin	Ident. Destination	Same	Date	By

Promec's Representative Signature | Date | Client's Representative Signature | Date

AGNICO EAGLE

Vendor Document Status

1 ☐ Proceed to next submission and status.

2 ☐ Proceed with exceptions as noted to next submission and status.

3 ☐ Do not proceed.
Revise as noted and resubmit next submission and status.

4 ☑ Complete, no further submission required.

By: Jean-Francois Tremblay Date: 2017-05-02

Review and authorization to fabricate are only for general conformance with the design concept of the Project as expressed in the Contract Documents. Sole responsibility for the accuracy and completeness of this document, including but not limited to dimensions and quantities, remains with the Supplier/Contractor. Agnico Eagle does not warrant the accuracy or completeness of any of the information contained herein, nor does Agnico Eagle authorize or approve any construction means, methods, techniques, sequences or any safety precautions or procedures.

Agnico Eagle No. 6515-C-270-007-141-TES-0010 R: Sub001

DOCUMENT FOR INFORMATION

AGNICO-EAGLE MINES Ltd.
Inspection and Testing Report
(C22498E)

NUQSANA PROMEC MINING

AGNICO EAGLE

Contract Title: Fuel Tanks Piping Supply and Installation
Contract No.: 6515-C-270-007
Subject: Cable to Meg
ITR No.: AEM-EL-ITR-003

Tester #: _____
Date: _____
Megger ?/Volts: _____

Calibration due Date: _____
By: _____

Cable ID	Origin / Destination	Phase 1/Phase 2	Phase 2/Phase 3	Phase 1/Phase 3	Phase 1 /GND	Phase 2/GND	Phase 3/GND

Promec's Representative Signature _____ Date _____

Client's Representative Signature _____ Date _____

Contract Title:	Fuel Tanks Piping Supply and Installation	**Contract No.:**	6515-C-270-007
Subject:	Cable to Meg	**ITR No.:**	AEM-EL-ITR-003

AGNICO EAGLE

Vendor Document Status

1 ☐ Proceed to next submission and status.

2 ☐ Proceed with exceptions as noted to next submission and status.

3 ☐ Do not proceed.
Revise as noted and resubmit next submission and status.

4 ☑ Complete, no further submission required.

By: Jean-Francois Tremblay Date: 2017-05-02

Review and authorization to fabricate are only for general conformance with the design concept of the Project as expressed in the Contract Documents. Sole responsibility for the accuracy and completeness of this document, including but not limited to dimensions and quantities, remains with the Supplier/Contractor. Agnico Eagle does not warrant the accuracy or completeness of any of the information contained herein, nor does Agnico Eagle authorize or approve any construction means, methods, techniques, sequences or any safety precautions or procedures.

Agnico Eagle No. 6515-C-270-007-141-TES-0011 R: Sub001

DOCUMENT FOR INFORMATION

AGNICO-EAGLE MINES Ltd.
Inspection and Testing Report
(C22498E)

Contract Title: Fuel Tanks Piping Supply and Installation
Contract No.: 6515-C-270-007
Subject: Continuity Test
ITR No.: AEM-EL-ITR-004

Cable ID	Description	Continuity	Visual	Ident. Origin	Ident. Destination	Same	Date	By

Promec's Representative Signature | Date | Client's Representative Signature | Date

AGNICO EAGLE

Vendor Document Status

1 ☐ Proceed to next submission and status.

2 ☐ Proceed with exceptions as noted to next submission and status.

3 ☐ Do not proceed.
Revise as noted and resubmit next submission and status.

4 ☑ Complete, no further submission required.

By: Jean-Francois Tremblay Date: 2017-05-02

Review and authorization to fabricate are only for general conformance with the design concept of the Project as expressed in the Contract Documents. Sole responsibility for the accuracy and completeness of this document, including but not limited to dimensions and quantities, remains with the Supplier/Contractor. Agnico Eagle does not warrant the accuracy or completeness of any of the information contained herein, nor does Agnico Eagle authorize or approve any construction means, methods, techniques, sequences or any safety precautions or procedures.

Agnico Eagle No. 6515-C-270-007-141-TES-0010 R: Sub001

DOCUMENT FOR INFORMATION

AGNICO-EAGLE MINES Ltd.
Inspection and Testing Report
(C22498E)

Contract Title:	Fuel Tanks Piping Supply and Installation	**Contract No.:**	6515-C-270-007
Subject:	Cable to Meg	**ITR No.:**	AEM-EL-ITR-003

Tester #: _____ Calibration due Date: _____

Date: _____ By: _____

Megger ?/Volts: _____

Cable ID	Origin / Destination	Phase 1/Phase 2	Phase 2/Phase 3	Phase 1/Phase 3	Phase 1 /GND	Phase 2/GND	Phase 3/GND

Promec's Representative Signature _____ Date _____ Client's Representative Signature _____ Date _____

Contract Title:	Fuel Tanks Piping Supply and Installation	**Contract No.:**	6515-C-270-007
Subject:	**Cable to Meg**	**ITR No.:**	**AEM-EL-ITR-003**

NUQSANA PROMEC MINING

AGNICO-EAGLE MINES Ltd.
Inspection and Testing Report
(C22498E)

AGNICO EAGLE

Contract Title: Fuel Tanks Piping Supply and Installation
Contract No.: 6515-C-270-007
Subject: Continuity Test
ITR No.: AEM-EL-ITR-004

Cable ID	Description	Continuity	Visual	Ident. Origin	Ident. Destination	Same	Date	By
65YB4160003-C1	3c 14	OL	OK	65JB41602	65YB-4160003		6-11-2017	MIKE NOR MAN DIN
65YL4160003-C1	3c 14	OL	OK	"	65YL4160003		6-11-2017	" "
65YL4160013-C1	3c 14	OL	OK	"	65YL4160013		6-11-2017	" "
65YL4160042-C1	3c 14	OL	OK	"	65YL4160042		6-11-2017	" "
65YL4160047-C1	6c 14	OL	OK	"	65YL4160047		6-11-2017	" "
65XS4160039-P1	6c 14	OL	OK	65JB41601	65XS4160039			" "
65XS4160039-C3								
65XS4160039-C2	2c 14	OL	OK	65XS4160039	SCHLCON SC47CC		6-11-2017	" "
65XS4160039-C1	3c 14	OL	OK	PLC4160001	MICROLOAD		6-11-2017	" "
65VSD41604B-C1	3c 14	OL	OK	65JB41602	65VSD41604B		6-11-2017	" "
65VSD41604A-C1	3c 14	OL	OK	65JB41602	65VSD41604A		6-11-2017	" "
65VSD41603B-C1	3c 14	OL	OK	" "	65VSD41603B		6-11-2017	" "
65VSD41603A-C1	3c 14	OL	OK	" "	65VSD41603A		6-11-2017	" "
65TT4160012-C1	1PR 16	OL	OK	" "	65TT4160012		6-11-2017	" "
65TT4160002-C1	1PR16	OL	OK	" "	65TT4160002		6-11-2017	" "
65TE4160035-C1	2PR16	OL	OK	65TE4160035	MICROLOAD		6-11-2017	" "

Promec's Representative Signature — Date: 7-11-2017

Client's Representative Signature — Date

NUQSANA PROMEC MINING

AGNICO-EAGLE MINES Ltd.
Inspection and Testing Report
(C22498E)

AGNICO EAGLE

Contract Title:	Fuel Tanks Piping Supply and Installation	Contract No.:	6515-C-270-007
Subject:	Continuity Test	ITR No.:	AEM-EL-ITR-004

Cable ID	Description	Continuity	Visual	Ident. Origin	Ident. Destination	Same	Date	By
65TE4116002 9-C1	2PR 16	OL	OK	65TE4116 0029	MICROLOAD		7-11-2017	MIKE NORMANDIN
65FV4116002 9A-C1	3C 14	OL	OK	65FCV4116 0029	65 FV4116002 9A		7-11-2017	" "
65FV4116002 9B-C1	3C 12	OL	OK	"	65 FV4116002 9B		7-11-2017	" "
65FV4116003 5A C1	3C 14	OL	OK	65FCV4116003 5	65 FV4116003 5A		7-11-2017	" "
65FV4116003 5B-C1	3C 12	OL	OK	"	65 FV4116003 5B		7-11-2017	" "
65HSS 4116003 9-C1	6C 14	OL	OK	PLC 416 01	65JB41601		7-11-2017	" "
65 HSS 4116004 0-C1	6C 14	OL	OK	65JB41602	65HSS 4116004 0		7-11-2017	" "
65 HSS 4116006 0-C1	6C 14	OL	OK	PLC 416 01	65HSS 4116006 0		7-11-2017	" "
65LIT4116000 3-C1	1PR 16	OL	OK	65JB41602	65LIT4116000 3		7-11-2017	" "
65LIT4116001 3-C1	1PR 16	OL	OK	"	65LIT4116001 3		7-11-2017	" "
65LIT4116004 2-C1	1PR 16	OL	OK	"	65LIT4116004 2		7-11-2017	" "
65LIT4116004 7-C1	1PR 16	OL	OK	"	65LIT4116004 7		7-11-2017	" "
65LS 4116004 2-C1	6C 14	OL	OK	"	65LS4116004 2		7-11-2017	" "
65LS4116004 2-C1	6C 14	OL	OK	"	65LS 4116004 7		7-11 2017	" "
65FT4116002 9-C1	2PR 16	OL	OK	65FT4116029	MICROLOAD		8-11-2017	" "
65FT4116003 5-C1	2PR 16	OL	OK	65 FT4116035	MICROLOAD		8-11-2017	" "

Promec's Representative Signature	Date	Client's Representative Signature	Date
	9-11-2017		

NUQSANA PROMEC MINING

AGNICO-EAGLE MINES Ltd.
Inspection and Testing Report
(C22498E)

AGNICO EAGLE

Contract Title: Fuel Tanks Piping Supply and Installation
Subject: Continuity Test
Contract No.: 6515-C-270-007
ITR No.: AEM-EL-ITR-004

Cable ID	Description	Continuity	Visual	Ident. Origin	Ident. Destination	Same	Date	By
65fv4160004-c1	6c 14	OL	OK	65Jb41602	65 FV 4160004		8-11-2017	MIKE NORM AND DIN
65FV4160004P1	3c12	OL	OK	MOV GRF box	65FV 416 0004		8-11-2017	" "
65FV4160006-C1	6c-14	OL	OK	65Jb41602	65FV 4160006		8-11-2017	" "
65FV4160006-P1	3c12	OL	OK	MOV GRF box	65FV4166006		8-11-2017	" "
65FV 4160004-C1	6c14	OL	OK	65Jb41602	65FV41600 14		8-11-2017	" "
65FV 41600 14-P1	3c 12	OL	OK	mov GRF box	65FV41600 14		8-11-2017	" "
65 FV 41600 16-C1	6c 14	OL	OK	65Jb41602	65FV 41600 16		8-11-2017	" "
65 FV 41600 16-P1	3c 12	OL	OK	MOV GRF box	65FV 41600 16		8-11-2017	" "
65FV4160043-C1	6c 14	OL	OK	65JB41602	65FV 41600 43		8-11-2017	" "
65FV41600 48-C1	6c 14	OL	OK	"	65FV4160048		8-11-2017	" "
65 FQY41600 49-C1	2PR 16	OL	OK	"	65FQY41600 49		9-11-2017	" "
65 FQY 41600 44-C1	2PR 16	OL	OK	"	65 FQY 41600 44		9-11-2017	" "
65 FQY 41600 29-P1	3C 14	OL	OK	65JB41601	MICROLOAD		9-11-2017	" "
65FQY 41600 29-P2	3c 14	OL	OK	"	"		9-11-2017	" "
65FQY41600 29-C2	4PR 16	OL	OK	PLC-416-01	"		9-11-2017	" "
65 FCV 41600 29-C1	3c 14	OL	OK	65 FCV 4160029	"		9-11-2017	" "

Promec's Representative Signature — Date: 9-11-2017

Client's Representative Signature — Date

NUQSANA PROMEC MINING

AGNICO-EAGLE MINES Ltd.
Inspection and Testing Report
(C22498E)

AGNICO EAGLE

Contract Title: Fuel Tanks Piping Supply and Installation
Contract No.: 6515-C-270-007
Subject: Continuity Test
ITR No.: AEM-EL-ITR-004

Cable ID	Description	Continuity	Visual	Ident. Origin	Ident. Destination	Same	Date	By
65FCV41600335-C1	3c 14	OL	OK	65FCV41600335	MICROLOAD		9-11-2017	MIKE NORMANDIN
65FQY41600335-C2	4PR 16	OL	OK	PLC 416 001	"		9-11-2017	" "
65FQY41600335P1	3c 14	OL	OK	65JB41601	"		9-11-2017	" "
65FQY41600335P2	3c 14	OL	OK	"	"		9-11-2017	" "

Promec's Representative Signature — Date: 9-11-2017

Client's Representative Signature — Date

AGNICO EAGLE

Vendor Document Status

1 ☐ Proceed to next submission and status.

2 ☐ Proceed with exceptions as noted to next submission and status.

3 ☐ Do not proceed.
Revise as noted and resubmit next submission and status.

4 ☑ Complete, no further submission required.

By: Jean-Francois Tremblay Date: 2017-05-02

Review and authorization to fabricate are only for general conformance with the design concept of the Project as expressed in the Contract Documents. Sole responsibility for the accuracy and completeness of this document, including but not limited to dimensions and quantities, remains with the Supplier/Contractor. Agnico Eagle does not warrant the accuracy or completeness of any of the information contained herein, nor does Agnico Eagle authorize or approve any construction means, methods, techniques, sequences or any safety precautions or procedures.

Agnico Eagle No. 6515-C-270-007-141-TES-0011 R: Sub001

DOCUMENT FOR INFORMATION

AGNICO-EAGLE MINES Ltd.
Inspection and Testing Report
(C22498E)

Contract Title: Fuel Tanks Piping Supply and Installation
Contract No.: 6515-C-270-007
Subject: Continuity Test
ITR No.: AEM-EL-ITR-004

Cable ID	Description	Continuity	Visual	Ident. Origin	Ident. Destination	Same	Date	By

Promec's Representative Signature | Date | Client's Representative Signature | Date

AGNICO EAGLE

Vendor Document Status

1 ☐ Proceed to next submission and status.

2 ☐ Proceed with exceptions as noted to next submission and status.

3 ☐ Do not proceed.
Revise as noted and resubmit next submission and status.

4 ☑ Complete, no further submission required.

By: Jean-Francois Tremblay Date: 2017-05-02

Review and authorization to fabricate are only for general conformance with the design concept of the Project as expressed in the Contract Documents. Sole responsibility for the accuracy and completeness of this document, including but not limited to dimensions and quantities, remains with the Supplier/Contractor. Agnico Eagle does not warrant the accuracy or completeness of any of the information contained herein, nor does Agnico Eagle authorize or approve any construction means, methods, techniques, sequences or any safety precautions or procedures.

Agnico Eagle No. 6515-C-270-007-141-TES-0018 R: Sub001

DOCUMENT FOR INFORMATION

Agnico-Eagle Mines Ltd.
Miscellaneous Field Report

ITR Number : AEM-GE-ITR-006
Contract no. : C22466T / C22498E

SYSTEM:	TAG NO. :	
LOCATION:	AREA:	UNIT:

DATE	ACTIVITY

PROMEC DESIGNATE - SIGNATURE | TITLE | DATE

CLIENT DESIGNATE - SIGNATURE | TITLE | DATE

AGNICO EAGLE

Vendor Document Status

1 ☐ Proceed to next submission and status.

2 ☐ Proceed with exceptions as noted to next submission and status.

3 ☐ Do not proceed.
Revise as noted and resubmit next submission and status.

4 ☑ Complete, no further submission required.

By: Jean-Francois Tremblay Date: 2017-05-02

Review and authorization to fabricate are only for general conformance with the design concept of the Project as expressed in the Contract Documents. Sole responsibility for the accuracy and completeness of this document, including but not limited to dimensions and quantities, remains with the Supplier/Contractor. Agnico Eagle does not warrant the accuracy or completeness of any of the information contained herein, nor does Agnico Eagle authorize or approve any construction means, methods, techniques, sequences or any safety precautions or procedures.

Agnico Eagle No. 6515-C-270-007-141-TES-0002 R: Sub001

DOCUMENT FOR INFORMATION

NUQSANA PROMEC MINING

AGNICO-EAGLE MINES Ltd.
Inspection & Testing Report

ITR Number: AEM-EL-ITR-001
ITR Type: GENERAL
Contract No.: 6515-C-270-007

AGNICO EAGLE

Tag Number:		**Equipment/ Pipe N°:**		**System:**	
Service:		**Function:**		**Purchase Order:**	
Manufacturer:		**Model:**		**Serial Number:**	
Location Dwg :		**Reference Datasheet:**		**Installation Detail Dwg:**	
Reference Datasheet Number:					

Item N°	Inspection Points	C	NC/ NCR #	N/A	Completed By/ Date
1	DEVICE INSTALLED AS PER INSTALLATION DETAILS, LOCATION OR MANUFACTURERS DRAWINGS	C	NC #	N/A	Promec: CLIENT:
2	EQUIPMENT ACESSIBLE AND EASY TO MAINTAIN	C	NC #	N/A	Promec: CLIENT:
3	EQUIPMENT RACK OR CLAMPING DEVICE ADEQUATE (HEIGHT, SOLIDITY ETC.)	C	NC #	N/A	Promec: CLIENT:
4	GROUNDING INSTALLED AND CONNECTED	C	NC #	N/A	Promec: CLIENT:
5	TERMINAL CONNECTION CONNECTED AND TORQUED	C	NC #	N/A	Promec: CLIENT:
6	BREAKER CONNECTIONS CONNECTED AND TORQUED	C	NC #	N/A	Promec: CLIENT:
7	LUG BOLT TORQUE	C	NC #	N/A	Promec: CLIENT:
8	POWER BUS BAR BOLTED AND TORQUED	C	NC #	N/A	Promec: CLIENT:
9	GROUND BUS BAR BOLTED AND TORQUED	C	NC #	N/A	Promec: CLIENT:
10	MEGGER EQUIPMENT	C	NC #	N/A	Promec: CLIENT:
11	MEGGER CABLES	C	NC #	N/A	Promec: CLIENT:
12	HI-POT TEST	C	NC #	N/A	Promec: CLIENT:
13	PANELS IDENTIFIED	C	NC #	N/A	Promec: CLIENT:
14	UNIT DRAWER IDENTIFIED	C	NC #	N/A	Promec: CLIENT:
15	BREAKERS IDENTIFIED	C	NC #	N/A	Promec: CLIENT:
16	CABLES IDENTIFIED	C	NC #	N/A	Promec: CLIENT:
17	SEAL O RING INSTALLED (IF APPLICABLE)	C	NC #	N/A	Promec: CLIENT:
18	FUSES INSTALLED AND OF ADEQUATE SIZE	C	NC #	N/A	Promec: CLIENT:
18	VISUAL INSPECTION	C	NC #	N/A	Promec: CLIENT:
20	CLEAN / VACUUMED	C	NC #	N/A	Promec: CLIENT:

NUQSANA PROMEC MINING

AGNICO-EAGLE MINES Ltd.
Inspection & Testing Report

ITR Number: AEM-EL-ITR-001
ITR Type: GENERAL
Contract No.: 6515-C-270-007

AGNICO EAGLE

Tag Number:		Equipment/ Pipe N°:		System:	
Service:		Function:		Purchase Order:	
Manufacturer:		Model:		Serial Number:	
Location Dwg :		Reference Datasheet:		Installation Detail Dwg:	
Reference Datasheet Number:					

Item N°	Inspection Points	C	NC/ NCR #	N/A	Completed By/ Date
21	PANEL AND DOOR CLOSED AND BOLTED	C	NC # _____	N/A	Promec: CLIENT:

Comments

Sign Off			
Promec Signature:		CLIENT Signature:	
Date:		Date:	

Legend					
C	Conformance	NC	Non Conformance	N/A	Not Applicable
NCR	Non Conformance Report				

AGNICO EAGLE

Vendor Document Status

1 ☐ Proceed to next submission and status.

2 ☐ Proceed with exceptions as noted to next submission and status.

3 ☐ Do not proceed.
Revise as noted and resubmit next submission and status.

4 ☑ Complete, no further submission required.

By: Jean-Francois Tremblay Date: 2017-05-02

Review and authorization to fabricate are only for general conformance with the design concept of the Project as expressed in the Contract Documents. Sole responsibility for the accuracy and completeness of this document, including but not limited to dimensions and quantities, remains with the Supplier/Contractor. Agnico Eagle does not warrant the accuracy or completeness of any of the information contained herein, nor does Agnico Eagle authorize or approve any construction means, methods, techniques, sequences or any safety precautions or procedures.

Agnico Eagle No. 6515-C-270-007-141-TES-0002 R: Sub001

DOCUMENT FOR INFORMATION

NUQSANA PROMEC MINING

AGNICO-EAGLE MINES Ltd.
Inspection & Testing Report

ITR Number: AEM-EL-ITR-001
ITR Type: GENERAL
Contract No.: 6515-C-270-007

AGNICO EAGLE

Tag Number:		**Equipment/ Pipe N°:**		**System:**	
Service:		**Function:**		**Purchase Order:**	
Manufacturer:		**Model:**		**Serial Number:**	
Location Dwg :		**Reference Datasheet:**		**Installation Detail Dwg:**	
Reference Datasheet Number:					

Item N°	Inspection Points	C	NC/ NCR #	N/A	Completed By/ Date
1	DEVICE INSTALLED AS PER INSTALLATION DETAILS, LOCATION OR MANUFACTURERS DRAWINGS	C	NC #	N/A	Promec: CLIENT:
2	EQUIPMENT ACESSIBLE AND EASY TO MAINTAIN	C	NC #	N/A	Promec: CLIENT:
3	EQUIPMENT RACK OR CLAMPING DEVICE ADEQUATE (HEIGHT, SOLIDITY ETC.)	C	NC #	N/A	Promec: CLIENT:
4	GROUNDING INSTALLED AND CONNECTED	C	NC #	N/A	Promec: CLIENT:
5	TERMINAL CONNECTION CONNECTED AND TORQUED	C	NC #	N/A	Promec: CLIENT:
6	BREAKER CONNECTIONS CONNECTED AND TORQUED	C	NC #	N/A	Promec: CLIENT:
7	LUG BOLT TORQUE	C	NC #	N/A	Promec: CLIENT:
8	POWER BUS BAR BOLTED AND TORQUED	C	NC #	N/A	Promec: CLIENT:
9	GROUND BUS BAR BOLTED AND TORQUED	C	NC #	N/A	Promec: CLIENT:
10	MEGGER EQUIPMENT	C	NC #	N/A	Promec: CLIENT:
11	MEGGER CABLES	C	NC #	N/A	Promec: CLIENT:
12	HI-POT TEST	C	NC #	N/A	Promec: CLIENT:
13	PANELS IDENTIFIED	C	NC #	N/A	Promec: CLIENT:
14	UNIT DRAWER IDENTIFIED	C	NC #	N/A	Promec: CLIENT:
15	BREAKERS IDENTIFIED	C	NC #	N/A	Promec: CLIENT:
16	CABLES IDENTIFIED	C	NC #	N/A	Promec: CLIENT:
17	SEAL O RING INSTALLED (IF APPLICABLE)	C	NC #	N/A	Promec: CLIENT:
18	FUSES INSTALLED AND OF ADEQUATE SIZE	C	NC #	N/A	Promec: CLIENT:
18	VISUAL INSPECTION	C	NC #	N/A	Promec: CLIENT:
20	CLEAN / VACUUMED	C	NC #	N/A	Promec: CLIENT:

NUQSANA PROMEC MINING

AGNICO-EAGLE MINES Ltd.
Inspection & Testing Report

ITR Number: AEM-EL-ITR-001
ITR Type: GENERAL
Contract No.: 6515-C-270-007

AGNICO EAGLE

Tag Number:		**Equipment/ Pipe N°:**		**System:**	
Service:		**Function:**		**Purchase Order:**	
Manufacturer:		**Model:**		**Serial Number:**	
Location Dwg :		**Reference Datasheet:**		**Installation Detail Dwg:**	
Reference Datasheet Number:					

Item N°	Inspection Points	C	NC/ NCR #	N/A	Completed By/ Date
21	PANEL AND DOOR CLOSED AND BOLTED	C	NC # _____	N/A	Promec: CLIENT:

Comments

Sign Off			
Promec Signature:		**CLIENT Signature:**	
Date:		**Date:**	

Legend					
C	Conformance	NC	Non Conformance	N/A	Not Applicable
NCR	Non Conformance Report				

AGNICO EAGLE

Vendor Document Status

1 ☐ Proceed to next submission and status.

2 ☐ Proceed with exceptions as noted to next submission and status.

3 ☐ Do not proceed.
Revise as noted and resubmit next submission and status.

4 ☑ Complete, no further submission required.

By: JEAN-FRANCOIS TREMBLAY Date: 2017-06-22

Review and authorization to fabricate are only for general conformance with the design concept of the Project as expressed in the Contract Documents. Sole responsibility for the accuracy and completeness of this document, including but not limited to dimensions and quantities, remains with the Supplier/Contractor. Agnico Eagle does not warrant the accuracy or completeness of any of the information contained herein, nor does Agnico Eagle authorize or approve any construction means, methods, techniques, sequences or any safety precautions or procedures.

Agnico Eagle No. 6515-C-270-007-141-TES-0021 R: Sub002

DOCUMENT FOR INFORMATION

NUQSANA PROMEC MINING

AGNICO-EAGLE MINES Ltd.
Inspection & Testing Report

ITR Number: AEM-IN-ITR-001B
ITR Type: FLOW SWITCH
Contract No.: 6515-C-270-007

AGNICO EAGLE

Tag Number:		**Equipment/ Pipe N°:**		**System:**	
Service:		**Function:**		**Purchase Order:**	
Manufacturer:		**Model:**		**Serial Number:**	
Location Dwg :		**Reference Datasheet:**		**Installation Detail Dwg:**	
Reference Datasheet Number:					

Item N°	Inspection Points	C	NC/ NCR #	N/A	Completed By/ Date
1	INSTRUMENT TAG ATTACHED	C	NC #	N/A	Promec: CLIENT:
2	CABLE TAG ATTACHED	C	NC #	N/A	Promec: CLIENT:
3	DEVICE INSTALLED AS PER INSTALLATION DETAILS, LOCATION OR MANUFACTURER'S DRAWING	C	NC #	N/A	Promec: CLIENT:
4	EQUIPMENT ACCESSIBLE AND EASY TO MAINTAIN	C	NC #	N/A	Promec: CLIENT:
5	WIRING CORRECT AND PROPERLY LABELED	C	NC #	N/A	Promec: CLIENT:
6	FLOW ARROW OR ORIENTATION MATCHES PROCESS FLOW	C	NC #	N/A	Promec: CLIENT:
7	PROCESS CONNECTION ADEQUATE (SCREWED OR FLANGED)	C	NC #	N/A	Promec: CLIENT:
8	CALIBRATION CERTIFICATE AVAILABLE	C	NC #	N/A	Promec: CLIENT:
9	ELECTRICAL SUPPLY COMPATIBLE WITH SOURCE	C	NC #	N/A	Promec: CLIENT:
10		C	NC #	N/A	Promec: CLIENT:
11		C	NC #	N/A	Promec: CLIENT:

Comments

Sign Off			
Promec Signature:		**CLIENT Signature:**	
Date:		**Date:**	

Legend					
C	Conformance	**NC**	Non Conformance	**N/A**	Not Applicable
NCR	Non Conformance Report				

AGNICO EAGLE

Vendor Document Status

1 ☐ Proceed to next submission and status.

2 ☐ Proceed with exceptions as noted to next submission and status.

3 ☐ Do not proceed.
Revise as noted and resubmit next submission and status.

4 ☑ Complete, no further submission required.

By: JEAN-FRANCOIS TREMBLAY Date: 2017-06-22

Review and authorization to fabricate are only for general conformance with the design concept of the Project as expressed in the Contract Documents. Sole responsibility for the accuracy and completeness of this document, including but not limited to dimensions and quantities, remains with the Supplier/Contractor. Agnico Eagle does not warrant the accuracy or completeness of any of the information contained herein, nor does Agnico Eagle authorize or approve any construction means, methods, techniques, sequences or any safety precautions or procedures.

Agnico Eagle No. 6515-C-270-007-141-TES-0022 R: Sub002

DOCUMENT FOR INFORMATION

NUQSANA PROMEC MINING

AGNICO-EAGLE MINES Ltd.
Inspection & Testing Report

ITR Number: AEM-IN-ITR-001C
ITR Type: FLOW TRANSMITTER
Contract No.: 6515-C-270-007

AGNICO EAGLE

Tag Number:		**Equipment/ Pipe N°:**		**System:**	
Service:		**Function:**		**Purchase Order:**	
Manufacturer:		**Model:**		**Serial Number:**	
Location Dwg :		**Reference Datasheet:**		**Installation Detail Dwg:**	
Reference Datasheet Number:					

Item N°	Inspection Points	C	NC/ NCR #	N/A	Completed By/ Date
1	INSTRUMENT TAG ATTACHED	C	NC #	N/A	Promec: CLIENT:
2	CABLE TAG ATTACHED	C	NC #	N/A	Promec: CLIENT:
3	DEVICE INSTALLED AS PER INSTALLATION DETAILS, LOCATION OR MANUFACTURER'S DRAWING	C	NC #	N/A	Promec: CLIENT:
4	EQUIPMENT ACESSIBLE AND EASY TO MAINTAIN	C	NC #	N/A	Promec: CLIENT:
5	EQUIPMENT RACK OR CLAMPING DEVICE ADEQUATE (HEIGHT, SOLIDITY ETC.)	C	NC #	N/A	Promec: CLIENT:
6	WIRING CORRECT AND PROPERLY LABELED	C	NC #	N/A	Promec: CLIENT:
7	MINIMUM STRAIGHT PIPE LENGHT UPSTREAM AND DOWNSTREAM REQUIREMENT	C	NC #	N/A	Promec: CLIENT:
8	GROUNDING OF DEVICE	C	NC #	N/A	Promec: CLIENT:
9	FLOW ARROW OR ORIENTATION MATCHES PROCESS FLOW	C	NC #	N/A	Promec: CLIENT:
10	DISPLAY VISIBLE	C	NC #	N/A	Promec: CLIENT:
11	PROCESS CONNECTION ADEQUATE (SCREWED OR FLANGED)	C	NC #	N/A	Promec: CLIENT:
12	CALIBRATION CERTIFICATE AVAILABLE	C	NC #	N/A	Promec: CLIENT:
13	ELECTRICAL SUPPLY COMPATIBLE WITH SOURCE	C	NC #	N/A	Promec: CLIENT:

Comments

Sign Off			
Promec Signature:		**CLIENT Signature:**	
Date:		**Date:**	

Legend					
C	Conformance	**NC**	Non Conformance	**N/A**	Not Applicable
NCR	Non Conformance Report				

NUQSANA PROMEC MINING

AGNICO-EAGLE MINES Ltd.
Inspection & Testing Report

ITR Number: AEM-IN-ITR-002A
ITR Type: PUSH BUTTON STATION
Contract No.: 6515-C-270-007

Vendor Document Status
AGNICO EAGLE
1 ☐ Proceed to next submission and status.
2 ☐ Proceed with exceptions as noted no need submission and status.
3 ☐ Do not proceed, revise as noted and resubmit next submission and status.
4 ☑ Complete, no further submission required.
By: JEAN-FRANCOIS TREMBLAY Date: 2017-06-29
Review and authorization to fabricate are only for general conformance with the Contract Documents. Fabrication of the equipment is the responsibility of the Contractor/Supplier. Any responsibility for the correctness and quantities, remains with the Supplier/Contractor. Agnico Eagle does not warrant the accuracy or completeness of any of the information contained herein, nor does Agnico Eagle authorize or approve any construction means, methods, techniques, sequences or any safety precautions or procedures.
Agnico Eagle No: 6515-C-270-007-141-TES-0023 • Sub002
DOCUMENT FOR INFORMATION

AGNICO EAGLE

Tag Number:		**Equipment/ Pipe N°:**		**System:**	
Service:		**Function:**		**Purchase Order:**	
Manufacturer:		**Model:**		**Serial Number:**	
Location Dwg :		**Reference Datasheet:**		**Installation Detail Dwg:**	
Reference Datasheet Number:					

Item N°	Inspection Points	C	NC/ NCR #	N/A	Completed By/ Date
1	INSTRUMENT TAG ATTACHED	C	NC #	N/A	Promec: CLIENT:
2	CABLE TAG ATTACHED	C	NC #	N/A	Promec: CLIENT:
3	DEVICE INSTALLED AS PER INSTALLATION DETAILS, LOCATION OR MANUFACTURER'S DRAWING	C	NC #	N/A	Promec: CLIENT:
4	EQUIPMENT ACCESSIBLE AND EASY TO MAINTAIN / OPERATE	C	NC #	N/A	Promec: CLIENT:
5	EQUIPMENT RACK OR CLAMPING DEVICE ADEQUATE (HEIGHT, SOLIDITY ETC.)	C	NC #	N/A	Promec: CLIENT:
6	WIRING CORRECT AND PROPERLY LABELED	C	NC #	N/A	Promec: CLIENT:
7		C	NC #	N/A	Promec: CLIENT:
8		C	NC #	N/A	Promec: CLIENT:
9		C	NC #	N/A	Promec: CLIENT:
10		C	NC #	N/A	Promec: CLIENT:
11		C	NC #	N/A	Promec: CLIENT:

Comments

Sign Off			
Promec Signature:		**CLIENT Signature:**	
Date:		**Date:**	

Legend					
C	Conformance	NC	Non Conformance	N/A	Not Applicable
NCR	Non Conformance Report				

AGNICO EAGLE

Vendor Document Status

1 ☐ Proceed to next submission and status.

2 ☐ Proceed with exceptions as noted to next submission and status.

3 ☐ Do not proceed.
Revise as noted and resubmit next submission and status.

4 ☑ Complete, no further submission required.

By: JEAN-FRANCOIS TREMBLAY Date: 2017-06-22

Review and authorization to fabricate are only for general conformance with the design concept of the Project as expressed in the Contract Documents. Sole responsibility for the accuracy and completeness of this document, including but not limited to dimensions and quantities, remains with the Supplier/Contractor. Agnico Eagle does not warrant the accuracy or completeness of any of the information contained herein, nor does Agnico Eagle authorize or approve any construction means, methods, techniques, sequences or any safety precautions or procedures.

Agnico Eagle No. 6515-C-270-007-141-TES-0024 R: Sub002

DOCUMENT FOR INFORMATION

AGNICO-EAGLE MINES Ltd.
Inspection & Testing Report

ITR Number: AEM-IN-ITR-003A
ITR Type: LEVEL TRANSMITTER
Contract No.: 6515-C-270-007

Tag Number:		**Equipment/ Pipe N°:**		**System:**	
Service:		**Function:**		**Purchase Order:**	
Manufacturer:		**Model:**		**Serial Number:**	
Location Dwg :		**Reference Datasheet:**		**Installation Detail Dwg:**	
Reference Datasheet Number:					

Item N°	Inspection Points	C	NC/ NCR #	N/A	Completed By/ Date
1	INSTRUMENT TAG ATTACHED	C	NC #	N/A	Promec: CLIENT:
2	CABLE TAG ATTACHED	C	NC #	N/A	Promec: CLIENT:
3	DEVICE INSTALLED AS PER INSTALLATION DETAILS, LOCATION OR MANUFACTURER'S DRAWING	C	NC #	N/A	Promec: CLIENT:
4	EQUIPMENT ACCESSIBLE AND EASY TO MAINTAIN	C	NC #	N/A	Promec: CLIENT:
5	EQUIPMENT RACK OR CLAMPING DEVICE ADEQUATE (HEIGHT, SOLIDITY ETC.)	C	NC #	N/A	Promec: CLIENT:
6	WIRING CORRECT AND PROPERLY LABELED	C	NC #	N/A	Promec: CLIENT:
7	NOZZLE IS UNOBSTRUCTED OR ADEQUATE	C	NC #	N/A	Promec: CLIENT:
8	DISPLAY VISIBLE	C	NC #	N/A	Promec: CLIENT:
9	PROCESS CONNECTION ADEQUATE (SCREWED OR FLANGED)	C	NC #	N/A	Promec: CLIENT:
10	CALIBRATION CERTIFICATE AVAILABLE	C	NC #	N/A	Promec: CLIENT:
11	ELECTRICAL SUPPLY COMPATIBLE WITH SOURCE	C	NC #	N/A	Promec: CLIENT:

Comments

Sign Off			
Promec Signature:		**CLIENT Signature:**	
Date:		**Date:**	

Legend					
C	Conformance	**NC**	Non Conformance	**N/A**	Not Applicable
NCR	Non Conformance Report				

AGNICO EAGLE

Vendor Document Status

1 ☐ Proceed to next submission and status.

2 ☐ Proceed with exceptions as noted to next submission and status.

3 ☐ Do not proceed.
Revise as noted and resubmit next submission and status.

4 ☑ Complete, no further submission required.

By: JEAN-FRANCOIS TREMBLAY Date: 2017-06-22

Review and authorization to fabricate are only for general conformance with the design concept of the Project as expressed in the Contract Documents. Sole responsibility for the accuracy and completeness of this document, including but not limited to dimensions and quantities, remains with the Supplier/Contractor. Agnico Eagle does not warrant the accuracy or completeness of any of the information contained herein, nor does Agnico Eagle authorize or approve any construction means, methods, techniques, sequences or any safety precautions or procedures.

Agnico Eagle No. 6515-C-270-007-141-TES-0027 R: Sub002

DOCUMENT FOR INFORMATION

NUQSANA PROMEC MINING

AGNICO-EAGLE MINES Ltd.
Inspection & Testing Report

ITR Number: AEM-IN-ITR-004C
ITR Type: PRESSURE SWITCH
Contract No.: 6515-C-270-007

AGNICO EAGLE

Tag Number:		**Equipment/ Pipe N°:**		**System:**	
Service:		**Function:**		**Purchase Order:**	
Manufacturer:		**Model:**		**Serial Number:**	
Location Dwg :		**Reference Datasheet:**		**Installation Detail Dwg:**	
Reference Datasheet Number:					

Item N°	Inspection Points	C	NC/ NCR #	N/A	Completed By/ Date
1	INSTRUMENT TAG ATTACHED	C	NC #	N/A	Promec: CLIENT:
2	CABLE TAG ATTACHED	C	NC #	N/A	Promec: CLIENT:
3	DEVICE INSTALLED AS PER INSTALLATION DETAILS, LOCATION OR MANUFACTURER'S DRAWING	C	NC #	N/A	Promec: CLIENT:
4	EQUIPMENT ACCESSIBLE AND EASY TO MAINTAIN	C	NC #	N/A	Promec: CLIENT:
5	WIRING CORRECT AND PROPERLY LABELED	C	NC #	N/A	Promec: CLIENT:
6	BLOCK AND BLEED VALVE	C	NC #	N/A	Promec: CLIENT:
7	PROCESS CONNECTION ADEQUATE (SCREWED OR FLANGED)	C	NC #	N/A	Promec: CLIENT:
8	CALIBRATION CERTIFICATE AVAILABLE	C	NC #	N/A	Promec: CLIENT:
9	ELECTRICAL SUPPLY COMPATIBLE WITH SOURCE	C	NC #	N/A	Promec: CLIENT:
10		C	NC #	N/A	Promec: CLIENT:
11		C	NC #	N/A	Promec: CLIENT:

Comments

Sign Off			
Promec Signature:		**CLIENT Signature:**	
Date:		**Date:**	

Legend					
C	Conformance	**NC**	Non Conformance	**N/A**	Not Applicable
NCR	Non Conformance Report				

AGNICO EAGLE

Vendor Document Status

1 ☐ Proceed to next submission and status.

2 ☐ Proceed with exceptions as noted to next submission and status.

3 ☐ Do not proceed.
Revise as noted and resubmit next submission and status.

4 ☑ Complete, no further submission required.

By: JEAN-FRANCOIS TREMBLAY Date: 2017-06-22

Review and authorization to fabricate are only for general conformance with the design concept of the Project as expressed in the Contract Documents. Sole responsibility for the accuracy and completeness of this document, including but not limited to dimensions and quantities, remains with the Supplier/Contractor. Agnico Eagle does not warrant the accuracy or completeness of any of the information contained herein, nor does Agnico Eagle authorize or approve any construction means, methods, techniques, sequences or any safety precautions or procedures.

Agnico Eagle No. 6515-C-270-007-141-TES-0029 R: Sub002

DOCUMENT FOR INFORMATION

NUQSANA PROMEC MINING

AGNICO-EAGLE MINES Ltd.
Inspection & Testing Report

ITR Number: AEM-IN-ITR-006A
ITR Type: On / OFF VALVE
Contract No.: 6515-C-270-007

AGNICO EAGLE

Tag Number:		**Equipment/ Pipe N°:**		**System:**	
Service:		**Function:**		**Purchase Order:**	
Manufacturer:		**Model:**		**Serial Number:**	
Location Dwg :		**Reference Datasheet:**		**Installation Detail Dwg:**	
Reference Datasheet Number:					

Item N°	Inspection Points	C	NC/ NCR #	N/A	Completed By/ Date
1	INSTRUMENT TAG ATTACHED	C	NC #	N/A	Promec: CLIENT:
2	CABLE TAG ATTACHED	C	NC #	N/A	Promec: CLIENT:
3	DEVICE INSTALLED AS PER INSTALLATION DETAILS, LOCATION OR MANUFACTURER'S DRAWING	C	NC #	N/A	Promec: CLIENT:
4	EQUIPMENT ACCESSIBLE AND EASY TO MAINTAIN	C	NC #	N/A	Promec: CLIENT:
5	WIRING CORRECT AND PROPERLY LABELED	C	NC #	N/A	Promec: CLIENT:
6	SS AIR SUPPLY TUBING MINIMUM 3/8"	C	NC #	N/A	Promec: CLIENT:
7	MINIMUM STRAIGHT PIPE LENGHT UPSTREAM AND DOWNSTREAM REQUIREMENT	C	NC #	N/A	Promec: CLIENT:
8	POSITIONER, SOLENOID OR LIMIT SWITCH IS UNDAMAGED	C	NC #	N/A	Promec: CLIENT:
9	FLOW ARROW OR ORIENTATION MATCHES PROCESS FLOW	C	NC #	N/A	Promec: CLIENT:
10	OPERATION BLOCK IN VALVE	C	NC #	N/A	Promec: CLIENT:
11	PROCESS CONNECTION ADEQUATE (SCREWED OR FLANGED)	C	NC #	N/A	Promec: CLIENT:
12	CALIBRATION CERTIFICATE AVAILABLE	C	NC #	N/A	Promec: CLIENT:
13	ELECTRICAL SUPPLY COMPATIBLE WITH SOURCE	C	NC #	N/A	Promec: CLIENT:

Comments

Sign Off			
Promec Signature:		**CLIENT Signature:**	
Date:		**Date:**	

Legend					
C	Conformance	**NC**	Non Conformance	**N/A**	Not Applicable
NCR	Non Conformance Report				

AGNICO EAGLE

Vendor Document Status

1 ☐ Proceed to next submission and status.

2 ☐ Proceed with exceptions as noted to next submission and status.

3 ☐ Do not proceed.
Revise as noted and resubmit next submission and status.

4 ☑ Complete, no further submission required.

By: JEAN-FRANCOIS TREMBLAY Date: 2017-06-22

Review and authorization to fabricate are only for general conformance with the design concept of the Project as expressed in the Contract Documents. Sole responsibility for the accuracy and completeness of this document, including but not limited to dimensions and quantities, remains with the Supplier/Contractor. Agnico Eagle does not warrant the accuracy or completeness of any of the information contained herein, nor does Agnico Eagle authorize or approve any construction means, methods, techniques, sequences or any safety precautions or procedures.

Agnico Eagle No. 6515-C-270-007-141-TES-0056 R: Sub001

DOCUMENT FOR INFORMATION

NUQSANA PROMEC MINING

AGNICO-EAGLE MINES Ltd.
Inspection & Testing Report

ITR Number: AEM-IN-ITR-001A
ITR Type: FLOW ELEMENT
Contract No.: 6515-C-270-007

AGNICO EAGLE

Tag Number:		**Equipment/ Pipe N°:**		**System:**	
Service:		**Function:**		**Purchase Order:**	
Manufacturer:		**Model:**		**Serial Number:**	
Location Dwg :		**Reference Datasheet:**		**Installation Detail Dwg:**	
Reference Datasheet Number:					

Item N°	Inspection Points	C	NC/ NCR #	N/A	Completed By/ Date
1	INSTRUMENT TAG ATTACHED	C	NC #	N/A	Promec: CLIENT:
2	CABLE TAG ATTACHED	C	NC #	N/A	Promec: CLIENT:
3	DEVICE INSTALLED AS PER INSTALLATION DETAILS, LOCATION OR MANUFACTURER'S DRAWING	C	NC #	N/A	Promec: CLIENT:
4	EQUIPMENT ACCESSIBLE AND EASY TO MAINTAIN	C	NC #	N/A	Promec: CLIENT:
5	EQUIPMENT RACK OR CLAMPING DEVICE ADEQUATE (HEIGHT, SOLIDITY ETC.)	C	NC #	N/A	Promec: CLIENT:
6	WIRING CORRECT AND PROPERLY LABELED	C	NC #	N/A	Promec: CLIENT:
7	MINIMUM STRAIGHT PIPE LENGHT UPSTREAM AND DOWNSTREAM REQUIREMENT	C	NC #	N/A	Promec: CLIENT:
8	GROUNDING OF DEVICE	C	NC #	N/A	Promec: CLIENT:
9	FLOW ARROW OR ORIENTATION MATCHES PROCESS FLOW	C	NC #	N/A	Promec: CLIENT:
10	PROCESS CONNECTION ADEQUATE (SCREWED OR FLANGED)	C	NC #	N/A	Promec: CLIENT:
11	DEFICIENCY LIST ITEMS CLEARED	C	NC #	N/A	Promec: CLIENT:
12	CALIBRATION CERTIFICATE AVAILABLE	C	NC #	N/A	Promec: CLIENT:
13	ELECTRICAL SUPPLY COMPATIBLE WITH SOURCE	C	NC #	N/A	Promec: CLIENT:

Comments

Sign Off			
Promec Signature:		**CLIENT Signature:**	
Date:		**Date:**	

Legend					
C	Conformance	**NC**	Non Conformance	**N/A**	Not Applicable
NCR	Non Conformance Report				

AGNICO EAGLE

Vendor Document Status

1 ☐ Proceed to next submission and status.

2 ☐ Proceed with exceptions as noted to next submission and status.

3 ☐ Do not proceed.
Revise as noted and resubmit next submission and status.

4 ☑ Complete, no further submission required.

By: JEAN-FRANCOIS TREMBLAY Date: 2017-06-22

Review and authorization to fabricate are only for general conformance with the design concept of the Project as expressed in the Contract Documents. Sole responsibility for the accuracy and completeness of this document, including but not limited to dimensions and quantities, remains with the Supplier/Contractor. Agnico Eagle does not warrant the accuracy or completeness of any of the information contained herein, nor does Agnico Eagle authorize or approve any construction means, methods, techniques, sequences or any safety precautions or procedures.

Agnico Eagle No. 6515-C-270-007-141-TES-0025 R: Sub002

DOCUMENT FOR INFORMATION

AGNICO-EAGLE MINES Ltd.
Inspection & Testing Report

ITR Number: AEM-IN-ITR-004A
ITR Type: PRESSURE INDICATOR
Contract No.: 6515-C-270-007

NUQSANA PROMEC MINING

AGNICO EAGLE

Tag Number:		**Equipment/ Pipe N°:**		**System:**	
Service:		**Function:**		**Purchase Order:**	
Manufacturer:		**Model:**		**Serial Number:**	
Location Dwg :		**Reference Datasheet:**		**Installation Detail Dwg:**	
Reference Datasheet Number:					

Item N°	Inspection Points	C	NC/ NCR #	N/A	Completed By/ Date
1	INSTRUMENT TAG ATTACHED	C	NC #	N/A	Promec: CLIENT:
2	DEVICE INSTALLED AS PER INSTALLATION DETAILS, LOCATION OR MANUFACTURER'S DRAWING	C	NC #	N/A	Promec: CLIENT:
3	EQUIPMENT ACCESSIBLE AND EASY TO MAINTAIN	C	NC #	N/A	Promec: CLIENT:
4	PROCESS CONNECTION ADEQUATE (SCREWED OR FLANGED)	C	NC #	N/A	Promec: CLIENT:
5	OPERATION BLOCK IN VALVE	C	NC #	N/A	Promec: CLIENT:
6	READING VISIBLE	C	NC #	N/A	Promec: CLIENT:
7	CALIBRATION CERTIFICATE AVAILABLE	C	NC #	N/A	Promec: CLIENT:
8	ELECTRICAL SUPPLY COMPATIBLE WITH SOURCE	C	NC #	N/A	Promec: CLIENT:
9		C	NC #	N/A	Promec: CLIENT:
10		C	NC #	N/A	Promec: CLIENT:
11		C	NC #	N/A	Promec: CLIENT:

Comments

Sign Off			
Promec Signature:		**CLIENT Signature:**	
Date:		**Date:**	

Legend					
C	Conformance	**NC**	Non Conformance	**N/A**	Not Applicable
NCR	Non Conformance Report				

AGNICO EAGLE

Vendor Document Status

1 ☐ Proceed to next submission and status.

2 ☐ Proceed with exceptions as noted to next submission and status.

3 ☐ Do not proceed.
Revise as noted and resubmit next submission and status.

4 ☑ Complete, no further submission required.

By: JEAN-FRANCOIS TREMBLAY Date: 2017-06-22

Review and authorization to fabricate are only for general conformance with the design concept of the Project as expressed in the Contract Documents. Sole responsibility for the accuracy and completeness of this document, including but not limited to dimensions and quantities, remains with the Supplier/Contractor. Agnico Eagle does not warrant the accuracy or completeness of any of the information contained herein, nor does Agnico Eagle authorize or approve any construction means, methods, techniques, sequences or any safety precautions or procedures.

Agnico Eagle No. 6515-C-270-007-141-TES-0026 R: Sub002

DOCUMENT FOR INFORMATION

NUQSANA PROMEC MINING

AGNICO-EAGLE MINES Ltd.
Inspection & Testing Report

ITR Number: AEM-IN-ITR-004B
ITR Type: PRESSURE SAFETY VALVE
Contract No.: 6515-C-270-007

AGNICO EAGLE

Tag Number:		**Equipment/ Pipe N°:**		**System:**	
Service:		**Function:**		**Purchase Order:**	
Manufacturer:		**Model:**		**Serial Number:**	
Location Dwg :		**Reference Datasheet:**		**Installation Detail Dwg:**	
Reference Datasheet Number:					

Item N°	Inspection Points	C	NC/ NCR #	N/A	Completed By/ Date
1	INSTRUMENT TAG ATTACHED	C	NC #	N/A	Promec: CLIENT:
2	DEVICE INSTALLED AS PER INSTALLATION DETAILS, LOCATION OR MANUFACTURER'S DRAWING	C	NC #	N/A	Promec: CLIENT:
3	EQUIPMENT ACCESSIBLE AND EASY TO MAINTAIN	C	NC #	N/A	Promec: CLIENT:
4	FLOW ARROW ON SENSOR OR ORIENTATION MATCHES PROCESS FLOW	C	NC #	N/A	Promec: CLIENT:
5	PROCESS CONNECTION ADEQUATE (SCREWED OR FLANGED)	C	NC #	N/A	Promec: CLIENT:
6	CALIBRATION CERTIFICATE AVAILABLE	C	NC #	N/A	Promec: CLIENT:
7	ELECTRICAL SUPPLY COMPATIBLE WITH SOURCE	C	NC #	N/A	Promec: CLIENT:
8		C	NC #	N/A	Promec: CLIENT:
9		C	NC #	N/A	Promec: CLIENT:
10		C	NC #	N/A	Promec: CLIENT:
11		C	NC #	N/A	Promec: CLIENT:

Comments

Sign Off			
Promec Signature:		**CLIENT Signature:**	
Date:		**Date:**	

Legend					
C	Conformance	**NC**	Non Conformance	**N/A**	Not Applicable
NCR	Non Conformance Report				

NUQSANA PROMEC MINING

AGNICO-EAGLE MINES Ltd.
Inspection & Testing Report

ITR Number: AEM-IN-ITR-003B
ITR Type: LEVEL GAUGE GLASS
Contract No.: 6515-C-270-007

Vendor Document Status
AGNICO EAGLE
1 ☐ Proceed to next submission and status.
2 ☐ Proceed with exceptions as noted to next submission and status
3 ☐ Do not proceed. Revise as noted and resubmit next submission and status.
4 ☑ Complete, no further submission required.
By: JEAN-FRANCOIS TREMBLAY Date: 2017-06-29
Review and authorization to fabrication only for general conformance with the design concept of the Project and compliance to the Contract Documents. Sole responsibility for the accuracy and completeness of the documents, including but not limited to dimensions and quantities, remains with the Supplier/Contractor. Agnico Eagle does not warrant the accuracy or completeness of any of the information contained herein, nor does Agnico Eagle authorize or approve any construction means, methods, techniques, sequences or any safety precautions or procedures.
Agnico Eagle No. 6515-C-270-007-141-TES-0057 #: Sub002
DOCUMENT FOR INFORMATION

AGNICO EAGLE

Tag Number:		**Equipment/ Pipe N°:**		**System:**	
Service:		**Function:**		**Purchase Order:**	
Manufacturer:		**Model:**		**Serial Number:**	
Location Dwg :		**Reference Datasheet:**		**Installation Detail Dwg:**	
Reference Datasheet Number:					

Item N°	Inspection Points	C	NC/ NCR #	N/A	Completed By/ Date
1	INSTRUMENT TAG ATTACHED	C	NC #	N/A	Promec: CLIENT:
2	DEVICE INSTALLED AS PER INSTALLATION DETAILS, LOCATION OR MANUFACTURER'S DRAWING	C	NC #	N/A	Promec: CLIENT:
3	EQUIPMENT ACCESSIBLE AND EASY TO MAINTAIN	C	NC #	N/A	Promec: CLIENT:
4	PROCESS CONNECTION ADEQUATE (SCREWED OR FLANGED)	C	NC #	N/A	Promec: CLIENT:
5	HAVE OPERATION BLOCK IN VALVE	C	NC #	N/A	Promec: CLIENT:
6	READING VISIBLE	C	NC #	N/A	Promec: CLIENT:
7	CALIBRATION CERTIFICATE AVAILABLE	C	NC #	N/A	Promec: CLIENT:
8	ELECTRICAL SUPPLY COMPATIBLE WITH SOURCE	C	NC #	N/A	Promec: CLIENT:
9		C	NC #	N/A	Promec: CLIENT:
10		C	NC #	N/A	Promec: CLIENT:
11		C	NC #	N/A	Promec: CLIENT:

Comments

Sign Off			
Promec Signature:		**CLIENT Signature:**	
Date:		**Date:**	

Legend					
C	Conformance	**NC**	Non Conformance	**N/A**	Not Applicable
NCR	Non Conformance Report				

AGNICO EAGLE

Vendor Document Status

1 ☐ Proceed to next submission and status.

2 ☐ Proceed with exceptions as noted to next submission and status.

3 ☐ Do not proceed.
Revise as noted and resubmit next submission and status.

4 ☑ Complete, no further submission required.

By: Jean-Francois Tremblay Date: 2017-05-02

Review and authorization to fabricate are only for general conformance with the design concept of the Project as expressed in the Contract Documents. Sole responsibility for the accuracy and completeness of this document, including but not limited to dimensions and quantities, remains with the Supplier/Contractor. Agnico Eagle does not warrant the accuracy or completeness of any of the information contained herein, nor does Agnico Eagle authorize or approve any construction means, methods, techniques, sequences or any safety precautions or procedures.

Agnico Eagle No. 6515-C-270-007-141-TES-0012 R: Sub001

DOCUMENT FOR INFORMATION

NUQSANA PROMEC MINING

AGNICO-EAGLE MINES Ltd.
Inspection & Testing Report

ITR Number: AEM-EL-ITR-005
ITR Type: MOTOR
Contract No.: 6515-C-270-007

AGNICO EAGLE

Tag Number:		**Equipment/ Pipe N°:**		**System:**	
Service:		**Function:**		**Purchase Order:**	
Manufacturer:		**Model:**		**Serial Number:**	
Location Dwg :		**Reference Datasheet:**		**Installation Detail Dwg:**	
Reference Datasheet Number:					

Item N°	Inspection Points	C	NC/ NCR #	N/A	Completed By/ Date
1	EQUIPEMENT ACCESSIBLE AND EASY TO MAINTAIN	C	NC #	N/A	Promec: CLIENT:
2	NAME PLATE DATA AGREES WITH MOTOR DATA SHEET	C	NC #	N/A	Promec: CLIENT:
3	MOTOR ENCLOSURE TYPE IS SUITABLE FOR USE IN AREA CLASSIFICATION	C	NC #	N/A	Promec: CLIENT:
4	GROUNDING CONDUCTORS INSTALLED AND CONNECTED (4/ 0 for motor over 100 HP)	C	NC #	N/A	Promec: CLIENT:
5	MOTOR HAS BEEN INSULATION RESISTANCE TESTED (Megger)	C	NC #	N/A	Promec: CLIENT:
6	MOTOR TERMINATIONS HAVE BEEN PROPERLY MADE UP	C	NC #	N/A	Promec: CLIENT:
7	ROTATION CHECKED	C	NC #	N/A	Promec: CLIENT:
8	DEFICIENCY LIST ITEMS CLEARED	C	NC #	N/A	Promec: CLIENT:

Comments

Sign Off			
Promec Signature:		**CLIENT Signature:**	
Date:		**Date:**	

Legend					
C	Conformance	**NC**	Non Conformance	**N/A**	Not Applicable
NCR	Non Conformance Report				

AGNICO EAGLE

Vendor Document Status

1 ☐ Proceed to next submission and status.

2 ☐ Proceed with exceptions as noted to next submission and status.

3 ☐ Do not proceed.
Revise as noted and resubmit next submission and status.

4 ☑ Complete, no further submission required.

By: Jean-Francois Tremblay Date: 2017-05-02

Review and authorization to fabricate are only for general conformance with the design concept of the Project as expressed in the Contract Documents. Sole responsibility for the accuracy and completeness of this document, including but not limited to dimensions and quantities, remains with the Supplier/Contractor. Agnico Eagle does not warrant the accuracy or completeness of any of the information contained herein, nor does Agnico Eagle authorize or approve any construction means, methods, techniques, sequences or any safety precautions or procedures.

Agnico Eagle No. 6515-C-270-007-141-TES-0018 R: Sub001

DOCUMENT FOR INFORMATION

Agnico-Eagle Mines Ltd.
Miscellaneous Field Report

ITR Number : AEM-GE-ITR-006
Contract no. : C22466T / C22498E

SYSTEM:	TAG NO. :	
LOCATION:	AREA:	UNIT:

DATE	ACTIVITY

PROMEC DESIGNATE - SIGNATURE _____ TITLE _____ DATE _____

CLIENT DESIGNATE - SIGNATURE _____ TITLE _____ DATE _____

AGNICO EAGLE

Vendor Document Status

1 ☐ Proceed to next submission and status.

2 ☐ Proceed with exceptions as noted to next submission and status.

3 ☐ Do not proceed.
Revise as noted and resubmit next submission and status.

4 ☑ Complete, no further submission required.

By: Jean-Francois Tremblay Date: 2017-05-02

Review and authorization to fabricate are only for general conformance with the design concept of the Project as expressed in the Contract Documents. Sole responsibility for the accuracy and completeness of this document, including but not limited to dimensions and quantities, remains with the Supplier/Contractor. Agnico Eagle does not warrant the accuracy or completeness of any of the information contained herein, nor does Agnico Eagle authorize or approve any construction means, methods, techniques, sequences or any safety precautions or procedures.

Agnico Eagle No. 6515-C-270-007-141-TES-0015 R: Sub001

DOCUMENT FOR INFORMATION

Fuel Tanks Piping

Supply and Installation

Punchlist

Document Number : AEM-GE-ITR-003

Contract Number : C22466T / C22498E

Equipment/System description:

ITEM No	DESCRIPTION	CAT 1	CAT 2	CAT 3	COMMENTS	COMPLETED
1						
2						
3						
4						
5						
6						
7						
8						
9						
10						
11						
12						
13						
14						
15						
16						
17						
18						
19						
20						

CAT 1 = Effects commissioning
CAT 2 = Effects operation
CAT 3 = Post operation

TO BE VALIDATED

AT A LATER DATE

AGNICO EAGLE

Vendor Document Status

1 ☐ Proceed to next submission and status.

2 ☐ Proceed with exceptions as noted to next submission and status.

3 ☐ Do not proceed.
Revise as noted and resubmit next submission and status.

4 ☑ Complete, no further submission required.

By: Jean-Francois Tremblay Date: 2017-05-02

Review and authorization to fabricate are only for general conformance with the design concept of the Project as expressed in the Contract Documents. Sole responsibility for the accuracy and completeness of this document, including but not limited to dimensions and quantities, remains with the Supplier/Contractor. Agnico Eagle does not warrant the accuracy or completeness of any of the information contained herein, nor does Agnico Eagle authorize or approve any construction means, methods, techniques, sequences or any safety precautions or procedures.

Agnico Eagle No. 6515-C-270-007-141-TES-0016 R: Sub001

DOCUMENT FOR INFORMATION

Date: _____

To: _____

Project No: _____

Contract No: _____

Contract Title: _____

Contractor: _____

We, _____ (Contractor's Name), the Contractor for the above described contract, hereby certify that we have reviewed the Contract Documents pertaining to:

Contract No.: _____

Contract Name: _____

Partial Completion Certificates: _____

and having physically inspected the Work performed, do hereby file claim for a notice of Final Completion.

I do declare that I am, _____ (Responsible's Name), HAVING AUTHORITY FROM MY COMPANY TO PETITION FOR THE ABOVE REFERRED TO FINAL COMPLETION NOTICE.

Signature: _____

Name: _____

Title: _____

NO. DESSIN DRAWING NO. 65-ULT-416-EL-010

FORMAT ARCHD

MATERIAL LIST					
TYPE	MANUFACTURER	CATALOGUE NUMBER	INPUT POWER (W)	VOLTAGE	DESCRIPTION
F1	PACO	PUAC-A-48-LED-50-40-MOLT	48	120	LUMINAIRE: WEATHERPROOF, DUST PROOF, SURFACE, MOUNT FEDERALOIS LUMINAIRE, IP67, NSF, 48W, 120-277VAC, 5120 LUMENS C/W ACCESSORIES
⊖:	HUBBEL	HBL52B2W	120	120	RECEPTACLE: 15A, 125V, 5-15R, 2 POLES
U1	LUMACELL	BOS7BWOLEN	36	120	EMERGENCY LIGHTING WITH BATTERY UNIT C/W CHARGER AND BATTERIES (FACTORY WHITE COLOUR,120/347VAC, 2 PARCES MPH DEL, 8V 4W)
$3	HUBBEL	CS7159	-	120	THREE WAY SWITCH FOR LIGHTING, 15A, 120-277VAC

PLAN CLE
KEY PLAN

NOTES GENERALES / GENERAL NOTES

PROMEC
AS-BUILT
Signature:
Date: 2017-11-14

ISSUED FOR CONSTRUCTION
ultragen DATE: SEPT 2017

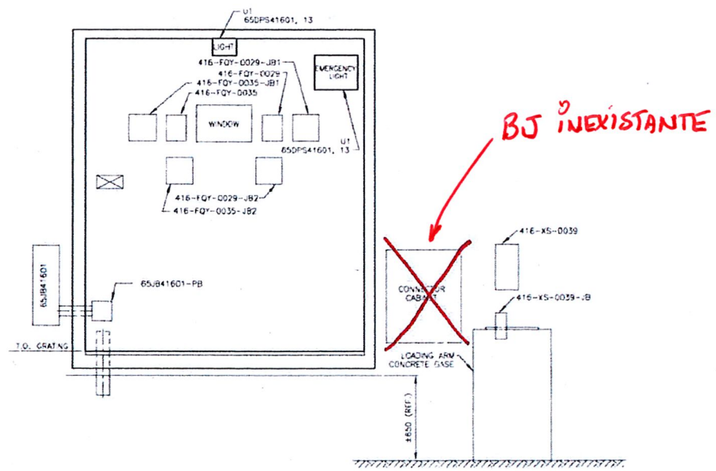

ELEVATION B
SCALE: 1:20
PORTAL #1 PUMPING STATION
ELECTRICAL EQUIPMENT LAYOUT

PERMIT TO PRACTICE
LE GROUPE ULTRAGEN LTÉE
Signature
Date SEP 26 2017
PERMIT NUMBER: P 1180
NT/NU Association of Professional Engineers and Geoscientists

REGISTERED PROFESSIONAL ENGINEER
L3627
D. CARRIER
LICENSEE
NT/NU
SEP 26 2017

DESSINS EN REFERENCE / REFERENCE DRAWINGS

TITRE / TITLE	# DWG
65DPS41601 PANEL SCHEDULE IN E-ROOM	65-ULT-416-EL-012
ELECTRICAL EQUIPMENT LAYOUT E-ROOM	65-ULT-416-EL-002
ELECTRICAL EQUIPMENT LAYOUT	65-ULT-416-EL-007
MATERIAL LIST	ULT-591700-EL-ML-001

AGNICO EAGLE

REV.	DATE	DESCRIPTION	PAR/BY	APP.	CLIENT
2	2017-09-20	ISSUED FOR CONSTRUCTION	S.G.	D.C.	
1	2017-08-04	UPDATE AREA & TAG NUMBER	N.S.	D.C.	
0	2017-06-12	ISSUED FOR CONSTRUCTION	S.G.	D.C.	
PA	2017-05-18	ISSUED FOR REVIEW	S.G.	D.C.	

REVISIONS

NUQSANA PROMEC MINING
ultragen
NO. PROJET PROJECT NO. 591700

TITRE / TITLE
AGNICO EAGLE – MELIADINE DIVISION
416 – FUEL TANK FARM
FUEL DISTRIBUTION
PORTAL #1 PUMPING STATION
LIGHTING AND SERVICES

DESSINÉ PAR DRAWN BY	RISHI SHRESTHA	DATE 2017-05-18
VERIFIÉ PAR CHECKED BY	STÉPHANE GRIMARD	2017-05-18
APPROUVÉ PAR APPROVED BY	DANIEL CARRIER	2017-05-18
ÉCHELLE SCALE	1:20	DATE 2017-05-18

NO. DESSIN DRAWING NO. 65-ULT-416-EL-010

NO. PROJET PROJECT NO.	REVISION	FEUILLE / SHT
6515	2	2/2

AE-CART-ARCH D

P:\1. ANNEE 2017 ACTIFS\PROMEC\5017\DC\ELECTRICITE\Dessins\Dessins de travail\65-ULT-416-EL-010.dwg

FILE NO. [illegible]

Source:	120 / 208	Volts	
Feeder from / Single line diagram:	65TRF41601 / 65-416-275-200		
Mounting:	SURFACE		
Location:	ELECTRICAL ROOM 416 (PORTAL #1)		
Manufacturer / Catalog No.:	SQUARE-D (SCHNEIDER) / NQ430L2C		
Breaker type:	QOB		

Enclosure type:	NEMA 1
Main breaker.:	NONE
No. of circuits:	30 CCTs
Bars:	225 A
Short circuit Ampacity:	10 kA
Power:	30 kVA

DESCRIPTION	CABLE AWG	TYPE REF	TYPE QTY	WATTS	BREAK. TYPE	BREAK. AMP	CT #		CT #	BREAK. AMP	BREAK. TYPE	WATTS	TYPE QTE	TYPE REF	CABLE AWG	DESCRIPTION
LIGHTING FIXTURES TANK #3 AND #6	12	L	10	690		15	1	A	2	15		240	2	O	12	OUTLET PUMPING STATION & OPERATION ROOM 416 (PORTAL #1)
							3	B	4	15		120	1	O	12	OUTLET ELECTRICAL ROOM 416
LIGHTING FIXTURES OUTSIDE ELECTRICAL ROOM/OUTSIDE PUMPING STATION	12	L	7	483		15	5	C	6	15		240	2	O	12	OUTLET ELECTRICAL ROOM IT AREA 416
							7	A	8	15		400	1	I	12	PLC/HMI/IO CARDS IN OPERATION ROOM CABINET 65PLC41601
LIGHTING FIXTURES TANK LIGHT AND HEAVY VEHICULE LOADING, CONTAINERIZED DEF PORTAL #1	12	L	8	552		15	9	B	10	30		2000	1	H	6	HEATING IN OPERATION ROOM 416 65HEA41605
							11	C	12							
	12	L	7	312		15	13	A	14	15		200	1	I	12	LIGHT VEHICULE GASBOY - CONTROL 416-FQY-0049
LIGHTING ROOM 416 ELECTRICAL	12	L	4	180		15	15	B	16	15		200	1	I	12	PLC CABINET 65PLC41601 OUTLET UTILITY IN OPERATION ROOM
LIGHTING CONTACTOR CONTROL FEEDER	12	L	1	37		15	17	C	18	15		100	1	I	12	INSTRUMENT (65-ULT-416-IN-013)
MOTORIZED OPERATOR VALVES FEEDER 416-FV-0014/0016 (65-ULT-416-IN-013)	10	I	2	888		15	19	A	20	15		888	2	I	12	MOTORIZED OPERATOR VALVES FEEDER 416-FV-0004/0006 (65-ULT-416-IN-013)
HEAVY VEHICULE GASBOY -MOTOR (1 1/2 HP) 416-FQY-0044	12	I	1	1120		15	21	B	22	15		444	2	I	12	MOTORIZED OPERATOR VALVES FEEDER 416-FV-0043 (65-ULT-416-IN-013)
							23	C	24	15		444	2	I	10	MOTORIZED OPERATOR VALVES FEEDER 416-FV-0048 (65-ULT-416-IN-013)
HEAVY VEHICULE GASBOY - CONTROL 416-FQY-0044	12	I	1	200		15	25	A	26	15		560	1	I	12	LIGHT VEHICULE GASBOY - MOTOR (3/4 HP) 416-FQY-0049
Lighting pumping and operation Room						15	27	B	28	15						Emergency Lighting Electric Room
Emergency Lighting pumping AND operation						15	29	C	30	15						ALARM Panel

TYPE (REF)	(W) total	Qte
(L) Lighting	2254	37
(O) Outlet	600	5
(H) Heating	2000	1
(I) Instrument	5444	15

BREAKER TYPE	Qte (ref)
(L) SPARE	0
(S) SPACE	0
(G) DDFT BREAKER (30mA)	0

	Watts
Phase A	4274,5
Phase B	3125
Phase C	2898,5
Total	10298

REGISTERED PROFESSIONAL ENGINEER 13674 D CARRIER LICENSEE NT/NU

SEP 26 2017

NOTES:
1. SEE LIGHTING DIAGRAM FOR DETAILS OF CABLE SIZE DWG #65-ULT-416-EL-013.

REV	DATE	DESCRIPTION	PAR	VER	APP
2	2017-09-20	ISSUED FOR CONSTRUCTION	S GRIMARD	D CARRIER	D CARRIER
1	2017-08-04	UPDATE AREA & TAG NUMBER	N SALDAN	D CARRIER	D CARRIER
0	2017-06-12	ISSUED FOR CONSTRUCTION	SG 111891	DC 40308	DC 40308
PA	2017-05-16	ISSUED FOR REVIEW	MT 5029941	SG 111891	DC 40308

AGNICO EAGLE

NUNAVUT MINE

ultragen

416 - FUEL TANK FARM

PORTAL #1 ELECTRICAL ROOM

PANEL SCHEDULE 65DPS41601

UNITE -

DATE 2017-05-16

REV 2

DESS MT 5029941

65-ULT-416-EL-012

PERMIT TO PRACTICE
LE GROUPE ULTRAGEN LTÉE
Signature
Date SEP 26 2017
PERMIT NUMBER: P 1180
NT/NU Association of Professional Engineers and Geoscientists

PROMEC AS-BUILT
Signature:
Date: 2017-11-14

NO. DESSIN / DRAWING NO. 65-416-275-202_R1

FORMAT ARCH D

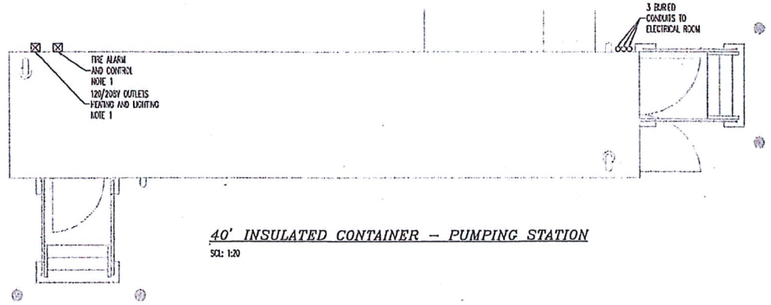

40' INSULATED CONTAINER – PUMPING STATION
SCL: 1:20

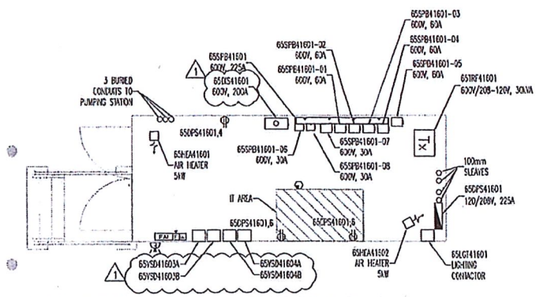

20' INSULATED CONTAINER – ELECTRICAL ROOM
SCL: 1:20

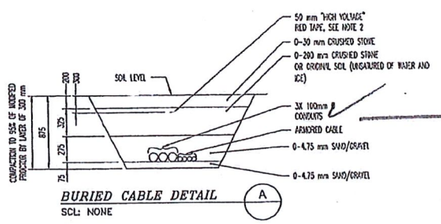

BURIED CABLE DETAIL (A)
SCL: NONE

REMPLACER PAR TRAY

PROMEC AS-BUILT
Signature: [signature]
Date: 2017-11-14

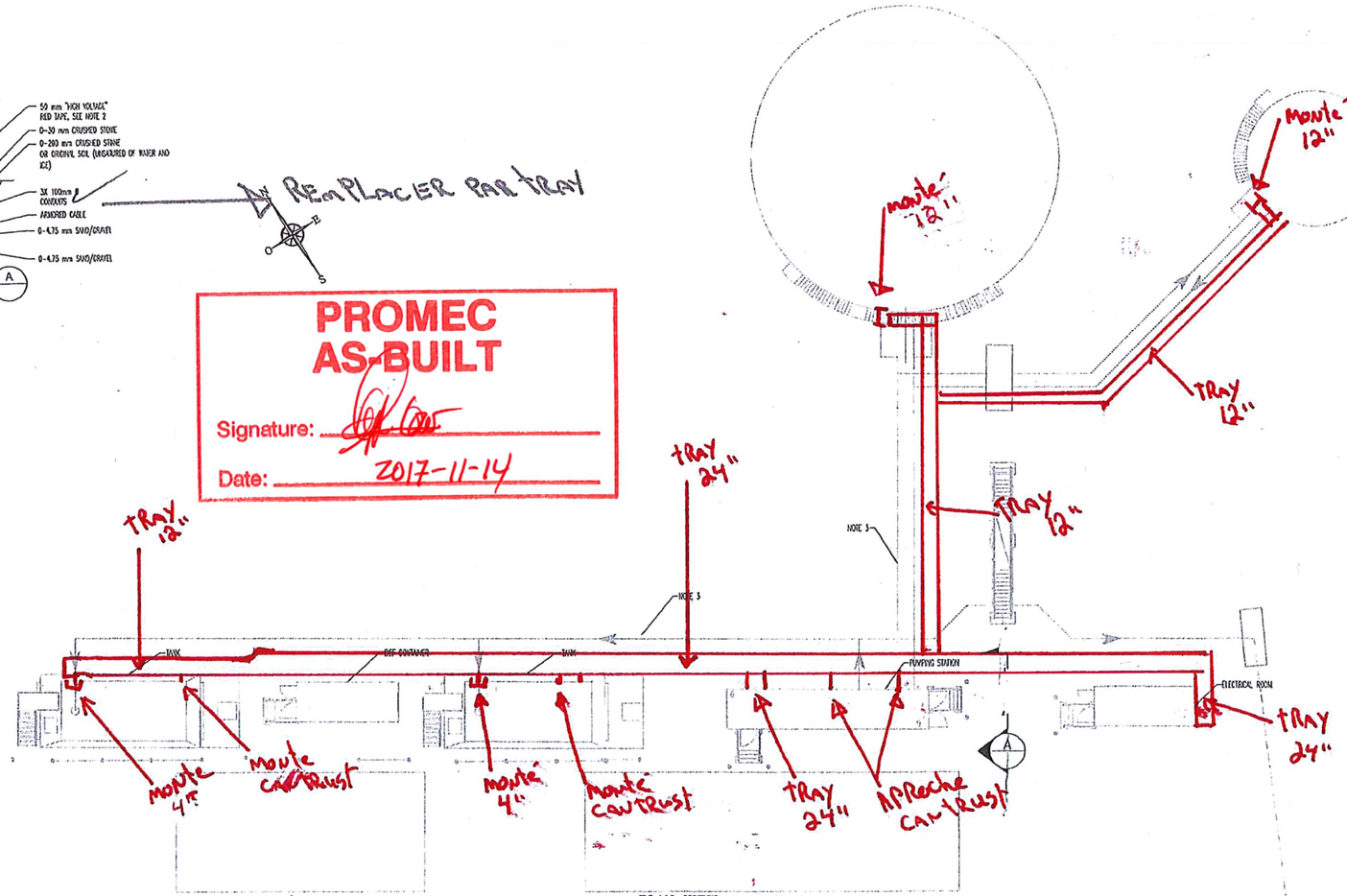

PLAN VIEW
SCL: 1:150

POUR CONSTRUCTION
FOR CONSTRUCTION
AGNICO EAGLE
DATE : 2017-08-02

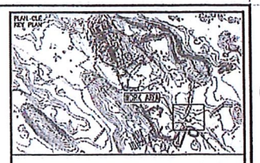

WSP
1075, 3e AVENUE EST
VAL-D'OR (QUÉBEC) CANADA J9P 0J7
TÉL. : 819 825-4274 | TÉLÉC. : 819 824-1514 | WWW.WSPGROUP.COM
Ref. 151-04440-40

NOTES GENERALES / GENERAL NOTES

1. THE PUMPING STATION CONTAINER COMES PREWIRED WITH THOSE JONCTION BOXES. ELECTRICAL CONTRACTOR SHALL CONNECT THOSE JONCTION BOXES TO THE RIGHT SERVICES IN THE ELECTRICAL CONTAINER. ALL CABLES BETWEEN CONTAINERS SHALL BE TECK TYPE AND INSTALLED BURIED IN TRENCH. INSTALL 3X 100mm Ø CONDUITS FOR FUTURE CABLES.
2. THE RED TAPES SHALL BE INSTALLED ABOVE THE WOODEN PLANKS AND FOLLOW ALL THE BURIED PART OF THEM.
3. LIGHTING AND SERVICES CABLES FOR TANKS MUST BE INSTALLED USING PIPING RACKS. PIPING RACKS ARE SUPPLIED AND INSTALLED BY OTHER (SEE TYPICAL DETAIL ON DRAWING 65-416-285-200)

- THE LOCATION OF PIPING IS APPROXIMATE AND SHALL BE COORDINATE WITH OTHER CONTRACTORS

CE PLAN ET LES DROITS DE REPRODUCTION QUI LUI SONT RELATIFS APPARTIENNENT À WSP. TOUS DROITS RÉSERVÉS. CE PLAN NE DOIT PAS ÊTRE UTILISÉ SANS L'AUTORISATION ÉCRITE DE WSP. © DROITS RÉSERVÉS

THE INTELLECTUAL PROPERTY IN AND RIGHTS OF REPRODUCTION OF THIS PLAN ARE THE PROPERTY OF WSP. ALL RIGHTS RESERVED. © COPYRIGHT RESERVED

DESSINS EN RÉFÉRENCE / REFERENCE DRAWINGS

TITRE / TITLE	# DWG
FUEL FARM – PORTAL #1	65-403-275-202
LEGEND, TABLES & DETAILS	65-416-285-200
LEGEND, TABLES, PANELS & DETAILS	65-416-275-204

AGNICO EAGLE

REV.	DATE	DESCRIPTION	DES/DR	APP.	CLIENT
1	2017-08-02	ISSUED FOR CONSTRUCTION	R.H.	S.P.D.	
0	2017-07-11	ISSUED FOR CONSTRUCTION	F.M.G.	L.S.	

REVISIONS

OFFICIER PROFESSIONNEL L3514 FRANÇOIS MARC GAUTHIER

TITRE / TITLE
AGNICO EAGLE – MELIADINE DIVISION
416 – FUEL TANK FARM
275 – POWER ELECTRICAL
EQUIPMENT LAYOUT AND DETAIL
PLAN VIEW
FUEL FARM – PORTAL #1

DESSINÉ PAR / DRAWN BY	FANNIE MONDERIE, Tech.	DATE 2017-02-01
VÉRIFIÉ PAR / CHECKED BY	RÉMI HÉNAULT, Tech.	2017-02-01
APPROUVÉ PAR / APPROVED BY	LUC SÉNÉCAL, P.Eng.	2017-07-11
ÉCHELLE / SCALE	INDICATED	DATE 2016-09-06

NO. DESSIN / DRAWING NO. 65-416-275-202

NO. PROJET / PROJECT NO.	REVISION	FEUILLE / SHT
6515	1	1/1

AE-CART-ARCH D

\\Cdvfs1bm01\Projet_15E-XXXX-XX\151-04440-40\01-CAD\Drawing_ADM\VSP-ADM-151-04440-40-549 [118 and 418 charging equipment number]\65-416-275-202_R1.dwg 2013-02-19 14:03:29

FILE NO. 65-416-275-202_R1.dwg

NO. DESSIN DRAWING NO. 65-416-275-205_R0

FORMAT ARCHD

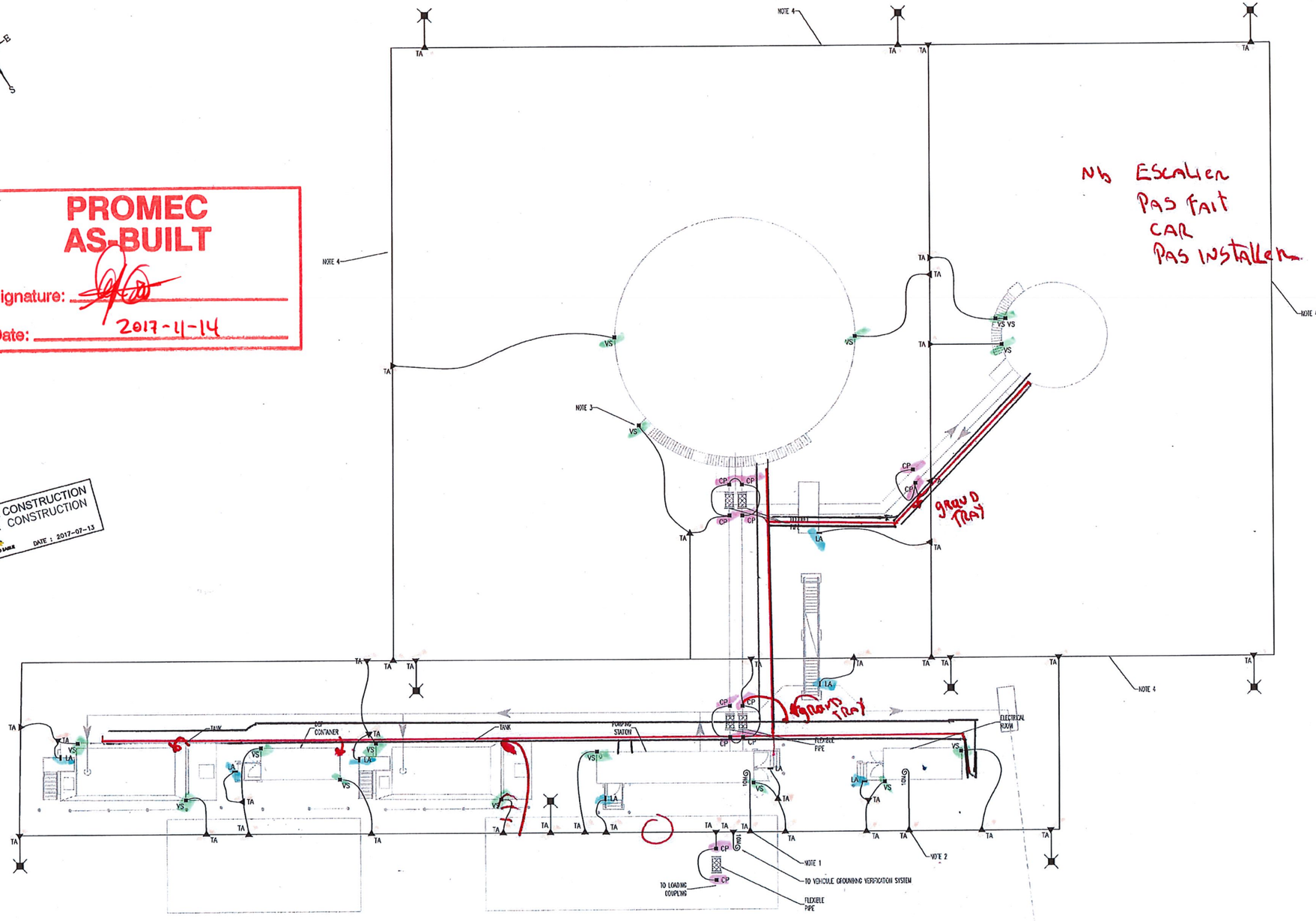

PLAN VIEW

SCL: 1:150

PROMEC
AS-BUILT
Signature:
Date: 2017-11-14

POUR CONSTRUCTION
FOR CONSTRUCTION
AGNICO EAGLE
DATE : 2017-07-13



WSP

1075, 3e AVENUE EST
VAL-D'OR (QUÉBEC) CANADA J9P 0J7
TÉL. : 819 825-4274 | TÉLÉC. : 819 824-1514 | WWW.WSPGROUP.COM
Ref. 151-06440-40

NOTES GÉNÉRALES / GENERAL NOTES

1. GROUND EQUIPMENT INSIDE THE PUMPING STATION AT THE CONNECTION POINT.
2. GROUND THE MAIN SAFETY SWITCH IN THE ELECTRICAL ROOM CONTAINER.
3. GROUND THE STAIRWELL OF THE TANK.
4. GROUNDING CONDUCTOR SHALL BE INSTALLED BURIED IN DIKE.

- GROUND ALL THE PROTECTION BOLLARDS.
- GROUND ALL METALLIC ELEMENTS IN THE RETENTION BASIN AREA AND IN TRUCK LOADING AREA.
- THE LOCATION OF THE GROUND CONNECTIONS AND CONDUCTORS ARE APROXIMATIVE AND SHALL BE COORDINATED WITH OTHER CONTRACTORS.
- THE LOCATION OF CONTAINERS SHALL BE COORDINATED WITH OTHER CONTRACTORS.
- INSTALL A 4/0 AWG GROUNDING CONDUCTOR INSIDE AND OVER THE ENTIRE LENGHT OF THE CABLE TRAY

DESSINS EN RÉFÉRENCE / REFERENCE DRAWINGS

TITRE / TITLE	# DWG
FUEL FARM – PORTAIL #1	65-403-275-205
CABLE TRAY PLAN	65-416-285-201
LEGEND, TABLES, PANELS & DETAILS	65-416-275-204

AGNICO EAGLE

REV.	DATE	DESCRIPTION	PAR/BY	APP.	CLIENT
0	2017-07-13	ISSUED FOR CONSTRUCTION	F.M.G.	L.S.	

REVISIONS

2017-07-13

TITRE / TITLE
AGNICO EAGLE – MELIADINE DIVISION
416 – FUEL TANK FARM
275 – POWER ELECTRICAL
GROUNDING LAYOUT
PLAN VIEW
FUEL FARM – PORTAIL #1

DESSINÉ PAR DRAWN BY	FANNIE MONDERIE, Tech.	DATE 2016-10-14
VÉRIFIÉ PAR CHECKED BY	RÉMI HÉNAULT, Tech.	2016-10-14
APPROUVÉ PAR APPROVED BY	LUC SÉNÉCAL, P.Eng.	2017-07-13
ÉCHELLE SCALE	INDICATED	DATE 2016-09-06
NO. DESSIN DRAWING NO.	65-416-275-205	
NO. PROJET PROJECT NO.	6515	REVISION 0 / FEUILLE / SHT 1/1

AE-CART-ARCH D

FILE NO. 65-416-275-205_R0.dwg

NO. DESSIN DRAWING NO. 65-416-285-201_R0

FORMAT ARCH D

PROMEC AS-BUILT

Signature: _____

Date: 2017-11-14

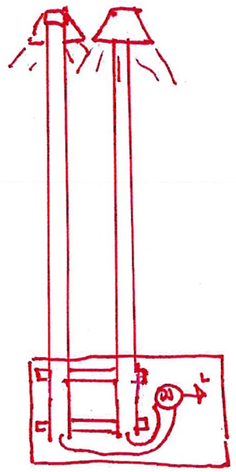

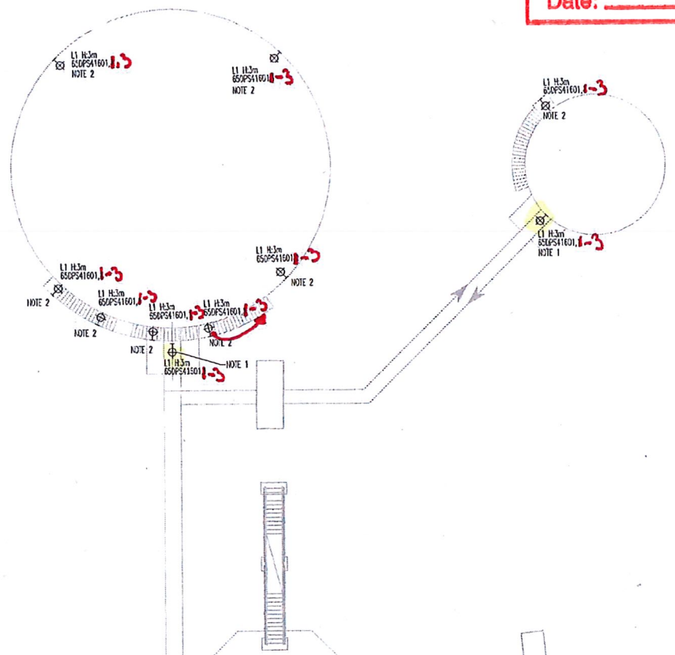

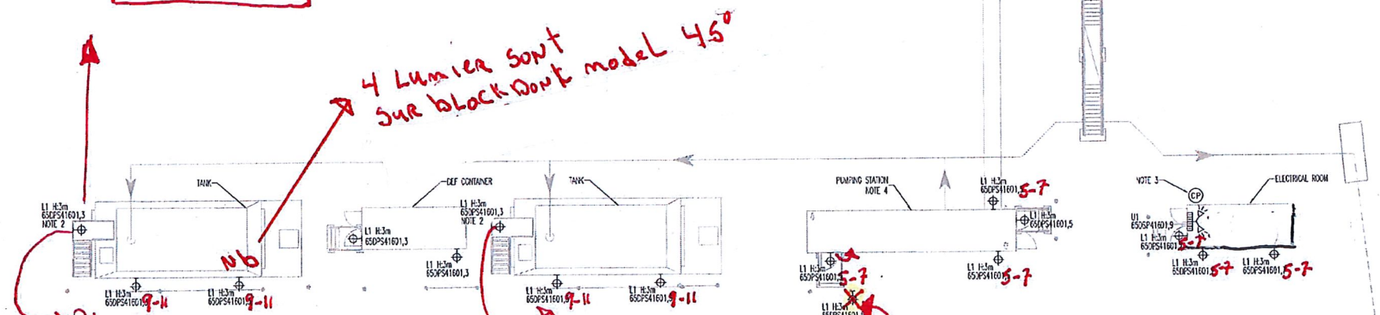
TANK
DEF CONTAINER
PUMPING STATION NOTE 4
NOTE 3
ELECTRICAL ROOM
L1 H.3m 650PS41601.3 NOTE 2
L1 H.3m 650PS41601.5
L1 H.3m 650PS41601.7
L1 H.3m 650PS41601.9-11
L1 H.3m 650PS41601.5-7
L1 H.3m 650PS41601.7
L1 H.3m 650PS41601.9-11
L1 H.3m 650PS41601.5-7
L1 H.3m 650PS41601.7
L1 H.3m 650PS41601.5-7
L1 H.3m 650PS41601.5-7
L1 H.3m 650PS41601.5-

NO. DESSIN
DRAWING NO. 65-ULT-416-EL-005

FORMAT ARCHD

MATERIAL LIST					
TYPE	MANUFACTURER	CATALOGUE NUMBER	INPUT POWER (W)	VOLTAGE	DESCRIPTION
F1	PACO	PUAC-A-48-LED-50-40-MVOLT	48	120	LUMINAIRE: WEATHERPROOF, DUST PROOF, SURFACE, MOUNT FIBERGLASS LUMINAIRE, IP67, NSF, 48W, 120-277VAC, 5120 LUMENS C/W ACCESSORIES
⊖=	HUBBEL	HBL5262W	120	120	RECEPTACLE: 15A, 125V, 5-15R, 2 POLES
U1	LUMACELL	RCS3RWOLD1	36	120	EMERGENCY LIGHTING WITH BATTERY UNIT C/W CHARGER AND BATTERIES (FACTORY WHITE COLOUR,120/347VAC, 2 PHASES MR16 DEL. 6W 4W)

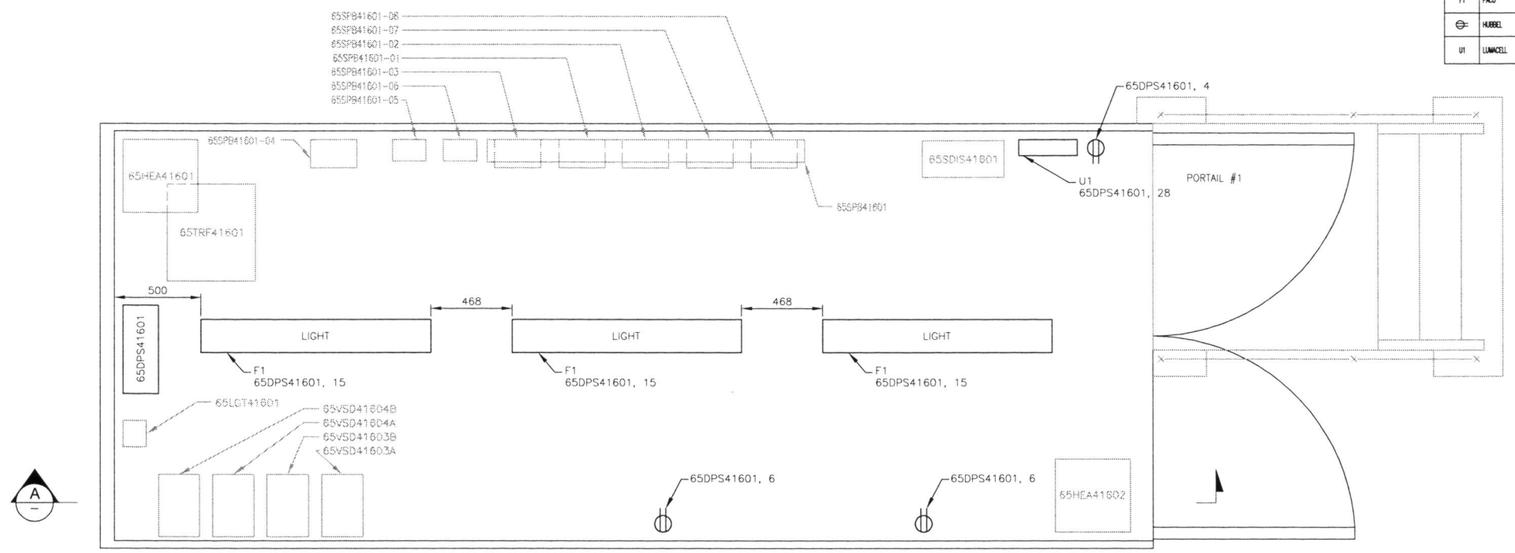

PLAN VIEW (1)
SCALE: 1:16
PORTAIL #1 ELECTRICAL ROOM
LIGHTING AND SERVICES

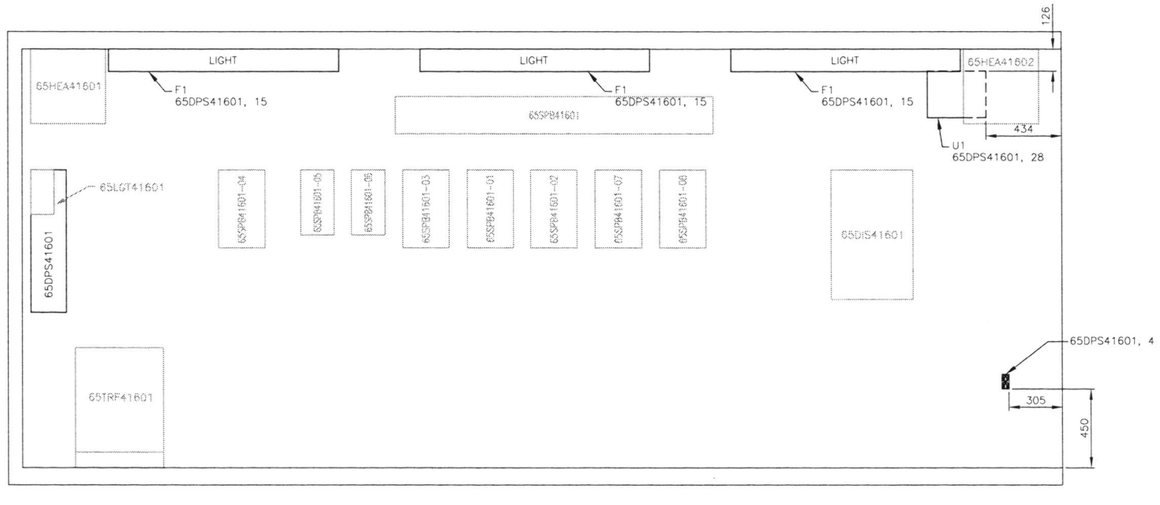

ELEVATION VIEW (A)
SCALE: 1:16
PORTAIL #1 ELECTRICAL ROOM
LIGHTING AND SERVICES

PERMIT TO PRACTICE
LE GROUPE ULTRAGEN LTÉE
Signature
Date NOV 15 2017
PERMIT NUMBER: P 1180
NT/NU Association of Professional Engineers and Geoscientists

REGISTERED PROFESSIONAL ENGINEER
L3627
D. CARRIER
LICENSEE
NT/NU
NOV 15 2017

PLAN CLE
KEY PLAN

NOTES GENERALES / GENERAL NOTES

ISSUED FOR CONSTRUCTION
ultragen DATE: SEPT 2017

DESSINS EN REFERENCE / REFERENCE DRAWINGS

TITRE / TITLE	# DWG
65DPS11601 PANEL SCHEDULE IN E-ROOM	65-ULT-416-EL-012
ELECTRICAL EQUIPMENT LAYOUT E-ROOM	65-ULT-416-EL-002
EQUIPMENT LAYOUT AND DETAIL	65-416-275-202
MATERIAL LIST	ULT-591700-EL-ML-001

AGNICO EAGLE

REV.	DATE	DESCRIPTION	PAR/BY	APP.	CLIENT
3	2017-11-15	AS BUILT	D.C.	D.C.	
2	2017-09-20	ISSUED FOR CONSTRUCTION	S.G.	D.C.	
1	2017-06-04	UPDATE AREA & TAG NUMBER	N.S.	D.C.	
0	2017-06-12	ISSUED FOR CONSTRUCTION	S.G.	D.C.	
PA	2017-05-15	ISSUED FOR REVIEW	M.T.	D.C.	

REVISIONS

NUNAVUT PROMEC MINING
ultragen
NO. PROJET / PROJECT NO. 591700

TITRE / TITLE
AGNICO EAGLE – MELIADINE DIVISION
416 – FUEL TANK FARM
FUEL DISTRIBUTION
PORTAIL #1 ELECTRICAL ROOM
LIGHTING AND SERVICES

DESSINE PAR / DRAWN BY	MARC TREMBLAY	DATE 2017-05-15
VERIFIE PAR / CHECKED BY	STÉPHANE GRIMARD	2017-05-15
APPROUVE PAR / APPROVED BY	DANIEL CARRIER	2017-05-15
ECHELLE / SCALE	1:16	DATE 2017-05-15

NO. DESSIN / DRAWING NO. 65-ULT-416-EL-005

NO. PROJET / PROJECT NO.	REVISION	FEUILLE / SHT
6515	3	1 / 1

AE-CART-ARCH D

NO. DESSIN
DRAWING NO. 65-ULT-416-EL-010

FORMAT ARCHD

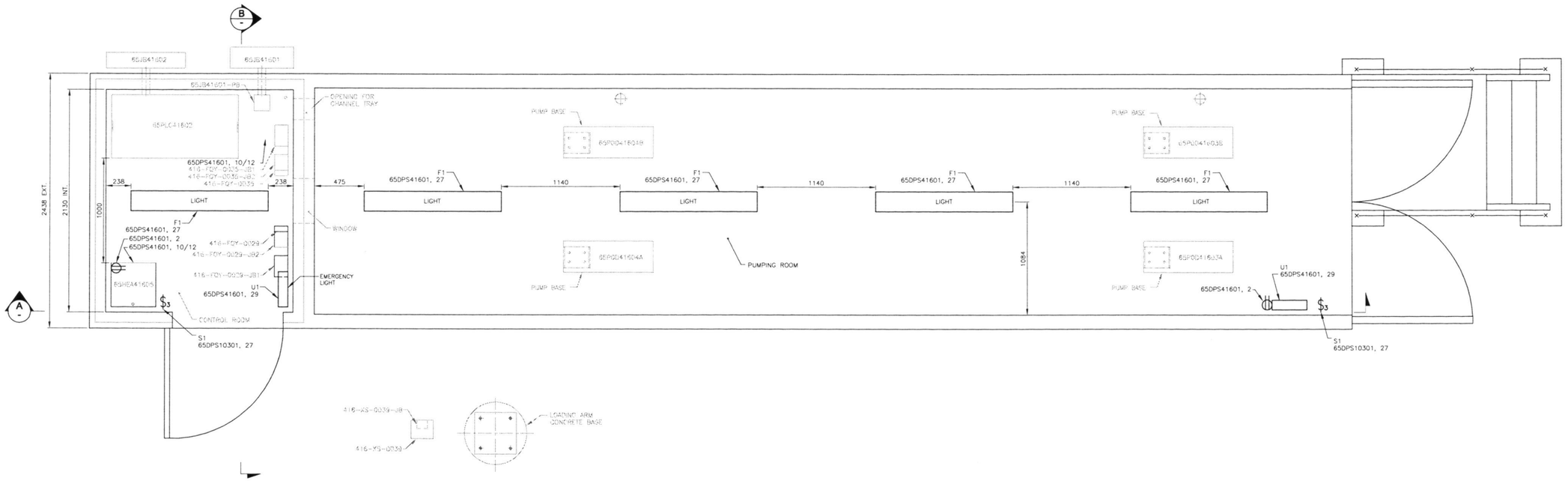

1 — *PLAN VIEW*
SCALE: 1:20
PORTAIL #1 PUMPING STATION
ELECTRICAL EQUIPMENT LAYOUT

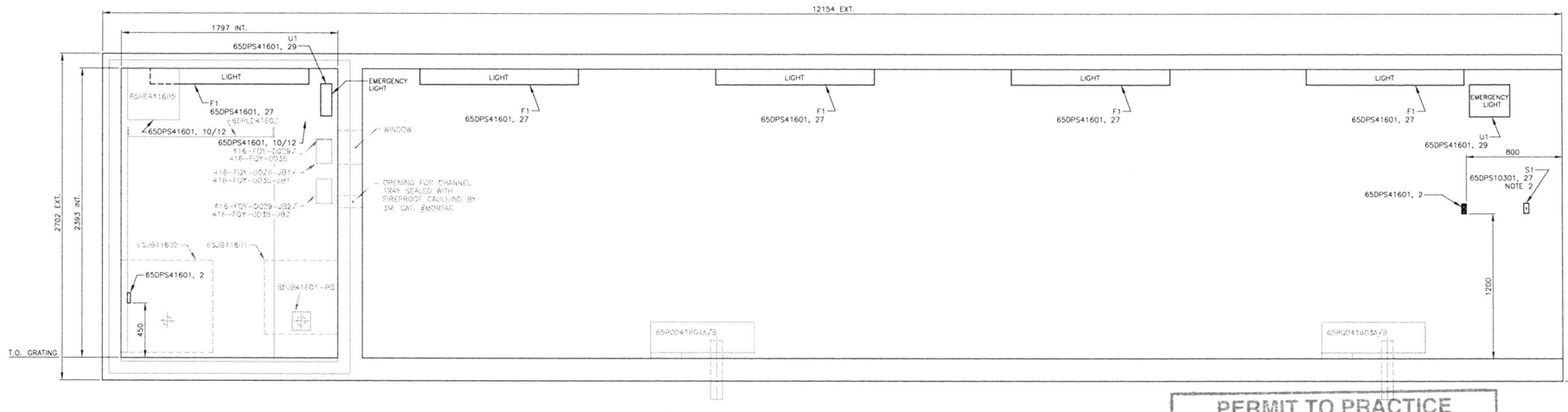

A — *ELEVATION*
SCALE: 1:20
PORTAIL #1 PUMPING STATION
ELECTRICAL EQUIPMENT LAYOUT

PERMIT TO PRACTICE
LE GROUPE ULTRAGEN LTÉE
Signature
Date NOV 15 2017
PERMIT NUMBER: P 1180
NT/NU Association of Professional Engineers and Geoscientists

REGISTERED PROFESSIONAL ENGINEER
L3624
D. CARRIER
LICENSEE
NT/NU

NOV 15 2017

PLAN CLE
KEY PLAN

NOTES GENERALES / GENERAL NOTES

ISSUED FOR CONSTRUCTION
ultragen DATE: SEPT 2017

DESSINS EN REFERENCE / REFERENCE DRAWINGS

TITRE / TITLE	# DWG.
65DPS41601 PANEL SCHEDULE IN E-ROOM	65-ULT-416-EL-012
ELECTRICAL EQUIPMENT LAYOUT E-ROOM	65-ULT-416-EL-002
ELECTRICAL EQUIPMENT LAYOUT	65-ULT-416-EL-007
MATERIAL LIST	ULT-591700-EL-ML-001

AGNICO EAGLE

REV.	DATE	DESCRIPTION	PAR/BY	APP.	CLIENT
3	2017-11-15	AS BUILT	D.C.	D.C.	
2	2017-09-20	ISSUED FOR CONSTRUCTION	S.G.	D.C.	
1	2017-08-04	UPDATE AREA & TAG NUMBER	N.S.	D.C.	
0	2017-06-12	ISSUED FOR CONSTRUCTION	S.G.	D.C.	
PA	2017-05-18	ISSUED FOR REVIEW	S.G.	D.C.	

REVISIONS

NUQSANA PRONEC MINING

ultragen

NO. PROJET
PROJECT NO. 591700

TITRE / TITLE
AGNICO EAGLE – MELIADINE DIVISION
416 – FUEL TANK FARM
FUEL DISTRIBUTION
PORTAL #1 PUMPING STATION
LIGHTING AND SERVICES

DESSINE PAR DRAWN BY	RISHI SHRESTHA	DATE 2017-05-18
VERIFIE PAR CHECKED BY	STÉPHANE GRIMARD	2017-05-18
APPROUVE PAR APPROVED BY	DANIEL CARRIER	2017-05-18
ECHELLE SCALE	1:20	DATE 2017-05-18

NO. DESSIN
DRAWING NO. 65-ULT-416-EL-010

NO. PROJET PROJECT NO.	REVISION	FEUILLE / SHT
6515	3	1 / 2

AE-CART-ARCH D

NO. DESSIN
DRAWING NO. 65-ULT-416-EL-010

FORMAT ARCHD

MATERIAL LIST

TYPE	MANUFACTURER	CATALOGUE NUMBER	INPUT POWER (W)	VOLTAGE	DESCRIPTION
F1	PACO	PLMC-4-48-LED-50-40-MVOLT	48	120	LUMINAIRE: WEATHERPROOF, DUST PROOF, SURFACE, MOUNT FIBERGLASS LUMINAIRE, IP67, NSF, 48W, 120-277VAC, 5120 LUMENS C/W ACCESSORIES
⊖	HUBBELL	HBL5362W	120	120	RECEPTACLE: 15A, 125V, 5-15R, 2 POLES
U1	LUMACELL	RGS36WOLD1	36	120	EMERGENCY LIGHTING WITH BATTERY UNIT C/W CHARGER AND BATTERIES (FACTORY WHITE COLOUR,120/347VAC, 2 PHASES MR16 DEL, 9W 4W)
$\$_{3}$	HUBBELL	CS315W	-	120	THREE WAY SWITCH FOR LIGHTING, 15A, 120-277VAC

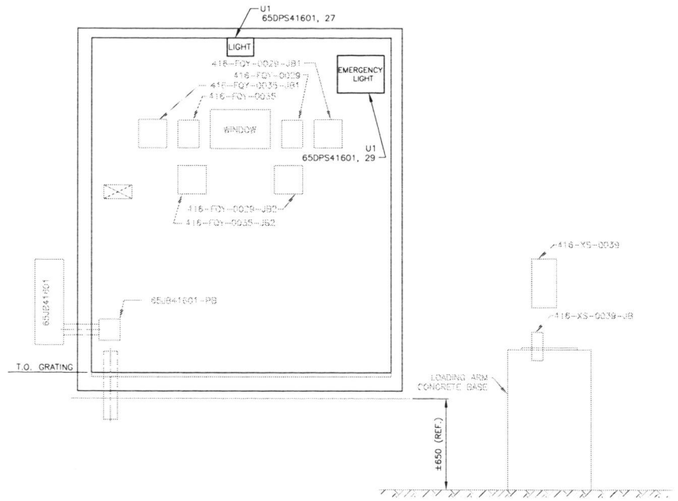

ELEVATION B
SCALE: 1:20
PORTAIL #1 PUMPING STATION
ELECTRICAL EQUIPMENT LAYOUT

PERMIT TO PRACTICE
LE GROUPE ULTRAGEN LTÉE
Signature
Date NOV 15 2017
PERMIT NUMBER: P 1180
NT/NU Association of Professional Engineers and Geoscientists

REGISTERED PROFESSIONAL ENGINEER
L3624
D. CARRIER
LICENSEE
NT(NU)
NOV 15 2017

PLAN CLE
KEY PLAN

NOTES GENERALES / GENERAL NOTES

ISSUED FOR CONSTRUCTION
ultragen DATE: SEPT 2017

DESSINS EN REFERENCE / REFERENCE DRAWINGS

TITRE / TITLE	# DWG
65DPS41601 PANEL SCHEDULE IN E-ROOM	65-ULT-416-EL-012
ELECTRICAL EQUIPMENT LAYOUT E-ROOM	65-ULT-416-EL-002
ELECTRICAL EQUIPMENT LAYOUT	65-ULT-416-EL-007
MATERIAL LIST	ULT-591700-EL-ML-001

AGNICO EAGLE

REV.	DATE	DESCRIPTION	PAR/BY	APP.	CLIENT
3	2017-11-15	AS BUILT	D.C.	D.C.	
2	2017-09-29	ISSUED FOR CONSTRUCTION	S.G.	D.C.	
1	2017-08-04	UPDATE AREA & TAG NUMBER	N.S.	D.C.	
0	2017-06-12	ISSUED FOR CONSTRUCTION	S.G.	D.C.	
PA	2017-05-18	ISSUED FOR REVIEW	S.G.	D.C.	

REVISIONS

NUQSANA-PROMEC MINING
ultragen
NO. PROJET
PROJECT NO. 591700

TITRE / TITLE
AGNICO EAGLE – MELIADINE DIVISION
416 – FUEL TANK FARM
FUEL DISTRIBUTION
PORTAIL #1 PUMPING STATION
LIGHTING AND SERVICES

DESSINÉ PAR / DRAWN BY	RISHI SHRESTHA	DATE 2017-05-18
VERIFIÉ PAR / CHECKED BY	STÉPHANE GRIMARD	2017-05-18
APPROUVÉ PAR / APPROVED BY	DANIEL CARRIER	2017-05-18
ÉCHELLE / SCALE	1:20	DATE 2017-05-18

NO. DESSIN / DRAWING NO. 65-ULT-416-EL-010

NO. PROJET / PROJECT NO.	REVISION	FEUILLE / SHT
6515	3	2 / 2

AE-CART-ARCH D

Source:	120	208	Volts
Feeder from / Single line diagram:	65TRF41601 / 65-416-275-200		
Mounting:	SURFACE		
Location:	ELECTRICAL ROOM 416 (PORTAL #1)		
Manufacturer / Catalog No.:	SQUARE-D (SCHNEIDER) / NQ430L2C		
Breaker type:	QOB		

Enclosure type:	NEMA 1
Main breaker.:	NONE
No. of circuits:	30 CCTs
Bars:	225 A
Short circuit Ampacity:	10 kA
Power:	30 kVA

DESCRIPTION	CABLE	TYPE		WATTS	BREAK.		CT #		CT #	BREAK.		WATTS	TYPE		CABLE	DESCRIPTION
	AWG	REF	QTY		TYPE	AMP				AMP	TYPE		QTE	REF	AWG	
LIGHTING FIXTURES TANK #3 AND #6	12	L	10	690		15	1	A	2	15		240	2	O	12	OUTLET PUMPING STATION & OPERATION ROOM 416 (PORTAL #1)
							3	B	4	15		120	1	O	12	OUTLET ELECTRICAL ROOM 416
LIGHTING FIXTURES OUTSIDE ELECTRICAL ROOM/OUTSIDE PUMPING STATION	12	L	7	483		15	5	C	6	15		240	2	O	12	OUTLET ELECTRICAL ROOM IT AREA 416
							7	A	8	15		400	1	I	12	PLC/HMI/IO CARDS IN OPERATION ROOM CABINET 65PLC41601
LIGHTING FIXTURES TANK LIGHT AND HEAVY VEHICULE LOADING, CONTAINERIZED DEF PORTAL #1	12	L	8	552		15	9	B	10	30		2000	1	H	6	HEATING IN OPERATION ROOM 416 65HEA41605
							11	C	12							
						15	13	A	14	15		200	1	I	12	LIGHT VEHICULE GASBOY - CONTROL 416-FQY-0049
LIGHTING ELECTRICAL ROOM 416	12	L	3	144		15	15	B	16	15		200	1	I	12	PLC CABINET 65PLC41601 OUTLET UTILITY IN OPERATION ROOM
LIGHTING CONTACTOR CONTROL FEEDER	12	L	1	37		15	17	C	18	15		100	1	I	12	INSTRUMENT (65-ULT-416-IN-013)
MOTORIZED OPERATOR VALVES FEEDER 416-FV-0014/0016 (65-ULT-416-IN-013)	10	I	2	888		15	19	A	20	15		888	2	I	12	MOTORIZED OPERATOR VALVES FEEDER 416-FV-0004/0006 (65-ULT-416-IN-013)
HEAVY VEHICULE GASBOY -MOTOR (1 1/2 HP) 416-FQY-0044	12	I	1	1120		15	21	B	22	15		444	2	I	12	MOTORIZED OPERATOR VALVES FEEDER 416-FV-0043 (65-ULT-416-IN-013)
							23	C	24	15		444	2	I	10	MOTORIZED OPERATOR VALVES FEEDER 416-FV-0048 (65-ULT-416-IN-013)
HEAVY VEHICULE GASBOY - CONTROL 416-FQY-0044	12	I	1	200		15	25	A	26	15		560	1	I	12	LIGHT VEHICULE GASBOY - MOTOR (3/4 HP) 416-FQY-0049
LIGHTING PUMPING STATION & OPERATION ROOM 416	12	L	5	240		15	27	B	28	15		36		L	12	EMERGENCY LIGHTING ELECTRICAL ROOM 416
EMERGENCY LIGHTING PUMPING STATION & OPERATION ROOM 416	12	L	2	72		15	29	C	30	15					12	ALARM PANEL

TYPE (REF)	(W) total	Qte
(L) Lighting	2254	36
(O) Outlet	600	5
(H) Heating	2000	1
(I) Instrument	5444	15

BREAKER TYPE	Qte (ref)
(L) SPARE	0
(S) SPACE	0
(G) DDFT BREAKER (30mA)	0

	Watts
Phase A	3962,5
Phase B	3365
Phase C	2970,5
Total	10298

REGISTERED PROFESSIONAL ENGINEER
L3627
D. CARRIER
LICENSEE
NT/NU
NOV 15 2017

NOTES:
1. SEE LIGHTING DIAGRAM FOR DETAILS OF CABLE SIZE DWG #65-ULT-416-EL-013.

REV.	DATE	DESCRIPTION	PAR	VER.	APP.
3	2017-11-15	AS BUILT	D.C.	D.C.	
2	2017-09-20	ISSUED FOR CONSTRUCTION	S. GRIMARD	D.CARRIER	D.CARRIER
1	2017-08-04	UPDATE AREA & TAG NUMBER	N.SALDAN	D.CARRIER	D.CARRIER
0	2017-06-12	ISSUED FOR CONSTRUCTION	SG 111891	DC 40308	DC 40308
PA	2017-05-16	ISSUED FOR REVIEW	MT 5029941	SG 111891	DC 40308

AGNICO EAGLE

NUQSANA PROMEC MINING

ultragen

416 - FUEL TANK FARM
PORTAL #1 ELECTRICAL ROOM
PANEL SCHEDULE 65DPS41601

UNITÉ: -	DATE: 2017-05-16	REV: 3
DESS: MT 5029941	65-ULT-416-EL-012	

PERMIT TO PRACTICE
LE GROUPE ULTRAGEN LTÉE
Signature
Date
PERMIT NUMBER: P 1180
NT/NU Association of Professional Engineers and Geoscientists

NO. DESSIN
DRAWING NO. 65-ULT-416-IN-004 (E-STOP & COMM)

FORMAT ARCH D

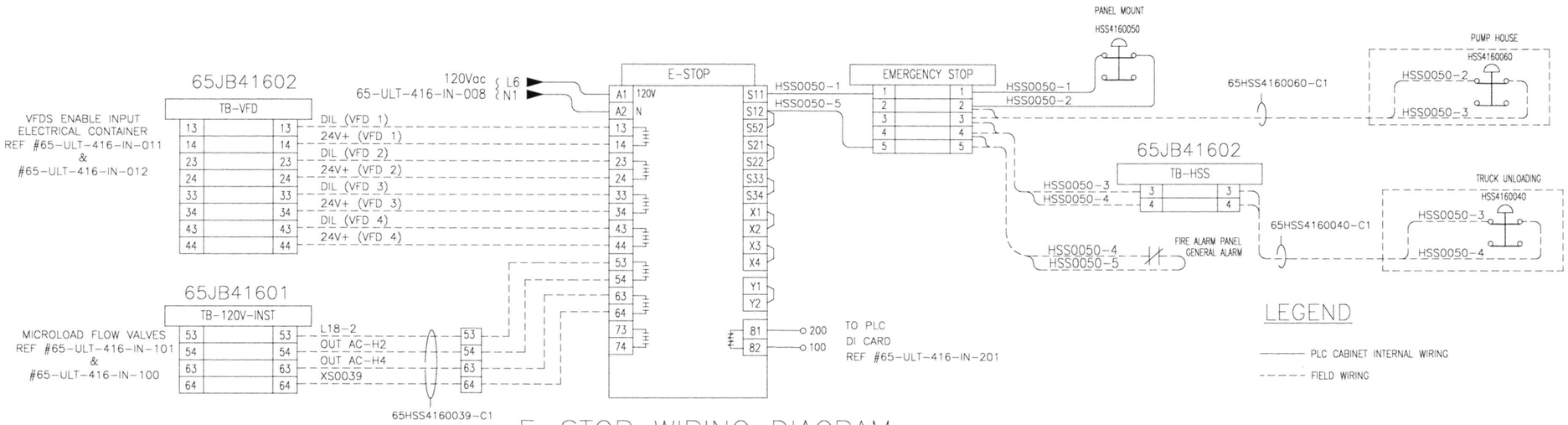

E-STOP WIRING DIAGRAM

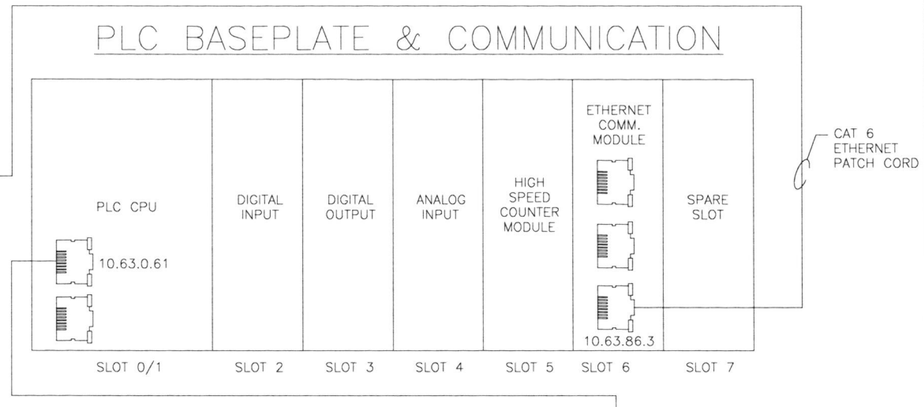

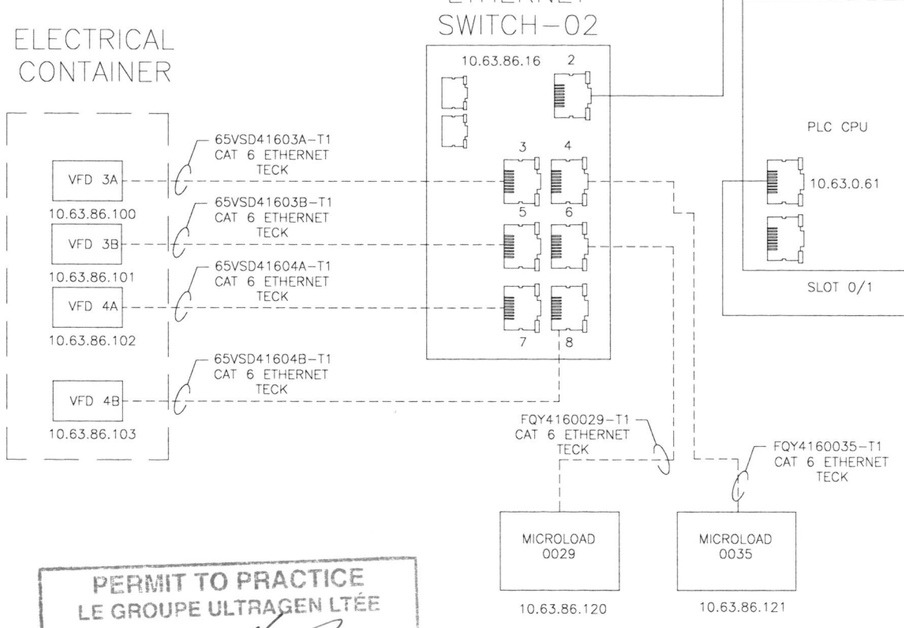

LAMICOID PLATE
BOM ITEM #26
SCALE = 1/2

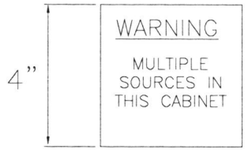

LAMICOID PLATE
BOM ITEM #27
SCALE = 1/2

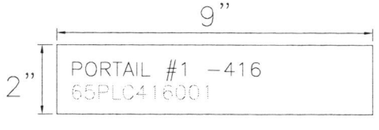

PERMIT TO PRACTICE
LE GROUPE ULTRAGEN LTÉE
Signature
Date NOV 15 2017
PERMIT NUMBER: P 1180
NT/NU Association of Professional Engineers and Geoscientists

REGISTERED PROFESSIONAL ENGINEER
13627
D. CARRIER
LICENSEE
NT/NU
NOV 15 2017

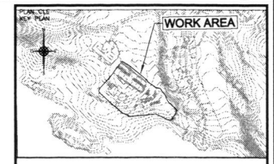

NOTES GENERALES / GENERAL NOTES

ISSUED FOR CONSTRUCTION
Ultragen DATE: SEPT 2017

DESSINS EN REFERENCE / REFERENCE DRAWINGS

TITRE / TITLE	# DWG
PLC CABINET LAYOUT	65-ULT-416-IN-001

AGNICO EAGLE

REV.	DATE	DESCRIPTION	PAR/BY	APP.	CLIENT
4	2017-11-15	AS BUILT	D.C.	D.C.	
3	2017-09-20	FOR CONSTRUCTION	E.L.	D.C.	
2	2017-08-14	UPDATE AREA & TAG NUMBER	E.L.	D.C.	
1	2017-06-09	FOR CONSTRUCTION	E.L.	D.C.	
0	2017-05-15	FOR CONSTRUCTION	E.L.	D.C.	

REVISIONS

NUQSANA PROMEC MINING
ultragen
NO. PROJET PROJECT NO. 591700

TITRE / TITLE
AGNICO EAGLE – MEADOWBANK DIVISION
416 – FUEL TANK FARM
FUEL DISTRIBUTION (PORTAL #1)
WIRING DETAIL
EMERGENCY STOP & COMMUNICATION

DESSINÉ PAR DRAWN BY	ERIC LAROUCHE	DATE 2017-04-11
VÉRIFIÉ PAR CHECKED BY	DANIEL CARRIER	2017-04-11
APPROUVÉ PAR APPROVED BY	DANIEL CARRIER	2017-04-11
ÉCHELLE SCALE	NTS	DATE 2017-04-11

NO. DESSIN, DRAWING NO. 65-ULT-416-IN-004

NO. PROJET PROJECT NO.	REVISION	FEUILLE / SHT
6515	4	1 / 1

AE-CART-ARCH D

P:\1. ANNEE 2017 ACTIFS\PROMEC\5917\00\INSTRUMENTATION\Plans et devis\Dessins\65-ULT-416-IN-004 (E-STOP & COMM).dwg

FILE NO. [Next Intext]

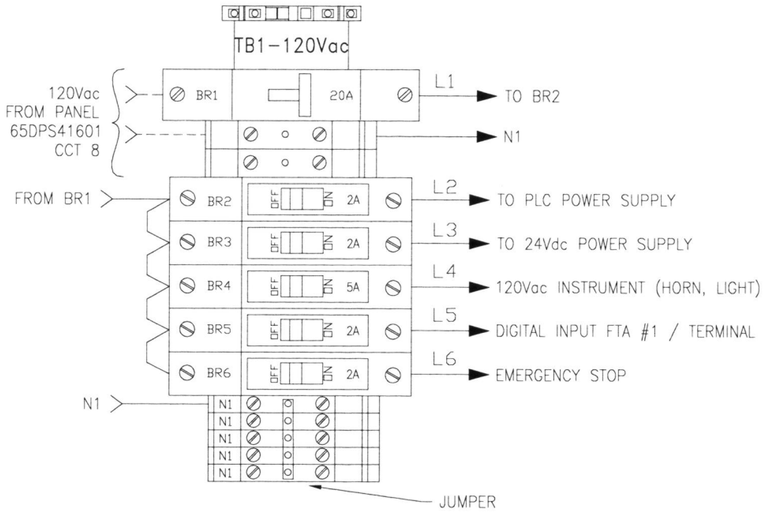

DETAIL #1

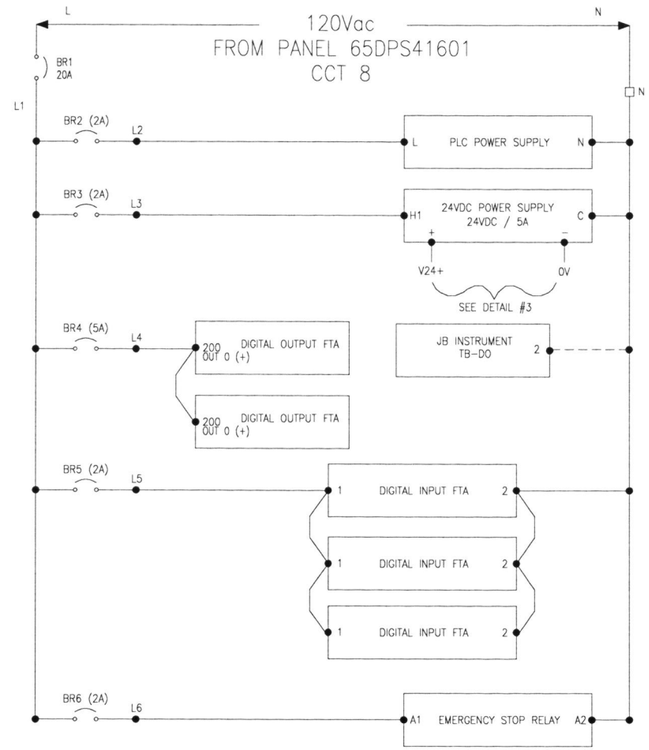

DETAIL #1 SCHEMATIC DIAGRAM

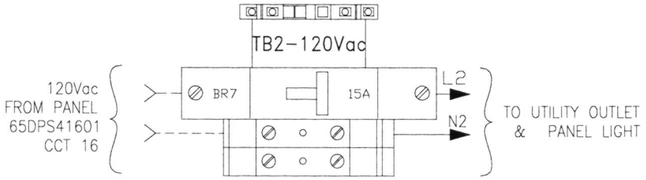

DETAIL #2

LEGEND

PLC CABINET INTERNAL WIRING

FIELD WIRING

DETAIL #1, #2, #3 FROM PLC CABINET LAYOUT DWG # 65-ULT-416-IN-001

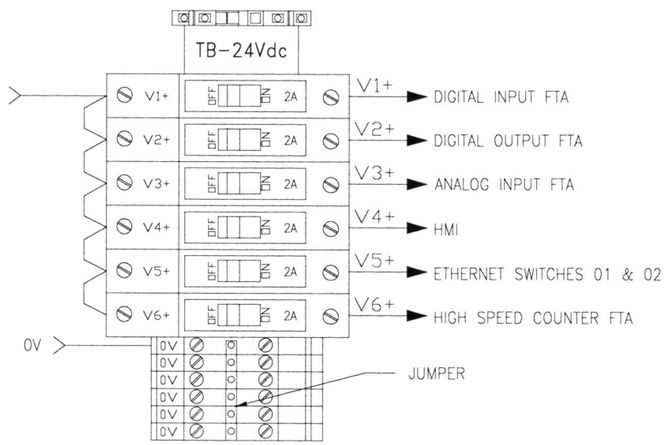

DETAIL #3

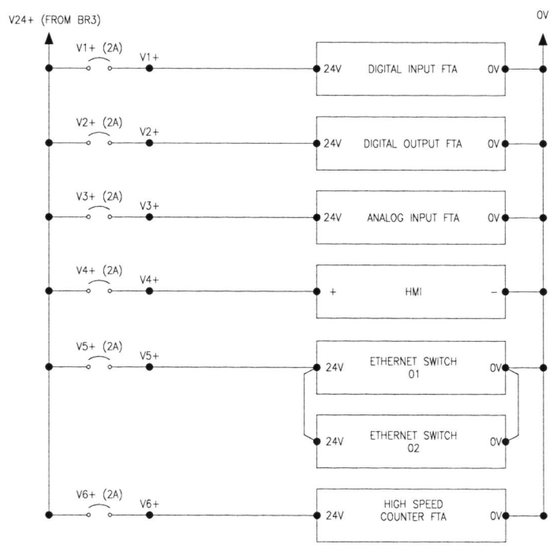

DETAIL #1 SCHEMATIC DIAGRAM

PERMIT TO PRACTICE
LE GROUPE ULTRAGEN LTÉE
Signature
Date NOV 15 2017
PERMIT NUMBER: P 1180
NT/NU Association of Professional Engineers and Geoscientists

REGISTERED PROFESSIONAL ENGINEER
13627
D. CARRIER
LICENSEE
NT/NU
NOV 15 2017

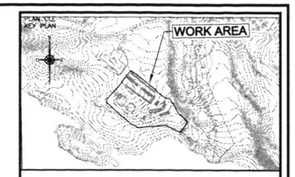

NOTES GENERALES / GENERAL NOTES

ISSUED FOR CONSTRUCTION
Ultragen DATE: SEPT 2017

DESSINS EN REFERENCE / REFERENCE DRAWINGS

TITRE / TITLE	# DWG
PLC CABINET LAYOUT	65-ULT-416-IN-001

AGNICO EAGLE

REV.	DATE	DESCRIPTION	PAR/BY	APP.	CLIENT
4	2017-11-15	AS BUILT	D.C.	D.C.	
3	2017-09-19	FOR CONSTRUCTION	E.L.	D.C.	
2	2017-08-14	UPDATE AREA & TAG NUMBER	E.L.	D.C.	
1	2017-07-05	FOR CONSTRUCTION	E.L.	D.C.	
0	2017-05-15	FOR CONSTRUCTION	E.L.	D.C.	

REVISIONS

NUOSANA PROJECT MINING
ultragen
NO. PROJET PROJECT NO. 591700

TITRE / TITLE
AGNICO EAGLE – MEL1ADINE DIVISION
416 – FUEL TANK FARM
FUEL DISTRIBUTION (PORTAL #1)
120Vac / 24Vdc DISTRIBUTION
MAIN PLC CABINET

DESSINE PAR DRAWN BY	ERIC LAROUCHE	DATE 2017-04-11
VERIFIE PAR CHECKED BY	DANIEL CARRIER	2017-04-11
APPROUVE PAR APPROVED BY	DANIEL CARRIER	2017-04-11
ECHELLE SCALE	NTS	DATE 2017-04-11
NO. DESSIN DRAWING NO.	65-ULT-416-IN-008	
NO. PROJET PROJECT NO.	6515	REVISION 4
		FEUILLE / SHT 1 / 1

AE-CART-ARCH D

NO. DESSIN
DRAWING NO. 65-ULT-416-IN-013 (DISTRIBUTION BJ 120)

FORMAT ARCHD

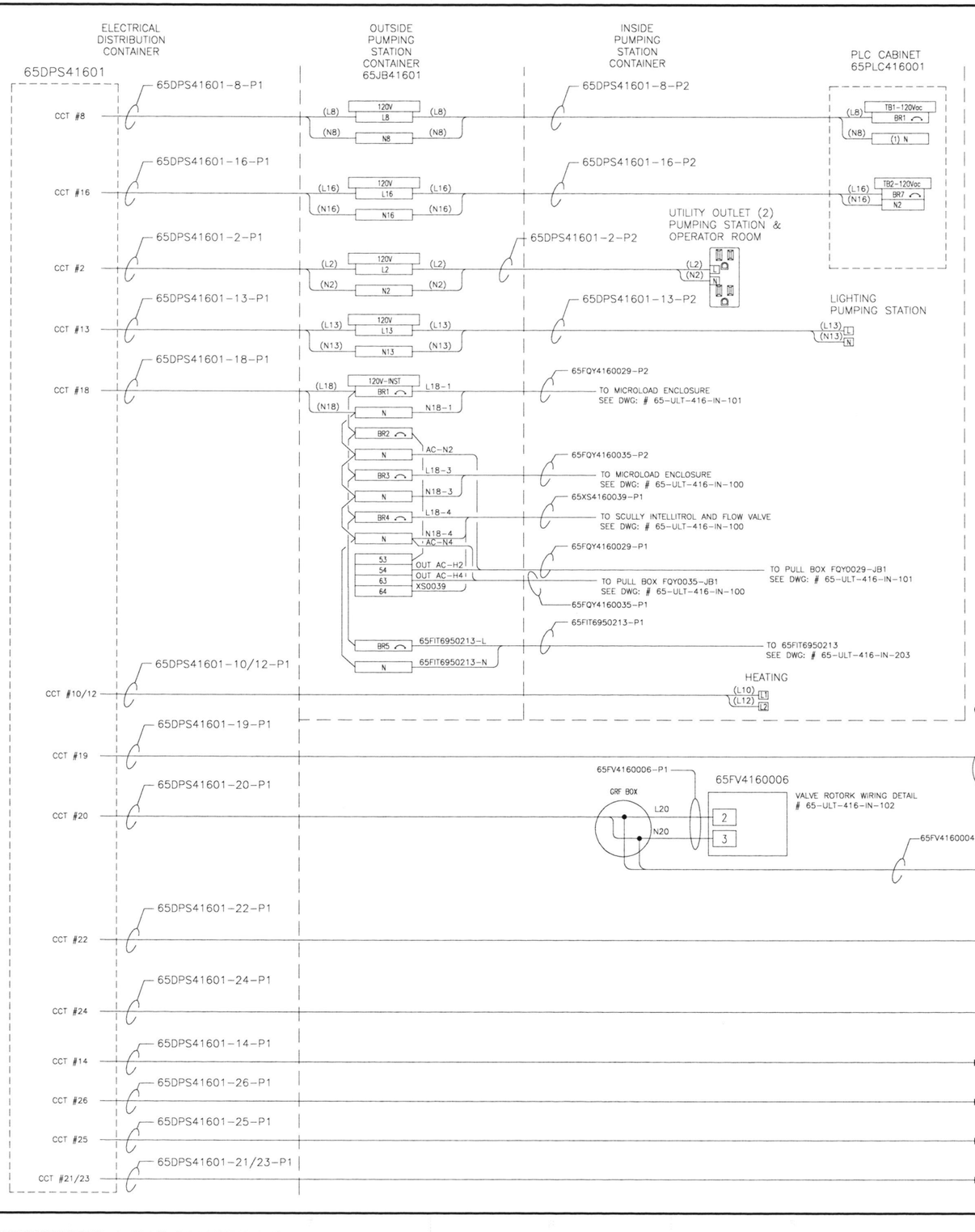

FIELD

PERMIT TO PRACTICE
LE GROUPE ULTRAGEN LTÉE
Signature
Date NOV 15 2017
PERMIT NUMBER: P 1180
NT/NU Association of Professional Engineers and Geoscientists

REGISTERED PROFESSIONAL ENGINEER
L3627
D. CARRIER
LICENSEE
NT/NU
NOV 15 2017

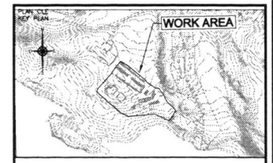

NOTES GENERALES / GENERAL NOTES

ISSUED FOR CONSTRUCTION
ultragen DATE: SEPT 2017

DESSINS EN REFERENCE / REFERENCE DRAWINGS

TITRE / TITLE	# DWG
PLC CABINET LAYOUT	65-ULT-416-IN-001

AGNICO EAGLE

REV.	DATE	DESCRIPTION	PAR/BY	APP.	CLIENT
3	2017-11-15	AS BUILT	D.C.	D.C.	
2	2017-09-19	FOR CONSTRUCTION	E.L.	D.C.	
1	2017-08-14	UPDATE AREA & TAG NUMBER	E.L.	D.C.	
0	2017-06-30	FOR CONSTRUCTION	E.L.	D.C.	
PA	2017-06-13	FOR COMMENTS	E.L.	D.C.	

REVISIONS

NUNAVUT PROMEC MINING
ultragen
NO. PROJET PROJECT NO. 591700

TITRE / TITLE
AGNICO EAGLE – MELIADINE DIVISION
416 – FUEL TANK FARM
FUEL DISTRIBUTION (PORTAL #1)
INTERCONNECTION
65JB41601 – 120Vac DISTRIBUTION

DESSINE PAR DRAWN BY	ERIC LAROUCHE	DATE 2017-06-05
VERIFIE PAR CHECKED BY	DANIEL CARRIER	2017-06-05
APPROUVE PAR APPROVED BY	DANIEL CARRIER	2017-06-05
ECHELLE SCALE	NTS	DATE 2017-06-06

NO. DESSIN DRAWING NO. 65-ULT-416-IN-013

NO. PROJET PROJECT NO.	REVISION	FEUILLE / SHT
6515	3	1 / 1

AE-CART-ARCH D

P:\1. ANNÉE 2017 ACTIFS\PROMEC\5917\00\INSTRUMENTATION\Plans et devis\Dessins\65-ULT-416-IN-013 (DISTRIBUTION BJ 120).dwg

FILE NO. (Next Entext)

NO. DESSIN
DRAWING NO.: 65-ULT-416-IN-200 (DO CARD)

FORMAT ARCH D

BMXDDO3202K
DIGITAL OUTPUT MODULE
SLOT 3

OUTPUT	DESCRIPTION
0	YL4160003 Strobe light - 65TNK41607
1	YL4160013 Strobe light - 65TNK41608
2	YL4160042 Strobe light - Light Vehicule Tank
3	YL4160047 Strobe light - Heavy Vehicule Tank
4	YB4160003 Common horn - area 416
5	FY4160006 FY - Loading 65TNK41607
6	FY4160004 FY - Unloading 65TNK41607
7	FY4160016 FY - Loading 65TNK41608
8	FY4160014 FY - Unloading 65TNK41608
9	FY4160043 FY - Loading Light Vehicule Tank
10	FY4160048 FY - Loading Heavy Vehicule Tank
11	YS4160029A PLC set Remote start for Microload to run
12	YS4160029B PLC set Remote stop for Microload to stop
13	YS4160035A PLC set Remote start for Microload to run
14	YS4160035B PLC set Remote stop for Microload to stop
15	SPARE -
16	YA4160050A Tank Overfill Alarm to fire alarm panel
17	YA4160050B Emergency Stop activated to fire alarm panel
18	YA4160050C Temperature Alarm to fire alarm panel
19	YA4160050D Pumps and Valves Malfunction Alarm to fire alarm panel
20	SPARE -
21	SPARE -
22	SPARE -
23	SPARE -
24	SPARE -
25	SPARE -
26	SPARE -
27	SPARE -
28	SPARE -
29	SPARE -
30	SPARE -
31	SPARE -

120Vac REF:65-ULT-416-IN-008

FTA-1
ABE7R16T210

OUT 0 (+)	200	DO-1-100	
OUT 0 (-)	100		
OUT 1 (+)	201	DO-1-101	
OUT 1 (-)	101		
OUT 2 (+)	202	DO-1-102	
OUT 2 (-)	102		
OUT 3 (+)	203	DO-1-103	
OUT 3 (-)	103		
OUT 4 (+)	204	DO-1-104	
OUT 4 (-)	104		
OUT 5 (+)	205	DO-1-105	
OUT 5 (-)	105		
OUT 6 (+)	206	DO-1-106	
OUT 6 (-)	106		
OUT 7 (+)	207	DO-1-107	
OUT 7 (-)	107		
OUT 8 (+)	208	DO-1-108	
OUT 8 (-)	108		
OUT 9 (+)	209	DO-1-109	
OUT 9 (-)	109		
OUT 10 (+)	210	DO-1-110	
OUT 10 (-)	110		
OUT 11 (+)	211	DO-1-111	
OUT 11 (-)	111		
OUT 12 (+)	212	DO-1-112	
OUT 12 (-)	112		
OUT 13 (+)	213	DO-1-113	
OUT 13 (-)	113		
OUT 14 (+)	214	DO-1-114	
OUT 14 (-)	114		
OUT 15 (+)	215		
OUT 15 (-)	115		

V2+ 24V
0V 0V

24Vdc REF:65-ULT-416-IN-008

65-JB-416-02
TB-DO

1-100	N	YL0003	65YL4160003-C1	YL 0003
	B	YL0003-N		
1-101	N	YL0013	65YL4160013-C1	YL 0013
	B	YL0013-N		
1-102	N	YL0042	65YL4160042-C1	YL 0042
	B	YL0042-N		
1-103	N	YL0047	65YL4160047-C1	YL 0047
	B	YL0047-N		
1-104	N	YB0003	65YB4160003-C1	YB 0003
	B	YB0003-N		
1-105	(1)	FY0006	PART OF 65FV4160006-C1	FV 0006 NOTE 1
	(2)	FY0006-N		
1-106	(1)	FY0004	PART OF 65FV4160004-C1	FV 0004 NOTE 1
	(2)	FY0004-N		
1-107	(1)	FY0016	PART OF 65FV4160016-C1	FV 0016 NOTE 1
	(2)	FY0016-N		
1-108	(1)	FY0014	PART OF 65FV4160014-C1	FV 0014 NOTE 1
	(2)	FY0014-N		
1-109	(1)	FY0043	PART OF 65FV4160043-C1	FV 0043 NOTE 1
	(2)	FY0043-N		
1-110	(1)	FY0048	PART OF 65FV4160048-C1	FV 0048 NOTE 1
	(2)	FY0048-N		

YS-0029A (120Vac) A1/A2 11/14 (1) 12VDC (2) XS0029A
YS-0029B (120Vac) A1/A2 11/14 (3) XS0029B
PART OF 65FQY4160029-C2 → FQY 0029 (1)→3 CN6, (2)→1 CN4, (3)→3 CN4
PUMPING ROOM AREA

YS-0035A (120Vac) A1/A2 11/14 (1) 12VDC (2) XS0035A
YS-0035B (120Vac) A1/A2 11/14 (3) XS0035B
PART OF 65FQY4160035-C2 → FQY 0035 (1)→3 CN6, (2)→1 CN4, (3)→3 CN4
PUMPING ROOM AREA

FTA-2
ABE7R16T210

OUT 16 (+)	200	DO-2-200	
OUT 16 (-)	100	DO-2-100	
OUT 17 (+)	201	DO-2-201	
OUT 17 (-)	101	DO-2-101	
OUT 18 (+)	202	DO-2-202	
OUT 18 (-)	102	DO-2-102	
OUT 19 (+)	203	DO-2-203	
OUT 19 (-)	103	DO-2-103	
OUT 20 (+)	204		
OUT 20 (-)	104		
OUT 21 (+)	205		
OUT 21 (-)	105		
OUT 22 (+)	206		
OUT 22 (-)	106		
OUT 23 (+)	207		
OUT 23 (-)	107		
OUT 24 (+)	208		
OUT 24 (-)	108		
OUT 25 (+)	209		
OUT 25 (-)	109		
OUT 26 (+)	210		
OUT 26 (-)	110		
OUT 27 (+)	211		
OUT 27 (-)	111		
OUT 28 (+)	212		
OUT 28 (-)	112		
OUT 29 (+)	213		
OUT 29 (-)	113		
OUT 30 (+)	214		
OUT 30 (-)	114		
OUT 31 (+)	215		
OUT 31 (-)	115		

V2+ 24V
0V 0V

24Vdc REF:65-ULT-416-IN-008

65-JB-416-02
TB-FIRE

2-200	(1)	YA0050A-C	65YA4160050-C1
2-100	(2)	YA0050A-NO	
2-201	(3)	YA0050B-C	
2-101	(4)	YA0050B-NO	
2-202	(5)	YA0050C-C	
2-102	(6)	YA0050C-NO	
2-203	(7)	YA0050D-C	
2-103	(8)	YA0050D-NO	

ELECTRICAL CONTAINER
~~FIRE ALARM PANEL~~

(1) X SENSING VOLTAGE
(2) X SIGNAL IN
(3) X
(4) X
(5) X YA 0050 A/B/C/D
(6) X
(7) X
(8) X

TO BE DEFINED BY AGNICO-EAGLE

CANCELLED

PLC CABINET 65PLC416001

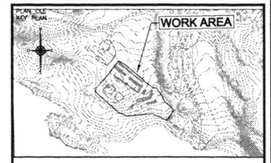

NOTES GENERALES / GENERAL NOTES

NOTE 1 : CONTRACTOR MUST INSTALL JUMPERS WIRE ON VALVE TERMINAL BLOCK
REF : 65-ULT-416-IN-102

ISSUED FOR CONSTRUCTION
ultragen DATE: SEPT 2017

DESSINS EN REFERENCE / REFERENCE DRAWINGS

TITRE / TITLE	# DWG
PLC CABINET LAYOUT	65-ULT-416-IN-001

AGNICO EAGLE

REV.	DATE	DESCRIPTION	PAR/BY	APP.	CLIENT
3	2017-11-15	AS BUILT	D.C.	D.C.	
2	2017-09-19	FOR CONSTRUCTION	E.L.	D.C.	
1	2017-08-14	UPDATE AREA & TAG NUMBER	E.L.	D.C.	
0	2017-06-30	FOR CONSTRUCTION	E.L.	D.C.	
PA	2017-06-13	FOR COMMENTS	E.L.	D.C.	

REVISIONS

NUNAVUT QUARTZ CORP. NUQSAUT PROMEC MINING — ultragen

NO. PROJET PROJECT NO. 591700

TITRE / TITLE
AGNICO EAGLE – MEADOWBANK DIVISION
416 – FUEL TANK FARM
FUEL DISTRIBUTION (PORTAL #1)
CARD WIRING INTERCONNECTION
DIGITAL OUTPUT
SLOT 3

DESSINE PAR DRAWN BY	ERIC LAROUCHE	DATE 2017-04-11
VERIFIE PAR CHECKED BY	DANIEL CARRIER	2017-04-11
APPROUVE PAR APPROVED BY	DANIEL CARRIER	2017-04-11
ECHELLE SCALE	NTS	DATE 2017-04-11
NO. DESSIN DRAWING NO.	65-ULT-416-IN-200	
NO. PROJET PROJECT NO.	6515	REVISION 3 / FEUILLE / SHT 1 / 1

PERMIT TO PRACTICE
LE GROUPE ULTRAGEN LTÉE
Signature
Date NOV 15 2017
PERMIT NUMBER: P 1180
NT/NU Association of Professional Engineers and Geoscientists

REGISTERED PROFESSIONAL ENGINEER L3627 D. CARRIER LICENSEE NT/NU

NOV 15 2017

AE-CART-ARCH D

P:\1. ANNEE 2017 ACTIFS\PROMEC\5917\DD\INSTRUMENTATION\Plans et devis\Dessins\65-ULT-416-IN-200 (DO CARD).dwg

FILE NO. [Next Sheet]

NO. DESSIN
DRAWING NO. 65-ULT-416-IN-201 (DI CARD)

FORMAT ARCHD

BMXDDI6402K
DIGITAL INPUT MODULE
SLOT 2

INPUT	DESCRIPTION
0	HSS4160050 E-stop depressed: truck area or pumping station or PLC cabinet
1	ZSC4160006 FV close position – Loading 65TNK41607
2	ZSO4160006 FV open position – Loading 65TNK41607
3	YS4160006 FV failure – Loading 65TNK41607
4	ZSC4160004 FV close position – Unloading 65TNK41607
5	ZSO4160004 FV open position – Unloading 65TNK41607
6	YS4160004 FV failure – Unloading 65TNK41607
7	ZSC4160016 FV close position – Loading 65TNK41608
8	ZSO4160016 FV open position – Loading 65TNK41608
9	YS4160016 FV failure – Loading 65TNK41608
10	ZSC4160014 FV close position – Unloading 65TNK41608
11	ZSO4160014 FV open position – Unloading 65TNK41608
12	YS4160014 FV failure – Unloading 65TNK41608
13	ZSC4160043 FV close position – Loading Heavy Vehicule Tank
14	ZSO4160043 FV open position – Loading Heavy Vehicule Tank
15	YS4160043 FV failure – Loading Heavy Vehicule Tank
16	ZSC4160048 FV close position – Loading Light Vehicule Tank
17	ZSO4160048 FV open position – Loading Light Vehicule Tank
18	YS4160048 FV failure – Loading Light Vehicule Tank
19	XS4160039 Scully – Truck Ground proving
20	LSHH4160042 Level – Light vehicule Tank
21	LSH4160042 Level – Light vehicule Tank
22	LSL4160042 Level – Light vehicule Tank
23	LSLL4160042 Level – Light vehicule Tank
24	LSHH4160047 Level – Heavy vehicule Tank
25	LSH4160047 Level – Heavy vehicule Tank
26	LSL4160047 Level – Heavy vehicule Tank
27	LSLL4160047 Level – Heavy vehicule Tank
28	SPARE -
29	SPARE -
30	SPARE -
31	SPARE -

INPUT #32 TO 63
REF:65-ULT-416-IN-202

FTA-1
ABE7S16E2F0

IN 0 (+)	200	DI-1-200	81 E-STOP RELAY 65-ULT-416-IN-004
IN 0 (-)	100	DI-1-100	82
IN 1 (+)	201	DI-1-201	
IN 1 (-)	101	DI-1-101	
IN 2 (+)	202		
IN 2 (-)	102	DI-1-102	
IN 3 (+)	203		
IN 3 (-)	103	DI-1-103	
IN 4 (+)	204	DI-1-204	
IN 4 (-)	104	DI-1-104	
IN 5 (+)	205		
IN 5 (-)	105	DI-1-105	
IN 6 (+)	206		
IN 6 (-)	106	DI-1-106	
IN 7 (+)	207	DI-1-207	
IN 7 (-)	107	DI-1-107	
IN 8 (+)	208		
IN 8 (-)	108	DI-1-108	
IN 9 (+)	209		
IN 9 (-)	109	DI-1-109	
IN 10 (+)	210	DI-1-210	
IN 10 (-)	110	DI-1-110	
IN 11 (+)	211		
IN 11 (-)	111	DI-1-111	
IN 12 (+)	212		
IN 12 (-)	112	DI-1-112	
IN 13 (+)	213	DI-1-213	
IN 13 (-)	113	DI-1-113	
IN 14 (+)	214		
IN 14 (-)	114	DI-1-114	
IN 15 (+)	215		
IN 15 (-)	115	DI-1-115	

24Vdc
REF:65-ULT-416-IN-008
V1+ — 24V
24V
0V — 0V
0V

3 — 1 — L5
4 — 2 — N1
120Vac REF:65-ULT-416-IN-008

FTA-2
ABE7S16E2F0

IN 16 (+)	200	DI-2-200
IN 16 (-)	100	DI-2-100
IN 17 (+)	201	
IN 17 (-)	101	DI-2-101
IN 18 (+)	202	
IN 18 (-)	102	DI-2-102
IN 19 (+)	203	DI-2-203
IN 19 (-)	103	DI-2-103
IN 20 (+)	204	DI-2-204
IN 20 (-)	104	DI-2-104
IN 21 (+)	205	
IN 21 (-)	105	DI-2-105
IN 22 (+)	206	
IN 22 (-)	106	DI-2-106
IN 23 (+)	207	
IN 23 (-)	107	DI-2-107
IN 24 (+)	208	DI-2-208
IN 24 (-)	108	DI-2-108
IN 25 (+)	209	
IN 25 (-)	109	DI-2-109
IN 26 (+)	210	
IN 26 (-)	110	DI-2-110
IN 27 (+)	211	
IN 27 (-)	111	DI-2-111
IN 28 (+)	212	
IN 28 (-)	112	
IN 29 (+)	213	
IN 29 (-)	113	
IN 30 (+)	214	
IN 30 (-)	114	
IN 31 (+)	215	
IN 31 (-)	115	

24Vdc
REF:65-ULT-416-IN-008
V1+ — 24V
24V
0V — 0V
0V

3 — 1 — L5
4 — 2 — N1
120Vac REF:65-ULT-416-IN-008

PLC CABINET 65PLC416001

65-JB-416-02
TB-DI

1-201	(3)	1-201	PART OF 65FV4160006-C1
1-101	(4)	ZSC-0006	
1-102	(5)	ZSO-0006	
1-103	(6)	YS-0006	
1-204	(3)	1-204	PART OF 65FV4160004-C1
1-104	(4)	ZSC-0004	
1-105	(5)	ZSO-0004	
1-106	(6)	YS-0004	
1-207	(3)	1-207	PART OF 65FV4160016-C1
1-107	(4)	ZSC-0016	
1-108	(5)	ZSO-0016	
1-109	(6)	YS-0016	
1-210	(3)	1-210	PART OF 65FV4160014-C1
1-110	(4)	ZSC-0014	
1-111	(5)	ZSO-0014	
1-112	(6)	YS-0014	
1-213	(3)	1-213	PART OF 65FV4160043-C1
1-113	(4)	ZSC-0043	
1-114	(5)	ZSO-0043	
1-115	(6)	YS-0043	

PART OF 65FV4160006-C1: (3)→6, (4)→7, (5)→9, (6)→44 — FV 0006 NOTE 1
PART OF 65FV4160004-C1: (3)→6, (4)→7, (5)→9, (6)→44 — FV 0004 NOTE 1
PART OF 65FV4160016-C1: (3)→6, (4)→7, (5)→9, (6)→44 — FV 0016 NOTE 1
PART OF 65FV4160014-C1: (3)→6, (4)→7, (5)→9, (6)→44 — FV 0014 NOTE 1
PART OF 65FV4160043-C1: (3)→6, (4)→7, (5)→9, (6)→44 — FV 0043 NOTE 1

65-JB-416-02
TB-DI

2-200	(3)	2-200	PART OF 65FV4160048-C1
2-100	(4)	ZSC-0048	
2-101	(5)	ZSO-0048	
2-102	(6)	YS-0048	

PART OF 65FV4160048-C1: (3)→6, (4)→7, (5)→9, (6)→44 — FV 0048 NOTE 1

CR-XS0039(120Vac): 11 — A1, 14 — A2
(1) OUT AC-H4
(2) AC-N4
65XS04160039-C1

TO MICROLOAD PULL BOX
FQY0035-JB1
REF #65-ULT-416-IN-100

65-JB-416-02
TB-DI

2-204	(1)	2-204	65LS4160042-C1
2-104	(2)	LSHH-0042	
2-105	(3)	LSH-0042	
2-106	(4)	LSL-0042	
2-107	(5)	LSLL-0042	
2-208	(1)	2-208	65LS4160047-C1
2-108	(2)	LSHH-0047	
2-109	(3)	LSH-0047	
2-110	(4)	LSL-0047	
2-111	(5)	LSLL-0047	

65LS4160042-C1: CRF BOX (1) (BLACK) — LSHH-0042; (2) (BLACK) — LSHH-0042; (WHITE) — LSH-0042; (3) (WHITE) — LSH-0042; (RED) — LSL-0042; (4) (RED) — LSL-0042; (GREEN) — LSLL-0042; (5) (GREEN) — LSLL-0042 — LS 0042
65LS4160047-C1: CRF BOX (1) (BLACK) — LSHH-0047; (2) (BLACK) — LSHH-0047; (WHITE) — LSH-0047; (3) (WHITE) — LSH-0047; (RED) — LSL-0047; (4) (RED) — LSL-0047; (GREEN) — LSLL-0047; (5) (GREEN) — LSLL-0047 — LS 0047

PERMIT TO PRACTICE
LE GROUPE ULTRAGEN LTÉE
Signature
Date NOV 15 2017
PERMIT NUMBER: P 1180
NT/NU Association of Professional Engineers and Geoscientists

REGISTERED PROFESSIONAL ENGINEER
L3627
D. CARRIER
LICENSEE
NT/NU
NOV 15 2017

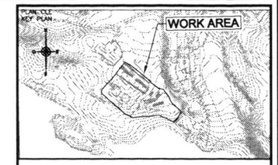

NOTES GENERALES / GENERAL NOTES

NOTE 1 : CONTRACTOR MUST INSTALL JUMPER WIRE ON VALVE TERMINAL BLOCK
REF : 65-ULT-416-102

ISSUED FOR CONSTRUCTION
ultragen DATE: SEPT 2017

DESSINS EN REFERENCE / REFERENCE DRAWINGS

TITRE / TITLE	# DWG
PLC CABINET LAYOUT	65-ULT-416-IN-001

AGNICO EAGLE

REV.	DATE	DESCRIPTION	PAR/BY	APP.	CLIENT
4	2017-11-15	AS BUILT	D.C.	D.C.	
3	2017-09-19	FOR CONSTRUCTION	E.L.	D.C.	
2	2017-09-06	UPDATE	D.C.		
1	2017-08-14	UPDATE AREA & TAG NUMBER	E.L.	D.C.	
0	2017-06-30	ISSUED FOR CONSTRUCTION	E.L.	D.C.	
PA	2017-06-13	FOR COMMENTS	E.L.	D.C.	

REVISIONS

ultragen
NO. PROJET / PROJECT NO. 591700

TITRE / TITLE
AGNICO EAGLE – MEADOWBANK DIVISION
416 – FUEL TANK FARM
FUEL DISTRIBUTION (PORTAL #1)
CARD WIRING INTERCONNECTION
DIGITAL INPUT (120Vac)
SLOT 2

DESSINE PAR / DRAWN BY	ERIC LAROUCHE	DATE 2017-04-11
VERIFIE PAR / CHECKED BY	DANIEL CARRIER	2017-04-11
APPROUVE PAR / APPROVED BY	DANIEL CARRIER	2017-04-11
ECHELLE / SCALE	NTS	DATE 2017-04-11

NO. DESSIN / DRAWING NO. 65-ULT-416-IN-201

NO. PROJET / PROJECT NO.	REVISION	FEUILLE / SHT
6515	4	1 / 1

AE-CART-ARCH D

NO. DESSIN
DRAWING NO. 65-ULT-416-IN-202 (DI CARD)

FORMAT ARCHD

BMXDDI6402K
DIGITAL INPUT MODULE
SLOT 2

INPUT	DESCRIPTION
32	SPARE -
33	SPARE -
34	SPARE -
35	SPARE -
36	SPARE -
37	SPARE -
38	SPARE -
39	SPARE -
40	SPARE -
41	SPARE -
42	SPARE -
43	SPARE -
44	SPARE -
45	SPARE -
46	SPARE -
47	SPARE -
48	SPARE -
49	SPARE -
50	SPARE -
51	SPARE -
52	SPARE -
53	SPARE -
54	SPARE -
55	SPARE -
56	SPARE -
57	SPARE -
58	SPARE -
59	SPARE -
60	SPARE -
61	SPARE -
62	SPARE -
63	SPARE -

INPUT #0 TO 31
REF:65-ULT-416-IN-201

FTA-3
ABE7S16E2F0

IN 0 (+)	200
IN 0 (-)	100
IN 1 (+)	201
IN 1 (-)	101
IN 2 (+)	202
IN 2 (-)	102
IN 3 (+)	203
IN 3 (-)	103
IN 4 (+)	204
IN 4 (-)	104
IN 5 (+)	205
IN 5 (-)	105
IN 6 (+)	206
IN 6 (-)	106
IN 7 (+)	207
IN 7 (-)	107
IN 8 (+)	208
IN 8 (-)	108
IN 9 (+)	209
IN 9 (-)	109
IN 10 (+)	210
IN 10 (-)	110
IN 11 (+)	211
IN 11 (-)	111
IN 12 (+)	212
IN 12 (-)	112
IN 13 (+)	213
IN 13 (-)	113
IN 14 (+)	214
IN 14 (-)	114
IN 15 (+)	215
IN 15 (-)	115

24Vdc
REF:65-ULT-416-IN-008

V1+ ◄ 24V
24V
0V ◄ 0V
0V

120Vac REF:65-ULT-416-IN-008

3 — 1 ◄ L5
4 — 2 ◄ N1

N

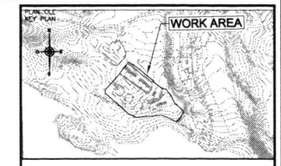

NOTES GENERALES / GENERAL NOTES

ISSUED FOR CONSTRUCTION
ultragen DATE: SEPT 2017

DESSINS EN REFERENCE / REFERENCE DRAWINGS

TITRE / TITLE	# DWG
PLC CABINET LAYOUT	65-ULT-416-IN-001

AGNICO EAGLE

REV.	DATE	DESCRIPTION	PAR/BY	APP.	CLIENT
3	2017-11-15	AS BUILT	D.C.	D.C.	
2	2017-09-19	FOR CONSTRUCTION	E.L.	D.C.	
1	2017-06-14	UPDATE AREA & TAG NUMBER	E.L.	D.C.	
0	2017-06-30	FOR CONSTRUCTION	E.L.	D.C.	
PA	2017-06-13	FOR COMMENTS	E.L.	D.C.	

REVISIONS

ultragen
NO. PROJET PROJECT NO. 591700

TITRE / TITLE
AGNICO EAGLE – MEADOWBANK DIVISION
416 – FUEL TANK FARM
FUEL DISTRIBUTION (PORTAL #1)
CARD WIRING INTERCONNECTION
DIGITAL INPUT (120Vac) – PART 2 OF 2
SLOT 2

DESSINE PAR DRAWN BY	ERIC LAROUCHE	DATE 2017-04-11
VERIFIE PAR CHECKED BY	DANIEL CARRIER	2017-04-11
APPROUVE PAR APPROVED BY	DANIEL CARRIER	2017-04-11
ECHELLE SCALE	NTS	DATE 2017-04-11

NO. DESSIN DRAWING NO. 65-ULT-416-IN-202

NO. PROJET PROJECT NO.	REVISION	FEUILLE / SHT
6515	3	1 / 1

PERMIT TO PRACTICE
LE GROUPE ULTRAGEN LTÉE
Signature
Date NOV 15 2017
PERMIT NUMBER: P 1180
NT/NU Association of Professional Engineers and Geoscientists

REGISTERED PROFESSIONAL ENGINEER
L3627
D. CARRIER
LICENSEE
NT/NU
NOV 15 2017

AE-CART-ARCH D

BMXEHC0800 HIGH SPEED COUNTER MODULE SLOT 5	
INPUT	DESCRIPTION
0 AUX	YS4160044 Gasboy started from Light Vehicule Tank
0 MAIN	FQY4160044 Volume transferred from Light Vehicule Tank
1 AUX	YS4160049 Gasboy started from Heavy Vehicule Tank
1 MAIN	FQY4160049 Volume transferred from Heavy Vehicule Tank
2 AUX	SPARE
2 MAIN	SPARE
3 AUX	SPARE
3 MAIN	SPARE
4 AUX	SPARE
4 MAIN	SPARE
5 AUX	SPARE
5 MAIN	SPARE
6 AUX	SPARE
6 MAIN	SPARE
7 AUX	SPARE
7 MAIN	SPARE

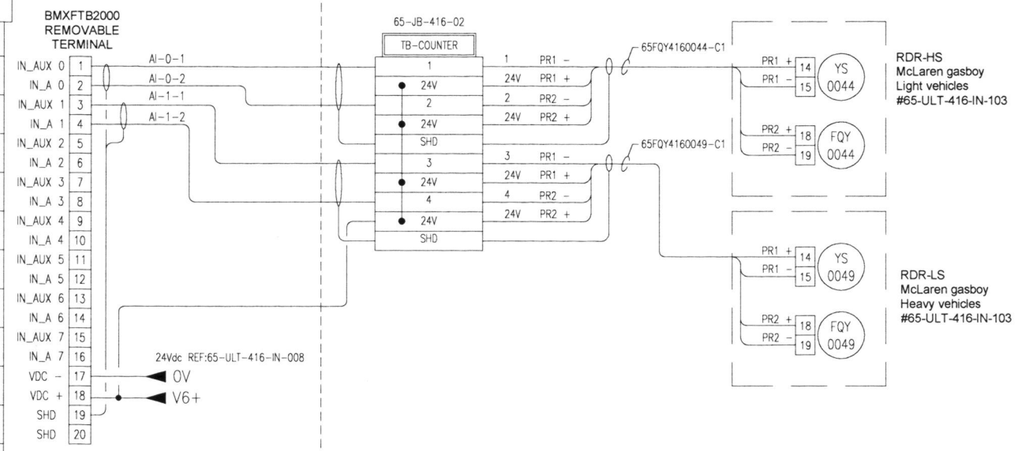

PLC CABINET 65PLC416001

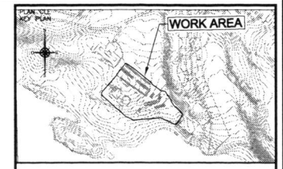

NOTES GENERALES / GENERAL NOTES

ISSUED FOR CONSTRUCTION
ultragen DATE: SEPT 2017

DESSINS EN REFERENCE / REFERENCE DRAWINGS

TITRE / TITLE	# DWG
PLC CABINET LAYOUT	65-ULT-416-IN-001

AGNICO EAGLE

REV.	DATE	DESCRIPTION	PAR/BY	APP.	CLIENT
3	2017-11-15	AS BUILT	D.C.	D.C.	
2	2017-09-19	FOR DESCRIPTION	E.L.	D.C.	
1	2017-08-14	UPDATE AREA & TAG NUMBER	E.L.	D.C.	
0	2017-06-30	FOR CONSTRUCTION	E.L.	D.C.	
PA	2017-06-13	FOR COMMENTS	E.L.	D.C.	

REVISIONS

NUQSANA PROMEC MINING

ultragen

NO. PROJET / PROJECT NO. 591700

TITRE / TITLE
AGNICO EAGLE – MELIADINE DIVISION
416 – FUEL TANK FARM
FUEL DISTRIBUTION (PORTAL #1)
CARD WIRING INTERCONNECTION
HIGH SPEED COUNTER MODULE
SLOT 5

DESSINE PAR / DRAWN BY	ERIC LAROUCHE	DATE 2017-06-06
VERIFIE PAR / CHECKED BY	DANIEL CARRIER	2017-06-06
APPROUVE PAR / APPROVED BY	DANIEL CARRIER	2017-06-06
ECHELLE / SCALE	NTS	DATE 2017-06-06

NO. DESSIN / DRAWING NO. 65-ULT-416-IN-204

NO. PROJET / PROJECT NO.	REVISION	FEUILLE / SHT
6515	3	1 / 1

PERMIT TO PRACTICE
LE GROUPE ULTRAGEN LTÉE
Signature
Date NOV 15 2017
PERMIT NUMBER: P 1180
NT/NU Association of Professional Engineers and Geoscientists

REGISTERED PROFESSIONAL ENGINEER
L3677
D. CARRIER
LICENSEE
NT/NU
NOV 15 2017

AE-CART-ARCH D

APPENDIX G

Inspection Report – Inspection Test Plan

MTKSL	INSPECTION TEST PLAN	Page 1 of 3

PROJECT:	AGNICO EAGLE MINES (AEM) - MELIADINE GOLD PROJECT		
Contractor:	MTKSL	Contract/Job No.:	6515-C-235-009
Area/System No.:	Mine Site Fuel Farm	ITP No.:	6515-C-235-009_ITP_007 20170819

Contact Person:	MTKSL – Tyler Wilson			Verification Type				AEM Job Titles	
Work Area:	Mine Site Fuel Farm (MSFF)			H:	Hold Point	T:	Test	CC	Construction Coordinator
Subcontractor:	Texel (Liner), Hamel (Survey), AEM Field Engineering (Materials Testing)			I:	Inspection	V:	Verify Test Results	FE	Field Engineer
CWP No.:	6515-C-235-009 – Industrial Pads	EWP No.:	N/A	R:	Review Documentation	W:	Witness / Report	QA	Quality Assurance Representative

ACTIVITY DATA							VERIFICATION DATA[4]											
								Subcontractor QC			General Contractor QC			AEM				
No.	Description of Activities[1] (Describe in sequential order. Sequence must align with the execution sequence of the work to be performed.)	Functional[2] Responsibility	Characteristic (s)[3]	Verification[5] Frequency	Reference Document(s)	Acceptance Criteria	Verification[5] Document(s) (Reporting)	Type	Initials	Date	Type	Initials	Date	Type	Initials	Date	Title	Comments
1	IFCs Approved (Issued for Construction)	AEM / MTKSL	Verify all IFCs are approved and correct	Prior to Construction and ongoing	Issued IFCs	Stamped IFC Drawings and latest revisions	Drawing Log; AEM Transmittal	H			H	JC	10/20/17	R	JP	10/20/17	RE	No work to proceed without Approved IFC Drawings issued froAEM Document Control ,Void older revisions
2	Materials Production	AEM/MTKSL	Material Acceptance	As required	Technical Specs	Passing material gradation	Sieve Analysis	N/A			H	JC	10/20/17	R/V	JP	10/20/17	RE	Sieve Analysis and moisture content testing. QC Testing by AEM.
3	Materials Assignment	AEM	Material Acceptance	Ongoing	Site Standards	Material suitability	Material Balance & Assignment Sheet	N/A			H	JC	10-20-17	I/V	JP	10/20/17	RE	Materials sources for construction materials to be dictated by AEM.
4	Survey Layout	HAMEL	Layout area of construction	As required	Issued IFC's	Conforms to IFC's.	Survey Layout Report	V			H	JC	10-20-17	R	JP	10/20/17	RE	Survey provided by AEM (Hamel)
5	Site Preparation	MTKSL	Ensure site is acceptable for placement	Once	IFCs, Site Standards, Technical Specs	Conforms to IFCs and Technical specs	Release for backfill / Stripping Report	V			R/I	JC	10-20-17	V/I	JP	10/20/17	RE	OG Surface to be surveyed prior to fill placement.
6	Placement of Material <600mm	MTKSL	Monitoring placement of materials	As required	IFCs, Site Standards, Technical Specs	Conforms to IFCs and Technical specs	Back Fill Report	V			V/R	JC	10-20-17	V/I	JP	10/20/17	RE	Lift to be released by QA. ROM ~~under tank pedestals, Solar disewhere~~, 90% SPD from Portal 2/ Clean source
7	Placement of Material <200mm	MTKSL	Monitoring placement of materials	As required	IFCs, Site Standards, Technical Specs	Conforms to IFCs and Technical specs	Back Fill Report	V			V/R	JC	10-20-17	V/I	JP	10/20/17	RE	Lift to be released by QA. ~~200mm removed from interior slopes & floor. 200mm remains under pedestals~~, 95% SPD – clean
8	Placement of Material <50mm – Service Pad	MTKSL	Monitoring placement of materials	As required	IFCs, Site Standards, Technical Specs	Conforms to IFCs and Technical specs	Back Fill Report	V			V/R	JC	10-20-17	V/I	JP	10/20/17	RE	Lift to be released by QA. 90% SPD.

9	Placement of Material <30mm – Under liner	MTKSL	Monitoring placement of materials	As required	IFCs, Site Standards, Technical Specs	Conforms to IFCs and Technical specs	Back Fill Report	V			V/R	JC	10.17.17	V/I	JP	10/20/17	RE	Lift to be released by QA. — clea
10	Placement of Liner	MTKSL/Texel	Monitoring placement of materials & verification	Ongoing	Manufacturers Specs, Technical Specs	Conforms to Manufacturers Specs, Install SOP, Technical Specs	Liner Installation Report	V	OD	Texel	V/R	JC	10-19-17	V/R/I	JP	10/20/17	RE	Liner ITP/QC Documents to be submitted separately.
11	Placement of Material <30mm – Over Liner	MKTSL	Monitoring placement of materials	As required	IFCs, Site Standards, Technical Specs	Conforms to IFCs and Technical specs	Back Fill Report	V			V/R	JC	10-20-17	V/I	JP	10/20/17	RE	Track pack liner cover. **Note Bearing Specs for Equipment on liner cover
12	Placement of Sand – Under Tank	MTKSL	Monitoring placement of materials	As required	IFCs, Site Standards, Technical Specs	Conforms to IFCs and Technical specs	Back Fill Report	V			V/R	JC	10-20-17	V/I	JP	10/20/17	RE	
13	As built summary	AEM/MTKSL /HAMEL	Verify construction against IFC's	Once	Issued IFC's & Approved Field Changes	Conforms to IFC's & Approved Field Changes	Survey report & cleared ECN log	H			H	JC	10-20-17	R/V	JP	10/20/17	RE	Survey to be completed as each material change or area
14	Walkdowns & Deficiency Correction	AEM/MTKSL	Verification	As Required	Asbuilt summary, IFCS, Field Changes	Conforms to IFC's & Approved Field Changes	Cleared Punch Log	N/A			H	JC	10-20-17	R/V	JP	10/20/17	RE	
15	Final acceptance and turnover	AEM/MTKSL	Acceptance of final turnover	Once	Issued IFC's, Technical Specs	Conforms to IFCs, Technical Specs, Field Changes	Final Acceptance	H			H	JC	10-20-17	W	JP	10/20/17	RE	

Comments: All Survey to be performed by Hamel. Material Testing to be performed by AEM.
Applicable Site Standard XXXXX-XXXXX
Applicable Technical Specification - 6515-GNS-014_R3.

ITP ISSUE APPROVALS

Contractor Construction Manager / Superintendent *(Print)*	Title	Signature	Date *(mm/dd/yy)*
Olivier Sonier	SUPERVISOR		11/15/17
Contractor Site Quality Manager / Supervisor *(Print)*	**Owner** Title	Signature	Date *(mm/dd/yy)*
Jennifer Pyliuk	Resident Engineer		10/2017
AEM Quality Manager / Supervisor *(Print)*	Title	Signature	Date *(mm/dd/yy)*

ITP CLOSEOUT AND WORK ACCEPTANCE APPROVALS

Contractor Site Quality Manager / Supervisor (Print)	Title	Signature	Date (mm/dd/yy)
Olivier Sonier	Supervisor		11/15/17
AEM Quality Manager / Supervisor / Designate (Print)	**Title**	**Signature**	**Date (mm/dd/yy)**
Jennifer Pyliuk	Resident Engineer		10/2017

APPENDIX H

Inspection Report – Handover Package for Tank #3

Handover Package Tank 3 – 3,000CUM

AEM PURCHASE ORDER: OC-568510
AEM PACKAGE NO.: 6515-C-260-002
PACKAGE TITLE: FUEL TANKS (SUPPLY & INSTALL)
TANK LOCATION: MELIADINE PORTAL #1

ICL Project No.: 295
ICL Document No.: 295-H3
AEM Document No.: 6515-C-260-002-141-QCR-0003_Sub001
Revision: 1

OWNER:

Agnico Eagle Mines Limited
145 King St. East, Suite 400,
Toronto, Ontario M5C 2Y7

GENERAL CONTRACTOR:

Inukshuk Construction Limited
PO Box 654
Rankin Inlet NU
X0C 0G0

Contact: David Mosher

PH: (867) 645-4030
FX: (902) 429-7762

Submitted by: Inukshuk Construction Limited
Submitted: October 20, 2017

AGNICO EAGLE

Vendor Document Status

1 ☐	Proceed to next submission and status.
2 ☐	Proceed with exceptions as noted to next submission and status.
3 ☐	Do not proceed. Revise as noted and resubmit next submission and status.
4 ☑	Complete, no further submission required.

By: Date:

Review and authorization to fabricate are only for general conformance with the design concept of the Project as expressed in the Contract Documents. Sole responsibility for the accuracy and completeness of this document, including but not limited to dimensions and quantities, remains with the Supplier/Contractor. Agnico Eagle does not warrant the accuracy or completeness of any of the information contained herein, nor does Agnico Eagle authorize or approve any construction means, methods, techniques, sequences or any safety precautions or procedures.

Agnico Eagle No. 6515-C-260-002-141-QCR-0003 R: Sub001

DOCUMENT FOR INFORMATION

Preamble:

This package contains all QA/QC documents and drawings for the field erected fuel storage tank. The Inspection and Test Plan (ITP) serves as a Table of Contents for the Handover Package. The contents have been divided into items 1-20, and a table of contents for each item of the ITP can be found at the beginning of each section (item). The As-Built Drawings can be found at the end of this package.

This package was compiled by the General Contractor: **Inukshuk Construction Ltd.** and reviewed by Mechanical Engineer: **Kyle Brown**.

INSPECTION & TEST PLAN

Client:	AGNICO EAGLE	**Tank Tag:**	TK #3	**Document:**	TK#3 ITP
Project ID:	MELIADINE GOLD MINE	**Work Order:**	295	**Revision:**	0

Item	Component	Activity	ITP Type	Documentation	Acceptance Criteria	Notes	Witness, Hold, Review Points	
							Client Sign/Date	Q.C. Sign/Date
1	Kick-Off Meeting	Kickoff Meeting	N/A	Meeting Minutes	N/A			H
2	Signature Log	Verify	N/A	Signature Log	N/A			H
3	Welder Qualification	Verify	N/A	Individual Welder Qualifications / Welder Log	API-650 / ASME IX			H
4	Inspector Qualification	Verify	N/A	In house Inspector & 3rd Party Qualifications	API-650			H
5	Weld Procedures	Verify	N/A	Approved Weld Procedures	API-650 / ASME IX, CWB W47.1			H
6	Welding Consumable	Electrode Storage	N/A	N/A	Manufacturer's Instructions			R
7	Foundation	Foundation Survey	DC	Foundation Acceptance Report, Compaction Report & Survey from 3rd Party	API-650 Para 7.5.5			H
8	Floor	Materials	FI	MTR Confirmation to Dwg	Drawing & API-650 Sect. 4	MTR of all plate under shell.		
		Fit up	VE, DC	As Built Drawing	Drawing	per API-650 5.1.5.4 - bottom plates under the shell shall have the outer ends of the joints fitted and lap-welded to form a smooth bearing surface.		R
		Welding	VE	Weld Map, Visual Report	API–650 Para 7.2 & 8.5 & WPS			R
		Vacuum Test	VB	Vacuum Box Test Report	API-650 Para 7.3.3(a) & 8.6			W
9	Shell to Floor Seams	Initial Weld Pass	VE	Weld Map, Visual Report	API-650 Para 8.5, 7.2.4.1			R
		Final Weld Pass	VE	Weld Map, Visual Report	API-650 Para 8.5, 7.2.4.1			R
		Diesel Test	NDT	Leak Test Report	API-650 Para 7.2.4.1 d)			W
10	Shell	Materials	FI	MTR Confirmation to Dwg	Drawing & API-650 Sect. 4	MTR of all plate		H
		Fit up 1st Course	VE, DC	As Built Drawing	Drawing			R
		Roundness	DC	Dimension Report	API-650 Para 7.5.3			H
		Welding	VE	Weld Map, Visual Report	API–650 Para 7.2, 7.5, 8.5 & WPS			R
		Tolerance Check – Plumbness & Local Deviations	DC	Dimension Report	API-650 Para 7.5			H
		Diesel Test Shell Welds	NDT	Leak Test Report	API-650 Para 7.3.6 2)a)i)			W
		UT – All Shell	NDT	UT report / Log / Map	API-650 Para Annex U	Shell less than 3/8" shall be intrepreted as 3/8" as a modification of API-650. All T joint UT.		H
11	Compression Ring	Fit up	VE, DC	As Built Drawing	Drawing			R
		Welding	VE	Weld Map, Visual Report	API–650 Para 7.2 & 8.5 & WPS			R
12	Roof	Fit up	VE, DC	As Built Drawing	Drawing			R
		Welding	VE	Visual Report	API–650 Para 7.2 & 8.5 & WPS			R
13	Roof Structure	Fit up	VE, DC	As Built Drawing	Drawing			R
		Column Plumbness	DC	Dimension Report	API–650 Para 7.5.2 b)			H
		Welding	VE	Visual Report	API–650 Para 7.2 & 8.5 & WPS			R

Item	Component	Activity	ITP Type	Documentation	Acceptance Criteria	Notes	Witness, Hold, Review Points	
							Client Sign/Date	Q.C. Sign/Date
14	Nozzles	Layout	VE, DC	As Built Drawing	Drawing			H
		Fit up	VE, DC	As Built Drawing	Drawing			R
		Welding	VE	Weld Map, Visual Report	API–650 Para 7.2 & 8.5 & WPS			R
		Tolerance Check – Plumbness & Local Deviations	DC	Dimension Report	API-650 Para 7.5			H
		Shell Nozzle Repad Air test	AT	Leak Test Report	API-650 Para 7.3.5			W
		MPI	NDT	MPI Report	API-650 Para 7.2.3.6	All welds of Shell Nozzles		W
15	Manway	Layout	VE, DC	As Built Drawing	Drawing			H
		Fit up	VE, DC	As Built Drawing	Drawing			R
		Welding	VE	Weld Map, Visual Report	API–650 Para 7.2 & 8.5 & WPS			R
		Tolerance Check – Plumbness & Local Deviations	DC	Dimension Report	API-650 Para 7.5			H
		Shell Manway Repad Air test	AT	Leak Test Report	API-650 Para 7.3.5			W
		MPT	NDT	MPI Report	API-650 Para 7.2.3.6	All welds of Shell Manways		R
16	Internals	Layout / Fit up	VE, DC	As Built Drawing	Drawing			R
		Welding	VE	Visual Report	API–650 Para 7.2 & 8.5 & WPS			R
		Stillwell Plumbness	DC	Dimension Report	API–650 Para H.4.5			R
		MPI or LP	NDT	NDT Report	Sump Welds (if applicable) 7.3.4	MPI all welds		H
17	Externals	Layout / Fit up	VE, DC	As Built Drawing	Drawing			R
	Externals	Welding	VE	Visual Report	API–650 Para 7.2 & 8.5 & WPS			R
18	Stairs & Platforms	Fit up	VE, DC	As Built Drawing	Drawing			R
		Welding	VE	Visual Report	API–650 Para 7.2 & 8.5 & WPS			R
19	Bolts & Nuts	Inspection	VE, DC	As Built Drawing	Drawing	Bolt Torque		W
20	Final	Name Plate Verification	N/A	Scan of Name Plate	Drawings			H
		Final Inspection	FI	As Built Drawings, Data Sheet, Manufacturer's Certification (3rd Party), Punch List	Drawings			H

DEFINITIONS:

W - WITNESS: Specified activity to be observed by an outlined party. QC to provide the applicable party 24 hours notice of witness point.

H - HOLD: Specified component or installation to be inspected by an outlined party. No further activities specific to the component or installation may proceed until inspection is carried out. QC to provide the applicable party 24 hours notice of hold point.

R - REVIEW: Specified documentation and specifications applicable to a particular component and/or installation to be examined by an outlined party.

AT - AIR TEST: Specified component and/or installation to be air tested according to specified documentation and specifications.

DC - DIMENSION CHECK: Physical dimensions of component and/or installation to be verified according to specified documentation and specifications.

FI - FINAL INSPECTION: Specified inspection procedures to be executed prior to release of the component and/or installation and verified according to specified documentation and specifications.

NDT - NON DESTRUCTIVE TESTING: Specified component and/or installation to be inspected using a named non destructive testing method according to specified documentation and specifications.

VE - VISUAL Examination: Specified component and/or installation to be examined visually according to specified documentation and specification.

VB - VACUUM-BOX TEST: Specified component and/or installation to be vacuum box tested according to specified documentation and specifications.

Item 2 – Signature Log

Contents

1. ICL Signature Log

AEM Meliadine Fuel Storage Tanks

Inukshuk Construction Ltd. – Project 295

Signature Log

Name	Company	Title	Signature
Marc Losier	ICL	Project Manager	
Jacob Saunders	ICL	Technical Coordinator	
Sheldon Burry	ICL	Supervisor	
Shawn Saunders	ICL	Supervisor	
Bruno Roy	AEM	QA/QC	
Stephane Dubois	AEM	QA/QC Mech. Engineer	
Sylvain Chartier	AEM	QA/QC	
Claude Filteau	AEM	Mechanical General Foreman	

Item 3 – Welder Qualification

Contents

1. Welder Qualification Log
2. Individual Welder Qualifications

Item 3 – Welder Qualification

Welder Qualification Log

Name	Initials	Qualification	Date of Issue	Expiry Date
Joel Overguard	JO	SAW, SMAW, SPOT	June/July 2017	
Justin Dredge	JD	SMAW B-Class Welder-Operator	06/06/2017	06/06/2018
Ryan Kettle	RK	SMAW B-Class Welder-Operator	30/05/2017	30/05/2018
Daniel White	DW	SMAW B-Class Welder-Operator	06/06/2017	06/06/2018
Michael K. Paul	MP	SMAW B-Class Welder-Operator	11/07/2017	11/07/2018
Zachary G. King	ZK	SMAW Pressure Welder License		24/07/2019
Abel Kalai	AK	SMAW Pressure Welder License		11/08/2019
John Cusick	JC	SMAW B-Class Welder-Operator	30/05/2017	30/05/2018
Dean W. Goodyear	DG	SMAW CSA W47.1 License		06/08/2017

Sub-Arc Systems Inc.	**WELDERS' QUALIFICATION RECORD** **API 650**	**Exhibit 8, Rev A**

WELDER NAME	WELDER SYMBOL	DATE QUALIF.	QUALIFICATION PROCEDURE	LIMITATIONS					REMARKS
				PROCESS	ELECTRODE	POSITION	THICKNESS RANGE	DIAMETER RANGE	
JOEL OVEREARD	J.OV	06,21,17	SAS 1	SMAW	F3, F4	2G	1 1/4"		X-RAY G2340
	J.OV	06,21,17	SAS 1	SMAW	F3, F4	3G	1 1/4"		X-RAY G2340
	J.OV	06,21,17	SAS 1	SMAW	F3, F4	4G	1 1/4"		X-RAY G2340
	J.OV	07,26,17	SAS 2	SAW	F7A6	2G	1 1/4"		X-RAY G2574

QC (PRINT) **SIGN:**	**DATE** (yyyy-MM-dd):
QA (PRINT) ROBERT HOFFMAN **SIGN:**	**DATE** (yyyy-MM-dd): 2017, 07, 26.

4605-47 Street
Vermillion, AB, T9X 1L6
780-608-9589

QUALITY CONTROL MANUAL

Sub-Arc Systems Inc.	**WELDERS' QUALIFICATION RECORD** **API 650**	**Exhibit 8, Rev A**

WELDER NAME	WELDER SYMBOL	DATE QUALIF.	QUALIFICATION PROCEDURE	LIMITATIONS					REMARKS
				PROCESS	ELECTRODE	POSITION	THICKNESS RANGE	DIAMETER RANGE	
JOEL OVERGAARD	J.OV	07,26,17		SAW	F7A6	2G	1 1/4"		X RAY # G2574

QC (PRINT) **SIGN:**	**DATE** (yyyy-MM-dd):
QA (PRINT) ROBERT HOFFMAN **SIGN:**	**DATE** (yyyy-MM-dd): 2017, 07, 28

ALL CAN INSPECTION SERVICES (2011) INC.

Report # G2574

9323-37 Avenue, NW, Edmonton, Alberta T6E 5N4
SHOP: 780-462-1072 OFFICE: 780-462-9797 FAX: 780-462-4664
EMAIL: shop@allcaninspection.com www.allcaninspection.com

Client:	**Sub Arc Systems**	Client Job #	**Welder Coupons**
Address:	17 Exploration Way, Devon	P.O. #	**Toby**
Contact: Name:	Toby	Date:	**July 26/17**
Phone:			
Work Location:	All Can Inspection Shop	Work Description:	J.OV

CODES
1. ASME B31.3 N/S
2. ASME B31.3 S/C
3. ASME Sec. VIII Div 1 UW51
4. ASME Sec. VIII Div. 1 UW52
5. CSA Z662
6. CSA Z662 (Sour)
7. API 650
8. ASME IX (QW-191.2)

LF - Lack of Fusion; IP - Incomplete Penetration; IC - Internal Concavity; BT - Burn Through; TI - Tungsten Inclusion; IU: Internal Undercut; EU: External Undercut; EP - Excessive Penetration; P - Porosity; S - Slag; HL - High-Low; C - Crack; AB - Arc Burn; HB - Hollow Bead

Severity: 1 = Slight, 2 = Medium, 3 = Severe (Reject)

NDE No:	Size & thickness Plus Code Max. reinforcement	Material	Code	IQI	Technique Number	Source Side of Object to Film Distance	Source to Object Distance	Number of Exposures	Welder ID	Discontinuity	Severity	Accept	Reject
			1 - 8	See Back	See Back	Inches	Inches				1 - 3	√	X
2G SAW SAS 1	5/8" SPOT	P1	8	2	RT-2	0.750	25.000	1	J.OV			√	

RT Technician: Gordon Thomas CGSB Level: 2 Reg. #: 6 SNT-TC-1A Level: III SNT-TC-1A No: 6

RT Assistant # 1: Adele Kezama CEDO #: 18988 SNT-TC-1A Level: II SNT-TC-1A No: 18988

RT Assistant # 2: CEDO #: SNT-TC-1A Level: SNT-TC-1A No:

IMPORTANT: See reverse side of this form for All Can Inspection Services (2011) Inc. LIMITED LIABILITY POLICY

Technician Signature — Date: July 26/17

Client Representative Signature — Evaluation Date

The above interpretation is a technical opinion, not a guarantee.
Client signature indicates acceptance of the report and results.

Clock tape marker and start arrow marked on weldment.
It is the customer's responsibility to map welds on drawings.

Film Make / Brand	AGFA	Film Class / Type:	1-D5
Screens Lead	Front 0.010"	Back 0.010"	One (no.) film per screen
Film Density in H & D:	Min. 2.0	Max. 4.0	
Penetrometer (IQI hole type) designation:	N/A	Recommended Max. U.G.:	0.20"
Source Isotope:	IRIDIUM-192 (Gamma)	Wall Viewing:	Single
Effective Focal Spot Size:	0.146 inches	Processing:	Automatic

RADIOGRAPHIC EXAMINATION REPORT

ALL CAN INSPECTION SERVICES (2011) INC.

Report # G2340

9323-37 Avenue, NW, Edmonton, Alberta T6E 5N4
SHOP: 780-462-1072 OFFICE: 780-462-9797 FAX: 780-462-4664
EMAIL: shop@allcaninspection.com www.allcaninspection.com

Client:	**Sub Arc Systems**	Client Job #	**Welder Coupons**
Address:	17 Exploration Way, Devon	P.O. #	**Toby**
Contact: Name:	Toby	Date:	**June 21/17**
Phone:			
Work Location:	All Can Inspection Shop	Work Description:	J.OV

CODES
1. ASME B31.3 N/S
2. ASME B31.3 S/C
3. ASME Sec. VIII Div 1 UW51
4. ASME Sec. VIII Div. 1 UW52
5. CSA Z662
6. CSA Z662 (Sour)
7. API 650
8. Other:

NDE No:	Size & thickness Plus Code Max. reinforcement	Material	Code	IQI	Technique Number	Source Side of Object to Film Distance	Source to Object Distance	Number of Exposures	Welder ID	Discontinuity	Severity	Accept	Reject
			1 - 8	See Back	See Back	inches	inches				1 - 3	√	X
2G SMAW	5/8" SPOT	P1	7	2	RT-2	0.750	25.000	1	J.OV	S & P @ 0", P @ 1 1/2" & 6"	2	√	
3G SMAW	5/8" SPOT	P1	7	2	RT-2	0.750	25.000	1	J.OV			√	
4G SMAW	5/8" SPOT	P1	7	2	RT-2	0.750	25.000	1	J.OV			√	

LF - Lack of Fusion
IP - Incomplete Penetration
IC - Internal Concavity
BT - Burn Through
TI - Tungsten Inclusion
IU: Internal Undercut
EU: External Undercut
EP - Excessive Penetration
P - Porosity
S - Slag
HL - High-Low
C - Crack
AB - Arc Burn
HB - Hollow Bead

Severity: 1 = Slight, 2 = Medium, 3 = Severe (Reject)

RT Technician:	Gordon Thomas	CGSB Level:	2	Reg. # :	6	SNT-TC-1A Level:	III	SNT-TC-1A No:	6
RT Assistant # 1	Victoria Sarnecki	CEDO #:	21927			SNT-TC-1A Level:	I	SNT-TC-1A No:	21927
RT Assistant # 2		CEDO #:				SNT-TC-1A Level:		SNT-TC-1A No:	

IMPORTANT: See reverse side of this form for All Can Inspection Services (2011) Inc. LIMITED LIABILITY POLICY

Technician Signature — June 21/17 Date

Client Representative Signature — Evaluation Date

The above interpretation is a technical opinion, not a guarantee.
Client signature indicates acceptance of the report and results.

Clock tape marker and start arrow marked on weldment.
It is the customer's responsibility to map welds on drawings.

Film Make / Brand	AGFA	Film Class / Type:	1-D5
Screens Lead	Front 0.010"	Back 0.010"	One (no.) film per screen
Film Density in H & D:	Min. 2.0	Max. 4.0	
Penetrometer (IQI hole type) designation:	N/A	Recommended Max. U.G.:	0.20"
Source Isotope:	IRIDIUM-192 (Gamma)	Wall Viewing:	Single
Effective Focal Spot Size:	0.146 inches	Processing:	Automatic

RADIOGRAPHIC EXAMINATION REPORT

File No. 591

WELDING PERFORMANCE QUALIFICATION

Justin Dredge **Is qualified**

As a B CLASS **Welder - Operator**

Subject to the limitations and for a period mentioned at the back of this card.

Chief Boiler and Gas Inspector (Muhammad Wani)

06/06/2017
Date of Issue

PERFORMANCE QUALIFICATION

(In accordance with section IX, A.S.M.E code)

Renewal of performance qualification is required when the welding operator named hereon has not used the specified process and materials, etc., for a period of six months or more.

06/06/2018

Expiry date dd/mm/yyyy

Process **SMAW**

Material group **P1 - 11**

Max Thickness **0.688"**

Filler Metal **F3, F4**

Positions **all**

File No. 589

WELDING PERFORMANCE QUALIFICATION

Ryan Kettle **Is qualified**

As a B CLASS **Welder - Operator**

Subject to the limitations and for a period mentioned at the back of this card.

Chief Boiler and Gas Inspector (Muhammad Wani)

30/05/2017
Date of Issue

PERFORMANCE QUALIFICATION

(In accordance with section IX, A.S.M.E code)

Renewal of performance qualification is required when the welding operator named hereon has not used the specified process and materials, etc., for a period of six months or more.

30/05/2018

Expiry date dd/mm/yyyy

Process **SMAW**

Material group **P1 - 11**

Max Thickness **0.688"**

Filler Metal **F3, F4**

Positions **all**

File No. 590

WELDING PERFORMANCE QUALIFICATION

Daniel White **Is qualified**

As a B CLASS **Welder - Operator**

Subject to the limitations and for a period mentioned at the back of this card.

Chief Boiler and Gas Inspector (Muhammad Wani)

06/06/2017
Date of Issue

PERFORMANCE QUALIFICATION

(In accordance with section IX, A.S.M.E code)

Renewal of performance qualification is required when the welding operator named hereon has not used the specified process and materials, etc., for a period of six months or more.

06/06/2018

Expiry date dd/mm/yyyy

Process **SMAW**

Material group **P1 - 11**

Max Thickness **0.75"**

Filler Metal **F4**

Positions **all**

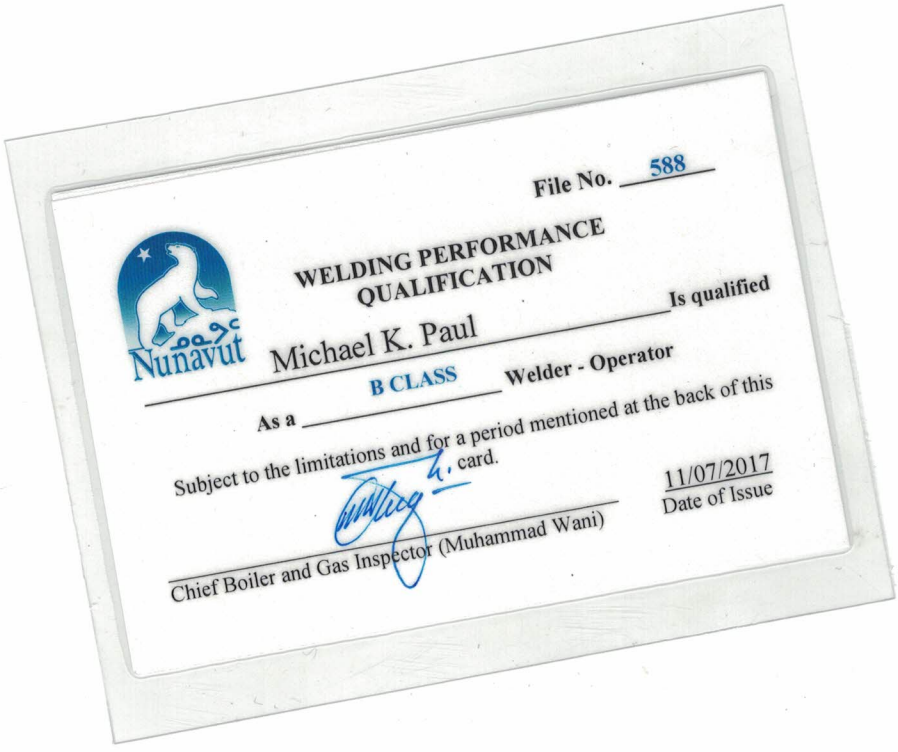

File No. 588

WELDING PERFORMANCE QUALIFICATION

Nunavut

Michael K. Paul **Is qualified**

As a **B CLASS** **Welder - Operator**

Subject to the limitations and for a period mentioned at the back of this card.

Chief Boiler and Gas Inspector (Muhammad Wani)

11/07/2017
Date of Issue

NOVA SCOTIA
Labour and Advanced Education

Boiler and Pressure Equipment Regulations
Tested in accordance with ASME Section IX
Pressure Welder Licence

NSID : W0186 **Expires :** 24 July 2019
Name : Zachary G. King
Certified by : Mosher Engineering Limited

Purge	Backing	Process	F-No.	Qual. thk.
NR	NR	SMAW	1 - 3	0.25"
NR	R	SMAW	1 - 4	0.438"

Inspector :

WPS : MEL-WP-002

Base metal (s) **Max. thk.** **Min. thk.** **Min. dia.**
P/S-No. 0.688" up 1"
P1 - 11 1: All
Position (s) 2:
Electrode (s) 1: EXX per F 1-3
2: EXX per F4
3:

Other
GMAW mode : n/a
Con. inert : n/a
Fused only : n/a

Machine controls
Visual : n/a
Auto volt : n/a
Auto joint : n/a

NSBPE
NS 9

NOVA SCOTIA
Labour and Advanced Education

Boiler and Pressure Equipment Regulations
Tested in accordance with ASME Section IX
Pressure Welder Licence

NSID : V0083 **Expires :** 11 Aug 2019
Name : Abel Kalai
Certified by : Mosher Engineering Limited

Purge	Backing	Process	F-No.	Qual. thk.
NR	NR	SMAW	1 - 3	0.25"
NR	R	SMAW	1 - 4	0.5"

WPS : A072.8-MEL-WP-00 **Inspector :**

Base metal (s)	Max. thk.	Min. thk.	Min. dia.
P/S-No.	0.75"	up	> 24"
P1 - 11			

Position (s)
1: All
2: FH 2 7/8" to 24" dia.

Electrode (s)
1: F1-3 per QW-432/433
2: F1-4 per QW-432/433
3:

Other
GMAW mode : n/a
Con. inert : n/a
Fused only : n/a

Machine controls
Visual : n/a
Auto volt : n/a
Auto joint : n/a

File No. 573

WELDING PERFORMANCE QUALIFICATION

John Cusick **Is qualified**

As a B CLASS **Welder - Operator**

Subject to the limitations and for a period mentioned at the back of this card.

Chief Boiler and Gas Inspector (Muhammad Wani)

30/05/2017
Date of Issue

PERFORMANCE QUALIFICATION

(In accordance with section IX, A.S.M.E code)

Renewal of performance qualification is required when the welding operator named hereon has not used the specified process and materials, etc., for a period of six months or more.

30/05/2018

Expiry date dd/mm/yyyy

Process **SMAW**

Material group **P1 - 11**

Max Thickness **0.688"**

Filler Metal **F3, F4**

Positions **all**

This card is valid only while employed by a CWB certified company

Transferable Welder

Name: DEAN W. GOODYEAR
Exp. Date: Aug 06, 2017

Employer: Iron Workers - Local 764, Mount Pearl, NL

Thickness Range: 3mm & above

Material: Carbon Steel
Process: SMAW
Standard: CSA W47.1
Classification: T
Electrode: F4

Mode: MANUAL

Class: FLAT/HORIZONTAL/VERTICAL UP/OVERHEAD

Item 4 – Inspector Qualification

Contents

1. CWB Inspector Qualifications for NDE Testing

Item 4 - Inspector Qualifications - Pierre Dostie (NDE)



Inspecteur en Soudage Certifié

PIERRE DOSTIE **No. Enr# 3414**

est un Inspecteur en soudage certifié de **Niveau3** et satisfait aux exigences de la norme CSA W178.2 « Qualification des inspecteurs en soudage ».

Valide jusqu'au **février 16, 2018**

Cette certification est valide pour le(s) code(s) et/ou la norme(s) suivant(es) :

CSA W47.1/W59	**Valide jusqu'en août 2020**
ASME MII-1 IX	**Valide jusqu'en novembre 2021**
ASME B31.3	**Valide jusqu'en août 2020**
CSA W47.2/W59.2	**Valide jusqu'en novembre 2021**

Conditions

1. La possession de cette carte ne signifie nullement que son détenteur représente un organisme d'inspection certifiée en vertu de la norme CSA W178.1 et ayant du personnel et des procédures approuvées par le Bureau canadien de soudage.
2. Cette carte demeure la propriété du Bureau et peut être rappelée en tout temps.
3. L'usage de la présente carte à des fins frauduleuses peut entraîner son annulation.

Pour toute question concernant cette qualification, veuillez communiquer avec :

1-800-844-6790 | www.cwbgroup.org

Item 4 - Inspector Qualifications - Sylvain Germain (NDE)



Inspecteur en Soudage Certifié

SYLVAIN GERMAIN No. Enr# 4935

est un Inspecteur en soudage certifié de Niveau3 et satisfait aux exigences de la norme CSA W178.2 « Qualification des inspecteurs en soudage ».

Valide jusqu'au avril 30, 2020

Cette certification est valide pour le(s) code(s) et/ou la norme(s) suivant(es) :

CSA W47.1-09/W59-13

Expiration de recertification après 6 ans avril 30, 2020



Conditions

1. La possession de cette carte ne signifie nullement que son détenteur représente un organisme d'inspection certifié en vertu de la norme CSA W178.1 et ayant du personnel et des procédures approuvées par le Bureau canadien de soudage.
2. Cette carte demeure la propriété du Bureau et peut être rappelée en tout temps.
3. L'usage de la présente carte à des fins frauduleuses peut entraîner son annulation.

Pour toute question concernant cette qualification, veuillez communiquer avec :

1-800-844-6790 | www.cwbgroup.org

Item 5 – Weld Procedures

Contents

1. Approved Weld Procedures

SUBMERGED ARC-WELDING MANUAL

TABLE OF CONTENT

SECTION PAGE

1 SCOPE 2
2 WELDING PROCEDURE 3
3 BASE MATERIAL 4
4 BASE METAL THICKNESS 5
5 FILLER METAL 6
STORAGE AND CONDITIONING OF ELECTRODES AND FLUXES 6
6 POSITION 7
7 PREHEAT 8
8 HEAT TREATMENT AND STRESS RELIEVING 9
9 ELECTRICAL CHARACTERISTICS WELDING TECHNIQUE 10
EFFECT OF PARAMETERS 11
Amperage *11*
Voltage *11*
Welding (Travel) Speed *12*
10 PREPARATION OF BASE MATERIAL 13
12 TREATMENT OF UNDERSIDE OF WELDING GROOVE 14
13 QUALITY 15
14 WELD METAL CLEANING 16
15 DATA SHEETS 17
16 TROUBLE SHOOTING 18
17 APPROVALS 20

Mosher ENGINEERING

1007 Cobequid Road, Windsor Junction, Nova Scotia B2T 1K1

WELDING PROCEDURE SPECIFICATION NUMBER SAW-1
Submerged Arc Welding

1 SCOPE

This Welding Procedure Specification covers welding and related operations of steel structures that are fabricated in accordance with the terms outlined in CSA Standard W47.1 and W59, latest revisions. The attached Data Sheets for an essential part of this specification.

A change in any of the essential variables contained in the succeeding paragraphs or detailed on applicable Welding Procedure Data Sheets shall require a new Welding Procedure Specification and/or new Welding Procedure Data Sheets.

2 WELDING PROCEDURE

The welding shall be done automatically or semi-automatically using the SAW (Submerged Arc Welding) process.

Joints shall be made following the procedural stipulations indicated in CSA Standard W59 and may consist of single or multiple passes, in accordance with the approved welding procedure data sheets to which this specification refers.

3 BASE MATERIAL

The base metal shall conform to the specifications for the steel groups 1, 2, and 3 per Table 11.1 or Table 12.1 of CSA W59. Other groups may be welded providing the Canadian Welding Bureau accepts the Welding Procedure Data Sheets (WPDS).

4 BASE METAL THICKNESS

Base metal thickness from over 3.2 mm (⅛") to an unlimited thickness (inclusive) may be welded under this specification providing the respective welding procedure data sheets have been supplied and approved for an appropriate weld size.

5 FILLER METAL

The filler metal shall conform to specification for CSA Standard W48 and shall be compatible with the base metal, as specified in Table 11.1 and 12.1 of CSA Standard W59. The classification of electrode to be used is shown on the appropriate Welding Procedure Data Sheet.

5.1 Storage and Conditioning of Electrodes and Fluxes

Electrodes (wire) shall be stored in a clean, dry environment in original containers until ready for use. All wire contaminated by surface rust or foreign material shall be discarded.

Flux used for SAW shall be dry and free from contamination of dirt, mill scale or other foreign material. All flux shall be purchased in packages capable of being stored under normal conditions for at least six (6) months without such storage affecting its welding characteristics or weld metal properties. Flux from damaged packages that have been exposed to free moisture shall be discarded or shall be dried before use in shallow layers (2 in. / 50 mm maximum) at a minimum temperature of 500°F (260°C) for at least one (1) hour or at time and temperature conditions as recommended by the flux manufacturer. Any flux that has been fused during welding shall not be reused

6 POSITION

The welding shall be done in the flat position or horizontal positions provided approved Welding Procedure Data Sheets referring to those positions and this procedure specification are followed.

7 PREHEAT

The minimum preheat before welding will comply with Table 5-3 shown in the CSA Standard W59. Welding will be done at sufficient speed to ensure that the minimum preheat is maintained or exceeded.

If welding is interrupted for some time so that the temperature of the base metal falls below the minimum preheat temperature, then arrangements will be made to preheat again prior to recommencing welding.

The weldment shall be allowed to cool to the ambient temperature, without an external quench media being supplied. In other words, cooling water or placement in frigid conditions that cause a quick temperature change shall not be used.

8 HEAT TREATMENT AND STRESS RELIEVING

This will not be applicable to structures welded under this specification unless a specification showing all the parameters is submitted to the Canadian Welding Bureau and approval is obtained.

9 ELECTRICAL CHARACTERISTICS WELDING TECHNIQUE

The Welding Procedure Data Sheets show details of the electrical characteristics to be used. The current used shall be direct current (DC) or alternating current (AC) as indicated on the welding procedure data sheets. However, unless otherwise noted on the data sheets or recommended by the consumable supplier, current and voltage ranges and electrode stick outs shall be as shown below:

Wire Diameter, in.	Current Range DC(+), amp	Arc Voltage Range	Stick out (standard), in
1/16	150 – 400	19 – 37	5/8" - 1 ¼"
5/64	200 – 600	20 – 37	5/8" - 1 ¼"
3/32	350 – 700	22 – 37	5/8" - 1 ¼"
1/8	300 – 900	23 – 37	5/8" - 1 ¼"
5/32	400 – 1000	25 – 37	5/8" - 1 ¼"
3/16	500 - 1100	27 – 37	5/8" - 1 ¼"
7/32	600 – 1200	30 – 37	5/8" - 1 ¼"
1/4	700 - 1600	30 – 38	5/8" - 1 ¼"

CURRENT (AMPS) VS. WIRE FEED SPEED
DC(+) Polarity, Single Arc, **Normal Stickout**

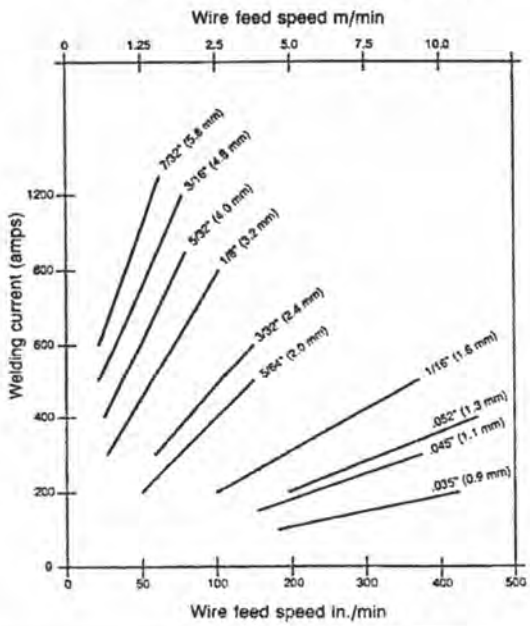

9.1 Effect of Parameters

9.1.1 Amperage

Increasing the amperage results in an increased deposition rate and penetration

Amperage too high
- Unstable arc
- Undercutting
- High narrow bead
- Burn through

Amperage to Low
- Unstable Arc
- Poor Penetration

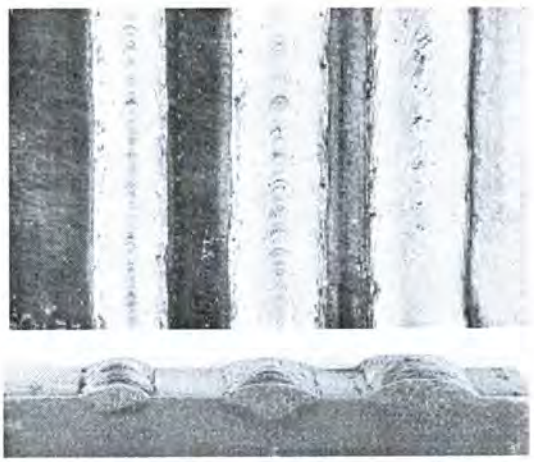

Weak Medium Strong

9.1.2 Voltage

An increased in voltage will increase the arc length, create a flatter and wider bead, increases flux consumption, improves slag removal; reduce penetration; increases resistance to porosity caused by rust or scale; increase alloy pick-up from the flux and will reduces flattening (root gap).

Voltage too high
- Produces a "hat-shaped" bead (cracking)
- Poor slag removal
- Concave fillet weld - crack-sensitive
- Increases transfer of alloying elements
- Undercuts at weld connection

Voltage too low
- Produces a high, narrow bead

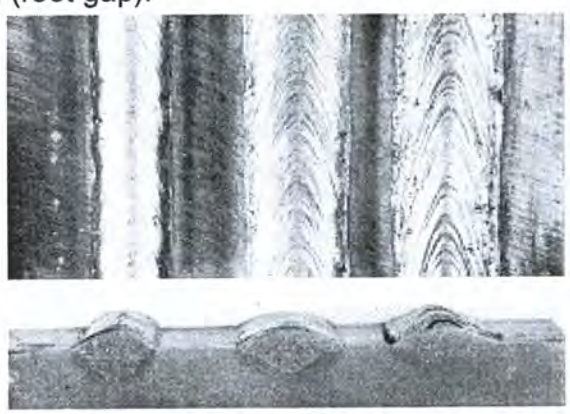

Low Medium High

Poor slag removal

9.1.3 Welding (Travel) Speed

Welding speed greatly affects penetration and bead shape. An increase in speed will reduce penetration, increases tendency to undercut, increase possibility of arc blow, increases porosity, can cause an irregular bead and may result in bad degassing.

If your welding speed too low it may result in bead profile subject to cracking, arc visibility, large difficult to control molten pool, rough looking bead, slag inclusions, make it difficult to remove slag and causes a risk of burn through

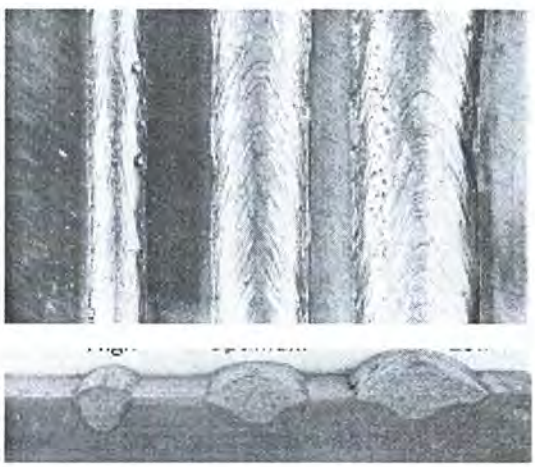

Low Medium High

10 PREPARATION OF BASE MATERIAL

The edges or surfaces of parts to be joined by welding shall be prepared by suitable means (e.g. Oxy-acetylene, plasma, etc.). Where hand cutting is involved the edge will be ground to a smooth surface. All surfaces and edges shall be free from fins, tears, cracks or any other defects that could adversely affect the quality of the weld.

All loose or thick scale, rust, moisture or other foreign material that would prevent proper welding or produce objectionable fumes shall be removed.

Typical joint preparations can be found in the appendix of this WPS.

11 TREATMENT OF UNDERSIDE OF WELDING GROOVE{tc \l2 "12.0 TREATMENT OF UNDERSIDE OF WELDING GROOVE}

Prior to depositing weld metal on the underside of a welding groove, the root shall be back gouged to sound metal, unless otherwise specified on the applicable data sheet.

Machining, air carbon arc or oxygen gouging, chipping or grinding may be used for back gouging.

12 QUALITY

Cracks or blowholes that appear on the surface of any pass shall be removed before depositing the next covering pass. The procedure and technique shall be such that undercutting of base metal or adjacent passes is minimized. Fillet and butt welds shall be meet the desirable or acceptable fillet weld profiles shown in Figure 5.4 of CSA Standard W59. The reinforcement in groove welds shall not exceed 3 mm (1/8") and shall have a gradual transition to the plane of the base metal surface. In general, the weld quality will be such as to meet the requirements of Clause 11.5.4 or 12.5.4 (as applicable) of CSA W59.

13 WELD METAL CLEANING

Glass remaining after a pass shall be removed before applying the next covering pass. Prior to painting, all glass shall be removed and the parts shall be free of loose scale, oil and dirt.

14 DATA SHEETS

Welding Procedure Data Sheets are specifications setting broad guidelines for the shop and field welding practice of the fabricator for each anticipated combination of essential variables. From the practical point of view, it is essential to include all variables that would make the weld easier or more difficult to make. The practical men will find that this will cover suitable tolerances for the geometry of joint and the other parameters involved.

The attached data sheets form part of this specification.

15 TROUBLE SHOOTING

The solutions below should only be used where they do not conflict with the Welding Procedure Data Sheets. Contact welding engineer for problems that cannot be corrected without conflict

Problem	Causes
Porosity	- Moist flux - Rust, carbon deposit or paint on plate surface - Oxidized electrode wire - Base metal chemistry - Contaminants - Excessive or insufficient flux thickness
Lack of Penetration	- Excessive root face - Insufficient amperage or wire speed - Travel speed too high - Voltage too high - Bad positioning of electrode wire - Excessive final length
Lack of Fusion	- Amperage too low - Travel speed too high - Bad positioning of electrode wire - Presence of carbon deposits or other foreign matters
Undercutting	- Travel speed too high - Excessive amperage - Excessive voltage - Bad positioning of electrode wire (angle, distance)
Hot Cracking	- Bad width/depth radio - Base metal chemistry (presence of sulphur, carbon or phosphor) - Presence of contaminants - Concave fillet weld - Stress

Cold Cracking	- Presence of hydrogen - Inappropriate pre-heat - Base metal chemistry - Tack welds too small
Unstable arc	- Check wire feed system

16 APPROVALS

CWB APPROVAL

CWB Accepted

CWB

Jul 28, 2008

Valid only if welding consumables are certified by the CWB

COMPANY'S APPROVAL



Welds / Joints	1 – Square Groove	2 – Single V-Groove	3 – Double V-Groove
Butt (B)	**S1-1** 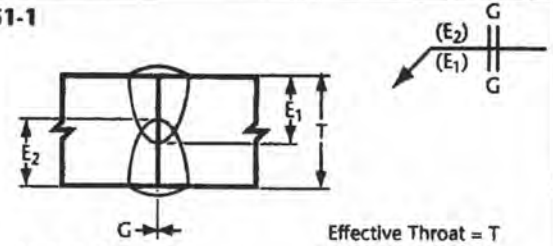 $E_1, E_2 > T/2$ $E_1 + E_2 > T$ Effective Throat = T T ≤ 12 mm (1/2 in) G = 0 **Note:** *Welds shall be centred on the joint.* **B-L1-S**	**S2-1** 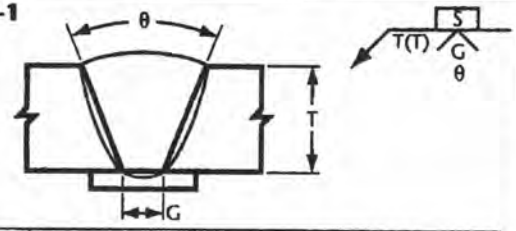 **B-U2a-S**	**S3-1** 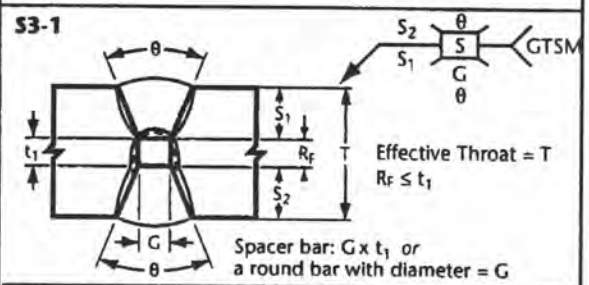 Effective Throat = T $R_F \le t_1$ Spacer bar: G x t_1 *or* a round bar with diameter = G **B-U3a-S**
Butt (B)	**S1-2** 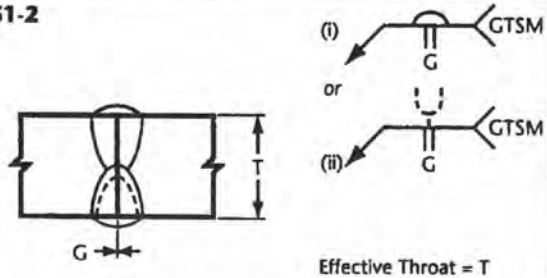 Effective Throat = T G = 0 **B-U1-S**	**S2-2** 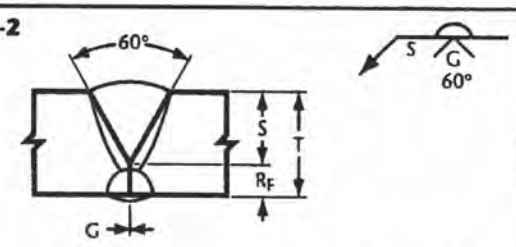 Effective Throat = T R_F = 6 mm (1/4 in) G = 0 **B-U2b-S**	**S3-2** 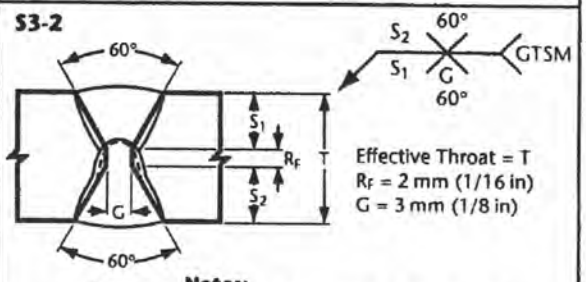 Effective Throat = T R_F = 2 mm (1/16 in) G = 3 mm (1/8 in) **Notes:** **(1)** *Deposit a SMAW or FCAW root weld 10 mm (3/8 in) thick minimum.* **(2)** *GTSM prior to welding from other side.* **B-U3b-S**
Butt (B) or Corner (C)	**S1-3** 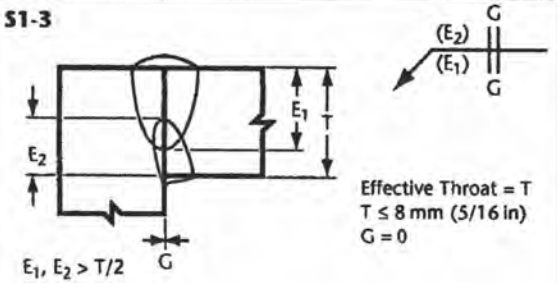 $E_1, E_2 > T/2$ $E_1 + E_2 > T$ Effective Throat = T T ≤ 8 mm (5/16 in) G = 0 **Note:** *Outside weld shall be centred on the joint.* **C-L1-S**	**S2-3** 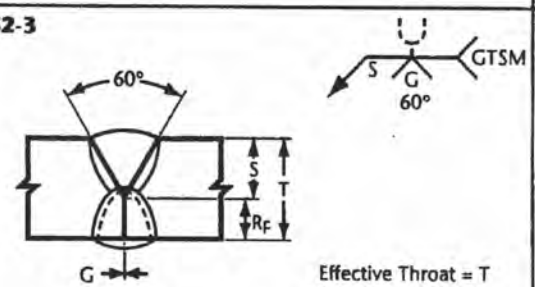 Effective Throat = T R_F > 6 mm (1/4 in) G = 0 **B-U2c-S**	**S3-3** 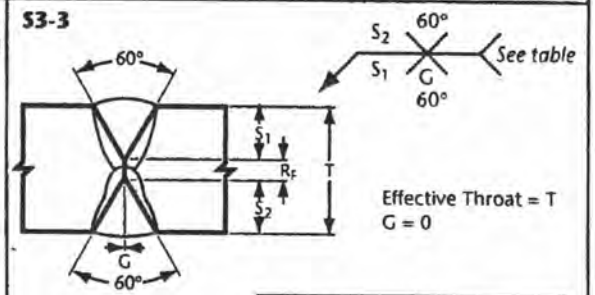 Effective Throat = T G = 0 **B-U3c-S**

R_F	GTSM
≤ 6 mm (1/4 in)	Not mandatory
> 6 mm (1/4 in)	Mandatory

θ	G	Notes
20°	≥ 16 mm (5/8 in)	*Split pass mandatory in root layer*
30°	≥ 6 mm (1/4 in)	—
45°	≥ 3 mm (1/8 in)	—

θ	G	t_1	GTSM	Notes
20°	≥16 mm (5/8 in)	≥6 mm (1/4 in)	Mandatory	*Split pass mandatory in root layer*
30°	≥6 mm (1/4 in)	≥6 mm (1/4 in)	Mandatory	—

*See **NOTES** at bottom left of following page*

(Continued)

Figure 10.3
Prequalified Complete Joint Penetration Groove Welds for the Submerged Arc Welding Process (SAW)
(See Clauses 10.1.1 and 10.3.1.)

Welds / Joints	1 – Square Groove (cont'd)	2 – Single V-Groove (cont'd)	
Tee (T) Corner (C)	**S1-4** 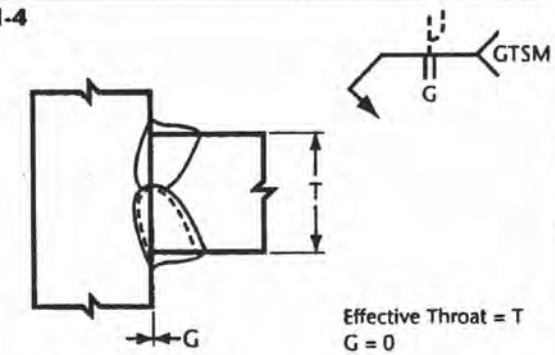 Effective Throat = T G = 0 **T-U1-S**	**S2-4** 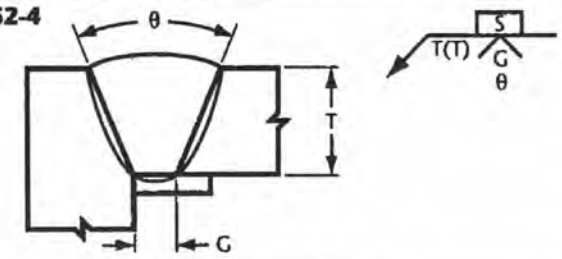 **C-U2a-S**	
Corner (C)	**S1-5** 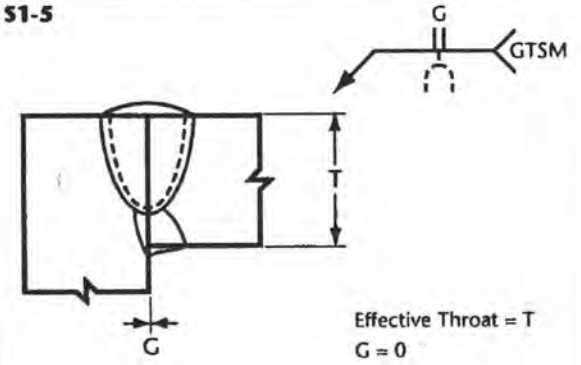 Effective Throat = T G = 0 **C-U1-S**	**S2-5** 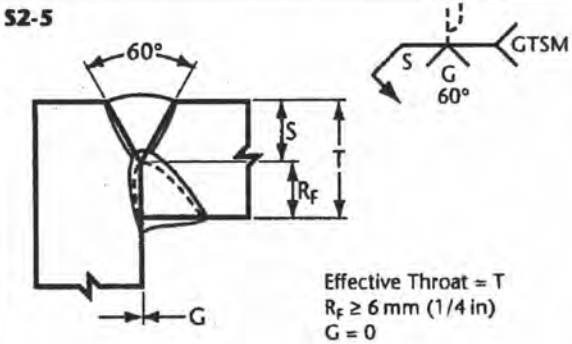 Effective Throat = T $R_F \geq 6$ mm (1/4 in) G = 0 **C-U2b-S**	
Corner (C)	**Notes:** **(1)** *For all joints that show the GTSM reference on the welding symbol, gouging to sound metal prior to welding from the other side is mandatory. See Clause 5.1.4 for definition.* **(2)** *The groove in a joint may be reversed where more practical or necessary.* **(3)** *See Clause 10.3.1.* **(4)** *For all joints with backing bars or spacers, the "S" in the welding symbol shall mean steel material in accordance with Clause 5.5.1.1.* **(5)** *For corner joints, see preferred preparation as shown in Figure 4.1.*	**S2-6** 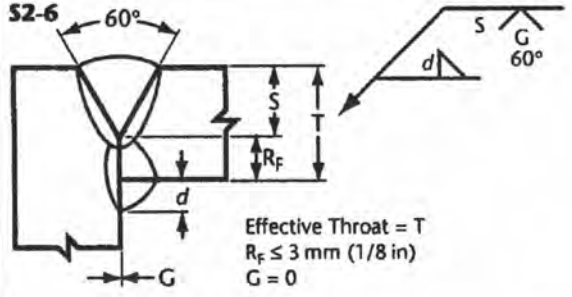 Effective Throat = T $R_F \leq 3$ mm (1/8 in) G = 0 **Note:** *Weld back side first with SMAW or FCAW minimum* 6 mm (1/4 in) *fillet.* **C-U2c-S**	

θ	G	Notes
20°	≥ 16 mm (5/8 in)	*Split pass mandatory in root layer*
30°	≥ 6 mm (1/4 in)	—
45°	≥ 3 mm (1/8 in)	—

(Continued)

Figure 10.3 (Continued)
Prequalified Complete Joint Penetration Groove Welds for the Submerged Arc Welding Process (SAW)

Welds / Joints	4 – Single Bevel Groove	5 – Double Bevel Groove	6 – Single U-Groove
Butt (B)	**S4-1** 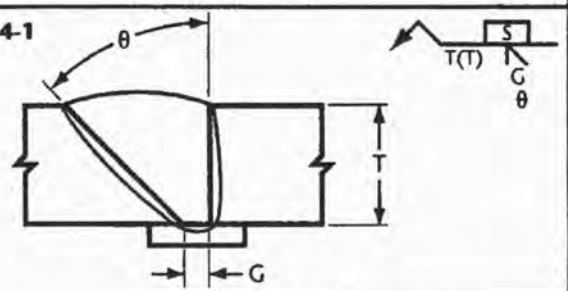 **B-U4a-S** θ: 20°, G: ≥16 mm (5/8 in), Notes: *Split pass mandatory in root layer* θ: 30°, G: ≥10 mm (3/8 in), Notes: — θ: 45°, G: ≥6 mm (1/4 in), Notes: —	**S5-1** 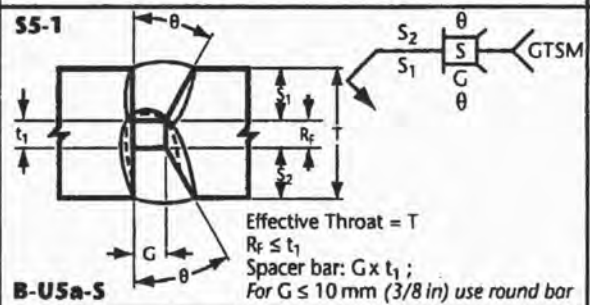 Effective Throat = T $R_F \le t_1$ Spacer bar: G x t_1 ; *For G ≤ 10 mm (3/8 in) use round bar* **B-U5a-S** θ: 20°, G: ≥16 mm (5/8 in), t_1: ≥6 mm (1/4 in), Notes: *Split pass mandatory in root layer* θ: 30°, G: ≥10 mm (3/8 in), t_1: ≥6 mm (1/4 in), Notes: — θ: 45°, G: ≥6 mm (1/4 in), t_1: ≥6 mm (1/4 in), Notes: —	**S6-1** 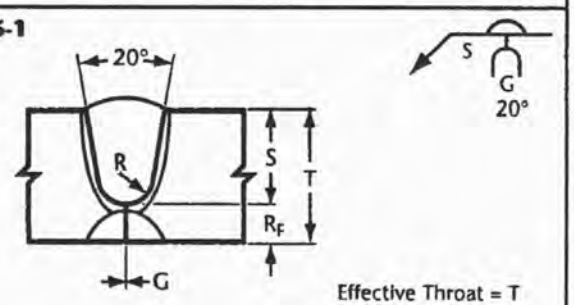 Effective Throat = T R_F = 6 mm (1/4 in) G = 0 R = 5 mm (3/16 in) **B-U6a-S**
Butt (B)	**S4-2** 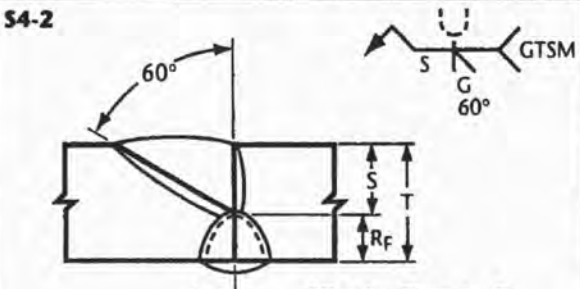 Effective Throat = T R_F > 6 mm (1/4 in) G = 0 **B-U4b-S**	**S5-2** 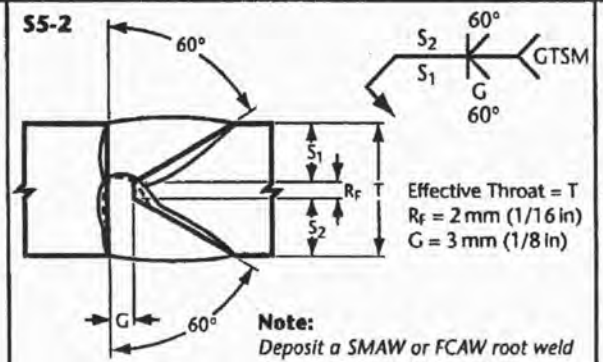 Effective Throat = T R_F = 2 mm (1/16 in) G = 3 mm (1/8 in) **Note:** *Deposit a SMAW or FCAW root weld 10 mm (3/8 in) thick minimum.* **B-U5b-S**	**S6-2** 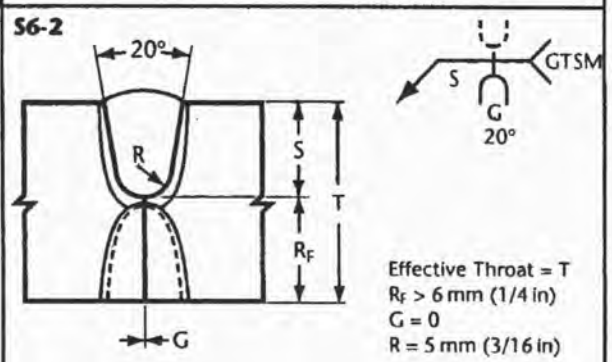 Effective Throat = T R_F > 6 mm (1/4 in) G = 0 R = 5 mm (3/16 in) **B-U6b-S**
Butt (B) Tee (T) Corner (C)	**S4-3** 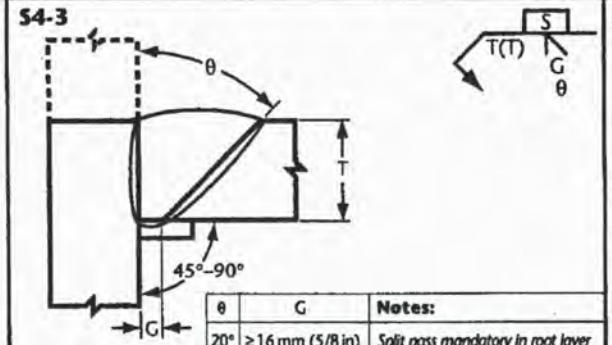 **TC-U4a-S** θ: 20°, G: ≥16 mm (5/8 in), Notes: *Split pass mandatory in root layer* θ: 30°, G: ≥10 mm (3/8 in), Notes: — θ: 45°, G: ≥6 mm (1/4 in), Notes: —	**S5-3** 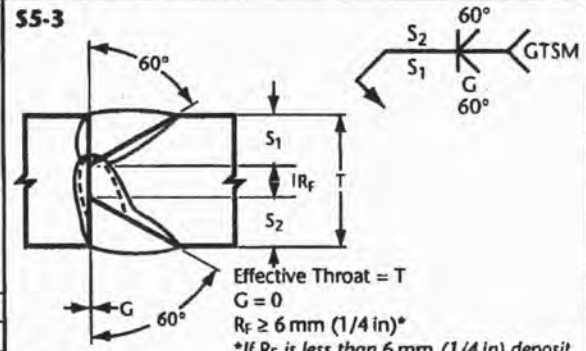 Effective Throat = T G = 0 $R_F \ge$ 6 mm (1/4 in)* **If R_F is less than 6 mm (1/4 in) deposit a SMAW or FCAW weld from other side.* **B-U5c-S**	**S6-3** 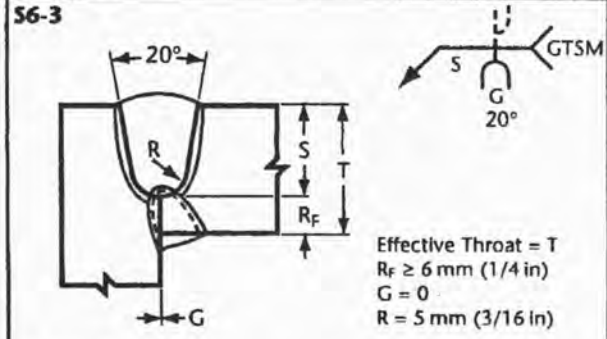 Effective Throat = T $R_F \ge$ 6 mm (1/4 in) G = 0 R = 5 mm (3/16 in) **C-U6a-S**

*See **NOTES** at bottom left of following page (Continued)*

Figure 10.3 (Continued)
Prequalified Complete Joint Penetration Groove Welds for the Submerged Arc Welding Process (SAW)

Welds / Joints	4 – Single Bevel Groove (cont'd)	5 – Double Bevel Groove (cont'd)	6 – Single U-Groove (cont'd)
Tee (T) Corner (C)	S4-4 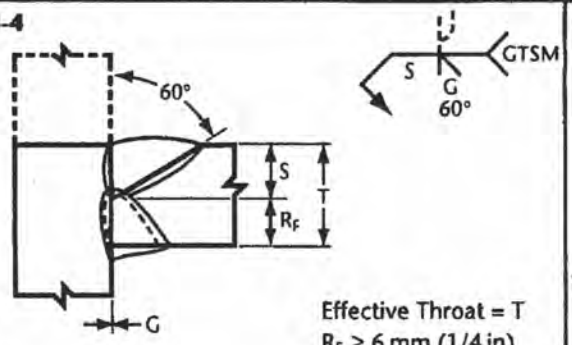 Effective Throat = T $R_F \geq 6$ mm (1/4 in) G = 0 TC-U4b-S	S5-4 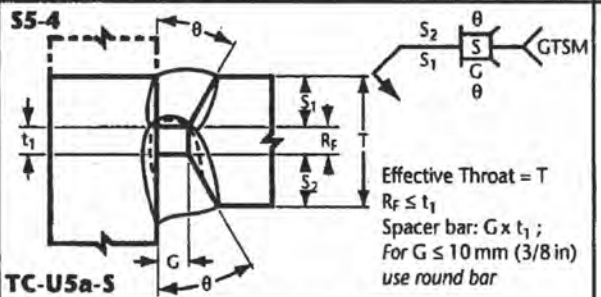 Effective Throat = T $R_F \leq t_1$ Spacer bar: G x t_1 ; For G ≤ 10 mm (3/8 in) use round bar TC-U5a-S θ | G | t_1 | Notes 20° | ≥16 mm (5/8 in) | ≥6 mm (1/4 in) | *Split pass mandatory in root layer* 30° | ≥10 mm (3/8 in) | ≥6 mm (1/4 in) | — 45° | ≥6 mm (1/4 in) | ≥6 mm (1/4 in) | —	S6-4 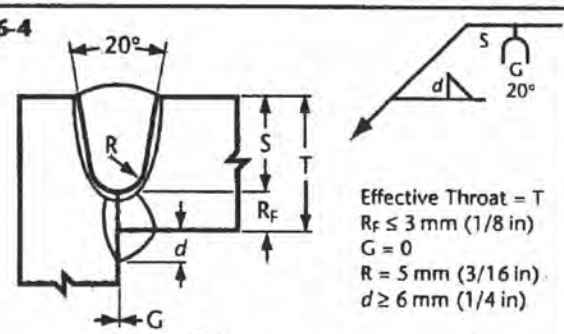 Effective Throat = T $R_F \leq 3$ mm (1/8 in) G = 0 R = 5 mm (3/16 in) $d \geq 6$ mm (1/4 in) **Note:** *Weld back side first with SMAW or FCAW minimum 6 mm (1/4 in) fillet.* C-U6b-S
Tee (T) Corner (C)		S5-5 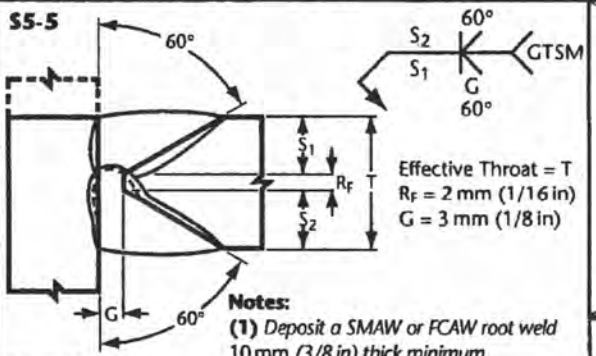 Effective Throat = T R_F = 2 mm (1/16 in) G = 3 mm (1/8 in) **Notes:** **(1)** *Deposit a SMAW or FCAW root weld 10 mm (3/8 in) thick minimum.* **(2)** *GTSM prior to welding from other side.* TC-U5b-S	7 – Double U-Groove
Butt (B) Tee (T) Corner (C)	**Notes:** **(1)** *For all joints that show the GTSM reference on the welding symbol, gouging to sound metal prior to welding from the other side is mandatory. See Clause 5.1.4 for definition.* **(2)** *The groove in a joint may be reversed where more practical or necessary.* **(3)** *Types of grooves designated by (x) shall be preferably limited to base metal thickness of 16 mm (5/8 in) or greater.* **(4)** *See Clause 10.3.1.* **(5)** *For all joints with backing bars or spacers, the "S" in the welding symbol shall mean steel material in accordance with Clause 5.5.1.1.* **(6)** *For corner joints, see preferred preparation as shown in Figure 4.1.*	S5-6 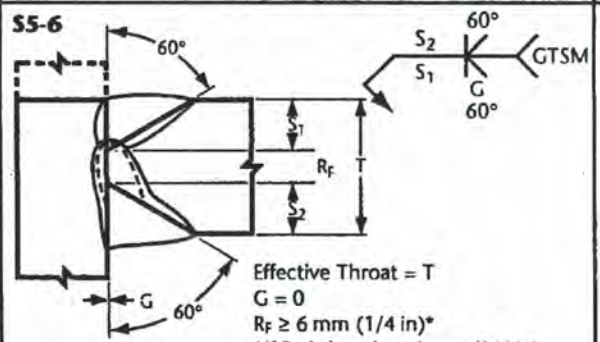 Effective Throat = T G = 0 $R_F \geq 6$ mm (1/4 in)* **If R_F is less than 6 mm (1/4 in) deposit a SMAW or FCAW weld from other side.* TC-U5c-S	S7-1 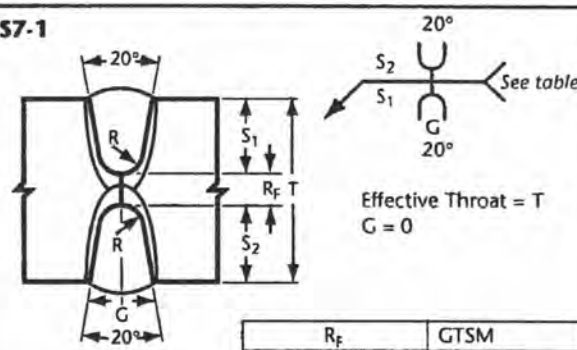 Effective Throat = T G = 0 B-U7-S R_F | GTSM ≤ 6 mm (1/4 in) | Not mandatory > 6 mm (1/4 in) | Mandatory

(Continued)

Figure 10.3 (Continued)
Prequalified Complete Joint Penetration Groove Welds for the Submerged Arc Welding Process (SAW)

Welds / Joints	8 – Single J-Groove	9 – Double J-Groove
Butt (B)	**S8-1** 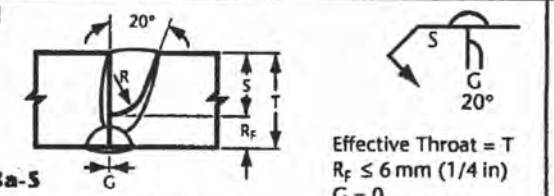 **B-U8a-S** Effective Throat = T $R_F \leq 6$ mm (1/4 in) G = 0 R = 12 mm (1/2 in) **S8-2** 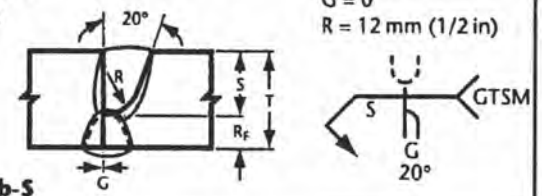 **B-U8b-S**	**S9-1** 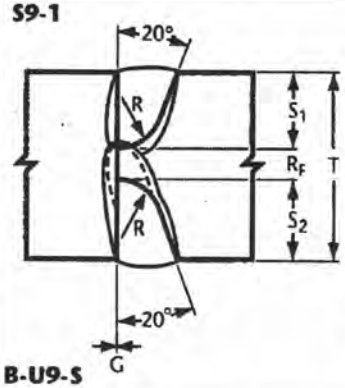 **B-U9-S** Effective Throat = T $R_F \geq 6$ mm (1/4 in) G = 0 R = 12 mm (1/2 in)
Tee (T) Corner (C)	**S8-3** 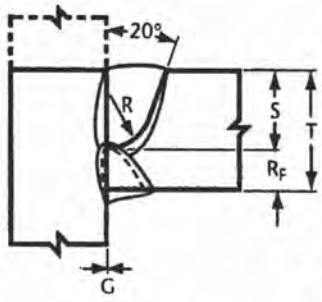 **TC-U8a-S** Effective Throat = T $R_F \geq 6$ mm (1/4 in) G = 0 R = 12 mm (1/2 in)	**S9-2** 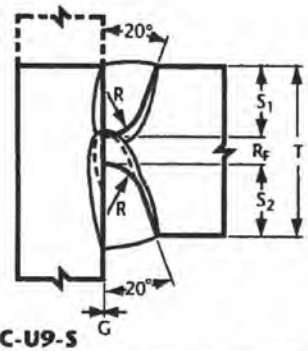 **TC-U9-S** Effective Throat = T $R_F \geq 6$ mm (1/4 in) G = 0 R = 12 mm (1/2 in)
Tee (T) Corner (C)	**S8-4** 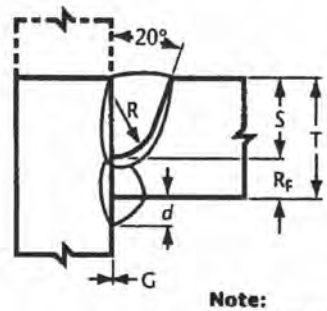 **TC-U8b-S** Effective Throat = T $R_F \leq 3$ mm (1/8 in) G = 0 $d \geq 6$ mm (1/4 in) R = 12 mm (1/2 in) **Note:** *Weld back side first with a SMAW or FCAW min.* 10 mm (3/8 in) *fillet.*	**Notes:** **(1)** *For all joints that show the GTSM reference on the welding symbol, gouging to sound metal prior to welding from the other side is mandatory. See Clause 5.1.4 for definition.* **(2)** *The groove in a joint may be reversed where more practical or necessary.* **(3)** *See Clause 10.3.1.* **(4)** *For corner joints, see preferred preparation as shown in Figure 4.1.*

Figure 10.3 (Concluded)
Prequalified Complete Joint Penetration Groove Welds for the Submerged Arc Welding Process (SAW)

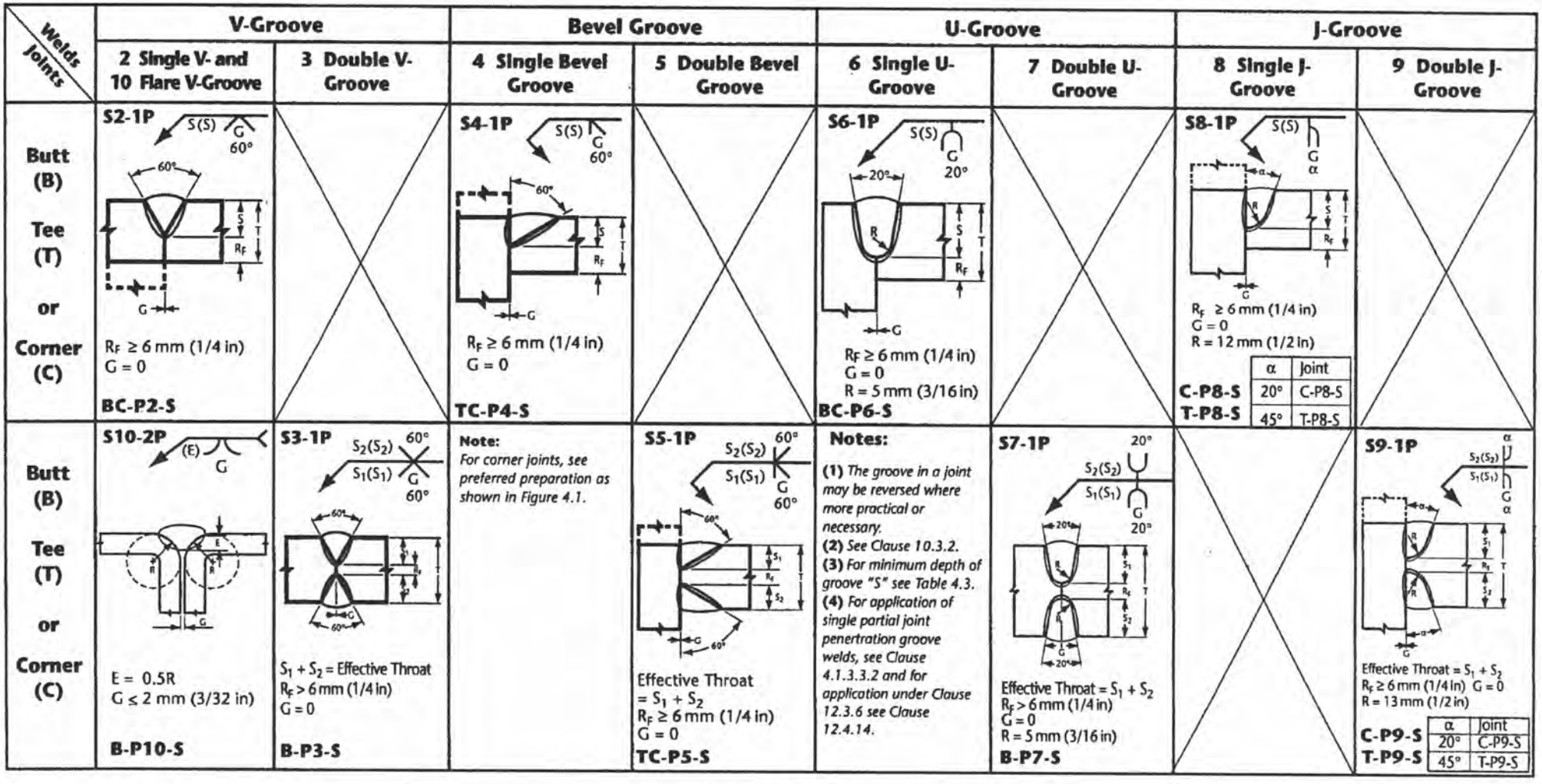

Figure 10.4
Prequalified Partial Joint Penetration Groove Welds for the Submerged Arc Welding Process (SAW)
(See Clause 10.3.2.)

Mosher ENGINEERING

WELDING PROCEDURE DATA SHEET

No.: **FCAW-06-CVN**

Date: May 5, 2008

Company Name:	Mosher Engineering	Wldg. Specification No:	RTR-4
Address:	1358 Queen Street	Reference WPQR:	
	Halifax Nova Scotia B3J 2H5	Ref. Standards:	CSA W47.1, W59 & W48

Material Information:

Position:	Horizontal	Welding Process:	FCAW	Consumable:	E491T-12MJ-H4
Base Mat'l:	CAN G40.21 350WT Cat. 5 (27J @-40°C)	Mode of Transfer:	Globular Transfer	Shielding Gas:	75% Ar 25% CO2
		Process Mode:	Semi-Automatic	Gas Flow:	45 ft3/h
		Tungsten Type:		Tungsten Dia.:	in

Cleaning:	Wire brush and remove slag in between passes	PHT Temp:	15°C or 59 °F
		PWHT Temp:	NA °F

Typical Joint Details:

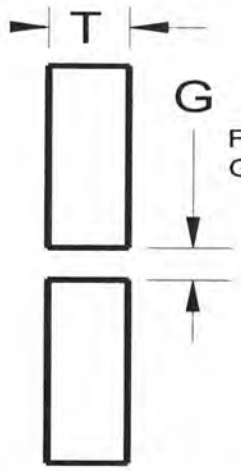

Typical Pass & Layer Sequence:

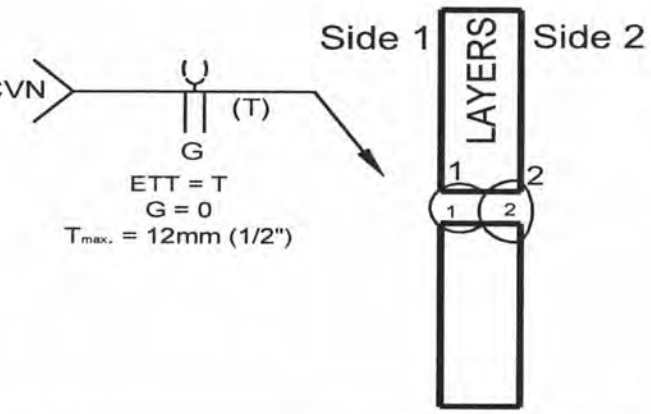

Joint Configuration:		**Joint Details:**		**Technique & Process Information:**		
Joint Type:	Butt, Tee, Corner	G = 0.045	Θ (°) = 0	Electrical Stickout:	3/4 ± 1/8	in
Weld Type:	Complete Joint Penetration	R_F = 0		Nozzle Diameter:	1/2	in
Backgouging:	Backgouged to Sound Metal			Average Deposition Rate:	7.0	lbs/h

Welding Parameters:

Weld Size in.	Weld Size mm	Depth of Prep'n in	Side No.	Layer No. Min	Layer No. Max	Pass No. Min	Pass No. Max	Electrode Size in.	Electrode Size mm	Current (Amps) DCRP Min	Current (Amps) DCRP Max	Wire Feed Speed (in/min) Min	Wire Feed Speed (in/min) Max	Arc Volts (Volts) Min	Arc Volts (Volts) Max	Travel Speed (in/min) Min	Travel Speed (in/min) Max	Average Heat Input (kJ/in)
1/4	6.4	1/4	1	1	1	1	1	0.045	1.2	200	240	300	400	27	29	31.4	42.5	10.0
			2		2	2	2	0.045	1.2	200	240	300	400	27	29	21.0	28.4	15.0
5/16	7.9	5/16	1	1	1	1	1	0.045	1.2	200	240	300	400	27	29	25.1	34.0	12.5
			2		2	2	2	0.045	1.2	200	240	300	400	27	29	21.0	28.4	15.0
3/8	9.5	3/8	1	1	1	1	1	0.045	1.2	200	240	300	400	27	29	21.0	28.4	15.0
			2		2	2	2	0.045	1.2	200	240	300	400	27	29	21.0	28.4	15.0

Revision Status:

Date:	Explanation:
22/07/2008	Per PQR P5745

NOTES:

1. Use stringer beads only. Restrict weld bead to ≤ 16 mm.
2. Weld Sizes represent effective weld throat thickness for qualified T range.
3. Target heat inputs at calculated average.
4. Tack weld parameters to be per main weld parameters
5. Backgouge as necessary to repair side 2.

CWB Approval:

CWB Accepted

CWB

Jul 25, 2008

Valid only if welding consumables are certified by the CWB

Company's Approval:

REGISTERED PROFESSIONAL ENGINEER
DATE 07/22/2008
7801
PROVINCE OF NOVA SCOTIA

Prepared by: FORGERON ENGINEERING LIMITED **Tel:** (902) 835-7225

Mosher ENGINEERING

WELDING PROCEDURE DATA SHEET

No.: **FCAW-07-CVN**

Date: May 5, 2008

Company Name:	Mosher Engineering	Wldg. Specification No:	RTR-4
Address:	1358 Queen Street	Reference WPQR:	
	Halifax Nova Scotia B3J 2H5	Ref. Standards:	CSA W47.1, W59 & W48

Material Information:

Position:	Vertical Up	Welding Process:	FCAW	Consumable:	E491T-12MJ-H4
Base Mat'l:	CAN G40.21 350WT Cat. 5 (27J @-40°C)	Mode of Transfer:	Globular Transfer	Shielding Gas:	75% Ar 25% CO2
		Process Mode:	Semi-Automatic	Gas Flow:	38 ft3/h
		Tungsten Type:		Tungsten Dia.:	in

Cleaning:	Wire brush and remove slag in between passes	PHT Temp:	15°C or 59 °F
		PWHT Temp:	NA °F

Typical Joint Details:

Typical Pass & Layer Sequence:

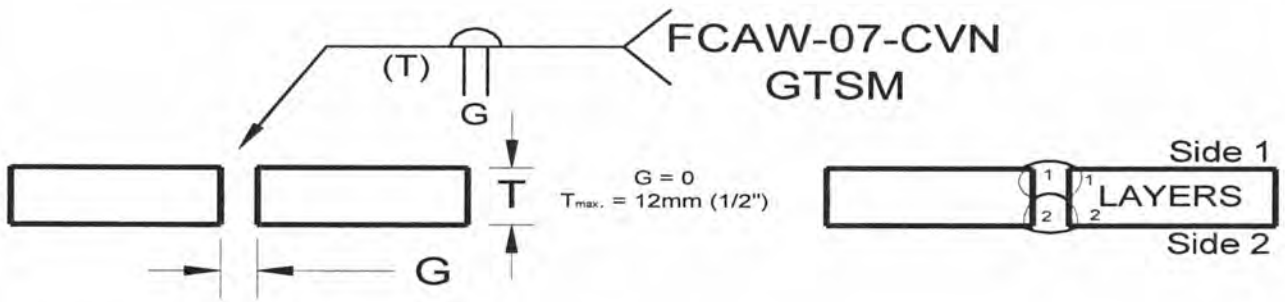

Joint Configuration:		**Joint Details:**		**Technique & Process Information:**		
Joint Type:	Butt, Tee, Corner	G = 0.045	Θ (°) = 0	Electrical Stickout:	3/4 ± 1/8	in
Weld Type:	Complete Joint Penetration	R_F = 0		Nozzle Diameter:	1/2	in
Backgouging:	Backgouged to Sound Metal			Average Deposition Rate:	4.7	lbs/h

Welding Parameters:

Weld Size in.	Weld Size mm	Depth of Prep'n in	Side No.	Layer No. Min	Layer No. Max	Pass No. Min	Pass No. Max	Electrode Size in.	Electrode Size mm	Current (Amps) DCRP Min	Current (Amps) DCRP Max	Wire Feed Speed (in/min) Min	Wire Feed Speed (in/min) Max	Arc Volts (Volts) Min	Arc Volts (Volts) Max	Travel Speed (in/min) Min	Travel Speed (in/min) Max	Average Heat Input (kJ/in)
1/4	6.4	1/4	1	1	1	1	1	0.045	1.2	150	170	175	225	21	25	6.9	7.4	30.9
			2		2		2	0.045	1.2	150	170	175	225	21	25	6.9	7.4	30.9
5/16	7.9	5/16	1	1	1	1	1	0.045	1.2	150	170	175	225	21	25	6.9	7.4	30.9
			2		2		2	0.045	1.2	150	170	175	225	21	25	6.9	7.4	30.9
3/8	9.5	3/8	1	1	1	1	1	0.045	1.2	150	170	175	225	21	25	6.9	7.4	30.9
			2		2		2	0.045	1.2	150	170	175	225	21	25	6.9	7.4	30.9

Revision Status:

Date:	Explanation:
22/07/2008	Per PQR P5745

NOTES:

1. Use stringer beads only. Restrict weld bead to ≤ 16 mm.
2. Weld Sizes represent effective weld throat thickness for qualified T range.
3. Target heat inputs at calculated average.
4. Tack weld parameters to be per main weld parameters
5. Backgouge as necessary to repair side 2.

CWB Approval:

CWB Accepted

CWB

Jul 25, 2008

Valid only if welding consumables are certified by the CWB

Company's Approval:

REGISTERED PROFESSIONAL ENGINEER
DATE 07/22/2008
7601
PROVINCE OF NOVA SCOTIA

Prepared by: FORGERON ENGINEERING LIMITED Tel: (902) 835-7225

Mosher ENGINEERING

WELDING PROCEDURE DATA SHEET

No.: **FCAW-10-CVN**

Date: May 5, 2008

Company Name:	Mosher Engineering	Wldg. Specification No:	RTR-4
Address:	1358 Queen Street	Reference WPQR:	
	Halifax Nova Scotia B3J 2H5	Ref. Standards:	CSA W47.1, W59 & W48

Material Information:

Position:	Horizontal	Welding Process:	FCAW	Consumable:	E491T-12MJ-H4
Base Mat'l:	CAN G40.21 350WT Cat. 5 (27J @-40°C)	Mode of Transfer:	Globular Transfer	Shielding Gas:	75% Ar 25% CO2
		Process Mode:	Semi-Automatic	Gas Flow:	45 ft3/h
		Tungsten Type:		Tungsten Dia.:	in

Cleaning:	Wire brush and remove slag in between passes	PHT Temp:	15°C or 59 °F
		PWHT Temp:	NA °F

Typical Joint Details:

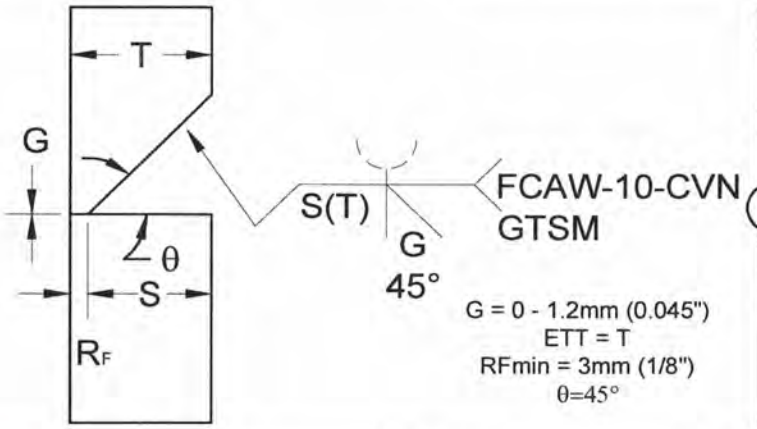

Typical Pass & Layer Sequence:

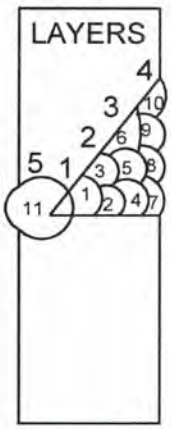

Joint Configuration:		Joint Details:		Technique & Process Information:	
Joint Type:	Butt, Tee, Corner	G = 0	Θ (°) = 45	Electrical Stickout:	3/4 ± 1/8 in
Weld Type:	Complete Joint Penetration	R_F = 1/8		Nozzle Diameter:	1/2 in
Backgouging:	Backgouged to Sound Metal			Average Deposition Rate:	7.0 lbs/h

Welding Parameters:

Weld Size in.	Weld Size mm	Depth of Prep'n in	Side No.	Layer No. Min	Layer No. Max	Pass No. Min	Pass No. Max	Electrode Size in.	Electrode Size mm	Current (Amps) DCRP Min	Current (Amps) DCRP Max	Wire Feed Speed (in/min) Min	Wire Feed Speed (in/min) Max	Arc Volts (Volts) Min	Arc Volts (Volts) Max	Travel Speed (in/min) Min	Travel Speed (in/min) Max	Average Heat Input (kJ/in)
3/8	9.5	1/4	1	1	2	1	3	0.045	1.2	200	240	300	400	27	29	22.6	30.6	13.9
			2		5		11	0.045	1.2	200	240	300	400	27	29	17.0	23.0	18.5
5/8	16	1/2	1	1	3	1	6	0.045	1.2	200	240	300	400	27	29	17.0	23.0	18.5
			2		5		11	0.045	1.2	200	240	300	400	27	29	17.0	23.0	18.5
3/4	19	5/8	1	1	4	1	10	0.045	1.2	200	240	300	400	27	29	18.1	24.5	17.3
			2		5		11	0.045	1.2	200	240	300	400	27	29	17.0	23.0	18.5

Revision Status:

Date:	Explanation:
22/07/2008	P5744

NOTES:

1. Use stringer beads only. Restrict weld bead to ≤ 16 mm.
2. Weld Sizes represent effective weld throat thickness for qualified T range.
3. Target heat inputs at calc'd average. Max. Heat Input to 46.7 kJ/in
4. Tack weld parameters to be per main weld parameters
5. Backgouge as necessary to repair side 2.

CWB Approval:

CWB Accepted

CWB

Jul 25, 2008

Valid only if welding consumables are certified by the CWB

Company's Approval:

REGISTERED PROFESSIONAL ENGINEER
DATE 07/22/2008
7601
PROVINCE OF NOVA SCOTIA

Prepared by: FORGERON ENGINEERING LIMITED **Tel: (902) 835-7225**

Mosher ENGINEERING

WELDING PROCEDURE DATA SHEET

No.: **FCAW-11-CVN**

Date: May 5, 2008

Company Name:	Mosher Engineering	Wldg. Specification No:	RTR-4
Address:	1358 Queen Street	Reference WPQR:	
	Halifax Nova Scotia B3J 2H5	Ref. Standards:	CSA W47.1, W59 & W48

Material Information:

Position:	Vertical Up	Welding Process:	FCAW	Consumable:	E491T-12MJ-H4
Base Mat'l:	CAN G40.21 350WT Cat. 5 (27J @-40°C)	Mode of Transfer:	Globular Transfer	Shielding Gas:	75% Ar 25% CO2
		Process Mode:	Semi-Automatic	Gas Flow:	38 ft3/h
		Tungsten Type:		Tungsten Dia.:	in

Cleaning:	Wire brush and remove slag in between passes	PHT Temp:	15°C or 59 °F
		PWHT Temp:	NA °F

Typical Joint Details:

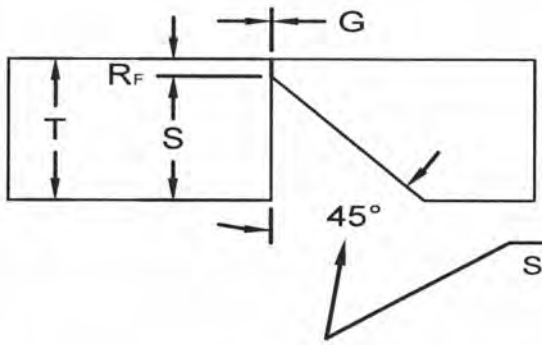

ETT = T
G = 0 - 1/8"
RF > 1/8"

Typical Pass & Layer Sequence:

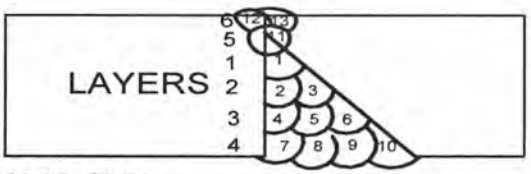

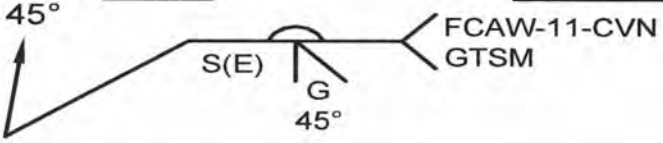

Joint Configuration:		**Joint Details:**		**Technique & Process Information:**		
Joint Type:	Butt, Tee, Corner	G = 0	Θ (°) = 45	Electrical Stickout:	5/8 ± 1/8	in
Weld Type:	Complete Joint Penetration	R_F = 1/8		Nozzle Diameter:	5/8	in
Backgouging:	Backgouged to Sound Metal			Average Deposition Rate:	6.5	lbs/h

Welding Parameters:

Weld Size		Depth of Prep'n	Side No.	Layer No.			Pass No.			Electrode Size		Current (Amps) DCRP			Wire Feed Speed (in/min)			Arc Volts (Volts)			Travel Speed (in/min)			Average Heat Input
in.	mm	in		Min		Max	Min		Max	in.	mm	Min		Max	Min		Max	Min		Max	Min		Max	(kJ/in)
3/8	9.5	1/4	1	1	-	2	1	-	3	0.045	1.2	155	-	175	175	-	225	24	-	27	13.1	-	19.7	15.4
			2	5	-	6	11	-	13	0.045	1.2	155	-	175	175	-	225	24	-	27	15.4	-	18.7	14.8
1/2	13	3/8	1	1	-	3	1	-	6	0.045	1.2	155	-	175	175	-	225	24	-	27	13.1	-	19.7	15.4
			2	5	-	6	11	-	13	0.045	1.2	155	-	175	175	-	225	24	-	27	15.4	-	18.7	17.5
5/8	16	1/2	1	1	-	3	1	-	6	0.045	1.2	155	-	175	175	-	225	24	-	27	13.1	-	19.7	15.4
			2	5	-	6	11	-	13	0.045	1.2	155	-	175	175	-	225	24	-	27	15.4	-	18.7	17.5
3/4	19	5/8	1	1	-	4	1	-	10	0.045	1.2	155	-	175	175	-	225	24	-	27	13.1	-	19.7	15.4
			2	5	-	6	11	-	13	0.045	1.2	155	-	175	175	-	225	24	-	27	15.4	-	18.7	17.5

Revision Status:

Date:	Explanation:
22/07/2008	P5744

NOTES:

1. Use stringer beads only. Restrict weld bead to ≤ 16 mm.
2. Weld Sizes represent effective weld throat thickness for qualified T range.
3. Target heat inputs at calc'd average. Max. Heat Input to 46.7 kJ/in
4. Tack weld parameters to be per main weld parameters
5. Backgouge as necessary to repair side 2.

CWB Approval:

CWB Accepted

CWB

Jul 25, 2008

Valid only if welding consumables are certified by the CWB

Company's Approval:

REGISTERED PROFESSIONAL ENGINEER
DATE 07/22/2008
7601
PROVINCE OF NOVA SCOTIA

Prepared by: FORGERON ENGINEERING LIMITED **Tel: (902) 835-7225**

Mosher ENGINEERING

WELDING PROCEDURE DATA SHEET

No.: **SMAW-06-CVN**

Date: May 5, 2008

Company Name:	Mosher Engineering	Wldg. Specification No:	RTR-1
Address:	1358 Queen Street	Reference WPQR:	
	Halifax Nova Scotia B3J 2H5	Ref. Standards:	CSA W47.1, W59 & W48

Material Information:

Position:	Horizontal	Welding Process:	SMAW	Consumable:	E4918/E48018/E7018
Base Mat'l:	CAN G40.21 350WT Cat. 5 (27J @-40°C)	Mode of Transfer:	N/A	Shielding Gas:	N/A
		Process Mode:	Manual	Gas Flow:	ft3/h
		Tungsten Type:		Tungsten Dia.:	in

Cleaning:	Wire brush and remove slag in between passes	PHT Temp:	15°C or 59	°F
		PWHT Temp:	NA	°F

Typical Joint Details:

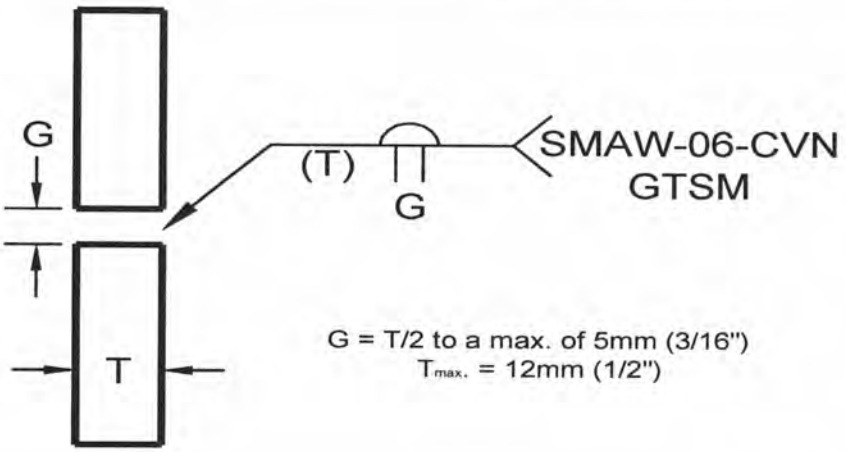

Typical Pass & Layer Sequence:

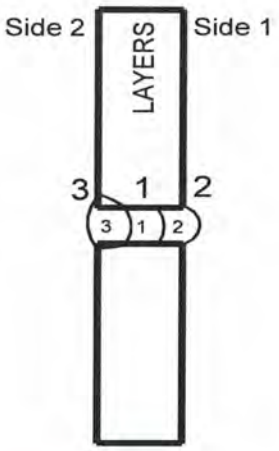

Joint Configuration:		**Joint Details:**		**Technique & Process Information:**		
Joint Type:	Butt, Tee, Corner	G = T/2	Θ (°) = 0	Electrical Stickout:	3/4 ± 1/8	in
Weld Type:	Complete Joint Penetration	R_F = 0		Nozzle Diameter:	1/2	in
Backgouging:	Backgouged to Sound Metal			Average Deposition Rate:	2.6	lbs/h

Welding Parameters:

Weld Size in.	Weld Size mm	Depth of Prep'n in	Side No.	Layer No. Min	Layer No. Max	Pass No. Min	Pass No. Max	Electrode Size in.	Electrode Size mm	Current (Amps) DCRP Min	Current (Amps) DCRP Max	Wire Feed Speed (in/min) Min	Wire Feed Speed (in/min) Max	Arc Volts (Volts) Min	Arc Volts (Volts) Max	Travel Speed (in/min) Min	Travel Speed (in/min) Max	Average Heat Input (kJ/in)
1/4	6.4	1/4	1		1		1	3/32	2.4	75	95			20	22	5.7	7.7	16.0
			2		2		2	3/32	2.4	75	95			20	22	5.7	7.7	16.0
5/16	7.9	5/16	1	1	2	1	2	3/32	2.4	75	95			20	22	4.6	6.2	16.0
			2		3	3	3	3/32	2.4	75	95			20	22	5.7	7.7	16.0
3/8	9.5	3/8	1	1	2	1	2	3/32	2.4	75	95			20	22	3.8	5.1	16.0
			2		3	3	3	3/32	2.4	75	95			20	22	5.7	7.7	16.0

Revision Status:

Date:	Explanation:
22/07/2008	Per PQR P65JR78

NOTES:

1. Use stringer beads only. Restrict weld bead to ≤ 16 mm.
2. Weld Sizes represent effective weld throat thickness for qualified T range.
3. Target heat inputs at calculated average.
4. Tack weld parameters to be per main weld parameters
5. Backgouge as necessary to repair side 2.

CWB Approval:

CWB Accepted

CWB

Jul 25, 2008

Valid only if welding consumables are certified by the CWB

Company's Approval:

REGISTERED PROFESSIONAL ENGINEER — DATE 07/22/2008 — 7601 — PROVINCE OF NOVA SCOTIA

Prepared by: FORGERON ENGINEERING LIMITED **Tel:** (902) 835-7225

Mosher ENGINEERING

WELDING PROCEDURE DATA SHEET

No.: **SMAW-07-CVN**

Date: May 5, 2008

Company Name:	Mosher Engineering	Wldg. Specification No:	RTR-1
Address:	1358 Queen Street	Reference WPQR:	
	Halifax Nova Scotia B3J 2H5	Ref. Standards:	CSA W47.1, W59 & W48

Material Information:

Position:	Vertical Up	Welding Process:	SMAW	Consumable:	E4918/E48018/E7018
Base Mat'l:	CAN G40.21 350WT Cat. 5 (27J @-40°C)	Mode of Transfer:	N/A	Shielding Gas:	N/A
		Process Mode:	Manual	Gas Flow:	ft3/h
		Tungsten Type:		Tungsten Dia.:	in
Cleaning:	Wire brush and remove slag in between passes	PHT Temp:		175°C or 347	°F
		PWHT Temp:		NA	°F

Typical Joint Details:

G = T/2 to a max. of 5mm (3/16")
$T_{max.}$ = 12mm (1/2")

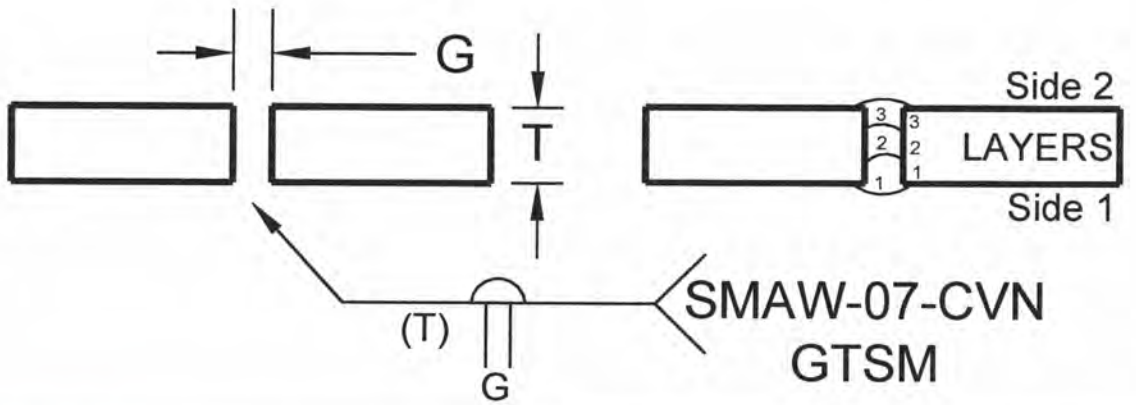

Typical Pass & Layer Sequence:

Joint Configuration:		**Joint Details:**		**Technique & Process Information:**		
Joint Type:	Butt, Tee, Corner	G = T/2	Θ (°) = 0	Electrical Stickout:	3/4 ± 1/8	in
Weld Type:	Complete Joint Penetration	R_F = 0		Nozzle Diameter:	1/2	in
Backgouging:	Backgouged to Sound Metal			Average Deposition Rate:	2.5	lbs/h

Welding Parameters:

Weld Size in.	Weld Size mm	Depth of Prep'n in	Side No.	Layer No. Min	Layer No. Max	Pass No. Min	Pass No. Max	Electrode Size in.	Electrode Size mm	Current (Amps) DCRP Min	Current (Amps) DCRP Max	Wire Feed Speed (in/min) Min	Wire Feed Speed (in/min) Max	Arc Volts (Volts) Min	Arc Volts (Volts) Max	Travel Speed (in/min) Min	Travel Speed (in/min) Max	Average Heat Input (kJ/in)
1/4	6.4	1/4	1		1		1	3/32	2.4	75	95			20	22	2.8	3.2	35.7
			2		2		2	3/32	2.4	75	95			20	22	2.8	3.2	35.7
5/16	7.9	5/16	1	1	2	1	2	3/32	2.4	75	95			20	22	2.8	3.2	35.7
			2		3	3	3	3/32	2.4	75	95			20	22	2.8	3.2	35.7
3/8	9.5	3/8	1	1	2	1	2	3/32	2.4	75	95			20	22	2.8	3.2	35.7
			2		2	3	3	3/32	2.4	75	95			20	22	2.8	3.2	35.7

Revision Status:

Date:	Explanation:
22/07/2008	Per PQR P65JR78

NOTES:

1. Use stringer beads only. Restrict weld bead to ≤ 16 mm.
2. Weld Sizes represent effective weld throat thickness for qualified T range.
3. Target heat inputs at calculated average.
4. Tack weld parameters to be per main weld parameters
5. Backgouge as necessary to repair side 2.

CWB Approval:

CWB Accepted

CWB

Jul 25, 2008

Valid only if welding consumables are certified by the CWB

Company's Approval:

REGISTERED PROFESSIONAL ENGINEER
DATE 07/22/2008
7681
PROVINCE OF NOVA SCOTIA

Prepared by: FORGERON ENGINEERING LIMITED Tel: (902) 835-7225

Mosher ENGINEERING

WELDING PROCEDURE DATA SHEET

No.: **SMAW-10-CVN**

Date: May 5, 2008

Company Name:	Mosher Engineering	Wldg. Specification No:	RTR-1
Address:	1358 Queen Street	Reference WPQR:	
	Halifax Nova Scotia B3J 2H5	Ref. Standards:	CSA W47.1, W59 & W48

Material Information:

Position:	Horizontal	Welding Process:	SMAW	Consumable:	E4918/E48018/E7018
Base Mat'l:	CAN G40.21 350WT Cat. 5 (27J @-40°C)	Mode of Transfer:	N/A	Shielding Gas:	N/A
		Process Mode:	Manual	Gas Flow:	ft3/h
		Tungsten Type:		Tungsten Dia.:	in
Cleaning:	Wire brush and remove slag in between passes	PHT Temp:		15°C or 59	°F
		PWHT Temp:		NA	°F

Typical Joint Details:

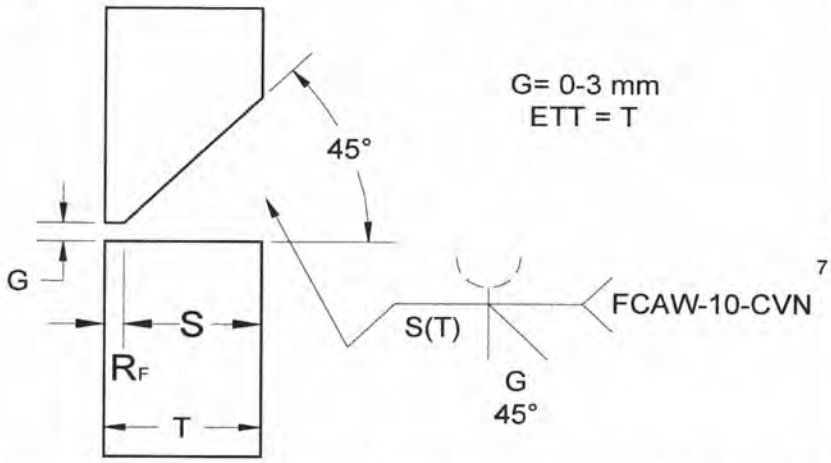

Typical Pass & Layer Sequence:

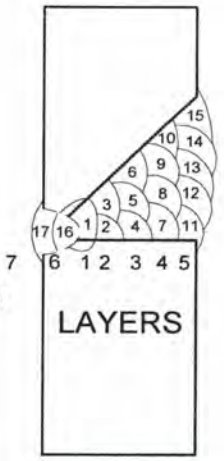

Joint Configuration:		**Joint Details:**		**Technique & Process Information:**	
Joint Type:	Butt, Tee, Corner	G = 1/8	Θ (°) = 45	Electrical Stickout:	in
Weld Type:	Complete Joint Penetration	R_F = 1/8		Nozzle Diameter:	in
Backgouging:	Backgouged to Sound Metal			Average Deposition Rate: 3.5	lbs/h

Welding Parameters:

Weld Size in.	Weld Size mm	Depth of Prep'n in	Side No.	Layer No. Min	Layer No. Max	Pass No. Min	Pass No. Max	Electrode Size in.	Electrode Size mm	Current (Amps) DCRP Min	Current (Amps) DCRP Max	Wire Feed Speed (in/min) Min	Wire Feed Speed (in/min) Max	Arc Volts (Volts) Min	Arc Volts (Volts) Max	Travel Speed (in/min) Min	Travel Speed (in/min) Max	Average Heat Input (kJ/in)
3/8	9.5	1/4	1	1	3	1	6	1/8	3.2	115	127			22	25	3.4	8.6	28.4
			2		7	16	17	1/8	3.2	115	127			22	25	3.4	8.6	28.4
1/2	13	3/8	1	1	4	1	10	1/8	3.2	115	127			22	25	3.4	8.6	28.4
			2		7	16	17	1/8	3.2	115	127			22	25	3.4	8.6	28.4
5/8	16	1/2	1	1	5	1	10	1/8	3.2	115	127			22	25	3.4	8.6	28.4
			2		7	16	17	1/8	3.2	115	127			22	25	3.4	8.6	28.4
3/4	19	5/8	1	1	6	1	15	1/8	3.2	115	127			22	25	3.4	8.6	28.4
			2		7	16	17	1/8	3.2	115	127			22	25	3.4	8.6	28.4

Revision Status:

Date:	Explanation:
22/07/2008	P036388

NOTES:

1. Use stringer beads only. Restrict weld bead to ≤ 16 mm.
2. Weld Sizes represent effective weld throat thickness for qualified T range.
3. Target heat inputs at calculated average.
4. Tack weld parameters to be per main weld parameters
5. Backgouge as necessary to repair side 2.

CWB Approval:

CWB Accepted

CWB

Jul 25, 2008

Valid only if welding consumables are certified by the CWB

Company's Approval:

REGISTERED PROFESSIONAL ENGINEER * PROVINCE OF NOVA SCOTIA * DATE 07/22/2008 7801

Prepared by: FORGERON ENGINEERING LIMITED **Tel: (902) 835-7225**

Mosher ENGINEERING

WELDING PROCEDURE DATA SHEET

No.: **SMAW-11-CVN**

Date: May 5, 2008

Company Name:	Mosher Engineering	Wldg. Specification No:	RTR-1
Address:	1358 Queen Street	Reference WPQR:	
	Halifax Nova Scotia B3J 2H5	Ref. Standards:	CSA W47.1, W59 & W48

Material Information:

Position:	Vertical Up	Welding Process:	SMAW	Consumable:	E4918/E48018/E7018
Base Mat'l:	CAN G40.21 350WT Cat. 5 (27J @-40°C)	Mode of Transfer:	N/A	Shielding Gas:	N/A
		Process Mode:	Manual	Gas Flow:	ft3/h
		Tungsten Type:		Tungsten Dia.:	in

Cleaning:	Wire brush and remove slag in between passes	PHT Temp:	175°C or 347 °F
		PWHT Temp:	NA °F

Typical Joint Details:

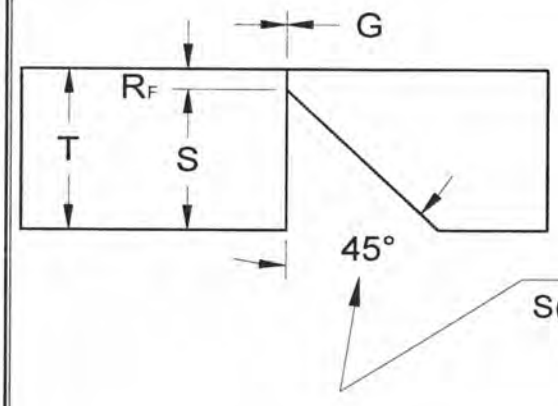

ETT = T

G = 0 - 1/8"

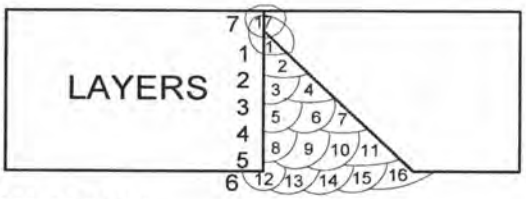

Typical Pass & Layer Sequence:

Joint Configuration:		**Joint Details:**		**Technique & Process Information:**	
Joint Type:	Butt, Tee, Corner	G = 0	Θ (°) = 45	Electrical Stickout:	in
Weld Type:	Complete Joint Penetration	R_F = 1/16		Nozzle Diameter:	in
Backgouging:	Backgouged to Sound Metal			Average Deposition Rate: 2.5	lbs/h

Welding Parameters:

Weld Size in.	Weld Size mm	Depth of Prep'n in	Side No.	Layer No. Min	Layer No. Max	Pass No. Min	Pass No. Max	Electrode Size in.	Electrode Size mm	Current (Amps) DCRP Min	Current (Amps) DCRP Max	Wire Feed Speed (in/min) Min	Wire Feed Speed (in/min) Max	Arc Volts (Volts) Min	Arc Volts (Volts) Max	Travel Speed (in/min) Min	Travel Speed (in/min) Max	Average Heat Input (kJ/in)
3/8	9.5	5/16	1	1	3	1	7	1/8	3.2	115	127			22	25	3.4	8.6	28.4
			2		7		17	1/8	3.2	115	127			22	25	3.4	8.6	28.4
1/2	13	7/16	1	1	4	1	10	1/8	3.2	115	127			22	25	3.4	8.6	28.4
			2		7		17	1/8	3.2	115	127			22	25	3.4	8.6	28.4
5/8	16	9/16	1	1	5	1	11	1/8	3.2	115	127			22	25	3.4	8.6	28.4
			2		7		17	1/8	3.2	115	127			22	25	3.4	8.6	28.4
3/4	19	11/16	1	1	6	1	16	1/8	3.2	115	127			22	25	3.4	8.6	28.4
			2		7		17	1/8	3.2	115	127			22	25	3.4	8.6	28.4

Revision Status:

Date:	Explanation:
22/07/2008	P036388

NOTES:

1. Use stringer beads only. Restrict weld bead to ≤ 16 mm.
2. Weld Sizes represent effective weld throat thickness for qualified T range.
3. Target heat inputs at calculated average.
4. Tack weld parameters to be per main weld parameters
5. Backgouge as necessary to repair side 2.

CWB Approval:

CWB Accepted

CWB

Jul 25, 2008

Valid only if welding consumables are certified by the CWB

Company's Approval:

REGISTERED PROFESSIONAL ENGINEER PROVINCE OF NOVA SCOTIA DATE 07/22/2008 7081

Prepared by: FORGERON ENGINEERING LIMITED Tel: (902) 835-7225

Mosher ENGINEERING

WELDING PROCEDURE DATA SHEET

No.: **SAW-06-CVN**

Date: June 11, 2008

Company Name:	Mosher Engineering	Wldg. Specification No:	SAW-1
Address:	1358 Queen Street	Reference WPQR:	
	Halifax Nova Scotia B3J 2H5	Ref. Standards:	CSA W47.1, W59 & W48

Material Information:

Position:	Horizontal	Welding Process:	SAW	Consumable:	F7A4-EM12K-H8
Base Mat'l:	CAN G40.21 350WT Cat. 5 (27J @-40°C)	Mode of Transfer:	Spray Transfer	Shielding Gas:	N/A
		Process Mode:	Automatic	Gas Flow:	NA ft3/h
		Tungsten Type:		Tungsten Dia.:	NA in

Cleaning:	Wire brush and remove slag in between passes	PHT Temp:	15°C or 59 °F
		PWHT Temp:	NA °F

Typical Joint Details:

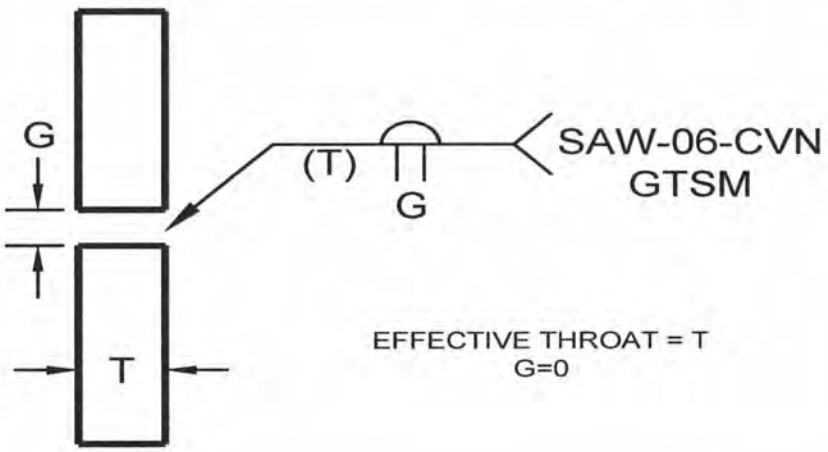

Typical Pass & Layer Sequence:

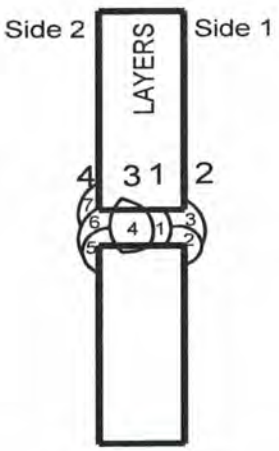

Joint Configuration:		**Joint Details:**		**Technique & Process Information:**		
Joint Type:	Butt	G = 3/32	Θ (°) = 0	Electrical Stickout:	1 1/2 ± 1/4	in
Weld Type:	Complete Joint Penetration	R_F = 0		Nozzle Diameter:	3/4	in
Backgouging:	Backgouged to Sound Metal			Average Deposition Rate:	11.1	lbs/h

Welding Parameters:

Weld Size in.	Weld Size mm	Depth of Prep'n in	Side No.	Layer No. Min	Layer No. Max	Pass No. Min	Pass No. Max	Electrode Size in.	Electrode Size mm	Current (Amps) DCRP Min	Current (Amps) DCRP Max	Wire Feed Speed (in/min) Min	Wire Feed Speed (in/min) Max	Arc Volts (Volts) Min	Arc Volts (Volts) Max	Travel Speed (in/min) Min	Travel Speed (in/min) Max	Average Heat Input (kJ/in)
3/8	9.5		1	1	2	1	3	1/8	3.3	350	450	415	505	25	29	19.1	25.3	30.3
			2	3	4	4	6	1/8	3.3	350	450	415	505	25	29	19.1	25.3	30.3
7/16	11		1	1	2	1	3	1/8	3.3	350	450	415	505	25	29	19.1	25.3	30.3
			2	3	4	4	6	1/8	3.3	350	450	415	505	25	29	19.1	25.3	30.3
1/2	13		1	1	2	1	2	1/8	3.3	350	450	415	505	25	29	19.1	25.3	30.3
			2	3	4	4	6	1/8	3.3	350	450	415	505	25	29	19.1	25.3	30.3

Revision Status:

Date:	Explanation:
7/22/08	Per PQR P5709

CWB Approval:

Company's Approval:



NOTES:

1. Use stringer beads only. Restrict weld bead to ≤ 16 mm.
2. Weld Sizes represent effective weld throat thickness for qualified T range.
3. Target heat inputs at calculated average.
4. Tack weld parameters to be per main weld parameters
5. Backgouge as necessary to repair side 2.

Prepared by: FORGERON ENGINEERING LIMITED **Tel: (902) 835-7225**

Mosher ENGINEERING

WELDING PROCEDURE DATA SHEET

No.: **SAW-10-CVN**

Date: June 11, 2008

Company Name:	Mosher Engineering	Wldg. Specification No:	SAW-1
Address:	1358 Queen Street	Reference WPQR:	
	Halifax Nova Scotia B3J 2H5	Ref. Standards:	CSA W47.1, W59 & W48

Material Information:

Position:	Horizontal	Welding Process:	SAW	Consumable:	F7A4-EM12K-H8
Base Mat'l:	CAN G40.21 350WT Cat. 5 (27J @-40°C)	Mode of Transfer:	Spray Transfer	Shielding Gas:	N/A
		Process Mode:	Automatic	Gas Flow:	NA ft3/h
		Tungsten Type:		Tungsten Dia.:	NA in

Cleaning:	Wire brush and remove slag in between passes	PHT Temp:	15°C or 59 °F
		PWHT Temp:	NA °F

Typical Joint Details:

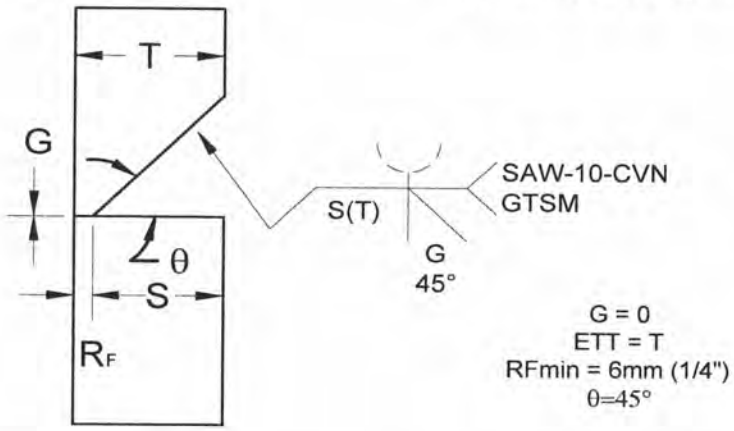

Typical Pass & Layer Sequence:

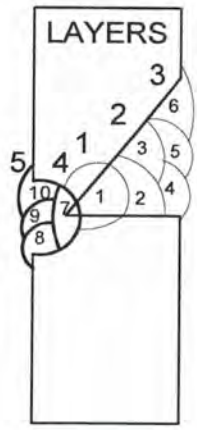

Joint Configuration:		**Joint Details:**		**Technique & Process Information:**		
Joint Type:	Butt	G = 0	Θ (°) = 45	Electrical Stickout:	1 1/4 ± 1/4	in
Weld Type:	Complete Joint Penetration	R_F = 1/4		Nozzle Diameter:	3/4	in
Backgouging:	Backgouged to Sound Metal			Average Deposition Rate:	11.1	lbs/h

Welding Parameters:

Weld Size in.	Weld Size mm	Depth of Prep'n in	Side No.	Layer No. Min	Layer No. Max	Pass No. Min	Pass No. Max	Electrode Size in.	Electrode Size mm	Current (Amps) DCRP Min	Current (Amps) DCRP Max	Wire Feed Speed (in/min) Min	Wire Feed Speed (in/min) Max	Arc Volts (Volts) Min	Arc Volts (Volts) Max	Travel Speed (in/min) Min	Travel Speed (in/min) Max	Average Heat Input (kJ/in)
7/16	11	3/16	1	1	2	1	2	1/8	3.3	450	550	415	510	25	29	15.4	23.6	41.5
			2	4	5	7	10	1/8	3.3	450	550	415	510	25	29	15.4	23.6	41.5
1/2	13	1/4	1	1	2	1	2	1/8	3.3	450	550	415	510	25	29	15.4	23.6	41.5
			2	4	5	7	10	1/8	3.3	450	550	415	510	25	29	15.4	23.6	41.5
5/8	16	3/8	1	1	3	1	5	1/8	3.3	450	550	415	510	25	29	15.4	23.6	41.5
			2	4	5	7	10	1/8	3.3	450	550	415	510	25	29	15.4	23.6	41.5
3/4	19	1/2	1	1	3	1	6	1/8	3.3	450	550	415	510	25	29	15.4	23.6	41.5
			2	4	5	7	10	1/8	3.3	450	550	415	510	25	29	15.4	23.6	41.5

Revision Status:

Date:	Explanation:
22/07/2008	P5710

CWB Approval:

Company's Approval:



NOTES:

1. Use stringer beads only. Restrict weld bead to ≤ 16 mm.
2. Weld Sizes represent effective weld throat thickness for qualified T range.
3. Target heat inputs at calculated average.
4. Tack weld parameters to be per main weld parameters
5. Backgouge as necessary to repair side 2.

Prepared by: FORGERON ENGINEERING LIMITED **Tel: (902) 835-7225**

Mosher ENGINEERING

WELDING PROCEDURE DATA SHEET

No.: **FCAW-1**

Date: July 22, 2008

Company Name:	Mosher Engineering	Wldg. Specification No:	RTR-4
Address:	1358 Queen Street	Reference WPQR:	
	Halifax Nova Scotia B3J 2H5	Ref. Standards:	CSA W47.1, W59 & W48

Material Information:

Position:	Flat	Welding Process:	FCAW	Consumable:	E491T-9MJ-H16/E4801T-9CH
Base Mat'l:	CAN G40.21 350WT Cat. 5 (27J @-40°C)	Mode of Transfer:	Spray Transfer	Shielding Gas:	75% Ar 25% CO2
		Process Mode:	Semi-Automatic	Gas Flow:	35 ft3/h
		Tungsten Type:		Tungsten Dia.:	in

Cleaning:	Wire brush and remove slag in between passes	PHT Temp:	As per Table 5.3 of CSA W59 °F
		PWHT Temp:	N/A °F

Typical Joint Details:

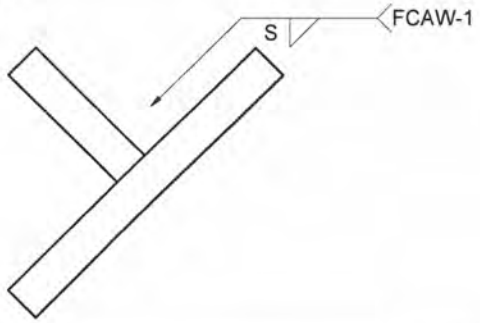

Typical Pass & Layer Sequence:

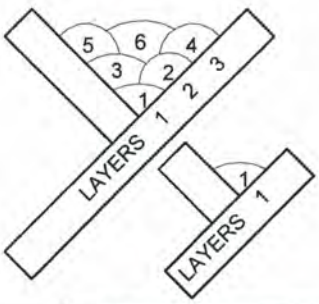

Joint Configuration:		**Joint Details:**		**Technique & Process Information:**		
Joint Type:	Tee, Corner, Lap	G = 0-1/16"	Q (°) =	Electrical Stickout:	3/4 ± 1/8	in
Weld Type:	Fillet Weld	R_F =		Nozzle Diameter:	1/2	in
Backgouging:	N/A			Average Deposition Rate:	8.0	lbs/h

Welding Parameters:

Weld Size in.	Weld Size mm	Depth of Prep'n in	Side No.	Layer No. Min	Layer No. Max	Pass No. Min	Pass No. Max	Electrode Size in.	Electrode Size mm	Current (Amps) DCRP Min	Current (Amps) DCRP Max	Wire Feed Speed (in/min) Min	Wire Feed Speed (in/min) Max	Arc Volts (Volts) Min	Arc Volts (Volts) Max	Travel Speed (in/min) Min	Travel Speed (in/min) Max	Average Heat Input (kJ/in)
3/16	4.8		1		1		1	0.045	1.2	225	275	380	460	29	31	20.0	24.0	20.5
1/4	6.4		1		1		1	0.045	1.2	225	275	380	460	29	31	20.0	24.0	20.5
5/16	7.9		1		1		1	0.045	1.2	225	275	380	460	29	31	16.6	22.4	20.5
3/8	9.5		1	1	2	1	3	0.045	1.2	225	275	380	460	29	31	17.3	23.4	22.1
1/2	13		1	1	2	1	3	0.045	1.2	225	275	380	460	29	31	12.4	16.8	30.8
5/8	16		1	1	3	1	6	0.045	1.2	226	275	380	460	29	31	12.4	16.8	30.8

Revision Status:

Date:	Explanation:
22/07/2008	Per PQR P5745

NOTES:

1. Use stringer beads only. Restrict weld bead to ≤ 16 mm.
2. Weld Sizes represent effective weld throat thickness for qualified T range.
3. Target heat inputs at calc'd average. Max. Heat Input to 46.7 kJ/in

CWB Approval:

CWB Accepted

CWB

Sep 09, 2008

Valid only if welding consumables are certified by the CWB

Company's Approval:

REGISTERED PROFESSIONAL ENGINEER * PROVINCE OF NOVA SCOTIA * DATE 07/22/2008 7601

Prepared by: FORGERON ENGINEERING LIMITED **Tel:** (902) 835-7225

Mosher ENGINEERING

WELDING PROCEDURE DATA SHEET

No.: **FCAW-2**

Date: July 22, 2008

Company Name:	Mosher Engineering	Wldg. Specification No:	RTR-4
Address:	1358 Queen Street	Reference WPQR:	
	Halifax Nova Scotia B3J 2H5	Ref. Standards:	CSA W47.1, W59 & W48

Material Information:

Position:	Horizontal	Welding Process:	FCAW	Consumable:	E491T-9MJ-H16/E4801T-9-CH	
Base Mat'l:	CAN G40.21 350WT Cat. 5 (27J @-40°C)	Mode of Transfer:	Spray Transfer	Shielding Gas:	75% Ar 25% CO2	
		Process Mode:	Semi-Automatic	Gas Flow:	35	ft3/h
		Tungsten Type:		Tungsten Dia.:		in
Cleaning:	Wire brush and remove slag in between passes	PHT Temp:			As per Table 5.3 of CSA W59	°F
		PWHT Temp:			N/A	°F

Typical Joint Details:

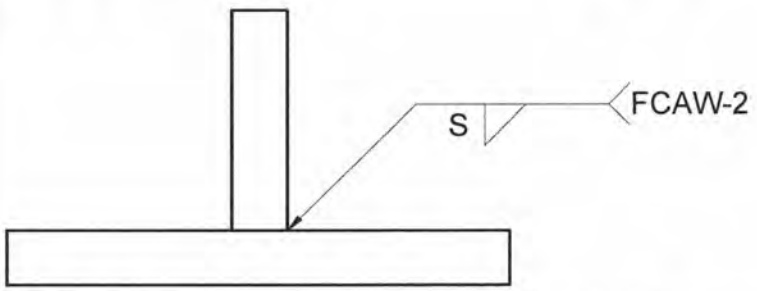

Typical Pass & Layer Sequence:

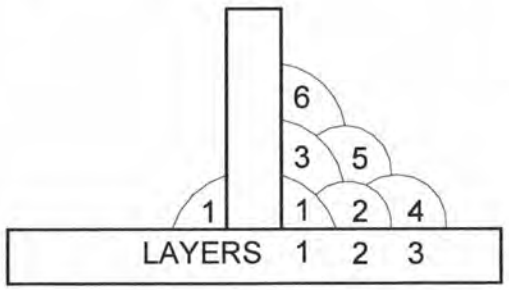

Joint Configuration:		**Joint Details:**		**Technique & Process Information:**		
Joint Type:	Tee, Corner, Lap	G = 0-1/16"	Q (°) =	Electrical Stickout:	3/4 ± 1/8	in
Weld Type:	Fillet Weld	R_F =		Nozzle Diameter:	1/2	in
Backgouging:	N/A			Average Deposition Rate:	8.0	lbs/h

Welding Parameters:

Weld Size in.	Weld Size mm	Depth of Prep'n in	Side No.	Layer No. Min	Layer No. Max	Pass No. Min	Pass No. Max	Electrode Size in.	Electrode Size mm	Current (Amps) DCRP Min	Current (Amps) DCRP Max	Wire Feed Speed (in/min) Min	Wire Feed Speed (in/min) Max	Arc Volts (Volts) Min	Arc Volts (Volts) Max	Travel Speed (in/min) Min	Travel Speed (in/min) Max	Average Heat Input (kJ/in)
3/16	4.8		1		1		1	0.045	1.2	225	275	380	460	29	31	20.0	24.0	20.5
1/4	6.4		1		1		1	0.045	1.2	225	275	380	460	29	31	20.0	24.0	20.5
5/16	7.9		1		1		1	0.045	1.2	225	275	380	460	29	31	16.6	22.4	20.5
3/8	9.5		1	1	2	1	3	0.045	1.2	225	275	380	460	29	31	17.3	23.4	22.1
1/2	13		1	1	2	1	3	0.045	1.2	225	275	380	460	29	31	12.4	16.8	30.8
5/8	16		1	1	3	1	6	0.045	1.2	226	275	380	460	29	31	12.4	16.8	30.8

Revision Status:

Date:	Explanation:
22/07/2008	Per PQR P5745

NOTES:

1. Use stringer beads only. Restrict weld bead to ≤ 16 mm.
2. Weld Sizes represent effective weld throat thickness for qualified T range.
3. Target heat inputs at calc'd average. Max. Heat Input to 46.7 kJ/in

CWB Approval:

CWB Accepted

CWB

Sep 09, 2008

Valid only if welding consumables are certified by the CWB

Company's Approval:

REGISTERED PROFESSIONAL ENGINEER
DATE 07/22/2008
7601
PROVINCE OF NOVA SCOTIA

Prepared by: FORGERON ENGINEERING LIMITED **Tel:** (902) 835-7225

Mosher ENGINEERING

WELDING PROCEDURE DATA SHEET

No.: **FCAW-3**

Date: July 22, 2008

Company Name:	Mosher Engineering	Wldg. Specification No:	RTR-4
Address:	1358 Queen Street	Reference WPQR:	
	Halifax Nova Scotia B3J 2H5	Ref. Standards:	CSA W47.1, W59 & W48

Material Information:

Position:	Vertical Up	Welding Process:	FCAW	Consumable:	E491T-9MJ-H16/E4801T-9CH	
Base Mat'l:	CAN G40.21 350WT Cat. 5 (27J @-40°C)	Mode of Transfer:	Spray Transfer	Shielding Gas:	75% Ar 25% CO2	
		Process Mode:	Semi-Automatic	Gas Flow:	35	ft3/h
		Tungsten Type:		Tungsten Dia.:		in

Cleaning:	Wire brush and remove slag in between passes	PHT Temp:	As per Table 5.3 of CSA W59	°F
		PWHT Temp:	N/A	°F

Typical Joint Details:

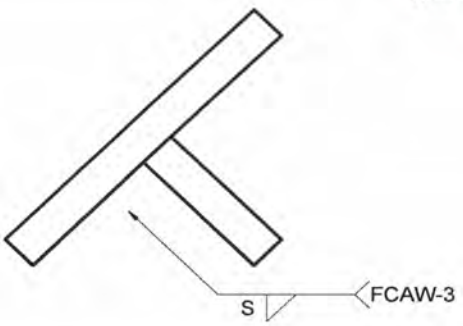

Typical Pass & Layer Sequence:

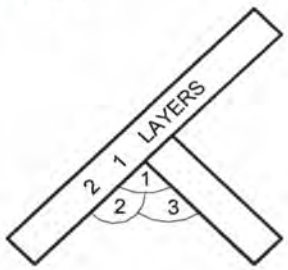

Joint Configuration:		**Joint Details:**		**Technique & Process Information:**		
Joint Type:	Tee, Corner, Lap	G = 0-1/16"	Q (°) =	Electrical Stickout:	3/4 ± 1/8	in
Weld Type:	Fillet Weld	R_F =		Nozzle Diameter:	1/2	in
Backgouging:	N/A			Average Deposition Rate:	5.0	lbs/h

Welding Parameters:

Weld Size in.	Weld Size mm	Depth of Prep'n in	Side No.	Layer No. Min	Layer No. Max	Pass No. Min	Pass No. Max	Electrode Size in.	Electrode Size mm	Current (Amps) DCRP Min	Current (Amps) DCRP Max	Wire Feed Speed (in/min) Min	Wire Feed Speed (in/min) Max	Arc Volts (Volts) Min	Arc Volts (Volts) Max	Travel Speed (in/min) Min	Travel Speed (in/min) Max	Average Heat Input (kJ/in)
3/16	4.8		1		1		1	0.045	1.2	150	250	200	300	26	29	28.8	38.9	9.7
1/4	6.4		1		1		1	0.045	1.2	150	250	200	300	26	29	16.2	21.9	17.3
5/16	7.9		1		1		1	0.045	1.2	150	250	200	300	26	29	10.4	14.0	26.0
3/8	9.5		1	1	2	1	3	0.045	1.2	150	250	200	300	26	29	10.8	14.6	26.0
1/2	13		1	1	2	1	3	0.045	1.2	150	250	200	300	26	29	6.1	8.2	46.2

On the Basis of **PREVIOUS TESTS ACCUMULATED BY THE CWB**

Revision Status:

Date:	Explanation:
22/07/2008	Per PQR P5745

NOTES:

1. Use stringer beads only. Restrict weld bead to ≤ 16 mm.
2. Weld Sizes represent effective weld throat thickness for qualified T range.
3. Target heat inputs at calc'd average. Max. Heat Input to 46.7 kJ/in

CWB Approval:

CWB Accepted

CWB

Sep 09, 2008

Valid only if welding consumables are certified by the CWB

Company's Approval:

REGISTERED PROFESSIONAL ENGINEER * PROVINCE OF NOVA SCOTIA * DATE 07/22/2008 7661

Prepared by: FORGERON ENGINEERING LIMITED Tel: (902) 835-7225

Mosher ENGINEERING

WELDING PROCEDURE DATA SHEET

No.: **FCAW-4**

Date: July 22, 2008

Company Name:	Mosher Engineering	Wldg. Specification No:	RTR-4
Address:	1358 Queen Street	Reference WPQR:	
	Halifax Nova Scotia B3J 2H5	Ref. Standards:	CSA W47.1, W59 & W48

Material Information:

Position:	Overhead	Welding Process:	FCAW	Consumable:	E491T-9MJ-H16/E4801T-9CH	
Base Mat'l:	CAN G40.21 350WT Cat. 5 (27J @-40°C)	Mode of Transfer:	Spray Transfer	Shielding Gas:	75% Ar 25% CO2	
		Process Mode:	Semi-Automatic	Gas Flow:	35	ft3/h
		Tungsten Type:		Tungsten Dia.:		in
Cleaning:	Wire brush and remove slag in between passes	PHT Temp:			As per Table 5.3 of CSA W59	°F
		PWHT Temp:			N/A	°F

Typical Joint Details:

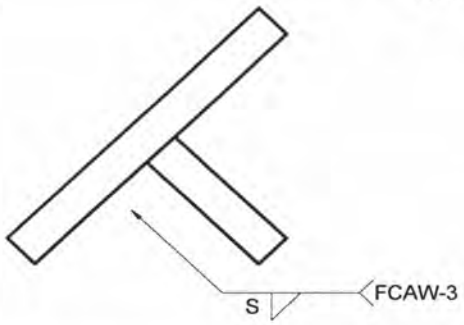

Typical Pass & Layer Sequence:

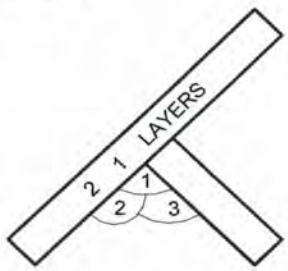

Joint Configuration:		**Joint Details:**		**Technique & Process Information:**		
Joint Type:	Tee, Corner, Lap	G = 0-1/16"	Q (°) =	Electrical Stickout:	3/4 ± 1/8	in
Weld Type:	Fillet Weld	R_F =		Nozzle Diameter:	1/2	in
Backgouging:	N/A			Average Deposition Rate:	5.0	lbs/h

Welding Parameters:

Weld Size in.	Weld Size mm	Depth of Prep'n in	Side No.	Layer No. Min	Layer No. Max	Pass No. Min	Pass No. Max	Electrode Size in.	Electrode Size mm	Current (Amps) DCRP Min	Current (Amps) DCRP Max	Wire Feed Speed (in/min) Min	Wire Feed Speed (in/min) Max	Arc Volts (Volts) Min	Arc Volts (Volts) Max	Travel Speed (in/min) Min	Travel Speed (in/min) Max	Average Heat Input (kJ/in)
3/16	4.8		1		1		1	0.045	1.2	150	250	200	300	26	29	28.8	38.9	9.7
1/4	6.4		1		1		1	0.045	1.2	150	250	200	300	26	29	16.2	21.9	17.3
5/16	7.9		1		1		1	0.045	1.2	150	250	200	300	26	29	16.2	21.9	17.3
3/8	9.5		1	1	2	1	3	0.045	1.2	150	250	200	300	26	29	10.8	14.6	26.0
1/2	13		1	1	2	1	3	0.045	1.2	150	250	200	300	26	29	6.1	8.2	46.2

On the Basis of **PREVIOUS TESTS ACCUMULATED BY THE CWB**

Revision Status:

Date:	Explanation:
22/07/2008	Per PQR P5745

NOTES:

1. Use stringer beads only. Restrict weld bead to ≤ 16 mm.
2. Weld Sizes represent effective weld throat thickness for qualified T range.
3. Target heat inputs at calc'd average. Max. Heat Input to 46.7 kJ/in

CWB Approval:

CWB Accepted

CWB

Sep 09, 2008

Valid only if welding consumables are certified by the CWB

Company's Approval:

REGISTERED PROFESSIONAL ENGINEER * PROVINCE OF NOVA SCOTIA * DATE 07/22/2008 7601

Prepared by: FORGERON ENGINEERING LIMITED **Tel:** (902) 835-7225

RTR FORM S-101, 1992 to CSA W47.1	**RTR ENGINEERING WELDING PROCEDURE DATA SHEET**	No. FCAW-4-IN1	Date MARCH 28, 2002

Company Name and Complete Address	**MOSHER ENGINEERING LIMITED** **2089 Upper Water Street** **Halifax, Nova Scotia, B3J 2R7**	WPS No.	RTR-4(A)
		Applicable Standard(s)	CSA W47.1, W59 & W48.
		Electrode Classification	E49XT9M-H16 X=1 or 2
Welding Process & Mode	☐ SMAW ☐ SAW ☐ GTAW (Tungsten) Type: ☒ FCAW ☐ GMAW ☐ ESW ☐ SW Size: ☐ Manual ☒ Semi-Automatic ☐ Machine ☐ Automatic	☒ Preheat Minimum as per CSA W59 ☐ Other	
Material Designation	**Steel groups 1,2 & 3 of Table 11-1 W59 for type A (without color matching), for type T (without regard to impact values)**	Welding Position: **FLAT**	Interpass Temperature: Minimum **as above**; Maximum **500 deg. F**

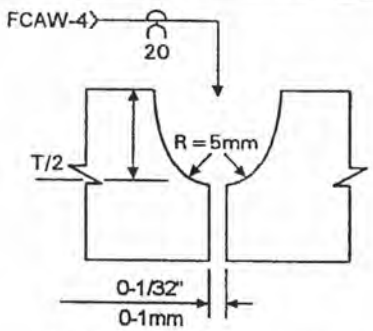

Sketch Of Typical Joint Preperation

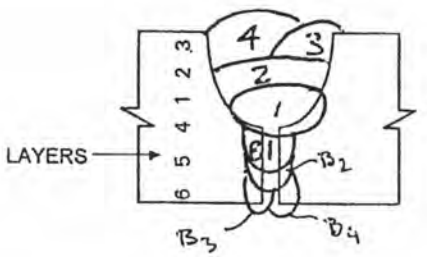

Typical Pass and Layer Sequence

Groove Weld Complete Joint Penetration	Groove Weld Partial Joint Penetration	Joint Type as per CSA W59	Automatic or Semi-Automatic
☒ Back-gouged to sound metal ☐ Welded onto steel backing ☐ Other	☐ Minimum as per CSA W59 ☐ Others **Fillet Weld** ☐ Minimum as per CSA W59	☒ Butt ☐ Tee ☐ Lap ☐ Edge ☐ Corner	Electrical Stickout: **3/4" +/- 3/16"** Shielding Gas: **75Ar/25CO2** cu.ft /hr. **30-45** Flux

Material Thickness	ETT, or Fillet Size	Side No.	Layer Number	Pass Number	Electrode (in) Size (mm)	Current Polarity	Amperes +/-8%	Wire Feed Speed (in/min)	Volts +/-8%	Arc Travel Speed (in/min)
1/4" 6mm		1	1	1	.045 1.2	DCRP	180	250-325	23	11 +/- 3
		2	6	B1*	.045 1.2	DCRP	180	250-325	23	12 +/- 4
5/16" 8mm		1	1	1/2	.045 1.2	DCRP	180	250-325	23	11 +/- 3
		2	5-6	B1-B2*	.045 1.2	DCRP	180	250-325	23	12 +/- 4
3/8" 10mm		1	1-2	1-2	.045 1.2	DCRP	190	265-340	23	11 +/- 3
		2	5-6	B1-B3*	.045 1.2	DCRP	190	265-340	23	12 +/- 4
1/2" 12mm		1	1-3	1-3	.045 1.2	DCRP	200	275-350	24	11 +/- 3
		2	5-6	B1-B3*	.045 1.2	DCRP	200	275-350	24	12 +/- 4
5/8" 16mm		1	1-3	1-4	1/16 1.6	DCRP	275	230-300	27	11 +/- 3
		2	4-6	B1-B4*	1/16 1.6	DCRP	275	230-300	27	12 +/- 4

Revision Date	Explanation

NOTES: *NUMBER OF PASSES MAY BE INCREASED TO FILL BACK-GOUGING

CWB Approval

CWB Accepted

CWB

Sep 16, 2008

Valid only if welding consumables are certified by the CWB

Engineer's Stamp

REGISTERED PROFESSIONAL ENGINEER * PROVINCE OF NOVA SCOTIA *

DATE 11/9/02

S. KEAY

7601

Mosher ENGINEERING

WELDING PROCEDURE DATA SHEET

No.: **SAW-06-CVN**

Date: June 11, 2008

Company Name:	Mosher Engineering	Wldg. Specification No:	SAW-1
Address:	1358 Queen Street	Reference WPQR:	
	Halifax Nova Scotia B3J 2H5	Ref. Standards:	CSA W47.1, W59 & W48

Material Information:

Position:	Horizontal	Welding Process:	SAW	Consumable:	F7A4-EM12K-H8
Base Mat'l:	CAN G40.21 350WT Cat. 5 (27J @-40°C)	Mode of Transfer:	Spray Transfer	Shielding Gas:	N/A
		Process Mode:	Automatic	Gas Flow:	NA ft3/h
		Tungsten Type:		Tungsten Dia.:	NA in

Cleaning:	Wire brush and remove slag in between passes	PHT Temp:	15°C or 59 °F
		PWHT Temp:	NA °F

Typical Joint Details:

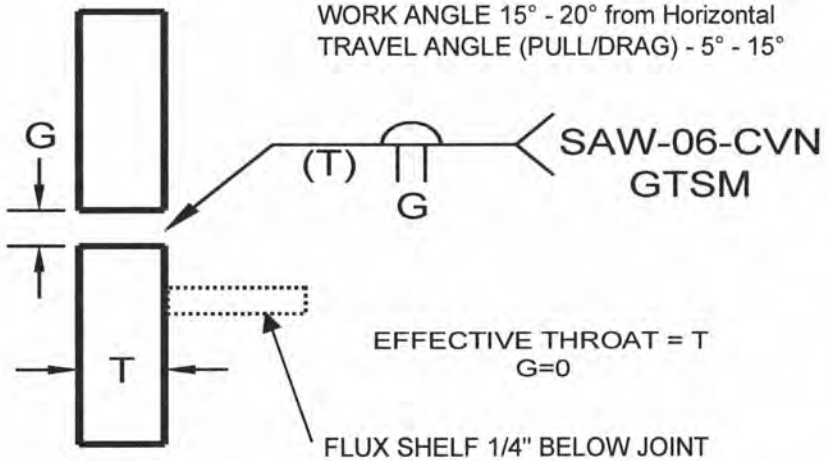

Typical Pass & Layer Sequence:

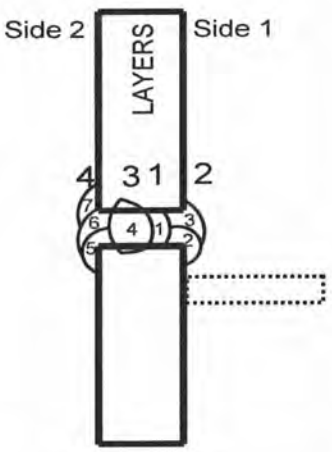

Joint Configuration:		**Joint Details:**		**Technique & Process Information:**		
Joint Type:	Butt	G = 3/32	⍉ (°) = 0	Electrical Stickout:	1 1/2 ± 1/4	in
Weld Type:	Complete Joint Penetration	R_F = 0		Nozzle Diameter:	3/4	in
Backgouging:	Backgouged to Sound Metal			Average Deposition Rate:	11.1	lbs/h

Welding Parameters:

Weld Size in.	Weld Size mm	Depth of Prep'n in	Side No.	Layer No. Min	Layer No. Max	Pass No. Min	Pass No. Max	Electrode Size in.	Electrode Size mm	Current (Amps) DCRP Min	Current (Amps) DCRP Max	Wire Feed Speed (in/min) Min	Wire Feed Speed (in/min) Max	Arc Volts (Volts) Min	Arc Volts (Volts) Max	Travel Speed (in/min) Min	Travel Speed (in/min) Max	Average Heat Input (kJ/in)
3/8	9.5		1	1	2	1	3	1/8	3.3	350	450	41	51	25	29	19.1	25.3	30.3
			2	3	4	4	6	1/8	3.3	350	450	41	51	25	29	19.1	25.3	30.3
7/16	11		1	1	2	1	3	1/8	3.3	350	450	41	51	25	29	19.1	25.3	30.3
			2	3	4	4	6	1/8	3.3	350	450	41	51	25	29	19.1	25.3	30.3
1/2	13		1	1	2	1	2	1/8	3.3	350	450	41	51	25	29	19.1	25.3	30.3
			2	3	4	4	6	1/8	3.3	350	450	41	51	25	29	19.1	25.3	30.3

Revision Status:	
Date:	Explanation:
7/22/08	Per PQR P5709

NOTES:

1. Use stringer beads only. Restrict weld bead to ≤ 16 mm.
2. Weld Sizes represent effective weld throat thickness for qualified T range.
3. Target heat inputs at calculated average.
4. Tack weld parameters to be per main weld parameters
5. Backgouge as necessary to repair side 2.

CWB Approval:

CWB Accepted

CWB

Jul 28, 2008

Valid only if welding consumables are certified by the CWB

Company's Approval:

REGISTERED PROFESSIONAL ENGINEER * PROVINCE OF NOVA SCOTIA * DATE 07/22/2008

Prepared by: FORGERON ENGINEERING LIMITED Tel: (902) 835-7225

Mosher ENGINEERING

WELDING PROCEDURE DATA SHEET

No.: **SAW-10-CVN**

Date: June 11, 2008

Company Name:	Mosher Engineering	Wldg. Specification No:	SAW-1
Address:	1358 Queen Street	Reference WPQR:	
	Halifax Nova Scotia B3J 2H5	Ref. Standards:	CSA W47.1, W59 & W48

Material Information:

Position:	Horizontal	Welding Process:	SAW	Consumable:	F7A4-EM12K-H8	
Base Mat'l:	CAN G40.21 350WT Cat. 5 (27J @-40°C)	Mode of Transfer:	Spray Transfer	Shielding Gas:	N/A	
		Process Mode:	Automatic	Gas Flow:	NA	ft3/h
		Tungsten Type:		Tungsten Dia.:	NA	in

Cleaning:	Wire brush and remove slag in between passes	PHT Temp:	15°C or 59 °F
		PWHT Temp:	NA °F

Typical Joint Details:

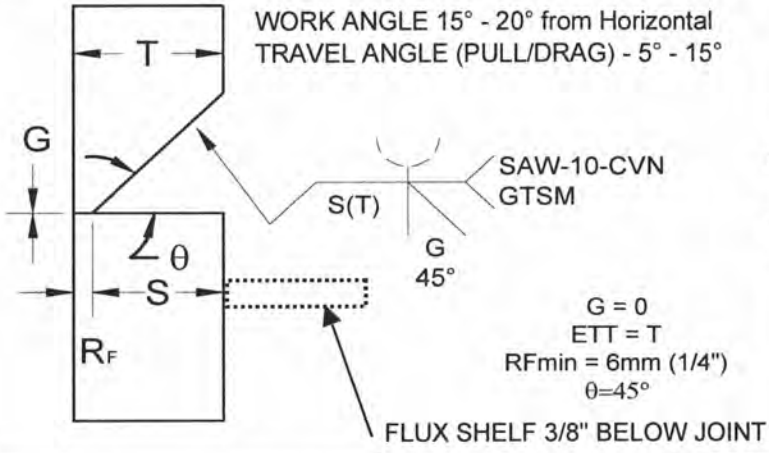

Typical Pass & Layer Sequence:

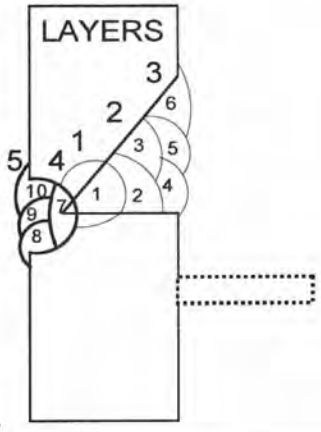

Joint Configuration:		**Joint Details:**		**Technique & Process Information:**		
Joint Type:	Butt	G = 0	Θ (°) = 45	Electrical Stickout:	1 1/4 ± 1/4	in
Weld Type:	Complete Joint Penetration	R_F = 1/4		Nozzle Diameter:	3/4	in
Backgouging:	Backgouged to Sound Metal			Average Deposition Rate:	11.1	lbs/h

Welding Parameters:

Weld Size in.	Weld Size mm	Depth of Prep'n in	Side No.	Layer No. Min	Layer No. Max	Pass No. Min	Pass No. Max	Electrode Size in.	Electrode Size mm	Current (Amps) DCRP Min	Current (Amps) DCRP Max	Wire Feed Speed (in/min) Min	Wire Feed Speed (in/min) Max	Arc Volts (Volts) Min	Arc Volts (Volts) Max	Travel Speed (in/min) Min	Travel Speed (in/min) Max	Average Heat Input (kJ/in)
7/16	11	3/16	1	1	2	1	2	1/8	3.3	450	550	42	51	25	29	15.4	23.6	41.5
			2	4	5	7	10	1/8	3.3	450	550	42	51	25	29	15.4	23.6	41.5
1/2	13	1/4	1	1	2	1	2	1/8	3.3	450	550	42	51	25	29	15.4	23.6	41.5
			2	4	5	7	10	1/8	3.3	450	550	42	51	25	29	15.4	23.6	41.5
5/8	16	3/8	1	1	3	1	5	1/8	3.3	450	550	42	51	25	29	15.4	23.6	41.5
			2	4	5	7	10	1/8	3.3	450	550	42	51	25	29	15.4	23.6	41.5
3/4	19	1/2	1	1	3	1	6	1/8	3.3	450	550	42	51	25	29	15.4	23.6	41.5
			2	4	5	7	10	1/8	3.3	450	550	42	51	25	29	15.4	23.6	41.5

Revision Status:

Date:	Explanation:
22/07/2008	P5710

NOTES:

1. Use stringer beads only. Restrict weld bead to ≤ 16 mm.
2. Weld Sizes represent effective weld throat thickness for qualified T range.
3. Target heat inputs at calculated average.
4. Tack weld parameters to be per main weld parameters
5. Backgouge as necessary to repair side 2.

CWB Approval:

CWB Accepted

CWB

Jul 28, 2008

Valid only if welding consumables are certified by the CWB

Company's Approval:

REGISTERED PROFESSIONAL ENGINEER * PROVINCE OF NOVA SCOTIA * DATE 07/22/2008 7601

Prepared by: FORGERON ENGINEERING LIMITED **Tel:** (902) 835-7225

Mosher ENGINEERING

WELDING PROCEDURE DATA SHEET

No.: **FCAW-1-CVN**

Date: July 22, 2008

Company Name:	Mosher Engineering			Wldg. Specification No:	RTR-4
Address:	1358 Queen Street			Reference WPQR:	
	Halifax	Nova Scotia	B3J 2H5	Ref. Standards:	CSA W47.1, W59 & W48

Material Information:

Position:	Flat	Welding Process:	FCAW	Consumable:	E491T-9MJ-H16/E4801T-9CH	
Base Mat'l:	CAN G40.21 350WT Cat. 5 (27J @-40°C)	Mode of Transfer:	Spray Transfer	Shielding Gas:	75% Ar 25% CO2	
		Process Mode:	Semi-Automatic	Gas Flow:	35	ft3/h
		Tungsten Type:		Tungsten Dia.:		in
Cleaning:	Wire brush and remove slag in between passes	PHT Temp:			As per Table 5.3 of CSA W59	°F
		PWHT Temp:			N/A	°F

Typical Joint Details:

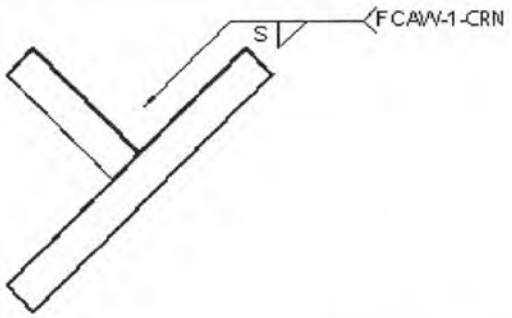

Typical Pass & Layer Sequence:

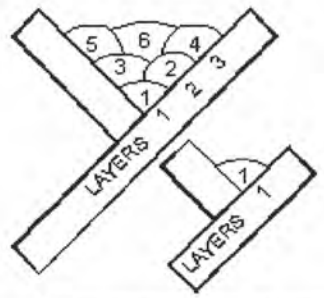

Joint Configuration:		**Joint Details:**		**Technique & Process Information:**		
Joint Type:	Tee, Corner, Lap	G = 0-1/16"	Q (°) =	Electrical Stickout:	3/4 ± 1/8	in
Weld Type:	Fillet Weld	R_F =		Nozzle Diameter:	1/2	in
Backgouging:	N/A			Average Deposition Rate:	8.0	lbs/h

Welding Parameters:

Weld Size in.	Weld Size mm	Depth of Prep'n in	Side No.	Layer No. Min	Layer No. Max	Pass No. Min	Pass No. Max	Electrode Size in.	Electrode Size mm	Current (Amps) DCRP Min	Current (Amps) DCRP Max	Wire Feed Speed (in/min) Min	Wire Feed Speed (in/min) Max	Arc Volts (Volts) Min	Arc Volts (Volts) Max	Travel Speed (in/min) Min	Travel Speed (in/min) Max	Average Heat Input (kJ/in)
3/16	4.8		1		1		1	0.045	1.2	225	275	380	460	29	31	20.0	24.0	20.5
1/4	6.4		1		1		1	0.045	1.2	225	275	380	460	29	31	20.0	24.0	20.5
5/16	7.9		1		1		1	0.045	1.2	225	275	380	460	29	31	16.6	22.4	20.5
3/8	9.5		1	1	2	1	3	0.045	1.2	225	275	380	460	29	31	17.3	23.4	22.1
1/2	13		1	1	2	1	3	0.045	1.2	225	275	380	460	29	31	12.4	16.8	30.8
5/8	16		1	1	3	1	6	0.045	1.2	226	275	380	460	29	31	12.4	16.8	30.8

Revision Status:

Date:	Explanation:
7/22/2008	Per PQR P5745
2/10/2009	Rev. WPDSnumber, added "CVN" to #

NOTES:

1. Use stringer beads only. Restrict weld bead to ≤ 16 mm.
2. Weld Sizes represent effective weld throat thickness for qualified T range.
3. Target heat inputs at calc'd average. Max. Heat Input to 46.7 kJ/in

CWB Approval:

CWB Accepted

CWB

Mar 03, 2009

Valid only if welding consumables are certified by the CWB

Company's Approval:

REGISTERED PROFESSIONAL ENGINEER · PROVINCE OF NOVA SCOTIA ·

DATE: 2/10/09

T. E. FORGERON

2913

Prepared by: FORGERON ENGINEERING LIMITED **Tel:** (902) 835-7225

Mosher ENGINEERING

WELDING PROCEDURE DATA SHEET

No.: **FCAW-2-CVN**

Date: July 22, 2008

Company Name:	Mosher Engineering	Wldg. Specification No:	RTR-4
Address:	1358 Queen Street	Reference WPQR:	
	Halifax Nova Scotia B3J 2H5	Ref. Standards:	CSA W47.1, W59 & W48

Material Information:

Position:	Horizontal	Welding Process:	FCAW	Consumable:	E491T-9-H16/E4801T-9-CH
Base Mat'l:	CAN G40.21 350WT Cat. 5 (27J @-40°C)	Mode of Transfer:	Spray Transfer	Shielding Gas:	75% Ar 25% CO2
		Process Mode:	Semi-Automatic	Gas Flow:	35 ft3/h
		Tungsten Type:		Tungsten Dia.:	in
Cleaning:	Wire brush and remove slag in between passes	PHT Temp:		As per Table 5.3 of CSA W59	°F
		PWHT Temp:		N/A	°F

Typical Joint Details:

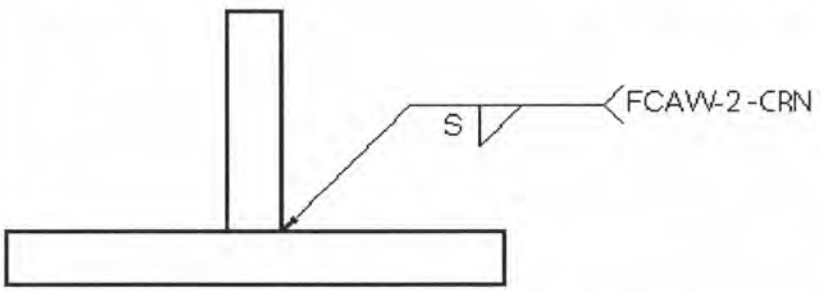

Typical Pass & Layer Sequence:

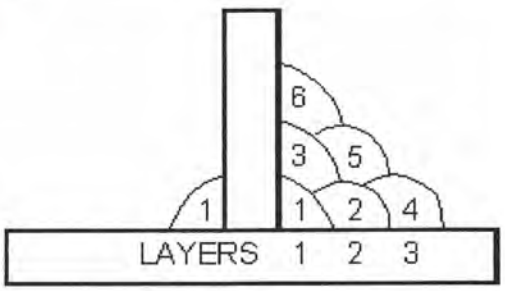

Joint Configuration:		**Joint Details:**		**Technique & Process Information:**		
Joint Type:	Tee, Corner, Lap	G = 0-1/16"	Q (°) =	Electrical Stickout:	3/4 ± 1/8	in
Weld Type:	Fillet Weld	R_F =		Nozzle Diameter:	1/2	in
Backgouging:	N/A			Average Deposition Rate:	8.0	lbs/h

Welding Parameters:

Weld Size in.	Weld Size mm	Depth of Prep'n in	Side No.	Layer No. Min	Layer No. Max	Pass No. Min	Pass No. Max	Electrode Size in.	Electrode Size mm	Current (Amps) DCRP Min	Current (Amps) DCRP Max	Wire Feed Speed (in/min) Min	Wire Feed Speed (in/min) Max	Arc Volts (Volts) Min	Arc Volts (Volts) Max	Travel Speed (in/min) Min	Travel Speed (in/min) Max	Average Heat Input (kJ/in)
3/16	4.8		1		1		1	0.045	1.2	225	275	380	460	29	31	20.0	24.0	20.5
1/4	6.4		1		1		1	0.045	1.2	225	275	380	460	29	31	20.0	24.0	20.5
5/16	7.9		1		1		1	0.045	1.2	225	275	380	460	29	31	16.6	22.4	20.5
3/8	9.5		1	1	2	1	3	0.045	1.2	225	275	380	460	29	31	17.3	23.4	22.1
1/2	13		1	1	2	1	3	0.045	1.2	225	275	380	460	29	31	12.4	16.8	30.8
5/8	16		1	1	3	1	6	0.045	1.2	226	275	380	460	29	31	12.4	16.8	30.8

Revision Status:

Date:	Explanation:
7/22/2008	Per PQR P5745
2/10/2009	Rev. WPDS number, added "CVN" to #

NOTES:

1. Use stringer beads only. Restrict weld bead to ≤ 16 mm.
2. Weld Sizes represent effective weld throat thickness for qualified T range.
3. Target heat inputs at calc'd average. Max. Heat Input to 46.7 kJ/in

CWB Approval:

CWB Accepted

CWB

Mar 03, 2009

Valid only if welding consumables are certified by the CWB

Company's Approval:

REGISTERED PROFESSIONAL ENGINEER
DATE: 2/10/09
T. E. FORGERON
2913
PROVINCE OF NOVA SCOTIA

Prepared by: FORGERON ENGINEERING LIMITED **Tel:** (902) 835-7225

Mosher ENGINEERING

WELDING PROCEDURE DATA SHEET

No.: **FCAW-3-CVN**

Date: July 22, 2008

Company Name:	Mosher Engineering	Wldg. Specification No:	RTR-4
Address:	1358 Queen Street	Reference WPQR:	
	Halifax Nova Scotia B3J 2H5	Ref. Standards:	CSA W47.1, W59 & W48

Material Information:

Position:	Vertical Up	Welding Process:	FCAW	Consumable:	E491T-9MJ-H16/E4801T-9CH
Base Mat'l:	CAN G40.21 350WT Cat. 5 (27J @-40°C)	Mode of Transfer:	Spray Transfer	Shielding Gas:	75% Ar 25% CO2
		Process Mode:	Semi-Automatic	Gas Flow:	35 ft3/h
		Tungsten Type:		Tungsten Dia.:	in

Cleaning:	Wire brush and remove slag in between passes	PHT Temp:	As per Table 5.3 of CSA W59	°F
		PWHT Temp:	N/A	°F

Typical Joint Details:

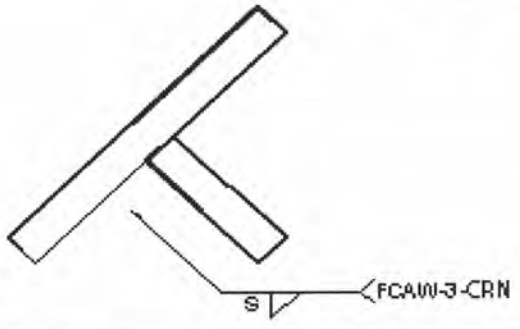

Typical Pass & Layer Sequence:

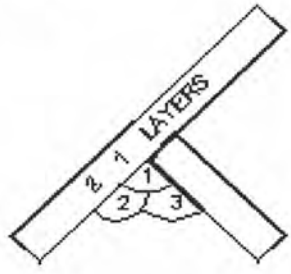

Joint Configuration:		**Joint Details:**		**Technique & Process Information:**		
Joint Type:	Tee, Corner, Lap	G = 0-1/16"	Q (°) =	Electrical Stickout:	3/4 ± 1/8	in
Weld Type:	Fillet Weld	R_F =		Nozzle Diameter:	1/2	in
Backgouging:	N/A			Average Deposition Rate:	5.0	lbs/h

Welding Parameters:

Weld Size in.	Weld Size mm	Depth of Prep'n in	Side No.	Layer No. Min	Layer No. Max	Pass No. Min	Pass No. Max	Electrode Size in.	Electrode Size mm	Current (Amps) DCRP Min	Current (Amps) DCRP Max	Wire Feed Speed (in/min) Min	Wire Feed Speed (in/min) Max	Arc Volts (Volts) Min	Arc Volts (Volts) Max	Travel Speed (in/min) Min	Travel Speed (in/min) Max	Average Heat Input (kJ/in)
3/16	4.8		1		1		1	0.045	1.2	150	250	200	300	26	29	28.8	38.9	9.7
1/4	6.4		1		1		1	0.045	1.2	150	250	200	300	26	29	16.2	21.9	17.3
5/16	7.9		1	1	2	1	3	0.045	1.2	150	250	200	300	26	29	10.4	14.0	26.0
3/8	9.5		1	1	2	1	3	0.045	1.2	150	250	200	300	26	29	10.8	14.6	26.0
1/2	13		1	1	2	1	3	0.045	1.2	150	250	200	300	26	29	6.1	8.2	46.2

On the Basis of **PREVIOUS TESTS ACCUMULATED BY THE CWB**

Revision Status:

Date:	Explanation:
7/22/2008	Per PQR P5745
9/10/2009	Rev. WPDS number, added "CVN" to #

NOTES:

1. Use stringer beads only. Restrict weld bead to ≤ 16 mm.
2. Weld Sizes represent effective weld throat thickness for qualified T range.
3. Target heat inputs at calc'd average. Max. Heat Input to 46.7 kJ/in

CWB Approval:

CWB Accepted

CWB

Mar 03, 2009

Valid only if welding consumables are certified by the CWB

Company's Approval:

REGISTERED PROFESSIONAL ENGINEER · PROVINCE OF NOVA SCOTIA · DATE: 9/10/09 · T. E. FORGERON 2913

Prepared by: FORGERON ENGINEERING LIMITED **Tel:** (902) 835-7225

Mosher ENGINEERING

WELDING PROCEDURE DATA SHEET

No.: **FCAW-4-CVN**

Date: July 22, 2008

Company Name:	Mosher Engineering	Wldg. Specification No:	RTR-4
Address:	1358 Queen Street	Reference WPQR:	
	Halifax Nova Scotia B3J 2H5	Ref. Standards:	CSA W47.1, W59 & W48

Material Information:

Position:	Overhead	Welding Process:	FCAW	Consumable:	E491T-9MJ-H16/E4801T-9CH
Base Mat'l:	CAN G40.21 350WT Cat. 5 (27J @-40°C)	Mode of Transfer:	Spray Transfer	Shielding Gas:	75% Ar 25% CO2
		Process Mode:	Semi-Automatic	Gas Flow:	35 ft3/h
		Tungsten Type:		Tungsten Dia.:	in

Cleaning:	Wire brush and remove slag in between passes	PHT Temp:	As per Table 5.3 of CSA W59 °F
		PWHT Temp:	N/A °F

Typical Joint Details:

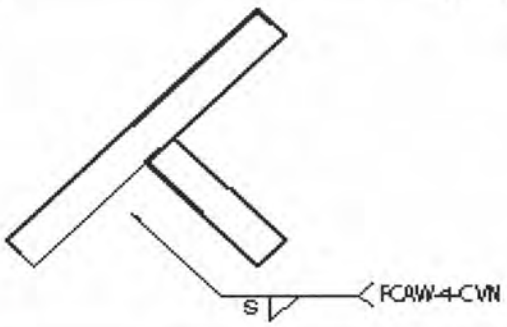

Typical Pass & Layer Sequence:

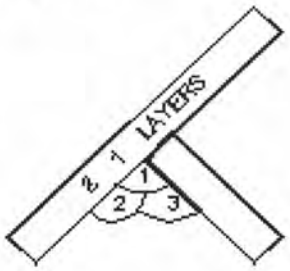

Joint Configuration:		**Joint Details:**		**Technique & Process Information:**		
Joint Type:	Tee, Corner, Lap	G = 0-1/16"	Q (°) =	Electrical Stickout:	3/4 ± 1/8	in
Weld Type:	Fillet Weld	R_F =		Nozzle Diameter:	1/2	in
Backgouging:	N/A			Average Deposition Rate:	5.0	lbs/h

Welding Parameters:

Weld Size in.	Weld Size mm	Depth of Prep'n in	Side No.	Layer No. Min	Layer No. Max	Pass No. Min	Pass No. Max	Electrode Size in.	Electrode Size mm	Current (Amps) DCRP Min	Current (Amps) DCRP Max	Wire Feed Speed (in/min) Min	Wire Feed Speed (in/min) Max	Arc Volts (Volts) Min	Arc Volts (Volts) Max	Travel Speed (in/min) Min	Travel Speed (in/min) Max	Average Heat Input (kJ/in)
3/16	4.8		1		1		1	0.045	1.2	150	250	200	300	26	29	28.8	38.9	9.7
1/4	6.4		1		1		1	0.045	1.2	150	250	200	300	26	29	16.2	21.9	17.3
5/16	7.9		1		1		1	0.045	1.2	150	250	200	300	26	29	16.2	21.9	17.3
3/8	9.5		1	1	2	1	3	0.045	1.2	150	250	200	300	26	29	10.8	14.6	26.0
1/2	13		1	1	2	1	3	0.045	1.2	150	250	200	300	26	29	6.1	8.2	46.2

On the Basis of **PREVIOUS TESTS ACCUMULATED BY THE CWB**

Revision Status:

Date:	Explanation:
7/22/2008	Per PQR P5745
2/10/2009	Rev. WPDS number, added "CVN" to #

NOTES:

1. Use stringer beads only. Restrict weld bead to ≤ 16 mm.
2. Weld Sizes represent effective weld throat thickness for qualified T range.
3. Target heat inputs at calc'd average. Max. Heat Input to 46.7 kJ/in

CWB Approval:

CWB Accepted

CWB

Mar 03, 2009

Valid only if welding consumables are certified by the CWB

Company's Approval:

REGISTERED PROFESSIONAL ENGINEER
DATE 2/10/09
T. E. FORGERON
2913
PROVINCE OF NOVA SCOTIA

Prepared by: FORGERON ENGINEERING LIMITED Tel: (902) 835-7225

Mosher ENGINEERING

WELDING PROCEDURE DATA SHEET

No.: **FCAW-8-CVN**

Date: Febuary 10, 2009

Company Name:	Mosher Engineering			Wldg. Specification No:	RTR-4
Address:	1358 Queen Street			Reference WPQR:	
	Halifax	Nova Scotia	B3J 2H5	Ref. Standards:	CSA W47.1, W59 & W48

Material Information:

Position:	Flat	Welding Process:	FCAW	Consumable:	E491T-12MJ-H4	
Base Mat'l:	CAN G40.21 350WT Cat. 5 (27J @-40°C)	Mode of Transfer:	Globular Transfer	Shielding Gas:	75% Ar 25% CO2	
		Process Mode:	Semi-Automatic	Gas Flow:	45	ft3/h
		Tungsten Type:		Tungsten Dia.:		in

Cleaning:	Wire brush and remove slag in between passes	PHT Temp:	15°C or 59 °F
		PWHT Temp:	N/A °F

Typical Joint Details:

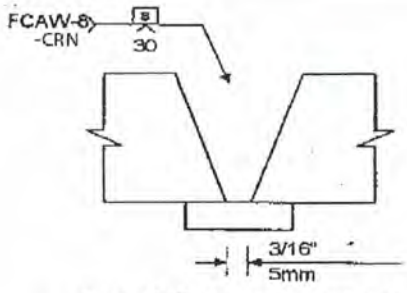

Sketch Of Typical Joint Preperation

Typical Pass & Layer Sequence:

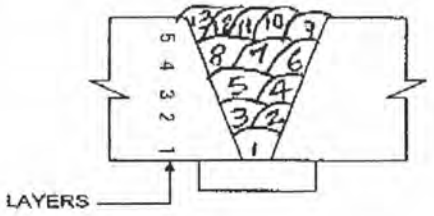

Typical Pass and Layer Sequence

Joint Configuration:		**Joint Details:**		**Technique & Process Information:**			
Joint Type:	Butt	G = 3/16"	Q (°) =	Electrical Stickout:	3/4	± 1/8	in
Weld Type:	Complete Joint Penetration	R_F =		Nozzle Diameter:	1/2		in
Backgouging:	N/A			Average Deposition Rate:	7.0		lbs/h

Welding Parameters:

Weld Size in.	Weld Size mm	Depth of Prep'n in	Side No.	Layer No. Min	Layer No. Max	Pass No. Min	Pass No. Max	Electrode Size in.	Electrode Size mm	Current (Amps) DCRP Min	Current (Amps) DCRP Max	Wire Feed Speed (in/min) Min	Wire Feed Speed (in/min) Max	Arc Volts (Volts) Min	Arc Volts (Volts) Max	Travel Speed (in/min) Min	Travel Speed (in/min) Max	Average Heat Input (kJ/in)
3/8	10	3/8	1	1	2	1	3	0.045	1.2	200	240	300	400	27	29	17.0	23.0	18.5
1/2	13	1/2	1	1	3	1	5	0.045	1.2	200	240	300	400	27	29	17.0	23.0	18.5
5/8	16	5/8	1	1	4	1	8	0.045	1.2	200	240	300	400	27	29	17.0	23.0	18.5
3/4	19	3/4	1	1	5	1	13	0.045	1.2	200	240	300	400	27	29	17.0	23.0	18.5

Revision Status:

Date:	Explanation:
7/22/2008	Per PQR P5744

NOTES:

1. Use stringer beads only. Restrict weld bead to ≤ 16 mm.
2. Weld Sizes represent effective weld throat thickness for qualified T range.
3. Target heat inputs at calc'd average. Max. Heat Input to 46.7 kJ/in

CWB Approval:

CWB Accepted

CWB

Mar 03, 2009

Valid only if welding consumables are certified by the CWB

Company's Approval:

REGISTERED PROFESSIONAL ENGINEER
DATE: 2/10/09
T. E. FORGERON
2913
PROVINCE OF NOVA SCOTIA

Prepared by: FORGERON ENGINEERING LIMITED **Tel:** (902) 835-7225

Mosher ENGINEERING

WELDING PROCEDURE DATA SHEET

No.: **FCAW-15-CVN**

Date: December 1, 2008

Company Name:	Mosher Engineering	Wldg. Specification No:	RTR-4
Address:	1358 Queen Street	Reference WPQR:	
	Halifax Nova Scotia B3J 2H5	Ref. Standards:	CSA W47.1, W59 & AWS D1.1

Material Information:

Position:	Vertical Up	Welding Process:	FCAW	Consumable:	E491T-12MJ-H4	
Base Mat'l:	CAN G40.21 350WT Cat. 5 (27J @-40°C)	Mode of Transfer:	Globular Transfer	Shielding Gas:	75% Ar 25% CO2	
		Process Mode:	Semi-Automatic	Gas Flow:	38	ft3/h
		Tungsten Type:		Tungsten Dia.:		in

Cleaning:	Wire brush and remove slag in between passes	PHT Temp:	15°C or 59 °F
		PWHT Temp:	NA °F

Typical Joint Details:

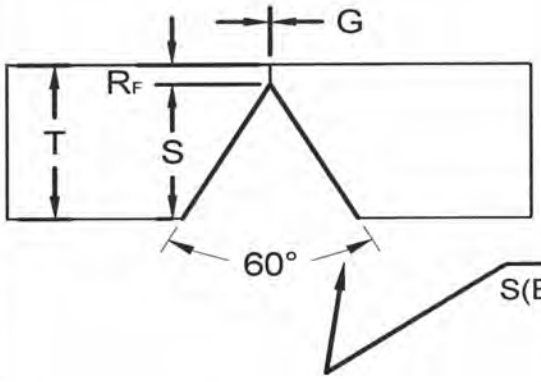

ETT = T
G = 0
RF = 1/8"

Typical Pass & Layer Sequence:

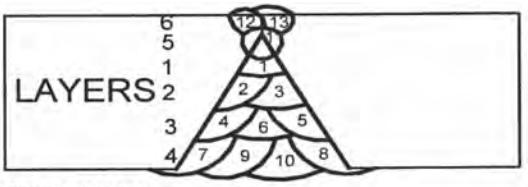

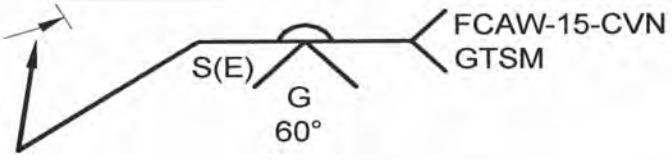

Joint Configuration:		Joint Details:		Technique & Process Information:		
Joint Type:	Butt	G = 0	Q (°) = 60	Electrical Stickout:	5/8 ± 1/8	in
Weld Type:	Complete Joint Penetration	RF = 1/8		Nozzle Diameter:	5/8	in
Backgouging:	Backgouged to Sound Metal			Average Deposition Rate:	6.5	lbs/h

Welding Parameters:

Weld Size in.	Weld Size mm	Depth of Prep'n in	Side No.	Layer No. Min	Layer No. Max	Pass No. Min	Pass No. Max	Electrode Size in.	Electrode Size mm	Current (Amps) DCRP Min	Current (Amps) DCRP Max	Wire Feed Speed (in/min) Min	Wire Feed Speed (in/min) Max	Arc Volts (Volts) Min	Arc Volts (Volts) Max	Travel Speed (in/min) Min	Travel Speed (in/min) Max	Average Heat Input (kJ/in)
3/8	9.5	1/4	1	1	2	1	3	0.045	1.2	155	175	175	225	24	27	21.0	28.0	15.4
			2	5	6	11	13	0.045	1.2	155	175	175	225	24	27	15.4	18.7	14.8
1/2	13	3/8	1	1	3	1	6	0.045	1.2	155	175	175	225	24	27	20.3	27.5	15.4
			2	5	6	11	13	0.045	1.2	155	175	175	225	24	27	15.4	18.7	17.5
5/8	16	1/2	1	1	3	1	6	0.045	1.2	155	175	175	225	24	27	19.0	25.7	15.4
			2	5	6	11	13	0.045	1.2	155	175	175	225	24	27	15.4	18.7	17.5
3/4	19	5/8	1	1	4	1	10	0.045	1.2	155	175	175	225	24	27	18.0	24.0	15.4
			2	5	6	11	13	0.045	1.2	155	175	175	225	24	27	15.4	18.7	17.5

Revision Status:

Date:	Explanation:
7/22/2008	P5744

NOTES:

1. Use stringer beads only. Restrict weld bead to ≤ 16 mm.
2. Weld Sizes represent effective weld throat thickness for qualified T range.
3. Target heat inputs at calc'd average. Max. Heat Input to 46.7 kJ/in
4. Tack weld parameters to be per main weld parameters
5. Backgouge as necessary to repair side 2.

CWB Approval:

CWB Accepted

CWB Dec 04, 2008

Valid only if welding consumables are certified by the CWB

Company's Approval:



Prepared by: FORGERON ENGINEERING LIMITED Tel: (902) 835-7225

On the Basis of **PREVIOUS TESTS ACCUMULATED BY THE CWB**

RTR FORM S-101, 1992
to CSA W47.1

RTR ENGINEERING
WELDING PROCEDURE DATA SHEET

No.	Date
SMAW-2	MARCH 28, 2002

Company Name and Complete Address	MOSHER ENGINEERING LIMITED 2089 Upper Water Street Halifax, Nova Scotia, B3J 2R7
Welding Process & Mode	[X] SMAW [ ] SAW [ ] GTAW (Tungsten) Type: ____ [ ] FCAW [ ] GMAW [ ] ESW [ ] SW Size: ____ [X] Manual [ ] Semi-Automatic [ ] Machine [ ] Automatic
Material Designation	Steel groups 1,2 & 3 of Table 11-1,W59 for type A (without color matching), for type T (without regard to impact values)
Welding Position	HORIZONTAL

WPS No.	RTR-1(A)
Applicable Standard(s)	CSA W47.1, W59 & W48.1
Electrode Classification	E48018
[X] Preheat Minimum as per CSA W59 [ ] Other	
Interpass Temperature	Minimum As above Maximum 450 deg. F

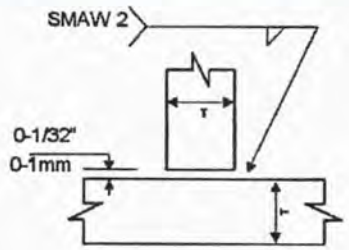

Sketch Of Typical Joint Preperation

1/8" </= T </= 1 1/4"

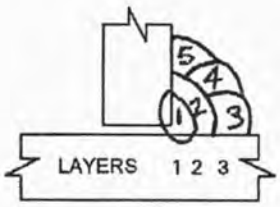

Typical Pass and Layer Sequence

Groove Weld Complete Joint Penetration
[ ] Back-gouged to sound metal
[ ] Welded onto steel backing
[ ] Other

Groove Weld Partial Joint Penetration
[ ] Minimum as per CSA W59
[ ] Others

Fillet Weld
[X] Minimum as per CSA W59

Joint Type as per CSA W59
[ ] Butt [X] Tee
[ ] Edge [X] Lap [X] Corner

Automatic or Semi-Automatic
Electrical Stickout
Shielding Gas ____ cu.ft /hr.
Flux

Material Thickness	ETT, or Fillet Size	Side No.	Layer Number	Pass Number	Electrode (in) Size (mm)	Current Polarity	Amperes	Wire Feed Speed (in/min)	Volts	Arc Travel Speed (in/min)
	1/8" 3mm		1	1	3/32 2.5	DCRP	75-95			
	3/16" 5mm		1	1	1/8 3.2	DCRP	110-140			
	1/4" 6mm		1	1	1/8 3.2	DCRP	110-140			
	5/16" 8mm		1-2	1-3	1/8 3.2	DCRP	110-140			
	OR		1-2	1-2	5/32 4.0	DCRP	160-200			
	3/8" 10mm		1-3	1-4*	5/32 4.0	DCRP	160-200			
	OR		1-2	1-3	3/16 5.0	DCRP	225-275			
	1/2" 12mm		1-3	1-5*	3/16 5.0	DCRP	225-275			

Revision Date	Explanation

NOTES: *NUMBER OF PASSES MAY VARY BY +/- 1 PASS

3mm fillet can only be applied to 3mm thick sheets.

CWB Approval

Welding Procedure Data Sheet
CWB Approved to CSA W47.1
APR 04 2002
Approval valid only when Welding Consumables certified by C.W.B. (Cl.8.2.2.1, CSA W47.1)

Engineer's Stamp

REGISTERED PROFESSIONAL ENGINEER
R. T. ROSE
SIGNATURE
02/03/29
PROVINCE OF NOVA SCOTIA

Mosher ENGINEERING

WELDING PROCEDURE DATA SHEET

No: **SMAW-06-CVN**

Date: May 5, 2008

Company Name:	Mosher Engineering	Wldg. Specification No:	RTR-1
Address:	1358 Queen Street	Reference WPQR:	
	Halifax Nova Scotia B3J 2H5	Ref. Standards:	CSA W47.1, W59 & W48

Material Information:

Position:	Horizontal	Welding Process:	SMAW	Consumable:	E4918/E48018/E7018
Base Mat'l:	CAN G40.21 350WT Cat. 5 (27J @-40°C)	Mode of Transfer:	N/A	Shielding Gas:	N/A
		Process Mode:	Manual	Gas Flow:	ft3/h
		Tungsten Type:		Tungsten Dia.:	in
Cleaning:	Wire brush and remove slag in between passes	PHT Temp:			15°C or 59 °F
		PWHT Temp:			NA °F

Typical Joint Details:

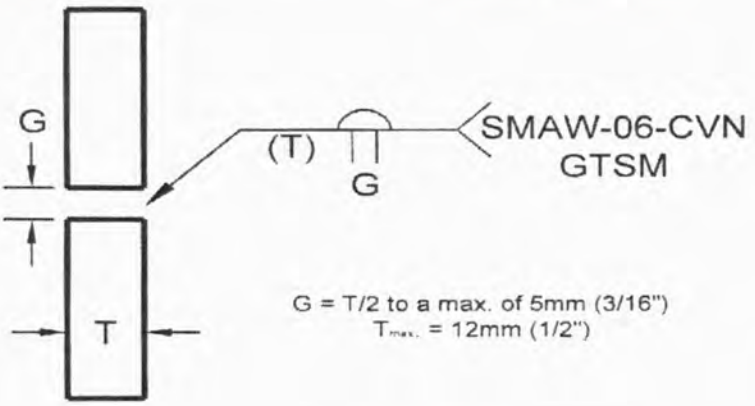

Typical Pass & Layer Sequence:

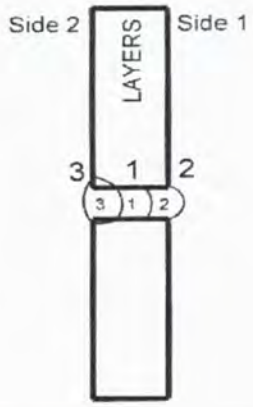

Joint Configuration:		Joint Details:		Technique & Process Information:	
Joint Type:	Butt, Tee, Corner	G = T/2	∠ (°) = 0	Electrical Stickout:	3/4 ± 1/8 in
Weld Type:	Complete Joint Penetration	R_F = 0		Nozzle Diameter:	1/2 in
Backgouging:	Backgouged to Sound Metal			Average Deposition Rate:	2.6 lbs/h

Welding Parameters:

Weld Size in	Weld Size mm	Depth of Prep'n in	Side No.	Layer No. Min	Layer No. Max	Pass No. Min	Pass No. Max	Electrode Size in.	Electrode Size mm	Current (Amps) DCRP Min	Current (Amps) DCRP Max	Wire Feed Speed (in/min) Min	Wire Feed Speed (in/min) Max	Arc Volts (Volts) Min	Arc Volts (Volts) Max	Travel Speed (in/min) Min	Travel Speed (in/min) Max	Average Heat Input (kJ/in)
1/4	6.4	1/4	1		1		1	3/32	2.4	75	95			20	22	5.7	7.7	16.0
			2		2		2	3/32	2.4	75	95			20	22	5.7	7.7	16.0
5/16	7.9	5/16	1	1	2	1	2	3/32	2.4	75	95			20	22	4.6	6.2	16.0
			2		3	3	3	3/32	2.4	75	95			20	22	5.7	7.7	16.0
3/8	9.5	3/8	1	1	2	1	2	3/32	2.4	75	95			20	22	3.8	5.1	16.0
			2		3	3	3	3/32	2.4	75	95			20	22	5.7	7.7	16.0

Revision Status:

Date:	Explanation:
22/07/2008	Per PQR P65JR78

NOTES:

1. Use stringer beads only. Restrict weld bead to ≤ 16 mm.
2. Weld Sizes represent effective weld throat thickness for qualified T range.
3. Target heat inputs at calculated average.
4. Tack weld parameters to be per main weld parameters
5. Backgouge as necessary to repair side 2.

CWB Approval:

CWB Accepted

CWB

Jul 25, 2008

Valid only if welding consumables are certified by the CWB

Company's Approval:

Prepared by: FORGERON ENGINEERING LIMITED Tel: (902) 835-7225

RTR FORM S-101, 1992 to CSA W47.1	**RTR ENGINEERING WELDING PROCEDURE DATA SHEET**	No. SMAW-31	Date MARCH 28, 2002

Company Name and Complete Address	**MOSHER ENGINEERING LIMITED** **2089 Upper Water Street** **Halifax, Nova Scotia, B3J 2R7**	WPS No.	**RTR-1(A)**
		Applicable Standard(s)	**CSA W47.1, W59 & W48.1**
		Electrode Classification	**E41011**
Welding Process & Mode	[x] SMAW [ ] SAW [ ] GTAW (Tungsten) Type: [ ] FCAW [ ] GMAW [ ] ESW [ ] SW Size: [x] Manual [ ] Semi-Automatic [ ] Machine [ ] Automatic	[x] Preheat Minimum as per CSA W59 [ ] Other	
Material Designation	**Steel group 2 from Table 5-3 of W59 Excluding 260WT, 300W, 300WT, A570 Gr. 50, A572 Gr. 50 & A607 Gr. 50**	Welding Position: **HORIZONTAL**	Interpass Temperature: Minimum **As above**; Maximum **450 deg. F**

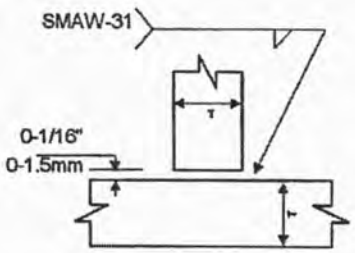

Sketch Of Typical Joint Preperation

3/16" </= T </= 1 1/4"

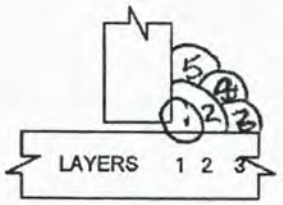

Typical Pass and Layer Sequence

Groove Weld Complete Joint Penetration	Groove Weld Partial Joint Penetration	Joint Type as per CSA W59	Automatic or Semi-Automatic
[ ] Back-gouged to sound metal [ ] Welded onto steel backing [ ] Other	[ ] Minimum as per CSA W59 [ ] Others **Fillet Weld** [x] Minimum as per CSA W59	[ ] Butt [x] Tee [ ] Edge [x] Lap [x] Corner	Electrical Stickout Shielding Gas (cu.ft /hr.) Flux

Material Thickness	ETT, or Fillet Size	Side No.	Layer Number	Pass Number	Electrode (in) Size (mm)	Current Polarity	Amperes	Wire Feed Speed (in/min)	Volts	Arc Travel Speed (in/min)
	3/16" 5mm		1	1	3/32 2.5	DCRP	55-75			
	1/4" 6mm		1	1	1/8 3.2	DCRP	95-115			
	OR		1	1	5/32 4.0	DCRP	130-160			
	5/16" 8mm		1-2	1-3*	5/32 4.0	DCRP	130-160			
	3/8" 10mm		1-3	1-5*	5/32 4.0	DCRP	130-160			
	OR		1-2	1-3*	3/16 5.0	DCRP	170-190			
	1/2" 12mm		1-3	1-5*	3/16 5.0	DCRP	170-190			

Revision Date	Explanation

NOTES: *NUMBER OF PASSES MAY VARY BY +/-1 PASS

CWB Approval

Welding Procedure Data Sheet
CWB Approved to CSA W47.1
APR 04 2002
Approval valid only when Welding Consumables certified by C.W.B. (Cl.8.2.2.1, CSA W47.1)

Engineer's Stamp

REGISTERED PROFESSIONAL ENGINEER
R. T. ROSE
SIGNATURE
02/03/28
PROVINCE OF NOVA SCOTIA

CWB Form 130E/2003-1

CANADIAN WELDING BUREAU
DIVISION OF CWB GROUP - INDUSTRY SERVICES

WELDING PROCEDURE QUALIFICATION REPORT

P 036339

REPORT ____ OF ____

WPDS No. A3332-1H

WPS No. A3300

MONTH	DAY	YEAR
06	24	2008

DATE OF TEST

APPLICABLE STANDARD
- ☐ CSA W47.1
- ☑ CSA W47.2
- ☐ CSA W186
- ☐ AWS D1.3
- ☐ OTHER ____

Company Code: D F B A R 2

RETEST ☑ YES ☐ NO | LAB WORK REQUIRED ☐ YES ☑ NO

INVOICING DATA

Hours on Site	1.5 HRS. @ 80.00 /HR. =	120.00	PR-01
Hours Travelling	0.5 HRS. @ 80.00 /HR. =	40.00	PR-02
Kilometres (kms)	27 KM. @ 0.48 /KM. =	12.96	PR-03
Travel Expenses			PR-08
Lab Charges	HRS. @ /HR. =		PR-04
Specimen Assessment	HRS. @ /HR. =		PR-05
Engineering Charge	HRS. @ /HR. =		PR-09
Outside Lab. Charges			PR-06/7

QUALIFICATION REQUESTED BY: ☑ COMPANY ☐ CWB

Company Name: D. F. Barnes Ltd

Location of Test: Goulds

CWB Witness: Leyi Feltham | Test Plate Number: 202

Signature of Comp. Rep.: Les Horn

Welder's Name: Wade L. Hillier | Welders N.T. Card Required ☐ Yes ☐ No

S.I.N.:

Base Materials: 1. Specification ASTM B221-02 Grade 6061-T6511; 2. Specification ASTM B221-02 Grade 6061-T6511

Preheat Temperature: Ambient 25° | Interpass Temperature MIN / MAX: NOT Recorder

Post-Weld Treatment: None

Cleaning Procedures: S.S. Wire Brush, Grinder

Welding Position(s): ☐ FLAT ☑ HORIZ. ☐ VERTICAL UP ☐ VERTICAL DOWN ☐ OVERHEAD ☐ OTHER ____

Welding Process: ☐ SAW ☑ GTAW ☐ SMAW ☐ PAW ☐ FCAW ☐ GMAW ☐ OTHER ____

Process Mode: ☑ Manual ☐ Semi-Automatic ☐ Machine ☐ Automatic

Method of Backgouging: N/A | Depth of Backgouging:

	Classification	Trade Name	Manufacturer
Filler Metal A	ER5356		Indalco
Filler Metal B			
Flux			

Tungsten Type: EWP | Tungsten Diameter: 4.0 mm

Shielding Gas: Argon | Flow Rate: 10L/min | Nozzle Size: 12 mm

Certified Electrode Used? ☑ Yes ☐ No | Current Type and Polarity: AC HF | Electrode Extension: ✓

Welding Sequence			Filler Metal		Arc Parameters		
Side	Layer	Pass	Size	W. Feed Speed	Amperes	Volts	Arc Travel Speed
UNITS			(mm)	(N/A)	A	V	(mm/min)
1	1	1	3.2		298	19	69

Welding Sequence			Filler Metal		Arc Parameters		
Side	Layer	Pass	Size	W. Feed Speed	Amperes	Volts	Arc Travel Speed
UNITS			( )	( )	A	V	( )

In the space below make a sketch to show: a) Joint geometry. b) Full welding symbol. c) Pass/layer sequence. d) Test specimens required.

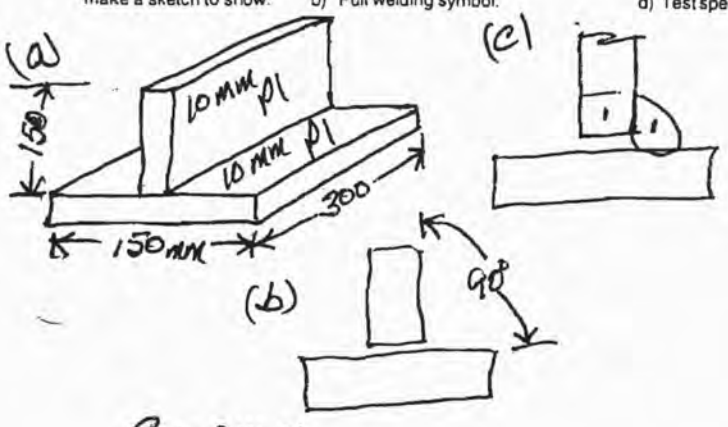

d) Specimen Extracted As per CSA W47.2 Fig 13

Failed due to Lack of Penetration in Fracture Specimen

LABORATORY EVALUATION

TEST	NO.	SAT.	UNSAT.	N/A
Root Bend		☐	☐	☐
Face Bend		☐	☐	☐
Side Bend		☐	☐	☐
Tensile		☐	☐	☐
Macro Etch		☐	☐	☐
Fracture		☐	☑	☐
Other(s)		☐	☐	☐
		☐	☐	☐

NOTES: Failed due to Lack of Root Fusion & Penetration

EVALUATION BY

DATE: 07 (MONTH) 09 (DAY) 2008 (YEAR)

CANADIAN WELDING BUREAU
DIVISION OF CWB GROUP - INDUSTRY SERVICES

WELDING PROCEDURE QUALIFICATION REPORT

RECEIVED JUL 04 2008

CWB Form 130E/99-1

REPORT ____ OF ____

DATE OF TEST (MONTH / DAY / YEAR)	APPLICABLE STANDARD	Company Code
06 / 24 / 2008	☐ CSA W47.1 ☑ CSA W47.2 ☐ CSA W186 ☐ AWS D1.3 ☐ OTHER ____	DFBAR2

P 5694 WPDS No. A3332-1H

WPS No. A3300

QUALIFICATION REQUESTED BY: ☑ COMPANY ☐ CWB

Company Name: D. F. Barnes Ltd

Location of Test: Goulds

CWB Witness: Lew Fetherham | Test Plate Number: 202

Signature of Comp. Rep.: [signature]

Welder's Name: Wade L. Hillier | Welders N.T. Card Required ☐ Yes ☐ No

S.I.N.:

Base Materials: 1. Specification ASTM B 221-02 Grade 6061-T6511; 2. Specification ASTM B 221-02 Grade 6061-T6511

Preheat Temperature: Ambient | Interpass Temperature MIN: N/A | MAX: N/A

Post-Weld Treatment: None

Cleaning Procedures: Stainless Steel Wire Brush

Welding Position(s): ☐ FLAT ☑ HORIZ. ☐ VERTICAL UP ☐ VERTICAL DOWN ☐ OVERHEAD ☐ OTHER ____

RETEST ☐ YES ☑ NO | LAB WORK REQUIRED ☐ YES ☑ NO

INVOICING DATA

Hours on Site	1.5	HRS. @	80.00	/HR. =	120.00
Hours Travelling	0.5	HRS. @	80.00	/HR. =	40.00
Kilometres (kms)	27	KM. @	0.48	/KM. =	12.96
Travel Expenses					

Welding Process: ☐ SAW ☑ GTAW ☐ SMAW ☐ PAW ☐ FCAW ☐ GMAW ☐ OTHER ____

Process Mode: ☑ Manual ☐ Semi-Automatic ☐ Machine ☐ Automatic

Method of Backgouging: N/A

Depth of Backgouging: N/A

	Classification	Trade Name	Manufacturer
Filler Metal A	ER5356	[illegible]	Indalco
Filler Metal B			
Flux			

Tungsten Type: EWP | Tungsten Diameter: 4.0 mm

Shielding Gas: Argon | Flow Rate: 10 L/min | Nozzle Size: 10 mm

Certified Electrode Used? ☑ Yes ☐ No | Current Type and Polarity: ACHF | Electrode Extension: —

Welding Sequence			Filler Metal		Arc Parameters		
Side	Layer	Pass	Size	W. Feed Speed	Amperes	Volts	Arc Travel Speed
UNITS			(mm)	( )	A	V	(mm/min)
1	1	1	3.2	NA	298	19	59

Welding Sequence			Filler Metal		Arc Parameters		
Side	Layer	Pass	Size	W. Feed Speed	Amperes	Volts	Arc Travel Speed
UNITS			( )	( )	A	V	( )

In the space below make a sketch to show: a) Joint geometry. b) Full welding symbol. c) Pass/layer sequence. d) Test specimens required.

(a)

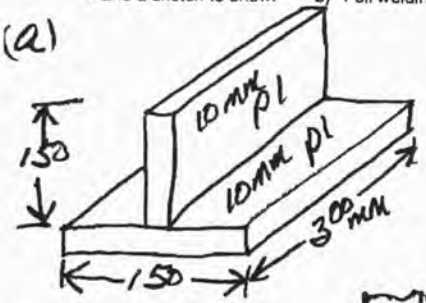

(c)

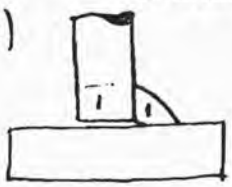

(d) Specimen extracted as per CSA, W47.2 Fig. 13

(b)



G = 0mm

Failed due to lack of penetration in Fracture specimen

LABORATORY EVALUATION

TEST	NO.	SAT.	UN-SAT.	N/A
Root Bend		☐	☐	☐
Face Bend		☐	☐	☐
Side Bend		☐	☐	☐
Tensile		☐	☐	☐
Macro Etch		☐	☑	☐
Fracture		☐	☑	☐
Other(s)		☐	☐	☐
		☐	☐	☐

NOTES: Failed due to LACK of Root Fusion & Penetration

EVALUATION BY: [signature]

DATE (MONTH / DAY / YEAR): 07 / 09 / 2008

CWB Form 130E/2003-1

CANADIAN WELDING BUREAU
DIVISION OF CWB GROUP - INDUSTRY SERVICES

WELDING PROCEDURE QUALIFICATION REPORT

P 036341

REPORT ____ OF ____

WPDS No. ____

WPS No. 3100

Company Code
METW01

DATE OF TEST (MONTH / DAY / YEAR)
06 / 26 / 2008

APPLICABLE STANDARD
- [x] CSA W47.1 [ ] CSA W47.2
- [ ] CSA W186 [ ] AWS D1.3
- [ ] OTHER S473

RETEST [ ] YES [x] NO — LAB WORK REQUIRED [x] YES [ ] NO

INVOICING DATA

Hours on Site	4 HRS. @ 80.00 /HR. =	320.00	PR-01
Hours Travelling	0.5 HRS. @ 80.00 /HR. =	40.00	PR-02
Kilometres (kms)	20 KM. @ 0.48 /KM. =	960	PR-03
Travel Expenses			PR-08
Lab Charges	HRS. @ /HR. =		PR-04
Specimen Assessment	HRS. @ /HR. =		PR-05
Engineering Charge	HRS. @ /HR. =		PR-09
Outside Lab. Charges			PR-06/7

QUALIFICATION REQUESTED BY: [x] COMPANY [ ] CWB

Company Name: Metal World

Location of Test: St. John's, NL

CWB Witness: Lew Feltham — Test Plate Number: 220

Signature of Comp. Rep.: [signature]

Welder's Name: Joe Fewer — Welders N.T. Card Required [ ] Yes [ ] No

S.I.N.:

Base Materials
1. Specification EN10225 Grade S355 G10
2. Specification EN10225 Grade S355 G10

Preheat Temperature: 75°C — Interpass Temperature MIN: 80°C — MAX: 120°C

Post-Weld Treatment: None

Cleaning Procedures: Chipping Hammer, Wire Brush, Grinder

Welding Position(s): [ ] FLAT [x] HORIZ. [ ] VERTICAL UP [ ] VERTICAL DOWN [ ] OVERHEAD [ ] OTHER

Welding Process: [ ] SAW [x] SMAW [x] FCAW [ ] OTHER ____ [ ] GTAW [ ] PAW [ ] GMAW
Process Mode: [x] Manual [x] Semi-Automatic [ ] Machine [ ] Automatic
Method of Backgouging: N/A
Depth of Backgouging:

	Classification	Trade Name	Manufacturer
Filler Metal A	E5518-C1	LA 8018	Air Liquide
Filler Metal B	81T1-N1	SAFDUAL 128	SAF
Flux			

Tungsten Type: — Tungsten Diameter:

Shielding Gas: 75% Ar 25% CO2 — Flow Rate: 22 L/min — Nozzle Size: 16 mm

Certified Electrode Used? [x] Yes [ ] No — Current Type and Polarity: DCRP — Electrode Extension: 16-20 mm

Welding Sequence			Filler Metal		Arc Parameters		
Side	Layer	Pass	Size	W. Feed Speed	Amperes	Volts	Arc Travel Speed
UNITS			(mm)	(m/min)	A	V	(mm/min)
1	1	1	3.2	N/A	132	21	45
1	2	2	1.6	4.4	240	23	191
1	3	3	1.6	4.4	238	23	291
1	3	4	1.6	5.0	250	23	315
1	4	5	1.6	5.0	265	23	250
1	4	6	1.6	5.0	282	22.5	297
1	5	7	1.6	5.0	270	22.5	370

Welding Sequence			Filler Metal		Arc Parameters		
Side	Layer	Pass	Size	W. Feed Speed	Amperes	Volts	Arc Travel Speed
UNITS			(mm)	(m/min)	A	V	(mm/min)
1	5	8	1.6	5.0	262	22.5	268
1	6	9	1.6	5.0	275	22.5	306
1	6	10	1.6	5.0	265	22.5	341
1	6	11	1.6	5.0	275	22.5	366
1	7	12-16	1.6	5.0	279	22.5	435

In the space below make a sketch to show: a) Joint geometry. b) Full welding symbol. c) Pass/layer sequence d) Test specimens required — d) Specimen Extracted as per Client's Instructions

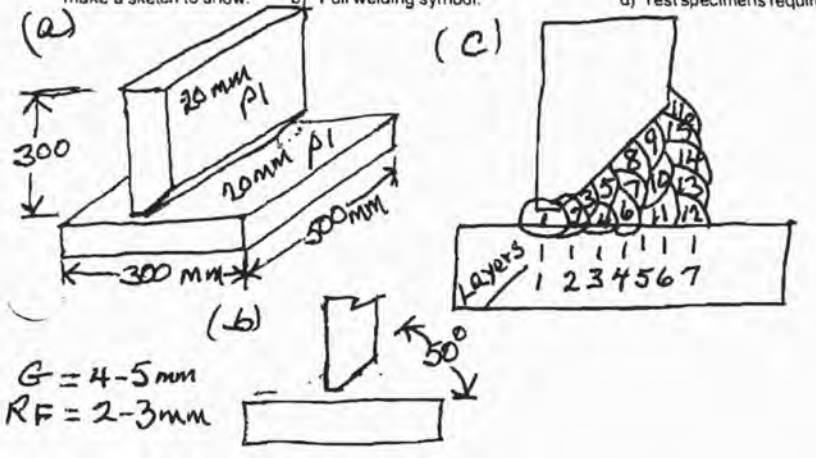

Failed Radiography due to Slag Inclusions

LABORATORY EVALUATION

TEST	NO.	SAT.	UNSAT.	N/A
Root Bend		[ ]	[ ]	[ ]
Face Bend		[ ]	[ ]	[ ]
Side Bend		[ ]	[ ]	[ ]
Tensile		[ ]	[ ]	[ ]
Macro Etch		[ ]	[ ]	[ ]
Fracture		[ ]	[ ]	[ ]
Other(s)		[ ]	[ ]	[ ]
		[ ]	[ ]	[ ]

NOTES: Failed Radiography due to Slag Inclusions

EVALUATION BY: [signature]

DATE (MONTH / DAY / YEAR): 07 / 09 / 2008

MOSHER ENGINEERING LIMITED 2089 Upper Water Street Halifax, Nova Scotia, B3J 2R7	TABLE MARCH 28, 2002

WELDING STANDARDS to CSA W47.1	CWB APPROVAL	ENGINEERS STAMP
TABLE OF CONTENTS	Welding Engineering Standards Received by CWB pursuant to CSA W47.1 APR 0 4 2002 Page 1-2	REGISTERED PROFESSIONAL ENGINEER R. T. ROSE SIGNATURE 02/03/28 PROVINCE OF NOVA SCOTIA

PART 1 - WELDING ENGINEERING STANDARDS

1 - GENERAL NOTES

2 - WELDING JOINTS, SYMBOLS AND DETAILS

a) Welding symbols and basic joints

b) Clarifications of "Arrow" and "Other" Side

c) Clarification of Intermittent & Staggered Fillet Welds

d) General Drafting and Design Information

3 - SUPPLEMENTARY WELD INFORMATION

a) Fillet Welds

b) Groove Welds

4 - SHOP STANDARDS

a) Acceptable and Unaccaptable Weld Profile

b) Splicing

c) Prepatation of Material

d) Assembly Practices

e) Allowable Workmanship Tolerances From Detailed Drawing

f) Control of Distortion and Shrinkage Stresses

g) Quality of Welds

PART II - WELDING PROCEDURE SPECIFICATIONS

RTR - 1 for SMAW

RTR - 4 for FCAW (With Shielding Gas)

RTR - 5 for GMAW

PART III - WELDING PROCEDURE DATA SHEETS

RTR - 1 for SMAW

RTR - 4 for FCAW (With Shielding Gas)

RTR - 5 for GMAW

MOSHER ENGINEERING LIMITED 2089 Upper Water Street Halifax, Nova Scotia, B3J 2R7	Page 1 MARCH 28, 2002

WELDING STANDARDS to CSA W47.1	CWB APPROVAL	ENGINEERS STAMP
GENERAL NOTES		REGISTERED PROFESSIONAL ENGINEER N. T. ROSE SIGNATURE 02/03/28 PROVINCE OF NOVA SCOTIA

1. General Notes

1.1 The Welding Standards of this firm are prepared in accordance with CSA Standard W47.1 - 1992. All welding will be performed in conformance with CSA Standard W59 - M1989, and to any revisions to the above mentioned Codes.

1.2 All welding operators employed will be qualified in accordance with CSA W47.1 and will be allowed to weld only the classifications (T and S), and positions for which they are qualified. They shall use only those welding processes and electrode classifications for which they are qualified.

1.3 Any welding sub-contracted by this form will be sublet only to firms approved and certified to CSA W47.1 - 1992 by the Canadian Welding Bureau. Drawings and welding procedures will be issued to the above sub-contractor so that welding quality is insured. (The subcontractor's CWB approved welding procedure may be used if satisfactory to the prime contractor.)

1.4 Changes in welding methods or welding engineering standards and additions to joints welded will be submitted to CWB for approval in accordance with Clause 6.4 of CSA Standard 47.1 before being used in production.

1.5 Only electrodes approved under CSA electrode standard or those conditionally approved under CSA Standard W47.1 shall be used. Each welding procedure data sheet will designate the electrode(s) to be used for the joint, the applicable codes and the number of the welding procedure specification which governs the data sheet application.

1.6 The individual data sheets will show the material specification(s) which may be welded.

WELDING STANDARDS to CSA W47.1	CWB APPROVAL	ENGINEERS STAMP
GENERAL NOTES		REGISTERED PROFESSIONAL ENGINEER · PROVINCE OF NOVA SCOTIA · R. T. ROSE SIGNATURE 02/03/28

1.7 Unless called for otherwise on a specific data sheet, vertical welds shall be made with progression of each pass in an upward direction.

1.8 All slag or flux remaining on any bead of welding shall be removed before laying down the next successive bead. Similarily with any new cracks, blow holes or porosity.

1.9 Metal surface to be welded shall be dry, clean and free from loose scale, paint and grease.

1.10 Specially designed anti- spatter compounds shall be used where called for on shop drawings.

1.11 No welding shall be done when temperature of the base metal is lower than -18 C (0 F) except with the express consent of the engineer. At temperatures below 0 C (32 F) the surfaces of all areas within 75mm (3") of the joint where a weld is to be deposited, shall be heated to a temperature at least warm to the hand before welding is commenced.

1.12 The operator and the work shall be adequately protected against the direct effect of wind, snow and rain.

WELDING STANDARDS to CSA W47.1	CWB APPROVAL	ENGINEERS STAMP
2.a WELDING SYMBOLS AND BASIC JOINTS		REGISTERED PROFESSIONAL ENGINEER · R. T. ROSE · SIGNATURE 02/03/28 · PROVINCE OF NOVA SCOTIA ·

1. Welding symbols shall be as shown in AWS Standard A2.4, Symbols for Welding and Nondestructive Testing. See Appendix D of CSAW59-M1989 for symbols from that Standard and additional conventions developed for incorporation into this Standard. Special requirements shall be fully explained by notes or details.

Detail of butt joints, corner joints, T-joints, lap joints and edge joints are shown in Appendix D, CSA W59-M1989. Standard location on elements of a welding symbol are also shown in this appendix.

MOSHER ENGINEERING LIMITED
2089 Upper Water Street
Halifax, Nova Scotia, B3J 2R7

MARCH 28, 2002

WELDING STANDARDS to CSA W47.1

CWB APPROVAL

ENGINEERS STAMP

REGISTERED PROFESSIONAL ENGINEER
R. T. ROSE
SIGNATURE
02/03/28
PROVINCE OF NOVA SCOTIA

2.b CLARIFICATION OF "ARROW" AND "OTHER" SIDE

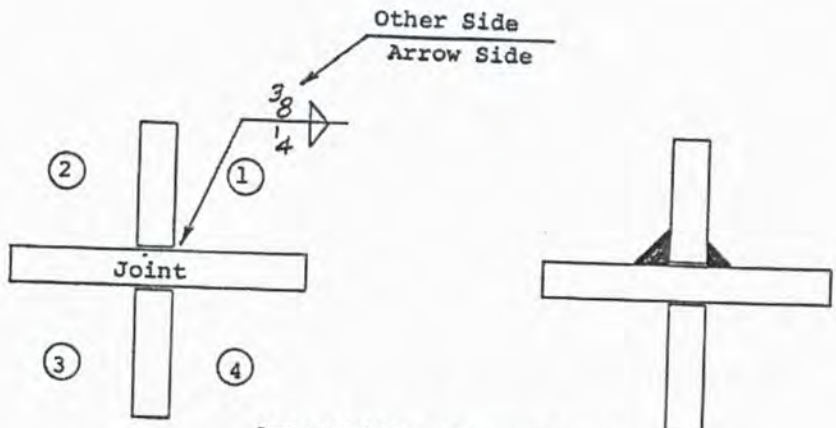

Arrow Side = Corner No. 1
Joint = Contact Area 1 - 2
Other Side = Corner No. 2

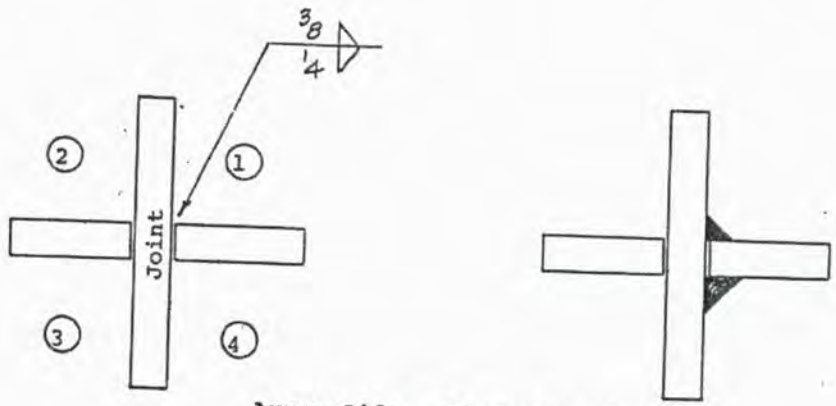

Arrow Side = Corner No. 1
Joint = Contract Area 1 - 4
Other Side = Corner No. 4

WELDING STANDARDS to CSA W47.1

CWB APPROVAL

ENGINEERS STAMP

REGISTERED PROFESSIONAL ENGINEER
R. T. ROSE
SIGNATURE
02/03/28
PROVINCE OF NOVA SCOTIA

2.c CLARIFICATION OF INTERMITTENT AND STAGGERED FILLET WELDS

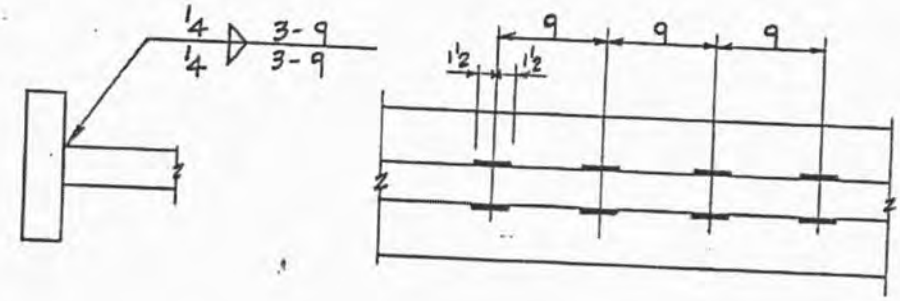

CHAIN INTERMITTENT FILLET WELD

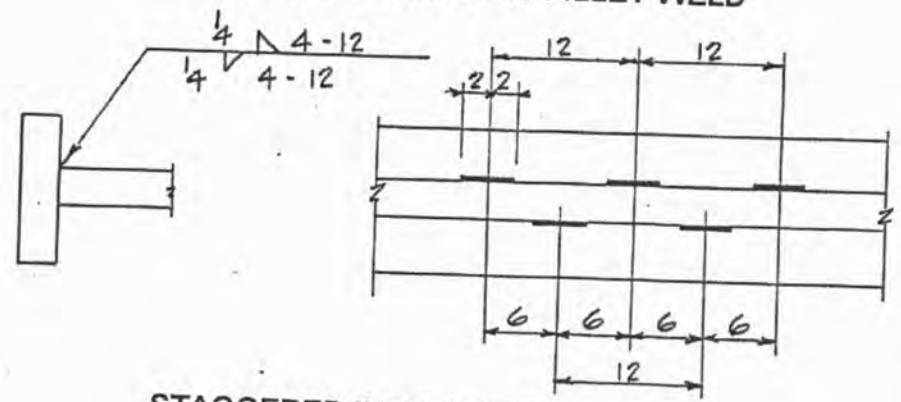

STAGGERED INTERMITTENT FILLET WELD

Note:

(a) When intermittent fillet welding is used by itself, the symbol indicates that increments shall be located at the ends of the dimensioned length.

(b) If required by actual length of the joint the length of increment of the welds at the end of the joint should be increased to terminate the weld at the end of the joint.

WELDING STANDARDS to CSA W47.1	CWB APPROVAL	ENGINEERS STAMP
2.d GENERAL DRAFTING AND DESIGN INFORMATION		REGISTERED PROFESSIONAL ENGINEER · R. T. ROSE · SIGNATURE 02/03/28 · PROVINCE OF NOVA SCOTIA ·

(1) Welds on both sides of the joint shall be shown by placing weld symbols on both sides of the reference line. The size of a fillet weld or groove weld (Depth unless it is complete joint penetration) shall be shown to the left of the weld symbol.

The length of a fillet or groove weld, when indicated on the welding symbol, shall be shown to the right of the weld symbol. Unless otherwise indicated on the welding symbol all welds shall be continous.

When no general note governing the dimensions of fillet welds or groove welds appears on the drawing the dimensions of fillet welds and groove welds on both sides of the joint shall be shown as follows.

(a) When both welds have the same dimensions, both shall be dimensioned.

(b) When the welds differ in dimensions, both shall be dimensioned.

(2) Symbols apply between abrupt changes in the direction of the welding or to the extent of hatching or dimension lines. Weld extending beyond abrupt changes in the direction of the welding shall be indicated by means of additional arrow points to each section of the joint to be welded. The above applies except when the weld all around symbol is used.

(3) When desired, General Notes, may be placed on a drawing to provide detailed information pertaining to predominant welds.

i.e. Unless otherwise indicated all fillet welds are 8mm (5/16") in size.

Such information need not be repeated on the symbol.

WELDING STANDARDS to CSA W47.1	CWB APPROVAL	ENGINEERS STAMP
2.d GENERAL DRAFTING AND DESIGN INFORMATION		REGISTERED PROFESSIONAL ENGINEER R. T. ROSE SIGNATURE 02/03/29 PROVINCE OF NOVA SCOTIA

(4) When only one member of a joint is to be prepared the arrow shall point with a definite break toward that member.

(5) All welds to be called up in Imperial Units unless drawing is designated as a metric drawing in which case all welds will be in Metric Units.

(6) The following finishing symbols, indicate the method, not the degree, of finish required for a weld.

C - Chipping

R - Rolling

G - Grinding

H - Hammering

M - Matching

The above does not include for normal cleaning which is always required after each weld pass.

WELDING STANDARDS to CSA W47.1	CWB APPROVAL	ENGINEERS STAMP
3 SUPPLEMENTARY WELD INFORMATION		REGISTERED PROFESSIONAL ENGINEER · R. T. ROSE · SIGNATURE · 02/03/28 · PROVINCE OF NOVA SCOTIA ·

3.a Fillet Welds

1. The effective area of a fillet weld shall be the effective weld length multiplied by the effective throat thickness.

2. The effective length of a fillet weld shall be the overall length of the full-size fillet, including end returns. No reduction in effective length shall be made for either the start or termination of the weld if the weld is full size throughout its length.

3. The effective length of a curved fillet weld shall be measured along the centreline of the effective throat.

4. The effective throat thickness shall be the shortest distance from the root to the face of the diagrammatic weld for all processes except SAW which will be governed by CSA W59-4.3.2.4.

5. Fillet welds may be used in skewed T-joints having a dihedral angle of not less than 60 degrees nor more than 120 degrees as shown in figure 4-2 and clause 4.3.2.5 of CSA W59-M1989

WELDING STANDARDS to CSA W47.1	CWB APPROVAL	ENGINEERS STAMP
3 SUPPLEMENTARY WELD INFORMATION		REGISTERED PROFESSIONAL ENGINEER · R. T. ROSE · SIGNATURE · 02/03/28 · PROVINCE OF NOVA SCOTIA ·

3.A Fillet Welds

4. The maximum fillet weld size permitted along the edge of material shall be:

   (a) The thickness of the material for material less than 6mm (1/4") thick.

   (b) 2mm(1/16") less than the thickness of material for 6mm (1/4") or more in thickness unless the weld is designated on the detail drawing to be built out to obtain full throat thickness.

   (c) The size of fillet welds on top of groove welds when required by the engineer for smoother transiton in "T" and corner joints shall not be less that t/4 where it is the thickness of the groove welded member, but need not to be more than 10mm (3/8"). They shall be mandatory for T-Joint subject to tension normal to the axis of the weld.

5. The minimum effective length of a fillet weld shall be 40mm (1 1/2") or 4 times the size of the fillet whichever is larger.

6. Fillet welds may be continous or intermittent except for CSA W59-12.4.14. 1.d which notes restriction on the use of intermittent welds in dynamically loaded structures.

7. The minimum overlap of parts in stress carrying lap joints shall be 5 times the thickness of the thinner part joined. Unless lateral deflection of the parts is prevented, they shall be connected by two transverse lines of fillet, or by longitudinal fillet welds along the edges or in slots.

WELDING STANDARDS to CSA W47.1	CWB APPROVAL	ENGINEERS STAMP
3 SUPPLEMENTARY WELD INFORMATION		REGISTERED PROFESSIONAL ENGINEER · R. T. ROSE · SIGNATURE 02/03/20 · PROVINCE OF NOVA SCOTIA ·

3.A Fillet Welds

8. Fillet welds shall not terminate at corners of parts of members but shall be returned continously, full size around the corner for a length equal to twice the weld size where such return can be made in the same plane.

9. The minimum fillet size as measured shall be shown in the table below (Table 3-1). Except that the weld size need not exceed the thickness of the thinner part joined unless a larger size is required by calculated stress. For this exception particular care shall be taken to provide sufficient heat input to ensure weld soundness.

When welding attachments to members which do not carry calculated stress, the requirements of the table below need not apply.

TABLE 3-1 MINIMUM FILLET SIZE

MATERIAL THICKNESS OF THICKER PART JOINED IN MILLIMETERS (INCHES)	MINIMUM SIZE OF FILLET WELD IN MILLIMETERS (INCHES)	
To 12mm (1/2") Inclusive	5mm (3/16")	Single Pass welds Must be used
Over 12mm (1/2") to 20mm (3/4")	6mm (1/4")	
Over 20mm (3/4")	8mm (5/16")	

WELDING STANDARDS to CSA W47.1	CWB APPROVAL	ENGINEERS STAMP
3 SUPPLEMENTARY WELD INFORMATION		REGISTERED PROFESSIONAL ENGINEER · R. T. ROSE · SIGNATURE 02/03/28 · PROVINCE OF NOVA SCOTIA ·

3.b Groove Welds

1. A complete penetration groove weld is defined as one made from one side on a backing bar or on both sides combined with back gouging to provide complete penetration and fusion of weld and base metal throughout the depth of the joint.

2. The effective area of a groove weld shall be the effective weld length multiplied by the efective throat thickness.

3. The effective throat thickness of a complete joint penetration groove weld shall be the thickness of the thinner part joined. (No increase is permitted for weld reinforcement.).

4. The minimum groove depth of single partial joint penetration groove welds or on each side of double partial joint penetration groove welds shall be in accordance with the Table 3.2 on page 12.

5. For details of Plug and Slot Welds refer to section 4.4.2 of CSA W59-M1989

6. For details of Flare Grooves and their effective throats refer to Section 4.3.1.6 of CSA W59-M1989

WELDING STANDARDS to CSA W47.1

CWB APPROVAL

ENGINEERS STAMP

REGISTERED PROFESSIONAL ENGINEER
R. T. ROSE
SIGNATURE
02/03/28
PROVINCE OF NOVA SCOTIA

3 SUPPLEMENTARY WELD INFORMATION

MINIMUM GROOVE DEPTH FOR PARTIAL JOINT PENETRATION GROOVE WELDS (NOT COMBINED WITH FILLET WELDS) TABLE 3-2

THICKNESS OF THICKER PART JOINED IN MILLIMETERS	MINIMUM GROOVE DEPTH	
	Groove Angle At Root > 45 < 60 (V, Bevel Grooves)	Groove Angle At Root > 60 (V, bevel J-,U-Grooves)
To 12mm (1/2") Inclusive	8mm (5/16")	5mm (3/16")
Over 12mm (1/2") to 20mm (3/4") Inclusive	10mm (3/8")	6mm (1/4")
Over 20mm (3/4") to 40mm (1 1/2") Inclusive	12mm (1/2")	8mm (5/16")
Over 40mm (1 1/2") to 60mm (2 1/4") Inclusive	14mm (9/16")	10mm (3/8")
Over 60mm (2 1/4") Inclusive	16mm (5/8")	12mm (1/2")

WELDING STANDARDS to CSA W47.1	CWB APPROVAL	ENGINEERS STAMP
3 SUPPLEMENTARY WELD INFORMATION		REGISTERED PROFESSIONAL ENGINEER · PROVINCE OF NOVA SCOTIA · R. T. ROSE SIGNATURE 02/03/28

3.b Groove Welds

5. The effective throat thickness of a partial joint penetration groove weld for joints with no root openingshall be the depth of camfer less 3mm (1/8") for grooves having an included angle at the root of the groove less than 60 but not less than 45 .

6. The effective throat thickness of a partial joint penetration groove weld shall be the depth of camfer for grooves having an included angle at the root of the groove of 60 or greater.

7. The effective throat thickness of a partial joint penetration groove weld reinforced with a fillet weld shall be the shortest distance between the root of the groove and the surface of the fillet less 3mm (1/8") where such reduction is required by Paragraph (5).

8. For hollow structural sections the effective throat thickness of Flare-V and Flare-Bevel Groove welds shall be established by the contractor. Unless otherwise approved by the engineer, this shall be done by means of trial welds for each set of procedural conditions shall then be sectioned and measured to establish welding techniques which will ensure that the design throat thickness is achieved in production.

WELDING STANDARDS to CSA W47.1

CWB APPROVAL

ENGINEERS STAMP

REGISTERED PROFESSIONAL ENGINEER
R. T. ROSE
SIGNATURE
02/03/28
PROVINCE OF NOVA SCOTIA

4 SHOP STANDARDS

4.a Acceptable and Unacceptable Weld Profiles

TABLE - 1

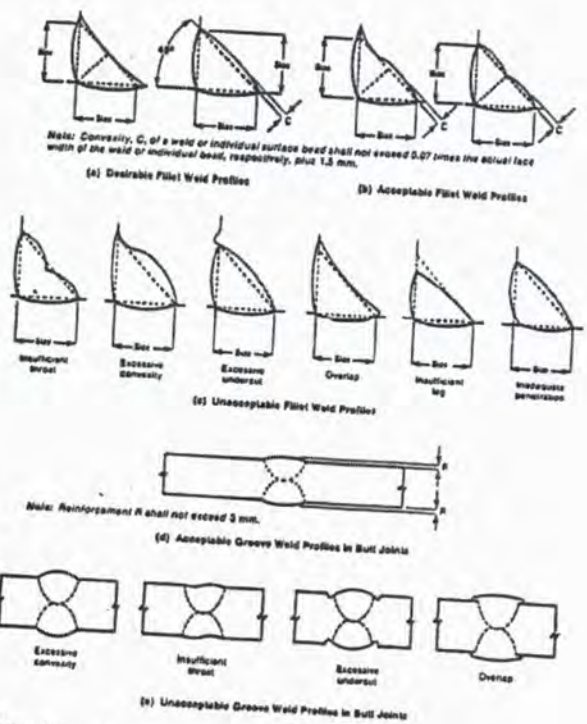

Notes:

(1) *The faces of fillet welds may be slightly convex, flat, or slightly concave. Except at outside corner joints, the convexity shall not exceed 0.07 x width of face or bead + 1.5 mm.*

(2) *The finishing passes of all groove welds in butt joints shall provide a reinforcement at the centre of weld not exceeding 3 mm. The reinforcement shall be built up uniformly from the surface of the parent metal to a maximum at the centre of the weld. There shall be no valley or groove along the edge or in the centre of the weld. The deposited metal shall be smooth and uniform in cross-section.*



4 SHOP STANDARDS

4.b Splicing

1. Connections or splices in beams or girders when made by groove welds shall be complete penetration groove welds, unless otherwise approved by the Engineer.

2. Splices of tension members made by groove welds shall be complete joint penetration groove welds unless otherwise approved by the Engineer.

3. All shop splices in each component of a cover-plated or built-up member shall be made before such component part is welded to other component parts of the member.

4. Tension butt joints in plates of different material thickness or widths shall be made in such a manner that the slope through the transistion zone is not steeper thatn 1 in 2 1/2. The transisiton shall be accomplished by chamfering the thicker part, tapering the wider part, slopeing the weld metal, or by any combination of these.

5. Compression butt joints do not require a transistion zone in members of different thickness or width, if approved by the Engineer.

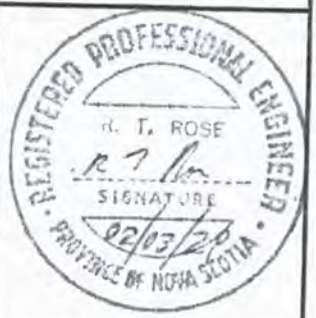

4 SHOP STANDARDS

4.c Preparation of Material (From CSA W59-M1989 Clause 5.3)

1. Surfaces and edges to be welded shall be smooth, uniform and free from fins, cracks and other defects that would adversely affect the quality or strength of the weld. Surfaces to be welded shall also be free, within 50 mm (2") of any weld locations, from loose or thick scale (except for tightly adhering small islands of scale), slag, loose rust, paint, grease, moisture and other foreign material that will prevent welding to meet acceptance levels of this standard or produce objectionable fumes.

2. Preparation of edges for welding shall be smooth and regular and shall be left free of slag. The edges resulting from cutting shall be smoothed when necessary to provide a surface equivalent to that specified in Clause 5.3 (CSA W59) (Pre-ceding paragraph). All re-entrant corners shall be shaped, notch-free, to a radius of at least 15mm. All cutting shall follow closely the lines prescribed. Oxygen gouging not to be used on quenched and tempered steels.

3. For reference to occassional notches and their repair see Clause 5.3.2 CSA W59-M1989 and for planar edge discontinuities refer to Clause 5.3.3 CSA W59-M1989

WELDING STANDARDS to CSA W47.1	CWB APPROVAL	ENGINEERS STAMP
4 SHOP STANDARDS		REGISTERED PROFESSIONAL ENGINEER · R. T. ROSE · SIGNATURE · 02/03/28 · PROVINCE OF NOVA SCOTIA ·

4.d Assembly Practices

1. The parts to be joined by fillet welds shall be brought into as close contact as practicable, (see Clause 54.1 of CSA W59-M1989) and in no event shall be separated by more than 5mm (3/16"). If the separation is 1mm (1/32") or greater, the size of the fillet weld shall be increased by the amount of the separation. The separation between faying surfaces of lap joints and of butt joints landing on a backing shall not exceed 2mm (1/16"). Where irregularities in rolled shapes or plates after straightening, do not permit contact within the above limits, the procedure necessary to bring the material within these limits shall be subject to the approval of the Engineer. The use of fillers is prohibited except as specified on the drawings or as specially approved by the Engineer, and made in accordance with Clause 4.5 CSA W59-M1989.

   Abutting parts to be joined by groove welds shall be carefully aligned. Where the parts are effectively restrained against bending due to eccentricity in alignment, an offset not exceeding 10% of the thickness of the thinner part joined, but in no case more than 3mm (1/8"), may be permitted as a departure from the theoretical alignment. In correcting misalignment in such cases, the parts shall not be drawn into a greater slope than 1 in 25. Measurement of offset shall be based upon midplane of parts unless otherwise shown on the drawings.

Members to be welded shall be brought into correct alignment and held safely in position until welding has been completed. Suitable allowances shall be made for warpage and shrinkage.



4 SHOP STANDARDS

4.e Allowable Workmanship Tolerances from Detailed Drawings

Dimensions of the cross-section of groove welded joints which vary from those on the detail drawings by more than the following workmanship tolerances shall be corrected as per Appendix C, Clause C1.1 (f) (CSA W59), or referred to the Engineer for approval.

	Root Not Gouged	Root Gouged
a) Root Face of Joint	+/- 2mm (1/16")	Not limited
b) Root Opening of Joints without steel backing	+/- 2mm (1/16")	+ 2mm (1/16") - 3mm (1/8")
Root Opening of Joints with steel backing	+ 6mm (1/4") - 2mm (1/16")	Not applicable Not applicable
Root openings wider than permitted by the above tolerances but not greater than twice the thickness of the thinner part of 20mm maximum be built up be welding to acceptable dimensions prior to the joining if the parts by welding.		
c) Groove angle of Joint	+10 Degrees - 5 degrees	+10 Degrees - 5 degrees

REGISTERED PROFESSIONAL ENGINEER
R. T. ROSE
SIGNATURE
02/03/28
PROVINCE OF NOVA SCOTIA

4 SHOP STANDARDS

4.f Control of Distortion and Shrinkage Stresses

1. Insofar as practicable, all welds shall be deposited in a sequence that will balance the applied heat of welding while the welding progresses.

   Before the start of welding on a member or structure in which shrinkage stresses or distortion is likely to effect the adequacy of the structure, the program for welding sequence and distortion control shall be developed by the Contractor and submitted to the Engineer for approval.

   The direction of the general progression in welding on a member shall be from points where the parts are relatively fixed in position with respect to each other toward points where they have a greater relative freedom of movement.

   Joints expected to have large shrinkage shall normally be welded before joints expected to have lesser shrinkage and with as little restraint as possible.

   All shop splices in each component of a coverplated or built-up member shall be made before such component part is welded to other component parts of the member. With the approval of the Engineer, long girders or girder section may be made by shop splicing sub-sections, each made in accordance with this Clause (Clause 5.4, CSA W59 - M1989).

   For conditions of severe external shrinkage restraint refer to clause 5.1.7 (CSA W59-M1989).

WELDING STANDARDS to CSA W47.1	CWB APPROVAL	ENGINEERS STAMP
4 SHOP STANDARDS		REGISTERED PROFESSIONAL ENGINEER R. T. ROSE SIGNATURE 02/03/28 PROVINCE OF NOVA SCOTIA

4.g Quality of Welds

1. Welds shall have no cracks

2. Welds shall be free from overlap

3. Undercut shall not exceed the permissable valves as given in Clauses 11.5.4 and 12.5.4 of CSA W59-M1989 for statically and Dynamically Loaded structures respectively.

4. The minimum acceptable quality of welds, including visual examination, shall confirm to clause 11.5.4 for Statically Loaded Structures, and Clause 12.5.4 for Dynamically Loaded Structures.

Item 6 – Welding Consumable

Contents

1. N/A

Item 7 – Foundation

Contents

1. Foundation Acceptance Report

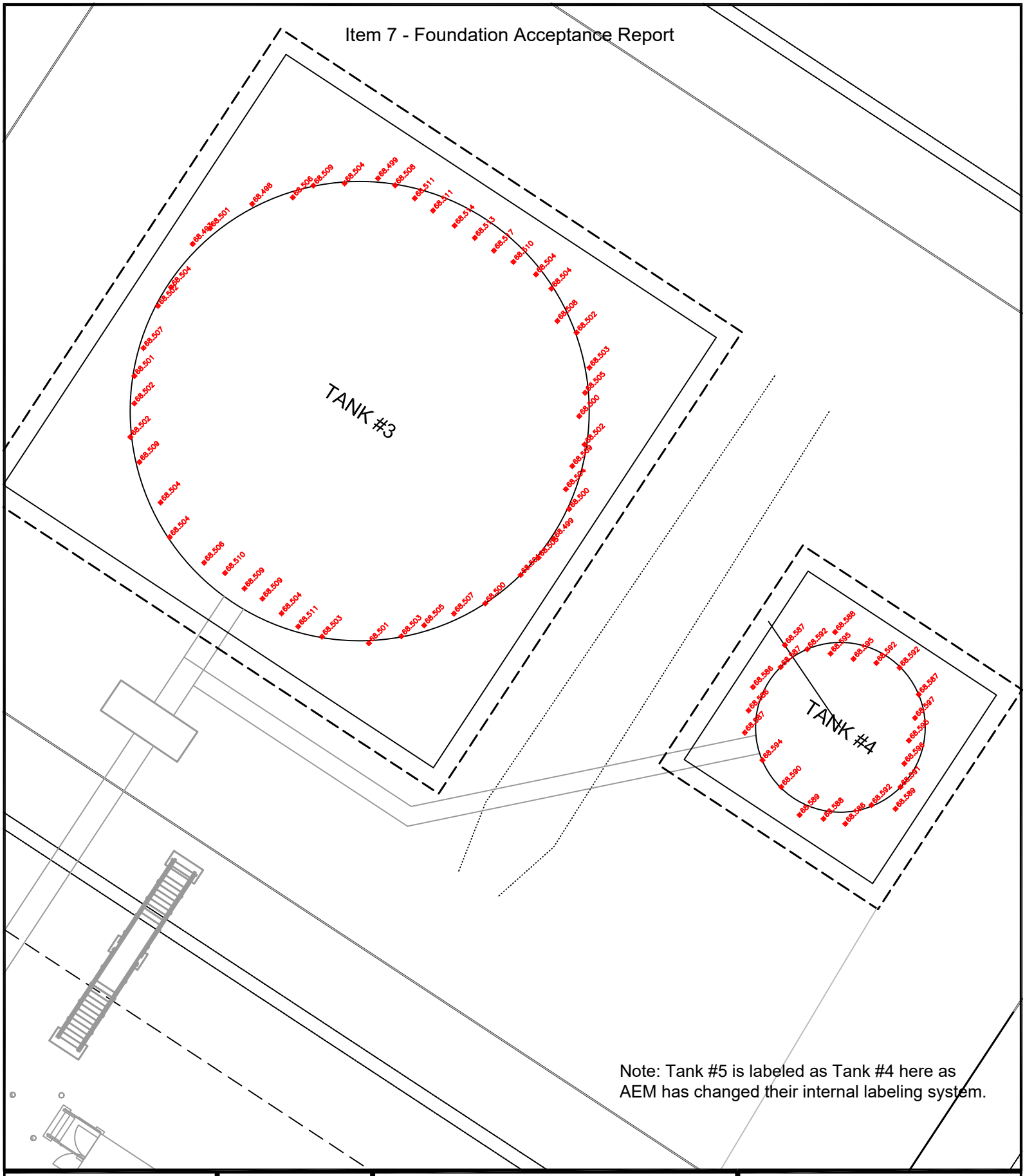

Note: Tank #5 is labeled as Tank #4 here as AEM has changed their internal labeling system.

HAMELARPENTAGE	AEM	Date des travaux : August 2017	Date d'envoi : 2017-10-14
	Système de Coord.: NAD83 UTM15	MINE SITE FUEL FARM Sand As-Built	Dessine par: JF Landreville
	Echelle: n.t.s.	No plan: AB 403 – Top Sand	Approuve par: Hamel Arp.

Item 8 – Floor

Contents

1. MTR
2. Weld Map / Visual Report
3. Vacuum Box Test Report
4. Floor Leveling Report

SSAB

12400 Highway 43 North, Axis, Alabama 36505, US

Item 8 - Floor - MTR

Test Certificate

Form TC1: Revision 2: Date 23 Apr 2014

Customer:
SAMUEL, SON & CO. LTD
1250 APPLEBY LINE

BURLINGTON
ON L7L5G6

Customer P.O.No.: C41965 & 41-490195 | **Mill Order No.** 41-491117-01 | **Shipping Manifest:** AR240135

Product Description: CSA G40.21(2013) 38WT/260WT - CAT 5;LCVN 15FT.LBS,TCVN13FT.LBS@-45F/A673-P ALLOYS API650(12TH ED) TABLE 4-1 GR.IIIA NORMALIZED

Ship Date: 21 Feb 17
Cert Date: 21 Feb 17

Cert No: 081597458
(Page 1 of 2)

Size: 0.250 X 120.0 X 480.0 (IN)

Tested Pieces:				Tensiles:					Hardness	Charpy Impact Tests								
Heat Id	Piece Id	Tested Thickness	Tst Loc	YS (KSI)	UTS (KSI)	%RA	Elong % 2in 8in	Tst Dir		Abs. Energy(FTLB) 1	2	3	Avg	% Shear 1	2	3	Avg	Tst Tmp	Tst Dir	Tst Siz (mm)	BDWTT Tmp %Shr
E7B101	E01	0.256 (DISCRT)	C	53	75		25	T													
E7B101	E02	0.256 (DISCRT)	C							37	27	59	41					-50F	L	5.0	
			C							24	36	28	29					-50F	T	5.0	
E7B101	E03	0.256 (DISCRT)	C	54	75		27	T		51	62	61	58					-50F	L	5.0	
			C							37	30	27	31					-50F	T	5.0	
E7B101	E04	0.256 (DISCRT)	C							22	33	38	31					-50F	L	5.0	
			C							42	37	48	42					-50F	T	5.0	
E7B101	E05	0.256 (DISCRT)	C							61	49	61	57					-50F	L	5.0	
			C							32	41	32	35					-50F	T	5.0	
W7B598	E07	0.256 (DISCRT)	C	52	72		25	T													
W7B598	E08	0.256 (DISCRT)	C	51	71		25	T		33	31	37	34					-45F	L	5.0	
			C							30	28	31	30					-45F	T	5.0	
W7B598	E09	0.256 (DISCRT)	C							43	31	55	43					-50F	L	5.0	
			C							33	30	31	31					-50F	T	5.0	

Chemical Analysis

Heat Id	C	Mn	P	S	Si	Tot Al	Sol Al	Cu	Ni	Cr	Mo	Cb	V	Ti	B	N	ORGN
E7B101	.19	.92	.010	<.001	.24	.022	.020	.24	.13	.10	.04	.002	.005	.010	.0002	.0069	USA
W7B598	.18	.92	.009	.001	.24	.028	.022	.26	.13	.08	.05	.001	.004	.011	.0002	.0078	USA

KILLED STEEL
MERCURY IS NOT A METALLURGICAL COMPONENT OF THE STEEL AND NO MERCURY WAS INTENTIONALLY ADDED DURING THE MANUFACTURE OF THIS PRODUCT.
KILLED STEEL, PRODUCED TO A FINE GRAIN PRACTICE
MTR EN 10204:2004 INSPECTION CERTIFICATE 3.1 COMPLIANT
CHARPY FULL SIZE EQUIVALENT = ABSORBED ENERGY AVG X 10 / TEST SIZE IN MM
NORMALIZED PLATES. HEATED AT 1665F FOR 14 MINUTES.
TEST COUPONS TAKEN FROM HEAT TREATED PLATE.
PRODUCTS SHIPPED:

E7B101 E05	6705084	PCES:	1,	LBS:	4084	E7B101 E02	6705125	PCES:	1,	LBS:	4084
E7B101 E02	6705123	PCES:	1,	LBS:	4084	E7B101 E05	6705086	PCES:	1,	LBS:	4084
E7B101 E03	6705100	PCES:	1,	LBS:	4084	E7B101 E05	6705085	PCES:	1,	LBS:	4084
E7B101 E02	6705124	PCES:	1,	LBS:	4084	W7B598 E08	6705042	PCES:	1,	LBS:	4084
W7B598 E08	6705041	PCES:	1,	LBS:	4084	W7B598 E08	6705040	PCES:	1,	LBS:	4084
W7B598 E09	6705038	PCES:	1,	LBS:	4084	W7B598 E08	6705043	PCES:	1,	LBS:	4084

(P) Cust Part #:

WE HEREBY CERTIFY THAT THIS MATERIAL WAS TESTED IN ACCORDANCE WITH, AND MEETS THE REQUIREMENTS OF, THE APPROPRIATE SPECIFICATION

Justin Ward +1 251 662 4400
SENIOR METALLURGIST - PRODUCT

Item 8 - Floor - MTR

Test Certificate

Form TC1: Revision 2: Date 23 Apr 2014

SSAB
12400 Highway 43 North, Axis, Alabama 36505, US

Customer:
SAMUEL, SON & CO. LTD
1250 APPLEBY LINE

BURLINGTON
ON L7L5G6

Customer P.O.No.: C41965 & 41-490195 | **Mill Order No.** 41-491117-01 | **Shipping Manifest:** AR240135

Product Description: CSA G40.21(2013) 38WT/260WT - CAT 5;LCVN 15FT.LBS,TCVN13FT.LBS@-45F/A673-P ALLOYS API650(12TH ED) TABLE 4-1 GR.IIIA NORMALIZED

Ship Date: 21 Feb 17
Cert Date: 21 Feb 17

Cert No: 081597458

Size: 0.250 X 120.0 X 480.0 (IN)

Tested Pieces:				Tensiles:						Charpy Impact Tests							
Heat Id	Piece Id	Tested Thickness	Tst Loc	YS (KSI)	UTS (KSI)	%RA	Elong % 2in 8in	Tst Dir	Hardness	Abs. Energy(FTLB) 1 2 3 Avg	% Shear 1 2 3 Avg	Tst Tmp	Tst Dir	Tst Siz (mm)	BDWTT Tmp %Shr
W7B598	E08	6705039	PCES: 1, LBS: 4084												
W7B598	E08	6705052	PCES: 1, LBS: 4084												
W7B598	E08	6705049	PCES: 1, LBS: 4084												
W7B598	E08	6705045	PCES: 1, LBS: 4084												
E7B101	E02	6705151	PCES: 1, LBS: 4084												
E7B101	E02	6705150	PCES: 1, LBS: 4084												
E7B101	E05	6705160	PCES: 1, LBS: 4084												
E7B101	E05	6705161	PCES: 1, LBS: 4084												
E7B101	E04	6705127	PCES: 1, LBS: 4084												
E7B101	E04	6705128	PCES: 1, LBS: 4084												
E7B101	E02	6705149	PCES: 1, LBS: 4084												
W7B598	E08	6705046	PCES: 1, LBS: 4084												
E7B101	E05	6705087	PCES: 1, LBS: 4084												
W7B598	E08	6705050	PCES: 1, LBS: 4084												
W7B598	E08	6705044	PCES: 1, LBS: 4084												
E7B101	E04	6705126	PCES: 1, LBS: 4084												
E7B101	E02	6705152	PCES: 1, LBS: 4084												
E7B101	E05	6705162	PCES: 1, LBS: 4084												
E7B101	E05	6705153	PCES: 1, LBS: 4084												
E7B101	E04	6705129	PCES: 1, LBS: 4084												
E7B101	E04	6705130	PCES: 1, LBS: 4084												
E7B101	E05	6705163	PCES: 1, LBS: 4084												
E7B101	E04	6705102	PCES: 1, LBS: 4084												

(P) Cust Part #:

WE HEREBY CERTIFY THAT THIS MATERIAL WAS TESTED IN ACCORDANCE WITH, AND MEETS THE REQUIREMENTS OF, THE APPROPRIATE SPECIFICATION

Justin Ward +1 251 662 4400
SENIOR METALLURGIST - PRODUCT

Item 8 - Floor - Weld Map and Visual Report

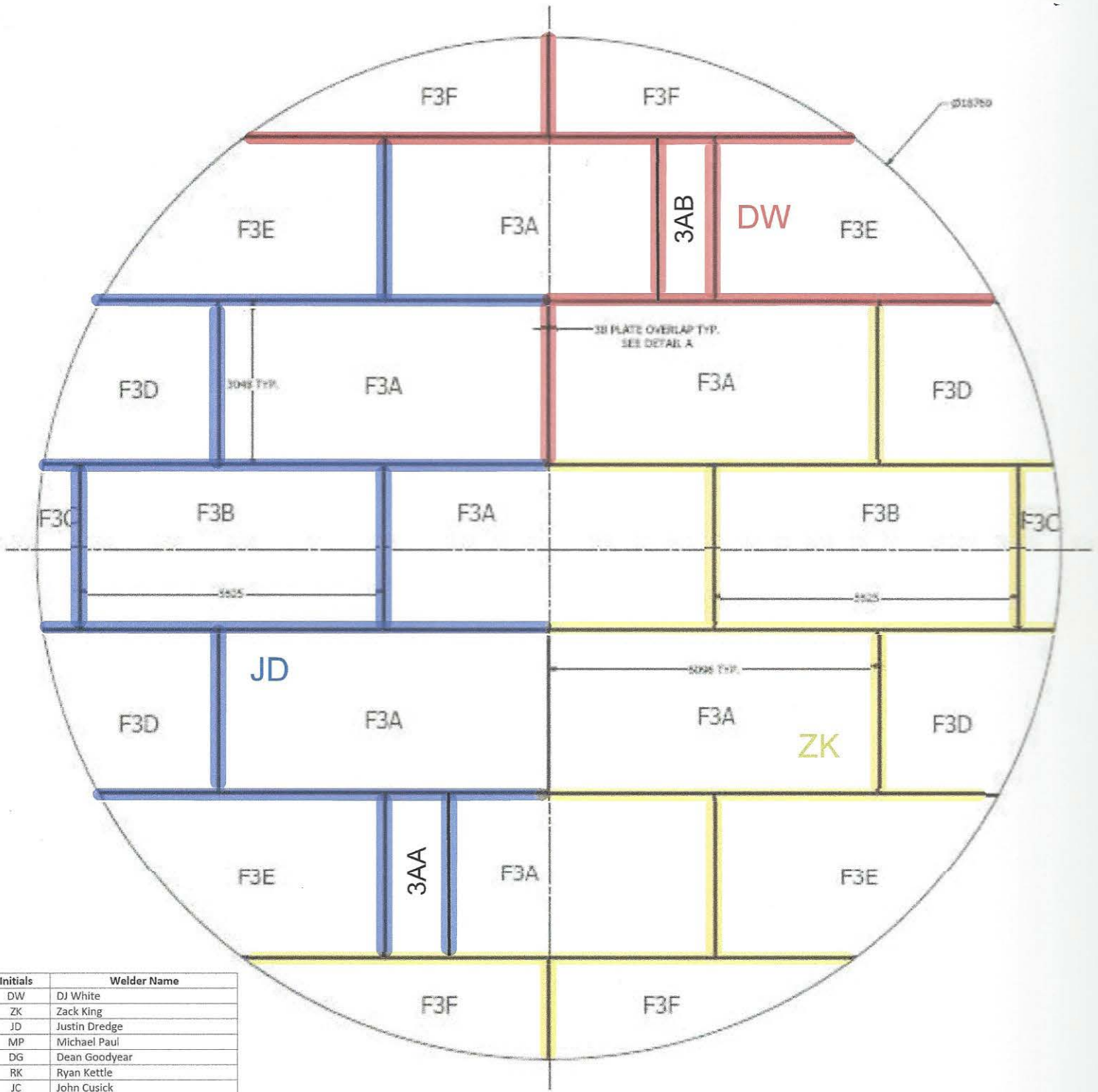

Initials	Welder Name
DW	DJ White
ZK	Zack King
JD	Justin Dredge
MP	Michael Paul
DG	Dean Goodyear
RK	Ryan Kettle
JC	John Cusick
AK	Abel Kalai
JG	Joel Overgaard (Sub Arc Systems)

TANK 3 (3ML) FLOOR LAYOUT
SCALE 1 / 50

I, Sheldan Burry (print supervisor name) have visually inspected the welds shown on this weld map.

Sign:

Tank #3

Inukshuk Construction Limited
Industrial Contracting | Project Management

PO Box 654
Rankin Inlet, NU X0C 0G0
T 867.645.4030 F 867.645.4064

PRESSURE TEST CERTIFICATE

SITE: Meliadine WORK ORDER #

TITLE: Tank Farm

DATE: Aug 9 2017

1. DESCRIPTION OF PIPE AND LOCATION:

Tank #3 [redacted] Vacuum Test The Floor at -12 psi

2. SKETCH INDICATING TEST POINT (S):

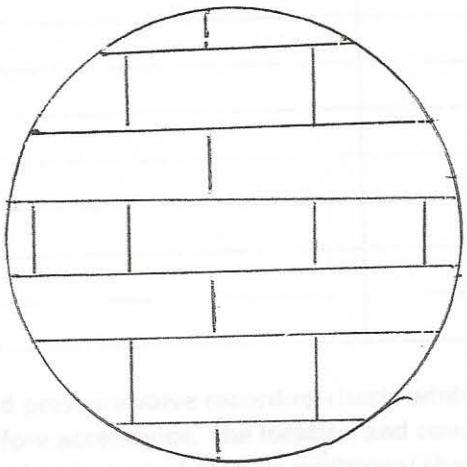

3. PIPE STANDARD / SPECIFICATION OF TEST SECTION:

Tank #3

Item 8 - Floor - Vacuum Test Report

Inukshuk Construction Limited
Industrial Contracting | Project Management

PO Box 654
Rankin Inlet, NU X0C 0G0
T 867.645.4030 F 867.645.4064

4. TESTING MEDIA: Vacuum Test at -12 psi and soaping water

Tank #3

5. CALCULATED PRESSURE / ACTUAL PRESSURE AT LOWEST ELEVATION:

TIME (MIN)	TEST PRESSURE (~~kPa~~)	TEMPERATURE (C)
100 pm – 300pm	-12 PSI	16°

Include all pressure, temperature and pressure valve recording charts where applicable. Charts to be signed and approved by Engineer before acceptance. The location and course of any leaks or failures and description of repair action(s) taken to be included on additional sheets. All certificates to be submitted to Engineer for each Test Section.

CONTRACTOR REPRESENTATIVE

Sheldon Burry
(Print Name)

(Signature)

(Date)

~~ENGINEER~~ QC

(Print Name)

(Signature)

(Date)

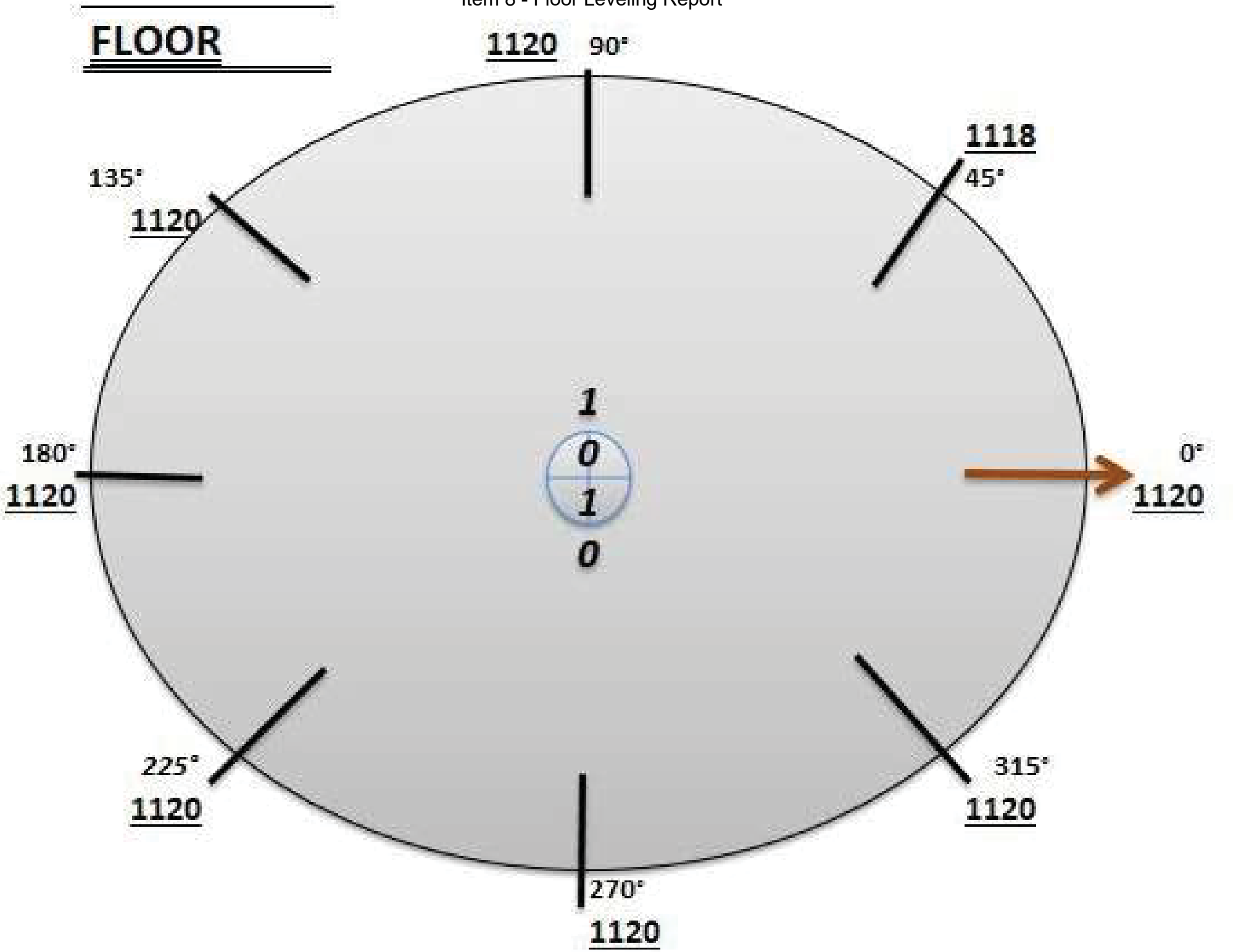
FLOOR
1120
90°
1118
45°
135°
1120
1
0
1
0
180°
1120
0°
1120
225°
1120
315°
1120
270°
1120

Item 9 – Shell to Floor Seams

Contents

1. Initial and Final (Inside and Outside) Pass Weld Map
2. Visual Report
3. Diesel Test – Leak Test Report

Item 9: Shell to Floor Seams -
Initial Pass Weld Map

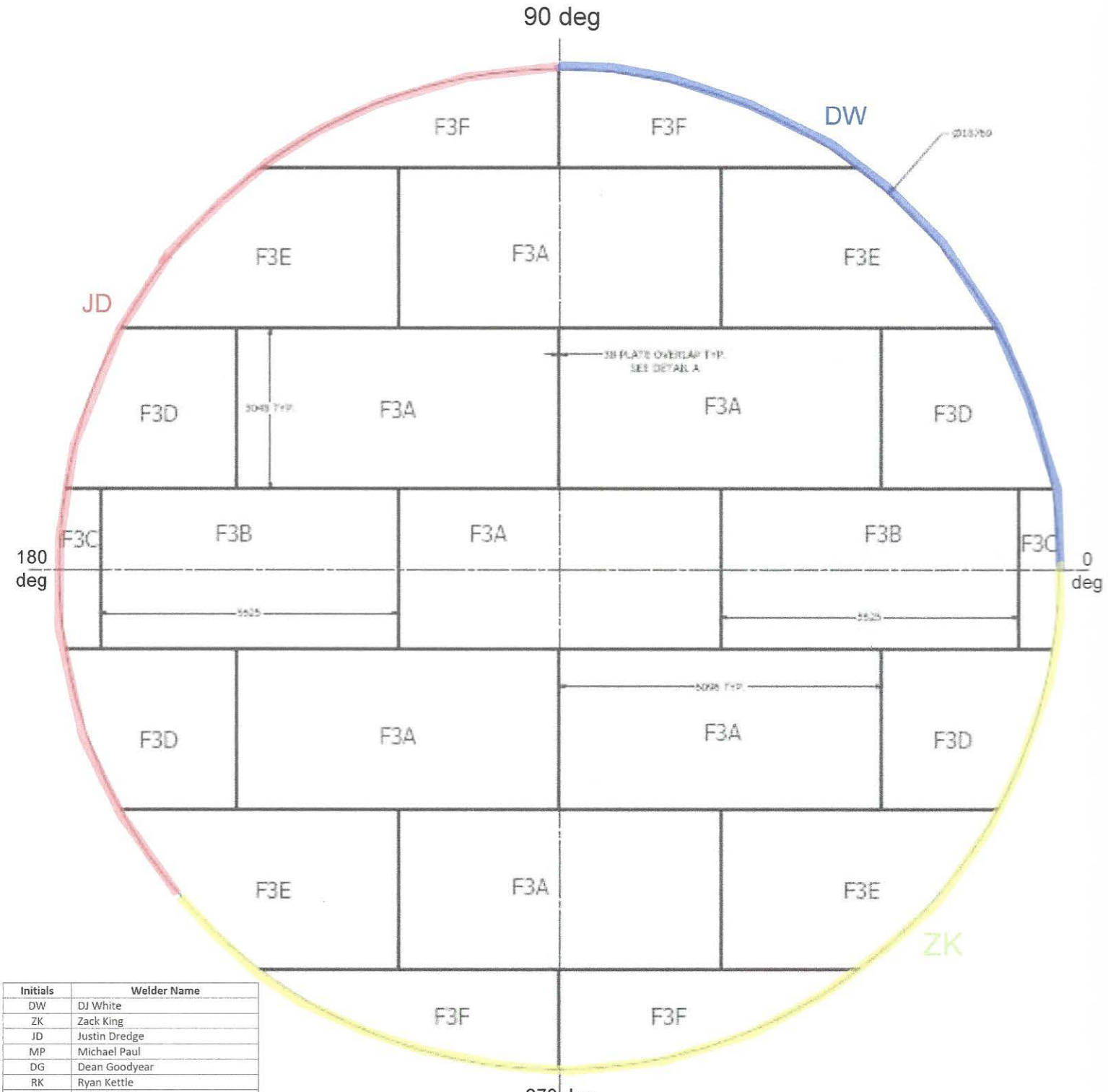

Initials	Welder Name
DW	DJ White
ZK	Zack King
JD	Justin Dredge
MP	Michael Paul
DG	Dean Goodyear
RK	Ryan Kettle
JC	John Cusick
AK	Abel Kalai
JO	Joel Overgaard (Sub Arc Systems)

TANK 3 (3ML) FLOOR LAYOUT
SCALE 1 / 50

I, Sheldon Berry (print supervisor name) have visually inspected the welds shown on this weld map.

Sign: Sheldon Berry

Item 9: Shell to Floor Seams - Final Pass Weld Map

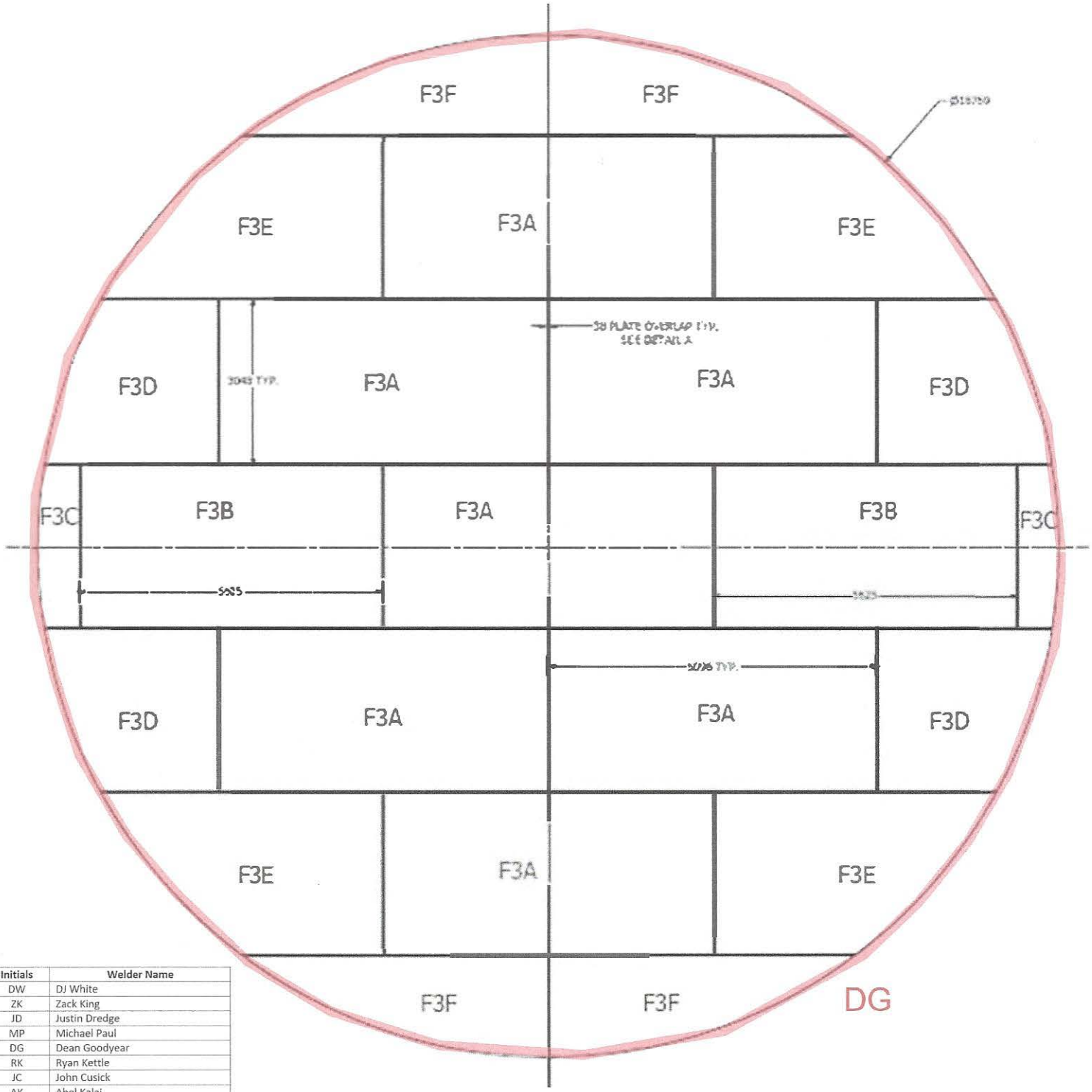

TANK 3 (3ML) FLOOR LAYOUT

Initials	Welder Name
DW	DJ White
ZK	Zack King
JD	Justin Dredge
MP	Michael Paul
DG	Dean Goodyear
RK	Ryan Kettle
JC	John Cusick
AK	Abel Kalai
JO	Joel Overgaard (Sub Arc Systems)

I, Shelby Berry (print supervisor name) have visually inspected the welds shown on this weld map.

Sign: Shelby Berry

Tank # 3

Item 9 - Floor to Shell Seams - Diesel Test Report

Inukshuk Construction Limited
Industrial Contracting | Project Management
PO Box 654
Rankin Inlet, NU X0C 0G0
T 867.645.4030 F 867.645.4064

PRESSURE TEST CERTIFICATE

SITE: Meliadine WORK ORDER #

TITLE: Tank Farm

DATE: Aug 9 2017

1. DESCRIPTION OF PIPE AND LOCATION:

Tank # 3

2. SKETCH INDICATING TEST POINT (S):

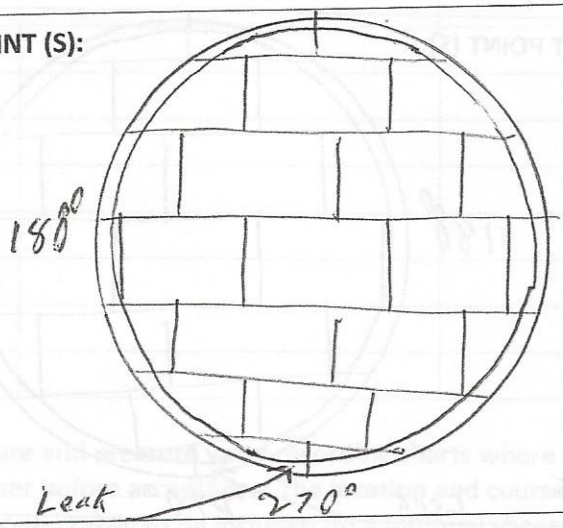

Diesel Test The weld on The Shell to Floor

F3F x F3F

3. PIPE STANDARD / SPECIFICATION OF TEST SECTION:

Tank #3

Item 9 - Floor to Shell Seams - Diesel Test Report

Inukshuk Construction Limited
Industrial Contracting Project Management
PO Box 654
Rankin Inlet, NU X0C 0G0
T 867.645.4030 F 867.645.4064

4. TESTING MEDIA: Diesel Test on Shell To Floor Tank #3

5. CALCULATED PRESSURE / ACTUAL PRESSURE AT LOWEST ELEVATION:

TIME (MIN)	TEST PRESSURE (KP)	TEMPERATURE (C)
10.00 am	Diesel	16°

Include all pressure, temperature and pressure valve recording charts where applicable. Charts to be signed and approved by Engineer before acceptance. The location and course of any leaks or failures and description of repair action(s) taken to be included on additional sheets. All certificates to be submitted to Engineer for each Test Section.

CONTRACTOR REPRESENTATIVE	~~ENGINEER~~ QC
Sheldon Burry	SYLVAIN CHARTIER
(Print Name)	(Print Name)
(Signature)	(Signature)
Aug 9 2017	AUGUST 9, 2017
(Date)	(Date)

Item 10 - Shell

Contents

1. MTR
2. Roundness Dimension Report (AmSpec)
3. Horizontal Weld Map and Visual Report
4. Vertical Weld Map and Visual Report
5. Dimension Report – Peaking and Banding Horizontal Weld Seams
6. Dimension Report – Peaking and Banding Vertical Weld Seams
7. Dimension Report – Plumbness
8. Diesel Test Reports
9. UT Report (3rd Party)

Item 10 - Shell - MTR

Test Certificate

Form TC1: Revision 2: Date 23 Apr 2014

SSAB
12400 Highway 43 North, Axis, Alabama 36505, US

Customer:
SAMUEL, SON & CO. LTD
1250 APPLEBY LINE

BURLINGTON
ON L7L5G6

Customer P.O.No.: C41966 & 41-490196 | **Mill Order No.** 41-491119-11 | **Shipping Manifest:** AR239891

Product Description: CSA G40.21(2013) 38WT/260WT - CAT 5;LCVN 15FT.LBS,TCVN13FT.LBS@-45F/A673-P ALLOYS API650(12TH ED) TABLE 4-1 GR.IIIA NORMALIZED

Ship Date: 16 Feb 17
Cert Date: 16 Feb 17

Cert No: 081596778
(Page 1 of 1)

Size: 0.313 X 113.0 X 332.0 (IN)

Tested Pieces:				Tensiles:					Hardness	Charpy Impact Tests								
Heat Id	Piece Id	Tested Thickness	Tst Loc	YS (KSI)	UTS (KSI)	%RA	Elong % 2in 8in	Tst Dir		Abs. Energy(FTLB) 1 2 3 Avg	% Shear 1 2 3 Avg	Tst Tmp	Tst Dir	Tst Siz (mm)	BDWTT Tmp %Shr
E7B110	B05	0.319 (DISCRT)	C	53	75		27	T		34 33 33 33		-45F	L	5.0	
			C							37 30 31 33		-45F	T	5.0	

Chemical Analysis

Heat Id	C	Mn	P	S	Si	Tot Al	Sol Al	Cu	Ni	Cr	Mo	Cb	V	Ti	B	N	ORGN
E7B110	.18	.90	.008	<.001	.23	.025	.024	.22	.14	.09	.04	.002	.004	.011	.0002	.0088	USA

KILLED STEEL
MERCURY IS NOT A METALLURGICAL COMPONENT OF THE STEEL AND NO MERCURY WAS INTENTIONALLY ADDED DURING THE MANUFACTURE OF THIS PRODUCT.
KILLED STEEL, PRODUCED TO A FINE GRAIN PRACTICE
MTR EN 10204:2004 INSPECTION CERTIFICATE 3.1 COMPLIANT
CHARPY FULL SIZE EQUIVALENT = ABSORBED ENERGY AVG X 10 / TEST SIZE IN MM
NORMALIZED PLATES. HEATED AT 1665F FOR 17 MINUTES.
TEST COUPONS TAKEN FROM HEAT TREATED PLATE.
PRODUCTS SHIPPED:

E7B110	B05	6704561	PCES:	1,	LBS:	3330	E7B110	B05	6704559	PCES:	1, LBS: 3330
E7B110	B05	6704558	PCES:	1,	LBS:	3330	E7B110	B05	6704562	PCES:	1, LBS: 3330
E7B110	B05	6704560	PCES:	1,	LBS:	3330	E7B110	B05	6704563	PCES:	1, LBS: 3330

(P) Cust Part #:

WE HEREBY CERTIFY THAT THIS MATERIAL WAS TESTED IN ACCORDANCE WITH, AND MEETS THE REQUIREMENTS OF, THE APPROPRIATE SPECIFICATION

Justin Ward +1 251 662 4400
SENIOR METALLURGIST - PRODUCT

Item 10 - Shell - MTR

Test Certificate

Form TC1: Revision 2: Date 23 Apr 2014

SSAB
12400 Highway 43 North, Axis, Alabama 36505, US

Customer:
SAMUEL, SON & CO. LTD
1250 APPLEBY LINE

BURLINGTON
ON L7L5G6

Customer P.O.No.: C41966 & 41-490196 | **Mill Order No.** 41-491119-11 | **Shipping Manifest:** AR240129

Product Description: CSA G40.21(2013) 38WT/260WT - CAT 5;LCVN 15FT.LBS,TCVN13FT.LBS@-45F/A673-P ALLOYS API650(12TH ED) TABLE 4-1 GR.IIIA NORMALIZED

Ship Date: 21 Feb 17
Cert Date: 21 Feb 17

Cert No: 081597444
(Page 1 of 1)

Size: 0.313 X 113.0 X 332.0 (IN)

Tested Pieces:				Tensiles:					Hardness	Charpy Impact Tests								
Heat Id	Piece Id	Tested Thickness	Tst Loc	YS (KSI)	UTS (KSI)	%RA	Elong % 2in 8in	Tst Dir		Abs. Energy(FTLB) 1 2 3 Avg	% Shear 1 2 3 Avg	Tst Tmp	Tst Dir	Tst Siz (mm)	BDWTT Tmp %Shr
E7B110	B04	0.318 (DISCRT)	C	54	75		26	T		60 58 52 57		-50F	L	5.0	
			C							38 31 33 34		-50F	T	5.0	

Chemical Analysis

Heat Id	C	Mn	P	S	Si	Tot Al	Sol Al	Cu	Ni	Cr	Mo	Cb	V	Ti	B	N	ORGN
E7B110	.18	.90	.008	<.001	.23	.025	.024	.22	.14	.09	.04	.002	.004	.011	.0002	.0088	USA

KILLED STEEL
MERCURY IS NOT A METALLURGICAL COMPONENT OF THE STEEL AND NO MERCURY WAS INTENTIONALLY ADDED DURING THE MANUFACTURE OF THIS PRODUCT.
KILLED STEEL, PRODUCED TO A FINE GRAIN PRACTICE
MTR EN 10204:2004 INSPECTION CERTIFICATE 3.1 COMPLIANT
CHARPY FULL SIZE EQUIVALENT = ABSORBED ENERGY AVG X 10 / TEST SIZE IN MM
NORMALIZED PLATES. HEATED AT 1665F FOR 17 MINUTES.
TEST COUPONS TAKEN FROM HEAT TREATED PLATE.
PRODUCTS SHIPPED:
E7B110 B04 6705316 PCES: 1, LBS: 3330 E7B110 B04 6705315 PCES: 1, LBS: 3330
E7B110 B04 6705314 PCES: 1, LBS: 3330 E7B110 B04 6705313 PCES: 1, LBS: 3330

(P) Cust Part #:

WE HEREBY CERTIFY THAT THIS MATERIAL WAS TESTED IN ACCORDANCE WITH, AND MEETS THE REQUIREMENTS OF, THE APPROPRIATE SPECIFICATION

Justin Ward +1 251 662 4400
SENIOR METALLURGIST - PRODUCT

SSAB

12400 Highway 43 North, Axis, Alabama 36505, US

Item 10 - Shell - MTR

Test Certificate

Form TC1: Revision 2: Date 23 Apr 2014

Customer:
SAMUEL, SON & CO. LTD
1250 APPLEBY LINE

BURLINGTON
ON L7L5G6

Customer P.O.No.: C41966 & 41-490196 | **Mill Order No.** 41-491119-11 | **Shipping Manifest:** AR240654

Product Description: CSA G40.21(2013) 38WT/260WT - CAT 5;LCVN 15FT.LBS,TCVN13FT.LBS@-45F/A673-P ALLOYS API650(12TH ED) TABLE 4-1 GR.IIIA NORMALIZED

Ship Date: 02 Mar 17
Cert Date: 02 Mar 17

Cert No: 081598883
(Page 1 of 1)

Size: 0.313 X 113.0 X 332.0 (IN)

Tested Pieces:				Tensiles:						Charpy Impact Tests								
Heat Id	Piece Id	Tested Thickness	Tst Loc	YS (KSI)	UTS (KSI)	%RA	Elong % 2in 8in	Tst Dir	Hardness	Abs. Energy(FTLB) 1	2	3	Avg	% Shear 1	2	3	Avg	Tst Tmp	Tst Dir	Tst Siz (mm)	BDWTT Tmp %Shr
E7B110	B03	0.318 (DISCRT)	C	53	75		26	T		30	38	31	33					-50F	L	5.0	
			C							30	24	26	27					-50F	T	5.0	
E7B110	B04	0.318 (DISCRT)	C	54	75		26	T		60	58	52	57					-50F	L	5.0	
			C							38	31	33	34					-50F	T	5.0	

Heat	Chemical Analysis																	
Id	C	Mn	P	S	Si	Tot Al	Sol Al	Cu	Ni	Cr	Mo	Cb	V	Ti	B	N		ORGN
E7B110	.18	.90	.008	<.001	.23	.025	.024	.22	.14	.09	.04	.002	.004	.011	.0002	.0088		USA

KILLED STEEL
MERCURY IS NOT A METALLURGICAL COMPONENT OF THE STEEL AND NO MERCURY WAS INTENTIONALLY ADDED DURING THE MANUFACTURE OF THIS PRODUCT.
KILLED STEEL, PRODUCED TO A FINE GRAIN PRACTICE
MTR EN 10204:2004 INSPECTION CERTIFICATE 3.1 COMPLIANT
CHARPY FULL SIZE EQUIVALENT = ABSORBED ENERGY AVG X 10 / TEST SIZE IN MM
NORMALIZED PLATES. HEATED AT 1665F FOR 17 MINUTES.
TEST COUPONS TAKEN FROM HEAT TREATED PLATE.
PRODUCTS SHIPPED:

E7B110	B03	6705294	PCES:	1,	LBS:	3330	E7B110	B04	6705302	PCES:	1, LBS: 3330
E7B110	B04	6705300	PCES:	1,	LBS:	3330	E7B110	B04	6705303	PCES:	1, LBS: 3330
E7B110	B03	6705299	PCES:	1,	LBS:	3330	E7B110	B03	6705297	PCES:	1, LBS: 3330
E7B110	B03	6705298	PCES:	1,	LBS:	3330	E7B110	B03	6705292	PCES:	1, LBS: 3330
E7B110	B04	6705305	PCES:	1,	LBS:	3330	E7B110	B03	6705296	PCES:	1, LBS: 3330
E7B110	B03	6705293	PCES:	1,	LBS:	3330	E7B110	B04	6705301	PCES:	1, LBS: 3330
E7B110	B03	6705290	PCES:	1,	LBS:	3330	E7B110	B03	6705288	PCES:	1, LBS: 3330
E7B110	B04	6705304	PCES:	1,	LBS:	3330	E7B110	B04	6705295	PCES:	1, LBS: 3330
E7B110	B03	6705291	PCES:	1,	LBS:	3330	E7B110	B03	6705289	PCES:	1, LBS: 3330

(P) Cust Part #:

WE HEREBY CERTIFY THAT THIS MATERIAL WAS TESTED IN ACCORDANCE WITH, AND MEETS THE REQUIREMENTS OF, THE APPROPRIATE SPECIFICATION

Justin Ward +1 251 662 4400
SENIOR METALLURGIST - PRODUCT

Item 10 - Shell - Roundness Report

AmSpec

LASER DIAMETERS

Dia	Beam	Hyp	
14.000		14.000	0.000

Enter Diameters (or Radii) in decimal Ft. Ex: 45.90

	Diameters left	Right	of center beam
1	60.90	60.91	
2	60.92	61.01	
3	60.94	60.98	
4	60.93	61.01	
5	60.80	60.99	
6	60.88	60.81	
7	60.90	60.95	
8	60.86	60.83	
9	60.96	60.90	
10	60.97	61.01	
11	60.93	60.94	
12	60.96	60.92	
13	60.94	60.99	
14	60.88	60.93	
15	60.90	60.95	
16	60.83	60.81	
17	60.89	60.85	
18	60.91	60.95	
19	60.93	60.96	
20	61.00	60.96	
21	60.95	60.92	
22	60.87	60.94	
23	60.85	60.90	
24	60.88	60.90	
25			
26			
27			
28			
29			
30			
31			
32			
33			
34			
Average=	60.908	60.930	

TAKE LASER DIAMETERS ABOUT EVERY 3 to 5 FEET AROUND THE INSIDE PERIMETER OF THE TANK FOR 180 DEGREES (HALF WAY ROUND). TAKING READINGS BOTH (ALTERNATE) SIDES OF THE CENTER POST/COLUMN.

IF DIAMETER DISTANCE IS TOO GREAT FOR LASER, THEN TAKE RADII FROM CENTER PIPE (NOT FROM A COLUMN) ABOUT EVERY 5 FEET AROUND THE INSIDE PERIMETER OF THE TANK FOR 360 DEGREES

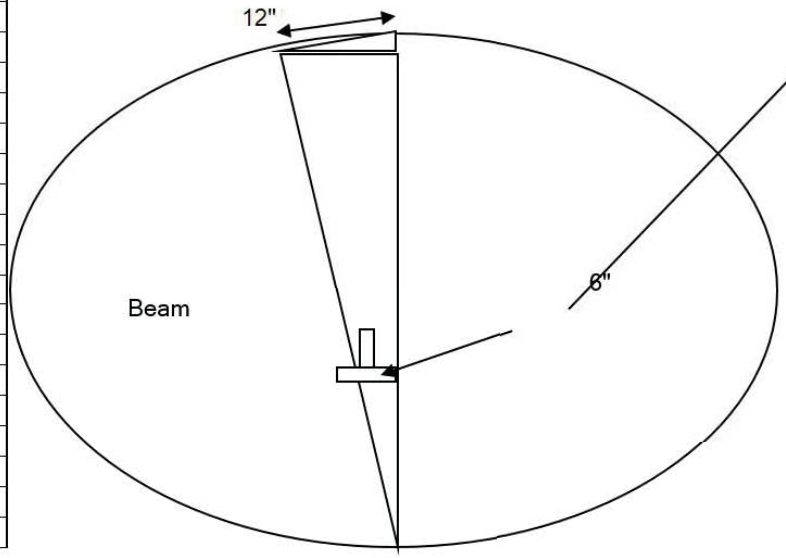

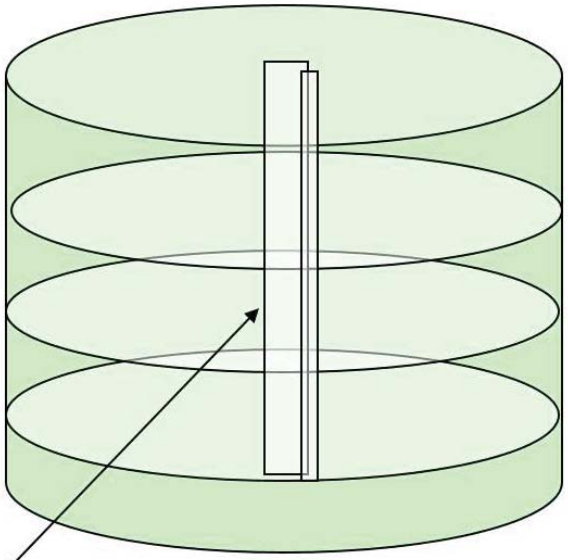

Item 10: Shell - Horizontal Weld Map and Visual Report

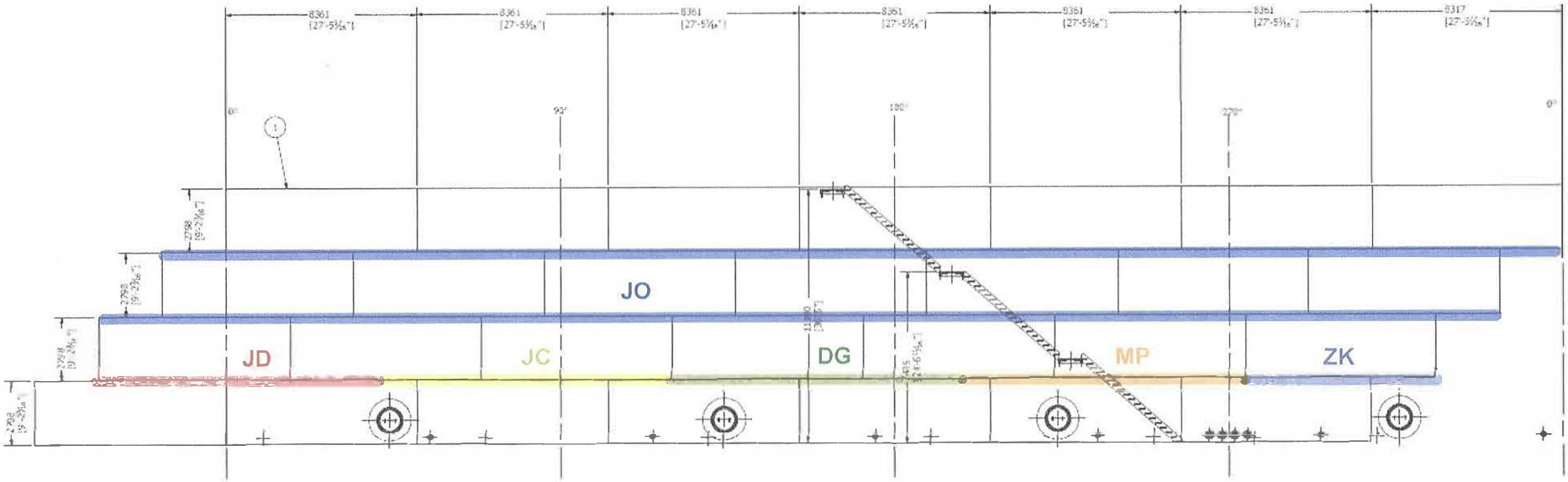

Initials	Welder Name
DW	DJ White
ZK	Zack King
JD	Justin Dredge
MP	Michael Paul
DG	Dean Goodyear
RK	Ryan Kettle
JC	John Cusick
AK	Abel Kalai
JO	Joel Overgaard (Sub Arc Systems)

SHELL DEVELOP VIEW

I, Sheldon Burry (print supervisor name) have visually inspected the welds shown on this weld map.

Sign: Sheldon Burry

Item 10 - Shell - Vertical Weld Map and Visual Report

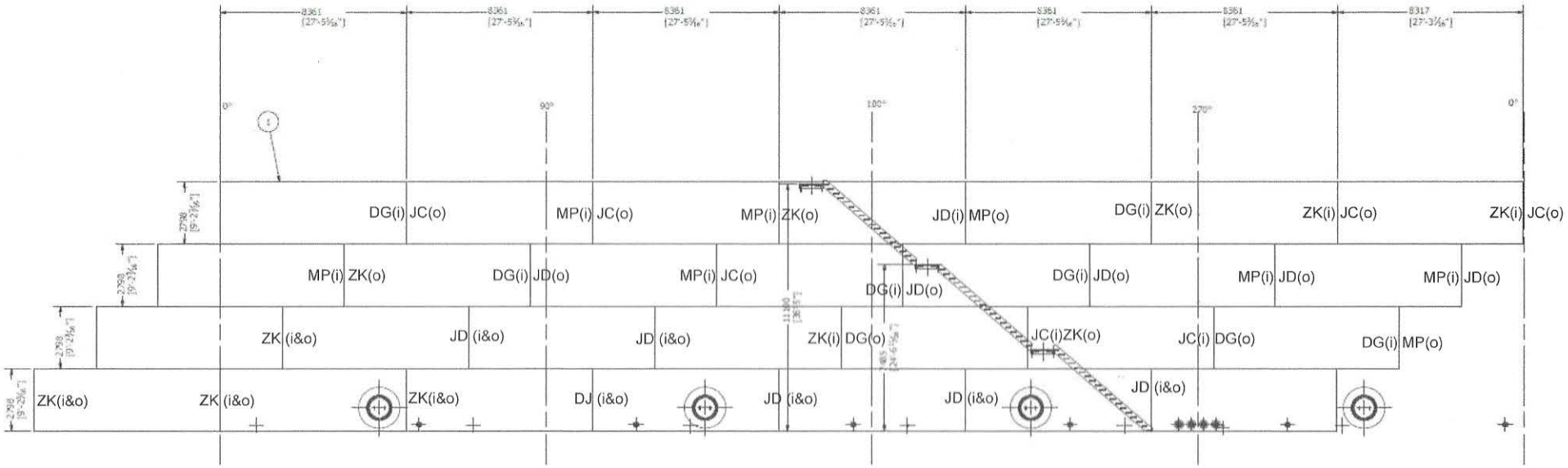

Initials	Welder Name
DW	DJ White
ZK	Zack King
JD	Justin Dredge
MP	Michael Paul
DG	Dean Goodyear
RK	Ryan Kettle
JC	John Cusick
AK	Abel Kalai
JG	Joel Overgaard (Sub Arc Systems)

(i) = Inside
(o) = Outside

SHELL DEVELOP VIEW

I, Sheldon Berry (print supervisor name) have visually inspected the welds shown on this weld map.

Sign: Sheldon Berry

Item 10 - Shell - Dimension Report
Horizontal Weld Seams Peaking and Banding

HORIZONTAL WELD SEAMS

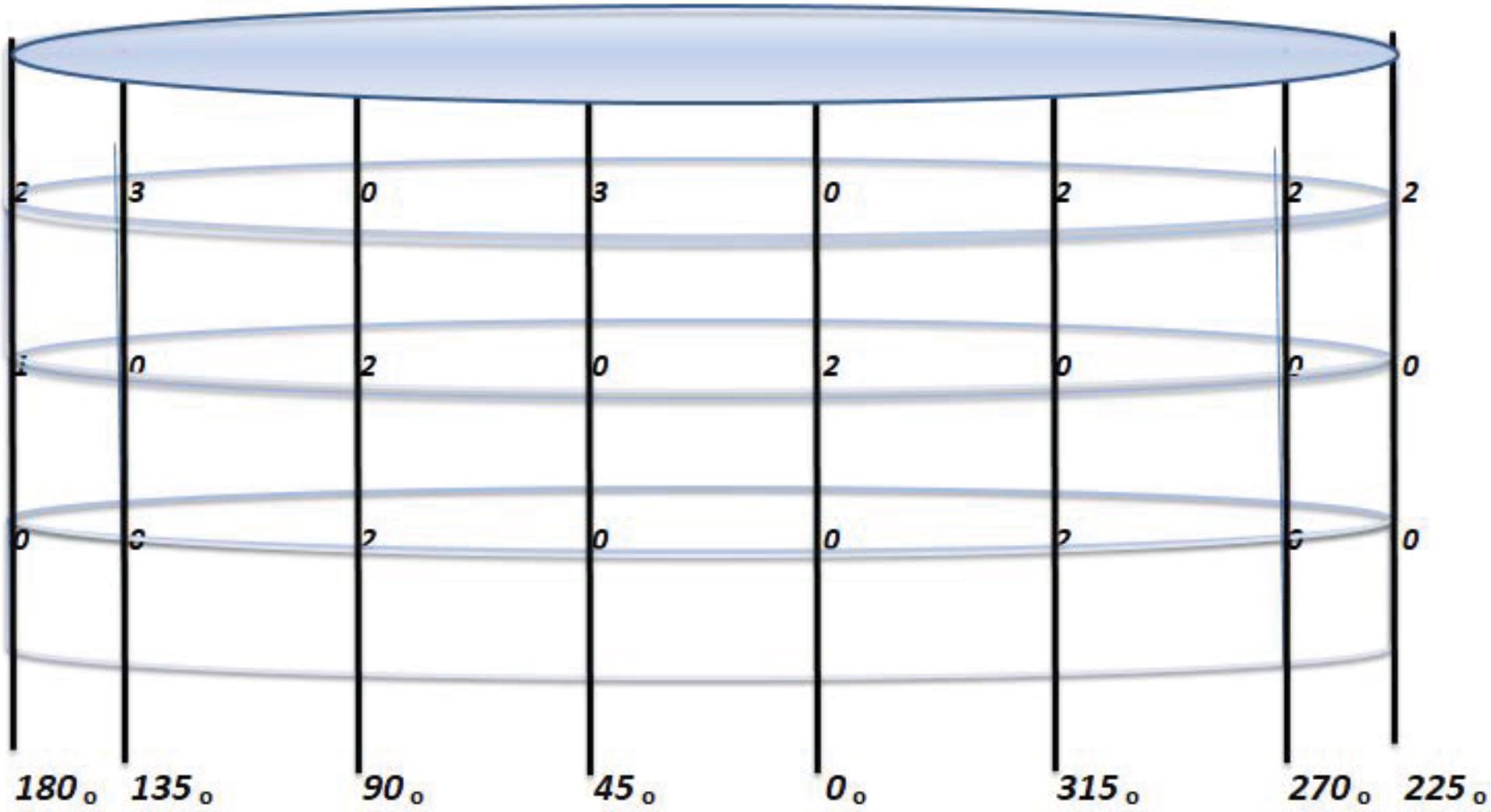

*All measurements are in mm

Item 10 - Shell - Dimension Report
Vertical Weld Seams Peaking and Banding

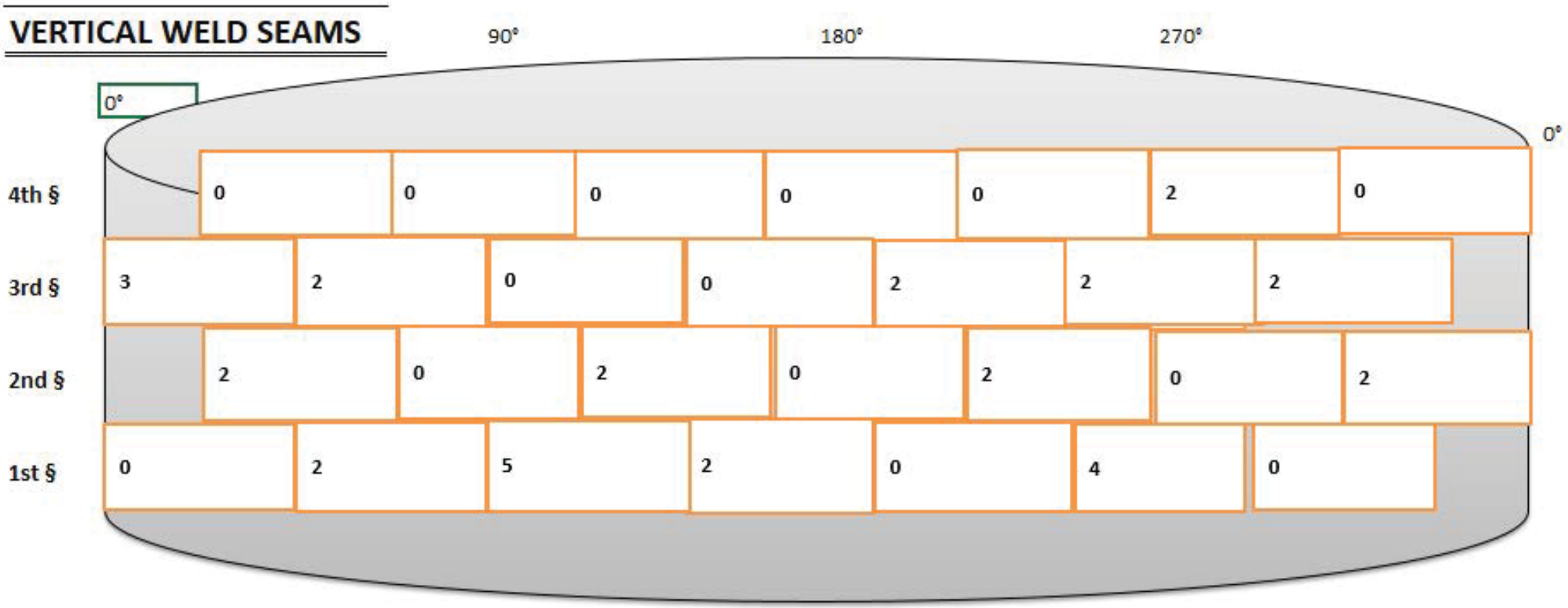

*All measurements are in mm

Item 10 - Shell - Dimension Report
Plumbness

PLUMBNESS

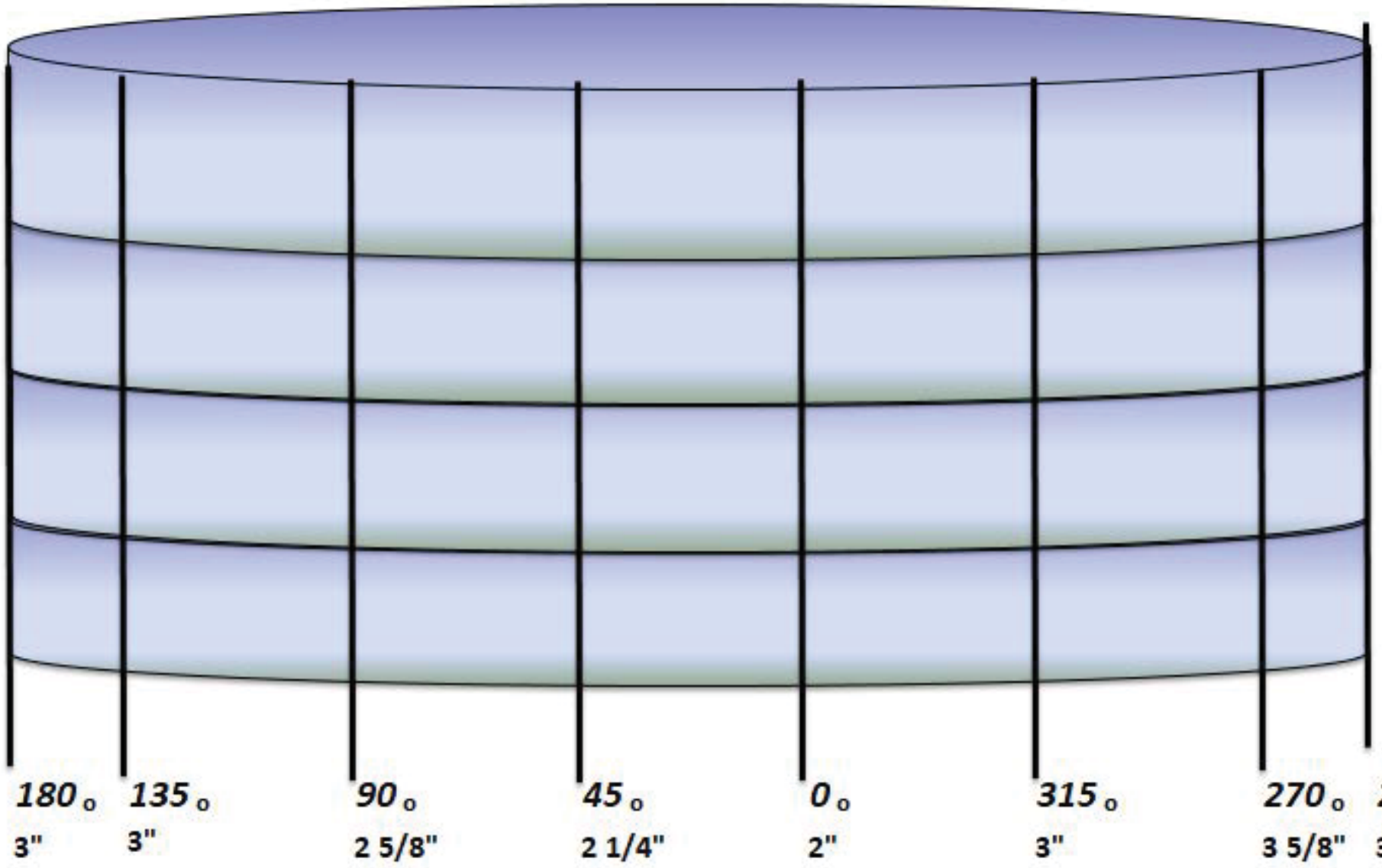

All measurements taken with plumb bomb from outside rim angle. Rim angle extends 3.0" from roof of tank. Subtract 3" from each measurement

Inukshuk Construction Limited
Industrial Contracting | Project Management

PO Box 654
Rankin Inlet, NU X0C 0G0
T 867.645.4030 F 867.645.4064

4. TESTING MEDIA: Diesel Test Tank 3 Shell Plate

5. CALCULATED PRESSURE / ACTUAL PRESSURE AT LOWEST ELEVATION:

TIME (MIN)	TEST PRESSURE (KP)	TEMPERATURE (C)

Include all pressure, temperature and pressure valve recording charts where applicable. Charts to be signed and approved by Engineer before acceptance. The location and course of any leaks or failures and description of repair action(s) taken to be included on additional sheets. All certificates to be submitted to Engineer for each Test Section.

CONTRACTOR REPRESENTATIVE	ENGINEER
Shawn Saunders	
(Print Name)	(Print Name)
(Signature)	(Signature)
(Date)	(Date)

AEM, 28-08-2017

Item 10 - Shell - Diesel Test Report

Inukshuk Construction Limited
Industrial Contracting Project Management

PO Box 654
Rankin Inlet, NU X0C 0G0
T 867.645.4030 F 867.645.4064

PRESSURE TEST CERTIFICATE

SITE: Meliadine WORK ORDER #

TITLE: Tank Farm

DATE:

1. DESCRIPTION OF PIPE AND LOCATION:

Tank #3

2. SKETCH INDICATING TEST POINT (S): All Horizontals & Verts tested with Diesel

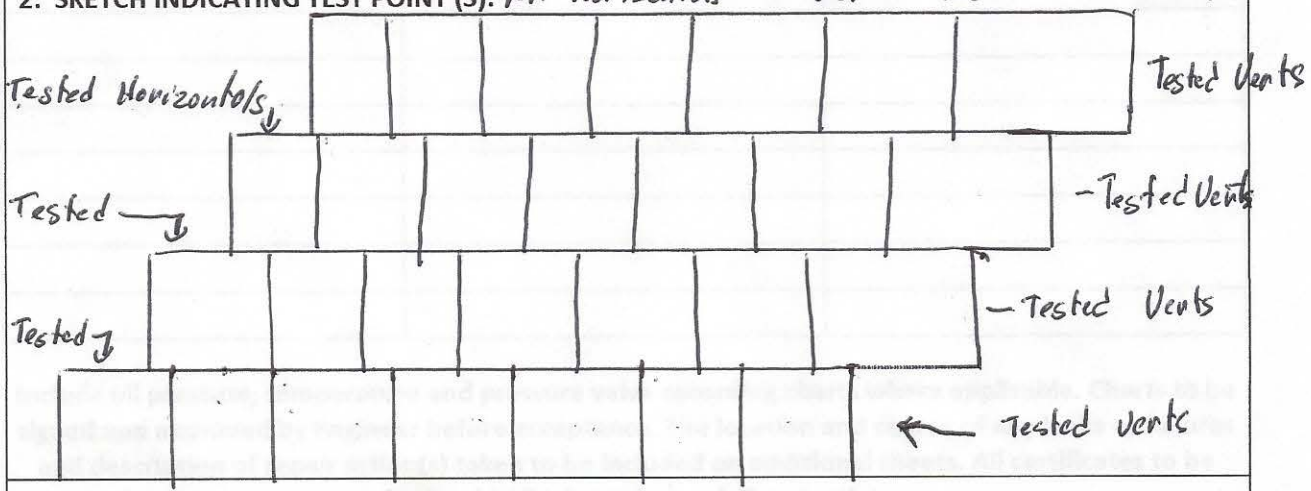

3. PIPE STANDARD / SPECIFICATION OF TEST SECTION:

A.E.M

28-08-2017

Item 10 - Shell - UT Report

Client :	**Inukshuk Construction Ltd,**	**Date d'intervention :** **Intervention date :**	2017-08-29
Adresse/Address :	PO Box 654 Rankin Inlet, Nunavut X0C 0G0	**Date du rapport :** **Report date :**	2017-09-08
Contact :	Marc Losier		
Entrepreneur : **Contractor :**	N/A	**N° dossier :** **File no :**	INS-117107-01
Endroit du travail : **Job location :**	Rankin Inlet , Nunavut	**Commande :** **Order :**	295-1046

INSP. VISUELLE / VISUAL INSP. ☐ **MAGNÉTOSCOPIE / MAGNETIC PARTICLES** ☒ **RESSUAGE / LIQUID PENETRANT** ☐ **ULTRASONS / ULTRASONIC** ☒

DESCRIPTION :

Magnetic inspection and Ultrasonic inspection on tank 3

The client is opting to use an ultrasonic testing, instead of radiographic testing & Magnetic testing on nozzles and bottom weld to the shell.

Remark: Visual testing was performed by client.

INSP. VISUELLE / VISUAL INSP.

NORME : **SPECIFICATION :**

N° équip. : **Equip. no :** N/A

MAGNÉTOSCOPIE / MAGNETIC PARTICLES

NORME : **SPECIFICATION :** Api 650

N° équip. : **Equip. no :** MP-Q-27

Ampérage : **Amperage :**	Culasse/Yoke	**Continue** **Continuous**	☒	**Résiduelle** **Residual**	☐	**Humide** **Wet**	☐	**Sèche** **Dry**	☒
Longitudinale **Longitudinal**	☐	**Circulaire** **Circular**	☐	**C.A.** **A.C.**	☒	**C.C.** **D.C.**	☐	**Démagnétisée** **Demagnetized**	☐

RESSUAGE / LIQUID PENETRANT

NORME : **SPECIFICATION :**

N° équip. : **Equip. no :**

Pénétrant/Penetrant : **Émulsifiant/Emulsifier :** **Révélateur/Developer :**

Temps/Time : **Temps/Time :** **Temps/Time :**

ULTRASONS / ULTRASONIC

NORME : **SPECIFICATION :** API 650

ÉTALONNAGE/CALIBRATION :

Bloc/Block : IIW Type 2 **Trou/Hole :** N/A **C.A.D. /D.A.C. :** ☐

APPAREIL/EQUIPMENT :

Instrument : USM GO+ **Couplant :** Echogel **Échelle/Sweep length :**

N° équip./Equip. no : UT-Q-34 **Palpeur/Transducer :** 0 degre and 70 degre

RÉSULTATS/RESULTS :

Ultrasonic inspection was performed:

- on every T (where vertical weld meet horizontal weld) between first/second, second/third & third/Fourth course: **Accepted**
- On every vertical weld of first course from 1" to 7 and 53" to 59": **Accepted**
- On every vertical weld of second course from 53" to 59" **Accepted**
- On horizontal see pictures 2 and 3 for 6 locations: **Accepted**

Magnetic particles inspection was performed on angle joint between the shell and nozzles, and joint between bottom weld and shell inside and outside:

- -**Inside tank**: weld between shell and nozzle & weld between shell to the bottom weld at 100%: by magnetic particles inspection: **Accepted**
- -**Outside tank**: weld between shell/pad, & weld between pad/nozzle & weld between shell/bottom weld at 100% (note 1) by magnetic particles inspection: **Accepted**

Note1: 16 nozzles including 4 manholes; one nozzle outside does not have pad. Please refer to drawing 295-M11; part section J-J item #39. This nozzle corresponds to a ¾" coupling for a water temperature gauge in the shell and the client has advised that no repad is needed for this specific coupling.

Techniciens : **Technicians :**	Sylvain Germain CSA W178.2 level 2	**Assistants:**	**Approuvé par :** **Approved by :** Pierre Dostie Technical Supervisor CSA W178.2, niveau 3

Ce rapport ne doit pas être reproduit, sinon en entier, sans l'autorisation écrite de SGS CANADA inc.
Le présent rapport est émis par la Société conformément à ses Conditions Générales de Service accessibles sur http://www.sgs.ca/fr-FR/Terms-and-Conditions.aspx
This report is confidential and shall not be reproduced without the written approval of SGS CANADA Inc
This document is issued by the Company under its General Conditions of Service accessible at http://www.sgs.ca/en/Terms-and-Conditions.aspx

Item 10 - Shell - UT Report

Client :	**Inukshuk Construction Ltd,**	**Date d'intervention :** **Intervention date :**	2017-08-29
Adresse/Address :	PO Box 654 Rankin Inlet, Nunavut X0C 0G0	**Date du rapport :** **Report date :**	2017-09-08
Contact :	Marc Losier		
Entrepreneur : **Contractor :**	N/A	**N° dossier :** **File no :**	INS-117107-01
Endroit du travail : **Job location :**	Rankin Inlet , Nunavut	**Commande :** **Order :**	295-1046

Picture : 1



View of tank # 3

Picture : 2



View at 0 degree

First horizontal UT between first/second course from vertical weld on second course on left at 60 to 66 inches. On second horizontal between second/third course UT on the right at 60 to 66 inches of the vertical second course. And for the third horizontal between third/fourth course located on left at 60 to 66 inches of vertical of third course. You can see on picture

Techniciens : **Technicians :**	Sylvain Germain CSA W178.2 level 2	**Assistants:**	**Approuvé par :** **Approved by :** Pierre Dostie Technical Supervisor CSA W178.2, niveau 3

Ce rapport ne doit pas être reproduit, sinon en entier, sans l'autorisation écrite de SGS CANADA inc.
Le présent rapport est émis par la Société conformément à ses Conditions Générales de Service accessibles sur http://www.sgs.ca/fr-FR/Terms-and-Conditions.aspx
This report is confidential and shall not be reproduced without the written approval of SGS CANADA Inc
This document is issued by the Company under its General Conditions of Service accessible at http://www.sgs.ca/en/Terms-and-Conditions.aspx

Client :	**Inukshuk Construction Ltd,**	**Date d'intervention :** **Intervention date :**	2017-08-29
Adresse/Address :	PO Box 654 Rankin Inlet, Nunavut X0C 0G0	**Date du rapport :** **Report date :**	2017-09-08
Contact :	Marc Losier		
Entrepreneur : **Contractor :**	N/A	**N° dossier :** **File no :**	INS-117107-01
Endroit du travail : **Job location :**	Rankin Inlet , Nunavut	**Commande :** **Order :**	295-1046

Picture :3



View at 180 degree

First horizontal UT between first/second course from vertical weld on second course on left at 60 to 66 inches. On second horizontal between second/third course UT on the right at 60 to 66 inches of the vertical second course. And for the third horizontal between third/fourth course located on left at 60 to 66 inches of vertical of third course. You can see on picture

Techniciens : **Technicians :**	Sylvain Germain CSA W178.2 level 2	**Assistants:**		**Approuvé par :** **Approved by :**	Pierre Dostie Technical Supervisor CSA W178.2, niveau 3

Ce rapport ne doit pas être reproduit, sinon en entier, sans l'autorisation écrite de SGS CANADA inc.
Le présent rapport est émis par la Société conformément à ses Conditions Générales de Service accessibles sur http://www.sgs.ca/fr-FR/Terms-and-Conditions.aspx
This report is confidential and shall not be reproduced without the written approval of SGS CANADA Inc
This document is issued by the Company under its General Conditions of Service accessible at http://www.sgs.ca/en/Terms-and-Conditions.aspx

Item 11 – Compression Ring

Contents

1. Weld Map / Visual Report

Item 11: Compression Ring - Weld Map

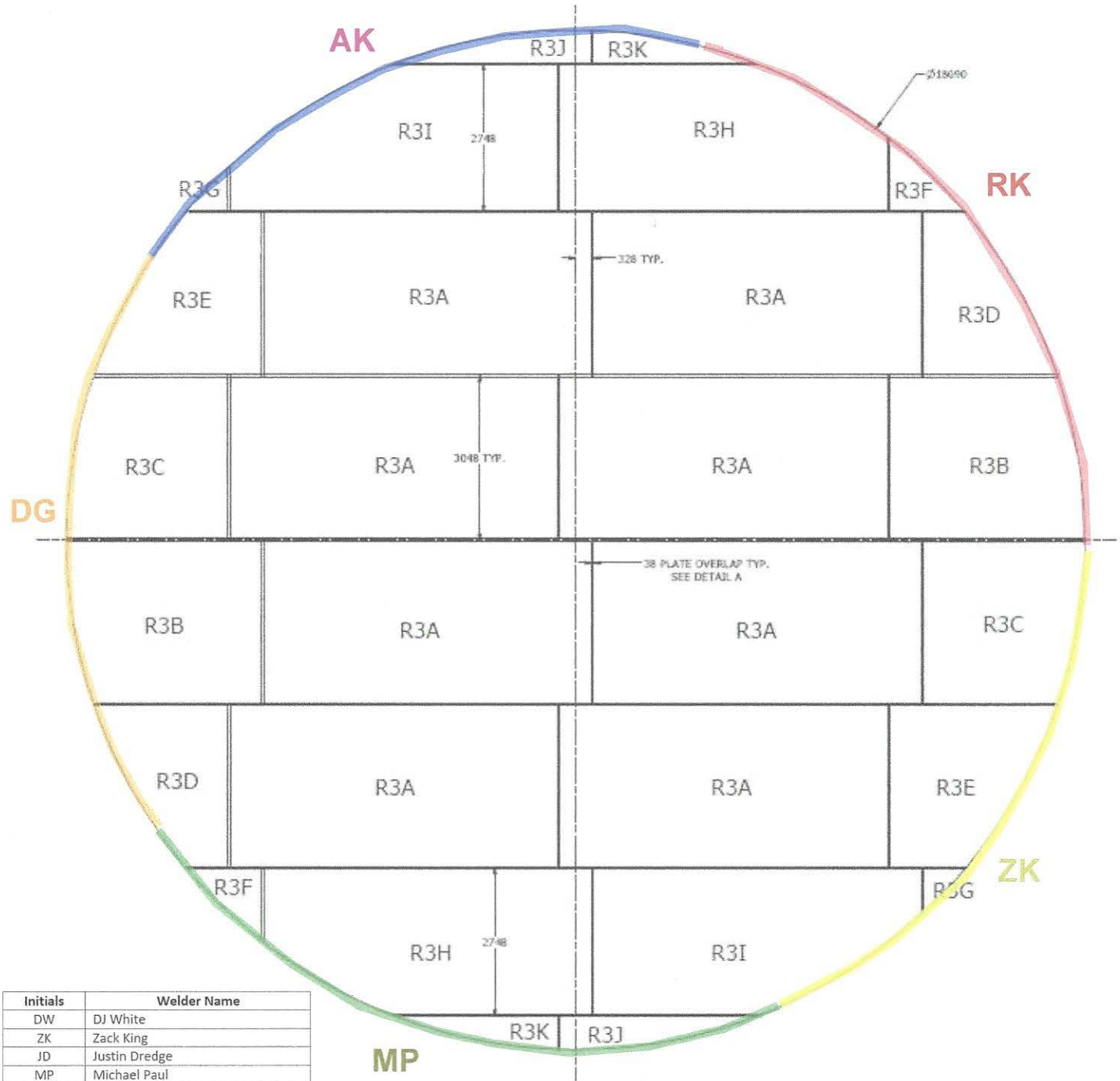

TANK 3 (3ML) ROOF LAYOUT
SCALE 1 / 50

Initials	Welder Name
DW	DJ White
ZK	Zack King
JD	Justin Dredge
MP	Michael Paul
DG	Dean Goodyear
RK	Ryan Kettle
JC	John Cusick
AK	Abel Kalai
JO	Joel Overgaard (Sub Arc Systems)

I, Sheldon Burry (print supervisor name) have visually inspected the welds shown on this weld map.

Sign: Sheldon Burry

Item 12 – Roof

Contents

1. MTR
2. Visual Report
3. Vacuum Box Test Report

Item 12 - Roof - MTR

Test Certificate

Form TC1: Revision 2: Date 23 Apr 2014

SSAB
12400 Highway 43 North, Axis, Alabama 36505, US

Customer:
SAMUEL, SON & CO. LTD
1250 APPLEBY LINE

BURLINGTON
ON L7L5G6

Customer P.O.No.: C41965 & 41-490195 | **Mill Order No.** 41-491117-01 | **Shipping Manifest:** AR240135

Product Description: CSA G40.21(2013) 38WT/260WT - CAT 5;LCVN 15FT.LBS,TCVN13FT.LBS@-45F/A673-P ALLOYS API650(12TH ED) TABLE 4-1 GR.IIIA NORMALIZED

Ship Date: 21 Feb 17
Cert Date: 21 Feb 17

Cert No: 081597458
(Page 1 of 2)

Size: 0.250 X 120.0 X 480.0 (IN)

Tested Pieces:				Tensiles:					Hardness	Charpy Impact Tests								
Heat Id	Piece Id	Tested Thickness	Tst Loc	YS (KSI)	UTS (KSI)	%RA	Elong % 2in 8in	Tst Dir		Abs. Energy(FTLB) 1	2	3	Avg	% Shear 1	2	3	Avg	Tst Tmp	Tst Dir	Tst Siz (mm)	BDWTT Tmp %Shr
E7B101	E01	0.256 (DISCRT)	C	53	75		25	T													
E7B101	E02	0.256 (DISCRT)	C							37	27	59	41					-50F	L	5.0	
			C							24	36	28	29					-50F	T	5.0	
E7B101	E03	0.256 (DISCRT)	C	54	75		27	T		51	62	61	58					-50F	L	5.0	
			C							37	30	27	31					-50F	T	5.0	
E7B101	E04	0.256 (DISCRT)	C							22	33	38	31					-50F	L	5.0	
			C							42	37	48	42					-50F	T	5.0	
E7B101	E05	0.256 (DISCRT)	C							61	49	61	57					-50F	L	5.0	
			C							32	41	32	35					-50F	T	5.0	
W7B598	E07	0.256 (DISCRT)	C	52	72		25	T													
W7B598	E08	0.256 (DISCRT)	C	51	71		25	T		33	31	37	34					-45F	L	5.0	
			C							30	28	31	30					-45F	T	5.0	
W7B598	E09	0.256 (DISCRT)	C							43	31	55	43					-50F	L	5.0	
			C							33	30	31	31					-50F	T	5.0	

Chemical Analysis

Heat Id	C	Mn	P	S	Si	Tot Al	Sol Al	Cu	Ni	Cr	Mo	Cb	V	Ti	B	N	ORGN
E7B101	.19	.92	.010	<.001	.24	.022	.020	.24	.13	.10	.04	.002	.005	.010	.0002	.0069	USA
W7B598	.18	.92	.009	.001	.24	.028	.022	.26	.13	.08	.05	.001	.004	.011	.0002	.0078	USA

KILLED STEEL
MERCURY IS NOT A METALLURGICAL COMPONENT OF THE STEEL AND NO MERCURY WAS INTENTIONALLY ADDED DURING THE MANUFACTURE OF THIS PRODUCT.
KILLED STEEL, PRODUCED TO A FINE GRAIN PRACTICE
MTR EN 10204:2004 INSPECTION CERTIFICATE 3.1 COMPLIANT
CHARPY FULL SIZE EQUIVALENT = ABSORBED ENERGY AVG X 10 / TEST SIZE IN MM
NORMALIZED PLATES. HEATED AT 1665F FOR 14 MINUTES.
TEST COUPONS TAKEN FROM HEAT TREATED PLATE.
PRODUCTS SHIPPED:

E7B101 E05	6705084	PCES:	1,	LBS:	4084	E7B101 E02	6705125	PCES:	1,	LBS:	4084
E7B101 E02	6705123	PCES:	1,	LBS:	4084	E7B101 E05	6705086	PCES:	1,	LBS:	4084
E7B101 E03	6705100	PCES:	1,	LBS:	4084	E7B101 E05	6705085	PCES:	1,	LBS:	4084
E7B101 E02	6705124	PCES:	1,	LBS:	4084	W7B598 E08	6705042	PCES:	1,	LBS:	4084
W7B598 E08	6705041	PCES:	1,	LBS:	4084	W7B598 E08	6705040	PCES:	1,	LBS:	4084
W7B598 E09	6705038	PCES:	1,	LBS:	4084	W7B598 E08	6705043	PCES:	1,	LBS:	4084

(P) Cust Part #:

WE HEREBY CERTIFY THAT THIS MATERIAL WAS TESTED IN ACCORDANCE WITH, AND MEETS THE REQUIREMENTS OF, THE APPROPRIATE SPECIFICATION

Justin Ward +1 251 662 4400
SENIOR METALLURGIST - PRODUCT

Item 12 - Roof - MTR

Test Certificate

Form TC1: Revision 2: Date 23 Apr 2014

SSAB
12400 Highway 43 North, Axis, Alabama 36505, US

Customer:
SAMUEL, SON & CO. LTD
1250 APPLEBY LINE

BURLINGTON
ON L7L5G6

Customer P.O.No.: C41965 & 41-490195 | **Mill Order No.** 41-491117-01 | **Shipping Manifest:** AR240135

Product Description: CSA G40.21(2013) 38WT/260WT - CAT 5;LCVN 15FT.LBS,TCVN13FT.LBS@-45F/A673-P ALLOYS API650(12TH ED) TABLE 4-1 GR.IIIA NORMALIZED

Ship Date: 21 Feb 17
Cert Date: 21 Feb 17

Cert No: 081597458
(Page 2 of 2)

Size: 0.250 X 120.0 X 480.0 (IN)

Tested Pieces:				Tensiles:						Charpy Impact Tests							
Heat Id	Piece Id	Tested Thickness	Tst Loc	YS (KSI)	UTS (KSI)	%RA	Elong % 2in 8in	Tst Dir	Hardness	Abs. Energy(FTLB) 1 2 3 Avg	% Shear 1 2 3 Avg	Tst Tmp	Tst Dir	Tst Siz (mm)	BDWTT Tmp %Shr
W7B598 E08	6705039		PCES: 1, LBS: 4084												
W7B598 E08	6705052		PCES: 1, LBS: 4084												
W7B598 E08	6705049		PCES: 1, LBS: 4084												
W7B598 E08	6705045		PCES: 1, LBS: 4084												
E7B101 E02	6705151		PCES: 1, LBS: 4084												
E7B101 E02	6705150		PCES: 1, LBS: 4084												
E7B101 E05	6705160		PCES: 1, LBS: 4084												
E7B101 E05	6705161		PCES: 1, LBS: 4084												
E7B101 E04	6705127		PCES: 1, LBS: 4084												
E7B101 E04	6705128		PCES: 1, LBS: 4084												
E7B101 E02	6705149		PCES: 1, LBS: 4084												
W7B598 E08	6705046		PCES: 1, LBS: 4084												
E7B101 E05	6705087		PCES: 1, LBS: 4084												
W7B598 E08	6705050		PCES: 1, LBS: 4084												
W7B598 E08	6705044		PCES: 1, LBS: 4084												
E7B101 E04	6705126		PCES: 1, LBS: 4084												
E7B101 E02	6705152		PCES: 1, LBS: 4084												
E7B101 E05	6705162		PCES: 1, LBS: 4084												
E7B101 E05	6705153		PCES: 1, LBS: 4084												
E7B101 E04	6705129		PCES: 1, LBS: 4084												
E7B101 E04	6705130		PCES: 1, LBS: 4084												
E7B101 E05	6705163		PCES: 1, LBS: 4084												
E7B101 E04	6705102		PCES: 1, LBS: 4084												

(P) Cust Part #:

WE HEREBY CERTIFY THAT THIS MATERIAL WAS TESTED IN ACCORDANCE WITH, AND MEETS THE REQUIREMENTS OF, THE APPROPRIATE SPECIFICATION

Justin Ward +1 251 662 4400
SENIOR METALLURGIST - PRODUCT

Inukshuk Construction Limited
Industrial Contracting Project Management

PO Box 654
Rankin Inlet, NU X0C 0G0
T 867.645.4030 F 867.645.4064

Item 12 - Roof - Visual Report

Fuel Tank Welding Visual Report

ICL Project #: 295 Supervisor Name: Sheldon Burry Location: Meliadine (Portal #1)

Client: Agnico Eagle Tank No: 3 Component Inspected: ROOF

Was all work on this component found to be acceptable? ☑ **Yes** ☐ **No** (if no, provide details below)

Details: _____

Corrective Action Required? ☐ **Yes** (if yes, provide details below) ☐ **No** (if no, explain why not)

Details of Corrective Action: _____

Supervisor Signature: Sheldon Burry Date: 2 10 17

Inukshuk Construction Limited
Industrial Contracting Project Management

PO Box 654
Rankin Inlet, NU X0C 0G0
T 867.645.4030 F 867.645.4064

PRESSURE TEST CERTIFICATE

SITE: Meliadine

WORK ORDER # _____

TITLE: Vacuum test (Roof tank 3)

DATE: Sept 01 / 2017

1. DESCRIPTION OF PIPE AND LOCATION:

2. SKETCH INDICATING TEST POINT (S):

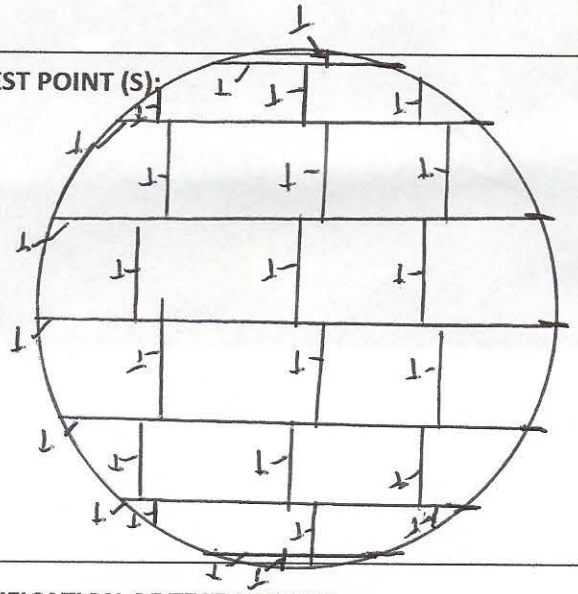

3. PIPE STANDARD / SPECIFICATION OF TEST SECTION:

Item 12 - Roof - Vacuum Test Report



Item 13 – Roof Structure

Contents

1. Column Plumbness Report
2. Visual Report

Inukshuk Construction Limited
Industrial Contracting Project Management

PO Box 654
Rankin Inlet, NU X0C 0G0
T 867.645.4030 F 867.645.4064

Item 13 – Roof Structure – Column Plumbness Report

Fuel Tank Column Plumbness Report

ICL Project #: 295 Supervisor Name: Sheldon Burry Location: Meliadine (Portal #1) .

Client: Agnico Eagle . Tank No: 3 .

I, Sheldon Burry (print supervisor name) have inspected the roof structure columns for plumbness and found them to be acceptable.

Supervisor Signature: Sheldon Burry Date: 12 10 17

Inukshuk Construction Limited
Industrial Contracting Project Management

PO Box 654
Rankin Inlet, NU X0C 0G0
T 867.645.4030 F 867.645.4064

Item 13 - Roof Structure - Visual Report

Fuel Tank Welding Visual Report

ICL Project #: 295 Supervisor Name: Sheldon Burry Location: Meliadine (Portal #1)

Client: Agnico Eagle Tank No: 3 Component Inspected: ROOF STRUCTURE

Was all work on this component found to be acceptable? ☑ **Yes** ☐ **No** (if no, provide details below)

Details: _____

Corrective Action Required? ☐ **Yes** (if yes, provide details below) ☐ **No** (if no, explain why not)

Details of Corrective Action: _____

Supervisor Signature: Sheldon Burry Date: 2 10 17

Item 14 - Nozzles

Contents

1. Shell Nozzle Weld Map / Visual Report
2. Roof Nozzle Weld Map / Visual Report
3. Dimension Report (AmSpec Data)
4. Air Test – Leak Test Report Water Drawoff
5. Air Test – Leak Test Report Inlet/Outlet
6. MPI Report

Item 14: Nozzles - Shell Nozzle Weld Map

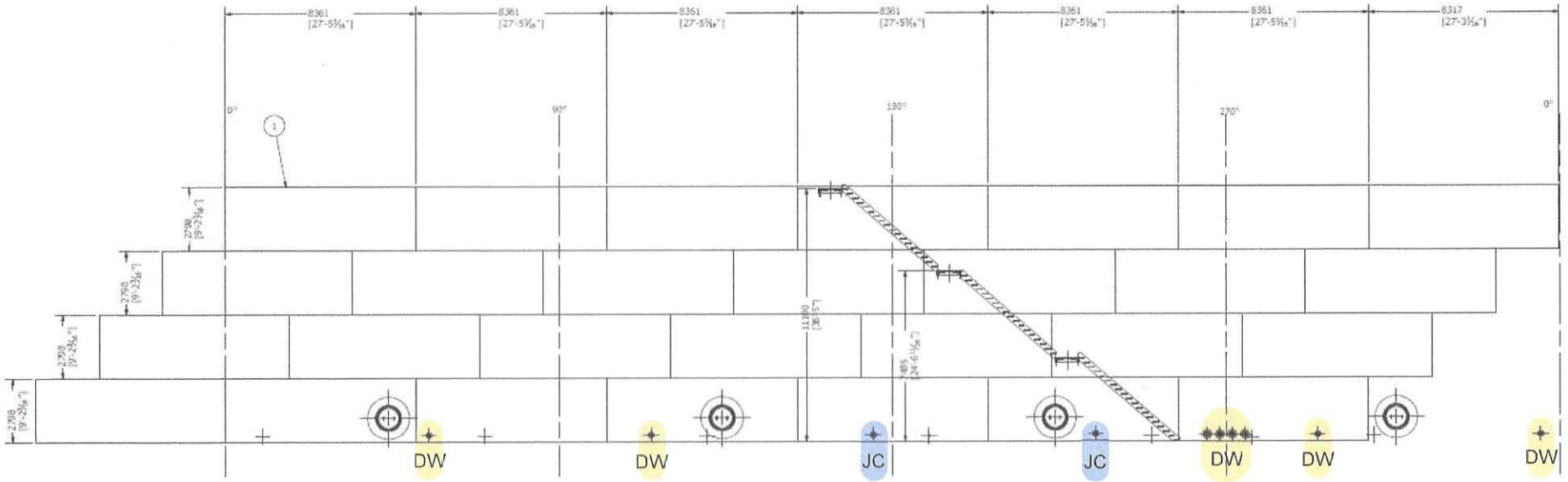

Initials	Welder Name
DW	DJ White
ZK	Zack King
JD	Justin Dredge
MP	Michael Paul
DG	Dean Goodyear
RK	Ryan Kettle
JC	John Cusick
AK	Abel Kalai
JO	Joel Overgaard (Sub Arc Systems)

SHELL DEVELOP VIEW

I, Sheldon Burry (print supervisor name) have visually inspected the welds shown on this weld map.

Sign: Sheldon Burry

Item 14: Nozzles - Roof Weld Map

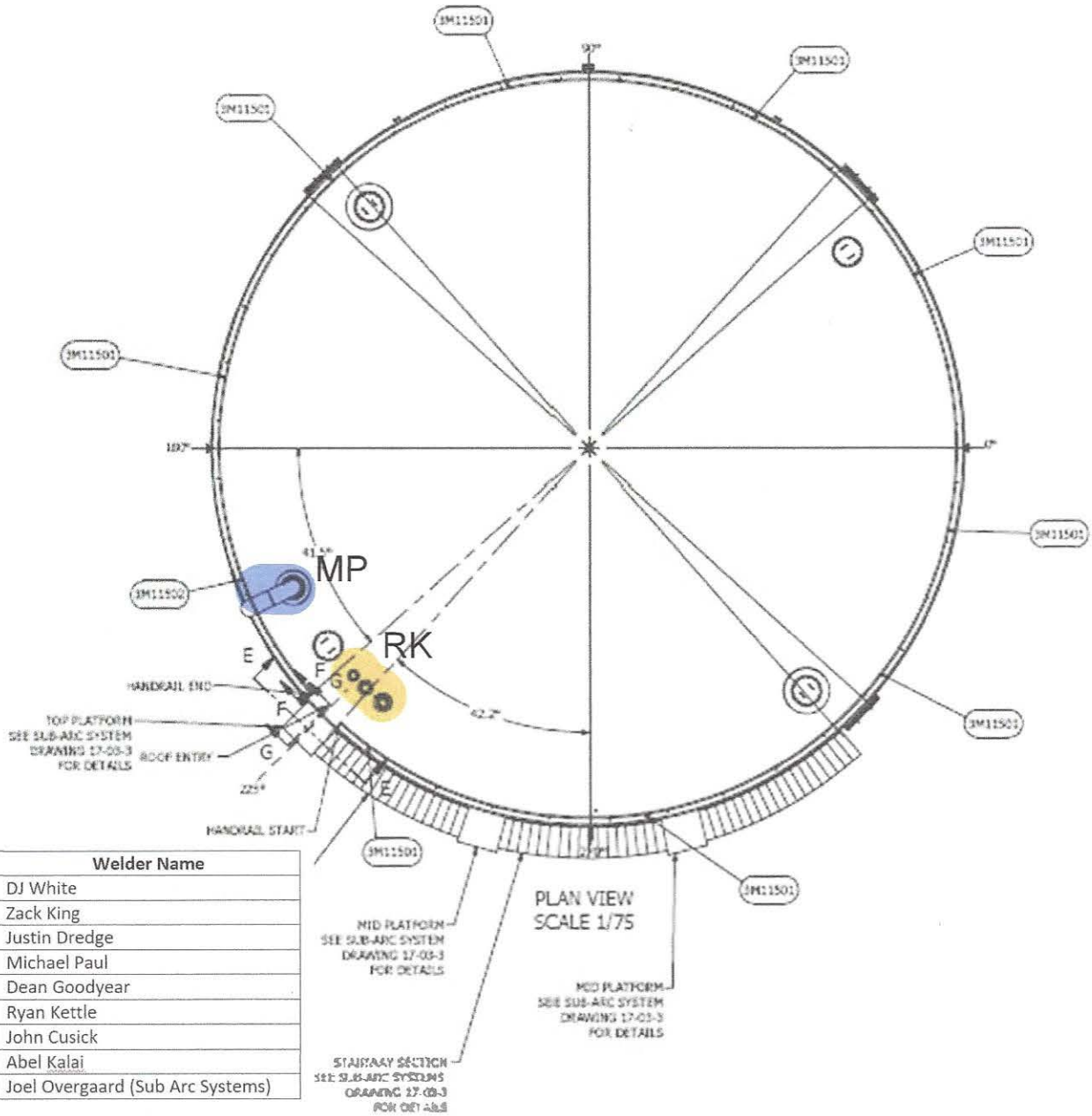

Initials	Welder Name
DW	DJ White
ZK	Zack King
JD	Justin Dredge
MP	Michael Paul
DG	Dean Goodyear
RK	Ryan Kettle
JC	John Cusick
AK	Abel Kalai
JO	Joel Overgaard (Sub Arc Systems)

I, Sheldon Burry (print supervisor name) have visually inspected the welds shown on this weld map.

Sign: Sheldon Burry

Item 14 - External Nozzle Dimension Report

Submit sketch for unusual deadwood

External

MW = Manway V = Valve F = Flange
Hatch = Hatch

Quantity	Description		Code	Diameter	Length	Height	Height From Bottom	Height From To	Office Use Bbls/8th	Office Use Gls/8th
4			MW	35	6	59	24	35		
6			V	3	7	13	10	13		
1			V	6	8	15	9	15		
4			V	6	8	15	9	15		

Inukshuk Construction Limited
Industrial Contracting | Project Management

PO Box 654
Rankin Inlet, NU X0C 0G0
T 867.645.4030 F 867.645.4064

PRESSURE TEST CERTIFICATE

SITE: Meliadine WORK ORDER #

TITLE: Tank Farm Tank #3

DATE: 9/9/17

1. DESCRIPTION OF PIPE AND LOCATION:

3" water Draw off 6 Places
60° – 120° – 180° – 240° – 300° – 360°

2. SKETCH INDICATING TEST POINT (S):

6 – water Draw off on Tank #3

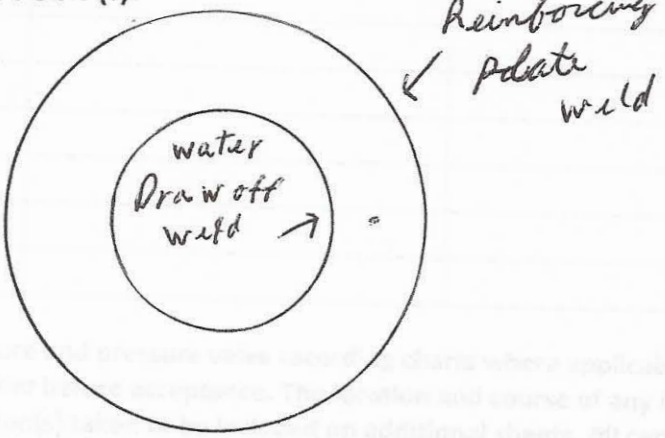

3. PIPE STANDARD / SPECIFICATION OF TEST SECTION:

Tank # 3

Inukshuk Construction Limited
Industrial Contracting Project Management

PO Box 654
Rankin Inlet, NU X0C 0G0
T 867.645.4030 F 867.645.4064

4. TESTING MEDIA: air pressure and soaping water

5. CALCULATED PRESSURE / ACTUAL PRESSURE AT LOWEST ELEVATION:

TIME (MIN)	TEST PRESSURE (KP)	TEMPERATURE (C)
1120 am	20 PSI	

Include all pressure, temperature and pressure valve recording charts where applicable. Charts to be signed and approved by Engineer before acceptance. The location and course of any leaks or failures and description of repair action(s) taken to be included on additional sheets. All certificates to be submitted to Engineer for each Test Section.

CONTRACTOR REPRESENTATIVE	ENGINEER
Sheldon Burry	BRUNO ROY
(Print Name)	(Print Name)
Sheldon Burry	Bruno Roy
(Signature)	(Signature)
9/9/17	2017/09/09
(Date)	(Date)

Inukshuk Construction Limited
Industrial Contracting Project Management

PO Box 654
Rankin Inlet, NU X0C 0G0
T 867.645.4030 F 867.645.4064

PRESSURE TEST CERTIFICATE

SITE: Meliadine

WORK ORDER #

TITLE: Tank Farm Tank # 3

DATE: 9/9/17

1. DESCRIPTION OF PIPE AND LOCATION:

6" LOADing/unLOADing
@ at 270° - 1 at 90°

2. SKETCH INDICATING TEST POINT (S):

5 - LoaDing/unLoaDing Shell NOZZLES

on Tank # 3

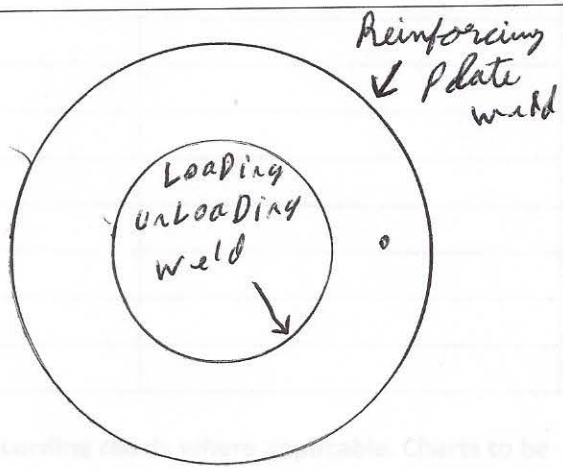

3. PIPE STANDARD / SPECIFICATION OF TEST SECTION:

Tank #3

Item 14: Nozzles - Loading/Unloading Pressure Test Report

Inukshuk Construction Limited
Industrial Contracting | Project Management

PO Box 654
Rankin Inlet, NU X0C 0G0
T 867.645.4030 F 867.645.4064

4. TESTING MEDIA: air pressure and soapy water

5. CALCULATED PRESSURE / ACTUAL PRESSURE AT LOWEST ELEVATION:		
TIME (MIN)	TEST PRESSURE (KP)	TEMPERATURE (C)
1200 am	20 PSI	

Include all pressure, temperature and pressure valve recording charts where applicable. Charts to be signed and approved by Engineer before acceptance. The location and course of any leaks or failures and description of repair action(s) taken to be included on additional sheets. All certificates to be submitted to Engineer for each Test Section.

CONTRACTOR REPRESENTATIVE	ENGINEER
Sheldon Burry	BRUNO ROY
(Print Name)	(Print Name)
Sheldon Burry	Bruno Roy
(Signature)	(Signature)
9/9/17	2017/09/09
(Date)	(Date)

Client :	**Inukshuk Construction Ltd,**	**Date d'intervention :** **Intervention date :**	2017-08-29
Adresse/Address :	PO Box 654 Rankin Inlet, Nunavut X0C 0G0	**Date du rapport :** **Report date :**	2017-09-08
Contact :	Marc Losier		
Entrepreneur : **Contractor :**	N/A	**N° dossier :** **File no :**	INS-117107-01
Endroit du travail : **Job location :**	Rankin Inlet , Nunavut	**Commande :** **Order :**	295-1046

INSP. VISUELLE VISUAL INSP.	MAGNÉTOSCOPIE MAGNETIC PARTICLES	RESSUAGE LIQUID PENETRANT	ULTRASONS ULTRASONIC
☐	☒	☐	☒

DESCRIPTION :

Magnetic inspection and Ultrasonic inspection on tank 3

The client is opting to use an ultrasonic testing, instead of radiographic testing & Magnetic testing on nozzles and bottom weld to the shell.

Remark: Visual testing was performed by client.

INSP. VISUELLE / VISUAL INSP.

NORME : **SPECIFICATION :**

N° équip. : **Equip. no :** N/A

MAGNÉTOSCOPIE MAGNETIC PARTICLES

NORME : **SPECIFICATION :** Api 650

N° équip. : **Equip. no :** MP-Q-27

Ampérage : **Amperage :**	Culasse/Yoke	**Continue** **Continuous**	☒	**Résiduelle** **Residual**	☐	**Humide** **Wet**	☐	**Sèche** **Dry**	☒
Longitudinale **Longitudinal**	☐	**Circulaire** **Circular**	☐	**C.A.** **A.C.**	☒	**C.C.** **D.C.**	☐	**Démagnétisée** **Demagnetized**	☐

RESSUAGE LIQUID PENETRANT

NORME : **SPECIFICATION :**

N° équip. : **Equip. no :**

Pénétrant/Penetrant : **Émulsifiant/Emulsifier :** **Révélateur/Developer :**

Temps/Time : **Temps/Time :** **Temps/Time :**

ULTRASONS / ULTRASONIC

NORME : **SPECIFICATION :** API 650

ÉTALONNAGE/CALIBRATION :

Bloc/Block : IIW Type 2 **Trou/Hole :** N/A **C.A.D. /D.A.C. :** ☐

APPAREIL/EQUIPMENT :

Instrument : USM GO+ **Couplant :** Echogel **Échelle/Sweep length :**

N° équip./Equip. no : UT-Q-34 **Palpeur/Transducer :** 0 degre and 70 degre

RÉSULTATS/RESULTS :

Ultrasonic inspection was performed:

- on every T (where vertical weld meet horizontal weld) between first/second, second/third & third/Fourth course: **Accepted**
- On every vertical weld of first course from 1" to 7 and 53" to 59": **Accepted**
- On every vertical weld of second course from 53" to 59" **Accepted**
- On horizontal see pictures 2 and 3 for 6 locations: **Accepted**

Magnetic particles inspection was performed on angle joint between the shell and nozzles, and joint between bottom weld and shell inside and outside:

- -**Inside tank**: weld between shell and nozzle & weld between shell to the bottom weld at 100%: by magnetic particles inspection: **Accepted**
- -**Outside tank**: weld between shell/pad, & weld between pad/nozzle & weld between shell/bottom weld at 100% (note 1) by magnetic particles inspection: **Accepted**

Note1: 16 nozzles including 4 manholes; one nozzle outside does not have pad. Please refer to drawing 295-M11; part section J-J item #39. This nozzle corresponds to a ¾" coupling for a water temperature gauge in the shell and the client has advised that no repad is needed for this specific coupling.

Techniciens : **Technicians :** Sylvain Germain CSA W178.2 level 2	**Assistants:**	**Approuvé par :** **Approved by :** Pierre Dostie Technical Supervisor CSA W178.2, niveau 3

Ce rapport ne doit pas être reproduit, sinon en entier, sans l'autorisation écrite de SGS CANADA inc.
Le présent rapport est émis par la Société conformément à ses Conditions Générales de Service accessibles sur http://www.sgs.ca/fr-FR/Terms-and-Conditions.aspx
This report is confidential and shall not be reproduced without the written approval of SGS CANADA Inc
This document is issued by the Company under its General Conditions of Service accessible at http://www.sgs.ca/en/Terms-and-Conditions.aspx

Client :	**Inukshuk Construction Ltd,**	**Date d'intervention :** **Intervention date :**	2017-08-29
Adresse/Address :	PO Box 654 Rankin Inlet, Nunavut X0C 0G0	**Date du rapport :** **Report date :**	2017-09-08
Contact :	Marc Losier		
Entrepreneur : **Contractor :**	N/A	**N° dossier :** **File no :**	INS-117107-01
Endroit du travail : **Job location :**	Rankin Inlet , Nunavut	**Commande :** **Order :**	295-1046

Picture : 1



View of tank # 3

Picture : 2



View at 0 degree

First horizontal UT between first/second course from vertical weld on second course on left at 60 to 66 inches. On second horizontal between second/third course UT on the right at 60 to 66 inches of the vertical second course. And for the third horizontal between third/fourth course located on left at 60 to 66 inches of vertical of third course. You can see on picture

Techniciens : **Technicians :**	Sylvain Germain CSA W178.2 level 2	**Assistants:**	**Approuvé par :** **Approved by :** Pierre Dostie Technical Supervisor CSA W178.2, niveau 3

Ce rapport ne doit pas être reproduit, sinon en entier, sans l'autorisation écrite de SGS CANADA inc.
Le présent rapport est émis par la Société conformément à ses Conditions Générales de Service accessibles sur http://www.sgs.ca/fr-FR/Terms-and-Conditions.aspx
This report is confidential and shall not be reproduced without the written approval of SGS CANADA Inc
This document is issued by the Company under its General Conditions of Service accessible at http://www.sgs.ca/en/Terms-and-Conditions.aspx

Client :	**Inukshuk Construction Ltd,**	**Date d'intervention :** **Intervention date :**	2017-08-29
Adresse/Address :	PO Box 654 Rankin Inlet, Nunavut X0C 0G0	**Date du rapport :** **Report date :**	2017-09-08
Contact :	Marc Losier		
Entrepreneur : **Contractor :**	N/A	**N° dossier :** **File no :**	INS-117107-01
Endroit du travail : **Job location :**	Rankin Inlet , Nunavut	**Commande :** **Order :**	295-1046

Picture :3



View at 180 degree

First horizontal UT between first/second course from vertical weld on second course on left at 60 to 66 inches. On second horizontal between second/third course UT on the right at 60 to 66 inches of the vertical second course. And for the third horizontal between third/fourth course located on left at 60 to 66 inches of vertical of third course. You can see on picture

Techniciens : **Technicians :**	Sylvain Germain CSA W178.2 level 2	**Assistants:**		**Approuvé par :** **Approved by :**	Pierre Dostie Technical Supervisor CSA W178.2, niveau 3

Ce rapport ne doit pas être reproduit, sinon en entier, sans l'autorisation écrite de SGS CANADA inc.
Le présent rapport est émis par la Société conformément à ses Conditions Générales de Service accessibles sur http://www.sgs.ca/fr-FR/Terms-and-Conditions.aspx
This report is confidential and shall not be reproduced without the written approval of SGS CANADA Inc
This document is issued by the Company under its General Conditions of Service accessible at http://www.sgs.ca/en/Terms-and-Conditions.aspx

Item 15 – Manways

Contents

1. Shell Manway Weld Map and Visual Report
2. Roof Manway Weld Map and Visual Report
3. Dimension Report (AmSpec)
4. Leak Test Report
5. Bolting Pattern and Torque Wrench Photos
6. Torque Wrench Specs
7. MPI Report
8. Rev. 1 - Diesel Test Report on Shell Neck Weld

Item 15: Manway - Shell Weld Map

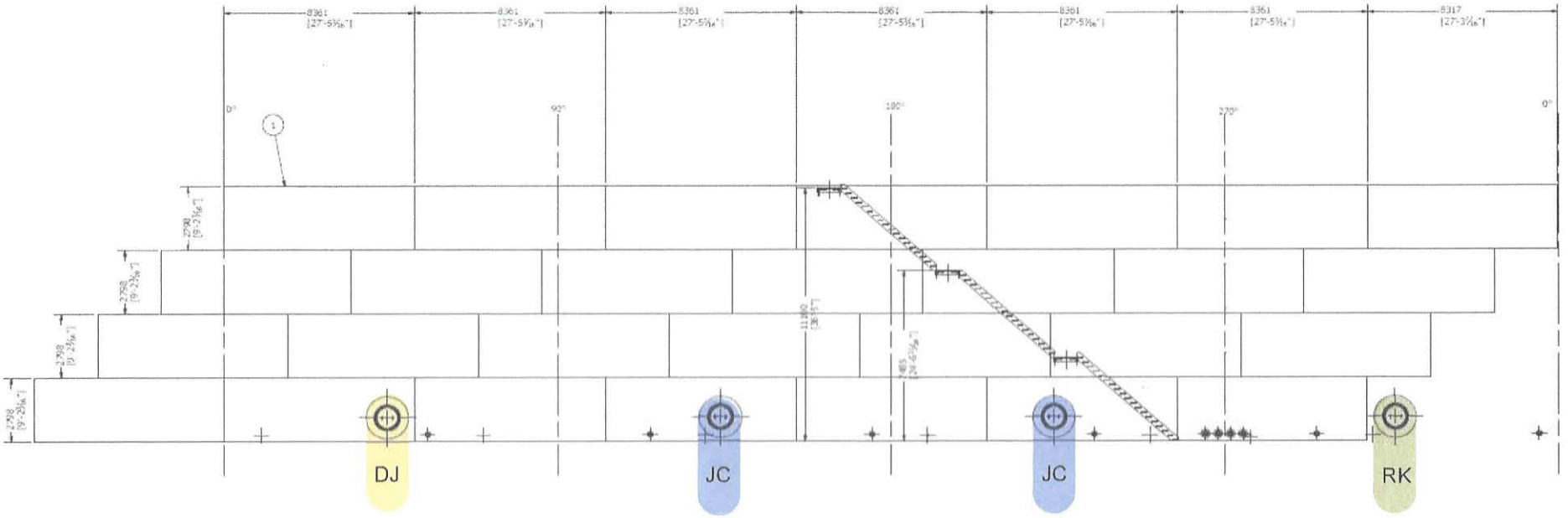

Initials	Welder Name
DW	DJ White
ZK	Zack King
JD	Justin Dredge
MP	Michael Paul
DG	Dean Goodyear
RK	Ryan Kettle
JC	John Cusick
AK	Abel Kalai
JO	Joel Overgaard (Sub Arc Systems)

SHELL DEVELOP VIEW

I, Sheldon Berry (print supervisor name) have visually inspected the welds shown on this weld map.

Sign: Sheldon Berry

Item 15: Manway - Roof Weld Map

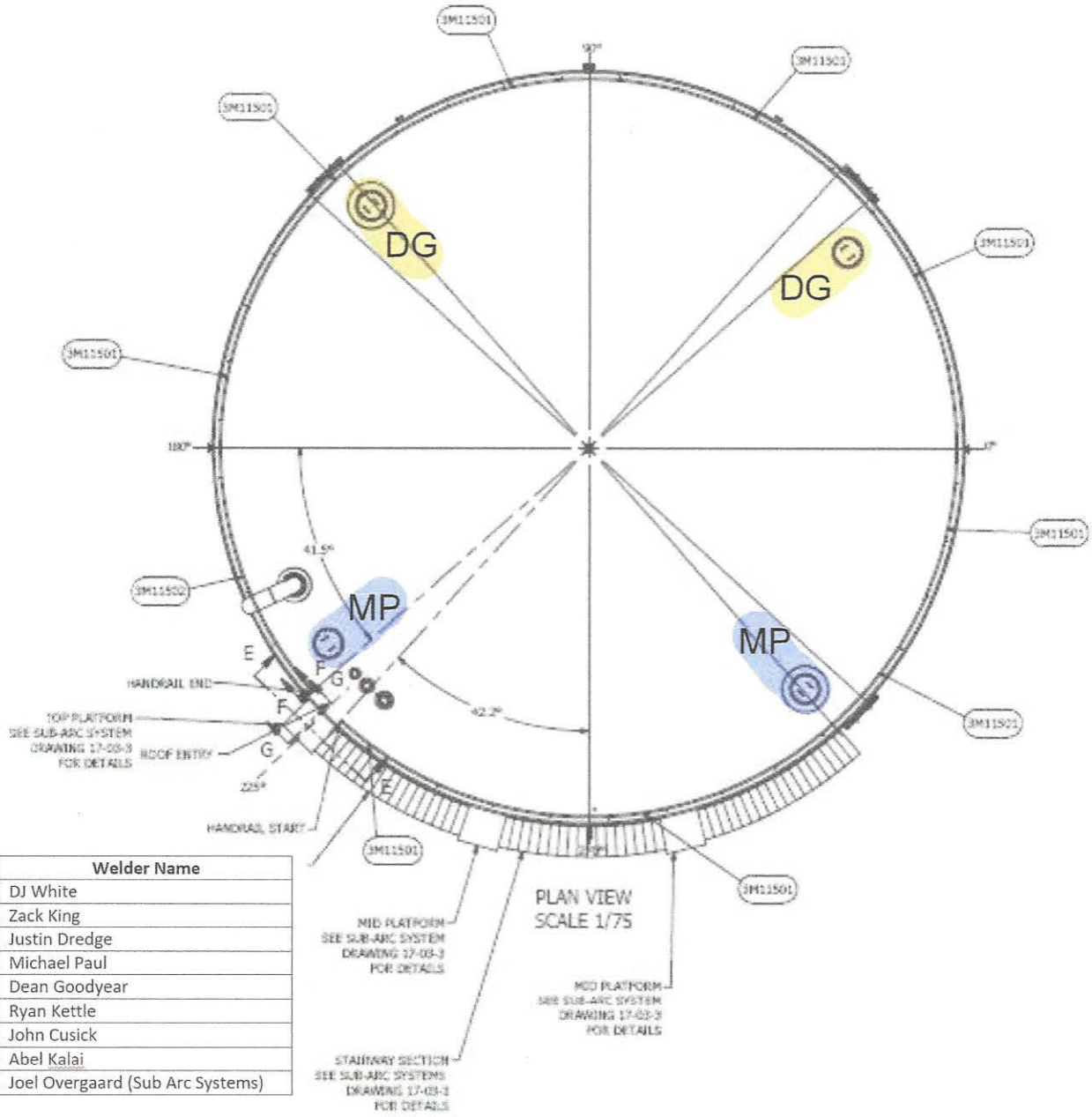

Initials	Welder Name
DW	DJ White
ZK	Zack King
JD	Justin Dredge
MP	Michael Paul
DG	Dean Goodyear
RK	Ryan Kettle
JC	John Cusick
AK	Abel Kalai
JO	Joel Overgaard (Sub Arc Systems)

I, Sheldon Burry (print supervisor name) have visually inspected the welds shown on this weld map.

Sign: Sheldon Burry

Tank 3 - External Nozzle Dimensions

Submit sketch for unusual deadwood

External

MW = Manway V = Valve F = Flange
Hatch = Hatch

Quantity	Description		Code	Diameter	Length	Height	Height From Bottom	Height To	Office Use Bbls/8th	Office Use Gls/8th
4			MW	35	6	59	24	35		
6			V	3	7	13	10	13		
1			V	6	8	15	9	15		
4			V	6	8	15	9	15		

Inukshuk Construction Limited
Industrial Contracting | Project Management

PO Box 654
Rankin Inlet, NU X0C 0G0
T 867.645.4030 F 867.645.4064

PRESSURE TEST CERTIFICATE

SITE: Meliadine

WORK ORDER #

TITLE: Tank Farm Tank #3

DATE: 9/9/17

1. DESCRIPTION OF PIPE AND LOCATION:

at 316° – 44° – 134° – 224° Manhole and Reinforcing Plate 4 plate in total

2. SKETCH INDICATING TEST POINT (S):

4 man Hole on Tank #3

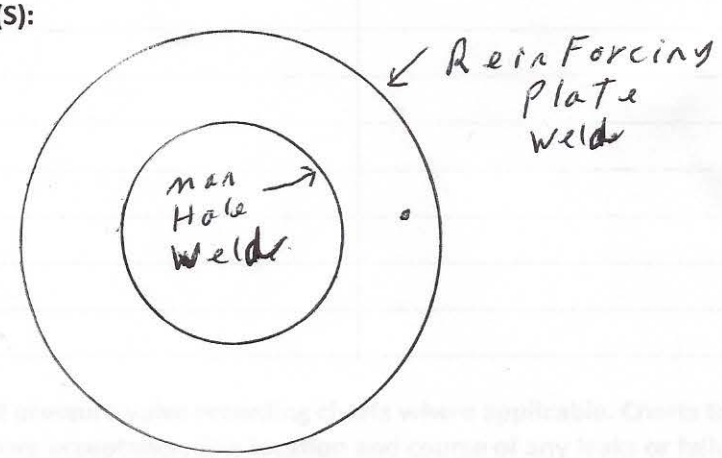

3. PIPE STANDARD / SPECIFICATION OF TEST SECTION:

Tank #3

Inukshuk Construction Limited
Industrial Contracting | Project Management

PO Box 654
Rankin Inlet, NU X0C 0G0
T 867.645.4030 F 867.645.4064

4. TESTING MEDIA: air pressure and soapy water

5. CALCULATED PRESSURE / ACTUAL PRESSURE AT LOWEST ELEVATION:		
TIME (MIN)	TEST PRESSURE (KP)	TEMPERATURE (C)
1100 am	20 PSI	

Include all pressure, temperature and pressure valve recording charts where applicable. Charts to be signed and approved by Engineer before acceptance. The location and course of any leaks or failures and description of repair action(s) taken to be included on additional sheets. All certificates to be submitted to Engineer for each Test Section.

CONTRACTOR REPRESENTATIVE	ENGINEER
Sheldon Burry	BRUNO ROY
(Print Name)	(Print Name)
Sheldon Burry	Bruno R
(Signature)	(Signature)
9/9/17	2017/09/09
(Date)	(Date)

Item 15 - Manways Bolting Pattern and Torque Wrench Photos





Item 19 - Bolts and Nuts - Torque Wrench Specs

Certification of Calibration
For Torque Wrench Used to Seal Shell Manholes

Certification of calibration					
Model : 8229239 Calibrator :			Serial No : E20140321 Date : 2014-10-21		
Set Torque	Min	Max	Actual Readings		
100FT	96.0	104.0	101.3	101.6	101.9
400FT	384.0	416.0	400	407.1	407.9
700FT	672.0	728.0	712.1	712.7	712.5

Client :	**Inukshuk Construction Ltd,**	**Date d'intervention :** **Intervention date :**	2017-08-29
Adresse/Address :	PO Box 654 Rankin Inlet, Nunavut X0C 0G0	**Date du rapport :** **Report date :**	2017-09-08
Contact :	Marc Losier		
Entrepreneur : **Contractor :**	N/A	**N° dossier :** **File no :**	INS-117107-01
Endroit du travail : **Job location :**	Rankin Inlet , Nunavut	**Commande :** **Order :**	295-1046

INSP. VISUELLE / VISUAL INSP. ☐ **MAGNÉTOSCOPIE / MAGNETIC PARTICLES** ☒ **RESSUAGE / LIQUID PENETRANT** ☐ **ULTRASONS / ULTRASONIC** ☒

DESCRIPTION :

Magnetic inspection and Ultrasonic inspection on tank 3

The client is opting to use an ultrasonic testing, instead of radiographic testing & Magnetic testing on nozzles and bottom weld to the shell.

Remark: Visual testing was performed by client.

INSP. VISUELLE / VISUAL INSP.

NORME : **SPECIFICATION :**

N° équip. : **Equip. no :** N/A

MAGNÉTOSCOPIE / MAGNETIC PARTICLES

NORME : **SPECIFICATION :** Api 650

N° équip. : **Equip. no :** MP-Q-27

Ampérage : **Amperage :**	Culasse/Yoke	**Continue** **Continuous**	☒	**Résiduelle** **Residual**	☐	**Humide** **Wet**	☐	**Sèche** **Dry**	☒
Longitudinale **Longitudinal**	☐	**Circulaire** **Circular**	☐	**C.A.** **A.C.**	☒	**C.C.** **D.C.**	☐	**Démagnétisée** **Demagnetized**	☐

RESSUAGE / LIQUID PENETRANT

NORME : **SPECIFICATION :**

N° équip. : **Equip. no :**

Pénétrant/Penetrant : **Émulsifiant/Emulsifier :** **Révélateur/Developer :**

Temps/Time : **Temps/Time :** **Temps/Time :**

ULTRASONS / ULTRASONIC

NORME : **SPECIFICATION :** API 650

ÉTALONNAGE/CALIBRATION :

Bloc/Block : IIW Type 2 **Trou/Hole :** N/A **C.A.D. /D.A.C. :** ☐

APPAREIL/EQUIPMENT :

Instrument : USM GO+ **Couplant :** Echogel **Échelle/Sweep length :**

N° équip./Equip. no : UT-Q-34 **Palpeur/Transducer :** 0 degre and 70 degre

RÉSULTATS/RESULTS :

Ultrasonic inspection was performed:

- on every T (where vertical weld meet horizontal weld) between first/second, second/third & third/Fourth course: **Accepted**
- On every vertical weld of first course from 1" to 7 and 53" to 59": **Accepted**
- On every vertical weld of second course from 53" to 59" **Accepted**
- On horizontal see pictures 2 and 3 for 6 locations: **Accepted**

Magnetic particles inspection was performed on angle joint between the shell and nozzles, and joint between bottom weld and shell inside and outside:

- -**Inside tank**: weld between shell and nozzle & weld between shell to the bottom weld at 100%: by magnetic particles inspection: **Accepted**
- -**Outside tank**: weld between shell/pad, & weld between pad/nozzle & weld between shell/bottom weld at 100% (note 1) by magnetic particles inspection: **Accepted**

Note1: 16 nozzles including 4 manholes; one nozzle outside does not have pad. Please refer to drawing 295-M11; part section J-J item #39. This nozzle corresponds to a ¾" coupling for a water temperature gauge in the shell and the client has advised that no repad is needed for this specific coupling.

Techniciens : **Technicians :** Sylvain Germain CSA W178.2 level 2	**Assistants:**	**Approuvé par :** **Approved by :** Pierre Dostie Technical Supervisor CSA W178.2, niveau 3

Ce rapport ne doit pas être reproduit, sinon en entier, sans l'autorisation écrite de SGS CANADA inc.
Le présent rapport est émis par la Société conformément à ses Conditions Générales de Service accessibles sur http://www.sgs.ca/fr-FR/Terms-and-Conditions.aspx
This report is confidential and shall not be reproduced without the written approval of SGS CANADA Inc
This document is issued by the Company under its General Conditions of Service accessible at http://www.sgs.ca/en/Terms-and-Conditions.aspx

Client :	**Inukshuk Construction Ltd,**	**Date d'intervention :** **Intervention date :**	2017-08-29
Adresse/Address :	PO Box 654 Rankin Inlet, Nunavut X0C 0G0	**Date du rapport :** **Report date :**	2017-09-08
Contact :	Marc Losier		
Entrepreneur : **Contractor :**	N/A	**N° dossier :** **File no :**	INS-117107-01
Endroit du travail : **Job location :**	Rankin Inlet , Nunavut	**Commande :** **Order :**	295-1046

Picture : 1



View of tank # 3

Picture : 2



View at 0 degree
First horizontal UT between first/second course from vertical weld on second course on left at 60 to 66 inches. On second horizontal between second/third course UT on the right at 60 to 66 inches of the vertical second course. And for the third horizontal between third/fourth course located on left at 60 to 66 inches of vertical of third course. You can see on picture

Techniciens : **Technicians :**	Sylvain Germain CSA W178.2 level 2	**Assistants:**	**Approuvé par :** **Approved by :** Pierre Dostie Technical Supervisor CSA W178.2, niveau 3

Ce rapport ne doit pas être reproduit, sinon en entier, sans l'autorisation écrite de SGS CANADA inc.
Le présent rapport est émis par la Société conformément à ses Conditions Générales de Service accessibles sur http://www.sgs.ca/fr-FR/Terms-and-Conditions.aspx
This report is confidential and shall not be reproduced without the written approval of SGS CANADA Inc
This document is issued by the Company under its General Conditions of Service accessible at http://www.sgs.ca/en/Terms-and-Conditions.aspx

Client :	**Inukshuk Construction Ltd,**	**Date d'intervention :** **Intervention date :**	2017-08-29
Adresse/Address :	PO Box 654 Rankin Inlet, Nunavut X0C 0G0	**Date du rapport :** **Report date :**	2017-09-08
Contact :	Marc Losier		
Entrepreneur : **Contractor :**	N/A	**N° dossier :** **File no :**	INS-117107-01
Endroit du travail : **Job location :**	Rankin Inlet , Nunavut	**Commande :** **Order :**	295-1046

Picture :3



View at 180 degree

First horizontal UT between first/second course from vertical weld on second course on left at 60 to 66 inches. On second horizontal between second/third course UT on the right at 60 to 66 inches of the vertical second course. And for the third horizontal between third/fourth course located on left at 60 to 66 inches of vertical of third course. You can see on picture

Techniciens : **Technicians :**	Sylvain Germain CSA W178.2 level 2	**Assistants:**		**Approuvé par :** **Approved by :**	Pierre Dostie Technical Supervisor CSA W178.2, niveau 3

Ce rapport ne doit pas être reproduit, sinon en entier, sans l'autorisation écrite de SGS CANADA inc.
Le présent rapport est émis par la Société conformément à ses Conditions Générales de Service accessibles sur http://www.sgs.ca/fr-FR/Terms-and-Conditions.aspx
This report is confidential and shall not be reproduced without the written approval of SGS CANADA Inc
This document is issued by the Company under its General Conditions of Service accessible at http://www.sgs.ca/en/Terms-and-Conditions.aspx

Project 295 - AEM Meliadine Fuel Storage Tank 6515-C-260-002

Tank 3 and 5 manhole necks – Diesel Test

Tank #	Manhole #	TEST			Witnesses		Comments
		Date	Start Time	End Time	Inukshuk	Agnico Eagle	
3	1	NOV01/2017	1:50	1:56	John Cusick John Cusick	Pierre Gauthier	Diesel Applied to all manholes, now we wait 48hrs
3	2	NOV01/2017	1:50	1:56	John Cusick	Pierre Gauthier	Diesel Applied to All manholes, now we wait 48 hrs
3	3	NOV01/2017	1:50	1:56	John Cusick	Pierre Gauthier	Diesel Applied now we wait 48 hrs
3	4	NOV01/2017	1:50	1:56	John Cusick	Pierre Gauthier	Diesel Applied now we wait 48 hrs
5	1	NOV01/2017	2:00	2:05	John Cusick	Pierre Gauthier	Diesel Applied now we wait 48 hrs
5	2	NOV01/2017	2:00	2:05	John Cusick	Pierre Gauthier	Diesel Applied now we wait 48 hrs.
		Nov04/2017	2:30		John Cusick	Stephane Gierat	Check Nov 04, 2:30pm No leak to report.

Item 16 – Internals

Contents

1. Visual Report
2. Internal Dimension Report (AmSpec)

Inukshuk Construction Limited
Industrial Contracting Project Management

PO Box 654
Rankin Inlet, NU X0C 0G0
T 867.645.4030 F 867.645.4064

Item 16 - Internals - Visual Report

Fuel Tank Welding Visual Report

ICL Project #: 295 Supervisor Name: Sheldon Burry Location: Meliadine (Portal #1)

Client: Agnico Eagle Tank No: 3 Component Inspected: INTERNALS

Was all work on this component found to be acceptable? ☑ **Yes** ☐ **No** (if no, provide details below)

Details: _____

Corrective Action Required? ☐ **Yes** (if yes, provide details below) ☐ **No** (if no, explain why not)

Details of Corrective Action: _____

Supervisor Signature: Sheldon Burry Date: 2 10 17

It is very important to note if tubular roof supports (pipes) are open (fills with product) or closed.



PAGE 6

Enter SUMP details in this first row ONLY

TANK No.: 5

ALL MEASUREMENTS TO BE SHOWN AS INCHES

Internal

Use Proper Codes and Enter all data

op = Open Pipe ch = Channel
cp = Closed Pipe

Quantity	Description		Code	Diameter	Length	Height	Height From Bottom	To	Office Use Bbls/8th	Gls/8th
1	Pipe		OP	6	36	13	10	13	-0.0005	-0.0229499
1	Pipe		OP	6	161	18	10	18	-0.0024	-0.1026373
1	Pipe		OP	6	161	15	9	15	-0.0024	-0.1026373
1	Pipe		OP	6	36	15	9	15	-0.0005	-0.0229499
4	Pipe		OP	3	53	15	9	15	-0.0032	-0.1351497
1	Pipe		OP	6	36				-0.0005	-0.0229499
1	Center Beam		OP	6	180				-0.0027	-0.1147497

Item 17 - Externals

Contents

1. Visual Report

Inukshuk Construction Limited
Industrial Contracting Project Management

PO Box 654
Rankin Inlet, NU X0C 0G0
T 867.645.4030 F 867.645.4064

Item 17 - Externals - Visual Report

Fuel Tank Welding Visual Report

ICL Project #: 295 Supervisor Name: Sheldon Burry Location: Meliadine (Portal #1)

Client: Agnico Eagle Tank No: 3 Component Inspected: EXTERNALS

Was all work on this component found to be acceptable? ☐ **Yes** ☐ **No** (if no, provide details below)

Details: _____

Corrective Action Required? ☐ **Yes** (if yes, provide details below) ☐ **No** (if no, explain why not)

Details of Corrective Action: _____

Supervisor Signature: Sheldon Burry Date: 2 10 17

Item 18 – Stairs and Platforms

Contents

1. Visual Report

Inukshuk Construction Limited
Industrial Contracting Project Management

PO Box 654
Rankin Inlet, NU X0C 0G0
T 867.645.4030 F 867.645.4064

Item 18 - Stairs and Platforms - Visual Report

Fuel Tank Welding Visual Report

ICL Project #: 295 Supervisor Name: Sheldon Burry Location: Meliadine (Portal #1)

Client: Agnico Eagle Tank No: 3 Component Inspected: STAIRS AND PLATFORMS

Was all work on this component found to be acceptable? ☐ **Yes** ☑ **No** (if no, provide details below)

Details: Steps to close to the ground

Corrective Action Required? ☑ **Yes** (if yes, provide details below) ☐ **No** (if no, explain why not)

Details of Corrective Action: cut the Bottom step of

Supervisor Signature: Sheldon Burry Date: 2 10 17

Item 19 – Bolts and Nuts

Contents

1. Fastener List
2. Torque Wrench Specs

Tank #	qty	Qty of Component	Connection	Description	Lght (in)
3	60.00	30	Shell to Rafter Connection	Bolt, Structural A325, 5/8"	1.75
3	60.00	30	Rafter to Center Column	Bolt, Structural A325, 5/8"	2.5
3	120.00			Nut, Structural heavy hex 5/8"	
3	240.00			Washer, type A, 5/8"	
3	168.00	4	36"Shell Manhole	Stud, L7, 3/4"	3 1/4
3	48.00	6	6" in/out Nozzle	Stud, L7, 3/4"	4
3		6	3" Water Drawoff	Stud, L7, 5/8"	3 1/2
3	60.00	3	24" Roof manhole	Stud, L7, 5/8"	2 1/4
3	20.00	1	24" Roof manhole emergency vent	Stud, L7, 5/8"	9.5
3	16.00	1	16" Vent	Stud, L7, 1"	5 1/4
3	8.00	1	8" Roof Nozzle	Stud, L7, 3/4"	4 1/4
3	8.00	1	6" Gauge Hatch	Stud, L7, 3/4"	4
3	8.00	1	4" Roof Nozzle	Stud, L7, 5/8"	3.5
3	4.00	4	36"Shell Manhole	Gasket, Ring, Durlon 8500, 1/8", 1051 o.d.x 914 i.d.	
3	6.00	6	6" in/out Nozzle	Gasket,Ring, Durlon 8500,1/8" x 6" x 150#	
3		6	3" Water Drawoff	Gasket, Ring, Durlon 8500,1/8" x 3" x 150#	
3	4.00	4	24" Roof manhole	Gasket, Ring, Durlon 8500, 1/16" x 762 x 610	
3	1.00	1	8" High Level	Gasket, Ring, Durlon 8500, 1/16" x 150#, 8"	
3	1.00	1	6" Gauge Hatch	Gasket, Full Face, Durlon 8500, 1/16" x 150#, 6"	
3	32.00			Nut, A194, Gr. 4, 1"	
3	464.00			Nut, A194, Gr. 4, 3/4"	
3	176.00			Nut, A194, Gr. 4, 5/8"	

Item 19 - Bolts and Nuts - Torque Wrench Specs

Certification of Calibration
For Torque Wrench Used to Seal Shell Manholes

Certification of calibration					
Model : 8229239 Calibrator :			Serial No : E20140321 Date : 2014-10-21		
Set Torque	Min	Max	Actual Readings		
100FT	96.0	104.0	101.3	101.6	101.9
400FT	384.0	416.0	400	407.1	407.9
700FT	672.0	728.0	712.1	712.7	712.5

Item 20 - Final

Contents

1. Name Plate Scan
2. Punch List
3. Manufacturer's Certification (3rd Party)
4. Data Sheet (Innage)

Item 20 - Final - Name Plate Scan



Inukshuk Construction Limited
Industrial Contracting Project Management

PO Box 654
Rankin Inlet, NU X0C 0G0
T 867.645.4030 F 867.645.4064

Item 20 – Final – Punch List

ICL Project No.: 295 Tank No.: 3 Client: AEM Site: Portal #1

Punch List

Initial When Complete

Description	To be Completed By	ICL	Client
Weld stairway and platform handrails together to eliminate pinch points		JC	

MANUFACTURER'S CERTIFICATION FOR A TANK BUILT TO API STANDARD 650

To **AGNICO EAGLE MINES LIMITED**

(name and address of Purchaser)

145 KING STREET EAST, SUITE 400, TORONTO, ONTARIO M5C 2Y7

We hereby certify that the tank constructed for you at

(location)

RANKIN INLET, NUNAVUT - MELIADINE FIELD ERECTED TANKS PROJECT

and described as follows: **TANK NO. 3, 18.6 M DIA X 11.2 M HIGH, 3,000 M3, FIXED CONE ROOF**

(serial or contract number, diameter, height, capacity, floating or fixed roof)

AEM PO: OC-568510

meets all applicable requirements of API Standard 650, **12th** Edition, **Addendum 2** Revision, Appendix _____ dated **JAN 2016** including the requirements for design, materials, fabrication, and erection.

REGISTERED PROFESSIONAL ENGINEER K.G. BROWN LICENSEE NT/NU

14-Nov-2017

Permit Number: P471

INUKSHUK CONSTRUCTION LIMITED

Manufacturer

Kyle Brown

Design Engineer

14-Nov-17

Date

Meliadine
Portal #1
Item 20 - Final - Datasheet

Tank No. 3
INNAGE TABLE

Calibration@AmSpecGroup.com

CAPACITIES GIVEN IN CUBIC METERS — **GAUGE HEIGHT: 11.443 M**

mm	0 M	mm	0 M	mm	0 M	mm	0 M	mm	0 M	mm	0 M	mm	0 M	mm	0 M	mm	0 M	mm	0 M	mm	0 M
0.000	CROWN BOTTOM 0.473	0.100	CROWN BOTTOM 22.542	0.200	49.643	0.300	76.712	0.400	103.810	0.500	130.928	0.600	158.053	0.700	185.214	0.800	212.374	0.900	239.518
0.001	0.617	0.101	22.812	0.201	49.914	0.301	76.982	0.401	104.081	0.501	131.199	0.601	158.325	0.701	185.485	0.801	212.646	0.901	239.789
0.002	0.762	0.102	23.083	0.202	50.185	0.302	77.253	0.402	104.352	0.502	131.470	0.602	158.596	0.702	185.757	0.802	212.917	0.902	240.060
0.003	0.907	0.103	23.353	0.203	50.456	0.303	77.524	0.403	104.623	0.503	131.741	0.603	158.868	0.703	186.028	0.803	213.189	0.903	240.331
0.004	1.051	0.104	23.624	0.204	50.727	0.304	77.795	0.404	104.894	0.504	132.012	0.604	159.140	0.704	186.300	0.804	213.460	0.904	240.603
0.005	1.196	0.105	23.894	0.205	50.997	0.305	78.065	0.405	105.166	0.505	132.283	0.605	159.411	0.705	186.572	0.805	213.732	0.905	240.874
0.006	1.341	0.106	24.165	0.206	51.268	0.306	78.336	0.406	105.437	0.506	132.555	0.606	159.683	0.706	186.843	0.806	214.004	0.906	241.145
0.007	1.485	0.107	24.435	0.207	51.539	0.307	78.607	0.407	105.708	0.507	132.826	0.607	159.954	0.707	187.115	0.807	214.275	0.907	241.416
0.008	1.630	0.108	24.706	0.208	51.810	0.308	78.878	0.408	105.979	0.508	133.097	0.608	160.226	0.708	187.386	0.808	214.547	0.908	241.687
0.009	1.775	0.109	24.976	0.209	52.081	0.309	79.149	0.409	106.250	0.509	133.368	0.609	160.498	0.709	187.658	0.809	214.818	0.909	241.959
0.010	1.919	0.110	25.247	0.210	52.352	0.310	79.419	0.410	106.522	0.510	133.639	0.610	160.769	0.710	187.930	0.810	215.090	0.910	242.230
0.011	2.064	0.111	25.517	0.211	52.622	0.311	79.690	0.411	106.793	0.511	133.911	0.611	161.041	0.711	188.201	0.811	215.362	0.911	242.501
0.012	2.209	0.112	25.788	0.212	52.893	0.312	79.961	0.412	107.064	0.512	134.182	0.612	161.312	0.712	188.473	0.812	215.633	0.912	242.772
0.013	2.354	0.113	26.058	0.213	53.164	0.313	80.232	0.413	107.335	0.513	134.453	0.613	161.584	0.713	188.744	0.813	215.905	0.913	243.043
0.014	2.498	0.114	26.329	0.214	53.435	0.314	80.503	0.414	107.606	0.514	134.724	0.614	161.856	0.714	189.016	0.814	216.177	0.914	243.314
0.015	2.643	0.115	26.600	0.215	53.706	0.315	80.773	0.415	107.877	0.515	134.995	0.615	162.127	0.715	189.288	0.815	216.448	0.915	243.586
0.016	2.788	0.116	26.870	0.216	53.976	0.316	81.044	0.416	108.149	0.516	135.266	0.616	162.399	0.716	189.559	0.816	216.720	0.916	243.857
0.017	2.932	0.117	27.141	0.217	54.247	0.317	81.315	0.417	108.420	0.517	135.538	0.617	162.670	0.717	189.831	0.817	216.991	0.917	244.128
0.018	3.077	0.118	27.411	0.218	54.518	0.318	81.586	0.418	108.691	0.518	135.809	0.618	162.942	0.718	190.102	0.818	217.263	0.918	244.399
0.019	3.222	0.119	27.682	0.219	54.789	0.319	81.857	0.419	108.962	0.519	136.080	0.619	163.214	0.719	190.374	0.819	217.535	0.919	244.670
0.020	3.366	0.120	27.952	0.220	55.060	0.320	82.128	0.420	109.233	0.520	136.351	0.620	163.485	0.720	190.646	0.820	217.806	0.920	244.941
0.021	3.511	0.121	28.223	0.221	55.330	0.321	82.398	0.421	109.504	0.521	136.622	0.621	163.757	0.721	190.917	0.821	218.078	0.921	245.213
0.022	3.656	0.122	28.493	0.222	55.601	0.322	82.669	0.422	109.776	0.522	136.894	0.622	164.028	0.722	191.189	0.822	218.349	0.922	245.484
0.023	3.800	0.123	28.764	0.223	55.872	0.323	82.940	0.423	110.047	0.523	137.165	0.623	164.300	0.723	191.461	0.823	218.621	0.923	245.755
0.024	3.945	0.124	29.034	0.224	56.143	0.324	83.211	0.424	110.318	0.524	137.436	0.624	164.572	0.724	191.732	0.824	218.893	0.924	246.026
0.025	4.090	0.125	29.305	0.225	56.414	0.325	83.482	0.425	110.589	0.525	137.707	0.625	164.843	0.725	192.004	0.825	219.164	0.925	246.297
0.026	4.310	0.126	29.576	0.226	56.684	0.326	83.752	0.426	110.860	0.526	137.978	0.626	165.115	0.726	192.275	0.826	219.436	0.926	246.569
0.027	4.530	0.127	29.847	0.227	56.955	0.327	84.023	0.427	111.132	0.527	138.249	0.627	165.386	0.727	192.547	0.827	219.707	0.927	246.840
0.028	4.750	0.128	30.118	0.228	57.226	0.328	84.294	0.428	111.403	0.528	138.521	0.628	165.658	0.728	192.819	0.828	219.979	0.928	247.111
0.029	4.970	0.129	30.389	0.229	57.496	0.329	84.565	0.429	111.674	0.529	138.792	0.629	165.930	0.729	193.090	0.829	220.251	0.929	247.382
0.030	5.191	0.130	30.661	0.230	57.767	0.330	84.836	0.430	111.945	0.530	139.063	0.630	166.201	0.730	193.362	0.830	220.522	0.930	247.653
0.031	5.411	0.131	30.932	0.231	58.038	0.331	85.106	0.431	112.216	0.531	139.334	0.631	166.473	0.731	193.633	0.831	220.794	0.931	247.924
0.032	5.631	0.132	31.203	0.232	58.308	0.332	85.377	0.432	112.487	0.532	139.605	0.632	166.744	0.732	193.905	0.832	221.065	0.932	248.196
0.033	5.851	0.133	31.474	0.233	58.579	0.333	85.648	0.433	112.759	0.533	139.877	0.633	167.016	0.733	194.177	0.833	221.337	0.933	248.467
0.034	6.071	0.134	31.745	0.234	58.850	0.334	85.919	0.434	113.030	0.534	140.148	0.634	167.288	0.734	194.448	0.834	221.609	0.934	248.738
0.035	6.292	0.135	32.016	0.235	59.120	0.335	86.190	0.435	113.301	0.535	140.419	0.635	167.559	0.735	194.720	0.835	221.880	0.935	249.009
0.036	6.512	0.136	32.288	0.236	59.391	0.336	86.461	0.436	113.572	0.536	140.690	0.636	167.831	0.736	194.991	0.836	222.152	0.936	249.280
0.037	6.732	0.137	32.559	0.237	59.661	0.337	86.731	0.437	113.843	0.537	140.961	0.637	168.103	0.737	195.263	0.837	222.423	0.937	249.552
0.038	6.952	0.138	32.830	0.238	59.932	0.338	87.002	0.438	114.115	0.538	141.232	0.638	168.374	0.738	195.535	0.838	222.695	0.938	249.823
0.039	7.173	0.139	33.101	0.239	60.203	0.339	87.273	0.439	114.386	0.539	141.504	0.639	168.646	0.739	195.806	0.839	222.967	0.939	250.094
0.040	7.393	0.140	33.372	0.240	60.473	0.340	87.544	0.440	114.657	0.540	141.775	0.640	168.917	0.740	196.078	0.840	223.238	0.940	250.365
0.041	7.613	0.141	33.643	0.241	60.744	0.341	87.815	0.441	114.928	0.541	142.046	0.641	169.189	0.741	196.349	0.841	223.510	0.941	250.636
0.042	7.833	0.142	33.915	0.242	61.015	0.342	88.085	0.442	115.199	0.542	142.317	0.642	169.461	0.742	196.621	0.842	223.781	0.942	250.907
0.043	8.053	0.143	34.186	0.243	61.285	0.343	88.356	0.443	115.470	0.543	142.588	0.643	169.732	0.743	196.893	0.843	224.053	0.943	251.179
0.044	8.274	0.144	34.457	0.244	61.556	0.344	88.627	0.444	115.742	0.544	142.859	0.644	170.004	0.744	197.164	0.844	224.325	0.944	251.450
0.045	8.494	0.145	34.728	0.245	61.827	0.345	88.898	0.445	116.013	0.545	143.131	0.645	170.275	0.745	197.436	0.845	224.596	0.945	251.721
0.046	8.714	0.146	34.999	0.246	62.097	0.346	89.169	0.446	116.284	0.546	143.402	0.646	170.547	0.746	197.707	0.846	224.868	0.946	251.992
0.047	8.934	0.147	35.271	0.247	62.368	0.347	89.439	0.447	116.555	0.547	143.673	0.647	170.819	0.747	197.979	0.847	225.139	0.947	252.263
0.048	9.154	0.148	35.542	0.248	62.639	0.348	89.710	0.448	116.826	0.548	143.944	0.648	171.090	0.748	198.251	0.848	225.411	0.948	252.534
0.049	9.375	0.149	35.813	0.249	62.909	0.349	89.981	0.449	117.097	0.549	144.215	0.649	171.362	0.749	198.522	0.849	225.683	0.949	252.806
0.050	9.595	0.150	36.084	0.250	63.180	0.350	90.252	0.450	117.369	0.550	144.487	0.650	171.633	0.750	198.794	0.850	225.954	0.950	253.077
0.051	9.844	0.151	36.355	0.251	63.450	0.351	90.523	0.451	117.640	0.551	144.758	0.651	171.905	0.751	199.065	0.851	226.226	0.951	253.348
0.052	10.094	0.152	36.626	0.252	63.721	0.352	90.793	0.452	117.911	0.552	145.029	0.652	172.177	0.752	199.337	0.852	226.497	0.952	253.619
0.053	10.343	0.153	36.898	0.253	63.992	0.353	91.064	0.453	118.182	0.553	145.300	0.653	172.448	0.753	199.609	0.853	226.769	0.953	253.890
0.054	10.592	0.154	37.169	0.254	64.262	0.354	91.335	0.454	118.453	0.554	145.571	0.654	172.720	0.754	199.880	0.854	227.041	0.954	254.162
0.055	10.842	0.155	37.440	0.255	64.533	0.355	91.607	0.455	118.725	0.555	145.842	0.655	172.991	0.755	200.152	0.855	227.312	0.955	254.433
0.056	11.091	0.156	37.711	0.256	64.804	0.356	91.878	0.456	118.996	0.556	146.114	0.656	173.263	0.756	200.423	0.856	227.584	0.956	254.704
0.057	11.340	0.157	37.982	0.257	65.074	0.357	92.149	0.457	119.267	0.557	146.385	0.657	173.535	0.757	200.695	0.857	227.856	0.957	254.975
0.058	11.590	0.158	38.254	0.258	65.345	0.358	92.420	0.458	119.538	0.558	146.656	0.658	173.806	0.758	200.967	0.858	228.127	0.958	255.246
0.059	11.839	0.159	38.525	0.259	65.616	0.359	92.691	0.459	119.809	0.559	146.927	0.659	174.078	0.759	201.238	0.859	228.399	0.959	255.517
0.060	12.089	0.160	38.796	0.260	65.886	0.360	92.963	0.460	120.080	0.560	147.198	0.660	174.349	0.760	201.510	0.860	228.670	0.960	255.789
0.061	12.338	0.161	39.067	0.261	66.157	0.361	93.234	0.461	120.352	0.561	147.470	0.661	174.621	0.761	201.781	0.861	228.942	0.961	256.060
0.062	12.587	0.162	39.338	0.262	66.427	0.362	93.505	0.462	120.623	0.562	147.741	0.662	174.893	0.762	202.053	0.862	229.213	0.962	256.331
0.063	12.837	0.163	39.609	0.263	66.698	0.363	93.776	0.463	120.894	0.563	148.012	0.663	175.164	0.763	202.325	0.863	229.484	0.963	256.602
0.064	13.086	0.164	39.881	0.264	66.969	0.364	94.047	0.464	121.165	0.564	148.283	0.664	175.436	0.764	202.596	0.864	229.755	0.964	256.873
0.065	13.335	0.165	40.152	0.265	67.239	0.365	94.318	0.465	121.436	0.565	148.554	0.665	175.707	0.765	202.868	0.865	230.027	0.965	257.145
0.066	13.585	0.166	40.423	0.266	67.510	0.366	94.590	0.466	121.708	0.566	148.825	0.666	175.979	0.766	203.139	0.866	230.298	0.966	257.416
0.067	13.834	0.167	40.694	0.267	67.781	0.367	94.861	0.467	121.979	0.567	149.097	0.667	176.251	0.767	203.411	0.867	230.569	0.967	257.687
0.068	14.084	0.168	40.965	0.268	68.051	0.368	95.132	0.468	122.250	0.568	149.368	0.668	176.522	0.768	203.683	0.868	230.840	0.968	257.958
0.069	14.333	0.169	41.236	0.269	68.322	0.369	95.403	0.469	122.521	0.569	149.639	0.669	176.794	0.769	203.954	0.869	231.111	0.969	258.229
0.070	14.582	0.170	41.508	0.270	68.593	0.370	95.674	0.470	122.792	0.570	149.910	0.670	177.065	0.770	204.226	0.870	231.383	0.970	258.500
0.071	14.832	0.171	41.779	0.271	68.863	0.371	95.946	0.471	123.063	0.571	150.181	0.671	177.337	0.771	204.498	0.871	231.654	0.971	258.772
0.072	15.081	0.172	42.050	0.272	69.134	0.372	96.217	0.472	123.335	0.572	150.452	0.672	177.609	0.772	204.769	0.872	231.925	0.972	259.043
0.073	15.330	0.173	42.321	0.273	69.404	0.373	96.488	0.473	123.606	0.573	150.724	0.673	177.880	0.773	205.041	0.873	232.196	0.973	259.314
0.074	15.580	0.174	42.592	0.274	69.675	0.374	96.759	0.474	123.877	0.574	150.995	0.674	178.152	0.774	205.312	0.874	232.467	0.974	259.585
0.075	15.829	0.175	42.864	0.275	69.946	0.375	97.030	0.475	124.148	0.575	151.266	0.675	178.423	0.775	205.584	0.875	232.738	0.975	259.856
0.076	16.098	0.176	43.135	0.276	70.216	0.376	97.301	0.476	124.419	0.576	151.537	0.676	178.695	0.776	205.856	0.876	233.010	0.976	260.127
0.077	16.366	0.177	43.406	0.277	70.487	0.377	97.573	0.477	124.690	0.577	151.808	0.677	178.967	0.777	206.127	0.877	233.281	0.977	260.399
0.078	16.635	0.178	43.677	0.278	70.758	0.378	97.844	0.478	124.962	0.578	152.080	0.678	179.238	0.778	206.399	0.878	233.552	0.978	260.670
0.079	16.903	0.179	43.948	0.279	71.028	0.379	98.115	0.479	125.233	0.579	152.351	0.679	179.510	0.779	206.670	0.879	233.823	0.979	260.941
0.080	17.172	0.180	44.219	0.280	71.299	0.380	98.386	0.480	125.504	0.580	152.622	0.680	179.782	0.780	206.942	0.880	234.094	0.980	261.212
0.081	17.440	0.181	44.491	0.281	71.570	0.381	98.657	0.481	125.775	0.581	152.893	0.681	180.053	0.781	207.214	0.881	234.366	0.981	261.483
0.082	17.709	0.182	44.762	0.282	71.840	0.382	98.928	0.482	126.046	0.582	153.164	0.682	180.325	0.782	207.485	0.882	234.637	0.982	261.755
0.083	17.977	0.183	45.033	0.283	72.111	0.383	99.200	0.483	126.318	0.583	153.436	0.683	180.596	0.783	207.757	0.883	234.908	0.983	262.026
0.084	18.246	0.184	45.304	0.284	72.381	0.384	99.471	0.484	126.589	0.584	153.707	0.684	180.868	0.784	208.028	0.884	235.179	0.984	262.297
0.085	18.514	0.185	45.575	0.285	72.652	0.385	99.742	0.485	126.860	0.585	153.979	0.685	181.140	0.785	208.300	0.885	235.450	0.985	262.568
0.086	18.783	0.186	45.847	0.286	72.923	0.386	100.013	0.486	127.131	0.586	154.251	0.686	181.411	0.786	208.572	0.886	235.721	0.986	262.839
0.087	19.051	0.187	46.118	0.287	73.193	0.387	100.284	0.487	127.402	0.587	154.522	0.687	181.683	0.787	208.843	0.887	235.993	0.987	263.110
0.088	19.320	0.188	46.389	0.288	73.464	0.388	100.556	0.488	127.673	0.588	154.794	0.688	181.954	0.788	209.115	0.888	236.264	0.988	263.382
0.089	19.588	0.189	46.660	0.289	73.735	0.389	100.827	0.489	127.945	0.589	155.065	0.689	182.226	0.789	209.386	0.889	236.535	0.989	263.653
0.090	19.857	0.190	46.931	0.290	74.005	0.390	101.098	0.490	128.216	0.590	155.337	0.690	182.498	0.790	209.658	0.890	236.806	0.990	263.924
0.091	20.125	0.191	47.202	0.291	74.276	0.391	101.369	0.491	128.487	0.591	155.609	0.691	182.769	0.791	209.930	0.891	237.077	0.991	264.195
0.092	20.394	0.192	47.474	0.292	74.547	0.392	101.640	0.492	128.758	0.592	155.880	0.692	183.041	0.792	210.201	0.892	237.348	0.992	264.466
0.093	20.662	0.193	47.745	0.293	74.817	0.393	101.911	0.493	129.029	0.593	156.152	0.693	183.312	0.793	210.473	0.893	237.620	0.993	264.738
0.094	20.931	0.194	48.016	0.294	75.088	0.394	102.183	0.494	129.301	0.594	156.424	0.694	183.584	0.794	210.744	0.894	237.891	0.994	265.009
0.095	21.199	0.195	48.287	0.295	75.358	0.395	102.454	0.495	129.572	0.595	156.695	0.695	183.856	0.795	211.016	0.895	238.162	0.995	265.280
0.096	21.468	0.196	48.558	0.296	75.629	0.396	102.725	0.496	129.843	0.596	156.967	0.696	184.127	0.796	211.288	0.896	238.433	0.996	265.551
0.097	21.736	0.197	48.829	0.297	75.900	0.397	102.996	0.497	130.114	0.597	157.238	0.697	184.399	0.797	211.559	0.897	238.704	0.997	265.822
0.098	22.005	0.198	49.101	0.298	76.170	0.398	103.267	0.498	130.385	0.598	157.510	0.698	184.670	0.798	211.831	0.898	238.976	0.998	266.093
0.099	22.273	0.199	49.372	0.299	76.441	0.399	103.539	0.499	130.656	0.599	157.782	0.699	184.942	0.799	212.102	0.899	239.247	0.999	266.365

NOTE: TANK STRAPPED AND COMPUTED IN ACCORDANCE WITH API STANDARD MPMS CHAPTER 2.2C.
NOTE: CAPACITY TABLE REFLECTS AN OPERATING TEMPERATURE OF 60 DEGREES F.
NOTE: LIQUID HEAD STRESS HAS BEEN APPLIED TO CAPACITY TABLE AT SPECIFIC GRAVITY 0.8500.
NOTE: A 13.9 CM CONE BOTTOM HAS BEEN APPLIED BELOW 10 CM
NOTE: NOMINAL TANK DIAMETER = 18.59 M SHELL HEIGHT = 11.16 M

DATE STRAPPED: 09/19/17 BY: RJ
DATE COMPUTED: 09/26/17 BY: WLH
DATE ISSUED: 09/26/17

AMSPEC

Meliadine

Portal #1

Item 20 - Final - Datasheet

Tank No. 3

INNAGE TABLE

Calibration@AmSpecGroup.com

CAPACITIES GIVEN IN CUBIC METERS

GAUGE HEIGHT: 11.443 M

mm	1 M	mm	1 M	mm	1 M	mm	1 M	mm	1 M	mm	1 M	mm	1 M	mm	1 M	mm	1 M	mm	1 M
0.000	266.636	0.100	293.754	0.200	320.872	0.300	347.989	0.400	375.107	0.500	402.225	0.600	429.343	0.700	456.461	0.800	483.579	0.900	510.697
0.001	266.907	0.101	294.025	0.201	321.143	0.301	348.261	0.401	375.379	0.501	402.496	0.601	429.614	0.701	456.732	0.801	483.850	0.901	510.968
0.002	267.178	0.102	294.296	0.202	321.414	0.302	348.532	0.402	375.650	0.502	402.768	0.602	429.885	0.702	457.003	0.802	484.121	0.902	511.239
0.003	267.449	0.103	294.567	0.203	321.685	0.303	348.803	0.403	375.921	0.503	403.039	0.603	430.157	0.703	457.275	0.803	484.392	0.903	511.510
0.004	267.721	0.104	294.838	0.204	321.956	0.304	349.074	0.404	376.192	0.504	403.310	0.604	430.428	0.704	457.546	0.804	484.664	0.904	511.781
0.005	267.992	0.105	295.110	0.205	322.227	0.305	349.345	0.405	376.463	0.505	403.581	0.605	430.699	0.705	457.817	0.805	484.935	0.905	512.053
0.006	268.263	0.106	295.381	0.206	322.499	0.306	349.617	0.406	376.734	0.506	403.852	0.606	430.970	0.706	458.088	0.806	485.206	0.906	512.324
0.007	268.534	0.107	295.652	0.207	322.770	0.307	349.888	0.407	377.006	0.507	404.123	0.607	431.241	0.707	458.359	0.807	485.477	0.907	512.595
0.008	268.805	0.108	295.923	0.208	323.041	0.308	350.159	0.408	377.277	0.508	404.395	0.608	431.513	0.708	458.630	0.808	485.748	0.908	512.866
0.009	269.076	0.109	296.194	0.209	323.312	0.309	350.430	0.409	377.548	0.509	404.666	0.609	431.784	0.709	458.902	0.809	486.019	0.909	513.137
0.010	269.348	0.110	296.465	0.210	323.583	0.310	350.701	0.410	377.819	0.510	404.937	0.610	432.055	0.710	459.173	0.810	486.291	0.910	513.409
0.011	269.619	0.111	296.737	0.211	323.855	0.311	350.972	0.411	378.090	0.511	405.208	0.611	432.326	0.711	459.444	0.811	486.562	0.911	513.680
0.012	269.890	0.112	297.008	0.212	324.126	0.312	351.244	0.412	378.361	0.512	405.479	0.612	432.597	0.712	459.715	0.812	486.833	0.912	513.951
0.013	270.161	0.113	297.279	0.213	324.397	0.313	351.515	0.413	378.633	0.513	405.751	0.613	432.868	0.713	459.986	0.813	487.104	0.913	514.222
0.014	270.432	0.114	297.550	0.214	324.668	0.314	351.786	0.414	378.904	0.514	406.022	0.614	433.140	0.714	460.258	0.814	487.375	0.914	514.493
0.015	270.703	0.115	297.821	0.215	324.939	0.315	352.057	0.415	379.175	0.515	406.293	0.615	433.411	0.715	460.529	0.815	487.647	0.915	514.764
0.016	270.975	0.116	298.093	0.216	325.210	0.316	352.328	0.416	379.446	0.516	406.564	0.616	433.682	0.716	460.800	0.816	487.918	0.916	515.036
0.017	271.246	0.117	298.364	0.217	325.482	0.317	352.599	0.417	379.717	0.517	406.835	0.617	433.953	0.717	461.071	0.817	488.189	0.917	515.307
0.018	271.517	0.118	298.635	0.218	325.753	0.318	352.871	0.418	379.989	0.518	407.106	0.618	434.224	0.718	461.342	0.818	488.460	0.918	515.578
0.019	271.788	0.119	298.906	0.219	326.024	0.319	353.142	0.419	380.260	0.519	407.378	0.619	434.496	0.719	461.613	0.819	488.731	0.919	515.849
0.020	272.059	0.120	299.177	0.220	326.295	0.320	353.413	0.420	380.531	0.520	407.649	0.620	434.767	0.720	461.885	0.820	489.002	0.920	516.120
0.021	272.331	0.121	299.448	0.221	326.566	0.321	353.684	0.421	380.802	0.521	407.920	0.621	435.038	0.721	462.156	0.821	489.274	0.921	516.392
0.022	272.602	0.122	299.720	0.222	326.837	0.322	353.955	0.422	381.073	0.522	408.191	0.622	435.309	0.722	462.427	0.822	489.545	0.922	516.663
0.023	272.873	0.123	299.991	0.223	327.109	0.323	354.227	0.423	381.344	0.523	408.462	0.623	435.580	0.723	462.698	0.823	489.816	0.923	516.934
0.024	273.144	0.124	300.262	0.224	327.380	0.324	354.498	0.424	381.616	0.524	408.734	0.624	435.851	0.724	462.969	0.824	490.087	0.924	517.205
0.025	273.415	0.125	300.533	0.225	327.651	0.325	354.769	0.425	381.887	0.525	409.005	0.625	436.123	0.725	463.240	0.825	490.358	0.925	517.476
0.026	273.686	0.126	300.804	0.226	327.922	0.326	355.040	0.426	382.158	0.526	409.276	0.626	436.394	0.726	463.512	0.826	490.630	0.926	517.747
0.027	273.958	0.127	301.076	0.227	328.193	0.327	355.311	0.427	382.429	0.527	409.547	0.627	436.665	0.727	463.783	0.827	490.901	0.927	518.019
0.028	274.229	0.128	301.347	0.228	328.465	0.328	355.582	0.428	382.700	0.528	409.818	0.628	436.936	0.728	464.054	0.828	491.172	0.928	518.290
0.029	274.500	0.129	301.618	0.229	328.736	0.329	355.854	0.429	382.972	0.529	410.089	0.629	437.207	0.729	464.325	0.829	491.443	0.929	518.561
0.030	274.771	0.130	301.889	0.230	329.007	0.330	356.125	0.430	383.243	0.530	410.361	0.630	437.478	0.730	464.596	0.830	491.714	0.930	518.832
0.031	275.042	0.131	302.160	0.231	329.278	0.331	356.396	0.431	383.514	0.531	410.632	0.631	437.750	0.731	464.868	0.831	491.985	0.931	519.103
0.032	275.314	0.132	302.431	0.232	329.549	0.332	356.667	0.432	383.785	0.532	410.903	0.632	438.021	0.732	465.139	0.832	492.257	0.932	519.374
0.033	275.585	0.133	302.703	0.233	329.820	0.333	356.938	0.433	384.056	0.533	411.174	0.633	438.292	0.733	465.410	0.833	492.528	0.933	519.646
0.034	275.856	0.134	302.974	0.234	330.092	0.334	357.210	0.434	384.327	0.534	411.445	0.634	438.563	0.734	465.681	0.834	492.799	0.934	519.917
0.035	276.127	0.135	303.245	0.235	330.363	0.335	357.481	0.435	384.599	0.535	411.716	0.635	438.834	0.735	465.952	0.835	493.070	0.935	520.188
0.036	276.398	0.136	303.516	0.236	330.634	0.336	357.752	0.436	384.870	0.536	411.988	0.636	439.106	0.736	466.223	0.836	493.341	0.936	520.459
0.037	276.669	0.137	303.787	0.237	330.905	0.337	358.023	0.437	385.141	0.537	412.259	0.637	439.377	0.737	466.495	0.837	493.613	0.937	520.730
0.038	276.941	0.138	304.058	0.238	331.176	0.338	358.294	0.438	385.412	0.538	412.530	0.638	439.648	0.738	466.766	0.838	493.884	0.938	521.002
0.039	277.212	0.139	304.330	0.239	331.448	0.339	358.565	0.439	385.683	0.539	412.801	0.639	439.919	0.739	467.037	0.839	494.155	0.939	521.273
0.040	277.483	0.140	304.601	0.240	331.719	0.340	358.837	0.440	385.954	0.540	413.072	0.640	440.190	0.740	467.308	0.840	494.426	0.940	521.544
0.041	277.754	0.141	304.872	0.241	331.990	0.341	359.108	0.441	386.226	0.541	413.344	0.641	440.461	0.741	467.579	0.841	494.697	0.941	521.815
0.042	278.025	0.142	305.143	0.242	332.261	0.342	359.379	0.442	386.497	0.542	413.615	0.642	440.733	0.742	467.851	0.842	494.968	0.942	522.086
0.043	278.296	0.143	305.414	0.243	332.532	0.343	359.650	0.443	386.768	0.543	413.886	0.643	441.004	0.743	468.122	0.843	495.240	0.943	522.357
0.044	278.568	0.144	305.686	0.244	332.803	0.344	359.921	0.444	387.039	0.544	414.157	0.644	441.275	0.744	468.393	0.844	495.511	0.944	522.629
0.045	278.839	0.145	305.957	0.245	333.075	0.345	360.193	0.445	387.310	0.545	414.428	0.645	441.546	0.745	468.664	0.845	495.782	0.945	522.900
0.046	279.110	0.146	306.228	0.246	333.346	0.346	360.464	0.446	387.582	0.546	414.699	0.646	441.817	0.746	468.935	0.846	496.053	0.946	523.171
0.047	279.381	0.147	306.499	0.247	333.617	0.347	360.735	0.447	387.853	0.547	414.971	0.647	442.089	0.747	469.206	0.847	496.324	0.947	523.442
0.048	279.652	0.148	306.770	0.248	333.888	0.348	361.006	0.448	388.124	0.548	415.242	0.648	442.360	0.748	469.478	0.848	496.595	0.948	523.713
0.049	279.924	0.149	307.041	0.249	334.159	0.349	361.277	0.449	388.395	0.549	415.513	0.649	442.631	0.749	469.749	0.849	496.867	0.949	523.985
0.050	280.195	0.150	307.313	0.250	334.431	0.350	361.548	0.450	388.666	0.550	415.784	0.650	442.902	0.750	470.020	0.850	497.138	0.950	524.256
0.051	280.466	0.151	307.584	0.251	334.702	0.351	361.820	0.451	388.937	0.551	416.055	0.651	443.173	0.751	470.291	0.851	497.409	0.951	524.527
0.052	280.737	0.152	307.855	0.252	334.973	0.352	362.091	0.452	389.209	0.552	416.327	0.652	443.444	0.752	470.562	0.852	497.680	0.952	524.798
0.053	281.008	0.153	308.126	0.253	335.244	0.353	362.362	0.453	389.480	0.553	416.598	0.653	443.716	0.753	470.833	0.853	497.951	0.953	525.069
0.054	281.279	0.154	308.397	0.254	335.515	0.354	362.633	0.454	389.751	0.554	416.869	0.654	443.987	0.754	471.105	0.854	498.223	0.954	525.340
0.055	281.551	0.155	308.669	0.255	335.786	0.355	362.904	0.455	390.022	0.555	417.140	0.655	444.258	0.755	471.376	0.855	498.494	0.955	525.612
0.056	281.822	0.156	308.940	0.256	336.058	0.356	363.175	0.456	390.293	0.556	417.411	0.656	444.529	0.756	471.647	0.856	498.765	0.956	525.883
0.057	282.093	0.157	309.211	0.257	336.329	0.357	363.447	0.457	390.565	0.557	417.682	0.657	444.800	0.757	471.918	0.857	499.036	0.957	526.154
0.058	282.364	0.158	309.482	0.258	336.600	0.358	363.718	0.458	390.836	0.558	417.954	0.658	445.071	0.758	472.189	0.858	499.307	0.958	526.425
0.059	282.635	0.159	309.753	0.259	336.871	0.359	363.989	0.459	391.107	0.559	418.225	0.659	445.343	0.759	472.461	0.859	499.578	0.959	526.696
0.060	282.907	0.160	310.024	0.260	337.142	0.360	364.260	0.460	391.378	0.560	418.496	0.660	445.614	0.760	472.732	0.860	499.850	0.960	526.968
0.061	283.178	0.161	310.296	0.261	337.413	0.361	364.531	0.461	391.649	0.561	418.767	0.661	445.885	0.761	473.003	0.861	500.121	0.961	527.239
0.062	283.449	0.162	310.567	0.262	337.685	0.362	364.803	0.462	391.920	0.562	419.038	0.662	446.156	0.762	473.274	0.862	500.392	0.962	527.510
0.063	283.720	0.163	310.838	0.263	337.956	0.363	365.074	0.463	392.192	0.563	419.309	0.663	446.427	0.763	473.545	0.863	500.663	0.963	527.781
0.064	283.991	0.164	311.109	0.264	338.227	0.364	365.345	0.464	392.463	0.564	419.581	0.664	446.699	0.764	473.816	0.864	500.934	0.964	528.052
0.065	284.262	0.165	311.380	0.265	338.498	0.365	365.616	0.465	392.734	0.565	419.852	0.665	446.970	0.765	474.088	0.865	501.206	0.965	528.323
0.066	284.534	0.166	311.651	0.266	338.769	0.366	365.887	0.466	393.005	0.566	420.123	0.666	447.241	0.766	474.359	0.866	501.477	0.966	528.595
0.067	284.805	0.167	311.923	0.267	339.041	0.367	366.158	0.467	393.276	0.567	420.394	0.667	447.512	0.767	474.630	0.867	501.748	0.967	528.866
0.068	285.076	0.168	312.194	0.268	339.312	0.368	366.430	0.468	393.548	0.568	420.665	0.668	447.783	0.768	474.901	0.868	502.019	0.968	529.137
0.069	285.347	0.169	312.465	0.269	339.583	0.369	366.701	0.469	393.819	0.569	420.937	0.669	448.054	0.769	475.172	0.869	502.290	0.969	529.408
0.070	285.618	0.170	312.736	0.270	339.854	0.370	366.972	0.470	394.090	0.570	421.208	0.670	448.326	0.770	475.444	0.870	502.561	0.970	529.679
0.071	285.889	0.171	313.007	0.271	340.125	0.371	367.243	0.471	394.361	0.571	421.479	0.671	448.597	0.771	475.715	0.871	502.833	0.971	529.950
0.072	286.161	0.172	313.279	0.272	340.396	0.372	367.514	0.472	394.632	0.572	421.750	0.672	448.868	0.772	475.986	0.872	503.104	0.972	530.222
0.073	286.432	0.173	313.550	0.273	340.668	0.373	367.786	0.473	394.903	0.573	422.021	0.673	449.139	0.773	476.257	0.873	503.375	0.973	530.493
0.074	286.703	0.174	313.821	0.274	340.939	0.374	368.057	0.474	395.175	0.574	422.292	0.674	449.410	0.774	476.528	0.874	503.646	0.974	530.764
0.075	286.974	0.175	314.092	0.275	341.210	0.375	368.328	0.475	395.446	0.575	422.564	0.675	449.682	0.775	476.799	0.875	503.917	0.975	531.035
0.076	287.245	0.176	314.363	0.276	341.481	0.376	368.599	0.476	395.717	0.576	422.835	0.676	449.953	0.776	477.071	0.876	504.188	0.976	531.306
0.077	287.517	0.177	314.634	0.277	341.752	0.377	368.870	0.477	395.988	0.577	423.106	0.677	450.224	0.777	477.342	0.877	504.460	0.977	531.578
0.078	287.788	0.178	314.906	0.278	342.024	0.378	369.141	0.478	396.259	0.578	423.377	0.678	450.495	0.778	477.613	0.878	504.731	0.978	531.849
0.079	288.059	0.179	315.177	0.279	342.295	0.379	369.413	0.479	396.530	0.579	423.648	0.679	450.766	0.779	477.884	0.879	505.002	0.979	532.120
0.080	288.330	0.180	315.448	0.280	342.566	0.380	369.684	0.480	396.802	0.580	423.920	0.680	451.037	0.780	478.155	0.880	505.273	0.980	532.391
0.081	288.601	0.181	315.719	0.281	342.837	0.381	369.955	0.481	397.073	0.581	424.191	0.681	451.309	0.781	478.426	0.881	505.544	0.981	532.662
0.082	288.872	0.182	315.990	0.282	343.108	0.382	370.226	0.482	397.344	0.582	424.462	0.682	451.580	0.782	478.698	0.882	505.816	0.982	532.933
0.083	289.144	0.183	316.262	0.283	343.379	0.383	370.497	0.483	397.615	0.583	424.733	0.683	451.851	0.783	478.969	0.883	506.087	0.983	533.205
0.084	289.415	0.184	316.533	0.284	343.651	0.384	370.768	0.484	397.886	0.584	425.004	0.684	452.122	0.784	479.240	0.884	506.358	0.984	533.476
0.085	289.686	0.185	316.804	0.285	343.922	0.385	371.040	0.485	398.158	0.585	425.275	0.685	452.393	0.785	479.511	0.885	506.629	0.985	533.747
0.086	289.957	0.186	317.075	0.286	344.193	0.386	371.311	0.486	398.429	0.586	425.547	0.686	452.664	0.786	479.782	0.886	506.900	0.986	534.018
0.087	290.228	0.187	317.346	0.287	344.464	0.387	371.582	0.487	398.700	0.587	425.818	0.687	452.936	0.787	480.054	0.887	507.171	0.987	534.289
0.088	290.500	0.188	317.617	0.288	344.735	0.388	371.853	0.488	398.971	0.588	426.089	0.688	453.207	0.788	480.325	0.888	507.443	0.988	534.561
0.089	290.771	0.189	317.889	0.289	345.006	0.389	372.124	0.489	399.242	0.589	426.360	0.689	453.478	0.789	480.596	0.889	507.714	0.989	534.832
0.090	291.042	0.190	318.160	0.290	345.278	0.390	372.396	0.490	399.513	0.590	426.631	0.690	453.749	0.790	480.867	0.890	507.985	0.990	535.103
0.091	291.313	0.191	318.431	0.291	345.549	0.391	372.667	0.491	399.785	0.591	426.903	0.691	454.020	0.791	481.138	0.891	508.256	0.991	535.374
0.092	291.584	0.192	318.702	0.292	345.820	0.392	372.938	0.492	400.056	0.592	427.174	0.692	454.292	0.792	481.409	0.892	508.527	0.992	535.645
0.093	291.855	0.193	318.973	0.293	346.091	0.393	373.209	0.493	400.327	0.593	427.445	0.693	454.563	0.793	481.681	0.893	508.799	0.993	535.916
0.094	292.127	0.194	319.244	0.294	346.362	0.394	373.480	0.494	400.598	0.594	427.716	0.694	454.834	0.794	481.952	0.894	509.070	0.994	536.188
0.095	292.398	0.195	319.516	0.295	346.634	0.395	373.751	0.495	400.869	0.595	427.987	0.695	455.105	0.795	482.223	0.895	509.341	0.995	536.459
0.096	292.669	0.196	319.787	0.296	346.905	0.396	374.023	0.496	401.141	0.596	428.258	0.696	455.376	0.796	482.494	0.896	509.612	0.996	536.730
0.097	292.940	0.197	320.058	0.297	347.176	0.397	374.294	0.497	401.412	0.597	428.530	0.697	455.647	0.797	482.765	0.897	509.883	0.997	537.001
0.098	293.211	0.198	320.329	0.298	347.447	0.398	374.565	0.498	401.683	0.598	428.801	0.698	455.919	0.798	483.037	0.898	510.154	0.998	537.272
0.099	293.482	0.199	320.600	0.299	347.718	0.399	374.836	0.499	401.954	0.599	429.072	0.699	456.190	0.799	483.308	0.899	510.426	0.999	537.543

DATE STRAPPED: 09/19/17 BY: RJ

DATE COMPUTED: 09/26/17 BY: WLH

DATE ISSUED: 09/26/17

AMSPEC

Meliadine

Portal #1

Item 20 - Final - Datasheet

Tank No. 3

INNAGE TABLE

Calibration@AmSpecGroup.com

CAPACITIES GIVEN IN CUBIC METERS

GAUGE HEIGHT: 11.443 M

mm	2 M	mm	2 M	mm	2 M	mm	2 M	mm	2 M	mm	2 M	mm	2 M	mm	2 M	mm	2 M	mm	2 M
0.000	537.815	0.100	564.933	0.200	592.050	0.300	619.168	0.400	646.286	0.500	673.404	0.600	700.522	0.700	727.640	0.800	754.751	0.900	781.854
0.001	538.086	0.101	565.204	0.201	592.322	0.301	619.440	0.401	646.557	0.501	673.675	0.601	700.793	0.701	727.911	0.801	755.022	0.901	782.125
0.002	538.357	0.102	565.475	0.202	592.593	0.302	619.711	0.402	646.829	0.502	673.946	0.602	701.064	0.702	728.182	0.802	755.293	0.902	782.396
0.003	538.628	0.103	565.746	0.203	592.864	0.303	619.982	0.403	647.100	0.503	674.218	0.603	701.336	0.703	728.453	0.803	755.564	0.903	782.667
0.004	538.899	0.104	566.017	0.204	593.135	0.304	620.253	0.404	647.371	0.504	674.489	0.604	701.607	0.704	728.725	0.804	755.835	0.904	782.938
0.005	539.171	0.105	566.288	0.205	593.406	0.305	620.524	0.405	647.642	0.505	674.760	0.605	701.878	0.705	728.996	0.805	756.106	0.905	783.209
0.006	539.442	0.106	566.560	0.206	593.678	0.306	620.795	0.406	647.913	0.506	675.031	0.606	702.149	0.706	729.267	0.806	756.377	0.906	783.480
0.007	539.713	0.107	566.831	0.207	593.949	0.307	621.067	0.407	648.184	0.507	675.302	0.607	702.420	0.707	729.538	0.807	756.648	0.907	783.751
0.008	539.984	0.108	567.102	0.208	594.220	0.308	621.338	0.408	648.456	0.508	675.574	0.608	702.691	0.708	729.809	0.808	756.919	0.908	784.022
0.009	540.255	0.109	567.373	0.209	594.491	0.309	621.609	0.409	648.727	0.509	675.845	0.609	702.963	0.709	730.080	0.809	757.190	0.909	784.293
0.010	540.526	0.110	567.644	0.210	594.762	0.310	621.880	0.410	648.998	0.510	676.116	0.610	703.234	0.710	730.352	0.810	757.461	0.910	784.564
0.011	540.798	0.111	567.916	0.211	595.033	0.311	622.151	0.411	649.269	0.511	676.387	0.611	703.505	0.711	730.623	0.811	757.732	0.911	784.835
0.012	541.069	0.112	568.187	0.212	595.305	0.312	622.422	0.412	649.540	0.512	676.658	0.612	703.776	0.712	730.894	0.812	758.003	0.912	785.106
0.013	541.340	0.113	568.458	0.213	595.576	0.313	622.694	0.413	649.812	0.513	676.929	0.613	704.047	0.713	731.165	0.813	758.274	0.913	785.377
0.014	541.611	0.114	568.729	0.214	595.847	0.314	622.965	0.414	650.083	0.514	677.201	0.614	704.318	0.714	731.436	0.814	758.545	0.914	785.648
0.015	541.882	0.115	569.000	0.215	596.118	0.315	623.236	0.415	650.354	0.515	677.472	0.615	704.590	0.715	731.708	0.815	758.816	0.915	785.919
0.016	542.154	0.116	569.271	0.216	596.389	0.316	623.507	0.416	650.625	0.516	677.743	0.616	704.861	0.716	731.979	0.816	759.087	0.916	786.190
0.017	542.425	0.117	569.543	0.217	596.660	0.317	623.778	0.417	650.896	0.517	678.014	0.617	705.132	0.717	732.250	0.817	759.358	0.917	786.461
0.018	542.696	0.118	569.814	0.218	596.932	0.318	624.050	0.418	651.167	0.518	678.285	0.618	705.403	0.718	732.521	0.818	759.629	0.918	786.732
0.019	542.967	0.119	570.085	0.219	597.203	0.319	624.321	0.419	651.439	0.519	678.556	0.619	705.674	0.719	732.792	0.819	759.900	0.919	787.003
0.020	543.238	0.120	570.356	0.220	597.474	0.320	624.592	0.420	651.710	0.520	678.828	0.620	705.946	0.720	733.063	0.820	760.171	0.920	787.274
0.021	543.509	0.121	570.627	0.221	597.745	0.321	624.863	0.421	651.981	0.521	679.099	0.621	706.217	0.721	733.335	0.821	760.442	0.921	787.545
0.022	543.781	0.122	570.898	0.222	598.016	0.322	625.134	0.422	652.252	0.522	679.370	0.622	706.488	0.722	733.606	0.822	760.713	0.922	787.816
0.023	544.052	0.123	571.170	0.223	598.288	0.323	625.405	0.423	652.523	0.523	679.641	0.623	706.759	0.723	733.877	0.823	760.984	0.923	788.087
0.024	544.323	0.124	571.441	0.224	598.559	0.324	625.677	0.424	652.795	0.524	679.912	0.624	707.030	0.724	734.148	0.824	761.255	0.924	788.358
0.025	544.594	0.125	571.712	0.225	598.830	0.325	625.948	0.425	653.066	0.525	680.184	0.625	707.301	0.725	734.419	0.825	761.526	0.925	788.629
0.026	544.865	0.126	571.983	0.226	599.101	0.326	626.219	0.426	653.337	0.526	680.455	0.626	707.573	0.726	734.691	0.826	761.798	0.926	788.900
0.027	545.136	0.127	572.254	0.227	599.372	0.327	626.490	0.427	653.608	0.527	680.726	0.627	707.844	0.727	734.962	0.827	762.069	0.927	789.171
0.028	545.408	0.128	572.526	0.228	599.643	0.328	626.761	0.428	653.879	0.528	680.997	0.628	708.115	0.728	735.233	0.828	762.340	0.928	789.442
0.029	545.679	0.129	572.797	0.229	599.915	0.329	627.033	0.429	654.150	0.529	681.268	0.629	708.386	0.729	735.504	0.829	762.611	0.929	789.713
0.030	545.950	0.130	573.068	0.230	600.186	0.330	627.304	0.430	654.422	0.530	681.539	0.630	708.657	0.730	735.775	0.830	762.882	0.930	789.985
0.031	546.221	0.131	573.339	0.231	600.457	0.331	627.575	0.431	654.693	0.531	681.811	0.631	708.929	0.731	736.046	0.831	763.153	0.931	790.256
0.032	546.492	0.132	573.610	0.232	600.728	0.332	627.846	0.432	654.964	0.532	682.082	0.632	709.200	0.732	736.318	0.832	763.424	0.932	790.527
0.033	546.764	0.133	573.881	0.233	600.999	0.333	628.117	0.433	655.235	0.533	682.353	0.633	709.471	0.733	736.589	0.833	763.695	0.933	790.798
0.034	547.035	0.134	574.153	0.234	601.271	0.334	628.388	0.434	655.506	0.534	682.624	0.634	709.742	0.734	736.860	0.834	763.966	0.934	791.069
0.035	547.306	0.135	574.424	0.235	601.542	0.335	628.660	0.435	655.777	0.535	682.895	0.635	710.013	0.735	737.131	0.835	764.237	0.935	791.340
0.036	547.577	0.136	574.695	0.236	601.813	0.336	628.931	0.436	656.049	0.536	683.167	0.636	710.284	0.736	737.402	0.836	764.508	0.936	791.611
0.037	547.848	0.137	574.966	0.237	602.084	0.337	629.202	0.437	656.320	0.537	683.438	0.637	710.556	0.737	737.673	0.837	764.779	0.937	791.882
0.038	548.119	0.138	575.237	0.238	602.355	0.338	629.473	0.438	656.591	0.538	683.709	0.638	710.827	0.738	737.945	0.838	765.050	0.938	792.153
0.039	548.391	0.139	575.509	0.239	602.626	0.339	629.744	0.439	656.862	0.539	683.980	0.639	711.098	0.739	738.216	0.839	765.321	0.939	792.424
0.040	548.662	0.140	575.780	0.240	602.898	0.340	630.015	0.440	657.133	0.540	684.251	0.640	711.369	0.740	738.487	0.840	765.592	0.940	792.695
0.041	548.933	0.141	576.051	0.241	603.169	0.341	630.287	0.441	657.405	0.541	684.522	0.641	711.640	0.741	738.758	0.841	765.863	0.941	792.966
0.042	549.204	0.142	576.322	0.242	603.440	0.342	630.558	0.442	657.676	0.542	684.794	0.642	711.911	0.742	739.029	0.842	766.134	0.942	793.237
0.043	549.475	0.143	576.593	0.243	603.711	0.343	630.829	0.443	657.947	0.543	685.065	0.643	712.183	0.743	739.300	0.843	766.405	0.943	793.508
0.044	549.747	0.144	576.864	0.244	603.982	0.344	631.100	0.444	658.218	0.544	685.336	0.644	712.454	0.744	739.572	0.844	766.676	0.944	793.779
0.045	550.018	0.145	577.136	0.245	604.253	0.345	631.371	0.445	658.489	0.545	685.607	0.645	712.725	0.745	739.843	0.845	766.947	0.945	794.050
0.046	550.289	0.146	577.407	0.246	604.525	0.346	631.643	0.446	658.760	0.546	685.878	0.646	712.996	0.746	740.114	0.846	767.218	0.946	794.321
0.047	550.560	0.147	577.678	0.247	604.796	0.347	631.914	0.447	659.032	0.547	686.150	0.647	713.267	0.747	740.385	0.847	767.489	0.947	794.592
0.048	550.831	0.148	577.949	0.248	605.067	0.348	632.185	0.448	659.303	0.548	686.421	0.648	713.539	0.748	740.656	0.848	767.760	0.948	794.863
0.049	551.102	0.149	578.220	0.249	605.338	0.349	632.456	0.449	659.574	0.549	686.692	0.649	713.810	0.749	740.927	0.849	768.031	0.949	795.134
0.050	551.374	0.150	578.491	0.250	605.609	0.350	632.727	0.450	659.845	0.550	686.963	0.650	714.081	0.750	741.198	0.850	768.302	0.950	795.405
0.051	551.645	0.151	578.763	0.251	605.881	0.351	632.998	0.451	660.116	0.551	687.234	0.651	714.352	0.751	741.469	0.851	768.573	0.951	795.676
0.052	551.916	0.152	579.034	0.252	606.152	0.352	633.270	0.452	660.388	0.552	687.505	0.652	714.623	0.752	741.740	0.852	768.844	0.952	795.947
0.053	552.187	0.153	579.305	0.253	606.423	0.353	633.541	0.453	660.659	0.553	687.777	0.653	714.894	0.753	742.011	0.853	769.115	0.953	796.218
0.054	552.458	0.154	579.576	0.254	606.694	0.354	633.812	0.454	660.930	0.554	688.048	0.654	715.166	0.754	742.283	0.854	769.386	0.954	796.489
0.055	552.730	0.155	579.847	0.255	606.965	0.355	634.083	0.455	661.201	0.555	688.319	0.655	715.437	0.755	742.554	0.855	769.657	0.955	796.760
0.056	553.001	0.156	580.119	0.256	607.236	0.356	634.354	0.456	661.472	0.556	688.590	0.656	715.708	0.756	742.825	0.856	769.928	0.956	797.031
0.057	553.272	0.157	580.390	0.257	607.508	0.357	634.626	0.457	661.743	0.557	688.861	0.657	715.979	0.757	743.096	0.857	770.199	0.957	797.302
0.058	553.543	0.158	580.661	0.258	607.779	0.358	634.897	0.458	662.015	0.558	689.132	0.658	716.250	0.758	743.367	0.858	770.470	0.958	797.573
0.059	553.814	0.159	580.932	0.259	608.050	0.359	635.168	0.459	662.286	0.559	689.404	0.659	716.522	0.759	743.638	0.859	770.741	0.959	797.844
0.060	554.085	0.160	581.203	0.260	608.321	0.360	635.439	0.460	662.557	0.560	689.675	0.660	716.793	0.760	743.909	0.860	771.012	0.960	798.115
0.061	554.357	0.161	581.474	0.261	608.592	0.361	635.710	0.461	662.828	0.561	689.946	0.661	717.064	0.761	744.180	0.861	771.284	0.961	798.386
0.062	554.628	0.162	581.746	0.262	608.864	0.362	635.981	0.462	663.099	0.562	690.217	0.662	717.335	0.762	744.451	0.862	771.555	0.962	798.657
0.063	554.899	0.163	582.017	0.263	609.135	0.363	636.253	0.463	663.370	0.563	690.488	0.663	717.606	0.763	744.722	0.863	771.826	0.963	798.928
0.064	555.170	0.164	582.288	0.264	609.406	0.364	636.524	0.464	663.642	0.564	690.760	0.664	717.877	0.764	744.994	0.864	772.097	0.964	799.199
0.065	555.441	0.165	582.559	0.265	609.677	0.365	636.795	0.465	663.913	0.565	691.031	0.665	718.149	0.765	745.265	0.865	772.368	0.965	799.471
0.066	555.712	0.166	582.830	0.266	609.948	0.366	637.066	0.466	664.184	0.566	691.302	0.666	718.420	0.766	745.536	0.866	772.639	0.966	799.742
0.067	555.984	0.167	583.102	0.267	610.219	0.367	637.337	0.467	664.455	0.567	691.573	0.667	718.691	0.767	745.807	0.867	772.910	0.967	800.013
0.068	556.255	0.168	583.373	0.268	610.491	0.368	637.608	0.468	664.726	0.568	691.844	0.668	718.962	0.768	746.078	0.868	773.181	0.968	800.284
0.069	556.526	0.169	583.644	0.269	610.762	0.369	637.880	0.469	664.998	0.569	692.115	0.669	719.233	0.769	746.349	0.869	773.452	0.969	800.555
0.070	556.797	0.170	583.915	0.270	611.033	0.370	638.151	0.470	665.269	0.570	692.387	0.670	719.505	0.770	746.620	0.870	773.723	0.970	800.826
0.071	557.068	0.171	584.186	0.271	611.304	0.371	638.422	0.471	665.540	0.571	692.658	0.671	719.776	0.771	746.891	0.871	773.994	0.971	801.097
0.072	557.340	0.172	584.457	0.272	611.575	0.372	638.693	0.472	665.811	0.572	692.929	0.672	720.047	0.772	747.162	0.872	774.265	0.972	801.368
0.073	557.611	0.173	584.729	0.273	611.846	0.373	638.964	0.473	666.082	0.573	693.200	0.673	720.318	0.773	747.433	0.873	774.536	0.973	801.639
0.074	557.882	0.174	585.000	0.274	612.118	0.374	639.236	0.474	666.353	0.574	693.471	0.674	720.589	0.774	747.704	0.874	774.807	0.974	801.910
0.075	558.153	0.175	585.271	0.275	612.389	0.375	639.507	0.475	666.625	0.575	693.743	0.675	720.860	0.775	747.975	0.875	775.078	0.975	802.181
0.076	558.424	0.176	585.542	0.276	612.660	0.376	639.778	0.476	666.896	0.576	694.014	0.676	721.132	0.776	748.246	0.876	775.349	0.976	802.452
0.077	558.695	0.177	585.813	0.277	612.931	0.377	640.049	0.477	667.167	0.577	694.285	0.677	721.403	0.777	748.517	0.877	775.620	0.977	802.723
0.078	558.967	0.178	586.085	0.278	613.202	0.378	640.320	0.478	667.438	0.578	694.556	0.678	721.674	0.778	748.788	0.878	775.891	0.978	802.994
0.079	559.238	0.179	586.356	0.279	613.474	0.379	640.591	0.479	667.709	0.579	694.827	0.679	721.945	0.779	749.059	0.879	776.162	0.979	803.265
0.080	559.509	0.180	586.627	0.280	613.745	0.380	640.863	0.480	667.981	0.580	695.098	0.680	722.216	0.780	749.330	0.880	776.433	0.980	803.536
0.081	559.780	0.181	586.898	0.281	614.016	0.381	641.134	0.481	668.252	0.581	695.370	0.681	722.487	0.781	749.601	0.881	776.704	0.981	803.807
0.082	560.051	0.182	587.169	0.282	614.287	0.382	641.405	0.482	668.523	0.582	695.641	0.682	722.759	0.782	749.872	0.882	776.975	0.982	804.078
0.083	560.323	0.183	587.440	0.283	614.558	0.383	641.676	0.483	668.794	0.583	695.912	0.683	723.030	0.783	750.143	0.883	777.246	0.983	804.349
0.084	560.594	0.184	587.712	0.284	614.829	0.384	641.947	0.484	669.065	0.584	696.183	0.684	723.301	0.784	750.414	0.884	777.517	0.984	804.620
0.085	560.865	0.185	587.983	0.285	615.101	0.385	642.219	0.485	669.336	0.585	696.454	0.685	723.572	0.785	750.685	0.885	777.788	0.985	804.891
0.086	561.136	0.186	588.254	0.286	615.372	0.386	642.490	0.486	669.608	0.586	696.725	0.686	723.843	0.786	750.956	0.886	778.059	0.986	805.162
0.087	561.407	0.187	588.525	0.287	615.643	0.387	642.761	0.487	669.879	0.587	696.997	0.687	724.115	0.787	751.227	0.887	778.330	0.987	805.433
0.088	561.678	0.188	588.796	0.288	615.914	0.388	643.032	0.488	670.150	0.588	697.268	0.688	724.386	0.788	751.498	0.888	778.601	0.988	805.704
0.089	561.950	0.189	589.067	0.289	616.185	0.389	643.303	0.489	670.421	0.589	697.539	0.689	724.657	0.789	751.769	0.889	778.872	0.989	805.975
0.090	562.221	0.190	589.339	0.290	616.457	0.390	643.574	0.490	670.692	0.590	697.810	0.690	724.928	0.790	752.040	0.890	779.143	0.990	806.246
0.091	562.492	0.191	589.610	0.291	616.728	0.391	643.846	0.491	670.963	0.591	698.081	0.691	725.199	0.791	752.312	0.891	779.414	0.991	806.517
0.092	562.763	0.192	589.881	0.292	616.999	0.392	644.117	0.492	671.235	0.592	698.353	0.692	725.470	0.792	752.583	0.892	779.685	0.992	806.788
0.093	563.034	0.193	590.152	0.293	617.270	0.393	644.388	0.493	671.506	0.593	698.624	0.693	725.742	0.793	752.854	0.893	779.956	0.993	807.059
0.094	563.305	0.194	590.423	0.294	617.541	0.394	644.659	0.494	671.777	0.594	698.895	0.694	726.013	0.794	753.125	0.894	780.227	0.994	807.330
0.095	563.577	0.195	590.695	0.295	617.812	0.395	644.930	0.495	672.048	0.595	699.166	0.695	726.284	0.795	753.396	0.895	780.498	0.995	807.601
0.096	563.848	0.196	590.966	0.296	618.084	0.396	645.201	0.496	672.319	0.596	699.437	0.696	726.555	0.796	753.667	0.896	780.770	0.996	807.872
0.097	564.119	0.197	591.237	0.297	618.355	0.397	645.473	0.497	672.591	0.597	699.708	0.697	726.826	0.797	753.938	0.897	781.041	0.997	808.143
0.098	564.390	0.198	591.508	0.298	618.626	0.398	645.744	0.498	672.862	0.598	699.980	0.698	727.098	0.798	754.209	0.898	781.312	0.998	808.414
0.099	564.661	0.199	591.779	0.299	618.897	0.399	646.015	0.499	673.133	0.599	700.251	0.699	727.369	0.799	754.480	0.899	781.583	0.999	808.685

NOTE: 42.0 GALLONS EQUAL 1.0 BARRELS

NOTE: 1 KILOLITER EQUALS 1 CUBIC METER

DATE STRAPPED: 09/19/17 BY: RJ

DATE COMPUTED: 09/26/17 BY: WLH

DATE ISSUED: 09/26/17

AMSPEC

Meliadine
Portal #1
Item 20 - Final - Datasheet

Tank No. 3
INNAGE TABLE

Calibration@AmSpecGroup.com

CAPACITIES GIVEN IN CUBIC METERS — **GAUGE HEIGHT: 11.443 M**

mm	3 M	mm	3 M	mm	3 M	mm	3 M	mm	3 M	mm	3 M	mm	3 M	mm	3 M	mm	3 M	mm	3 M
0.000	808.957	0.100	836.059	0.200	863.162	0.300	890.265	0.400	917.368	0.500	944.471	0.600	971.574	0.700	998.677	0.800	1,025.779	0.900	1,052.882
0.001	809.228	0.101	836.330	0.201	863.433	0.301	890.536	0.401	917.639	0.501	944.742	0.601	971.845	0.701	998.948	0.801	1,026.050	0.901	1,053.153
0.002	809.499	0.102	836.601	0.202	863.704	0.302	890.807	0.402	917.910	0.502	945.013	0.602	972.116	0.702	999.219	0.802	1,026.321	0.902	1,053.424
0.003	809.770	0.103	836.872	0.203	863.975	0.303	891.078	0.403	918.181	0.503	945.284	0.603	972.387	0.703	999.490	0.803	1,026.593	0.903	1,053.695
0.004	810.041	0.104	837.143	0.204	864.246	0.304	891.349	0.404	918.452	0.504	945.555	0.604	972.658	0.704	999.761	0.804	1,026.864	0.904	1,053.966
0.005	810.312	0.105	837.415	0.205	864.517	0.305	891.620	0.405	918.723	0.505	945.826	0.605	972.929	0.705	1,000.032	0.805	1,027.135	0.905	1,054.237
0.006	810.583	0.106	837.686	0.206	864.788	0.306	891.891	0.406	918.994	0.506	946.097	0.606	973.200	0.706	1,000.303	0.806	1,027.406	0.906	1,054.508
0.007	810.854	0.107	837.957	0.207	865.059	0.307	892.162	0.407	919.265	0.507	946.368	0.607	973.471	0.707	1,000.574	0.807	1,027.677	0.907	1,054.779
0.008	811.125	0.108	838.228	0.208	865.330	0.308	892.433	0.408	919.536	0.508	946.639	0.608	973.742	0.708	1,000.845	0.808	1,027.948	0.908	1,055.051
0.009	811.396	0.109	838.499	0.209	865.601	0.309	892.704	0.409	919.807	0.509	946.910	0.609	974.013	0.709	1,001.116	0.809	1,028.219	0.909	1,055.322
0.010	811.667	0.110	838.770	0.210	865.873	0.310	892.975	0.410	920.078	0.510	947.181	0.610	974.284	0.710	1,001.387	0.810	1,028.490	0.910	1,055.593
0.011	811.938	0.111	839.041	0.211	866.144	0.311	893.246	0.411	920.349	0.511	947.452	0.611	974.555	0.711	1,001.658	0.811	1,028.761	0.911	1,055.864
0.012	812.209	0.112	839.312	0.212	866.415	0.312	893.517	0.412	920.620	0.512	947.723	0.612	974.826	0.712	1,001.929	0.812	1,029.032	0.912	1,056.135
0.013	812.480	0.113	839.583	0.213	866.686	0.313	893.788	0.413	920.891	0.513	947.994	0.613	975.097	0.713	1,002.200	0.813	1,029.303	0.913	1,056.406
0.014	812.751	0.114	839.854	0.214	866.957	0.314	894.060	0.414	921.162	0.514	948.265	0.614	975.368	0.714	1,002.471	0.814	1,029.574	0.914	1,056.677
0.015	813.022	0.115	840.125	0.215	867.228	0.315	894.331	0.415	921.433	0.515	948.536	0.615	975.639	0.715	1,002.742	0.815	1,029.845	0.915	1,056.948
0.016	813.293	0.116	840.396	0.216	867.499	0.316	894.602	0.416	921.704	0.516	948.807	0.616	975.910	0.716	1,003.013	0.816	1,030.116	0.916	1,057.219
0.017	813.564	0.117	840.667	0.217	867.770	0.317	894.873	0.417	921.975	0.517	949.078	0.617	976.181	0.717	1,003.284	0.817	1,030.387	0.917	1,057.490
0.018	813.835	0.118	840.938	0.218	868.041	0.318	895.144	0.418	922.246	0.518	949.349	0.618	976.452	0.718	1,003.555	0.818	1,030.658	0.918	1,057.761
0.019	814.106	0.119	841.209	0.219	868.312	0.319	895.415	0.419	922.518	0.519	949.620	0.619	976.723	0.719	1,003.826	0.819	1,030.929	0.919	1,058.032
0.020	814.377	0.120	841.480	0.220	868.583	0.320	895.686	0.420	922.789	0.520	949.891	0.620	976.994	0.720	1,004.097	0.820	1,031.200	0.920	1,058.303
0.021	814.648	0.121	841.751	0.221	868.854	0.321	895.957	0.421	923.060	0.521	950.162	0.621	977.265	0.721	1,004.368	0.821	1,031.471	0.921	1,058.574
0.022	814.919	0.122	842.022	0.222	869.125	0.322	896.228	0.422	923.331	0.522	950.433	0.622	977.536	0.722	1,004.639	0.822	1,031.742	0.922	1,058.845
0.023	815.190	0.123	842.293	0.223	869.396	0.323	896.499	0.423	923.602	0.523	950.704	0.623	977.807	0.723	1,004.910	0.823	1,032.013	0.923	1,059.116
0.024	815.461	0.124	842.564	0.224	869.667	0.324	896.770	0.424	923.873	0.524	950.976	0.624	978.078	0.724	1,005.181	0.824	1,032.284	0.924	1,059.387
0.025	815.732	0.125	842.835	0.225	869.938	0.325	897.041	0.425	924.144	0.525	951.247	0.625	978.349	0.725	1,005.452	0.825	1,032.555	0.925	1,059.658
0.026	816.003	0.126	843.106	0.226	870.209	0.326	897.312	0.426	924.415	0.526	951.518	0.626	978.620	0.726	1,005.723	0.826	1,032.826	0.926	1,059.929
0.027	816.274	0.127	843.377	0.227	870.480	0.327	897.583	0.427	924.686	0.527	951.789	0.627	978.891	0.727	1,005.994	0.827	1,033.097	0.927	1,060.200
0.028	816.545	0.128	843.648	0.228	870.751	0.328	897.854	0.428	924.957	0.528	952.060	0.628	979.162	0.728	1,006.265	0.828	1,033.368	0.928	1,060.471
0.029	816.816	0.129	843.919	0.229	871.022	0.329	898.125	0.429	925.228	0.529	952.331	0.629	979.434	0.729	1,006.536	0.829	1,033.639	0.929	1,060.742
0.030	817.087	0.130	844.190	0.230	871.293	0.330	898.396	0.430	925.499	0.530	952.602	0.630	979.705	0.730	1,006.807	0.830	1,033.910	0.930	1,061.013
0.031	817.358	0.131	844.461	0.231	871.564	0.331	898.667	0.431	925.770	0.531	952.873	0.631	979.976	0.731	1,007.078	0.831	1,034.181	0.931	1,061.284
0.032	817.629	0.132	844.732	0.232	871.835	0.332	898.938	0.432	926.041	0.532	953.144	0.632	980.247	0.732	1,007.349	0.832	1,034.452	0.932	1,061.555
0.033	817.900	0.133	845.003	0.233	872.106	0.333	899.209	0.433	926.312	0.533	953.415	0.633	980.518	0.733	1,007.621	0.833	1,034.723	0.933	1,061.826
0.034	818.171	0.134	845.274	0.234	872.377	0.334	899.480	0.434	926.583	0.534	953.686	0.634	980.789	0.734	1,007.892	0.834	1,034.994	0.934	1,062.097
0.035	818.443	0.135	845.545	0.235	872.648	0.335	899.751	0.435	926.854	0.535	953.957	0.635	981.060	0.735	1,008.163	0.835	1,035.265	0.935	1,062.368
0.036	818.714	0.136	845.816	0.236	872.919	0.336	900.022	0.436	927.125	0.536	954.228	0.636	981.331	0.736	1,008.434	0.836	1,035.536	0.936	1,062.639
0.037	818.985	0.137	846.087	0.237	873.190	0.337	900.293	0.437	927.396	0.537	954.499	0.637	981.602	0.737	1,008.705	0.837	1,035.807	0.937	1,062.910
0.038	819.256	0.138	846.358	0.238	873.461	0.338	900.564	0.438	927.667	0.538	954.770	0.638	981.873	0.738	1,008.976	0.838	1,036.079	0.938	1,063.181
0.039	819.527	0.139	846.629	0.239	873.732	0.339	900.835	0.439	927.938	0.539	955.041	0.639	982.144	0.739	1,009.247	0.839	1,036.350	0.939	1,063.452
0.040	819.798	0.140	846.901	0.240	874.003	0.340	901.106	0.440	928.209	0.540	955.312	0.640	982.415	0.740	1,009.518	0.840	1,036.621	0.940	1,063.723
0.041	820.069	0.141	847.172	0.241	874.274	0.341	901.377	0.441	928.480	0.541	955.583	0.641	982.686	0.741	1,009.789	0.841	1,036.892	0.941	1,063.994
0.042	820.340	0.142	847.443	0.242	874.545	0.342	901.648	0.442	928.751	0.542	955.854	0.642	982.957	0.742	1,010.060	0.842	1,037.163	0.942	1,064.265
0.043	820.611	0.143	847.714	0.243	874.816	0.343	901.919	0.443	929.022	0.543	956.125	0.643	983.228	0.743	1,010.331	0.843	1,037.434	0.943	1,064.537
0.044	820.882	0.144	847.985	0.244	875.087	0.344	902.190	0.444	929.293	0.544	956.396	0.644	983.499	0.744	1,010.602	0.844	1,037.705	0.944	1,064.808
0.045	821.153	0.145	848.256	0.245	875.359	0.345	902.461	0.445	929.564	0.545	956.667	0.645	983.770	0.745	1,010.873	0.845	1,037.976	0.945	1,065.079
0.046	821.424	0.146	848.527	0.246	875.630	0.346	902.732	0.446	929.835	0.546	956.938	0.646	984.041	0.746	1,011.144	0.846	1,038.247	0.946	1,065.350
0.047	821.695	0.147	848.798	0.247	875.901	0.347	903.003	0.447	930.106	0.547	957.209	0.647	984.312	0.747	1,011.415	0.847	1,038.518	0.947	1,065.621
0.048	821.966	0.148	849.069	0.248	876.172	0.348	903.274	0.448	930.377	0.548	957.480	0.648	984.583	0.748	1,011.686	0.848	1,038.789	0.948	1,065.892
0.049	822.237	0.149	849.340	0.249	876.443	0.349	903.546	0.449	930.648	0.549	957.751	0.649	984.854	0.749	1,011.957	0.849	1,039.060	0.949	1,066.163
0.050	822.508	0.150	849.611	0.250	876.714	0.350	903.817	0.450	930.919	0.550	958.022	0.650	985.125	0.750	1,012.228	0.850	1,039.331	0.950	1,066.434
0.051	822.779	0.151	849.882	0.251	876.985	0.351	904.088	0.451	931.190	0.551	958.293	0.651	985.396	0.751	1,012.499	0.851	1,039.602	0.951	1,066.705
0.052	823.050	0.152	850.153	0.252	877.256	0.352	904.359	0.452	931.461	0.552	958.564	0.652	985.667	0.752	1,012.770	0.852	1,039.873	0.952	1,066.976
0.053	823.321	0.153	850.424	0.253	877.527	0.353	904.630	0.453	931.732	0.553	958.835	0.653	985.938	0.753	1,013.041	0.853	1,040.144	0.953	1,067.247
0.054	823.592	0.154	850.695	0.254	877.798	0.354	904.901	0.454	932.004	0.554	959.106	0.654	986.209	0.754	1,013.312	0.854	1,040.415	0.954	1,067.518
0.055	823.863	0.155	850.966	0.255	878.069	0.355	905.172	0.455	932.275	0.555	959.377	0.655	986.480	0.755	1,013.583	0.855	1,040.686	0.955	1,067.789
0.056	824.134	0.156	851.237	0.256	878.340	0.356	905.443	0.456	932.546	0.556	959.648	0.656	986.751	0.756	1,013.854	0.856	1,040.957	0.956	1,068.060
0.057	824.405	0.157	851.508	0.257	878.611	0.357	905.714	0.457	932.817	0.557	959.919	0.657	987.022	0.757	1,014.125	0.857	1,041.228	0.957	1,068.331
0.058	824.676	0.158	851.779	0.258	878.882	0.358	905.985	0.458	933.088	0.558	960.190	0.658	987.293	0.758	1,014.396	0.858	1,041.499	0.958	1,068.602
0.059	824.947	0.159	852.050	0.259	879.153	0.359	906.256	0.459	933.359	0.559	960.462	0.659	987.564	0.759	1,014.667	0.859	1,041.770	0.959	1,068.873
0.060	825.218	0.160	852.321	0.260	879.424	0.360	906.527	0.460	933.630	0.560	960.733	0.660	987.835	0.760	1,014.938	0.860	1,042.041	0.960	1,069.144
0.061	825.489	0.161	852.592	0.261	879.695	0.361	906.798	0.461	933.901	0.561	961.004	0.661	988.106	0.761	1,015.209	0.861	1,042.312	0.961	1,069.415
0.062	825.760	0.162	852.863	0.262	879.966	0.362	907.069	0.462	934.172	0.562	961.275	0.662	988.377	0.762	1,015.480	0.862	1,042.583	0.962	1,069.686
0.063	826.031	0.163	853.134	0.263	880.237	0.363	907.340	0.463	934.443	0.563	961.546	0.663	988.649	0.763	1,015.751	0.863	1,042.854	0.963	1,069.957
0.064	826.302	0.164	853.405	0.264	880.508	0.364	907.611	0.464	934.714	0.564	961.817	0.664	988.920	0.764	1,016.022	0.864	1,043.125	0.964	1,070.228
0.065	826.573	0.165	853.676	0.265	880.779	0.365	907.882	0.465	934.985	0.565	962.088	0.665	989.191	0.765	1,016.293	0.865	1,043.396	0.965	1,070.499
0.066	826.844	0.166	853.947	0.266	881.050	0.366	908.153	0.466	935.256	0.566	962.359	0.666	989.462	0.766	1,016.564	0.866	1,043.667	0.966	1,070.770
0.067	827.115	0.167	854.218	0.267	881.321	0.367	908.424	0.467	935.527	0.567	962.630	0.667	989.733	0.767	1,016.835	0.867	1,043.938	0.967	1,071.041
0.068	827.386	0.168	854.489	0.268	881.592	0.368	908.695	0.468	935.798	0.568	962.901	0.668	990.004	0.768	1,017.107	0.868	1,044.209	0.968	1,071.312
0.069	827.657	0.169	854.760	0.269	881.863	0.369	908.966	0.469	936.069	0.569	963.172	0.669	990.275	0.769	1,017.378	0.869	1,044.480	0.969	1,071.583
0.070	827.929	0.170	855.031	0.270	882.134	0.370	909.237	0.470	936.340	0.570	963.443	0.670	990.546	0.770	1,017.649	0.870	1,044.751	0.970	1,071.854
0.071	828.200	0.171	855.302	0.271	882.405	0.371	909.508	0.471	936.611	0.571	963.714	0.671	990.817	0.771	1,017.920	0.871	1,045.022	0.971	1,072.125
0.072	828.471	0.172	855.573	0.272	882.676	0.372	909.779	0.472	936.882	0.572	963.985	0.672	991.088	0.772	1,018.191	0.872	1,045.293	0.972	1,072.396
0.073	828.742	0.173	855.844	0.273	882.947	0.373	910.050	0.473	937.153	0.573	964.256	0.673	991.359	0.773	1,018.462	0.873	1,045.565	0.973	1,072.667
0.074	829.013	0.174	856.115	0.274	883.218	0.374	910.321	0.474	937.424	0.574	964.527	0.674	991.630	0.774	1,018.733	0.874	1,045.836	0.974	1,072.938
0.075	829.284	0.175	856.387	0.275	883.489	0.375	910.592	0.475	937.695	0.575	964.798	0.675	991.901	0.775	1,019.004	0.875	1,046.107	0.975	1,073.209
0.076	829.555	0.176	856.658	0.276	883.760	0.376	910.863	0.476	937.966	0.576	965.069	0.676	992.172	0.776	1,019.275	0.876	1,046.378	0.976	1,073.480
0.077	829.826	0.177	856.929	0.277	884.031	0.377	911.134	0.477	938.237	0.577	965.340	0.677	992.443	0.777	1,019.546	0.877	1,046.649	0.977	1,073.751
0.078	830.097	0.178	857.200	0.278	884.302	0.378	911.405	0.478	938.508	0.578	965.611	0.678	992.714	0.778	1,019.817	0.878	1,046.920	0.978	1,074.023
0.079	830.368	0.179	857.471	0.279	884.573	0.379	911.676	0.479	938.779	0.579	965.882	0.679	992.985	0.779	1,020.088	0.879	1,047.191	0.979	1,074.294
0.080	830.639	0.180	857.742	0.280	884.845	0.380	911.947	0.480	939.050	0.580	966.153	0.680	993.256	0.780	1,020.359	0.880	1,047.462	0.980	1,074.565
0.081	830.910	0.181	858.013	0.281	885.116	0.381	912.218	0.481	939.321	0.581	966.424	0.681	993.527	0.781	1,020.630	0.881	1,047.733	0.981	1,074.836
0.082	831.181	0.182	858.284	0.282	885.387	0.382	912.489	0.482	939.592	0.582	966.695	0.682	993.798	0.782	1,020.901	0.882	1,048.004	0.982	1,075.107
0.083	831.452	0.183	858.555	0.283	885.658	0.383	912.760	0.483	939.863	0.583	966.966	0.683	994.069	0.783	1,021.172	0.883	1,048.275	0.983	1,075.378
0.084	831.723	0.184	858.826	0.284	885.929	0.384	913.032	0.484	940.134	0.584	967.237	0.684	994.340	0.784	1,021.443	0.884	1,048.546	0.984	1,075.649
0.085	831.994	0.185	859.097	0.285	886.200	0.385	913.303	0.485	940.405	0.585	967.508	0.685	994.611	0.785	1,021.714	0.885	1,048.817	0.985	1,075.920
0.086	832.265	0.186	859.368	0.286	886.471	0.386	913.574	0.486	940.676	0.586	967.779	0.686	994.882	0.786	1,021.985	0.886	1,049.088	0.986	1,076.191
0.087	832.536	0.187	859.639	0.287	886.742	0.387	913.845	0.487	940.947	0.587	968.050	0.687	995.153	0.787	1,022.256	0.887	1,049.359	0.987	1,076.462
0.088	832.807	0.188	859.910	0.288	887.013	0.388	914.116	0.488	941.218	0.588	968.321	0.688	995.424	0.788	1,022.527	0.888	1,049.630	0.988	1,076.733
0.089	833.078	0.189	860.181	0.289	887.284	0.389	914.387	0.489	941.490	0.589	968.592	0.689	995.695	0.789	1,022.798	0.889	1,049.901	0.989	1,077.004
0.090	833.349	0.190	860.452	0.290	887.555	0.390	914.658	0.490	941.761	0.590	968.863	0.690	995.966	0.790	1,023.069	0.890	1,050.172	0.990	1,077.275
0.091	833.620	0.191	860.723	0.291	887.826	0.391	914.929	0.491	942.032	0.591	969.134	0.691	996.237	0.791	1,023.340	0.891	1,050.443	0.991	1,077.546
0.092	833.891	0.192	860.994	0.292	888.097	0.392	915.200	0.492	942.303	0.592	969.405	0.692	996.508	0.792	1,023.611	0.892	1,050.714	0.992	1,077.817
0.093	834.162	0.193	861.265	0.293	888.368	0.393	915.471	0.493	942.574	0.593	969.676	0.693	996.779	0.793	1,023.882	0.893	1,050.985	0.993	1,078.088
0.094	834.433	0.194	861.536	0.294	888.639	0.394	915.742	0.494	942.845	0.594	969.948	0.694	997.050	0.794	1,024.153	0.894	1,051.256	0.994	1,078.359
0.095	834.704	0.195	861.807	0.295	888.910	0.395	916.013	0.495	943.116	0.595	970.219	0.695	997.321	0.795	1,024.424	0.895	1,051.527	0.995	1,078.630
0.096	834.975	0.196	862.078	0.296	889.181	0.396	916.284	0.496	943.387	0.596	970.490	0.696	997.592	0.796	1,024.695	0.896	1,051.798	0.996	1,078.901
0.097	835.246	0.197	862.349	0.297	889.452	0.397	916.555	0.497	943.658	0.597	970.761	0.697	997.863	0.797	1,024.966	0.897	1,052.069	0.997	1,079.172
0.098	835.517	0.198	862.620	0.298	889.723	0.398	916.826	0.498	943.929	0.598	971.032	0.698	998.135	0.798	1,025.237	0.898	1,052.340	0.998	1,079.443
0.099	835.788	0.199	862.891	0.299	889.994	0.399	917.097	0.499	944.200	0.599	971.303	0.699	998.406	0.799	1,025.508	0.899	1,052.611	0.999	1,079.714

DATE STRAPPED: 09/19/17 BY: RJ
DATE COMPUTED: 09/26/17 BY: WLH
DATE ISSUED: 09/26/17

AMSPEC

Calibration@AmSpecGroup.com

Meliadine
Portal #1
Item 20 - Final - Datasheet

Tank No. 3
INNAGE TABLE

CAPACITIES GIVEN IN CUBIC METERS

GAUGE HEIGHT: 11.443 M

mm	4 M	mm	4 M	mm	4 M	mm	4 M	mm	4 M	mm	4 M	mm	4 M	mm	4 M	mm	4 M	mm	4 M
0.000	1,079.985	0.100	1,107.088	0.200	1,134.191	0.300	1,161.294	0.400	1,188.397	0.500	1,215.499	0.600	1,242.602	0.700	1,269.705	0.800	1,296.808	0.900	1,323.911
0.001	1,080.256	0.101	1,107.359	0.201	1,134.462	0.301	1,161.565	0.401	1,188.668	0.501	1,215.771	0.601	1,242.873	0.701	1,269.976	0.801	1,297.079	0.901	1,324.182
0.002	1,080.527	0.102	1,107.630	0.202	1,134.733	0.302	1,161.836	0.402	1,188.939	0.502	1,216.042	0.602	1,243.144	0.702	1,270.247	0.802	1,297.350	0.902	1,324.453
0.003	1,080.798	0.103	1,107.901	0.203	1,135.004	0.303	1,162.107	0.403	1,189.210	0.503	1,216.313	0.603	1,243.415	0.703	1,270.518	0.803	1,297.621	0.903	1,324.724
0.004	1,081.069	0.104	1,108.172	0.204	1,135.275	0.304	1,162.378	0.404	1,189.481	0.504	1,216.584	0.604	1,243.686	0.704	1,270.789	0.804	1,297.892	0.904	1,324.995
0.005	1,081.340	0.105	1,108.443	0.205	1,135.546	0.305	1,162.649	0.405	1,189.752	0.505	1,216.855	0.605	1,243.957	0.705	1,271.060	0.805	1,298.163	0.905	1,325.266
0.006	1,081.611	0.106	1,108.714	0.206	1,135.817	0.306	1,162.920	0.406	1,190.023	0.506	1,217.126	0.606	1,244.229	0.706	1,271.331	0.806	1,298.434	0.906	1,325.537
0.007	1,081.882	0.107	1,108.985	0.207	1,136.088	0.307	1,163.191	0.407	1,190.294	0.507	1,217.397	0.607	1,244.500	0.707	1,271.602	0.807	1,298.705	0.907	1,325.808
0.008	1,082.153	0.108	1,109.256	0.208	1,136.359	0.308	1,163.462	0.408	1,190.565	0.508	1,217.668	0.608	1,244.771	0.708	1,271.873	0.808	1,298.976	0.908	1,326.079
0.009	1,082.424	0.109	1,109.527	0.209	1,136.630	0.309	1,163.733	0.409	1,190.836	0.509	1,217.939	0.609	1,245.042	0.709	1,272.144	0.809	1,299.247	0.909	1,326.350
0.010	1,082.695	0.110	1,109.798	0.210	1,136.901	0.310	1,164.004	0.410	1,191.107	0.510	1,218.210	0.610	1,245.313	0.710	1,272.415	0.810	1,299.518	0.910	1,326.621
0.011	1,082.966	0.111	1,110.069	0.211	1,137.172	0.311	1,164.275	0.411	1,191.378	0.511	1,218.481	0.611	1,245.584	0.711	1,272.687	0.811	1,299.789	0.911	1,326.892
0.012	1,083.237	0.112	1,110.340	0.212	1,137.443	0.312	1,164.546	0.412	1,191.649	0.512	1,218.752	0.612	1,245.855	0.712	1,272.958	0.812	1,300.060	0.912	1,327.163
0.013	1,083.509	0.113	1,110.611	0.213	1,137.714	0.313	1,164.817	0.413	1,191.920	0.513	1,219.023	0.613	1,246.126	0.713	1,273.229	0.813	1,300.331	0.913	1,327.434
0.014	1,083.780	0.114	1,110.882	0.214	1,137.985	0.314	1,165.088	0.414	1,192.191	0.514	1,219.294	0.614	1,246.397	0.714	1,273.500	0.814	1,300.602	0.914	1,327.705
0.015	1,084.051	0.115	1,111.153	0.215	1,138.256	0.315	1,165.359	0.415	1,192.462	0.515	1,219.565	0.615	1,246.668	0.715	1,273.771	0.815	1,300.874	0.915	1,327.976
0.016	1,084.322	0.116	1,111.424	0.216	1,138.527	0.316	1,165.630	0.416	1,192.733	0.516	1,219.836	0.616	1,246.939	0.716	1,274.042	0.816	1,301.145	0.916	1,328.247
0.017	1,084.593	0.117	1,111.696	0.217	1,138.798	0.317	1,165.901	0.417	1,193.004	0.517	1,220.107	0.617	1,247.210	0.717	1,274.313	0.817	1,301.416	0.917	1,328.518
0.018	1,084.864	0.118	1,111.967	0.218	1,139.069	0.318	1,166.172	0.418	1,193.275	0.518	1,220.378	0.618	1,247.481	0.718	1,274.584	0.818	1,301.687	0.918	1,328.789
0.019	1,085.135	0.119	1,112.238	0.219	1,139.340	0.319	1,166.443	0.419	1,193.546	0.519	1,220.649	0.619	1,247.752	0.719	1,274.855	0.819	1,301.958	0.919	1,329.060
0.020	1,085.406	0.120	1,112.509	0.220	1,139.611	0.320	1,166.714	0.420	1,193.817	0.520	1,220.920	0.620	1,248.023	0.720	1,275.126	0.820	1,302.229	0.920	1,329.332
0.021	1,085.677	0.121	1,112.780	0.221	1,139.882	0.321	1,166.985	0.421	1,194.088	0.521	1,221.191	0.621	1,248.294	0.721	1,275.397	0.821	1,302.500	0.921	1,329.603
0.022	1,085.948	0.122	1,113.051	0.222	1,140.154	0.322	1,167.256	0.422	1,194.359	0.522	1,221.462	0.622	1,248.565	0.722	1,275.668	0.822	1,302.771	0.922	1,329.874
0.023	1,086.219	0.123	1,113.322	0.223	1,140.425	0.323	1,167.527	0.423	1,194.630	0.523	1,221.733	0.623	1,248.836	0.723	1,275.939	0.823	1,303.042	0.923	1,330.145
0.024	1,086.490	0.124	1,113.593	0.224	1,140.696	0.324	1,167.798	0.424	1,194.901	0.524	1,222.004	0.624	1,249.107	0.724	1,276.210	0.824	1,303.313	0.924	1,330.416
0.025	1,086.761	0.125	1,113.864	0.225	1,140.967	0.325	1,168.069	0.425	1,195.172	0.525	1,222.275	0.625	1,249.378	0.725	1,276.481	0.825	1,303.584	0.925	1,330.687
0.026	1,087.032	0.126	1,114.135	0.226	1,141.238	0.326	1,168.340	0.426	1,195.443	0.526	1,222.546	0.626	1,249.649	0.726	1,276.752	0.826	1,303.855	0.926	1,330.958
0.027	1,087.303	0.127	1,114.406	0.227	1,141.509	0.327	1,168.612	0.427	1,195.714	0.527	1,222.817	0.627	1,249.920	0.727	1,277.023	0.827	1,304.126	0.927	1,331.229
0.028	1,087.574	0.128	1,114.677	0.228	1,141.780	0.328	1,168.883	0.428	1,195.985	0.528	1,223.088	0.628	1,250.191	0.728	1,277.294	0.828	1,304.397	0.928	1,331.500
0.029	1,087.845	0.129	1,114.948	0.229	1,142.051	0.329	1,169.154	0.429	1,196.256	0.529	1,223.359	0.629	1,250.462	0.729	1,277.565	0.829	1,304.668	0.929	1,331.771
0.030	1,088.116	0.130	1,115.219	0.230	1,142.322	0.330	1,169.425	0.430	1,196.527	0.530	1,223.630	0.630	1,250.733	0.730	1,277.836	0.830	1,304.939	0.930	1,332.042
0.031	1,088.387	0.131	1,115.490	0.231	1,142.593	0.331	1,169.696	0.431	1,196.799	0.531	1,223.901	0.631	1,251.004	0.731	1,278.107	0.831	1,305.210	0.931	1,332.313
0.032	1,088.658	0.132	1,115.761	0.232	1,142.864	0.332	1,169.967	0.432	1,197.070	0.532	1,224.172	0.632	1,251.275	0.732	1,278.378	0.832	1,305.481	0.932	1,332.584
0.033	1,088.929	0.133	1,116.032	0.233	1,143.135	0.333	1,170.238	0.433	1,197.341	0.533	1,224.443	0.633	1,251.546	0.733	1,278.649	0.833	1,305.752	0.933	1,332.855
0.034	1,089.200	0.134	1,116.303	0.234	1,143.406	0.334	1,170.509	0.434	1,197.612	0.534	1,224.714	0.634	1,251.817	0.734	1,278.920	0.834	1,306.023	0.934	1,333.126
0.035	1,089.471	0.135	1,116.574	0.235	1,143.677	0.335	1,170.780	0.435	1,197.883	0.535	1,224.985	0.635	1,252.088	0.735	1,279.191	0.835	1,306.294	0.935	1,333.397
0.036	1,089.742	0.136	1,116.845	0.236	1,143.948	0.336	1,171.051	0.436	1,198.154	0.536	1,225.257	0.636	1,252.359	0.736	1,279.462	0.836	1,306.565	0.936	1,333.668
0.037	1,090.013	0.137	1,117.116	0.237	1,144.219	0.337	1,171.322	0.437	1,198.425	0.537	1,225.528	0.637	1,252.630	0.737	1,279.733	0.837	1,306.836	0.937	1,333.939
0.038	1,090.284	0.138	1,117.387	0.238	1,144.490	0.338	1,171.593	0.438	1,198.696	0.538	1,225.799	0.638	1,252.901	0.738	1,280.004	0.838	1,307.107	0.938	1,334.210
0.039	1,090.555	0.139	1,117.658	0.239	1,144.761	0.339	1,171.864	0.439	1,198.967	0.539	1,226.070	0.639	1,253.172	0.739	1,280.275	0.839	1,307.378	0.939	1,334.481
0.040	1,090.826	0.140	1,117.929	0.240	1,145.032	0.340	1,172.135	0.440	1,199.238	0.540	1,226.341	0.640	1,253.443	0.740	1,280.546	0.840	1,307.649	0.940	1,334.752
0.041	1,091.097	0.141	1,118.200	0.241	1,145.303	0.341	1,172.406	0.441	1,199.509	0.541	1,226.612	0.641	1,253.715	0.741	1,280.817	0.841	1,307.920	0.941	1,335.023
0.042	1,091.368	0.142	1,118.471	0.242	1,145.574	0.342	1,172.677	0.442	1,199.780	0.542	1,226.883	0.642	1,253.986	0.742	1,281.088	0.842	1,308.191	0.942	1,335.294
0.043	1,091.639	0.143	1,118.742	0.243	1,145.845	0.343	1,172.948	0.443	1,200.051	0.543	1,227.154	0.643	1,254.257	0.743	1,281.359	0.843	1,308.462	0.943	1,335.565
0.044	1,091.910	0.144	1,119.013	0.244	1,146.116	0.344	1,173.219	0.444	1,200.322	0.544	1,227.425	0.644	1,254.528	0.744	1,281.630	0.844	1,308.733	0.944	1,335.836
0.045	1,092.181	0.145	1,119.284	0.245	1,146.387	0.345	1,173.490	0.445	1,200.593	0.545	1,227.696	0.645	1,254.799	0.745	1,281.901	0.845	1,309.004	0.945	1,336.107
0.046	1,092.452	0.146	1,119.555	0.246	1,146.658	0.346	1,173.761	0.446	1,200.864	0.546	1,227.967	0.646	1,255.070	0.746	1,282.173	0.846	1,309.275	0.946	1,336.378
0.047	1,092.724	0.147	1,119.826	0.247	1,146.929	0.347	1,174.032	0.447	1,201.135	0.547	1,228.238	0.647	1,255.341	0.747	1,282.444	0.847	1,309.546	0.947	1,336.649
0.048	1,092.995	0.148	1,120.097	0.248	1,147.200	0.348	1,174.303	0.448	1,201.406	0.548	1,228.509	0.648	1,255.612	0.748	1,282.715	0.848	1,309.817	0.948	1,336.920
0.049	1,093.266	0.149	1,120.368	0.249	1,147.471	0.349	1,174.574	0.449	1,201.677	0.549	1,228.780	0.649	1,255.883	0.749	1,282.986	0.849	1,310.088	0.949	1,337.191
0.050	1,093.537	0.150	1,120.639	0.250	1,147.742	0.350	1,174.845	0.450	1,201.948	0.550	1,229.051	0.650	1,256.154	0.750	1,283.257	0.850	1,310.360	0.950	1,337.462
0.051	1,093.808	0.151	1,120.910	0.251	1,148.013	0.351	1,175.116	0.451	1,202.219	0.551	1,229.322	0.651	1,256.425	0.751	1,283.528	0.851	1,310.631	0.951	1,337.733
0.052	1,094.079	0.152	1,121.182	0.252	1,148.284	0.352	1,175.387	0.452	1,202.490	0.552	1,229.593	0.652	1,256.696	0.752	1,283.799	0.852	1,310.902	0.952	1,338.004
0.053	1,094.350	0.153	1,121.453	0.253	1,148.555	0.353	1,175.658	0.453	1,202.761	0.553	1,229.864	0.653	1,256.967	0.753	1,284.070	0.853	1,311.173	0.953	1,338.275
0.054	1,094.621	0.154	1,121.724	0.254	1,148.826	0.354	1,175.929	0.454	1,203.032	0.554	1,230.135	0.654	1,257.238	0.754	1,284.341	0.854	1,311.444	0.954	1,338.546
0.055	1,094.892	0.155	1,121.995	0.255	1,149.097	0.355	1,176.200	0.455	1,203.303	0.555	1,230.406	0.655	1,257.509	0.755	1,284.612	0.855	1,311.715	0.955	1,338.818
0.056	1,095.163	0.156	1,122.266	0.256	1,149.368	0.356	1,176.471	0.456	1,203.574	0.556	1,230.677	0.656	1,257.780	0.756	1,284.883	0.856	1,311.986	0.956	1,339.089
0.057	1,095.434	0.157	1,122.537	0.257	1,149.640	0.357	1,176.742	0.457	1,203.845	0.557	1,230.948	0.657	1,258.051	0.757	1,285.154	0.857	1,312.257	0.957	1,339.360
0.058	1,095.705	0.158	1,122.808	0.258	1,149.911	0.358	1,177.013	0.458	1,204.116	0.558	1,231.219	0.658	1,258.322	0.758	1,285.425	0.858	1,312.528	0.958	1,339.631
0.059	1,095.976	0.159	1,123.079	0.259	1,150.182	0.359	1,177.284	0.459	1,204.387	0.559	1,231.490	0.659	1,258.593	0.759	1,285.696	0.859	1,312.799	0.959	1,339.902
0.060	1,096.247	0.160	1,123.350	0.260	1,150.453	0.360	1,177.555	0.460	1,204.658	0.560	1,231.761	0.660	1,258.864	0.760	1,285.967	0.860	1,313.070	0.960	1,340.173
0.061	1,096.518	0.161	1,123.621	0.261	1,150.724	0.361	1,177.826	0.461	1,204.929	0.561	1,232.032	0.661	1,259.135	0.761	1,286.238	0.861	1,313.341	0.961	1,340.444
0.062	1,096.789	0.162	1,123.892	0.262	1,150.995	0.362	1,178.098	0.462	1,205.200	0.562	1,232.303	0.662	1,259.406	0.762	1,286.509	0.862	1,313.612	0.962	1,340.715
0.063	1,097.060	0.163	1,124.163	0.263	1,151.266	0.363	1,178.369	0.463	1,205.471	0.563	1,232.574	0.663	1,259.677	0.763	1,286.780	0.863	1,313.883	0.963	1,340.986
0.064	1,097.331	0.164	1,124.434	0.264	1,151.537	0.364	1,178.640	0.464	1,205.742	0.564	1,232.845	0.664	1,259.948	0.764	1,287.051	0.864	1,314.154	0.964	1,341.257
0.065	1,097.602	0.165	1,124.705	0.265	1,151.808	0.365	1,178.911	0.465	1,206.013	0.565	1,233.116	0.665	1,260.219	0.765	1,287.322	0.865	1,314.425	0.965	1,341.528
0.066	1,097.873	0.166	1,124.976	0.266	1,152.079	0.366	1,179.182	0.466	1,206.285	0.566	1,233.387	0.666	1,260.490	0.766	1,287.593	0.866	1,314.696	0.966	1,341.799
0.067	1,098.144	0.167	1,125.247	0.267	1,152.350	0.367	1,179.453	0.467	1,206.556	0.567	1,233.658	0.667	1,260.761	0.767	1,287.864	0.867	1,314.967	0.967	1,342.070
0.068	1,098.415	0.168	1,125.518	0.268	1,152.621	0.368	1,179.724	0.468	1,206.827	0.568	1,233.929	0.668	1,261.032	0.768	1,288.135	0.868	1,315.238	0.968	1,342.341
0.069	1,098.686	0.169	1,125.789	0.269	1,152.892	0.369	1,179.995	0.469	1,207.098	0.569	1,234.200	0.669	1,261.303	0.769	1,288.406	0.869	1,315.509	0.969	1,342.612
0.070	1,098.957	0.170	1,126.060	0.270	1,153.163	0.370	1,180.266	0.470	1,207.369	0.570	1,234.471	0.670	1,261.574	0.770	1,288.677	0.870	1,315.780	0.970	1,342.883
0.071	1,099.228	0.171	1,126.331	0.271	1,153.434	0.371	1,180.537	0.471	1,207.640	0.571	1,234.743	0.671	1,261.845	0.771	1,288.948	0.871	1,316.051	0.971	1,343.154
0.072	1,099.499	0.172	1,126.602	0.272	1,153.705	0.372	1,180.808	0.472	1,207.911	0.572	1,235.014	0.672	1,262.116	0.772	1,289.219	0.872	1,316.322	0.972	1,343.425
0.073	1,099.770	0.173	1,126.873	0.273	1,153.976	0.373	1,181.079	0.473	1,208.182	0.573	1,235.285	0.673	1,262.387	0.773	1,289.490	0.873	1,316.593	0.973	1,343.696
0.074	1,100.041	0.174	1,127.144	0.274	1,154.247	0.374	1,181.350	0.474	1,208.453	0.574	1,235.556	0.674	1,262.658	0.774	1,289.761	0.874	1,316.864	0.974	1,343.967
0.075	1,100.312	0.175	1,127.415	0.275	1,154.518	0.375	1,181.621	0.475	1,208.724	0.575	1,235.827	0.675	1,262.929	0.775	1,290.032	0.875	1,317.135	0.975	1,344.238
0.076	1,100.583	0.176	1,127.686	0.276	1,154.789	0.376	1,181.892	0.476	1,208.995	0.576	1,236.098	0.676	1,263.201	0.776	1,290.303	0.876	1,317.406	0.976	1,344.509
0.077	1,100.854	0.177	1,127.957	0.277	1,155.060	0.377	1,182.163	0.477	1,209.266	0.577	1,236.369	0.677	1,263.472	0.777	1,290.574	0.877	1,317.677	0.977	1,344.780
0.078	1,101.125	0.178	1,128.228	0.278	1,155.331	0.378	1,182.434	0.478	1,209.537	0.578	1,236.640	0.678	1,263.743	0.778	1,290.845	0.878	1,317.948	0.978	1,345.051
0.079	1,101.396	0.179	1,128.499	0.279	1,155.602	0.379	1,182.705	0.479	1,209.808	0.579	1,236.911	0.679	1,264.014	0.779	1,291.116	0.879	1,318.219	0.979	1,345.322
0.080	1,101.667	0.180	1,128.770	0.280	1,155.873	0.380	1,182.976	0.480	1,210.079	0.580	1,237.182	0.680	1,264.285	0.780	1,291.388	0.880	1,318.490	0.980	1,345.593
0.081	1,101.938	0.181	1,129.041	0.281	1,156.144	0.381	1,183.247	0.481	1,210.350	0.581	1,237.453	0.681	1,264.556	0.781	1,291.659	0.881	1,318.761	0.981	1,345.864
0.082	1,102.210	0.182	1,129.312	0.282	1,156.415	0.382	1,183.518	0.482	1,210.621	0.582	1,237.724	0.682	1,264.827	0.782	1,291.930	0.882	1,319.032	0.982	1,346.135
0.083	1,102.481	0.183	1,129.583	0.283	1,156.686	0.383	1,183.789	0.483	1,210.892	0.583	1,237.995	0.683	1,265.098	0.783	1,292.201	0.883	1,319.303	0.983	1,346.406
0.084	1,102.752	0.184	1,129.854	0.284	1,156.957	0.384	1,184.060	0.484	1,211.163	0.584	1,238.266	0.684	1,265.369	0.784	1,292.472	0.884	1,319.574	0.984	1,346.677
0.085	1,103.023	0.185	1,130.125	0.285	1,157.228	0.385	1,184.331	0.485	1,211.434	0.585	1,238.537	0.685	1,265.640	0.785	1,292.743	0.885	1,319.846	0.985	1,346.948
0.086	1,103.294	0.186	1,130.396	0.286	1,157.499	0.386	1,184.602	0.486	1,211.705	0.586	1,238.808	0.686	1,265.911	0.786	1,293.014	0.886	1,320.117	0.986	1,347.219
0.087	1,103.565	0.187	1,130.668	0.287	1,157.770	0.387	1,184.873	0.487	1,211.976	0.587	1,239.079	0.687	1,266.182	0.787	1,293.285	0.887	1,320.388	0.987	1,347.490
0.088	1,103.836	0.188	1,130.939	0.288	1,158.041	0.388	1,185.144	0.488	1,212.247	0.588	1,239.350	0.688	1,266.453	0.788	1,293.556	0.888	1,320.659	0.988	1,347.761
0.089	1,104.107	0.189	1,131.210	0.289	1,158.312	0.389	1,185.415	0.489	1,212.518	0.589	1,239.621	0.689	1,266.724	0.789	1,293.827	0.889	1,320.930	0.989	1,348.032
0.090	1,104.378	0.190	1,131.481	0.290	1,158.583	0.390	1,185.686	0.490	1,212.789	0.590	1,239.892	0.690	1,266.995	0.790	1,294.098	0.890	1,321.201	0.990	1,348.304
0.091	1,104.649	0.191	1,131.752	0.291	1,158.854	0.391	1,185.957	0.491	1,213.060	0.591	1,240.163	0.691	1,267.266	0.791	1,294.369	0.891	1,321.472	0.991	1,348.575
0.092	1,104.920	0.192	1,132.023	0.292	1,159.126	0.392	1,186.228	0.492	1,213.331	0.592	1,240.434	0.692	1,267.537	0.792	1,294.640	0.892	1,321.743	0.992	1,348.846
0.093	1,105.191	0.193	1,132.294	0.293	1,159.397	0.393	1,186.499	0.493	1,213.602	0.593	1,240.705	0.693	1,267.808	0.793	1,294.911	0.893	1,322.014	0.993	1,349.117
0.094	1,105.462	0.194	1,132.565	0.294	1,159.668	0.394	1,186.770	0.494	1,213.873	0.594	1,240.976	0.694	1,268.079	0.794	1,295.182	0.894	1,322.285	0.994	1,349.388
0.095	1,105.733	0.195	1,132.836	0.295	1,159.939	0.395	1,187.041	0.495	1,214.144	0.595	1,241.247	0.695	1,268.350	0.795	1,295.453	0.895	1,322.556	0.995	1,349.659
0.096	1,106.004	0.196	1,133.107	0.296	1,160.210	0.396	1,187.313	0.496	1,214.415	0.596	1,241.518	0.696	1,268.621	0.796	1,295.724	0.896	1,322.827	0.996	1,349.930
0.097	1,106.275	0.197	1,133.378	0.297	1,160.481	0.397	1,187.584	0.497	1,214.686	0.597	1,241.789	0.697	1,268.892	0.797	1,295.995	0.897	1,323.098	0.997	1,350.201
0.098	1,106.546	0.198	1,133.649	0.298	1,160.752	0.398	1,187.855	0.498	1,214.957	0.598	1,242.060	0.698	1,269.163	0.798	1,296.266	0.898	1,323.369	0.998	1,350.472
0.099	1,106.817	0.199	1,133.920	0.299	1,161.023	0.399	1,188.126	0.499	1,215.228	0.599	1,242.331	0.699	1,269.434	0.799	1,296.537	0.899	1,323.640	0.999	1,350.743

DATE STRAPPED: 09/19/17 BY: RJ
DATE COMPUTED: 09/26/17 BY: WLH
DATE ISSUED: 09/26/17

AMSPEC

Meliadine
Portal #1
Item 20 - Final - Datasheet

Tank No. 3
INNAGE TABLE

Calibration@AmSpecGroup.com

CAPACITIES GIVEN IN CUBIC METERS — **GAUGE HEIGHT: 11.443 M**

mm	5 M	mm	5 M	mm	5 M	mm	5 M	mm	5 M	mm	5 M	mm	5 M	mm	5 M	mm	5 M	mm	5 M
0.000	1,351.014	0.100	1,378.117	0.200	1,405.220	0.300	1,432.322	0.400	1,459.425	0.500	1,486.528	0.600	1,513.600	0.700	1,540.645	0.800	1,567.690	0.900	1,594.735
0.001	1,351.285	0.101	1,378.388	0.201	1,405.491	0.301	1,432.593	0.401	1,459.696	0.501	1,486.799	0.601	1,513.871	0.701	1,540.916	0.801	1,567.961	0.901	1,595.005
0.002	1,351.556	0.102	1,378.659	0.202	1,405.762	0.302	1,432.864	0.402	1,459.967	0.502	1,487.070	0.602	1,514.141	0.702	1,541.186	0.802	1,568.231	0.902	1,595.276
0.003	1,351.827	0.103	1,378.930	0.203	1,406.033	0.303	1,433.135	0.403	1,460.238	0.503	1,487.341	0.603	1,514.412	0.703	1,541.457	0.803	1,568.501	0.903	1,595.546
0.004	1,352.098	0.104	1,379.201	0.204	1,406.304	0.304	1,433.407	0.404	1,460.509	0.504	1,487.612	0.604	1,514.682	0.704	1,541.727	0.804	1,568.772	0.904	1,595.817
0.005	1,352.369	0.105	1,379.472	0.205	1,406.575	0.305	1,433.678	0.405	1,460.780	0.505	1,487.883	0.605	1,514.953	0.705	1,541.998	0.805	1,569.042	0.905	1,596.087
0.006	1,352.640	0.106	1,379.743	0.206	1,406.846	0.306	1,433.949	0.406	1,461.051	0.506	1,488.154	0.606	1,515.223	0.706	1,542.268	0.806	1,569.313	0.906	1,596.358
0.007	1,352.911	0.107	1,380.014	0.207	1,407.117	0.307	1,434.220	0.407	1,461.322	0.507	1,488.425	0.607	1,515.494	0.707	1,542.538	0.807	1,569.583	0.907	1,596.628
0.008	1,353.182	0.108	1,380.285	0.208	1,407.388	0.308	1,434.491	0.408	1,461.593	0.508	1,488.696	0.608	1,515.764	0.708	1,542.809	0.808	1,569.854	0.908	1,596.898
0.009	1,353.453	0.109	1,380.556	0.209	1,407.659	0.309	1,434.762	0.409	1,461.865	0.509	1,488.967	0.609	1,516.035	0.709	1,543.079	0.809	1,570.124	0.909	1,597.169
0.010	1,353.724	0.110	1,380.827	0.210	1,407.930	0.310	1,435.033	0.410	1,462.136	0.510	1,489.238	0.610	1,516.305	0.710	1,543.350	0.810	1,570.395	0.910	1,597.439
0.011	1,353.995	0.111	1,381.098	0.211	1,408.201	0.311	1,435.304	0.411	1,462.407	0.511	1,489.509	0.611	1,516.575	0.711	1,543.620	0.811	1,570.665	0.911	1,597.710
0.012	1,354.266	0.112	1,381.369	0.212	1,408.472	0.312	1,435.575	0.412	1,462.678	0.512	1,489.780	0.612	1,516.846	0.712	1,543.891	0.812	1,570.935	0.912	1,597.980
0.013	1,354.537	0.113	1,381.640	0.213	1,408.743	0.313	1,435.846	0.413	1,462.949	0.513	1,490.052	0.613	1,517.116	0.713	1,544.161	0.813	1,571.206	0.913	1,598.251
0.014	1,354.808	0.114	1,381.911	0.214	1,409.014	0.314	1,436.117	0.414	1,463.220	0.514	1,490.323	0.614	1,517.387	0.714	1,544.432	0.814	1,571.476	0.914	1,598.521
0.015	1,355.079	0.115	1,382.182	0.215	1,409.285	0.315	1,436.388	0.415	1,463.491	0.515	1,490.594	0.615	1,517.657	0.715	1,544.702	0.815	1,571.747	0.915	1,598.792
0.016	1,355.350	0.116	1,382.453	0.216	1,409.556	0.316	1,436.659	0.416	1,463.762	0.516	1,490.865	0.616	1,517.928	0.716	1,544.972	0.816	1,572.017	0.916	1,599.062
0.017	1,355.621	0.117	1,382.724	0.217	1,409.827	0.317	1,436.930	0.417	1,464.033	0.517	1,491.136	0.617	1,518.198	0.717	1,545.243	0.817	1,572.288	0.917	1,599.332
0.018	1,355.892	0.118	1,382.995	0.218	1,410.098	0.318	1,437.201	0.418	1,464.304	0.518	1,491.407	0.618	1,518.469	0.718	1,545.513	0.818	1,572.558	0.918	1,599.603
0.019	1,356.163	0.119	1,383.266	0.219	1,410.369	0.319	1,437.472	0.419	1,464.575	0.519	1,491.678	0.619	1,518.739	0.719	1,545.784	0.819	1,572.829	0.919	1,599.873
0.020	1,356.434	0.120	1,383.537	0.220	1,410.640	0.320	1,437.743	0.420	1,464.846	0.520	1,491.949	0.620	1,519.009	0.720	1,546.054	0.820	1,573.099	0.920	1,600.144
0.021	1,356.705	0.121	1,383.808	0.221	1,410.911	0.321	1,438.014	0.421	1,465.117	0.521	1,492.220	0.621	1,519.280	0.721	1,546.325	0.821	1,573.369	0.921	1,600.414
0.022	1,356.976	0.122	1,384.079	0.222	1,411.182	0.322	1,438.285	0.422	1,465.388	0.522	1,492.491	0.622	1,519.550	0.722	1,546.595	0.822	1,573.640	0.922	1,600.685
0.023	1,357.247	0.123	1,384.350	0.223	1,411.453	0.323	1,438.556	0.423	1,465.659	0.523	1,492.762	0.623	1,519.821	0.723	1,546.866	0.823	1,573.910	0.923	1,600.955
0.024	1,357.518	0.124	1,384.621	0.224	1,411.724	0.324	1,438.827	0.424	1,465.930	0.524	1,493.033	0.624	1,520.091	0.724	1,547.136	0.824	1,574.181	0.924	1,601.226
0.025	1,357.790	0.125	1,384.892	0.225	1,411.995	0.325	1,439.098	0.425	1,466.201	0.525	1,493.304	0.625	1,520.362	0.725	1,547.406	0.825	1,574.451	0.925	1,601.496
0.026	1,358.061	0.126	1,385.163	0.226	1,412.266	0.326	1,439.369	0.426	1,466.472	0.526	1,493.575	0.626	1,520.632	0.726	1,547.677	0.826	1,574.722	0.926	1,601.766
0.027	1,358.332	0.127	1,385.434	0.227	1,412.537	0.327	1,439.640	0.427	1,466.743	0.527	1,493.846	0.627	1,520.903	0.727	1,547.947	0.827	1,574.992	0.927	1,602.037
0.028	1,358.603	0.128	1,385.705	0.228	1,412.808	0.328	1,439.911	0.428	1,467.014	0.528	1,494.117	0.628	1,521.173	0.728	1,548.218	0.828	1,575.263	0.928	1,602.307
0.029	1,358.874	0.129	1,385.977	0.229	1,413.079	0.329	1,440.182	0.429	1,467.285	0.529	1,494.388	0.629	1,521.443	0.729	1,548.488	0.829	1,575.533	0.929	1,602.578
0.030	1,359.145	0.130	1,386.248	0.230	1,413.350	0.330	1,440.453	0.430	1,467.556	0.530	1,494.659	0.630	1,521.714	0.730	1,548.759	0.830	1,575.803	0.930	1,602.848
0.031	1,359.416	0.131	1,386.519	0.231	1,413.621	0.331	1,440.724	0.431	1,467.827	0.531	1,494.930	0.631	1,521.984	0.731	1,549.029	0.831	1,576.074	0.931	1,603.119
0.032	1,359.687	0.132	1,386.790	0.232	1,413.892	0.332	1,440.995	0.432	1,468.098	0.532	1,495.201	0.632	1,522.255	0.732	1,549.300	0.832	1,576.344	0.932	1,603.389
0.033	1,359.958	0.133	1,387.061	0.233	1,414.163	0.333	1,441.266	0.433	1,468.369	0.533	1,495.472	0.633	1,522.525	0.733	1,549.570	0.833	1,576.615	0.933	1,603.660
0.034	1,360.229	0.134	1,387.332	0.234	1,414.435	0.334	1,441.537	0.434	1,468.640	0.534	1,495.743	0.634	1,522.796	0.734	1,549.841	0.834	1,576.885	0.934	1,603.930
0.035	1,360.500	0.135	1,387.603	0.235	1,414.706	0.335	1,441.808	0.435	1,468.911	0.535	1,496.014	0.635	1,523.066	0.735	1,550.111	0.835	1,577.156	0.935	1,604.201
0.036	1,360.771	0.136	1,387.874	0.236	1,414.977	0.336	1,442.079	0.436	1,469.182	0.536	1,496.285	0.636	1,523.337	0.736	1,550.381	0.836	1,577.426	0.936	1,604.471
0.037	1,361.042	0.137	1,388.145	0.237	1,415.248	0.337	1,442.350	0.437	1,469.453	0.537	1,496.556	0.637	1,523.607	0.737	1,550.652	0.837	1,577.697	0.937	1,604.741
0.038	1,361.313	0.138	1,388.416	0.238	1,415.519	0.338	1,442.621	0.438	1,469.724	0.538	1,496.826	0.638	1,523.878	0.738	1,550.922	0.838	1,577.967	0.938	1,605.012
0.039	1,361.584	0.139	1,388.687	0.239	1,415.790	0.339	1,442.893	0.439	1,469.995	0.539	1,497.097	0.639	1,524.148	0.739	1,551.193	0.839	1,578.238	0.939	1,605.282
0.040	1,361.855	0.140	1,388.958	0.240	1,416.061	0.340	1,443.164	0.440	1,470.266	0.540	1,497.368	0.640	1,524.418	0.740	1,551.463	0.840	1,578.508	0.940	1,605.553
0.041	1,362.126	0.141	1,389.229	0.241	1,416.332	0.341	1,443.435	0.441	1,470.537	0.541	1,497.639	0.641	1,524.689	0.741	1,551.734	0.841	1,578.778	0.941	1,605.823
0.042	1,362.397	0.142	1,389.500	0.242	1,416.603	0.342	1,443.706	0.442	1,470.808	0.542	1,497.909	0.642	1,524.959	0.742	1,552.004	0.842	1,579.049	0.942	1,606.094
0.043	1,362.668	0.143	1,389.771	0.243	1,416.874	0.343	1,443.977	0.443	1,471.079	0.543	1,498.180	0.643	1,525.230	0.743	1,552.275	0.843	1,579.319	0.943	1,606.364
0.044	1,362.939	0.144	1,390.042	0.244	1,417.145	0.344	1,444.248	0.444	1,471.351	0.544	1,498.451	0.644	1,525.500	0.744	1,552.545	0.844	1,579.590	0.944	1,606.635
0.045	1,363.210	0.145	1,390.313	0.245	1,417.416	0.345	1,444.519	0.445	1,471.622	0.545	1,498.722	0.645	1,525.771	0.745	1,552.815	0.845	1,579.860	0.945	1,606.905
0.046	1,363.481	0.146	1,390.584	0.246	1,417.687	0.346	1,444.790	0.446	1,471.893	0.546	1,498.992	0.646	1,526.041	0.746	1,553.086	0.846	1,580.131	0.946	1,607.175
0.047	1,363.752	0.147	1,390.855	0.247	1,417.958	0.347	1,445.061	0.447	1,472.164	0.547	1,499.263	0.647	1,526.312	0.747	1,553.356	0.847	1,580.401	0.947	1,607.446
0.048	1,364.023	0.148	1,391.126	0.248	1,418.229	0.348	1,445.332	0.448	1,472.435	0.548	1,499.534	0.648	1,526.582	0.748	1,553.627	0.848	1,580.672	0.948	1,607.716
0.049	1,364.294	0.149	1,391.397	0.249	1,418.500	0.349	1,445.603	0.449	1,472.706	0.549	1,499.804	0.649	1,526.852	0.749	1,553.897	0.849	1,580.942	0.949	1,607.987
0.050	1,364.565	0.150	1,391.668	0.250	1,418.771	0.350	1,445.874	0.450	1,472.977	0.550	1,500.075	0.650	1,527.123	0.750	1,554.168	0.850	1,581.212	0.950	1,608.257
0.051	1,364.836	0.151	1,391.939	0.251	1,419.042	0.351	1,446.145	0.451	1,473.248	0.551	1,500.346	0.651	1,527.393	0.751	1,554.438	0.851	1,581.483	0.951	1,608.528
0.052	1,365.107	0.152	1,392.210	0.252	1,419.313	0.352	1,446.416	0.452	1,473.519	0.552	1,500.617	0.652	1,527.664	0.752	1,554.709	0.852	1,581.753	0.952	1,608.798
0.053	1,365.378	0.153	1,392.481	0.253	1,419.584	0.353	1,446.687	0.453	1,473.790	0.553	1,500.887	0.653	1,527.934	0.753	1,554.979	0.853	1,582.024	0.953	1,609.069
0.054	1,365.649	0.154	1,392.752	0.254	1,419.855	0.354	1,446.958	0.454	1,474.061	0.554	1,501.158	0.654	1,528.205	0.754	1,555.249	0.854	1,582.294	0.954	1,609.339
0.055	1,365.920	0.155	1,393.023	0.255	1,420.126	0.355	1,447.229	0.455	1,474.332	0.555	1,501.429	0.655	1,528.475	0.755	1,555.520	0.855	1,582.565	0.955	1,609.609
0.056	1,366.191	0.156	1,393.294	0.256	1,420.397	0.356	1,447.500	0.456	1,474.603	0.556	1,501.700	0.656	1,528.746	0.756	1,555.790	0.856	1,582.835	0.956	1,609.880
0.057	1,366.462	0.157	1,393.565	0.257	1,420.668	0.357	1,447.771	0.457	1,474.874	0.557	1,501.970	0.657	1,529.016	0.757	1,556.061	0.857	1,583.106	0.957	1,610.150
0.058	1,366.733	0.158	1,393.836	0.258	1,420.939	0.358	1,448.042	0.458	1,475.145	0.558	1,502.241	0.658	1,529.286	0.758	1,556.331	0.858	1,583.376	0.958	1,610.421
0.059	1,367.004	0.159	1,394.107	0.259	1,421.210	0.359	1,448.313	0.459	1,475.416	0.559	1,502.512	0.659	1,529.557	0.759	1,556.602	0.859	1,583.646	0.959	1,610.691
0.060	1,367.276	0.160	1,394.378	0.260	1,421.481	0.360	1,448.584	0.460	1,475.687	0.560	1,502.783	0.660	1,529.827	0.760	1,556.872	0.860	1,583.917	0.960	1,610.962
0.061	1,367.547	0.161	1,394.649	0.261	1,421.752	0.361	1,448.855	0.461	1,475.958	0.561	1,503.053	0.661	1,530.098	0.761	1,557.143	0.861	1,584.187	0.961	1,611.232
0.062	1,367.818	0.162	1,394.920	0.262	1,422.023	0.362	1,449.126	0.462	1,476.229	0.562	1,503.323	0.662	1,530.368	0.762	1,557.413	0.862	1,584.458	0.962	1,611.503
0.063	1,368.089	0.163	1,395.191	0.263	1,422.294	0.363	1,449.397	0.463	1,476.500	0.563	1,503.594	0.663	1,530.639	0.763	1,557.683	0.863	1,584.728	0.963	1,611.773
0.064	1,368.360	0.164	1,395.463	0.264	1,422.565	0.364	1,449.668	0.464	1,476.771	0.564	1,503.864	0.664	1,530.909	0.764	1,557.954	0.864	1,584.999	0.964	1,612.043
0.065	1,368.631	0.165	1,395.734	0.265	1,422.836	0.365	1,449.939	0.465	1,477.042	0.565	1,504.135	0.665	1,531.180	0.765	1,558.224	0.865	1,585.269	0.965	1,612.314
0.066	1,368.902	0.166	1,396.005	0.266	1,423.107	0.366	1,450.210	0.466	1,477.313	0.566	1,504.405	0.666	1,531.450	0.766	1,558.495	0.866	1,585.540	0.966	1,612.584
0.067	1,369.173	0.167	1,396.276	0.267	1,423.378	0.367	1,450.481	0.467	1,477.584	0.567	1,504.676	0.667	1,531.721	0.767	1,558.765	0.867	1,585.810	0.967	1,612.855
0.068	1,369.444	0.168	1,396.547	0.268	1,423.649	0.368	1,450.752	0.468	1,477.855	0.568	1,504.946	0.668	1,531.991	0.768	1,559.036	0.868	1,586.081	0.968	1,613.125
0.069	1,369.715	0.169	1,396.818	0.269	1,423.921	0.369	1,451.023	0.469	1,478.126	0.569	1,505.217	0.669	1,532.261	0.769	1,559.306	0.869	1,586.351	0.969	1,613.396
0.070	1,369.986	0.170	1,397.089	0.270	1,424.192	0.370	1,451.294	0.470	1,478.397	0.570	1,505.487	0.670	1,532.532	0.770	1,559.577	0.870	1,586.621	0.970	1,613.666
0.071	1,370.257	0.171	1,397.360	0.271	1,424.463	0.371	1,451.565	0.471	1,478.668	0.571	1,505.758	0.671	1,532.802	0.771	1,559.847	0.871	1,586.892	0.971	1,613.937
0.072	1,370.528	0.172	1,397.631	0.272	1,424.734	0.372	1,451.836	0.472	1,478.939	0.572	1,506.028	0.672	1,533.073	0.772	1,560.118	0.872	1,587.162	0.972	1,614.207
0.073	1,370.799	0.173	1,397.902	0.273	1,425.005	0.373	1,452.107	0.473	1,479.210	0.573	1,506.298	0.673	1,533.343	0.773	1,560.388	0.873	1,587.433	0.973	1,614.478
0.074	1,371.070	0.174	1,398.173	0.274	1,425.276	0.374	1,452.379	0.474	1,479.481	0.574	1,506.569	0.674	1,533.614	0.774	1,560.658	0.874	1,587.703	0.974	1,614.748
0.075	1,371.341	0.175	1,398.444	0.275	1,425.547	0.375	1,452.650	0.475	1,479.752	0.575	1,506.839	0.675	1,533.884	0.775	1,560.929	0.875	1,587.974	0.975	1,615.018
0.076	1,371.612	0.176	1,398.715	0.276	1,425.818	0.376	1,452.921	0.476	1,480.023	0.576	1,507.110	0.676	1,534.155	0.776	1,561.199	0.876	1,588.244	0.976	1,615.289
0.077	1,371.883	0.177	1,398.986	0.277	1,426.089	0.377	1,453.192	0.477	1,480.294	0.577	1,507.380	0.677	1,534.425	0.777	1,561.470	0.877	1,588.515	0.977	1,615.559
0.078	1,372.154	0.178	1,399.257	0.278	1,426.360	0.378	1,453.463	0.478	1,480.565	0.578	1,507.651	0.678	1,534.695	0.778	1,561.740	0.878	1,588.785	0.978	1,615.830
0.079	1,372.425	0.179	1,399.528	0.279	1,426.631	0.379	1,453.734	0.479	1,480.837	0.579	1,507.921	0.679	1,534.966	0.779	1,562.011	0.879	1,589.055	0.979	1,616.100
0.080	1,372.696	0.180	1,399.799	0.280	1,426.902	0.380	1,454.005	0.480	1,481.108	0.580	1,508.192	0.680	1,535.236	0.780	1,562.281	0.880	1,589.326	0.980	1,616.371
0.081	1,372.967	0.181	1,400.070	0.281	1,427.173	0.381	1,454.276	0.481	1,481.379	0.581	1,508.462	0.681	1,535.507	0.781	1,562.552	0.881	1,589.596	0.981	1,616.641
0.082	1,373.238	0.182	1,400.341	0.282	1,427.444	0.382	1,454.547	0.482	1,481.650	0.582	1,508.732	0.682	1,535.777	0.782	1,562.822	0.882	1,589.867	0.982	1,616.912
0.083	1,373.509	0.183	1,400.612	0.283	1,427.715	0.383	1,454.818	0.483	1,481.921	0.583	1,509.003	0.683	1,536.048	0.783	1,563.092	0.883	1,590.137	0.983	1,617.182
0.084	1,373.780	0.184	1,400.883	0.284	1,427.986	0.384	1,455.089	0.484	1,482.192	0.584	1,509.273	0.684	1,536.318	0.784	1,563.363	0.884	1,590.408	0.984	1,617.452
0.085	1,374.051	0.185	1,401.154	0.285	1,428.257	0.385	1,455.360	0.485	1,482.463	0.585	1,509.544	0.685	1,536.589	0.785	1,563.633	0.885	1,590.678	0.985	1,617.723
0.086	1,374.322	0.186	1,401.425	0.286	1,428.528	0.386	1,455.631	0.486	1,482.734	0.586	1,509.814	0.686	1,536.859	0.786	1,563.904	0.886	1,590.949	0.986	1,617.993
0.087	1,374.593	0.187	1,401.696	0.287	1,428.799	0.387	1,455.902	0.487	1,483.005	0.587	1,510.085	0.687	1,537.129	0.787	1,564.174	0.887	1,591.219	0.987	1,618.264
0.088	1,374.864	0.188	1,401.967	0.288	1,429.070	0.388	1,456.173	0.488	1,483.276	0.588	1,510.355	0.688	1,537.400	0.788	1,564.445	0.888	1,591.489	0.988	1,618.534
0.089	1,375.135	0.189	1,402.238	0.289	1,429.341	0.389	1,456.444	0.489	1,483.547	0.589	1,510.626	0.689	1,537.670	0.789	1,564.715	0.889	1,591.760	0.989	1,618.805
0.090	1,375.406	0.190	1,402.509	0.290	1,429.612	0.390	1,456.715	0.490	1,483.818	0.590	1,510.896	0.690	1,537.941	0.790	1,564.986	0.890	1,592.030	0.990	1,619.075
0.091	1,375.677	0.191	1,402.780	0.291	1,429.883	0.391	1,456.986	0.491	1,484.089	0.591	1,511.166	0.691	1,538.211	0.791	1,565.256	0.891	1,592.301	0.991	1,619.346
0.092	1,375.948	0.192	1,403.051	0.292	1,430.154	0.392	1,457.257	0.492	1,484.360	0.592	1,511.437	0.692	1,538.482	0.792	1,565.526	0.892	1,592.571	0.992	1,619.616
0.093	1,376.219	0.193	1,403.322	0.293	1,430.425	0.393	1,457.528	0.493	1,484.631	0.593	1,511.707	0.693	1,538.752	0.793	1,565.797	0.893	1,592.842	0.993	1,619.886
0.094	1,376.490	0.194	1,403.593	0.294	1,430.696	0.394	1,457.799	0.494	1,484.902	0.594	1,511.978	0.694	1,539.023	0.794	1,566.067	0.894	1,593.112	0.994	1,620.157
0.095	1,376.762	0.195	1,403.864	0.295	1,430.967	0.395	1,458.070	0.495	1,485.173	0.595	1,512.248	0.695	1,539.293	0.795	1,566.338	0.895	1,593.383	0.995	1,620.427
0.096	1,377.033	0.196	1,404.135	0.296	1,431.238	0.396	1,458.341	0.496	1,485.444	0.596	1,512.519	0.696	1,539.563	0.796	1,566.608	0.896	1,593.653	0.996	1,620.698
0.097	1,377.304	0.197	1,404.406	0.297	1,431.509	0.397	1,458.612	0.497	1,485.715	0.597	1,512.789	0.697	1,539.834	0.797	1,566.879	0.897	1,593.923	0.997	1,620.968
0.098	1,377.575	0.198	1,404.677	0.298	1,431.780	0.398	1,458.883	0.498	1,485.986	0.598	1,513.060	0.698	1,540.104	0.798	1,567.149	0.898	1,594.194	0.998	1,621.239
0.099	1,377.846	0.199	1,404.949	0.299	1,432.051	0.399	1,459.154	0.499	1,486.257	0.599	1,513.330	0.699	1,540.375	0.799	1,567.420	0.899	1,594.464	0.999	1,621.509

DATE STRAPPED: 09/19/17 BY: RJ
DATE COMPUTED: 09/26/17 BY: WLH
DATE ISSUED: 09/26/17

AMSPEC

Calibration@AmSpecGroup.com

Meliadine
Portal #1
Item 20 - Final - Datasheet

Tank No. 3
INNAGE TABLE

CAPACITIES GIVEN IN CUBIC METERS — **GAUGE HEIGHT: 11.443 M**

mm	6 M	mm	6 M	mm	6 M	mm	6 M	mm	6 M	mm	6 M	mm	6 M	mm	6 M	mm	6 M	mm	6 M
0.000	1,621.780	0.100	1,648.824	0.200	1,675.869	0.300	1,702.914	0.400	1,729.959	0.500	1,757.004	0.600	1,784.048	0.700	1,811.093	0.800	1,838.138	0.900	1,865.183
0.001	1,622.050	0.101	1,649.095	0.201	1,676.140	0.301	1,703.184	0.401	1,730.229	0.501	1,757.274	0.601	1,784.319	0.701	1,811.364	0.801	1,838.408	0.901	1,865.453
0.002	1,622.321	0.102	1,649.365	0.202	1,676.410	0.302	1,703.455	0.402	1,730.500	0.502	1,757.544	0.602	1,784.589	0.702	1,811.634	0.802	1,838.679	0.902	1,865.724
0.003	1,622.591	0.103	1,649.636	0.203	1,676.681	0.303	1,703.725	0.403	1,730.770	0.503	1,757.815	0.603	1,784.860	0.703	1,811.904	0.803	1,838.949	0.903	1,865.994
0.004	1,622.861	0.104	1,649.906	0.204	1,676.951	0.304	1,703.996	0.404	1,731.041	0.504	1,758.085	0.604	1,785.130	0.704	1,812.175	0.804	1,839.220	0.904	1,866.264
0.005	1,623.132	0.105	1,650.177	0.205	1,677.221	0.305	1,704.266	0.405	1,731.311	0.505	1,758.356	0.605	1,785.401	0.705	1,812.445	0.805	1,839.490	0.905	1,866.535
0.006	1,623.402	0.106	1,650.447	0.206	1,677.492	0.306	1,704.537	0.406	1,731.581	0.506	1,758.626	0.606	1,785.671	0.706	1,812.716	0.806	1,839.761	0.906	1,866.805
0.007	1,623.673	0.107	1,650.718	0.207	1,677.762	0.307	1,704.807	0.407	1,731.852	0.507	1,758.897	0.607	1,785.941	0.707	1,812.986	0.807	1,840.031	0.907	1,867.076
0.008	1,623.943	0.108	1,650.988	0.208	1,678.033	0.308	1,705.078	0.408	1,732.122	0.508	1,759.167	0.608	1,786.212	0.708	1,813.257	0.808	1,840.301	0.908	1,867.346
0.009	1,624.214	0.109	1,651.258	0.209	1,678.303	0.309	1,705.348	0.409	1,732.393	0.509	1,759.438	0.609	1,786.482	0.709	1,813.527	0.809	1,840.572	0.909	1,867.617
0.010	1,624.484	0.110	1,651.529	0.210	1,678.574	0.310	1,705.618	0.410	1,732.663	0.510	1,759.708	0.610	1,786.753	0.710	1,813.798	0.810	1,840.842	0.910	1,867.887
0.011	1,624.755	0.111	1,651.799	0.211	1,678.844	0.311	1,705.889	0.411	1,732.934	0.511	1,759.978	0.611	1,787.023	0.711	1,814.068	0.811	1,841.113	0.911	1,868.158
0.012	1,625.025	0.112	1,652.070	0.212	1,679.115	0.312	1,706.159	0.412	1,733.204	0.512	1,760.249	0.612	1,787.294	0.712	1,814.338	0.812	1,841.383	0.912	1,868.428
0.013	1,625.295	0.113	1,652.340	0.213	1,679.385	0.313	1,706.430	0.413	1,733.475	0.513	1,760.519	0.613	1,787.564	0.713	1,814.609	0.813	1,841.654	0.913	1,868.698
0.014	1,625.566	0.114	1,652.611	0.214	1,679.655	0.314	1,706.700	0.414	1,733.745	0.514	1,760.790	0.614	1,787.835	0.714	1,814.879	0.814	1,841.924	0.914	1,868.969
0.015	1,625.836	0.115	1,652.881	0.215	1,679.926	0.315	1,706.971	0.415	1,734.015	0.515	1,761.060	0.615	1,788.105	0.715	1,815.150	0.815	1,842.195	0.915	1,869.239
0.016	1,626.107	0.116	1,653.152	0.216	1,680.196	0.316	1,707.241	0.416	1,734.286	0.516	1,761.331	0.616	1,788.375	0.716	1,815.420	0.816	1,842.465	0.916	1,869.510
0.017	1,626.377	0.117	1,653.422	0.217	1,680.467	0.317	1,707.512	0.417	1,734.556	0.517	1,761.601	0.617	1,788.646	0.717	1,815.691	0.817	1,842.735	0.917	1,869.780
0.018	1,626.648	0.118	1,653.692	0.218	1,680.737	0.318	1,707.782	0.418	1,734.827	0.518	1,761.872	0.618	1,788.916	0.718	1,815.961	0.818	1,843.006	0.918	1,870.051
0.019	1,626.918	0.119	1,653.963	0.219	1,681.008	0.319	1,708.052	0.419	1,735.097	0.519	1,762.142	0.619	1,789.187	0.719	1,816.232	0.819	1,843.276	0.919	1,870.321
0.020	1,627.189	0.120	1,654.233	0.220	1,681.278	0.320	1,708.323	0.420	1,735.368	0.520	1,762.412	0.620	1,789.457	0.720	1,816.502	0.820	1,843.547	0.920	1,870.592
0.021	1,627.459	0.121	1,654.504	0.221	1,681.549	0.321	1,708.593	0.421	1,735.638	0.521	1,762.683	0.621	1,789.728	0.721	1,816.772	0.821	1,843.817	0.921	1,870.862
0.022	1,627.729	0.122	1,654.774	0.222	1,681.819	0.322	1,708.864	0.422	1,735.909	0.522	1,762.953	0.622	1,789.998	0.722	1,817.043	0.822	1,844.088	0.922	1,871.132
0.023	1,628.000	0.123	1,655.045	0.223	1,682.089	0.323	1,709.134	0.423	1,736.179	0.523	1,763.224	0.623	1,790.269	0.723	1,817.313	0.823	1,844.358	0.923	1,871.403
0.024	1,628.270	0.124	1,655.315	0.224	1,682.360	0.324	1,709.405	0.424	1,736.449	0.524	1,763.494	0.624	1,790.539	0.724	1,817.584	0.824	1,844.629	0.924	1,871.673
0.025	1,628.541	0.125	1,655.586	0.225	1,682.630	0.325	1,709.675	0.425	1,736.720	0.525	1,763.765	0.625	1,790.809	0.725	1,817.854	0.825	1,844.899	0.925	1,871.944
0.026	1,628.811	0.126	1,655.856	0.226	1,682.901	0.326	1,709.946	0.426	1,736.990	0.526	1,764.035	0.626	1,791.080	0.726	1,818.125	0.826	1,845.169	0.926	1,872.214
0.027	1,629.082	0.127	1,656.126	0.227	1,683.171	0.327	1,710.216	0.427	1,737.261	0.527	1,764.306	0.627	1,791.350	0.727	1,818.395	0.827	1,845.440	0.927	1,872.485
0.028	1,629.352	0.128	1,656.397	0.228	1,683.442	0.328	1,710.486	0.428	1,737.531	0.528	1,764.576	0.628	1,791.621	0.728	1,818.666	0.828	1,845.710	0.928	1,872.755
0.029	1,629.623	0.129	1,656.667	0.229	1,683.712	0.329	1,710.757	0.429	1,737.802	0.529	1,764.846	0.629	1,791.891	0.729	1,818.936	0.829	1,845.981	0.929	1,873.026
0.030	1,629.893	0.130	1,656.938	0.230	1,683.983	0.330	1,711.027	0.430	1,738.072	0.530	1,765.117	0.630	1,792.162	0.730	1,819.206	0.830	1,846.251	0.930	1,873.296
0.031	1,630.163	0.131	1,657.208	0.231	1,684.253	0.331	1,711.298	0.431	1,738.343	0.531	1,765.387	0.631	1,792.432	0.731	1,819.477	0.831	1,846.522	0.931	1,873.566
0.032	1,630.434	0.132	1,657.479	0.232	1,684.523	0.332	1,711.568	0.432	1,738.613	0.532	1,765.658	0.632	1,792.703	0.732	1,819.747	0.832	1,846.792	0.932	1,873.837
0.033	1,630.704	0.133	1,657.749	0.233	1,684.794	0.333	1,711.839	0.433	1,738.884	0.533	1,765.928	0.633	1,792.973	0.733	1,820.018	0.833	1,847.063	0.933	1,874.107
0.034	1,630.975	0.134	1,658.020	0.234	1,685.064	0.334	1,712.109	0.434	1,739.154	0.534	1,766.199	0.634	1,793.244	0.734	1,820.288	0.834	1,847.333	0.934	1,874.378
0.035	1,631.245	0.135	1,658.290	0.235	1,685.335	0.335	1,712.380	0.435	1,739.424	0.535	1,766.469	0.635	1,793.514	0.735	1,820.559	0.835	1,847.604	0.935	1,874.648
0.036	1,631.516	0.136	1,658.561	0.236	1,685.605	0.336	1,712.650	0.436	1,739.695	0.536	1,766.740	0.636	1,793.784	0.736	1,820.829	0.836	1,847.874	0.936	1,874.919
0.037	1,631.786	0.137	1,658.831	0.237	1,685.876	0.337	1,712.921	0.437	1,739.965	0.537	1,767.010	0.637	1,794.055	0.737	1,821.100	0.837	1,848.144	0.937	1,875.189
0.038	1,632.057	0.138	1,659.101	0.238	1,686.146	0.338	1,713.191	0.438	1,740.236	0.538	1,767.281	0.638	1,794.325	0.738	1,821.370	0.838	1,848.415	0.938	1,875.460
0.039	1,632.327	0.139	1,659.372	0.239	1,686.417	0.339	1,713.461	0.439	1,740.506	0.539	1,767.551	0.639	1,794.596	0.739	1,821.641	0.839	1,848.685	0.939	1,875.730
0.040	1,632.598	0.140	1,659.642	0.240	1,686.687	0.340	1,713.732	0.440	1,740.777	0.540	1,767.821	0.640	1,794.866	0.740	1,821.911	0.840	1,848.956	0.940	1,876.001
0.041	1,632.868	0.141	1,659.913	0.241	1,686.958	0.341	1,714.002	0.441	1,741.047	0.541	1,768.092	0.641	1,795.137	0.741	1,822.181	0.841	1,849.226	0.941	1,876.271
0.042	1,633.138	0.142	1,660.183	0.242	1,687.228	0.342	1,714.273	0.442	1,741.318	0.542	1,768.362	0.642	1,795.407	0.742	1,822.452	0.842	1,849.497	0.942	1,876.541
0.043	1,633.409	0.143	1,660.454	0.243	1,687.498	0.343	1,714.543	0.443	1,741.588	0.543	1,768.633	0.643	1,795.678	0.743	1,822.722	0.843	1,849.767	0.943	1,876.812
0.044	1,633.679	0.144	1,660.724	0.244	1,687.769	0.344	1,714.814	0.444	1,741.858	0.544	1,768.903	0.644	1,795.948	0.744	1,822.993	0.844	1,850.038	0.944	1,877.082
0.045	1,633.950	0.145	1,660.995	0.245	1,688.039	0.345	1,715.084	0.445	1,742.129	0.545	1,769.174	0.645	1,796.218	0.745	1,823.263	0.845	1,850.308	0.945	1,877.353
0.046	1,634.220	0.146	1,661.265	0.246	1,688.310	0.346	1,715.355	0.446	1,742.399	0.546	1,769.444	0.646	1,796.489	0.746	1,823.534	0.846	1,850.578	0.946	1,877.623
0.047	1,634.491	0.147	1,661.535	0.247	1,688.580	0.347	1,715.625	0.447	1,742.670	0.547	1,769.715	0.647	1,796.759	0.747	1,823.804	0.847	1,850.849	0.947	1,877.894
0.048	1,634.761	0.148	1,661.806	0.248	1,688.851	0.348	1,715.895	0.448	1,742.940	0.548	1,769.985	0.648	1,797.030	0.748	1,824.075	0.848	1,851.119	0.948	1,878.164
0.049	1,635.032	0.149	1,662.076	0.249	1,689.121	0.349	1,716.166	0.449	1,743.211	0.549	1,770.255	0.649	1,797.300	0.749	1,824.345	0.849	1,851.390	0.949	1,878.435
0.050	1,635.302	0.150	1,662.347	0.250	1,689.392	0.350	1,716.436	0.450	1,743.481	0.550	1,770.526	0.650	1,797.571	0.750	1,824.615	0.850	1,851.660	0.950	1,878.705
0.051	1,635.572	0.151	1,662.617	0.251	1,689.662	0.351	1,716.707	0.451	1,743.752	0.551	1,770.796	0.651	1,797.841	0.751	1,824.886	0.851	1,851.931	0.951	1,878.975
0.052	1,635.843	0.152	1,662.888	0.252	1,689.932	0.352	1,716.977	0.452	1,744.022	0.552	1,771.067	0.652	1,798.112	0.752	1,825.156	0.852	1,852.201	0.952	1,879.246
0.053	1,636.113	0.153	1,663.158	0.253	1,690.203	0.353	1,717.248	0.453	1,744.292	0.553	1,771.337	0.653	1,798.382	0.753	1,825.427	0.853	1,852.472	0.953	1,879.516
0.054	1,636.384	0.154	1,663.429	0.254	1,690.473	0.354	1,717.518	0.454	1,744.563	0.554	1,771.608	0.654	1,798.652	0.754	1,825.697	0.854	1,852.742	0.954	1,879.787
0.055	1,636.654	0.155	1,663.699	0.255	1,690.744	0.355	1,717.789	0.455	1,744.833	0.555	1,771.878	0.655	1,798.923	0.755	1,825.968	0.855	1,853.012	0.955	1,880.057
0.056	1,636.925	0.156	1,663.969	0.256	1,691.014	0.356	1,718.059	0.456	1,745.104	0.556	1,772.149	0.656	1,799.193	0.756	1,826.238	0.856	1,853.283	0.956	1,880.328
0.057	1,637.195	0.157	1,664.240	0.257	1,691.285	0.357	1,718.329	0.457	1,745.374	0.557	1,772.419	0.657	1,799.464	0.757	1,826.509	0.857	1,853.553	0.957	1,880.598
0.058	1,637.466	0.158	1,664.510	0.258	1,691.555	0.358	1,718.600	0.458	1,745.645	0.558	1,772.689	0.658	1,799.734	0.758	1,826.779	0.858	1,853.824	0.958	1,880.869
0.059	1,637.736	0.159	1,664.781	0.259	1,691.826	0.359	1,718.870	0.459	1,745.915	0.559	1,772.960	0.659	1,800.005	0.759	1,827.049	0.859	1,854.094	0.959	1,881.139
0.060	1,638.006	0.160	1,665.051	0.260	1,692.096	0.360	1,719.141	0.460	1,746.186	0.560	1,773.230	0.660	1,800.275	0.760	1,827.320	0.860	1,854.365	0.960	1,881.409
0.061	1,638.277	0.161	1,665.322	0.261	1,692.366	0.361	1,719.411	0.461	1,746.456	0.561	1,773.501	0.661	1,800.546	0.761	1,827.590	0.861	1,854.635	0.961	1,881.680
0.062	1,638.547	0.162	1,665.592	0.262	1,692.637	0.362	1,719.682	0.462	1,746.726	0.562	1,773.771	0.662	1,800.816	0.762	1,827.861	0.862	1,854.906	0.962	1,881.950
0.063	1,638.818	0.163	1,665.863	0.263	1,692.907	0.363	1,719.952	0.463	1,746.997	0.563	1,774.042	0.663	1,801.086	0.763	1,828.131	0.863	1,855.176	0.963	1,882.221
0.064	1,639.088	0.164	1,666.133	0.264	1,693.178	0.364	1,720.223	0.464	1,747.267	0.564	1,774.312	0.664	1,801.357	0.764	1,828.402	0.864	1,855.446	0.964	1,882.491
0.065	1,639.359	0.165	1,666.403	0.265	1,693.448	0.365	1,720.493	0.465	1,747.538	0.565	1,774.583	0.665	1,801.627	0.765	1,828.672	0.865	1,855.717	0.965	1,882.762
0.066	1,639.629	0.166	1,666.674	0.266	1,693.719	0.366	1,720.764	0.466	1,747.808	0.566	1,774.853	0.666	1,801.898	0.766	1,828.943	0.866	1,855.987	0.966	1,883.032
0.067	1,639.900	0.167	1,666.944	0.267	1,693.989	0.367	1,721.034	0.467	1,748.079	0.567	1,775.124	0.667	1,802.168	0.767	1,829.213	0.867	1,856.258	0.967	1,883.303
0.068	1,640.170	0.168	1,667.215	0.268	1,694.260	0.368	1,721.304	0.468	1,748.349	0.568	1,775.394	0.668	1,802.439	0.768	1,829.484	0.868	1,856.528	0.968	1,883.573
0.069	1,640.441	0.169	1,667.485	0.269	1,694.530	0.369	1,721.575	0.469	1,748.620	0.569	1,775.664	0.669	1,802.709	0.769	1,829.754	0.869	1,856.799	0.969	1,883.844
0.070	1,640.711	0.170	1,667.756	0.270	1,694.801	0.370	1,721.845	0.470	1,748.890	0.570	1,775.935	0.670	1,802.980	0.770	1,830.024	0.870	1,857.069	0.970	1,884.114
0.071	1,640.981	0.171	1,668.026	0.271	1,695.071	0.371	1,722.116	0.471	1,749.161	0.571	1,776.205	0.671	1,803.250	0.771	1,830.295	0.871	1,857.340	0.971	1,884.384
0.072	1,641.252	0.172	1,668.297	0.272	1,695.341	0.372	1,722.386	0.472	1,749.431	0.572	1,776.476	0.672	1,803.521	0.772	1,830.565	0.872	1,857.610	0.972	1,884.655
0.073	1,641.522	0.173	1,668.567	0.273	1,695.612	0.373	1,722.657	0.473	1,749.701	0.573	1,776.746	0.673	1,803.791	0.773	1,830.836	0.873	1,857.881	0.973	1,884.925
0.074	1,641.793	0.174	1,668.838	0.274	1,695.882	0.374	1,722.927	0.474	1,749.972	0.574	1,777.017	0.674	1,804.061	0.774	1,831.106	0.874	1,858.151	0.974	1,885.196
0.075	1,642.063	0.175	1,669.108	0.275	1,696.153	0.375	1,723.198	0.475	1,750.242	0.575	1,777.287	0.675	1,804.332	0.775	1,831.377	0.875	1,858.421	0.975	1,885.466
0.076	1,642.334	0.176	1,669.378	0.276	1,696.423	0.376	1,723.468	0.476	1,750.513	0.576	1,777.558	0.676	1,804.602	0.776	1,831.647	0.876	1,858.692	0.976	1,885.737
0.077	1,642.604	0.177	1,669.649	0.277	1,696.694	0.377	1,723.738	0.477	1,750.783	0.577	1,777.828	0.677	1,804.873	0.777	1,831.918	0.877	1,858.962	0.977	1,886.007
0.078	1,642.875	0.178	1,669.919	0.278	1,696.964	0.378	1,724.009	0.478	1,751.054	0.578	1,778.098	0.678	1,805.143	0.778	1,832.188	0.878	1,859.233	0.978	1,886.278
0.079	1,643.145	0.179	1,670.190	0.279	1,697.235	0.379	1,724.279	0.479	1,751.324	0.579	1,778.369	0.679	1,805.414	0.779	1,832.458	0.879	1,859.503	0.979	1,886.548
0.080	1,643.415	0.180	1,670.460	0.280	1,697.505	0.380	1,724.550	0.480	1,751.595	0.580	1,778.639	0.680	1,805.684	0.780	1,832.729	0.880	1,859.774	0.980	1,886.818
0.081	1,643.686	0.181	1,670.731	0.281	1,697.775	0.381	1,724.820	0.481	1,751.865	0.581	1,778.910	0.681	1,805.955	0.781	1,832.999	0.881	1,860.044	0.981	1,887.089
0.082	1,643.956	0.182	1,671.001	0.282	1,698.046	0.382	1,725.091	0.482	1,752.135	0.582	1,779.180	0.682	1,806.225	0.782	1,833.270	0.882	1,860.315	0.982	1,887.359
0.083	1,644.227	0.183	1,671.272	0.283	1,698.316	0.383	1,725.361	0.483	1,752.406	0.583	1,779.451	0.683	1,806.495	0.783	1,833.540	0.883	1,860.585	0.983	1,887.630
0.084	1,644.497	0.184	1,671.542	0.284	1,698.587	0.384	1,725.632	0.484	1,752.676	0.584	1,779.721	0.684	1,806.766	0.784	1,833.811	0.884	1,860.855	0.984	1,887.900
0.085	1,644.768	0.185	1,671.812	0.285	1,698.857	0.385	1,725.902	0.485	1,752.947	0.585	1,779.992	0.685	1,807.036	0.785	1,834.081	0.885	1,861.126	0.985	1,888.171
0.086	1,645.038	0.186	1,672.083	0.286	1,699.128	0.386	1,726.172	0.486	1,753.217	0.586	1,780.262	0.686	1,807.307	0.786	1,834.352	0.886	1,861.396	0.986	1,888.441
0.087	1,645.309	0.187	1,672.353	0.287	1,699.398	0.387	1,726.443	0.487	1,753.488	0.587	1,780.532	0.687	1,807.577	0.787	1,834.622	0.887	1,861.667	0.987	1,888.712
0.088	1,645.579	0.188	1,672.624	0.288	1,699.669	0.388	1,726.713	0.488	1,753.758	0.588	1,780.803	0.688	1,807.848	0.788	1,834.892	0.888	1,861.937	0.988	1,888.982
0.089	1,645.849	0.189	1,672.894	0.289	1,699.939	0.389	1,726.984	0.489	1,754.029	0.589	1,781.073	0.689	1,808.118	0.789	1,835.163	0.889	1,862.208	0.989	1,889.252
0.090	1,646.120	0.190	1,673.165	0.290	1,700.209	0.390	1,727.254	0.490	1,754.299	0.590	1,781.344	0.690	1,808.389	0.790	1,835.433	0.890	1,862.478	0.990	1,889.523
0.091	1,646.390	0.191	1,673.435	0.291	1,700.480	0.391	1,727.525	0.491	1,754.569	0.591	1,781.614	0.691	1,808.659	0.791	1,835.704	0.891	1,862.749	0.991	1,889.793
0.092	1,646.661	0.192	1,673.706	0.292	1,700.750	0.392	1,727.795	0.492	1,754.840	0.592	1,781.885	0.692	1,808.929	0.792	1,835.974	0.892	1,863.019	0.992	1,890.064
0.093	1,646.931	0.193	1,673.976	0.293	1,701.021	0.393	1,728.066	0.493	1,755.110	0.593	1,782.155	0.693	1,809.200	0.793	1,836.245	0.893	1,863.289	0.993	1,890.334
0.094	1,647.202	0.194	1,674.246	0.294	1,701.291	0.394	1,728.336	0.494	1,755.381	0.594	1,782.426	0.694	1,809.470	0.794	1,836.515	0.894	1,863.560	0.994	1,890.605
0.095	1,647.472	0.195	1,674.517	0.295	1,701.562	0.395	1,728.606	0.495	1,755.651	0.595	1,782.696	0.695	1,809.741	0.795	1,836.786	0.895	1,863.830	0.995	1,890.875
0.096	1,647.743	0.196	1,674.787	0.296	1,701.832	0.396	1,728.877	0.496	1,755.922	0.596	1,782.966	0.696	1,810.011	0.796	1,837.056	0.896	1,864.101	0.996	1,891.146
0.097	1,648.013	0.197	1,675.058	0.297	1,702.103	0.397	1,729.147	0.497	1,756.192	0.597	1,783.237	0.697	1,810.282	0.797	1,837.326	0.897	1,864.371	0.997	1,891.416
0.098	1,648.283	0.198	1,675.328	0.298	1,702.373	0.398	1,729.418	0.498	1,756.463	0.598	1,783.507	0.698	1,810.552	0.798	1,837.597	0.898	1,864.642	0.998	1,891.687
0.099	1,648.554	0.199	1,675.599	0.299	1,702.643	0.399	1,729.688	0.499	1,756.733	0.599	1,783.778	0.699	1,810.823	0.799	1,837.867	0.899	1,864.912	0.999	1,891.957

DATE STRAPPED: 09/19/17 BY: RJ
DATE COMPUTED: 09/26/17 BY: WLH
DATE ISSUED: 09/26/17

AMSPEC

Meliadine
Portal #1
Item 20 - Final - Datasheet

Tank No. 3
INNAGE TABLE

Calibration@AmSpecGroup.com

CAPACITIES GIVEN IN CUBIC METERS — **GAUGE HEIGHT: 11.443 M**

mm	7 M	mm	7 M	mm	7 M	mm	7 M	mm	7 M	mm	7 M	mm	7 M	mm	7 M	mm	7 M	mm	7 M
0.000	1,892.227	0.100	1,919.272	0.200	1,946.317	0.300	1,973.362	0.400	2,000.407	0.500	2,027.451	0.600	2,054.496	0.700	2,081.541	0.800	2,108.586	0.900	2,135.630
0.001	1,892.498	0.101	1,919.543	0.201	1,946.587	0.301	1,973.632	0.401	2,000.677	0.501	2,027.722	0.601	2,054.767	0.701	2,081.811	0.801	2,108.856	0.901	2,135.901
0.002	1,892.768	0.102	1,919.813	0.202	1,946.858	0.302	1,973.903	0.402	2,000.947	0.502	2,027.992	0.602	2,055.037	0.702	2,082.082	0.802	2,109.127	0.902	2,136.171
0.003	1,893.039	0.103	1,920.084	0.203	1,947.128	0.303	1,974.173	0.403	2,001.218	0.503	2,028.263	0.603	2,055.307	0.703	2,082.352	0.803	2,109.397	0.903	2,136.442
0.004	1,893.309	0.104	1,920.354	0.204	1,947.399	0.304	1,974.444	0.404	2,001.488	0.504	2,028.533	0.604	2,055.578	0.704	2,082.623	0.804	2,109.667	0.904	2,136.712
0.005	1,893.580	0.105	1,920.624	0.205	1,947.669	0.305	1,974.714	0.405	2,001.759	0.505	2,028.804	0.605	2,055.848	0.705	2,082.893	0.805	2,109.938	0.905	2,136.983
0.006	1,893.850	0.106	1,920.895	0.206	1,947.940	0.306	1,974.984	0.406	2,002.029	0.506	2,029.074	0.606	2,056.119	0.706	2,083.164	0.806	2,110.208	0.906	2,137.253
0.007	1,894.121	0.107	1,921.165	0.207	1,948.210	0.307	1,975.255	0.407	2,002.300	0.507	2,029.344	0.607	2,056.389	0.707	2,083.434	0.807	2,110.479	0.907	2,137.524
0.008	1,894.391	0.108	1,921.436	0.208	1,948.481	0.308	1,975.525	0.408	2,002.570	0.508	2,029.615	0.608	2,056.660	0.708	2,083.704	0.808	2,110.749	0.908	2,137.794
0.009	1,894.661	0.109	1,921.706	0.209	1,948.751	0.309	1,975.796	0.409	2,002.841	0.509	2,029.885	0.609	2,056.930	0.709	2,083.975	0.809	2,111.020	0.909	2,138.064
0.010	1,894.932	0.110	1,921.977	0.210	1,949.021	0.310	1,976.066	0.410	2,003.111	0.510	2,030.156	0.610	2,057.201	0.710	2,084.245	0.810	2,111.290	0.910	2,138.335
0.011	1,895.202	0.111	1,922.247	0.211	1,949.292	0.311	1,976.337	0.411	2,003.381	0.511	2,030.426	0.611	2,057.471	0.711	2,084.516	0.811	2,111.561	0.911	2,138.605
0.012	1,895.473	0.112	1,922.518	0.212	1,949.562	0.312	1,976.607	0.412	2,003.652	0.512	2,030.697	0.612	2,057.741	0.712	2,084.786	0.812	2,111.831	0.912	2,138.876
0.013	1,895.743	0.113	1,922.788	0.213	1,949.833	0.313	1,976.878	0.413	2,003.922	0.513	2,030.967	0.613	2,058.012	0.713	2,085.057	0.813	2,112.101	0.913	2,139.146
0.014	1,896.014	0.114	1,923.058	0.214	1,950.103	0.314	1,977.148	0.414	2,004.193	0.514	2,031.238	0.614	2,058.282	0.714	2,085.327	0.814	2,112.372	0.914	2,139.417
0.015	1,896.284	0.115	1,923.329	0.215	1,950.374	0.315	1,977.418	0.415	2,004.463	0.515	2,031.508	0.615	2,058.553	0.715	2,085.598	0.815	2,112.642	0.915	2,139.687
0.016	1,896.555	0.116	1,923.599	0.216	1,950.644	0.316	1,977.689	0.416	2,004.734	0.516	2,031.778	0.616	2,058.823	0.716	2,085.868	0.816	2,112.913	0.916	2,139.958
0.017	1,896.825	0.117	1,923.870	0.217	1,950.915	0.317	1,977.959	0.417	2,005.004	0.517	2,032.049	0.617	2,059.094	0.717	2,086.138	0.817	2,113.183	0.917	2,140.228
0.018	1,897.095	0.118	1,924.140	0.218	1,951.185	0.318	1,978.230	0.418	2,005.275	0.518	2,032.319	0.618	2,059.364	0.718	2,086.409	0.818	2,113.454	0.918	2,140.498
0.019	1,897.366	0.119	1,924.411	0.219	1,951.455	0.319	1,978.500	0.419	2,005.545	0.519	2,032.590	0.619	2,059.635	0.719	2,086.679	0.819	2,113.724	0.919	2,140.769
0.020	1,897.636	0.120	1,924.681	0.220	1,951.726	0.320	1,978.771	0.420	2,005.815	0.520	2,032.860	0.620	2,059.905	0.720	2,086.950	0.820	2,113.995	0.920	2,141.039
0.021	1,897.907	0.121	1,924.952	0.221	1,951.996	0.321	1,979.041	0.421	2,006.086	0.521	2,033.131	0.621	2,060.175	0.721	2,087.220	0.821	2,114.265	0.921	2,141.310
0.022	1,898.177	0.122	1,925.222	0.222	1,952.267	0.322	1,979.312	0.422	2,006.356	0.522	2,033.401	0.622	2,060.446	0.722	2,087.491	0.822	2,114.535	0.922	2,141.580
0.023	1,898.448	0.123	1,925.492	0.223	1,952.537	0.323	1,979.582	0.423	2,006.627	0.523	2,033.672	0.623	2,060.716	0.723	2,087.761	0.823	2,114.806	0.923	2,141.851
0.024	1,898.718	0.124	1,925.763	0.224	1,952.808	0.324	1,979.852	0.424	2,006.897	0.524	2,033.942	0.624	2,060.987	0.724	2,088.032	0.824	2,115.076	0.924	2,142.121
0.025	1,898.989	0.125	1,926.033	0.225	1,953.078	0.325	1,980.123	0.425	2,007.168	0.525	2,034.212	0.625	2,061.257	0.725	2,088.302	0.825	2,115.347	0.925	2,142.392
0.026	1,899.259	0.126	1,926.304	0.226	1,953.349	0.326	1,980.393	0.426	2,007.438	0.526	2,034.483	0.626	2,061.528	0.726	2,088.572	0.826	2,115.617	0.926	2,142.662
0.027	1,899.529	0.127	1,926.574	0.227	1,953.619	0.327	1,980.664	0.427	2,007.709	0.527	2,034.753	0.627	2,061.798	0.727	2,088.843	0.827	2,115.888	0.927	2,142.932
0.028	1,899.800	0.128	1,926.845	0.228	1,953.889	0.328	1,980.934	0.428	2,007.979	0.528	2,035.024	0.628	2,062.069	0.728	2,089.113	0.828	2,116.158	0.928	2,143.203
0.029	1,900.070	0.129	1,927.115	0.229	1,954.160	0.329	1,981.205	0.429	2,008.249	0.529	2,035.294	0.629	2,062.339	0.729	2,089.384	0.829	2,116.429	0.929	2,143.473
0.030	1,900.341	0.130	1,927.386	0.230	1,954.430	0.330	1,981.475	0.430	2,008.520	0.530	2,035.565	0.630	2,062.609	0.730	2,089.654	0.830	2,116.699	0.930	2,143.744
0.031	1,900.611	0.131	1,927.656	0.231	1,954.701	0.331	1,981.746	0.431	2,008.790	0.531	2,035.835	0.631	2,062.880	0.731	2,089.925	0.831	2,116.970	0.931	2,144.014
0.032	1,900.882	0.132	1,927.927	0.232	1,954.971	0.332	1,982.016	0.432	2,009.061	0.532	2,036.106	0.632	2,063.150	0.732	2,090.195	0.832	2,117.240	0.932	2,144.285
0.033	1,901.152	0.133	1,928.197	0.233	1,955.242	0.333	1,982.287	0.433	2,009.331	0.533	2,036.376	0.633	2,063.421	0.733	2,090.466	0.833	2,117.510	0.933	2,144.555
0.034	1,901.423	0.134	1,928.467	0.234	1,955.512	0.334	1,982.557	0.434	2,009.602	0.534	2,036.647	0.634	2,063.691	0.734	2,090.736	0.834	2,117.781	0.934	2,144.826
0.035	1,901.693	0.135	1,928.738	0.235	1,955.783	0.335	1,982.827	0.435	2,009.872	0.535	2,036.917	0.635	2,063.962	0.735	2,091.007	0.835	2,118.051	0.935	2,145.096
0.036	1,901.964	0.136	1,929.008	0.236	1,956.053	0.336	1,983.098	0.436	2,010.143	0.536	2,037.187	0.636	2,064.232	0.736	2,091.277	0.836	2,118.322	0.936	2,145.367
0.037	1,902.234	0.137	1,929.279	0.237	1,956.324	0.337	1,983.368	0.437	2,010.413	0.537	2,037.458	0.637	2,064.503	0.737	2,091.547	0.837	2,118.592	0.937	2,145.637
0.038	1,902.504	0.138	1,929.549	0.238	1,956.594	0.338	1,983.639	0.438	2,010.684	0.538	2,037.728	0.638	2,064.773	0.738	2,091.818	0.838	2,118.863	0.938	2,145.907
0.039	1,902.775	0.139	1,929.820	0.239	1,956.864	0.339	1,983.909	0.439	2,010.954	0.539	2,037.999	0.639	2,065.044	0.739	2,092.088	0.839	2,119.133	0.939	2,146.178
0.040	1,903.045	0.140	1,930.090	0.240	1,957.135	0.340	1,984.180	0.440	2,011.224	0.540	2,038.269	0.640	2,065.314	0.740	2,092.359	0.840	2,119.404	0.940	2,146.448
0.041	1,903.316	0.141	1,930.361	0.241	1,957.405	0.341	1,984.450	0.441	2,011.495	0.541	2,038.540	0.641	2,065.584	0.741	2,092.629	0.841	2,119.674	0.941	2,146.719
0.042	1,903.586	0.142	1,930.631	0.242	1,957.676	0.342	1,984.721	0.442	2,011.765	0.542	2,038.810	0.642	2,065.855	0.742	2,092.900	0.842	2,119.944	0.942	2,146.989
0.043	1,903.857	0.143	1,930.901	0.243	1,957.946	0.343	1,984.991	0.443	2,012.036	0.543	2,039.081	0.643	2,066.125	0.743	2,093.170	0.843	2,120.215	0.943	2,147.260
0.044	1,904.127	0.144	1,931.172	0.244	1,958.217	0.344	1,985.261	0.444	2,012.306	0.544	2,039.351	0.644	2,066.396	0.744	2,093.441	0.844	2,120.485	0.944	2,147.530
0.045	1,904.398	0.145	1,931.442	0.245	1,958.487	0.345	1,985.532	0.445	2,012.577	0.545	2,039.621	0.645	2,066.666	0.745	2,093.711	0.845	2,120.756	0.945	2,147.801
0.046	1,904.668	0.146	1,931.713	0.246	1,958.758	0.346	1,985.802	0.446	2,012.847	0.546	2,039.892	0.646	2,066.937	0.746	2,093.981	0.846	2,121.026	0.946	2,148.071
0.047	1,904.938	0.147	1,931.983	0.247	1,959.028	0.347	1,986.073	0.447	2,013.118	0.547	2,040.162	0.647	2,067.207	0.747	2,094.252	0.847	2,121.297	0.947	2,148.341
0.048	1,905.209	0.148	1,932.254	0.248	1,959.298	0.348	1,986.343	0.448	2,013.388	0.548	2,040.433	0.648	2,067.478	0.748	2,094.522	0.848	2,121.567	0.948	2,148.612
0.049	1,905.479	0.149	1,932.524	0.249	1,959.569	0.349	1,986.614	0.449	2,013.658	0.549	2,040.703	0.649	2,067.748	0.749	2,094.793	0.849	2,121.838	0.949	2,148.882
0.050	1,905.750	0.150	1,932.795	0.250	1,959.839	0.350	1,986.884	0.450	2,013.929	0.550	2,040.974	0.650	2,068.018	0.750	2,095.063	0.850	2,122.108	0.950	2,149.153
0.051	1,906.020	0.151	1,933.065	0.251	1,960.110	0.351	1,987.155	0.451	2,014.199	0.551	2,041.244	0.651	2,068.289	0.751	2,095.334	0.851	2,122.378	0.951	2,149.423
0.052	1,906.291	0.152	1,933.335	0.252	1,960.380	0.352	1,987.425	0.452	2,014.470	0.552	2,041.515	0.652	2,068.559	0.752	2,095.604	0.852	2,122.649	0.952	2,149.694
0.053	1,906.561	0.153	1,933.606	0.253	1,960.651	0.353	1,987.695	0.453	2,014.740	0.553	2,041.785	0.653	2,068.830	0.753	2,095.875	0.853	2,122.919	0.953	2,149.964
0.054	1,906.832	0.154	1,933.876	0.254	1,960.921	0.354	1,987.966	0.454	2,015.011	0.554	2,042.055	0.654	2,069.100	0.754	2,096.145	0.854	2,123.190	0.954	2,150.235
0.055	1,907.102	0.155	1,934.147	0.255	1,961.192	0.355	1,988.236	0.455	2,015.281	0.555	2,042.326	0.655	2,069.371	0.755	2,096.415	0.855	2,123.460	0.955	2,150.505
0.056	1,907.372	0.156	1,934.417	0.256	1,961.462	0.356	1,988.507	0.456	2,015.552	0.556	2,042.596	0.656	2,069.641	0.756	2,096.686	0.856	2,123.731	0.956	2,150.775
0.057	1,907.643	0.157	1,934.688	0.257	1,961.732	0.357	1,988.777	0.457	2,015.822	0.557	2,042.867	0.657	2,069.912	0.757	2,096.956	0.857	2,124.001	0.957	2,151.046
0.058	1,907.913	0.158	1,934.958	0.258	1,962.003	0.358	1,989.048	0.458	2,016.092	0.558	2,043.137	0.658	2,070.182	0.758	2,097.227	0.858	2,124.272	0.958	2,151.316
0.059	1,908.184	0.159	1,935.229	0.259	1,962.273	0.359	1,989.318	0.459	2,016.363	0.559	2,043.408	0.659	2,070.452	0.759	2,097.497	0.859	2,124.542	0.959	2,151.587
0.060	1,908.454	0.160	1,935.499	0.260	1,962.544	0.360	1,989.589	0.460	2,016.633	0.560	2,043.678	0.660	2,070.723	0.760	2,097.768	0.860	2,124.812	0.960	2,151.857
0.061	1,908.725	0.161	1,935.769	0.261	1,962.814	0.361	1,989.859	0.461	2,016.904	0.561	2,043.949	0.661	2,070.993	0.761	2,098.038	0.861	2,125.083	0.961	2,152.128
0.062	1,908.995	0.162	1,936.040	0.262	1,963.085	0.362	1,990.129	0.462	2,017.174	0.562	2,044.219	0.662	2,071.264	0.762	2,098.309	0.862	2,125.353	0.962	2,152.398
0.063	1,909.266	0.163	1,936.310	0.263	1,963.355	0.363	1,990.400	0.463	2,017.445	0.563	2,044.489	0.663	2,071.534	0.763	2,098.579	0.863	2,125.624	0.963	2,152.669
0.064	1,909.536	0.164	1,936.581	0.264	1,963.626	0.364	1,990.670	0.464	2,017.715	0.564	2,044.760	0.664	2,071.805	0.764	2,098.850	0.864	2,125.894	0.964	2,152.939
0.065	1,909.807	0.165	1,936.851	0.265	1,963.896	0.365	1,990.941	0.465	2,017.986	0.565	2,045.030	0.665	2,072.075	0.765	2,099.120	0.865	2,126.165	0.965	2,153.210
0.066	1,910.077	0.166	1,937.122	0.266	1,964.167	0.366	1,991.211	0.466	2,018.256	0.566	2,045.301	0.666	2,072.346	0.766	2,099.390	0.866	2,126.435	0.966	2,153.480
0.067	1,910.347	0.167	1,937.392	0.267	1,964.437	0.367	1,991.482	0.467	2,018.527	0.567	2,045.571	0.667	2,072.616	0.767	2,099.661	0.867	2,126.706	0.967	2,153.750
0.068	1,910.618	0.168	1,937.663	0.268	1,964.707	0.368	1,991.752	0.468	2,018.797	0.568	2,045.842	0.668	2,072.887	0.768	2,099.931	0.868	2,126.976	0.968	2,154.021
0.069	1,910.888	0.169	1,937.933	0.269	1,964.978	0.369	1,992.023	0.469	2,019.067	0.569	2,046.112	0.669	2,073.157	0.769	2,100.202	0.869	2,127.247	0.969	2,154.291
0.070	1,911.159	0.170	1,938.204	0.270	1,965.248	0.370	1,992.293	0.470	2,019.338	0.570	2,046.383	0.670	2,073.427	0.770	2,100.472	0.870	2,127.517	0.970	2,154.562
0.071	1,911.429	0.171	1,938.474	0.271	1,965.519	0.371	1,992.564	0.471	2,019.608	0.571	2,046.653	0.671	2,073.698	0.771	2,100.743	0.871	2,127.787	0.971	2,154.832
0.072	1,911.700	0.172	1,938.744	0.272	1,965.789	0.372	1,992.834	0.472	2,019.879	0.572	2,046.924	0.672	2,073.968	0.772	2,101.013	0.872	2,128.058	0.972	2,155.103
0.073	1,911.970	0.173	1,939.015	0.273	1,966.060	0.373	1,993.104	0.473	2,020.149	0.573	2,047.194	0.673	2,074.239	0.773	2,101.284	0.873	2,128.328	0.973	2,155.373
0.074	1,912.241	0.174	1,939.285	0.274	1,966.330	0.374	1,993.375	0.474	2,020.420	0.574	2,047.464	0.674	2,074.509	0.774	2,101.554	0.874	2,128.599	0.974	2,155.644
0.075	1,912.511	0.175	1,939.556	0.275	1,966.601	0.375	1,993.645	0.475	2,020.690	0.575	2,047.735	0.675	2,074.780	0.775	2,101.824	0.875	2,128.869	0.975	2,155.914
0.076	1,912.781	0.176	1,939.826	0.276	1,966.871	0.376	1,993.916	0.476	2,020.961	0.576	2,048.005	0.676	2,075.050	0.776	2,102.095	0.876	2,129.140	0.976	2,156.184
0.077	1,913.052	0.177	1,940.097	0.277	1,967.141	0.377	1,994.186	0.477	2,021.231	0.577	2,048.276	0.677	2,075.321	0.777	2,102.365	0.877	2,129.410	0.977	2,156.455
0.078	1,913.322	0.178	1,940.367	0.278	1,967.412	0.378	1,994.457	0.478	2,021.501	0.578	2,048.546	0.678	2,075.591	0.778	2,102.636	0.878	2,129.681	0.978	2,156.725
0.079	1,913.593	0.179	1,940.638	0.279	1,967.682	0.379	1,994.727	0.479	2,021.772	0.579	2,048.817	0.679	2,075.861	0.779	2,102.906	0.879	2,129.951	0.979	2,156.996
0.080	1,913.863	0.180	1,940.908	0.280	1,967.953	0.380	1,994.998	0.480	2,022.042	0.580	2,049.087	0.680	2,076.132	0.780	2,103.177	0.880	2,130.221	0.980	2,157.266
0.081	1,914.134	0.181	1,941.178	0.281	1,968.223	0.381	1,995.268	0.481	2,022.313	0.581	2,049.358	0.681	2,076.402	0.781	2,103.447	0.881	2,130.492	0.981	2,157.537
0.082	1,914.404	0.182	1,941.449	0.282	1,968.494	0.382	1,995.538	0.482	2,022.583	0.582	2,049.628	0.682	2,076.673	0.782	2,103.718	0.882	2,130.762	0.982	2,157.807
0.083	1,914.675	0.183	1,941.719	0.283	1,968.764	0.383	1,995.809	0.483	2,022.854	0.583	2,049.898	0.683	2,076.943	0.783	2,103.988	0.883	2,131.033	0.983	2,158.078
0.084	1,914.945	0.184	1,941.990	0.284	1,969.035	0.384	1,996.079	0.484	2,023.124	0.584	2,050.169	0.684	2,077.214	0.784	2,104.258	0.884	2,131.303	0.984	2,158.348
0.085	1,915.215	0.185	1,942.260	0.285	1,969.305	0.385	1,996.350	0.485	2,023.395	0.585	2,050.439	0.685	2,077.484	0.785	2,104.529	0.885	2,131.574	0.985	2,158.618
0.086	1,915.486	0.186	1,942.531	0.286	1,969.575	0.386	1,996.620	0.486	2,023.665	0.586	2,050.710	0.686	2,077.755	0.786	2,104.799	0.886	2,131.844	0.986	2,158.889
0.087	1,915.756	0.187	1,942.801	0.287	1,969.846	0.387	1,996.891	0.487	2,023.935	0.587	2,050.980	0.687	2,078.025	0.787	2,105.070	0.887	2,132.115	0.987	2,159.159
0.088	1,916.027	0.188	1,943.072	0.288	1,970.116	0.388	1,997.161	0.488	2,024.206	0.588	2,051.251	0.688	2,078.295	0.788	2,105.340	0.888	2,132.385	0.988	2,159.430
0.089	1,916.297	0.189	1,943.342	0.289	1,970.387	0.389	1,997.432	0.489	2,024.476	0.589	2,051.521	0.689	2,078.566	0.789	2,105.611	0.889	2,132.655	0.989	2,159.700
0.090	1,916.568	0.190	1,943.612	0.290	1,970.657	0.390	1,997.702	0.490	2,024.747	0.590	2,051.792	0.690	2,078.836	0.790	2,105.881	0.890	2,132.926	0.990	2,159.971
0.091	1,916.838	0.191	1,943.883	0.291	1,970.928	0.391	1,997.972	0.491	2,025.017	0.591	2,052.062	0.691	2,079.107	0.791	2,106.152	0.891	2,133.196	0.991	2,160.241
0.092	1,917.109	0.192	1,944.153	0.292	1,971.198	0.392	1,998.243	0.492	2,025.288	0.592	2,052.332	0.692	2,079.377	0.792	2,106.422	0.892	2,133.467	0.992	2,160.512
0.093	1,917.379	0.193	1,944.424	0.293	1,971.469	0.393	1,998.513	0.493	2,025.558	0.593	2,052.603	0.693	2,079.648	0.793	2,106.692	0.893	2,133.737	0.993	2,160.782
0.094	1,917.649	0.194	1,944.694	0.294	1,971.739	0.394	1,998.784	0.494	2,025.829	0.594	2,052.873	0.694	2,079.918	0.794	2,106.963	0.894	2,134.008	0.994	2,161.052
0.095	1,917.920	0.195	1,944.965	0.295	1,972.009	0.395	1,999.054	0.495	2,026.099	0.595	2,053.144	0.695	2,080.189	0.795	2,107.233	0.895	2,134.278	0.995	2,161.323
0.096	1,918.190	0.196	1,945.235	0.296	1,972.280	0.396	1,999.325	0.496	2,026.369	0.596	2,053.414	0.696	2,080.459	0.796	2,107.504	0.896	2,134.549	0.996	2,161.593
0.097	1,918.461	0.197	1,945.506	0.297	1,972.550	0.397	1,999.595	0.497	2,026.640	0.597	2,053.685	0.697	2,080.730	0.797	2,107.774	0.897	2,134.819	0.997	2,161.864
0.098	1,918.731	0.198	1,945.776	0.298	1,972.821	0.398	1,999.866	0.498	2,026.910	0.598	2,053.955	0.698	2,081.000	0.798	2,108.045	0.898	2,135.090	0.998	2,162.134
0.099	1,919.002	0.199	1,946.047	0.299	1,973.091	0.399	2,000.136	0.499	2,027.181	0.599	2,054.226	0.699	2,081.270	0.799	2,108.315	0.899	2,135.360	0.999	2,162.405

DATE STRAPPED: 09/19/17 BY: RJ
DATE COMPUTED: 09/26/17 BY: WLH
DATE ISSUED: 09/26/17

AMSPEC

Calibration@AmSpecGroup.com

Meliadine
Portal #1
Item 20 - Final - Datasheet

Tank No. 3
INNAGE TABLE

CAPACITIES GIVEN IN CUBIC METERS — **GAUGE HEIGHT: 11.443 M**

mm	8 M	mm	8 M	mm	8 M	mm	8 M	mm	8 M	mm	8 M	mm	8 M	mm	8 M	mm	8 M	mm	8 M
0.000	2,162.675	0.100	2,189.720	0.200	2,216.765	0.300	2,243.810	0.400	2,270.862	0.500	2,297.921	0.600	2,324.980	0.700	2,352.039	0.800	2,379.098	0.900	2,406.156
0.001	2,162.946	0.101	2,189.990	0.201	2,217.035	0.301	2,244.080	0.401	2,271.133	0.501	2,298.192	0.601	2,325.251	0.701	2,352.309	0.801	2,379.368	0.901	2,406.427
0.002	2,163.216	0.102	2,190.261	0.202	2,217.306	0.302	2,244.350	0.402	2,271.404	0.502	2,298.462	0.602	2,325.521	0.702	2,352.580	0.802	2,379.639	0.902	2,406.698
0.003	2,163.487	0.103	2,190.531	0.203	2,217.576	0.303	2,244.621	0.403	2,271.674	0.503	2,298.733	0.603	2,325.792	0.703	2,352.851	0.803	2,379.909	0.903	2,406.968
0.004	2,163.757	0.104	2,190.802	0.204	2,217.847	0.304	2,244.891	0.404	2,271.945	0.504	2,299.004	0.604	2,326.062	0.704	2,353.121	0.804	2,380.180	0.904	2,407.239
0.005	2,164.027	0.105	2,191.072	0.205	2,218.117	0.305	2,245.162	0.405	2,272.215	0.505	2,299.274	0.605	2,326.333	0.705	2,353.392	0.805	2,380.451	0.905	2,407.509
0.006	2,164.298	0.106	2,191.343	0.206	2,218.387	0.306	2,245.432	0.406	2,272.486	0.506	2,299.545	0.606	2,326.604	0.706	2,353.662	0.806	2,380.721	0.906	2,407.780
0.007	2,164.568	0.107	2,191.613	0.207	2,218.658	0.307	2,245.703	0.407	2,272.757	0.507	2,299.815	0.607	2,326.874	0.707	2,353.933	0.807	2,380.992	0.907	2,408.051
0.008	2,164.839	0.108	2,191.884	0.208	2,218.928	0.308	2,245.973	0.408	2,273.027	0.508	2,300.086	0.608	2,327.145	0.708	2,354.204	0.808	2,381.262	0.908	2,408.321
0.009	2,165.109	0.109	2,192.154	0.209	2,219.199	0.309	2,246.244	0.409	2,273.298	0.509	2,300.357	0.609	2,327.415	0.709	2,354.474	0.809	2,381.533	0.909	2,408.592
0.010	2,165.380	0.110	2,192.424	0.210	2,219.469	0.310	2,246.514	0.410	2,273.568	0.510	2,300.627	0.610	2,327.686	0.710	2,354.745	0.810	2,381.804	0.910	2,408.862
0.011	2,165.650	0.111	2,192.695	0.211	2,219.740	0.311	2,246.784	0.411	2,273.839	0.511	2,300.898	0.611	2,327.957	0.711	2,355.015	0.811	2,382.074	0.911	2,409.133
0.012	2,165.921	0.112	2,192.965	0.212	2,220.010	0.312	2,247.055	0.412	2,274.110	0.512	2,301.168	0.612	2,328.227	0.712	2,355.286	0.812	2,382.345	0.912	2,409.404
0.013	2,166.191	0.113	2,193.236	0.213	2,220.281	0.313	2,247.325	0.413	2,274.380	0.513	2,301.439	0.613	2,328.498	0.713	2,355.557	0.813	2,382.615	0.913	2,409.674
0.014	2,166.461	0.114	2,193.506	0.214	2,220.551	0.314	2,247.596	0.414	2,274.651	0.514	2,301.710	0.614	2,328.768	0.714	2,355.827	0.814	2,382.886	0.914	2,409.945
0.015	2,166.732	0.115	2,193.777	0.215	2,220.821	0.315	2,247.866	0.415	2,274.921	0.515	2,301.980	0.615	2,329.039	0.715	2,356.098	0.815	2,383.157	0.915	2,410.215
0.016	2,167.002	0.116	2,194.047	0.216	2,221.092	0.316	2,248.137	0.416	2,275.192	0.516	2,302.251	0.616	2,329.310	0.716	2,356.368	0.816	2,383.427	0.916	2,410.486
0.017	2,167.273	0.117	2,194.318	0.217	2,221.362	0.317	2,248.407	0.417	2,275.462	0.517	2,302.521	0.617	2,329.580	0.717	2,356.639	0.817	2,383.698	0.917	2,410.756
0.018	2,167.543	0.118	2,194.588	0.218	2,221.633	0.318	2,248.678	0.418	2,275.733	0.518	2,302.792	0.618	2,329.851	0.718	2,356.909	0.818	2,383.968	0.918	2,411.027
0.019	2,167.814	0.119	2,194.858	0.219	2,221.903	0.319	2,248.948	0.419	2,276.004	0.519	2,303.062	0.619	2,330.121	0.719	2,357.180	0.819	2,384.239	0.919	2,411.298
0.020	2,168.084	0.120	2,195.129	0.220	2,222.174	0.320	2,249.218	0.420	2,276.274	0.520	2,303.333	0.620	2,330.392	0.720	2,357.451	0.820	2,384.509	0.920	2,411.568
0.021	2,168.355	0.121	2,195.399	0.221	2,222.444	0.321	2,249.489	0.421	2,276.545	0.521	2,303.604	0.621	2,330.662	0.721	2,357.721	0.821	2,384.780	0.921	2,411.839
0.022	2,168.625	0.122	2,195.670	0.222	2,222.715	0.322	2,249.759	0.422	2,276.815	0.522	2,303.874	0.622	2,330.933	0.722	2,357.992	0.822	2,385.051	0.922	2,412.109
0.023	2,168.895	0.123	2,195.940	0.223	2,222.985	0.323	2,250.030	0.423	2,277.086	0.523	2,304.145	0.623	2,331.204	0.723	2,358.262	0.823	2,385.321	0.923	2,412.380
0.024	2,169.166	0.124	2,196.211	0.224	2,223.255	0.324	2,250.300	0.424	2,277.357	0.524	2,304.415	0.624	2,331.474	0.724	2,358.533	0.824	2,385.592	0.924	2,412.651
0.025	2,169.436	0.125	2,196.481	0.225	2,223.526	0.325	2,250.571	0.425	2,277.627	0.525	2,304.686	0.625	2,331.745	0.725	2,358.804	0.825	2,385.862	0.925	2,412.921
0.026	2,169.707	0.126	2,196.752	0.226	2,223.796	0.326	2,250.841	0.426	2,277.898	0.526	2,304.957	0.626	2,332.015	0.726	2,359.074	0.826	2,386.133	0.926	2,413.192
0.027	2,169.977	0.127	2,197.022	0.227	2,224.067	0.327	2,251.112	0.427	2,278.168	0.527	2,305.227	0.627	2,332.286	0.727	2,359.345	0.827	2,386.404	0.927	2,413.462
0.028	2,170.248	0.128	2,197.292	0.228	2,224.337	0.328	2,251.382	0.428	2,278.439	0.528	2,305.498	0.628	2,332.557	0.728	2,359.615	0.828	2,386.674	0.928	2,413.733
0.029	2,170.518	0.129	2,197.563	0.229	2,224.608	0.329	2,251.652	0.429	2,278.710	0.529	2,305.768	0.629	2,332.827	0.729	2,359.886	0.829	2,386.945	0.929	2,414.004
0.030	2,170.789	0.130	2,197.833	0.230	2,224.878	0.330	2,251.923	0.430	2,278.980	0.530	2,306.039	0.630	2,333.098	0.730	2,360.157	0.830	2,387.215	0.930	2,414.274
0.031	2,171.059	0.131	2,198.104	0.231	2,225.149	0.331	2,252.194	0.431	2,279.251	0.531	2,306.310	0.631	2,333.368	0.731	2,360.427	0.831	2,387.486	0.931	2,414.545
0.032	2,171.330	0.132	2,198.374	0.232	2,225.419	0.332	2,252.464	0.432	2,279.521	0.532	2,306.580	0.632	2,333.639	0.732	2,360.698	0.832	2,387.757	0.932	2,414.815
0.033	2,171.600	0.133	2,198.645	0.233	2,225.690	0.333	2,252.735	0.433	2,279.792	0.533	2,306.851	0.633	2,333.909	0.733	2,360.968	0.833	2,388.027	0.933	2,415.086
0.034	2,171.870	0.134	2,198.915	0.234	2,225.960	0.334	2,253.005	0.434	2,280.062	0.534	2,307.121	0.634	2,334.180	0.734	2,361.239	0.834	2,388.298	0.934	2,415.356
0.035	2,172.141	0.135	2,199.186	0.235	2,226.230	0.335	2,253.276	0.435	2,280.333	0.535	2,307.392	0.635	2,334.451	0.735	2,361.509	0.835	2,388.568	0.935	2,415.627
0.036	2,172.411	0.136	2,199.456	0.236	2,226.501	0.336	2,253.546	0.436	2,280.604	0.536	2,307.662	0.636	2,334.721	0.736	2,361.780	0.836	2,388.839	0.936	2,415.898
0.037	2,172.682	0.137	2,199.727	0.237	2,226.771	0.337	2,253.817	0.437	2,280.874	0.537	2,307.933	0.637	2,334.992	0.737	2,362.051	0.837	2,389.109	0.937	2,416.168
0.038	2,172.952	0.138	2,199.997	0.238	2,227.042	0.338	2,254.087	0.438	2,281.145	0.538	2,308.204	0.638	2,335.262	0.738	2,362.321	0.838	2,389.380	0.938	2,416.439
0.039	2,173.223	0.139	2,200.267	0.239	2,227.312	0.339	2,254.358	0.439	2,281.415	0.539	2,308.474	0.639	2,335.533	0.739	2,362.592	0.839	2,389.651	0.939	2,416.709
0.040	2,173.493	0.140	2,200.538	0.240	2,227.583	0.340	2,254.628	0.440	2,281.686	0.540	2,308.745	0.640	2,335.804	0.740	2,362.862	0.840	2,389.921	0.940	2,416.980
0.041	2,173.764	0.141	2,200.808	0.241	2,227.853	0.341	2,254.899	0.441	2,281.957	0.541	2,309.015	0.641	2,336.074	0.741	2,363.133	0.841	2,390.192	0.941	2,417.251
0.042	2,174.034	0.142	2,201.079	0.242	2,228.124	0.342	2,255.169	0.442	2,282.227	0.542	2,309.286	0.642	2,336.345	0.742	2,363.404	0.842	2,390.462	0.942	2,417.521
0.043	2,174.304	0.143	2,201.349	0.243	2,228.394	0.343	2,255.440	0.443	2,282.498	0.543	2,309.557	0.643	2,336.615	0.743	2,363.674	0.843	2,390.733	0.943	2,417.792
0.044	2,174.575	0.144	2,201.620	0.244	2,228.664	0.344	2,255.710	0.444	2,282.768	0.544	2,309.827	0.644	2,336.886	0.744	2,363.945	0.844	2,391.004	0.944	2,418.062
0.045	2,174.845	0.145	2,201.890	0.245	2,228.935	0.345	2,255.981	0.445	2,283.039	0.545	2,310.098	0.645	2,337.157	0.745	2,364.215	0.845	2,391.274	0.945	2,418.333
0.046	2,175.116	0.146	2,202.161	0.246	2,229.205	0.346	2,256.251	0.446	2,283.310	0.546	2,310.368	0.646	2,337.427	0.746	2,364.486	0.846	2,391.545	0.946	2,418.604
0.047	2,175.386	0.147	2,202.431	0.247	2,229.476	0.347	2,256.522	0.447	2,283.580	0.547	2,310.639	0.647	2,337.698	0.747	2,364.757	0.847	2,391.815	0.947	2,418.874
0.048	2,175.657	0.148	2,202.701	0.248	2,229.746	0.348	2,256.792	0.448	2,283.851	0.548	2,310.910	0.648	2,337.968	0.748	2,365.027	0.848	2,392.086	0.948	2,419.145
0.049	2,175.927	0.149	2,202.972	0.249	2,230.017	0.349	2,257.063	0.449	2,284.121	0.549	2,311.180	0.649	2,338.239	0.749	2,365.298	0.849	2,392.357	0.949	2,419.415
0.050	2,176.198	0.150	2,203.242	0.250	2,230.287	0.350	2,257.333	0.450	2,284.392	0.550	2,311.451	0.650	2,338.509	0.750	2,365.568	0.850	2,392.627	0.950	2,419.686
0.051	2,176.468	0.151	2,203.513	0.251	2,230.558	0.351	2,257.604	0.451	2,284.662	0.551	2,311.721	0.651	2,338.780	0.751	2,365.839	0.851	2,392.898	0.951	2,419.956
0.052	2,176.738	0.152	2,203.783	0.252	2,230.828	0.352	2,257.874	0.452	2,284.933	0.552	2,311.992	0.652	2,339.051	0.752	2,366.109	0.852	2,393.168	0.952	2,420.227
0.053	2,177.009	0.153	2,204.054	0.253	2,231.098	0.353	2,258.145	0.453	2,285.204	0.553	2,312.262	0.653	2,339.321	0.753	2,366.380	0.853	2,393.439	0.953	2,420.498
0.054	2,177.279	0.154	2,204.324	0.254	2,231.369	0.354	2,258.415	0.454	2,285.474	0.554	2,312.533	0.654	2,339.592	0.754	2,366.651	0.854	2,393.709	0.954	2,420.768
0.055	2,177.550	0.155	2,204.595	0.255	2,231.639	0.355	2,258.686	0.455	2,285.745	0.555	2,312.804	0.655	2,339.862	0.755	2,366.921	0.855	2,393.980	0.955	2,421.039
0.056	2,177.820	0.156	2,204.865	0.256	2,231.910	0.356	2,258.957	0.456	2,286.015	0.556	2,313.074	0.656	2,340.133	0.756	2,367.192	0.856	2,394.251	0.956	2,421.309
0.057	2,178.091	0.157	2,205.135	0.257	2,232.180	0.357	2,259.227	0.457	2,286.286	0.557	2,313.345	0.657	2,340.404	0.757	2,367.462	0.857	2,394.521	0.957	2,421.580
0.058	2,178.361	0.158	2,205.406	0.258	2,232.451	0.358	2,259.498	0.458	2,286.557	0.558	2,313.615	0.658	2,340.674	0.758	2,367.733	0.858	2,394.792	0.958	2,421.851
0.059	2,178.632	0.159	2,205.676	0.259	2,232.721	0.359	2,259.768	0.459	2,286.827	0.559	2,313.886	0.659	2,340.945	0.759	2,368.004	0.859	2,395.062	0.959	2,422.121
0.060	2,178.902	0.160	2,205.947	0.260	2,232.992	0.360	2,260.039	0.460	2,287.098	0.560	2,314.157	0.660	2,341.215	0.760	2,368.274	0.860	2,395.333	0.960	2,422.392
0.061	2,179.172	0.161	2,206.217	0.261	2,233.262	0.361	2,260.310	0.461	2,287.368	0.561	2,314.427	0.661	2,341.486	0.761	2,368.545	0.861	2,395.604	0.961	2,422.662
0.062	2,179.443	0.162	2,206.488	0.262	2,233.532	0.362	2,260.580	0.462	2,287.639	0.562	2,314.698	0.662	2,341.757	0.762	2,368.815	0.862	2,395.874	0.962	2,422.933
0.063	2,179.713	0.163	2,206.758	0.263	2,233.803	0.363	2,260.851	0.463	2,287.910	0.563	2,314.968	0.663	2,342.027	0.763	2,369.086	0.863	2,396.145	0.963	2,423.204
0.064	2,179.984	0.164	2,207.029	0.264	2,234.073	0.364	2,261.121	0.464	2,288.180	0.564	2,315.239	0.664	2,342.298	0.764	2,369.357	0.864	2,396.415	0.964	2,423.474
0.065	2,180.254	0.165	2,207.299	0.265	2,234.344	0.365	2,261.392	0.465	2,288.451	0.565	2,315.510	0.665	2,342.568	0.765	2,369.627	0.865	2,396.686	0.965	2,423.745
0.066	2,180.525	0.166	2,207.570	0.266	2,234.614	0.366	2,261.663	0.466	2,288.721	0.566	2,315.780	0.666	2,342.839	0.766	2,369.898	0.866	2,396.956	0.966	2,424.015
0.067	2,180.795	0.167	2,207.840	0.267	2,234.885	0.367	2,261.933	0.467	2,288.992	0.567	2,316.051	0.667	2,343.109	0.767	2,370.168	0.867	2,397.227	0.967	2,424.286
0.068	2,181.066	0.168	2,208.110	0.268	2,235.155	0.368	2,262.204	0.468	2,289.262	0.568	2,316.321	0.668	2,343.380	0.768	2,370.439	0.868	2,397.498	0.968	2,424.556
0.069	2,181.336	0.169	2,208.381	0.269	2,235.426	0.369	2,262.474	0.469	2,289.533	0.569	2,316.592	0.669	2,343.651	0.769	2,370.709	0.869	2,397.768	0.969	2,424.827
0.070	2,181.607	0.170	2,208.651	0.270	2,235.696	0.370	2,262.745	0.470	2,289.804	0.570	2,316.862	0.670	2,343.921	0.770	2,370.980	0.870	2,398.039	0.970	2,425.098
0.071	2,181.877	0.171	2,208.922	0.271	2,235.967	0.371	2,263.015	0.471	2,290.074	0.571	2,317.133	0.671	2,344.192	0.771	2,371.251	0.871	2,398.309	0.971	2,425.368
0.072	2,182.147	0.172	2,209.192	0.272	2,236.237	0.372	2,263.286	0.472	2,290.345	0.572	2,317.404	0.672	2,344.462	0.772	2,371.521	0.872	2,398.580	0.972	2,425.639
0.073	2,182.418	0.173	2,209.463	0.273	2,236.507	0.373	2,263.557	0.473	2,290.615	0.573	2,317.674	0.673	2,344.733	0.773	2,371.792	0.873	2,398.851	0.973	2,425.909
0.074	2,182.688	0.174	2,209.733	0.274	2,236.778	0.374	2,263.827	0.474	2,290.886	0.574	2,317.945	0.674	2,345.004	0.774	2,372.062	0.874	2,399.121	0.974	2,426.180
0.075	2,182.959	0.175	2,210.004	0.275	2,237.048	0.375	2,264.098	0.475	2,291.157	0.575	2,318.215	0.675	2,345.274	0.775	2,372.333	0.875	2,399.392	0.975	2,426.451
0.076	2,183.229	0.176	2,210.274	0.276	2,237.319	0.376	2,264.368	0.476	2,291.427	0.576	2,318.486	0.676	2,345.545	0.776	2,372.604	0.876	2,399.662	0.976	2,426.721
0.077	2,183.500	0.177	2,210.544	0.277	2,237.589	0.377	2,264.639	0.477	2,291.698	0.577	2,318.757	0.677	2,345.815	0.777	2,372.874	0.877	2,399.933	0.977	2,426.992
0.078	2,183.770	0.178	2,210.815	0.278	2,237.860	0.378	2,264.910	0.478	2,291.968	0.578	2,319.027	0.678	2,346.086	0.778	2,373.145	0.878	2,400.204	0.978	2,427.262
0.079	2,184.041	0.179	2,211.085	0.279	2,238.130	0.379	2,265.180	0.479	2,292.239	0.579	2,319.298	0.679	2,346.357	0.779	2,373.415	0.879	2,400.474	0.979	2,427.533
0.080	2,184.311	0.180	2,211.356	0.280	2,238.401	0.380	2,265.451	0.480	2,292.510	0.580	2,319.568	0.680	2,346.627	0.780	2,373.686	0.880	2,400.745	0.980	2,427.804
0.081	2,184.581	0.181	2,211.626	0.281	2,238.671	0.381	2,265.721	0.481	2,292.780	0.581	2,319.839	0.681	2,346.898	0.781	2,373.957	0.881	2,401.015	0.981	2,428.074
0.082	2,184.852	0.182	2,211.897	0.282	2,238.941	0.382	2,265.992	0.482	2,293.051	0.582	2,320.110	0.682	2,347.168	0.782	2,374.227	0.882	2,401.286	0.982	2,428.345
0.083	2,185.122	0.183	2,212.167	0.283	2,239.212	0.383	2,266.262	0.483	2,293.321	0.583	2,320.380	0.683	2,347.439	0.783	2,374.498	0.883	2,401.556	0.983	2,428.615
0.084	2,185.393	0.184	2,212.438	0.284	2,239.482	0.384	2,266.533	0.484	2,293.592	0.584	2,320.651	0.684	2,347.709	0.784	2,374.768	0.884	2,401.827	0.984	2,428.886
0.085	2,185.663	0.185	2,212.708	0.285	2,239.753	0.385	2,266.804	0.485	2,293.862	0.585	2,320.921	0.685	2,347.980	0.785	2,375.039	0.885	2,402.098	0.985	2,429.156
0.086	2,185.934	0.186	2,212.978	0.286	2,240.023	0.386	2,267.074	0.486	2,294.133	0.586	2,321.192	0.686	2,348.251	0.786	2,375.309	0.886	2,402.368	0.986	2,429.427
0.087	2,186.204	0.187	2,213.249	0.287	2,240.294	0.387	2,267.345	0.487	2,294.404	0.587	2,321.462	0.687	2,348.521	0.787	2,375.580	0.887	2,402.639	0.987	2,429.698
0.088	2,186.475	0.188	2,213.519	0.288	2,240.564	0.388	2,267.615	0.488	2,294.674	0.588	2,321.733	0.688	2,348.792	0.788	2,375.851	0.888	2,402.909	0.988	2,429.968
0.089	2,186.745	0.189	2,213.790	0.289	2,240.835	0.389	2,267.886	0.489	2,294.945	0.589	2,322.004	0.689	2,349.062	0.789	2,376.121	0.889	2,403.180	0.989	2,430.239
0.090	2,187.015	0.190	2,214.060	0.290	2,241.105	0.390	2,268.157	0.490	2,295.215	0.590	2,322.274	0.690	2,349.333	0.790	2,376.392	0.890	2,403.451	0.990	2,430.509
0.091	2,187.286	0.191	2,214.331	0.291	2,241.375	0.391	2,268.427	0.491	2,295.486	0.591	2,322.545	0.691	2,349.604	0.791	2,376.662	0.891	2,403.721	0.991	2,430.780
0.092	2,187.556	0.192	2,214.601	0.292	2,241.646	0.392	2,268.698	0.492	2,295.757	0.592	2,322.815	0.692	2,349.874	0.792	2,376.933	0.892	2,403.992	0.992	2,431.051
0.093	2,187.827	0.193	2,214.872	0.293	2,241.916	0.393	2,268.968	0.493	2,296.027	0.593	2,323.086	0.693	2,350.145	0.793	2,377.204	0.893	2,404.262	0.993	2,431.321
0.094	2,188.097	0.194	2,215.142	0.294	2,242.187	0.394	2,269.239	0.494	2,296.298	0.594	2,323.357	0.694	2,350.415	0.794	2,377.474	0.894	2,404.533	0.994	2,431.592
0.095	2,188.368	0.195	2,215.412	0.295	2,242.457	0.395	2,269.510	0.495	2,296.568	0.595	2,323.627	0.695	2,350.686	0.795	2,377.745	0.895	2,404.804	0.995	2,431.862
0.096	2,188.638	0.196	2,215.683	0.296	2,242.728	0.396	2,269.780	0.496	2,296.839	0.596	2,323.898	0.696	2,350.957	0.796	2,378.015	0.896	2,405.074	0.996	2,432.133
0.097	2,188.909	0.197	2,215.953	0.297	2,242.998	0.397	2,270.051	0.497	2,297.110	0.597	2,324.168	0.697	2,351.227	0.797	2,378.286	0.897	2,405.345	0.997	2,432.404
0.098	2,189.179	0.198	2,216.224	0.298	2,243.269	0.398	2,270.321	0.498	2,297.380	0.598	2,324.439	0.698	2,351.498	0.798	2,378.557	0.898	2,405.615	0.998	2,432.674
0.099	2,189.450	0.199	2,216.494	0.299	2,243.539	0.399	2,270.592	0.499	2,297.651	0.599	2,324.710	0.699	2,351.768	0.799	2,378.827	0.899	2,405.886	0.999	2,432.945

DATE STRAPPED: 09/19/17 BY: RJ
DATE COMPUTED: 09/26/17 BY: WLH
DATE ISSUED: 09/26/17

AMSPEC

Meliadine
Portal #1
Item 20 - Final - Datasheet

Tank No. 3
INNAGE TABLE

Calibration@AmSpecGroup.com

CAPACITIES GIVEN IN CUBIC METERS

GAUGE HEIGHT: 11.443 M

mm	9 M	mm	9 M	mm	9 M	mm	9 M	mm	9 M	mm	9 M	mm	9 M	mm	9 M	mm	9 M	mm	9 M
0.000	2,433.215	0.100	2,460.274	0.200	2,487.333	0.300	2,514.392	0.400	2,541.450	0.500	2,568.509	0.600	2,595.568	0.700	2,622.627	0.800	2,649.686	0.900	2,676.744
0.001	2,433.486	0.101	2,460.545	0.201	2,487.603	0.301	2,514.662	0.401	2,541.721	0.501	2,568.780	0.601	2,595.839	0.701	2,622.897	0.801	2,649.956	0.901	2,677.015
0.002	2,433.756	0.102	2,460.815	0.202	2,487.874	0.302	2,514.933	0.402	2,541.992	0.502	2,569.050	0.602	2,596.109	0.702	2,623.168	0.802	2,650.227	0.902	2,677.286
0.003	2,434.027	0.103	2,461.086	0.203	2,488.145	0.303	2,515.203	0.403	2,542.262	0.503	2,569.321	0.603	2,596.380	0.703	2,623.439	0.803	2,650.497	0.903	2,677.556
0.004	2,434.298	0.104	2,461.356	0.204	2,488.415	0.304	2,515.474	0.404	2,542.533	0.504	2,569.592	0.604	2,596.650	0.704	2,623.709	0.804	2,650.768	0.904	2,677.827
0.005	2,434.568	0.105	2,461.627	0.205	2,488.686	0.305	2,515.745	0.405	2,542.803	0.505	2,569.862	0.605	2,596.921	0.705	2,623.980	0.805	2,651.039	0.905	2,678.097
0.006	2,434.839	0.106	2,461.898	0.206	2,488.956	0.306	2,516.015	0.406	2,543.074	0.506	2,570.133	0.606	2,597.192	0.706	2,624.250	0.806	2,651.309	0.906	2,678.368
0.007	2,435.109	0.107	2,462.168	0.207	2,489.227	0.307	2,516.286	0.407	2,543.345	0.507	2,570.403	0.607	2,597.462	0.707	2,624.521	0.807	2,651.580	0.907	2,678.639
0.008	2,435.380	0.108	2,462.439	0.208	2,489.498	0.308	2,516.556	0.408	2,543.615	0.508	2,570.674	0.608	2,597.733	0.708	2,624.792	0.808	2,651.850	0.908	2,678.909
0.009	2,435.651	0.109	2,462.709	0.209	2,489.768	0.309	2,516.827	0.409	2,543.886	0.509	2,570.945	0.609	2,598.003	0.709	2,625.062	0.809	2,652.121	0.909	2,679.180
0.010	2,435.921	0.110	2,462.980	0.210	2,490.039	0.310	2,517.098	0.410	2,544.156	0.510	2,571.215	0.610	2,598.274	0.710	2,625.333	0.810	2,652.392	0.910	2,679.450
0.011	2,436.192	0.111	2,463.251	0.211	2,490.309	0.311	2,517.368	0.411	2,544.427	0.511	2,571.486	0.611	2,598.545	0.711	2,625.603	0.811	2,652.662	0.911	2,679.721
0.012	2,436.462	0.112	2,463.521	0.212	2,490.580	0.312	2,517.639	0.412	2,544.698	0.512	2,571.756	0.612	2,598.815	0.712	2,625.874	0.812	2,652.933	0.912	2,679.992
0.013	2,436.733	0.113	2,463.792	0.213	2,490.851	0.313	2,517.909	0.413	2,544.968	0.513	2,572.027	0.613	2,599.086	0.713	2,626.145	0.813	2,653.203	0.913	2,680.262
0.014	2,437.004	0.114	2,464.062	0.214	2,491.121	0.314	2,518.180	0.414	2,545.239	0.514	2,572.298	0.614	2,599.356	0.714	2,626.415	0.814	2,653.474	0.914	2,680.533
0.015	2,437.274	0.115	2,464.333	0.215	2,491.392	0.315	2,518.451	0.415	2,545.509	0.515	2,572.568	0.615	2,599.627	0.715	2,626.686	0.815	2,653.745	0.915	2,680.803
0.016	2,437.545	0.116	2,464.603	0.216	2,491.662	0.316	2,518.721	0.416	2,545.780	0.516	2,572.839	0.616	2,599.897	0.716	2,626.956	0.816	2,654.015	0.916	2,681.074
0.017	2,437.815	0.117	2,464.874	0.217	2,491.933	0.317	2,518.992	0.417	2,546.050	0.517	2,573.109	0.617	2,600.168	0.717	2,627.227	0.817	2,654.286	0.917	2,681.344
0.018	2,438.086	0.118	2,465.145	0.218	2,492.203	0.318	2,519.262	0.418	2,546.321	0.518	2,573.380	0.618	2,600.439	0.718	2,627.497	0.818	2,654.556	0.918	2,681.615
0.019	2,438.356	0.119	2,465.415	0.219	2,492.474	0.319	2,519.533	0.419	2,546.592	0.519	2,573.650	0.619	2,600.709	0.719	2,627.768	0.819	2,654.827	0.919	2,681.886
0.020	2,438.627	0.120	2,465.686	0.220	2,492.745	0.320	2,519.803	0.420	2,546.862	0.520	2,573.921	0.620	2,600.980	0.720	2,628.039	0.820	2,655.097	0.920	2,682.156
0.021	2,438.898	0.121	2,465.956	0.221	2,493.015	0.321	2,520.074	0.421	2,547.133	0.521	2,574.192	0.621	2,601.250	0.721	2,628.309	0.821	2,655.368	0.921	2,682.427
0.022	2,439.168	0.122	2,466.227	0.222	2,493.286	0.322	2,520.345	0.422	2,547.403	0.522	2,574.462	0.622	2,601.521	0.722	2,628.580	0.822	2,655.639	0.922	2,682.697
0.023	2,439.439	0.123	2,466.498	0.223	2,493.556	0.323	2,520.615	0.423	2,547.674	0.523	2,574.733	0.623	2,601.792	0.723	2,628.850	0.823	2,655.909	0.923	2,682.968
0.024	2,439.709	0.124	2,466.768	0.224	2,493.827	0.324	2,520.886	0.424	2,547.945	0.524	2,575.003	0.624	2,602.062	0.724	2,629.121	0.824	2,656.180	0.924	2,683.239
0.025	2,439.980	0.125	2,467.039	0.225	2,494.098	0.325	2,521.156	0.425	2,548.215	0.525	2,575.274	0.625	2,602.333	0.725	2,629.392	0.825	2,656.450	0.925	2,683.509
0.026	2,440.251	0.126	2,467.309	0.226	2,494.368	0.326	2,521.427	0.426	2,548.486	0.526	2,575.545	0.626	2,602.603	0.726	2,629.662	0.826	2,656.721	0.926	2,683.780
0.027	2,440.521	0.127	2,467.580	0.227	2,494.639	0.327	2,521.698	0.427	2,548.756	0.527	2,575.815	0.627	2,602.874	0.727	2,629.933	0.827	2,656.992	0.927	2,684.050
0.028	2,440.792	0.128	2,467.851	0.228	2,494.909	0.328	2,521.968	0.428	2,549.027	0.528	2,576.086	0.628	2,603.145	0.728	2,630.203	0.828	2,657.262	0.928	2,684.321
0.029	2,441.062	0.129	2,468.121	0.229	2,495.180	0.329	2,522.239	0.429	2,549.298	0.529	2,576.356	0.629	2,603.415	0.729	2,630.474	0.829	2,657.533	0.929	2,684.592
0.030	2,441.333	0.130	2,468.392	0.230	2,495.451	0.330	2,522.509	0.430	2,549.568	0.530	2,576.627	0.630	2,603.686	0.730	2,630.745	0.830	2,657.803	0.930	2,684.862
0.031	2,441.604	0.131	2,468.662	0.231	2,495.721	0.331	2,522.780	0.431	2,549.839	0.531	2,576.898	0.631	2,603.956	0.731	2,631.015	0.831	2,658.074	0.931	2,685.133
0.032	2,441.874	0.132	2,468.933	0.232	2,495.992	0.332	2,523.051	0.432	2,550.109	0.532	2,577.168	0.632	2,604.227	0.732	2,631.286	0.832	2,658.344	0.932	2,685.403
0.033	2,442.145	0.133	2,469.203	0.233	2,496.262	0.333	2,523.321	0.433	2,550.380	0.533	2,577.439	0.633	2,604.497	0.733	2,631.556	0.833	2,658.615	0.933	2,685.674
0.034	2,442.415	0.134	2,469.474	0.234	2,496.533	0.334	2,523.592	0.434	2,550.650	0.534	2,577.709	0.634	2,604.768	0.734	2,631.827	0.834	2,658.886	0.934	2,685.944
0.035	2,442.686	0.135	2,469.745	0.235	2,496.803	0.335	2,523.862	0.435	2,550.921	0.535	2,577.980	0.635	2,605.039	0.735	2,632.097	0.835	2,659.156	0.935	2,686.215
0.036	2,442.956	0.136	2,470.015	0.236	2,497.074	0.336	2,524.133	0.436	2,551.192	0.536	2,578.250	0.636	2,605.309	0.736	2,632.368	0.836	2,659.427	0.936	2,686.486
0.037	2,443.227	0.137	2,470.286	0.237	2,497.345	0.337	2,524.403	0.437	2,551.462	0.537	2,578.521	0.637	2,605.580	0.737	2,632.639	0.837	2,659.697	0.937	2,686.756
0.038	2,443.498	0.138	2,470.556	0.238	2,497.615	0.338	2,524.674	0.438	2,551.733	0.538	2,578.792	0.638	2,605.850	0.738	2,632.909	0.838	2,659.968	0.938	2,687.027
0.039	2,443.768	0.139	2,470.827	0.239	2,497.886	0.339	2,524.945	0.439	2,552.003	0.539	2,579.062	0.639	2,606.121	0.739	2,633.180	0.839	2,660.239	0.939	2,687.297
0.040	2,444.039	0.140	2,471.098	0.240	2,498.156	0.340	2,525.215	0.440	2,552.274	0.540	2,579.333	0.640	2,606.392	0.740	2,633.450	0.840	2,660.509	0.940	2,687.568
0.041	2,444.309	0.141	2,471.368	0.241	2,498.427	0.341	2,525.486	0.441	2,552.545	0.541	2,579.603	0.641	2,606.662	0.741	2,633.721	0.841	2,660.780	0.941	2,687.839
0.042	2,444.580	0.142	2,471.639	0.242	2,498.698	0.342	2,525.756	0.442	2,552.815	0.542	2,579.874	0.642	2,606.933	0.742	2,633.992	0.842	2,661.050	0.942	2,688.109
0.043	2,444.851	0.143	2,471.909	0.243	2,498.968	0.343	2,526.027	0.443	2,553.086	0.543	2,580.145	0.643	2,607.203	0.743	2,634.262	0.843	2,661.321	0.943	2,688.380
0.044	2,445.121	0.144	2,472.180	0.244	2,499.239	0.344	2,526.298	0.444	2,553.356	0.544	2,580.415	0.644	2,607.474	0.744	2,634.533	0.844	2,661.592	0.944	2,688.650
0.045	2,445.392	0.145	2,472.451	0.245	2,499.509	0.345	2,526.568	0.445	2,553.627	0.545	2,580.686	0.645	2,607.745	0.745	2,634.803	0.845	2,661.862	0.945	2,688.921
0.046	2,445.662	0.146	2,472.721	0.246	2,499.780	0.346	2,526.839	0.446	2,553.898	0.546	2,580.956	0.646	2,608.015	0.746	2,635.074	0.846	2,662.133	0.946	2,689.192
0.047	2,445.933	0.147	2,472.992	0.247	2,500.051	0.347	2,527.109	0.447	2,554.168	0.547	2,581.227	0.647	2,608.286	0.747	2,635.345	0.847	2,662.403	0.947	2,689.462
0.048	2,446.204	0.148	2,473.262	0.248	2,500.321	0.348	2,527.380	0.448	2,554.439	0.548	2,581.498	0.648	2,608.556	0.748	2,635.615	0.848	2,662.674	0.948	2,689.733
0.049	2,446.474	0.149	2,473.533	0.249	2,500.592	0.349	2,527.650	0.449	2,554.709	0.549	2,581.768	0.649	2,608.827	0.749	2,635.886	0.849	2,662.944	0.949	2,690.003
0.050	2,446.745	0.150	2,473.803	0.250	2,500.862	0.350	2,527.921	0.450	2,554.980	0.550	2,582.039	0.650	2,609.097	0.750	2,636.156	0.850	2,663.215	0.950	2,690.274
0.051	2,447.015	0.151	2,474.074	0.251	2,501.133	0.351	2,528.192	0.451	2,555.250	0.551	2,582.309	0.651	2,609.368	0.751	2,636.427	0.851	2,663.486	0.951	2,690.544
0.052	2,447.286	0.152	2,474.345	0.252	2,501.403	0.352	2,528.462	0.452	2,555.521	0.552	2,582.580	0.652	2,609.639	0.752	2,636.697	0.852	2,663.756	0.952	2,690.815
0.053	2,447.556	0.153	2,474.615	0.253	2,501.674	0.353	2,528.733	0.453	2,555.792	0.553	2,582.850	0.653	2,609.909	0.753	2,636.968	0.853	2,664.027	0.953	2,691.086
0.054	2,447.827	0.154	2,474.886	0.254	2,501.945	0.354	2,529.003	0.454	2,556.062	0.554	2,583.121	0.654	2,610.180	0.754	2,637.239	0.854	2,664.297	0.954	2,691.356
0.055	2,448.098	0.155	2,475.156	0.255	2,502.215	0.355	2,529.274	0.455	2,556.333	0.555	2,583.392	0.655	2,610.450	0.755	2,637.509	0.855	2,664.568	0.955	2,691.627
0.056	2,448.368	0.156	2,475.427	0.256	2,502.486	0.356	2,529.545	0.456	2,556.603	0.556	2,583.662	0.656	2,610.721	0.756	2,637.780	0.856	2,664.839	0.956	2,691.897
0.057	2,448.639	0.157	2,475.698	0.257	2,502.756	0.357	2,529.815	0.457	2,556.874	0.557	2,583.933	0.657	2,610.992	0.757	2,638.050	0.857	2,665.109	0.957	2,692.168
0.058	2,448.909	0.158	2,475.968	0.258	2,503.027	0.358	2,530.086	0.458	2,557.145	0.558	2,584.203	0.658	2,611.262	0.758	2,638.321	0.858	2,665.380	0.958	2,692.439
0.059	2,449.180	0.159	2,476.239	0.259	2,503.298	0.359	2,530.356	0.459	2,557.415	0.559	2,584.474	0.659	2,611.533	0.759	2,638.592	0.859	2,665.650	0.959	2,692.709
0.060	2,449.451	0.160	2,476.509	0.260	2,503.568	0.360	2,530.627	0.460	2,557.686	0.560	2,584.745	0.660	2,611.803	0.760	2,638.862	0.860	2,665.921	0.960	2,692.980
0.061	2,449.721	0.161	2,476.780	0.261	2,503.839	0.361	2,530.898	0.461	2,557.956	0.561	2,585.015	0.661	2,612.074	0.761	2,639.133	0.861	2,666.192	0.961	2,693.250
0.062	2,449.992	0.162	2,477.051	0.262	2,504.109	0.362	2,531.168	0.462	2,558.227	0.562	2,585.286	0.662	2,612.345	0.762	2,639.403	0.862	2,666.462	0.962	2,693.521
0.063	2,450.262	0.163	2,477.321	0.263	2,504.380	0.363	2,531.439	0.463	2,558.498	0.563	2,585.556	0.663	2,612.615	0.763	2,639.674	0.863	2,666.733	0.963	2,693.792
0.064	2,450.533	0.164	2,477.592	0.264	2,504.651	0.364	2,531.709	0.464	2,558.768	0.564	2,585.827	0.664	2,612.886	0.764	2,639.945	0.864	2,667.003	0.964	2,694.062
0.065	2,450.804	0.165	2,477.862	0.265	2,504.921	0.365	2,531.980	0.465	2,559.039	0.565	2,586.098	0.665	2,613.156	0.765	2,640.215	0.865	2,667.274	0.965	2,694.333
0.066	2,451.074	0.166	2,478.133	0.266	2,505.192	0.366	2,532.250	0.466	2,559.309	0.566	2,586.368	0.666	2,613.427	0.766	2,640.486	0.866	2,667.544	0.966	2,694.603
0.067	2,451.345	0.167	2,478.403	0.267	2,505.462	0.367	2,532.521	0.467	2,559.580	0.567	2,586.639	0.667	2,613.697	0.767	2,640.756	0.867	2,667.815	0.967	2,694.874
0.068	2,451.615	0.168	2,478.674	0.268	2,505.733	0.368	2,532.792	0.468	2,559.850	0.568	2,586.909	0.668	2,613.968	0.768	2,641.027	0.868	2,668.086	0.968	2,695.144
0.069	2,451.886	0.169	2,478.945	0.269	2,506.003	0.369	2,533.062	0.469	2,560.121	0.569	2,587.180	0.669	2,614.239	0.769	2,641.297	0.869	2,668.356	0.969	2,695.415
0.070	2,452.156	0.170	2,479.215	0.270	2,506.274	0.370	2,533.333	0.470	2,560.392	0.570	2,587.450	0.670	2,614.509	0.770	2,641.568	0.870	2,668.627	0.970	2,695.686
0.071	2,452.427	0.171	2,479.486	0.271	2,506.545	0.371	2,533.603	0.471	2,560.662	0.571	2,587.721	0.671	2,614.780	0.771	2,641.839	0.871	2,668.897	0.971	2,695.956
0.072	2,452.698	0.172	2,479.756	0.272	2,506.815	0.372	2,533.874	0.472	2,560.933	0.572	2,587.992	0.672	2,615.050	0.772	2,642.109	0.872	2,669.168	0.972	2,696.227
0.073	2,452.968	0.173	2,480.027	0.273	2,507.086	0.373	2,534.145	0.473	2,561.203	0.573	2,588.262	0.673	2,615.321	0.773	2,642.380	0.873	2,669.439	0.973	2,696.497
0.074	2,453.239	0.174	2,480.298	0.274	2,507.356	0.374	2,534.415	0.474	2,561.474	0.574	2,588.533	0.674	2,615.592	0.774	2,642.650	0.874	2,669.709	0.974	2,696.768
0.075	2,453.509	0.175	2,480.568	0.275	2,507.627	0.375	2,534.686	0.475	2,561.745	0.575	2,588.803	0.675	2,615.862	0.775	2,642.921	0.875	2,669.980	0.975	2,697.039
0.076	2,453.780	0.176	2,480.839	0.276	2,507.898	0.376	2,534.956	0.476	2,562.015	0.576	2,589.074	0.676	2,616.133	0.776	2,643.192	0.876	2,670.250	0.976	2,697.309
0.077	2,454.051	0.177	2,481.109	0.277	2,508.168	0.377	2,535.227	0.477	2,562.286	0.577	2,589.345	0.677	2,616.403	0.777	2,643.462	0.877	2,670.521	0.977	2,697.580
0.078	2,454.321	0.178	2,481.380	0.278	2,508.439	0.378	2,535.498	0.478	2,562.556	0.578	2,589.615	0.678	2,616.674	0.778	2,643.733	0.878	2,670.792	0.978	2,697.850
0.079	2,454.592	0.179	2,481.651	0.279	2,508.709	0.379	2,535.768	0.479	2,562.827	0.579	2,589.886	0.679	2,616.945	0.779	2,644.003	0.879	2,671.062	0.979	2,698.121
0.080	2,454.862	0.180	2,481.921	0.280	2,508.980	0.380	2,536.039	0.480	2,563.098	0.580	2,590.156	0.680	2,617.215	0.780	2,644.274	0.880	2,671.333	0.980	2,698.392
0.081	2,455.133	0.181	2,482.192	0.281	2,509.251	0.381	2,536.309	0.481	2,563.368	0.581	2,590.427	0.681	2,617.486	0.781	2,644.545	0.881	2,671.603	0.981	2,698.662
0.082	2,455.404	0.182	2,482.462	0.282	2,509.521	0.382	2,536.580	0.482	2,563.639	0.582	2,590.698	0.682	2,617.756	0.782	2,644.815	0.882	2,671.874	0.982	2,698.933
0.083	2,455.674	0.183	2,482.733	0.283	2,509.792	0.383	2,536.850	0.483	2,563.909	0.583	2,590.968	0.683	2,618.027	0.783	2,645.086	0.883	2,672.144	0.983	2,699.203
0.084	2,455.945	0.184	2,483.003	0.284	2,510.062	0.384	2,537.121	0.484	2,564.180	0.584	2,591.239	0.684	2,618.297	0.784	2,645.356	0.884	2,672.415	0.984	2,699.474
0.085	2,456.215	0.185	2,483.274	0.285	2,510.333	0.385	2,537.392	0.485	2,564.450	0.585	2,591.509	0.685	2,618.568	0.785	2,645.627	0.885	2,672.686	0.985	2,699.744
0.086	2,456.486	0.186	2,483.545	0.286	2,510.603	0.386	2,537.662	0.486	2,564.721	0.586	2,591.780	0.686	2,618.839	0.786	2,645.897	0.886	2,672.956	0.986	2,700.015
0.087	2,456.756	0.187	2,483.815	0.287	2,510.874	0.387	2,537.933	0.487	2,564.992	0.587	2,592.050	0.687	2,619.109	0.787	2,646.168	0.887	2,673.227	0.987	2,700.286
0.088	2,457.027	0.188	2,484.086	0.288	2,511.145	0.388	2,538.203	0.488	2,565.262	0.588	2,592.321	0.688	2,619.380	0.788	2,646.439	0.888	2,673.497	0.988	2,700.556
0.089	2,457.298	0.189	2,484.356	0.289	2,511.415	0.389	2,538.474	0.489	2,565.533	0.589	2,592.592	0.689	2,619.650	0.789	2,646.709	0.889	2,673.768	0.989	2,700.827
0.090	2,457.568	0.190	2,484.627	0.290	2,511.686	0.390	2,538.745	0.490	2,565.803	0.590	2,592.862	0.690	2,619.921	0.790	2,646.980	0.890	2,674.039	0.990	2,701.097
0.091	2,457.839	0.191	2,484.898	0.291	2,511.956	0.391	2,539.015	0.491	2,566.074	0.591	2,593.133	0.691	2,620.192	0.791	2,647.250	0.891	2,674.309	0.991	2,701.368
0.092	2,458.109	0.192	2,485.168	0.292	2,512.227	0.392	2,539.286	0.492	2,566.345	0.592	2,593.403	0.692	2,620.462	0.792	2,647.521	0.892	2,674.580	0.992	2,701.639
0.093	2,458.380	0.193	2,485.439	0.293	2,512.498	0.393	2,539.556	0.493	2,566.615	0.593	2,593.674	0.693	2,620.733	0.793	2,647.792	0.893	2,674.850	0.993	2,701.909
0.094	2,458.651	0.194	2,485.709	0.294	2,512.768	0.394	2,539.827	0.494	2,566.886	0.594	2,593.945	0.694	2,621.003	0.794	2,648.062	0.894	2,675.121	0.994	2,702.180
0.095	2,458.921	0.195	2,485.980	0.295	2,513.039	0.395	2,540.098	0.495	2,567.156	0.595	2,594.215	0.695	2,621.274	0.795	2,648.333	0.895	2,675.392	0.995	2,702.450
0.096	2,459.192	0.196	2,486.251	0.296	2,513.309	0.396	2,540.368	0.496	2,567.427	0.596	2,594.486	0.696	2,621.545	0.796	2,648.603	0.896	2,675.662	0.996	2,702.721
0.097	2,459.462	0.197	2,486.521	0.297	2,513.580	0.397	2,540.639	0.497	2,567.698	0.597	2,594.756	0.697	2,621.815	0.797	2,648.874	0.897	2,675.933	0.997	2,702.992
0.098	2,459.733	0.198	2,486.792	0.298	2,513.851	0.398	2,540.909	0.498	2,567.968	0.598	2,595.027	0.698	2,622.086	0.798	2,649.145	0.898	2,676.203	0.998	2,703.262
0.099	2,460.004	0.199	2,487.062	0.299	2,514.121	0.399	2,541.180	0.499	2,568.239	0.599	2,595.297	0.699	2,622.356	0.799	2,649.415	0.899	2,676.474	0.999	2,703.533

DATE STRAPPED: 09/19/17 BY: RJ
DATE COMPUTED: 09/26/17 BY: WLH
DATE ISSUED: 09/26/17

AMSPEC

Meliadine
Portal #1
Item 20 - Final - Datasheet

Tank No. 3
INNAGE TABLE

Calibration@AmSpecGroup.com

CAPACITIES GIVEN IN CUBIC METERS

GAUGE HEIGHT: 11.443 M

mm	10 M	mm	10 M	mm	10 M	mm	10 M	mm	10 M	mm	10 M	mm	10 M	mm	10 M	mm	10 M	mm	10 M
0.000	2,703.803	0.100	2,730.862	0.200	2,757.921	0.300	2,784.980	0.400	2,812.038	0.500	2,839.097	0.600	2,866.156	0.700	2,893.215	0.800	2,920.274	0.900	2,947.332
0.001	2,704.074	0.101	2,731.133	0.201	2,758.191	0.301	2,785.250	0.401	2,812.309	0.501	2,839.368	0.601	2,866.427	0.701	2,893.485	0.801	2,920.544	0.901	2,947.603
0.002	2,704.344	0.102	2,731.403	0.202	2,758.462	0.302	2,785.521	0.402	2,812.580	0.502	2,839.638	0.602	2,866.697	0.702	2,893.756	0.802	2,920.815	0.902	2,947.874
0.003	2,704.615	0.103	2,731.674	0.203	2,758.733	0.303	2,785.791	0.403	2,812.850	0.503	2,839.909	0.603	2,866.968	0.703	2,894.027	0.803	2,921.085	0.903	2,948.144
0.004	2,704.886	0.104	2,731.944	0.204	2,759.003	0.304	2,786.062	0.404	2,813.121	0.504	2,840.180	0.604	2,867.238	0.704	2,894.297	0.804	2,921.356	0.904	2,948.415
0.005	2,705.156	0.105	2,732.215	0.205	2,759.274	0.305	2,786.333	0.405	2,813.391	0.505	2,840.450	0.605	2,867.509	0.705	2,894.568	0.805	2,921.627	0.905	2,948.685
0.006	2,705.427	0.106	2,732.486	0.206	2,759.544	0.306	2,786.603	0.406	2,813.662	0.506	2,840.721	0.606	2,867.780	0.706	2,894.838	0.806	2,921.897	0.906	2,948.956
0.007	2,705.697	0.107	2,732.756	0.207	2,759.815	0.307	2,786.874	0.407	2,813.933	0.507	2,840.991	0.607	2,868.050	0.707	2,895.109	0.807	2,922.168	0.907	2,949.227
0.008	2,705.968	0.108	2,733.027	0.208	2,760.086	0.308	2,787.144	0.408	2,814.203	0.508	2,841.262	0.608	2,868.321	0.708	2,895.380	0.808	2,922.438	0.908	2,949.497
0.009	2,706.239	0.109	2,733.297	0.209	2,760.356	0.309	2,787.415	0.409	2,814.474	0.509	2,841.533	0.609	2,868.591	0.709	2,895.650	0.809	2,922.709	0.909	2,949.768
0.010	2,706.509	0.110	2,733.568	0.210	2,760.627	0.310	2,787.686	0.410	2,814.744	0.510	2,841.803	0.610	2,868.862	0.710	2,895.921	0.810	2,922.980	0.910	2,950.038
0.011	2,706.780	0.111	2,733.839	0.211	2,760.897	0.311	2,787.956	0.411	2,815.015	0.511	2,842.074	0.611	2,869.133	0.711	2,896.191	0.811	2,923.250	0.911	2,950.309
0.012	2,707.050	0.112	2,734.109	0.212	2,761.168	0.312	2,788.227	0.412	2,815.286	0.512	2,842.344	0.612	2,869.403	0.712	2,896.462	0.812	2,923.521	0.912	2,950.580
0.013	2,707.321	0.113	2,734.380	0.213	2,761.439	0.313	2,788.497	0.413	2,815.556	0.513	2,842.615	0.613	2,869.674	0.713	2,896.733	0.813	2,923.791	0.913	2,950.850
0.014	2,707.592	0.114	2,734.650	0.214	2,761.709	0.314	2,788.768	0.414	2,815.827	0.514	2,842.886	0.614	2,869.944	0.714	2,897.003	0.814	2,924.062	0.914	2,951.121
0.015	2,707.862	0.115	2,734.921	0.215	2,761.980	0.315	2,789.038	0.415	2,816.097	0.515	2,843.156	0.615	2,870.215	0.715	2,897.274	0.815	2,924.332	0.915	2,951.391
0.016	2,708.133	0.116	2,735.191	0.216	2,762.250	0.316	2,789.309	0.416	2,816.368	0.516	2,843.427	0.616	2,870.485	0.716	2,897.544	0.816	2,924.603	0.916	2,951.662
0.017	2,708.403	0.117	2,735.462	0.217	2,762.521	0.317	2,789.580	0.417	2,816.638	0.517	2,843.697	0.617	2,870.756	0.717	2,897.815	0.817	2,924.874	0.917	2,951.932
0.018	2,708.674	0.118	2,735.733	0.218	2,762.791	0.318	2,789.850	0.418	2,816.909	0.518	2,843.968	0.618	2,871.027	0.718	2,898.085	0.818	2,925.144	0.918	2,952.203
0.019	2,708.944	0.119	2,736.003	0.219	2,763.062	0.319	2,790.121	0.419	2,817.180	0.519	2,844.238	0.619	2,871.297	0.719	2,898.356	0.819	2,925.415	0.919	2,952.474
0.020	2,709.215	0.120	2,736.274	0.220	2,763.333	0.320	2,790.391	0.420	2,817.450	0.520	2,844.509	0.620	2,871.568	0.720	2,898.627	0.820	2,925.685	0.920	2,952.744
0.021	2,709.486	0.121	2,736.544	0.221	2,763.603	0.321	2,790.662	0.421	2,817.721	0.521	2,844.780	0.621	2,871.838	0.721	2,898.897	0.821	2,925.956	0.921	2,953.015
0.022	2,709.756	0.122	2,736.815	0.222	2,763.874	0.322	2,790.933	0.422	2,817.991	0.522	2,845.050	0.622	2,872.109	0.722	2,899.168	0.822	2,926.227	0.922	2,953.285
0.023	2,710.027	0.123	2,737.086	0.223	2,764.144	0.323	2,791.203	0.423	2,818.262	0.523	2,845.321	0.623	2,872.380	0.723	2,899.438	0.823	2,926.497	0.923	2,953.556
0.024	2,710.297	0.124	2,737.356	0.224	2,764.415	0.324	2,791.474	0.424	2,818.533	0.524	2,845.591	0.624	2,872.650	0.724	2,899.709	0.824	2,926.768	0.924	2,953.827
0.025	2,710.568	0.125	2,737.627	0.225	2,764.686	0.325	2,791.744	0.425	2,818.803	0.525	2,845.862	0.625	2,872.921	0.725	2,899.980	0.825	2,927.038	0.925	2,954.097
0.026	2,710.839	0.126	2,737.897	0.226	2,764.956	0.326	2,792.015	0.426	2,819.074	0.526	2,846.133	0.626	2,873.191	0.726	2,900.250	0.826	2,927.309	0.926	2,954.368
0.027	2,711.109	0.127	2,738.168	0.227	2,765.227	0.327	2,792.286	0.427	2,819.344	0.527	2,846.403	0.627	2,873.462	0.727	2,900.521	0.827	2,927.580	0.927	2,954.638
0.028	2,711.380	0.128	2,738.439	0.228	2,765.497	0.328	2,792.556	0.428	2,819.615	0.528	2,846.674	0.628	2,873.733	0.728	2,900.791	0.828	2,927.850	0.928	2,954.909
0.029	2,711.650	0.129	2,738.709	0.229	2,765.768	0.329	2,792.827	0.429	2,819.886	0.529	2,846.944	0.629	2,874.003	0.729	2,901.062	0.829	2,928.121	0.929	2,955.180
0.030	2,711.921	0.130	2,738.980	0.230	2,766.039	0.330	2,793.097	0.430	2,820.156	0.530	2,847.215	0.630	2,874.274	0.730	2,901.333	0.830	2,928.391	0.930	2,955.450
0.031	2,712.192	0.131	2,739.250	0.231	2,766.309	0.331	2,793.368	0.431	2,820.427	0.531	2,847.486	0.631	2,874.544	0.731	2,901.603	0.831	2,928.662	0.931	2,955.721
0.032	2,712.462	0.132	2,739.521	0.232	2,766.580	0.332	2,793.638	0.432	2,820.697	0.532	2,847.756	0.632	2,874.815	0.732	2,901.874	0.832	2,928.932	0.932	2,955.991
0.033	2,712.733	0.133	2,739.791	0.233	2,766.850	0.333	2,793.909	0.433	2,820.968	0.533	2,848.027	0.633	2,875.085	0.733	2,902.144	0.833	2,929.203	0.933	2,956.262
0.034	2,713.003	0.134	2,740.062	0.234	2,767.121	0.334	2,794.180	0.434	2,821.238	0.534	2,848.297	0.634	2,875.356	0.734	2,902.415	0.834	2,929.474	0.934	2,956.532
0.035	2,713.274	0.135	2,740.333	0.235	2,767.391	0.335	2,794.450	0.435	2,821.509	0.535	2,848.568	0.635	2,875.627	0.735	2,902.685	0.835	2,929.744	0.935	2,956.803
0.036	2,713.544	0.136	2,740.603	0.236	2,767.662	0.336	2,794.721	0.436	2,821.780	0.536	2,848.838	0.636	2,875.897	0.736	2,902.956	0.836	2,930.015	0.936	2,957.074
0.037	2,713.815	0.137	2,740.874	0.237	2,767.933	0.337	2,794.991	0.437	2,822.050	0.537	2,849.109	0.637	2,876.168	0.737	2,903.227	0.837	2,930.285	0.937	2,957.344
0.038	2,714.086	0.138	2,741.144	0.238	2,768.203	0.338	2,795.262	0.438	2,822.321	0.538	2,849.380	0.638	2,876.438	0.738	2,903.497	0.838	2,930.556	0.938	2,957.615
0.039	2,714.356	0.139	2,741.415	0.239	2,768.474	0.339	2,795.533	0.439	2,822.591	0.539	2,849.650	0.639	2,876.709	0.739	2,903.768	0.839	2,930.827	0.939	2,957.885
0.040	2,714.627	0.140	2,741.686	0.240	2,768.744	0.340	2,795.803	0.440	2,822.862	0.540	2,849.921	0.640	2,876.980	0.740	2,904.038	0.840	2,931.097	0.940	2,958.156
0.041	2,714.897	0.141	2,741.956	0.241	2,769.015	0.341	2,796.074	0.441	2,823.133	0.541	2,850.191	0.641	2,877.250	0.741	2,904.309	0.841	2,931.368	0.941	2,958.427
0.042	2,715.168	0.142	2,742.227	0.242	2,769.286	0.342	2,796.344	0.442	2,823.403	0.542	2,850.462	0.642	2,877.521	0.742	2,904.580	0.842	2,931.638	0.942	2,958.697
0.043	2,715.439	0.143	2,742.497	0.243	2,769.556	0.343	2,796.615	0.443	2,823.674	0.543	2,850.733	0.643	2,877.791	0.743	2,904.850	0.843	2,931.909	0.943	2,958.968
0.044	2,715.709	0.144	2,742.768	0.244	2,769.827	0.344	2,796.886	0.444	2,823.944	0.544	2,851.003	0.644	2,878.062	0.744	2,905.121	0.844	2,932.180	0.944	2,959.238
0.045	2,715.980	0.145	2,743.039	0.245	2,770.097	0.345	2,797.156	0.445	2,824.215	0.545	2,851.274	0.645	2,878.333	0.745	2,905.391	0.845	2,932.450	0.945	2,959.509
0.046	2,716.250	0.146	2,743.309	0.246	2,770.368	0.346	2,797.427	0.446	2,824.486	0.546	2,851.544	0.646	2,878.603	0.746	2,905.662	0.846	2,932.721	0.946	2,959.780
0.047	2,716.521	0.147	2,743.580	0.247	2,770.639	0.347	2,797.697	0.447	2,824.756	0.547	2,851.815	0.647	2,878.874	0.747	2,905.933	0.847	2,932.991	0.947	2,960.050
0.048	2,716.792	0.148	2,743.850	0.248	2,770.909	0.348	2,797.968	0.448	2,825.027	0.548	2,852.086	0.648	2,879.144	0.748	2,906.203	0.848	2,933.262	0.948	2,960.321
0.049	2,717.062	0.149	2,744.121	0.249	2,771.180	0.349	2,798.238	0.449	2,825.297	0.549	2,852.356	0.649	2,879.415	0.749	2,906.474	0.849	2,933.532	0.949	2,960.591
0.050	2,717.333	0.150	2,744.391	0.250	2,771.450	0.350	2,798.509	0.450	2,825.568	0.550	2,852.627	0.650	2,879.685	0.750	2,906.744	0.850	2,933.803	0.950	2,960.862
0.051	2,717.603	0.151	2,744.662	0.251	2,771.721	0.351	2,798.780	0.451	2,825.838	0.551	2,852.897	0.651	2,879.956	0.751	2,907.015	0.851	2,934.074	0.951	2,961.132
0.052	2,717.874	0.152	2,744.933	0.252	2,771.991	0.352	2,799.050	0.452	2,826.109	0.552	2,853.168	0.652	2,880.227	0.752	2,907.285	0.852	2,934.344	0.952	2,961.403
0.053	2,718.144	0.153	2,745.203	0.253	2,772.262	0.353	2,799.321	0.453	2,826.380	0.553	2,853.438	0.653	2,880.497	0.753	2,907.556	0.853	2,934.615	0.953	2,961.674
0.054	2,718.415	0.154	2,745.474	0.254	2,772.533	0.354	2,799.591	0.454	2,826.650	0.554	2,853.709	0.654	2,880.768	0.754	2,907.827	0.854	2,934.885	0.954	2,961.944
0.055	2,718.686	0.155	2,745.744	0.255	2,772.803	0.355	2,799.862	0.455	2,826.921	0.555	2,853.980	0.655	2,881.038	0.755	2,908.097	0.855	2,935.156	0.955	2,962.215
0.056	2,718.956	0.156	2,746.015	0.256	2,773.074	0.356	2,800.133	0.456	2,827.191	0.556	2,854.250	0.656	2,881.309	0.756	2,908.368	0.856	2,935.427	0.956	2,962.485
0.057	2,719.227	0.157	2,746.286	0.257	2,773.344	0.357	2,800.403	0.457	2,827.462	0.557	2,854.521	0.657	2,881.580	0.757	2,908.638	0.857	2,935.697	0.957	2,962.756
0.058	2,719.497	0.158	2,746.556	0.258	2,773.615	0.358	2,800.674	0.458	2,827.733	0.558	2,854.791	0.658	2,881.850	0.758	2,908.909	0.858	2,935.968	0.958	2,963.027
0.059	2,719.768	0.159	2,746.827	0.259	2,773.886	0.359	2,800.944	0.459	2,828.003	0.559	2,855.062	0.659	2,882.121	0.759	2,909.180	0.859	2,936.238	0.959	2,963.297
0.060	2,720.039	0.160	2,747.097	0.260	2,774.156	0.360	2,801.215	0.460	2,828.274	0.560	2,855.333	0.660	2,882.391	0.760	2,909.450	0.860	2,936.509	0.960	2,963.568
0.061	2,720.309	0.161	2,747.368	0.261	2,774.427	0.361	2,801.486	0.461	2,828.544	0.561	2,855.603	0.661	2,882.662	0.761	2,909.721	0.861	2,936.780	0.961	2,963.838
0.062	2,720.580	0.162	2,747.639	0.262	2,774.697	0.362	2,801.756	0.462	2,828.815	0.562	2,855.874	0.662	2,882.933	0.762	2,909.991	0.862	2,937.050	0.962	2,964.109
0.063	2,720.850	0.163	2,747.909	0.263	2,774.968	0.363	2,802.027	0.463	2,829.086	0.563	2,856.144	0.663	2,883.203	0.763	2,910.262	0.863	2,937.321	0.963	2,964.380
0.064	2,721.121	0.164	2,748.180	0.264	2,775.239	0.364	2,802.297	0.464	2,829.356	0.564	2,856.415	0.664	2,883.474	0.764	2,910.533	0.864	2,937.591	0.964	2,964.650
0.065	2,721.392	0.165	2,748.450	0.265	2,775.509	0.365	2,802.568	0.465	2,829.627	0.565	2,856.685	0.665	2,883.744	0.765	2,910.803	0.865	2,937.862	0.965	2,964.921
0.066	2,721.662	0.166	2,748.721	0.266	2,775.780	0.366	2,802.838	0.466	2,829.897	0.566	2,856.956	0.666	2,884.015	0.766	2,911.074	0.866	2,938.132	0.966	2,965.191
0.067	2,721.933	0.167	2,748.991	0.267	2,776.050	0.367	2,803.109	0.467	2,830.168	0.567	2,857.227	0.667	2,884.285	0.767	2,911.344	0.867	2,938.403	0.967	2,965.462
0.068	2,722.203	0.168	2,749.262	0.268	2,776.321	0.368	2,803.380	0.468	2,830.438	0.568	2,857.497	0.668	2,884.556	0.768	2,911.615	0.868	2,938.674	0.968	2,965.732
0.069	2,722.474	0.169	2,749.533	0.269	2,776.591	0.369	2,803.650	0.469	2,830.709	0.569	2,857.768	0.669	2,884.827	0.769	2,911.885	0.869	2,938.944	0.969	2,966.003
0.070	2,722.744	0.170	2,749.803	0.270	2,776.862	0.370	2,803.921	0.470	2,830.980	0.570	2,858.038	0.670	2,885.097	0.770	2,912.156	0.870	2,939.215	0.970	2,966.274
0.071	2,723.015	0.171	2,750.074	0.271	2,777.133	0.371	2,804.191	0.471	2,831.250	0.571	2,858.309	0.671	2,885.368	0.771	2,912.427	0.871	2,939.485	0.971	2,966.544
0.072	2,723.286	0.172	2,750.344	0.272	2,777.403	0.372	2,804.462	0.472	2,831.521	0.572	2,858.580	0.672	2,885.638	0.772	2,912.697	0.872	2,939.756	0.972	2,966.815
0.073	2,723.556	0.173	2,750.615	0.273	2,777.674	0.373	2,804.733	0.473	2,831.791	0.573	2,858.850	0.673	2,885.909	0.773	2,912.968	0.873	2,940.027	0.973	2,967.085
0.074	2,723.827	0.174	2,750.886	0.274	2,777.944	0.374	2,805.003	0.474	2,832.062	0.574	2,859.121	0.674	2,886.180	0.774	2,913.238	0.874	2,940.297	0.974	2,967.356
0.075	2,724.097	0.175	2,751.156	0.275	2,778.215	0.375	2,805.274	0.475	2,832.333	0.575	2,859.391	0.675	2,886.450	0.775	2,913.509	0.875	2,940.568	0.975	2,967.627
0.076	2,724.368	0.176	2,751.427	0.276	2,778.486	0.376	2,805.544	0.476	2,832.603	0.576	2,859.662	0.676	2,886.721	0.776	2,913.780	0.876	2,940.838	0.976	2,967.897
0.077	2,724.639	0.177	2,751.697	0.277	2,778.756	0.377	2,805.815	0.477	2,832.874	0.577	2,859.933	0.677	2,886.991	0.777	2,914.050	0.877	2,941.109	0.977	2,968.168
0.078	2,724.909	0.178	2,751.968	0.278	2,779.027	0.378	2,806.086	0.478	2,833.144	0.578	2,860.203	0.678	2,887.262	0.778	2,914.321	0.878	2,941.380	0.978	2,968.438
0.079	2,725.180	0.179	2,752.239	0.279	2,779.297	0.379	2,806.356	0.479	2,833.415	0.579	2,860.474	0.679	2,887.533	0.779	2,914.591	0.879	2,941.650	0.979	2,968.709
0.080	2,725.450	0.180	2,752.509	0.280	2,779.568	0.380	2,806.627	0.480	2,833.686	0.580	2,860.744	0.680	2,887.803	0.780	2,914.862	0.880	2,941.921	0.980	2,968.980
0.081	2,725.721	0.181	2,752.780	0.281	2,779.839	0.381	2,806.897	0.481	2,833.956	0.581	2,861.015	0.681	2,888.074	0.781	2,915.133	0.881	2,942.191	0.981	2,969.250
0.082	2,725.991	0.182	2,753.050	0.282	2,780.109	0.382	2,807.168	0.482	2,834.227	0.582	2,861.285	0.682	2,888.344	0.782	2,915.403	0.882	2,942.462	0.982	2,969.521
0.083	2,726.262	0.183	2,753.321	0.283	2,780.380	0.383	2,807.438	0.483	2,834.497	0.583	2,861.556	0.683	2,888.615	0.783	2,915.674	0.883	2,942.732	0.983	2,969.791
0.084	2,726.533	0.184	2,753.591	0.284	2,780.650	0.384	2,807.709	0.484	2,834.768	0.584	2,861.827	0.684	2,888.885	0.784	2,915.944	0.884	2,943.003	0.984	2,970.062
0.085	2,726.803	0.185	2,753.862	0.285	2,780.921	0.385	2,807.980	0.485	2,835.038	0.585	2,862.097	0.685	2,889.156	0.785	2,916.215	0.885	2,943.274	0.985	2,970.332
0.086	2,727.074	0.186	2,754.133	0.286	2,781.191	0.386	2,808.250	0.486	2,835.309	0.586	2,862.368	0.686	2,889.427	0.786	2,916.485	0.886	2,943.544	0.986	2,970.603
0.087	2,727.344	0.187	2,754.403	0.287	2,781.462	0.387	2,808.521	0.487	2,835.580	0.587	2,862.638	0.687	2,889.697	0.787	2,916.756	0.887	2,943.815	0.987	2,970.874
0.088	2,727.615	0.188	2,754.674	0.288	2,781.733	0.388	2,808.791	0.488	2,835.850	0.588	2,862.909	0.688	2,889.968	0.788	2,917.027	0.888	2,944.085	0.988	2,971.144
0.089	2,727.886	0.189	2,754.944	0.289	2,782.003	0.389	2,809.062	0.489	2,836.121	0.589	2,863.180	0.689	2,890.238	0.789	2,917.297	0.889	2,944.356	0.989	2,971.415
0.090	2,728.156	0.190	2,755.215	0.290	2,782.274	0.390	2,809.333	0.490	2,836.391	0.590	2,863.450	0.690	2,890.509	0.790	2,917.568	0.890	2,944.627	0.990	2,971.685
0.091	2,728.427	0.191	2,755.486	0.291	2,782.544	0.391	2,809.603	0.491	2,836.662	0.591	2,863.721	0.691	2,890.780	0.791	2,917.838	0.891	2,944.897	0.991	2,971.956
0.092	2,728.697	0.192	2,755.756	0.292	2,782.815	0.392	2,809.874	0.492	2,836.933	0.592	2,863.991	0.692	2,891.050	0.792	2,918.109	0.892	2,945.168	0.992	2,972.227
0.093	2,728.968	0.193	2,756.027	0.293	2,783.086	0.393	2,810.144	0.493	2,837.203	0.593	2,864.262	0.693	2,891.321	0.793	2,918.380	0.893	2,945.438	0.993	2,972.497
0.094	2,729.239	0.194	2,756.297	0.294	2,783.356	0.394	2,810.415	0.494	2,837.474	0.594	2,864.533	0.694	2,891.591	0.794	2,918.650	0.894	2,945.709	0.994	2,972.768
0.095	2,729.509	0.195	2,756.568	0.295	2,783.627	0.395	2,810.686	0.495	2,837.744	0.595	2,864.803	0.695	2,891.862	0.795	2,918.921	0.895	2,945.980	0.995	2,973.038
0.096	2,729.780	0.196	2,756.839	0.296	2,783.897	0.396	2,810.956	0.496	2,838.015	0.596	2,865.074	0.696	2,892.133	0.796	2,919.191	0.896	2,946.250	0.996	2,973.309
0.097	2,730.050	0.197	2,757.109	0.297	2,784.168	0.397	2,811.227	0.497	2,838.286	0.597	2,865.344	0.697	2,892.403	0.797	2,919.462	0.897	2,946.521	0.997	2,973.580
0.098	2,730.321	0.198	2,757.380	0.298	2,784.439	0.398	2,811.497	0.498	2,838.556	0.598	2,865.615	0.698	2,892.674	0.798	2,919.732	0.898	2,946.791	0.998	2,973.850
0.099	2,730.591	0.199	2,757.650	0.299	2,784.709	0.399	2,811.768	0.499	2,838.827	0.599	2,865.885	0.699	2,892.944	0.799	2,920.003	0.899	2,947.062	0.999	2,974.121

DATE STRAPPED: 09/19/17 BY: RJ
DATE COMPUTED: 09/26/17 BY: WLH
DATE ISSUED: 09/26/17

AMSPEC

Meliadine
Portal #1
Item 20 - Final - Datasheet

Tank No. 3
INNAGE TABLE

Calibration@AmSpecGroup.com

CAPACITIES GIVEN IN CUBIC METERS — **GAUGE HEIGHT: 11.443 M**

mm	11 M	mm	11 M	mm	11 M	mm	11 M	mm	11 M	mm	11 M	mm	11 M	mm	11 M	mm	11 M	mm	11 M
0.000	2,974.391	0.100	3,001.450	0.200		0.300		0.400		0.500		0.600		0.700		0.800		0.900	
0.001	2,974.662	0.101	3,001.721	0.201		0.301		0.401		0.501		0.601		0.701		0.801		0.901	
0.002	2,974.932	0.102	3,001.991	0.202		0.302		0.402		0.502		0.602		0.702		0.802		0.902	
0.003	2,975.203	0.103	3,002.262	0.203		0.303		0.403		0.503		0.603		0.703		0.803		0.903	
0.004	2,975.474	0.104	3,002.532	0.204		0.304		0.404		0.504		0.604		0.704		0.804		0.904	
0.005	2,975.744	0.105	3,002.803	0.205		0.305		0.405		0.505		0.605		0.705		0.805		0.905	
0.006	2,976.015	0.106	3,003.074	0.206		0.306		0.406		0.506		0.606		0.706		0.806		0.906	
0.007	2,976.285	0.107	3,003.344	0.207		0.307		0.407		0.507		0.607		0.707		0.807		0.907	
0.008	2,976.556	0.108	3,003.615	0.208		0.308		0.408		0.508		0.608		0.708		0.808		0.908	
0.009	2,976.827	0.109	3,003.885	0.209		0.309		0.409		0.509		0.609		0.709		0.809		0.909	
0.010	2,977.097	0.110	3,004.156	0.210		0.310		0.410		0.510		0.610		0.710		0.810		0.910	
0.011	2,977.368	0.111	3,004.427	0.211		0.311		0.411		0.511		0.611		0.711		0.811		0.911	
0.012	2,977.638	0.112	3,004.697	0.212		0.312		0.412		0.512		0.612		0.712		0.812		0.912	
0.013	2,977.909	0.113	3,004.968	0.213		0.313		0.413		0.513		0.613		0.713		0.813		0.913	
0.014	2,978.180	0.114	3,005.238	0.214		0.314		0.414		0.514		0.614		0.714		0.814		0.914	
0.015	2,978.450	0.115	3,005.509	0.215		0.315		0.415		0.515		0.615		0.715		0.815		0.915	
0.016	2,978.721	0.116	3,005.779	0.216		0.316		0.416		0.516		0.616		0.716		0.816		0.916	
0.017	2,978.991	0.117	3,006.050	0.217		0.317		0.417		0.517		0.617		0.717		0.817		0.917	
0.018	2,979.262	0.118	3,006.321	0.218		0.318		0.418		0.518		0.618		0.718		0.818		0.918	
0.019	2,979.532	0.119	3,006.591	0.219		0.319		0.419		0.519		0.619		0.719		0.819		0.919	
0.020	2,979.803	0.120	3,006.862	0.220		0.320		0.420		0.520		0.620		0.720		0.820		0.920	
0.021	2,980.074	0.121	3,007.132	0.221		0.321		0.421		0.521		0.621		0.721		0.821		0.921	
0.022	2,980.344	0.122	3,007.403	0.222		0.322		0.422		0.522		0.622		0.722		0.822		0.922	
0.023	2,980.615	0.123	3,007.674	0.223		0.323		0.423		0.523		0.623		0.723		0.823		0.923	
0.024	2,980.885	0.124	3,007.944	0.224		0.324		0.424		0.524		0.624		0.724		0.824		0.924	
0.025	2,981.156	0.125	3,008.215	0.225		0.325		0.425		0.525		0.625		0.725		0.825		0.925	
0.026	2,981.427	0.126	3,008.485	0.226		0.326		0.426		0.526		0.626		0.726		0.826		0.926	
0.027	2,981.697	0.127	3,008.756	0.227		0.327		0.427		0.527		0.627		0.727		0.827		0.927	
0.028	2,981.968	0.128	3,009.027	0.228		0.328		0.428		0.528		0.628		0.728		0.828		0.928	
0.029	2,982.238	0.129	3,009.297	0.229		0.329		0.429		0.529		0.629		0.729		0.829		0.929	
0.030	2,982.509	0.130	3,009.568	0.230		0.330		0.430		0.530		0.630		0.730		0.830		0.930	
0.031	2,982.780	0.131	3,009.838	0.231		0.331		0.431		0.531		0.631		0.731		0.831		0.931	
0.032	2,983.050	0.132	3,010.109	0.232		0.332		0.432		0.532		0.632		0.732		0.832		0.932	
0.033	2,983.321	0.133	3,010.379	0.233		0.333		0.433		0.533		0.633		0.733		0.833		0.933	
0.034	2,983.591	0.134	3,010.650	0.234		0.334		0.434		0.534		0.634		0.734		0.834		0.934	
0.035	2,983.862	0.135	3,010.921	0.235		0.335		0.435		0.535		0.635		0.735		0.835		0.935	
0.036	2,984.132	0.136	3,011.191	0.236		0.336		0.436		0.536		0.636		0.736		0.836		0.936	
0.037	2,984.403	0.137	3,011.462	0.237		0.337		0.437		0.537		0.637		0.737		0.837		0.937	
0.038	2,984.674	0.1379	3,011.626	0.238		0.338		0.438		0.538		0.638		0.738		0.838		0.938	
0.039	2,984.944	0.139		0.239		0.339		0.439		0.539		0.639		0.739		0.839		0.939	
0.040	2,985.215	0.140		0.240		0.340		0.440		0.540		0.640		0.740		0.840		0.940	
0.041	2,985.485	0.141		0.241		0.341		0.441		0.541		0.641		0.741		0.841		0.941	
0.042	2,985.756	0.142		0.242		0.342		0.442		0.542		0.642		0.742		0.842		0.942	
0.043	2,986.027	0.143		0.243		0.343		0.443		0.543		0.643		0.743		0.843		0.943	
0.044	2,986.297	0.144		0.244		0.344		0.444		0.544		0.644		0.744		0.844		0.944	
0.045	2,986.568	0.145		0.245		0.345		0.445		0.545		0.645		0.745		0.845		0.945	
0.046	2,986.838	0.146		0.246		0.346		0.446		0.546		0.646		0.746		0.846		0.946	
0.047	2,987.109	0.147		0.247		0.347		0.447		0.547		0.647		0.747		0.847		0.947	
0.048	2,987.379	0.148		0.248		0.348		0.448		0.548		0.648		0.748		0.848		0.948	
0.049	2,987.650	0.149		0.249		0.349		0.449		0.549		0.649		0.749		0.849		0.949	
0.050	2,987.921	0.150		0.250		0.350		0.450		0.550		0.650		0.750		0.850		0.950	
0.051	2,988.191	0.151		0.251		0.351		0.451		0.551		0.651		0.751		0.851		0.951	
0.052	2,988.462	0.152		0.252		0.352		0.452		0.552		0.652		0.752		0.852		0.952	
0.053	2,988.732	0.153		0.253		0.353		0.453		0.553		0.653		0.753		0.853		0.953	
0.054	2,989.003	0.154		0.254		0.354		0.454		0.554		0.654		0.754		0.854		0.954	
0.055	2,989.274	0.155		0.255		0.355		0.455		0.555		0.655		0.755		0.855		0.955	
0.056	2,989.544	0.156		0.256		0.356		0.456		0.556		0.656		0.756		0.856		0.956	
0.057	2,989.815	0.157		0.257		0.357		0.457		0.557		0.657		0.757		0.857		0.957	
0.058	2,990.085	0.158		0.258		0.358		0.458		0.558		0.658		0.758		0.858		0.958	
0.059	2,990.356	0.159		0.259		0.359		0.459		0.559		0.659		0.759		0.859		0.959	
0.060	2,990.627	0.160		0.260		0.360		0.460		0.560		0.660		0.760		0.860		0.960	
0.061	2,990.897	0.161		0.261		0.361		0.461		0.561		0.661		0.761		0.861		0.961	
0.062	2,991.168	0.162		0.262		0.362		0.462		0.562		0.662		0.762		0.862		0.962	
0.063	2,991.438	0.163		0.263		0.363		0.463		0.563		0.663		0.763		0.863		0.963	
0.064	2,991.709	0.164		0.264		0.364		0.464		0.564		0.664		0.764		0.864		0.964	
0.065	2,991.979	0.165		0.265		0.365		0.465		0.565		0.665		0.765		0.865		0.965	
0.066	2,992.250	0.166		0.266		0.366		0.466		0.566		0.666		0.766		0.866		0.966	
0.067	2,992.521	0.167		0.267		0.367		0.467		0.567		0.667		0.767		0.867		0.967	
0.068	2,992.791	0.168		0.268		0.368		0.468		0.568		0.668		0.768		0.868		0.968	
0.069	2,993.062	0.169		0.269		0.369		0.469		0.569		0.669		0.769		0.869		0.969	
0.070	2,993.332	0.170		0.270		0.370		0.470		0.570		0.670		0.770		0.870		0.970	
0.071	2,993.603	0.171		0.271		0.371		0.471		0.571		0.671		0.771		0.871		0.971	
0.072	2,993.874	0.172		0.272		0.372		0.472		0.572		0.672		0.772		0.872		0.972	
0.073	2,994.144	0.173		0.273		0.373		0.473		0.573		0.673		0.773		0.873		0.973	
0.074	2,994.415	0.174		0.274		0.374		0.474		0.574		0.674		0.774		0.874		0.974	
0.075	2,994.685	0.175		0.275		0.375		0.475		0.575		0.675		0.775		0.875		0.975	
0.076	2,994.956	0.176		0.276		0.376		0.476		0.576		0.676		0.776		0.876		0.976	
0.077	2,995.227	0.177		0.277		0.377		0.477		0.577		0.677		0.777		0.877		0.977	
0.078	2,995.497	0.178		0.278		0.378		0.478		0.578		0.678		0.778		0.878		0.978	
0.079	2,995.768	0.179		0.279		0.379		0.479		0.579		0.679		0.779		0.879		0.979	
0.080	2,996.038	0.180		0.280		0.380		0.480		0.580		0.680		0.780		0.880		0.980	
0.081	2,996.309	0.181		0.281		0.381		0.481		0.581		0.681		0.781		0.881		0.981	
0.082	2,996.579	0.182		0.282		0.382		0.482		0.582		0.682		0.782		0.882		0.982	
0.083	2,996.850	0.183		0.283		0.383		0.483		0.583		0.683		0.783		0.883		0.983	
0.084	2,997.121	0.184		0.284		0.384		0.484		0.584		0.684		0.784		0.884		0.984	
0.085	2,997.391	0.185		0.285		0.385		0.485		0.585		0.685		0.785		0.885		0.985	
0.086	2,997.662	0.186		0.286		0.386		0.486		0.586		0.686		0.786		0.886		0.986	
0.087	2,997.932	0.187		0.287		0.387		0.487		0.587		0.687		0.787		0.887		0.987	
0.088	2,998.203	0.188		0.288		0.388		0.488		0.588		0.688		0.788		0.888		0.988	
0.089	2,998.474	0.189		0.289		0.389		0.489		0.589		0.689		0.789		0.889		0.989	
0.090	2,998.744	0.190		0.290		0.390		0.490		0.590		0.690		0.790		0.890		0.990	
0.091	2,999.015	0.191		0.291		0.391		0.491		0.591		0.691		0.791		0.891		0.991	
0.092	2,999.285	0.192		0.292		0.392		0.492		0.592		0.692		0.792		0.892		0.992	
0.093	2,999.556	0.193		0.293		0.393		0.493		0.593		0.693		0.793		0.893		0.993	
0.094	2,999.827	0.194		0.294		0.394		0.494		0.594		0.694		0.794		0.894		0.994	
0.095	3,000.097	0.195		0.295		0.395		0.495		0.595		0.695		0.795		0.895		0.995	
0.096	3,000.368	0.196		0.296		0.396		0.496		0.596		0.696		0.796		0.896		0.996	
0.097	3,000.638	0.197		0.297		0.397		0.497		0.597		0.697		0.797		0.897		0.997	
0.098	3,000.909	0.198		0.298		0.398		0.498		0.598		0.698		0.798		0.898		0.998	
0.099	3,001.179	0.199		0.299		0.399		0.499		0.599		0.699		0.799		0.899		0.999	

DATE STRAPPED: 09/19/17 BY: RJ
DATE COMPUTED: 09/26/17 BY: WLH
DATE ISSUED: 09/26/17

AMSPEC

APPENDIX I

Inspection Report – Handover Package for Tank #5

Handover Package Tank 5 – 250CUM

AEM PURCHASE ORDER: OC-568510
AEM PACKAGE NO.: 6515-C-260-002
PACKAGE TITLE: FUEL TANKS (SUPPLY & INSTALL)
TANK LOCATION: MELIADINE PORTAL #1

ICL Project No.: 295
ICL Document No.: 295-H5
AEM Document No.: 6515-C-260-002-141-QCR-0005_Sub001
Revision: 1

OWNER:

Agnico Eagle Mines Limited
145 King St. East, Suite 400,
Toronto, Ontario M5C 2Y7

GENERAL CONTRACTOR:

Inukshuk Construction Limited
PO Box 654
Rankin Inlet NU
X0C 0G0

Contact: David Mosher

PH: (867) 645-4030
FX: (902) 429-7762

Submitted by: Inukshuk Construction Limited
Submitted: November 15, 2017

AGNICO EAGLE

Vendor Document Status

1 ☐	Proceed to next submission and status.
2 ☐	Proceed with exceptions as noted to next submission and status.
3 ☐	Do not proceed. Revise as noted and resubmit next submission and status.
4 ☑	Complete, no further submission required.

By: Date:

Review and authorization to fabricate are only for general conformance with the design concept of the Project as expressed in the Contract Documents. Sole responsibility for the accuracy and completeness of this document, including but not limited to dimensions and quantities, remains with the Supplier/Contractor. Agnico Eagle does not warrant the accuracy or completeness of any of the information contained herein, nor does Agnico Eagle authorize or approve any construction means, methods, techniques, sequences or any safety precautions or procedures.

Agnico Eagle No. 6515-C-260-002-141-QCR-0005 R: Sub001

DOCUMENT FOR INFORMATION

Preamble:

This package contains all QA/QC documents and drawings for the field erected fuel storage tank. The Inspection and Test Plan (ITP) serves as a Table of Contents for the Handover Package. The contents have been divided into items 1-20, and a table of contents for each item of the ITP can be found at the beginning of each section (item). The As-Built Drawings can be found at the end of this package.

This package was compiled by the General Contractor: **Inukshuk Construction Ltd.** and reviewed by Mechanical Engineer: **Kyle Brown**.

INSPECTION & TEST PLAN

Client:	AGNICO EAGLE	**Tank Tag:**	TK #5	**Document:**	TK#5 ITP
Project ID:	MELIADINE GOLD MINE	**Work Order:**	295	**Revision:**	0

Item	Component	Activity	ITP Type	Documentation	Acceptance Criteria	Notes	Witness, Hold, Review Points	
							Client Sign/Date	Q.C. Sign/Date
1	Kick-Off Meeting	Kickoff Meeting	N/A	Meeting Minutes	N/A			H
2	Signature Log	Verify	N/A	Signature Log	N/A			H
3	Welder Qualification	Verify	N/A	Individual Welder Qualifications / Welder Log	API-650 / ASME IX			H
4	Inspector Qualification	Verify	N/A	In house Inspector & 3rd Party Qualifications	API-650			H
5	Weld Procedures	Verify	N/A	Approved Weld Procedures	API-650 / ASME IX, CWB W47.1			H
6	Welding Consumable	Electrode Storage	N/A	N/A	Manufacturer's Instructions			R
7	Foundation	Foundation Survey	DC	Foundation Acceptance Report, Compaction Report & Survey from 3rd Party	API-650 Para 7.5.5			H
8	Floor	Materials	FI	MTR Confirmation to Dwg	Drawing & API-650 Sect. 4	MTR of all plate under shell.		
		Fit up	VE, DC	As Built Drawing	Drawing	per API-650 5.1.5.4 - bottom plates under the shell shall have the outer ends of the joints fitted and lap-welded to form a smooth bearing surface.		R
		Welding	VE	Weld Map, Visual Report	API–650 Para 7.2 & 8.5 & WPS			R
		Vacuum Test	VB	Vacuum Box Test Report	API-650 Para 7.3.3(a) & 8.6			W
9	Shell to Floor Seams	Initial Weld Pass	VE	Weld Map, Visual Report	API-650 Para 8.5, 7.2.4.1			R
		Final Weld Pass	VE	Weld Map, Visual Report	API-650 Para 8.5, 7.2.4.1			R
		Diesel Test	NDT	Leak Test Report	API-650 Para 7.2.4.1 d)			W
10	Shell	Materials	FI	MTR Confirmation to Dwg	Drawing & API-650 Sect. 4	MTR of all plate		H
		Fit up 1st Course	VE, DC	As Built Drawing	Drawing			R
		Roundness	DC	Dimension Report	API-650 Para 7.5.3			H
		Welding	VE	Weld Map, Visual Report	API–650 Para 7.2, 7.5, 8.5 & WPS			R
		Tolerance Check – Plumbness & Local Deviations	DC	Dimension Report	API-650 Para 7.5			H
		Diesel Test Shell Welds	NDT	Leak Test Report	API-650 Para 7.3.6 2)a)i)			W
		UT – All Shell	NDT	UT report / Log / Map	API-650 Para Annex U	Shell less than 3/8" shall be intrepreted as 3/8" as a modification of API-650. All T joint UT.		H
11	Compression Ring	Fit up	VE, DC	As Built Drawing	Drawing			R
		Welding	VE	Weld Map, Visual Report	API–650 Para 7.2 & 8.5 & WPS			R
12	Roof	Fit up	VE, DC	As Built Drawing	Drawing			R
		Welding	VE	Visual Report	API–650 Para 7.2 & 8.5 & WPS			R
13	Roof Structure	Fit up	VE, DC	As Built Drawing	Drawing			R
		Column Plumbness	DC	Dimension Report	API–650 Para 7.5.2 b)			H
		Welding	VE	Visual Report	API–650 Para 7.2 & 8.5 & WPS			R

Item	Component	Activity	ITP Type	Documentation	Acceptance Criteria	Notes	Witness, Hold, Review Points	
							Client Sign/Date	Q.C. Sign/Date
14	Nozzles	Layout	VE, DC	As Built Drawing	Drawing			H
		Fit up	VE, DC	As Built Drawing	Drawing			R
		Welding	VE	Weld Map, Visual Report	API–650 Para 7.2 & 8.5 & WPS			R
		Tolerance Check – Plumbness & Local Deviations	DC	Dimension Report	API-650 Para 7.5			H
		Shell Nozzle Repad Air test	AT	Leak Test Report	API-650 Para 7.3.5			W
		MPI	NDT	MPI Report	API-650 Para 7.2.3.6	All welds of Shell Nozzles		W
15	Manway	Layout	VE, DC	As Built Drawing	Drawing			H
		Fit up	VE, DC	As Built Drawing	Drawing			R
		Welding	VE	Weld Map, Visual Report	API–650 Para 7.2 & 8.5 & WPS			R
		Tolerance Check – Plumbness & Local Deviations	DC	Dimension Report	API-650 Para 7.5			H
		Shell Manway Repad Air test	AT	Leak Test Report	API-650 Para 7.3.5			W
		MPT	NDT	MPI Report	API-650 Para 7.2.3.6	All welds of Shell Manways		R
16	Internals	Layout / Fit up	VE, DC	As Built Drawing	Drawing			R
		Welding	VE	Visual Report	API–650 Para 7.2 & 8.5 & WPS			R
		Stillwell Plumbness	DC	Dimension Report	API–650 Para H.4.5			R
		MPI or LP	NDT	NDT Report	Sump Welds (if applicable) 7.3.4	MPI all welds		H
17	Externals	Layout / Fit up	VE, DC	As Built Drawing	Drawing			R
	Externals	Welding	VE	Visual Report	API–650 Para 7.2 & 8.5 & WPS			R
18	Stairs & Platforms	Fit up	VE, DC	As Built Drawing	Drawing			R
		Welding	VE	Visual Report	API–650 Para 7.2 & 8.5 & WPS			R
19	Bolts & Nuts	Inspection	VE, DC	As Built Drawing	Drawing	Bolt Torque		W
20	Final	Name Plate Verification	N/A	Scan of Name Plate	Drawings			H
		Final Inspection	FI	As Built Drawings, Data Sheet, Manufacturer's Certification (3rd Party), Punch List	Drawings			H

DEFINITIONS:

W - WITNESS: Specified activity to be observed by an outlined party. QC to provide the applicable party 24 hours notice of witness point.

H - HOLD: Specified component or installation to be inspected by an outlined party. No further activities specific to the component or installation may proceed until inspection is carried out. QC to provide the applicable party 24 hours notice of hold point.

R - REVIEW: Specified documentation and specifications applicable to a particular component and/or installation to be examined by an outlined party.

AT - AIR TEST: Specified component and/or installation to be air tested according to specified documentation and specifications.

DC - DIMENSION CHECK: Physical dimensions of component and/or installation to be verified according to specified documentation and specifications.

FI - FINAL INSPECTION: Specified inspection procedures to be executed prior to release of the component and/or installation and verified according to specified documentation and specifications.

NDT - NON DESTRUCTIVE TESTING: Specified component and/or installation to be inspected using a named non destructive testing method according to specified documentation and specifications.

VE - VISUAL Examination: Specified component and/or installation to be examined visually according to specified documentation and specification.

VB - VACUUM-BOX TEST: Specified component and/or installation to be vacuum box tested according to specified documentation and specifications.

Item 2 – Signature Log

Contents

1. ICL Signature Log

AEM Meliadine Fuel Storage Tanks

Inukshuk Construction Ltd. – Project 295

Signature Log

Name	Company	Title	Signature
Marc Losier	ICL	Project Manager	
Jacob Saunders	ICL	Technical Coordinator	
Sheldon Burry	ICL	Supervisor	
Shawn Saunders	ICL	Supervisor	
Bruno Roy	AEM	QA/QC	
Stephane Dubois	AEM	QA/QC Mech. Engineer	
Sylvain Chartier	AEM	QA/QC	
Claude Filteau	AEM	Mechanical General Foreman	

Item 3 – Welder Qualification

Contents

1. Welder Qualification Log
2. Individual Welder Qualifications

Item 3 – Welder Qualification

Welder Qualification Log

Name	Initials	Qualification	Date of Issue	Expiry Date
Joel Overguard	JO	SAW, SMAW, SPOT	June/July 2017	
Justin Dredge	JD	SMAW B-Class Welder-Operator	06/06/2017	06/06/2018
Ryan Kettle	RK	SMAW B-Class Welder-Operator	30/05/2017	30/05/2018
Daniel White	DW	SMAW B-Class Welder-Operator	06/06/2017	06/06/2018
Michael K. Paul	MP	SMAW B-Class Welder-Operator	11/07/2017	11/07/2018
Zachary G. King	ZK	SMAW Pressure Welder License		24/07/2019
Abel Kalai	AK	SMAW Pressure Welder License		11/08/2019
John Cusick	JC	SMAW B-Class Welder-Operator	30/05/2017	30/05/2018
Dean W. Goodyear	DG	SMAW CSA W47.1 License		06/08/2017

Sub-Arc Systems Inc.	**WELDERS' QUALIFICATION RECORD** **API 650**	**Exhibit 8, Rev A**

WELDER NAME	WELDER SYMBOL	DATE QUALIF.	QUALIFICATION PROCEDURE	LIMITATIONS					REMARKS
				PROCESS	ELECTRODE	POSITION	THICKNESS RANGE	DIAMETER RANGE	
JOEL OVEREARD	J.OV	06,21,17	SAS 1	SMAW	F3, F4	2G	1 1/4"		X-RAY G2340
	J.OV	06,21,17	SAS 1	SMAW	F3, F4	3G	1 1/4"		X-RAY G2340
	J.OV	06,21,17	SAS 1	SMAW	F3, F4	4G	1 1/4"		X-RAY G2340
	J.OV	07,26,17	SAS 2	SAW	F7A6	2G	1 1/4"		X-RAY G2574

QC (PRINT) **SIGN:**	**DATE** (yyyy-MM-dd):
QA (PRINT) ROBERT HOFFMAN **SIGN:**	**DATE** (yyyy-MM-dd): 2017, 07, 26.

4605-47 Street
Vermillion, AB, T9X 1L6
780-608-9589

QUALITY CONTROL MANUAL

Sub-Arc Systems Inc.	**WELDERS' QUALIFICATION RECORD** **API 650**	**Exhibit 8, Rev A**

WELDER NAME	WELDER SYMBOL	DATE QUALIF.	QUALIFICATION PROCEDURE	LIMITATIONS					REMARKS
				PROCESS	ELECTRODE	POSITION	THICKNESS RANGE	DIAMETER RANGE	
JOEL OVERGAARD	J.OV	07,26,17		SAW	F7A6	2G	1 1/4"		X RAY # G2574

QC (PRINT) **SIGN:**	**DATE** (yyyy-MM-dd):
QA (PRINT) ROBERT HOFFMAN **SIGN:**	**DATE** (yyyy-MM-dd): 2017, 07, 28

ALL CAN INSPECTION SERVICES (2011) INC.

Report # G2574

9323-37 Avenue, NW, Edmonton, Alberta T6E 5N4
SHOP: 780-462-1072 OFFICE: 780-462-9797 FAX: 780-462-4664
EMAIL: shop@allcaninspection.com www.allcaninspection.com

Client:	**Sub Arc Systems**	Client Job #	**Welder Coupons**
Address:	17 Exploration Way, Devon	P.O. #	**Toby**
Contact: Name:	Toby	Date:	**July 26/17**
Phone:			
Work Location:	All Can Inspection Shop	Work Description:	J.OV

CODES
1. ASME B31.3 N/S
2. ASME B31.3 S/C
3. ASME Sec. VIII Div 1 UW51
4. ASME Sec. VIII Div. 1 UW52
5. CSA Z662
6. CSA Z662 (Sour)
7. API 650
8. ASME IX (QW-191.2)

LF - Lack of Fusion; IP - Incomplete Penetration; IC - Internal Concavity; BT - Burn Through; TI - Tungsten Inclusion; IU: Internal Undercut; EU: External Undercut; EP - Excessive Penetration; P - Porosity; S - Slag; HL - High-Low; C - Crack; AB - Arc Burn; HB - Hollow Bead

Severity: 1 = Slight, 2 = Medium, 3 = Severe (Reject)

NDE No:	Size & thickness Plus Code Max. reinforcement	Material	Code	IQI	Technique Number	Source Side of Object to Film Distance	Source to Object Distance	Number of Exposures	Welder ID	Discontinuity	Severity	Accept	Reject
			1 - 8	See Back	See Back	Inches	Inches				1 - 3	√	X
2G SAW SAS 1	5/8" SPOT	P1	8	2	RT-2	0.750	25.000	1	J.OV			√	

RT Technician: Gordon Thomas CGSB Level: 2 Reg. #: 6 SNT-TC-1A Level: III SNT-TC-1A No: 6

RT Assistant # 1: Adele Kezama CEDO #: 18988 SNT-TC-1A Level: II SNT-TC-1A No: 18988

RT Assistant # 2: CEDO #: SNT-TC-1A Level: SNT-TC-1A No:

IMPORTANT: See reverse side of this form for All Can Inspection Services (2011) Inc. LIMITED LIABILITY POLICY

Technician Signature — Date: July 26/17

Client Representative Signature — Evaluation Date

The above interpretation is a technical opinion, not a guarantee.
Client signature indicates acceptance of the report and results.

Clock tape marker and start arrow marked on weldment.
It is the customer's responsibility to map welds on drawings.

Film Make / Brand	AGFA	Film Class / Type:	1-D5
Screens Lead	Front 0.010"	Back 0.010"	One (no.) film per screen
Film Density in H & D:	Min. 2.0	Max. 4.0	
Penetrometer (IQI hole type) designation:	N/A	Recommended Max. U.G.:	0.20"
Source Isotope:	IRIDIUM-192 (Gamma)	Wall Viewing:	Single
Effective Focal Spot Size:	0.146 inches	Processing:	Automatic

RADIOGRAPHIC EXAMINATION REPORT

ALL CAN INSPECTION SERVICES (2011) INC.

Report # G2340

9323-37 Avenue, NW, Edmonton, Alberta T6E 5N4
SHOP: 780-462-1072 OFFICE: 780-462-9797 FAX: 780-462-4664
EMAIL: shop@allcaninspection.com www.allcaninspection.com

Client:	**Sub Arc Systems**	Client Job #	**Welder Coupons**
Address:	17 Exploration Way, Devon	P.O. #	**Toby**
Contact: Name:	Toby	Date:	**June 21/17**
Phone:			
Work Location:	All Can Inspection Shop	Work Description:	J.OV

CODES
1. ASME B31.3 N/S
2. ASME B31.3 S/C
3. ASME Sec. VIII Div 1 UW51
4. ASME Sec. VIII Div. 1 UW52
5. CSA Z662
6. CSA Z662 (Sour)
7. API 650
8. Other:

NDE No:	Size & thickness Plus Code Max. reinforcement	Material	Code	IQI	Technique Number	Source Side of Object to Film Distance	Source to Object Distance	Number of Exposures	Welder ID	Discontinuity	Severity	Accept	Reject
			1 - 8	See Back	See Back	inches	inches				1 - 3	√	X
2G SMAW	5/8" SPOT	P1	7	2	RT-2	0.750	25.000	1	J.OV	S & P @ 0", P @ 1 1/2" & 6"	2	√	
3G SMAW	5/8" SPOT	P1	7	2	RT-2	0.750	25.000	1	J.OV			√	
4G SMAW	5/8" SPOT	P1	7	2	RT-2	0.750	25.000	1	J.OV			√	

LF - Lack of Fusion
IP - Incomplete Penetration
IC - Internal Concavity
BT - Burn Through
TI - Tungsten Inclusion
IU: Internal Undercut
EU: External Undercut
EP - Excessive Penetration
P - Porosity
S - Slag
HL - High-Low
C - Crack
AB - Arc Burn
HB - Hollow Bead

Severity: 1 = Slight, 2 = Medium, 3 = Severe (Reject)

RT Technician:	Gordon Thomas	CGSB Level:	2	Reg. # :	6	SNT-TC-1A Level:	III	SNT-TC-1A No:	6
RT Assistant # 1	Victoria Sarnecki	CEDO #:	21927			SNT-TC-1A Level:	I	SNT-TC-1A No:	21927
RT Assistant # 2		CEDO #:				SNT-TC-1A Level:		SNT-TC-1A No:	

IMPORTANT: See reverse side of this form for All Can Inspection Services (2011) Inc. LIMITED LIABILITY POLICY

Technician Signature — June 21/17 Date

Client Representative Signature — Evaluation Date

The above interpretation is a technical opinion, not a guarantee.
Client signature indicates acceptance of the report and results.

Clock tape marker and start arrow marked on weldment.
It is the customer's responsibility to map welds on drawings.

Film Make / Brand	AGFA	Film Class / Type:	1-D5
Screens Lead	Front 0.010"	Back 0.010"	One (no.) film per screen
Film Density in H & D:	Min. 2.0	Max. 4.0	
Penetrometer (IQI hole type) designation:	N/A	Recommended Max. U.G.:	0.20"
Source Isotope:	IRIDIUM-192 (Gamma)	Wall Viewing:	Single
Effective Focal Spot Size:	0.146 inches	Processing:	Automatic

RADIOGRAPHIC EXAMINATION REPORT

File No. 591

WELDING PERFORMANCE QUALIFICATION

Justin Dredge **Is qualified**

As a B CLASS **Welder - Operator**

Subject to the limitations and for a period mentioned at the back of this card.

Chief Boiler and Gas Inspector (Muhammad Wani)

06/06/2017
Date of Issue

PERFORMANCE QUALIFICATION

(In accordance with section IX, A.S.M.E code)

Renewal of performance qualification is required when the welding operator named hereon has not used the specified process and materials, etc., for a period of six months or more.

06/06/2018

Expiry date dd/mm/yyyy

Process **SMAW**

Material group **P1 - 11**

Max Thickness **0.688"**

Filler Metal **F3, F4**

Positions **all**

File No. 589

WELDING PERFORMANCE QUALIFICATION

Ryan Kettle **Is qualified**

As a B CLASS **Welder - Operator**

Subject to the limitations and for a period mentioned at the back of this card.

Chief Boiler and Gas Inspector (Muhammad Wani)

30/05/2017
Date of Issue

PERFORMANCE QUALIFICATION

(In accordance with section IX, A.S.M.E code)

Renewal of performance qualification is required when the welding operator named hereon has not used the specified process and materials, etc., for a period of six months or more.

30/05/2018

Expiry date dd/mm/yyyy

Process **SMAW**

Material group **P1 - 11**

Max Thickness **0.688"**

Filler Metal **F3, F4**

Positions **all**

File No. 590

WELDING PERFORMANCE QUALIFICATION

Daniel White **Is qualified**

As a B CLASS **Welder - Operator**

Subject to the limitations and for a period mentioned at the back of this card.

Chief Boiler and Gas Inspector (Muhammad Wani)

06/06/2017
Date of Issue

PERFORMANCE QUALIFICATION

(In accordance with section IX, A.S.M.E code)

Renewal of performance qualification is required when the welding operator named hereon has not used the specified process and materials, etc., for a period of six months or more.

06/06/2018

Expiry date dd/mm/yyyy

Process **SMAW**

Material group **P1 - 11**

Max Thickness **0.75"**

Filler Metal **F4**

Positions **all**

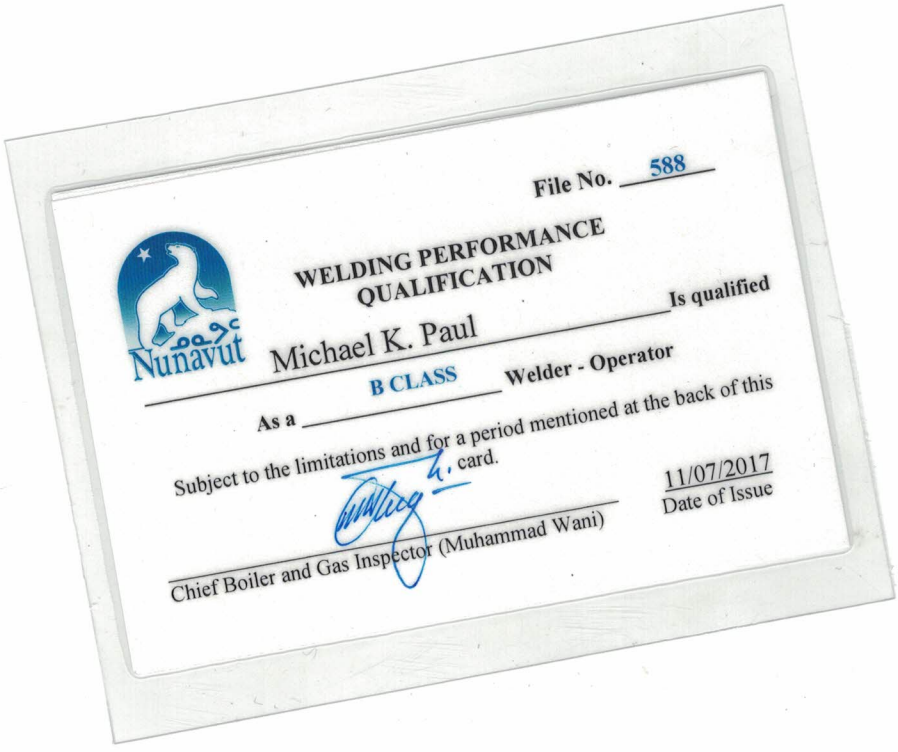

File No. 588

WELDING PERFORMANCE QUALIFICATION

Nunavut

Michael K. Paul **Is qualified**

As a **B CLASS** **Welder - Operator**

Subject to the limitations and for a period mentioned at the back of this card.

Chief Boiler and Gas Inspector (Muhammad Wani)

11/07/2017
Date of Issue

NOVA SCOTIA
Labour and Advanced Education

Boiler and Pressure Equipment Regulations
Tested in accordance with ASME Section IX
Pressure Welder Licence

NSID : W0186 **Expires :** 24 July 2019
Name : Zachary G. King
Certified by : Mosher Engineering Limited

Purge	Backing	Process	F-No.	Qual. thk.
NR	NR	SMAW	1 - 3	0.25"
NR	R	SMAW	1 - 4	0.438"

Inspector :

WPS : MEL-WP-002

Base metal (s) **Max. thk.** **Min. thk.** **Min. dia.**
P/S-No. 0.688" up 1"
P1 - 11 1: All
Position (s) 2:
Electrode (s) 1: EXX per F 1-3
2: EXX per F4
3:

Other
GMAW mode : n/a
Con. inert : n/a
Fused only : n/a

Machine controls
Visual : n/a
Auto volt : n/a
Auto joint : n/a

NSBPE
NS 9

NOVA SCOTIA
Labour and Advanced Education

Boiler and Pressure Equipment Regulations
Tested in accordance with ASME Section IX
Pressure Welder Licence

NSID : V0083 **Expires :** 11 Aug 2019
Name : Abel Kalai
Certified by : Mosher Engineering Limited

Purge	Backing	Process	F-No.	Qual. thk.
NR	NR	SMAW	1 - 3	0.25"
NR	R	SMAW	1 - 4	0.5"

WPS : A072.8-MEL-WP-00 **Inspector :**

Base metal (s)	Max. thk.	Min. thk.	Min. dia.
P/S-No.	0.75"	up	> 24"
P1 - 11			

Position (s)
1: All
2: FH 2 7/8" to 24" dia.

Electrode (s)
1: F1-3 per QW-432/433
2: F1-4 per QW-432/433
3:

Other
GMAW mode : n/a
Con. inert : n/a
Fused only : n/a

Machine controls
Visual : n/a
Auto volt : n/a
Auto joint : n/a

File No. 573

WELDING PERFORMANCE QUALIFICATION

John Cusick **Is qualified**

As a B CLASS **Welder - Operator**

Subject to the limitations and for a period mentioned at the back of this card.

Chief Boiler and Gas Inspector (Muhammad Wani)

30/05/2017
Date of Issue

PERFORMANCE QUALIFICATION

(In accordance with section IX, A.S.M.E code)

Renewal of performance qualification is required when the welding operator named hereon has not used the specified process and materials, etc., for a period of six months or more.

30/05/2018

Expiry date dd/mm/yyyy

Process **SMAW**

Material group **P1 - 11**

Max Thickness **0.688"**

Filler Metal **F3, F4**

Positions **all**

This card is valid only while employed by a CWB certified company

Transferable Welder

Name: DEAN W. GOODYEAR
Exp. Date: Aug 06, 2017

Employer: Iron Workers - Local 764, Mount Pearl, NL

Thickness Range: 3mm & above

Material: Carbon Steel
Process: SMAW
Standard: CSA W47.1
Classification: T
Electrode: F4

Mode: MANUAL

Class: FLAT/HORIZONTAL/VERTICAL UP/OVERHEAD

Item 4 – Inspector Qualification

Contents

1. CWB Inspector Qualifications for NDE Testing

Inspector Qualifications - Pierre Dostie (NDE)



Inspecteur en Soudage Certifié

PIERRE DOSTIE **No. Enr# 3414**

est un Inspecteur en soudage certifié de **Niveau3** et satisfait aux exigences de la norme CSA W178.2 « Qualification des inspecteurs en soudage ».

Valide jusqu'au **février 16, 2018**

Cette certification est valide pour le(s) code(s) et/ou la norme(s) suivant(es) :

CSA W47.1/W59	**Valide jusqu'en août 2020**
ASME MII-1 IX	**Valide jusqu'en novembre 2021**
ASME B31.3	**Valide jusqu'en août 2020**
CSA W47.2/W59.2	**Valide jusqu'en novembre 2021**

Conditions

1. La possession de cette carte ne signifie nullement que son détenteur représente un organisme d'inspection certifiée en vertu de la norme CSA W178.1 et ayant du personnel et des procédures approuvées par le Bureau canadien de soudage.
2. Cette carte demeure la propriété du Bureau et peut être rappelée en tout temps.
3. L'usage de la présente carte à des fins frauduleuses peut entraîner son annulation.

Pour toute question concernant cette qualification, veuillez communiquer avec :

1-800-844-6790 | www.cwbgroup.org

Inspector Qualifications - Sylvain Germain (NDE)



Inspecteur en Soudage Certifié

SYLVAIN GERMAIN No. Enr# 4935

est un Inspecteur en soudage certifié de Niveau3 et satisfait aux exigences de la norme CSA W178.2 « Qualification des inspecteurs en soudage ».

Valide jusqu'au avril 30, 2020

Cette certification est valide pour le(s) code(s) et/ou la norme(s) suivant(es) :

CSA W47.1-09/W59-13

Expiration de recertification après 6 ans avril 30, 2020



Conditions

1. La possession de cette carte ne signifie nullement que son détenteur représente un organisme d'inspection certifiée en vertu de la norme CSA W178.1 et ayant du personnel et des procédures approuvées par le Bureau canadien de soudage.
2. Cette carte demeure la propriété du Bureau et peut être rappelée en tout temps.
3. L'usage de la présente carte à des fins frauduleuses peut entraîner son annulation.

Pour toute question concernant cette qualification, veuillez communiquer avec :

1-800-844-6790 | www.cwbgroup.org

Item 5 – Weld Procedures

Contents

1. Approved Weld Procedures

SUBMERGED ARC-WELDING MANUAL

TABLE OF CONTENT

SECTION PAGE

1 SCOPE 2
2 WELDING PROCEDURE 3
3 BASE MATERIAL 4
4 BASE METAL THICKNESS 5
5 FILLER METAL 6
STORAGE AND CONDITIONING OF ELECTRODES AND FLUXES 6
6 POSITION 7
7 PREHEAT 8
8 HEAT TREATMENT AND STRESS RELIEVING 9
9 ELECTRICAL CHARACTERISTICS WELDING TECHNIQUE 10
EFFECT OF PARAMETERS 11
Amperage *11*
Voltage *11*
Welding (Travel) Speed *12*
10 PREPARATION OF BASE MATERIAL 13
12 TREATMENT OF UNDERSIDE OF WELDING GROOVE 14
13 QUALITY 15
14 WELD METAL CLEANING 16
15 DATA SHEETS 17
16 TROUBLE SHOOTING 18
17 APPROVALS 20

Mosher ENGINEERING

1007 Cobequid Road, Windsor Junction, Nova Scotia B2T 1K1

WELDING PROCEDURE SPECIFICATION NUMBER SAW-1
Submerged Arc Welding

1 SCOPE

This Welding Procedure Specification covers welding and related operations of steel structures that are fabricated in accordance with the terms outlined in CSA Standard W47.1 and W59, latest revisions. The attached Data Sheets for an essential part of this specification.

A change in any of the essential variables contained in the succeeding paragraphs or detailed on applicable Welding Procedure Data Sheets shall require a new Welding Procedure Specification and/or new Welding Procedure Data Sheets.

2 WELDING PROCEDURE

The welding shall be done automatically or semi-automatically using the SAW (Submerged Arc Welding) process.

Joints shall be made following the procedural stipulations indicated in CSA Standard W59 and may consist of single or multiple passes, in accordance with the approved welding procedure data sheets to which this specification refers.

3 BASE MATERIAL

The base metal shall conform to the specifications for the steel groups 1, 2, and 3 per Table 11.1 or Table 12.1 of CSA W59. Other groups may be welded providing the Canadian Welding Bureau accepts the Welding Procedure Data Sheets (WPDS).

4 BASE METAL THICKNESS

Base metal thickness from over 3.2 mm (⅛") to an unlimited thickness (inclusive) may be welded under this specification providing the respective welding procedure data sheets have been supplied and approved for an appropriate weld size.

5 FILLER METAL

The filler metal shall conform to specification for CSA Standard W48 and shall be compatible with the base metal, as specified in Table 11.1 and 12.1 of CSA Standard W59. The classification of electrode to be used is shown on the appropriate Welding Procedure Data Sheet.

5.1 Storage and Conditioning of Electrodes and Fluxes

Electrodes (wire) shall be stored in a clean, dry environment in original containers until ready for use. All wire contaminated by surface rust or foreign material shall be discarded.

Flux used for SAW shall be dry and free from contamination of dirt, mill scale or other foreign material. All flux shall be purchased in packages capable of being stored under normal conditions for at least six (6) months without such storage affecting its welding characteristics or weld metal properties. Flux from damaged packages that have been exposed to free moisture shall be discarded or shall be dried before use in shallow layers (2 in. / 50 mm maximum) at a minimum temperature of 500°F (260°C) for at least one (1) hour or at time and temperature conditions as recommended by the flux manufacturer. Any flux that has been fused during welding shall not be reused

6 POSITION

The welding shall be done in the flat position or horizontal positions provided approved Welding Procedure Data Sheets referring to those positions and this procedure specification are followed.

7 PREHEAT

The minimum preheat before welding will comply with Table 5-3 shown in the CSA Standard W59. Welding will be done at sufficient speed to ensure that the minimum preheat is maintained or exceeded.

If welding is interrupted for some time so that the temperature of the base metal falls below the minimum preheat temperature, then arrangements will be made to preheat again prior to recommencing welding.

The weldment shall be allowed to cool to the ambient temperature, without an external quench media being supplied. In other words, cooling water or placement in frigid conditions that cause a quick temperature change shall not be used.

8 HEAT TREATMENT AND STRESS RELIEVING

This will not be applicable to structures welded under this specification unless a specification showing all the parameters is submitted to the Canadian Welding Bureau and approval is obtained.

9 ELECTRICAL CHARACTERISTICS WELDING TECHNIQUE

The Welding Procedure Data Sheets show details of the electrical characteristics to be used. The current used shall be direct current (DC) or alternating current (AC) as indicated on the welding procedure data sheets. However, unless otherwise noted on the data sheets or recommended by the consumable supplier, current and voltage ranges and electrode stick outs shall be as shown below:

Wire Diameter, in.	Current Range DC(+), amp	Arc Voltage Range	Stick out (standard), in
1/16	150 – 400	19 – 37	5/8" - 1 ¼"
5/64	200 – 600	20 – 37	5/8" - 1 ¼"
3/32	350 – 700	22 – 37	5/8" - 1 ¼"
1/8	300 – 900	23 – 37	5/8" - 1 ¼"
5/32	400 – 1000	25 – 37	5/8" - 1 ¼"
3/16	500 - 1100	27 – 37	5/8" - 1 ¼"
7/32	600 – 1200	30 – 37	5/8" - 1 ¼"
1/4	700 - 1600	30 – 38	5/8" - 1 ¼"

CURRENT (AMPS) VS. WIRE FEED SPEED
DC(+) Polarity, Single Arc, **Normal Stickout**

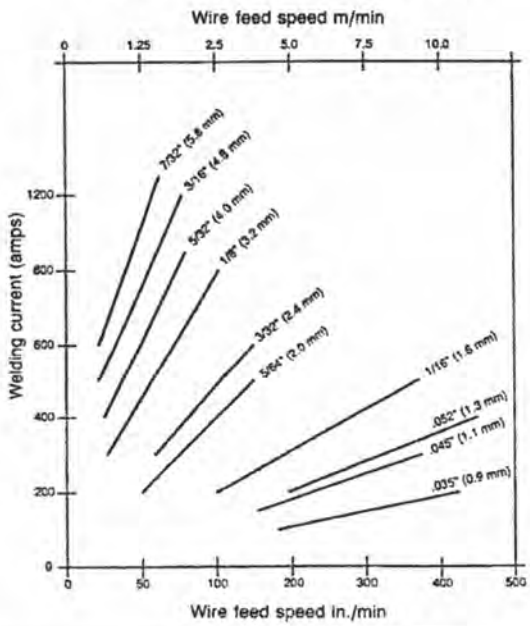

9.1 Effect of Parameters

9.1.1 Amperage

Increasing the amperage results in an increased deposition rate and penetration

Amperage too high
- Unstable arc
- Undercutting
- High narrow bead
- Burn through

Amperage to Low
- Unstable Arc
- Poor Penetration

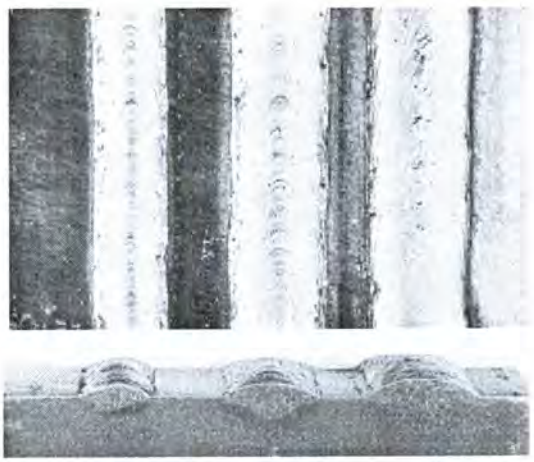

Weak Medium Strong

9.1.2 Voltage

An increased in voltage will increase the arc length, create a flatter and wider bead, increases flux consumption, improves slag removal; reduce penetration; increases resistance to porosity caused by rust or scale; increase alloy pick-up from the flux and will reduces flattening (root gap).

Voltage too high
- Produces a "hat-shaped" bead (cracking)
- Poor slag removal
- Concave fillet weld - crack-sensitive
- Increases transfer of alloying elements
- Undercuts at weld connection

Voltage too low
- Produces a high, narrow bead

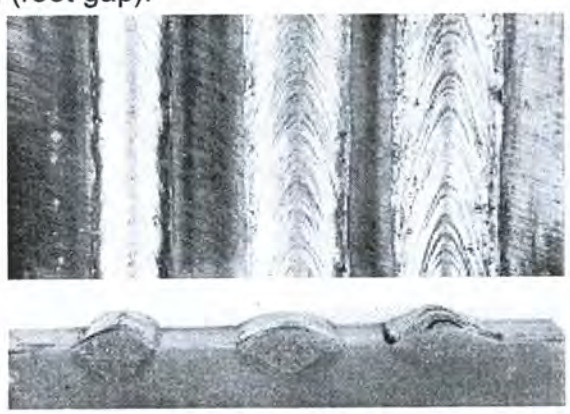

Low Medium High

Poor slag removal

9.1.3 Welding (Travel) Speed

Welding speed greatly affects penetration and bead shape. An increase in speed will reduce penetration, increases tendency to undercut, increase possibility of arc blow, increases porosity, can cause an irregular bead and may result in bad degassing.

If your welding speed too low it may result in bead profile subject to cracking, arc visibility, large difficult to control molten pool, rough looking bead, slag inclusions, make it difficult to remove slag and causes a risk of burn through

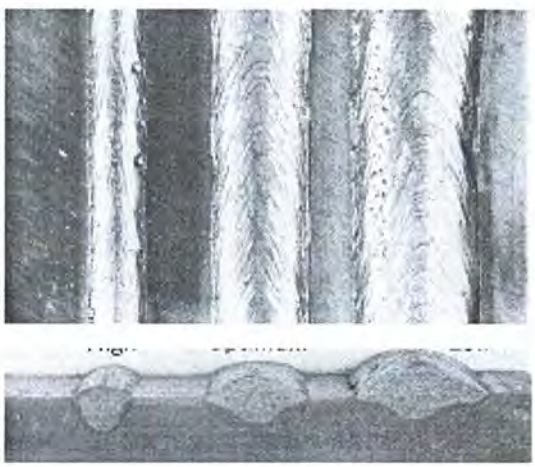

Low Medium High

10 PREPARATION OF BASE MATERIAL

The edges or surfaces of parts to be joined by welding shall be prepared by suitable means (e.g. Oxy-acetylene, plasma, etc.). Where hand cutting is involved the edge will be ground to a smooth surface. All surfaces and edges shall be free from fins, tears, cracks or any other defects that could adversely affect the quality of the weld.

All loose or thick scale, rust, moisture or other foreign material that would prevent proper welding or produce objectionable fumes shall be removed.

Typical joint preparations can be found in the appendix of this WPS.

11 TREATMENT OF UNDERSIDE OF WELDING GROOVE{tc \l2 "12.0 TREATMENT OF UNDERSIDE OF WELDING GROOVE}

Prior to depositing weld metal on the underside of a welding groove, the root shall be back gouged to sound metal, unless otherwise specified on the applicable data sheet.

Machining, air carbon arc or oxygen gouging, chipping or grinding may be used for back gouging.

12 QUALITY

Cracks or blowholes that appear on the surface of any pass shall be removed before depositing the next covering pass. The procedure and technique shall be such that undercutting of base metal or adjacent passes is minimized. Fillet and butt welds shall be meet the desirable or acceptable fillet weld profiles shown in Figure 5.4 of CSA Standard W59. The reinforcement in groove welds shall not exceed 3 mm (1/8") and shall have a gradual transition to the plane of the base metal surface. In general, the weld quality will be such as to meet the requirements of Clause 11.5.4 or 12.5.4 (as applicable) of CSA W59.

13 WELD METAL CLEANING

Glass remaining after a pass shall be removed before applying the next covering pass. Prior to painting, all glass shall be removed and the parts shall be free of loose scale, oil and dirt.

14 DATA SHEETS

Welding Procedure Data Sheets are specifications setting broad guidelines for the shop and field welding practice of the fabricator for each anticipated combination of essential variables. From the practical point of view, it is essential to include all variables that would make the weld easier or more difficult to make. The practical men will find that this will cover suitable tolerances for the geometry of joint and the other parameters involved.

The attached data sheets form part of this specification.

15 TROUBLE SHOOTING

The solutions below should only be used where they do not conflict with the Welding Procedure Data Sheets. Contact welding engineer for problems that cannot be corrected without conflict

Problem	Causes
Porosity	- Moist flux - Rust, carbon deposit or paint on plate surface - Oxidized electrode wire - Base metal chemistry - Contaminants - Excessive or insufficient flux thickness
Lack of Penetration	- Excessive root face - Insufficient amperage or wire speed - Travel speed too high - Voltage too high - Bad positioning of electrode wire - Excessive final length
Lack of Fusion	- Amperage too low - Travel speed too high - Bad positioning of electrode wire - Presence of carbon deposits or other foreign matters
Undercutting	- Travel speed too high - Excessive amperage - Excessive voltage - Bad positioning of electrode wire (angle, distance)
Hot Cracking	- Bad width/depth radio - Base metal chemistry (presence of sulphur, carbon or phosphor) - Presence of contaminants - Concave fillet weld - Stress

Cold Cracking	- Presence of hydrogen - Inappropriate pre-heat - Base metal chemistry - Tack welds too small
Unstable arc	- Check wire feed system

16 APPROVALS

CWB APPROVAL

CWB Accepted

CWB

Jul 28, 2008

Valid only if welding consumables are certified by the CWB

COMPANY'S APPROVAL



Welds / Joints	1 – Square Groove	2 – Single V-Groove	3 – Double V-Groove
Butt (B)	**S1-1** 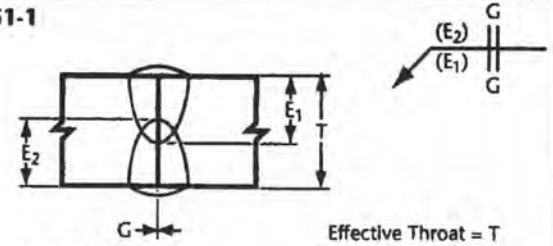 $E_1, E_2 > T/2$ $E_1 + E_2 > T$ Effective Throat = T T ≤ 12 mm (1/2 in) G = 0 **Note:** *Welds shall be centred on the joint.* **B-L1-S**	**S2-1** 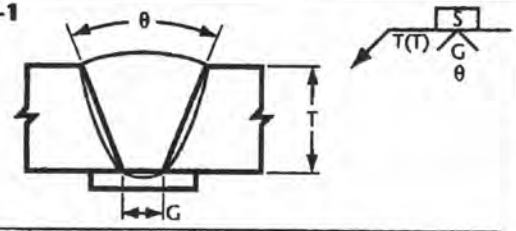 **B-U2a-S**	**S3-1** 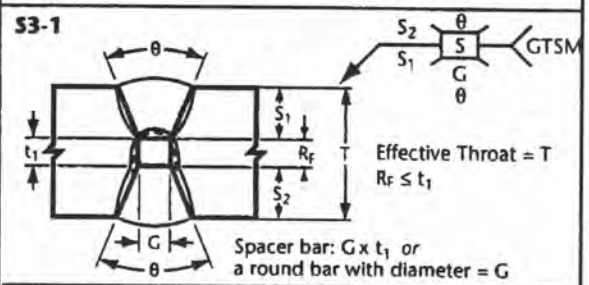 Effective Throat = T $R_F \le t_1$ Spacer bar: G x t_1 *or* a round bar with diameter = G **B-U3a-S**
Butt (B)	**S1-2** 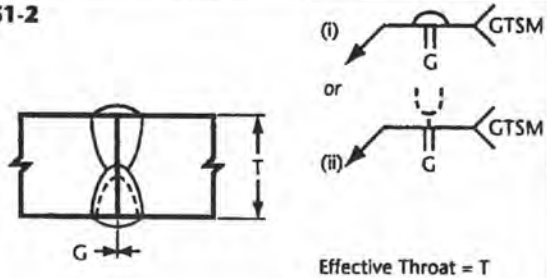 Effective Throat = T G = 0 **B-U1-S**	**S2-2** 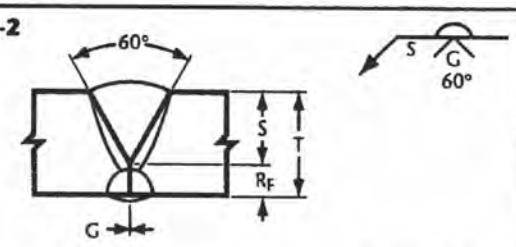 Effective Throat = T R_F = 6 mm (1/4 in) G = 0 **B-U2b-S**	**S3-2** 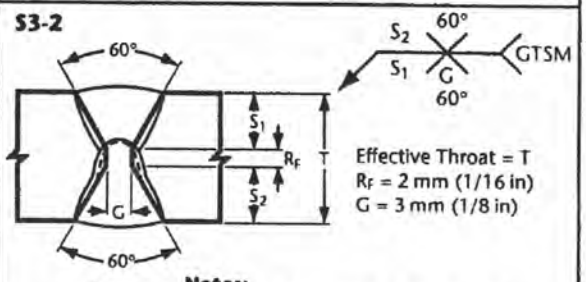 Effective Throat = T R_F = 2 mm (1/16 in) G = 3 mm (1/8 in) **Notes:** **(1)** *Deposit a SMAW or FCAW root weld 10 mm (3/8 in) thick minimum.* **(2)** *GTSM prior to welding from other side.* **B-U3b-S**
Butt (B) or Corner (C)	**S1-3** 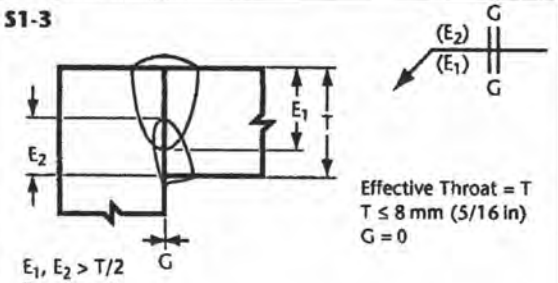 $E_1, E_2 > T/2$ $E_1 + E_2 > T$ Effective Throat = T T ≤ 8 mm (5/16 in) G = 0 **Note:** *Outside weld shall be centred on the joint.* **C-L1-S**	**S2-3** 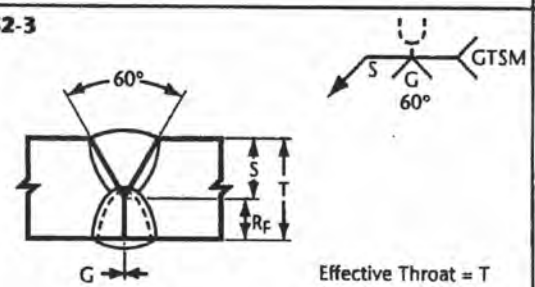 Effective Throat = T R_F > 6 mm (1/4 in) G = 0 **B-U2c-S**	**S3-3** 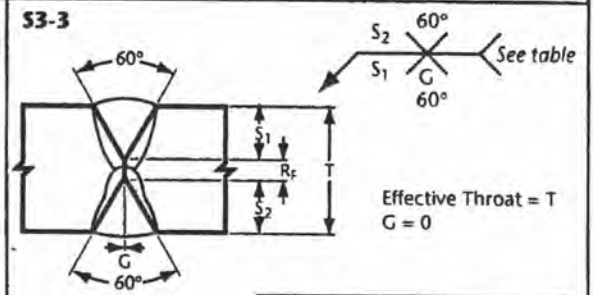 Effective Throat = T G = 0 **B-U3c-S**

R_F	GTSM
≤ 6 mm (1/4 in)	Not mandatory
> 6 mm (1/4 in)	Mandatory

θ	G	Notes
20°	≥ 16 mm (5/8 in)	*Split pass mandatory in root layer*
30°	≥ 6 mm (1/4 in)	—
45°	≥ 3 mm (1/8 in)	—

θ	G	t_1	GTSM	Notes
20°	≥16 mm (5/8 in)	≥6 mm (1/4 in)	Mandatory	*Split pass mandatory in root layer*
30°	≥6 mm (1/4 in)	≥6 mm (1/4 in)	Mandatory	—

*See **NOTES** at bottom left of following page*

(Continued)

Figure 10.3
Prequalified Complete Joint Penetration Groove Welds for the Submerged Arc Welding Process (SAW)
(See Clauses 10.1.1 and 10.3.1.)

Welds / Joints	1 – Square Groove (cont'd)	2 – Single V-Groove (cont'd)	
Tee (T) Corner (C)	**S1-4** 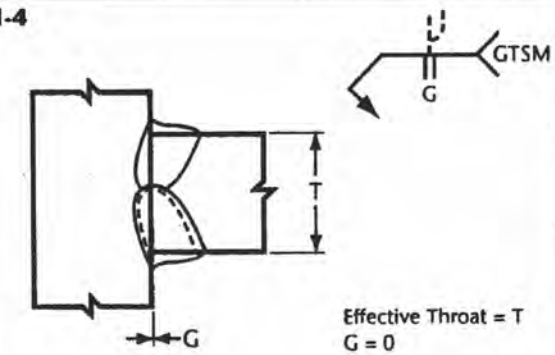 Effective Throat = T G = 0 **T-U1-S**	**S2-4** 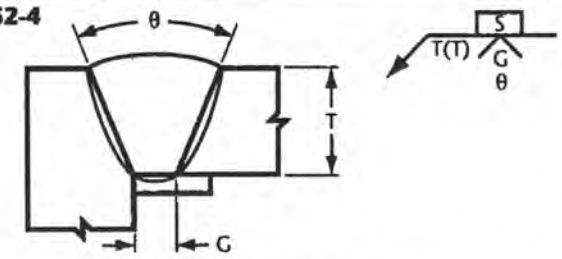 **C-U2a-S**	
Corner (C)	**S1-5** 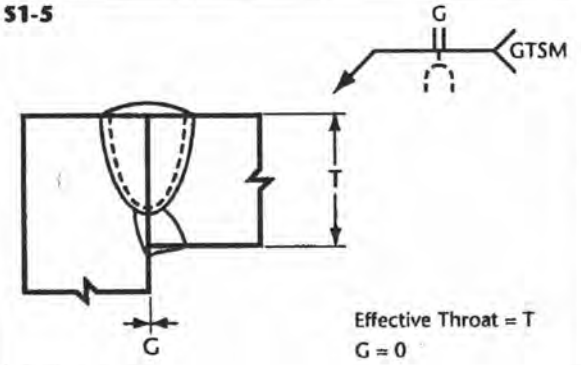 Effective Throat = T G = 0 **C-U1-S**	**S2-5** 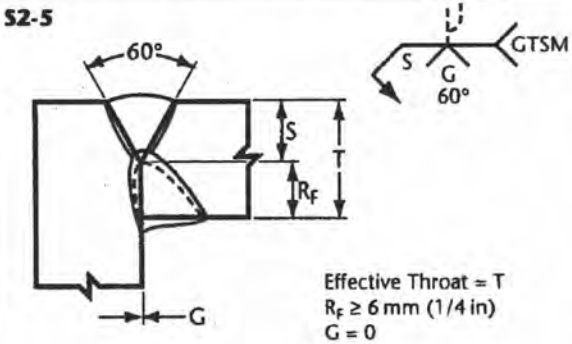 Effective Throat = T $R_F \geq 6$ mm (1/4 in) G = 0 **C-U2b-S**	
Corner (C)	**Notes:** **(1)** *For all joints that show the GTSM reference on the welding symbol, gouging to sound metal prior to welding from the other side is mandatory. See Clause 5.1.4 for definition.* **(2)** *The groove in a joint may be reversed where more practical or necessary.* **(3)** *See Clause 10.3.1.* **(4)** *For all joints with backing bars or spacers, the "S" in the welding symbol shall mean steel material in accordance with Clause 5.5.1.1.* **(5)** *For corner joints, see preferred preparation as shown in Figure 4.1.*	**S2-6** 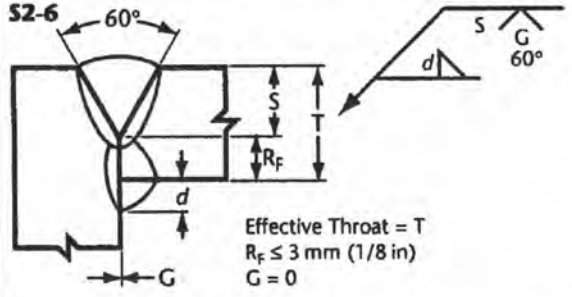 Effective Throat = T $R_F \leq 3$ mm (1/8 in) G = 0 **Note:** *Weld back side first with SMAW or FCAW minimum* 6 mm (1/4 in) *fillet.* **C-U2c-S**	

θ	G	Notes
20°	≥ 16 mm (5/8 in)	*Split pass mandatory in root layer*
30°	≥ 6 mm (1/4 in)	—
45°	≥ 3 mm (1/8 in)	—

(Continued)

Figure 10.3 (Continued)
Prequalified Complete Joint Penetration Groove Welds for the Submerged Arc Welding Process (SAW)

Welds / Joints	4 – Single Bevel Groove	5 – Double Bevel Groove	6 – Single U-Groove
Butt (B)	**S4-1** 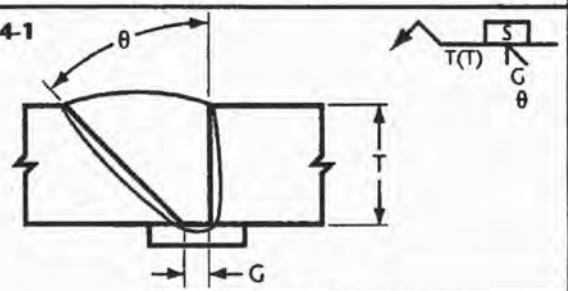 **B-U4a-S** θ: 20°, G: ≥16 mm (5/8 in), Notes: *Split pass mandatory in root layer* θ: 30°, G: ≥10 mm (3/8 in), Notes: — θ: 45°, G: ≥6 mm (1/4 in), Notes: —	**S5-1** 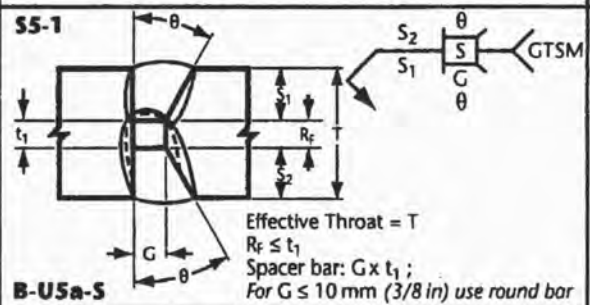 Effective Throat = T $R_F \le t_1$ Spacer bar: G x t_1 ; *For G ≤ 10 mm (3/8 in) use round bar* **B-U5a-S** θ: 20°, G: ≥16 mm (5/8 in), t_1: ≥6 mm (1/4 in), Notes: *Split pass mandatory in root layer* θ: 30°, G: ≥10 mm (3/8 in), t_1: ≥6 mm (1/4 in), Notes: — θ: 45°, G: ≥6 mm (1/4 in), t_1: ≥6 mm (1/4 in), Notes: —	**S6-1** 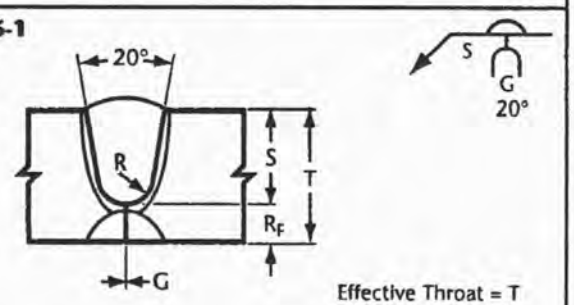 Effective Throat = T R_F = 6 mm (1/4 in) G = 0 R = 5 mm (3/16 in) **B-U6a-S**
Butt (B)	**S4-2** 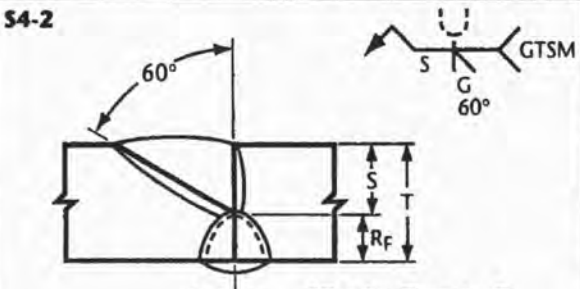 Effective Throat = T R_F > 6 mm (1/4 in) G = 0 **B-U4b-S**	**S5-2** 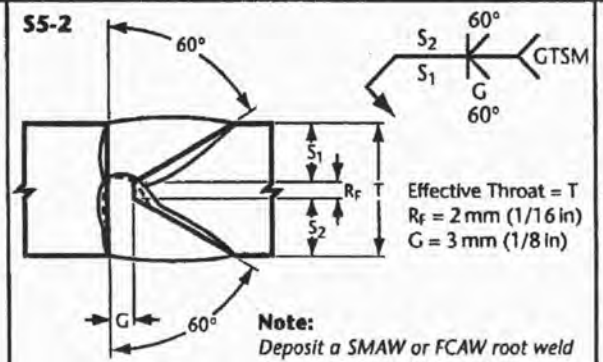 Effective Throat = T R_F = 2 mm (1/16 in) G = 3 mm (1/8 in) **Note:** *Deposit a SMAW or FCAW root weld 10 mm (3/8 in) thick minimum.* **B-U5b-S**	**S6-2** 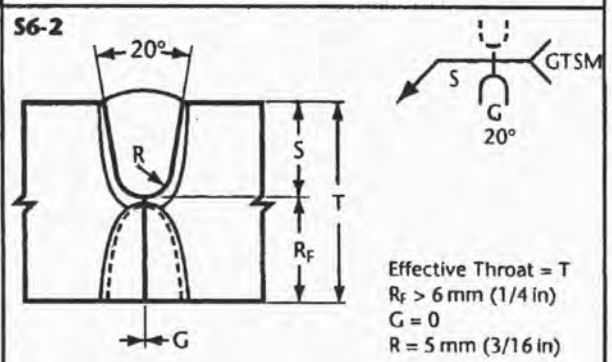 Effective Throat = T R_F > 6 mm (1/4 in) G = 0 R = 5 mm (3/16 in) **B-U6b-S**
Butt (B) Tee (T) Corner (C)	**S4-3** 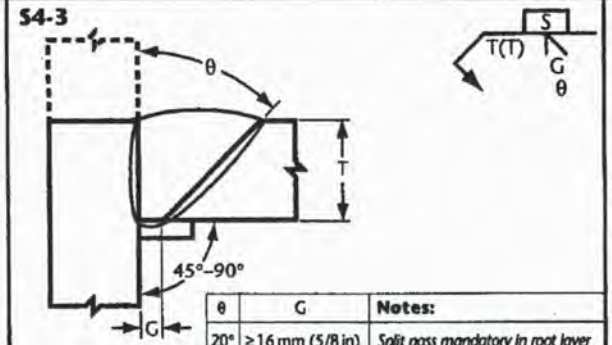 **TC-U4a-S** θ: 20°, G: ≥16 mm (5/8 in), Notes: *Split pass mandatory in root layer* θ: 30°, G: ≥10 mm (3/8 in), Notes: — θ: 45°, G: ≥6 mm (1/4 in), Notes: —	**S5-3** 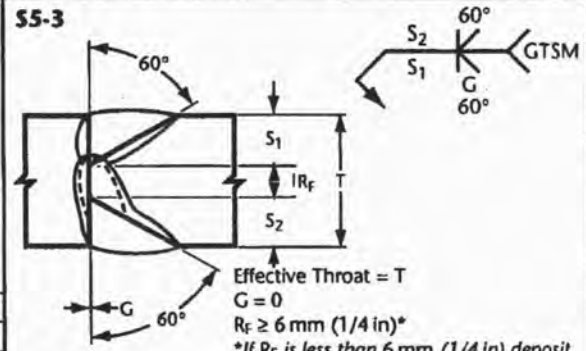 Effective Throat = T G = 0 $R_F \ge$ 6 mm (1/4 in)* **If R_F is less than 6 mm (1/4 in) deposit a SMAW or FCAW weld from other side.* **B-U5c-S**	**S6-3** 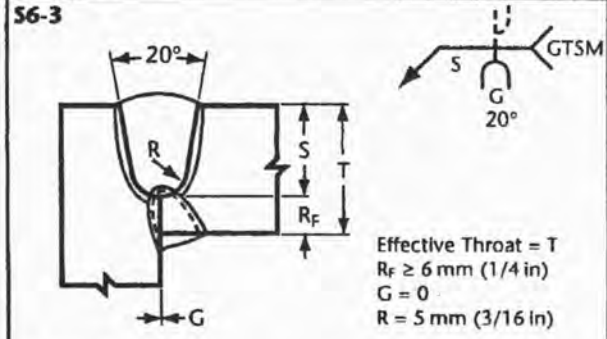 Effective Throat = T $R_F \ge$ 6 mm (1/4 in) G = 0 R = 5 mm (3/16 in) **C-U6a-S**

*See **NOTES** at bottom left of following page (Continued)*

Figure 10.3 (Continued)
Prequalified Complete Joint Penetration Groove Welds for the Submerged Arc Welding Process (SAW)

Welds / Joints	4 – Single Bevel Groove (cont'd)	5 – Double Bevel Groove (cont'd)	6 – Single U-Groove (cont'd)
Tee (T) Corner (C)	S4-4 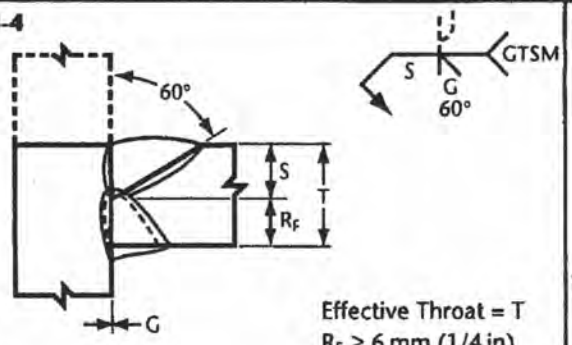 Effective Throat = T $R_F \geq 6$ mm (1/4 in) G = 0 TC-U4b-S	S5-4 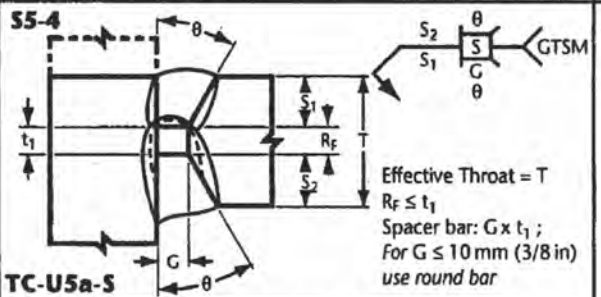 Effective Throat = T $R_F \leq t_1$ Spacer bar: G x t_1 ; For G ≤ 10 mm (3/8 in) use round bar TC-U5a-S θ | G | t_1 | Notes 20° | ≥16 mm (5/8 in) | ≥6 mm (1/4 in) | *Split pass mandatory in root layer* 30° | ≥10 mm (3/8 in) | ≥6 mm (1/4 in) | — 45° | ≥6 mm (1/4 in) | ≥6 mm (1/4 in) | —	S6-4 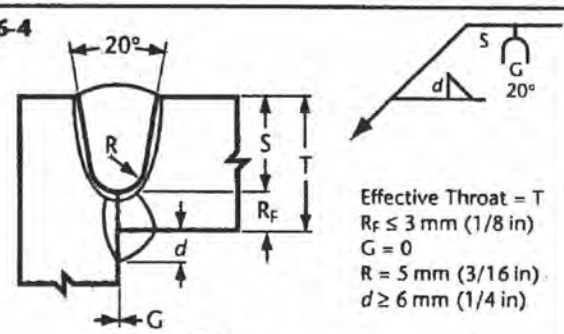 Effective Throat = T $R_F \leq 3$ mm (1/8 in) G = 0 R = 5 mm (3/16 in) $d \geq 6$ mm (1/4 in) **Note:** *Weld back side first with SMAW or FCAW minimum 6 mm (1/4 in) fillet.* C-U6b-S
Tee (T) Corner (C)		S5-5 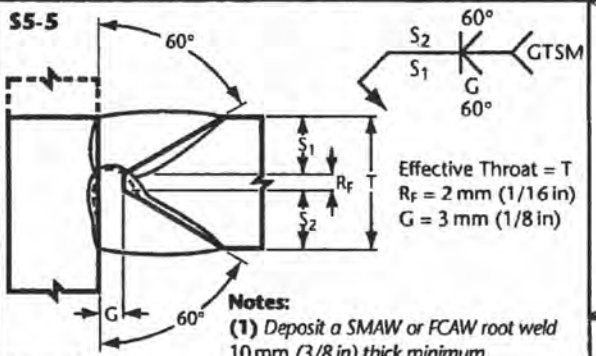 Effective Throat = T R_F = 2 mm (1/16 in) G = 3 mm (1/8 in) **Notes:** **(1)** *Deposit a SMAW or FCAW root weld 10 mm (3/8 in) thick minimum.* **(2)** *GTSM prior to welding from other side.* TC-U5b-S	7 – Double U-Groove
Butt (B) Tee (T) Corner (C)	**Notes:** **(1)** *For all joints that show the GTSM reference on the welding symbol, gouging to sound metal prior to welding from the other side is mandatory. See Clause 5.1.4 for definition.* **(2)** *The groove in a joint may be reversed where more practical or necessary.* **(3)** *Types of grooves designated by (x) shall be preferably limited to base metal thickness of 16 mm (5/8 in) or greater.* **(4)** *See Clause 10.3.1.* **(5)** *For all joints with backing bars or spacers, the "S" in the welding symbol shall mean steel material in accordance with Clause 5.5.1.1.* **(6)** *For corner joints, see preferred preparation as shown in Figure 4.1.*	S5-6 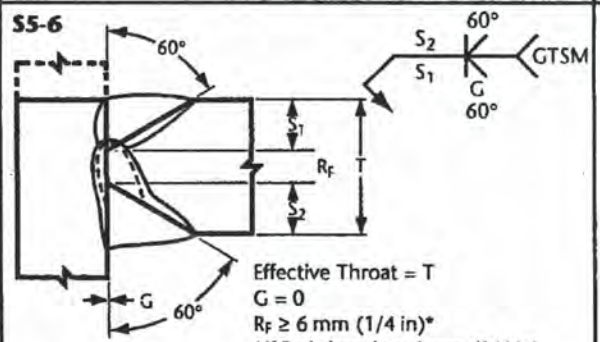 Effective Throat = T G = 0 $R_F \geq 6$ mm (1/4 in)* **If R_F is less than 6 mm (1/4 in) deposit a SMAW or FCAW weld from other side.* TC-U5c-S	S7-1 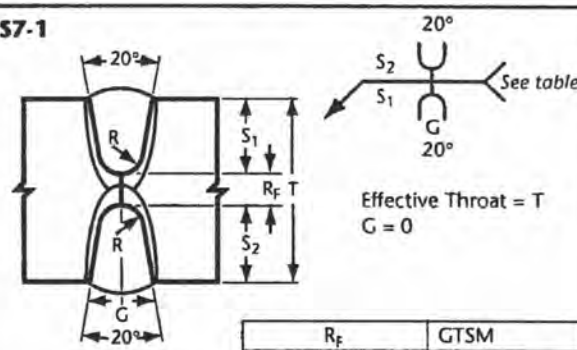 Effective Throat = T G = 0 B-U7-S R_F | GTSM ≤ 6 mm (1/4 in) | Not mandatory > 6 mm (1/4 in) | Mandatory

(Continued)

Figure 10.3 (Continued)
Prequalified Complete Joint Penetration Groove Welds for the Submerged Arc Welding Process (SAW)

Welds / Joints	8 – Single J-Groove	9 – Double J-Groove
Butt (B)	**S8-1** 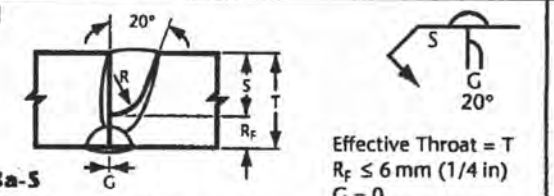 **B-U8a-S** Effective Throat = T $R_F \leq 6$ mm (1/4 in) G = 0 R = 12 mm (1/2 in) **S8-2** 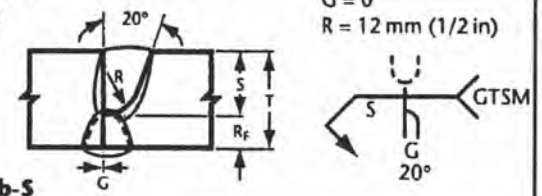 **B-U8b-S**	**S9-1** 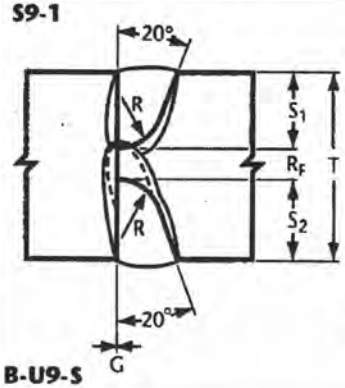 **B-U9-S** Effective Throat = T $R_F \geq 6$ mm (1/4 in) G = 0 R = 12 mm (1/2 in)
Tee (T) Corner (C)	**S8-3** 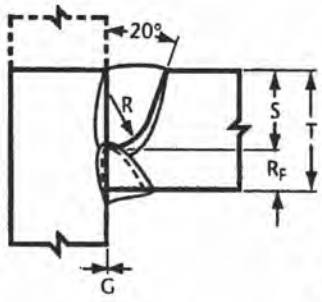 **TC-U8a-S** Effective Throat = T $R_F \geq 6$ mm (1/4 in) G = 0 R = 12 mm (1/2 in)	**S9-2** 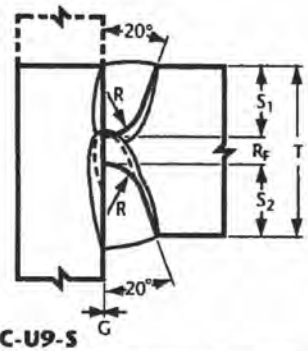 **TC-U9-S** Effective Throat = T $R_F \geq 6$ mm (1/4 in) G = 0 R = 12 mm (1/2 in)
Tee (T) Corner (C)	**S8-4** 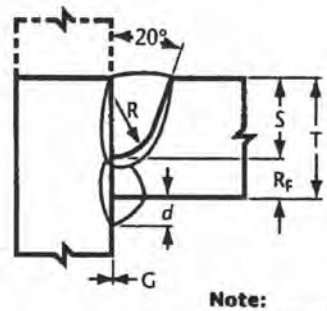 **TC-U8b-S** Effective Throat = T $R_F \leq 3$ mm (1/8 in) G = 0 $d \geq 6$ mm (1/4 in) R = 12 mm (1/2 in) **Note:** *Weld back side first with a SMAW or FCAW min.* 10 mm (3/8 in) *fillet.*	**Notes:** **(1)** *For all joints that show the GTSM reference on the welding symbol, gouging to sound metal prior to welding from the other side is mandatory. See Clause 5.1.4 for definition.* **(2)** *The groove in a joint may be reversed where more practical or necessary.* **(3)** *See Clause 10.3.1.* **(4)** *For corner joints, see preferred preparation as shown in Figure 4.1.*

Figure 10.3 (Concluded)
Prequalified Complete Joint Penetration Groove Welds for the Submerged Arc Welding Process (SAW)

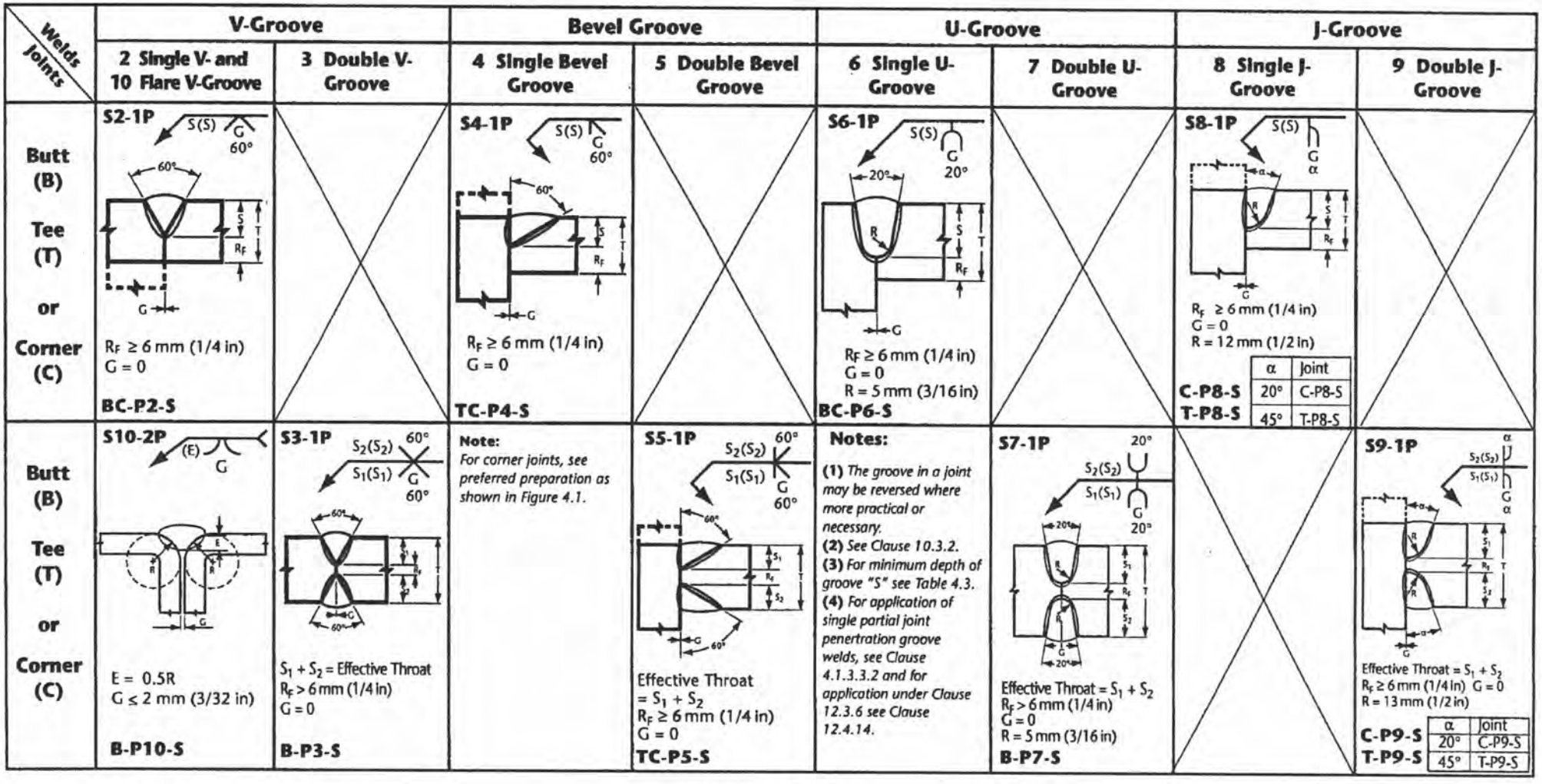

Figure 10.4
Prequalified Partial Joint Penetration Groove Welds for the Submerged Arc Welding Process (SAW)
(See Clause 10.3.2.)

Mosher ENGINEERING

WELDING PROCEDURE DATA SHEET

No.: **FCAW-06-CVN**

Date: May 5, 2008

Company Name:	Mosher Engineering	Wldg. Specification No:	RTR-4
Address:	1358 Queen Street	Reference WPQR:	
	Halifax Nova Scotia B3J 2H5	Ref. Standards:	CSA W47.1, W59 & W48

Material Information:

Position:	Horizontal	Welding Process:	FCAW	Consumable:	E491T-12MJ-H4
Base Mat'l:	CAN G40.21 350WT Cat. 5 (27J @-40°C)	Mode of Transfer:	Globular Transfer	Shielding Gas:	75% Ar 25% CO2
		Process Mode:	Semi-Automatic	Gas Flow:	45 ft3/h
		Tungsten Type:		Tungsten Dia.:	in

Cleaning:	Wire brush and remove slag in between passes	PHT Temp:	15°C or 59 °F
		PWHT Temp:	NA °F

Typical Joint Details:

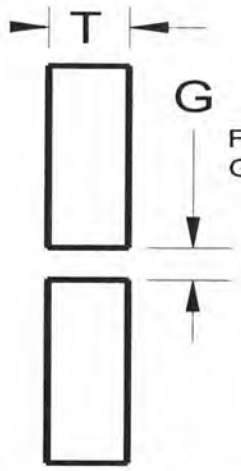

Typical Pass & Layer Sequence:

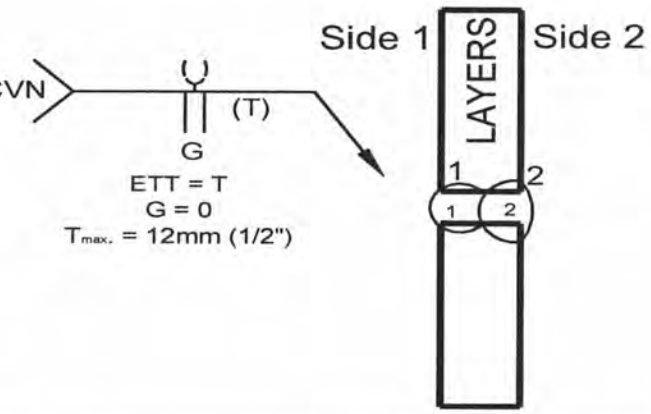

Joint Configuration:		**Joint Details:**		**Technique & Process Information:**		
Joint Type:	Butt, Tee, Corner	G = 0.045	Θ (°) = 0	Electrical Stickout:	3/4 ± 1/8	in
Weld Type:	Complete Joint Penetration	R_F = 0		Nozzle Diameter:	1/2	in
Backgouging:	Backgouged to Sound Metal			Average Deposition Rate:	7.0	lbs/h

Welding Parameters:

Weld Size in.	Weld Size mm	Depth of Prep'n in	Side No.	Layer No. Min	Layer No. Max	Pass No. Min	Pass No. Max	Electrode Size in.	Electrode Size mm	Current (Amps) DCRP Min	Current (Amps) DCRP Max	Wire Feed Speed (in/min) Min	Wire Feed Speed (in/min) Max	Arc Volts (Volts) Min	Arc Volts (Volts) Max	Travel Speed (in/min) Min	Travel Speed (in/min) Max	Average Heat Input (kJ/in)
1/4	6.4	1/4	1	1	1	1	1	0.045	1.2	200	240	300	400	27	29	31.4	42.5	10.0
			2		2	2	2	0.045	1.2	200	240	300	400	27	29	21.0	28.4	15.0
5/16	7.9	5/16	1	1	1	1	1	0.045	1.2	200	240	300	400	27	29	25.1	34.0	12.5
			2		2	2	2	0.045	1.2	200	240	300	400	27	29	21.0	28.4	15.0
3/8	9.5	3/8	1	1	1	1	1	0.045	1.2	200	240	300	400	27	29	21.0	28.4	15.0
			2		2	2	2	0.045	1.2	200	240	300	400	27	29	21.0	28.4	15.0

Revision Status:

Date:	Explanation:
22/07/2008	Per PQR P5745

NOTES:

1. Use stringer beads only. Restrict weld bead to ≤ 16 mm.
2. Weld Sizes represent effective weld throat thickness for qualified T range.
3. Target heat inputs at calculated average.
4. Tack weld parameters to be per main weld parameters
5. Backgouge as necessary to repair side 2.

CWB Approval:

CWB Accepted

CWB

Jul 25, 2008

Valid only if welding consumables are certified by the CWB

Company's Approval:

REGISTERED PROFESSIONAL ENGINEER
DATE 07/22/2008
7801
PROVINCE OF NOVA SCOTIA

Prepared by: FORGERON ENGINEERING LIMITED **Tel:** (902) 835-7225

Mosher ENGINEERING

WELDING PROCEDURE DATA SHEET

No.: **FCAW-07-CVN**

Date: May 5, 2008

Company Name:	Mosher Engineering	Wldg. Specification No:	RTR-4
Address:	1358 Queen Street	Reference WPQR:	
	Halifax Nova Scotia B3J 2H5	Ref. Standards:	CSA W47.1, W59 & W48

Material Information:

Position:	Vertical Up	Welding Process:	FCAW	Consumable:	E491T-12MJ-H4
Base Mat'l:	CAN G40.21 350WT Cat. 5 (27J @-40°C)	Mode of Transfer:	Globular Transfer	Shielding Gas:	75% Ar 25% CO2
		Process Mode:	Semi-Automatic	Gas Flow:	38 ft3/h
		Tungsten Type:		Tungsten Dia.:	in

Cleaning:	Wire brush and remove slag in between passes	PHT Temp:	15°C or 59 °F
		PWHT Temp:	NA °F

Typical Joint Details:

Typical Pass & Layer Sequence:

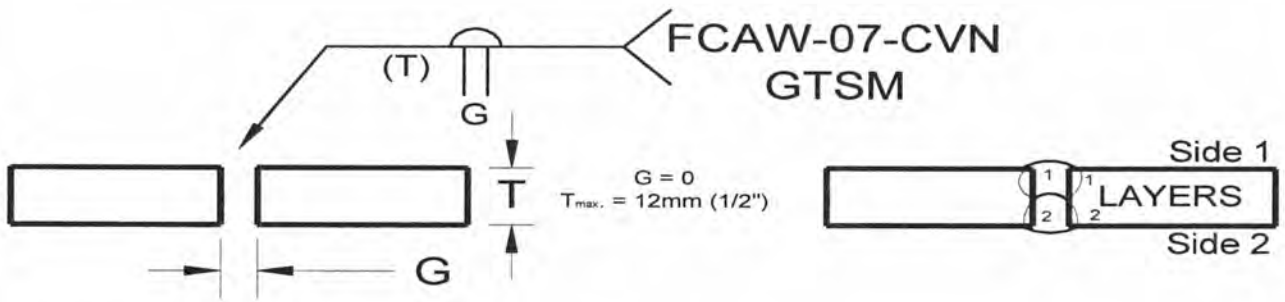

Joint Configuration:		**Joint Details:**		**Technique & Process Information:**		
Joint Type:	Butt, Tee, Corner	G = 0.045	Θ (°) = 0	Electrical Stickout:	3/4 ± 1/8	in
Weld Type:	Complete Joint Penetration	R_F = 0		Nozzle Diameter:	1/2	in
Backgouging:	Backgouged to Sound Metal			Average Deposition Rate:	4.7	lbs/h

Welding Parameters:

Weld Size in.	Weld Size mm	Depth of Prep'n in	Side No.	Layer No. Min	Layer No. Max	Pass No. Min	Pass No. Max	Electrode Size in.	Electrode Size mm	Current (Amps) DCRP Min	Current (Amps) DCRP Max	Wire Feed Speed (in/min) Min	Wire Feed Speed (in/min) Max	Arc Volts (Volts) Min	Arc Volts (Volts) Max	Travel Speed (in/min) Min	Travel Speed (in/min) Max	Average Heat Input (kJ/in)
1/4	6.4	1/4	1	1	1	1	1	0.045	1.2	150	170	175	225	21	25	6.9	7.4	30.9
			2		2		2	0.045	1.2	150	170	175	225	21	25	6.9	7.4	30.9
5/16	7.9	5/16	1	1	1	1	1	0.045	1.2	150	170	175	225	21	25	6.9	7.4	30.9
			2		2		2	0.045	1.2	150	170	175	225	21	25	6.9	7.4	30.9
3/8	9.5	3/8	1	1	1	1	1	0.045	1.2	150	170	175	225	21	25	6.9	7.4	30.9
			2		2		2	0.045	1.2	150	170	175	225	21	25	6.9	7.4	30.9

Revision Status:

Date:	Explanation:
22/07/2008	Per PQR P5745

NOTES:

1. Use stringer beads only. Restrict weld bead to ≤ 16 mm.
2. Weld Sizes represent effective weld throat thickness for qualified T range.
3. Target heat inputs at calculated average.
4. Tack weld parameters to be per main weld parameters
5. Backgouge as necessary to repair side 2.

CWB Approval:

CWB Accepted

CWB

Jul 25, 2008

Valid only if welding consumables are certified by the CWB

Company's Approval:

REGISTERED PROFESSIONAL ENGINEER
DATE 07/22/2008
7601
PROVINCE OF NOVA SCOTIA

Prepared by: FORGERON ENGINEERING LIMITED Tel: (902) 835-7225

Mosher ENGINEERING

WELDING PROCEDURE DATA SHEET

No.: **FCAW-10-CVN**

Date: May 5, 2008

Company Name:	Mosher Engineering	Wldg. Specification No:	RTR-4
Address:	1358 Queen Street	Reference WPQR:	
	Halifax Nova Scotia B3J 2H5	Ref. Standards:	CSA W47.1, W59 & W48

Material Information:

Position:	Horizontal	Welding Process:	FCAW	Consumable:	E491T-12MJ-H4
Base Mat'l:	CAN G40.21 350WT Cat. 5 (27J @-40°C)	Mode of Transfer:	Globular Transfer	Shielding Gas:	75% Ar 25% CO2
		Process Mode:	Semi-Automatic	Gas Flow:	45 ft3/h
		Tungsten Type:		Tungsten Dia.:	in

Cleaning:	Wire brush and remove slag in between passes	PHT Temp:	15°C or 59 °F
		PWHT Temp:	NA °F

Typical Joint Details:

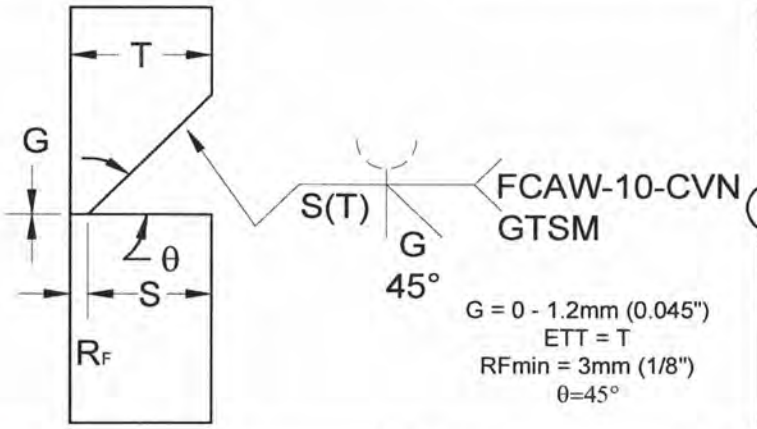

Typical Pass & Layer Sequence:

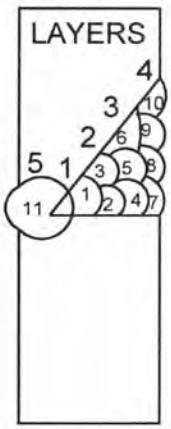

Joint Configuration:		Joint Details:		Technique & Process Information:	
Joint Type:	Butt, Tee, Corner	G = 0	Θ (°) = 45	Electrical Stickout:	3/4 ± 1/8 in
Weld Type:	Complete Joint Penetration	R_F = 1/8		Nozzle Diameter:	1/2 in
Backgouging:	Backgouged to Sound Metal			Average Deposition Rate:	7.0 lbs/h

Welding Parameters:

Weld Size in.	Weld Size mm	Depth of Prep'n in	Side No.	Layer No. Min	Layer No. Max	Pass No. Min	Pass No. Max	Electrode Size in.	Electrode Size mm	Current (Amps) DCRP Min	Current (Amps) DCRP Max	Wire Feed Speed (in/min) Min	Wire Feed Speed (in/min) Max	Arc Volts (Volts) Min	Arc Volts (Volts) Max	Travel Speed (in/min) Min	Travel Speed (in/min) Max	Average Heat Input (kJ/in)
3/8	9.5	1/4	1	1	2	1	3	0.045	1.2	200	240	300	400	27	29	22.6	30.6	13.9
			2		5		11	0.045	1.2	200	240	300	400	27	29	17.0	23.0	18.5
5/8	16	1/2	1	1	3	1	6	0.045	1.2	200	240	300	400	27	29	17.0	23.0	18.5
			2		5		11	0.045	1.2	200	240	300	400	27	29	17.0	23.0	18.5
3/4	19	5/8	1	1	4	1	10	0.045	1.2	200	240	300	400	27	29	18.1	24.5	17.3
			2		5		11	0.045	1.2	200	240	300	400	27	29	17.0	23.0	18.5

Revision Status:

Date:	Explanation:
22/07/2008	P5744

NOTES:

1. Use stringer beads only. Restrict weld bead to ≤ 16 mm.
2. Weld Sizes represent effective weld throat thickness for qualified T range.
3. Target heat inputs at calc'd average. Max. Heat Input to 46.7 kJ/in
4. Tack weld parameters to be per main weld parameters
5. Backgouge as necessary to repair side 2.

CWB Approval:

CWB Accepted

CWB

Jul 25, 2008

Valid only if welding consumables are certified by the CWB

Company's Approval:

REGISTERED PROFESSIONAL ENGINEER
DATE 07/22/2008
7601
PROVINCE OF NOVA SCOTIA

Prepared by: FORGERON ENGINEERING LIMITED **Tel: (902) 835-7225**

Mosher ENGINEERING

WELDING PROCEDURE DATA SHEET

No.: **FCAW-11-CVN**

Date: May 5, 2008

Company Name:	Mosher Engineering	Wldg. Specification No:	RTR-4
Address:	1358 Queen Street	Reference WPQR:	
	Halifax Nova Scotia B3J 2H5	Ref. Standards:	CSA W47.1, W59 & W48

Material Information:

Position:	Vertical Up	Welding Process:	FCAW	Consumable:	E491T-12MJ-H4
Base Mat'l:	CAN G40.21 350WT Cat. 5 (27J @-40°C)	Mode of Transfer:	Globular Transfer	Shielding Gas:	75% Ar 25% CO2
		Process Mode:	Semi-Automatic	Gas Flow:	38 ft3/h
		Tungsten Type:		Tungsten Dia.:	in

Cleaning:	Wire brush and remove slag in between passes	PHT Temp:	15°C or 59 °F
		PWHT Temp:	NA °F

Typical Joint Details:

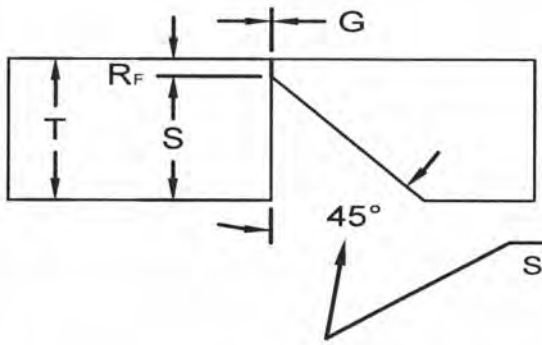

ETT = T
G = 0 - 1/8"
RF > 1/8"

Typical Pass & Layer Sequence:

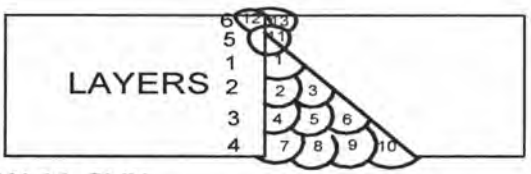

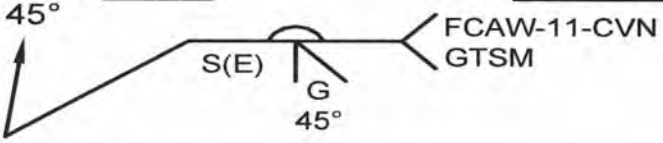

Joint Configuration:		**Joint Details:**		**Technique & Process Information:**		
Joint Type:	Butt, Tee, Corner	G = 0	Θ (°) = 45	Electrical Stickout:	5/8 ± 1/8	in
Weld Type:	Complete Joint Penetration	R_F = 1/8		Nozzle Diameter:	5/8	in
Backgouging:	Backgouged to Sound Metal			Average Deposition Rate:	6.5	lbs/h

Welding Parameters:

Weld Size		Depth of Prep'n	Side No.	Layer No.			Pass No.			Electrode Size		Current (Amps) DCRP			Wire Feed Speed (in/min)			Arc Volts (Volts)			Travel Speed (in/min)			Average Heat Input
in.	mm	in		Min		Max	Min		Max	in.	mm	Min		Max	Min		Max	Min		Max	Min		Max	(kJ/in)
3/8	9.5	1/4	1	1	-	2	1	-	3	0.045	1.2	155	-	175	175	-	225	24	-	27	13.1	-	19.7	15.4
			2	5	-	6	11	-	13	0.045	1.2	155	-	175	175	-	225	24	-	27	15.4	-	18.7	14.8
1/2	13	3/8	1	1	-	3	1	-	6	0.045	1.2	155	-	175	175	-	225	24	-	27	13.1	-	19.7	15.4
			2	5	-	6	11	-	13	0.045	1.2	155	-	175	175	-	225	24	-	27	15.4	-	18.7	17.5
5/8	16	1/2	1	1	-	3	1	-	6	0.045	1.2	155	-	175	175	-	225	24	-	27	13.1	-	19.7	15.4
			2	5	-	6	11	-	13	0.045	1.2	155	-	175	175	-	225	24	-	27	15.4	-	18.7	17.5
3/4	19	5/8	1	1	-	4	1	-	10	0.045	1.2	155	-	175	175	-	225	24	-	27	13.1	-	19.7	15.4
			2	5	-	6	11	-	13	0.045	1.2	155	-	175	175	-	225	24	-	27	15.4	-	18.7	17.5

Revision Status:

Date:	Explanation:
22/07/2008	P5744

NOTES:

1. Use stringer beads only. Restrict weld bead to ≤ 16 mm.
2. Weld Sizes represent effective weld throat thickness for qualified T range.
3. Target heat inputs at calc'd average. Max. Heat Input to 46.7 kJ/in
4. Tack weld parameters to be per main weld parameters
5. Backgouge as necessary to repair side 2.

CWB Approval:

CWB Accepted

CWB

Jul 25, 2008

Valid only if welding consumables are certified by the CWB

Company's Approval:

REGISTERED PROFESSIONAL ENGINEER
DATE 07/22/2008
7601
PROVINCE OF NOVA SCOTIA

Prepared by: FORGERON ENGINEERING LIMITED **Tel: (902) 835-7225**

Mosher ENGINEERING

WELDING PROCEDURE DATA SHEET

No.: **SMAW-06-CVN**

Date: May 5, 2008

Company Name:	Mosher Engineering	Wldg. Specification No:	RTR-1
Address:	1358 Queen Street	Reference WPQR:	
	Halifax Nova Scotia B3J 2H5	Ref. Standards:	CSA W47.1, W59 & W48

Material Information:

Position:	Horizontal	Welding Process:	SMAW	Consumable:	E4918/E48018/E7018
Base Mat'l:	CAN G40.21 350WT Cat. 5 (27J @-40°C)	Mode of Transfer:	N/A	Shielding Gas:	N/A
		Process Mode:	Manual	Gas Flow:	ft3/h
		Tungsten Type:		Tungsten Dia.:	in

Cleaning:	Wire brush and remove slag in between passes	PHT Temp:	15°C or 59	°F
		PWHT Temp:	NA	°F

Typical Joint Details:

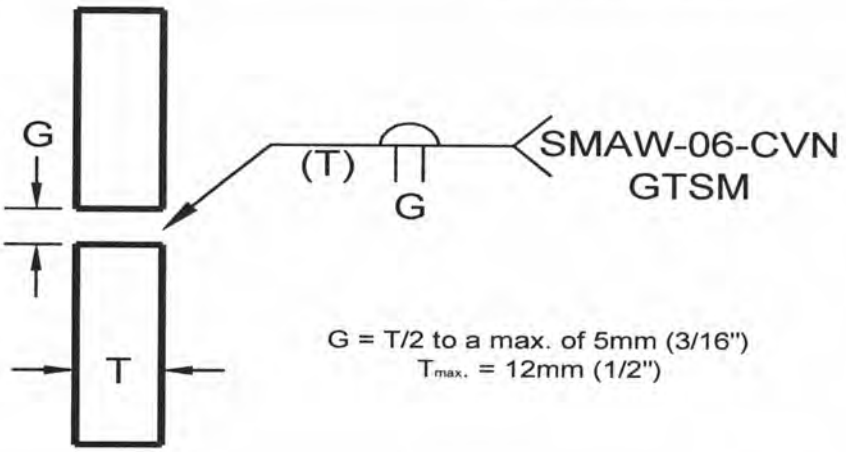

Typical Pass & Layer Sequence:

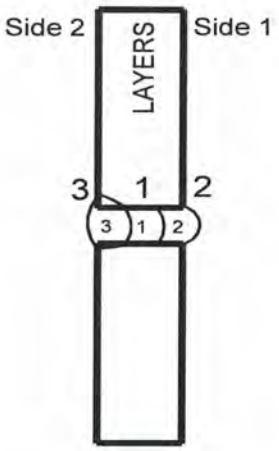

Joint Configuration:		**Joint Details:**		**Technique & Process Information:**		
Joint Type:	Butt, Tee, Corner	G = T/2	Θ (°) = 0	Electrical Stickout:	3/4 ± 1/8	in
Weld Type:	Complete Joint Penetration	R_F = 0		Nozzle Diameter:	1/2	in
Backgouging:	Backgouged to Sound Metal			Average Deposition Rate:	2.6	lbs/h

Welding Parameters:

Weld Size in.	Weld Size mm	Depth of Prep'n in	Side No.	Layer No. Min	Layer No. Max	Pass No. Min	Pass No. Max	Electrode Size in.	Electrode Size mm	Current (Amps) DCRP Min	Current (Amps) DCRP Max	Wire Feed Speed (in/min) Min	Wire Feed Speed (in/min) Max	Arc Volts (Volts) Min	Arc Volts (Volts) Max	Travel Speed (in/min) Min	Travel Speed (in/min) Max	Average Heat Input (kJ/in)
1/4	6.4	1/4	1		1		1	3/32	2.4	75	95			20	22	5.7	7.7	16.0
			2		2		2	3/32	2.4	75	95			20	22	5.7	7.7	16.0
5/16	7.9	5/16	1	1	2	1	2	3/32	2.4	75	95			20	22	4.6	6.2	16.0
			2		3	3	3	3/32	2.4	75	95			20	22	5.7	7.7	16.0
3/8	9.5	3/8	1	1	2	1	2	3/32	2.4	75	95			20	22	3.8	5.1	16.0
			2		3	3	3	3/32	2.4	75	95			20	22	5.7	7.7	16.0

Revision Status:

Date:	Explanation:
22/07/2008	Per PQR P65JR78

NOTES:

1. Use stringer beads only. Restrict weld bead to ≤ 16 mm.
2. Weld Sizes represent effective weld throat thickness for qualified T range.
3. Target heat inputs at calculated average.
4. Tack weld parameters to be per main weld parameters
5. Backgouge as necessary to repair side 2.

CWB Approval:

CWB Accepted

CWB

Jul 25, 2008

Valid only if welding consumables are certified by the CWB

Company's Approval:

REGISTERED PROFESSIONAL ENGINEER — DATE 07/22/2008 — 7601 — PROVINCE OF NOVA SCOTIA

Prepared by: FORGERON ENGINEERING LIMITED **Tel:** (902) 835-7225

Mosher ENGINEERING

WELDING PROCEDURE DATA SHEET

No.: **SMAW-07-CVN**

Date: May 5, 2008

Company Name:	Mosher Engineering	Wldg. Specification No:	RTR-1
Address:	1358 Queen Street	Reference WPQR:	
	Halifax Nova Scotia B3J 2H5	Ref. Standards:	CSA W47.1, W59 & W48

Material Information:

Position:	Vertical Up	Welding Process:	SMAW	Consumable:	E4918/E48018/E7018
Base Mat'l:	CAN G40.21 350WT Cat. 5 (27J @-40°C)	Mode of Transfer:	N/A	Shielding Gas:	N/A
		Process Mode:	Manual	Gas Flow:	ft3/h
		Tungsten Type:		Tungsten Dia.:	in
Cleaning:	Wire brush and remove slag in between passes	PHT Temp:		175°C or 347	°F
		PWHT Temp:		NA	°F

Typical Joint Details:

G = T/2 to a max. of 5mm (3/16")
$T_{max.}$ = 12mm (1/2")

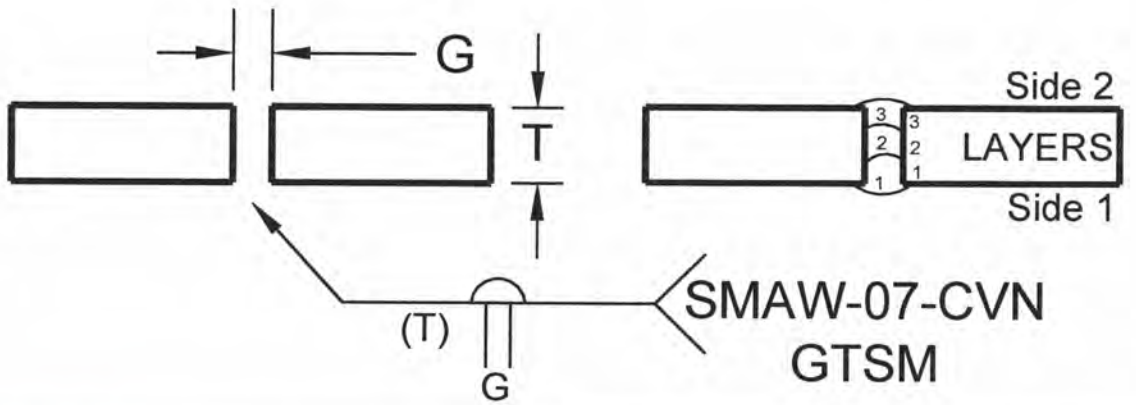

Typical Pass & Layer Sequence:

Joint Configuration:		**Joint Details:**		**Technique & Process Information:**		
Joint Type:	Butt, Tee, Corner	G = T/2	Θ (°) = 0	Electrical Stickout:	3/4 ± 1/8	in
Weld Type:	Complete Joint Penetration	R_F = 0		Nozzle Diameter:	1/2	in
Backgouging:	Backgouged to Sound Metal			Average Deposition Rate:	2.5	lbs/h

Welding Parameters:

Weld Size in.	Weld Size mm	Depth of Prep'n in	Side No.	Layer No. Min	Layer No. Max	Pass No. Min	Pass No. Max	Electrode Size in.	Electrode Size mm	Current (Amps) DCRP Min	Current (Amps) DCRP Max	Wire Feed Speed (in/min) Min	Wire Feed Speed (in/min) Max	Arc Volts (Volts) Min	Arc Volts (Volts) Max	Travel Speed (in/min) Min	Travel Speed (in/min) Max	Average Heat Input (kJ/in)
1/4	6.4	1/4	1		1		1	3/32	2.4	75	95			20	22	2.8	3.2	35.7
			2		2		2	3/32	2.4	75	95			20	22	2.8	3.2	35.7
5/16	7.9	5/16	1	1	2	1	2	3/32	2.4	75	95			20	22	2.8	3.2	35.7
			2		3	3	3	3/32	2.4	75	95			20	22	2.8	3.2	35.7
3/8	9.5	3/8	1	1	2	1	2	3/32	2.4	75	95			20	22	2.8	3.2	35.7
			2		2	3	3	3/32	2.4	75	95			20	22	2.8	3.2	35.7

Revision Status:

Date:	Explanation:
22/07/2008	Per PQR P65JR78

NOTES:

1. Use stringer beads only. Restrict weld bead to ≤ 16 mm.
2. Weld Sizes represent effective weld throat thickness for qualified T range.
3. Target heat inputs at calculated average.
4. Tack weld parameters to be per main weld parameters
5. Backgouge as necessary to repair side 2.

CWB Approval:

CWB Accepted

CWB

Jul 25, 2008

Valid only if welding consumables are certified by the CWB

Company's Approval:

REGISTERED PROFESSIONAL ENGINEER
DATE 07/22/2008
7681
PROVINCE OF NOVA SCOTIA

Prepared by: FORGERON ENGINEERING LIMITED Tel: (902) 835-7225

Mosher ENGINEERING

WELDING PROCEDURE DATA SHEET

No.: **SMAW-10-CVN**

Date: May 5, 2008

Company Name:	Mosher Engineering	Wldg. Specification No:	RTR-1
Address:	1358 Queen Street	Reference WPQR:	
	Halifax Nova Scotia B3J 2H5	Ref. Standards:	CSA W47.1, W59 & W48

Material Information:

Position:	Horizontal	Welding Process:	SMAW	Consumable:	E4918/E48018/E7018
Base Mat'l:	CAN G40.21 350WT Cat. 5 (27J @-40°C)	Mode of Transfer:	N/A	Shielding Gas:	N/A
		Process Mode:	Manual	Gas Flow:	ft3/h
		Tungsten Type:		Tungsten Dia.:	in
Cleaning:	Wire brush and remove slag in between passes	PHT Temp:		15°C or 59	°F
		PWHT Temp:		NA	°F

Typical Joint Details:

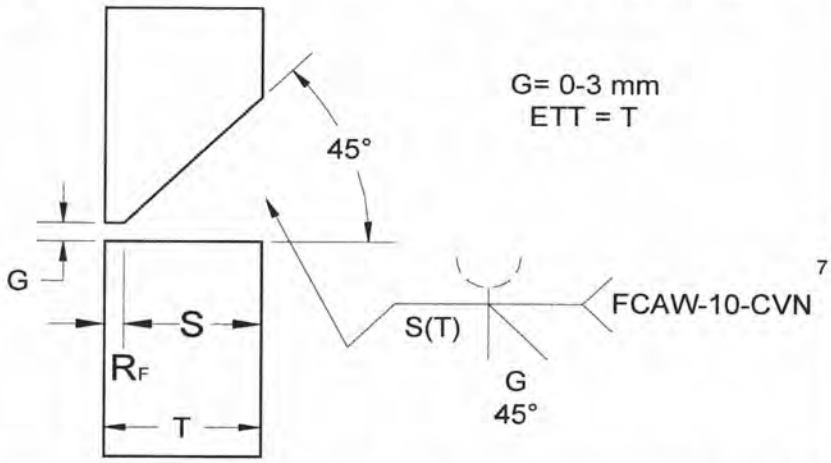

Typical Pass & Layer Sequence:

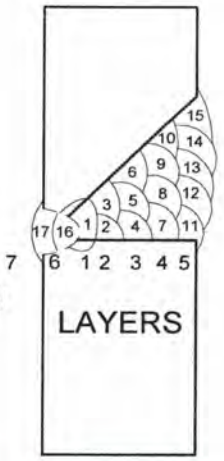

Joint Configuration:		**Joint Details:**		**Technique & Process Information:**	
Joint Type:	Butt, Tee, Corner	G = 1/8	Θ (°) = 45	Electrical Stickout:	in
Weld Type:	Complete Joint Penetration	R_F = 1/8		Nozzle Diameter:	in
Backgouging:	Backgouged to Sound Metal			Average Deposition Rate: 3.5	lbs/h

Welding Parameters:

Weld Size in.	Weld Size mm	Depth of Prep'n in	Side No.	Layer No. Min	Layer No. Max	Pass No. Min	Pass No. Max	Electrode Size in.	Electrode Size mm	Current (Amps) DCRP Min	Current (Amps) DCRP Max	Wire Feed Speed (in/min) Min	Wire Feed Speed (in/min) Max	Arc Volts (Volts) Min	Arc Volts (Volts) Max	Travel Speed (in/min) Min	Travel Speed (in/min) Max	Average Heat Input (kJ/in)
3/8	9.5	1/4	1	1	3	1	6	1/8	3.2	115	127			22	25	3.4	8.6	28.4
			2		7	16	17	1/8	3.2	115	127			22	25	3.4	8.6	28.4
1/2	13	3/8	1	1	4	1	10	1/8	3.2	115	127			22	25	3.4	8.6	28.4
			2		7	16	17	1/8	3.2	115	127			22	25	3.4	8.6	28.4
5/8	16	1/2	1	1	5	1	10	1/8	3.2	115	127			22	25	3.4	8.6	28.4
			2		7	16	17	1/8	3.2	115	127			22	25	3.4	8.6	28.4
3/4	19	5/8	1	1	6	1	15	1/8	3.2	115	127			22	25	3.4	8.6	28.4
			2		7	16	17	1/8	3.2	115	127			22	25	3.4	8.6	28.4

Revision Status:

Date:	Explanation:
22/07/2008	P036388

NOTES:

1. Use stringer beads only. Restrict weld bead to ≤ 16 mm.
2. Weld Sizes represent effective weld throat thickness for qualified T range.
3. Target heat inputs at calculated average.
4. Tack weld parameters to be per main weld parameters
5. Backgouge as necessary to repair side 2.

CWB Approval:

CWB Accepted

CWB

Jul 25, 2008

Valid only if welding consumables are certified by the CWB

Company's Approval:

REGISTERED PROFESSIONAL ENGINEER * PROVINCE OF NOVA SCOTIA * DATE 07/22/2008 7801

Prepared by: FORGERON ENGINEERING LIMITED **Tel: (902) 835-7225**

Mosher ENGINEERING

WELDING PROCEDURE DATA SHEET

No.: **SMAW-11-CVN**

Date: May 5, 2008

Company Name:	Mosher Engineering	Wldg. Specification No:	RTR-1
Address:	1358 Queen Street	Reference WPQR:	
	Halifax Nova Scotia B3J 2H5	Ref. Standards:	CSA W47.1, W59 & W48

Material Information:

Position:	Vertical Up	Welding Process:	SMAW	Consumable:	E4918/E48018/E7018
Base Mat'l:	CAN G40.21 350WT Cat. 5 (27J @-40°C)	Mode of Transfer:	N/A	Shielding Gas:	N/A
		Process Mode:	Manual	Gas Flow:	ft3/h
		Tungsten Type:		Tungsten Dia.:	in

Cleaning:	Wire brush and remove slag in between passes	PHT Temp:	175°C or 347 °F
		PWHT Temp:	NA °F

Typical Joint Details:

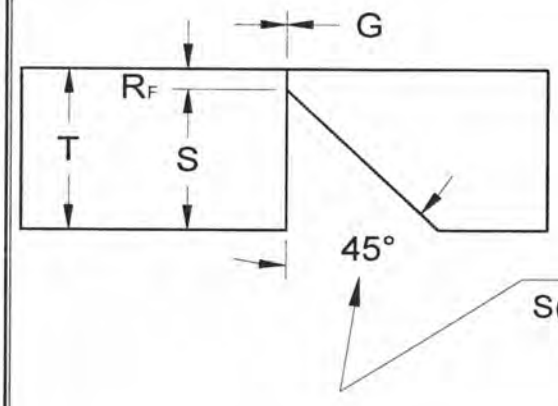

ETT = T

G = 0 - 1/8"

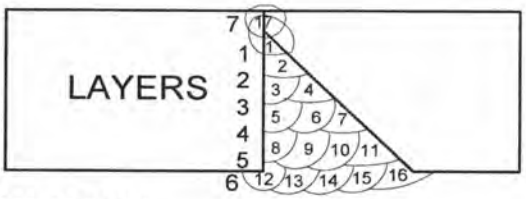

Typical Pass & Layer Sequence:

Joint Configuration:		**Joint Details:**		**Technique & Process Information:**	
Joint Type:	Butt, Tee, Corner	G = 0	Θ (°) = 45	Electrical Stickout:	in
Weld Type:	Complete Joint Penetration	R_F = 1/16		Nozzle Diameter:	in
Backgouging:	Backgouged to Sound Metal			Average Deposition Rate: 2.5	lbs/h

Welding Parameters:

Weld Size in.	Weld Size mm	Depth of Prep'n in	Side No.	Layer No. Min	Layer No. Max	Pass No. Min	Pass No. Max	Electrode Size in.	Electrode Size mm	Current (Amps) DCRP Min	Current (Amps) DCRP Max	Wire Feed Speed (in/min) Min	Wire Feed Speed (in/min) Max	Arc Volts (Volts) Min	Arc Volts (Volts) Max	Travel Speed (in/min) Min	Travel Speed (in/min) Max	Average Heat Input (kJ/in)
3/8	9.5	5/16	1	1	3	1	7	1/8	3.2	115	127			22	25	3.4	8.6	28.4
			2		7		17	1/8	3.2	115	127			22	25	3.4	8.6	28.4
1/2	13	7/16	1	1	4	1	10	1/8	3.2	115	127			22	25	3.4	8.6	28.4
			2		7		17	1/8	3.2	115	127			22	25	3.4	8.6	28.4
5/8	16	9/16	1	1	5	1	11	1/8	3.2	115	127			22	25	3.4	8.6	28.4
			2		7		17	1/8	3.2	115	127			22	25	3.4	8.6	28.4
3/4	19	11/16	1	1	6	1	16	1/8	3.2	115	127			22	25	3.4	8.6	28.4
			2		7		17	1/8	3.2	115	127			22	25	3.4	8.6	28.4

Revision Status:

Date:	Explanation:
22/07/2008	P036388

NOTES:

1. Use stringer beads only. Restrict weld bead to ≤ 16 mm.
2. Weld Sizes represent effective weld throat thickness for qualified T range.
3. Target heat inputs at calculated average.
4. Tack weld parameters to be per main weld parameters
5. Backgouge as necessary to repair side 2.

CWB Approval:

CWB Accepted

CWB

Jul 25, 2008

Valid only if welding consumables are certified by the CWB

Company's Approval:

REGISTERED PROFESSIONAL ENGINEER PROVINCE OF NOVA SCOTIA DATE 07/22/2008 7081

Prepared by: FORGERON ENGINEERING LIMITED Tel: (902) 835-7225

Mosher ENGINEERING

WELDING PROCEDURE DATA SHEET

No.: **SAW-06-CVN**

Date: June 11, 2008

Company Name:	Mosher Engineering	Wldg. Specification No:	SAW-1
Address:	1358 Queen Street	Reference WPQR:	
	Halifax Nova Scotia B3J 2H5	Ref. Standards:	CSA W47.1, W59 & W48

Material Information:

Position:	Horizontal	Welding Process:	SAW	Consumable:	F7A4-EM12K-H8
Base Mat'l:	CAN G40.21 350WT Cat. 5 (27J @-40°C)	Mode of Transfer:	Spray Transfer	Shielding Gas:	N/A
		Process Mode:	Automatic	Gas Flow:	NA ft3/h
		Tungsten Type:		Tungsten Dia.:	NA in

Cleaning:	Wire brush and remove slag in between passes	PHT Temp:	15°C or 59 °F
		PWHT Temp:	NA °F

Typical Joint Details:

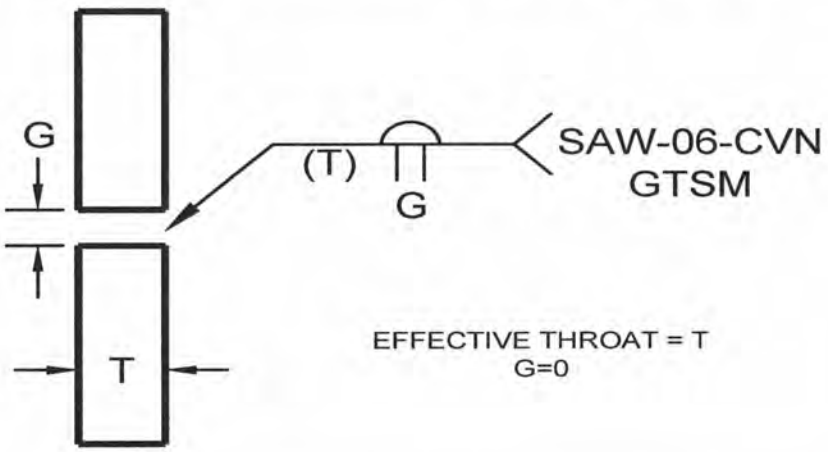

Typical Pass & Layer Sequence:

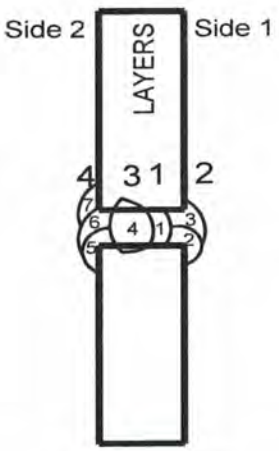

Joint Configuration:		**Joint Details:**		**Technique & Process Information:**		
Joint Type:	Butt	G = 3/32	Θ (°) = 0	Electrical Stickout:	1 1/2 ± 1/4	in
Weld Type:	Complete Joint Penetration	R_F = 0		Nozzle Diameter:	3/4	in
Backgouging:	Backgouged to Sound Metal			Average Deposition Rate:	11.1	lbs/h

Welding Parameters:

Weld Size in.	Weld Size mm	Depth of Prep'n in	Side No.	Layer No. Min	Layer No. Max	Pass No. Min	Pass No. Max	Electrode Size in.	Electrode Size mm	Current (Amps) DCRP Min	Current (Amps) DCRP Max	Wire Feed Speed (in/min) Min	Wire Feed Speed (in/min) Max	Arc Volts (Volts) Min	Arc Volts (Volts) Max	Travel Speed (in/min) Min	Travel Speed (in/min) Max	Average Heat Input (kJ/in)
3/8	9.5		1	1	2	1	3	1/8	3.3	350	450	415	505	25	29	19.1	25.3	30.3
			2	3	4	4	6	1/8	3.3	350	450	415	505	25	29	19.1	25.3	30.3
7/16	11		1	1	2	1	3	1/8	3.3	350	450	415	505	25	29	19.1	25.3	30.3
			2	3	4	4	6	1/8	3.3	350	450	415	505	25	29	19.1	25.3	30.3
1/2	13		1	1	2	1	2	1/8	3.3	350	450	415	505	25	29	19.1	25.3	30.3
			2	3	4	4	6	1/8	3.3	350	450	415	505	25	29	19.1	25.3	30.3

Revision Status:

Date:	Explanation:
7/22/08	Per PQR P5709

CWB Approval:

Company's Approval:



NOTES:

1. Use stringer beads only. Restrict weld bead to ≤ 16 mm.
2. Weld Sizes represent effective weld throat thickness for qualified T range.
3. Target heat inputs at calculated average.
4. Tack weld parameters to be per main weld parameters
5. Backgouge as necessary to repair side 2.

Prepared by: FORGERON ENGINEERING LIMITED **Tel: (902) 835-7225**

Mosher ENGINEERING

WELDING PROCEDURE DATA SHEET

No.: **SAW-10-CVN**

Date: June 11, 2008

Company Name:	Mosher Engineering	Wldg. Specification No:	SAW-1
Address:	1358 Queen Street	Reference WPQR:	
	Halifax Nova Scotia B3J 2H5	Ref. Standards:	CSA W47.1, W59 & W48

Material Information:

Position:	Horizontal	Welding Process:	SAW	Consumable:	F7A4-EM12K-H8
Base Mat'l:	CAN G40.21 350WT Cat. 5 (27J @-40°C)	Mode of Transfer:	Spray Transfer	Shielding Gas:	N/A
		Process Mode:	Automatic	Gas Flow:	NA ft3/h
		Tungsten Type:		Tungsten Dia.:	NA in

Cleaning:	Wire brush and remove slag in between passes	PHT Temp:	15°C or 59 °F
		PWHT Temp:	NA °F

Typical Joint Details:

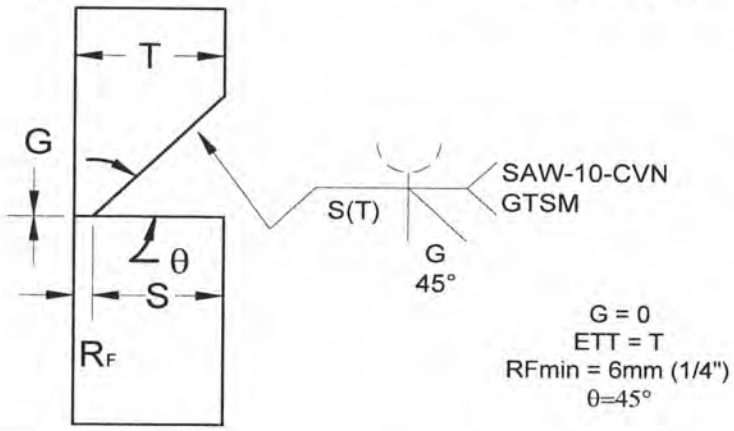

Typical Pass & Layer Sequence:

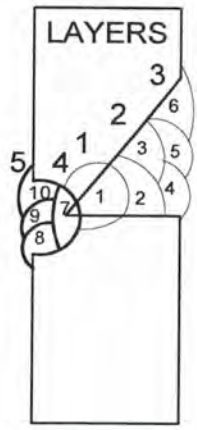

Joint Configuration:		**Joint Details:**		**Technique & Process Information:**		
Joint Type:	Butt	G = 0	Θ (°) = 45	Electrical Stickout:	1 1/4 ± 1/4	in
Weld Type:	Complete Joint Penetration	R_F = 1/4		Nozzle Diameter:	3/4	in
Backgouging:	Backgouged to Sound Metal			Average Deposition Rate:	11.1	lbs/h

Welding Parameters:

Weld Size in.	Weld Size mm	Depth of Prep'n in	Side No.	Layer No. Min	Layer No. Max	Pass No. Min	Pass No. Max	Electrode Size in.	Electrode Size mm	Current (Amps) DCRP Min	Current (Amps) DCRP Max	Wire Feed Speed (in/min) Min	Wire Feed Speed (in/min) Max	Arc Volts (Volts) Min	Arc Volts (Volts) Max	Travel Speed (in/min) Min	Travel Speed (in/min) Max	Average Heat Input (kJ/in)
7/16	11	3/16	1	1	2	1	2	1/8	3.3	450	550	415	510	25	29	15.4	23.6	41.5
			2	4	5	7	10	1/8	3.3	450	550	415	510	25	29	15.4	23.6	41.5
1/2	13	1/4	1	1	2	1	2	1/8	3.3	450	550	415	510	25	29	15.4	23.6	41.5
			2	4	5	7	10	1/8	3.3	450	550	415	510	25	29	15.4	23.6	41.5
5/8	16	3/8	1	1	3	1	5	1/8	3.3	450	550	415	510	25	29	15.4	23.6	41.5
			2	4	5	7	10	1/8	3.3	450	550	415	510	25	29	15.4	23.6	41.5
3/4	19	1/2	1	1	3	1	6	1/8	3.3	450	550	415	510	25	29	15.4	23.6	41.5
			2	4	5	7	10	1/8	3.3	450	550	415	510	25	29	15.4	23.6	41.5

Revision Status:

Date:	Explanation:
22/07/2008	P5710

CWB Approval:

Company's Approval:



NOTES:

1. Use stringer beads only. Restrict weld bead to ≤ 16 mm.
2. Weld Sizes represent effective weld throat thickness for qualified T range.
3. Target heat inputs at calculated average.
4. Tack weld parameters to be per main weld parameters
5. Backgouge as necessary to repair side 2.

Prepared by: FORGERON ENGINEERING LIMITED **Tel: (902) 835-7225**

Mosher ENGINEERING

WELDING PROCEDURE DATA SHEET

No.: **FCAW-1**

Date: July 22, 2008

Company Name:	Mosher Engineering	Wldg. Specification No:	RTR-4
Address:	1358 Queen Street	Reference WPQR:	
	Halifax Nova Scotia B3J 2H5	Ref. Standards:	CSA W47.1, W59 & W48

Material Information:

Position:	Flat	Welding Process:	FCAW	Consumable:	E491T-9MJ-H16/E4801T-9CH
Base Mat'l:	CAN G40.21 350WT Cat. 5 (27J @-40°C)	Mode of Transfer:	Spray Transfer	Shielding Gas:	75% Ar 25% CO2
		Process Mode:	Semi-Automatic	Gas Flow:	35 ft3/h
		Tungsten Type:		Tungsten Dia.:	in

Cleaning:	Wire brush and remove slag in between passes	PHT Temp:	As per Table 5.3 of CSA W59 °F
		PWHT Temp:	N/A °F

Typical Joint Details:

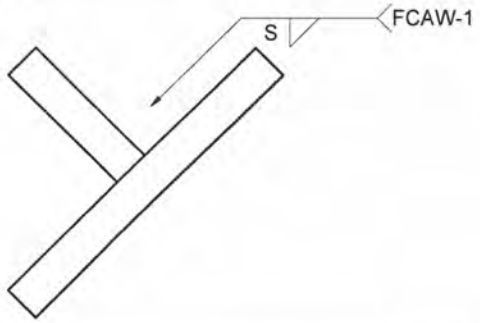

Typical Pass & Layer Sequence:

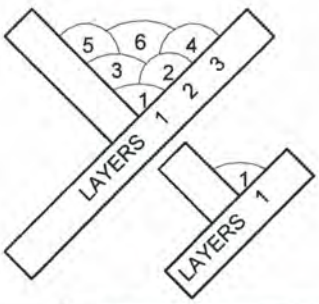

Joint Configuration:		**Joint Details:**		**Technique & Process Information:**		
Joint Type:	Tee, Corner, Lap	G = 0-1/16"	Q (°) =	Electrical Stickout:	3/4 ± 1/8	in
Weld Type:	Fillet Weld	R_F =		Nozzle Diameter:	1/2	in
Backgouging:	N/A			Average Deposition Rate:	8.0	lbs/h

Welding Parameters:

Weld Size in.	Weld Size mm	Depth of Prep'n in	Side No.	Layer No. Min	Layer No. Max	Pass No. Min	Pass No. Max	Electrode Size in.	Electrode Size mm	Current (Amps) DCRP Min	Current (Amps) DCRP Max	Wire Feed Speed (in/min) Min	Wire Feed Speed (in/min) Max	Arc Volts (Volts) Min	Arc Volts (Volts) Max	Travel Speed (in/min) Min	Travel Speed (in/min) Max	Average Heat Input (kJ/in)
3/16	4.8		1		1		1	0.045	1.2	225	275	380	460	29	31	20.0	24.0	20.5
1/4	6.4		1		1		1	0.045	1.2	225	275	380	460	29	31	20.0	24.0	20.5
5/16	7.9		1		1		1	0.045	1.2	225	275	380	460	29	31	16.6	22.4	20.5
3/8	9.5		1	1	2	1	3	0.045	1.2	225	275	380	460	29	31	17.3	23.4	22.1
1/2	13		1	1	2	1	3	0.045	1.2	225	275	380	460	29	31	12.4	16.8	30.8
5/8	16		1	1	3	1	6	0.045	1.2	226	275	380	460	29	31	12.4	16.8	30.8

Revision Status:

Date:	Explanation:
22/07/2008	Per PQR P5745

NOTES:

1. Use stringer beads only. Restrict weld bead to ≤ 16 mm.
2. Weld Sizes represent effective weld throat thickness for qualified T range.
3. Target heat inputs at calc'd average. Max. Heat Input to 46.7 kJ/in

CWB Approval:

CWB Accepted

CWB

Sep 09, 2008

Valid only if welding consumables are certified by the CWB

Company's Approval:

REGISTERED PROFESSIONAL ENGINEER * PROVINCE OF NOVA SCOTIA * DATE 07/22/2008 7601

Prepared by: FORGERON ENGINEERING LIMITED **Tel:** (902) 835-7225

Mosher ENGINEERING

WELDING PROCEDURE DATA SHEET

No.: **FCAW-2**

Date: July 22, 2008

Company Name:	Mosher Engineering	Wldg. Specification No:	RTR-4
Address:	1358 Queen Street	Reference WPQR:	
	Halifax Nova Scotia B3J 2H5	Ref. Standards:	CSA W47.1, W59 & W48

Material Information:

Position:	Horizontal	Welding Process:	FCAW	Consumable:	E491T-9MJ-H16/E4801T-9-CH	
Base Mat'l:	CAN G40.21 350WT Cat. 5 (27J @-40°C)	Mode of Transfer:	Spray Transfer	Shielding Gas:	75% Ar 25% CO2	
		Process Mode:	Semi-Automatic	Gas Flow:	35	ft3/h
		Tungsten Type:		Tungsten Dia.:		in
Cleaning:	Wire brush and remove slag in between passes	PHT Temp:			As per Table 5.3 of CSA W59	°F
		PWHT Temp:			N/A	°F

Typical Joint Details:

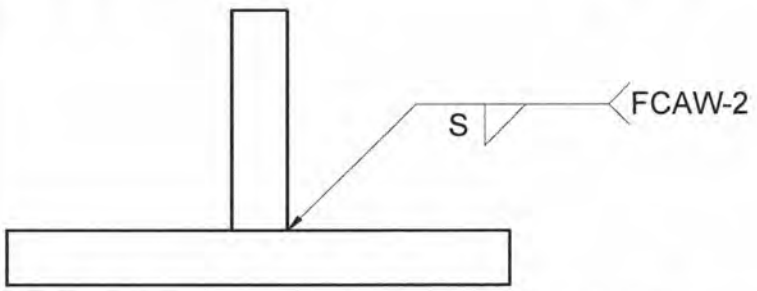

Typical Pass & Layer Sequence:

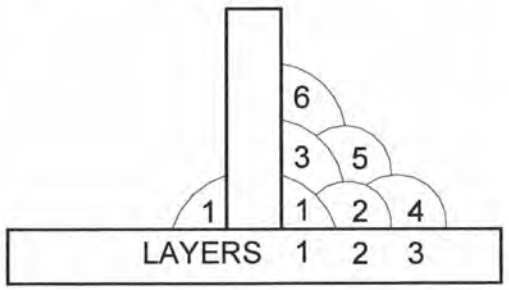

Joint Configuration:		**Joint Details:**		**Technique & Process Information:**		
Joint Type:	Tee, Corner, Lap	G = 0-1/16"	Q (°) =	Electrical Stickout:	3/4 ± 1/8	in
Weld Type:	Fillet Weld	R_F =		Nozzle Diameter:	1/2	in
Backgouging:	N/A			Average Deposition Rate:	8.0	lbs/h

Welding Parameters:

Weld Size in.	Weld Size mm	Depth of Prep'n in	Side No.	Layer No. Min	Layer No. Max	Pass No. Min	Pass No. Max	Electrode Size in.	Electrode Size mm	Current (Amps) DCRP Min	Current (Amps) DCRP Max	Wire Feed Speed (in/min) Min	Wire Feed Speed (in/min) Max	Arc Volts (Volts) Min	Arc Volts (Volts) Max	Travel Speed (in/min) Min	Travel Speed (in/min) Max	Average Heat Input (kJ/in)
3/16	4.8		1		1		1	0.045	1.2	225	275	380	460	29	31	20.0	24.0	20.5
1/4	6.4		1		1		1	0.045	1.2	225	275	380	460	29	31	20.0	24.0	20.5
5/16	7.9		1		1		1	0.045	1.2	225	275	380	460	29	31	16.6	22.4	20.5
3/8	9.5		1	1	2	1	3	0.045	1.2	225	275	380	460	29	31	17.3	23.4	22.1
1/2	13		1	1	2	1	3	0.045	1.2	225	275	380	460	29	31	12.4	16.8	30.8
5/8	16		1	1	3	1	6	0.045	1.2	226	275	380	460	29	31	12.4	16.8	30.8

Revision Status:

Date:	Explanation:
22/07/2008	Per PQR P5745

NOTES:

1. Use stringer beads only. Restrict weld bead to ≤ 16 mm.
2. Weld Sizes represent effective weld throat thickness for qualified T range.
3. Target heat inputs at calc'd average. Max. Heat Input to 46.7 kJ/in

CWB Approval:

CWB Accepted

CWB

Sep 09, 2008

Valid only if welding consumables are certified by the CWB

Company's Approval:

REGISTERED PROFESSIONAL ENGINEER
DATE 07/22/2008
7601
PROVINCE OF NOVA SCOTIA

Prepared by: FORGERON ENGINEERING LIMITED **Tel:** (902) 835-7225

Mosher ENGINEERING

WELDING PROCEDURE DATA SHEET

No.: **FCAW-3**

Date: July 22, 2008

Company Name:	Mosher Engineering	Wldg. Specification No:	RTR-4
Address:	1358 Queen Street	Reference WPQR:	
	Halifax Nova Scotia B3J 2H5	Ref. Standards:	CSA W47.1, W59 & W48

Material Information:

Position:	Vertical Up	Welding Process:	FCAW	Consumable:	E491T-9MJ-H16/E4801T-9CH	
Base Mat'l:	CAN G40.21 350WT Cat. 5 (27J @-40°C)	Mode of Transfer:	Spray Transfer	Shielding Gas:	75% Ar 25% CO2	
		Process Mode:	Semi-Automatic	Gas Flow:	35	ft3/h
		Tungsten Type:		Tungsten Dia.:		in

Cleaning:	Wire brush and remove slag in between passes	PHT Temp:	As per Table 5.3 of CSA W59	°F
		PWHT Temp:	N/A	°F

Typical Joint Details:

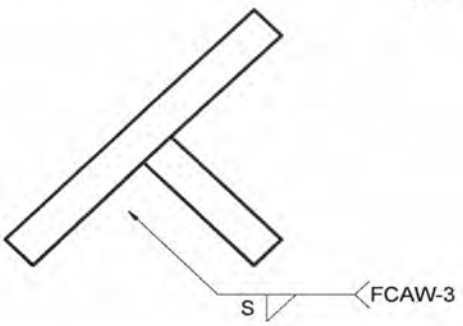

Typical Pass & Layer Sequence:

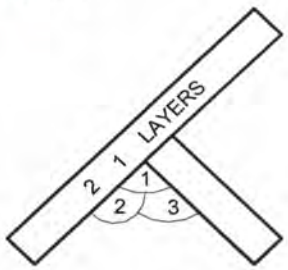

Joint Configuration:		**Joint Details:**		**Technique & Process Information:**		
Joint Type:	Tee, Corner, Lap	G = 0-1/16"	Q (°) =	Electrical Stickout:	3/4 ± 1/8	in
Weld Type:	Fillet Weld	R_F =		Nozzle Diameter:	1/2	in
Backgouging:	N/A			Average Deposition Rate:	5.0	lbs/h

Welding Parameters:

Weld Size in.	Weld Size mm	Depth of Prep'n in	Side No.	Layer No. Min	Layer No. Max	Pass No. Min	Pass No. Max	Electrode Size in.	Electrode Size mm	Current (Amps) DCRP Min	Current (Amps) DCRP Max	Wire Feed Speed (in/min) Min	Wire Feed Speed (in/min) Max	Arc Volts (Volts) Min	Arc Volts (Volts) Max	Travel Speed (in/min) Min	Travel Speed (in/min) Max	Average Heat Input (kJ/in)
3/16	4.8		1		1		1	0.045	1.2	150	250	200	300	26	29	28.8	38.9	9.7
1/4	6.4		1		1		1	0.045	1.2	150	250	200	300	26	29	16.2	21.9	17.3
5/16	7.9		1		1		1	0.045	1.2	150	250	200	300	26	29	10.4	14.0	26.0
3/8	9.5		1	1	2	1	3	0.045	1.2	150	250	200	300	26	29	10.8	14.6	26.0
1/2	13		1	1	2	1	3	0.045	1.2	150	250	200	300	26	29	6.1	8.2	46.2

On the Basis of **PREVIOUS TESTS ACCUMULATED BY THE CWB**

Revision Status:

Date:	Explanation:
22/07/2008	Per PQR P5745

NOTES:

1. Use stringer beads only. Restrict weld bead to ≤ 16 mm.
2. Weld Sizes represent effective weld throat thickness for qualified T range.
3. Target heat inputs at calc'd average. Max. Heat Input to 46.7 kJ/in

CWB Approval:

CWB Accepted

CWB

Sep 09, 2008

Valid only if welding consumables are certified by the CWB

Company's Approval:

REGISTERED PROFESSIONAL ENGINEER * PROVINCE OF NOVA SCOTIA * DATE 07/22/2008 7661

Prepared by: FORGERON ENGINEERING LIMITED Tel: (902) 835-7225

Mosher ENGINEERING

WELDING PROCEDURE DATA SHEET

No.: **FCAW-4**

Date: July 22, 2008

Company Name:	Mosher Engineering	Wldg. Specification No:	RTR-4
Address:	1358 Queen Street	Reference WPQR:	
	Halifax Nova Scotia B3J 2H5	Ref. Standards:	CSA W47.1, W59 & W48

Material Information:

Position:	Overhead	Welding Process:	FCAW	Consumable:	E491T-9MJ-H16/E4801T-9CH	
Base Mat'l:	CAN G40.21 350WT Cat. 5 (27J @-40°C)	Mode of Transfer:	Spray Transfer	Shielding Gas:	75% Ar 25% CO2	
		Process Mode:	Semi-Automatic	Gas Flow:	35	ft3/h
		Tungsten Type:		Tungsten Dia.:		in
Cleaning:	Wire brush and remove slag in between passes	PHT Temp:			As per Table 5.3 of CSA W59	°F
		PWHT Temp:			N/A	°F

Typical Joint Details:

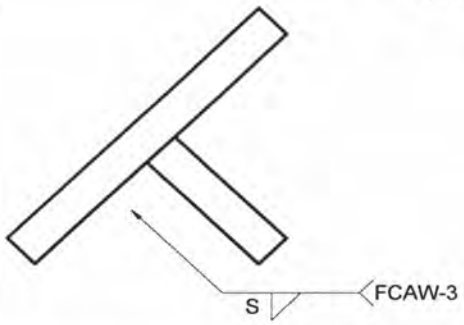

Typical Pass & Layer Sequence:

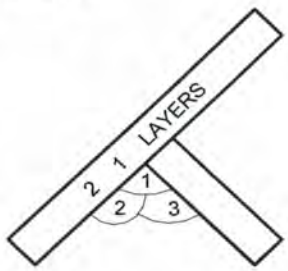

Joint Configuration:		**Joint Details:**		**Technique & Process Information:**		
Joint Type:	Tee, Corner, Lap	G = 0-1/16"	Q (°) =	Electrical Stickout:	3/4 ± 1/8	in
Weld Type:	Fillet Weld	R_F =		Nozzle Diameter:	1/2	in
Backgouging:	N/A			Average Deposition Rate:	5.0	lbs/h

Welding Parameters:

Weld Size in.	Weld Size mm	Depth of Prep'n in	Side No.	Layer No. Min	Layer No. Max	Pass No. Min	Pass No. Max	Electrode Size in.	Electrode Size mm	Current (Amps) DCRP Min	Current (Amps) DCRP Max	Wire Feed Speed (in/min) Min	Wire Feed Speed (in/min) Max	Arc Volts (Volts) Min	Arc Volts (Volts) Max	Travel Speed (in/min) Min	Travel Speed (in/min) Max	Average Heat Input (kJ/in)
3/16	4.8		1		1		1	0.045	1.2	150	250	200	300	26	29	28.8	38.9	9.7
1/4	6.4		1		1		1	0.045	1.2	150	250	200	300	26	29	16.2	21.9	17.3
5/16	7.9		1		1		1	0.045	1.2	150	250	200	300	26	29	16.2	21.9	17.3
3/8	9.5		1	1	2	1	3	0.045	1.2	150	250	200	300	26	29	10.8	14.6	26.0
1/2	13		1	1	2	1	3	0.045	1.2	150	250	200	300	26	29	6.1	8.2	46.2

On the Basis of **PREVIOUS TESTS ACCUMULATED BY THE CWB**

Revision Status:

Date:	Explanation:
22/07/2008	Per PQR P5745

NOTES:

1. Use stringer beads only. Restrict weld bead to ≤ 16 mm.
2. Weld Sizes represent effective weld throat thickness for qualified T range.
3. Target heat inputs at calc'd average. Max. Heat Input to 46.7 kJ/in

CWB Approval:

CWB Accepted

CWB

Sep 09, 2008

Valid only if welding consumables are certified by the CWB

Company's Approval:

REGISTERED PROFESSIONAL ENGINEER * PROVINCE OF NOVA SCOTIA * DATE 07/22/2008 7601

Prepared by: FORGERON ENGINEERING LIMITED **Tel:** (902) 835-7225

RTR FORM S-101, 1992 to CSA W47.1	**RTR ENGINEERING WELDING PROCEDURE DATA SHEET**	No. FCAW-4-IN1	Date MARCH 28, 2002

Company Name and Complete Address	**MOSHER ENGINEERING LIMITED** **2089 Upper Water Street** **Halifax, Nova Scotia, B3J 2R7**	WPS No.	RTR-4(A)
		Applicable Standard(s)	CSA W47.1, W59 & W48.
		Electrode Classification	E49XT9M-H16 X=1 or 2
Welding Process & Mode	☐ SMAW ☐ SAW ☐ GTAW (Tungsten) Type: ☒ FCAW ☐ GMAW ☐ ESW ☐ SW Size: ☐ Manual ☒ Semi-Automatic ☐ Machine ☐ Automatic	☒ Preheat Minimum as per CSA W59 ☐ Other	
Material Designation	**Steel groups 1,2 & 3 of Table 11-1 W59 for type A (without color matching), for type T (without regard to impact values)**	Welding Position: **FLAT**	Interpass Temperature: Minimum **as above**; Maximum **500 deg. F**

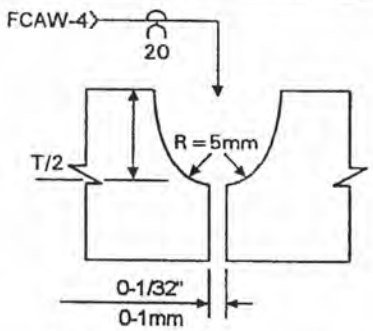

Sketch Of Typical Joint Preperation

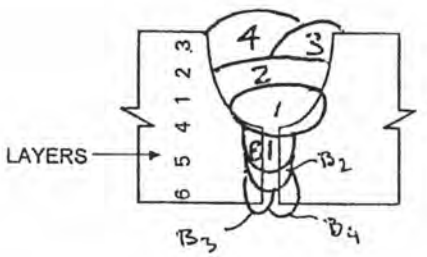

Typical Pass and Layer Sequence

Groove Weld Complete Joint Penetration	Groove Weld Partial Joint Penetration	Joint Type as per CSA W59	Automatic or Semi-Automatic
☒ Back-gouged to sound metal ☐ Welded onto steel backing ☐ Other	☐ Minimum as per CSA W59 ☐ Others **Fillet Weld** ☐ Minimum as per CSA W59	☒ Butt ☐ Tee ☐ Lap ☐ Edge ☐ Corner	Electrical Stickout: **3/4" +/- 3/16"** Shielding Gas: **75Ar/25CO2** cu.ft /hr. **30-45** Flux

Material Thickness	ETT, or Fillet Size	Side No.	Layer Number	Pass Number	Electrode (in) Size (mm)	Current Polarity	Amperes +/-8%	Wire Feed Speed (in/min)	Volts +/-8%	Arc Travel Speed (in/min)
1/4" 6mm		1	1	1	.045 1.2	DCRP	180	250-325	23	11 +/- 3
		2	6	B1*	.045 1.2	DCRP	180	250-325	23	12 +/- 4
5/16" 8mm		1	1	1/2	.045 1.2	DCRP	180	250-325	23	11 +/- 3
		2	5-6	B1-B2*	.045 1.2	DCRP	180	250-325	23	12 +/- 4
3/8" 10mm		1	1-2	1-2	.045 1.2	DCRP	190	265-340	23	11 +/- 3
		2	5-6	B1-B3*	.045 1.2	DCRP	190	265-340	23	12 +/- 4
1/2" 12mm		1	1-3	1-3	.045 1.2	DCRP	200	275-350	24	11 +/- 3
		2	5-6	B1-B3*	.045 1.2	DCRP	200	275-350	24	12 +/- 4
5/8" 16mm		1	1-3	1-4	1/16 1.6	DCRP	275	230-300	27	11 +/- 3
		2	4-6	B1-B4*	1/16 1.6	DCRP	275	230-300	27	12 +/- 4

Revision Date	Explanation

NOTES: *NUMBER OF PASSES MAY BE INCREASED TO FILL BACK-GOUGING

CWB Approval

CWB Accepted

CWB

Sep 16, 2008

Valid only if welding consumables are certified by the CWB

Engineer's Stamp

REGISTERED PROFESSIONAL ENGINEER * PROVINCE OF NOVA SCOTIA *

DATE 11/9/02

S. KEAY

7601

Mosher ENGINEERING

WELDING PROCEDURE DATA SHEET

No.: **SAW-06-CVN**

Date: June 11, 2008

Company Name:	Mosher Engineering	Wldg. Specification No:	SAW-1
Address:	1358 Queen Street	Reference WPQR:	
	Halifax Nova Scotia B3J 2H5	Ref. Standards:	CSA W47.1, W59 & W48

Material Information:

Position:	Horizontal	Welding Process:	SAW	Consumable:	F7A4-EM12K-H8
Base Mat'l:	CAN G40.21 350WT Cat. 5 (27J @-40°C)	Mode of Transfer:	Spray Transfer	Shielding Gas:	N/A
		Process Mode:	Automatic	Gas Flow:	NA ft3/h
		Tungsten Type:		Tungsten Dia.:	NA in

Cleaning:	Wire brush and remove slag in between passes	PHT Temp:	15°C or 59 °F
		PWHT Temp:	NA °F

Typical Joint Details:

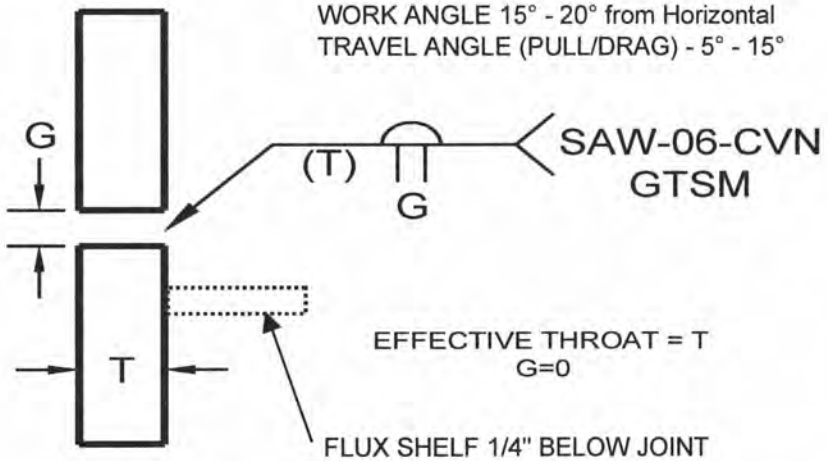

Typical Pass & Layer Sequence:

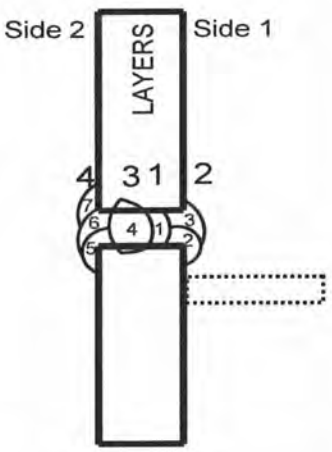

Joint Configuration:		**Joint Details:**		**Technique & Process Information:**		
Joint Type:	Butt	G = 3/32	⍉ (°) = 0	Electrical Stickout:	1 1/2 ± 1/4	in
Weld Type:	Complete Joint Penetration	R_F = 0		Nozzle Diameter:	3/4	in
Backgouging:	Backgouged to Sound Metal			Average Deposition Rate:	11.1	lbs/h

Welding Parameters:

Weld Size in.	Weld Size mm	Depth of Prep'n in	Side No.	Layer No. Min	Layer No. Max	Pass No. Min	Pass No. Max	Electrode Size in.	Electrode Size mm	Current (Amps) DCRP Min	Current (Amps) DCRP Max	Wire Feed Speed (in/min) Min	Wire Feed Speed (in/min) Max	Arc Volts (Volts) Min	Arc Volts (Volts) Max	Travel Speed (in/min) Min	Travel Speed (in/min) Max	Average Heat Input (kJ/in)
3/8	9.5		1	1	2	1	3	1/8	3.3	350	450	41	51	25	29	19.1	25.3	30.3
			2	3	4	4	6	1/8	3.3	350	450	41	51	25	29	19.1	25.3	30.3
7/16	11		1	1	2	1	3	1/8	3.3	350	450	41	51	25	29	19.1	25.3	30.3
			2	3	4	4	6	1/8	3.3	350	450	41	51	25	29	19.1	25.3	30.3
1/2	13		1	1	2	1	2	1/8	3.3	350	450	41	51	25	29	19.1	25.3	30.3
			2	3	4	4	6	1/8	3.3	350	450	41	51	25	29	19.1	25.3	30.3

Revision Status:	
Date:	Explanation:
7/22/08	Per PQR P5709

NOTES:

1. Use stringer beads only. Restrict weld bead to ≤ 16 mm.
2. Weld Sizes represent effective weld throat thickness for qualified T range.
3. Target heat inputs at calculated average.
4. Tack weld parameters to be per main weld parameters
5. Backgouge as necessary to repair side 2.

CWB Approval:

CWB Accepted

CWB

Jul 28, 2008

Valid only if welding consumables are certified by the CWB

Company's Approval:

REGISTERED PROFESSIONAL ENGINEER * PROVINCE OF NOVA SCOTIA * DATE 07/22/2008

Prepared by: FORGERON ENGINEERING LIMITED Tel: (902) 835-7225

Mosher ENGINEERING

WELDING PROCEDURE DATA SHEET

No.: **SAW-10-CVN**

Date: June 11, 2008

Company Name:	Mosher Engineering	Wldg. Specification No:	SAW-1
Address:	1358 Queen Street	Reference WPQR:	
	Halifax Nova Scotia B3J 2H5	Ref. Standards:	CSA W47.1, W59 & W48

Material Information:

Position:	Horizontal	Welding Process:	SAW	Consumable:	F7A4-EM12K-H8	
Base Mat'l:	CAN G40.21 350WT Cat. 5 (27J @-40°C)	Mode of Transfer:	Spray Transfer	Shielding Gas:	N/A	
		Process Mode:	Automatic	Gas Flow:	NA	ft3/h
		Tungsten Type:		Tungsten Dia.:	NA	in

Cleaning:	Wire brush and remove slag in between passes	PHT Temp:	15°C or 59 °F
		PWHT Temp:	NA °F

Typical Joint Details:

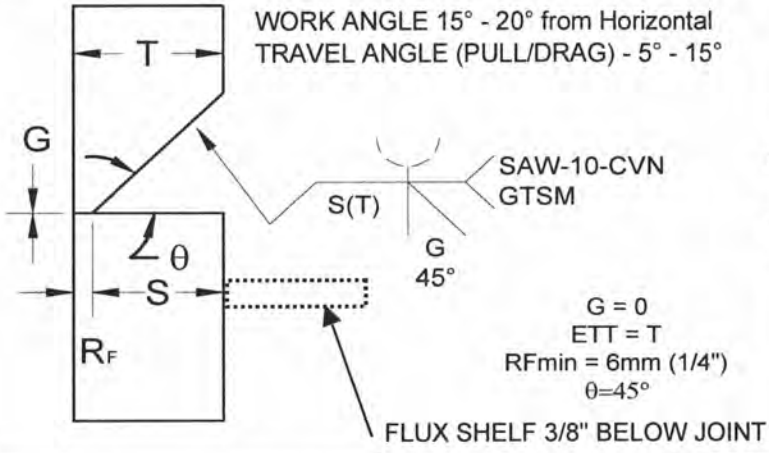

Typical Pass & Layer Sequence:

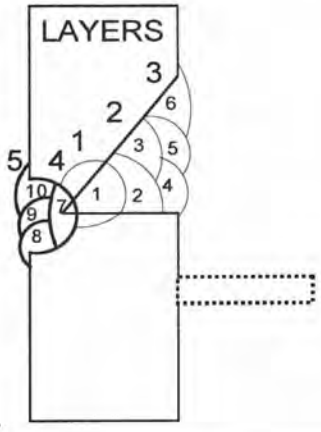

Joint Configuration:		**Joint Details:**		**Technique & Process Information:**		
Joint Type:	Butt	G = 0	Θ (°) = 45	Electrical Stickout:	1 1/4 ± 1/4	in
Weld Type:	Complete Joint Penetration	R_F = 1/4		Nozzle Diameter:	3/4	in
Backgouging:	Backgouged to Sound Metal			Average Deposition Rate:	11.1	lbs/h

Welding Parameters:

Weld Size in.	Weld Size mm	Depth of Prep'n in	Side No.	Layer No. Min	Layer No. Max	Pass No. Min	Pass No. Max	Electrode Size in.	Electrode Size mm	Current (Amps) DCRP Min	Current (Amps) DCRP Max	Wire Feed Speed (in/min) Min	Wire Feed Speed (in/min) Max	Arc Volts (Volts) Min	Arc Volts (Volts) Max	Travel Speed (in/min) Min	Travel Speed (in/min) Max	Average Heat Input (kJ/in)
7/16	11	3/16	1	1	2	1	2	1/8	3.3	450	550	42	51	25	29	15.4	23.6	41.5
			2	4	5	7	10	1/8	3.3	450	550	42	51	25	29	15.4	23.6	41.5
1/2	13	1/4	1	1	2	1	2	1/8	3.3	450	550	42	51	25	29	15.4	23.6	41.5
			2	4	5	7	10	1/8	3.3	450	550	42	51	25	29	15.4	23.6	41.5
5/8	16	3/8	1	1	3	1	5	1/8	3.3	450	550	42	51	25	29	15.4	23.6	41.5
			2	4	5	7	10	1/8	3.3	450	550	42	51	25	29	15.4	23.6	41.5
3/4	19	1/2	1	1	3	1	6	1/8	3.3	450	550	42	51	25	29	15.4	23.6	41.5
			2	4	5	7	10	1/8	3.3	450	550	42	51	25	29	15.4	23.6	41.5

Revision Status:

Date:	Explanation:
22/07/2008	P5710

NOTES:

1. Use stringer beads only. Restrict weld bead to ≤ 16 mm.
2. Weld Sizes represent effective weld throat thickness for qualified T range.
3. Target heat inputs at calculated average.
4. Tack weld parameters to be per main weld parameters
5. Backgouge as necessary to repair side 2.

CWB Approval:

CWB Accepted

CWB

Jul 28, 2008

Valid only if welding consumables are certified by the CWB

Company's Approval:

REGISTERED PROFESSIONAL ENGINEER * PROVINCE OF NOVA SCOTIA * DATE 07/22/2008 7601

Prepared by: FORGERON ENGINEERING LIMITED **Tel:** (902) 835-7225

Mosher ENGINEERING

WELDING PROCEDURE DATA SHEET

No.: **FCAW-1-CVN**

Date: July 22, 2008

Company Name:	Mosher Engineering			Wldg. Specification No:	RTR-4
Address:	1358 Queen Street			Reference WPQR:	
	Halifax	Nova Scotia	B3J 2H5	Ref. Standards:	CSA W47.1, W59 & W48

Material Information:

Position:	Flat	Welding Process:	FCAW	Consumable:	E491T-9MJ-H16/E4801T-9CH	
Base Mat'l:	CAN G40.21 350WT Cat. 5 (27J @-40°C)	Mode of Transfer:	Spray Transfer	Shielding Gas:	75% Ar 25% CO2	
		Process Mode:	Semi-Automatic	Gas Flow:	35	ft3/h
		Tungsten Type:		Tungsten Dia.:		in
Cleaning:	Wire brush and remove slag in between passes	PHT Temp:			As per Table 5.3 of CSA W59	°F
		PWHT Temp:			N/A	°F

Typical Joint Details:

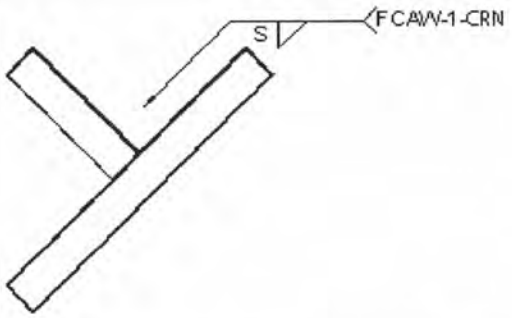

Typical Pass & Layer Sequence:

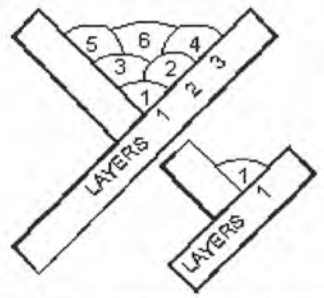

Joint Configuration:		**Joint Details:**		**Technique & Process Information:**		
Joint Type:	Tee, Corner, Lap	G = 0-1/16"	Q (°) =	Electrical Stickout:	3/4 ± 1/8	in
Weld Type:	Fillet Weld	R_F =		Nozzle Diameter:	1/2	in
Backgouging:	N/A			Average Deposition Rate:	8.0	lbs/h

Welding Parameters:

Weld Size in.	Weld Size mm	Depth of Prep'n in	Side No.	Layer No. Min	Layer No. Max	Pass No. Min	Pass No. Max	Electrode Size in.	Electrode Size mm	Current (Amps) DCRP Min	Current (Amps) DCRP Max	Wire Feed Speed (in/min) Min	Wire Feed Speed (in/min) Max	Arc Volts (Volts) Min	Arc Volts (Volts) Max	Travel Speed (in/min) Min	Travel Speed (in/min) Max	Average Heat Input (kJ/in)
3/16	4.8		1		1		1	0.045	1.2	225	275	380	460	29	31	20.0	24.0	20.5
1/4	6.4		1		1		1	0.045	1.2	225	275	380	460	29	31	20.0	24.0	20.5
5/16	7.9		1		1		1	0.045	1.2	225	275	380	460	29	31	16.6	22.4	20.5
3/8	9.5		1	1	2	1	3	0.045	1.2	225	275	380	460	29	31	17.3	23.4	22.1
1/2	13		1	1	2	1	3	0.045	1.2	225	275	380	460	29	31	12.4	16.8	30.8
5/8	16		1	1	3	1	6	0.045	1.2	226	275	380	460	29	31	12.4	16.8	30.8

Revision Status:

Date:	Explanation:
7/22/2008	Per PQR P5745
2/10/2009	Rev. WPDSnumber, added "CVN" to #

NOTES:

1. Use stringer beads only. Restrict weld bead to ≤ 16 mm.
2. Weld Sizes represent effective weld throat thickness for qualified T range.
3. Target heat inputs at calc'd average. Max. Heat Input to 46.7 kJ/in

CWB Approval:

CWB Accepted

CWB

Mar 03, 2009

Valid only if welding consumables are certified by the CWB

Company's Approval:

REGISTERED PROFESSIONAL ENGINEER · PROVINCE OF NOVA SCOTIA ·

DATE: 2/10/09

T. E. FORGERON

2913

Prepared by: FORGERON ENGINEERING LIMITED **Tel:** (902) 835-7225

Mosher ENGINEERING

WELDING PROCEDURE DATA SHEET

No.: **FCAW-2-CVN**

Date: July 22, 2008

Company Name:	Mosher Engineering	Wldg. Specification No:	RTR-4
Address:	1358 Queen Street	Reference WPQR:	
	Halifax Nova Scotia B3J 2H5	Ref. Standards:	CSA W47.1, W59 & W48

Material Information:

Position:	Horizontal	Welding Process:	FCAW	Consumable:	E491T-9-H16/E4801T-9-CH
Base Mat'l:	CAN G40.21 350WT Cat. 5 (27J @-40°C)	Mode of Transfer:	Spray Transfer	Shielding Gas:	75% Ar 25% CO2
		Process Mode:	Semi-Automatic	Gas Flow:	35 ft3/h
		Tungsten Type:		Tungsten Dia.:	in
Cleaning:	Wire brush and remove slag in between passes	PHT Temp:		As per Table 5.3 of CSA W59	°F
		PWHT Temp:		N/A	°F

Typical Joint Details:

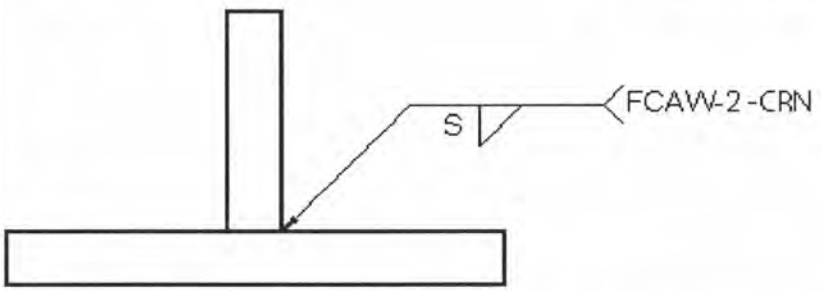

Typical Pass & Layer Sequence:

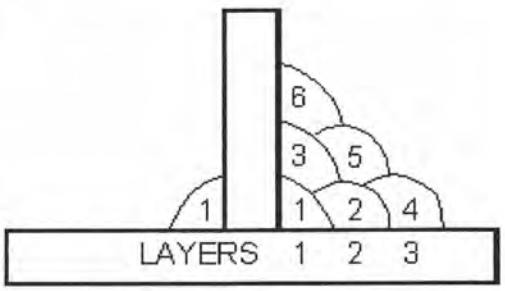

Joint Configuration:		**Joint Details:**		**Technique & Process Information:**		
Joint Type:	Tee, Corner, Lap	G = 0-1/16"	Q (°) =	Electrical Stickout:	3/4 ± 1/8	in
Weld Type:	Fillet Weld	R_F =		Nozzle Diameter:	1/2	in
Backgouging:	N/A			Average Deposition Rate:	8.0	lbs/h

Welding Parameters:

Weld Size in.	Weld Size mm	Depth of Prep'n in	Side No.	Layer No. Min	Layer No. Max	Pass No. Min	Pass No. Max	Electrode Size in.	Electrode Size mm	Current (Amps) DCRP Min	Current (Amps) DCRP Max	Wire Feed Speed (in/min) Min	Wire Feed Speed (in/min) Max	Arc Volts (Volts) Min	Arc Volts (Volts) Max	Travel Speed (in/min) Min	Travel Speed (in/min) Max	Average Heat Input (kJ/in)
3/16	4.8		1		1		1	0.045	1.2	225	275	380	460	29	31	20.0	24.0	20.5
1/4	6.4		1		1		1	0.045	1.2	225	275	380	460	29	31	20.0	24.0	20.5
5/16	7.9		1		1		1	0.045	1.2	225	275	380	460	29	31	16.6	22.4	20.5
3/8	9.5		1	1	2	1	3	0.045	1.2	225	275	380	460	29	31	17.3	23.4	22.1
1/2	13		1	1	2	1	3	0.045	1.2	225	275	380	460	29	31	12.4	16.8	30.8
5/8	16		1	1	3	1	6	0.045	1.2	226	275	380	460	29	31	12.4	16.8	30.8

Revision Status:

Date:	Explanation:
7/22/2008	Per PQR P5745
2/10/2009	Rev. WPDS number, added "CVN" to #

NOTES:

1. Use stringer beads only. Restrict weld bead to ≤ 16 mm.
2. Weld Sizes represent effective weld throat thickness for qualified T range.
3. Target heat inputs at calc'd average. Max. Heat Input to 46.7 kJ/in

CWB Approval:

CWB Accepted

CWB

Mar 03, 2009

Valid only if welding consumables are certified by the CWB

Company's Approval:

REGISTERED PROFESSIONAL ENGINEER
DATE: 2/10/09
T. E. FORGERON
2913
PROVINCE OF NOVA SCOTIA

Prepared by: FORGERON ENGINEERING LIMITED **Tel:** (902) 835-7225

Mosher ENGINEERING

WELDING PROCEDURE DATA SHEET

No.: **FCAW-3-CVN**

Date: July 22, 2008

Company Name:	Mosher Engineering	Wldg. Specification No:	RTR-4
Address:	1358 Queen Street	Reference WPQR:	
	Halifax Nova Scotia B3J 2H5	Ref. Standards:	CSA W47.1, W59 & W48

Material Information:

Position:	Vertical Up	Welding Process:	FCAW	Consumable:	E491T-9MJ-H16/E4801T-9CH
Base Mat'l:	CAN G40.21 350WT Cat. 5 (27J @-40°C)	Mode of Transfer:	Spray Transfer	Shielding Gas:	75% Ar 25% CO2
		Process Mode:	Semi-Automatic	Gas Flow:	35 ft3/h
		Tungsten Type:		Tungsten Dia.:	in

Cleaning:	Wire brush and remove slag in between passes	PHT Temp:	As per Table 5.3 of CSA W59 °F
		PWHT Temp:	N/A °F

Typical Joint Details:

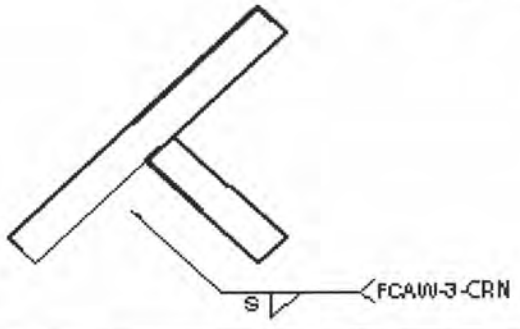

Typical Pass & Layer Sequence:

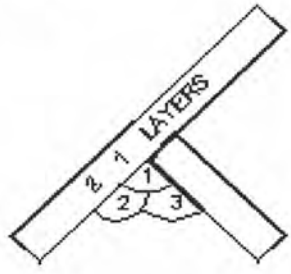

Joint Configuration:		**Joint Details:**		**Technique & Process Information:**		
Joint Type:	Tee, Corner, Lap	G = 0-1/16"	Q (°) =	Electrical Stickout:	3/4 ± 1/8	in
Weld Type:	Fillet Weld	R_F =		Nozzle Diameter:	1/2	in
Backgouging:	N/A			Average Deposition Rate:	5.0	lbs/h

Welding Parameters:

Weld Size in.	Weld Size mm	Depth of Prep'n in	Side No.	Layer No. Min	Layer No. Max	Pass No. Min	Pass No. Max	Electrode Size in.	Electrode Size mm	Current (Amps) DCRP Min	Current (Amps) DCRP Max	Wire Feed Speed (in/min) Min	Wire Feed Speed (in/min) Max	Arc Volts (Volts) Min	Arc Volts (Volts) Max	Travel Speed (in/min) Min	Travel Speed (in/min) Max	Average Heat Input (kJ/in)
3/16	4.8		1		1		1	0.045	1.2	150	250	200	300	26	29	28.8	38.9	9.7
1/4	6.4		1		1		1	0.045	1.2	150	250	200	300	26	29	16.2	21.9	17.3
5/16	7.9		1	1	2	1	3	0.045	1.2	150	250	200	300	26	29	10.4	14.0	26.0
3/8	9.5		1	1	2	1	3	0.045	1.2	150	250	200	300	26	29	10.8	14.6	26.0
1/2	13		1	1	2	1	3	0.045	1.2	150	250	200	300	26	29	6.1	8.2	46.2

On the Basis of **PREVIOUS TESTS ACCUMULATED BY THE CWB**

Revision Status:

Date:	Explanation:
7/22/2008	Per PQR P5745
9/10/2009	Rev. WPDS number, added "CVN" to #

NOTES:

1. Use stringer beads only. Restrict weld bead to ≤ 16 mm.
2. Weld Sizes represent effective weld throat thickness for qualified T range.
3. Target heat inputs at calc'd average. Max. Heat Input to 46.7 kJ/in

CWB Approval:

CWB Accepted

CWB

Mar 03, 2009

Valid only if welding consumables are certified by the CWB

Company's Approval:

REGISTERED PROFESSIONAL ENGINEER
DATE 07/10/09
T. E. FORGERON
2913
PROVINCE OF NOVA SCOTIA

Prepared by: FORGERON ENGINEERING LIMITED Tel: (902) 835-7225

Mosher ENGINEERING

WELDING PROCEDURE DATA SHEET

No.: **FCAW-4-CVN**

Date: July 22, 2008

Company Name:	Mosher Engineering	Wldg. Specification No:	RTR-4
Address:	1358 Queen Street	Reference WPQR:	
	Halifax Nova Scotia B3J 2H5	Ref. Standards:	CSA W47.1, W59 & W48

Material Information:

Position:	Overhead	Welding Process:	FCAW	Consumable:	E491T-9MJ-H16/E4801T-9CH
Base Mat'l:	CAN G40.21 350WT Cat. 5 (27J @-40°C)	Mode of Transfer:	Spray Transfer	Shielding Gas:	75% Ar 25% CO2
		Process Mode:	Semi-Automatic	Gas Flow:	35 ft3/h
		Tungsten Type:		Tungsten Dia.:	in

Cleaning:	Wire brush and remove slag in between passes	PHT Temp:	As per Table 5.3 of CSA W59 °F
		PWHT Temp:	N/A °F

Typical Joint Details:

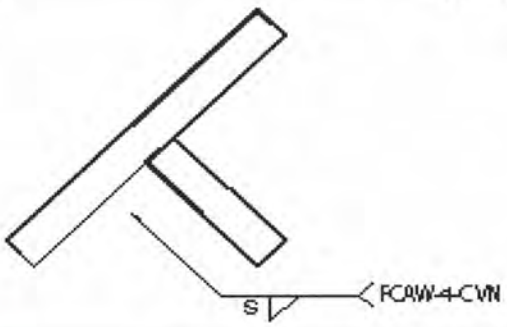

Typical Pass & Layer Sequence:

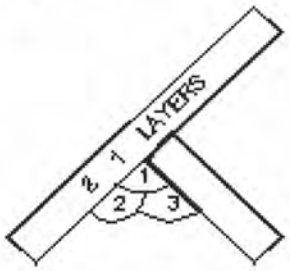

Joint Configuration:		**Joint Details:**		**Technique & Process Information:**		
Joint Type:	Tee, Corner, Lap	G = 0-1/16"	Q (°) =	Electrical Stickout:	3/4 ± 1/8	in
Weld Type:	Fillet Weld	R_F =		Nozzle Diameter:	1/2	in
Backgouging:	N/A			Average Deposition Rate:	5.0	lbs/h

Welding Parameters:

Weld Size in.	Weld Size mm	Depth of Prep'n in	Side No.	Layer No. Min	Layer No. Max	Pass No. Min	Pass No. Max	Electrode Size in.	Electrode Size mm	Current (Amps) DCRP Min	Current (Amps) DCRP Max	Wire Feed Speed (in/min) Min	Wire Feed Speed (in/min) Max	Arc Volts (Volts) Min	Arc Volts (Volts) Max	Travel Speed (in/min) Min	Travel Speed (in/min) Max	Average Heat Input (kJ/in)
3/16	4.8		1		1		1	0.045	1.2	150	250	200	300	26	29	28.8	38.9	9.7
1/4	6.4		1		1		1	0.045	1.2	150	250	200	300	26	29	16.2	21.9	17.3
5/16	7.9		1		1		1	0.045	1.2	150	250	200	300	26	29	16.2	21.9	17.3
3/8	9.5		1	1	2	1	3	0.045	1.2	150	250	200	300	26	29	10.8	14.6	26.0
1/2	13		1	1	2	1	3	0.045	1.2	150	250	200	300	26	29	6.1	8.2	46.2

On the Basis of **PREVIOUS TESTS ACCUMULATED BY THE CWB**

Revision Status:

Date:	Explanation:
7/22/2008	Per PQR P5745
2/10/2009	Rev. WPDS number, added "CVN" to #

NOTES:

1. Use stringer beads only. Restrict weld bead to ≤ 16 mm.
2. Weld Sizes represent effective weld throat thickness for qualified T range.
3. Target heat inputs at calc'd average. Max. Heat Input to 46.7 kJ/in

CWB Approval:

CWB Accepted

CWB

Mar 03, 2009

Valid only if welding consumables are certified by the CWB

Company's Approval:

REGISTERED PROFESSIONAL ENGINEER
DATE 2/10/09
T. E. FORGERON
2913
PROVINCE OF NOVA SCOTIA

Prepared by: FORGERON ENGINEERING LIMITED Tel: (902) 835-7225

Mosher ENGINEERING

WELDING PROCEDURE DATA SHEET

No.: **FCAW-8-CVN**

Date: Febuary 10, 2009

Company Name:	Mosher Engineering			Wldg. Specification No:	RTR-4
Address:	1358 Queen Street			Reference WPQR:	
	Halifax	Nova Scotia	B3J 2H5	Ref. Standards:	CSA W47.1, W59 & W48

Material Information:

Position:	Flat	Welding Process:	FCAW	Consumable:	E491T-12MJ-H4	
Base Mat'l:	CAN G40.21 350WT Cat. 5 (27J @-40°C)	Mode of Transfer:	Globular Transfer	Shielding Gas:	75% Ar 25% CO2	
		Process Mode:	Semi-Automatic	Gas Flow:	45	ft3/h
		Tungsten Type:		Tungsten Dia.:		in

Cleaning:	Wire brush and remove slag in between passes	PHT Temp:	15°C or 59 °F
		PWHT Temp:	N/A °F

Typical Joint Details:

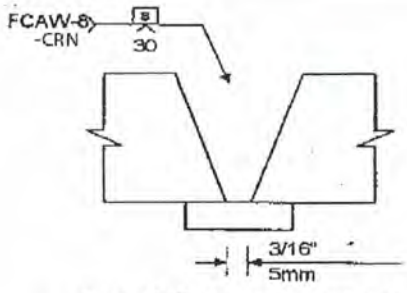

Sketch Of Typical Joint Preperation

Typical Pass & Layer Sequence:

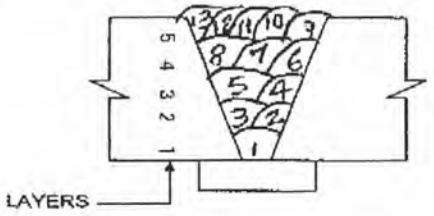

Typical Pass and Layer Sequence

Joint Configuration:		**Joint Details:**		**Technique & Process Information:**			
Joint Type:	Butt	G = 3/16"	Q (°) =	Electrical Stickout:	3/4	± 1/8	in
Weld Type:	Complete Joint Penetration	R_F =		Nozzle Diameter:	1/2		in
Backgouging:	N/A			Average Deposition Rate:	7.0		lbs/h

Welding Parameters:

Weld Size in.	Weld Size mm	Depth of Prep'n in	Side No.	Layer No. Min	Layer No. Max	Pass No. Min	Pass No. Max	Electrode Size in.	Electrode Size mm	Current (Amps) DCRP Min	Current (Amps) DCRP Max	Wire Feed Speed (in/min) Min	Wire Feed Speed (in/min) Max	Arc Volts (Volts) Min	Arc Volts (Volts) Max	Travel Speed (in/min) Min	Travel Speed (in/min) Max	Average Heat Input (kJ/in)
3/8	10	3/8	1	1	2	1	3	0.045	1.2	200	240	300	400	27	29	17.0	23.0	18.5
1/2	13	1/2	1	1	3	1	5	0.045	1.2	200	240	300	400	27	29	17.0	23.0	18.5
5/8	16	5/8	1	1	4	1	8	0.045	1.2	200	240	300	400	27	29	17.0	23.0	18.5
3/4	19	3/4	1	1	5	1	13	0.045	1.2	200	240	300	400	27	29	17.0	23.0	18.5

Revision Status:

Date:	Explanation:
7/22/2008	Per PQR P5744

NOTES:

1. Use stringer beads only. Restrict weld bead to ≤ 16 mm.
2. Weld Sizes represent effective weld throat thickness for qualified T range.
3. Target heat inputs at calc'd average. Max. Heat Input to 46.7 kJ/in

CWB Approval:

CWB Accepted

CWB

Mar 03, 2009

Valid only if welding consumables are certified by the CWB

Company's Approval:

REGISTERED PROFESSIONAL ENGINEER
DATE: 2/10/09
T. E. FORGERON
2913
PROVINCE OF NOVA SCOTIA

Prepared by: FORGERON ENGINEERING LIMITED **Tel:** (902) 835-7225

Mosher ENGINEERING

WELDING PROCEDURE DATA SHEET

No.: **FCAW-15-CVN**

Date: December 1, 2008

Company Name:	Mosher Engineering	Wldg. Specification No:	RTR-4
Address:	1358 Queen Street	Reference WPQR:	
	Halifax Nova Scotia B3J 2H5	Ref. Standards:	CSA W47.1, W59 & AWS D1.1

Material Information:

Position:	Vertical Up	Welding Process:	FCAW	Consumable:	E491T-12MJ-H4	
Base Mat'l:	CAN G40.21 350WT Cat. 5 (27J @-40°C)	Mode of Transfer:	Globular Transfer	Shielding Gas:	75% Ar 25% CO2	
		Process Mode:	Semi-Automatic	Gas Flow:	38	ft3/h
		Tungsten Type:		Tungsten Dia.:		in

Cleaning:	Wire brush and remove slag in between passes	PHT Temp:	15°C or 59 °F
		PWHT Temp:	NA °F

Typical Joint Details:

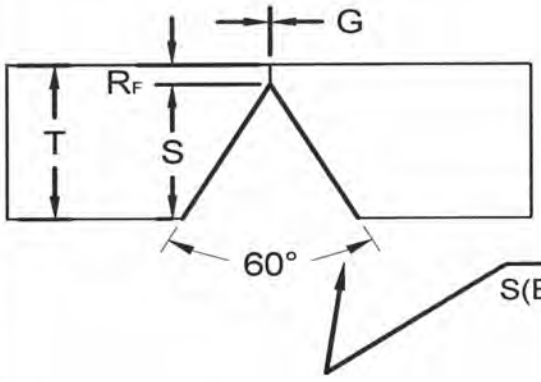

ETT = T
G = 0
RF = 1/8"

Typical Pass & Layer Sequence:

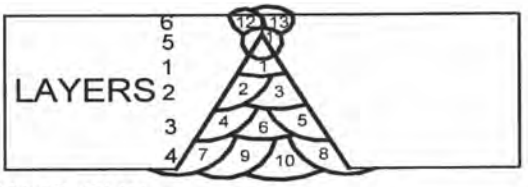

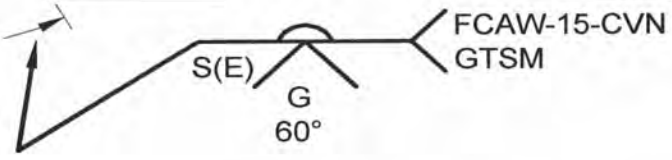

Joint Configuration:		Joint Details:		Technique & Process Information:		
Joint Type:	Butt	G = 0	Q (°) = 60	Electrical Stickout:	5/8 ± 1/8	in
Weld Type:	Complete Joint Penetration	RF = 1/8		Nozzle Diameter:	5/8	in
Backgouging:	Backgouged to Sound Metal			Average Deposition Rate:	6.5	lbs/h

Welding Parameters:

Weld Size in.	Weld Size mm	Depth of Prep'n in	Side No.	Layer No. Min	Layer No. Max	Pass No. Min	Pass No. Max	Electrode Size in.	Electrode Size mm	Current (Amps) DCRP Min	Current (Amps) DCRP Max	Wire Feed Speed (in/min) Min	Wire Feed Speed (in/min) Max	Arc Volts (Volts) Min	Arc Volts (Volts) Max	Travel Speed (in/min) Min	Travel Speed (in/min) Max	Average Heat Input (kJ/in)
3/8	9.5	1/4	1	1	2	1	3	0.045	1.2	155	175	175	225	24	27	21.0	28.0	15.4
			2	5	6	11	13	0.045	1.2	155	175	175	225	24	27	15.4	18.7	14.8
1/2	13	3/8	1	1	3	1	6	0.045	1.2	155	175	175	225	24	27	20.3	27.5	15.4
			2	5	6	11	13	0.045	1.2	155	175	175	225	24	27	15.4	18.7	17.5
5/8	16	1/2	1	1	3	1	6	0.045	1.2	155	175	175	225	24	27	19.0	25.7	15.4
			2	5	6	11	13	0.045	1.2	155	175	175	225	24	27	15.4	18.7	17.5
3/4	19	5/8	1	1	4	1	10	0.045	1.2	155	175	175	225	24	27	18.0	24.0	15.4
			2	5	6	11	13	0.045	1.2	155	175	175	225	24	27	15.4	18.7	17.5

Revision Status:

Date:	Explanation:
7/22/2008	P5744

NOTES:

1. Use stringer beads only. Restrict weld bead to ≤ 16 mm.
2. Weld Sizes represent effective weld throat thickness for qualified T range.
3. Target heat inputs at calc'd average. Max. Heat Input to 46.7 kJ/in
4. Tack weld parameters to be per main weld parameters
5. Backgouge as necessary to repair side 2.

CWB Approval:

CWB Accepted

CWB Dec 04, 2008

Valid only if welding consumables are certified by the CWB

Company's Approval:



Prepared by: FORGERON ENGINEERING LIMITED Tel: (902) 835-7225

On the Basis of **PREVIOUS TESTS ACCUMULATED BY THE CWB**

RTR FORM S-101, 1992
to CSA W47.1

RTR ENGINEERING
WELDING PROCEDURE DATA SHEET

No.	Date
SMAW-2	MARCH 28, 2002

Company Name and Complete Address	MOSHER ENGINEERING LIMITED 2089 Upper Water Street Halifax, Nova Scotia, B3J 2R7
Welding Process & Mode	[X] SMAW [ ] SAW [ ] GTAW (Tungsten) Type: ____ [ ] FCAW [ ] GMAW [ ] ESW [ ] SW Size: ____ [X] Manual [ ] Semi-Automatic [ ] Machine [ ] Automatic
Material Designation	Steel groups 1,2 & 3 of Table 11-1,W59 for type A (without color matching), for type T (without regard to impact values)
Welding Position	HORIZONTAL

WPS No.	RTR-1(A)
Applicable Standard(s)	CSA W47.1, W59 & W48.1
Electrode Classification	E48018
[X] Preheat Minimum as per CSA W59 [ ] Other	
Interpass Temperature	Minimum As above Maximum 450 deg. F

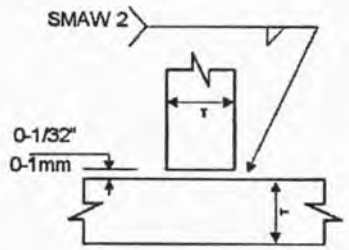

Sketch Of Typical Joint Preperation

1/8" </= T </= 1 1/4"

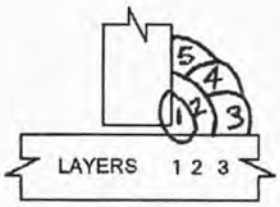

Typical Pass and Layer Sequence

Groove Weld Complete Joint Penetration
[ ] Back-gouged to sound metal
[ ] Welded onto steel backing
[ ] Other

Groove Weld Partial Joint Penetration
[ ] Minimum as per CSA W59
[ ] Others

Fillet Weld
[X] Minimum as per CSA W59

Joint Type as per CSA W59
[ ] Butt [X] Tee
[ ] Edge [X] Lap [X] Corner

Automatic or Semi-Automatic
Electrical Stickout
Shielding Gas ____ cu.ft /hr.
Flux

Material Thickness	ETT, or Fillet Size	Side No.	Layer Number	Pass Number	Electrode (in) Size (mm)	Current Polarity	Amperes	Wire Feed Speed (in/min)	Volts	Arc Travel Speed (in/min)
	1/8" 3mm		1	1	3/32 2.5	DCRP	75-95			
	3/16" 5mm		1	1	1/8 3.2	DCRP	110-140			
	1/4" 6mm		1	1	1/8 3.2	DCRP	110-140			
	5/16" 8mm		1-2	1-3	1/8 3.2	DCRP	110-140			
	OR		1-2	1-2	5/32 4.0	DCRP	160-200			
	3/8" 10mm		1-3	1-4*	5/32 4.0	DCRP	160-200			
	OR		1-2	1-3	3/16 5.0	DCRP	225-275			
	1/2" 12mm		1-3	1-5*	3/16 5.0	DCRP	225-275			

Revision Date	Explanation

NOTES: *NUMBER OF PASSES MAY VARY BY +/- 1 PASS

3mm fillet can only be applied to 3mm thick sheets.

CWB Approval

Welding Procedure Data Sheet
CWB Approved to CSA W47.1
APR 04 2002
Approval valid only when Welding Consumables certified by C.W.B. (Cl.8.2.2.1, CSA W47.1)

Engineer's Stamp

REGISTERED PROFESSIONAL ENGINEER
R. T. ROSE
SIGNATURE
02/03/29
PROVINCE OF NOVA SCOTIA

Mosher ENGINEERING

WELDING PROCEDURE DATA SHEET

No: **SMAW-06-CVN**

Date: May 5, 2008

Company Name:	Mosher Engineering	Wldg. Specification No:	RTR-1
Address:	1358 Queen Street	Reference WPQR:	
	Halifax Nova Scotia B3J 2H5	Ref. Standards:	CSA W47.1, W59 & W48

Material Information:

Position:	Horizontal	Welding Process:	SMAW	Consumable:	E4918/E48018/E7018
Base Mat'l:	CAN G40.21 350WT Cat. 5 (27J @-40°C)	Mode of Transfer:	N/A	Shielding Gas:	N/A
		Process Mode:	Manual	Gas Flow:	ft3/h
		Tungsten Type:		Tungsten Dia.:	in
Cleaning:	Wire brush and remove slag in between passes	PHT Temp:			15°C or 59 °F
		PWHT Temp:			NA °F

Typical Joint Details:

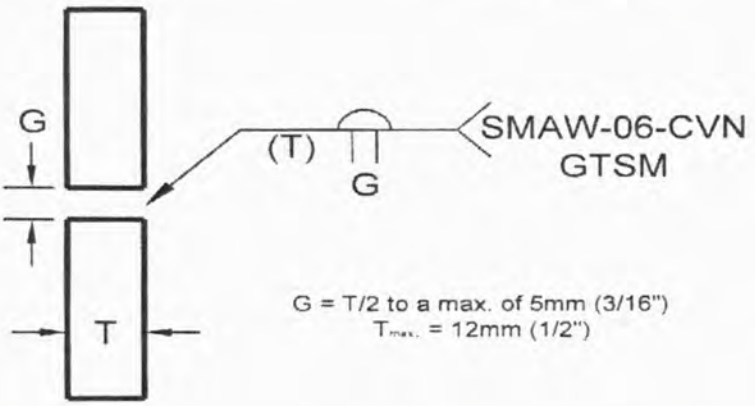

Typical Pass & Layer Sequence:

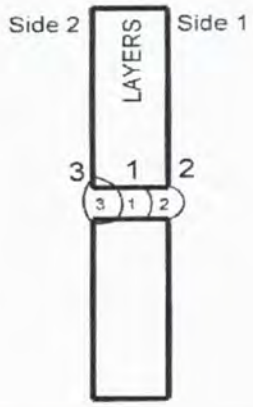

Joint Configuration:		Joint Details:		Technique & Process Information:	
Joint Type:	Butt, Tee, Corner	G = T/2	∠ (°) = 0	Electrical Stickout:	3/4 ± 1/8 in
Weld Type:	Complete Joint Penetration	R_F = 0		Nozzle Diameter:	1/2 in
Backgouging:	Backgouged to Sound Metal			Average Deposition Rate:	2.6 lbs/h

Welding Parameters:

Weld Size in	Weld Size mm	Depth of Prep'n in	Side No.	Layer No. Min	Layer No. Max	Pass No. Min	Pass No. Max	Electrode Size in.	Electrode Size mm	Current (Amps) DCRP Min	Current (Amps) DCRP Max	Wire Feed Speed (in/min) Min	Wire Feed Speed (in/min) Max	Arc Volts (Volts) Min	Arc Volts (Volts) Max	Travel Speed (in/min) Min	Travel Speed (in/min) Max	Average Heat Input (kJ/in)
1/4	6.4	1/4	1		1		1	3/32	2.4	75	95			20	22	5.7	7.7	16.0
			2		2		2	3/32	2.4	75	95			20	22	5.7	7.7	16.0
5/16	7.9	5/16	1	1	2	1	2	3/32	2.4	75	95			20	22	4.6	6.2	16.0
			2		3	3	3	3/32	2.4	75	95			20	22	5.7	7.7	16.0
3/8	9.5	3/8	1	1	2	1	2	3/32	2.4	75	95			20	22	3.8	5.1	16.0
			2		3	3	3	3/32	2.4	75	95			20	22	5.7	7.7	16.0

Revision Status:

Date:	Explanation:
22/07/2008	Per PQR P65JR78

NOTES:

1. Use stringer beads only. Restrict weld bead to ≤ 16 mm.
2. Weld Sizes represent effective weld throat thickness for qualified T range.
3. Target heat inputs at calculated average.
4. Tack weld parameters to be per main weld parameters
5. Backgouge as necessary to repair side 2.

CWB Approval:

CWB Accepted

CWB

Jul 25, 2008

Valid only if welding consumables are certified by the CWB

Company's Approval:

Prepared by: FORGERON ENGINEERING LIMITED Tel: (902) 835-7225

RTR FORM S-101, 1992 to CSA W47.1	**RTR ENGINEERING WELDING PROCEDURE DATA SHEET**	No. SMAW-31	Date MARCH 28, 2002

Company Name and Complete Address	**MOSHER ENGINEERING LIMITED** **2089 Upper Water Street** **Halifax, Nova Scotia, B3J 2R7**	WPS No.	**RTR-1(A)**
		Applicable Standard(s)	**CSA W47.1, W59 & W48.1**
		Electrode Classification	**E41011**
Welding Process & Mode	[x] SMAW [ ] SAW [ ] GTAW (Tungsten) Type: [ ] FCAW [ ] GMAW [ ] ESW [ ] SW Size: [x] Manual [ ] Semi-Automatic [ ] Machine [ ] Automatic	[x] Preheat Minimum as per CSA W59 [ ] Other	
Material Designation	**Steel group 2 from Table 5-3 of W59 Excluding 260WT, 300W, 300WT, A570 Gr. 50, A572 Gr. 50 & A607 Gr. 50**	Welding Position: **HORIZONTAL**	Interpass Temperature: Minimum **As above**; Maximum **450 deg. F**

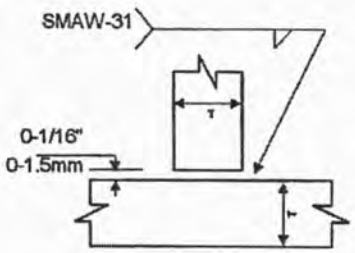

Sketch Of Typical Joint Preperation

3/16" </= T </= 1 1/4"

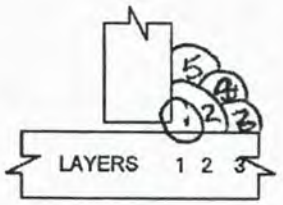

Typical Pass and Layer Sequence

Groove Weld Complete Joint Penetration	Groove Weld Partial Joint Penetration	Joint Type as per CSA W59	Automatic or Semi-Automatic
[ ] Back-gouged to sound metal [ ] Welded onto steel backing [ ] Other	[ ] Minimum as per CSA W59 [ ] Others **Fillet Weld** [x] Minimum as per CSA W59	[ ] Butt [x] Tee [ ] Edge [x] Lap [x] Corner	Electrical Stickout Shielding Gas (cu.ft /hr.) Flux

Material Thickness	ETT, or Fillet Size	Side No.	Layer Number	Pass Number	Electrode (in) Size (mm)	Current Polarity	Amperes	Wire Feed Speed (in/min)	Volts	Arc Travel Speed (in/min)
	3/16" 5mm		1	1	3/32 2.5	DCRP	55-75			
	1/4" 6mm		1	1	1/8 3.2	DCRP	95-115			
	OR		1	1	5/32 4.0	DCRP	130-160			
	5/16" 8mm		1-2	1-3*	5/32 4.0	DCRP	130-160			
	3/8" 10mm		1-3	1-5*	5/32 4.0	DCRP	130-160			
	OR		1-2	1-3*	3/16 5.0	DCRP	170-190			
	1/2" 12mm		1-3	1-5*	3/16 5.0	DCRP	170-190			

Revision Date	Explanation

NOTES: *NUMBER OF PASSES MAY VARY BY +/-1 PASS

CWB Approval

Welding Procedure Data Sheet
CWB Approved to CSA W47.1
APR 04 2002
Approval valid only when Welding Consumables certified by C.W.B. (Cl.8.2.2.1, CSA W47.1)

Engineer's Stamp

REGISTERED PROFESSIONAL ENGINEER
R. T. ROSE
SIGNATURE
02/03/28
PROVINCE OF NOVA SCOTIA

CWB Form 130E/2003-1

CANADIAN WELDING BUREAU
DIVISION OF CWB GROUP - INDUSTRY SERVICES

WELDING PROCEDURE QUALIFICATION REPORT

P 036339

REPORT ____ OF ____

WPDS No. A3332-1H

WPS No. A3300

MONTH	DAY	YEAR
06	24	2008

DATE OF TEST

APPLICABLE STANDARD
- ☐ CSA W47.1
- ☑ CSA W47.2
- ☐ CSA W186
- ☐ AWS D1.3
- ☐ OTHER ____

Company Code: D F B A R 2

RETEST ☑ YES ☐ NO | LAB WORK REQUIRED ☐ YES ☑ NO

INVOICING DATA

Hours on Site	1.5 HRS. @ 80.00 /HR. =	120.00	PR-01
Hours Travelling	0.5 HRS. @ 80.00 /HR. =	40.00	PR-02
Kilometres (kms)	27 KM. @ 0.48 /KM. =	12.96	PR-03
Travel Expenses			PR-08
Lab Charges	HRS. @ /HR. =		PR-04
Specimen Assessment	HRS. @ /HR. =		PR-05
Engineering Charge	HRS. @ /HR. =		PR-09
Outside Lab. Charges			PR-06/7

QUALIFICATION REQUESTED BY: ☑ COMPANY ☐ CWB

Company Name: D. F. Barnes Ltd

Location of Test: Goulds

CWB Witness: Leyi Feltham | Test Plate Number: 202

Signature of Comp. Rep.: Les Horn

Welder's Name: Wade L. Hillier | Welders N.T. Card Required ☐ Yes ☐ No

S.I.N.:

Base Materials: 1. Specification ASTM B221-02 Grade 6061-T6511; 2. Specification ASTM B221-02 Grade 6061-T6511

Preheat Temperature: Ambient 25° | Interpass Temperature MIN / MAX: NOT Recorder

Post-Weld Treatment: None

Cleaning Procedures: S.S. Wire Brush, Grinder

Welding Position(s): ☐ FLAT ☑ HORIZ. ☐ VERTICAL UP ☐ VERTICAL DOWN ☐ OVERHEAD ☐ OTHER ____

Welding Process: ☐ SAW ☑ GTAW ☐ SMAW ☐ PAW ☐ FCAW ☐ GMAW ☐ OTHER ____

Process Mode: ☑ Manual ☐ Semi-Automatic ☐ Machine ☐ Automatic

Method of Backgouging: N/A | Depth of Backgouging:

	Classification	Trade Name	Manufacturer
Filler Metal A	ER5356		Indalco
Filler Metal B			
Flux			

Tungsten Type: EWP | Tungsten Diameter: 4.0 mm

Shielding Gas: Argon | Flow Rate: 10L/min | Nozzle Size: 12 mm

Certified Electrode Used? ☑ Yes ☐ No | Current Type and Polarity: AC HF | Electrode Extension: ✓

Welding Sequence			Filler Metal		Arc Parameters		
Side	Layer	Pass	Size	W. Feed Speed	Amperes	Volts	Arc Travel Speed
UNITS			(mm)	(N/A)	A	V	(mm/min)
1	1	1	3.2		298	19	69

Welding Sequence			Filler Metal		Arc Parameters		
Side	Layer	Pass	Size	W. Feed Speed	Amperes	Volts	Arc Travel Speed
UNITS			( )	( )	A	V	( )

In the space below make a sketch to show: a) Joint geometry. b) Full welding symbol. c) Pass/layer sequence. d) Test specimens required.

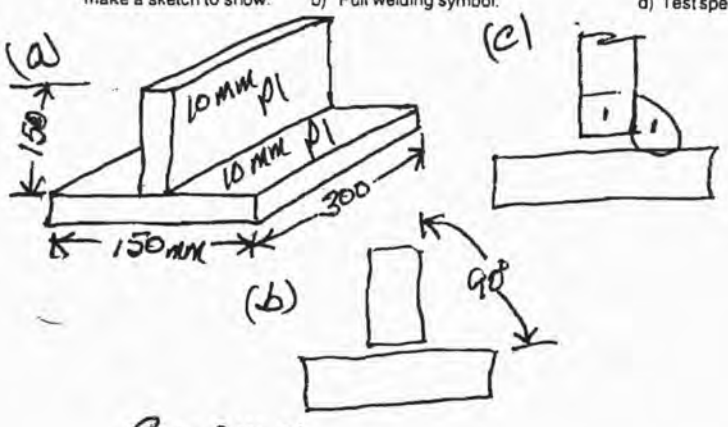

d) Specimen Extracted As per CSA W47.2 Fig 13

Failed due to Lack of Penetration in Fracture Specimen

LABORATORY EVALUATION

TEST	NO.	SAT.	UNSAT.	N/A
Root Bend		☐	☐	☐
Face Bend		☐	☐	☐
Side Bend		☐	☐	☐
Tensile		☐	☐	☐
Macro Etch		☐	☐	☐
Fracture		☐	☑	☐
Other(s)		☐	☐	☐
		☐	☐	☐

NOTES: Failed due to Lack of Root Fusion & Penetration

EVALUATION BY

DATE: 07 (MONTH) 09 (DAY) 2008 (YEAR)

CANADIAN WELDING BUREAU
DIVISION OF CWB GROUP - INDUSTRY SERVICES

WELDING PROCEDURE QUALIFICATION REPORT

RECEIVED JUL 04 2008

CWB Form 130E/99-1

REPORT ____ OF ____

DATE OF TEST (MONTH / DAY / YEAR)	APPLICABLE STANDARD	Company Code
06 / 24 / 2008	☐ CSA W47.1 ☑ CSA W47.2 ☐ CSA W186 ☐ AWS D1.3 ☐ OTHER ____	DFBAR2

P 5694 WPDS No. A3332-1H

WPS No. A3300

QUALIFICATION REQUESTED BY: ☑ COMPANY ☐ CWB

Company Name: D. F. Barnes Ltd

Location of Test: Goulds

CWB Witness: Lew Fetherham | Test Plate Number: 202

Signature of Comp. Rep.: [signature]

Welder's Name: Wade L. Hillier | Welders N.T. Card Required ☐ Yes ☐ No

S.I.N.:

Base Materials: 1. Specification ASTM B 221-02 Grade 6061-T6511; 2. Specification ASTM B 221-02 Grade 6061-T6511

Preheat Temperature: Ambient | Interpass Temperature MIN: N/A | MAX: N/A

Post-Weld Treatment: None

Cleaning Procedures: Stainless Steel Wire Brush

Welding Position(s): ☐ FLAT ☑ HORIZ. ☐ VERTICAL UP ☐ VERTICAL DOWN ☐ OVERHEAD ☐ OTHER ____

RETEST ☐ YES ☑ NO | LAB WORK REQUIRED ☐ YES ☑ NO

INVOICING DATA

Hours on Site	1.5	HRS. @	80.00	/HR. =	120.00
Hours Travelling	0.5	HRS. @	80.00	/HR. =	40.00
Kilometres (kms)	27	KM. @	0.48	/KM. =	12.96
Travel Expenses					

Welding Process: ☐ SAW ☑ GTAW ☐ SMAW ☐ PAW ☐ FCAW ☐ GMAW ☐ OTHER ____

Process Mode: ☑ Manual ☐ Semi-Automatic ☐ Machine ☐ Automatic

Method of Backgouging: N/A

Depth of Backgouging: N/A

	Classification	Trade Name	Manufacturer
Filler Metal A	ER5356	[illegible]	Indalco
Filler Metal B			
Flux			

Tungsten Type: EWP | Tungsten Diameter: 4.0 mm

Shielding Gas: Argon | Flow Rate: 10 L/min | Nozzle Size: 10 mm

Certified Electrode Used? ☑ Yes ☐ No | Current Type and Polarity: ACHF | Electrode Extension: —

Welding Sequence			Filler Metal		Arc Parameters		
Side	Layer	Pass	Size	W. Feed Speed	Amperes	Volts	Arc Travel Speed
UNITS			(mm)	(✓)	A	V	(mm/min)
1	1	1	3.2	NA	298	19	59

Welding Sequence			Filler Metal		Arc Parameters		
Side	Layer	Pass	Size	W. Feed Speed	Amperes	Volts	Arc Travel Speed
UNITS			( )	( )	A	V	( )

In the space below make a sketch to show: a) Joint geometry. b) Full welding symbol. c) Pass/layer sequence. d) Test specimens required.

(a)

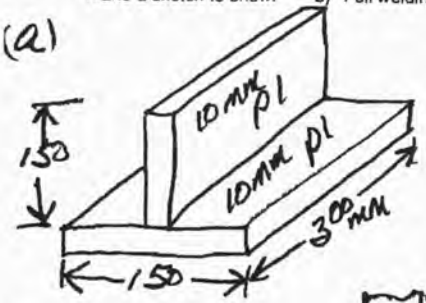

(c)

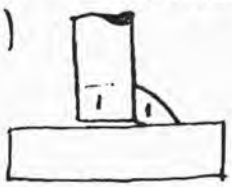

(d) Specimen extracted as per CSA, W47.2 Fig. 13

(b)



G = 0 mm

Failed due to lack of penetration in Fracture specimen

LABORATORY EVALUATION

TEST	NO.	SAT.	UN-SAT.	N/A
Root Bend		☐	☐	☐
Face Bend		☐	☐	☐
Side Bend		☐	☐	☐
Tensile		☐	☐	☐
Macro Etch		☐	☑	☐
Fracture		☐	☑	☐
Other(s)		☐	☐	☐
		☐	☐	☐

NOTES: Failed due to LACK of Root Fusion & Penetration

EVALUATION BY: [signature]

DATE (MONTH / DAY / YEAR): 07 / 09 / 2008

CWB Form 130E/2003-1

CANADIAN WELDING BUREAU
DIVISION OF CWB GROUP - INDUSTRY SERVICES

WELDING PROCEDURE QUALIFICATION REPORT

P 036341

REPORT ____ OF ____

WPDS No. ____

WPS No. 3100

Company Code
METW01

DATE OF TEST (MONTH / DAY / YEAR)
06 / 26 / 2008

APPLICABLE STANDARD
- [x] CSA W47.1 [ ] CSA W47.2
- [ ] CSA W186 [ ] AWS D1.3
- [ ] OTHER S473

RETEST [ ] YES [x] NO — LAB WORK REQUIRED [x] YES [ ] NO

INVOICING DATA

Hours on Site	4 HRS. @ 80.00 /HR. =	320.00	PR-01
Hours Travelling	0.5 HRS. @ 80.00 /HR. =	40.00	PR-02
Kilometres (kms)	20 KM. @ 0.48 /KM. =	960	PR-03
Travel Expenses			PR-08
Lab Charges	HRS. @ /HR. =		PR-04
Specimen Assessment	HRS. @ /HR. =		PR-05
Engineering Charge	HRS. @ /HR. =		PR-09
Outside Lab. Charges			PR-06/7

QUALIFICATION REQUESTED BY: [x] COMPANY [ ] CWB

Company Name: Metal World

Location of Test: St. John's, NL

CWB Witness: Lew Feltham — Test Plate Number: 220

Signature of Comp. Rep.: [signature]

Welder's Name: Joe Fewer — Welders N.T. Card Required [ ] Yes [ ] No

S.I.N.:

Base Materials
1. Specification EN10225 Grade S355 G10
2. Specification EN10225 Grade S355 G10

Preheat Temperature: 75°C — Interpass Temperature MIN: 80°C — MAX: 120°C

Post-Weld Treatment: None

Cleaning Procedures: Chipping Hammer, Wire Brush, Grinder

Welding Position(s): [ ] FLAT [x] HORIZ. [ ] VERTICAL UP [ ] VERTICAL DOWN [ ] OVERHEAD [ ] OTHER

Welding Process: [ ] SAW [x] SMAW [x] FCAW [ ] OTHER ____ [ ] GTAW [ ] PAW [ ] GMAW
Process Mode: [x] Manual [x] Semi-Automatic [ ] Machine [ ] Automatic
Method of Backgouging: N/A
Depth of Backgouging:

	Classification	Trade Name	Manufacturer
Filler Metal A	E5518-C1	LA 8018	Air Liquide
Filler Metal B	81T1-N1	SAFDUAL 128	SAF
Flux			

Tungsten Type: — Tungsten Diameter:

Shielding Gas: 75% Ar 25% CO2 — Flow Rate: 22 L/min — Nozzle Size: 16 mm

Certified Electrode Used? [x] Yes [ ] No — Current Type and Polarity: DCRP — Electrode Extension: 16-20 mm

Welding Sequence			Filler Metal		Arc Parameters		
Side	Layer	Pass	Size	W. Feed Speed	Amperes	Volts	Arc Travel Speed
UNITS			(mm)	(m/min)	A	V	(mm/min)
1	1	1	3.2	N/A	132	21	45
1	2	2	1.6	4.4	240	23	191
1	3	3	1.6	4.4	238	23	291
1	3	4	1.6	5.0	250	23	315
1	4	5	1.6	5.0	265	23	250
1	4	6	1.6	5.0	282	22.5	297
1	5	7	1.6	5.0	270	22.5	370

Welding Sequence			Filler Metal		Arc Parameters		
Side	Layer	Pass	Size	W. Feed Speed	Amperes	Volts	Arc Travel Speed
UNITS			(mm)	(m/min)	A	V	(mm/min)
1	5	8	1.6	5.0	262	22.5	268
1	6	9	1.6	5.0	275	22.5	306
1	6	10	1.6	5.0	265	22.5	341
1	6	11	1.6	5.0	275	22.5	366
1	7	12-16	1.6	5.0	279	22.5	435

In the space below make a sketch to show: a) Joint geometry. b) Full welding symbol. c) Pass/layer sequence d) Test specimens required — d) Specimen Extracted as per Client's Instructions

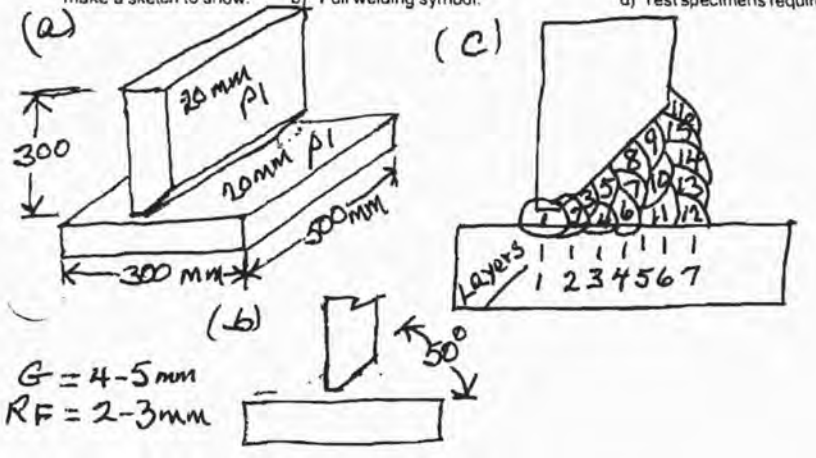

Failed Radiography due to Slag Inclusions

LABORATORY EVALUATION

TEST	NO.	SAT.	UNSAT.	N/A
Root Bend		[ ]	[ ]	[ ]
Face Bend		[ ]	[ ]	[ ]
Side Bend		[ ]	[ ]	[ ]
Tensile		[ ]	[ ]	[ ]
Macro Etch		[ ]	[ ]	[ ]
Fracture		[ ]	[ ]	[ ]
Other(s)		[ ]	[ ]	[ ]
		[ ]	[ ]	[ ]

NOTES: Failed Radiography due to Slag Inclusions

EVALUATION BY: [signature]

DATE (MONTH / DAY / YEAR): 07 / 09 / 2008

MOSHER ENGINEERING LIMITED 2089 Upper Water Street Halifax, Nova Scotia, B3J 2R7	TABLE MARCH 28, 2002

WELDING STANDARDS to CSA W47.1	CWB APPROVAL	ENGINEERS STAMP
TABLE OF CONTENTS	Welding Engineering Standards Received by CWB pursuant to CSA W47.1 APR 0 4 2002 Page 1-2	REGISTERED PROFESSIONAL ENGINEER R. T. ROSE SIGNATURE 02/03/28 PROVINCE OF NOVA SCOTIA

PART 1 - WELDING ENGINEERING STANDARDS

1 - GENERAL NOTES

2 - WELDING JOINTS, SYMBOLS AND DETAILS

a) Welding symbols and basic joints

b) Clarifications of "Arrow" and "Other" Side

c) Clarification of Intermittent & Staggered Fillet Welds

d) General Drafting and Design Information

3 - SUPPLEMENTARY WELD INFORMATION

a) Fillet Welds

b) Groove Welds

4 - SHOP STANDARDS

a) Acceptable and Unaccaptable Weld Profile

b) Splicing

c) Prepatation of Material

d) Assembly Practices

e) Allowable Workmanship Tolerances From Detailed Drawing

f) Control of Distortion and Shrinkage Stresses

g) Quality of Welds

PART II - WELDING PROCEDURE SPECIFICATIONS

RTR - 1 for SMAW

RTR - 4 for FCAW (With Shielding Gas)

RTR - 5 for GMAW

PART III - WELDING PROCEDURE DATA SHEETS

RTR - 1 for SMAW

RTR - 4 for FCAW (With Shielding Gas)

RTR - 5 for GMAW

MOSHER ENGINEERING LIMITED 2089 Upper Water Street Halifax, Nova Scotia, B3J 2R7	Page 1 MARCH 28, 2002

WELDING STANDARDS to CSA W47.1	CWB APPROVAL	ENGINEERS STAMP
GENERAL NOTES		REGISTERED PROFESSIONAL ENGINEER N. T. ROSE SIGNATURE 02/03/28 PROVINCE OF NOVA SCOTIA

1. General Notes

1.1 The Welding Standards of this firm are prepared in accordance with CSA Standard W47.1 - 1992. All welding will be performed in conformance with CSA Standard W59 - M1989, and to any revisions to the above mentioned Codes.

1.2 All welding operators employed will be qualified in accordance with CSA W47.1 and will be allowed to weld only the classifications (T and S), and positions for which they are qualified. They shall use only those welding processes and electrode classifications for which they are qualified.

1.3 Any welding sub-contracted by this form will be sublet only to firms approved and certified to CSA W47.1 - 1992 by the Canadian Welding Bureau. Drawings and welding procedures will be issued to the above sub-contractor so that welding quality is insured. (The subcontractor's CWB approved welding procedure may be used if satisfactory to the prime contractor.)

1.4 Changes in welding methods or welding engineering standards and additions to joints welded will be submitted to CWB for approval in accordance with Clause 6.4 of CSA Standard 47.1 before being used in production.

1.5 Only electrodes approved under CSA electrode standard or those conditionally approved under CSA Standard W47.1 shall be used. Each welding procedure data sheet will designate the electrode(s) to be used for the joint, the applicable codes and the number of the welding procedure specification which governs the data sheet application.

1.6 The individual data sheets will show the material specification(s) which may be welded.

WELDING STANDARDS to CSA W47.1	CWB APPROVAL	ENGINEERS STAMP
GENERAL NOTES		REGISTERED PROFESSIONAL ENGINEER · PROVINCE OF NOVA SCOTIA · R. T. ROSE SIGNATURE 02/03/28

1.7 Unless called for otherwise on a specific data sheet, vertical welds shall be made with progression of each pass in an upward direction.

1.8 All slag or flux remaining on any bead of welding shall be removed before laying down the next successive bead. Similarily with any new cracks, blow holes or porosity.

1.9 Metal surface to be welded shall be dry, clean and free from loose scale, paint and grease.

1.10 Specially designed anti- spatter compounds shall be used where called for on shop drawings.

1.11 No welding shall be done when temperature of the base metal is lower than -18 C (0 F) except with the express consent of the engineer. At temperatures below 0 C (32 F) the surfaces of all areas within 75mm (3") of the joint where a weld is to be deposited, shall be heated to a temperature at least warm to the hand before welding is commenced.

1.12 The operator and the work shall be adequately protected against the direct effect of wind, snow and rain.

WELDING STANDARDS to CSA W47.1	CWB APPROVAL	ENGINEERS STAMP
2.a WELDING SYMBOLS AND BASIC JOINTS		REGISTERED PROFESSIONAL ENGINEER · R. T. ROSE · SIGNATURE 02/03/28 · PROVINCE OF NOVA SCOTIA ·

1. Welding symbols shall be as shown in AWS Standard A2.4, Symbols for Welding and Nondestructive Testing. See Appendix D of CSAW59-M1989 for symbols from that Standard and additional conventions developed for incorporation into this Standard. Special requirements shall be fully explained by notes or details.

Detail of butt joints, corner joints, T-joints, lap joints and edge joints are shown in Appendix D, CSA W59-M1989. Standard location on elements of a welding symbol are also shown in this appendix.

MOSHER ENGINEERING LIMITED
2089 Upper Water Street
Halifax, Nova Scotia, B3J 2R7

MARCH 28, 2002

WELDING STANDARDS to CSA W47.1

CWB APPROVAL

ENGINEERS STAMP

REGISTERED PROFESSIONAL ENGINEER
R. T. ROSE
SIGNATURE
02/03/28
PROVINCE OF NOVA SCOTIA

2.b CLARIFICATION OF "ARROW" AND "OTHER" SIDE

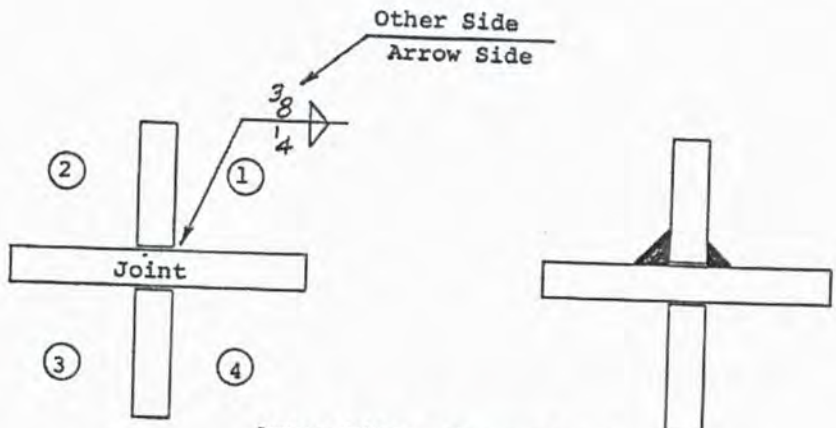

Arrow Side = Corner No. 1
Joint = Contact Area 1 - 2
Other Side = Corner No. 2

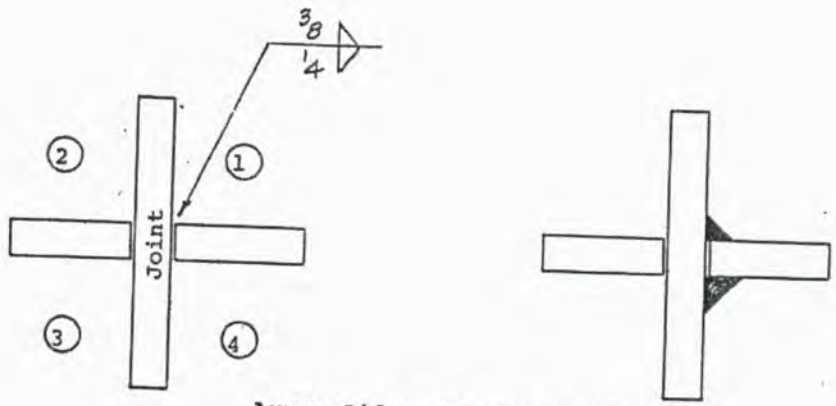

Arrow Side = Corner No. 1
Joint = Contract Area 1 - 4
Other Side = Corner No. 4

WELDING STANDARDS to CSA W47.1

CWB APPROVAL

ENGINEERS STAMP

REGISTERED PROFESSIONAL ENGINEER
R. T. ROSE
SIGNATURE
02/03/28
PROVINCE OF NOVA SCOTIA

2.c CLARIFICATION OF INTERMITTENT AND STAGGERED FILLET WELDS

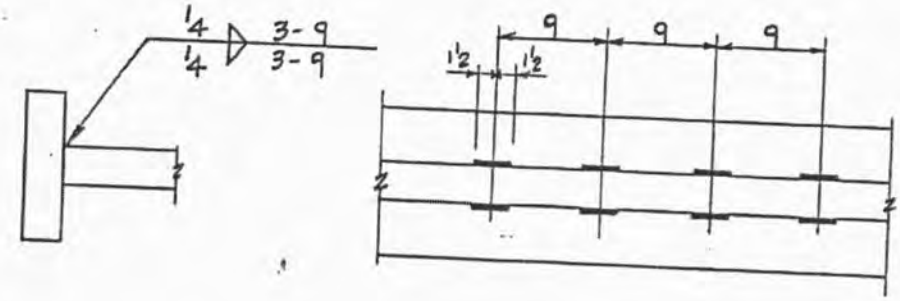

CHAIN INTERMITTENT FILLET WELD

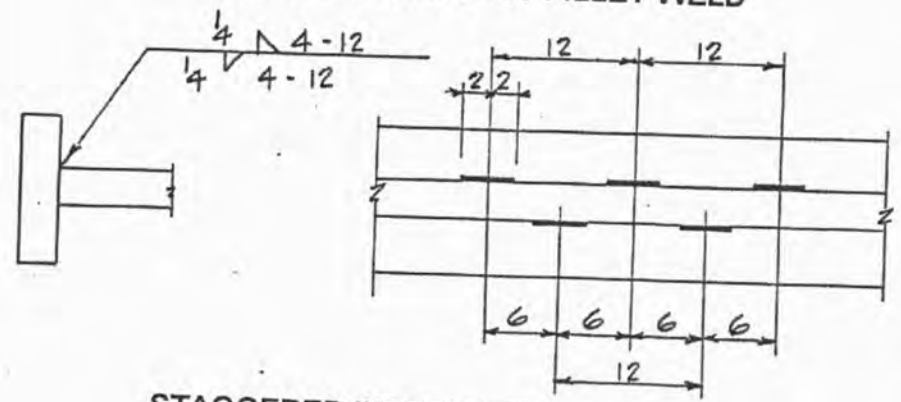

STAGGERED INTERMITTENT FILLET WELD

Note:

(a) When intermittent fillet welding is used by itself, the symbol indicates that increments shall be located at the ends of the dimensioned length.

(b) If required by actual length of the joint the length of increment of the welds at the end of the joint should be increased to terminate the weld at the end of the joint.

WELDING STANDARDS to CSA W47.1	CWB APPROVAL	ENGINEERS STAMP
2.d GENERAL DRAFTING AND DESIGN INFORMATION		REGISTERED PROFESSIONAL ENGINEER · R. T. ROSE · SIGNATURE 02/03/28 · PROVINCE OF NOVA SCOTIA ·

(1) Welds on both sides of the joint shall be shown by placing weld symbols on both sides of the reference line. The size of a fillet weld or groove weld (Depth unless it is complete joint penetration) shall be shown to the left of the weld symbol.

The length of a fillet or groove weld, when indicated on the welding symbol, shall be shown to the right of the weld symbol. Unless otherwise indicated on the welding symbol all welds shall be continous.

When no general note governing the dimensions of fillet welds or groove welds appears on the drawing the dimensions of fillet welds and groove welds on both sides of the joint shall be shown as follows.

(a) When both welds have the same dimensions, both shall be dimensioned.

(b) When the welds differ in dimensions, both shall be dimensioned.

(2) Symbols apply between abrupt changes in the direction of the welding or to the extent of hatching or dimension lines. Weld extending beyond abrupt changes in the direction of the welding shall be indicated by means of additional arrow points to each section of the joint to be welded. The above applies except when the weld all around symbol is used.

(3) When desired, General Notes, may be placed on a drawing to provide detailed information pertaining to predominant welds.

i.e. Unless otherwise indicated all fillet welds are 8mm (5/16") in size.

Such information need not be repeated on the symbol.

WELDING STANDARDS to CSA W47.1	CWB APPROVAL	ENGINEERS STAMP
2.d GENERAL DRAFTING AND DESIGN INFORMATION		REGISTERED PROFESSIONAL ENGINEER R. T. ROSE SIGNATURE 02/03/29 PROVINCE OF NOVA SCOTIA

(4) When only one member of a joint is to be prepared the arrow shall point with a definite break toward that member.

(5) All welds to be called up in Imperial Units unless drawing is designated as a metric drawing in which case all welds will be in Metric Units.

(6) The following finishing symbols, indicate the method, not the degree, of finish required for a weld.

C - Chipping

R - Rolling

G - Grinding

H - Hammering

M - Matching

The above does not include for normal cleaning which is always required after each weld pass.

WELDING STANDARDS to CSA W47.1	CWB APPROVAL	ENGINEERS STAMP
3 SUPPLEMENTARY WELD INFORMATION		REGISTERED PROFESSIONAL ENGINEER · R. T. ROSE · SIGNATURE · 02/03/28 · PROVINCE OF NOVA SCOTIA ·

3.a Fillet Welds

1. The effective area of a fillet weld shall be the effective weld length multiplied by the effective throat thickness.

2. The effective length of a fillet weld shall be the overall length of the full-size fillet, including end returns. No reduction in effective length shall be made for either the start or termination of the weld if the weld is full size throughout its length.

3. The effective length of a curved fillet weld shall be measured along the centreline of the effective throat.

4. The effective throat thickness shall be the shortest distance from the root to the face of the diagrammatic weld for all processes except SAW which will be governed by CSA W59-4.3.2.4.

5. Fillet welds may be used in skewed T-joints having a dihedral angle of not less than 60 degrees nor more than 120 degrees as shown in figure 4-2 and clause 4.3.2.5 of CSA W59-M1989

WELDING STANDARDS to CSA W47.1	CWB APPROVAL	ENGINEERS STAMP
3 SUPPLEMENTARY WELD INFORMATION		REGISTERED PROFESSIONAL ENGINEER · R. T. ROSE · SIGNATURE · 02/03/28 · PROVINCE OF NOVA SCOTIA ·

3.A Fillet Welds

4. The maximum fillet weld size permitted along the edge of material shall be:

   (a) The thickness of the material for material less than 6mm (1/4") thick.

   (b) 2mm(1/16") less than the thickness of material for 6mm (1/4") or more in thickness unless the weld is designated on the detail drawing to be built out to obtain full throat thickness.

   (c) The size of fillet welds on top of groove welds when required by the engineer for smoother transiton in "T" and corner joints shall not be less that t/4 where it is the thickness of the groove welded member, but need not to be more than 10mm (3/8"). They shall be mandatory for T-Joint subject to tension normal to the axis of the weld.

5. The minimum effective length of a fillet weld shall be 40mm (1 1/2") or 4 times the size of the fillet whichever is larger.

6. Fillet welds may be continous or intermittent except for CSA W59-12.4.14. 1.d which notes restriction on the use of intermittent welds in dynamically loaded structures.

7. The minimum overlap of parts in stress carrying lap joints shall be 5 times the thickness of the thinner part joined. Unless lateral deflection of the parts is prevented, they shall be connected by two transverse lines of fillet, or by longitudinal fillet welds along the edges or in slots.

WELDING STANDARDS to CSA W47.1	CWB APPROVAL	ENGINEERS STAMP
3 SUPPLEMENTARY WELD INFORMATION		REGISTERED PROFESSIONAL ENGINEER · R. T. ROSE · SIGNATURE 02/03/20 · PROVINCE OF NOVA SCOTIA ·

3.A Fillet Welds

8. Fillet welds shall not terminate at corners of parts of members but shall be returned continously, full size around the corner for a length equal to twice the weld size where such return can be made in the same plane.

9. The minimum fillet size as measured shall be shown in the table below (Table 3-1). Except that the weld size need not exceed the thickness of the thinner part joined unless a larger size is required by calculated stress. For this exception particular care shall be taken to provide sufficient heat input to ensure weld soundness.

When welding attachments to members which do not carry calculated stress, the requirements of the table below need not apply.

TABLE 3-1 MINIMUM FILLET SIZE

MATERIAL THICKNESS OF THICKER PART JOINED IN MILLIMETERS (INCHES)	MINIMUM SIZE OF FILLET WELD IN MILLIMETERS (INCHES)	
To 12mm (1/2") Inclusive	5mm (3/16")	Single Pass welds Must be used
Over 12mm (1/2") to 20mm (3/4")	6mm (1/4")	
Over 20mm (3/4")	8mm (5/16")	

WELDING STANDARDS to CSA W47.1	CWB APPROVAL	ENGINEERS STAMP
3 SUPPLEMENTARY WELD INFORMATION		REGISTERED PROFESSIONAL ENGINEER · R. T. ROSE · SIGNATURE 02/03/28 · PROVINCE OF NOVA SCOTIA ·

3.b Groove Welds

1. A complete penetration groove weld is defined as one made from one side on a backing bar or on both sides combined with back gouging to provide complete penetration and fusion of weld and base metal throughout the depth of the joint.

2. The effective area of a groove weld shall be the effective weld length multiplied by the efective throat thickness.

3. The effective throat thickness of a complete joint penetration groove weld shall be the thickness of the thinner part joined. (No increase is permitted for weld reinforcement.).

4. The minimum groove depth of single partial joint penetration groove welds or on each side of double partial joint penetration groove welds shall be in accordance with the Table 3.2 on page 12.

5. For details of Plug and Slot Welds refer to section 4.4.2 of CSA W59-M1989

6. For details of Flare Grooves and their effective throats refer to Section 4.3.1.6 of CSA W59-M1989

WELDING STANDARDS to CSA W47.1

CWB APPROVAL

ENGINEERS STAMP

REGISTERED PROFESSIONAL ENGINEER
R. T. ROSE
SIGNATURE
02/03/28
PROVINCE OF NOVA SCOTIA

3 SUPPLEMENTARY WELD INFORMATION

MINIMUM GROOVE DEPTH FOR PARTIAL JOINT PENETRATION GROOVE WELDS (NOT COMBINED WITH FILLET WELDS) TABLE 3-2

THICKNESS OF THICKER PART JOINED IN MILLIMETERS	MINIMUM GROOVE DEPTH	
	Groove Angle At Root > 45 < 60 (V, Bevel Grooves)	Groove Angle At Root > 60 (V, bevel J-,U-Grooves)
To 12mm (1/2") Inclusive	8mm (5/16")	5mm (3/16")
Over 12mm (1/2") to 20mm (3/4") Inclusive	10mm (3/8")	6mm (1/4")
Over 20mm (3/4") to 40mm (1 1/2") Inclusive	12mm (1/2")	8mm (5/16")
Over 40mm (1 1/2") to 60mm (2 1/4") Inclusive	14mm (9/16")	10mm (3/8")
Over 60mm (2 1/4") Inclusive	16mm (5/8")	12mm (1/2")

WELDING STANDARDS to CSA W47.1	CWB APPROVAL	ENGINEERS STAMP
3 SUPPLEMENTARY WELD INFORMATION		REGISTERED PROFESSIONAL ENGINEER · PROVINCE OF NOVA SCOTIA · R. T. ROSE SIGNATURE 02/03/28

3.b Groove Welds

5. The effective throat thickness of a partial joint penetration groove weld for joints with no root openingshall be the depth of camfer less 3mm (1/8") for grooves having an included angle at the root of the groove less than 60 but not less than 45 .

6. The effective throat thickness of a partial joint penetration groove weld shall be the depth of camfer for grooves having an included angle at the root of the groove of 60 or greater.

7. The effective throat thickness of a partial joint penetration groove weld reinforced with a fillet weld shall be the shortest distance between the root of the groove and the surface of the fillet less 3mm (1/8") where such reduction is required by Paragraph (5).

8. For hollow structural sections the effective throat thickness of Flare-V and Flare-Bevel Groove welds shall be established by the contractor. Unless otherwise approved by the engineer, this shall be done by means of trial welds for each set of procedural conditions shall then be sectioned and measured to establish welding techniques which will ensure that the design throat thickness is achieved in production.

WELDING STANDARDS to CSA W47.1

CWB APPROVAL

ENGINEERS STAMP

REGISTERED PROFESSIONAL ENGINEER
R. T. ROSE
SIGNATURE
02/03/28
PROVINCE OF NOVA SCOTIA

4 SHOP STANDARDS

4.a Acceptable and Unacceptable Weld Profiles

TABLE - 1

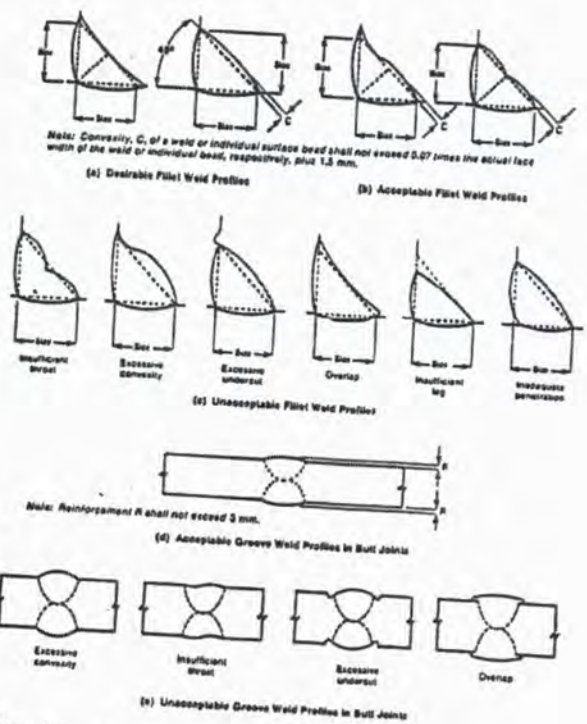

Notes:

(1) *The faces of fillet welds may be slightly convex, flat, or slightly concave. Except at outside corner joints, the convexity shall not exceed 0.07 x width of face or bead + 1.5 mm.*

(2) *The finishing passes of all groove welds in butt joints shall provide a reinforcement at the centre of weld not exceeding 3 mm. The reinforcement shall be built up uniformly from the surface of the parent metal to a maximum at the centre of the weld. There shall be no valley or groove along the edge or in the centre of the weld. The deposited metal shall be smooth and uniform in cross-section.*



4 SHOP STANDARDS

4.b Splicing

1. Connections or splices in beams or girders when made by groove welds shall be complete penetration groove welds, unless otherwise approved by the Engineer.

2. Splices of tension members made by groove welds shall be complete joint penetration groove welds unless otherwise approved by the Engineer.

3. All shop splices in each component of a cover-plated or built-up member shall be made before such component part is welded to other component parts of the member.

4. Tension butt joints in plates of different material thickness or widths shall be made in such a manner that the slope through the transistion zone is not steeper thatn 1 in 2 1/2. The transisiton shall be accomplished by chamfering the thicker part, tapering the wider part, slopeing the weld metal, or by any combination of these.

5. Compression butt joints do not require a transistion zone in members of different thickness or width, if approved by the Engineer.

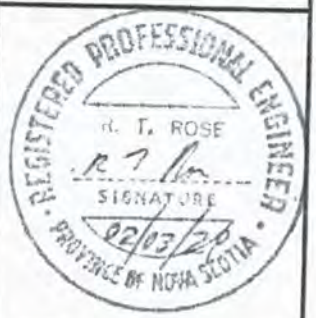

4 SHOP STANDARDS

4.c Preparation of Material (From CSA W59-M1989 Clause 5.3)

1. Surfaces and edges to be welded shall be smooth, uniform and free from fins, cracks and other defects that would adversely affect the quality or strength of the weld. Surfaces to be welded shall also be free, within 50 mm (2") of any weld locations, from loose or thick scale (except for tightly adhering small islands of scale), slag, loose rust, paint, grease, moisture and other foreign material that will prevent welding to meet acceptance levels of this standard or produce objectionable fumes.

2. Preparation of edges for welding shall be smooth and regular and shall be left free of slag. The edges resulting from cutting shall be smoothed when necessary to provide a surface equivalent to that specified in Clause 5.3 (CSA W59) (Pre-ceding paragraph). All re-entrant corners shall be shaped, notch-free, to a radius of at least 15mm. All cutting shall follow closely the lines prescribed. Oxygen gouging not to be used on quenched and tempered steels.

3. For reference to occassional notches and their repair see Clause 5.3.2 CSA W59-M1989 and for planar edge discontinuities refer to Clause 5.3.3 CSA W59-M1989

WELDING STANDARDS to CSA W47.1	CWB APPROVAL	ENGINEERS STAMP
4 SHOP STANDARDS		REGISTERED PROFESSIONAL ENGINEER · R. T. ROSE · SIGNATURE · 02/03/28 · PROVINCE OF NOVA SCOTIA ·

4.d Assembly Practices

1. The parts to be joined by fillet welds shall be brought into as close contact as practicable, (see Clause 54.1 of CSA W59-M1989) and in no event shall be separated by more than 5mm (3/16"). If the separation is 1mm (1/32") or greater, the size of the fillet weld shall be increased by the amount of the separation. The separation between faying surfaces of lap joints and of butt joints landing on a backing shall not exceed 2mm (1/16"). Where irregularities in rolled shapes or plates after straightening, do not permit contact within the above limits, the procedure necessary to bring the material within these limits shall be subject to the approval of the Engineer. The use of fillers is prohibited except as specified on the drawings or as specially approved by the Engineer, and made in accordance with Clause 4.5 CSA W59-M1989.

   Abutting parts to be joined by groove welds shall be carefully aligned. Where the parts are effectively restrained against bending due to eccentricity in alignment, an offset not exceeding 10% of the thickness of the thinner part joined, but in no case more than 3mm (1/8"), may be permitted as a departure from the theoretical alignment. In correcting misalignment in such cases, the parts shall not be drawn into a greater slope than 1 in 25. Measurement of offset shall be based upon midplane of parts unless otherwise shown on the drawings.

Members to be welded shall be brought into correct alignment and held safely in position until welding has been completed. Suitable allowances shall be made for warpage and shrinkage.



4 SHOP STANDARDS

4.e Allowable Workmanship Tolerances from Detailed Drawings

Dimensions of the cross-section of groove welded joints which vary from those on the detail drawings by more than the following workmanship tolerances shall be corrected as per Appendix C, Clause C1.1 (f) (CSA W59), or referred to the Engineer for approval.

	Root Not Gouged	Root Gouged
a) Root Face of Joint	+/- 2mm (1/16")	Not limited
b) Root Opening of Joints without steel backing	+/- 2mm (1/16")	+ 2mm (1/16") - 3mm (1/8")
Root Opening of Joints with steel backing	+ 6mm (1/4") - 2mm (1/16")	Not applicable Not applicable
Root openings wider than permitted by the above tolerances but not greater than twice the thickness of the thinner part of 20mm maximum be built up be welding to acceptable dimensions prior to the joining if the parts by welding.		
c) Groove angle of Joint	+10 Degrees - 5 degrees	+10 Degrees - 5 degrees

REGISTERED PROFESSIONAL ENGINEER
R. T. ROSE
SIGNATURE
02/03/28
PROVINCE OF NOVA SCOTIA

4 SHOP STANDARDS

4.f Control of Distortion and Shrinkage Stresses

1. Insofar as practicable, all welds shall be deposited in a sequence that will balance the applied heat of welding while the welding progresses.

   Before the start of welding on a member or structure in which shrinkage stresses or distortion is likely to effect the adequacy of the structure, the program for welding sequence and distortion control shall be developed by the Contractor and submitted to the Engineer for approval.

   The direction of the general progression in welding on a member shall be from points where the parts are relatively fixed in position with respect to each other toward points where they have a greater relative freedom of movement.

   Joints expected to have large shrinkage shall normally be welded before joints expected to have lesser shrinkage and with as little restraint as possible.

   All shop splices in each component of a coverplated or built-up member shall be made before such component part is welded to other component parts of the member. With the approval of the Engineer, long girders or girder section may be made by shop splicing sub-sections, each made in accordance with this Clause (Clause 5.4, CSA W59 - M1989).

   For conditions of severe external shrinkage restraint refer to clause 5.1.7 (CSA W59-M1989).

WELDING STANDARDS to CSA W47.1	CWB APPROVAL	ENGINEERS STAMP
4 SHOP STANDARDS		REGISTERED PROFESSIONAL ENGINEER R. T. ROSE SIGNATURE 02/03/28 PROVINCE OF NOVA SCOTIA

4.g Quality of Welds

1. Welds shall have no cracks

2. Welds shall be free from overlap

3. Undercut shall not exceed the permissable valves as given in Clauses 11.5.4 and 12.5.4 of CSA W59-M1989 for statically and Dynamically Loaded structures respectively.

4. The minimum acceptable quality of welds, including visual examination, shall confirm to clause 11.5.4 for Statically Loaded Structures, and Clause 12.5.4 for Dynamically Loaded Structures.

Item 6 – Welding Consumable

Contents

1. N/A

Item 7 – Foundation

Contents

1. Foundation Acceptance Report

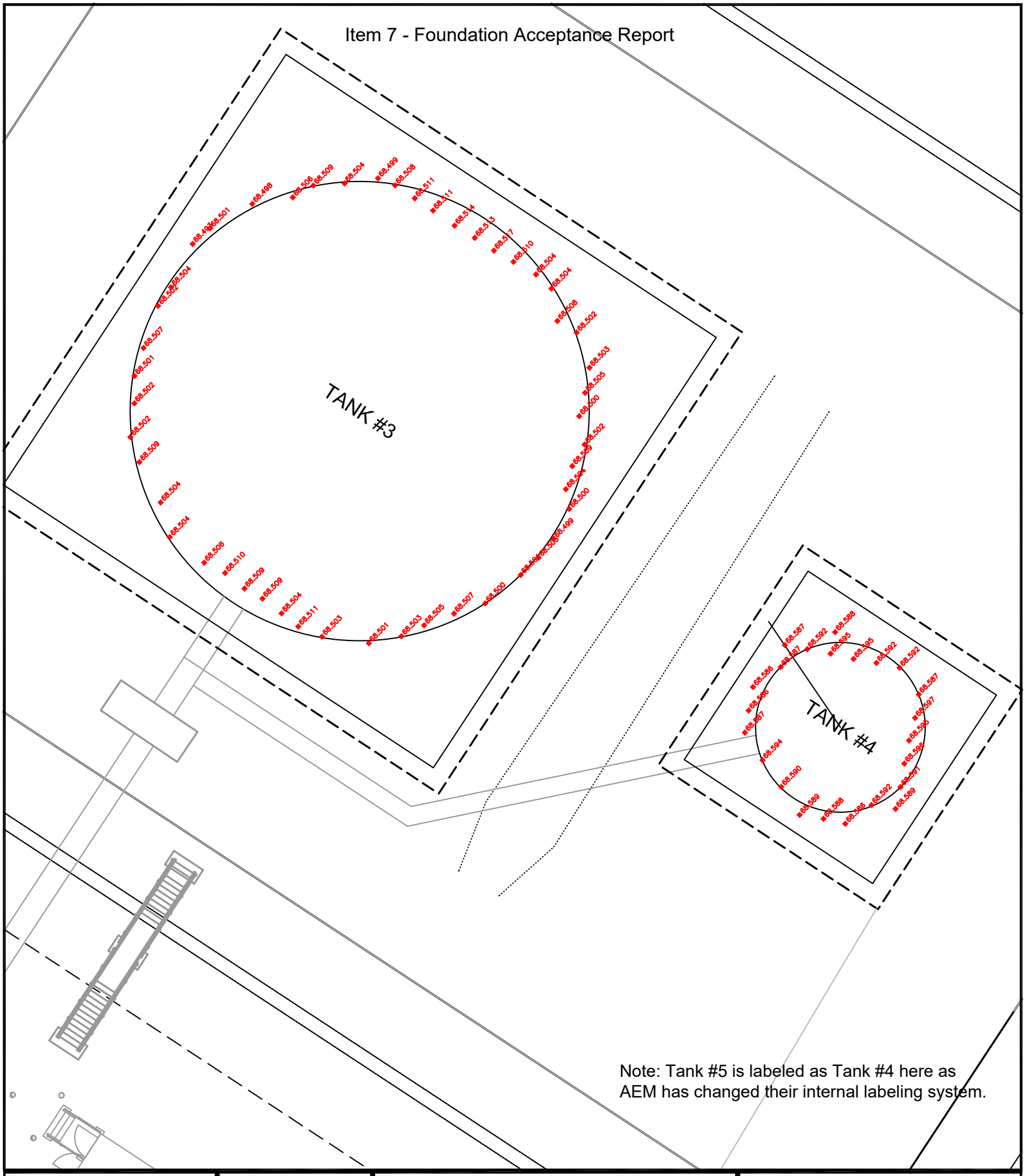

Note: Tank #5 is labeled as Tank #4 here as AEM has changed their internal labeling system.

HAMELARPENTAGE	AEM	Date des travaux : August 2017	Date d'envoi : 2017-10-14
	Système de Coord.: NAD83 UTM15	MINE SITE FUEL FARM Sand As-Built	Dessine par: JF Landreville
	Echelle: n.t.s.	No plan: AB 403 – Top Sand	Approuve par: Hamel Arp.

Item 8 – Floor

Contents

1. MTR
2. Weld Map / Visual Report
3. Vacuum Box Test Report
4. Floor Leveling Report

Item 8 - Floor - MTR

Test Certificate

Form TC1: Revision 2: Date 23 Apr 2014

SSAB

12400 Highway 43 North, Axis, Alabama 36505, US

Customer:
SAMUEL, SON & CO. LTD
1250 APPLEBY LINE

BURLINGTON
ON L7L5G6

Customer P.O.No.: C41965 & 41-496189 | **Mill Order No.** 41-496191-01 | **Shipping Manifest:** AR240215

Product Description: CSA G40.21(2013) 38WT/260WT - CAT 5;LCVN 15FT.LBS,TCVN13FT.LBS@-45F/A673-P ALLOYS API650(12TH ED) TABLE 4-1 GR.IIIA NORMALIZED

Ship Date: 22 Feb 17
Cert Date: 22 Feb 17

Cert No: 081597726
(Page 1 of 2)

Size: 0.250 X 120.0 X 480.0 (IN)

Tested Pieces:				Tensiles:					Hardness	Charpy Impact Tests								
Heat Id	Piece Id	Tested Thickness	Tst Loc	YS (KSI)	UTS (KSI)	%RA	Elong % 2in 8in	Tst Dir		Abs. Energy(FTLB) 1	2	3	Avg	% Shear 1	2	3	Avg	Tst Tmp	Tst Dir	Tst Siz (mm)	BDWTT Tmp %Shr
E7B102	E13	0.255 (DISCRT)	C	55	76		26	T		35	34	30	33					-50F	L	5.0	
			C							27	44	41	37					-50F	T	5.0	
W7B598	E07	0.256 (DISCRT)	C	52	72		25	T		36	34	32	34					-45F	L	5.0	
			C							30	29	27	29					-45F	T	5.0	
W7B598	E08	0.256 (DISCRT)	C	51	71		25	T													
W7B598	E09	0.256 (DISCRT)	C							43	31	55	43					-50F	L	5.0	
			C							33	30	31	31					-50F	T	5.0	
W7B598	E10	0.256 (DISCRT)	C							32	40	31	34					-50F	L	5.0	
			C							28	34	28	30					-50F	T	5.0	

Chemical Analysis

Heat Id	C	Mn	P	S	Si	Tot Al	Sol Al	Cu	Ni	Cr	Mo	Cb	V	Ti	B	N	ORGN
E7B102	.18	.94	.009	.001	.25	.027	.025	.26	.12	.11	.05	.002	.005	.011	.0002	.0076	USA
W7B598	.18	.92	.009	.001	.24	.028	.022	.26	.13	.08	.05	.001	.004	.011	.0002	.0078	USA

KILLED STEEL
MERCURY IS NOT A METALLURGICAL COMPONENT OF THE STEEL AND NO MERCURY WAS INTENTIONALLY ADDED DURING THE MANUFACTURE OF THIS PRODUCT.
KILLED STEEL, PRODUCED TO A FINE GRAIN PRACTICE
MTR EN 10204:2004 INSPECTION CERTIFICATE 3.1 COMPLIANT
CHARPY FULL SIZE EQUIVALENT = ABSORBED ENERGY AVG X 10 / TEST SIZE IN MM
NORMALIZED PLATES. HEATED AT 1665F FOR 15 MINUTES.
TEST COUPONS TAKEN FROM HEAT TREATED PLATE.
PRODUCTS SHIPPED:

W7B598 E10	6705182	PCES:	1,	LBS:	4084	W7B598 E07	6705202	PCES:	1,	LBS:	4084
W7B598 E07	6705203	PCES:	1,	LBS:	4084	W7B598 E07	6705204	PCES:	1,	LBS:	4084
W7B598 E07	6705205	PCES:	1,	LBS:	4084	W7B598 E09	6705210	PCES:	1,	LBS:	4084
W7B598 E07	6705211	PCES:	1,	LBS:	4084	W7B598 E07	6705212	PCES:	1,	LBS:	4084
W7B598 E07	6705213	PCES:	1,	LBS:	4084	W7B598 E07	6705214	PCES:	1,	LBS:	4084
W7B598 E07	6705215	PCES:	1,	LBS:	4084	W7B598 E10	6705216	PCES:	1,	LBS:	4084
W7B598 E10	6705217	PCES:	1,	LBS:	4084	W7B598 E10	6705218	PCES:	1,	LBS:	4084
W7B598 E10	6705219	PCES:	1,	LBS:	4084	W7B598 E09	6705220	PCES:	1,	LBS:	4084
W7B598 E09	6705221	PCES:	1,	LBS:	4084	W7B598 E09	6705222	PCES:	1,	LBS:	4084
W7B598 E09	6705223	PCES:	1,	LBS:	4084	E7B102 E13	6705232	PCES:	1,	LBS:	4084
E7B102 E13	6705233	PCES:	1,	LBS:	4084	E7B102 E13	6705245	PCES:	1,	LBS:	4084

(P) Cust Part #:

WE HEREBY CERTIFY THAT THIS MATERIAL WAS TESTED IN ACCORDANCE WITH, AND MEETS THE REQUIREMENTS OF, THE APPROPRIATE SPECIFICATION

Justin Ward +1 251 662 4400
SENIOR METALLURGIST - PRODUCT

Item 8 - Floor - MTR

Test Certificate

Form TC1: Revision 2: Date 23 Apr 2014

SSAB
12400 Highway 43 North, Axis, Alabama 36505, US

Customer:
SAMUEL, SON & CO. LTD
1250 APPLEBY LINE

BURLINGTON
ON L7L5G6

Customer P.O.No.: C41965 & 41-496189 | **Mill Order No.** 41-496191-01 | **Shipping Manifest:** AR240215

Product Description: CSA G40.21(2013) 38WT/260WT - CAT 5;LCVN 15FT.LBS,TCVN13FT.LBS@-45F/A673-P ALLOYS API650(12TH ED) TABLE 4-1 GR.IIIA NORMALIZED

Size: 0.250 X 120.0 X 480.0 (IN)

Ship Date: 22 Feb 17
Cert Date: 22 Feb 17

Cert No: 081597726
(Page 2 of 2)

Tested Pieces:				Tensiles:						Charpy Impact Tests								
Heat Id	Piece Id	Tested Thickness	Tst Loc	YS (KSI)	UTS (KSI)	%RA	Elong % 2in 8in	Tst Dir	Hardness	Abs. Energy(FTLB) 1 2 3 Avg				% Shear 1 2 3 Avg				Tst Tmp	Tst Dir	Tst Siz (mm)	BDWTT Tmp %Shr
E7B102 E13	6705246	PCES: 1, LBS: 4084																			

(P) Cust Part #:

WE HEREBY CERTIFY THAT THIS MATERIAL WAS TESTED IN ACCORDANCE WITH, AND MEETS THE REQUIREMENTS OF, THE APPROPRIATE SPECIFICATION

Justin Ward +1 251 662 4400
SENIOR METALLURGIST - PRODUCT

Item 8: Floor - Weld Map

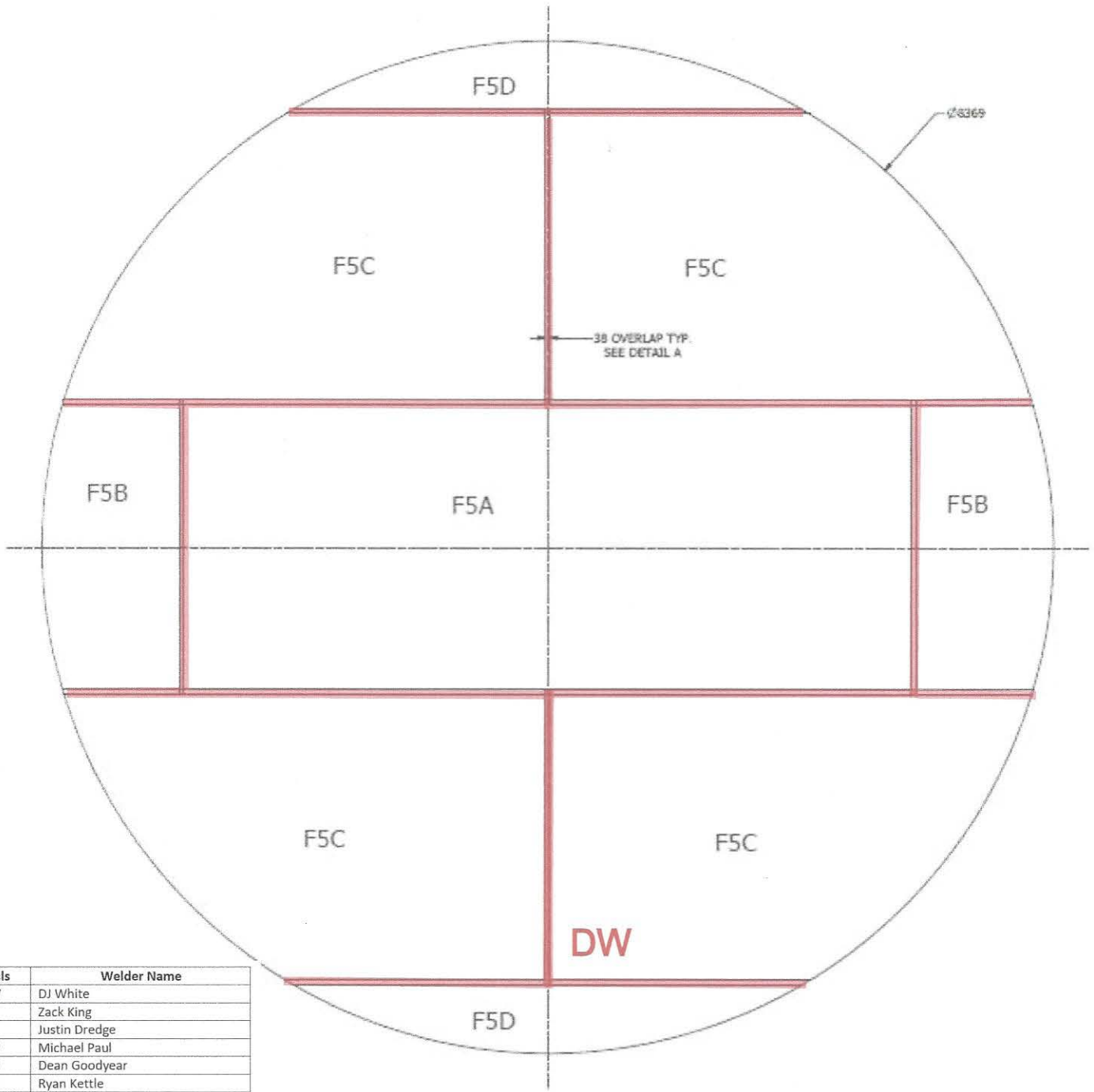

Initials	Welder Name
DW	DJ White
ZK	Zack King
JD	Justin Dredge
MP	Michael Paul
DG	Dean Goodyear
RK	Ryan Kettle
JC	John Cusick
AK	Abel Kalai
JO	Joel Overgaard (Sub Arc Systems)

I, Sheldon Burry (print supervisor name) have visually inspected the welds shown on this weld map.

Sign: Sheldon Burry

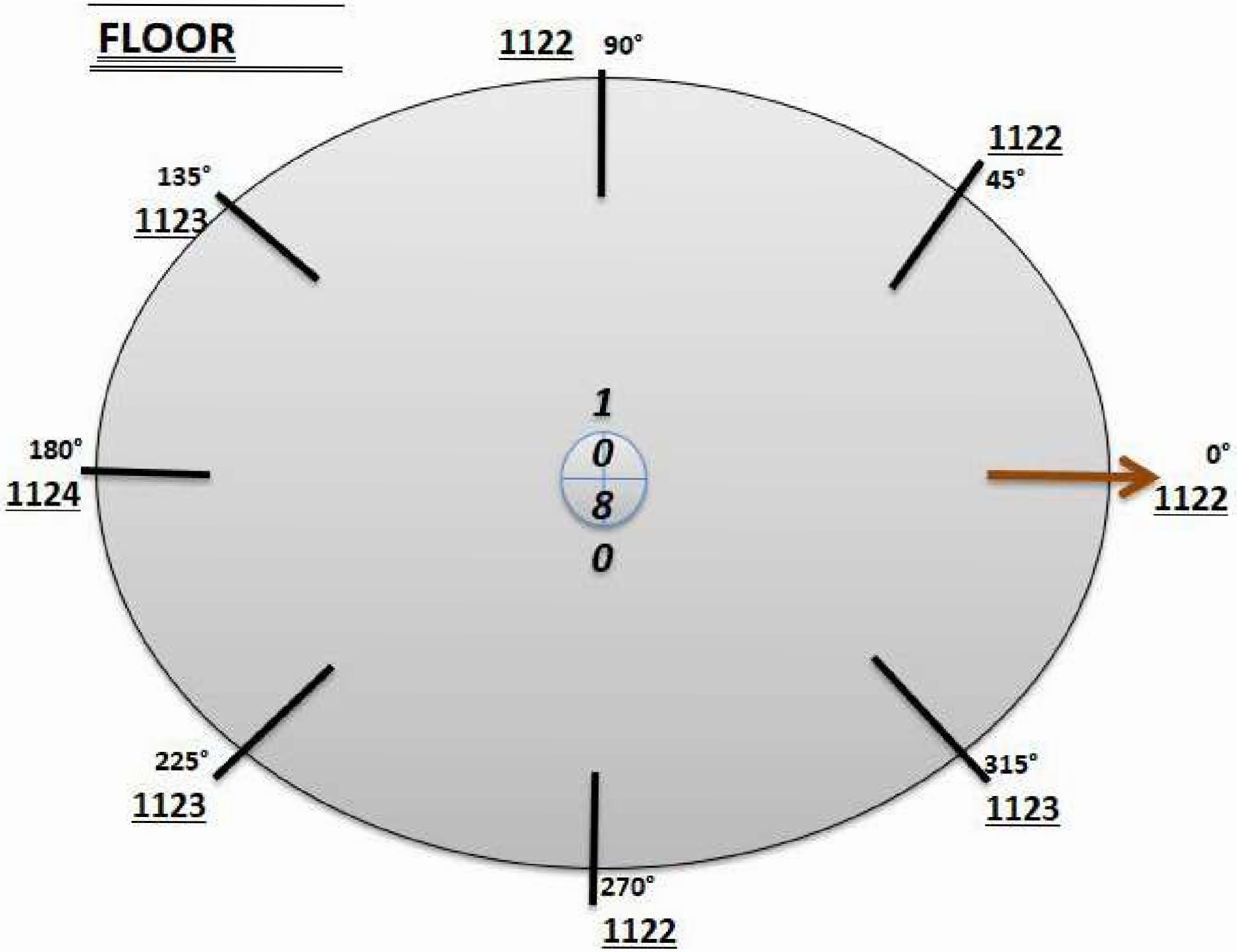
FLOOR
1122
90°
1122
45°
135°
1123
180°
1124
1
0
8
0
0°
1122
225°
1123
315°
1123
270°
1122

Tank # 5

Item 8 - Floor - Vacuum Test Report

Inukshuk Construction Limited
Industrial Contracting Project Management

PO Box 654
Rankin Inlet, NU X0C 0G0
T 867.645.4030 F 867.645.4064

4. TESTING MEDIA: Vacuum Test at -12 PSI with Soapy water

TANK 5

5. CALCULATED PRESSURE / ACTUAL PRESSURE AT LOWEST ELEVATION:

TIME (MIN)	TEST PRESSURE (KP)	TEMPERATURE (C)
330pm - 415	-12 PSI	16°

Include all pressure, temperature and pressure valve recording charts where applicable. Charts to be signed and approved by Engineer before acceptance. The location and course of any leaks or failures and description of repair action(s) taken to be included on additional sheets. All certificates to be submitted to Engineer for each Test Section.

CONTRACTOR REPRESENTATIVE

Sheldon Burry
(Print Name)

(Signature)

(Date)

~~ENGINEER~~ QC

(Print Name)

(Signature)

(Date)

Tank # 5

Item 8 - Floor - Vacuum Test Report

Inukshuk Construction Limited
Industrial Contracting | Project Management

PO Box 654
Rankin Inlet, NU X0C 0G0
T 867.645.4030 F 867.645.4064

PRESSURE TEST CERTIFICATE

SITE: Meliadine

WORK ORDER #

TITLE: Tank Farm

DATE: Aug 9 2017

1. DESCRIPTION OF PIPE AND LOCATION: Tank # 5
Vacuum Test The Floor at -12 PSI

2. SKETCH INDICATING TEST POINT (S):

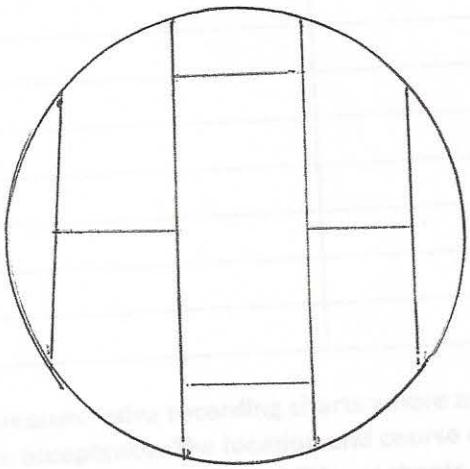

3. PIPE STANDARD / SPECIFICATION OF TEST SECTION:

Item 9 – Shell to Floor Seams

Contents

1. Initial and Final (Inside and Outside) Pass Weld Map
2. Visual Report
3. Diesel Test – Leak Test Report

Item 9: Shell to Floor Seams - Initial Weld Map

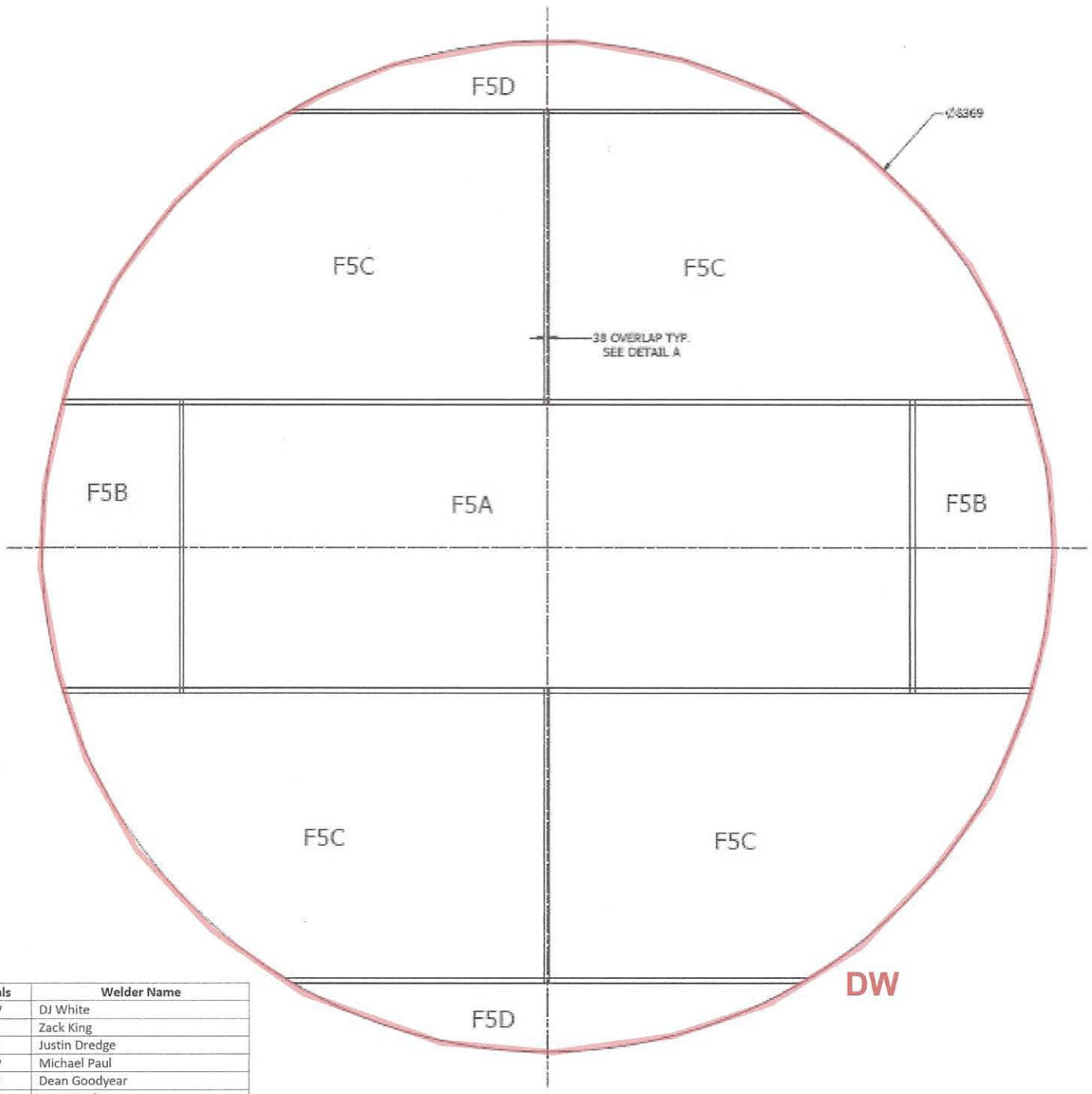

Initials	Welder Name
DW	DJ White
ZK	Zack King
JD	Justin Dredge
MP	Michael Paul
DG	Dean Goodyear
RK	Ryan Kettle
JC	John Cusick
AK	Abel Kalai
JO	Joel Overgaard (Sub Arc Systems)

I, Sheldon Berry (print supervisor name) have visually inspected the welds shown on this weld map.

Sign: Sheldon Berry

Item 9: Shell to Floor Seams - Final Weld Map

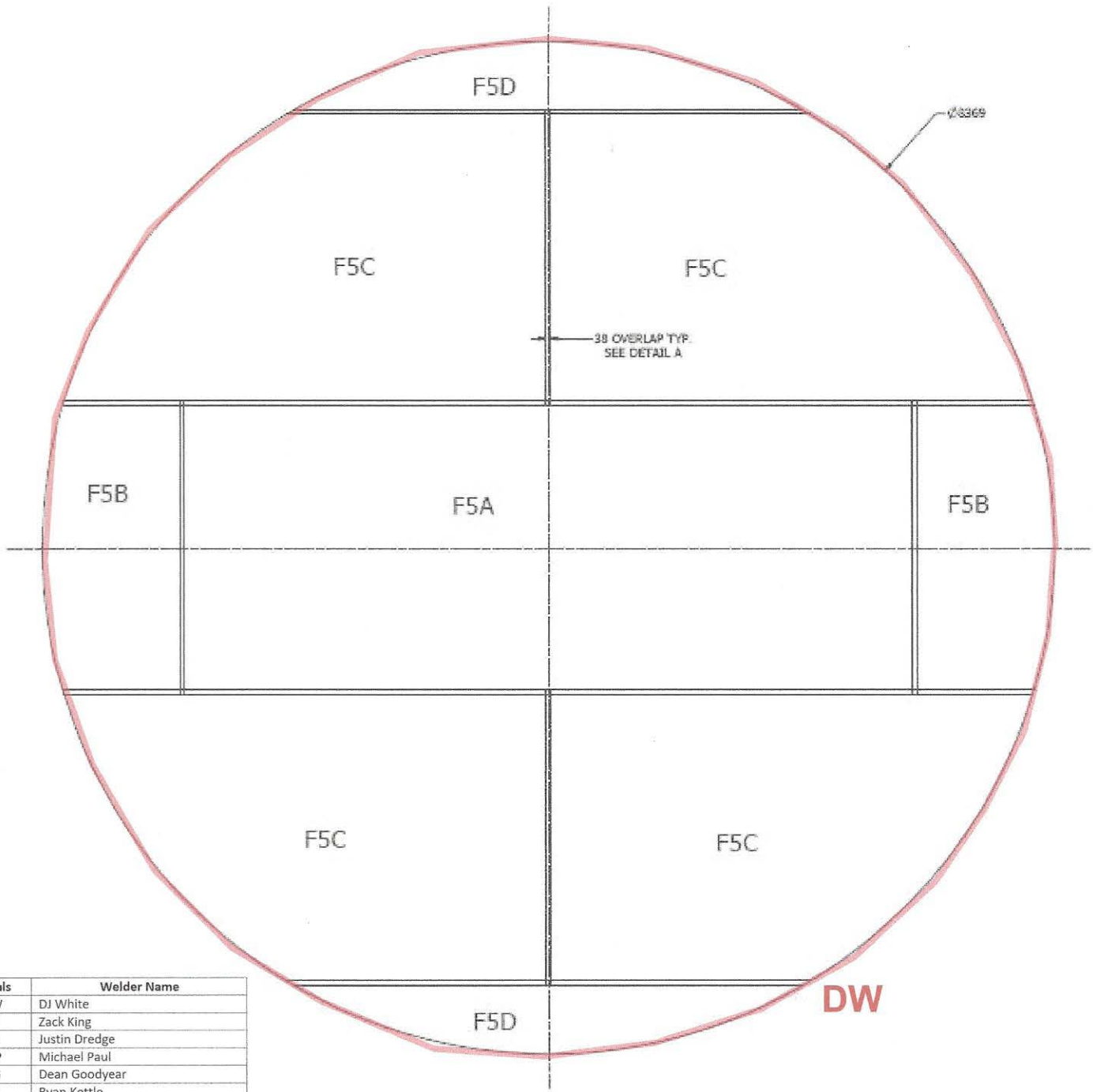

Initials	Welder Name
DW	DJ White
ZK	Zack King
JD	Justin Dredge
MP	Michael Paul
DG	Dean Goodyear
RK	Ryan Kettle
JC	John Cusick
AK	Abel Kalai
JO	Joel Overgaard (Sub Arc Systems)

I, Sheldon Berry (print supervisor name) have visually inspected the welds shown on this weld map.

Sign: Sheldon Berry

Tank # 5

Item 9 - Shell to Floor Seams - Diesel Test Report

Inukshuk Construction Limited
Industrial Contracting ≡ Project Management

PO Box 654
Rankin Inlet, NU X0C 0G0
T 867.645.4030 F 867.645.4064

4. TESTING MEDIA: Diesel Test on Shell to Floor Tank # 5

5. CALCULATED PRESSURE / ACTUAL PRESSURE AT LOWEST ELEVATION:		
TIME (MIN)	TEST PRESSURE (KP)	TEMPERATURE (C)
11:00 am	Diesel	10°

Include all pressure, temperature and pressure valve recording charts where applicable. Charts to be signed and approved by Engineer before acceptance. The location and course of any leaks or failures and description of repair action(s) taken to be included on additional sheets. All certificates to be submitted to Engineer for each Test Section.

CONTRACTOR REPRESENTATIVE

Sheldon Burry
(Print Name)

(Signature)

aug 13 2017
(Date)

~~ENGINEER~~ QC

SYLVAIN CHARTIER
(Print Name)

(Signature)

(Date)

(# 5

Item 9 - Shell to Floor Seams - Diesel Test Report

Inukshuk Construction Limited
Industrial Contracting Project Management

PO Box 654
Rankin Inlet, NU X0C 0G0
T 867.645.4030 F 867.645.4064

PRESSURE TEST CERTIFICATE

SITE: Meliadine

WORK ORDER #

TITLE: Tank Farm

DATE: Aug 13 2017

1. DESCRIPTION OF ~~PIPE~~ AND LOCATION:

Tank # 5

F50 x F5C

2. SKETCH INDICATING TEST POINT (S):

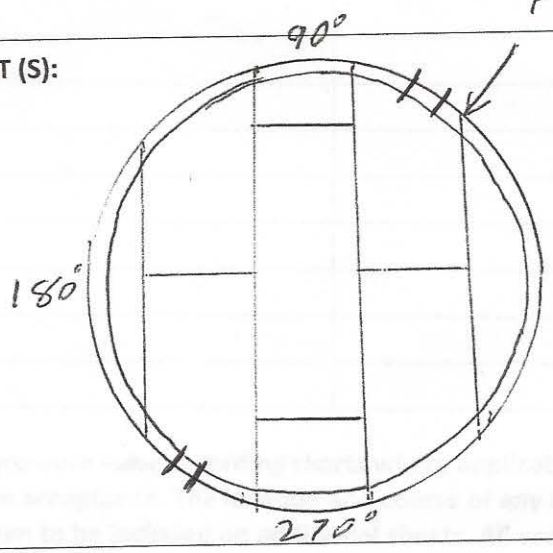

Diesel test the weld on The Shell To Floor

3. PIPE STANDARD / SPECIFICATION OF TEST SECTION:

Item 10 - Shell

Contents

1. MTR
2. Roundness Dimension Report (AmSpec)
3. Horizontal Weld Map and Visual Report
4. Vertical Weld Map and Visual Report
5. Dimension Report – Peaking and Banding Horizontal Weld Seams
6. Dimension Report – Peaking and Banding Vertical Weld Seams
7. Dimension Report – Plumbness
8. Diesel Test Reports
9. UT Report (3rd Party)

SSAB

12400 Highway 43 North, Axis, Alabama 36505, US

Item 10 - Shell - MTR

Test Certificate

Form TC1: Revision 2: Date 23 Apr 2014

Customer:
SAMUEL, SON & CO. LTD
1250 APPLEBY LINE

BURLINGTON
ON L7L5G6

Customer P.O.No.: C41966 & 41-490196 | **Mill Order No.** 41-491119-14 | **Shipping Manifest:** AR240654

Product Description: CSA G40.21(2013) 38WT/260WT - CAT 5;LCVN 15FT.LBS,TCVN13FT.LBS@-45F/A673-P ALLOYS API650(12TH ED) TABLE 4-1 GR.IIIA NORMALIZED

Ship Date: 02 Mar 17
Cert Date: 02 Mar 17

Cert No: 081598887
(Page 1 of 1)

Size: 0.250 X 96.00 X 342.0 (IN)

Tested Pieces:				Tensiles:					Hardness	Charpy Impact Tests								
Heat Id	Piece Id	Tested Thickness	Tst Loc	YS (KSI)	UTS (KSI)	%RA	Elong % 2in 8in	Tst Dir		Abs. Energy(FTLB) 1 2 3 Avg	% Shear 1 2 3 Avg	Tst Tmp	Tst Dir	Tst Siz (mm)	BDWTT Tmp %Shr
E7B075	E01	0.256 (DISCRT)	C	53	75		26	T		53 55 38 49		-50F	L	5.0	
			C							46 31 26 34		-50F	T	5.0	

Chemical Analysis

Heat Id	C	Mn	P	S	Si	Tot Al	Sol Al	Cu	Ni	Cr	Mo	Cb	V	Ti	B	N	ORGN
E7B075	.18	.96	.009	<.001	.25	.027	.024	.26	.13	.06	.03	.001	.004	.014	.0002	.0067	USA

KILLED STEEL
MERCURY IS NOT A METALLURGICAL COMPONENT OF THE STEEL AND NO MERCURY WAS INTENTIONALLY ADDED DURING THE MANUFACTURE OF THIS PRODUCT.
KILLED STEEL, PRODUCED TO A FINE GRAIN PRACTICE
MTR EN 10204:2004 INSPECTION CERTIFICATE 3.1 COMPLIANT
CHARPY FULL SIZE EQUIVALENT = ABSORBED ENERGY AVG X 10 / TEST SIZE IN MM
NORMALIZED PLATES. HEATED AT 1665F FOR 14 MINUTES.
TEST COUPONS TAKEN FROM HEAT TREATED PLATE.
PRODUCTS SHIPPED:

E7B075 E01 6705257 PCES: 1, LBS: 2328
E7B075 E01 6705253 PCES: 1, LBS: 2328
E7B075 E01 6705256 PCES: 1, LBS: 2328
E7B075 E01 6705260 PCES: 1, LBS: 2328
E7B075 E01 6705259 PCES: 1, LBS: 2328
E7B075 E01 6705263 PCES: 1, LBS: 2328
E7B075 E01 6705254 PCES: 1, LBS: 2328
E7B075 E01 6705255 PCES: 1, LBS: 2328
E7B075 E01 6705252 PCES: 1, LBS: 2328
E7B075 E01 6705262 PCES: 1, LBS: 2328
E7B075 E01 6705261 PCES: 1, LBS: 2328
E7B075 E01 6705258 PCES: 1, LBS: 2328

(P) Cust Part #:

WE HEREBY CERTIFY THAT THIS MATERIAL WAS TESTED IN ACCORDANCE WITH, AND MEETS THE REQUIREMENTS OF, THE APPROPRIATE SPECIFICATION

Justin Ward +1 251 662 4400
SENIOR METALLURGIST - PRODUCT

Item 10 - Shell Roundness Report

Dia	Beam	Hyp	
6.000		6.000	0.000

LASER DIAMETERS

Enter Diameters (or Radii) in decimal Ft. Ex: 45.90

	Diameters left	Right	of center beam
1	26.84	26.84	
2	26.81	26.88	
3	26.82	26.77	
4	26.79	26.83	
5	26.84	26.83	
6	26.84	26.85	
7	26.83	26.83	
8	26.82	26.82	
9	26.84	26.85	
10	26.81	26.83	
11	26.83	26.84	
12	26.83	26.84	
13			
14			
15			
16			
17			
18			
19			
20			
21			
22			
23			
24			
25			
26			
27			
28			
29			
30			
31			
32			
33			
34			
Average=	26.825	26.834	

TAKE LASER DIAMETERS ABOUT EVERY 3 to 5 FEET AROUND THE INSIDE PERIMETER OF THE TANK FOR 180 DEGREES (HALF WAY ROUND). TAKING READINGS BOTH (ALTERNATE) SIDES OF THE CENTER POST/COLUMN.

IF DIAMETER DISTANCE IS TOO GREAT FOR LASER, THEN TAKE RADII FROM CENTER PIPE (NOT FROM A COLUMN) ABOUT EVERY 5 FEET AROUND THE INSIDE PERIMETER OF THE TANK FOR 360 DEGREES

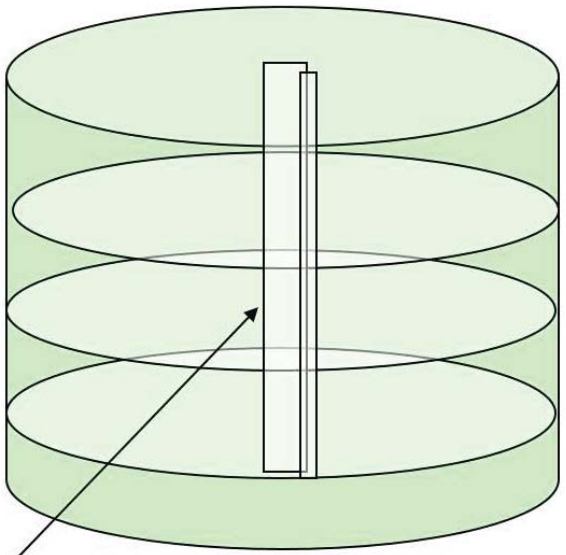

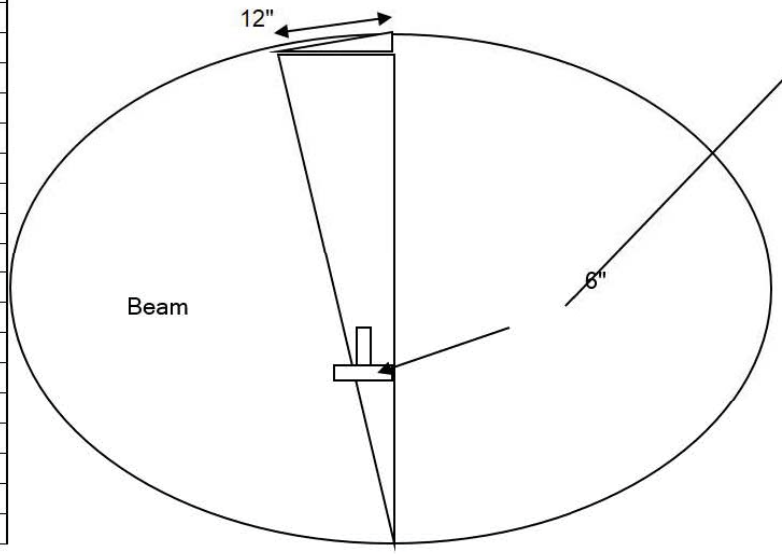

Item 10 - Shell - Horizontal Weld Map

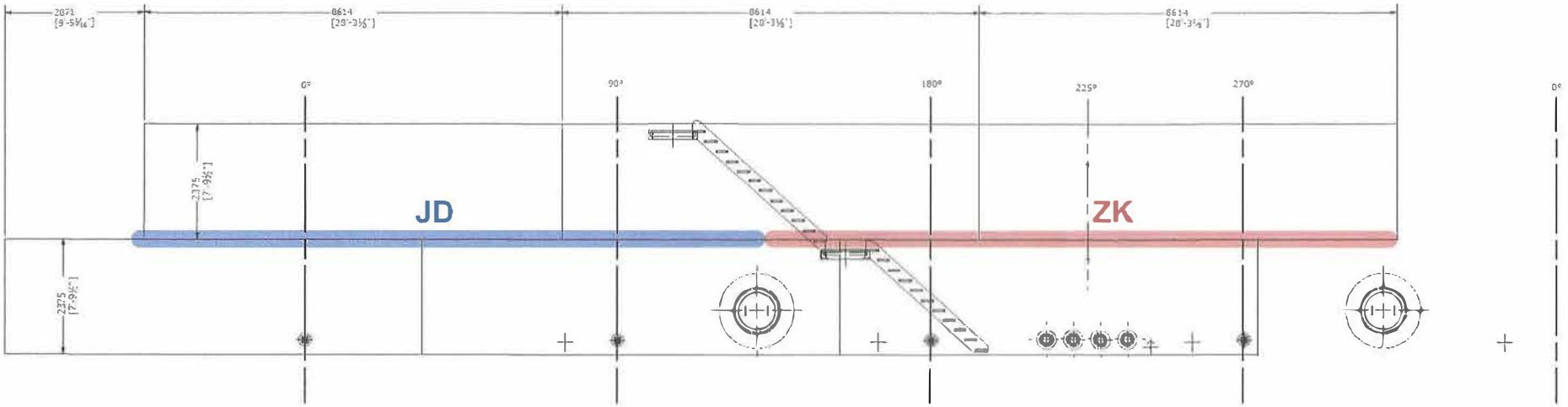

Initials	Welder Name
DW	DJ White
ZK	Zack King
JD	Justin Dredge
MP	Michael Paul
DG	Dean Goodyear
RK	Ryan Kettle
JC	John Cusick
AK	Abel Kalai
JO	Joel Overgaard (Sub Arc Systems)

I, Sheldon Burry (print supervisor name) have visually inspected the welds shown on this weld map.

Sign: Sheldon Burry

Item 10: Shell - Verticals Weld Map

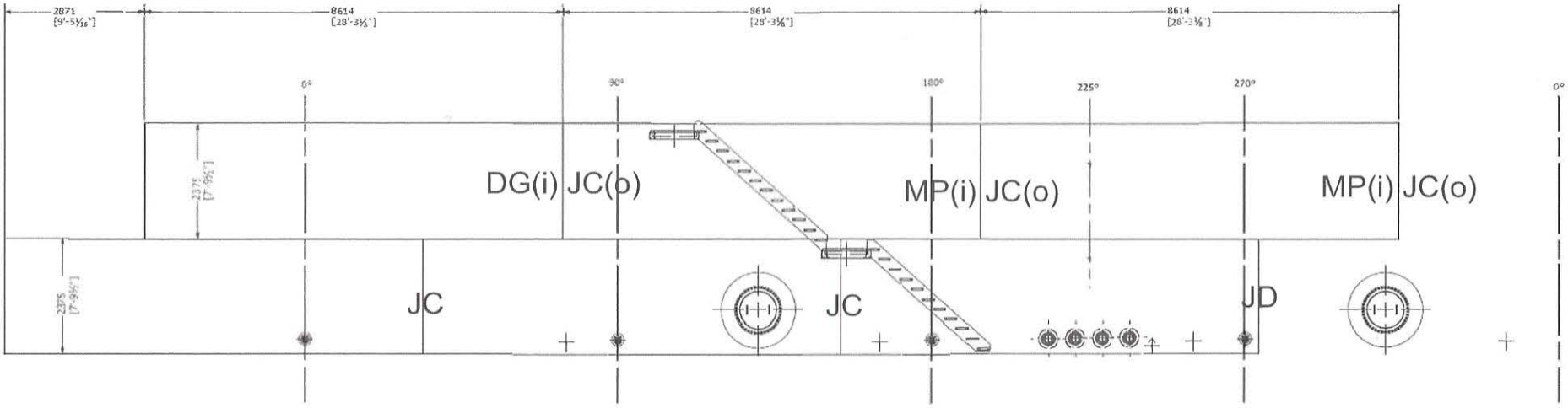

Initials	Welder Name
DW	DJ White
ZK	Zack King
JD	Justin Dredge
MP	Michael Paul
DG	Dean Goodyear
RK	Ryan Kettle
JC	John Cusick
AK	Abel Kalai
JO	Joel Overgaard (Sub Arc Systems)

(i) = inside
(o) = outside

I, Sheldon Burry (print supervisor name) have visually inspected the welds shown on this weld map.

Sign: Sheldon Burry

Item 10 - Peaking and Banding Horizontal Weld Seams

HORIZONTAL WELD SEAMS

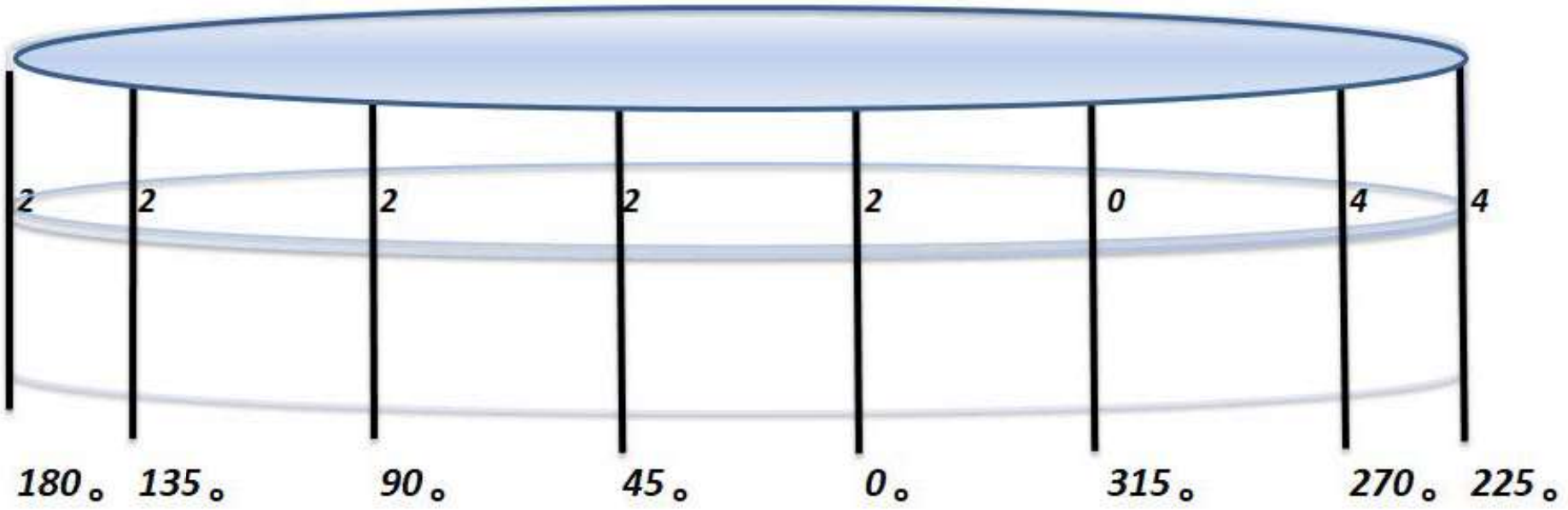

*All units are in mm

Tank no. 5

Item 10 - Peaking and Banding Vertical Weld Seams

Courses	2
Plates/Course	3

VERTICAL WELD SEAMS

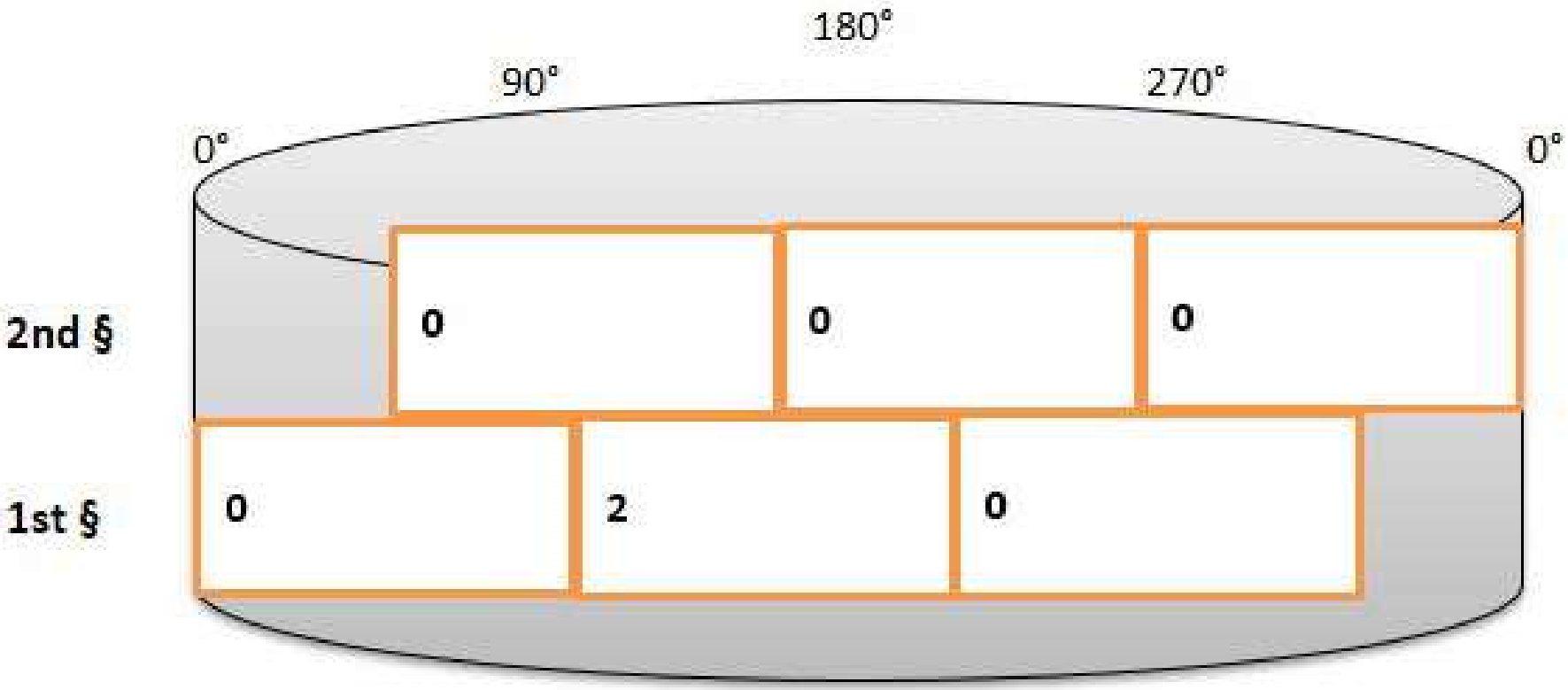

*All units are in mm

Item 10 - Dimension Report - Plumbness

PLUMBNESS

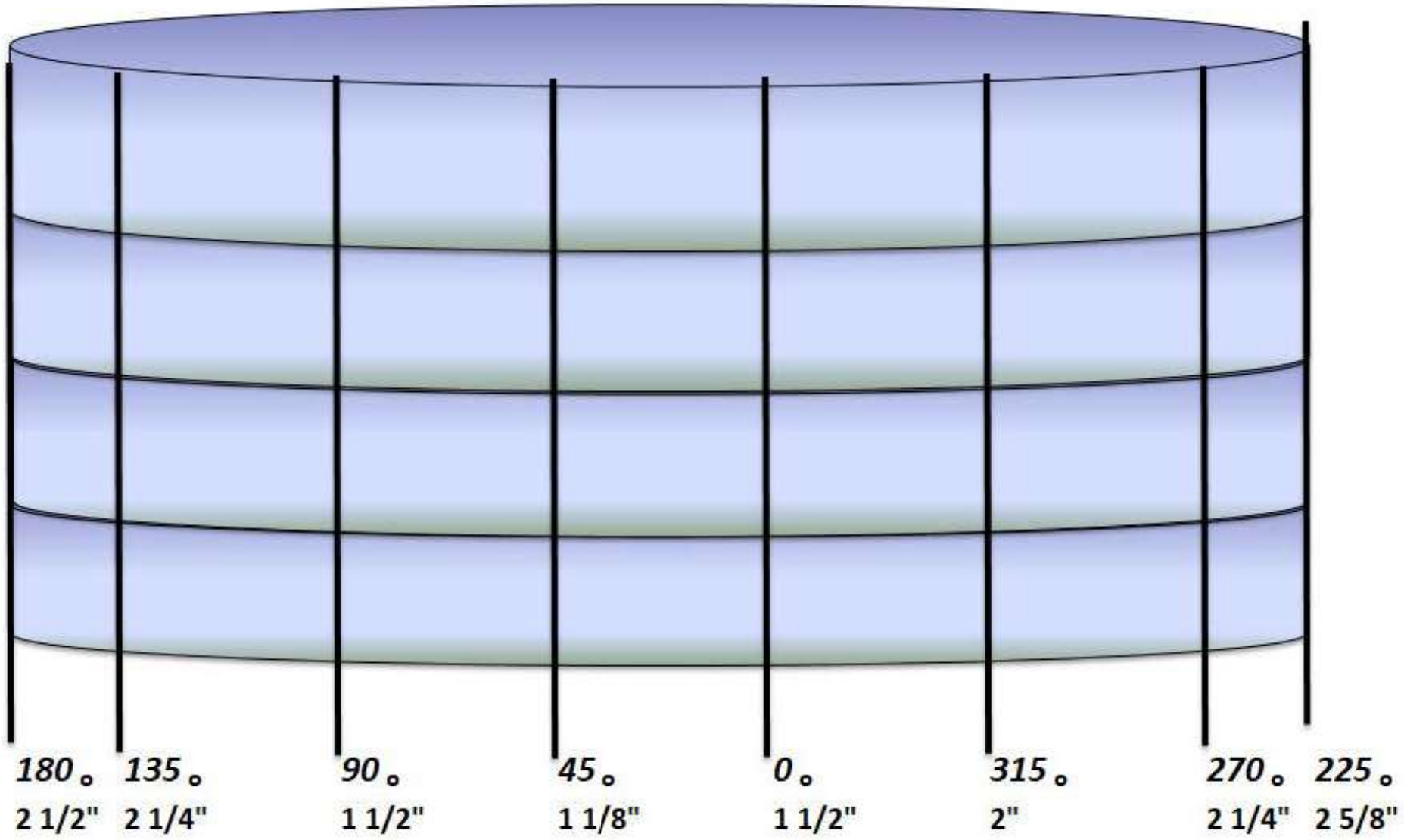

All measurements taken with plumb bomb from outside rim angle. Rim angle extends 2.0" from roof of tank. Subtract 2" from each measurement

Inukshuk Construction Limited
Industrial Contracting Project Management

PO Box 654
Rankin Inlet, NU X0C 0G0
T 867.645.4030 F 867.645.4064

4. TESTING MEDIA:

Diesel test on tank Shell #5

5. CALCULATED PRESSURE / ACTUAL PRESSURE AT LOWEST ELEVATION:

TIME (MIN)	TEST PRESSURE (KP)	TEMPERATURE (C)
Aug 27 2017		

Include all pressure, temperature and pressure valve recording charts where applicable. Charts to be signed and approved by Engineer before acceptance. The location and course of any leaks or failures and description of repair action(s) taken to be included on additional sheets. All certificates to be submitted to Engineer for each Test Section.

CONTRACTOR REPRESENTATIVE	ENGINEER
Shawna Saunders	
(Print Name)	(Print Name)
Shawn Saunders	
(Signature)	(Signature)
Aug 27 / 2017	
(Date)	(Date)

A.E.M.

28-08-2017

Inukshuk Construction Limited
Industrial Contracting Project Management

PO Box 654
Rankin Inlet, NU X0C 0G0
T 867.645.4030 F 867.645.4064

PRESSURE TEST CERTIFICATE

SITE: Meliadine Tank Farm
Tank # 5

WORK ORDER #

TITLE: Diesel test

DATE:

1. DESCRIPTION OF PIPE AND LOCATION:

2. SKETCH INDICATING TEST POINT (S):

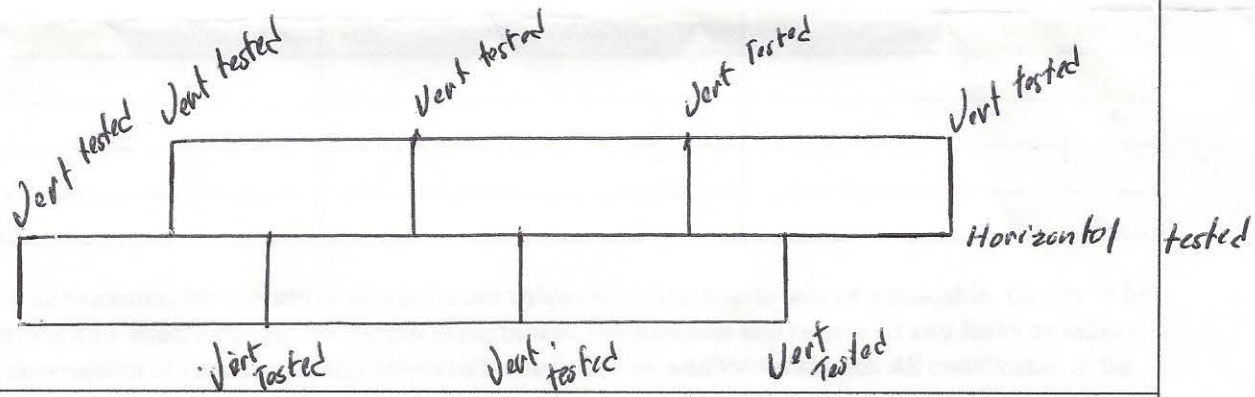

3. PIPE STANDARD / SPECIFICATION OF TEST SECTION:

A.E.M

28-08-2017

Client :	**Inukshuk Construction Ltd,**	**Date d'intervention :** **Intervention date :**	2017-08-29
Adresse/Address :	PO Box 654 Rankin Inlet, Nunavut X0C 0G0	**Date du rapport :** **Report date :**	2017-09-08
Contact :	Marc Losier		
Entrepreneur : **Contractor :**	N/A	**N° dossier :** **File no :**	INS-117107-01
Endroit du travail : **Job location :**	Rankin Inlet , Nunavut	**Commande :** **Order :**	295-1046

INSP. VISUELLE VISUAL INSP.	MAGNÉTOSCOPIE MAGNETIC PARTICLES	RESSUAGE LIQUID PENETRANT	ULTRASONS ULTRASONIC
☐	☒	☐	☒

DESCRIPTION :

Magnetic inspection and Ultrasonic inspection on tank 5

The client is opting to use an ultrasonic testing, instead of radiographic testing

Remark : Visual testing was performed by client.
I

INSP. VISUELLE / VISUAL INSP.

NORME : **SPECIFICATION :**

N° équip. : **Equip. no :** N/A

MAGNÉTOSCOPIE MAGNETIC PARTICLES

NORME : **SPECIFICATION :** Api 650

N° équip. : **Equip. no :** MP-Q-27

Ampérage : **Amperage :**	Culasse/Yoke	**Continue** **Continuous**	☒	**Résiduelle** **Residual**	☐	**Humide** **Wet**	☐	**Sèche** **Dry**	☒
Longitudinale **Longitudinal**	☐	**Circulaire** **Circular**	☐	**C.A.** **A.C.**	☒	**C.C.** **D.C.**	☐	**Démagnétisée** **Demagnetized**	☐

RESSUAGE LIQUID PENETRANT

NORME : **SPECIFICATION :**

N° équip. : **Equip. no :**

Pénétrant/Penetrant : **Émulsifiant/Emulsifier :** **Révélateur/Developer :**

Temps/Time : **Temps/Time :** **Temps/Time :**

ULTRASONS / ULTRASONIC

NORME : **SPECIFICATION :** API 650

ÉTALONNAGE/CALIBRATION :

Bloc/Block : IIW Type 2 **Trou/Hole :** N/A **C.A.D. /D.A.C. :** ☐

APPAREIL/EQUIPMENT :

Instrument : USM GO+ **Couplant :** Echogel **Échelle/Sweep length :** 0'' to 2 ''

N° équip./Equip. no : UT-Q-34 **Palpeur/Transducer :** 0 degre and 70 degre

RÉSULTATS/RESULTS :

Ultrasonic inspection was performed:

- On every T (where vertical weld and horizontal touch each other) between first/second, second/third & third/forth course: **Accepted**
- On every vertical first course from 1" to 7 and 53" to 59": **Accepted**
- On horizontal UT on two locations, placed at center over each manhole 6" long: **Accepted**

Magnetic particles inspection was performed on angle joint between the shell and nozzle & bottom weld to shell inside and outside the tank:

- -**Inside tank,** weld shell/nozzle and shell to the bottom weld at 100%: **Accepted**
- -**Outside tank**, weld between shell/pad, and weld pad/nozzle, and on weld shell to bottom weld at 100%: **Accepted**

Remark: 12 nozzles including 2 manholes; one nozzle outside does not have pad. Please refer to drawing 295-M13; part section J-J item #35. This nozzle corresponds to a ¾" coupling for a water temperature gauge in the shell and the client has advised that no repad is needed for this specific coupling.

Techniciens : **Technicians :** Sylvain Germain CSA W178.2 level 2	**Assistants:**	**Approuvé par :** **Approved by :** Pierre Dostie Technical Supervisor CSA W178.2 Level 3

Ce rapport ne doit pas être reproduit, sinon en entier, sans l'autorisation écrite de SGS CANADA inc.
Le présent rapport est émis par la Société conformément à ses Conditions Générales de Service accessibles sur http://www.sgs.ca/fr-FR/Terms-and-Conditions.aspx
This report is confidential and shall not be reproduced without the written approval of SGS CANADA Inc
This document is issued by the Company under its General Conditions of Service accessible at http://www.sgs.ca/en/Terms-and-Conditions.aspx

Item 10 - Shell - UT Test Report

Client :	**Inukshuk Construction Ltd,**	**Date d'intervention :** **Intervention date :**	2017-08-29
Adresse/Address :	PO Box 654 Rankin Inlet, Nunavut X0C 0G0	**Date du rapport :** **Report date :**	2017-09-08
Contact :	Marc Losier		
Entrepreneur : **Contractor :**	N/A	**N° dossier :** **File no :**	INS-117107-01
Endroit du travail : **Job location :**	Rankin Inlet , Nunavut	**Commande :** **Order :**	295-1046

Picture : 1



View of tank # 5

Techniciens : **Technicians :**	Sylvain Germain CSA W178.2 level 2	**Assistants:**		**Approuvé par :** **Approved by :**	Pierre Dostie Technical Supervisor CSA W178.2 Level 3

Ce rapport ne doit pas être reproduit, sinon en entier, sans l'autorisation écrite de SGS CANADA inc.
Le présent rapport est émis par la Société conformément à ses Conditions Générales de Service accessibles sur http://www.sgs.ca/fr-FR/Terms-and-Conditions.aspx
This report is confidential and shall not be reproduced without the written approval of SGS CANADA Inc
This document is issued by the Company under its General Conditions of Service accessible at http://www.sgs.ca/en/Terms-and-Conditions.aspx

Item 11 – Compression Ring

Contents

1. Weld Map / Visual Report

Item 11: Compression Ring - Weld Map

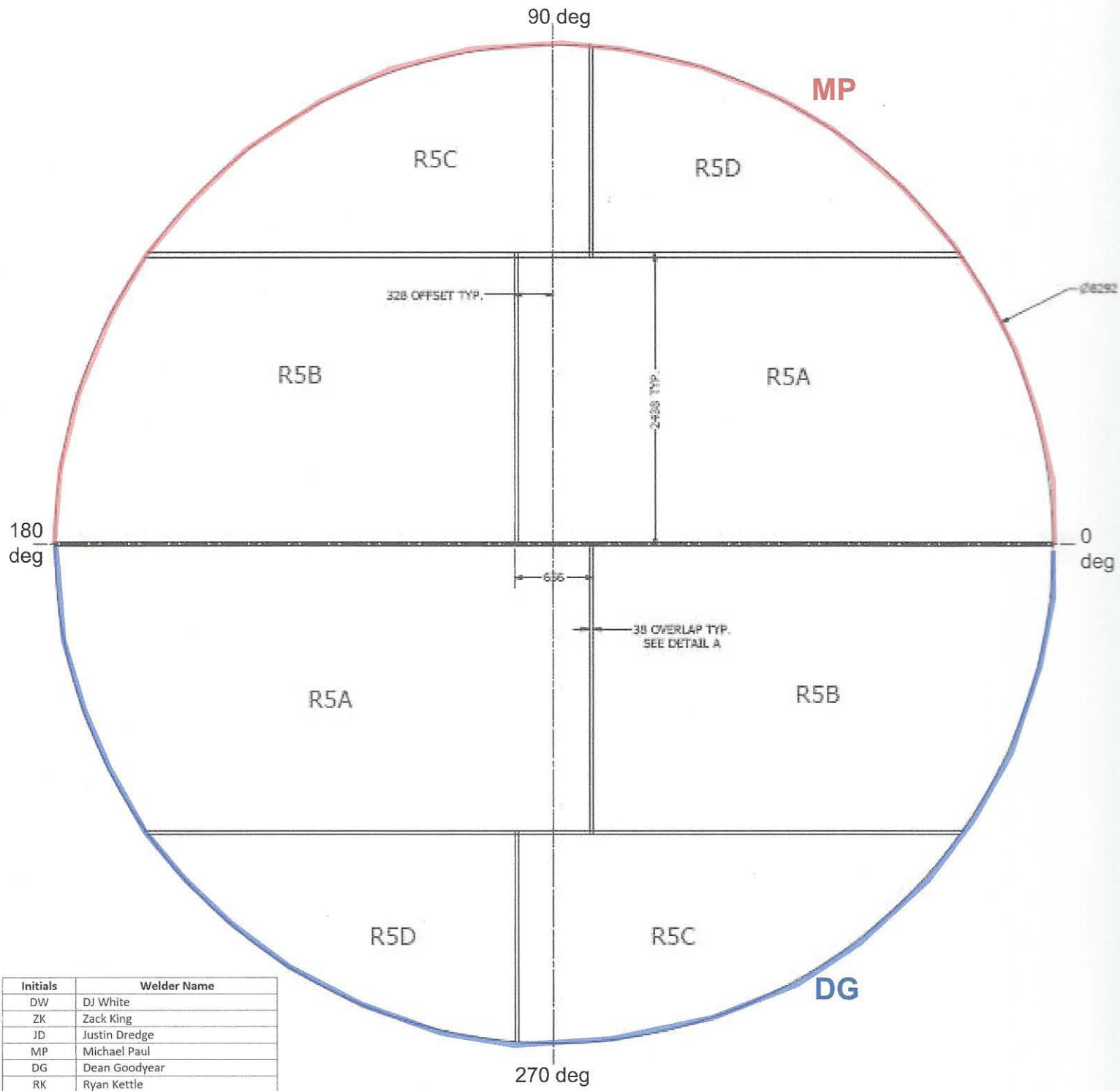

TK 5 (250KL) ROOF LAYOUT
SCALE 1 / 25

Initials	Welder Name
DW	DJ White
ZK	Zack King
JD	Justin Dredge
MP	Michael Paul
DG	Dean Goodyear
RK	Ryan Kettle
JC	John Cusick
AK	Abel Kalai
JO	Joel Overgaard (Sub Arc Systems)

I, Sheldon Bussey (print supervisor name) have visually inspected the welds shown on this weld map.

Sign: Sheldon Bussey

Item 12 – Roof

Contents

1. MTR
2. Visual Report
3. Vacuum Box Test Report

SSAB

Test Certificate

Form TC1: Revision 2: Date 23 Apr 2014

12400 Highway 43 North, Axis, Alabama 36505, US

Customer:
SAMUEL, SON & CO. LTD
1250 APPLEBY LINE

BURLINGTON
ON L7L5G6

Customer P.O.No.: C41965 & 41-496189 | **Mill Order No.** 41-496191-01 | **Shipping Manifest:** AR240215

Product Description: CSA G40.21(2013) 38WT/260WT - CAT 5;LCVN 15FT.LBS,TCVN13FT.LBS@-45F/A673-P ALLOYS API650(12TH ED) TABLE 4-1 GR.IIIA NORMALIZED

Ship Date: 22 Feb 17
Cert Date: 22 Feb 17

Cert No: 081597726

Size: 0.250 X 120.0 X 480.0 (IN)

Tested Pieces:				Tensiles:					Hardness	Charpy Impact Tests									
Heat Id	Piece Id	Tested Thickness	Tst Loc	YS (KSI)	UTS (KSI)	%RA	Elong % 2in 8in	Tst Dir		Abs. Energy(FTLB) 1	2	3	Avg	% Shear 1	2	3	Avg	Tst Tmp	Tst Dir	Tst Siz (mm)	BDWTT Tmp %Shr
E7B102	E13	0.255 (DISCRT)	C	55	76		26	T		35	34	30	33					-50F	L	5.0	
			C							27	44	41	37					-50F	T	5.0	
W7B598	E07	0.256 (DISCRT)	C	52	72		25	T		36	34	32	34					-45F	L	5.0	
			C							30	29	27	29					-45F	T	5.0	
W7B598	E08	0.256 (DISCRT)	C	51	71		25	T													
W7B598	E09	0.256 (DISCRT)	C							43	31	55	43					-50F	L	5.0	
			C							33	30	31	31					-50F	T	5.0	
W7B598	E10	0.256 (DISCRT)	C							32	40	31	34					-50F	L	5.0	
			C							28	34	28	30					-50F	T	5.0	

Chemical Analysis

Heat Id	C	Mn	P	S	Si	Tot Al	Sol Al	Cu	Ni	Cr	Mo	Cb	V	Ti	B	N	ORGN
E7B102	.18	.94	.009	.001	.25	.027	.025	.26	.12	.11	.05	.002	.005	.011	.0002	.0076	USA
W7B598	.18	.92	.009	.001	.24	.028	.022	.26	.13	.08	.05	.001	.004	.011	.0002	.0078	USA

KILLED STEEL
MERCURY IS NOT A METALLURGICAL COMPONENT OF THE STEEL AND NO MERCURY WAS INTENTIONALLY ADDED DURING THE MANUFACTURE OF THIS PRODUCT.
KILLED STEEL, PRODUCED TO A FINE GRAIN PRACTICE
MTR EN 10204:2004 INSPECTION CERTIFICATE 3.1 COMPLIANT
CHARPY FULL SIZE EQUIVALENT = ABSORBED ENERGY AVG X 10 / TEST SIZE IN MM
NORMALIZED PLATES. HEATED AT 1665F FOR 15 MINUTES.
TEST COUPONS TAKEN FROM HEAT TREATED PLATE.
PRODUCTS SHIPPED:

W7B598	E10	6705182	PCES:	1,	LBS:	4084	W7B598	E07	6705202	PCES:	1, LBS: 4084
W7B598	E07	6705203	PCES:	1,	LBS:	4084	W7B598	E07	6705204	PCES:	1, LBS: 4084
W7B598	E07	6705205	PCES:	1,	LBS:	4084	W7B598	E09	6705210	PCES:	1, LBS: 4084
W7B598	E07	6705211	PCES:	1,	LBS:	4084	W7B598	E07	6705212	PCES:	1, LBS: 4084
W7B598	E07	6705213	PCES:	1,	LBS:	4084	W7B598	E07	6705214	PCES:	1, LBS: 4084
W7B598	E07	6705215	PCES:	1,	LBS:	4084	W7B598	E10	6705216	PCES:	1, LBS: 4084
W7B598	E10	6705217	PCES:	1,	LBS:	4084	W7B598	E10	6705218	PCES:	1, LBS: 4084
W7B598	E10	6705219	PCES:	1,	LBS:	4084	W7B598	E09	6705220	PCES:	1, LBS: 4084
W7B598	E09	6705221	PCES:	1,	LBS:	4084	W7B598	E09	6705222	PCES:	1, LBS: 4084
W7B598	E09	6705223	PCES:	1,	LBS:	4084	E7B102	E13	6705232	PCES:	1, LBS: 4084
E7B102	E13	6705233	PCES:	1,	LBS:	4084	E7B102	E13	6705245	PCES:	1, LBS: 4084

(P) Cust Part #:

WE HEREBY CERTIFY THAT THIS MATERIAL WAS TESTED IN ACCORDANCE WITH, AND MEETS THE REQUIREMENTS OF, THE APPROPRIATE SPECIFICATION

Justin Ward +1 251 662 4400
SENIOR METALLURGIST - PRODUCT

Item 12 - Roof - MTR

Test Certificate

Form TC1: Revision 2: Date 23 Apr 2014

SSAB
12400 Highway 43 North, Axis, Alabama 36505, US

Customer:
SAMUEL, SON & CO. LTD
1250 APPLEBY LINE

BURLINGTON
ON L7L5G6

Customer P.O.No.: C41965 & 41-496189 | **Mill Order No.** 41-496191-01 | **Shipping Manifest:** AR240215

Product Description: CSA G40.21(2013) 38WT/260WT - CAT 5;LCVN 15FT.LBS,TCVN13FT.LBS@-45F/A673-P ALLOYS API650(12TH ED) TABLE 4-1 GR.IIIA NORMALIZED

Size: 0.250 X 120.0 X 480.0 (IN)

Ship Date: 22 Feb 17
Cert Date: 22 Feb 17

Cert No: 081597726
(Page 2 of 2)

Tested Pieces:				Tensiles:						Charpy Impact Tests								
Heat Id	Piece Id	Tested Thickness	Tst Loc	YS (KSI)	UTS (KSI)	%RA	Elong % 2in 8in	Tst Dir	Hardness	Abs. Energy(FTLB) 1	2	3	Avg	% Shear 1	2	3	Avg	Tst Tmp	Tst Dir	Tst Siz (mm)	BDWTT Tmp %Shr

E7B102 E13 6705246 PCES: 1, LBS: 4084

(P) Cust Part #:

WE HEREBY CERTIFY THAT THIS MATERIAL WAS TESTED IN ACCORDANCE WITH, AND MEETS THE REQUIREMENTS OF, THE APPROPRIATE SPECIFICATION

Justin Ward +1 251 662 4400
SENIOR METALLURGIST - PRODUCT

Inukshuk Construction Limited
Industrial Contracting Project Management

PO Box 654
Rankin Inlet, NU X0C 0G0
T 867.645.4030 F 867.645.4064

Item 12 - Roof - Visual Report

Fuel Tank Welding Visual Report

ICL Project #: 295 Supervisor Name: Sheldon Burry Location: Meliadine (Portal #1)

Client: Agnico Eagle Tank No: 5 Component Inspected: ROOF

Was all work on this component found to be acceptable? ☑ **Yes** ☐ **No** (if no, provide details below)

Details: _____

Corrective Action Required? ☐ **Yes** (if yes, provide details below) ☐ **No** (if no, explain why not)

Details of Corrective Action: _____

Supervisor Signature: Shelly Burry Date: 2 10 17

Inukshuk Construction Limited
Industrial Contracting Project Management

PO Box 654
Rankin Inlet, NU X0C 0G0
T 867.645.4030 F 867.645.4064

4. TESTING MEDIA: Vacuum Test Tank 5 Roof

Vaccuum test by Matt burry - Matthew Burry

5. CALCULATED PRESSURE / ACTUAL PRESSURE AT LOWEST ELEVATION:

TIME (MIN)	TEST PRESSURE (KP)	TEMPERATURE (C)
Aug 31 / 2017		

Include all pressure, temperature and pressure valve recording charts where applicable. Charts to be signed and approved by Engineer before acceptance. The location and course of any leaks or failures and description of repair action(s) taken to be included on additional sheets. All certificates to be submitted to Engineer for each Test Section.

CONTRACTOR REPRESENTATIVE

Shawn Saunders
(Print Name)

Shawn Saunders
(Signature)

Aug 31 / 2017
(Date)

~~ENGINEER~~ QC

SYLVAIN CHARTIER
(Print Name)

(Signature)

2-09-2017
(Date)

Inukshuk Construction Limited
Industrial Contracting | Project Management

PO Box 654
Rankin Inlet, NU X0C 0G0
T 867.645.4030 F 867.645.4064

PRESSURE TEST CERTIFICATE

SITE: Meliadine

WORK ORDER #

TITLE: Vacuum test (Tank 5 Roof)

DATE: Aug 31 / 2017

1. DESCRIPTION OF PIPE AND LOCATION:

2. SKETCH INDICATING TEST POINT (S):

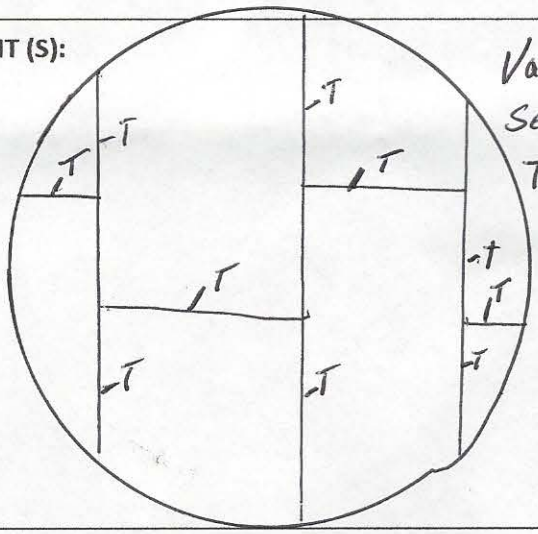

Vacuum test
Seams on Roof
Tank 5

3. PIPE STANDARD / SPECIFICATION OF TEST SECTION:

Item 13 – Roof Structure

Contents

1. Column Plumbness Report
2. Visual Report

Inukshuk Construction Limited
Industrial Contracting Project Management

PO Box 654
Rankin Inlet, NU X0C 0G0
T 867.645.4030 F 867.645.4064

Item 13 – Roof Structure – Column Plumbness Report

Fuel Tank Column Plumbness Report

ICL Project #: 295 Supervisor Name: Sheldon Burry Location: Meliadine (Portal #1) .

Client: Agnico Eagle . Tank No: 5 .

I, Sheldon Burry (print supervisor name) have inspected the roof structure columns for plumbness and found them to be acceptable.

Supervisor Signature: Shm Burry Date: 12 10 17

Inukshuk Construction Limited
Industrial Contracting Project Management

PO Box 654
Rankin Inlet, NU X0C 0G0
T 867.645.4030 F 867.645.4064

Item 13 - Roof Structure - Visual Report

Fuel Tank Welding Visual Report

ICL Project #: 295 Supervisor Name: Sheldon Burry Location: Meliadine (Portal #1)

Client: Agnico Eagle Tank No: 5 Component Inspected: ROOF STRUCTURE

Was all work on this component found to be acceptable? ☑ **Yes** ☐ **No** (if no, provide details below)

Details: _____

Corrective Action Required? ☐ **Yes** (if yes, provide details below) ☐ **No** (if no, explain why not)

Details of Corrective Action: _____

Supervisor Signature: Sheldon Burry Date: 2-10-17

Item 14 - Nozzles

Contents

1. Shell Nozzle Weld Map / Visual Report
2. Roof Nozzle Weld Map / Visual Report
3. Dimension Report (AmSpec Data)
4. Air Test – Leak Test Report Water Drawoff
5. Air Test – Leak Test Report Inlet/Outlet
6. MPI Report

Item 14: Nozzles - Shell Nozzle Weld Map

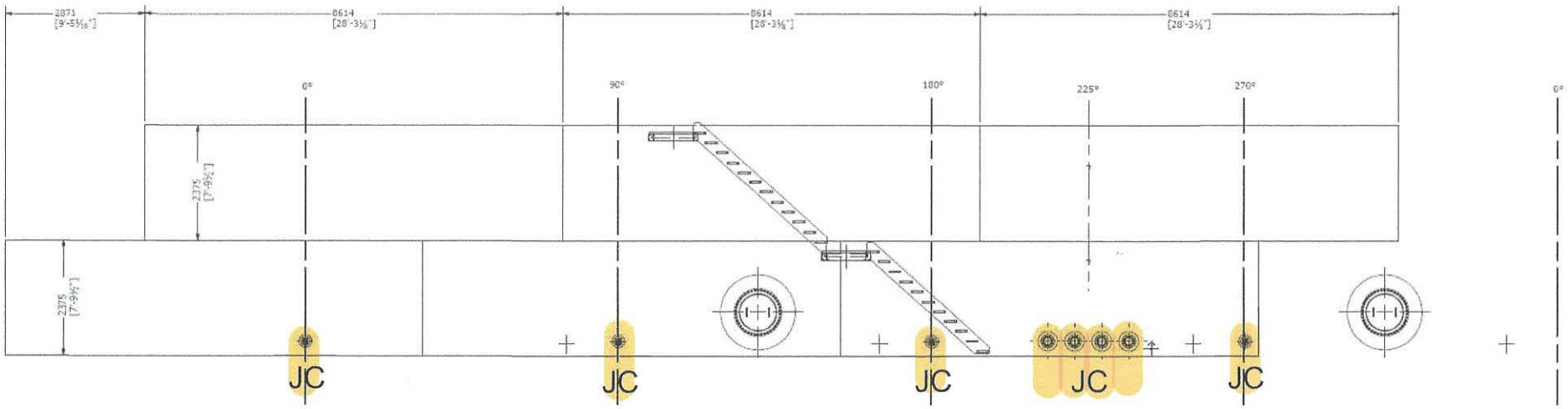

Initials	Welder Name
DW	DJ White
ZK	Zack King
JD	Justin Dredge
MP	Michael Paul
DG	Dean Goodyear
RK	Ryan Kettle
JC	John Cusick
AK	Abel Kalai
JO	Joel Overgaard (Sub Arc Systems)

I, Sheldon Berry (print supervisor name) have visually inspected the welds shown on this weld map.

Sign: Sheldon Berry

Item 14: Nozzles - Roof Nozzle Weld Map

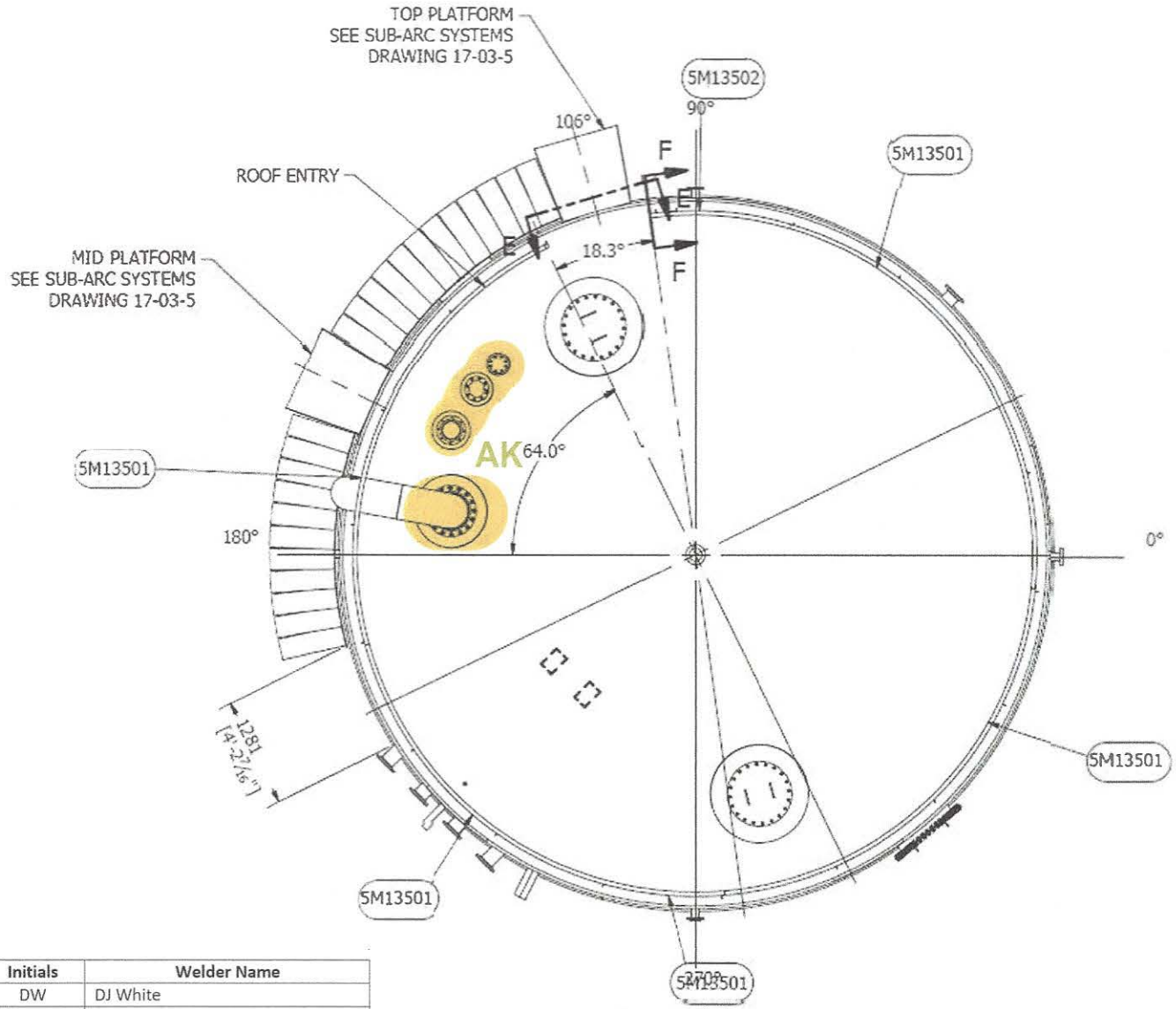

SCALE 1/50

Initials	Welder Name
DW	DJ White
ZK	Zack King
JD	Justin Dredge
MP	Michael Paul
DG	Dean Goodyear
RK	Ryan Kettle
JC	John Cusick
AK	Abel Kalai
JO	Joel Overgaard (Sub Arc Systems)

I, Sheldon Berry (print supervisor name) have visually inspected the welds shown on this weld map.

Sign: Sheldon Berry

Item 14 - Nozzles Dimension Report

Submit sketch for unusual deadwood

External

Quantity	Description	MW = Manway Hatch = Hatch	Code	Diameter	Length	Height	Height From Bottom	To	Office Use Bbls/8th	Gls/8th
1	v		V	6	8		9 1/2	15.5	0.0001214	
1	v		V	6	5 1/2		9 1/2	15 1/2	0.0000835	
1	v		V	6	5 3/4		9 1/2	15 1/2	0.0000873	
1	v		V	6	9		9 1/2	15 1/2	0.0001366	
1	v		V	3	7 1/2		10 1/2	13 1/2	0.0001138	
2	v		MW	29	5 1/2		22 1/2	51.5	0.0032280	
1	v		V	3	6		10 1/2	13.5	0.0000911	
2	v		V	6	7		9	15	0.0002125	
1	v		V	3	6		11	14	0.0000911	

Inukshuk Construction Limited
Industrial Contracting | Project Management

PO Box 654
Rankin Inlet, NU X0C 0G0
T 867.645.4030 F 867.645.4064

PRESSURE TEST CERTIFICATE

SITE: Meliadine WORK ORDER #

TITLE: Tank Farm Tank #5

DATE: 9/9/17

1. DESCRIPTION OF PIPE AND LOCATION:

3" water Draw off 4 places

0° — 90° — 180° — 270°

2. SKETCH INDICATING TEST POINT (S):

4 — water Drawoff on Tank #5

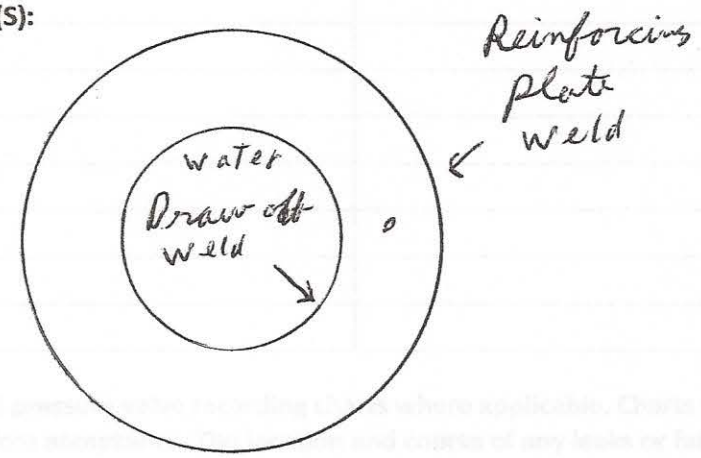

3. PIPE STANDARD / SPECIFICATION OF TEST SECTION:

Inukshuk Construction Limited
Industrial Contracting Project Management
PO Box 654
Rankin Inlet, NU X0C 0G0
T 867.645.4030 F 867.645.4064

4. **TESTING MEDIA:** air pressure and soapy water

5. **CALCULATED PRESSURE / ACTUAL PRESSURE AT LOWEST ELEVATION:**

TIME (MIN)	TEST PRESSURE (KP)	TEMPERATURE (C)
130 pm	20 PSI	

Include all pressure, temperature and pressure valve recording charts where applicable. Charts to be signed and approved by Engineer before acceptance. The location and course of any leaks or failures and description of repair action(s) taken to be included on additional sheets. All certificates to be submitted to Engineer for each Test Section.

CONTRACTOR REPRESENTATIVE

Sheldon Burry
(Print Name)

Sheldon Burry
(Signature)

9/9/17
(Date)

ENGINEER

BRUNO ROY
(Print Name)

Bruno R
(Signature)

2017/09/09
(Date)

Inukshuk Construction Limited
Industrial Contracting Project Management

PO Box 654
Rankin Inlet, NU X0C 0G0
T 867.645.4030 F 867.645.4064

PRESSURE TEST CERTIFICATE

SITE: Meliadine WORK ORDER #

TITLE: Tank Farm Tank # 5

DATE: 9/9/17

1. DESCRIPTION OF PIPE AND LOCATION:

6" Loading / unloading
4 at 228° — 1 at 45°

2. SKETCH INDICATING TEST POINT (S):

5 – Loading / unloading
Shell nozzles
on Tank # 5

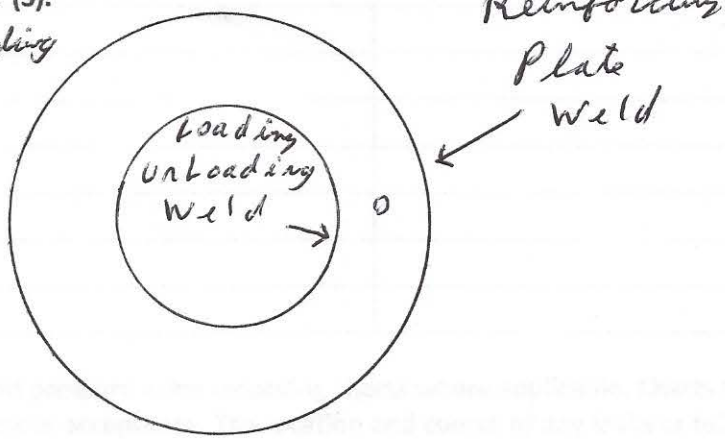

3. PIPE STANDARD / SPECIFICATION OF TEST SECTION:

Item 14 - Nozzles - Leak Test Report Tank # 5

Inukshuk Construction Limited
Industrial Contracting Project Management
PO Box 654
Rankin Inlet, NU X0C 0G0
T 867.645.4030 F 867.645.4064

4. TESTING MEDIA: air pressure and Soapy water

5. CALCULATED PRESSURE / ACTUAL PRESSURE AT LOWEST ELEVATION:

TIME (MIN)	TEST PRESSURE (KP)	TEMPERATURE (C)
230 pm	20 PSI	

Include all pressure, temperature and pressure valve recording charts where applicable. Charts to be signed and approved by Engineer before acceptance. The location and course of any leaks or failures and description of repair action(s) taken to be included on additional sheets. All certificates to be submitted to Engineer for each Test Section.

CONTRACTOR REPRESENTATIVE

Sheldon Burry
(Print Name)

Sheldon Burry
(Signature)

9/9/17
(Date)

ENGINEER

BRUNO ROY
(Print Name)

Bruno Roy
(Signature)

2017-09-09
(Date)

Client :	**Inukshuk Construction Ltd,**	**Date d'intervention :** **Intervention date :**	2017-08-29
Adresse/Address :	PO Box 654 Rankin Inlet, Nunavut X0C 0G0	**Date du rapport :** **Report date :**	2017-09-08
Contact :	Marc Losier		
Entrepreneur : **Contractor :**	N/A	**N° dossier :** **File no :**	INS-117107-01
Endroit du travail : **Job location :**	Rankin Inlet , Nunavut	**Commande :** **Order :**	295-1046

INSP. VISUELLE VISUAL INSP.	MAGNÉTOSCOPIE MAGNETIC PARTICLES	RESSUAGE LIQUID PENETRANT	ULTRASONS ULTRASONIC
☐	☒	☐	☒

DESCRIPTION :

Magnetic inspection and Ultrasonic inspection on tank 5

The client is opting to use an ultrasonic testing, instead of radiographic testing

Remark : Visual testing was performed by client.
I

INSP. VISUELLE / VISUAL INSP.

NORME : **SPECIFICATION :**

N° équip. : **Equip. no :** N/A

MAGNÉTOSCOPIE MAGNETIC PARTICLES

NORME : **SPECIFICATION :** Api 650

N° équip. : **Equip. no :** MP-Q-27

Ampérage : **Amperage :**	Culasse/Yoke	**Continue** **Continuous**	☒	**Résiduelle** **Residual**	☐	**Humide** **Wet**	☐	**Sèche** **Dry**	☒
Longitudinale **Longitudinal**	☐	**Circulaire** **Circular**	☐	**C.A.** **A.C.**	☒	**C.C.** **D.C.**	☐	**Démagnétisée** **Demagnetized**	☐

RESSUAGE LIQUID PENETRANT

NORME : **SPECIFICATION :**

N° équip. : **Equip. no :**

Pénétrant/Penetrant : **Émulsifiant/Emulsifier :** **Révélateur/Developer :**

Temps/Time : **Temps/Time :** **Temps/Time :**

ULTRASONS / ULTRASONIC

NORME : **SPECIFICATION :** API 650

ÉTALONNAGE/CALIBRATION :

Bloc/Block : IIW Type 2 **Trou/Hole :** N/A **C.A.D. /D.A.C. :** ☐

APPAREIL/EQUIPMENT :

Instrument : USM GO+ **Couplant :** Echogel **Échelle/Sweep length :** 0'' to 2 ''

N° équip./Equip. no : UT-Q-34 **Palpeur/Transducer :** 0 degre and 70 degre

RÉSULTATS/RESULTS :

Ultrasonic inspection was performed:

- On every T (where vertical weld and horizontal touch each other) between first/second, second/third & third/forth course: **Accepted**
- On every vertical first course from 1" to 7 and 53" to 59": **Accepted**
- On horizontal UT on two locations, placed at center over each manhole 6" long: **Accepted**

Magnetic particles inspection was performed on angle joint between the shell and nozzle & bottom weld to shell inside and outside the tank:

- -**Inside tank,** weld shell/nozzle and shell to the bottom weld at 100%: **Accepted**
- -**Outside tank**, weld between shell/pad, and weld pad/nozzle, and on weld shell to bottom weld at 100%: **Accepted**

Remark: 12 nozzles including 2 manholes; one nozzle outside does not have pad. Please refer to drawing 295-M13; part section J-J item #35. This nozzle corresponds to a ¾" coupling for a water temperature gauge in the shell and the client has advised that no repad is needed for this specific coupling.

Techniciens : **Technicians :** Sylvain Germain, CSA W178.2 level 2	**Assistants:**	**Approuvé par :** **Approved by :** Pierre Dostie, Technical Supervisor, CSA W178.2 Level 3

Ce rapport ne doit pas être reproduit, sinon en entier, sans l'autorisation écrite de SGS CANADA inc.
Le présent rapport est émis par la Société conformément à ses Conditions Générales de Service accessibles sur http://www.sgs.ca/fr-FR/Terms-and-Conditions.aspx
This report is confidential and shall not be reproduced without the written approval of SGS CANADA Inc
This document is issued by the Company under its General Conditions of Service accessible at http://www.sgs.ca/en/Terms-and-Conditions.aspx

Client :	**Inukshuk Construction Ltd,**	**Date d'intervention :** **Intervention date :**	2017-08-29
Adresse/Address :	PO Box 654 Rankin Inlet, Nunavut X0C 0G0	**Date du rapport :** **Report date :**	2017-09-08
Contact :	Marc Losier		
Entrepreneur : **Contractor :**	N/A	**N° dossier :** **File no :**	INS-117107-01
Endroit du travail : **Job location :**	Rankin Inlet , Nunavut	**Commande :** **Order :**	295-1046

Picture : 1



View of tank # 5

Techniciens : **Technicians :**	Sylvain Germain CSA W178.2 level 2	**Assistants:**		**Approuvé par :** **Approved by :**	Pierre Dostie Technical Supervisor CSA W178.2 Level 3

Ce rapport ne doit pas être reproduit, sinon en entier, sans l'autorisation écrite de SGS CANADA inc.
Le présent rapport est émis par la Société conformément à ses Conditions Générales de Service accessibles sur http://www.sgs.ca/fr-FR/Terms-and-Conditions.aspx
This report is confidential and shall not be reproduced without the written approval of SGS CANADA Inc
This document is issued by the Company under its General Conditions of Service accessible at http://www.sgs.ca/en/Terms-and-Conditions.aspx

Item 15 – Manways

Contents

1. Shell Manway Weld Map and Visual Report
2. Roof Manway Weld Map and Visual Report
3. Dimension Report (AmSpec)
4. Leak Test Report
5. Bolting Pattern and Torque Wrench Photos
6. Torque Wrench Specs
7. MPI Report
8. Rev. 1 - Diesel Test Report on Shell Neck Weld

Item 15: Manways - Shell Manway Weld Map

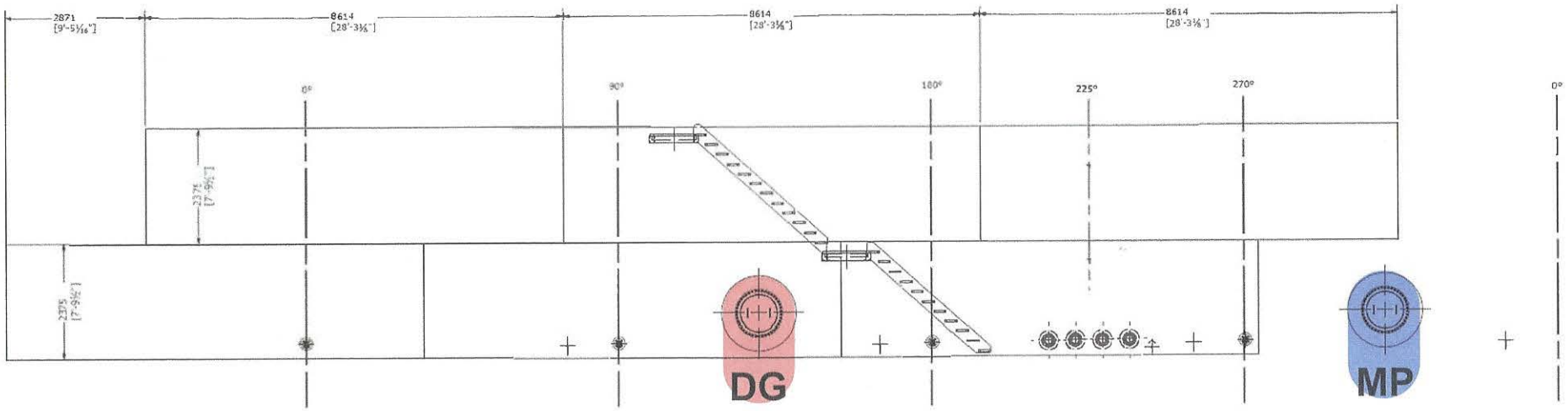

Initials	Welder Name
DW	DJ White
ZK	Zack King
JD	Justin Dredge
MP	Michael Paul
DG	Dean Goodyear
RK	Ryan Kettle
JC	John Cusick
AK	Abel Kalai
JO	Joel Overgaard (Sub Arc Systems)

I, Sheldon Burry (print supervisor name) have visually inspected the welds shown on this weld map.

Sign: Sheldon Burry

Item 15: Manways - Roof Manway Weld Map

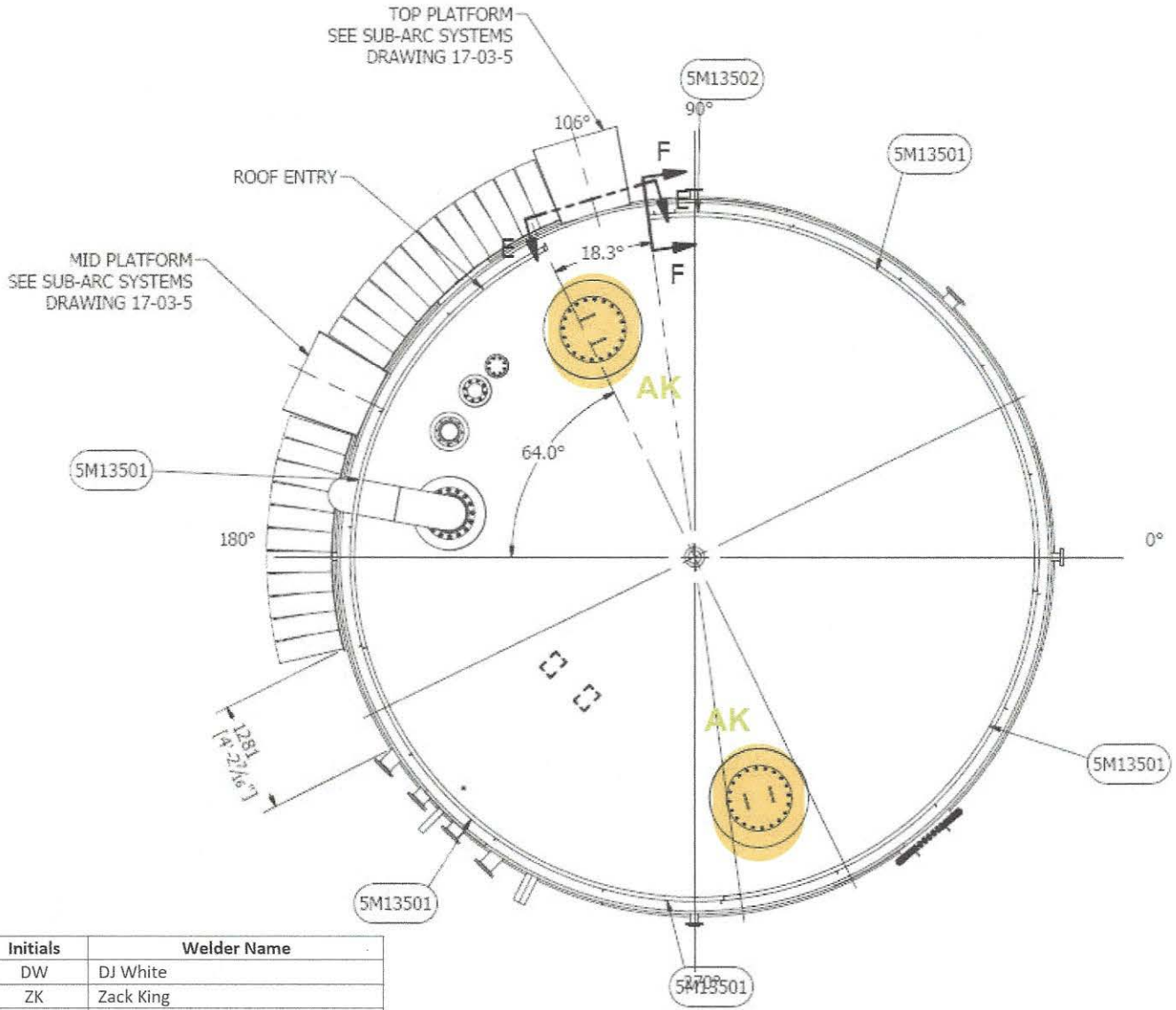

SCALE 1/50

Initials	Welder Name
DW	DJ White
ZK	Zack King
JD	Justin Dredge
MP	Michael Paul
DG	Dean Goodyear
RK	Ryan Kettle
JC	John Cusick
AK	Abel Kalai
JO	Joel Overgaard (Sub Arc Systems)

I, Sheldon Bruty (print supervisor name) have visually inspected the welds shown on this weld map.

Sign: Sheldon Bruty

Item 15 - Manways Dimension Report

Submit sketch for unusual deadwood

External

Quantity	Description	MW = Manway V = Valve F = Flange Hatch = Hatch	Code	Diameter	Length	Height	Height From Bottom	To	Office Use Bbls/8th	Gls/8th
1	v		V	6	8		9 1/2	15.5	0.0001214	
1	v		V	6	5 1/2		9 1/2	15 1/2	0.0000835	
1	v		V	6	5 3/4		9 1/2	15 1/2	0.0000873	
1	v		V	6	9		9 1/2	15 1/2	0.0001366	
1	v		V	3	7 1/2		10 1/2	13 1/2	0.0001138	
2	v		MW	29	5 1/2		22 1/2	51.5	0.0032280	
1	v		V	3	6		10 1/2	13.5	0.0000911	
2	v		V	6	7		9	15	0.0002125	
1	v		V	3	6		11	14	0.0000911	

Inukshuk Construction Limited
Industrial Contracting | Project Management

PO Box 654
Rankin Inlet, NU X0C 0G0
T 867.645.4030 F 867.645.4064

4. TESTING MEDIA: air pressure and soapy water

5. CALCULATED PRESSURE / ACTUAL PRESSURE AT LOWEST ELEVATION:

TIME (MIN)	TEST PRESSURE (KP)	TEMPERATURE (C)
100 pm	20 PSI	

Include all pressure, temperature and pressure valve recording charts where applicable. Charts to be signed and approved by Engineer before acceptance. The location and course of any leaks or failures and description of repair action(s) taken to be included on additional sheets. All certificates to be submitted to Engineer for each Test Section.

CONTRACTOR REPRESENTATIVE	ENGINEER
Sheldon Burry	BRUNO ROY
(Print Name)	(Print Name)
(Signature)	Bruno R
(Signature)
9/9/17	2017/09/09
(Date)	(Date)

Inukshuk Construction Limited
Industrial Contracting Project Management

PO Box 654
Rankin Inlet, NU X0C 0G0
T 867.645.4030 F 867.645.4064

PRESSURE TEST CERTIFICATE

SITE: Meliadine

WORK ORDER #

TITLE: Tank Farm Tank #5

DATE: 9/9/17

1. DESCRIPTION OF PIPE AND LOCATION:

Manhole and reinforcing plate at 130° — 310°

2. SKETCH INDICATING TEST POINT (S):

2 manhole on tank #5

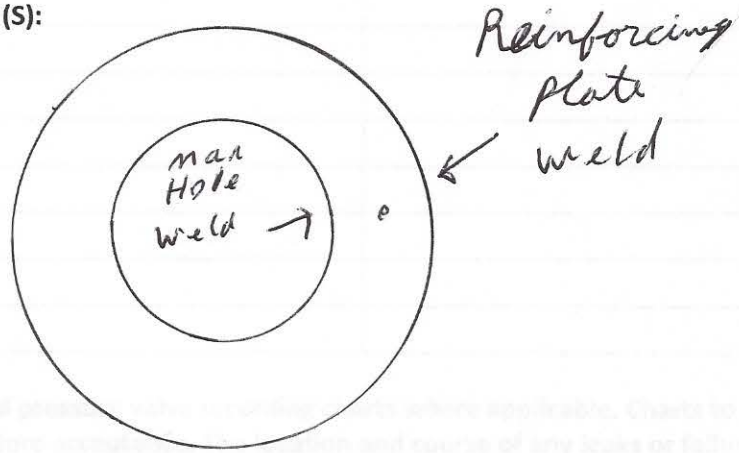

3. PIPE STANDARD / SPECIFICATION OF TEST SECTION:

Item 15 - Manways Bolting Pattern and Torque Wrench Photos





Item 15 - Manways - Torque Wrench Specs

Certification of Calibration
For Torque Wrench Used to Seal Shell Manholes

Certification of calibration					
Model : 8229239 Calibrator :			Serial No : E20140321 Date : 2014-10-21		
Set Torque	Min	Max	Actual Readings		
100FT	96.0	104.0	101.3	101.6	101.9
400FT	384.0	416.0	400	407.1	407.9
700FT	672.0	728.0	712.1	712.7	712.5

Client :	**Inukshuk Construction Ltd,**	**Date d'intervention :** **Intervention date :**	2017-08-29
Adresse/Address :	PO Box 654 Rankin Inlet, Nunavut X0C 0G0	**Date du rapport :** **Report date :**	2017-09-08
Contact :	Marc Losier		
Entrepreneur : **Contractor :**	N/A	**N° dossier :** **File no :**	INS-117107-01
Endroit du travail : **Job location :**	Rankin Inlet , Nunavut	**Commande :** **Order :**	295-1046

INSP. VISUELLE / VISUAL INSP. ☐ **MAGNÉTOSCOPIE / MAGNETIC PARTICLES** ☒ **RESSUAGE / LIQUID PENETRANT** ☐ **ULTRASONS / ULTRASONIC** ☒

DESCRIPTION :

Magnetic inspection and Ultrasonic inspection on tank 5

The client is opting to use an ultrasonic testing, instead of radiographic testing

Remark : Visual testing was performed by client.
I

INSP. VISUELLE / VISUAL INSP.

NORME : **SPECIFICATION :**

N° équip. : **Equip. no :** N/A

MAGNÉTOSCOPIE / MAGNETIC PARTICLES

NORME : **SPECIFICATION :** Api 650

N° équip. : **Equip. no :** MP-Q-27

Ampérage : **Amperage :**	Culasse/Yoke	**Continue** **Continuous**	☒	**Résiduelle** **Residual**	☐	**Humide** **Wet**	☐	**Sèche** **Dry**	☒
Longitudinale **Longitudinal**	☐	**Circulaire** **Circular**	☐	**C.A.** **A.C.**	☒	**C.C.** **D.C.**	☐	**Démagnétisée** **Demagnetized**	☐

RESSUAGE / LIQUID PENETRANT

NORME : **SPECIFICATION :**

N° équip. : **Equip. no :**

Pénétrant/Penetrant : **Émulsifiant/Emulsifier :** **Révélateur/Developer :**

Temps/Time : **Temps/Time :** **Temps/Time :**

ULTRASONS / ULTRASONIC

NORME : **SPECIFICATION :** API 650

ÉTALONNAGE/CALIBRATION :

Bloc/Block : IIW Type 2 **Trou/Hole :** N/A **C.A.D. /D.A.C. :** ☐

APPAREIL/EQUIPMENT :

Instrument : USM GO+ **Couplant :** Echogel **Échelle/Sweep length :** 0'' to 2 ''

N° équip./Equip. no : UT-Q-34 **Palpeur/Transducer :** 0 degre and 70 degre

RÉSULTATS/RESULTS :

Ultrasonic inspection was performed:

- On every T (where vertical weld and horizontal touch each other) between first/second, second/third & third/forth course: **Accepted**
- On every vertical first course from 1" to 7 and 53" to 59": **Accepted**
- On horizontal UT on two locations, placed at center over each manhole 6" long: **Accepted**

Magnetic particles inspection was performed on angle joint between the shell and nozzle & bottom weld to shell inside and outside the tank:

- -**Inside tank,** weld shell/nozzle and shell to the bottom weld at 100%: **Accepted**
- -**Outside tank**, weld between shell/pad, and weld pad/nozzle, and on weld shell to bottom weld at 100%: **Accepted**

Remark: 12 nozzles including 2 manholes; one nozzle outside does not have pad. Please refer to drawing 295-M13; part section J-J item #35. This nozzle corresponds to a ¾" coupling for a water temperature gauge in the shell and the client has advised that no repad is needed for this specific coupling.

Techniciens : **Technicians :** Sylvain Germain CSA W178.2 level 2	**Assistants:**	**Approuvé par :** **Approved by :** Pierre Dostie Technical Supervisor CSA W178.2 Level 3

Ce rapport ne doit pas être reproduit, sinon en entier, sans l'autorisation écrite de SGS CANADA inc.
Le présent rapport est émis par la Société conformément à ses Conditions Générales de Service accessibles sur http://www.sgs.ca/fr-FR/Terms-and-Conditions.aspx
This report is confidential and shall not be reproduced without the written approval of SGS CANADA Inc
This document is issued by the Company under its General Conditions of Service accessible at http://www.sgs.ca/en/Terms-and-Conditions.aspx

Client :	**Inukshuk Construction Ltd,**	**Date d'intervention :** **Intervention date :**	2017-08-29
Adresse/Address :	PO Box 654 Rankin Inlet, Nunavut X0C 0G0	**Date du rapport :** **Report date :**	2017-09-08
Contact :	Marc Losier		
Entrepreneur : **Contractor :**	N/A	**N° dossier :** **File no :**	INS-117107-01
Endroit du travail : **Job location :**	Rankin Inlet , Nunavut	**Commande :** **Order :**	295-1046

Picture : 1



View of tank # 5

Techniciens : **Technicians :**	Sylvain Germain CSA W178.2 level 2	**Assistants:**		**Approuvé par :** **Approved by :**	Pierre Dostie Technical Supervisor CSA W178.2 Level 3

Ce rapport ne doit pas être reproduit, sinon en entier, sans l'autorisation écrite de SGS CANADA inc.
Le présent rapport est émis par la Société conformément à ses Conditions Générales de Service accessibles sur http://www.sgs.ca/fr-FR/Terms-and-Conditions.aspx
This report is confidential and shall not be reproduced without the written approval of SGS CANADA Inc
This document is issued by the Company under its General Conditions of Service accessible at http://www.sgs.ca/en/Terms-and-Conditions.aspx

Item 16 – Internals

Contents

1. Visual Report
2. Internal Dimension Report (AmSpec)

Project 295 - AEM Meliadine Fuel Storage Tank 6515-C-260-002

Tank 3 and 5 manhole necks – Diesel Test

Tank #	Manhole #	TEST			Witnesses		Comments
		Date	Start Time	End Time	Inukshuk	Agnico Eagle	
3	1	NOV01/2017	1:50	1:56	John Cusick John Cusick	Pierre Gauthier	Diesel Applied to all manholes, now we wait 48hrs
3	2	NOV01/2017	1:50	1:56	John Cusick	Pierre Gauthier	Diesel Applied to All manholes, now we wait 48 hrs
3	3	NOV01/2017	1:50	1:56	John Cusick	Pierre Gauthier	Diesel Applied now we wait 48 hrs
3	4	NOV01/2017	1:50	1:56	John Cusick	Pierre Gauthier	Diesel Applied now we wait 48 hrs
5	1	NOV01/2017	2:00	2:05	John Cusick	Pierre Gauthier	Diesel Applied now we wait 48 hrs
5	2	NOV01/2017	2:00	2:05	John Cusick	Pierre Gauthier	Diesel Applied now we wait 48 hrs.
		Nov04/2017	2:30		John Cusick	Stephane Gierat	Check Nov 04, 2:30pm No leak to report.

Inukshuk Construction Limited
Industrial Contracting Project Management

PO Box 654
Rankin Inlet, NU X0C 0G0
T 867.645.4030 F 867.645.4064

Item 16 - Internals - Visual Report

Fuel Tank Welding Visual Report

ICL Project #: 295 Supervisor Name: Sheldon Burry Location: Meliadine (Portal #1)

Client: Agnico Eagle Tank No: 5 Component Inspected: INTERNALS

Was all work on this component found to be acceptable? ☑ **Yes** ☐ **No** (if no, provide details below)

Details: _____

Corrective Action Required? ☐ **Yes** (if yes, provide details below) ☐ **No** (if no, explain why not)

Details of Corrective Action: _____

Supervisor Signature: Sheldon Burry Date: 2.10.17

It is very important to note if tubular roof supports (pipes) are open (fills with product) or closed.



PAGE 6

Enter SUMP details in this first row ONLY

TANK No.: 5

ALL MEASUREMENTS TO BE SHOWN AS INCHES

Internal

Use Proper Codes and Enter all data

op = Open Pipe ch = Channel
cp = Closed Pipe

Quantity	Description	Code	Diameter	Length	Height	Height From Bottom	Height From To	Office Use Bbls/8th	Gls/8th
1	Pipe	OP	6	36	13	10	13	-0.0005	-0.0229499
1	Pipe	OP	6	161	18	10	18	-0.0024	-0.1026373
1	Pipe	OP	6	161	15	9	15	-0.0024	-0.1026373
1	Pipe	OP	6	36	15	9	15	-0.0005	-0.0229499
4	Pipe	OP	3	53	15	9	15	-0.0032	-0.1351497
1	Pipe	OP	6	36				-0.0005	-0.0229499
1	Center Beam	OP	6	180				-0.0027	-0.1147497

Item 17 - Externals

Contents

1. Visual Report

Inukshuk Construction Limited
Industrial Contracting Project Management

PO Box 654
Rankin Inlet, NU X0C 0G0
T 867.645.4030 F 867.645.4064

Item 17 - Externals - Visual Report

Fuel Tank Welding Visual Report

ICL Project #: 295 Supervisor Name: Sheldon Burry Location: Meliadine (Portal #1)

Client: Agnico Eagle Tank No: 5 Component Inspected: EXTERNALS

Was all work on this component found to be acceptable? ☑ **Yes** ☐ **No** (if no, provide details below)

Details: _____

Corrective Action Required? ☐ **Yes** (if yes, provide details below) ☐ **No** (if no, explain why not)

Details of Corrective Action: _____

Supervisor Signature: Sheldon Burry Date: 2017

Item 18 – Stairs and Platforms

Contents

1. Visual Report

Inukshuk Construction Limited
Industrial Contracting Project Management

PO Box 654
Rankin Inlet, NU X0C 0G0
T 867.645.4030 F 867.645.4064

Item 18 - Stairs and Platforms - Visual Report

Fuel Tank Welding Visual Report

ICL Project #: 295 Supervisor Name: Sheldon Burry Location: Meliadine (Portal #1)

Client: Agnico Eagle Tank No: 5 Component Inspected: STAIRS AND PLATFORMS

Was all work on this component found to be acceptable? ☐ **Yes** ☑ **No** (if no, provide details below)

Details: 3 steps to close to the ground

Corrective Action Required? ☑ **Yes** (if yes, provide details below) ☐ **No** (if no, explain why not)

Details of Corrective Action: cut the Botton steps off

Supervisor Signature: Sheldon Burry Date: 2 10 17

Item 19 – Bolts and Nuts

Contents

1. Fastener List
2. Torque Wrench Specs

Fastener List

Tank #	qty	Qty of Component	Connection	Description	Lght (in)
5	26.00	13	Shell to Rafter Connection	Bolt, Structural A325, 5/8"	1.75
5	26.00	13	Rafter to Center Column	Bolt, Structural A325, 5/8"	3
5	52.00			Nut, Structural heavy hex 5/8"	
5	104.00			Washer, type A, 5/8"	
5	84.00	2	32"Shell Manhole	Stud, L7, 3/4"	2 3/4
5	48.00	6	6" in/out Nozzle	Stud, L7, 3/4"	4
5		4	3" Water Drawoff	Stud, L7, 5/8"	3 1/2
5	20.00	1	24" Roof manhole	Stud, L7, 5/8"	2 1/4
5	20.00	1	24" Roof manhole emergency vent	Stud, L7, 5/8"	9.5
5	16.00	1	16" Vent	Stud, L7, 1"	5 1/4
5	8.00	1	8" Roof Nozzle	Stud, L7, 3/4"	4 1/4
5	8.00	1	6" Gauge Hatch	Stud, L7, 3/4"	4
5	8.00	1	4" Roof Nozzle	Stud, L7, 5/8"	3.5
5	2.00	2	32"Shell Manhole	Gasket, Ring, Durlon 8500, 1/8", 899 o.d.x 762 i.d.	
5	6.00	6	6" in/out Nozzle	Gasket,Ring, Durlon 8500,1/8" x 6" x 150#	
5		4	3" Water Drawoff	Gasket, Ring, Durlon 8500,1/8" x 3" x 150#	
5	2.00	2	24" Roof manhole	Gasket, Ring, Durlon 8500, 1/16" x 762 x 610	
5	1.00	1	8" High Level	Gasket, Ring, Durlon 8500, 1/16" x 150#, 8"	
5	1.00	1	6" Gauge Hatch	Gasket, Full Face, Durlon 8500, 1/16" x 150#, 6"	
5	1.00	1	4" Roof Nozzle	Gasket, Full Face, Durlon 8500, 1/16" x 150#, 4"	
5	32.00			Nut, A194, Gr. 4, 1"	
5	296.00			Nut, A194, Gr. 4, 3/4"	
5	96.00			Nut, A194, Gr. 4, 5/8"	

Item 19 - Bolts and Nuts - Torque Wrench Specs

Certification of Calibration
For Torque Wrench Used to Seal Shell Manholes

Certification of calibration					
Model : 8229239 Calibrator :			Serial No : E20140321 Date : 2014-10-21		
Set Torque	Min	Max	Actual Readings		
100FT	96.0	104.0	101.3	101.6	101.9
400FT	384.0	416.0	400	407.1	407.9
700FT	672.0	728.0	712.1	712.7	712.5

Item 20 - Final

Contents

1. Name Plate Scan
2. Punch List
3. Manufacturer's Certification (3rd Party)
4. Data Sheet (Innage)

Item 20 - Final - Name Plate Scan

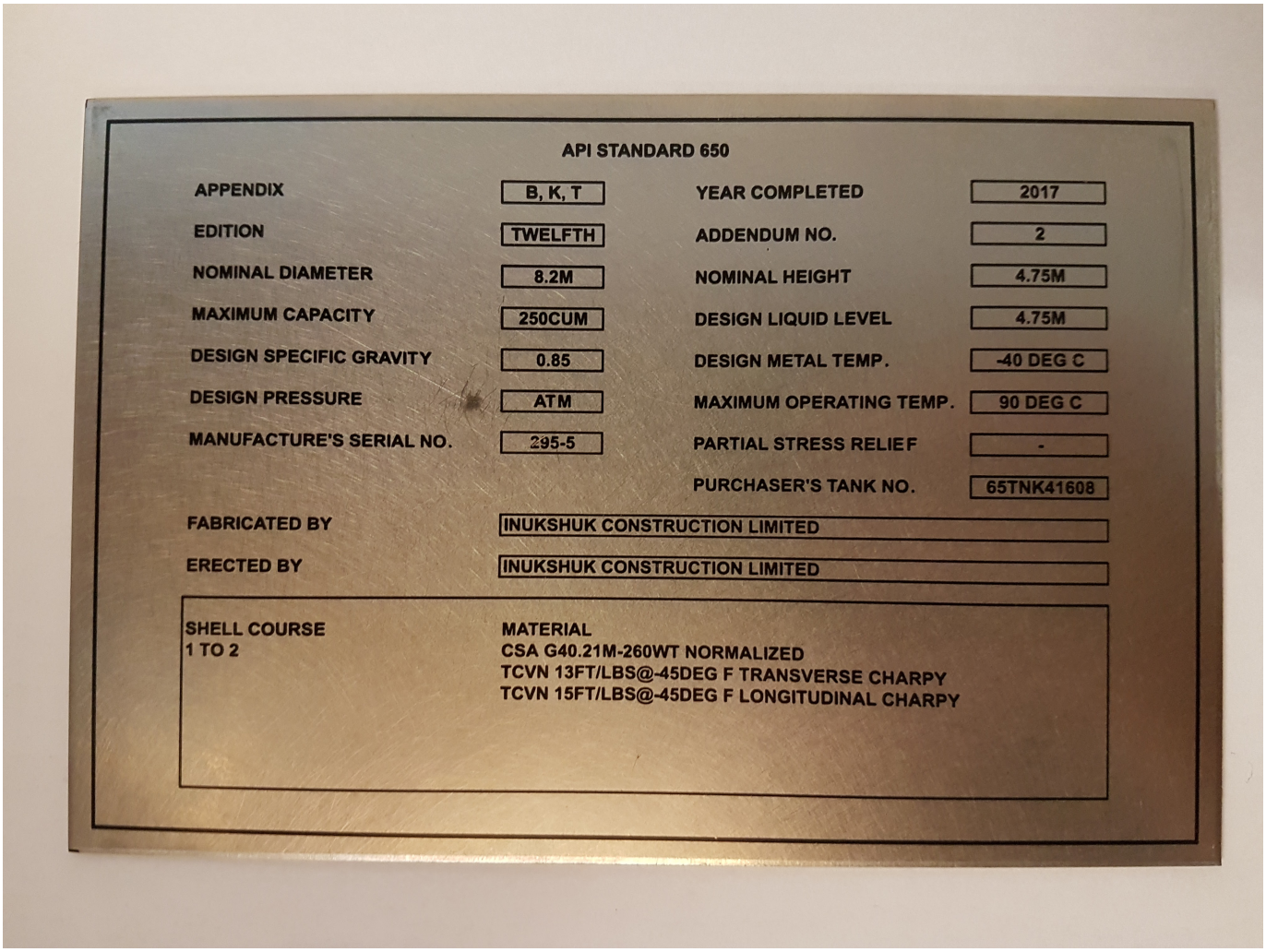

Inukshuk Construction Limited
Industrial Contracting Project Management

PO Box 654
Rankin Inlet, NU X0C 0G0
T 867.645.4030 F 867.645.4064

Item 20 – Final – Punch List

ICL Project No.: 295 Tank No.: 5 Client: AEM Site: Portal #1

Punch List

Initial When Complete

Description	To be Completed By	ICL	Client
Weld stairway and platform handrails together to eliminate pinch points	ICL	SB	
Reduce gap in opening of roof railing at stairway top railing. Do this by adding vertical picket and horizontal handrails and kick plate	ICL	SB	

MANUFACTURER'S CERTIFICATION FOR A TANK BUILT TO API STANDARD 650

To **AGNICO EAGLE MINES LIMITED**

(name and address of Purchaser)

145 KING STREET EAST, SUITE 400, TORONTO, ONTARIO M5C 2Y7

We hereby certify that the tank constructed for you at

(location)

RANKIN INLET, NUNAVUT - MELIADINE FIELD ERECTED TANKS PROJECT

and described as follows: **TANK NO. 5, 8.2 M DIA X 4.75 M HIGH, 250 M3, FIXED CONE ROOF**

(serial or contract number, diameter, height, capacity, floating or fixed roof)

AEM PO: OC-568510

meets all applicable requirements of API Standard 650, **12th** Edition, **Addendum 2** Revision, Appendix

_____ dated **JAN 2016** including the requirements for design, materials, fabrication, and erection.

REGISTERED PROFESSIONAL ENGINEER K.G. BROWN LICENSEE NT/NU

14-Nov-2017

Permit Number: P471

INUKSHUK CONSTRUCTION LIMITED

Manufacturer

Kyle Brown

Design Engineer

14-Nov-17

Date

Meliadine

Portal #1

Item 20 - Final - Datasheet

Tank No. 5

INNAGE TABLE

Calibration@AmSpecGroup.com

CAPACITIES GIVEN IN CUBIC METERS

GAUGE HEIGHT: 4.959 M

mm	0 M	mm	0 M	mm	0 M	mm	0 M	mm	0 M	mm	0 M	mm	0 M	mm	0 M	mm	0 M	mm	0 M
0.000	CROWN BOTTOM 0.636	0.100	5.485	0.200	10.774	0.300	16.045	0.400	21.328	0.500	26.621	0.600	31.926	0.700	37.237	0.800	42.548	0.900	47.859
0.001	0.674	0.101	5.538	0.201	10.827	0.301	16.098	0.401	21.381	0.501	26.673	0.601	31.979	0.701	37.290	0.801	42.601	0.901	47.912
0.002	0.713	0.102	5.590	0.202	10.880	0.302	16.151	0.402	21.433	0.502	26.726	0.602	32.032	0.702	37.343	0.802	42.654	0.902	47.965
0.003	0.751	0.103	5.643	0.203	10.933	0.303	16.203	0.403	21.486	0.503	26.779	0.603	32.085	0.703	37.396	0.803	42.707	0.903	48.018
0.004	0.789	0.104	5.696	0.204	10.985	0.304	16.256	0.404	21.539	0.504	26.832	0.604	32.138	0.704	37.449	0.804	42.760	0.904	48.071
0.005	0.827	0.105	5.749	0.205	11.038	0.305	16.309	0.405	21.592	0.505	26.885	0.605	32.191	0.705	37.502	0.805	42.813	0.905	48.124
0.006	0.866	0.106	5.802	0.206	11.091	0.306	16.361	0.406	21.645	0.506	26.938	0.606	32.244	0.706	37.555	0.806	42.866	0.906	48.178
0.007	0.904	0.107	5.855	0.207	11.143	0.307	16.414	0.407	21.698	0.507	26.991	0.607	32.297	0.707	37.608	0.807	42.920	0.907	48.231
0.008	0.942	0.108	5.908	0.208	11.196	0.308	16.467	0.408	21.751	0.508	27.044	0.608	32.350	0.708	37.662	0.808	42.973	0.908	48.284
0.009	0.980	0.109	5.961	0.209	11.249	0.309	16.520	0.409	21.804	0.509	27.097	0.609	32.404	0.709	37.715	0.809	43.026	0.909	48.337
0.010	1.019	0.110	6.014	0.210	11.302	0.310	16.572	0.410	21.857	0.510	27.150	0.610	32.457	0.710	37.768	0.810	43.079	0.910	48.390
0.011	1.057	0.111	6.067	0.211	11.354	0.311	16.625	0.411	21.910	0.511	27.203	0.611	32.510	0.711	37.821	0.811	43.132	0.911	48.443
0.012	1.095	0.112	6.120	0.212	11.407	0.312	16.678	0.412	21.963	0.512	27.256	0.612	32.563	0.712	37.874	0.812	43.185	0.912	48.496
0.013	1.134	0.113	6.173	0.213	11.460	0.313	16.731	0.413	22.016	0.513	27.309	0.613	32.616	0.713	37.927	0.813	43.238	0.913	48.549
0.014	1.172	0.114	6.226	0.214	11.512	0.314	16.783	0.414	22.068	0.514	27.362	0.614	32.669	0.714	37.980	0.814	43.291	0.914	48.602
0.015	1.210	0.115	6.279	0.215	11.565	0.315	16.836	0.415	22.121	0.515	27.415	0.615	32.722	0.715	38.033	0.815	43.344	0.915	48.656
0.016	1.248	0.116	6.331	0.216	11.618	0.316	16.889	0.416	22.174	0.516	27.467	0.616	32.775	0.716	38.086	0.816	43.398	0.916	48.709
0.017	1.287	0.117	6.384	0.217	11.670	0.317	16.941	0.417	22.227	0.517	27.520	0.617	32.828	0.717	38.140	0.817	43.451	0.917	48.762
0.018	1.325	0.118	6.437	0.218	11.723	0.318	16.994	0.418	22.280	0.518	27.573	0.618	32.882	0.718	38.193	0.818	43.504	0.918	48.815
0.019	1.363	0.119	6.490	0.219	11.776	0.319	17.047	0.419	22.333	0.519	27.626	0.619	32.935	0.719	38.246	0.819	43.557	0.919	48.868
0.020	1.401	0.120	6.543	0.220	11.829	0.320	17.100	0.420	22.386	0.520	27.679	0.620	32.988	0.720	38.299	0.820	43.610	0.920	48.921
0.021	1.440	0.121	6.596	0.221	11.881	0.321	17.152	0.421	22.439	0.521	27.732	0.621	33.041	0.721	38.352	0.821	43.663	0.921	48.974
0.022	1.478	0.122	6.649	0.222	11.934	0.322	17.205	0.422	22.492	0.522	27.785	0.622	33.094	0.722	38.405	0.822	43.716	0.922	49.027
0.023	1.516	0.123	6.702	0.223	11.987	0.323	17.258	0.423	22.545	0.523	27.838	0.623	33.147	0.723	38.458	0.823	43.769	0.923	49.080
0.024	1.555	0.124	6.755	0.224	12.039	0.324	17.311	0.424	22.598	0.524	27.891	0.624	33.200	0.724	38.511	0.824	43.822	0.924	49.134
0.025	1.593	0.125	6.808	0.225	12.092	0.325	17.363	0.425	22.650	0.525	27.944	0.625	33.253	0.725	38.564	0.825	43.876	0.925	49.187
0.026	1.643	0.126	6.861	0.226	12.145	0.326	17.416	0.426	22.703	0.526	27.997	0.626	33.306	0.726	38.618	0.826	43.929	0.926	49.240
0.027	1.693	0.127	6.914	0.227	12.197	0.327	17.469	0.427	22.756	0.527	28.050	0.627	33.360	0.727	38.671	0.827	43.982	0.927	49.293
0.028	1.742	0.128	6.967	0.228	12.250	0.328	17.522	0.428	22.809	0.528	28.103	0.628	33.413	0.728	38.724	0.828	44.035	0.928	49.346
0.029	1.792	0.129	7.020	0.229	12.303	0.329	17.575	0.429	22.862	0.529	28.156	0.629	33.466	0.729	38.777	0.829	44.088	0.929	49.399
0.030	1.842	0.130	7.072	0.230	12.356	0.330	17.627	0.430	22.915	0.530	28.209	0.630	33.519	0.730	38.830	0.830	44.141	0.930	49.452
0.031	1.892	0.131	7.125	0.231	12.408	0.331	17.680	0.431	22.968	0.531	28.262	0.631	33.572	0.731	38.883	0.831	44.194	0.931	49.505
0.032	1.942	0.132	7.178	0.232	12.461	0.332	17.733	0.432	23.021	0.532	28.315	0.632	33.625	0.732	38.936	0.832	44.247	0.932	49.558
0.033	1.992	0.133	7.231	0.233	12.514	0.333	17.786	0.433	23.074	0.533	28.368	0.633	33.678	0.733	38.989	0.833	44.300	0.933	49.612
0.034	2.042	0.134	7.284	0.234	12.566	0.334	17.839	0.434	23.127	0.534	28.421	0.634	33.731	0.734	39.042	0.834	44.354	0.934	49.665
0.035	2.091	0.135	7.337	0.235	12.619	0.335	17.892	0.435	23.180	0.535	28.474	0.635	33.784	0.735	39.096	0.835	44.407	0.935	49.718
0.036	2.141	0.136	7.390	0.236	12.672	0.336	17.945	0.436	23.233	0.536	28.527	0.636	33.838	0.736	39.149	0.836	44.460	0.936	49.771
0.037	2.191	0.137	7.443	0.237	12.724	0.337	17.998	0.437	23.286	0.537	28.580	0.637	33.891	0.737	39.202	0.837	44.513	0.937	49.824
0.038	2.241	0.138	7.496	0.238	12.777	0.338	18.051	0.438	23.339	0.538	28.633	0.638	33.944	0.738	39.255	0.838	44.566	0.938	49.877
0.039	2.291	0.139	7.549	0.239	12.830	0.339	18.103	0.439	23.392	0.539	28.686	0.639	33.997	0.739	39.308	0.839	44.619	0.939	49.930
0.040	2.341	0.140	7.602	0.240	12.882	0.340	18.156	0.440	23.444	0.540	28.739	0.640	34.050	0.740	39.361	0.840	44.672	0.940	49.983
0.041	2.391	0.141	7.655	0.241	12.935	0.341	18.209	0.441	23.497	0.541	28.793	0.641	34.103	0.741	39.414	0.841	44.725	0.941	50.036
0.042	2.440	0.142	7.708	0.242	12.988	0.342	18.262	0.442	23.550	0.542	28.846	0.642	34.156	0.742	39.467	0.842	44.778	0.942	50.090
0.043	2.490	0.143	7.761	0.243	13.041	0.343	18.315	0.443	23.603	0.543	28.899	0.643	34.209	0.743	39.520	0.843	44.832	0.943	50.143
0.044	2.540	0.144	7.814	0.244	13.093	0.344	18.368	0.444	23.656	0.544	28.952	0.644	34.262	0.744	39.574	0.844	44.885	0.944	50.196
0.045	2.590	0.145	7.867	0.245	13.146	0.345	18.421	0.445	23.709	0.545	29.005	0.645	34.316	0.745	39.627	0.845	44.938	0.945	50.249
0.046	2.640	0.146	7.919	0.246	13.199	0.346	18.474	0.446	23.762	0.546	29.058	0.646	34.369	0.746	39.680	0.846	44.991	0.946	50.302
0.047	2.690	0.147	7.972	0.247	13.251	0.347	18.526	0.447	23.815	0.547	29.111	0.647	34.422	0.747	39.733	0.847	45.044	0.947	50.355
0.048	2.740	0.148	8.025	0.248	13.304	0.348	18.579	0.448	23.868	0.548	29.164	0.648	34.475	0.748	39.786	0.848	45.097	0.948	50.408
0.049	2.789	0.149	8.078	0.249	13.357	0.349	18.632	0.449	23.921	0.549	29.217	0.649	34.528	0.749	39.839	0.849	45.150	0.949	50.461
0.050	2.839	0.150	8.131	0.250	13.409	0.350	18.685	0.450	23.974	0.550	29.270	0.650	34.581	0.750	39.892	0.850	45.203	0.950	50.514
0.051	2.892	0.151	8.184	0.251	13.462	0.351	18.738	0.451	24.027	0.551	29.323	0.651	34.634	0.751	39.945	0.851	45.256	0.951	50.568
0.052	2.945	0.152	8.237	0.252	13.515	0.352	18.791	0.452	24.080	0.552	29.376	0.652	34.687	0.752	39.998	0.852	45.310	0.952	50.621
0.053	2.998	0.153	8.290	0.253	13.567	0.353	18.844	0.453	24.133	0.553	29.429	0.653	34.740	0.753	40.052	0.853	45.363	0.953	50.674
0.054	3.051	0.154	8.343	0.254	13.620	0.354	18.896	0.454	24.186	0.554	29.482	0.654	34.794	0.754	40.105	0.854	45.416	0.954	50.727
0.055	3.104	0.155	8.396	0.255	13.673	0.355	18.949	0.455	24.238	0.555	29.536	0.655	34.847	0.755	40.158	0.855	45.469	0.955	50.780
0.056	3.157	0.156	8.449	0.256	13.726	0.356	19.002	0.456	24.291	0.556	29.589	0.656	34.900	0.756	40.211	0.856	45.522	0.956	50.833
0.057	3.210	0.157	8.502	0.257	13.778	0.357	19.055	0.457	24.344	0.557	29.642	0.657	34.953	0.757	40.264	0.857	45.575	0.957	50.886
0.058	3.263	0.158	8.555	0.258	13.831	0.358	19.108	0.458	24.397	0.558	29.695	0.658	35.006	0.758	40.317	0.858	45.628	0.958	50.939
0.059	3.315	0.159	8.608	0.259	13.884	0.359	19.161	0.459	24.450	0.559	29.748	0.659	35.059	0.759	40.370	0.859	45.681	0.959	50.992
0.060	3.368	0.160	8.661	0.260	13.936	0.360	19.214	0.460	24.503	0.560	29.801	0.660	35.112	0.760	40.423	0.860	45.734	0.960	51.046
0.061	3.421	0.161	8.713	0.261	13.989	0.361	19.267	0.461	24.556	0.561	29.854	0.661	35.165	0.761	40.476	0.861	45.788	0.961	51.099
0.062	3.474	0.162	8.766	0.262	14.042	0.362	19.319	0.462	24.609	0.562	29.907	0.662	35.218	0.762	40.530	0.862	45.841	0.962	51.152
0.063	3.527	0.163	8.819	0.263	14.094	0.363	19.372	0.463	24.662	0.563	29.960	0.663	35.272	0.763	40.583	0.863	45.894	0.963	51.205
0.064	3.580	0.164	8.872	0.264	14.147	0.364	19.425	0.464	24.715	0.564	30.014	0.664	35.325	0.764	40.636	0.864	45.947	0.964	51.258
0.065	3.633	0.165	8.925	0.265	14.200	0.365	19.478	0.465	24.768	0.565	30.067	0.665	35.378	0.765	40.689	0.865	46.000	0.965	51.311
0.066	3.686	0.166	8.978	0.266	14.252	0.366	19.531	0.466	24.821	0.566	30.120	0.666	35.431	0.766	40.742	0.866	46.053	0.966	51.364
0.067	3.739	0.167	9.031	0.267	14.305	0.367	19.584	0.467	24.874	0.567	30.173	0.667	35.484	0.767	40.795	0.867	46.106	0.967	51.417
0.068	3.792	0.168	9.084	0.268	14.358	0.368	19.637	0.468	24.927	0.568	30.226	0.668	35.537	0.768	40.848	0.868	46.159	0.968	51.470
0.069	3.845	0.169	9.137	0.269	14.411	0.369	19.689	0.469	24.980	0.569	30.279	0.669	35.590	0.769	40.901	0.869	46.212	0.969	51.524
0.070	3.897	0.170	9.190	0.270	14.463	0.370	19.742	0.470	25.032	0.570	30.332	0.670	35.643	0.770	40.954	0.870	46.266	0.970	51.577
0.071	3.950	0.171	9.243	0.271	14.516	0.371	19.795	0.471	25.085	0.571	30.385	0.671	35.696	0.771	41.008	0.871	46.319	0.971	51.630
0.072	4.003	0.172	9.296	0.272	14.569	0.372	19.848	0.472	25.138	0.572	30.438	0.672	35.750	0.772	41.061	0.872	46.372	0.972	51.683
0.073	4.056	0.173	9.349	0.273	14.621	0.373	19.901	0.473	25.191	0.573	30.492	0.673	35.803	0.773	41.114	0.873	46.425	0.973	51.736
0.074	4.109	0.174	9.402	0.274	14.674	0.374	19.954	0.474	25.244	0.574	30.545	0.674	35.856	0.774	41.167	0.874	46.478	0.974	51.789
0.075	4.162	0.175	9.455	0.275	14.727	0.375	20.007	0.475	25.297	0.575	30.598	0.675	35.909	0.775	41.220	0.875	46.531	0.975	51.842
0.076	4.215	0.176	9.507	0.276	14.779	0.376	20.060	0.476	25.350	0.576	30.651	0.676	35.962	0.776	41.273	0.876	46.584	0.976	51.895
0.077	4.268	0.177	9.560	0.277	14.832	0.377	20.112	0.477	25.403	0.577	30.704	0.677	36.015	0.777	41.326	0.877	46.637	0.977	51.948
0.078	4.321	0.178	9.613	0.278	14.885	0.378	20.165	0.478	25.456	0.578	30.757	0.678	36.068	0.778	41.379	0.878	46.690	0.978	52.002
0.079	4.374	0.179	9.666	0.279	14.938	0.379	20.218	0.479	25.509	0.579	30.810	0.679	36.121	0.779	41.432	0.879	46.744	0.979	52.055
0.080	4.426	0.180	9.719	0.280	14.990	0.380	20.271	0.480	25.562	0.580	30.863	0.680	36.174	0.780	41.486	0.880	46.797	0.980	52.108
0.081	4.479	0.181	9.771	0.281	15.043	0.381	20.324	0.481	25.615	0.581	30.916	0.681	36.228	0.781	41.539	0.881	46.850	0.981	52.161
0.082	4.532	0.182	9.824	0.282	15.096	0.382	20.377	0.482	25.668	0.582	30.970	0.682	36.281	0.782	41.592	0.882	46.903	0.982	52.214
0.083	4.585	0.183	9.877	0.283	15.149	0.383	20.429	0.483	25.721	0.583	31.023	0.683	36.334	0.783	41.645	0.883	46.956	0.983	52.267
0.084	4.638	0.184	9.930	0.284	15.201	0.384	20.482	0.484	25.774	0.584	31.076	0.684	36.387	0.784	41.698	0.884	47.009	0.984	52.320
0.085	4.691	0.185	9.983	0.285	15.254	0.385	20.535	0.485	25.827	0.585	31.129	0.685	36.440	0.785	41.751	0.885	47.062	0.985	52.373
0.086	4.744	0.186	10.035	0.286	15.307	0.386	20.588	0.486	25.879	0.586	31.182	0.686	36.493	0.786	41.804	0.886	47.115	0.986	52.426
0.087	4.797	0.187	10.088	0.287	15.360	0.387	20.641	0.487	25.932	0.587	31.235	0.687	36.546	0.787	41.857	0.887	47.168	0.987	52.480
0.088	4.850	0.188	10.141	0.288	15.412	0.388	20.694	0.488	25.985	0.588	31.288	0.688	36.599	0.788	41.910	0.888	47.222	0.988	52.533
0.089	4.903	0.189	10.194	0.289	15.465	0.389	20.746	0.489	26.038	0.589	31.341	0.689	36.652	0.789	41.964	0.889	47.275	0.989	52.586
0.090	4.956	0.190	10.247	0.290	15.518	0.390	20.799	0.490	26.091	0.590	31.394	0.690	36.706	0.790	42.017	0.890	47.328	0.990	52.639
0.091	5.008	0.191	10.299	0.291	15.570	0.391	20.852	0.491	26.144	0.591	31.448	0.691	36.759	0.791	42.070	0.891	47.381	0.991	52.692
0.092	5.061	0.192	10.352	0.292	15.623	0.392	20.905	0.492	26.197	0.592	31.501	0.692	36.812	0.792	42.123	0.892	47.434	0.992	52.745
0.093	5.114	0.193	10.405	0.293	15.676	0.393	20.958	0.493	26.250	0.593	31.554	0.693	36.865	0.793	42.176	0.893	47.487	0.993	52.798
0.094	5.167	0.194	10.458	0.294	15.729	0.394	21.011	0.494	26.303	0.594	31.607	0.694	36.918	0.794	42.229	0.894	47.540	0.994	52.851
0.095	5.220	0.195	10.511	0.295	15.781	0.395	21.064	0.495	26.356	0.595	31.660	0.695	36.971	0.795	42.282	0.895	47.593	0.995	52.904
0.096	5.273	0.196	10.563	0.296	15.834	0.396	21.116	0.496	26.409	0.596	31.713	0.696	37.024	0.796	42.335	0.896	47.646	0.996	52.958
0.097	5.326	0.197	10.616	0.297	15.887	0.397	21.169	0.497	26.462	0.597	31.766	0.697	37.077	0.797	42.388	0.897	47.700	0.997	53.011
0.098	5.379	0.198	10.669	0.298	15.940	0.398	21.222	0.498	26.515	0.598	31.819	0.698	37.130	0.798	42.442	0.898	47.753	0.998	53.064
0.099	5.432	0.199	10.722	0.299	15.992	0.399	21.275	0.499	26.568	0.599	31.872	0.699	37.184	0.799	42.495	0.899	47.806	0.999	53.117

NOTE: TANK STRAPPED AND COMPUTED IN ACCORDANCE WITH API STANDARD MPMS CHAPTER 2.2C.

NOTE: CAPACITY TABLE REFLECTS AN OPERATING TEMPERATURE OF 60 DEGREES F.

NOTE: LIQUID HEAD STRESS HAS BEEN APPLIED TO CAPACITY TABLE AT SPECIFIC GRAVITY 0.8500.

NOTE: A 8.3 CM CONE BOTTOM HAS BEEN APPLIED BELOW 5 CM

NOTE: NOMINAL TANK DIAMETER = 8.20 M SHELL HEIGHT = 4.756 M

DATE STRAPPED: 09/19/17 BY: RJ

DATE COMPUTED: 09/26/17 BY: WLH

DATE ISSUED: 09/26/17

AMSPEC

Meliadine

Portal #1

Item 20 - Final - Datasheet

Tank No. 5

INNAGE TABLE

Calibration@AmSpecGroup.com

CAPACITIES GIVEN IN CUBIC METERS

GAUGE HEIGHT: 4.959 M

mm	1 M	mm	1 M	mm	1 M	mm	1 M	mm	1 M	mm	1 M	mm	1 M	mm	1 M	mm	1 M	mm	1 M
0.000	53.170	0.100	58.481	0.200	63.792	0.300	69.098	0.400	74.391	0.500	79.685	0.600	84.978	0.700	90.272	0.800	95.565	0.900	100.859
0.001	53.223	0.101	58.534	0.201	63.845	0.301	69.151	0.401	74.444	0.501	79.738	0.601	85.031	0.701	90.325	0.801	95.618	0.901	100.912
0.002	53.276	0.102	58.587	0.202	63.898	0.302	69.204	0.402	74.497	0.502	79.791	0.602	85.084	0.702	90.378	0.802	95.671	0.902	100.965
0.003	53.329	0.103	58.640	0.203	63.951	0.303	69.257	0.403	74.550	0.503	79.844	0.603	85.137	0.703	90.431	0.803	95.724	0.903	101.018
0.004	53.382	0.104	58.693	0.204	64.005	0.304	69.310	0.404	74.603	0.504	79.897	0.604	85.190	0.704	90.484	0.804	95.777	0.904	101.070
0.005	53.436	0.105	58.747	0.205	64.058	0.305	69.363	0.405	74.656	0.505	79.950	0.605	85.243	0.705	90.536	0.805	95.830	0.905	101.123
0.006	53.489	0.106	58.800	0.206	64.111	0.306	69.416	0.406	74.709	0.506	80.003	0.606	85.296	0.706	90.589	0.806	95.883	0.906	101.176
0.007	53.542	0.107	58.853	0.207	64.164	0.307	69.469	0.407	74.762	0.507	80.055	0.607	85.349	0.707	90.642	0.807	95.936	0.907	101.229
0.008	53.595	0.108	58.906	0.208	64.217	0.308	69.521	0.408	74.815	0.508	80.108	0.608	85.402	0.708	90.695	0.808	95.989	0.908	101.282
0.009	53.648	0.109	58.959	0.209	64.270	0.309	69.574	0.409	74.868	0.509	80.161	0.609	85.455	0.709	90.748	0.809	96.042	0.909	101.335
0.010	53.701	0.110	59.012	0.210	64.323	0.310	69.627	0.410	74.921	0.510	80.214	0.610	85.508	0.710	90.801	0.810	96.095	0.910	101.388
0.011	53.754	0.111	59.065	0.211	64.376	0.311	69.680	0.411	74.974	0.511	80.267	0.611	85.561	0.711	90.854	0.811	96.148	0.911	101.441
0.012	53.807	0.112	59.118	0.212	64.429	0.312	69.733	0.412	75.027	0.512	80.320	0.612	85.614	0.712	90.907	0.812	96.200	0.912	101.494
0.013	53.860	0.113	59.171	0.213	64.483	0.313	69.786	0.413	75.080	0.513	80.373	0.613	85.667	0.713	90.960	0.813	96.253	0.913	101.547
0.014	53.914	0.114	59.225	0.214	64.536	0.314	69.839	0.414	75.133	0.514	80.426	0.614	85.719	0.714	91.013	0.814	96.306	0.914	101.600
0.015	53.967	0.115	59.278	0.215	64.589	0.315	69.892	0.415	75.185	0.515	80.479	0.615	85.772	0.715	91.066	0.815	96.359	0.915	101.653
0.016	54.020	0.116	59.331	0.216	64.642	0.316	69.945	0.416	75.238	0.516	80.532	0.616	85.825	0.716	91.119	0.816	96.412	0.916	101.706
0.017	54.073	0.117	59.384	0.217	64.695	0.317	69.998	0.417	75.291	0.517	80.585	0.617	85.878	0.717	91.172	0.817	96.465	0.917	101.759
0.018	54.126	0.118	59.437	0.218	64.748	0.318	70.051	0.418	75.344	0.518	80.638	0.618	85.931	0.718	91.225	0.818	96.518	0.918	101.812
0.019	54.179	0.119	59.490	0.219	64.801	0.319	70.104	0.419	75.397	0.519	80.691	0.619	85.984	0.719	91.278	0.819	96.571	0.919	101.864
0.020	54.232	0.120	59.543	0.220	64.854	0.320	70.157	0.420	75.450	0.520	80.744	0.620	86.037	0.720	91.331	0.820	96.624	0.920	101.917
0.021	54.285	0.121	59.596	0.221	64.907	0.321	70.210	0.421	75.503	0.521	80.797	0.621	86.090	0.721	91.383	0.821	96.677	0.921	101.970
0.022	54.338	0.122	59.649	0.222	64.961	0.322	70.263	0.422	75.556	0.522	80.849	0.622	86.143	0.722	91.436	0.822	96.730	0.922	102.023
0.023	54.392	0.123	59.703	0.223	65.014	0.323	70.315	0.423	75.609	0.523	80.902	0.623	86.196	0.723	91.489	0.823	96.783	0.923	102.076
0.024	54.445	0.124	59.756	0.224	65.067	0.324	70.368	0.424	75.662	0.524	80.955	0.624	86.249	0.724	91.542	0.824	96.836	0.924	102.129
0.025	54.498	0.125	59.809	0.225	65.120	0.325	70.421	0.425	75.715	0.525	81.008	0.625	86.302	0.725	91.595	0.825	96.889	0.925	102.182
0.026	54.551	0.126	59.862	0.226	65.173	0.326	70.474	0.426	75.768	0.526	81.061	0.626	86.355	0.726	91.648	0.826	96.942	0.926	102.235
0.027	54.604	0.127	59.915	0.227	65.226	0.327	70.527	0.427	75.821	0.527	81.114	0.627	86.408	0.727	91.701	0.827	96.995	0.927	102.288
0.028	54.657	0.128	59.968	0.228	65.279	0.328	70.580	0.428	75.874	0.528	81.167	0.628	86.461	0.728	91.754	0.828	97.047	0.928	102.341
0.029	54.710	0.129	60.021	0.229	65.332	0.329	70.633	0.429	75.927	0.529	81.220	0.629	86.513	0.729	91.807	0.829	97.100	0.929	102.394
0.030	54.763	0.130	60.074	0.230	65.385	0.330	70.686	0.430	75.979	0.530	81.273	0.630	86.566	0.730	91.860	0.830	97.153	0.930	102.447
0.031	54.816	0.131	60.127	0.231	65.439	0.331	70.739	0.431	76.032	0.531	81.326	0.631	86.619	0.731	91.913	0.831	97.206	0.931	102.500
0.032	54.870	0.132	60.181	0.232	65.492	0.332	70.792	0.432	76.085	0.532	81.379	0.632	86.672	0.732	91.966	0.832	97.259	0.932	102.553
0.033	54.923	0.133	60.234	0.233	65.545	0.333	70.845	0.433	76.138	0.533	81.432	0.633	86.725	0.733	92.019	0.833	97.312	0.933	102.606
0.034	54.976	0.134	60.287	0.234	65.598	0.334	70.898	0.434	76.191	0.534	81.485	0.634	86.778	0.734	92.072	0.834	97.365	0.934	102.659
0.035	55.029	0.135	60.340	0.235	65.651	0.335	70.951	0.435	76.244	0.535	81.538	0.635	86.831	0.735	92.125	0.835	97.418	0.935	102.711
0.036	55.082	0.136	60.393	0.236	65.704	0.336	71.004	0.436	76.297	0.536	81.591	0.636	86.884	0.736	92.177	0.836	97.471	0.936	102.764
0.037	55.135	0.137	60.446	0.237	65.757	0.337	71.057	0.437	76.350	0.537	81.643	0.637	86.937	0.737	92.230	0.837	97.524	0.937	102.817
0.038	55.188	0.138	60.499	0.238	65.810	0.338	71.109	0.438	76.403	0.538	81.696	0.638	86.990	0.738	92.283	0.838	97.577	0.938	102.870
0.039	55.241	0.139	60.552	0.239	65.863	0.339	71.162	0.439	76.456	0.539	81.749	0.639	87.043	0.739	92.336	0.839	97.630	0.939	102.923
0.040	55.294	0.140	60.605	0.240	65.917	0.340	71.215	0.440	76.509	0.540	81.802	0.640	87.096	0.740	92.389	0.840	97.683	0.940	102.976
0.041	55.347	0.141	60.659	0.241	65.970	0.341	71.268	0.441	76.562	0.541	81.855	0.641	87.149	0.741	92.442	0.841	97.736	0.941	103.029
0.042	55.401	0.142	60.712	0.242	66.023	0.342	71.321	0.442	76.615	0.542	81.908	0.642	87.202	0.742	92.495	0.842	97.789	0.942	103.082
0.043	55.454	0.143	60.765	0.243	66.076	0.343	71.374	0.443	76.668	0.543	81.961	0.643	87.255	0.743	92.548	0.843	97.841	0.943	103.135
0.044	55.507	0.144	60.818	0.244	66.129	0.344	71.427	0.444	76.721	0.544	82.014	0.644	87.307	0.744	92.601	0.844	97.894	0.944	103.188
0.045	55.560	0.145	60.871	0.245	66.182	0.345	71.480	0.445	76.773	0.545	82.067	0.645	87.360	0.745	92.654	0.845	97.947	0.945	103.241
0.046	55.613	0.146	60.924	0.246	66.235	0.346	71.533	0.446	76.826	0.546	82.120	0.646	87.413	0.746	92.707	0.846	98.000	0.946	103.294
0.047	55.666	0.147	60.977	0.247	66.288	0.347	71.586	0.447	76.879	0.547	82.173	0.647	87.466	0.747	92.760	0.847	98.053	0.947	103.347
0.048	55.719	0.148	61.030	0.248	66.341	0.348	71.639	0.448	76.932	0.548	82.226	0.648	87.519	0.748	92.813	0.848	98.106	0.948	103.400
0.049	55.772	0.149	61.083	0.249	66.395	0.349	71.692	0.449	76.985	0.549	82.279	0.649	87.572	0.749	92.866	0.849	98.159	0.949	103.453
0.050	55.825	0.150	61.137	0.250	66.448	0.350	71.745	0.450	77.038	0.550	82.332	0.650	87.625	0.750	92.919	0.850	98.212	0.950	103.505
0.051	55.879	0.151	61.190	0.251	66.501	0.351	71.798	0.451	77.091	0.551	82.385	0.651	87.678	0.751	92.971	0.851	98.265	0.951	103.558
0.052	55.932	0.152	61.243	0.252	66.554	0.352	71.851	0.452	77.144	0.552	82.438	0.652	87.731	0.752	93.024	0.852	98.318	0.952	103.611
0.053	55.985	0.153	61.296	0.253	66.607	0.353	71.904	0.453	77.197	0.553	82.490	0.653	87.784	0.753	93.077	0.853	98.371	0.953	103.664
0.054	56.038	0.154	61.349	0.254	66.660	0.354	71.956	0.454	77.250	0.554	82.543	0.654	87.837	0.754	93.130	0.854	98.424	0.954	103.717
0.055	56.091	0.155	61.402	0.255	66.713	0.355	72.009	0.455	77.303	0.555	82.596	0.655	87.890	0.755	93.183	0.855	98.477	0.955	103.770
0.056	56.144	0.156	61.455	0.256	66.766	0.356	72.062	0.456	77.356	0.556	82.649	0.656	87.943	0.756	93.236	0.856	98.530	0.956	103.823
0.057	56.197	0.157	61.508	0.257	66.819	0.357	72.115	0.457	77.409	0.557	82.702	0.657	87.996	0.757	93.289	0.857	98.583	0.957	103.876
0.058	56.250	0.158	61.561	0.258	66.873	0.358	72.168	0.458	77.462	0.558	82.755	0.658	88.049	0.758	93.342	0.858	98.635	0.958	103.929
0.059	56.303	0.159	61.615	0.259	66.926	0.359	72.221	0.459	77.515	0.559	82.808	0.659	88.102	0.759	93.395	0.859	98.688	0.959	103.982
0.060	56.357	0.160	61.668	0.260	66.979	0.360	72.274	0.460	77.568	0.560	82.861	0.660	88.154	0.760	93.448	0.860	98.741	0.960	104.035
0.061	56.410	0.161	61.721	0.261	67.032	0.361	72.327	0.461	77.620	0.561	82.914	0.661	88.207	0.761	93.501	0.861	98.794	0.961	104.088
0.062	56.463	0.162	61.774	0.262	67.085	0.362	72.380	0.462	77.673	0.562	82.967	0.662	88.260	0.762	93.554	0.862	98.847	0.962	104.141
0.063	56.516	0.163	61.827	0.263	67.138	0.363	72.433	0.463	77.726	0.563	83.020	0.663	88.313	0.763	93.607	0.863	98.900	0.963	104.194
0.064	56.569	0.164	61.880	0.264	67.191	0.364	72.486	0.464	77.779	0.564	83.073	0.664	88.366	0.764	93.660	0.864	98.953	0.964	104.247
0.065	56.622	0.165	61.933	0.265	67.244	0.365	72.539	0.465	77.832	0.565	83.126	0.665	88.419	0.765	93.713	0.865	99.006	0.965	104.299
0.066	56.675	0.166	61.986	0.266	67.297	0.366	72.592	0.466	77.885	0.566	83.179	0.666	88.472	0.766	93.766	0.866	99.059	0.966	104.352
0.067	56.728	0.167	62.039	0.267	67.350	0.367	72.645	0.467	77.938	0.567	83.232	0.667	88.525	0.767	93.818	0.867	99.112	0.967	104.405
0.068	56.781	0.168	62.093	0.268	67.403	0.368	72.698	0.468	77.991	0.568	83.284	0.668	88.578	0.768	93.871	0.868	99.165	0.968	104.458
0.069	56.835	0.169	62.146	0.269	67.456	0.369	72.750	0.469	78.044	0.569	83.337	0.669	88.631	0.769	93.924	0.869	99.218	0.969	104.511
0.070	56.888	0.170	62.199	0.270	67.509	0.370	72.803	0.470	78.097	0.570	83.390	0.670	88.684	0.770	93.977	0.870	99.271	0.970	104.564
0.071	56.941	0.171	62.252	0.271	67.562	0.371	72.856	0.471	78.150	0.571	83.443	0.671	88.737	0.771	94.030	0.871	99.324	0.971	104.617
0.072	56.994	0.172	62.305	0.272	67.615	0.372	72.909	0.472	78.203	0.572	83.496	0.672	88.790	0.772	94.083	0.872	99.377	0.972	104.670
0.073	57.047	0.173	62.358	0.273	67.668	0.373	72.962	0.473	78.256	0.573	83.549	0.673	88.843	0.773	94.136	0.873	99.430	0.973	104.723
0.074	57.100	0.174	62.411	0.274	67.721	0.374	73.015	0.474	78.309	0.574	83.602	0.674	88.896	0.774	94.189	0.874	99.482	0.974	104.776
0.075	57.153	0.175	62.464	0.275	67.774	0.375	73.068	0.475	78.362	0.575	83.655	0.675	88.948	0.775	94.242	0.875	99.535	0.975	104.829
0.076	57.206	0.176	62.517	0.276	67.827	0.376	73.121	0.476	78.414	0.576	83.708	0.676	89.001	0.776	94.295	0.876	99.588	0.976	104.882
0.077	57.259	0.177	62.571	0.277	67.880	0.377	73.174	0.477	78.467	0.577	83.761	0.677	89.054	0.777	94.348	0.877	99.641	0.977	104.935
0.078	57.313	0.178	62.624	0.278	67.933	0.378	73.227	0.478	78.520	0.578	83.814	0.678	89.107	0.778	94.401	0.878	99.694	0.978	104.988
0.079	57.366	0.179	62.677	0.279	67.986	0.379	73.280	0.479	78.573	0.579	83.867	0.679	89.160	0.779	94.454	0.879	99.747	0.979	105.041
0.080	57.419	0.180	62.730	0.280	68.039	0.380	73.333	0.480	78.626	0.580	83.920	0.680	89.213	0.780	94.507	0.880	99.800	0.980	105.094
0.081	57.472	0.181	62.783	0.281	68.092	0.381	73.386	0.481	78.679	0.581	83.973	0.681	89.266	0.781	94.560	0.881	99.853	0.981	105.146
0.082	57.525	0.182	62.836	0.282	68.145	0.382	73.439	0.482	78.732	0.582	84.026	0.682	89.319	0.782	94.612	0.882	99.906	0.982	105.199
0.083	57.578	0.183	62.889	0.283	68.198	0.383	73.492	0.483	78.785	0.583	84.078	0.683	89.372	0.783	94.665	0.883	99.959	0.983	105.252
0.084	57.631	0.184	62.942	0.284	68.251	0.384	73.544	0.484	78.838	0.584	84.131	0.684	89.425	0.784	94.718	0.884	100.012	0.984	105.305
0.085	57.684	0.185	62.995	0.285	68.304	0.385	73.597	0.485	78.891	0.585	84.184	0.685	89.478	0.785	94.771	0.885	100.065	0.985	105.358
0.086	57.737	0.186	63.049	0.286	68.357	0.386	73.650	0.486	78.944	0.586	84.237	0.686	89.531	0.786	94.824	0.886	100.118	0.986	105.411
0.087	57.791	0.187	63.102	0.287	68.410	0.387	73.703	0.487	78.997	0.587	84.290	0.687	89.584	0.787	94.877	0.887	100.171	0.987	105.464
0.088	57.844	0.188	63.155	0.288	68.463	0.388	73.756	0.488	79.050	0.588	84.343	0.688	89.637	0.788	94.930	0.888	100.224	0.988	105.517
0.089	57.897	0.189	63.208	0.289	68.516	0.389	73.809	0.489	79.103	0.589	84.396	0.689	89.690	0.789	94.983	0.889	100.276	0.989	105.570
0.090	57.950	0.190	63.261	0.290	68.569	0.390	73.862	0.490	79.156	0.590	84.449	0.690	89.742	0.790	95.036	0.890	100.329	0.990	105.623
0.091	58.003	0.191	63.314	0.291	68.622	0.391	73.915	0.491	79.208	0.591	84.502	0.691	89.795	0.791	95.089	0.891	100.382	0.991	105.676
0.092	58.056	0.192	63.367	0.292	68.675	0.392	73.968	0.492	79.261	0.592	84.555	0.692	89.848	0.792	95.142	0.892	100.435	0.992	105.729
0.093	58.109	0.193	63.420	0.293	68.727	0.393	74.021	0.493	79.314	0.593	84.608	0.693	89.901	0.793	95.195	0.893	100.488	0.993	105.782
0.094	58.162	0.194	63.473	0.294	68.780	0.394	74.074	0.494	79.367	0.594	84.661	0.694	89.954	0.794	95.248	0.894	100.541	0.994	105.835
0.095	58.215	0.195	63.527	0.295	68.833	0.395	74.127	0.495	79.420	0.595	84.714	0.695	90.007	0.795	95.301	0.895	100.594	0.995	105.888
0.096	58.269	0.196	63.580	0.296	68.886	0.396	74.180	0.496	79.473	0.596	84.767	0.696	90.060	0.796	95.354	0.896	100.647	0.996	105.940
0.097	58.322	0.197	63.633	0.297	68.939	0.397	74.233	0.497	79.526	0.597	84.820	0.697	90.113	0.797	95.406	0.897	100.700	0.997	105.993
0.098	58.375	0.198	63.686	0.298	68.992	0.398	74.286	0.498	79.579	0.598	84.872	0.698	90.166	0.798	95.459	0.898	100.753	0.998	106.046
0.099	58.428	0.199	63.739	0.299	69.045	0.399	74.339	0.499	79.632	0.599	84.925	0.699	90.219	0.799	95.512	0.899	100.806	0.999	106.099

DATE STRAPPED: 09/19/17 BY: RJ

DATE COMPUTED: 09/26/17 BY: WLH

DATE ISSUED: 09/26/17

AMSPEC

Meliadine
Portal #1
Item 20 - Final - Datasheet

Tank No. 5
INNAGE TABLE

Calibration@AmSpecGroup.com

CAPACITIES GIVEN IN CUBIC METERS — **GAUGE HEIGHT: 4.959 M**

mm	2 M	mm	2 M	mm	2 M	mm	2 M	mm	2 M	mm	2 M	mm	2 M	mm	2 M	mm	2 M	mm	2 M
0.000	106.152	0.100	111.446	0.200	116.739	0.300	122.033	0.400	127.322	0.500	132.609	0.600	137.897	0.700	143.184	0.800	148.472	0.900	153.759
0.001	106.205	0.101	111.499	0.201	116.792	0.301	122.086	0.401	127.375	0.501	132.662	0.601	137.950	0.701	143.237	0.801	148.525	0.901	153.812
0.002	106.258	0.102	111.552	0.202	116.845	0.302	122.138	0.402	127.428	0.502	132.715	0.602	138.002	0.702	143.290	0.802	148.577	0.902	153.865
0.003	106.311	0.103	111.604	0.203	116.898	0.303	122.191	0.403	127.480	0.503	132.768	0.603	138.055	0.703	143.343	0.803	148.630	0.903	153.918
0.004	106.364	0.104	111.657	0.204	116.951	0.304	122.244	0.404	127.533	0.504	132.821	0.604	138.108	0.704	143.396	0.804	148.683	0.904	153.971
0.005	106.417	0.105	111.710	0.205	117.004	0.305	122.297	0.405	127.586	0.505	132.874	0.605	138.161	0.705	143.449	0.805	148.736	0.905	154.023
0.006	106.470	0.106	111.763	0.206	117.057	0.306	122.350	0.406	127.639	0.506	132.927	0.606	138.214	0.706	143.501	0.806	148.789	0.906	154.076
0.007	106.523	0.107	111.816	0.207	117.110	0.307	122.403	0.407	127.692	0.507	132.979	0.607	138.267	0.707	143.554	0.807	148.842	0.907	154.129
0.008	106.576	0.108	111.869	0.208	117.163	0.308	122.456	0.408	127.745	0.508	133.032	0.608	138.320	0.708	143.607	0.808	148.895	0.908	154.182
0.009	106.629	0.109	111.922	0.209	117.216	0.309	122.509	0.409	127.798	0.509	133.085	0.609	138.373	0.709	143.660	0.809	148.947	0.909	154.235
0.010	106.682	0.110	111.975	0.210	117.268	0.310	122.562	0.410	127.851	0.510	133.138	0.610	138.425	0.710	143.713	0.810	149.000	0.910	154.288
0.011	106.734	0.111	112.028	0.211	117.321	0.311	122.615	0.411	127.903	0.511	133.191	0.611	138.478	0.711	143.766	0.811	149.053	0.911	154.341
0.012	106.787	0.112	112.081	0.212	117.374	0.312	122.668	0.412	127.956	0.512	133.244	0.612	138.531	0.712	143.819	0.812	149.106	0.912	154.394
0.013	106.840	0.113	112.134	0.213	117.427	0.313	122.721	0.413	128.009	0.513	133.297	0.613	138.584	0.713	143.872	0.813	149.159	0.913	154.446
0.014	106.893	0.114	112.187	0.214	117.480	0.314	122.774	0.414	128.062	0.514	133.350	0.614	138.637	0.714	143.924	0.814	149.212	0.914	154.499
0.015	106.946	0.115	112.240	0.215	117.533	0.315	122.827	0.415	128.115	0.515	133.402	0.615	138.690	0.715	143.977	0.815	149.265	0.915	154.552
0.016	106.999	0.116	112.293	0.216	117.586	0.316	122.880	0.416	128.168	0.516	133.455	0.616	138.743	0.716	144.030	0.816	149.318	0.916	154.605
0.017	107.052	0.117	112.346	0.217	117.639	0.317	122.932	0.417	128.221	0.517	133.508	0.617	138.796	0.717	144.083	0.817	149.370	0.917	154.658
0.018	107.105	0.118	112.398	0.218	117.692	0.318	122.985	0.418	128.274	0.518	133.561	0.618	138.848	0.718	144.136	0.818	149.423	0.918	154.711
0.019	107.158	0.119	112.451	0.219	117.745	0.319	123.038	0.419	128.326	0.519	133.614	0.619	138.901	0.719	144.189	0.819	149.476	0.919	154.764
0.020	107.211	0.120	112.504	0.220	117.798	0.320	123.091	0.420	128.379	0.520	133.667	0.620	138.954	0.720	144.242	0.820	149.529	0.920	154.817
0.021	107.264	0.121	112.557	0.221	117.851	0.321	123.144	0.421	128.432	0.521	133.720	0.621	139.007	0.721	144.295	0.821	149.582	0.921	154.869
0.022	107.317	0.122	112.610	0.222	117.904	0.322	123.197	0.422	128.485	0.522	133.773	0.622	139.060	0.722	144.347	0.822	149.635	0.922	154.922
0.023	107.370	0.123	112.663	0.223	117.957	0.323	123.250	0.423	128.538	0.523	133.825	0.623	139.113	0.723	144.400	0.823	149.688	0.923	154.975
0.024	107.423	0.124	112.716	0.224	118.010	0.324	123.303	0.424	128.591	0.524	133.878	0.624	139.166	0.724	144.453	0.824	149.741	0.924	155.028
0.025	107.476	0.125	112.769	0.225	118.062	0.325	123.356	0.425	128.644	0.525	133.931	0.625	139.219	0.725	144.506	0.825	149.793	0.925	155.081
0.026	107.528	0.126	112.822	0.226	118.115	0.326	123.409	0.426	128.697	0.526	133.984	0.626	139.271	0.726	144.559	0.826	149.846	0.926	155.134
0.027	107.581	0.127	112.875	0.227	118.168	0.327	123.462	0.427	128.749	0.527	134.037	0.627	139.324	0.727	144.612	0.827	149.899	0.927	155.187
0.028	107.634	0.128	112.928	0.228	118.221	0.328	123.515	0.428	128.802	0.528	134.090	0.628	139.377	0.728	144.665	0.828	149.952	0.928	155.240
0.029	107.687	0.129	112.981	0.229	118.274	0.329	123.568	0.429	128.855	0.529	134.143	0.629	139.430	0.729	144.718	0.829	150.005	0.929	155.292
0.030	107.740	0.130	113.034	0.230	118.327	0.330	123.621	0.430	128.908	0.530	134.196	0.630	139.483	0.730	144.770	0.830	150.058	0.930	155.345
0.031	107.793	0.131	113.087	0.231	118.380	0.331	123.673	0.431	128.961	0.531	134.248	0.631	139.536	0.731	144.823	0.831	150.111	0.931	155.398
0.032	107.846	0.132	113.140	0.232	118.433	0.332	123.726	0.432	129.014	0.532	134.301	0.632	139.589	0.732	144.876	0.832	150.164	0.932	155.451
0.033	107.899	0.133	113.192	0.233	118.486	0.333	123.779	0.433	129.067	0.533	134.354	0.633	139.642	0.733	144.929	0.833	150.216	0.933	155.504
0.034	107.952	0.134	113.245	0.234	118.539	0.334	123.832	0.434	129.120	0.534	134.407	0.634	139.694	0.734	144.982	0.834	150.269	0.934	155.557
0.035	108.005	0.135	113.298	0.235	118.592	0.335	123.885	0.435	129.172	0.535	134.460	0.635	139.747	0.735	145.035	0.835	150.322	0.935	155.610
0.036	108.058	0.136	113.351	0.236	118.645	0.336	123.938	0.436	129.225	0.536	134.513	0.636	139.800	0.736	145.088	0.836	150.375	0.936	155.663
0.037	108.111	0.137	113.404	0.237	118.698	0.337	123.991	0.437	129.278	0.537	134.566	0.637	139.853	0.737	145.141	0.837	150.428	0.937	155.715
0.038	108.164	0.138	113.457	0.238	118.751	0.338	124.044	0.438	129.331	0.538	134.619	0.638	139.906	0.738	145.193	0.838	150.481	0.938	155.768
0.039	108.217	0.139	113.510	0.239	118.804	0.339	124.096	0.439	129.384	0.539	134.671	0.639	139.959	0.739	145.246	0.839	150.534	0.939	155.821
0.040	108.270	0.140	113.563	0.240	118.856	0.340	124.149	0.440	129.437	0.540	134.724	0.640	140.012	0.740	145.299	0.840	150.587	0.940	155.874
0.041	108.323	0.141	113.616	0.241	118.909	0.341	124.202	0.441	129.490	0.541	134.777	0.641	140.065	0.741	145.352	0.841	150.639	0.941	155.927
0.042	108.375	0.142	113.669	0.242	118.962	0.342	124.255	0.442	129.543	0.542	134.830	0.642	140.117	0.742	145.405	0.842	150.692	0.942	155.980
0.043	108.428	0.143	113.722	0.243	119.015	0.343	124.308	0.443	129.595	0.543	134.883	0.643	140.170	0.743	145.458	0.843	150.745	0.943	156.033
0.044	108.481	0.144	113.775	0.244	119.068	0.344	124.361	0.444	129.648	0.544	134.936	0.644	140.223	0.744	145.511	0.844	150.798	0.944	156.086
0.045	108.534	0.145	113.828	0.245	119.121	0.345	124.414	0.445	129.701	0.545	134.989	0.645	140.276	0.745	145.564	0.845	150.851	0.945	156.138
0.046	108.587	0.146	113.881	0.246	119.174	0.346	124.467	0.446	129.754	0.546	135.042	0.646	140.329	0.746	145.616	0.846	150.904	0.946	156.191
0.047	108.640	0.147	113.934	0.247	119.227	0.347	124.519	0.447	129.807	0.547	135.094	0.647	140.382	0.747	145.669	0.847	150.957	0.947	156.244
0.048	108.693	0.148	113.987	0.248	119.280	0.348	124.572	0.448	129.860	0.548	135.147	0.648	140.435	0.748	145.722	0.848	151.010	0.948	156.297
0.049	108.746	0.149	114.039	0.249	119.333	0.349	124.625	0.449	129.913	0.549	135.200	0.649	140.488	0.749	145.775	0.849	151.062	0.949	156.350
0.050	108.799	0.150	114.092	0.250	119.386	0.350	124.678	0.450	129.966	0.550	135.253	0.650	140.540	0.750	145.828	0.850	151.115	0.950	156.403
0.051	108.852	0.151	114.145	0.251	119.439	0.351	124.731	0.451	130.018	0.551	135.306	0.651	140.593	0.751	145.881	0.851	151.168	0.951	156.456
0.052	108.905	0.152	114.198	0.252	119.492	0.352	124.784	0.452	130.071	0.552	135.359	0.652	140.646	0.752	145.934	0.852	151.221	0.952	156.509
0.053	108.958	0.153	114.251	0.253	119.545	0.353	124.837	0.453	130.124	0.553	135.412	0.653	140.699	0.753	145.987	0.853	151.274	0.953	156.561
0.054	109.011	0.154	114.304	0.254	119.598	0.354	124.890	0.454	130.177	0.554	135.465	0.654	140.752	0.754	146.039	0.854	151.327	0.954	156.614
0.055	109.064	0.155	114.357	0.255	119.651	0.355	124.942	0.455	130.230	0.555	135.517	0.655	140.805	0.755	146.092	0.855	151.380	0.955	156.667
0.056	109.117	0.156	114.410	0.256	119.703	0.356	124.995	0.456	130.283	0.556	135.570	0.656	140.858	0.756	146.145	0.856	151.433	0.956	156.720
0.057	109.169	0.157	114.463	0.257	119.756	0.357	125.048	0.457	130.336	0.557	135.623	0.657	140.911	0.757	146.198	0.857	151.485	0.957	156.773
0.058	109.222	0.158	114.516	0.258	119.809	0.358	125.101	0.458	130.389	0.558	135.676	0.658	140.963	0.758	146.251	0.858	151.538	0.958	156.826
0.059	109.275	0.159	114.569	0.259	119.862	0.359	125.154	0.459	130.441	0.559	135.729	0.659	141.016	0.759	146.304	0.859	151.591	0.959	156.879
0.060	109.328	0.160	114.622	0.260	119.915	0.360	125.207	0.460	130.494	0.560	135.782	0.660	141.069	0.760	146.357	0.860	151.644	0.960	156.932
0.061	109.381	0.161	114.675	0.261	119.968	0.361	125.260	0.461	130.547	0.561	135.835	0.661	141.122	0.761	146.410	0.861	151.697	0.961	156.984
0.062	109.434	0.162	114.728	0.262	120.021	0.362	125.313	0.462	130.600	0.562	135.887	0.662	141.175	0.762	146.462	0.862	151.750	0.962	157.037
0.063	109.487	0.163	114.781	0.263	120.074	0.363	125.365	0.463	130.653	0.563	135.940	0.663	141.228	0.763	146.515	0.863	151.803	0.963	157.090
0.064	109.540	0.164	114.833	0.264	120.127	0.364	125.418	0.464	130.706	0.564	135.993	0.664	141.281	0.764	146.568	0.864	151.856	0.964	157.143
0.065	109.593	0.165	114.886	0.265	120.180	0.365	125.471	0.465	130.759	0.565	136.046	0.665	141.334	0.765	146.621	0.865	151.908	0.965	157.196
0.066	109.646	0.166	114.939	0.266	120.233	0.366	125.524	0.466	130.812	0.566	136.099	0.666	141.386	0.766	146.674	0.866	151.961	0.966	157.249
0.067	109.699	0.167	114.992	0.267	120.286	0.367	125.577	0.467	130.864	0.567	136.152	0.667	141.439	0.767	146.727	0.867	152.014	0.967	157.302
0.068	109.752	0.168	115.045	0.268	120.339	0.368	125.630	0.468	130.917	0.568	136.205	0.668	141.492	0.768	146.780	0.868	152.067	0.968	157.355
0.069	109.805	0.169	115.098	0.269	120.392	0.369	125.683	0.469	130.970	0.569	136.258	0.669	141.545	0.769	146.833	0.869	152.120	0.969	157.407
0.070	109.858	0.170	115.151	0.270	120.445	0.370	125.736	0.470	131.023	0.570	136.310	0.670	141.598	0.770	146.885	0.870	152.173	0.970	157.460
0.071	109.911	0.171	115.204	0.271	120.497	0.371	125.788	0.471	131.076	0.571	136.363	0.671	141.651	0.771	146.938	0.871	152.226	0.971	157.513
0.072	109.963	0.172	115.257	0.272	120.550	0.372	125.841	0.472	131.129	0.572	136.416	0.672	141.704	0.772	146.991	0.872	152.279	0.972	157.566
0.073	110.016	0.173	115.310	0.273	120.603	0.373	125.894	0.473	131.182	0.573	136.469	0.673	141.757	0.773	147.044	0.873	152.331	0.973	157.619
0.074	110.069	0.174	115.363	0.274	120.656	0.374	125.947	0.474	131.235	0.574	136.522	0.674	141.809	0.774	147.097	0.874	152.384	0.974	157.672
0.075	110.122	0.175	115.416	0.275	120.709	0.375	126.000	0.475	131.287	0.575	136.575	0.675	141.862	0.775	147.150	0.875	152.437	0.975	157.725
0.076	110.175	0.176	115.469	0.276	120.762	0.376	126.053	0.476	131.340	0.576	136.628	0.676	141.915	0.776	147.203	0.876	152.490	0.976	157.778
0.077	110.228	0.177	115.522	0.277	120.815	0.377	126.106	0.477	131.393	0.577	136.681	0.677	141.968	0.777	147.256	0.877	152.543	0.977	157.830
0.078	110.281	0.178	115.575	0.278	120.868	0.378	126.159	0.478	131.446	0.578	136.733	0.678	142.021	0.778	147.308	0.878	152.596	0.978	157.883
0.079	110.334	0.179	115.627	0.279	120.921	0.379	126.211	0.479	131.499	0.579	136.786	0.679	142.074	0.779	147.361	0.879	152.649	0.979	157.936
0.080	110.387	0.180	115.680	0.280	120.974	0.380	126.264	0.480	131.552	0.580	136.839	0.680	142.127	0.780	147.414	0.880	152.702	0.980	157.989
0.081	110.440	0.181	115.733	0.281	121.027	0.381	126.317	0.481	131.605	0.581	136.892	0.681	142.180	0.781	147.467	0.881	152.754	0.981	158.042
0.082	110.493	0.182	115.786	0.282	121.080	0.382	126.370	0.482	131.658	0.582	136.945	0.682	142.232	0.782	147.520	0.882	152.807	0.982	158.095
0.083	110.546	0.183	115.839	0.283	121.133	0.383	126.423	0.483	131.710	0.583	136.998	0.683	142.285	0.783	147.573	0.883	152.860	0.983	158.148
0.084	110.599	0.184	115.892	0.284	121.186	0.384	126.476	0.484	131.763	0.584	137.051	0.684	142.338	0.784	147.626	0.884	152.913	0.984	158.201
0.085	110.652	0.185	115.945	0.285	121.239	0.385	126.529	0.485	131.816	0.585	137.104	0.685	142.391	0.785	147.679	0.885	152.966	0.985	158.253
0.086	110.705	0.186	115.998	0.286	121.291	0.386	126.582	0.486	131.869	0.586	137.156	0.686	142.444	0.786	147.731	0.886	153.019	0.986	158.306
0.087	110.758	0.187	116.051	0.287	121.344	0.387	126.634	0.487	131.922	0.587	137.209	0.687	142.497	0.787	147.784	0.887	153.072	0.987	158.359
0.088	110.810	0.188	116.104	0.288	121.397	0.388	126.687	0.488	131.975	0.588	137.262	0.688	142.550	0.788	147.837	0.888	153.125	0.988	158.412
0.089	110.863	0.189	116.157	0.289	121.450	0.389	126.740	0.489	132.028	0.589	137.315	0.689	142.603	0.789	147.890	0.889	153.177	0.989	158.465
0.090	110.916	0.190	116.210	0.290	121.503	0.390	126.793	0.490	132.081	0.590	137.368	0.690	142.655	0.790	147.943	0.890	153.230	0.990	158.518
0.091	110.969	0.191	116.263	0.291	121.556	0.391	126.846	0.491	132.133	0.591	137.421	0.691	142.708	0.791	147.996	0.891	153.283	0.991	158.571
0.092	111.022	0.192	116.316	0.292	121.609	0.392	126.899	0.492	132.186	0.592	137.474	0.692	142.761	0.792	148.049	0.892	153.336	0.992	158.624
0.093	111.075	0.193	116.369	0.293	121.662	0.393	126.952	0.493	132.239	0.593	137.527	0.693	142.814	0.793	148.102	0.893	153.389	0.993	158.676
0.094	111.128	0.194	116.422	0.294	121.715	0.394	127.005	0.494	132.292	0.594	137.579	0.694	142.867	0.794	148.154	0.894	153.442	0.994	158.729
0.095	111.181	0.195	116.474	0.295	121.768	0.395	127.057	0.495	132.345	0.595	137.632	0.695	142.920	0.795	148.207	0.895	153.495	0.995	158.782
0.096	111.234	0.196	116.527	0.296	121.821	0.396	127.110	0.496	132.398	0.596	137.685	0.696	142.973	0.796	148.260	0.896	153.548	0.996	158.835
0.097	111.287	0.197	116.580	0.297	121.874	0.397	127.163	0.497	132.451	0.597	137.738	0.697	143.026	0.797	148.313	0.897	153.600	0.997	158.888
0.098	111.340	0.198	116.633	0.298	121.927	0.398	127.216	0.498	132.504	0.598	137.791	0.698	143.078	0.798	148.366	0.898	153.653	0.998	158.941
0.099	111.393	0.199	116.686	0.299	121.980	0.399	127.269	0.499	132.556	0.599	137.844	0.699	143.131	0.799	148.419	0.899	153.706	0.999	158.994

NOTE: 42.0 GALLONS EQUAL 1.0 BARRELS
NOTE: 1 KILOLITER EQUALS 1 CUBIC METER

DATE STRAPPED: 09/19/17 BY: RJ
DATE COMPUTED: 09/26/17 BY: WLH
DATE ISSUED: 09/26/17

AMSPEC

Meliadine
Portal #1
Item 20 - Final - Datasheet

Tank No. 5
INNAGE TABLE

Calibration@AmSpecGroup.com

CAPACITIES GIVEN IN CUBIC METERS — **GAUGE HEIGHT: 4.959 M**

mm	3 M	mm	3 M	mm	3 M	mm	3 M	mm	3 M	mm	3 M	mm	3 M	mm	3 M	mm	3 M	mm	3 M
0.000	159.047	0.100	164.334	0.200	169.621	0.300	174.909	0.400	180.196	0.500	185.484	0.600	190.771	0.700	196.059	0.800	201.346	0.900	206.634
0.001	159.099	0.101	164.387	0.201	169.674	0.301	174.962	0.401	180.249	0.501	185.537	0.601	190.824	0.701	196.112	0.801	201.399	0.901	206.686
0.002	159.152	0.102	164.440	0.202	169.727	0.302	175.015	0.402	180.302	0.502	185.590	0.602	190.877	0.702	196.164	0.802	201.452	0.902	206.739
0.003	159.205	0.103	164.493	0.203	169.780	0.303	175.068	0.403	180.355	0.503	185.642	0.603	190.930	0.703	196.217	0.803	201.505	0.903	206.792
0.004	159.258	0.104	164.545	0.204	169.833	0.304	175.120	0.404	180.408	0.504	185.695	0.604	190.983	0.704	196.270	0.804	201.558	0.904	206.845
0.005	159.311	0.105	164.598	0.205	169.886	0.305	175.173	0.405	180.461	0.505	185.748	0.605	191.036	0.705	196.323	0.805	201.611	0.905	206.898
0.006	159.364	0.106	164.651	0.206	169.939	0.306	175.226	0.406	180.514	0.506	185.801	0.606	191.088	0.706	196.376	0.806	201.663	0.906	206.951
0.007	159.417	0.107	164.704	0.207	169.992	0.307	175.279	0.407	180.566	0.507	185.854	0.607	191.141	0.707	196.429	0.807	201.716	0.907	207.004
0.008	159.470	0.108	164.757	0.208	170.044	0.308	175.332	0.408	180.619	0.508	185.907	0.608	191.194	0.708	196.482	0.808	201.769	0.908	207.057
0.009	159.522	0.109	164.810	0.209	170.097	0.309	175.385	0.409	180.672	0.509	185.960	0.609	191.247	0.709	196.535	0.809	201.822	0.909	207.109
0.010	159.575	0.110	164.863	0.210	170.150	0.310	175.438	0.410	180.725	0.510	186.013	0.610	191.300	0.710	196.587	0.810	201.875	0.910	207.162
0.011	159.628	0.111	164.916	0.211	170.203	0.311	175.491	0.411	180.778	0.511	186.065	0.611	191.353	0.711	196.640	0.811	201.928	0.911	207.215
0.012	159.681	0.112	164.968	0.212	170.256	0.312	175.543	0.412	180.831	0.512	186.118	0.612	191.406	0.712	196.693	0.812	201.981	0.912	207.268
0.013	159.734	0.113	165.021	0.213	170.309	0.313	175.596	0.413	180.884	0.513	186.171	0.613	191.459	0.713	196.746	0.813	202.034	0.913	207.321
0.014	159.787	0.114	165.074	0.214	170.362	0.314	175.649	0.414	180.937	0.514	186.224	0.614	191.511	0.714	196.799	0.814	202.086	0.914	207.374
0.015	159.840	0.115	165.127	0.215	170.415	0.315	175.702	0.415	180.989	0.515	186.277	0.615	191.564	0.715	196.852	0.815	202.139	0.915	207.427
0.016	159.893	0.116	165.180	0.216	170.467	0.316	175.755	0.416	181.042	0.516	186.330	0.616	191.617	0.716	196.905	0.816	202.192	0.916	207.480
0.017	159.945	0.117	165.233	0.217	170.520	0.317	175.808	0.417	181.095	0.517	186.383	0.617	191.670	0.717	196.958	0.817	202.245	0.917	207.532
0.018	159.998	0.118	165.286	0.218	170.573	0.318	175.861	0.418	181.148	0.518	186.436	0.618	191.723	0.718	197.010	0.818	202.298	0.918	207.585
0.019	160.051	0.119	165.339	0.219	170.626	0.319	175.913	0.419	181.201	0.519	186.488	0.619	191.776	0.719	197.063	0.819	202.351	0.919	207.638
0.020	160.104	0.120	165.391	0.220	170.679	0.320	175.966	0.420	181.254	0.520	186.541	0.620	191.829	0.720	197.116	0.820	202.404	0.920	207.691
0.021	160.157	0.121	165.444	0.221	170.732	0.321	176.019	0.421	181.307	0.521	186.594	0.621	191.882	0.721	197.169	0.821	202.456	0.921	207.744
0.022	160.210	0.122	165.497	0.222	170.785	0.322	176.072	0.422	181.360	0.522	186.647	0.622	191.934	0.722	197.222	0.822	202.509	0.922	207.797
0.023	160.263	0.123	165.550	0.223	170.838	0.323	176.125	0.423	181.412	0.523	186.700	0.623	191.987	0.723	197.275	0.823	202.562	0.923	207.850
0.024	160.316	0.124	165.603	0.224	170.890	0.324	176.178	0.424	181.465	0.524	186.753	0.624	192.040	0.724	197.328	0.824	202.615	0.924	207.903
0.025	160.368	0.125	165.656	0.225	170.943	0.325	176.231	0.425	181.518	0.525	186.806	0.625	192.093	0.725	197.381	0.825	202.668	0.925	207.955
0.026	160.421	0.126	165.709	0.226	170.996	0.326	176.284	0.426	181.571	0.526	186.859	0.626	192.146	0.726	197.433	0.826	202.721	0.926	208.008
0.027	160.474	0.127	165.762	0.227	171.049	0.327	176.336	0.427	181.624	0.527	186.911	0.627	192.199	0.727	197.486	0.827	202.774	0.927	208.061
0.028	160.527	0.128	165.814	0.228	171.102	0.328	176.389	0.428	181.677	0.528	186.964	0.628	192.252	0.728	197.539	0.828	202.827	0.928	208.114
0.029	160.580	0.129	165.867	0.229	171.155	0.329	176.442	0.429	181.730	0.529	187.017	0.629	192.305	0.729	197.592	0.829	202.879	0.929	208.167
0.030	160.633	0.130	165.920	0.230	171.208	0.330	176.495	0.430	181.783	0.530	187.070	0.630	192.357	0.730	197.645	0.830	202.932	0.930	208.220
0.031	160.686	0.131	165.973	0.231	171.261	0.331	176.548	0.431	181.835	0.531	187.123	0.631	192.410	0.731	197.698	0.831	202.985	0.931	208.273
0.032	160.739	0.132	166.026	0.232	171.313	0.332	176.601	0.432	181.888	0.532	187.176	0.632	192.463	0.732	197.751	0.832	203.038	0.932	208.326
0.033	160.791	0.133	166.079	0.233	171.366	0.333	176.654	0.433	181.941	0.533	187.229	0.633	192.516	0.733	197.804	0.833	203.091	0.933	208.378
0.034	160.844	0.134	166.132	0.234	171.419	0.334	176.707	0.434	181.994	0.534	187.282	0.634	192.569	0.734	197.856	0.834	203.144	0.934	208.431
0.035	160.897	0.135	166.185	0.235	171.472	0.335	176.759	0.435	182.047	0.535	187.334	0.635	192.622	0.735	197.909	0.835	203.197	0.935	208.484
0.036	160.950	0.136	166.237	0.236	171.525	0.336	176.812	0.436	182.100	0.536	187.387	0.636	192.675	0.736	197.962	0.836	203.250	0.936	208.537
0.037	161.003	0.137	166.290	0.237	171.578	0.337	176.865	0.437	182.153	0.537	187.440	0.637	192.728	0.737	198.015	0.837	203.302	0.937	208.590
0.038	161.056	0.138	166.343	0.238	171.631	0.338	176.918	0.438	182.206	0.538	187.493	0.638	192.780	0.738	198.068	0.838	203.355	0.938	208.643
0.039	161.109	0.139	166.396	0.239	171.684	0.339	176.971	0.439	182.258	0.539	187.546	0.639	192.833	0.739	198.121	0.839	203.408	0.939	208.696
0.040	161.162	0.140	166.449	0.240	171.736	0.340	177.024	0.440	182.311	0.540	187.599	0.640	192.886	0.740	198.174	0.840	203.461	0.940	208.749
0.041	161.214	0.141	166.502	0.241	171.789	0.341	177.077	0.441	182.364	0.541	187.652	0.641	192.939	0.741	198.227	0.841	203.514	0.941	208.801
0.042	161.267	0.142	166.555	0.242	171.842	0.342	177.130	0.442	182.417	0.542	187.705	0.642	192.992	0.742	198.279	0.842	203.567	0.942	208.854
0.043	161.320	0.143	166.608	0.243	171.895	0.343	177.182	0.443	182.470	0.543	187.757	0.643	193.045	0.743	198.332	0.843	203.620	0.943	208.907
0.044	161.373	0.144	166.660	0.244	171.948	0.344	177.235	0.444	182.523	0.544	187.810	0.644	193.098	0.744	198.385	0.844	203.673	0.944	208.960
0.045	161.426	0.145	166.713	0.245	172.001	0.345	177.288	0.445	182.576	0.545	187.863	0.645	193.151	0.745	198.438	0.845	203.725	0.945	209.013
0.046	161.479	0.146	166.766	0.246	172.054	0.346	177.341	0.446	182.629	0.546	187.916	0.646	193.203	0.746	198.491	0.846	203.778	0.946	209.066
0.047	161.532	0.147	166.819	0.247	172.107	0.347	177.394	0.447	182.681	0.547	187.969	0.647	193.256	0.747	198.544	0.847	203.831	0.947	209.119
0.048	161.585	0.148	166.872	0.248	172.159	0.348	177.447	0.448	182.734	0.548	188.022	0.648	193.309	0.748	198.597	0.848	203.884	0.948	209.172
0.049	161.637	0.149	166.925	0.249	172.212	0.349	177.500	0.449	182.787	0.549	188.075	0.649	193.362	0.749	198.650	0.849	203.937	0.949	209.224
0.050	161.690	0.150	166.978	0.250	172.265	0.350	177.553	0.450	182.840	0.550	188.128	0.650	193.415	0.750	198.702	0.850	203.990	0.950	209.277
0.051	161.743	0.151	167.031	0.251	172.318	0.351	177.605	0.451	182.893	0.551	188.180	0.651	193.468	0.751	198.755	0.851	204.043	0.951	209.330
0.052	161.796	0.152	167.083	0.252	172.371	0.352	177.658	0.452	182.946	0.552	188.233	0.652	193.521	0.752	198.808	0.852	204.096	0.952	209.383
0.053	161.849	0.153	167.136	0.253	172.424	0.353	177.711	0.453	182.999	0.553	188.286	0.653	193.574	0.753	198.861	0.853	204.148	0.953	209.436
0.054	161.902	0.154	167.189	0.254	172.477	0.354	177.764	0.454	183.052	0.554	188.339	0.654	193.626	0.754	198.914	0.854	204.201	0.954	209.489
0.055	161.955	0.155	167.242	0.255	172.530	0.355	177.817	0.455	183.104	0.555	188.392	0.655	193.679	0.755	198.967	0.855	204.254	0.955	209.542
0.056	162.008	0.156	167.295	0.256	172.582	0.356	177.870	0.456	183.157	0.556	188.445	0.656	193.732	0.756	199.020	0.856	204.307	0.956	209.595
0.057	162.060	0.157	167.348	0.257	172.635	0.357	177.923	0.457	183.210	0.557	188.498	0.657	193.785	0.757	199.073	0.857	204.360	0.957	209.647
0.058	162.113	0.158	167.401	0.258	172.688	0.358	177.976	0.458	183.263	0.558	188.551	0.658	193.838	0.758	199.125	0.858	204.413	0.958	209.700
0.059	162.166	0.159	167.454	0.259	172.741	0.359	178.028	0.459	183.316	0.559	188.603	0.659	193.891	0.759	199.178	0.859	204.466	0.959	209.753
0.060	162.219	0.160	167.506	0.260	172.794	0.360	178.081	0.460	183.369	0.560	188.656	0.660	193.944	0.760	199.231	0.860	204.519	0.960	209.806
0.061	162.272	0.161	167.559	0.261	172.847	0.361	178.134	0.461	183.422	0.561	188.709	0.661	193.997	0.761	199.284	0.861	204.571	0.961	209.859
0.062	162.325	0.162	167.612	0.262	172.900	0.362	178.187	0.462	183.475	0.562	188.762	0.662	194.049	0.762	199.337	0.862	204.624	0.962	209.912
0.063	162.378	0.163	167.665	0.263	172.953	0.363	178.240	0.463	183.527	0.563	188.815	0.663	194.102	0.763	199.390	0.863	204.677	0.963	209.965
0.064	162.430	0.164	167.718	0.264	173.005	0.364	178.293	0.464	183.580	0.564	188.868	0.664	194.155	0.764	199.443	0.864	204.730	0.964	210.018
0.065	162.483	0.165	167.771	0.265	173.058	0.365	178.346	0.465	183.633	0.565	188.921	0.665	194.208	0.765	199.496	0.865	204.783	0.965	210.070
0.066	162.536	0.166	167.824	0.266	173.111	0.366	178.399	0.466	183.686	0.566	188.973	0.666	194.261	0.766	199.548	0.866	204.836	0.966	210.123
0.067	162.589	0.167	167.877	0.267	173.164	0.367	178.451	0.467	183.739	0.567	189.026	0.667	194.314	0.767	199.601	0.867	204.889	0.967	210.176
0.068	162.642	0.168	167.929	0.268	173.217	0.368	178.504	0.468	183.792	0.568	189.079	0.668	194.367	0.768	199.654	0.868	204.942	0.968	210.229
0.069	162.695	0.169	167.982	0.269	173.270	0.369	178.557	0.469	183.845	0.569	189.132	0.669	194.420	0.769	199.707	0.869	204.994	0.969	210.282
0.070	162.748	0.170	168.035	0.270	173.323	0.370	178.610	0.470	183.898	0.570	189.185	0.670	194.472	0.770	199.760	0.870	205.047	0.970	210.335
0.071	162.801	0.171	168.088	0.271	173.376	0.371	178.663	0.471	183.950	0.571	189.238	0.671	194.525	0.771	199.813	0.871	205.100	0.971	210.388
0.072	162.853	0.172	168.141	0.272	173.428	0.372	178.716	0.472	184.003	0.572	189.291	0.672	194.578	0.772	199.866	0.872	205.153	0.972	210.441
0.073	162.906	0.173	168.194	0.273	173.481	0.373	178.769	0.473	184.056	0.573	189.344	0.673	194.631	0.773	199.919	0.873	205.206	0.973	210.493
0.074	162.959	0.174	168.247	0.274	173.534	0.374	178.822	0.474	184.109	0.574	189.396	0.674	194.684	0.774	199.971	0.874	205.259	0.974	210.546
0.075	163.012	0.175	168.300	0.275	173.587	0.375	178.874	0.475	184.162	0.575	189.449	0.675	194.737	0.775	200.024	0.875	205.312	0.975	210.599
0.076	163.065	0.176	168.352	0.276	173.640	0.376	178.927	0.476	184.215	0.576	189.502	0.676	194.790	0.776	200.077	0.876	205.365	0.976	210.652
0.077	163.118	0.177	168.405	0.277	173.693	0.377	178.980	0.477	184.268	0.577	189.555	0.677	194.843	0.777	200.130	0.877	205.417	0.977	210.705
0.078	163.171	0.178	168.458	0.278	173.746	0.378	179.033	0.478	184.321	0.578	189.608	0.678	194.895	0.778	200.183	0.878	205.470	0.978	210.758
0.079	163.224	0.179	168.511	0.279	173.799	0.379	179.086	0.479	184.373	0.579	189.661	0.679	194.948	0.779	200.236	0.879	205.523	0.979	210.811
0.080	163.276	0.180	168.564	0.280	173.851	0.380	179.139	0.480	184.426	0.580	189.714	0.680	195.001	0.780	200.289	0.880	205.576	0.980	210.864
0.081	163.329	0.181	168.617	0.281	173.904	0.381	179.192	0.481	184.479	0.581	189.767	0.681	195.054	0.781	200.342	0.881	205.629	0.981	210.916
0.082	163.382	0.182	168.670	0.282	173.957	0.382	179.245	0.482	184.532	0.582	189.819	0.682	195.107	0.782	200.394	0.882	205.682	0.982	210.969
0.083	163.435	0.183	168.723	0.283	174.010	0.383	179.297	0.483	184.585	0.583	189.872	0.683	195.160	0.783	200.447	0.883	205.735	0.983	211.022
0.084	163.488	0.184	168.775	0.284	174.063	0.384	179.350	0.484	184.638	0.584	189.925	0.684	195.213	0.784	200.500	0.884	205.788	0.984	211.075
0.085	163.541	0.185	168.828	0.285	174.116	0.385	179.403	0.485	184.691	0.585	189.978	0.685	195.266	0.785	200.553	0.885	205.840	0.985	211.128
0.086	163.594	0.186	168.881	0.286	174.169	0.386	179.456	0.486	184.744	0.586	190.031	0.686	195.318	0.786	200.606	0.886	205.893	0.986	211.181
0.087	163.647	0.187	168.934	0.287	174.222	0.387	179.509	0.487	184.796	0.587	190.084	0.687	195.371	0.787	200.659	0.887	205.946	0.987	211.234
0.088	163.699	0.188	168.987	0.288	174.274	0.388	179.562	0.488	184.849	0.588	190.137	0.688	195.424	0.788	200.712	0.888	205.999	0.988	211.287
0.089	163.752	0.189	169.040	0.289	174.327	0.389	179.615	0.489	184.902	0.589	190.190	0.689	195.477	0.789	200.765	0.889	206.052	0.989	211.339
0.090	163.805	0.190	169.093	0.290	174.380	0.390	179.668	0.490	184.955	0.590	190.242	0.690	195.530	0.790	200.817	0.890	206.105	0.990	211.392
0.091	163.858	0.191	169.146	0.291	174.433	0.391	179.720	0.491	185.008	0.591	190.295	0.691	195.583	0.791	200.870	0.891	206.158	0.991	211.445
0.092	163.911	0.192	169.198	0.292	174.486	0.392	179.773	0.492	185.061	0.592	190.348	0.692	195.636	0.792	200.923	0.892	206.211	0.992	211.498
0.093	163.964	0.193	169.251	0.293	174.539	0.393	179.826	0.493	185.114	0.593	190.401	0.693	195.689	0.793	200.976	0.893	206.263	0.993	211.551
0.094	164.017	0.194	169.304	0.294	174.592	0.394	179.879	0.494	185.167	0.594	190.454	0.694	195.741	0.794	201.029	0.894	206.316	0.994	211.604
0.095	164.070	0.195	169.357	0.295	174.645	0.395	179.932	0.495	185.219	0.595	190.507	0.695	195.794	0.795	201.082	0.895	206.369	0.995	211.657
0.096	164.122	0.196	169.410	0.296	174.697	0.396	179.985	0.496	185.272	0.596	190.560	0.696	195.847	0.796	201.135	0.896	206.422	0.996	211.710
0.097	164.175	0.197	169.463	0.297	174.750	0.397	180.038	0.497	185.325	0.597	190.613	0.697	195.900	0.797	201.188	0.897	206.475	0.997	211.762
0.098	164.228	0.198	169.516	0.298	174.803	0.398	180.091	0.498	185.378	0.598	190.665	0.698	195.953	0.798	201.240	0.898	206.528	0.998	211.815
0.099	164.281	0.199	169.569	0.299	174.856	0.399	180.143	0.499	185.431	0.599	190.718	0.699	196.006	0.799	201.293	0.899	206.581	0.999	211.868

DATE STRAPPED: 09/19/17 BY: RJ
DATE COMPUTED: 09/26/17 BY: WLH
DATE ISSUED: 09/26/17

AMSPEC

Meliadine
Portal #1
Item 20 - Final - Datasheet

Tank No. 5
INNAGE TABLE

Calibration@AmSpecGroup.com

CAPACITIES GIVEN IN CUBIC METERS — **GAUGE HEIGHT: 4.959 M**

mm	4 M	mm	4 M	mm	4 M	mm	4 M	mm	4 M	mm	4 M	mm	4 M	mm	4 M	mm	4 M	mm	4 M
0.000	211.921	0.100	217.208	0.200	222.496	0.300	227.783	0.400	233.071	0.500	238.358	0.600	243.646	0.700	248.933	0.800		0.900	
0.001	211.974	0.101	217.261	0.201	222.549	0.301	227.836	0.401	233.124	0.501	238.411	0.601	243.699	0.701	248.986	0.801		0.901	
0.002	212.027	0.102	217.314	0.202	222.602	0.302	227.889	0.402	233.177	0.502	238.464	0.602	243.751	0.702	249.039	0.802		0.902	
0.003	212.080	0.103	217.367	0.203	222.655	0.303	227.942	0.403	233.229	0.503	238.517	0.603	243.804	0.703	249.092	0.803		0.903	
0.004	212.133	0.104	217.420	0.204	222.707	0.304	227.995	0.404	233.282	0.504	238.570	0.604	243.857	0.704	249.145	0.804		0.904	
0.005	212.185	0.105	217.473	0.205	222.760	0.305	228.048	0.405	233.335	0.505	238.623	0.605	243.910	0.705	249.198	0.805		0.905	
0.006	212.238	0.106	217.526	0.206	222.813	0.306	228.101	0.406	233.388	0.506	238.676	0.606	243.963	0.706	249.250	0.806		0.906	
0.007	212.291	0.107	217.579	0.207	222.866	0.307	228.154	0.407	233.441	0.507	238.728	0.607	244.016	0.707	249.303	0.807		0.907	
0.008	212.344	0.108	217.631	0.208	222.919	0.308	228.206	0.408	233.494	0.508	238.781	0.608	244.069	0.708	249.356	0.808		0.908	
0.009	212.397	0.109	217.684	0.209	222.972	0.309	228.259	0.409	233.547	0.509	238.834	0.609	244.122	0.709	249.409	0.809		0.909	
0.010	212.450	0.110	217.737	0.210	223.025	0.310	228.312	0.410	233.600	0.510	238.887	0.610	244.174	0.710	249.462	0.810		0.910	
0.011	212.503	0.111	217.790	0.211	223.078	0.311	228.365	0.411	233.652	0.511	238.940	0.611	244.227	0.711	249.515	0.811		0.911	
0.012	212.556	0.112	217.843	0.212	223.130	0.312	228.418	0.412	233.705	0.512	238.993	0.612	244.280	0.712	249.545	0.812		0.912	
0.013	212.608	0.113	217.896	0.213	223.183	0.313	228.471	0.413	233.758	0.513	239.046	0.613	244.333	0.713		0.813		0.913	
0.014	212.661	0.114	217.949	0.214	223.236	0.314	228.524	0.414	233.811	0.514	239.099	0.614	244.386	0.714		0.814		0.914	
0.015	212.714	0.115	218.002	0.215	223.289	0.315	228.577	0.415	233.864	0.515	239.151	0.615	244.439	0.715		0.815		0.915	
0.016	212.767	0.116	218.054	0.216	223.342	0.316	228.629	0.416	233.917	0.516	239.204	0.616	244.492	0.716		0.816		0.916	
0.017	212.820	0.117	218.107	0.217	223.395	0.317	228.682	0.417	233.970	0.517	239.257	0.617	244.545	0.717		0.817		0.917	
0.018	212.873	0.118	218.160	0.218	223.448	0.318	228.735	0.418	234.023	0.518	239.310	0.618	244.597	0.718		0.818		0.918	
0.019	212.926	0.119	218.213	0.219	223.501	0.319	228.788	0.419	234.075	0.519	239.363	0.619	244.650	0.719		0.819		0.919	
0.020	212.979	0.120	218.266	0.220	223.553	0.320	228.841	0.420	234.128	0.520	239.416	0.620	244.703	0.720		0.820		0.920	
0.021	213.031	0.121	218.319	0.221	223.606	0.321	228.894	0.421	234.181	0.521	239.469	0.621	244.756	0.721		0.821		0.921	
0.022	213.084	0.122	218.372	0.222	223.659	0.322	228.947	0.422	234.234	0.522	239.522	0.622	244.809	0.722		0.822		0.922	
0.023	213.137	0.123	218.425	0.223	223.712	0.323	228.999	0.423	234.287	0.523	239.574	0.623	244.862	0.723		0.823		0.923	
0.024	213.190	0.124	218.477	0.224	223.765	0.324	229.052	0.424	234.340	0.524	239.627	0.624	244.915	0.724		0.824		0.924	
0.025	213.243	0.125	218.530	0.225	223.818	0.325	229.105	0.425	234.393	0.525	239.680	0.625	244.968	0.725		0.825		0.925	
0.026	213.296	0.126	218.583	0.226	223.871	0.326	229.158	0.426	234.446	0.526	239.733	0.626	245.020	0.726		0.826		0.926	
0.027	213.349	0.127	218.636	0.227	223.924	0.327	229.211	0.427	234.498	0.527	239.786	0.627	245.073	0.727		0.827		0.927	
0.028	213.402	0.128	218.689	0.228	223.976	0.328	229.264	0.428	234.551	0.528	239.839	0.628	245.126	0.728		0.828		0.928	
0.029	213.454	0.129	218.742	0.229	224.029	0.329	229.317	0.429	234.604	0.529	239.892	0.629	245.179	0.729		0.829		0.929	
0.030	213.507	0.130	218.795	0.230	224.082	0.330	229.370	0.430	234.657	0.530	239.945	0.630	245.232	0.730		0.830		0.930	
0.031	213.560	0.131	218.848	0.231	224.135	0.331	229.422	0.431	234.710	0.531	239.997	0.631	245.285	0.731		0.831		0.931	
0.032	213.613	0.132	218.900	0.232	224.188	0.332	229.475	0.432	234.763	0.532	240.050	0.632	245.338	0.732		0.832		0.932	
0.033	213.666	0.133	218.953	0.233	224.241	0.333	229.528	0.433	234.816	0.533	240.103	0.633	245.391	0.733		0.833		0.933	
0.034	213.719	0.134	219.006	0.234	224.294	0.334	229.581	0.434	234.869	0.534	240.156	0.634	245.443	0.734		0.834		0.934	
0.035	213.772	0.135	219.059	0.235	224.347	0.335	229.634	0.435	234.921	0.535	240.209	0.635	245.496	0.735		0.835		0.935	
0.036	213.825	0.136	219.112	0.236	224.399	0.336	229.687	0.436	234.974	0.536	240.262	0.636	245.549	0.736		0.836		0.936	
0.037	213.877	0.137	219.165	0.237	224.452	0.337	229.740	0.437	235.027	0.537	240.315	0.637	245.602	0.737		0.837		0.937	
0.038	213.930	0.138	219.218	0.238	224.505	0.338	229.793	0.438	235.080	0.538	240.368	0.638	245.655	0.738		0.838		0.938	
0.039	213.983	0.139	219.271	0.239	224.558	0.339	229.845	0.439	235.133	0.539	240.420	0.639	245.708	0.739		0.839		0.939	
0.040	214.036	0.140	219.323	0.240	224.611	0.340	229.898	0.440	235.186	0.540	240.473	0.640	245.761	0.740		0.840		0.940	
0.041	214.089	0.141	219.376	0.241	224.664	0.341	229.951	0.441	235.239	0.541	240.526	0.641	245.814	0.741		0.841		0.941	
0.042	214.142	0.142	219.429	0.242	224.717	0.342	230.004	0.442	235.292	0.542	240.579	0.642	245.866	0.742		0.842		0.942	
0.043	214.195	0.143	219.482	0.243	224.770	0.343	230.057	0.443	235.344	0.543	240.632	0.643	245.919	0.743		0.843		0.943	
0.044	214.248	0.144	219.535	0.244	224.822	0.344	230.110	0.444	235.397	0.544	240.685	0.644	245.972	0.744		0.844		0.944	
0.045	214.300	0.145	219.588	0.245	224.875	0.345	230.163	0.445	235.450	0.545	240.738	0.645	246.025	0.745		0.845		0.945	
0.046	214.353	0.146	219.641	0.246	224.928	0.346	230.216	0.446	235.503	0.546	240.791	0.646	246.078	0.746		0.846		0.946	
0.047	214.406	0.147	219.694	0.247	224.981	0.347	230.268	0.447	235.556	0.547	240.843	0.647	246.131	0.747		0.847		0.947	
0.048	214.459	0.148	219.746	0.248	225.034	0.348	230.321	0.448	235.609	0.548	240.896	0.648	246.184	0.748		0.848		0.948	
0.049	214.512	0.149	219.799	0.249	225.087	0.349	230.374	0.449	235.662	0.549	240.949	0.649	246.237	0.749		0.849		0.949	
0.050	214.565	0.150	219.852	0.250	225.140	0.350	230.427	0.450	235.715	0.550	241.002	0.650	246.289	0.750		0.850		0.950	
0.051	214.618	0.151	219.905	0.251	225.193	0.351	230.480	0.451	235.767	0.551	241.055	0.651	246.342	0.751		0.851		0.951	
0.052	214.671	0.152	219.958	0.252	225.245	0.352	230.533	0.452	235.820	0.552	241.108	0.652	246.395	0.752		0.852		0.952	
0.053	214.723	0.153	220.011	0.253	225.298	0.353	230.586	0.453	235.873	0.553	241.161	0.653	246.448	0.753		0.853		0.953	
0.054	214.776	0.154	220.064	0.254	225.351	0.354	230.639	0.454	235.926	0.554	241.214	0.654	246.501	0.754		0.854		0.954	
0.055	214.829	0.155	220.117	0.255	225.404	0.355	230.691	0.455	235.979	0.555	241.266	0.655	246.554	0.755		0.855		0.955	
0.056	214.882	0.156	220.169	0.256	225.457	0.356	230.744	0.456	236.032	0.556	241.319	0.656	246.607	0.756		0.856		0.956	
0.057	214.935	0.157	220.222	0.257	225.510	0.357	230.797	0.457	236.085	0.557	241.372	0.657	246.660	0.757		0.857		0.957	
0.058	214.988	0.158	220.275	0.258	225.563	0.358	230.850	0.458	236.138	0.558	241.425	0.658	246.712	0.758		0.858		0.958	
0.059	215.041	0.159	220.328	0.259	225.616	0.359	230.903	0.459	236.190	0.559	241.478	0.659	246.765	0.759		0.859		0.959	
0.060	215.094	0.160	220.381	0.260	225.668	0.360	230.956	0.460	236.243	0.560	241.531	0.660	246.818	0.760		0.860		0.960	
0.061	215.146	0.161	220.434	0.261	225.721	0.361	231.009	0.461	236.296	0.561	241.584	0.661	246.871	0.761		0.861		0.961	
0.062	215.199	0.162	220.487	0.262	225.774	0.362	231.062	0.462	236.349	0.562	241.637	0.662	246.924	0.762		0.862		0.962	
0.063	215.252	0.163	220.540	0.263	225.827	0.363	231.114	0.463	236.402	0.563	241.689	0.663	246.977	0.763		0.863		0.963	
0.064	215.305	0.164	220.592	0.264	225.880	0.364	231.167	0.464	236.455	0.564	241.742	0.664	247.030	0.764		0.864		0.964	
0.065	215.358	0.165	220.645	0.265	225.933	0.365	231.220	0.465	236.508	0.565	241.795	0.665	247.083	0.765		0.865		0.965	
0.066	215.411	0.166	220.698	0.266	225.986	0.366	231.273	0.466	236.561	0.566	241.848	0.666	247.135	0.766		0.866		0.966	
0.067	215.464	0.167	220.751	0.267	226.039	0.367	231.326	0.467	236.613	0.567	241.901	0.667	247.188	0.767		0.867		0.967	
0.068	215.516	0.168	220.804	0.268	226.091	0.368	231.379	0.468	236.666	0.568	241.954	0.668	247.241	0.768		0.868		0.968	
0.069	215.569	0.169	220.857	0.269	226.144	0.369	231.432	0.469	236.719	0.569	242.007	0.669	247.294	0.769		0.869		0.969	
0.070	215.622	0.170	220.910	0.270	226.197	0.370	231.485	0.470	236.772	0.570	242.059	0.670	247.347	0.770		0.870		0.970	
0.071	215.675	0.171	220.963	0.271	226.250	0.371	231.537	0.471	236.825	0.571	242.112	0.671	247.400	0.771		0.871		0.971	
0.072	215.728	0.172	221.015	0.272	226.303	0.372	231.590	0.472	236.878	0.572	242.165	0.672	247.453	0.772		0.872		0.972	
0.073	215.781	0.173	221.068	0.273	226.356	0.373	231.643	0.473	236.931	0.573	242.218	0.673	247.506	0.773		0.873		0.973	
0.074	215.834	0.174	221.121	0.274	226.409	0.374	231.696	0.474	236.984	0.574	242.271	0.674	247.558	0.774		0.874		0.974	
0.075	215.887	0.175	221.174	0.275	226.462	0.375	231.749	0.475	237.036	0.575	242.324	0.675	247.611	0.775		0.875		0.975	
0.076	215.939	0.176	221.227	0.276	226.514	0.376	231.802	0.476	237.089	0.576	242.377	0.676	247.664	0.776		0.876		0.976	
0.077	215.992	0.177	221.280	0.277	226.567	0.377	231.855	0.477	237.142	0.577	242.430	0.677	247.717	0.777		0.877		0.977	
0.078	216.045	0.178	221.333	0.278	226.620	0.378	231.908	0.478	237.195	0.578	242.482	0.678	247.770	0.778		0.878		0.978	
0.079	216.098	0.179	221.386	0.279	226.673	0.379	231.960	0.479	237.248	0.579	242.535	0.679	247.823	0.779		0.879		0.979	
0.080	216.151	0.180	221.438	0.280	226.726	0.380	232.013	0.480	237.301	0.580	242.588	0.680	247.876	0.780		0.880		0.980	
0.081	216.204	0.181	221.491	0.281	226.779	0.381	232.066	0.481	237.354	0.581	242.641	0.681	247.929	0.781		0.881		0.981	
0.082	216.257	0.182	221.544	0.282	226.832	0.382	232.119	0.482	237.407	0.582	242.694	0.682	247.981	0.782		0.882		0.982	
0.083	216.310	0.183	221.597	0.283	226.885	0.383	232.172	0.483	237.459	0.583	242.747	0.683	248.034	0.783		0.883		0.983	
0.084	216.362	0.184	221.650	0.284	226.937	0.384	232.225	0.484	237.512	0.584	242.800	0.684	248.087	0.784		0.884		0.984	
0.085	216.415	0.185	221.703	0.285	226.990	0.385	232.278	0.485	237.565	0.585	242.853	0.685	248.140	0.785		0.885		0.985	
0.086	216.468	0.186	221.756	0.286	227.043	0.386	232.331	0.486	237.618	0.586	242.905	0.686	248.193	0.786		0.886		0.986	
0.087	216.521	0.187	221.809	0.287	227.096	0.387	232.383	0.487	237.671	0.587	242.958	0.687	248.246	0.787		0.887		0.987	
0.088	216.574	0.188	221.861	0.288	227.149	0.388	232.436	0.488	237.724	0.588	243.011	0.688	248.299	0.788		0.888		0.988	
0.089	216.627	0.189	221.914	0.289	227.202	0.389	232.489	0.489	237.777	0.589	243.064	0.689	248.352	0.789		0.889		0.989	
0.090	216.680	0.190	221.967	0.290	227.255	0.390	232.542	0.490	237.830	0.590	243.117	0.690	248.404	0.790		0.890		0.990	
0.091	216.733	0.191	222.020	0.291	227.308	0.391	232.595	0.491	237.882	0.591	243.170	0.691	248.457	0.791		0.891		0.991	
0.092	216.785	0.192	222.073	0.292	227.360	0.392	232.648	0.492	237.935	0.592	243.223	0.692	248.510	0.792		0.892		0.992	
0.093	216.838	0.193	222.126	0.293	227.413	0.393	232.701	0.493	237.988	0.593	243.276	0.693	248.563	0.793		0.893		0.993	
0.094	216.891	0.194	222.179	0.294	227.466	0.394	232.754	0.494	238.041	0.594	243.328	0.694	248.616	0.794		0.894		0.994	
0.095	216.944	0.195	222.232	0.295	227.519	0.395	232.806	0.495	238.094	0.595	243.381	0.695	248.669	0.795		0.895		0.995	
0.096	216.997	0.196	222.284	0.296	227.572	0.396	232.859	0.496	238.147	0.596	243.434	0.696	248.722	0.796		0.896		0.996	
0.097	217.050	0.197	222.337	0.297	227.625	0.397	232.912	0.497	238.200	0.597	243.487	0.697	248.775	0.797		0.897		0.997	
0.098	217.103	0.198	222.390	0.298	227.678	0.398	232.965	0.498	238.253	0.598	243.540	0.698	248.827	0.798		0.898		0.998	
0.099	217.156	0.199	222.443	0.299	227.731	0.399	233.018	0.499	238.305	0.599	243.593	0.699	248.880	0.799		0.899		0.999	

DATE STRAPPED: 09/19/17 BY: RJ
DATE COMPUTED: 09/26/17 BY: WLH
DATE ISSUED: 09/26/17

AMSPEC

APPENDIX J

Construction Summary of Mine Site Fuel Storage and Containment Facilities

Civil Earthworks Construction Summary – Mine Site Tank Farm

- Construction management and quality assurance performed by Agnico Eagle Construction
- Primary civil construction contractor was MTKSL
- Subcontractors: Texel Geosol for liner installation and liner QC
- All survey conducted by Hamel Arpentage

1. **Site Preparation (June)**

- OG surveyed of tank farm footprint

2. **Under Liner Material Placement (June 5 to July 17)**

- Due to the location of the Tank Farm being outside the CP1 containment area, rockfill for all under liner and the service area was sourced from "clean" sources:
    - 600 mm minus (tank containment area) was obtained from the remnants of the Temporary Water Treatment Pad and access road (previously placed in 2016 and therefore subject to multiple flushings) and Portal 2 drill/blast operations for the initial surface open cut
    - 600 mm minus (service area) was obtained from Meliadine Esker
    - 200 mm minus sourced from material crushed winter 2016 (and therefore subject to multiple flushings)
    - 30 mm minus under liner was sourced from processed esker material (Mel. Esker)

3. **Liner System Installation (July 18 to October 12)**

- Textured 60 mil HDPE installed throughout and 540 g/m2 geotextile
- Liner was first placed under the tank pedestal footprints (July 18), the two tanks were erected, then liner installation proceeded throughout the remainder of the containment area (October 1, October 9 to 12)
- Liner under the tank pedestals was initially placed with no allowance for the ditch between the two tanks – this necessitated cutting of the liner between the tanks, excavation of the ditch area, and re-welding of the liner in this location after tank construction
- Liner on the tank pedestals was protected with plywood after installation and before the remaining liner was installed
- Liner installation QA was carried out by AEM and quality control testing by Texel

4. **Tank Erection (July 31 to September 13)**

- Civil earthworks within the Tank Farm area were suspended during erection of the tanks

5. **Over Liner Material Placement (July 19 to October 18)**

- Over liner material placement on the tank pedestals (July 19 to July 30) and in the tank containment area (October 2 to October 18) followed the design specification of placement of 30 mm minus placed on geotextile placed on HDPE

Equipment Used for Construction:

- CAT D8 Bulldozer
- CAT D6 Bulldozer
- CAT 330L Excavator
- CAT 345B Excavator
- CAT 320 Excavator
- CAT 980 Loader
- CAT IT62
- CAT skid steers
- CAT 773 haul trucks
- CAT 740 articulated haul trucks
- CAT CS56 10-ton vibratory drum compactor

- HAMM 5-ton vibratory drum compactor
- Various small hand-pushed compactors

QA/QC Summary

1. 600 mm minus, 200 mm minus, 50 mm minus (service area) and 30 mm minus (under liner) was placed according to the Technical Specifications for Civil Earthworks Revision 3 (6515-GNS-014, June 6, 2017). Compaction efforts consisted of a minimum number of passes with either a 10-tonne vibratory compactor (4 passes) or a 5-tonne vibratory compactor (6 passes). Suitability for placement and compaction efforts were assessed visually and approved by AEM.
2. Particle size analysis was conducted on the 30 mm minus produced from both the ROM and esker sources (results attached). The 30 mm minus material produced from the esker was within the specifications on average, while the 30 mm minus produced from ROM was generally slightly lower than specified for particles of 5 mm (37% tested versus 45% minimum specified)
3. Texel Geosol was responsible for all quality control of the liner installation process.

APPENDIX K

Particle Size Summary – 30 mm minus Run of Mine

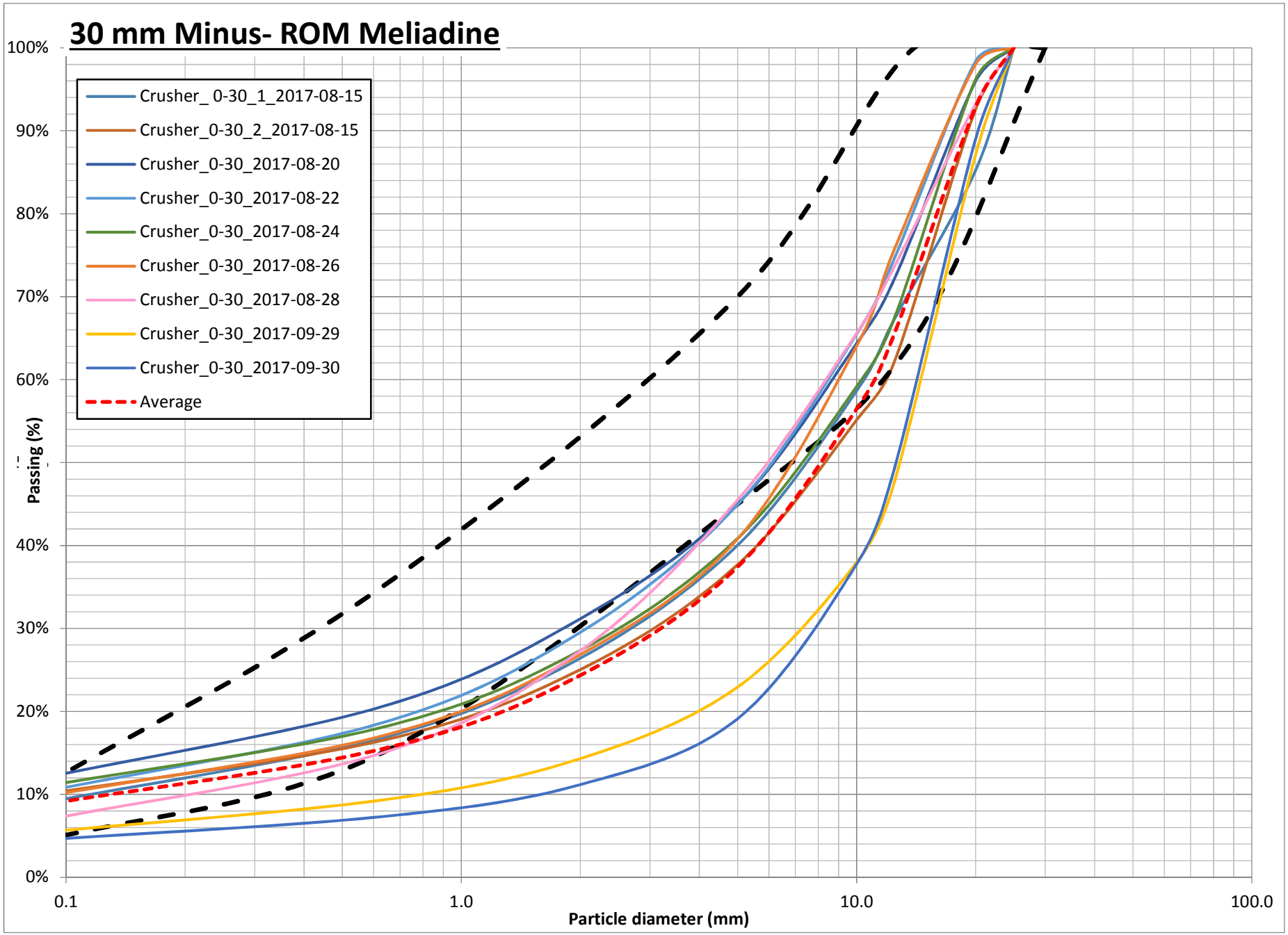
30 mm Minus- ROM Meliadine
Crusher_ 0-30_1_2017-08-15
Crusher_0-30_2_2017-08-15
Crusher_0-30_2017-08-20
Crusher_0-30_2017-08-22
Crusher_0-30_2017-08-24
Crusher_0-30_2017-08-26
Crusher_0-30_2017-08-28
Crusher_0-30_2017-09-29
Crusher_0-30_2017-09-30
Average
100%
90%
80%
70%
60%
40%
30%
20%
10%
0%
Passing (%)
0.1
1.0
10.0
100.0
Particle diameter (mm)

Table 1: Summary of Particle Size Analysis Results - 30 mm minus ROM Meliadine

No.	Sample ID	Sieve Size (mm)								Moisture Content
		25.00	20.00	12.50	10.00	5.00	2.00	0.63	0.08	
1	Crusher_ 0-30_1_2017-08-15	100.0%	85.2%	67.4%	58.6%	40.0%	26.4%	16.8%	8.6%	4.2%
2	Crusher_0-30_2_2017-08-15	100.0%	92.6%	62.3%	55.1%	37.7%	25.0%	16.5%	9.7%	2.9%
3	Crusher_0-30_2017-08-20	100.0%	95.9%	72.3%	64.4%	45.0%	31.2%	20.6%	11.6%	3.2%
4	Crusher_0-30_2017-08-24	100.0%	96.2%	67.6%	59.2%	40.9%	27.4%	18.1%	10.7%	2.2%
5	Crusher_0-30_2017-08-22	100.0%	98.4%	74.7%	65.5%	44.9%	29.5%	18.6%	10.0%	3.7%
6	Crusher_0-30_2017-08-26	100.0%	98.0%	75.9%	64.0%	40.8%	26.8%	17.0%	9.4%	2.2%
7	Crusher_0-30_2017-08-28	100.0%	93.2%	73.8%	65.6%	45.5%	27.3%	15.0%	6.5%	4.4%
8	Crusher_0-30_2017-09-29	100.0%	87.1%	47.9%	38.0%	22.9%	14.3%	9.3%	5.3%	1.7%
9	Crusher_0-30_2017-09-30	100.0%	89.0%	49.5%	37.8%	19.1%	11.2%	7.3%	4.4%	1.3%
Average		**100.0%**	**92.8%**	**65.7%**	**56.5%**	**37.4%**	**24.4%**	**15.5%**	**8.5%**	**2.9%**

APPENDIX L

Particle Size Summary – 30 mm minus Esker

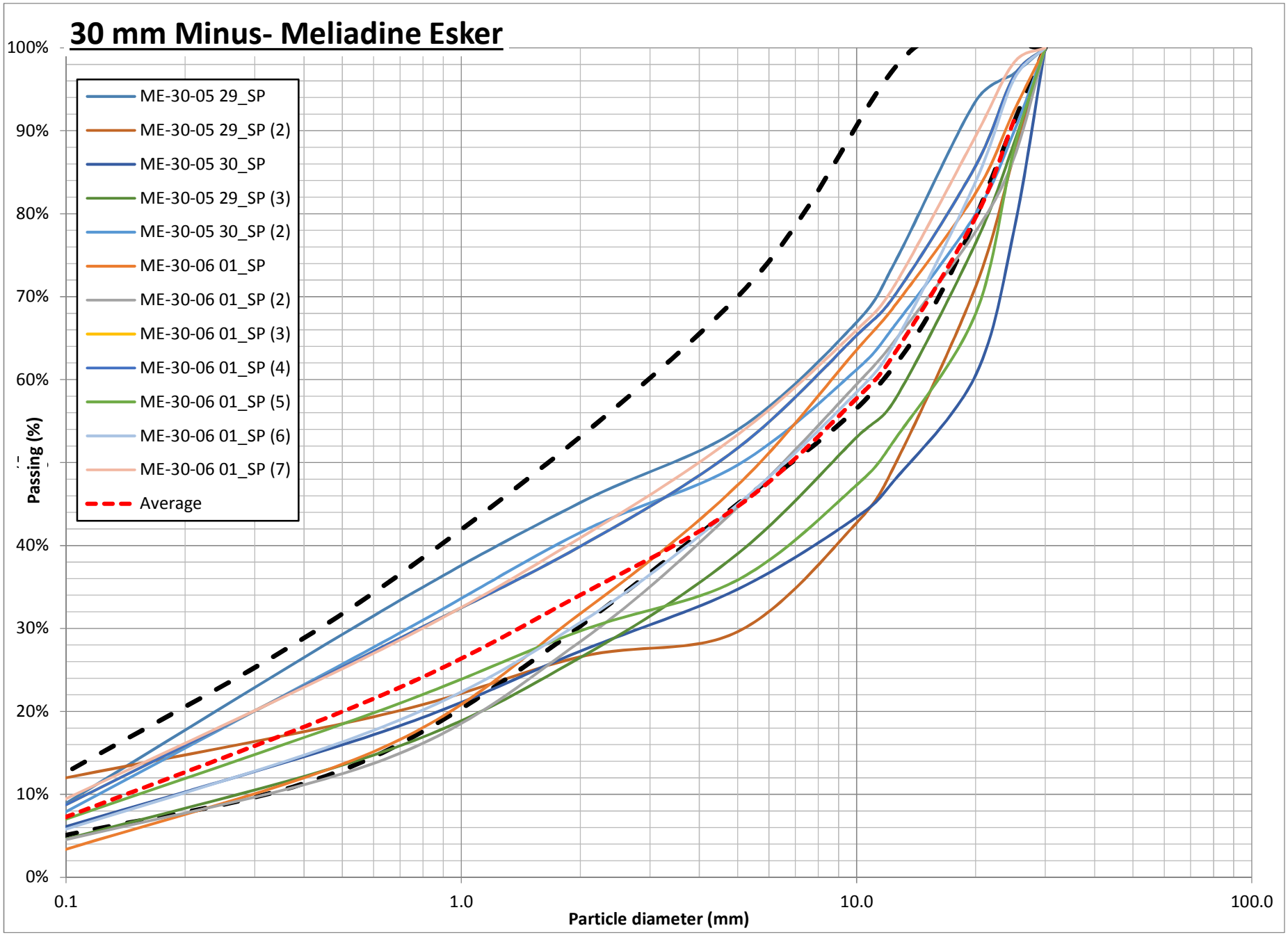
30 mm Minus- Meliadine Esker
ME-30-05 29_SP
ME-30-05 29_SP (2)
ME-30-05 30_SP
ME-30-05 29_SP (3)
ME-30-05 30_SP (2)
ME-30-06 01_SP
ME-30-06 01_SP (2)
ME-30-06 01_SP (3)
ME-30-06 01_SP (4)
ME-30-06 01_SP (5)
ME-30-06 01_SP (6)
ME-30-06 01_SP (7)
Average
100%
90%
80%
70%
60%
40%
30%
20%
10%
0%
Passing (%)
0.1
1.0
10.0
100.0
Particle diameter (mm)

Table 1: Summary of Particle Size Analysis Results - 30 mm minus Meliadine Esker

No.	Sample ID	Sieve Size (mm)									Moisture Content
		30.00	25.00	20.00	12.50	10.00	5.00	2.00	0.63	0.08	
1	ME-30-05 29_SP	100%	96.9%	93.5%	74.1%	66.9%	53.9%	45.2%	32.1%	6.1%	3.4%
2	ME-30-05 29_SP (2)	100%	87.0%	71.2%	49.7%	42.7%	29.6%	26.6%	19.6%	11.1%	3.0%
3	ME-30-05 30_SP	100%	77.9%	60.5%	47.9%	43.4%	34.7%	27.3%	17.5%	4.8%	2.8%
4	ME-30-05 29_SP (3)	100%	88.4%	76.4%	57.6%	53.0%	39.0%	26.5%	15.1%	3.4%	2.2%
5	ME-30-05 30_SP (2)	100%	89.9%	79.9%	66.6%	61.2%	49.7%	41.6%	28.3%	5.5%	3.5%
6	ME-30-06 01_SP	100%	92.4%	82.5%	68.9%	63.6%	47.3%	31.8%	15.6%	2.0%	3.6%
7	ME-30-06 01_SP (2)	100%	86.7%	77.9%	64.7%	59.4%	44.6%	28.4%	14.1%	3.4%	3.4%
8	ME-30-06 01_SP (3)	100%	96.6%	85.8%	70.2%	65.3%	51.7%	39.9%	27.7%	6.5%	5.1%
9	ME-30-06 01_SP (4)	100%	96.6%	85.8%	70.2%	65.3%	51.7%	39.9%	27.7%	6.5%	5.1%
10	ME-30-06 01_SP (5)	100%	87.7%	67.9%	52.8%	47.3%	35.8%	29.7%	20.2%	5.4%	3.7%
11	ME-30-06 01_SP (6)	100%	96.2%	83.9%	64.5%	58.5%	45.0%	30.7%	18.1%	4.3%	4.1%
12	ME-30-06 01_SP (7)	100%	98.2%	89.3%	71.4%	66.0%	53.4%	40.9%	27.5%	7.3%	5.0%
Average		**100%**	**91.2%**	**79.5%**	**63.2%**	**57.7%**	**44.7%**	**34.0%**	**22.0%**	**5.5%**	**3.8%**

APPENDIX M

Inspection Report – Quality Control Final Report for Geomembrane Installation

MELIADINE MINE SITE FUEL FARM PHASE 2
AGNICO EAGLE MINES LIMITED
Meliadine, Nunavut
Texel Geosol Project No. C-17060

QUALITY CONTROL FINAL REPORT BY TEXEL GEOSOL INC.

Prepared for:

NUNA KIVALLIQ EARTHWORKS INC

By:

Texel GEOSOL

December, 2017

MELIADINE MINE SITE FUEL FARM PHASE 2
AGNICO EAGLE MINES LIMITED
Meliadine, Nunavut
Texel Geosol Project No. C-17060

QUALITY CONTROL FINAL REPORT BY TEXEL GEOSOL INC.

Prepared for:

NUNA KIVALLIQ EARTHWORKS INC
NUNA SERVICES LTD

9839-31 Avenue
Edmonton, Alberta
T6N 1C5

By:

TEXEL GEOSOL INC.
1300, 2e Rue, Parc industriel
Sainte-Marie, Québec, Canada
G6E 1G8

December, 2017

TABLE OF CONTENTS

1. INTRODUCTION 4
2. HUMAN RESOURCES 4
3. GEOMEMBRANE INSTALLATION 4
3.1. DESCRIPTION OF THE WORK 4
3.2. INSTALLATION PROCEDURES 5
3.3. GEOMEMBRANE QUALITY CONTROLS 5
3.3.1. On-site geomembrane installation 5
3.3.1.1 Welding trial tests 5,6
3.3.1.2 On-site non-destructive testing 6,7
3.3.1.3 On-site destructive tests 7
3.4. REPAIR PROCEDURES 8
3.5. RECORD DRAWING 8
4. GEOTEXTILE QUALITY CONTROL 8
5. CERTIFICATION 9

LIST OF APPENDICES

- APPENDIX I - Quality control test results obtained on site by Texel Geosol Inc
- APPENDIX II - Field Memos and Communications
- APPENDIX III - US-EPA Classification for Types of Break
- APPENDIX IV - Record drawing

LIST OF FIGURES

FIGURE 1 - DOUBLE -TRACK GEOMEMBRANE WELD 5
FIGURE 2 - FILLET-EXTRUDED GEOMEMBRANE WELD 5
FIGURE 3 - PEEL ADHESION TEST 6
FIGURE 4 - SHEAR STRENGTH TEST 6
FIGURE 5 - AIR-PRESSURE TEST 6
FIGURE 6 - VACUUM-BOX TEST 7

1. INTRODUCTION

The following report was prepared by Texel Geosol, for Nuna Kivalliq Earthworks Inc.

This report contains a description as well as a certification of all work conducted by Texel Geosol, installer of the geosynthetics. It also contains the record drawing of the geomembrane installation for the Meliadine Industrial Pad Fuel Farm. All installation work conducted on the geosynthetics took place between July and October, 2017.

2. HUMAN RESOURCES

The following list identifies the key personnel involved with the physical realization of this project

TEXEL GEOSOL INC. (Geosynthetic Installer)

- Mr. François Thivierge, Construction and project Manager
- Mr. Jacques St-Gelais, Operation Manager
- Mr. Eric Black, Simon Jodoin, Site Foreman
- Mr. Michael Gilbert, Field QC Inspector and technician
- Mr. Kléber Nault, David Beaulieu, Simon-Carl Marcoux, Olivier Belval and Phillipe Allie, Technicians

NUNA KIVALLIQ EARTHWORKS INC (General Contractor - Client)

- Mr. Matt Gallant, Project Manager

AGNICO EAGLE CONSTRUCTION (Quality Assurance)

3. GEOMEMBRANE INSTALLATION

This section includes a description of the work and the installation procedures used during the deployment of the geomembrane. Also, the construction quality control procedures are detailed in this section

3.1. Description of the work

The scope of the installation was to completely cover the Meliadine industrial pad fuel farm with a geosynthetic lining system. Texel Geosol installed approximately 3682 sm of 60 mil HDPE textured geomembrane. All the installation, seaming and repair procedures were conducted according to the project plans and specifications, and manufacturer's recommendations.

3.2. Installation Procedures

The geomembrane rolls were later deployed and installed by Texel Geosol as prescribed in the specifications. Panels were placed to minimize seams across the side slope and the tie-in seams. The panels were overlapped about 125 to 150 mm, allowing adequate double fusion welding and leaving enough material to perform peel and shear tests on seam samples (see section 3.3.2.1 for a description of these tests).

All seams between panels were made using an automated polymer fusion process, the fusion being obtained through a double hot wedge. These parallel welds create an air channel which allow air-pressure testing of the continuity of the seam (see Fig. 1).

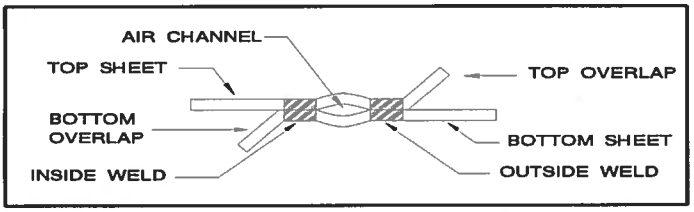

***Figure 1* - Double -Track Geomembrane Weld**

In restrictive areas where this process could not be adequately applied, such as corners, repair work and pipe penetrations, a manual extrusion fillet welding was employed (see Fig. 2).

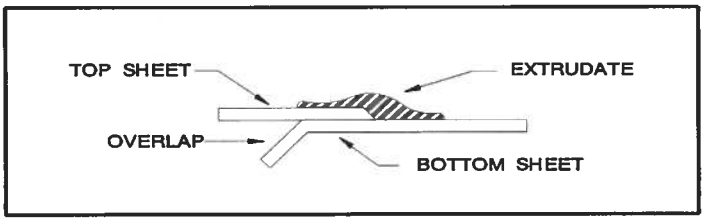

***Figure 2* - Fillet-Extruded Geomembrane Weld**

3.3. Geomembrane quality control

3.3.1. On-site geomembrane installation

3.3.1.1 Welding trial tests

Trial tests were performed prior to any on-site seaming in order to quantify the calibration of the welding equipment. On each sample, four peel tests and one shear tests were performed. A peel adhesion test is conducted by submitting a one inch-wide seam specimen to a tensile effort on a calibrated, portable tensiometer and trying to "peel", or open the seam (see Fig. 3). A shear strength test is similar, but the tension is applied in the plane of the seam (see Fig. 4). The peel test gives an indication of the quality of the seam while the shear test demonstrates the actual behavior of the seam in service.

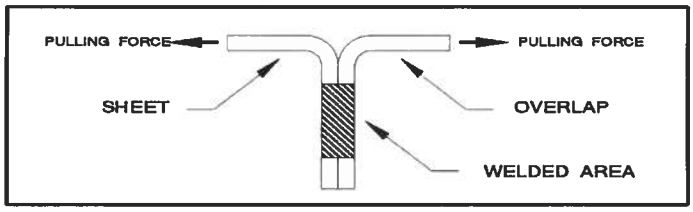

Figure 3 **- Peel Adhesion Test**

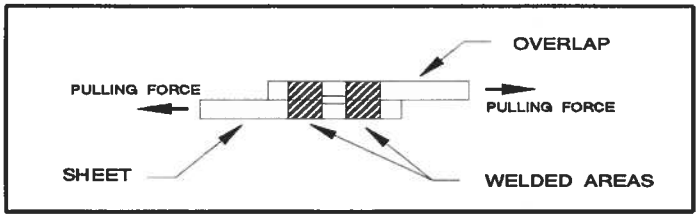

Figure 4 **- Shear Strength Test**

For each trial test, the QC Inspector recorded the date, time, ambient and operating temperatures, equipment number, speed setting, operator's initials, peel and shear values and corresponding type of break. The only type of break acceptable is designated as "FTB", as per the US-EPA classification for types of breaks, available in appendix III. The seams were made only after a satisfactory trial test had been obtained. All the results of these tests are also included in appendix I.

3.3.1.2 On-site non-destructive testing

The continuity of all seams (100%) was verified by non-destructive methods. These methods include the air-pressure test and the vacuum-box test. Any seam that failed one of these tests was rebuilt or repaired until a satisfactory result was obtained. All the results of these tests are included in Appendix I of this report.

a) Air-Pressure Testing

Air-pressure testing was employed as the primary test method. This non-destructive test method consists of injecting air at a predetermined pressure in the center air channel of fusion-welded seams (see Fig. 5). If the seam is continuous there will be very little or no drop of pressure. If a leak is present within the area under pressure, it is located and repaired. This type of non-destructive test is faster than the vacuum-box test, less observer-dependent and represents a supplementary mechanical resistance test since the geomembrane sheets are pulled away from each other by the air pressure in the channel.

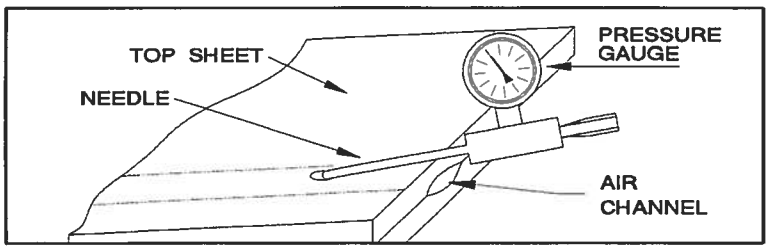

Figure 5 **- Air-Pressure Test**

b) Vacuum-box test

Wherever the air-pressure test could not be used, the vacuum-box test was employed. In this test, a film of soapy water is sprinkled over the area to be tested. A box fitted with a transparent upper cover and a neoprene lower rim is placed over that same area and connected to a vacuum pump; a negative pressure of 5 psi is then applied (see Fig. 6). If there is a puncture or discontinuous seam within this area, bubbles will appear and be detected by the observer.

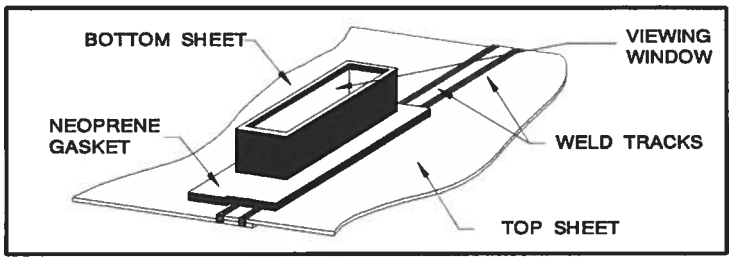

***Figure 6* - Vacuum-Box Test**

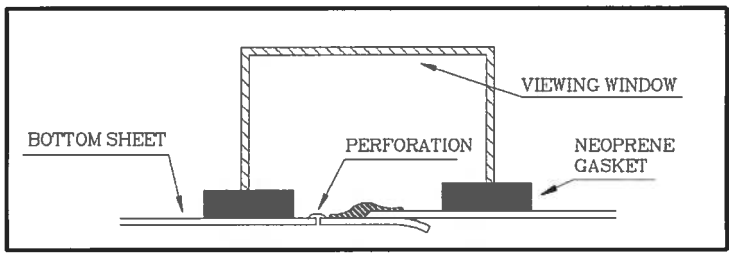

***Figure 7* - Vacuum-Box Test**

3.3.1.3 On-site destructive tests

Finally, a destructive testing program was applied, where seam samples taken from the installed geomembrane were tested for peel adhesion and shear strength on a calibrated, portable tensiometer. On each sample, four peel tests and one shear tests were performed. All the results from these tests are included in Appendix I of this report.

3.4. Repair Procedures

All materials were visually inspected for blemishes, punctures and other defects or damages that may have occurred during transport or panel placement. Any defect or damage was repaired as per the procedures described in this section.

Demobilization was not authorized until Texel Geosol, Nuna Kivalliq Earthworks Inc and Agnico Eagle Construction completed a last visual inspection of the installation work. Any defect revealed by any step of the Quality Control Program was repaired and verified according to the prescribed procedures:

- All pockmarks, pinholes, T-seams, etc., smaller than the tip of the extruder were covered with an extrusion bead;
- All punctures, holes, tears, etc., wider than the tip of the extruder were repaired with extrusion-welded patches;
- Any seam revealed as defective by the CQC or CQA Programs was entirely rebuilt through a fusion and/or extrusion seaming process.

Prior to any fillet extrusion welding, the geomembrane was buffed to insure better adhesion of the extruded material. All repairs were visually inspected and verified by a non-destructive testing method, as described in section 3.3.2.2.

3.5. Record Drawing

The record drawing of the geomembrane installation, showing all panels, panel identification, pipe penetrations, repairs and destructive test locations, is included in Appendix IV of this report.

4. GEOTEXTILE QUALITY CONTROL

Approximately 7364 sm of non-woven geotextile was installed by Texel Geosol according to the project plans and specifications. The geotextile panels were overlapped approximately 100 to 150 mm and thermally bonding (hot air or wedge) or sewing in order to ensure the continuity of the cushion layer.

Any holes or tears in the geotextile were repaired according to the project specifications. All geotextile materials were installed by Texel Geosol.

5. CERTIFICATION

Texel Geosol certifies having installed all geosynthetic materials according to the project plans and specifications provided by the consultant Tetra Tech, for Nuna Kivalliq Earthworks Inc. All installation work conducted by Texel Geosol meets or exceeds the standards of the geosynthetic industry.

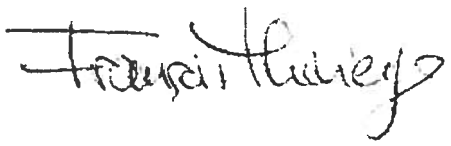

12-07-17

François Thivierge, P. Eng, MBA
Construction Director
TEXEL GEOSOL INC.

Date

(mm-dd-yy)

APPENDIX I

QUALITY CONTROL PROCEDURES CONDUCTED ON SITE BY TEXEL GEOSOL INC.

Texel
GEOSOL

Fusion Trial Tests
Calibration par Fusion

Project Name / Nom de Projet: **Meliadine mine site fuel farm**

Project No. / No. de Projet: **C-17060**

QC Inspector / Inspecteur CQ: **Anthony Duquette-Michon**

Trial Test No. No. de Calibration	Date (mm/dd/yy)	Time Heure	Ambient Temp. Temp. Ambiante	Equipment No. No. Équipement	Equipment Temp. Temp. Équipement	Equipment Speed Vitesse Équipement	Peel Resistance Résistance Pelage "A" (ppi)	Peel Type of Break Type de Brisure	Peel Resistance Résistance Pelage "B" (ppi)	Peel Type of Break Type de Brisure	Shear Resistance Résist. Cisaillement (ppi)	Shear Type of Break Type de Brisure	Tech.-Welder Soudeur	Tensiometer No. No. Tensiomètre
F-1	07-18-17	10:15	8 °C	MD 007	860 °F	500	130	SE1	121	SE1	177	BRK	D.B	T-9709
"	"	"	"	"	"	"	125	SE1	131	SE1	N/A	N/A	"	"
"	"	"	"	"	"	"	123	SE1	132	SE1	N/A	N/A	"	"
"	"	"	"	"	"	"	142	SE1	128	SE1	N/A	N/A	"	"
F-2	09-30-17	16:00	3 °C	MD 007	860 °F	300	177	SE1	180	SE1	216	BRK	K.N	T-9709
"	"	"	"	"	"	"	174	SE1	182	SE1	N/A	N/A	"	"
"	"	"	"	"	"	"	176	SE1	177	SE1	N/A	N/A	"	"
"	"	"	"	"	"	"	174	SE1	177	SE1	N/A	N/A	"	"
F-3	10-01-17	07:15	-2 °C	MD 007	860 °F	500	156	SE1	171	SE1	238	BRK	K.N	T-9709
"	"	"	"	"	"	"	167	SE1	172	SE1	N/A	N/A	"	"
"	"	"	"	"	"	"	183	SE1	164	SE1	N/A	N/A	"	"
"	"	"	"	"	"	"	154	SE1	178	SE1	N/A	N/A	"	"
F-4	10-01-17	07:15	-2 °C	MD 007	860 °F	300	171	SE1	174	SE1	217	BRK	K.N	T-9709
"	"	"	"	"	"	"	184	SE1	174	SE1	N/A	N/A	"	"
"	"	"	"	"	"	"	163	SE1	167	SE1	N/A	N/A	"	"
"	"	"	"	"	"	"	178	SE1	164	SE1	N/A	N/A	"	"
F-5	10-09-17	09:45	-3 °C	MD 007	860 °F	500	153	SE1	142	SE1	182	BRK	K.N	T-9709
"	"	"	"	"	"	"	150	SE1	150	SE1	N/A	N/A	"	"
"	"	"	"	"	"	"	142	SE1	153	SE1	N/A	N/A	"	"
"	"	"	"	"	"	"	152	SE1	145	SE1	N/A	N/A	"	"
F-6	10-09-17	10:00	-3 °C	MD 007	860 °F	300	150	SE1	139	SE1	184	BRK	K.N	T-9709
"	"	"	"	"	"	"	147	SE1	151	SE1	N/A	N/A	"	"
"	"	"	"	"	"	"	149	SE1	155	SE1	N/A	N/A	"	"
"	"	"	"	"	"	"	158	SE1	154	SE1	N/A	N/A	"	"

Texel GEOSOL

Fusion Trial Tests
Calibration par Fusion

Project Name / Nom de Projet: **Meliadine mine site fuel farm**

Project No. / No. de Projet: **C-17060**

QC Inspector / Inspecteur CQ: **Anthony Duquette-Michon**

Trial Test No. No. de Calibration	Date (mm/dd/yy)	Time Heure	Ambient Temp. Temp. Ambiante	Equipment No. No. Équipement	Equipment Temp. Temp. Équipement	Equipment Speed Vitesse Équipement	Peel Resistance Résistance Pelage "A" (ppi)	Peel Type of Break Type de Brisure	Peel Resistance Résistance Pelage "B" (ppi)	Peel Type of Break Type de Brisure	Shear Resistance Résist. Cisaillement (ppi)	Shear Type of Break Type de Brisure	Tech.-Welder Soudeur	Tensiometer No. No. Tensiomètre
F-7	10-10-17	12:20	-8 °C	MD 007	860 °F	500	147	SEI	139	SEI	196	BRK	K.N	T-9709
"	"	"	"	"	"	"	160	SEI	141	SEI	N/A	N/A	"	"
"	"	"	"	"	"	"	149	SEI	141	SEI	N/A	N/A	"	"
"	"	"	"	"	"	"	150	SEI	140	SEI	N/A	N/A	"	"
F-8	10-10-17	12:30	-8 °C	MD 007	860 °F	300	148	SEI	150	SEI	194	BRK	K.N	T-9709
"	"	"	"	"	"	"	139	SEI	153	SEI	N/A	N/A	"	"
"	"	"	"	"	"	"	149	SEI	152	SEI	N/A	N/A	"	"
"	"	"	"	"	"	"	154	SEI	157	SEI	N/A	N/A	"	"
F-9	10-11-17	08:25	-8 °C	MD 007	860 °F	500	134	SEI	143	SEI	216	BRK	K.N	T-9709
"	"	"	"	"	"	"	147	SEI	153	SEI	N/A	N/A	"	"
"	"	"	"	"	"	"	135	SEI	142	SEI	N/A	N/A	"	"
"	"	"	"	"	"	"	143	SEI	148	SEI	N/A	N/A	"	"
F-10	10-11-17	08:25	-8 °C	MD 007	860 °F	300	148	SEI	164	SEI	210	BRK	K.N	T-9709
"	"	"	"	"	"	"	153	SEI	159	SEI	N/A	N/A	"	"
"	"	"	"	"	"	"	141	SEI	157	SEI	N/A	N/A	"	"
"	"	"	"	"	"	"	146	SEI	143	SEI	N/A	N/A	"	"
F-11	10-12-17	08:00	-2 °C	MD 007	860 °F	500	146	SEI	151	SEI	209	BRK	K.N	T-9709
"	"	"	"	"	"	"	143	SEI	142	SEI	N/A	N/A	"	"
"	"	"	"	"	"	"	151	SEI	142	SEI	N/A	N/A	"	"
"	"	"	"	"	"	"	147	SEI	147	SEI	N/A	N/A	"	"
F-12	10-12-17	08:00	-2 °C	MD 007	860 °F	300	153	SEI	148	SEI	203	BRK	K.N	T-9709
"	"	"	"	"	"	"	162	SEI	146	SEI	N/A	N/A	"	"
"	"	"	"	"	"	"	148	SEI	145	SEI	N/A	N/A	"	"
"	"	"	"	"	"	"	151	SEI	152	SEI	N/A	N/A	"	"

Texel GEOSOL

Extrusion Trial Tests
Calibration par Extrusion

Project Name / Nom de Projet: **Meliadine mine site fuel farm**

Project No. / No. de Projet: **C-17060**

QC Inspector / Inspecteur CQ: **Anthony Duquette-Michon**

Trial Test No. No. de Calibration	Date (mm/dd/yy)	Time Heure	Ambient Temp. Temp. Ambiante	Equipment No. No. Équipement	Equipment Temp. Temp. Équipement	Pre-Heat Temp. Temp. Pré-Chauf.	Peel Resistance Résistance Pelage (ppi)	Peel Type of Break Type de Brisure	Shear Resistance Résist. Cisaillement (ppi)	Shear Type of Break Type de Brisure	Tech.-Welder Soudeur	Tensiometer No. No. Tensiomètre
E-1	07-18-17	14:00	8 °C	EX-E	250 °C	250 °C	131	SE3	180	BRK	E.B	T-9709
"	"	"	"	"	"	"	140	SE3	N/A	N/A	"	"
"	"	"	"	"	"	"	128	SE3	N/A	N/A	"	"
"	"	"	"	"	"	"	140	SE3	N/A	N/A	"	"
E-2	10-01-17	14:00	2 °C	EX-E	260 °C	260 °C	129	SE3	N/A	N/A	S.M	T-9709
"	"	"	"	"	"	"	111	SE3	N/A	N/A	"	"
"	"	"	"	"	"	"	69	AD	N/A	N/A	"	"
E-3	10-01-17	14:30	2 °C	EX-E	260 °C	260 °C	120	SE3	205	BRK	S.M	T-9709
"	"	"	"	"	"	"	138	SE3	N/A	N/A	"	"
"	"	"	"	"	"	"	145	SE3	N/A	N/A	"	"
"	"	"	"	"	"	"	167	SE3	N/A	N/A	"	"
E-4	10-09-17	13:30	-3 °C	EX-E	260 °C	265 °C	132	SE3	191	BRK	P.A	T-9709
"	"	"	"	"	"	"	125	SE3	N/A	N/A	"	"
"	"	"	"	"	"	"	141	SE3	N/A	N/A	"	"
"	"	"	"	"	"	"	152	SE3	N/A	N/A	"	"

Texel GEOSOL

Extrusion Trial Tests
Calibration par Extrusion

Project Name / Nom de Projet: **Meliadine mine site fuel farm**

Project No. / No. de Projet: **C-17060**

QC Inspector / Inspecteur CQ: **Anthony Duquette-Michon**

Trial Test No. No. de Calibration	Date (mm/dd/yy)	Time Heure	Ambient Temp. Temp. Ambiante	Equipment No. No. Équipement	Equipment Temp. Temp. Équipement	Pre-Heat Temp. Temp. Pré-Chauf.	Peel Resistance Résistance Pelage (ppi)	Peel Type of Break Type de Brisure	Shear Resistance Résist. Cisaillement (ppi)	Shear Type of Break Type de Brisure	Tech.-Welder Soudeur	Tensiometer No. No. Tensiomètre
E-5	10-10-17	14:00	-8 °C	EX-E	260 °C	265 °C	142	SE3	201	BRK	P.A	T-9709
"	"	"	"	"	"	"	139	SE3	N/A	N/A	"	"
"	"	"	"	"	"	"	124	SE3	N/A	N/A	"	"
"	"	"	"	"	"	"	154	SE3	N/A	N/A	"	"
E-6	10-11-17	10:00	-3 °C	EX-E	260 °C	265 °C	131	SE3	197	BRK	P.A	T-9709
"	"	"	"	"	"	"	153	SE3	N/A	N/A	"	"
"	"	"	"	"	"	"	137	SE3	N/A	N/A	"	"
"	"	"	"	"	"	"	145	SE3	N/A	N/A	"	"
E-7	10-12-17	08:00	-2 °C	EX-E	260 °C	265 °C	134	SE3	202	BRK	P.A	T-9709
"	"	"	"	"	"	"	127	SE3	N/A	N/A	"	"
"	"	"	"	"	"	"	147	SE3	N/A	N/A	"	"
"	"	"	"	"	"	"	135	SE3	N/A	N/A	"	"

Texel GEOSOL

Seaming Procedures
Procédures de Soudures

Project Name / Nom de Projet: **Meliadine mine site fuel farm**

Project No. / No. de Projet: **C-17060**

QC Inspector / Inspecteur CQ: **Anthony Duquette-Michon**

Seaming Procedures / Procédures de Soudures						Non-Destructive Testing / Essai Non-Destructif							
Seam No. No. de Soudure	Date of Seaming Date de Soudure (mm/dd/yy)	Time of Seaming Heure de Soudure	Seam Length Longueur Soudure (m)	Trial Test No. No. Calibration	Technician-Welder Soudeur	Test Date Date de l'essai (mm/dd/yy)	Time Heure	Air-Pressure Pressurisation	Vacuum Box Boîte à Vide	Starting Pressure Pression Départ (psi)	Ending Pressure Pression Fin (psi)	Testing Details/Location Détails de l'essai/Localisation	Approved (Yes/No) Approuvé (Oui/Non)
1-2	07-18-17	10:55	47.3	F-1	D.B	07-18-17	11:47	X	-	30	30	From South 0m to 11.2m	O
"	"	"	"	"	D.B	07-18-17	12:26	X	-	31	31	11.2m to 27.3m	O
"	"	"	"	"	D.B	07-18-17	12:23	X	-	27	25	27.3m to 44.8m	O
"	"	"	"	"	D.B	07-18-17	-	-	X	-	-	44.8m to 47.3m	O
2-3	07-18-17	12:06	47.5	F-1	D.B	07-18-17	12:41	X	-	31	31	Soudure complète	O
3-4	07-18-17	12:36	47.5	F-1	D.B	07-18-17	13:01	X	-	31	31	Soudure complète	O
5-6	07-18-17	13:05	1.7	F-1	D.B	07-18-17	13:22	X	-	28	27	Soudure complète	O
6-7	07-18-17	13:03	1.5	F-1	D.B	07-18-17	13:09	X	-	31	31	Soudure complète	O
7-8	07-18-17	13:00	1.3	F-1	D.B	07-18-17	13:05	X	-	32	31	Soudure complète	O
4-5	07-18-17	13:15	11.9	F-1	D.B	07-18-17	13:45	X	-	29.5	27.5	Soudure complète	O
4-6	07-18-17	13:15	11.9	F-1	D.B	07-18-17	13:45	X	-	29.5	27.5	Soudure complète	O
4-7	07-18-17	13:15	10.9	F-1	D.B	07-18-17	13:45	X	-	29.5	27.5	Soudure complète	O
4-8	07-18-17	13:15	12.0	F-1	D.B	07-18-17	13:45	X	-	29.5	27.5	Soudure complète	O
Patch1-Patch2	09-30-17	16:35	0.7	F-2	K.N	09-30-17	-	-	X	-	-	Soudure complète	O
Patch2-Patch3	09-30-17	16:39	0.4	F-2	K.N	09-30-17	-	-	X	-	-	Soudure complète	O

Texel GEOSOL

Seaming Procedures
Procédures de Soudures

Project Name / Nom de Projet: **Meliadine mine site fuel farm**

QC Inspector / Inspecteur CQ: **Anthony Duquette-Michon**

Project No. / No. de Projet: **C-17060**

Seaming Procedures / Procédures de Soudures						Non-Destructive Testing / Essai Non-Destructif							
Seam No. No. de Soudure	Date of Seaming Date de Soudure (mm/dd/yy)	Time of Seaming Heure de Soudure	Seam Length Longueur Soudure (m)	Trial Test No. No. Calibration	Technician-Welder Soudeur	Test Date Date de l'essai (mm/dd/yy)	Time Heure	Air-Pressure Pressurisation	Vacuum Box Boîte à Vide	Starting Pressure Pression Départ (psi)	Ending Pressure Pression Fin (psi)	Testing Details/Location Détails de l'essai/Localisation	Approved (Yes/No) Approuvé (Oui/Non)
Patch3-Patch4	09-30-17	16:42	0.8	F-2	K.N	09-30-17	-	-	X	-	-	Soudure complète	O
Patch1-1-North	09-30-17	17:00	4.3	F-2	K.N	09-30-17	17:18	X	-	30.5	29	Soudure complète	O
Patch1-2-North	09-30-17	17:00	2.2	F-2	K.N	09-30-17	17:18	X	-	30.5	29	Soudure complète	O
Patch2-2-North	09-30-17	17:00	4.5	F-2	K.N	09-30-17	17:18	X	-	30.5	29	Soudure complète	O
Patch2-3-North	09-30-17	17:00	1.6	F-2	K.N	09-30-17	17:18	X	-	30.5	29	Soudure complète	O
Patch3-3-North	09-30-17	17:00	5.1	F-2	K.N	09-30-17	17:18	X	-	30.5	29	Soudure complète	O
Patch3-4-North	09-30-17	17:00	1.3	F-2	K.N	09-30-17	17:18	X	-	30.5	29	Soudure complète	O
Patch4-4-North	09-30-17	17:00	5.4	F-2	K.N	09-30-17	17:18	X	-	30.5	29	Soudure complète	O
Patch4-6-North	09-30-17	17:00	1.7	F-2	K.N	09-30-17	17:18	X	-	30.5	29	Soudure complète	O
Patch1-1-South	09-30-17	17:35	4.3	F-2	K.N	09-30-17	17:55	X	-	31	29	Soudure complète	O
Patch1-2-South	09-30-17	17:35	2.2	F-2	K.N	09-30-17	17:55	X	-	31	29	Soudure complète	O
Patch2-2-South	09-30-17	17:35	4.5	F-2	K.N	09-30-17	17:55	X	-	31	29	Soudure complète	O
Patch2-3-South	09-30-17	17:35	1.6	F-2	K.N	09-30-17	17:55	X	-	31	29	Soudure complète	O
Patch3-3-South	09-30-17	17:35	5.1	F-2	K.N	09-30-17	17:55	X	-	31	29	Soudure complète	O
Patch3-4-South	09-30-17	17:35	1.3	F-2	K.N	09-30-17	17:55	X	-	31	29	Soudure complète	O

Texel GEOSOL

Seaming Procedures
Procédures de Soudures

Project Name / Nom de Projet: **Meliadine mine site fuel farm**

Project No. / No. de Projet: **C-17060**

QC Inspector / Inspecteur CQ: **Anthony Duquette-Michon**

Seaming Procedures / Procédures de Soudures						Non-Destructive Testing / Essai Non-Destructif							
Seam No. No. de Soudure	Date of Seaming Date de Soudure (mm/dd/yy)	Time of Seaming Heure de Soudure	Seam Length Longueur Soudure (m)	Trial Test No. No. Calibration	Technician-Welder Soudeur	Test Date Date de l'essai (mm/dd/yy)	Time Heure	Air-Pressure Pressurisation	Vacuum Box Boîte à Vide	Starting Pressure Pression Départ (psi)	Ending Pressure Pression Fin (psi)	Testing Details/Location Détails de l'essai/Localisation	Approved (Yes/No) Approuvé (Oui/Non)
Patch4-4-South	09-30-17	17:35	5.4	F-2	K.N	09-30-17	17:55	X	-	31	29	Soudure complète	O
Patch4-6-South	09-30-17	17:35	1.7	F-2	K.N	09-30-17	17:55	X	-	31	29	Soudure complète	O
9-10	10-01-17	09:33	12.7	F-3	K.N	10-01-17	9:40	X	-	31	30	Soudure complète	O
10-11	10-01-17	09:45	12.2	F-3	K.N	10-01-17	9:54	X	-	30.5	30	Soudure complète	O
11-12	10-01-17	10:02	11.7	F-3	K.N	10-01-17	10:07	X	-	31	29	Soudure complète	O
12-13	10-01-17	10:16	11.7	F-3	K.N	10-01-17	10:24	X	-	30	29	Soudure complète	O
13-14	10-01-17	10:45	12.8	F-3	K.N	10-01-17	10:51	X	-	29	29	Soudure complète	O
9-5	10-01-17	12:23	0.2	F-4	K.N	10-01-17	13:01	X	-	31.5	31.5	Soudure complète	O
9-6	10-01-17	12:23	6.5	F-4	K.N	10-01-17	13:01	X	-	31.5	31.5	Soudure complète	O
Patch4-10	10-01-17	12:23	0.4	F-4	K.N	10-01-17	13:01	X	-	31.5	31.5	Soudure complète	O
10-6	10-01-17	12:23	5.1	F-4	K.N	10-01-17	13:01	X	-	31.5	31.5	Soudure complète	O
10-7	10-01-17	12:23	1.2	F-4	K.N	10-01-17	13:01	X	-	31.5	31.5	Soudure complète	O
11-7	10-01-17	12:23	6.7	F-4	K.N	10-01-17	13:01	X	-	31.5	31.5	Soudure complète	O
12-7	10-01-17	12:23	3.7	F-4	K.N	10-01-17	13:01	X	-	31.5	31.5	Soudure complète	O
12-8	10-01-17	12:23	3.0	F-4	K.N	10-01-17	13:01	X	-	31.5	31.5	Soudure complète	O

Texel GEOSOL

Seaming Procedures
Procédures de Soudures

Project Name / Nom de Projet: **Meliadine mine site fuel farm**

QC Inspector / Inspecteur CQ: **Anthony Duquette-Michon**

Project No. / No. de Projet: **C-17060**

Seaming Procedures / Procédures de Soudures						Non-Destructive Testing / Essai Non-Destructif							
Seam No. No. de Soudure	Date of Seaming Date de Soudure (mm/dd/yy)	Time of Seaming Heure de Soudure	Seam Length Longueur Soudure (m)	Trial Test No. No. Calibration	Technician-Welder Soudeur	Test Date Date de l'essai (mm/dd/yy)	Time Heure	Air-Pressure Pressurisation	Vacuum Box Boîte à Vide	Starting Pressure Pression Départ (psi)	Ending Pressure Pression Fin (psi)	Testing Details/Location Détails de l'essai/Localisation	Approved (Yes/No) Approuvé (Oui/Non)
13-8	10-01-17	12:23	6.7	F-4	K.N	10-01-17	13:01	-	X	31.5	31.5	Soudure complète	O
14-8	10-01-17	12:23	2.6	F-4	K.N	10-01-17	12:57	-	X	34	34	Soudure complète	O
15-16	10-09-17	10:28	12.7	F-5	K.N	10-09-17	11:10	-	X	33	33	Soudure complète	O
16-17	10-09-17	10:40	13.2	F-5	K.N	10-09-17	11:15	X	-	32	31	Soudure complète	O
17-18	10-09-17	10:47	13.6	F-5	K.N	10-09-17	11:22	X	-	31	31	Soudure complète	O
18-19	10-09-17	11:03	13.5	F-5	K.N	10-09-17	11:27	X	-	33	31	Soudure complète	O
20-14	10-09-17	13:14	7.9	F-5	K.N	10-09-17	13:23	X	-	33	31	Soudure complète	O
19-21	10-09-17	13:30	11.3	F-5	K.N	10-09-17	13:45	X	-	31	30	Soudure complète	O
21-22	10-09-17	13:45	3.4	F-5	K.N	10-09-17	13:55	X	-	30	30	Soudure complète	O
1-15	10-09-17	14:30	2.6	F-6	K.N	10-09-17	14:54	X	-	30	30	Soudure complète	O
1-16	10-09-17	14:30	4.3	F-6	K.N	10-09-17	14:54	X	-	30	30	Soudure complète	O
2-16	10-09-17	14:30	2.5	F-6	K.N	10-09-17	15:10	X	-	31	31	Soudure complète	O
2-17	10-09-17	14:30	4.2	F-6	K.N	10-09-17	15:10	X	-	31	31	Soudure complète	O
3-17	10-09-17	14:30	2.6	F-6	K.N	10-09-17	15:10	X	-	31	31	Soudure complète	O
3-18	10-09-17	14:30	4.2	F-6	K.N	10-09-17	15:10	X	-	31	31	Soudure complète	O

Texel GEOSOL

Seaming Procedures
Procédures de Soudures

Project Name / Nom de Projet: **Meliadine mine site fuel farm**

Project No. / No. de Projet: **C-17060**

QC Inspector / Inspecteur CQ: **Anthony Duquette-Michon**

Seaming Procedures / Procédures de Soudures						Non-Destructive Testing / Essai Non-Destructif							
Seam No. No. de Soudure	Date of Seaming Date de Soudure (mm/dd/yy)	Time of Seaming Heure de Soudure	Seam Length Longueur Soudure (m)	Trial Test No. No. Calibration	Technician-Welder Soudeur	Test Date Date de l'essai (mm/dd/yy)	Time Heure	Air-Pressure Pressurisation	Vacuum Box Boîte à Vide	Starting Pressure Pression Départ (psi)	Ending Pressure Pression Fin (psi)	Testing Details/Location Détails de l'essai/Localisation	Approved (Yes/No) Approuvé (Oui/Non)
4-18	10-09-17	14:30	2.5	F-6	K.N	10-09-17	15:10	X	-	31	31	Soudure complète	O
4-19	10-09-17	14:30	4.2	F-6	K.N	10-09-17	15:10	X	-	31	31	Soudure complète	O
8-19	10-09-17	14:30	1.2	F-6	K.N	10-09-17	15:10	X	-	31	31	Soudure complète	O
14-19	10-09-17	14:30	2.1	F-6	K.N	10-09-17	15:10	X	-	31	31	Soudure complète	O
14-21	10-09-17	14:30	3.9	F-6	K.N	10-09-17	15:10	X	-	31	31	Soudure complète	O
20-21	10-09-17	14:30	6.1	F-6	K.N	10-09-17	15:10	X	-	31	31	Soudure complète	O
20-22	10-09-17	14:30	3.3	F-6	K.N	10-09-17	15:10	X	-	31	31	Soudure complète	O
15-23	10-10-17	12:30	7.5	F-7	K.N	10-10-17	12:45	X	-	32	31	Soudure complète	O
23-24	10-10-17	12:40	8.7	F-8	K.N	10-10-17	12:51	X	-	30	30	Soudure complète	O
15-24	10-10-17	13:01	2.4	F-8	K.N	10-10-17	13:15	X	-	32	30	Soudure complète	O
15-25	10-10-17	13:01	4.7	F-8	K.N	10-10-17	13:15	X	-	32	30	Soudure complète	O
24-25	10-10-17	12:52	8.8	F-7	K.N	10-10-17	13:02	X	-	31	31	Soudure complète	O
25-26	10-10-17	14:00	12.3	F-7	K.N	10-10-17	14:15	X	-	30	28	Soudure complète	O
26-27	10-10-17	14:18	12.0	F-7	K.N	10-10-17	14:27	X	-	30	30	Soudure complète	O
27-28	10-10-17	14:38	12.5	F-7	K.N	10-10-17	14:54	X	-	32	31	Soudure complète	O

Texel GEOSOL

Seaming Procedures
Procédures de Soudures

Project Name / Nom de Projet: **Meliadine mine site fuel farm**

QC Inspector / Inspecteur CQ: **Anthony Duquette-Michon**

Project No. / No. de Projet: **C-17060**

Seaming Procedures / Procédures de Soudures						Non-Destructive Testing / Essai Non-Destructif							
Seam No. No. de Soudure	Date of Seaming Date de Soudure (mm/dd/yy)	Time of Seaming Heure de Soudure	Seam Length Longueur Soudure (m)	Trial Test No. No. Calibration	Technician-Welder Soudeur	Test Date Date de l'essai (mm/dd/yy)	Time Heure	Air-Pressure Pressurisation	Vacuum Box Boîte à Vide	Starting Pressure Pression Départ (psi)	Ending Pressure Pression Fin (psi)	Testing Details/Location Détails de l'essai/Localisation	Approved (Yes/No) Approuvé (Oui/Non)
1-28	10-10-17	16:00	6.7	F-8	K.N	10-10-17	16:27	X	-	34	32	Soudure complète	O
1-27	10-10-17	16:00	6.7	F-8	K.N	10-10-17	16:27	X	-	34	32	Soudure complète	O
1-26	10-10-17	16:00	6.7	F-8	K.N	10-10-17	16:27	X	-	34	32	Soudure complète	O
1-25	10-10-17	16:00	2.5	F-8	K.N	10-10-17	16:27	X	-	34	32	Soudure complète	O
28-29	10-11-17	09:03	12.1	F-9	K.N	10-11-17	9:17	X	-	33	32	Soudure complète	O
29-30	10-11-17	09:10	12.4	F-9	K.N	10-11-17	9:25	X	-	34	32	Soudure complète	O
30-31	10-11-17	09:30	12.0	F-9	K.N	10-11-17	9:40	X	-	30	28	Soudure complète	O
31-32	10-11-17	09:37	11.2	F-9	K.N	10-11-17	9:47	X	-	30	28	Soudure complète	O
32-33	10-11-17	09:54	8.4	F-9	K.N	10-11-17	10:00	X	-	31	30	Soudure complète	O
33-34	10-11-17	10:00	8.6	F-10	K.N	10-11-17	10:10	X	-	31	30	Soudure complète	O
34-35	10-11-17	10:16	8.3	F-9	K.N	10-11-17	10:27	X	-	33	33	Soudure complète	O
32-35	10-11-17	10:23	5.3	F-10	K.N	10-11-17	10:32	X	-	32	31	Soudure complète	O
1-32	10-11-17	AM	3.4	E-6	P.A	10-11-17	-	-	X	-	-	Soudure complète	O
1-31	10-11-17	AM	6.7	E-6	P.A	10-11-17	-	-	X	-	-	Soudure complète	O
1-30	10-11-17	AM	2.8	E-6	P.A	10-11-17	-	-	X	-	-	From int.1-30-31 0m to 2.8m	O

Texel GEOSOL

Seaming Procedures
Procédures de Soudures

Project Name / Nom de Projet: **Meliadine mine site fuel farm**

Project No. / No. de Projet: **C-17060**

QC Inspector / Inspecteur CQ: **Anthony Duquette-Michon**

Seaming Procedures / Procédures de Soudures						Non-Destructive Testing / Essai Non-Destructif							
Seam No. No. de Soudure	Date of Seaming Date de Soudure (mm/dd/yy)	Time of Seaming Heure de Soudure	Seam Length Longueur Soudure (m)	Trial Test No. No. Calibration	Technician-Welder Soudeur	Test Date Date de l'essai (mm/dd/yy)	Time Heure	Air-Pressure Pressurisation	Vacuum Box Boîte à Vide	Starting Pressure Pression Départ (psi)	Ending Pressure Pression Fin (psi)	Testing Details/Location Détails de l'essai/Localisation	Approved (Yes/No) Approuvé (Oui/Non)
1-30	10-11-17	12:12	3.9	F-10	K.N	10-11-17	12:35	X	-	31	30	2.8m to 6.7m	O
1-29	10-11-17	12:12	6.6	F-10	K.N	10-11-17	12:35	X	-	31	30	From int. 1-29-30 0m to 1.4m	O
"	"	"	"	"	"	10-11-17	12:44	X	-	34	34	1.4m to 6.6m	O
35-36	10-11-17	12:40	10.9	F-9	K.N	10-11-17	13:08	X	-	31	29	Soudure complète	O
36-37	10-11-17	12:50	10.9	F-9	K.N	10-11-17	13:14	X	-	32	32	Soudure complète	O
37-38	10-11-17	13:00	11.0	F-9	K.N	10-11-17	13:20	X	-	31	30	Soudure complète	O
38-39	10-11-17	13:20	10.7	F-9	K.N	10-11-17	13:27	X	-	33	32	Soudure complète	O
1-35	10-11-17	13:40	2.5	F-10	K.N	10-11-17	14:55	X	-	32	31	Soudure complète	O
1-36	10-11-17	13:40	4.2	F-10	K.N	10-11-17	14:55	X	-	32	31	Soudure complète	O
2-36	10-11-17	13:40	2.7	F-10	K.N	10-11-17	15:50	X	-	30	30	Soudure complète	O
2-37	10-11-17	13:40	4.0	F-10	K.N	10-11-17	15:50	X	-	30	30	Soudure complète	O
3-37	10-11-17	13:40	2.7	F-10	K.N	10-11-17	15:50	X	-	30	30	Soudure complète	O
3-38	10-11-17	13:40	4.1	F-10	K.N	10-11-17	15:50	X	-	30	30	Soudure complète	O
4-38	10-11-17	13:40	2.6	F-10	K.N	10-11-17	15:50	X	-	30	30	Soudure complète	O
4-39	10-11-17	13:40	4.1	F-10	K.N	10-11-17	15:50	X	-	30	30	Soudure complète	O

Texel GEOSOL

Seaming Procedures
Procédures de Soudures

Project Name / Nom de Projet: **Meliadine mine site fuel farm**

Project No. / No. de Projet: **C-17060**

QC Inspector / Inspecteur CQ: **Anthony Duquette-Michon**

Seaming Procedures / Procédures de Soudures						Non-Destructive Testing / Essai Non-Destructif							
Seam No. No. de Soudure	Date of Seaming Date de Soudure (mm/dd/yy)	Time of Seaming Heure de Soudure	Seam Length Longueur Soudure (m)	Trial Test No. No. Calibration	Technician-Welder Soudeur	Test Date Date de l'essai (mm/dd/yy)	Time Heure	Air-Pressure Pressurisation	Vacuum Box Boîte à Vide	Starting Pressure Pression Départ (psi)	Ending Pressure Pression Fin (psi)	Testing Details/Location Détails de l'essai/Localisation	Approved (Yes/No) Approuvé (Oui/Non)
5-39	10-11-17	13:40	1.7	F-10	K.N	10-11-17	15:50	X	-	30	30	Soudure complète	O
9-40	10-12-17	08:10	11.7	F-11	K.N	10-12-17	8:45	X	-	31	31	Soudure complète	O
40-41	10-12-17	08:26	11.9	F-11	K.N	10-12-17	9:00	X	-	31	30	Soudure complète	O
39-44	10-12-17	08:34	9.1	F-11	K.N	10-12-17	9:30	X	-	32	30	Soudure complète	O
41-42	10-12-17	09:01	10.0	F-11	K.N	10-12-17	9:34	X	-	32	31	Soudure complète	O
43-44	10-12-17	08:41	3.6	F-11	K.N	10-12-17	9:40	X	-	31	30	Soudure complète	O
5-40	10-12-17	09:47	6.7	F-12	K.N	10-12-17	10:10	X	-	32	31	Soudure complète	O
5-41	10-12-17	09:47	4.8	F-12	K.N	10-12-17	10:10	X	-	32	31	Soudure complète	O
39-41	10-12-17	09:47	2.5	F-12	K.N	10-12-17	10:10	X	-	32	31	Soudure complète	O
42-44	10-12-17	09:47	9.0	F-12	K.N	10-12-17	10:20	X	-	33	31	Soudure complète	O
42-43	10-12-17	09:47	3.1	F-12	K.N	10-12-17	10:20	X	-	33	31	Soudure complète	O

Texel GEOSOL

Destructive Testing
Essai Destructif

Project Name / Nom de Projet: **Meliadine mine site fuel farm**

Project No. / No. de Projet: **C-17060**

QC Inspector / Inspecteur CQ: **Anthony Duquette-Michon**

Destructive Test No. No. Essai Destructif	Seam No. No. de Soudure	Date (mm/dd/yy)	Sample Location Localisation de l'échantillon	Peel Resistance Résistance Pelage (ppi)	Peel Type of Break Type de Brisure	Peel Resistance Résistance Pelage (ppi)	Peel Type of Break Type de Brisure	Shear Resistance Résist. Cisaillement (ppi)	Shear Type of Break Type de Brisure	Date Repaired Date Réparée (mm/dd/yy)	Date Repair Verified Date Réparée Vérifiée (mm/dd/yy)	Lab. Testing (P/F) Lab. Indép. (A/R)	Tensiometer No. No. Tensiomètre
DT-1	2-3	07-18-17	At 5m from SEOS	130	SE1	115	SE1	173	BRK	07-18-17	07-18-17	P	T-9709
"	"	"	"	118	SE1	115	SE1	N/A	N/A	"	"	"	"
"	"	"	"	125	SE1	117	SE1	N/A	N/A	"	"	"	"
"	"	"	"	123	SE1	113	SE1	N/A	N/A	"	"	"	"
DT-2	18-19	10-09-17	North trench	144	SE1	124	SE1	185	BRK	10-09-17	10-09-17	P	T-9709
"	"	"	"	148	SE1	134	SE1	N/A	N/A	"	"	"	"
"	"	"	"	136	SE1	142	SE1	N/A	N/A	"	"	"	"
"	"	"	"	124	SE1	136	SE1	N/A	N/A	"	"	"	"
DT-3	29-30	10-11-17	East trench	122	SE1	135	SE1	182	BRK	10-11-17	10-11-17	P	T-9709
"	"	"	"	147	SE1	142	SE1	N/A	N/A	"	"	"	"
"	"	"	"	134	SE1	121	SE1	N/A	N/A	"	"	"	"
"	"	"	"	132	SE1	132	SE1	N/A	N/A	"	"	"	"
DT-4	40-41	10-12-17	West trench	129	SE1	140	SE1	191	BRK	10-12-17	10-12-17	P	T-9709
"	"	"	"	140	SE1	139	SE1	N/A	N/A	"	"	"	"
"	"	"	"	140	SE1	138	SE1	N/A	N/A	"	"	"	"
"	"	"	"	151	SE1	134	SE1	N/A	N/A	"	"	"	"

Texel GEOSOL

Repair Report
Rapport de Réparation

Project Name / Nom de Projet: **Meliadine mine site fuel farm**

Project No. / No. de Projet: **C-17060**

QC Inspector / Inspecteur CQ: **Anthony Duquette-Michon**

Repair No. No. Réparation	Type & Dimensions Type et Dimensions			Location of Repair Localisation de la Réparation				Date Repaired Date Réparée (mm/dd/yy)	Date Repair Verified Date Réparée Vérifiée (mm/dd/yy)	Approved (Yes/No) Approuvé (Oui/Non)
	Patch Empiècement	Extrusion Weld or Bead Soudure Extrusion	Pipe Boot Manchon d'étanchéité	On Panel No. Sur Panneau No.	On Seam No. Sur Soudure No.	Intersection of Panels Intersection des Panneaux	Sample Location Localisation de l'échantillon			
R-1	P3				1-2		At 0.8m from SEOS	07-18-17	07-18-17	O
R-2	P2			2			At 1m from SEOP and 2m from EEOP	07-18-17	07-18-17	O
R-3	P2			2			At 3.3m from SEOP and 2m from EEOP	07-18-17	07-18-17	O
R-4	P2			2			At 5.5m from SEOP and 2m from EEOP	07-18-17	07-18-17	O
R-5	P2			2			At 7.8m from SEOP and 2m from EEOP	07-18-17	07-18-17	O
R-6	P2			2			At 10m from SEOP and 2m from EEOP	07-18-17	07-18-17	O
R-7	P2			2			At 1m from SEOP and 2m from WEOP	07-18-17	07-18-17	O
R-8	P1				1-2		At 11.2m from SEOS	07-18-17	07-18-17	O
R-9	P1				1-2		At 27.3m from SEOS	07-18-17	07-18-17	O
R-10	P1				1-2		At 44.8m from SEOS	07-18-17	07-18-17	O
R-11	P1				1-2		At 0.4m from NEOS	07-18-17	07-18-17	O
R-12		E				4-5-6		07-18-17	07-18-17	O
R-13		E				4-6-7		07-18-17	07-18-17	O
R-14		E				4-7-8		07-18-17	07-18-17	O
R-15A		E				Patch1 / 1-2 North		10-01-17	10-01-17	O
R-16A		E				Patch1-Patch2-2 North		10-01-17	10-01-17	O
R-17A		E				Patch2 / 2-3 North		10-01-17	10-01-17	O
R-18A		E				Patch2-Patch3-3 North		10-01-17	10-01-17	O
R-19A		E				Patch3 / 3-4 North		10-01-17	10-01-17	O
R-20A		E				Patch3-Patch4-4 North		10-01-17	10-01-17	O
R-21A		E				Patch4 / 4-6 North		10-01-17	10-01-17	O
R-22A		E				Patch1 / 1-2 South		10-01-17	10-01-17	O

Texel GEOSOL

Repair Report
Rapport de Réparation

Project Name / Nom de Projet: **Meliadine mine site fuel farm**

Project No. / No. de Projet: **C-17060**

QC Inspector / Inspecteur CQ: **Anthony Duquette-Michon**

Repair No. No. Réparation	Type & Dimensions Type et Dimensions			Location of Repair Localisation de la Réparation				Date Repaired Date Réparée (mm/dd/yy)	Date Repair Verified Date Réparée Vérifiée (mm/dd/yy)	Approved (Yes/No) Approuvé (Oui/Non)
	Patch Empiècement	Extrusion Weld or Bead Soudure Extrusion	Pipe Boot Manchon d'étanchéité	On Panel No. Sur Panneau No.	On Seam No. Sur Soudure No.	Intersection of Panels Intersection des Panneaux	Sample Location Localisation de l'échantillon			
R-23A		E				Patch1-Patch2-2 South		10-01-17	10-01-17	O
R-24A		E				Patch2 / 2-3 South		10-01-17	10-01-17	O
R-25A		E				Patch2-Patch3-3 South		10-01-17	10-01-17	O
R-26A		E				Patch3 / 3-4 South		10-01-17	10-01-17	O
R-27A		E				Patch3-Patch4-4 South		10-01-17	10-01-17	O
R-28A		E				Patch4 / 4-6 South		10-01-17	10-01-17	O
R-29A		E DB			Patch1 - Patch2		Full seam	10-01-17	10-01-17	O
R-30A		E DB			Patch2 - Patch3		Full seam	10-01-17	10-01-17	O
R-31A		E DB			Patch3 - Patch4		Full seam	10-01-17	10-01-17	O
R-32A		E				Patch4-6-9-10		10-01-17	10-01-17	O
R-33A		E				6-7-10		10-01-17	10-01-17	O
R-34A		E				7-10-11		10-01-17	10-01-17	O
R-35A		E				7-11-12		10-01-17	10-01-17	O
R-36A		E				7-8-12		10-01-17	10-01-17	O
R-37A		E				8-12-13		10-01-17	10-01-17	O
R-38A	P1					8-13-14		10-01-17	10-01-17	O
R-15	P1			14			At 0.2m of 14-20 and 0.5m of West trench	10-09-17	10-09-17	O
R-16		E				20-21-22	"T" Seam	10-09-17	10-09-17	O
R-17		E				14-20-21	"T" Seam	10-09-17	10-09-17	O
R-18		E				14-19-21	"T" Seam	10-09-17	10-09-17	O
R-19		E				8-14-19	"T" Seam	10-09-17	10-09-17	O
R-20		E				4-8-19	"T" Seam	10-09-17	10-09-17	O

Texel GEOSOL

Repair Report
Rapport de Réparation

Project Name / Nom de Projet: **Meliadine mine site fuel farm**

Project No. / No. de Projet: **C-17060**

QC Inspector / Inspecteur CQ: **Anthony Duquette-Michon**

Repair No. No. Réparation	Type & Dimensions Type et Dimensions			Location of Repair Localisation de la Réparation				Date Repaired Date Réparée (mm/dd/yy)	Date Repair Verified Date Réparée Vérifiée (mm/dd/yy)	Approved (Yes/No) Approuvé (Oui/Non)
	Patch Empiècement	Extrusion Weld or Bead Soudure Extrusion	Pipe Boot Manchon d'étanchéité	On Panel No. Sur Panneau No.	On Seam No. Sur Soudure No.	Intersection of Panels Intersection des Panneaux	Sample Location Localisation de l'échantillon			
R-21		E				4-18-19	"T" Seam	10-09-17	10-09-17	O
R-22		E				3-4-18	"T" Seam	10-09-17	10-09-17	O
R-23		E				3-17-18	"T" Seam	10-09-17	10-09-17	O
R-24		E				2-3-17	"T" Seam	10-09-17	10-09-17	O
R-25		E				2-16-17	"T" Seam	10-09-17	10-09-17	O
R-26		E				1-2-16	"T" Seam	10-09-17	10-09-17	O
R-27		E				1-15-16	"T" Seam	10-09-17	10-09-17	O
R-28		E				1-15-25	"T" Seam	10-10-17	10-10-17	O
R-29		E				15-24-25	"T" Seam	10-10-17	10-10-17	O
R-30	P3					15-23-24		10-10-17	10-10-17	O
R-31	P3				1-25		At 1.5m of int. 1-15-25	10-10-17	10-10-17	O
R-32		E				1-25-26	"T" Seam	10-10-17	10-10-17	O
R-33		E				1-26-27	"T" Seam	10-10-17	10-10-17	O
R-34		E				1-27-28	"T" Seam	10-10-17	10-10-17	O
R-35	P3			1			At 5m South of int. 1-28-29	10-10-17	10-10-17	O
R-36	P2					1-28-29		10-10-17	10-10-17	O
R-37	P3					32-33-34-35		10-10-17	10-10-17	O
R-38		E				1-29-30	"T" Seam	10-10-17	10-10-17	O
R-39	P3				1-30		At 3m of int. 1-30-31	10-10-17	10-10-17	O
R-40		E				1-30-31	"T" Seam	10-10-17	10-10-17	O
R-41		E				1-31-32	"T" Seam	10-10-17	10-10-17	O
R-42	P3					1-32-35		10-10-17	10-10-17	O

Texel GEOSOL

Repair Report
Rapport de Réparation

Project Name / Nom de Projet: **Meliadine mine site fuel farm**

Project No. / No. de Projet: **C-17060**

QC Inspector / Inspecteur CQ: **Anthony Duquette-Michon**

Repair No. / No. Réparation	Type & Dimensions / Type et Dimensions			Location of Repair / Localisation de la Réparation				Date Repaired / Date Réparée (mm/dd/yy)	Date Repair Verified / Date Réparée Vérifiée (mm/dd/yy)	Approved (Yes/No) / Approuvé (Oui/Non)
	Patch / Empiècement	Extrusion Weld or Bead / Soudure Extrusion	Pipe Boot / Manchon d'étanchéité	On Panel No. / Sur Panneau No.	On Seam No. / Sur Soudure No.	Intersection of Panels / Intersection des Panneaux	Sample Location / Localisation de l'échantillon			
R-43		DB			1-32		Full seam	10-10-17	10-10-17	O
R-44		DB			1-31		Full seam	10-10-17	10-10-17	O
R-45		DB			1-30		From int. 1-30-31 to 3m	10-10-17	10-10-17	O
R-46	P3				33-34		South-East corner trench	10-11-17	10-11-17	O
R-47		E				1-35-36	"T" Seam	10-11-17	10-11-17	O
R-48		E				1-2-36	"T" Seam	10-11-17	10-11-17	O
R-49		E				2-36-37	"T" Seam	10-11-17	10-11-17	O
R-50		E				2-3-37	"T" Seam	10-11-17	10-11-17	O
R-51		E				3-37-38	"T" Seam	10-11-17	10-11-17	O
R-52		E				3-4-38	"T" Seam	10-11-17	10-11-17	O
R-53		E				4-38-39	"T" Seam	10-11-17	10-11-17	O
R-54		E				4-5-39	"T" Seam	10-11-17	10-11-17	O
R-55	P3				9-40		West trench	10-12-17	10-12-17	O
R-56	P1				9-40		At 2m of int. 5-6-9-40	10-12-17	10-12-17	O
R-57	P3					5-6-9-40		10-12-17	10-12-17	O
R-58	P3			40			At 3.5m of 40-41 and 3m of 5-40	10-12-17	10-12-17	O
R-59		E				5-40-41	"T" Seam	10-12-17	10-12-17	O
R-60		E				5-39-41	"T" Seam	10-12-17	10-12-17	O
R-61	P3					39-41-42-44		10-12-17	10-12-17	O
R-62		E				42-43-44	"T" Seam	10-12-17	10-12-17	O

CHARTE/CHART : Empièçement/Patch (**P1** 0.3m à/to 0.6m; **P2** 0.6m à/to 1m; **P3** over 1m et plus), Extrusion (**E**), Embout/Pipe Boot (**B**), Cap strip (**CS**), Doublure/Reinforcement (**DB**) et/and Reconstruction

Texel GEOSOL

Repair Report
Rapport de Réparation

Project Name / Nom de Projet: **Meliadine mine site fuel farm**

Project No. / No. de Projet: **C-17060**

QC Inspector / Inspecteur CQ: **Anthony Duquette-Michon**

Repair No. / No. Réparation	Type & Dimensions / Type et Dimensions			Location of Repair / Localisation de la Réparation				Date Repaired / Date Réparée (mm/dd/yy)	Date Repair Verified / Date Réparée Vérifiée (mm/dd/yy)	Approved (Yes/No) / Approuvé (Oui/Non)
	Patch / Empiècement	Extrusion Weld or Bead / Soudure Extrusion	Pipe Boot / Manchon d'étanchéité	On Panel No. / Sur Panneau No.	On Seam No. / Sur Soudure No.	Intersection of Panels / Intersection des Panneaux	Sample Location / Localisation de l'échantillon			

APPENDIX III

US-EPA CLASSIFICATION FOR TYPES OF BREAK

DOUBLE–TRACK GEOMEMBRANE WELD

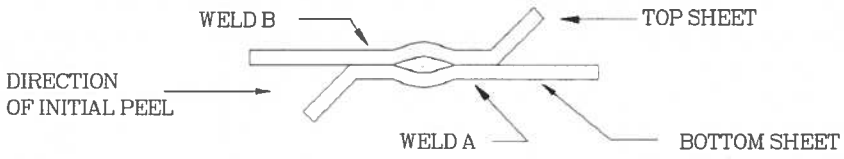

TYPES OF BREAK	CODE	BREAK DESCRIPTION	CLASSI–FICATION [a]
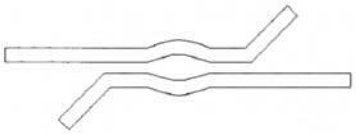	AD	ADHESION FAILURE	NON–FTB
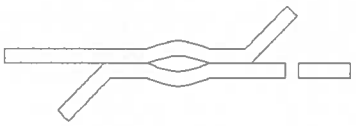	BRK	BREAK IN SHEETING. BREAK CAN BE IN EITHER TOP OR BOTTOM SHEET.	FTB
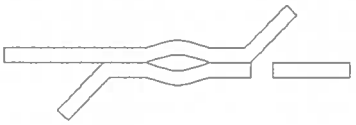	SE1	BREAK AT OUTHER EDGE OF SEAM. BREAK CAN BE IN EITHER TOP OR BOTTOM SHEET.	FTB
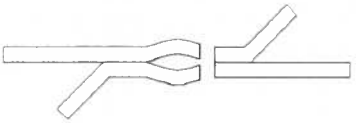	SE2	BREAK AT INNER EDGE OF SEAM THROUGH BOTH SHEETS	FTB
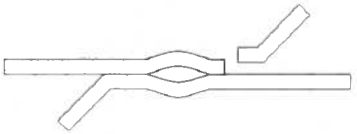	AD–BRK	BREAK IN FIRST SEAM AFTER SOME ADHESION FAILURE. BREAK CAN BE IN EITHER THE TOP OR BOTTOM SHEET.	FTB

[a] FTB="FILM–TEAR BOND."

FILLET–EXTRUDED GEOMEMBRANE WELD

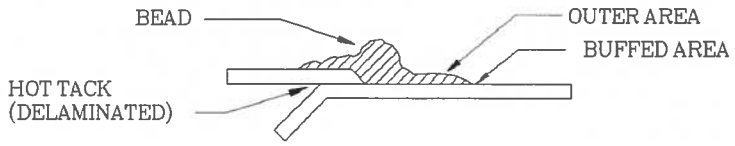

TYPES OF BREAKS	CODE	BREAK DESCRIPTION	CLASSIFICATION [a]
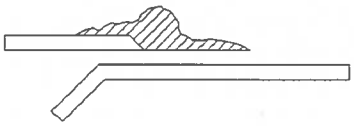	AD1	FAILURE IN ADHESION. SPECIMENS MAY ALSO DELAMINATE UNDER THE BEAD AND BREAK THROUGH THE THIN EXTRUDED MATERIAL IN THE OUTER AREA.	NON–FTB
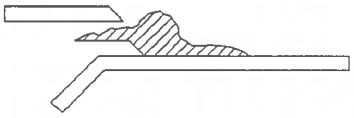	AD2	FAILURE IN ADHESION.	NON–FTB
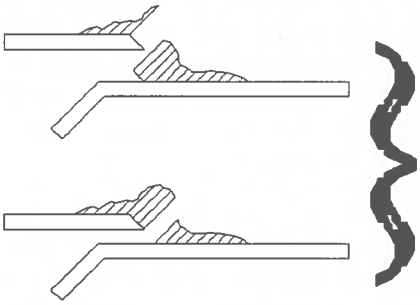	AD–WLD	BREAK THROUGH THE FILLET. BREAKS THROUGH THE FILLET RANGE FROM BREAKS STARTING AT THE EDGE OF THE TOP SHEET TO BREAKS THROUGH THE FILLET AFTER SOME ADHESION FAILURE BETWEEN THE FILLET AND THE BOTTOM SHEET.	NON–FTB [b]
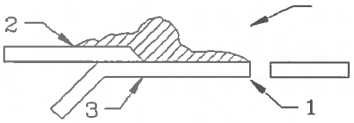	SE	BREAK AT SEAM EDGE. INDICATE LOCATION BY 1,2 OR 3	FTB
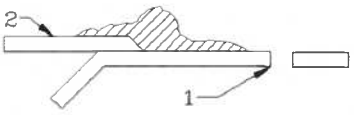	BRK	BREAK IN THE SHEET. USE 1 TO INDICATE BOTTOM SHEET AND 2 TO INDICATE TOP SHEET. IF BREAK IS IN BUFFED AREA, INDICATE WITH "(B)".	FTB
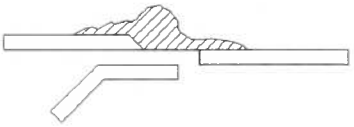	AD–BRK	BREAK IN THE BOTTOM SHEETING AFTER SOME ADHESION FAILURE BETWEEN THE FILLET AND THE BOTTOM SHEET. (APPLICABLE TO PEEL ONLY).	FTB
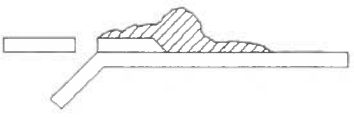	HT	BREAK AT THE EDGE OF THE HOT TACK FOR SPECIMENS WHICH COULD NOT BE DELAMINATED IN THE HOT TACK.	NO TEST

[a] FTB="FILM–TEAR BOND."

[b] ACCEPTANCE OF AD–WLD BREAKS MAY DEPEND ON WHETHER TEST VALUES MEET A MINIMUM SPECIFICATION VALUE AND NOT ON CLASSIFICATION AS A FTB OR NON–FTB BREAK.

APPENDIX IV

RECORD DRAWING

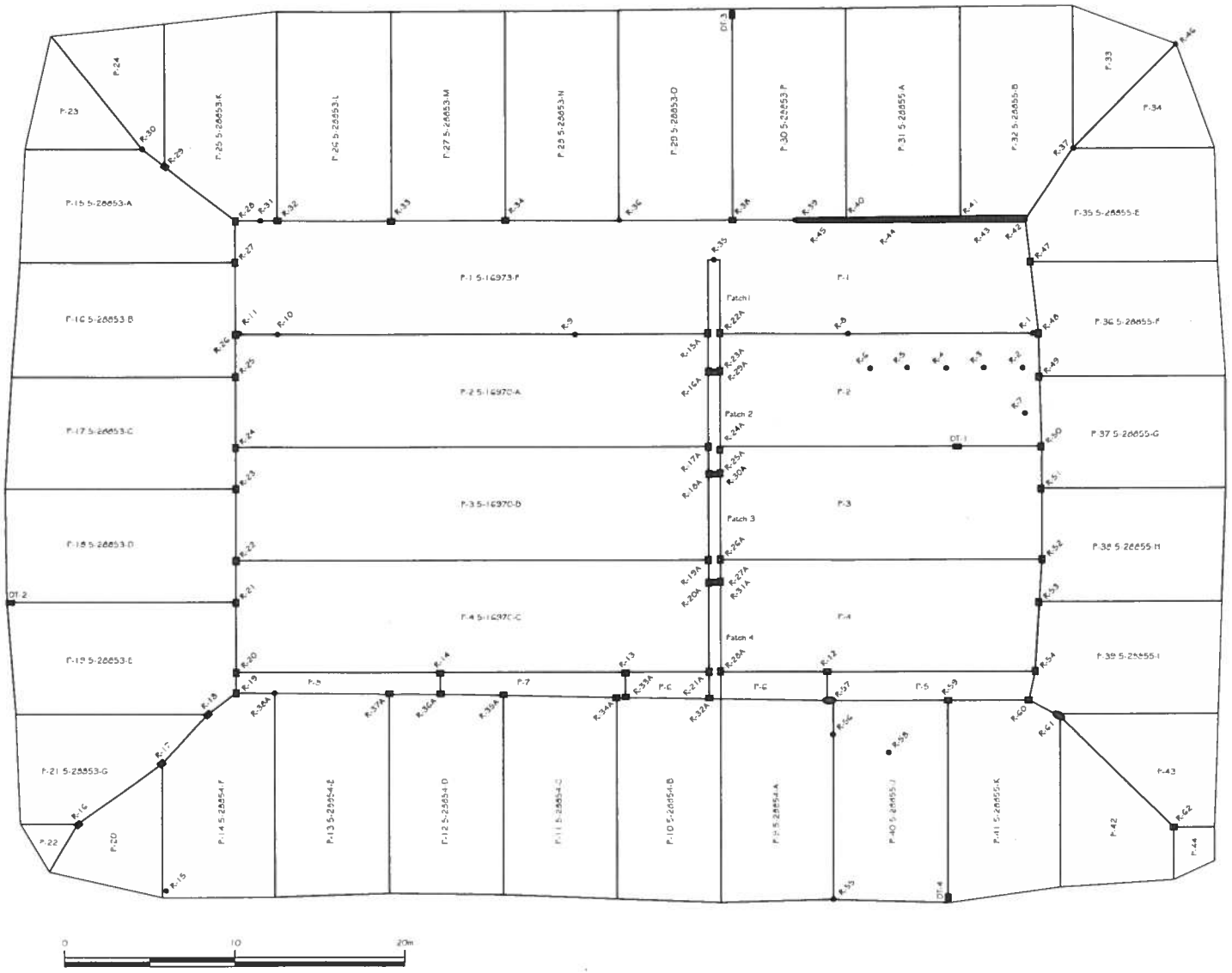

NO PANNEAU / PANEL NO	ROULEAU NO. / ROLL NO	
P-5	5-16973	D
P-6	5-16973	E
P-7	5-16973	F
P-8	5-16973	G
P-20	5-28853	I
P-22	5-28853	H
P-23	5-28853	I
P-24	5-28853	J
P-33	5-28855	C
P-34	5-28855	D
P-42	5-28855	E
P-43	5-28855	F
P-44	5-28855	G

INGÉNIEUR / ENGINEER :

AGNICO EAGLE CONSTRUCTION

LÉGENDE / LEGEND:

- EMPIÈCEMENT / PATCH
- MANCHON TUYAU / PIPE BOOT
- DESTRUCTIF / DESTRUCTIVE
- SOUDURE EXTRUSION / EXTRUSION WELD
- ! PANNEAU NO. / PANEL NO.
- 1-30474 ROULEAU NO. / ROLL NO.
- ANCRAGE MECANIQUE / MECHANICAL ANCHORAGE
- SOUDURE EXISTANTE / EXISTING SEAM

CLIENT / CUSTOMER:

NUNA KIVALLIQ EARTHWORKS INC

TYPE DE PRODUIT INSTALLÉ / PRODUCT TYPE INSTALLED

GEOTEXTILE I GOE HDPE GOMIL TEXTURED GEOTEXTILE I GCE

TYPE DE PROJET / PROJECT TYPE

MEADINE MINE SITE FUEL FARM LINING AS-BUILT

NOM DU PROJET / PROJECT NAME

AGNICO EAGLE MEADINE AEMOOS MEADINE MINE SITE FUEL FARM

Texel GEOSOL

1300, 2e Rue, Parc industriel
Sainte-Marie, QC, Canada
G6V 4T2

NO. PROJET / PROJECT NO.:	C-17060
FICHIER AUTOCAD: AUTOCAD FILE:	C-17060rsff.dwg
DATE (yy-mm-aa): DATE (dd-mm-yy):	17/11/17
DESSINÉ PAR / DRAWN BY:	E.B.
VERIFIÉ PAR / VERIFIED BY:	E.B.
APPROUVÉ PAR / APPROVED BY:	P.T.
ÉCHELLE / SCALE:	1/250
DESSIN NO / DRAWING NO.:	1/1