Meliadine Project
Fresh Water Intake, Pumping Station and Pipeline

As-Built Report and Drawings
(Construction Summary)
6515-692-163-REP-002

In Accordance with Water License 2AM-MEL1631 (Part D, item 3)

Prepared by:
Agnico Eagle Mines Limited – Meliadine Division

February 2019

TABLE OF CONTENTS

1 INTRODUCTION 4

2 SUMMARY OF THE CONSTRUCTION 5

2.1 Site Location Plan 5
2.2 Freshwater Intake Description 5
2.2.1 Intake Location and Concept 5
2.3 Pumping Station 6
2.3.1 General 6
2.3.2 Suction Line and Strainer 6
2.3.3 Piping 6
2.3.4 Controls 6
2.4 Pipeline 7
2.4.1 Above-ground Pipelines 7
2.4.2 Sub-marine suction line and strainer 7
2.5 Construction pad (on Meliadine Lake shore) 7
2.5.1 Earth Work Construction Material 8
2.6 Testing and Inspection 8
2.7 Construction Schedule 8
2.8 Field Decisions 9

3 PHOTOGRAPHS AND DRAWINGS 10

LIST OF FIGURES

Figure 1 – Location of Meliadine Freshwater Intake 4

LIST OF TABLES

Table 1 - Earthwork material quantities for the construction of the fresh water intake area…….8

Table 2 - Construction Milestones for the Fresh Water Intake System…….....……9

LIST OF APPENDICES

Appendix A: Photographs

Appendix B: Drawings and Technical Specifications

1 INTRODUCTION

Agnico Eagle Mines Limited (Agnico Eagle) is developing the Meliadine Project (the Project), a gold mine located approximately 25 km north from Rankin Inlet, and 80 km southwest from Chesterfield Inlet in the Kivalliq Region of Nunavut. Situated on the western shore of Hudson Bay, the Project site is located on a peninsula between the east, south, and west basins of Meliadine Lake (63°1’23.8’’ N, 92°13’6.42"W) on Inuit Owned Land. The area is accessible from the all-weather gravel road linking the existing exploration camp with Rankin Inlet.

As required by Water License A No. 2AM-MEL1631 – Agnico Eagle Mines Limited for the Meliadine Gold Project (Part D, Item 3), this report summarizes the construction work of the permanent fresh water intake, pumping station and associated pipelines into Meliadine Lake. Included in this report:

- Summary of the construction
- Summary of field decisions and mitigation measures implemented during construction (including list of deficiencies detected during construction)
- Photographs of the infrastructure
- Drawings

2 SUMMARY OF THE CONSTRUCTION

2.1 Site Location Plan

The permanent freshwater intake installation is located next to the temporary freshwater intake in Meliadine Lake, north east of the industrial site. Figure 1 shows the location of the freshwater intake.

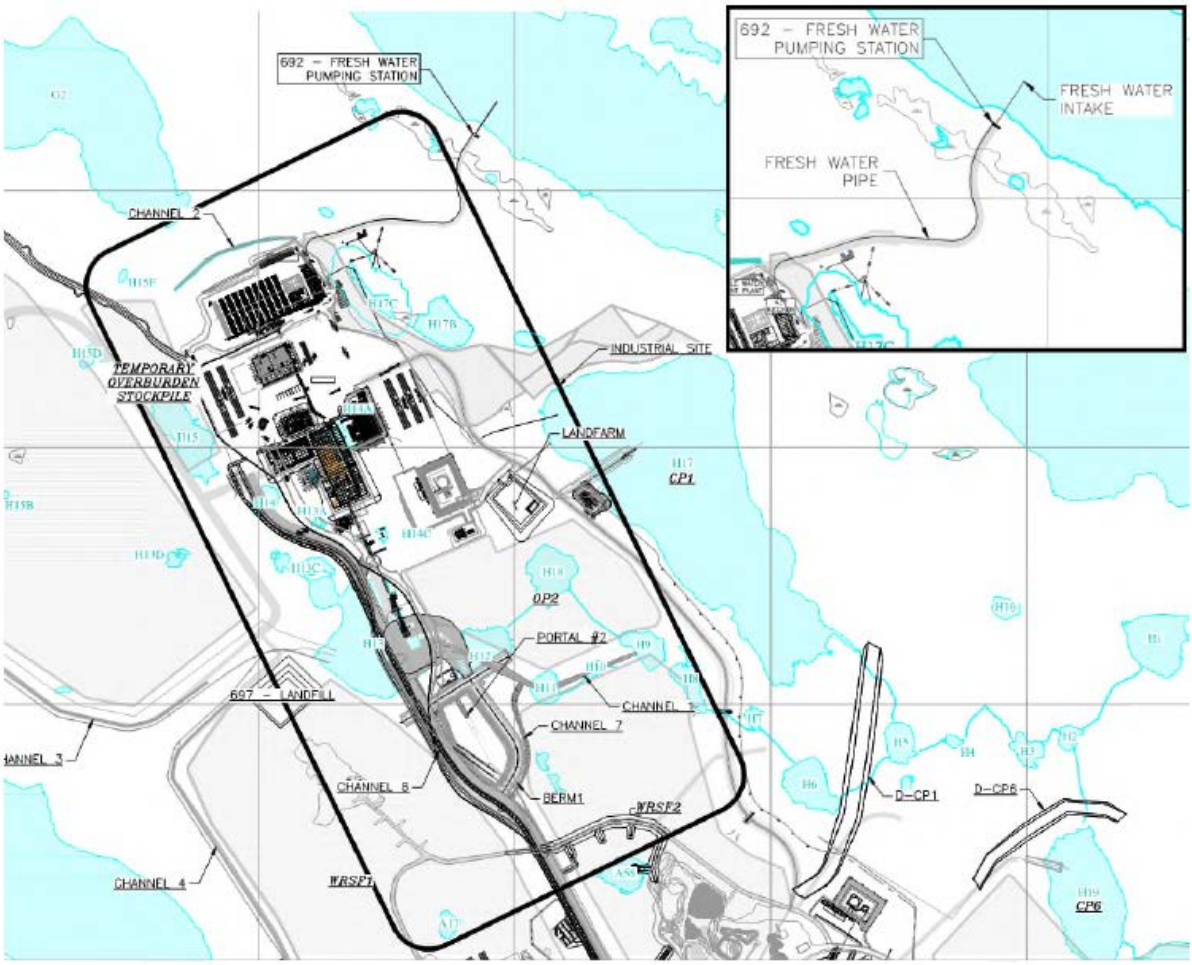

Figure 1 **–Location of the Freshwater Intake in Meliadine Lake**

2.2 Freshwater Intake Description

2.2.1 Intake Location and Concept

Fresh water for site use is pumped from Meliadine Lake. The fresh water intake consists of a 90 m long HDPE pipe of 300 mm of diameter, laying on the bottom of the lake. It is held in place by weights. The

submerged end of the intake pipeline is raised to avoid any entrained sediments. The facility includes measures to avoid the entrainment of fish in the intake or the impingement of the fish on any screens.

2.3 Pumping Station

2.3.1 General

Fresh water is pumped from Meliadine Lake to the Process Plant, mainly. Part of the fresh water pumped is directed to the Freshwater Treatment Plant, to be treated and then used as potable water for the whole site. The pumping station is located on the shore of Meliadine Lake. A unique suction line is installed in Meliadine Lake, completed with a fish strainer (Appendix A).

Two pumps are installed in the pumping station: one operates while the second one is stand-by, in case of a failure of the operation pump. The flowrate is approximately 131.5 m^3/hr and 3156 m^3/day.

All mechanical and electrical pumping station equipment is housed in a heated and insulated enclosure. Electrical equipment (control panel, junction boxes, VFD/soft starters, etc.) are separated from the mechanical equipment (e.g. pumps, isolation valves, piping, piping accessories, etc.) by a wall and each room has its own access door. The enclosure has been designed following the site information and design coefficients (temperature, wind load, snow load, etc.) to resist to the Nunavut climatic conditions. The enclosure is installed on a leveled coarse compacted gravel surface. All surfaces are painted to ensure corrosion resistance over the years of operation.

2.3.2 Suction Line and Strainer

The suction line is made of HDPE piping of 300 mm diameter and 90 m in length. The section of the suction line from the pumping station to the water in Meliadine Lake is insulated and heat traced to prevent freezing. The section of the suction line going through the ice during winter is insulated and heat traced. The suction line is held in place by ballasts.

The suction line ends with a fish strainer that consists, as per design, of a mesh of ½''-13R representing an expanded metal thickness of 0.225 inch and a diamond opening of the short way (SWO) of 0.325 inch (8 mm) and long way of opening (LWO) of 0.875 inch (22 mm). The % of open area was calculated according to Department of Fisheries and Ocean's (DFO) Freshwater Intake End-of-Pipe Fish Screen Guidelines. The strainer suction point is raised by 1 m from the bottom of Meliadine Lake to avoid pumping sediments from the bottom of the lake. Refer to drawing P1803211-0201 in Appendix B for more details.

2.3.3 Piping

Piping manifold inside the pumping station is made of steel with Victaulic connections for easy dismantlement during maintenance operations. All piping was hydrostatically tested at the manufacturing facility to insure tightness.

2.3.4 Controls

The pumping station control is intended to keep a constant water pressure in the line going from the pumping station to the arctic corridor. That pressure is kept by varying the pump speed with a variable speed drive (VSD). The pump speed setpoint is determined by the pressure transducer on the line at

the output of the pump. Also, a flowmeter is installed on the line at the output close to the pump. Refer to the P&ID drawing 65-692-205-200 presented in Appendix B for more details. There is a local PLC in the pumping station to connect and control all instruments and equipment. There is also a local HMI for local operation. The PLC is connected to the process plant control system via a fiber optic network and parameters and control can be accessible anywhere.

2.4 Pipeline

The pumping station for the fresh water intake transfer water through a total of approximately 1712 m of pipes. The fresh water from the Meliadine Lake is pumped to the Process Plant. The sub-marine portion of the suction line that connects the fresh water intake to the pumping station has a length of 90 m. A pipeline of 978 m connects the pumping station with the facilities, at the Camp Complex. From the Camp, the piping runs inside Arctic Corridors on approximately 644 m, to reach the Process Plant. At the Process Plant, the fresh water is received by the Fire Water Tank. Sections of the pipelines are insulated and/or heat traced when necessary.

2.4.1 Above-ground Pipelines

There is 978 m long of above-ground pipeline that is made with 200 mm of diameter HDPE pipe. The above-ground pipeline lies directly on the tundra along the access road to the Pumping Station. Before the installation of the pipeline, no sharp stones that could cause a risk of tears and premature wear were required to be removed. Since the pipeline is water tight, no hazards or disturbances are expected after installation. After the complete installation and prior to the pumping station commissioning, a service test was performed to confirm the water tightness of the pipeline.

2.4.2 Sub-marine suction line and strainer

The sub-marine portion of the suction line has a length of 90 m and is made of 300 mm diameter HDPE pipe. A construction and service pad was built on the water intake shore, at a distance of approximately 13.5 meters from the High Water Mark, to provide a flat area where material could be stored before being assembled and where heavy equipment could circulate, thus limiting at its minimum the disturbance of the land around the construction area. See section 2.5 of this report for details about the construction pad.

The suction line sections were assembled on the shore, with the fish strainer and the ballasts. The suction line was deployed on the water, where it floated as it was full of air. Once the suction line was located correctly, it was flooded, to sink into its final position. The lake bed was not disturbed by any mechanical works and no machinery entered the water. See Appendix B for alignment of suction line and strainer.

2.5 Construction pad (on Meliadine Lake shore)

To minimize land disturbance during construction, a construction pad was built close to the Meliadine Lake shore. This area will further be used as an operation and maintenance pad for the pipeline and fresh water intake. The main purpose of the pad was to define a limited area of work for shore activities, reducing the risks for environmental or health and safety issues. Since the pumping station is installed at approximately 13.5 m from the Meliadine Lake High Water Mark, this pad is located within 31m of the Meliadine Lake shore, refer to drawing 65-692-142-200-R0 in Appendix B for the exact location. The location of the pad and its proximity to the edge of the water allowed safe access to the lake and

installation of the submerged section of pipeline as well as the fresh water intake. Drawing 65-692-142-200-R0 (2 of 2) in Appendix B shows an overview of the pipeline and fresh water intake system.

No archaeological sites have been documented near the construction site.

2.5.1 Earth Work Construction Material

The granular material required for the access and construction pad consisted of well-graded 600 mm minus esker material sourced from Meliadine Esker. The material was placed and compacted in accordance with the Technical Specifications for Civil Earthworks (Tetra Tech, 2017). All material used for the construction pad were non-acid and non-metal leaching.

The table below presents the earthwork material quantities for the construction of the fresh water intake area.

Table 1 Earthwork material quantities for the construction of the fresh water intake area

Item	Pad
Class A borrow material from Esker (0-600 mm) (m^3)	292
Total Fill Material Volume (m^3)	**292**

2.6 Testing and Inspection

Prior to start up, the full length of above-ground pipelines were tested for leaks at fusion weld and flange joints. When leaks were found, the joint were be re-welded or re-torqued and the hydrostatic test redone from the beginning. Service tests were as well conducted at the Pumping Station.

All tests were done according to ASTM F2620, Standard Practice for Heat Fusion Joining of Polyethylene Pipe and Fittings, ASTM F2164, Standard Practice for Field Leak Testing of Polyethylene (PE) Pressure Piping System Using Hydrostatic Pressure.

After start up, an annual inspection, performed by AEM personal, was done to ensure pipeline integrity.

2.7 Construction Schedule

Construction activities at the Meliadine fresh water intake system were conducted in July and August 2018. All works in Meliadine Lake were completed by August 8th 2018. The start-up of the fresh water intake system began in mid-September 2018.

Construction was completed according to the milestones dates shown in Table 2.1.

Table 2 Construction Milestones for the Fresh Water Intake System

Items	Date
Earthworks for Construction pad	July 3-27, 2018
Installation of Pumping Station	August 9, 2018
Installation of Piping between Camp and Pumping Station	8" pipe from Pumping Station to temporary 4" line: **July 24th, 2018 to July 31st, 2018** Tie-in to temporary 4" line: **September 24th, 2018** Tie-in to 8" line and camp: **December 14th, 2018 to December 16th, 2018**
Installation of Piping between Pumping Station and edge of Lake	July 28, 2018 to August 6, 2018
Installation of sub-marine piping	August 7, 2018
Installation of suction (intake) at bottom of Lake	August 7, 2018
Instrumentation and controls	August 9, 2018 to September 30, 2018
Pre-commissioning	September 25, 2018
Commissioning	End of September, 2018

2.8 Field Decisions

During construction, a deficiency was noted and addressed: the fire panel in the pumping station were in French. This deficiency did not affect the performance of the Fresh Water Intake System.

3 PHOTOGRAPHS AND DRAWINGS

Pictures are available in Appendix A and show the Fresh Water Intake System under construction. Drawings are available at Appendix B.

Appendix A
Photographs of Fresh Water Intake System during construction

Photo 1 Meliadine’s fresh water intake with fish screen

Photo 2 Meliadine’s fresh water intake fish screen mesh

Photo 3 Installation of suction line and fresh water intake in Meliadine Lake

Photo 4 Meliadine's fresh water intake insulated and heat traced piping

Photo 5 Meliadine Fresh Water Pumping Station

Appendix B
As-Built Drawings & Technical Specifications of Fresh Water Intake System

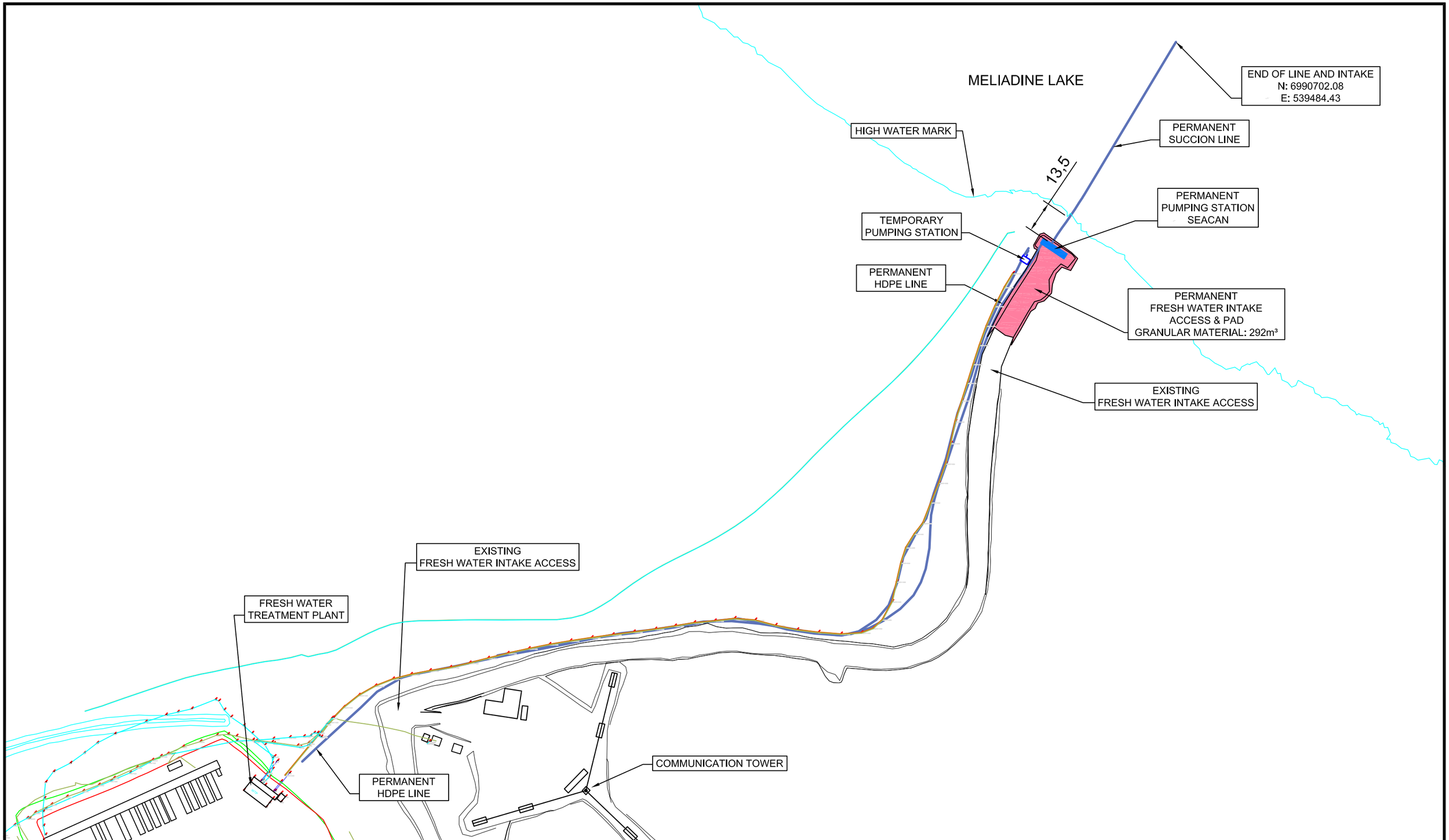

HAMEL ARPENTAGE	Système de Coord.: NAD83 UTM15	No plan: 65-692-142-200-R0_ABD_Fresh Water Intake	692 - FRESH WATER INTAKE AS-BUILT DRAWING (2of2)	AGNICO EAGLE	Date des travaux : 2018
	Echelle: 1:1500				Date d'envoi : 2019-01-21
					Dessine par: JF Landreville
					Approuve par: Hamel Arp.

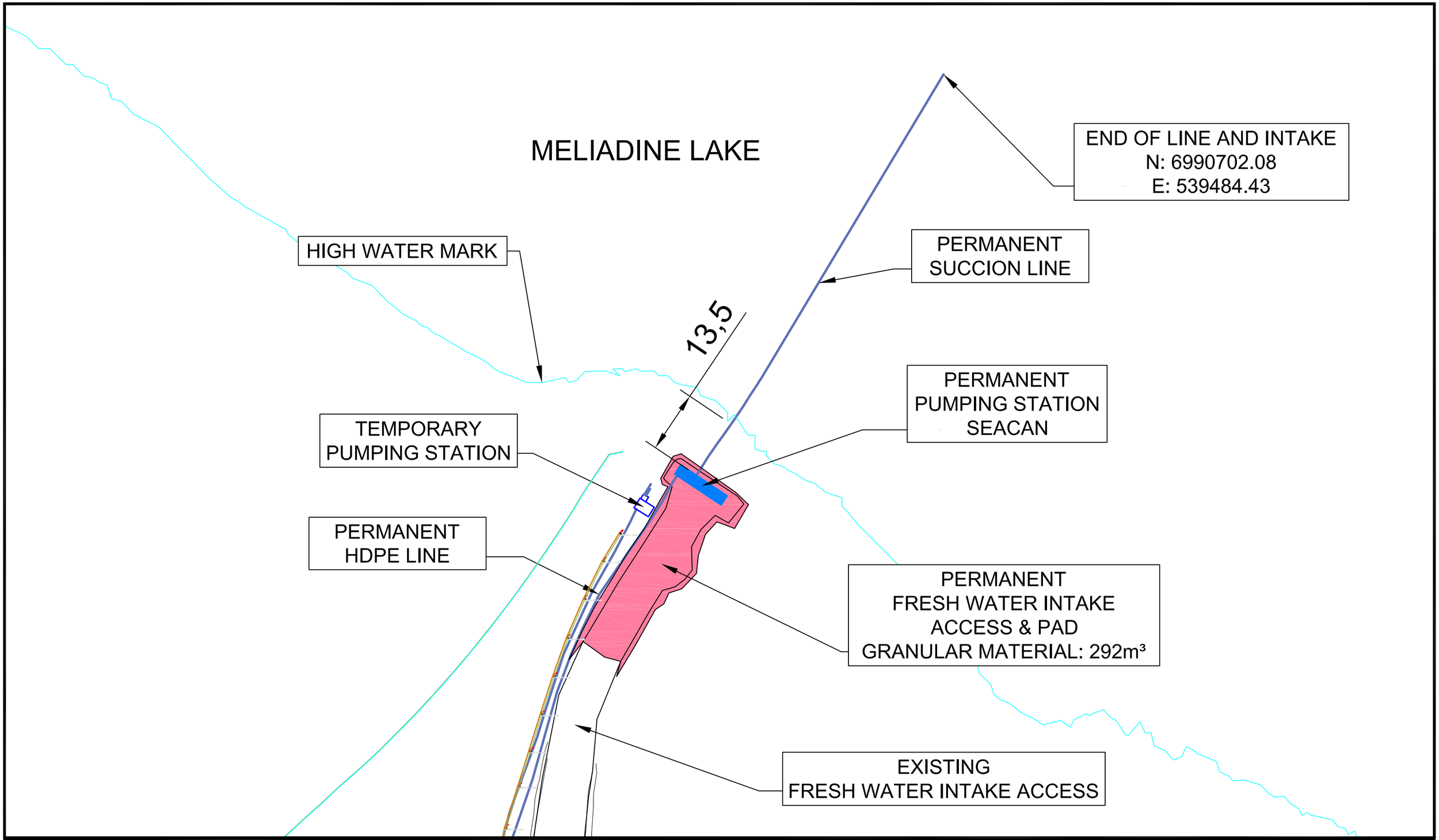

HA HAMELARPENTAGE	Système de Coord.: NAD83 UTM15	No plan: 65-692-142-200-R0_ABD_Fresh Water Intake	692 - FRESH WATER INTAKE AS-BUILT DRAWING	AGNICO EAGLE	Date des travaux : 2018
	Echelle: 1:750				Date d'envoi : 2018-11-20
					Dessine par: JF Landreville
					Approuve par: Hamel Arp.

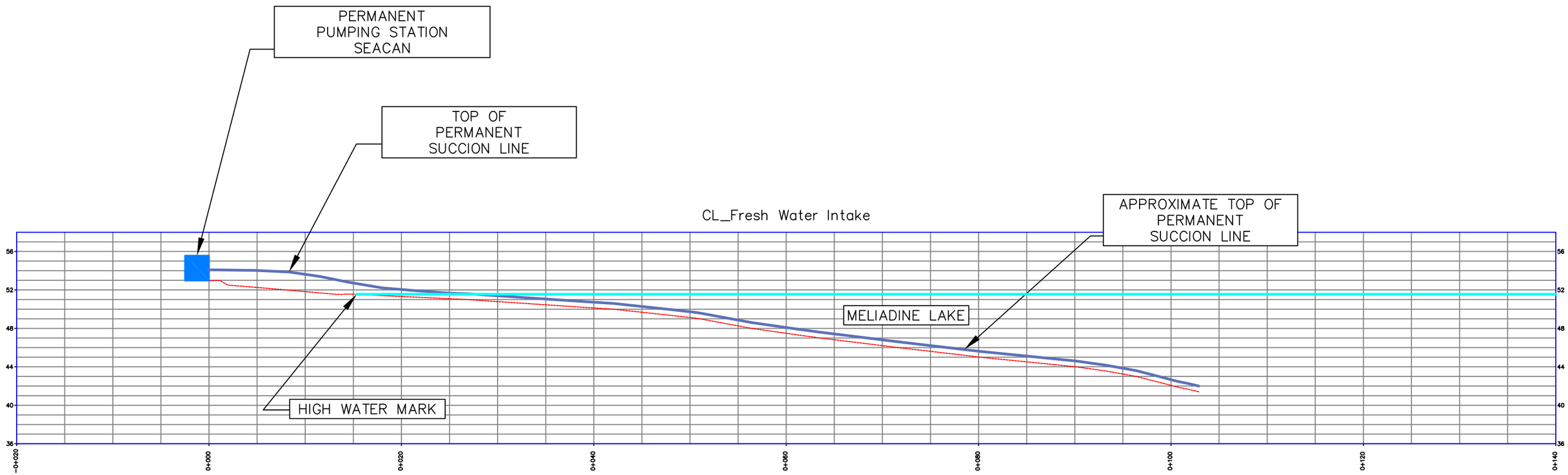

HA HAMEL ARPENTAGE	Système de Coord.: NAD83 UTM15 Echelle: 1:400	No plan: 65-692-142-200-R0_ABD_Fresh Water Intake	692 - FRESH WATER INTAKE SUCCION LINE CROSS-SECTION	AGNICO EAGLE	Date des travaux : 2018 Date d'envoi : 2018-11-24	Dessine par: JF Landreville Approuve par: Hamel Arp.

NO. DESSIN
DRAWING NO. 65-692-205-200_R3_ABD

FORMAT ARCHD

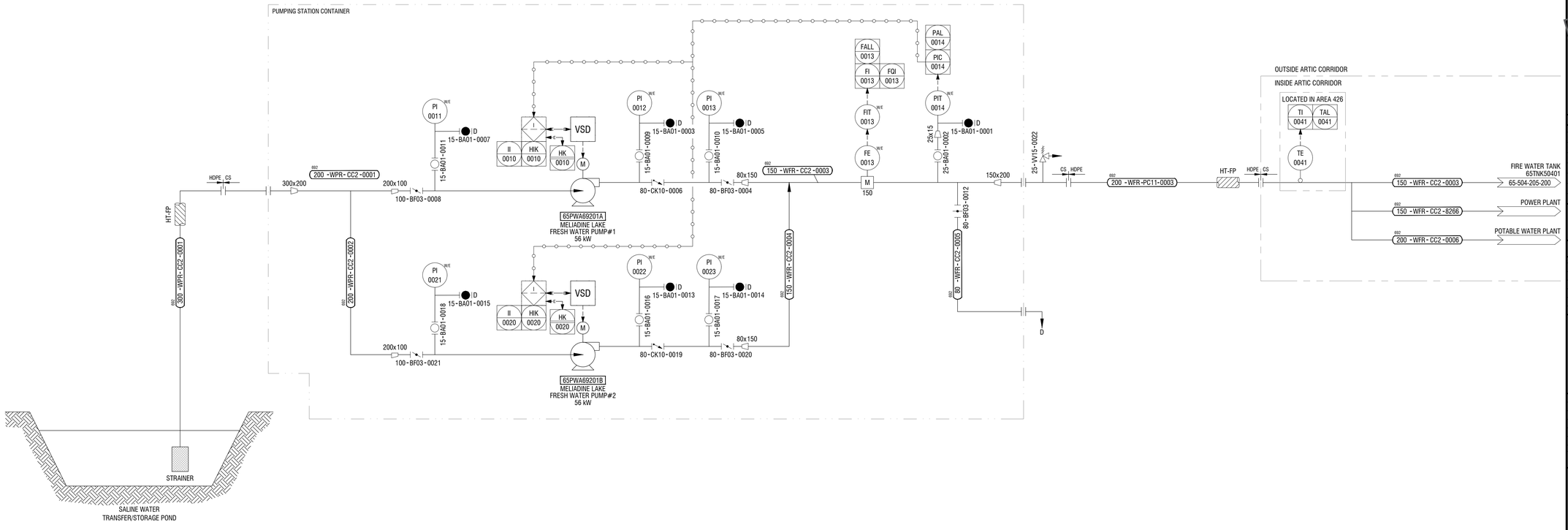

PLAN CLÉ
KEY PLAN

WSP
1075, 3e AVENUE EST
VAL-D'OR (QUÉBEC) CANADA J9P 0J7
TÉL. : 819 825-4274 | TÉLÉC. : 819 824-1514 | WWW.WSPGROUP.COM
Ref. 151-06440-10

NOTES GÉNÉRALES / GENERAL NOTES

TEL QUE CONSTRUIT
AS BUILT
AGNICO EAGLE
DATE : 2019-01-23

BASIC ENGINEERING FINAL APPROVAL PROCESS

NAME	TITLE	APPROVAL SIGNATURE	DATE
P-A BOSSÉ	PROJECT COORDINATOR		
MARTIN GAUMONT	MELIADINE PROCESS PLANT SUPERINTENDANT		
DANIEL SÉGUIN	ENGINEERING MANAGER MELIADINE		

L'INFORMATION CI-CONTENUE EST LA PROPRIÉTÉ DE AGNICO EAGLE LTÉE ET DOIT ÊTRE RETOURNÉE SUR DEMANDE. SANS AUTORISATION ÉCRITE PRÉALABLE, TOUTE TRANSMISSION DE COPIE(S) À AUTRUI ET TOUTE UTILISATION AUTRE QUE CELLE POUR LAQUELLE L'INFORMATION EST PRÊTÉE SONT INTERDITES. © AGNICO EAGLE LTÉE

THE INFORMATION HERE ON IS THE PROPERTY OF AGNICO EAGLE LTD. AND MUST BE RETURNED UPON REQUEST. WITHOUT WRITTEN PERMISSION, ANY COPYING TRANSMITTAL TO OTHERS AND ANY USE EXCEPT THAT FOR WHICH IT IS LOANED ARE PROHIBITED. © AGNICO EAGLE LTD.

DESSINS EN RÉFÉRENCE / REFERENCE DRAWINGS

TITRE / TITLE	# DWG
–	–
–	–
–	–
–	–
–	–
–	–

AGNICO EAGLE

REV.	DATE	DESCRIPTION	PAR/BY	APP.	CLIENT
3	2019-01-23	AS BUILT	J.L.	S.P.	
2	2018-06-06	ISSUED FOR CONSTRUCTION	EL/BF	EL/BF	
1	2017-08-29	ISSUED FOR CONSTRUCTION	E.B.	B.F.	
0	2017-06-05	ISSUED FOR TENDER	E.B.	B.F.	

REVISIONS

TITRE / TITLE
AGNICO EAGLE – MELIADINE DIVISION
692 – FRESH WATER PUMPING STATION
205 – PIPING & INSTRUMENTATION DIAGRAM
FRESH WATER PUMPING STATION

DESSINÉ PAR / DRAWN BY	JONATHAN LAVOIE	DATE 2018-02-02
VERIFIÉ PAR / CHECKED BY	BERTRAND FORTIN, P. Eng. ÉRIC LAVOIE, P. Eng.	2018-06-06
APPROUVÉ PAR / APPROVED BY	BERTRAND FORTIN, P. Eng. ÉRIC LAVOIE, P. Eng.	2018-06-06
ÉCHELLE / SCALE	NO SCALE	DATE 2015-08-05

NO. DESSIN / DRAWING NO. 65-692-205-200

NO. PROJET / PROJECT NO.	REVISION	FEUILLE / SHT
6515	3	1 / 1

AE-CART-ARCH D

FILE NO. 65-692-205-200_R3_ABD.dwg

AGNICO EAGLE

Vendor Document Status

1 ☐ Proceed to next submission and status.

2 ☐ Proceed with exceptions as noted to next submission and status.

3 ☐ Do not proceed.
Revise as noted and resubmit next submission and status.

4 ☒ Complete, no further submission required.

By: Date:

Review and authorization to fabricate are only for general conformance with the design concept of the Project as expressed in the Contract Documents. Sole responsibility for the accuracy and completeness of this document, including but not limited to dimensions and quantities, remains with the Supplier/Contractor. Agnico Eagle does not warrant the accuracy or completeness of any of the information contained herein, nor does Agnico Eagle authorize or approve any construction means, methods, techniques, sequences or any safety precautions or procedures.

Agnico Eagle No. 6515-S-265-095-265-SPD-0001 R: Sub001

DOCUMENT FOR INFORMATION

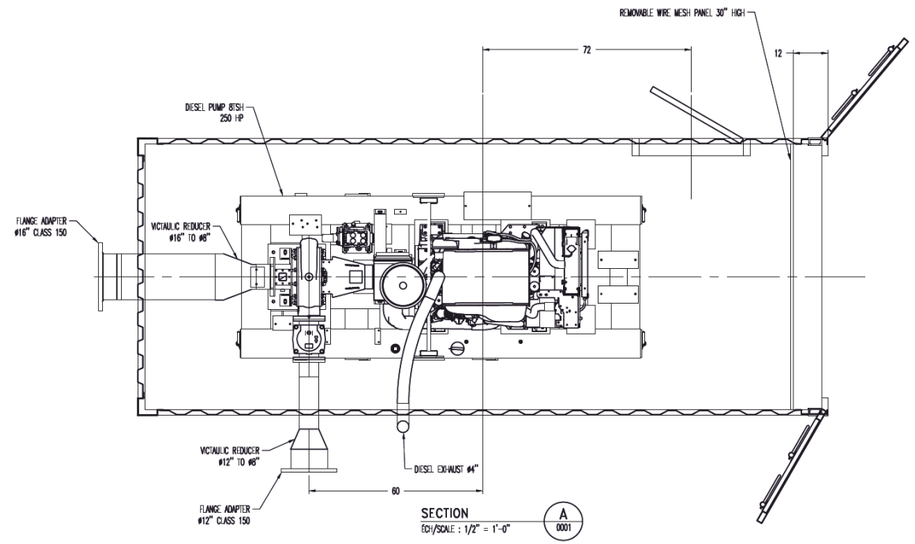

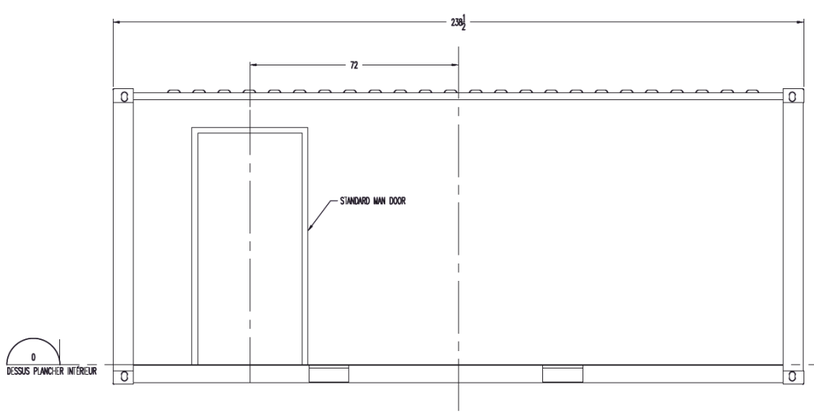

ELEVATION MAN DOOR SIDE
ÉCH/SCALE : 1/2" = 1'-0"

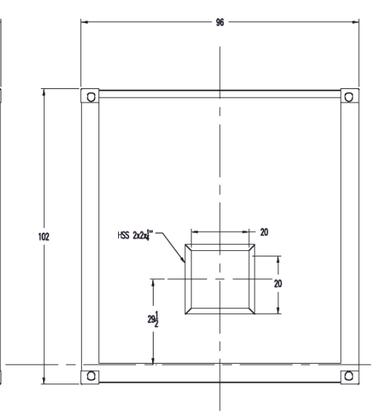

PROFIL REAR
ÉCH/SCALE : 1/2" = 1'-0"

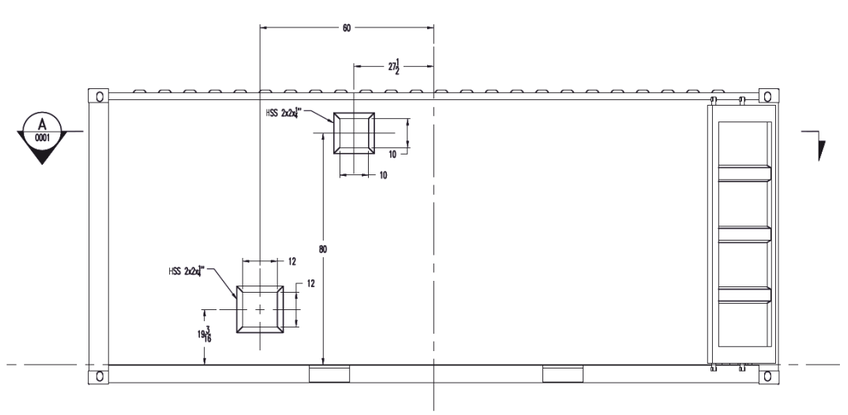

ELEVATION PUMP OUTLET SIDE
ÉCH/SCALE : 1/2" = 1'-0"

TEL QUE CONSTRUIT
(AS BUILT)
DATE : 2018-08-13

REGISTERED PROFESSIONAL ENGINEER
A. LABBÉ
LICENSEE
2018-08-16

REV	DATE	DESCRIPTION	INIT.	INIT.
2	2018-08-13	AS BUILT	C.F.	A.L.
1	2018-06-08	PUMP OUTLET SIDE MODIFICATION	C.F.	A.L.
0	2018-05-22	FOR CONSTRUCTION	C.F.	A.L.
A	2018-05-15	ISSUED FOR APPROBATION	C.F.	

ÉMISSION/ISSUED FOR

Technosub

CLIENT:
AGNICO EAGLE
MELIADINE

PROJET/PROJECT:
CP3 & CP4 DIESEL PUMPS

TITRE/TITLE:
DETAILS DRAWING
CONTAINER

CONÇU PAR/DESIGNED BY: M. BERGERON	INIT.
DESSIN PAR/DRAWN BY: C. FLUET, Jr. Eng.	INIT.
VERIFIÉ PAR/CHECKED BY: C. FLUET, Jr. Eng.	INIT.
APPROUVÉ PAR/APPROVED BY: A. LABBÉ, P. Eng.	INIT.
ÉCHELLE/SCALE: AS SHOWN	DATE DE CRÉATION/CREATION DATE: 2018-05-11
# DE PROJET/PROJECT #: P1805011	
# DE DESSIN/DRAWING #: P1805011-1001	REVISION 2

FICHIER/FILE: Q:\PROJETS\P18--- PROJETS 2018\P1805011 - AGNICO EAGLE MELIADINE - PUMPING STATION CP3&CP4 DIESEL PUMPS\3 - DESSINS\IN PROGRESS\DESSIN\BLADE: AVM DIESEL PUMP
ÉCHELLE DE TRACÉ/PLOT SCALE: 1:1

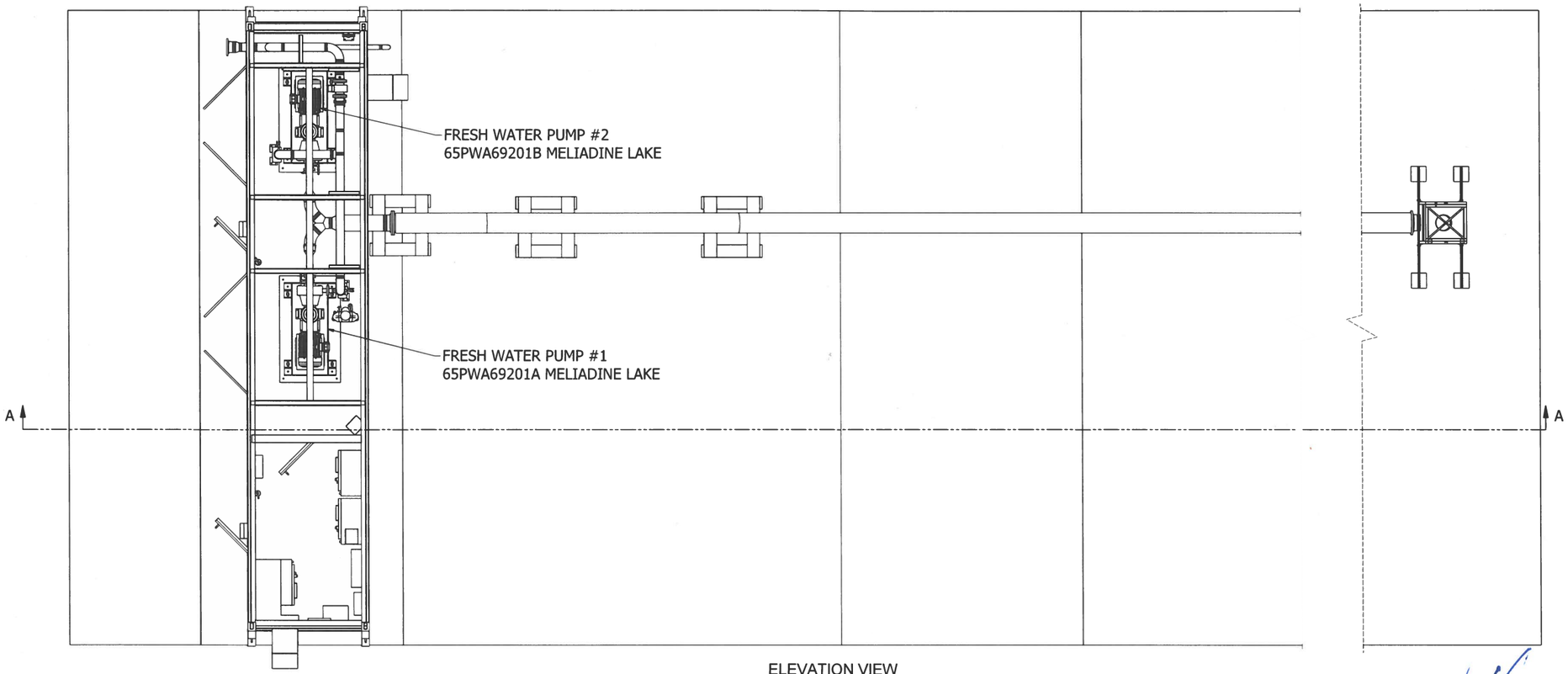

ELEVATION VIEW
SCALE : 1/4" = 1'

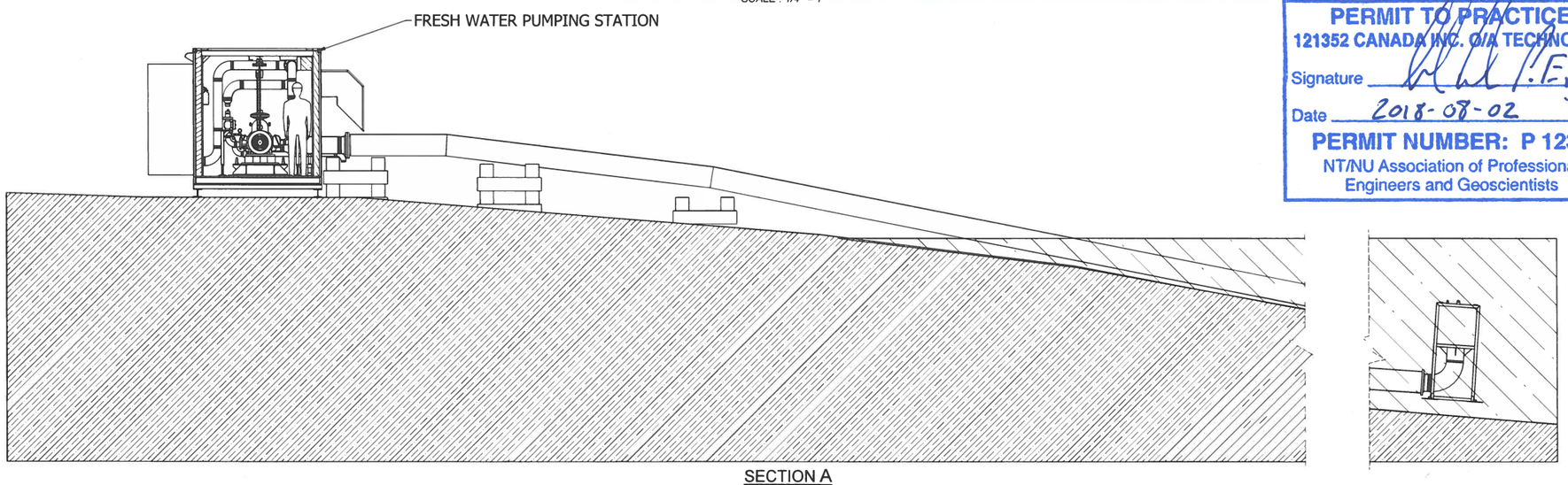

SECTION A
SCALE : 1/4" = 1'

NOTES & SPECIFICATIONS

SECTION I.

1. ALL DIMENSIONS ARE IN INCHES UNLESS OTHERWISE NOTED
2. ALL REFERENCES TO COMPLEMENTARY DRAWING SEQUENTIAL NUMBERS IMPLY THE SAME PROJECT NUMBER UNLESS OTHERWISE NOTED
3. ALL MATERIALS TO BE STANDARD STEEL 44W UNLESS OTHERWISE NOTED
4. UNSPECIFIED FABRICATION TOLERANCES
   - 6" - ± 1/32"
   - 6" to 12" ± 1/16"
   - 12" + ± 1 8"
5. UNSPECIFIED MACHINING TOLERANCES
   - 6" - ± 010"
   - 6" to 18" ± 015"
   - 18" + ± 020"
6. GENERAL TOLERANCES
   - X XXX" ± .002"
   - X XX" ± 010"
7. MACHINE ALLOWANCE UNLESS OTHERWISE SPECIFIED
8. BREAK ALL CORNERS UNLESS OTHERWISE SPECIFIED

USE FOR CONSTRUCTION
UTILISER POUR CONSTRUCTION

AGNICO EAGLE — Vendor Document Status

1 ☐ Proceed to next submission and status.
2 ☐ Proceed with exceptions as noted to next submission and status.
3 ☐ Do not proceed. Revise as noted and resubmit next submission and status.
4 ☒ Complete no further submission required.

By: Date:

Review and authorization to fabricate are only for general conformance with the design concept of the Project as expressed in the Contract Documents. Fabrication, materials, dimensions, quantities, and performance of all work remain the sole responsibility of the Supplier/Contractor. Agnico Eagle does not guarant the accuracy or completeness of any of the information contained herein, nor does Agnico Eagle authorize or approve any construction means, methods techniques, sequences or any safety precautions or procedures.

Agnico Eagle
"6515-S265-067-210-GAD-0001" Sub002

DOCUMENT FOR INFORMATION

PO: OC677221-R2

REVISIONS

R	DESCRIPTION	DATE	APP
A	ISSUED FOR APPROVAL	2018-04-04	P D
B	ISSUED FOR APPROVAL	2018-04-12	P D
0	ISSUED FOR CONSTRUCTION	2018-05-02	P D
1	AS BUILD	2018-07-24	A L

Agnico-Eagle mine

Technosub

SEAL

REGISTERED PROFESSIONAL ENGINEER A. LABBÉ NT/NU

2018-08-02

PERMIT TO PRACTICE
121352 CANADA INC. O/A TECHNOSUB
Signature
Date 2018-08-02
PERMIT NUMBER: P 1231
NT/NU Association of Professional Engineers and Geoscientists

PROJECT MANAGER P. Descoteaux	
DESIGNER P. Descoteaux	2018-04-04
QUALITY ASSURANCE P. Marquis	2018-04-05
ENGINEER A. Labbé, P. Eng.	2018-05-02

L'INFORMATION CONTENU DANS CE DOCUMENT EST LA PROPRIETE DE TECHNOSUB INC. ET DOIT ETRE RETOURNE SUR DEMANDE. TOUTE TRANSMISSION DE CE DOCUMENT A DES TIERS ET TOUTE UTILISATION AUTRE QUE CELLE POUR LAQUELLE CETTE INFORMATION FUT PRÊTÉE SONT INTERDITES SANS AUTORISATION ECRITE PRÉALABLE TECHNOSUB

THE INFORMATION CONTAINED IN THIS DOCUMENT IS THE PROPERTY OF TECHNOSUB INC. AND MUST BE RETURNED UPON REQUEST. ANY TRANSMITTAL OF THIS INFORMATION TO A THIRD PARTY OR ANY USE OF THIS INFORMATION EXCEPT FOR ITS ORIGINAL PURPOSE WITHOUT PRIOR WRITTEN PERMISSION IS PROHIBITED © TECHNOSUB

Méliadine 6515-S-265_067
General Arrangement
P1803211_MEQ_GAD_0001

PROJECT	SEQ #	SHEET #	REV
P1803211	0001	1 / 1	1

G:\PROJETS 1\18_PROJETS\2018\18803211_Agnico Eagle_Station de pompage d'eau fraiche 2\DESSINS EN PROGRES\Mine en plan\P1803211_MEQ_GAD_0001.dwg

THIS SHEET IS DIMENSIONAL "REEXACTLY 18" SQ

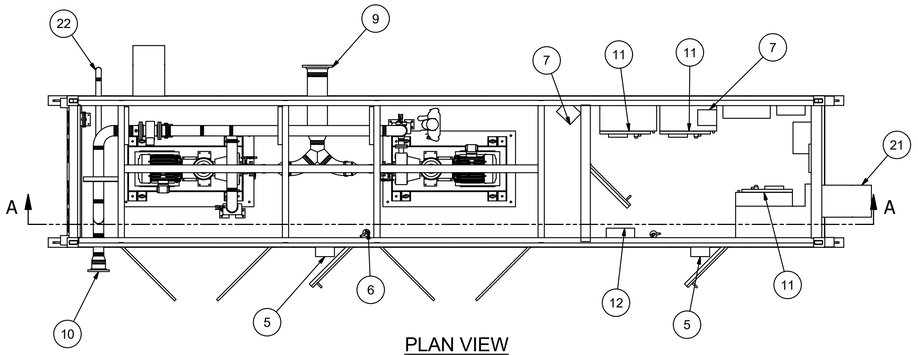

PLAN VIEW
SCALE 1/4" = 1'

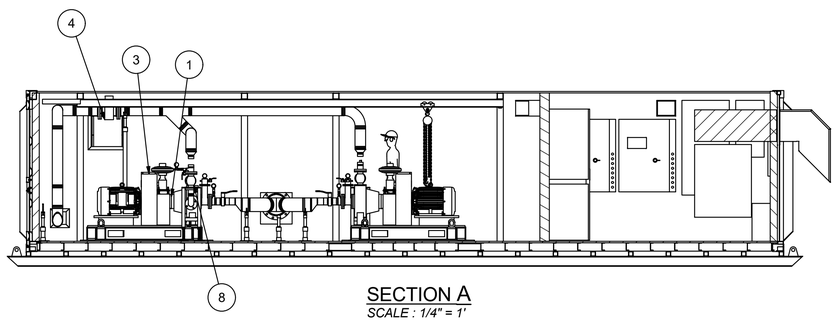

SECTION A
SCALE : 1/4" = 1'

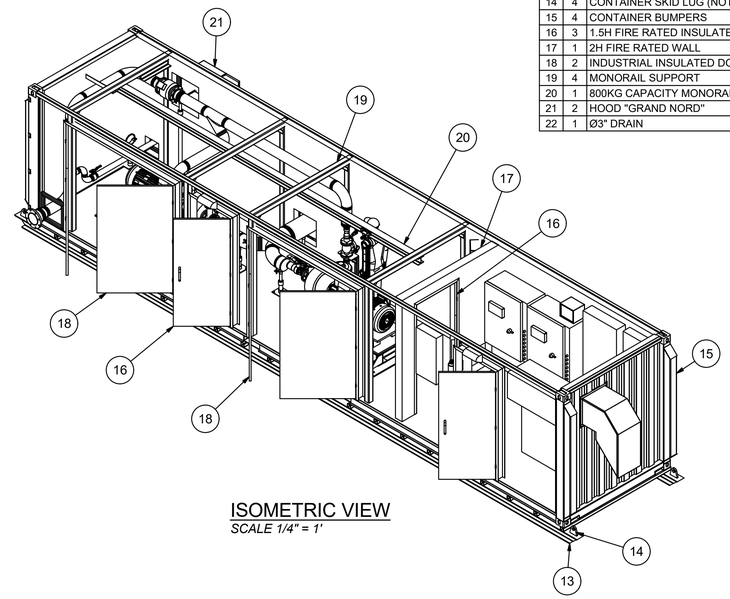

ISOMETRIC VIEW
SCALE 1/4" = 1'

#	Q	DESCRIPTION	NOTE
1	2	4TSH HIGH HEAD PUMP 1800RPM (14" TRIM) (135M^3/H @ 50M TDH)	See Drawing P1803211_MEQ_GAD_0301
3	4	SAFETY GUARD	See Drawing P1803211_MEQ_GAD_0301
4	1	AEM FLOWMETER 65 FE 692 0013	See Drawing P1803211_MEQ_AED_0102
5	2	EXTERIOR WALLPACK	See Drawing P1803211_ELC_GAD_0101
6	2	FIRE EXTINGUISHER ABC 10LB STRIKE FIRST	
7	2	AEROTHERME 7.5KW/600V WITH MECHANICAL WALL THERMOSTAT	See Drawing P1803211_ELC_GAD_0101
8	2	Ø3" SWING CHECK VALVE	See Drawing P1803211_MEQ_AED_0102
9	1	Ø12" PUMPING STATION INLET	See Drawing P1803211_MEQ_AED_0102
10	1	Ø8" PUMPING STATION OUTLET	See Drawing P1803211_MEQ_AED_0102
11	3	60HP VFD ACS880	See Drawing P1803211_ELC_GAD_0101
12	3	ELECTRICAL PANNELS	See Drawing P1803211_ELC_GAD_0101
13	1	CONTAINER HEAVY DUTY STEEL SKID	See Drawing P1803211_MEQ_GAD_0401
14	4	CONTAINER SKID LUG (NOT FOR LIFTING)	See Drawing P1803211_MEQ_GAD_0401
15	4	CONTAINER BUMPERS	
16	3	1.5H FIRE RATED INSULATED MAN DOOR WITH WINDOW	
17	1	2H FIRE RATED WALL	
18	2	INDUSTRIAL INSULATED DOUBLE DOOR 96" WIDE	
19	4	MONORAIL SUPPORT	See Drawing P1803211_MEQ_AED_0103
20	1	800KG CAPACITY MONORAIL	See Drawing P1803211_MEQ_AED_0103
21	2	HOOD "GRAND NORD"	See Drawing P1803211_MEQ_AED_0102
22	1	Ø3" DRAIN	See Drawing P1803211_MEQ_GAD_0102

STANDARD 40' CONTAINER INCLUDING:

EXTERIOR WALLS FABRICATION
- INSULATION URETHANE 3" : R-30
- 2x4 STUD AT 16" O.C.
- PLYWOOD 1/2"
- INTERIOR FINISH : WHITE CLADDING 24GA.
- EXTERIOR FINISH : SLATE BLUE AS PER AEM PAINTING SPEC 6515-GGD-022

INTERIOR WALL FABRICATION
(FIRE RATED WALL)
- 2x4 STUD AT 16" O.C.
- 2 LAYERS OF TYPE X GYPSE 5/8"
- WHITE CLADDING 24GA.

TOP CONSTRUCTION
- INSULATION URETHANE 3" : R-30
- 2x4 STUD AT 16" O.C.
- WHITE CLADDING 24GA.

FLOOR CONSTRUCTION
- ALUMINIUM CHECKER PLATE 1/8"
- EXISTING PLYWOOD 3/4"
- EXISTING FRAME (C BEAM)
- INSULATION URETHANE 4" : R-30

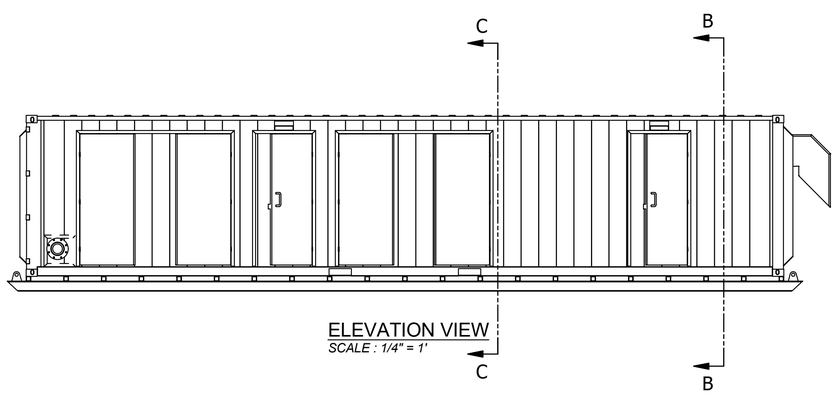

ELEVATION VIEW
SCALE : 1/4" = 1'

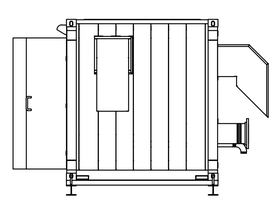

RIGHT PROFIL VIEW
SCALE 1/4" = 1'

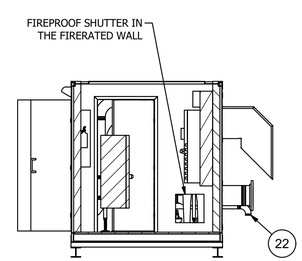

SECTION B
SCALE : 1/4" = 1'

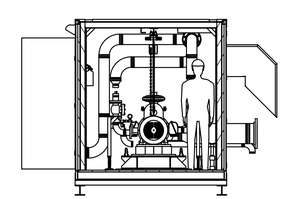

SECTION C
SCALE : 1/4" = 1'

NOTES & SPECIFICATIONS

SECTION I.

1. ALL DIMENSIONS ARE IN INCHES UNLESS OTHERWISE NOTED.

2. ALL REFERENCES TO COMPLEMENTARY DRAWING SEQUENTIAL NUMBERS IMPLY THE SAME PROJECT NUMBER UNLESS OTHERWISE NOTED.

3. ALL MATERIALS TO BE STANDARD STEEL 44W UNLESS OTHERWISE NOTED.

4. UNSPECIFIED FABRICATION TOLERANCES

6" -	± 1/32"
6" to 12"	± 1/16"
12" +	± 1/8"

5. UNSPECIFIED MACHINING TOLERANCES

6" -	± .010"
6" to 18"	± .015"
18" +	± .020"

6. GENERAL TOLERANCES

X.XXX" ± .002"
X.XX" ± .010"

7. MACHINE ALLOWANCE UNLESS OTHERWISE SPECIFIED.

8. BREAK ALL CORNERS UNLESS OTHERWISE SPECIFIED.

USE FOR CONSTRUCTION
UTILISER POUR CONSTRUCTION

AGNICO EAGLE

Vendor Document Status

1 ☐ Proceed to next submission and status.

2 ☐ Proceed with exceptions as noted to next submission and status.

3 ☐ Do not proceed. Revise as noted and resubmit next submission and status.

4 ☒ Complete, no further submission required.

By: Date:

Review and authorization to fabricate are only for general conformance with the design concept of the Project as expressed in the Contract Documents. Sole responsibility for the accuracy and completeness of this document, including but not limited to dimensions and quantities, remains with the Supplier/Contractor. Agnico Eagle does not warrant the accuracy or completeness of any of the information contained herein, nor does Agnico Eagle authorize or approve any construction means, methods, techniques, sequences or any safety precautions or procedures.

Agnico Eagle No. 6515-S-265-067-210-GAD-0002 R: Sub002

DOCUMENT FOR INFORMATION

PO: OC677221-R2

REVISIONS

R	DESCRIPTION	DATE	APP
A	ISSUED FOR APPROVAL	2018-04-04	P.D.
B	ISSUED FOR APPROVAL	2018-04-13	P.D.
0	ISSUED FOR CONSTRUCTION	2018-04-16	P.D.
1	AS BUILD	2018-07-24	A.L.

Agnico-Eagle Mine

Technosub

SEAL

REGISTERED PROFESSIONAL ENGINEER
A. LABBÉ
LICENSEE
NT/NU

2018-08-02

PROJECT MANAGER	P. Descoteaux	
DESIGNER	P. Descoteaux	*2018-04-04*
QUALITY ASSURANCE	P. Marquis	*2018-04-05*
ENGINEER	A. Labbé, P. Eng.	*2018-05-02*

L'INFORMATION CONTENUE DANS CE DOCUMENT EST LA PROPRIÉTÉ DE TECHNOSUB INC. ET DOIT ÊTRE RETOURNÉE SUR DEMANDE. TOUTE TRANSMISSION DE COPIE(S) À AUTRUI ET TOUTE UTILISATION AUTRE QUE CELLE POUR LAQUELLE CETTE INFORMATION FUT PRÊTÉE SONT INTERDITES SANS AUTORISATION ÉCRITE PRÉALABLE. © TECHNOSUB

THE INFORMATION CONTAINED IN THIS DOCUMENT IS THE PROPERTY OF TECHNOSUB INC. AND MUST BE RETURNED UPON REQUEST. ANY TRANSMITTAL OF THIS INFORMATION TO A THIRD PARTY OR ANY USE OF THIS INFORMATION EXCEPT FOR ITS ORIGINAL PURPOSE WITHOUT PRIOR WRITTEN PERMISSION IS PROHIBITED. © TECHNOSUB

Méliadine 6515-S-265-067
Container General Assembly
P1803211_MEQ_GAD_0101

PROJECT	*SEQ #*	*SHEET #*	*REV.*
P1803211	0101	1 / 1	1

G:\PROJETS\P18 - PROJETS 2018\P1803211 - Agnico Eagle - Station de pompage d'eau fraiche\2 - DESSINS\EN PROGRÈS\Mise en plan\P1803211_MEQ_GAD_0101.idw

THIS SHOULD MEASURE EXACTLY 1 INCH

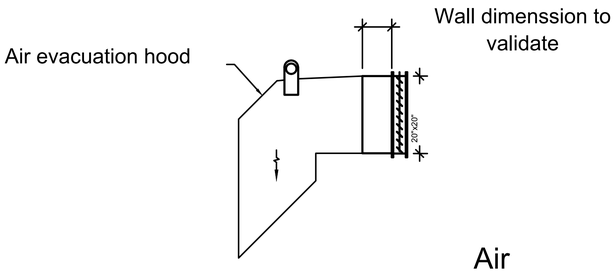

Air evacuation system

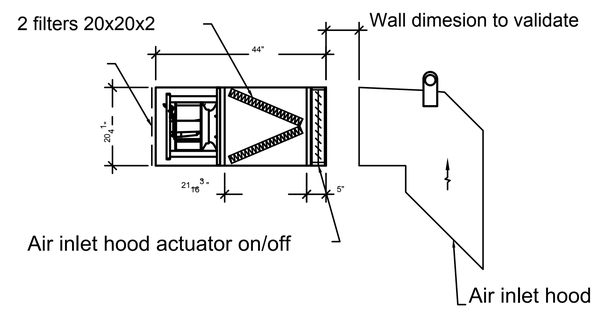

Air inlet system

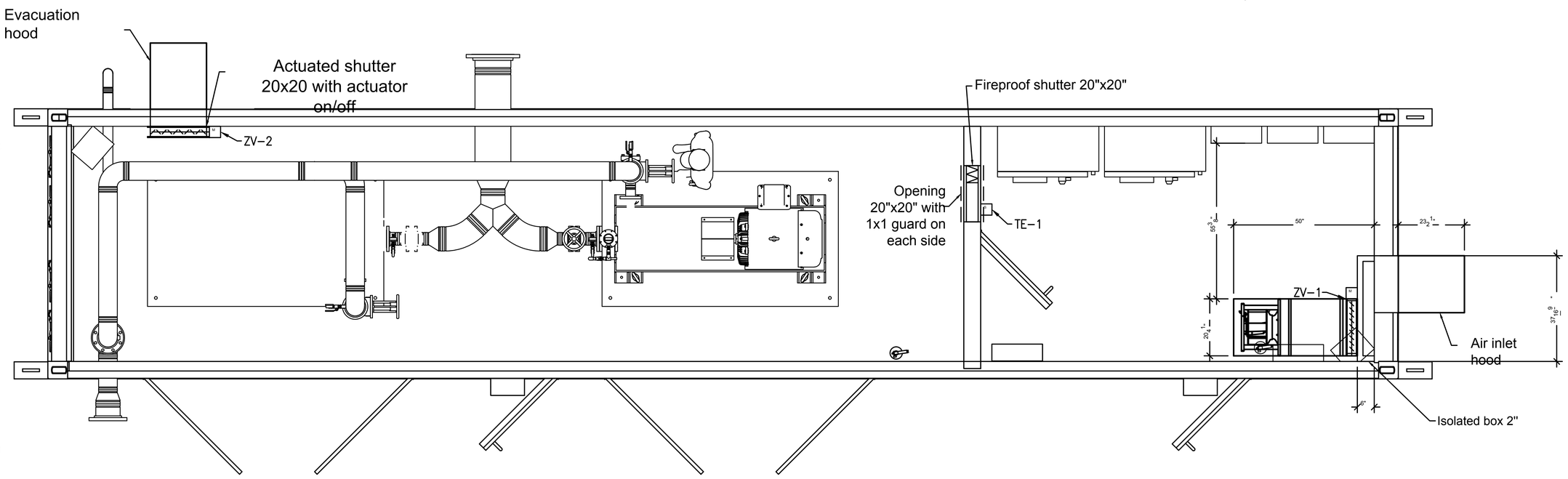

PLAN VIEW

Not to scale

NOTES & SPECIFICATIONS

SECTION I.

1. ALL DIMENSIONS ARE IN INCHES UNLESS OTHERWISE NOTED.
2. ALL REFERENCES TO COMPLEMENTARY DRAWING SEQUENTIAL NUMBERS IMPLY THE SAME PROJECT NUMBER UNLESS OTHERWISE NOTED.
3. ALL MATERIALS TO BE STANDARD STEEL 44W UNLESS OTHERWISE NOTED.
4. UNSPECIFIED FABRICATION TOLERANCES

6" -	± 1/32"
6" to 12"	± 1/16"
12" +	± 1/8"

5. UNSPECIFIED MACHINING TOLERANCES

6" -	± .010"
6" to 18"	± .015"
18" +	± .020"

6. GENERAL TOLERANCES

X.XXX" ± .002"
X.XX" ± .010"

7. MACHINE ALLOWANCE UNLESS OTHERWISE SPECIFIED.
8. BREAK ALL CORNERS UNLESS OTHERWISE SPECIFIED.

USE FOR CONSTRUCTION
UTILISER POUR CONSTRUCTION

AGNICO EAGLE

Vendor Document Status

1 ☐ Proceed to next submission and status.
2 ☐ Proceed with exceptions as noted to next submission and status.
3 ☐ Do not proceed. Revise as noted and resubmit next submission and status.
4 ☒ Complete, no further submission required.

By: Date:

Review and authorization to fabricate are only for general conformance with the design concept of the Project as expressed in the Contract Documents. Sole responsibility for the accuracy and completeness of the document, including, but not limited to, dimensions and quantities, lies with the Supplier/Contractor. Agnico Eagle does not warrant the accuracy or completeness of any of the information contained herein, nor does Agnico Eagle authorize or approve any construction means, methods, techniques, sequences or any safety precautions or procedures.

Agnico Eagle No. 6515-S-265-067-210-GAD-0003 R Sub002

DOCUMENT FOR INFORMATION

OC-677221-R2

REVISIONS

R	DESCRIPTION	DATE	APP
A	ISSUED FOR APPROVAL	2018-04-13	P.D.
0	ISSUED FOR CONSTRUCTION	2018-05-02	P.D.
1	AS BUILD	2018-07-24	A.L.

Agnico-Eagle Mine

Technosub

REGISTERED PROFESSIONAL ENGINEER A. LABBÉ LICENSEE NUNAVUT

2018-08-02

PROJECT MANAGER P. Descoteaux	
DESIGNER P. Descoteaux	*2018-04-04*
QUALITY ASSURANCE P. Marquis	*2018-04-05*
ENGINEER A. Labbé, P. Eng.	

L'INFORMATION CONTENU DANS CE DOCUMENT EST LA PROPRIÉTÉ DE TECHNOSUB INC. ET DOIT ÊTRE RETOURNÉE SUR DEMANDE. TOUTE TRANSMISSION DE COPIE(S) À AUTRUI ET TOUTE UTILISATION AUTRE QUE CELLE POUR LAQUELLE CETTE INFORMATION FUT PRÊTÉE SONT INTERDITES SANS AUTORISATION ÉCRITE PRÉALABLE. © TECHNOSUB

THE INFORMATION CONTAINED IN THIS DOCUMENT IS THE PROPERTY OF TECHNOSUB INC. AND MUST BE RETURNED ON DEMAND. ANY TRANSMITTAL OF THIS INFORMATION TO A THIRD PARTY OR ANY USE OF THIS INFORMATION EXCEPT FOR ITS ORIGINAL PURPOSE WITHOUT PRIOR WRITTEN PERMISSION IS PROHIBITED. © TECHNOSUB

Méliadine 6515-S-265-067
Ventilation General Arrangement
P1803211_MEQ_GAD_0102

PROJECT	*SEQ. #*	*SHEET #*	*REV.*
P1803211	0102	1 / 1	1

G:\PROJETS P18-- PROJETS 2018\P1803211 - Agnico Eagle - Station de pompage d'eau fraiche\v2 - DESSINS\EN PROGRÈS\Mise en plan\P1803211_MEQ_GAD_0102.dwg

THIS SHOULD MEASURE EXACTLY 1 INCH

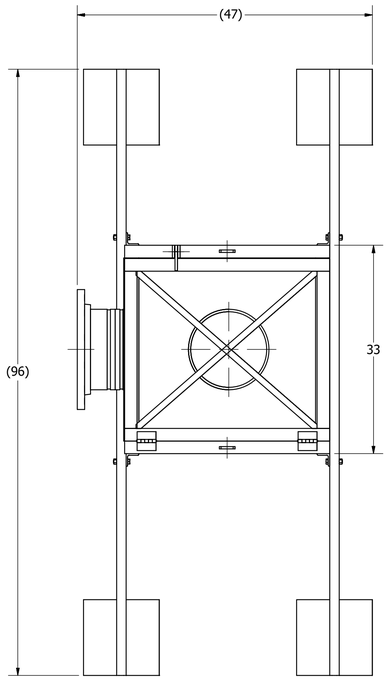

PLAN VIEW
SCALE 1" = 1'

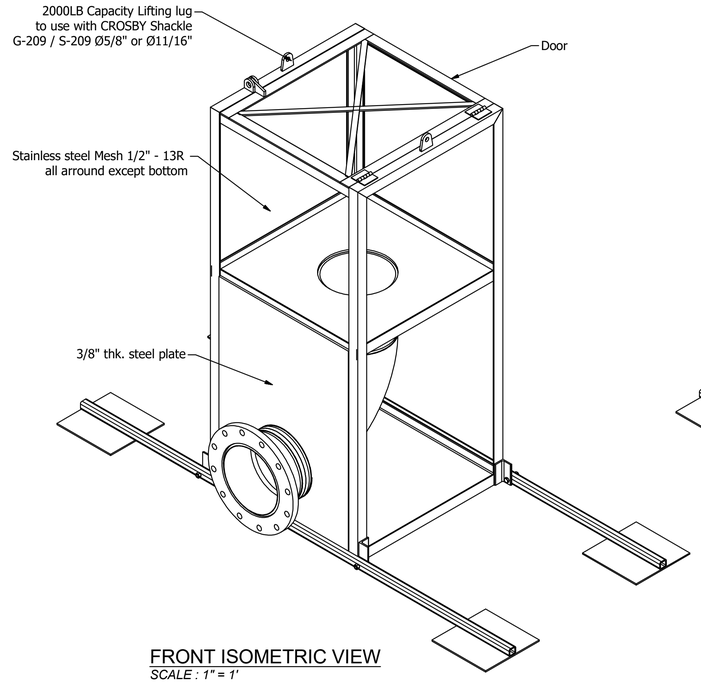

FRONT ISOMETRIC VIEW
SCALE : 1" = 1'

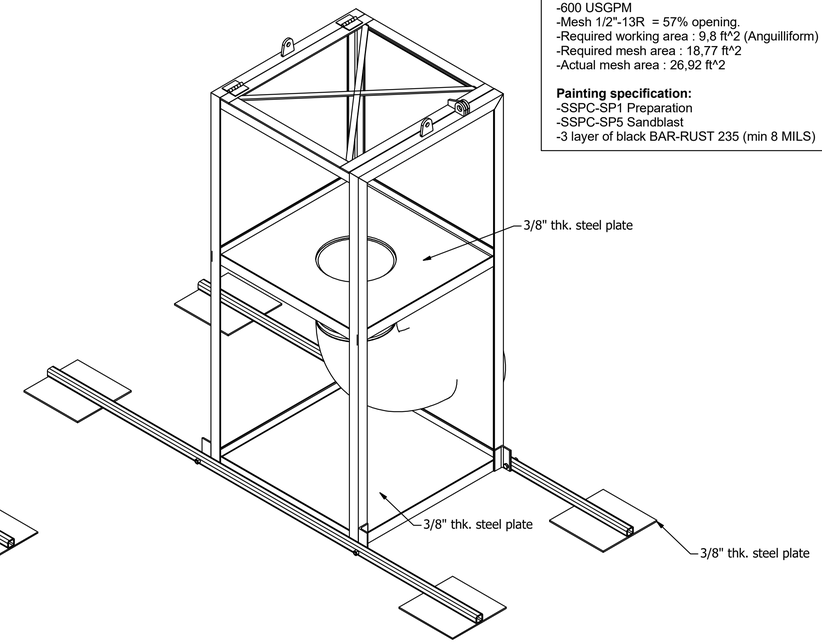

BACK ISOMETRIC VIEW
SCALE : 1" = 1'

Design Criteria based on Freshwater Intake End-of-Pipe Fish Screen Guideline 1995.
-600 USGPM
-Mesh 1/2"-13R = 57% opening.
-Required working area : 9,8 ft^2 (Anguilliform)
-Required mesh area : 18,77 ft^2
-Actual mesh area : 26,92 ft^2

Painting specification:
-SSPC-SP1 Preparation
-SSPC-SP5 Sandblast
-3 layer of black BAR-RUST 235 (min 8 MILS)

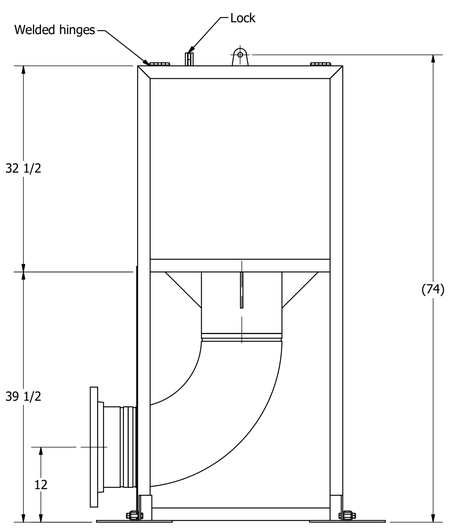

ELEVATION VIEW
SCALE : 1" = 1'

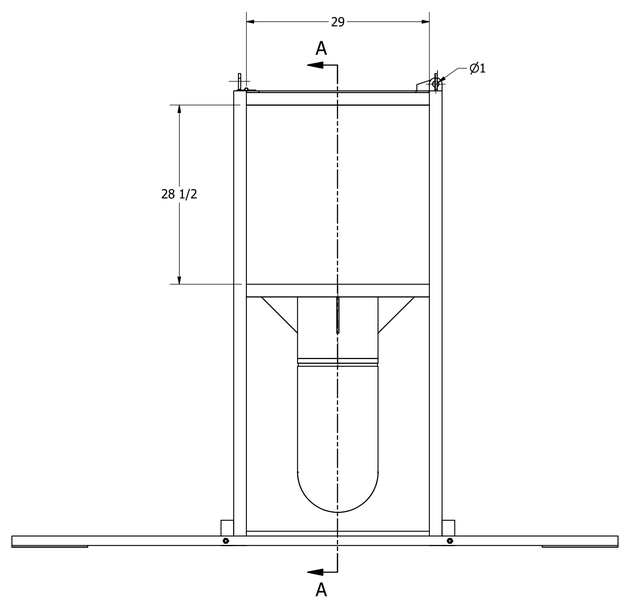

RIGHT PROFIL VIEW
SCALE 1" = 1'

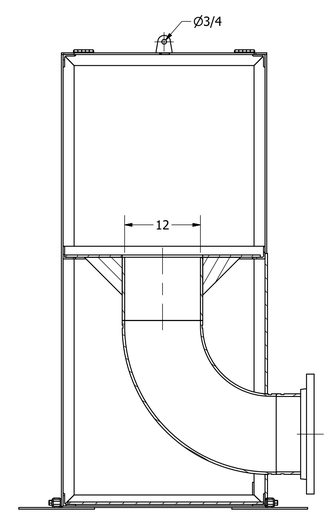

SECTION A
SCALE : 1" = 1'

WEIGHT : Approx. 800 lb

NOTES & SPECIFICATIONS

SECTION I.

1. ALL DIMENSIONS ARE IN INCHES UNLESS OTHERWISE NOTED.

2. ALL REFERENCES TO COMPLEMENTARY DRAWING SEQUENTIAL NUMBERS IMPLY THE SAME PROJECT NUMBER UNLESS OTHERWISE NOTED.

3. ALL MATERIALS TO BE STANDARD STEEL 44W UNLESS OTHERWISE NOTED.

4. UNSPECIFIED FABRICATION TOLERANCES

6" -	± 1/32"
6" to 12'	± 1/16"
12' +	± 1/8"

5. UNSPECIFIED MACHINING TOLERANCES

6" -	± .010"
6" to 18"	± .015"
18" +	± .020"

6. GENERAL TOLERANCES

X.XX" ± .002"
X.XX" ± .010"

7. MACHINE ALLOWANCE
UNLESS OTHERWISE SPECIFIED.

8. BREAK ALL CORNERS UNLESS OTHERWISE SPECIFIED.

USE FOR CONSTRUCTION
UTILISER POUR CONSTRUCTION

AGNICO EAGLE

Vendor Document Status

1 ☐ Proceed to next submission and status.
2 ☐ Proceed with exceptions as noted to next submission and status.
3 ☐ Do not proceed. Revise as noted and resubmit next submission and status.
4 ☒ Complete, no further submission required.

By: Date:

Review and authorization to fabricate are only for general conformance with the design concept of the Project as expressed in the Contract Documents. Sole responsibility for the accuracy and completeness of this document, including but not limited to dimensions and quantities, remains with the Supplier/Contractor. Agnico Eagle does not warrant the accuracy or completeness of any of the information contained herein, nor does Agnico Eagle authorize or approve any construction means, methods, techniques, sequences or any safety precautions or procedures.

Agnico Eagle No. 6515-S-265-067-210-GAD-0004 R: Sub002

DOCUMENT FOR INFORMATION

PO: OC677221-R2

REVISIONS

R	DESCRIPTION	DATE	APP
A	ISSUED FOR APPROVAL	2018-04-11	P.D.
0	ISSUED FOR CONSTRUCTION	2018-04-16	P.D.
1	AS BUILD	2018-07-24	A.L.

Agnico-Eagle Mine

Technosub

SEAL

REGISTERED PROFESSIONAL ENGINEER
A. LABBÉ
LICENSEE
NUNAVUT

2018-08-02

PROJECT MANAGER P. Descoteaux	
DESIGNER P. Descoteaux	*2018-03-30*
QUALITY ASSURANCE P. Marquis	*2018-04-05*
ENGINEER A. Labbé, P. Eng.	*2018-05-02*

L'INFORMATION CONTENU DANS CE DOCUMENT EST LA PROPRIÉTÉ DE TECHNOSUB INC. ET DOIT ÊTRE RETOURNÉE SUR DEMANDE. TOUTE TRANSMISSION DE COPIE(S) À AUTRUI ET TOUTE UTILISATION AUTRE QUE CELLE POUR LAQUELLE CETTE INFORMATION FUT PRÊTÉE SONT INTERDITES SANS AUTORISATION ÉCRITE PRÉALABLE. © TECHNOSUB

THE INFORMATION CONTAINED IN THIS DOCUMENT IS THE PROPERTY OF TECHNOSUB INC. AND MUST BE RETURNED UPON REQUEST. ANY TRANSMITTAL OF THIS INFORMATION TO A THIRD PARTY OR ANY USE OF THIS INFORMATION EXCEPT FOR ITS ORIGINAL PURPOSE WITHOUT PRIOR WRITTEN PERMISSION IS PROHIBITED. © TECHNOSUB

Meliadine 6515-S-265-067
Freshwater intake strainer GA
P1803211_MEQ_GAD_0201

PROJECT	*SEQ #*	*SHEET #*	*REV.*
P1803211	0201	1 / 1	1

G:\PROJETS\P18~ PROJETS 2018\P1803211 - Agnico Eagle - Station de pompage d'eau fraiche\2 - DESSINS EN PROGRÈS\Mise en plan\P1803211_MEQ_GAD_0201.dfw

THIS SHOULD MEASURE EXACTLY 1 INCH

#	Q	DESCRIPTION	NOTE	MASSE
1	1	4TSH HIGH HEAD PUMP 1800RPM (14" TRIM)		900 lb
2	1	HEAVY DUTY STEEL BASE		953 lb
3	1	DIAPHRAGM PRIMING SYSTEM		50 lb
4	4	LIFTING EYE BOLT		-
5	1	SAFETY GUARD		15 lb
6	2	ADJUSTING BLOCS		176 lb

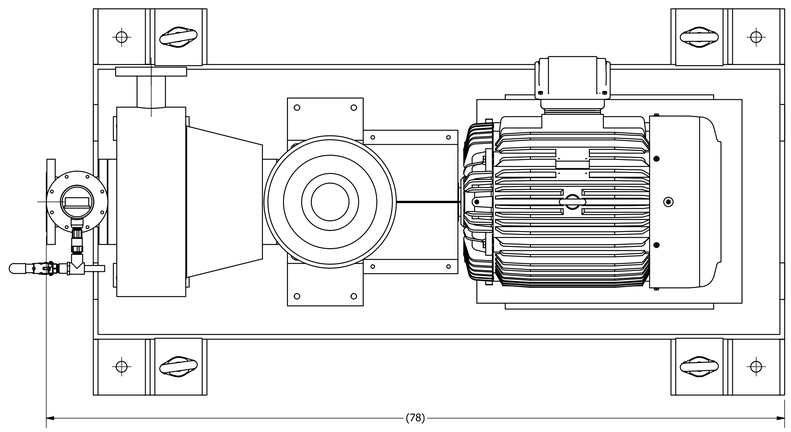

PLAN VIEW
SCALE 1 1/2" = 1'

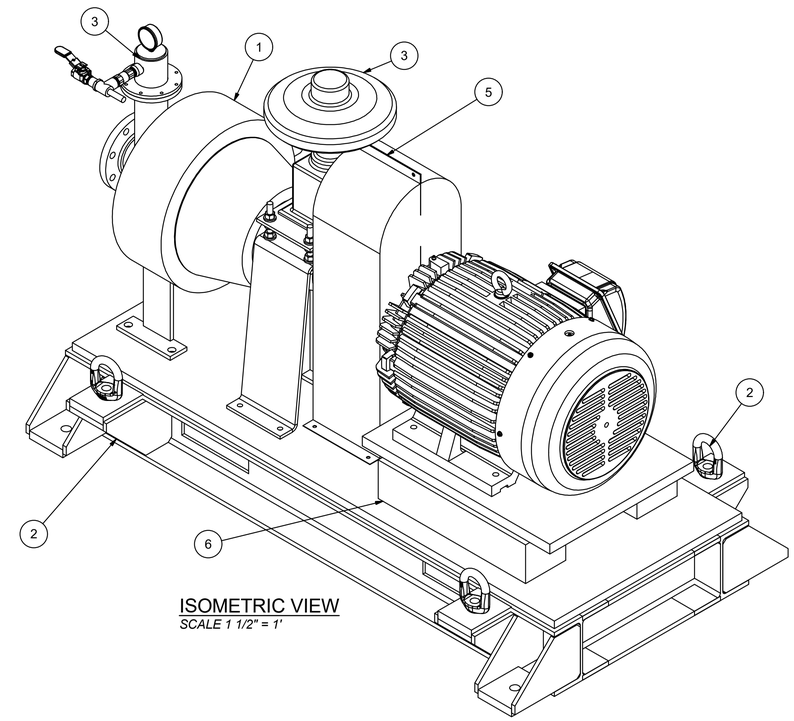

ISOMETRIC VIEW
SCALE 1 1/2" = 1'

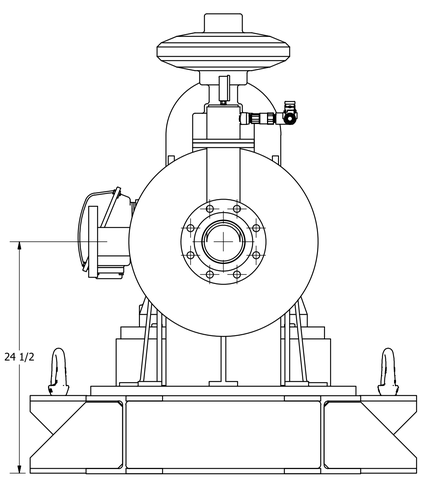

LEFT PROFIL VIEW
SCALE 1 1/2" = 1'

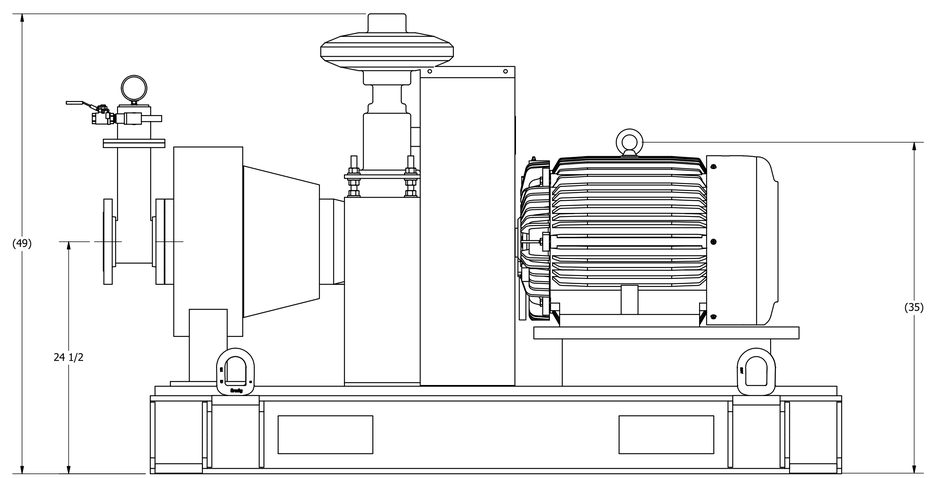

ELEVATION VIEW
SCALE : 1 1/2" = 1'

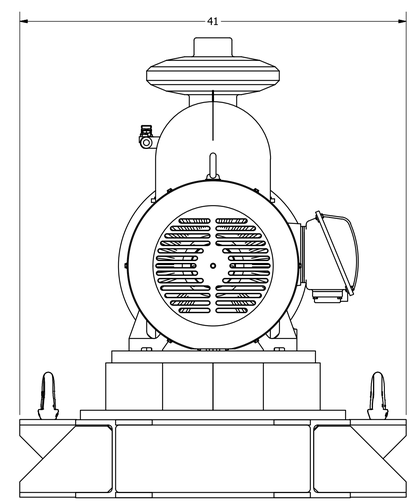

RIGHT PROFIL VIEW
SCALE 1 1/2" = 1'

ASSEMBLY WEIGHT: APPROX. 3100 lb.

NOTES & SPECIFICATIONS

SECTION I.

1. ALL DIMENSIONS ARE IN INCHES UNLESS OTHERWISE NOTED.

2. ALL REFERENCES TO COMPLEMENTARY DRAWING SEQUENTIAL NUMBERS IMPLY THE SAME PROJECT NUMBER UNLESS OTHERWISE NOTED.

3. ALL MATERIALS TO BE STANDARD STEEL 44W UNLESS OTHERWISE NOTED.

4. UNSPECIFIED FABRICATION TOLERANCES

6" -	± 1/32"
6" to 12"	± 1/16"
12" +	± 1/8"

5. UNSPECIFIED MACHINING TOLERANCES

6" -	± .010"
6" to 18"	± .015"
18" +	± .020"

6. GENERAL TOLERANCES

X.XXX" ± .002"
X.XX" ± .010"

7. MACHINE ALLOWANCE UNLESS OTHERWISE SPECIFIED.

8. BREAK ALL CORNERS UNLESS OTHERWISE SPECIFIED.

USE FOR CONSTRUCTION
UTILISER POUR CONSTRUCTION

AGNICO EAGLE

Vendor Document Status

1 ☐ Proceed to next submission and status.

2 ☐ Proceed with exceptions as noted to next submission and status.

3 ☐ Do not proceed. Revise as noted and resubmit next submission and status.

4 ☒ Complete, no further submission required.

By: Date:

Review and authorization to fabricate are only for general conformance with the design concept of the Project as expressed in the Contract Documents. Sole responsibility for the accuracy and completeness of this document, including but not limited to dimensions and quantities, remains with the Supplier/Contractor. Agnico Eagle does not warrant the accuracy or completeness of any of the information contained herein, nor does Agnico Eagle authorize or approve any construction means, methods, techniques, sequences or any safety precautions or procedures.

Agnico Eagle
No. 6515-S-265-067-210-GAD-0005 R. Sub002

DOCUMENT FOR INFORMATION

PO: OC677221-R2

REVISIONS

R	DESCRIPTION	DATE	APP
A	ISSUED FOR APPROVAL	2018-04-04	P.D.
0	ISSUED FOR CONSTRUCTION	2018-05-02	P.D.
1	AS BUILD	2018-07-24	A.L.

Agnico-Eagle Mine

Technosub

SEAL

REGISTERED PROFESSIONAL ENGINEER
A. LABBÉ
LICENSEE
NUNAVUT

2018-08-02

PROJECT MANAGER P. Descoteaux	
DESIGNER P. Descoteaux	*2018-04-05*
QUALITY ASSURANCE P. Marquis	*2018-04-05*
ENGINEER A.Labbé, P. Eng.	*2018-05-02*

L'INFORMATION CONTENU DANS CE DOCUMENT EST LA PROPRIÉTÉ DE TECHNOSUB INC. ET DOIT ÊTRE RETOURNÉ SUR DEMANDE. TOUTE TRANSMISSION DE COPIE(S) À AUTRUI ET TOUTE UTILISATION AUTRE QUE CELLE POUR LAQUELLE CE ITE INFORMATION FUT PRÊTÉE SONT INTERDITES SANS AUTORISATION ÉCRITE PRÉALABLE © TECHNOSUB

THE INFORMATION CONTAINED IN THIS DOCUMENT IS THE PROPERTY OF TECHNOSUB INC. AND MUST BE RETURNED UPON REQUEST. ANY TRANSMITTAL OF THIS INFORMATION TO A THIRD PARTY OR ANY USE OF THIS INFORMATION EXCEPT FOR ITS ORIGINAL PURPOSE WITHOUT PRIOR WRITTEN PERMISSION IS PROHIBITED. © TECHNOSUB

Méliadine 6515-S-265-067
Pump assembly drawing
P1803211_MEQ_GAD_0301

PROJECT	*SEQ #*	*SHEET #*	*REV.*
P1803211	0301	1 / 1	1

G:\PROJETS\P18+ PROJETS 2018\P1802211 - Agnico Eagle - Station de pommage d'eau fraiche\2 - DESSINS\EN PROGRES\Mise en plan\P1802211_MEQ_GAD_0301.dwg

THIS SHOULD MEASURE EXACTLY 1 INCH

#	Q	DESCRIPTION	NOTE
1	2	W6 x 25	
2	21	HSS 3" X 3" X 1/4"	
3	4	SKID LUG	

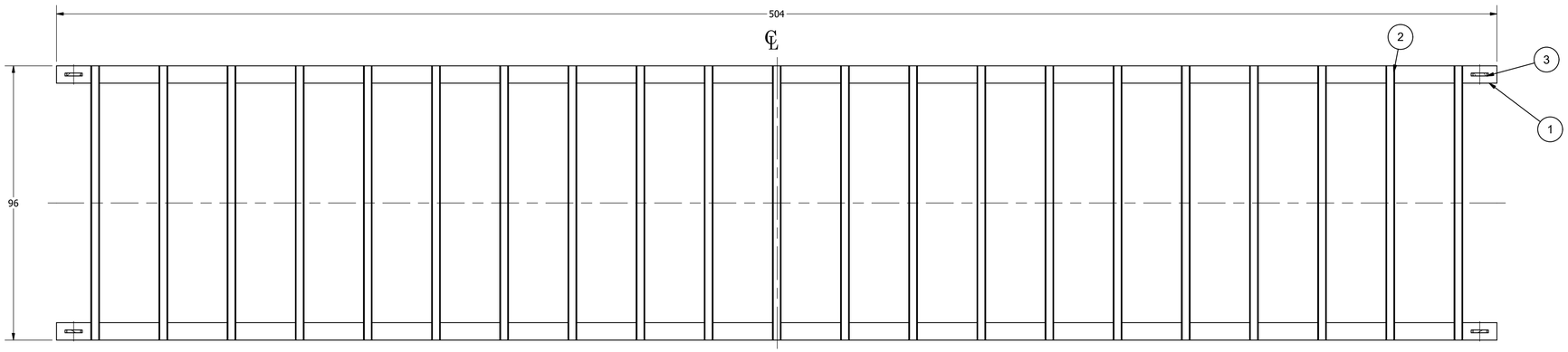

SECTION A
SCALE : 1/2" = 1'

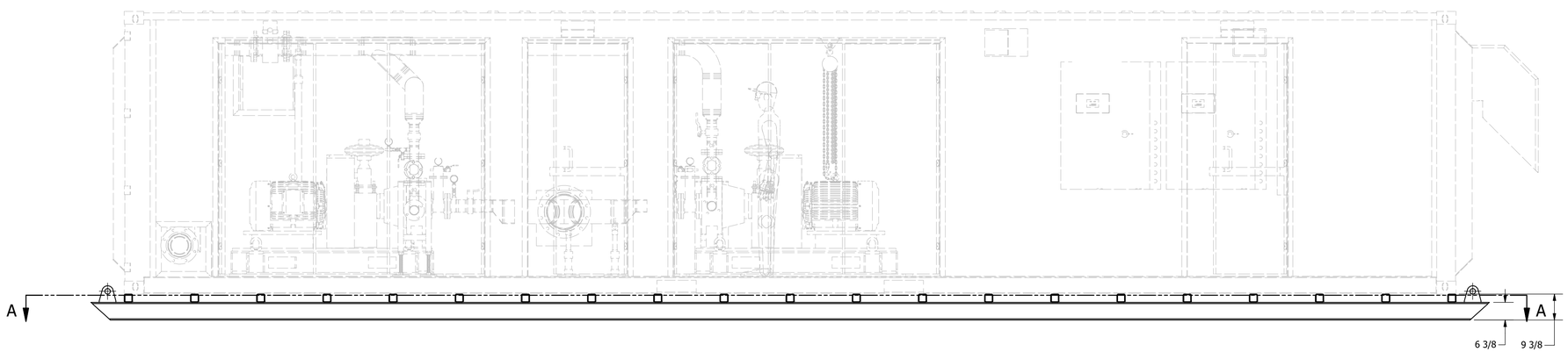

ELEVATION VIEW
SCALE : 1/2" = 1'

NOTES & SPECIFICATIONS

SECTION I.

1. ALL DIMENSIONS ARE IN INCHES UNLESS OTHERWISE NOTED.

2. ALL REFERENCES TO COMPLEMENTARY DRAWING SEQUENTIAL NUMBERS IMPLY THE SAME PROJECT NUMBER UNLESS OTHERWISE NOTED.

3. ALL MATERIALS TO BE STANDARD STEEL 44W UNLESS OTHERWISE NOTED.

4. UNSPECIFIED FABRICATION TOLERANCES

6' -	± 1/32"
6' to 12'	± 1/16"
12' +	± 1/8"

5. UNSPECIFIED MACHINING TOLERANCES

6" -	± .010"
6" to 18"	± .015"
18" +	± .020"

6. GENERAL TOLERANCES

X.XXX" ± .002"
X.XX" ± .010"

7. MACHINE ALLOWANCE UNLESS OTHERWISE SPECIFIED.

8. BREAK ALL CORNERS UNLESS OTHERWISE SPECIFIED.

USE FOR CONSTRUCTION
UTILISER POUR CONSTRUCTION

AGNICO EAGLE

Vendor Document Status

1 ☐ Proceed to next submission and status.

2 ☐ Proceed with exceptions as noted to next submission and status.

3 ☐ Do not proceed. Revise as noted and resubmit next submission and status.

4 ☒ Complete, no further submission required.

By: Date:

Review and authorization to fabricate are only for general conformance with the design concept of the Project as expressed in the Contract Documents. Sole responsibility for the accuracy and completeness of this document, including but not limited to dimensions and quantities, remains with the Supplier/Contractor. Agnico Eagle does not warrant the accuracy or completeness of any of the information contained herein, nor does Agnico Eagle authorize or approve any construction means, methods, techniques, sequences or any safety precautions or procedures.

Agnico Eagle
No. 6515-S-265-067-210-GAD-0006 R. Sub002

DOCUMENT FOR INFORMATION

PO: OC677221-R2

REVISIONS

R	DESCRIPTION	DATE	APP
A	ISSUED FOR APPROVAL	2018-04-04	P.D.
0	ISSUED FOR CONSTRUCTION	2018-04-16	P.D.
1	AS BUILD	2018-07-24	A.L.

Agnico-Eagle Mine

Technosub

SEAL

REGISTERED PROFESSIONAL ENGINEER
A. LABBÉ
LICENSEE
NUNAVUT

2018-08-02

PROJECT MANAGER P. Descoteaux	
DESIGNER P. Descoteaux	*2018-04-05*
QUALITY ASSURANCE P. Marquis	*2018-04-05*
ENGINEER A. Labbé, P. Eng.	*2018-05-02*

L'INFORMATION CONTENU DANS CE DOCUMENT EST LA PROPRIÉTÉ DE TECHNOSUB INC. ET DOIT ÊTRE RETOURNÉ SUR DEMANDE. TOUTE TRANSMISSION DE COPIE(S) À AUTRUI AT TOUTE UTILISATION AUTRE QUE CELLE POUR LAQUELLE CETTE INFORMATION FUT PRÊTÉE SONT INTERDITES SANS AUTORISATION ECRITE PREALABLE. © TECHNOSUB

THE INFORMATION CONTAINED IN THIS DOCUMENT IS THE PROPERTY OF TECHNOSUB INC. AND MUST BE RETURNED UPON REQUEST. ANY TRANSMITTAL OF THIS INFORMATION TO A THIRD PARTY OR ANY USE OF THIS INFORMATION EXCEPT FOR ITS ORIGINAL PURPOSE WITHOUT PRIOR WRITTEN PERMISSION IS PROHIBITED. © TECHNOSUB

Méliadine 6515-S-265-067
Container Skid Drawing
P1803211_MEQ_GAD_0401

PROJECT	*SEQ #*	*SHEET #*	*REV.*
P1803211	0401	1 / 1	1

G:\PROJETS\P18-PROJETS 2018\P1803211 - Agnico Eagle - Station de pompage d'eau fraiche\2 - DESSINS\EN PROGRÈS-Mises en plan\P1803211_MEQ_GAD_0401.idw

THIS SHOULD MEASURE EXACTLY 1 INCH

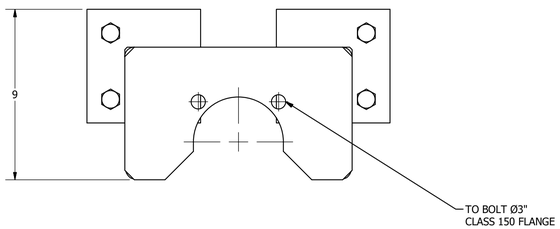

PLAN VIEW
SCALE 3" = 1'

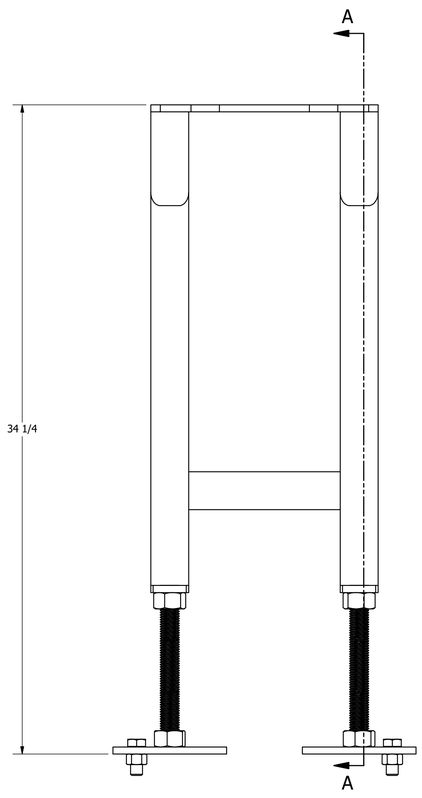

ELEVATION VIEW
SCALE : 3" = 1'

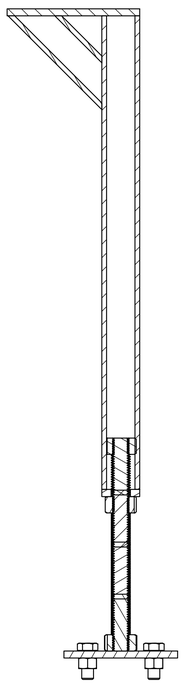

SECTION A
SCALE : 3" = 1'

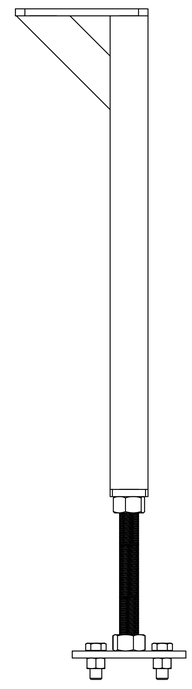

RIGHT PROFIL VIEW
SCALE 3" = 1'

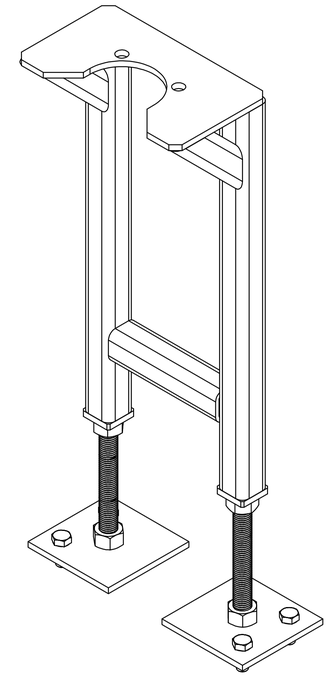

ISOMETRIC VIEW
SCALE 3" = 1'

NOTES & SPECIFICATIONS

SECTION I.

1. ALL DIMENSIONS ARE IN INCHES UNLESS OTHERWISE NOTED.

2. ALL REFERENCES TO COMPLEMENTARY DRAWING SEQUENTIAL NUMBERS IMPLY THE SAME PROJECT NUMBER UNLESS OTHERWISE NOTED.

3. ALL MATERIALS TO BE STANDARD STEEL 44W UNLESS OTHERWISE NOTED.

4. UNSPECIFIED FABRICATION TOLERANCES

6" -	± 1/32"
6" to 12"	± 1/16"
12" +	± 1/8"

5. UNSPECIFIED MACHINING TOLERANCES

6" -	± .010"
6" to 18"	± .015"
18" +	± .020"

6. GENERAL TOLERANCES

X.XXX" ± .002"
X.XX" ± .010"

7. MACHINE ALLOWANCE UNLESS OTHERWISE SPECIFIED.

8. BREAK ALL CORNERS UNLESS OTHERWISE SPECIFIED.

USE FOR CONSTRUCTION
UTILISER POUR CONSTRUCTION

AGNICO EAGLE

Vendor Document Status

1 ☐ Proceed to next submission and status.

2 ☐ Proceed with exceptions as noted to next submission and status.

3 ☐ Do not proceed. Revise as noted and resubmit next submission and status.

4 ☒ Complete, no further submission required.

By: Date:

Review and authorization to fabricate are only for general conformance with the design concept of the Project as expressed in the Contract Documents. Sole responsibility for the accuracy and completeness of this document, including but not limited to dimensions and quantities, remains with the Supplier/Contractor. Agnico Eagle does not warrant the accuracy or completeness of any of the information contained herein, nor does Agnico Eagle authorize or approve any construction means, methods, techniques, sequences or any safety precautions or procedures.

Agnico Eagle No. 6515-S-265-067-210-GAD-0007 Rev Sub002

DOCUMENT FOR INFORMATION

PO: OC677221-R2

REVISIONS

R	DESCRIPTION	DATE	APP
A	ISSUED FOR APPROVAL	2018-04-04	P.D.
0	ISSUED FOR CONSTRUCTION	2018-05-02	P.D.
1	AS BUILD	2018-07-24	A.L.

Agnico-Eagle Mine

Technosub

SEAL

REGISTERED PROFESSIONAL ENGINEER
A. LABBÉ
LICENSEE
NUNAVUT

2018-08-02

PROJECT MANAGER P. Descoteaux	
DESIGNER P. Descoteaux	*2018-04-19*
QUALITY ASSURANCE P. Marquis	*2018-04-19*
ENGINEER A. Labbé, P. Eng.	*2018-05-02*

L'INFORMATION CONTENU DANS CE DOCUMENT EST LA PROPRIÉTÉ DE TECHNOSUB INC. ET DOIT ÊTRE RETOURNÉE SUR DEMANDE. TOUTE TRANSMISSION DE COPIE(S) À AUTRUI ET TOUTE UTILISATION AUTRE QUE CELLE POUR LAQUELLE CETTE INFORMATION FUT PRÊTÉE SONT INTERDITES SANS AUTORISATION ÉCRITE PRÉALABLE. © TECHNOSUB

THE INFORMATION CONTAINED IN THIS DOCUMENT IS THE PROPERTY OF TECHNOSUB INC. AND MUST BE RETURNED UPON REQUEST. ANY TRANSMITTAL OF THIS INFORMATION TO A THIRD PARTY OR ANY USE OF THIS INFORMATION EXCEPT FOR ITS ORIGINAL PURPOSE WITHOUT PRIOR WRITTEN PERMISSION IS PROHIBITED. © TECHNOSUB

Méliadine 6515-S-265-067
Valve support Drawing
P1803211_MEQ_GAD_0501

PROJECT	*SEQ #*	*SHEET #*	*REV.*
P1803211	0501	1 / 1	1

G:\PROJETS\P18~ PROJETS 2018\P1803211 - Agnico Eagle - Station de pompage d'eau fraiche\2 - DESSINS\EN PROGRÈS\Mise en plan\P1803211_MEQ_GAD_0501.idw

THIS SHOULD MEASURE EXACTLY 1 INCH

NO. DESSIN DRAWING NO 65-692-210-203_P2

FORMAT ARCHD

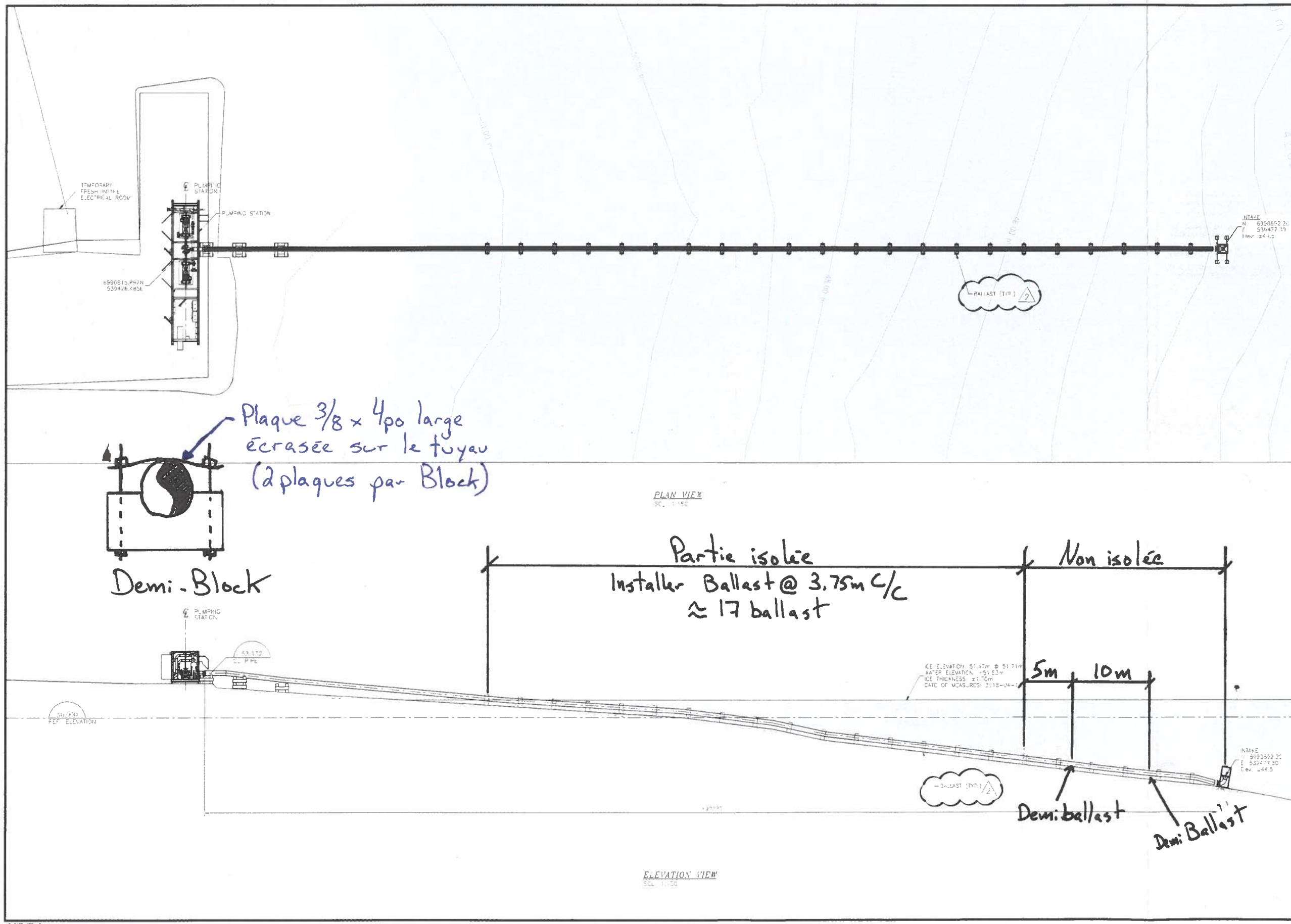

PLAN CLÉ KEY PLAN

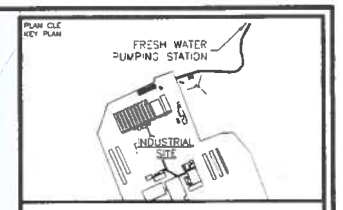

WSP

675, 3e AVENUE EST
VALCOURT, QUÉBEC, CANADA J0E 2L0
TÉL. : 819 825-0274 | TÉLÉC. : 819 824-1541 | WWW.WSPGROUP.COM

Ref. 151-08440-10

NOTES GÉNÉRALES / GENERAL NOTES

NOTE : THE VENDOR SHALL REFER HIMSELF TO THE EQUIPMENT SPECIFICATIONS AND THE SCOPE OF WORK OF THE 65-18-S-265-067 FRESH WATER PUMP STATION FOR DETAIL RELATED TO THIS DESIGN.

POUR CONSTRUCTION
AGNICO EAGLE
DATE : 2018-06-05

DESSINS EN RÉFÉRENCE / REFERENCE DRAWINGS

TITRE / TITLE	# DWG
-	-
-	-
-	-
-	-
-	-
-	-

AGNICO EAGLE

REV.	DATE	DESCRIPTION	PAR/BY	APP.	CLIENT
2	2018-06-05	ADD BALLAST	I.G.	B.F.	
1	2018-06-01	ISSUED FOR CONSTRUCTION	I.G.	B.F.	
0	2018-01-24	ISSUED FOR TENDER	I.G.	S.L.	

REVISIONS

Bertrand Fortin
2018-06-01

TITRE / TITLE
AGNICO EAGLE – MELIADINE DIVISION
692 – FRESH WATER PUMPING STATION
210 – GENERAL ARRANGEMENT
PLAN VIEW

DESSINÉ PAR DRAWN BY	ISABELLE GILBERT	DATE 2015-11-30
VERIFIÉ PAR CHECKED BY	BERTRAND FORTIN, P. Eng.	2018-06-01
APPROUVÉ PAR APPROVED BY	BERTRAND FORTIN, P. Eng.	2018-06-01
ÉCHELLE SCALE	INDICATED	DATE 2015-11-30
NO. DESSIN DRAWING NO.	65-692-210-203	
NO. PROJET PROJECT NO	6515	REVISION 2 / FEUILLE / SHT 1 / 1

AE-CART-ARCH D

\\cavado\aud01\Projet_15X-XXXX-XX\151-08440-10\01-COMM\Envoyé_AEM\WSP-AEM-151-08440-10-2869 (Fresh water pumping station GA rev. 2)\65-692-210-203_P2.dwg-2018-06-05 12:01:39

FILE NO. 65-692-210-203_P2.dwg

Printed: 2018-10-22 17:41:21 UTC

McElroy Joint Report

Reference Number 1176076

Job Details

Joint Number	40
Joint Time	2018-07-28 11:51:35 GMT
Job	melliadine promec
Operator	stephen pepin

Fusion Machine

Machine Name	McELROY
Machine Model	T500 MF
Piston Area	6.01 in²

Pipe Specifications

Pipe Material	PE4710
Pipe Size	12 " DIPS
Wall Thickness	DR 17

Pressures

Drag Pressure 156 psi

	Interfacial	Gauge
Bead Up	75 psi	534 psi
Heat Soak	0 psi	156 psi
Fuse	75 psi	534 psi
Cool	0 psi	0 psi

Fusion Specification

Fusion Type	Butt Fusion
Fusion Specification	ASTM F2620
Bead Time	0 seconds
Bead Size	3/8"
Heat/Soak Time	209 seconds
Fuse Time	512 seconds
Open/Close Time	15 seconds
Cool Time	0 seconds

	Minimum	Maximum
Bead Up	458 psi	609 psi
Heat Soak	0 psi	156 psi
Fuse	458 psi	609 psi
Cool	0 psi	0 psi

External Heater Temperatures

	Side A	Side B
One	425 F	425 F
Two	425 F	425 F
Three	425 F	425 F
Four	425 F	425 F

GPS Location

	Latitude	Longitude
2018/07/28 16:55:46 UTC	63°2'34.0"N	92°13'14.1"W

Logged Data Summary

Number of Data Points	224
Total Fusion Time	244 seconds
Maximum Recorded Pressure	363 psi

Device Information

DataLogger Serial Number	MDL5-1111
Calibration Date	2018-06-21
Firmware Version	v5.1
Software Version	v1.0.8
Software Product Name	DL5m

Data Source

File Name \My Documents\Joint Reports\DL5 2018-07-28 at 11-51-35 Joint 40 Job melliadine promec by stephen pepin.DL5

Upload Time 2018-10-22 15:14:18 GMT

Front-end Plot

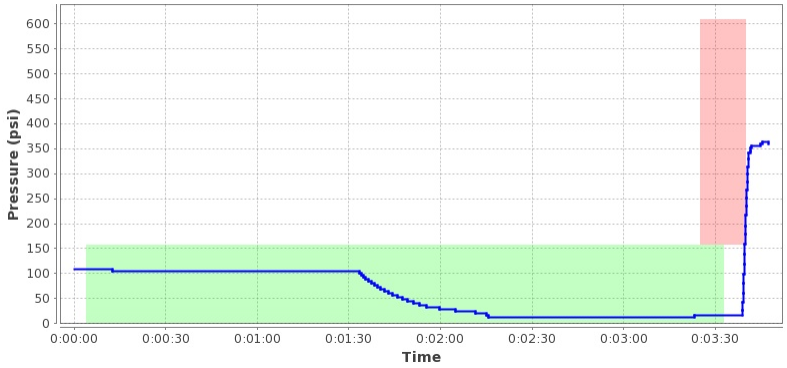

Heater Removal Plot

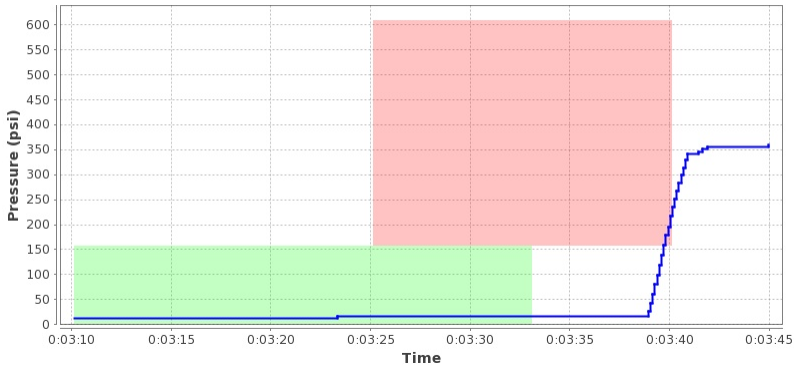

Summary Plot

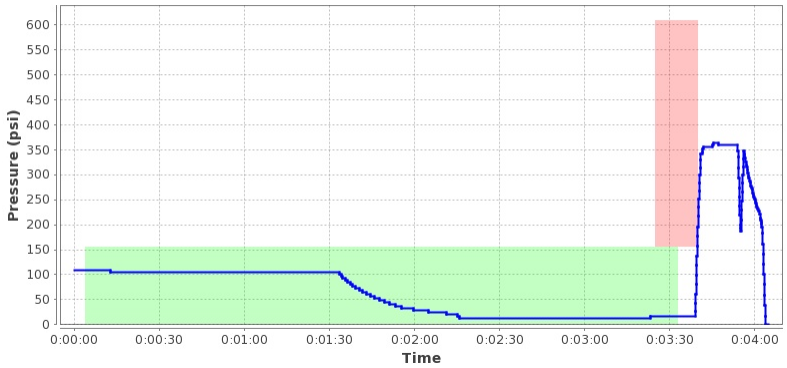

Notes

12 " DR17 tuyaux isoler dans l eau

Printed: 2018-10-22 17:41:20 UTC

McElroy Joint Report

Reference Number 1176077

Job Details

Joint Number	41
Joint Time	2018-07-28 11:57:51 GMT
Job	melliadine promec
Operator	stephen pepin

Fusion Machine

Machine Name	McELROY
Machine Model	T500 MF
Piston Area	6.01 in²

Pipe Specifications

Pipe Material	PE4710
Pipe Size	12 " DIPS
Wall Thickness	DR 17

Pressures

Drag Pressure 0 psi

	Interfacial	Gauge
Bead Up	75 psi	378 psi
Heat Soak	0 psi	0 psi
Fuse	75 psi	378 psi
Cool	0 psi	0 psi

Fusion Specification

Fusion Type	Butt Fusion
Fusion Specification	ASTM F2620
Bead Time	0 seconds
Bead Size	3/8"
Heat/Soak Time	209 seconds
Fuse Time	512 seconds
Open/Close Time	15 seconds
Cool Time	0 seconds

	Minimum	Maximum
Bead Up	302 psi	453 psi
Heat Soak	0 psi	0 psi
Fuse	302 psi	453 psi
Cool	0 psi	0 psi

External Heater Temperatures

	Side A	Side B
One	425 F	425 F
Two	425 F	425 F
Three	425 F	425 F
Four	425 F	425 F

GPS Location

	Latitude	Longitude
2018/07/28 17:02:57 UTC	63°2'33.9"N	92°13'14.1"W

Logged Data Summary

Number of Data Points	750
Total Fusion Time	5373 seconds
Maximum Recorded Pressure	432 psi

Device Information

DataLogger Serial Number	MDL5-1111
Calibration Date	2018-06-21
Firmware Version	v5.1
Software Version	v1.0.8
Software Product Name	DL5m

Data Source

File Name \My Documents\Joint Reports\DL5 2018-07-28 at 11-57-51 Joint 41 Job melliadine promec by stephen pepin.DL5

Upload Time 2018-10-22 15:14:20 GMT

Front-end Plot

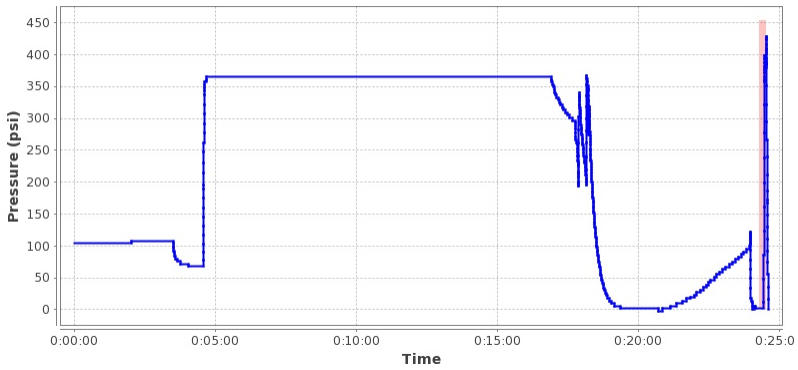

Heater Removal Plot

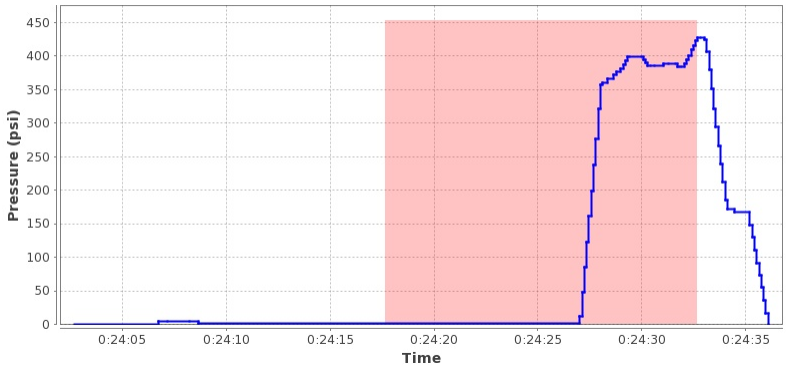

Summary Plot

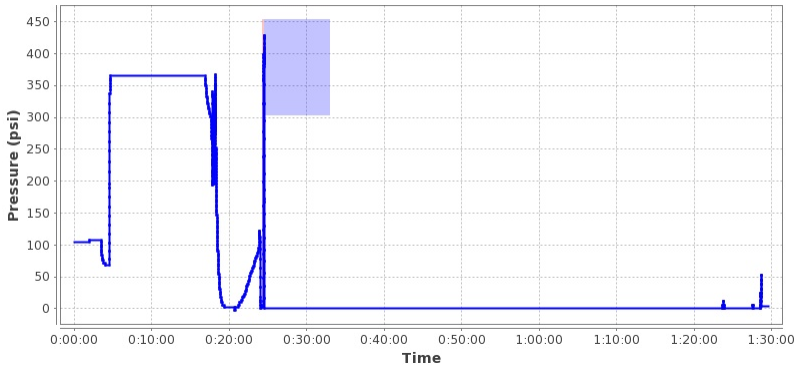

Notes

12 " DR17 tuyaux isoler dans l eau

Printed: 2018-10-22 17:41:19 UTC

McElroy Joint Report

Reference Number 1176078

Job Details

Joint Number	42
Joint Time	2018-07-28 13:45:46 GMT
Job	melliadine promec
Operator	stephen pepin

Fusion Machine

Machine Name	McELROY
Machine Model	T500 MF
Piston Area	6.01 in²

Pipe Specifications

Pipe Material	PE4710
Pipe Size	12 " DIPS
Wall Thickness	DR 17

Pressures

Drag Pressure 1 psi

	Interfacial	Gauge
Bead Up	75 psi	379 psi
Heat Soak	0 psi	1 psi
Fuse	75 psi	379 psi
Cool	0 psi	0 psi

Fusion Specification

Fusion Type	Butt Fusion
Fusion Specification	ASTM F2620
Bead Time	0 seconds
Bead Size	3/8"
Heat/Soak Time	209 seconds
Fuse Time	512 seconds
Open/Close Time	15 seconds
Cool Time	0 seconds

	Minimum	Maximum
Bead Up	303 psi	454 psi
Heat Soak	0 psi	1 psi
Fuse	303 psi	454 psi
Cool	0 psi	0 psi

External Heater Temperatures

	Side A	Side B
One	422 F	422 F
Two	423 F	423 F
Three	422 F	422 F
Four	423 F	423 F

GPS Location

	Latitude	Longitude
2018/07/28 18:50:52 UTC	63°2'33.7"N	92°13'14.7"W

Logged Data Summary

Number of Data Points	84
Total Fusion Time	794 seconds
Maximum Recorded Pressure	375 psi

Device Information

DataLogger Serial Number	MDL5-1111
Calibration Date	2018-06-21
Firmware Version	v5.1
Software Version	v1.0.8
Software Product Name	DL5m

Data Source

File Name	\My Documents\Joint Reports\DL5 2018-07-28 at 13-45-46 Joint 42 Job melliadine promec by stephen pepin.DL5
Upload Time	2018-10-22 15:14:22 GMT

Front-end Plot

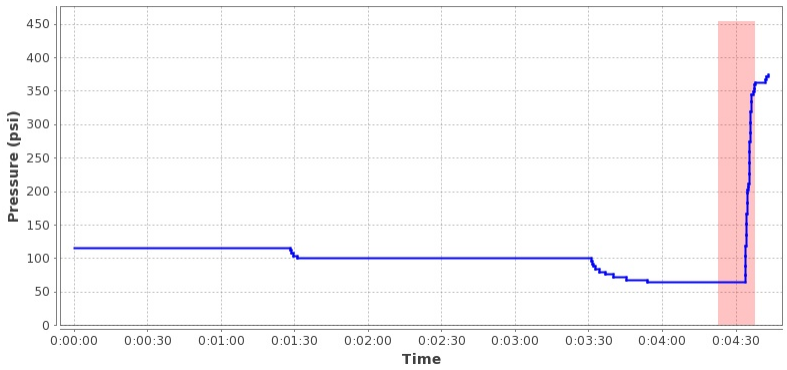

Heater Removal Plot

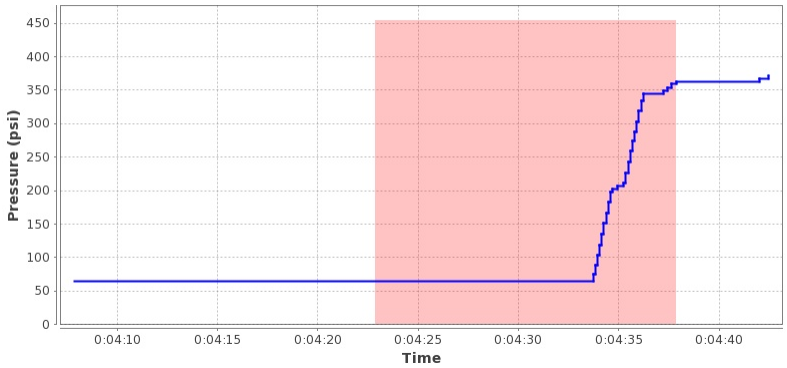

Summary Plot

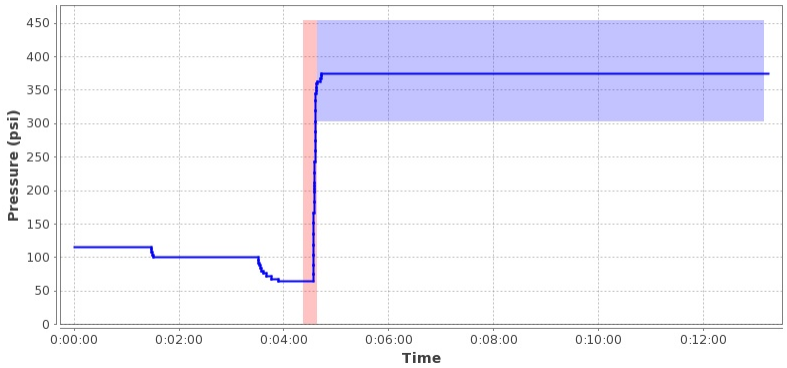

Notes

12 " DR17 tuyaux isoler dans l eau

Printed: 2018-10-22 17:41:18 UTC

McElroy Joint Report

Reference Number 1176079

Job Details

Joint Number	43
Joint Time	2018-07-28 14:20:35 GMT
Job	melliadine promec
Operator	stephen pepin

Fusion Machine

Machine Name	McELROY
Machine Model	T500 MF
Piston Area	6.01 in²

Pipe Specifications

Pipe Material	PE4710
Pipe Size	12 " DIPS
Wall Thickness	DR 17

Pressures

Drag Pressure 341 psi

	Interfacial	Gauge
Bead Up	75 psi	719 psi
Heat Soak	0 psi	341 psi
Fuse	75 psi	719 psi
Cool	0 psi	0 psi

Fusion Specification

Fusion Type	Butt Fusion
Fusion Specification	ASTM F2620
Bead Time	0 seconds
Bead Size	3/8"
Heat/Soak Time	209 seconds
Fuse Time	512 seconds
Open/Close Time	15 seconds
Cool Time	0 seconds

	Minimum	Maximum
Bead Up	643 psi	794 psi
Heat Soak	0 psi	341 psi
Fuse	643 psi	794 psi
Cool	0 psi	0 psi

External Heater Temperatures

	Side A	Side B

GPS Location

	Latitude	Longitude
2018/07/28 19:25:43 UTC	63°2'33.3"N	92°13'15.0"W

Logged Data Summary

Number of Data Points	114
Total Fusion Time	748 seconds
Maximum Recorded Pressure	413 psi

Device Information

DataLogger Serial Number	MDL5-1111
Calibration Date	2018-06-21
Firmware Version	v5.1
Software Version	v1.0.8
Software Product Name	DL5m

Data Source

File Name	\My Documents\Joint Reports\DL5 2018-07-28 at 14-20-35 Joint 43 Job melliadine promec by stephen pepin.DL5
Upload Time	2018-10-22 15:14:23 GMT

Front-end Plot

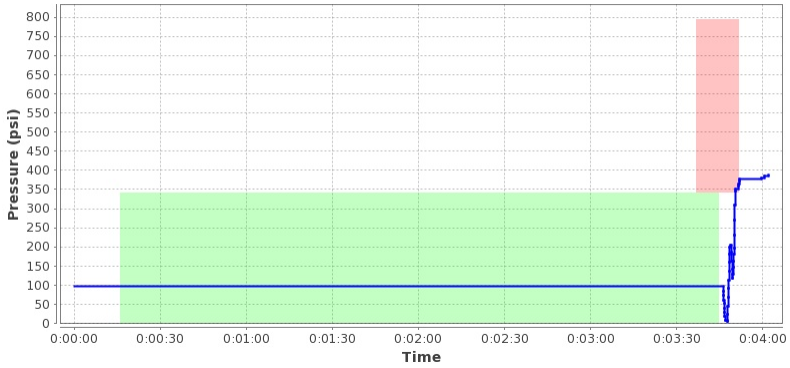

Heater Removal Plot

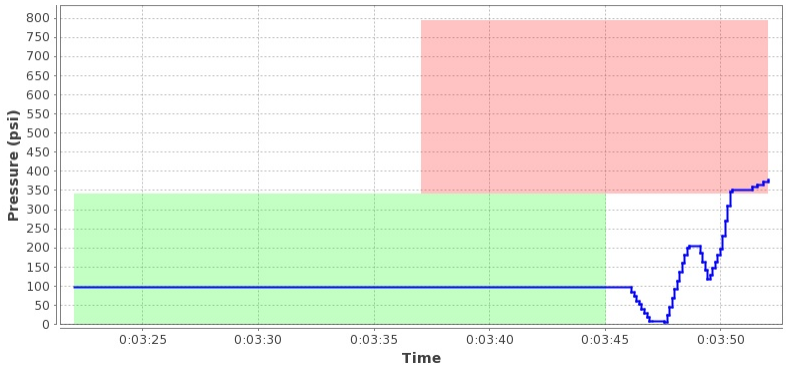

Summary Plot

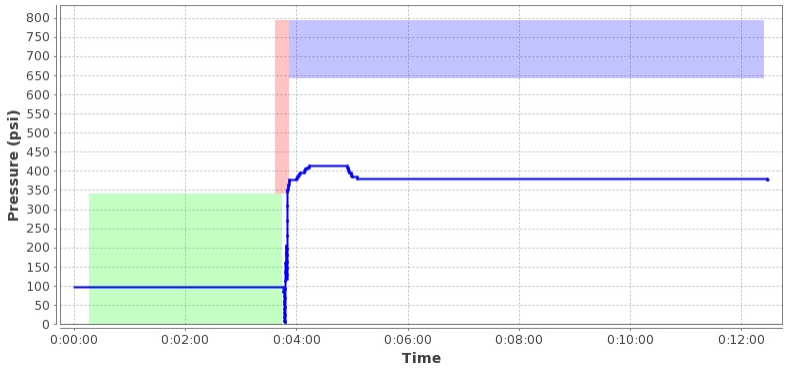

Notes

12 " DR17 tuyaux isoler dans l eau

Printed: 2018-10-22 17:41:17 UTC

McElroy Joint Report

Reference Number 1176080

Job Details

Joint Number	44
Joint Time	2018-07-28 14:54:26 GMT
Job	melliadine promec
Operator	stephen pepin

Fusion Machine

Machine Name	McELROY
Machine Model	T500 MF
Piston Area	6.01 in²

Pipe Specifications

Pipe Material	PE4710
Pipe Size	12 " DIPS
Wall Thickness	DR 17

Pressures

Drag Pressure 329 psi

	Interfacial	Gauge
Bead Up	75 psi	707 psi
Heat Soak	0 psi	329 psi
Fuse	75 psi	707 psi
Cool	0 psi	0 psi

Fusion Specification

Fusion Type	Butt Fusion
Fusion Specification	ASTM F2620
Bead Time	0 seconds
Bead Size	3/8"
Heat/Soak Time	209 seconds
Fuse Time	512 seconds
Open/Close Time	15 seconds
Cool Time	0 seconds

	Minimum	Maximum
Bead Up	631 psi	782 psi
Heat Soak	0 psi	329 psi
Fuse	631 psi	782 psi
Cool	0 psi	0 psi

External Heater Temperatures

	Side A	Side B

GPS Location

	Latitude	Longitude
2018/07/28 19:59:34 UTC	63°2'32.9"N	92°13'15.2"W

Logged Data Summary

Number of Data Points	84
Total Fusion Time	834 seconds
Maximum Recorded Pressure	381 psi

Device Information

DataLogger Serial Number	MDL5-1111
Calibration Date	2018-06-21
Firmware Version	v5.1
Software Version	v1.0.8
Software Product Name	DL5m

Data Source

File Name	\My Documents\Joint Reports\DL5 2018-07-28 at 14-54-26 Joint 44 Job melliadine promec by stephen pepin.DL5
Upload Time	2018-10-22 15:14:24 GMT

Front-end Plot

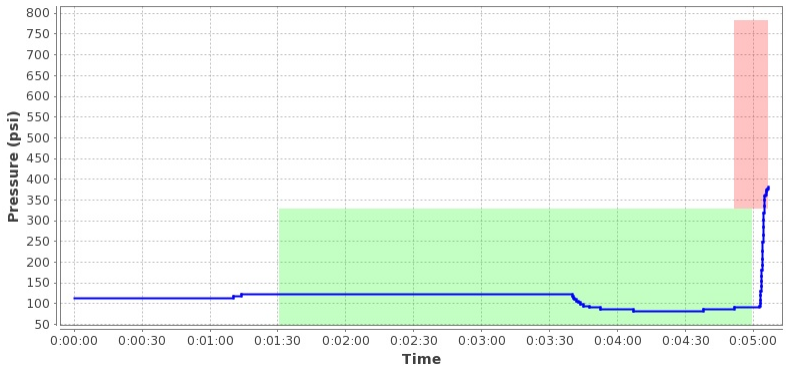

Heater Removal Plot

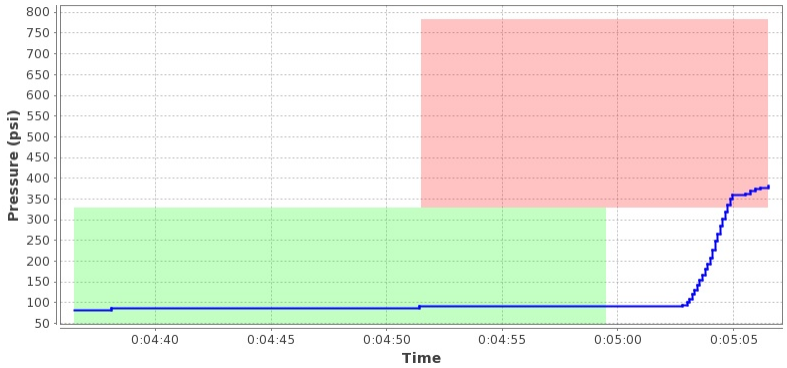

Summary Plot

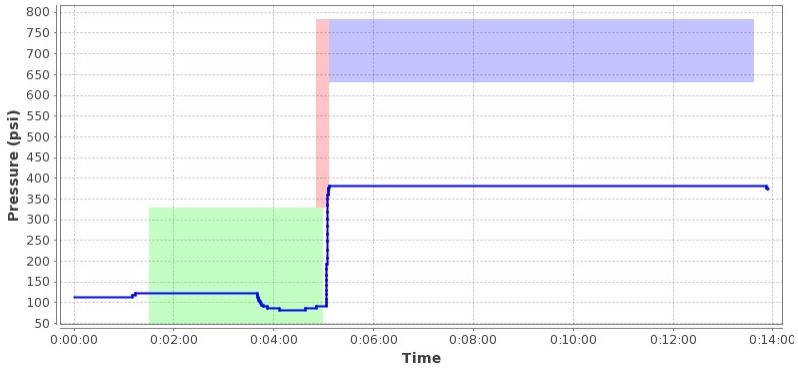

Notes

12 " DR17 tuyaux isoler dans l eau

Printed: 2018-10-22 17:41:16 UTC

McElroy Joint Report

Reference Number 1176081

Job Details

Joint Number	45
Joint Time	2018-07-28 16:15:24 GMT
Job	melliadine promec
Operator	stephen pepin

Fusion Machine

Machine Name	McELROY
Machine Model	T500 MF
Piston Area	6.01 in²

Pipe Specifications

Pipe Material	PE4710
Pipe Size	12 " DIPS
Wall Thickness	DR 17

Pressures

Drag Pressure 341 psi

	Interfacial	Gauge
Bead Up	75 psi	719 psi
Heat Soak	0 psi	341 psi
Fuse	75 psi	719 psi
Cool	0 psi	0 psi

Fusion Specification

Fusion Type	Butt Fusion
Fusion Specification	ASTM F2620
Bead Time	0 seconds
Bead Size	3/8"
Heat/Soak Time	209 seconds
Fuse Time	512 seconds
Open/Close Time	15 seconds
Cool Time	0 seconds

	Minimum	Maximum
Bead Up	643 psi	794 psi
Heat Soak	0 psi	341 psi
Fuse	643 psi	794 psi
Cool	0 psi	0 psi

External Heater Temperatures

	Side A	Side B

GPS Location

	Latitude	Longitude
2018/07/28 21:20:32 UTC	63°2'32.5"N	92°13'15.5"W

Logged Data Summary

Number of Data Points	104
Total Fusion Time	854 seconds
Maximum Recorded Pressure	377 psi

Device Information

DataLogger Serial Number	MDL5-1111
Calibration Date	2018-06-21
Firmware Version	v5.1
Software Version	v1.0.8
Software Product Name	DL5m

Data Source

File Name	\My Documents\Joint Reports\DL5 2018-07-28 at 16-15-24 Joint 45 Job melliadine promec by stephen pepin.DL5
Upload Time	2018-10-22 15:14:25 GMT

Front-end Plot

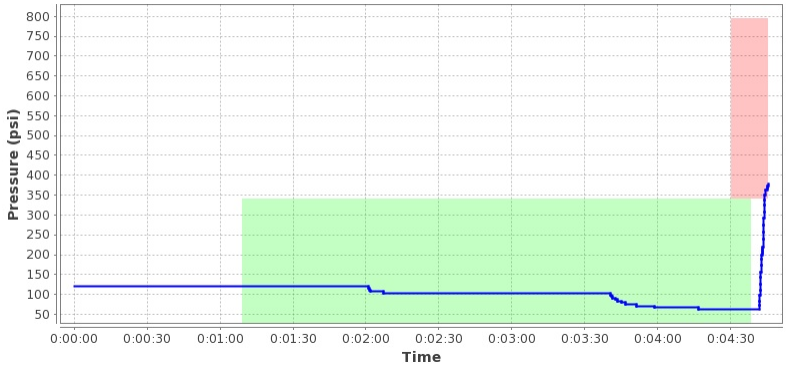

Heater Removal Plot

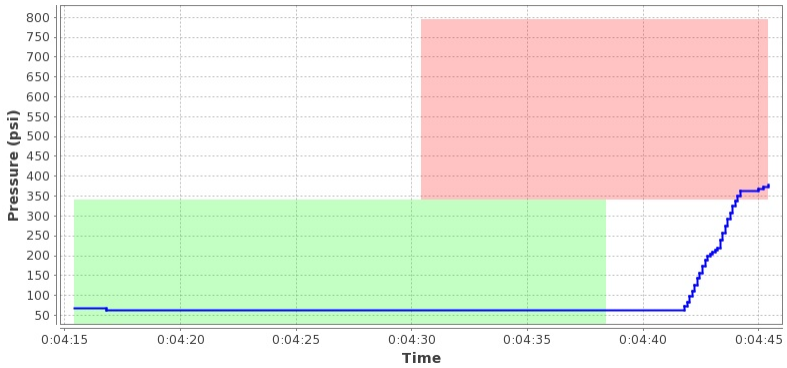

Summary Plot

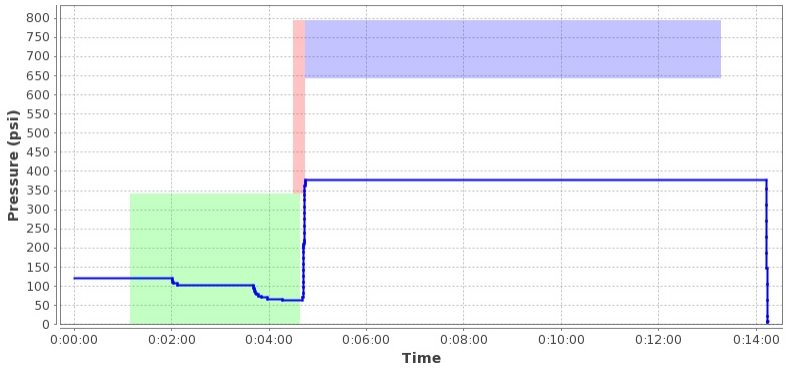

Notes

12 " DR17 tuyaux isoler dans l eau

Printed: 2018-10-22 17:41:15 UTC

McElroy Joint Report

Reference Number 1176082

Job Details

Joint Number	46
Joint Time	2018-07-28 16:45:32 GMT
Job	melliadine promec
Operator	stephen pepin

Fusion Machine

Machine Name	McELROY
Machine Model	T500 MF
Piston Area	6.01 in²

Pipe Specifications

Pipe Material	PE4710
Pipe Size	12 " DIPS
Wall Thickness	DR 17

Pressures

Drag Pressure 66 psi

	Interfacial	Gauge
Bead Up	75 psi	444 psi
Heat Soak	0 psi	66 psi
Fuse	75 psi	444 psi
Cool	0 psi	0 psi

Fusion Specification

Fusion Type	Butt Fusion
Fusion Specification	ASTM F2620
Bead Time	0 seconds
Bead Size	3/8"
Heat/Soak Time	209 seconds
Fuse Time	512 seconds
Open/Close Time	15 seconds
Cool Time	0 seconds

	Minimum	Maximum
Bead Up	368 psi	519 psi
Heat Soak	0 psi	66 psi
Fuse	368 psi	519 psi
Cool	0 psi	0 psi

External Heater Temperatures

	Side A	Side B

GPS Location

	Latitude	Longitude
2018/07/28 21:50:40 UTC	63°2'32.1"N	92°13'15.6"W

Logged Data Summary

Number of Data Points	80
Total Fusion Time	852 seconds
Maximum Recorded Pressure	380 psi

Device Information

DataLogger Serial Number	MDL5-1111
Calibration Date	2018-06-21
Firmware Version	v5.1
Software Version	v1.0.8
Software Product Name	DL5m

Data Source

File Name	\My Documents\Joint Reports\DL5 2018-07-28 at 16-45-32 Joint 46 Job melliadine promec by stephen pepin.DL5
Upload Time	2018-10-22 15:14:26 GMT

Front-end Plot

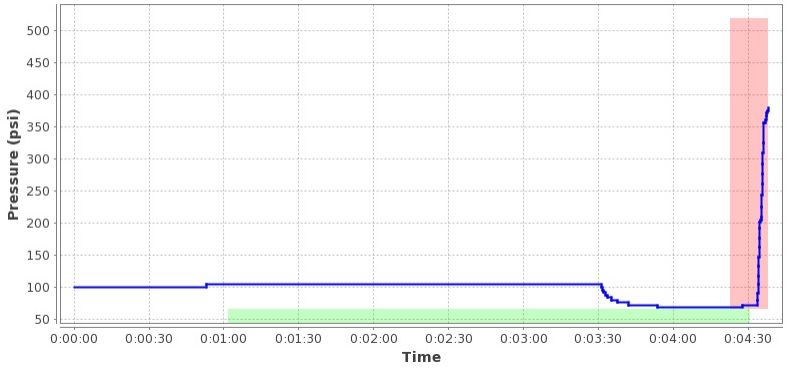

Heater Removal Plot

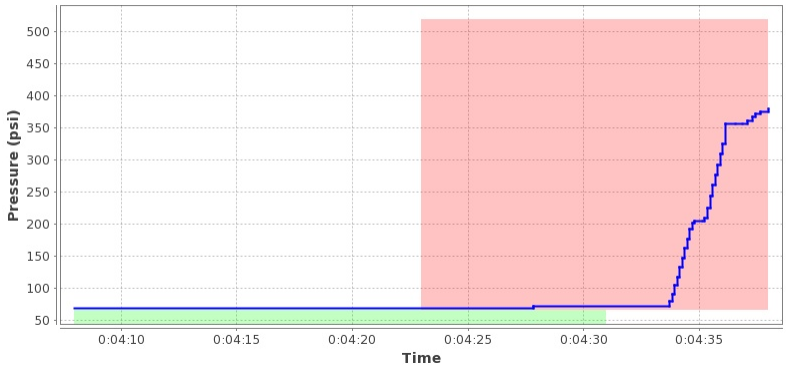

Summary Plot

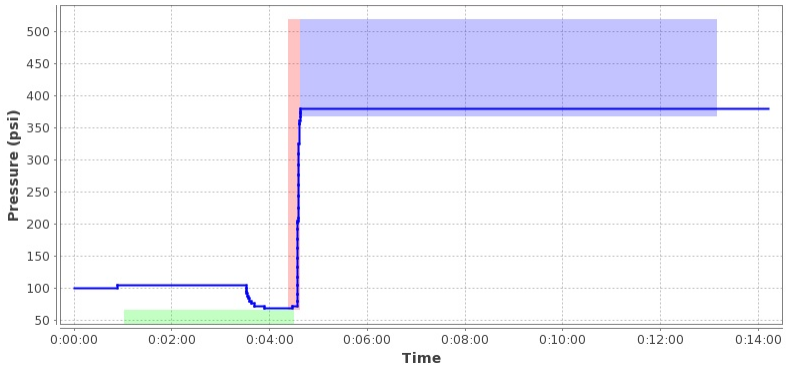

Notes

12 " DR17 tuyaux isoler dans l eau

AGNICO EAGLE

VENDOR DOCUMENT STATUS

CLIENT	AGNICO-EAGLE
PROJECT	MELIADINE
PACKAGE	6515-S-265-067
PACKAGE TITLE	Fresh Water Pumping Station
P.O	OC-677221

AGNICO EAGLE

Vendor Document Status

- 1 ☐ **Proceed to next submission and status.**
- 2 ☐ **Proceed with exceptions as noted to next submission and status.**
- 3 ☐ **Do not proceed. Revise as noted and resubmit next submission and status.**
- 4 ☑ **Complete, no further submission required.**

By: **Date:**

Review and authorization to fabricate are only for general conformance with the design concept of the Project as expressed in the Contract Documents. Sole responsibility for the accuracy and completeness of this document, including but not limited to dimensions and quantities, remains with the Supplier/Contractor. Agnico Eagle does not warrant the accuracy or completeness of any of the information contained herein, nor does Agnico Eagle authorize or approve any construction means, methods, techniques, sequences or any safety precautions or procedures.

Agnico Eagle No. 6515-S-265-067-141-TES-0004 **R:** 001

DOCUMENT FOR INFORMATION

Bon de travail	MWO13810	**Puissance (HP)**	60
Client		**Vitesse (R.P.M.)**	1800
Marque	Technosub	**Tension nominal (V)**	575
Modèle	4TSH	**Courant nominal (A)**	54.7
Numéro de série	18-2548	**Fréquence (Hz)**	60
Diamètre de la ligne (")	4	**Mécanicien**	Simon F.
Test d'isolation (MΩ)	INFINI	**Résistance de phase (Ω)**	0.40 /0.40 /0.40
Diode testée	Non		
Date du test	4 Jun. 2018		

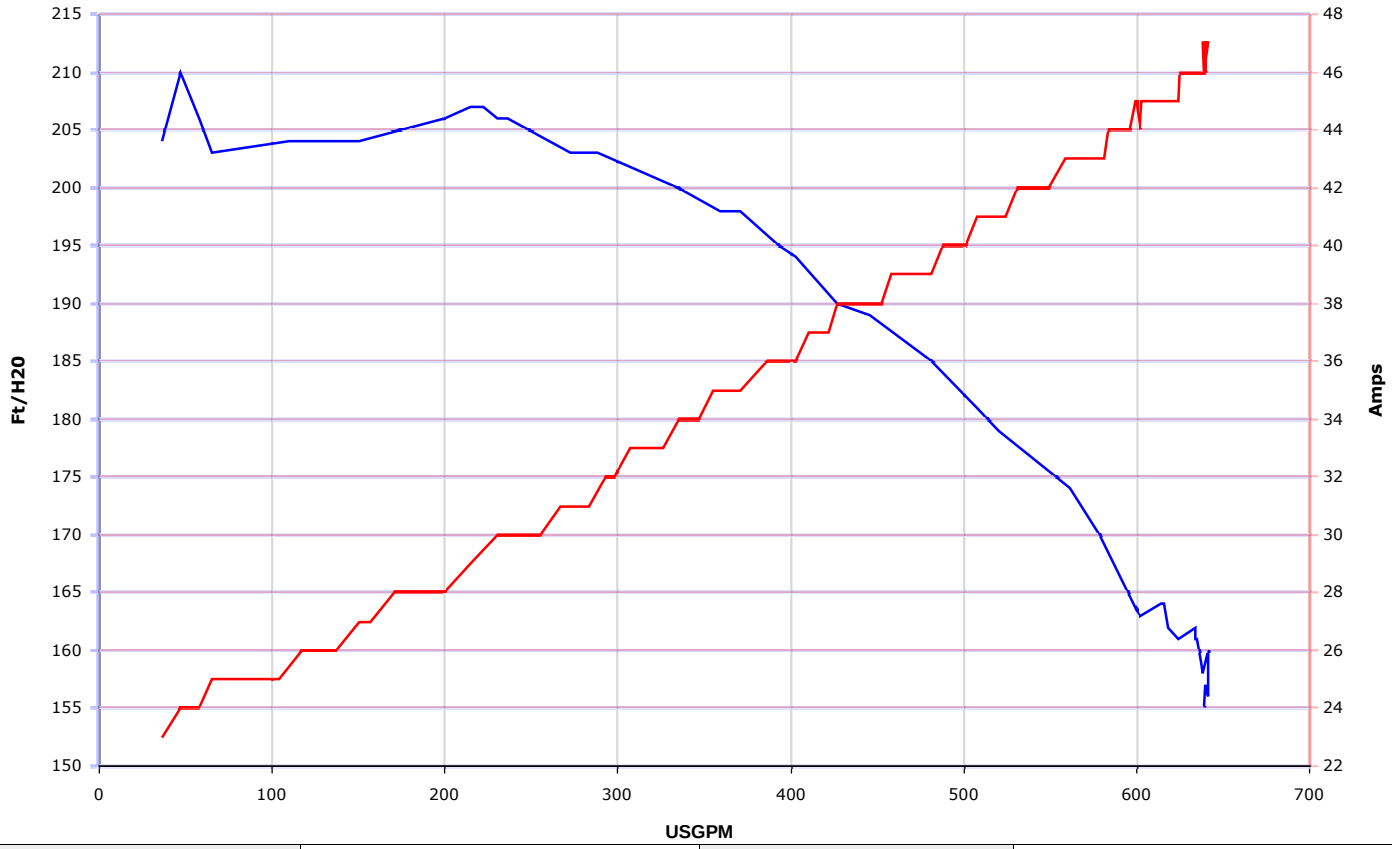

Pression max.(Ft H2O)	213	**Débit max.(USGPM)**	641
Courant max.(Amps)	47		

Note client

Connecteur vérifié : Non | Câble vérifié : Non | Information vérifiée : Oui | Rotation vérifiée : Oui

TS-RN-2

Technosub

INDUSTRIAL PUMPS
DEWATERING SOLUTIONS

4TSHAP

STANDARD HIGH HEAD AUTO PRIME

Shown with optional modular trailer kit

Technosub® Standard High Head Auto Prime pumps are specifically designed to effectively handle a wide range of liquids in applications such as liquid transfer, wash down, fire protection, fracking and jetting where high heads and pressure are required.

Technosub Standard High Head Auto Prime pumps provide a dependable, highly efficient solution in a completely automatic priming pump.

The model 4TSHAP is capable of achieving maximum flows of 1375 gpm (312 m^3/h) and maximum total head of 380' (115 m), with solids handling up to 5/8" (15 mm) in diameter.

The standard 4TSHAP is powered by a water-cooled, 4-cylinder diesel engine. Alternative drives are available, including other diesel engines or electric motor options.

FEATURES

- Technosub's rugged, heavy duty pumps are engineered specifically for portable application
- Fully automatic priming system allows the pump to prime and re-prime while running
- Compressor-fed, venturi priming system provides rapid, reliable priming
- Mechanical seal with biodegradable glycol quench allows the pump to start and run dry
- Non-return valve uses only a single moving part to allow full flow with minimal restriction
- Pump casings are hydrostatically tested to 50 psig (345 kPa) above the peak casing design pressure
- Standard engine control panel provides preset emergency shutdown protection and allows the addition of automatic level control
- Skid-mounted formats with tie downs, lifting bail, and fork pockets

OPTIONS

- Fuel tanks for extended run times and/or remote location
- Modular trailer kit
- Trailer brakes and lights
- Sound attenuated enclosure
- Hose racks, accessory containers and other custom features available
- Wide range of suction and discharge fittings including Technosub's own "QD" Quick Disconnect fittings and accessories

4TSHAP STANDARD HIGH HEAD AUTO PRIME

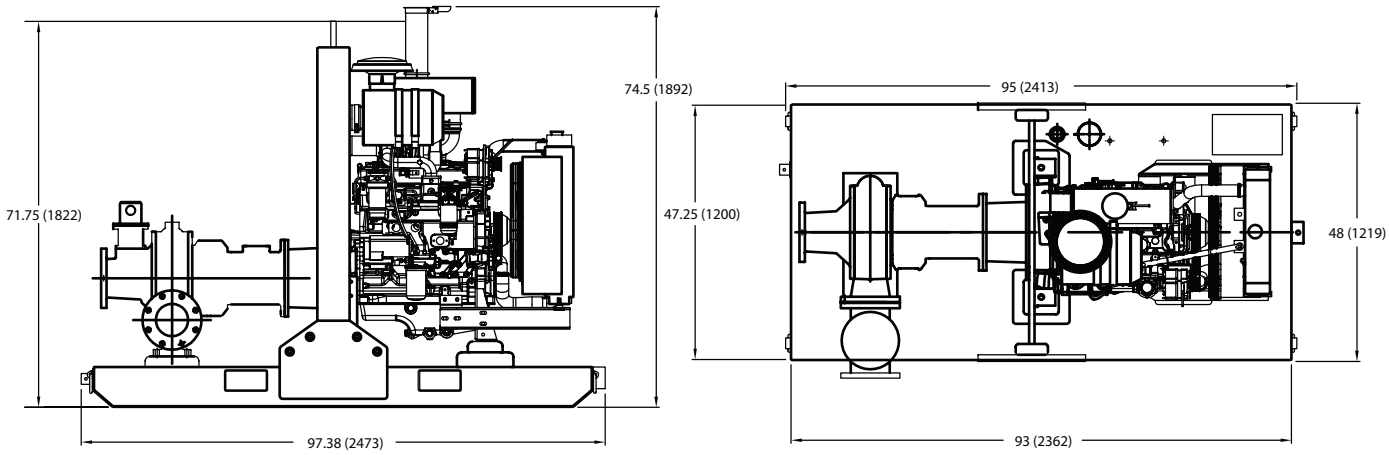

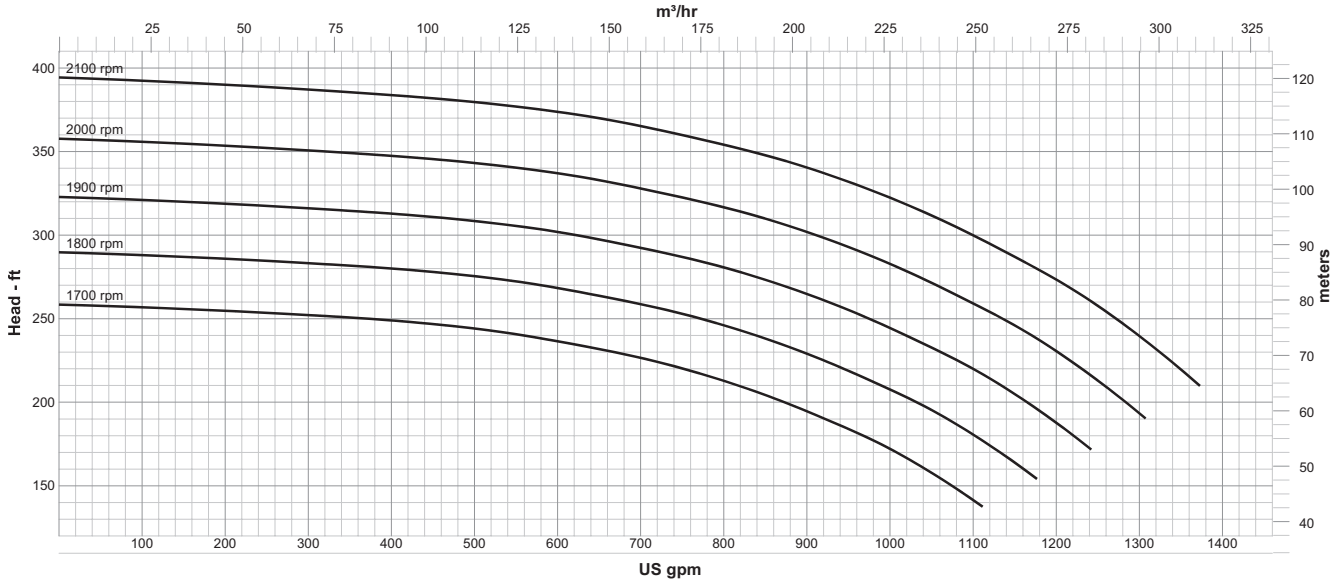

SPECIFICATIONS

- **Connections:** 4” x 3” (100 mm x 75 mm) ANSI Flanges
- **Maximum Pump Speed:** 2100 rpm
- **Maximum Flow:** 1375 gpm (312 m^3/h)
- **Maximum Head:** 380’ (115 m)
- **Maximum Static Priming Lift:** 28’ (8.5 m)
- **Water Temperature Limit:** 160° F (70° C)
- **Solids Handling Capability:** 5/8” (15 mm)
- **Maximum Casing Pressure:** 200 psig (1379 kPa)
- **Fuel Tank:** 110 gallons (416 liters)

PUMP MATERIALS

- **Casing:** Cast Iron (CD4MCu is an option)
- **Impeller:** CD4MCu
- **Wear Rings:** CD4MCu and 316 SS
- **Bearing Housing:** Cast Iron
- **Bearing Lubrication:** Grease
- **Shaft:** 431 Stainless Steel
- **Seal:** Silicon Carbide on Silicon Carbide
- **Chassis/Fuel Cell:** Steel
- **Non-Return Valve:** Nitrile Fitted Cast Iron

Specifications and illustrations are subject to revision without notice. Technosub is not liable for any consequential, incidental or indirect damages relating to these specifications.

1 866 797-3300 **TECHNOSUB.NET**
1156 Larivière avenue, Rouyn-Noranda QC Canada J9X 4K8
T 819 797-3300 **F** 819 797-3060 info@technosub.net

Technosub
INDUSTRIAL **PUMPS**
DEWATERING SOLUTIONS

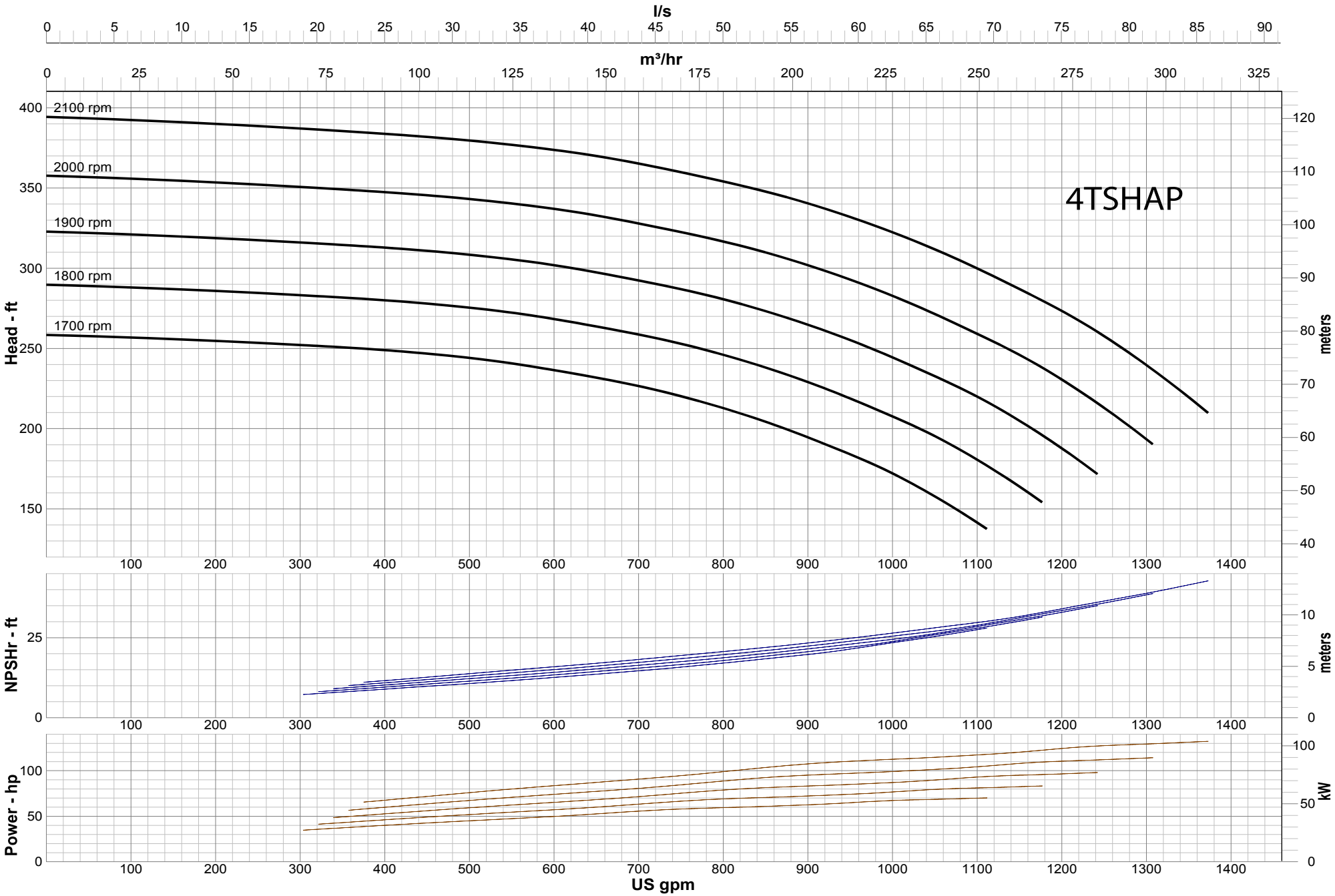

SPECIFICATIONS

Technosub
Standard High Head
Pump Model: 4TSHAP

Speed: 1700 - 2100 rpm
Impeller Diameter: 16 in

- **Connections**: 4" x 3" (200 x 150 mm) ANSI
- **Flanges Maximum Pump Speed**: 2100 rpm
- **Maximum Flow**: 1375 gpm (312 m3/h)
- **Maximum Head**: 380' (115 m)
- **Maximum Static Priming Lift**: 28' (8.5 m)
- **Solids Handling Capability**: 5/8" (15 mm)

Technosub
INDUSTRIAL **PUMPS**
DEWATERING SOLUTIONS

1 866 797-3300 **TECHNOSUB.NET**
1156 Larivière avenue, Rouyn-Noranda QC Canada J9X 4K8
T 819 797-3300 **F** 819 797-3060 info@technosub.net