FINAL REPORT

CONSTRUCTION SUMMARY (AS-BUILT) REPORT FOR RANKIN INLET ITIVIA SITE FUEL STORAGE AND CONTAINMENT FACILITIES MELIADINE PROJECT, NUNAVUT



PRESENTED TO

Agnico Eagle Mines Ltd.

FEBRUARY 2019
ISSUED FOR USE_REV 2
MELIADINE PROJECT, NU | TETRA TECH PROJECT NUMBER: 28920
AGNICO EAGLE DOCUMENT NUMBER: 6515-E-132-005-132-REP-015

Tetra Tech
5100, Sherbrooke street east, suite 400
Montreal (QC) H1V 3R9, CANADA
Tel 514.257.1112 Fax 514.257.0717

REVISION FOLLOW-UP

REVISION	DATE	DESCRIPTION	PREPARED BY
0	February 2018	Interim report issued for use	Christopher Morin
1	March 2018	Interim report issued for use	Christopher Morin
2	February 2019	Final report issued for use	Christopher Morin

EXECUTIVE SUMMARY

Tetra Tech was retained by Agnico Eagle Mines Limited (Agnico Eagle) to prepare a construction summary (as-built) report for the Rankin Inlet Itivia Site fuel storage and containment facility at the Meliadine Gold Project, Nunavut. Tetra Tech and WSP Canada Inc. previously prepared the construction drawings and specifications as well as the design report for the fuel storage and containment facilities for the Project (AEM No 6515-E-132-004-132-REP-003). The facilities include two (2) main fuel storage tanks located at Rankin Inlet Itivia site and four (4) fuel storage tanks located at the Meliadine site.

This revision of the as-built report summarizes the work executed at Rankin Inlet Itivia Site fuel storage and containment facility where the field erected fuel storage Tank #1 (20 ML) was completed and commissioned in July 2018. The completion and commissioning of Tank #2 (13.5 ML) was in October 2017 and was summarized in revision 1 of this report.

Tetra Tech was not involved in the construction of the fuel farm facilities. The information presented in this report was provided by Agnico Eagle.

The construction monitoring and quality assurance was managed by Agnico Eagle.

1.0 INTRODUCTION 1

2.0 SUMMARY OF THE CONSTRUCTION 2
2.1 Site Location Plan 2
2.2 Construction Schedule 3
2.3 As-Built Drawings and Photographs 4

3.0 CODES AND STANDARDS 4
3.1 Compliance for Field Erected Fuel Tanks 4
3.2 Compliance for Secondary Containment 5
3.3 Distance Restrictions As-Built 6

4.0 FIELD DECISIONS FOR THE FIELD ERECTED FUEL TANK #1 AND TANK #2 AND SURROUNDING FACILITIES (STRUCTURAL, MECHANICAL, AND ELECTRICAL) 6
4.1 Documentation on Field Decisions that Deviate from Original Plans 6
4.1.1 Structural 7
4.1.2 Mechanical 7
4.1.3 Electrical 7
4.2 Maintenance, Inspection, Construction Monitoring, and Inspection Reports 8

5.0 FIELD DECISIONS FOR THE SECONDARY CONTAINMENT FACILITY 10
5.1 Documentation on Field Decisions that Deviate from Original Plans 10
5.1.1 Excavation and Blasting 10
5.1.2 Dike and Secondary Containment for Fuel Tank Farm 10
5.1.3 Dike and Secondary Containment for Refuelling Service Area 10
5.2 Commissioning, Inspection, Construction Monitoring, and Inspection Reports 12

6.0 FIELD DECISIONS FOR THE RANKIN INLET ITIVIA CULVERT 12
6.1 Documentation on Field Decisions that Deviate from Original Plans 12
6.1.1 Culvert 12
6.2 Commissioning, Inspection, Construction Monitoring, and Inspection Reports 13

7.0 EARTH WORKS 13

8.0 LIMITATIONS OF REPORT 15

9.0 CLOSURE 15

APPENDICES

Appendix A	As-Built Drawings of Rankin Inlet Itivia Site fuel storage and containment facility
Appendix B	Survey Drawing of Rankin Inlet Itivia Site fuel storage and containment facility
Appendix C	Survey Drawing of Rankin Inlet Itivia Culvert
Appendix D	Photographs of Rankin Inlet Itivia Site fuel storage and containment facility
Appendix E	Photographs of Rankin Inlet Itivia Culvert
Appendix F	Construction Summary of Rankin Inlet Fuel Tank Farm and Laydown Area Structural
Appendix G	Construction Summary of Rankin Inlet Itivia Site Mechanical and Electrical Equipment
Appendix H	Inspection Reports – Inspection Test Plan
Appendix I	Inspection Report – Handover Package of Tank #1
Appendix J	Inspection Report – Handover Package of Tank #2
Appendix K	Inspection Report – Rankin Inlet Offsite and Onsite Fabrication
Appendix L	Inspection Report – Fuel Module Quality Control Documents
Appendix M	Inspection Reports – Non-Compliance Reports
Appendix N	Construction Summary of Rankin Inlet Itivia Site fuel storage and containment facility
Appendix O	Particle Size Summary – 30 mm minus
Appendix P	Inspection Reports – Visit Reports for Final Wall Inspection
Appendix Q	Inspection Report – Blasting Operation, Survey and Monotoring
Appendix R	Inspection Report – Quality Control Final Report for Geomembrane Installation
Appendix S	Particle Size Summary – 20 mm minus
Appendix T	Construction Summary of Rankin Inlet Itivia Laydown Area Culvert
Appendix U	Photographs of Corrective Measure for Double Wall Underground Pipe
Appendix V	Request for information

ACRONYMS & ABBREVIATIONS

ACRONYMS	
API	American Petroleum Institute
CCME	Canadian Council of Ministers of the Environment
CEC	Canadian Electrical Code
CL	Centerline
CSA	Canadian Standards Association
HDPE	High-Density Polyethylene
ITP	Inspection Test Plan
NAD83	North American Datum of 1983
NBCC	National Building Code of Canada
NFCC	National Fire Code of Canada
NFPA	National Fire Protection Association
NWT	Northwest Territories
PLC	Programmable Logic Controller
RRNWT	Revised Regulations of the Northwest Territories
RTD	Resistance Temperature Detector
UTM	Universal Transverse Mercator
V:H	Vertical : Horizontal
VSD	Variable Speed Drive

UNITS	
km	Kilometer
m	Meter
cm	Centimeter
mm	Millimeter
ft	Feet
in	Inches
ML	Megaliter
kL	Kiloliter
s	Second
V	Volt
mA	Milliamp

1.0 INTRODUCTION

Agnico Eagle Mines Ltd. (Agnico Eagle) retained the services of Tetra Tech and WSP Canada Inc. to carry out the planning and design works associated with the surface infrastructures for the Meliadine project, a gold mine located approximately 25 km north from Rankin Inlet, and 80 km southwest from Chesterfield Inlet in the Kivalliq Region of Nunavut. These works include the fuel storage and containment facilities for both Rankin Inlet and Meliadine. These components are part of the Meliadine Project.

Tetra Tech and WSP Canada Inc. previously prepared the design report and drawings for construction related to the fuel storage and containment facilities for the Project including one fuel storage facility at the Rankin Inlet Itivia site and two facilities at the Meliadine site (Industrial Site and Mine Site).

As required by the Water Licence A (No. 2AM-MEL1631), this revision of the report summarizes the construction work executed at Rankin Inlet Itivia Site fuel storage and containment facility where the field erected fuel storage Tank #1 (20 ML) was completed and commissioned in July 2018. The completion of the secondary containment for the fuel farm, pumping station and ancillaries, and field erection and commissioning of Tank #2 (13.5 ML), as well as the Rankin Itivia culvert was in October 2017 and was summarized in revision 1 of this report (namely the Interim Report). Included in this report is:

- A summary of the characteristics of the Rankin Inlet Itivia Site fuel storage and containment facility;
- Documentation on field decisions that deviate from original plans and non-conformance / corrective action reports;
- As-built drawings;
- Survey drawings conducted during and after the construction of the Rankin Inlet Itivia Site fuel storage and containment facility and Rankin Inlet Itivia Culvert;
- Photographs of the Rankin Inlet Itivia Site fuel storage and containment facility and Rankin Inlet Itivia Culvert;
- Inspection reports and quality control documents for the offsite and onsite fabrication and fuel modules;
- Inspection report for the inspection test plan (ITP), and handover package of Tank #1 and Tank #2;
- Inspection reports for the tank farm area final wall, blasting operations, and the quality control of the geomembrane installation; and
- Particle Size Summary of 30 mm minus and 20 mm minus material.

Construction summary reports detailing the other fuel storage and containment facilities will be provided under separate covers.

2.0 SUMMARY OF THE CONSTRUCTION

2.1 Site Location Plan

The figure below presents the site location plan for the Rankin Inlet Itivia Site fuel storage and containment facility, pumping station, and Rankin Inlet Itivia Culvert. Tank #2 (13.5 ML) was erected, commissioned, and has been operating since October 2017 while Tank #1 (20 ML) was completed and commissioned in July 2018. The Rankin Itivia Culvert was installed at the southwestern portion of the laydown area where the laydown connects with the existing road.

Figure 2.1: Rankin Inlet Itivia Site Location Plan

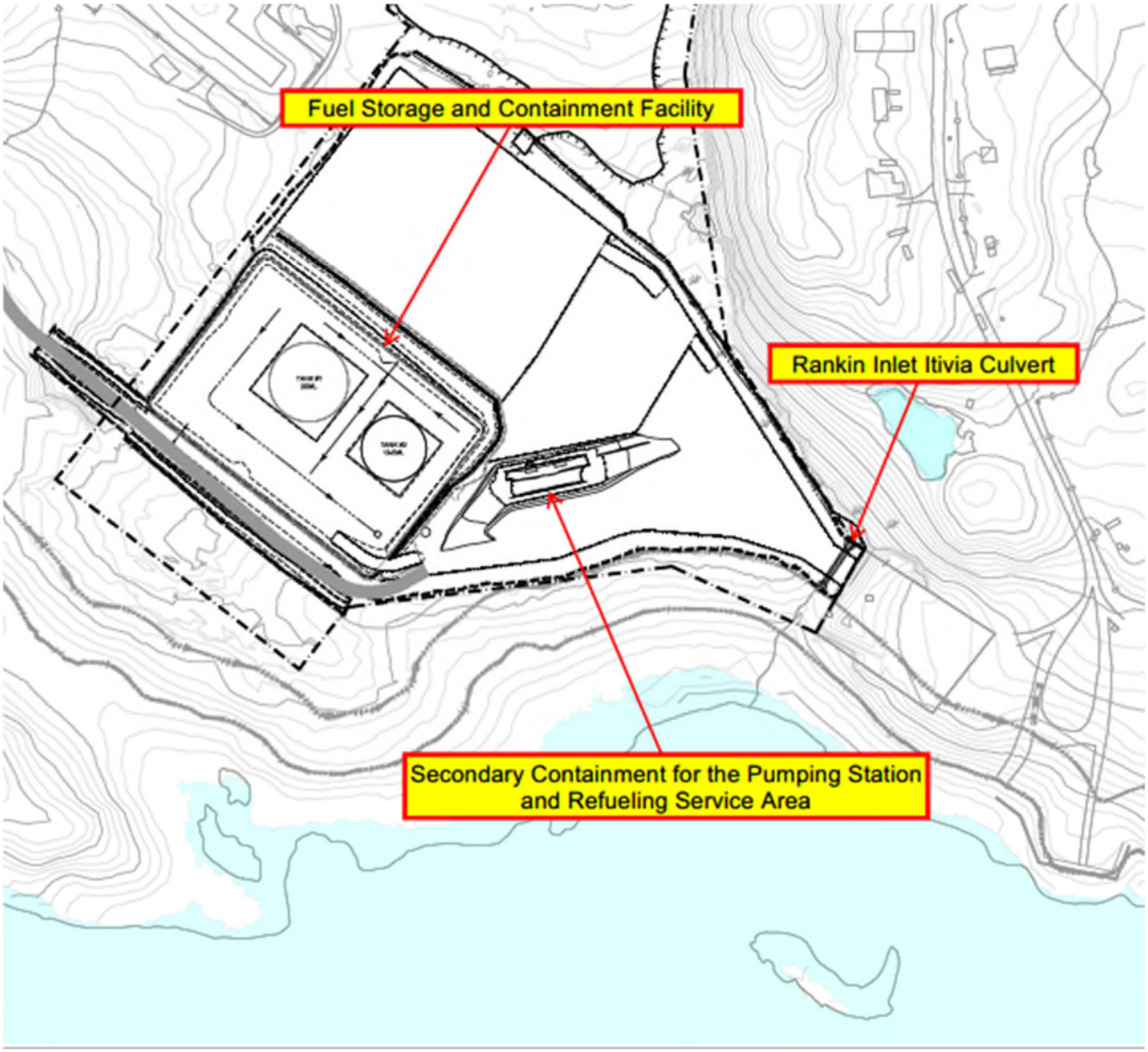

2.2 Construction Schedule

Construction activities at the Rankin Inlet Itivia Site fuel storage and containment facility were conducted between March 2017 and October 2018. Both tanks were being erected in 2017 but only Tank #2 was completed for service as planned in 2017 while Tank #1 was completed for service in 2018. Construction was completed according to the milestone dates shown in Table 2.1.

Table 2.1: Rankin Inlet Itivia Site Construction Milestone Dates

Item	Date
Site Preparation	April 25th to May 2nd, 2017
Drill/Blast	April 27th to June 6th, 2017
Excavation	May 1st to June 25th, 2017
Rock Face Scaling	June 19th to 22nd, 2017
Overburden Pushback and Protection Berm	July 15th to August 1st, 2017
Under Liner Material Placement	June 10th to September 26th, 2017
Containment Berm	June 24th to September 26th, 2017
Liner System Installation	July 14th to October 6th, 2017
Tank #2 Erection	July 29th to September 8th, 2017
Overliner Material Placement	July 16th to October 9th, 2017
Marine Pipeline Installation	August 17th to October 14th, 2017
Miscellaneous Steel Elements to Pumping Station	September 2nd to October 14th, 2017
Rankin Inlet Facility Testing	September 2nd to October 14th, 2017
Commissioning of Tank #2	October 17th, 2017
Piping Interrelated to Pumping Station	September 16th to October 21st, 2017
Electrical Construction	September 16th to October 21st, 2017
System Operational for Tank #2	October 21st, 2017
Tank #1 Erection Completion	May to June 2018
Piping Installation to Connect Tank #1	July 2018
Commissioning of Tank #1	July 2018
Corrective Measure on Flexible Ducting for Scrubber	July 2018
Painting of both Tank #1 and Tank #2	July to August 2018
Modification of Secondary Containment to increase capacity and allow for both tanks in operations	September 2018
Corrective Measure for Double Wall Underground Pipe	November 2018

2.3 As-Built Drawings and Photographs

Sealed as-built drawings completed by Tetra Tech and WSP, and as-built binder for Tank #1 and Tank #2 prepared by Inukshuk are presented in Appendix A.

Survey drawings conducted during and after the construction of the Rankin Inlet Itivia Site fuel storage and containment facility and Rankin Inlet Itivia Culvert can be found in Appendices B and C, respectively.

Photographs of the Rankin Inlet Itivia Site fuel storage and containment facility and Rankin Inlet Itivia Culvert during and after construction are shown in Appendices D and E, respectively.

3.0 CODES AND STANDARDS

3.1 Compliance for Field Erected Fuel Tanks

The systems comply with all codes and standards related to the project (Federal, Territorial, Municipal, NBCC, NFCC, CEC, CSA, NFPA, and API) as well as the directives of the authorities having jurisdiction over the project, including specific codes such as R-125-95 NWT, Mine Health and Safety Act, and RRMWT 1990, C F-12 Fire Prevention Regulations. A summary of the compliance requirements are shown in Table 3.1 below.

Table 3.1: Rankin Inlet Itivia Site Field Erected Fuel Tanks As-Built

Fuel Farm Description	Rankin Inlet Itivia Site Field Erected Fuel Tanks	
	Tank #1	Tank #2
Comply with CCME	Yes	Yes
Equipped with Overfill Protection	Yes	Yes
Underground Piping Double Wall	Yes	Yes
Underground Piping Installed to Collect Leak into an Accessible Sump	Yes	Yes
Connections for Filling/Emptying Storage Tanks Kept Close	Yes	Yes
Material	G40.21M-260WT	G40.21M-260WT
Product	Diesel	Diesel
Volume	20 ML	13.5 ML
Diameter	43.00 m	35.10 m
Height	14 m	14 m

* A portion of the marine pipeline (single wall) intended to be aboveground was temporarily buried and the covering material had frozen in 2017 and was corrected in 2018. An appropriate remedial measure was done to remove the covering material as soon as the material thawed in 2018, a section was also replaced for a double wall pipe.

3.2 Compliance for Secondary Containment

The secondary containment for aboveground storage tanks complies to NFCC standards. The base and walls of the containment basin were constructed to withstand a full hydrostatic head and has a permeability of 1_E^{-13} cm/s while the required permeability is 1_E^{-6} cm/s. The tanks are located entirely within the diked area, with an impermeable membrane covered with a non-combustible material.

Table 3.2: Rankin Inlet Itivia Site Secondary Containment As-Built

Parameters	Description		Compliance
Enclosed Tanks	Tank #1	Tank #2	-
Volume	20 ML	13.5 ML	-
Containment Requirement (for Tank #2 only)	14.850 ML		Yes
Containment Capacity when only Tank #2 was in service (2017/18)	21.868 ML		Yes
Containment Requirement (for both tanks)	22.000 ML		Yes*
Actual Containment Capacity	22.033 ML		Yes
Base and Wall Membrane to Withstand Hydrostatic Head	HDPE		Yes
Permeability (1_E^{-6} cm/s min.)	1_E^{-13} cm/s		Yes
Tanks Located Entirely Within the Diked Area	Tank #1 and Tank #2		Yes

As shown in Table 3.2 above, the initial total capacity of the Rankin Inlet Itivia Site fuel farm containment in 2017/2018 was 21 868 m^3 which was sufficient to operate only Tank #2 (requiring a minimum containment capacity of 14 850 m^3). For both Tank #1 and Tank #2 to be in operation, the required containment capacity is 22 000 m^3. The fill material over the liner was remodelled in 2018 to reach the current volumetric capacity of 22 033 m^3, which is slightly greater than the required capacity thus both Tank #1 and Tank #2 are able to be operated simultaneously.

3.3 Distance Restrictions As-Built

The minimum clearances that were required or recommended by the *Design Rationale for Fuel Storage and Distribution Facility* by Public Works and Services of the Government of the Northwest Territories and NFPA-30 were met and are listed on Table 3.3 below:

Table 3.3: Distances Restrictions

Item	Minimum Required	Tank #1	Tank #2
Distance Between Tanks	¼ (D1 + D2) = 19.5 m Min. Where D1=43 m, D2=35.1 m	19.56 m	
Distance Between Tank and Toe of the Dike	1.50 m Min.	15.42 m	12.43 m
Distance Between Tank and CL of the Dike	½ (Height of Tank) = 7.0 m Min. Where Height = 14 m	27.91 m	19.33 m
Distance Between Property Limit (that can be built upon) and Tank	Tanks with 3 000 001 gallons or more: 175 ft. = 53.34 m Min.	54.20 m	64.26 m
Distance Between Property Limit and Exterior Toe of the Dike	3.0 m Min.	4.27 m	
Distance Between Tank and Public Roads	60 ft. = 18.3 m Min.	115 m	166.30 m
Distance Between Fuel Farm and High Water Line of Melvin Bay	31.0 m Min.	37.76 m	

4.0 FIELD DECISIONS FOR THE FIELD ERECTED FUEL TANK #1 AND TANK #2 AND SURROUNDING FACILITIES (STRUCTURAL, MECHANICAL, AND ELECTRICAL)

4.1 Documentation on Field Decisions that Deviate from Original Plans

This section documents variations from original design which were approved by the designer and/or the field engineer on site for the field erected fuel tank and piping systems.

A construction summary was prepared for the structural, and the mechanical and electrical systems. See Appendix F and G, respectively.

The construction work led to slight variations from the original design in the structural, mechanical, and electrical aspects of Tank #1 and Tank #2 of the Rankin Itivia Site fuel farm. The designed intent of the structure was not compromised with the changes to the original design.

4.1.1 Structural

- The handrails were changed to steel angle of 55 mm x 55 mm x 6 mm instead of a pipe handrail, approved by the designer.

4.1.2 Mechanical

- All horizontal welds inspection test for leaks for both Tank #1 and Tank #2 were changed to a liquid penetrant test, as approved by the designer.
- Vent valves were installed at the top of the dike section in the pipeline for both Tank #1 and Tank #2.
- An OPW loading arm replaced the Emco loading arm and was approved by the designer due to the time constraints of the delivery.
- Two odour control scrubbers with a vent were installed, approved by the designer.
- Tripods were replaced by cement blocks underneath the pump and electrical stations, approved by the designer.
- Structural framing was added to the pumping station to reinforce the structure beneath the motor and pump. This addition was approved by the designer.
- The diesel marine line double walled section did not conform in 2017 as per Federal regulations. Monitoring gauge and ball valves must be accessible and the double wall pipe section must be visible on both ends. Corrective actions were taken in 2018 to remedy the situation, see the non-compliance report provided in Appendix M and the photographs of the corrective measures in Appendix U.
- The flexible connection for the odor scrubber ducting did not respect the piping and instrumentation diagram in 2017. Corrective action was put in place and the piping arrangement now fully respects the original P&ID.
- A change of routing was done for the piping between the tanks and pumping station to allow the addition of the secondary containment in the refuelling service area, it is shown in the as-built drawings of the fuel modules presented in Appendix L.

4.1.3 Electrical

- The installation of Rankin Inlet's main electrical entry and the buried cable and electrical pole were added and approved by the designer.
- Cabletray and its supports were required to be installed on instrumentation and lighting cables, approved by the engineer.
- One switch per variable speed drive (VSD) was installed per pump. The 600 V power junction boxes were removed, approved by the designer and control cables were installed between cabinets and the VSD.
- Four (4) additional unit heaters were added to the filter containers. A 45 kVA transformer and a 120/208 V panel with 42 circuits replaced the 30 kVA transformer and the 120/208 V panel with 30 circuits, approved by the designer.
- Additional exterior lighting and fixtures were installed upon approval by the field engineer. One emergency lighting fixture and one 120 V receptacle in each operator room.

- To avoid adding a resistance temperature detector (RTD) card to the programmable logic controller (PLC), a 4-20 mA signal from all RTD temperature sensor were added.
- A temperature sensor was installed on both Tank #1 and Tank #2.
- Grounding and bonding connections were added to the buried grid for all metallic equipment, as approved by the designer.
- The outer housing material was substituted for NEMA 4x Aluminum or Stainless Steel rather than the specified 3R to prevent any rust damage. This change was approved by the designer.

4.2 Maintenance, Inspection, Construction Monitoring, and Inspection Reports

The construction monitoring was managed by Agnico Eagle. Several activities were conducted during construction to ensure the quality of the work. Here is a description of the reports prepared to summarize the quality control, monitoring, and/or inspections performed during the construction of key activities.

- *Rankin Inlet Offsite and Onsite Fabrication Quality Control Documents* dated June 6th, 2017 prepared by Nuqsana Promec Mining, see Appendix K. Quality control was done throughout the construction and fabrication the project, including but not limited to, the catwalk, piping, and mechanical fixtures.
- *Fuel Module Quality Control Documents* dated November 27th, 2017 prepared by Nuqsana Promec Mining, see Appendix L. Documentation for inspection and test plan for mechanical, piping, and also red line are included in this document.
- *Handover Package of Tank #1* dated January 3rd, 2019 prepared by Inukshuk Construction Limited, see Appendix I. Testing was done throughout the erection of Tank #1 and the installation of the mechanical and electrical systems. See Table 4.1 for a summary of the inspections.
- *Handover Package of Tank #2* dated October 30th, 2017 prepared by Inukshuk Construction Limited, see Appendix J. Testing was done throughout the erection of Tank #2 and the installation of the mechanical and electrical systems. See Table 4.1 for a summary of the inspections.

During the first filling process of Tank #2, two (2) minor fuel leaks were observed. The first leak occurred on October 17th 2017, as fuel seeped out from the pressure test port on the fueling nozzle neck reinforcement plate. The second leak occurred on October 18th 2017, with minor weeping between the manhole welding joint and the tank reinforcement plate. Both of these leaks were promptly reported to the installation contractor who repaired the leaks with temporary welding from the tank exterior. Regular visual inspections were made thereafter to ensure no further leaks occurred. Two (2) Non-Compliance Reports were completed to cover these defects, see Appendix M. At the time of the interim report the permanent corrective measures had not yet been finalized by the contractor. The permanent repairs from within the interior of the tank will be done during 2019 summer season.

All of the inspections done during and after the construction of Tank #1 and Tank #2 at the Rankin Inlet Itivia Site fuel storage and containment facility were shown to comply with API standard 650. Table 4.1 shows the inspections that were done during the fabrication and erection of the tanks as provided in the Handover Packages.

Table 4.1: Rankin Tank As-Built Inspections

Description	Test Method	Tank #1 Result	Tank #2 Result
Floor Welding	Visual	Acceptable	Acceptable
Floor Welding	Vacuum Box	Acceptable	Acceptable
Shell to Floor Welding	Visual	Acceptable	Acceptable
Shell to Bottom Welding	Visual	Acceptable	Acceptable
Tank #2 Roundness	Visual	Acceptable	Acceptable
1st Horizontal Banding	Measure	Acceptable	Acceptable
2nd Horizontal Banding	Measure	Acceptable	Acceptable
3rd Horizontal Banding	Measure	Acceptable	Acceptable
4th Horizontal Banding	Measure	Acceptable	Acceptable
SR1 Vertical	Measure	Acceptable	Acceptable
SR2 Vertical	Measure	Acceptable	Acceptable
SR3 Vertical	Measure	Acceptable	Acceptable
SR4 Vertical	Measure	Acceptable	Acceptable
SR5 Vertical	Measure	Acceptable	Acceptable
Tank Shell Plumbness	Measure	Acceptable	Acceptable
1st Horizontal and Vertical Leaks	Visual	Acceptable	Acceptable
2nd Horizontal and Vertical Leaks	Visual	Acceptable	Acceptable
3rd Horizontal and Vertical Leaks	Visual	Acceptable	Acceptable
4th Horizontal and 4th and 5th Vertical Leaks	Visual	Acceptable	Acceptable
Compression Ring Welding	Visual	Acceptable	Acceptable
Tank #2 Roof Welding	Visual	Acceptable	Acceptable
Roof Columns Plumbness	Measure	Acceptable	Acceptable
Roof Structure Welding and Bolting	Visual	Acceptable	Acceptable
Tank Shell Plumbness	Measure	Acceptable	Acceptable
Shell Nozzle Welding	Visual	Acceptable	Acceptable
Nozzle Repad Leaks	Air Test	Acceptable	Acceptable
Shell Manway Welding	Visual	Acceptable	Acceptable
Tank #2 Shell Plumbness	Measure	Acceptable	Acceptable
Manway Leaks	Visual	Acceptable	Acceptable
Internal Column Repads and Pipe Support Welding	Visual	Acceptable	Acceptable
External Brackets and Cable Tray Welding	Visual	Acceptable	Acceptable
Roof Painter Post Welding	Visual	Acceptable	Acceptable
Staircase Support Bracket and Repad Welding	Visual	Acceptable	Acceptable
Stairs and Platforms Welding	Visual	Acceptable	Acceptable

5.0 FIELD DECISIONS FOR THE SECONDARY CONTAINMENT FACILITY

5.1 Documentation on Field Decisions that Deviate from Original Plans

This section documents variations from original design which were approved by the designer and/or the field engineer on site.

A construction summary of the earthworks for the secondary containment facility was prepared for the Rankin Inlet Itivia Site fuel storage and containment facility, see Appendix N.

The construction work led to slight variations from the original design in the geometry of the Rankin Inlet fuel farm. The designed intent of the structure was not compromised with the changes to the original design. Table 5.1 and the following sections summarize the changes between the proposed and final works.

5.1.1 Excavation and Blasting

- The rock slope excavation is 1V:0.1H instead of the original 1V:0.75H. It was approved by the geotechnical engineer.

5.1.2 Dike and Secondary Containment for Fuel Tank Farm

- Within the northeast corner and extending along the east wall the bedrock elevation was found to be below 9.45 m or non-existent at the designed floor elevation. The blast was drilled to bedrock or the designed floor in this area, 4 m back from the designed highwall to allow additional berm structure to be constructed.
- The dimensions of the dike CL to CL are greater by 1.6 m length and 2.6 m width.
- The average top width of the dike crest is 1.4 m which is an increase of 0.4 m from the original 1 m design.
- The containment height was reduced by 0.08 m to a height of 1.57 m.
- The depth of fill placed over the liner was increased by 0.01 m to an average depth of 0.31 m. This depth is the result of the secondary containment floor regrading done in 2018 to increase the volume capacity of the containment area.
- The riprap was removed from the ditch, approved by the designer. The geometry of the ditch was changed due to constructability issues and approved by the field engineer. The overall water management of the containment facility was unaffected, sloping toward the sump area where the clean water will be pumped out of the fuel farm.

5.1.3 Dike and Secondary Containment for Refuelling Service Area

- A secondary containment was added to the original design of the refueling service area as an additional measure to improve the potential spill management as shown in the as-built drawings, see Appendix A. The capacity of this additional secondary containment area is 366 m^3.

Table 5.1: Rankin Inlet Itivia Site fuel storage and containment facility Geometry and Characteristics

Item	Proposed		Actual		Difference
	Tank #1	Tank #2	Tank #1	Tank #2	
Secondary Containment Permeability (max.)	1_E^{-6} cm/s		1_E^{-13} cm/s		- 10_E^{-7} cm/s
Dike: length, width (CL to CL) (avg.)	154 m x 104.3 m		155.6 m x 106.9 m		+ 1.6 m / + 2.6 m
Dike Height (avg.)	1.8 m		1.8 m		-
Containment Height (avg.)	1.65 m		1.57 m		- 0.08 m
Dike Flat Top Width (avg.)	1.0 m		1.4 m		+ 0.4 m
Dike Embankment Slope (avg.)	1V:2H		1V:2H		-
Impervious Area	16 050 m^2		17 051 m^2		+ 1 001 m^2
Tank Foundation Pad (avg.)	45.4 m x 45.4 m	37.5 m x 37.5 m	45.4 m x 45.4 m	37.5 m x 37.5 m	-
Tank Foundation Thickness (min.)	900 mm	900 mm	950 mm	1.02 m	+ 50 mm / + 102 mm
Tank Foundation Shoulder (min.)	1.2 m	1.2 m	1.2 m	1.2 m	-
Tank Foundation Pad Embankment Slope (avg.)	1V:2H	1V:2H	1V:2H	1V:2H	-
Tank Foundation Pad Slope (avg.)	1V:120H	1V:120H	1V:120H	1V:120H	-
Tank Foundation Pad Thickness, Above Surrounding Ground (m)	0.4	0.4	0.4	0.4	-
Depth of Liner Under Fill (avg.)	0.3 m		0.31 m		+ 0.01 m
Containment Capacity	22 000 m^3		22 033 m^3		+ 33 m^3

5.2 Commissioning, Inspection, Construction Monitoring, and Inspection Reports

The construction monitoring was managed by Agnico Eagle. Several activities were conducted during construction to ensure the quality of the work. Here is a description of the reports prepared to summarize the quality control, monitoring, and/or inspections performed during the construction of key activities.

- Several particle size analyses were conducted for the 30 mm minus material to be used for the tank foundation and liner system. It was approved by the field engineer and the results and summary can be found in Appendix O.
- *Visit Reports for Final Wall Inspection* dated June 21st and 29th, 2017 prepared by Vanessa Smith, see Appendix P. A visual inspection was conducted and a fault was discovered in the rock which may reduce the long term stability of the wall, but overall the condition of the rock was good.
- *Blasting Operation, Survey and Monitoring* dated October 6th, 2017 prepared by Explotech Engineering Ltd, see Appendix Q. A pre-blast and post-blast inspection were done including vibration monitoring during blasting. No notable changes were observed related to the blasting or construction operations in the surrounding buildings and facilities.
- *Quality Control Final Report for Geomembrane Installation* prepared by Texel Geosol for Nuna Kivalliq Earthworks Inc, see Appendix R. Testing, both non-destructive and destructive, was performed to ensure the quality of the installation of the geosynthetic materials, including welding. Texel Geosol certified that all materials were installed according to the project plans and specifications.
- *Inspection Test Plan* (ITP) dated October 29th, 2017 prepared by MTKSL, see Appendix H.

6.0 FIELD DECISIONS FOR THE RANKIN INLET ITIVIA CULVERT

6.1 Documentation on Field Decisions that Deviate from Original Plans

This section documents variations from original design which were approved by the designer and/or the field engineer on site. The designed intent of the structure was not compromised with the changes to the original design. Table 6.1 below presents the changes between the proposed and final works.

6.1.1 Culvert

- The culvert slope was decreased on site to a slope of 1.33% to follow the natural ground slope, and is still adequate to carry the water flow.
- The riprap around the Rankin Itivia Culvert will be installed at a later date.
- Temporary culverts were replaced by final culverts in November 2017 as indicated in the Construction Summary of Rankin Inlet Itivia Laydown Area Culvert, see Appendix T.

Table 6.1: Rankin Itivia Culvert Geometry and Characteristics

Culvert Description	Proposed	Actual	Difference
Length	30 m	30 m	-
Diameter	900 mm	900 mm	-
Slope	3.61%	1.33%	- 2.28%
Number of pipes	2	2	-

6.2 Commissioning, Inspection, Construction Monitoring, and Inspection Reports

The construction monitoring was managed by Agnico Eagle. Several activities were conducted during construction to ensure the quality of the work. Here is a description of the reports prepared to summarize the quality control, monitoring, and/or inspections performed during the construction of key activities.

- Particle size analyses were conducted for the 20 mm minus material to be used for the culvert bedding. It was approved by the field engineer and the results and summary can be found in Appendix S.

7.0 EARTH WORKS

A shortage of on-site granular material and construction constraints led to slight changes in the materials. These changes were approved by the designer and/or the field engineer as per multiple requests for information (6515-C-230-005-RFI-001, 6515-C-230-005-RFI-007 and 6515-C-230-009-RFI-012), see Appendix V:

- The original material specified for the Rankin Inlet Itivia Site fuel storage and containment facility was 200 mm minus granular material. It was replaced with Class A Borrow Pit or 600 mm minus granular fill graded to a particle size of ≤ 200 mm outside of the tank pedestal areas.
- The fill thickness of the 30 mm minus granular fill over and under the liner system was changed to 300 mm and 200 mm respectively, approved by the designer. This change was to allow the heavy equipment required for construction to access the site. This change did not affect the total material quantities.
- A 100 mm layer of sand between the geotextile and geomembrane replaced the 30 mm minus in the Tank #1 containment area, minus the tank pedestal. This was due to construction constraints and to avoid potentially damaging the liner system during tank erection. The substitution was approved by the designer.

The as-built material quantities for the Rankin Inlet fuel storage and containment facilities and the Rankin Inlet Itivia Culvert are presented in the following Table 7.1.

Table 7.1: As-Built Material Quantities

Item	Proposed*	Actual	Difference
Sand	180	1 744 m^3	+ 1 564 m^3
30 mm minus	10 590 m^3	6 908 m^3	- 3 682 m^3
Borrow Pit CL-A or Granular Fill (Graded to < 200 mm)	7 670 m^3	4 510 m^3	- 3 160 m^3
Borrow Pit CL-A or Granular Fill (600 mm minus)	7 160 m^3	12 440 m^3	+ 5 280 m^3
Riprap (50 mm to 300 mm)	30 m^3	-	- 30 m^3
Total Fill	**25 630 m^3**	**25 602 m^3**	**-28 m^3**
540 g/m^2 Non-Woven Geotextile for tank farm area only	33 600 m^2	34 102 m^2	+ 502 m^2
HDPE Geomembrane for tank farm area only	16 800 m^2	17 051 m^2	+ 251 m^2
Length Culvert, 2 CSP Ø 900 mm, 2.0 mm thick	30 m	30 m	-
Excavation of Overburden	18 480 m^3	43 445 m^3	+ 24 965 m^3
Drill and Blast Excavation of Bedrock	68 400 m^3	78 500 m^3	+ 10 100 m^3

* The proposed item names and values in the table vary from the Design Report and have been taken from the latest drawing that was issued for construction, 65-131-230-200 revision 1.

- The geotextile and geomembrane quantities associated to the refuelling secondary containment area added are not provided.
- The as-built excavation volume is greater than design because of the natural ground variations from the contour lines.

8.0 LIMITATIONS OF REPORT

This report and its contents are intended for the sole use of Agnico Eagle Mines Ltd. and their agents. Tetra Tech does not accept any responsibility for the accuracy of any of the data, the analysis, or the recommendations contained or referenced in the report when the report is used or relied upon by any Party other than Agnico Eagle Mines Ltd., or for any Project other than the proposed development at the subject site. Any such unauthorized use of this report is at the sole risk of the user. Tetra Tech accepts no responsibility for losses, claims, expenses or damages, if any, suffered by a third party as a result of any decisions made or actions based on this report. Use of this report is subject to the terms and conditions stated in Tetra Tech's Services Agreement.

While it is believed that the information contained herein is reliable under the conditions and subject to the limitations set forth in the report, this report is based on information not within the control of Tetra Tech, nor has said information been verified by Tetra Tech, and Tetra Tech therefore cannot and does not guarantee its sufficiency and accuracy. The comments in the report reflect Tetra Tech's best judgment in light of the information available to it at the time of preparation.

Use of this Document acknowledges acceptance of the foregoing conditions.

9.0 CLOSURE

We trust this report meets your present requirements. If you have any questions or comments, please contact the undersigned.

Respectfully submitted,
Tetra Tech

PERMIT TO PRACTICE
TETRA TECH INDUSTRIES, INC.
O/A TETRA TECH
Signature
Date 2019-02-25
PERMIT NUMBER: P 1029
NT/NU Association of Professional Engineers and Geoscientists

REGISTERED PROFESSIONAL ENGINEER
J.M.I.F. ALARIE
LICENSEE
NT/NU

2019-02-25

Prepared by:
Christopher Morin, Jr. Eng.
Direct Line: 514.257.2427 x3240
Christopher.Morin@tetratech.com

Reviewed by:
Josée Alarie, P.Eng.
Direct Line: 514.257.2427 x3323
Josee.Alarie@tetratech.com

APPENDIX A

As-Built Drawings of Rankin Inlet Itivia Site fuel storage and containment facility

NU. DESSIN DRAWING NO. 65-131-230-200TO202_R5-

FORMAT ARCH D

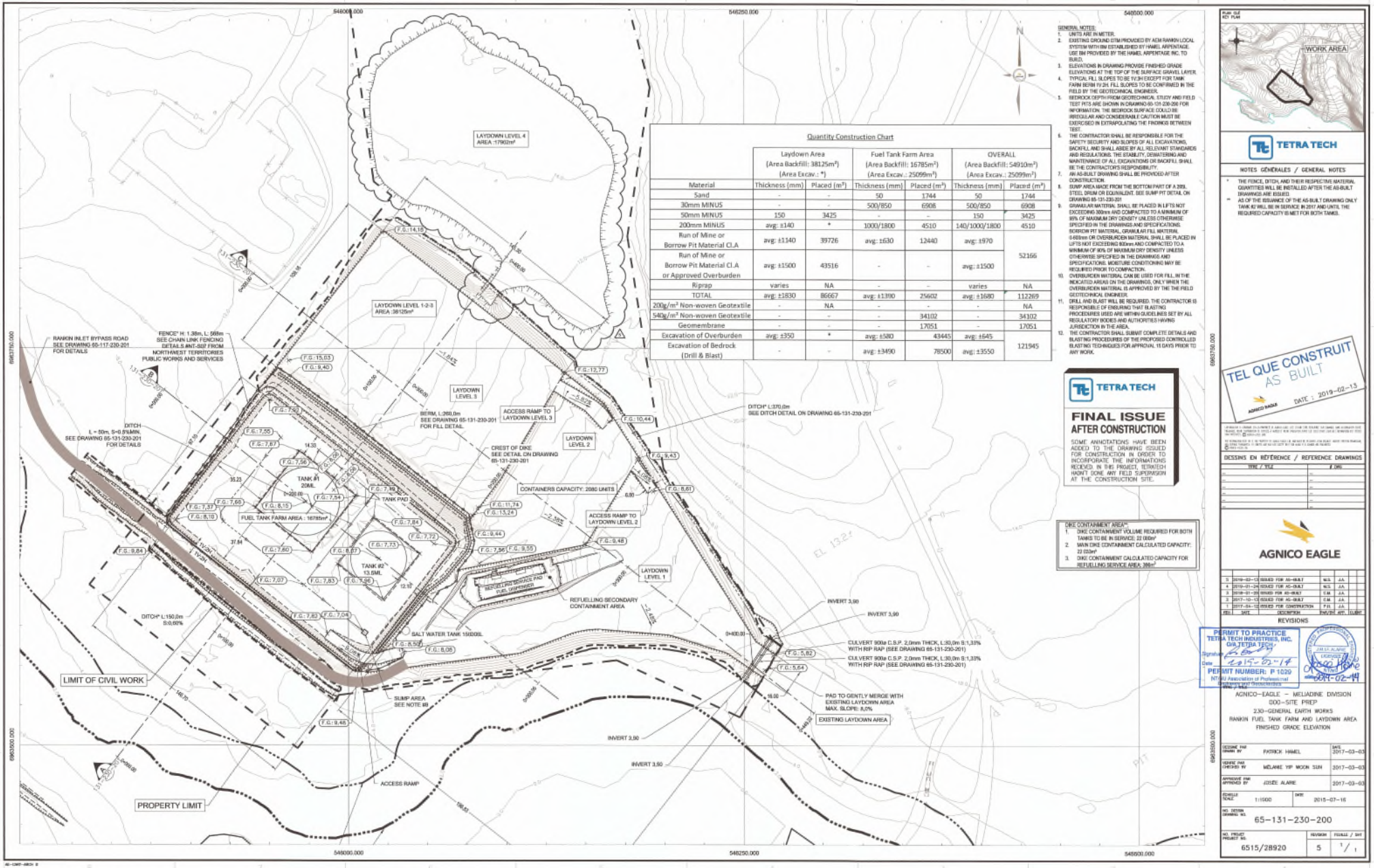

Quantity Construction Chart

	Laydown Area (Area Backfill: 38125m²) (Area Excav.: *)		Fuel Tank Farm Area (Area Backfill: 16785m²) (Area Excav.: 25099m²)		OVERALL (Area Backfill: 54910m²) (Area Excav.: 25099m²)	
Material	Thickness (mm)	Placed (m³)	Thickness (mm)	Placed (m³)	Thickness (mm)	Placed (m³)
Sand	-	-	50	1744	50	1744
30mm MINUS	-	-	500/850	6908	500/850	6908
50mm MINUS	150	3425	-	-	150	3425
200mm MINUS	avg: ±140	*	1000/1800	4510	140/1000/1800	4510
Run of Mine or Borrow Pit Material Cl.A	avg: ±1140	39726	avg: ±630	12440	avg: ±970	52166
Run of Mine or Borrow Pit Material Cl.A or Approved Overburden	avg: ±1500	43516	-	-	avg: ±1500	
Riprap	varies	NA	-	-	varies	NA
TOTAL	avg: ±1830	86667	avg: ±1390	25602	avg: ±1680	112269
200g/m² Non-woven Geotextile	-	NA	-	-	-	NA
540g/m² Non-woven Geotextile	-	-	-	34102	-	34102
Geomembrane	-	-	-	17051	-	17051
Excavation of Overburden	avg: ±350	*	avg: ±580	43445	avg: ±645	121945
Excavation of Bedrock (Drill & Blast)	-	-	avg: ±3490	78500	avg: ±3550	

GENERAL NOTES:
1. UNITS ARE IN METER.
2. EXISTING GROUND DTM PROVIDED BY AEM RANKIN LOCAL SYSTEM WITH BM ESTABLISHED BY HAMEL ARPENTAGE. USE BM PROVIDED BY THE HAMEL ARPENTAGE INC. TO BUILD.
3. ELEVATIONS IN DRAWING PROVIDE FINISHED GRADE ELEVATIONS AT THE TOP OF THE SURFACE GRAVEL LAYER.
4. TYPICAL FILL SLOPES TO BE 1V:3H EXCEPT FOR TANK FARM BERM 1V:2H. FILL SLOPES TO BE CONFIRMED IN THE FIELD BY THE GEOTECHNICAL ENGINEER.
5. BEDROCK DEPTH FROM GEOTECHNICAL STUDY AND FIELD TEST PITS ARE SHOWN IN DRAWING 65-131-230-200 FOR INFORMATION. THE BEDROCK SURFACE COULD BE IRREGULAR AND CONSIDERABLE CAUTION MUST BE EXERCISED IN EXTRAPOLATING THE FINDINGS BETWEEN TEST.
6. THE CONTRACTOR SHALL BE RESPONSIBLE FOR THE SAFETY SECURITY AND SLOPES OF ALL EXCAVATIONS, BACKFILL AND SHALL ABIDE BY ALL RELEVANT STANDARDS AND REGULATIONS. THE STABILITY, DEWATERING AND MAINTENANCE OF ALL EXCAVATIONS OR BACKFILL SHALL BE THE CONTRACTOR'S RESPONSIBILITY.
7. AN AS-BUILT DRAWING SHALL BE PROVIDED AFTER CONSTRUCTION.
8. SUMP AREA MADE FROM THE BOTTOM PART OF A 205L STEEL DRUM OR EQUIVALENT. SEE SUMP PIT DETAIL ON DRAWING 65-131-230-201
9. GRANULAR MATERIAL SHALL BE PLACED IN LIFTS NOT EXCEEDING 300mm AND COMPACTED TO A MINIMUM OF 95% OF MAXIMUM DRY DENSITY UNLESS OTHERWISE SPECIFIED IN THE DRAWINGS AND SPECIFICATIONS. BORROW PIT MATERIAL, GRANULAR FILL MATERIAL 0-80mm OR OVERBURDEN MATERIAL SHALL BE PLACED IN LIFTS NOT EXCEEDING 800mm AND COMPACTED TO A MINIMUM OF 90% OF MAXIMUM DRY DENSITY UNLESS OTHERWISE SPECIFIED IN THE DRAWINGS AND SPECIFICATIONS. MOISTURE CONDITIONING MAY BE REQUIRED PRIOR TO COMPACTION.
10. OVERBURDEN MATERIAL CAN BE USED FOR FILL, IN THE INDICATED AREAS ON THE DRAWINGS, ONLY WHEN THE OVERBURDEN MATERIAL IS APPROVED BY THE THE FIELD GEOTECHNICAL ENGINEER.
11. DRILL AND BLAST WILL BE REQUIRED. THE CONTRACTOR IS RESPONSIBLE OF ENSURING THAT BLASTING PROCEDURES USED ARE WITHIN GUIDELINES SET BY ALL REGULATORY BODIES AND AUTHORITIES HAVING JURISDICTION IN THE AREA.
12. THE CONTRACTOR SHALL SUBMIT COMPLETE DETAILS AND BLASTING PROCEDURES OF THE PROPOSED CONTROLLED BLASTING TECHNIQUES FOR APPROVAL 15 DAYS PRIOR TO ANY WORK.

TETRA TECH

FINAL ISSUE
AFTER CONSTRUCTION

SOME ANNOTATIONS HAVE BEEN ADDED TO THE DRAWING ISSUED FOR CONSTRUCTION IN ORDER TO INCORPORATE THE INFORMATIONS RECEIVED IN THIS PROJECT. TETRATECH HADN'T DONE ANY FIELD SUPERVISION AT THE CONSTRUCTION SITE.

DIKE CONTAINMENT AREA**:
1. DIKE CONTAINMENT VOLUME REQUIRED FOR BOTH TANKS TO BE IN SERVICE: 22 000m³
2. MAIN DIKE CONTAINMENT CALCULATED CAPACITY: 22 032m³
3. DIKE CONTAINMENT CALCULATED CAPACITY FOR REFUELLING SERVICE AREA: 300m³

PLAN CLÉ
KEY PLAN

TETRA TECH

NOTES GÉNÉRALES / GENERAL NOTES

* THE FENCE, DITCH, AND THEIR RESPECTIVE MATERIAL QUANTITIES WILL BE INSTALLED AFTER THE AS-BUILT DRAWINGS ARE ISSUED.
** AS OF THE ISSUANCE OF THE AS-BUILT DRAWING ONLY TANK #2 WILL BE IN SERVICE IN 2017 AND UNTIL THE REQUIRED CAPACITY IS MET FOR BOTH TANKS.

TEL QUE CONSTRUIT
AS BUILT
AGNICO EAGLE DATE : 2019-02-13

DESSINS EN RÉFÉRENCE / REFERENCE DRAWINGS

TYPE / TYP.	# DWG

AGNICO EAGLE

REV.	DATE	DESCRIPTION	DWN/DIT	APP.	CLIENT
5	2019-02-13	ISSUED FOR AS-BUILT	M.S.	J.A.	
4	2019-01-24	ISSUED FOR AS-BUILT	M.S.	J.A.	
3	2018-01-25	ISSUED FOR AS-BUILT	C.M.	J.A.	
2	2017-10-13	ISSUED FOR AS-BUILT	C.M.	J.A.	
1	2017-04-13	ISSUED FOR CONSTRUCTION	P.H.	J.A.	

REVISIONS

PERMIT TO PRACTICE
TETRA TECH INDUSTRIES, INC.
OA/ETA TECH
Signature
Date 2019-02-14
PERMIT NUMBER: P 1029
NT/NU Association of Professional Engineers and Geoscientists

J.M.D. ALARIE LICENSED PROFESSIONAL ENGINEER NUNAVUT 2019-02-14

AGNICO—EAGLE — MELIADINE DIVISION
000—SITE PREP
230—GENERAL EARTH WORKS
RANKIN FUEL TANK FARM AND LAYDOWN AREA
FINISHED GRADE ELEVATION

DESSINÉ PAR DRAWN BY	PATRICK HAMEL	DATE 2017-03-03
VÉRIFIÉ PAR CHECKED BY	MELANIE YIP MOON SUN	2017-03-03
APPROUVÉ PAR APPROVED BY	JOSÉE ALARIE	2017-03-03
ÉCHELLE SCALE	1:1000	DATE 2015-07-16

NO. DESSIN DRAWING NO. 65-131-230-200

NO. PROJET PROJECT NO.	REVISION	FEUILLE / SHT
6515/28920	5	1/1

A1-ISO-ARCH D

NO. DESSIN
DRAWING NO. 65-131-230-200T0202_R5

FORMAT ARCH D

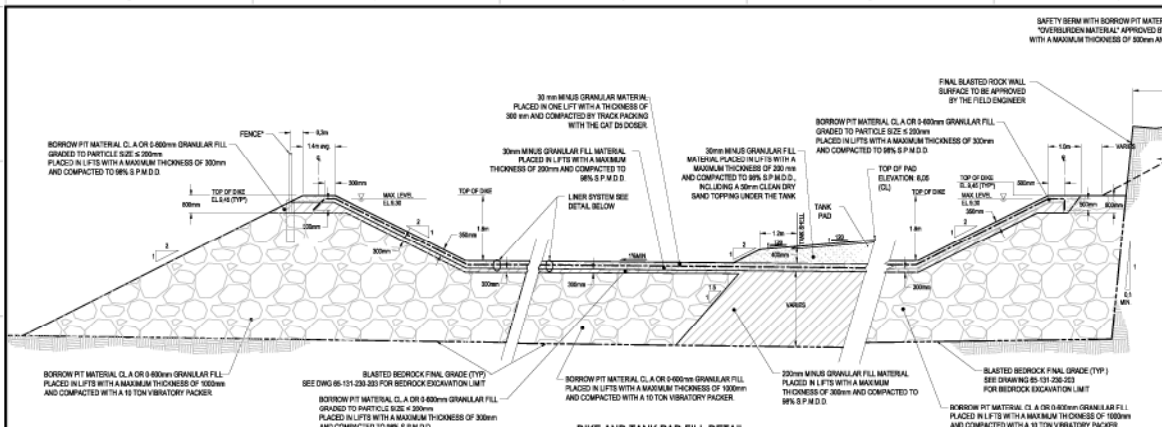

DIKE AND TANK PAD FILL DETAIL
N.T.S.

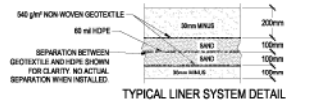

TYPICAL LINER SYSTEM DETAIL AROUND TANK #1
N.T.S.

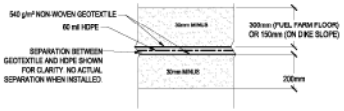

TYPICAL LINER SYSTEM DETAIL
N.T.S.

TEL QUE CONSTRUIT
AS BUILT
AGNICO EAGLE
DATE : 2019-01-28

GENERAL NOTES:
1. EXISTING GROUND DTM PROVIDED BY AEM RANKIN LOCAL SYSTEM WITH BM ESTABLISHED BY HAMEL ARPENTAGE. USE BM PROVIDED BY HAMEL ARPENTAGE INC. TO BUILD.
2. ELEVATIONS IN DRAWING PROVIDE FINISHED GRADE ELEVATIONS AT THE TOP OF THE SURFACE GRAVEL LAYER.
3. TYPICAL FILL SLOPES TO BE 1V:3H EXCEPT FOR TANK FARM BERM 1V:2H. FILL SLOPES TO BE CONFIRMED IN THE FIELD BY THE GEOTECHNICAL ENGINEER.
4. BEDROCK DEPTH FROM GEOTECHNICAL STUDY AND FIELD TEST PITS ARE SHOWN IN DRAWING 65-131-230-200 FOR INFORMATION. THE BEDROCK SURFACE COULD BE IRREGULAR AND CONSIDERABLE CAUTION MUST BE EXERCISED IN EXTRAPOLATING THE FINDINGS BETWEEN TEST.
5. THE CONTRACTOR SHALL BE RESPONSIBLE FOR THE SAFETY SECURITY AND SLOPES OF ALL EXCAVATIONS, BACKFILL AND SHALL ABIDE BY ALL RELEVANT STANDARDS AND REGULATIONS. THE STABILITY, DEWATERING AND MAINTENANCE OF ALL EXCAVATIONS OR BACKFILL SHALL BE THE CONTRACTOR'S RESPONSIBILITY.
6. AN AS-BUILT DRAWING SHALL BE PROVIDED AFTER CONSTRUCTION.
7. SUMP AREA MADE FROM THE BOTTOM PART OF A 205L STEEL DRUM OR EQUIVALENT. SEE SUMP PIT DETAIL ON DRAWING 65-131-230-201.

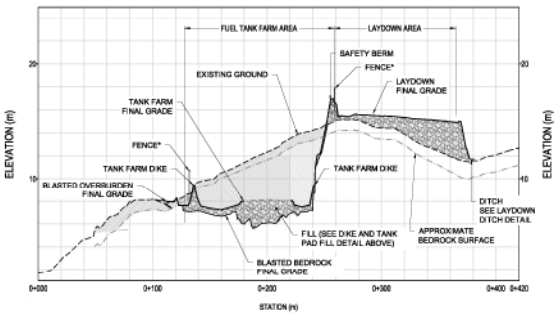

CROSS-SECTION A

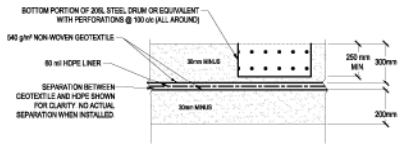

TYPICAL SUMP PIT DETAIL
N.T.S.

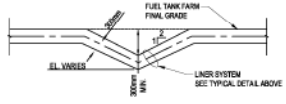

TYPICAL FUEL TANK FARM DITCH DETAIL
N.T.S.

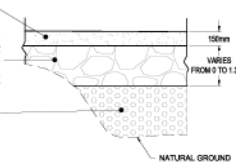

LAYDOWN AREA FILL DETAIL
N.T.S.

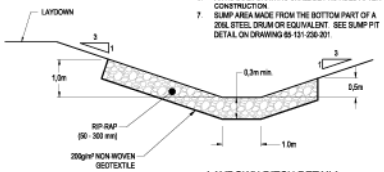

LAYDOWN DITCH DETAIL*
N.T.S.

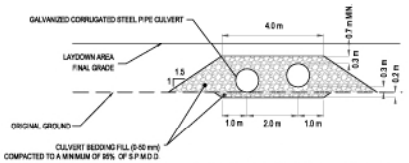

TYPICAL CULVERT BEDDING SECTION*
N.T.S.

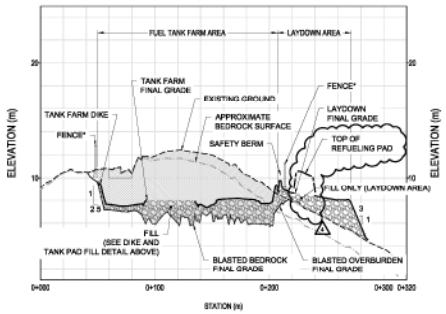

CROSS-SECTION B

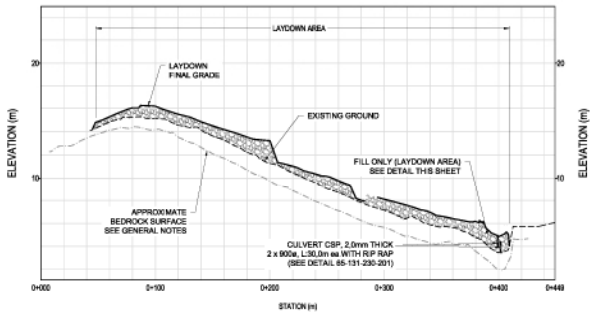

CROSS-SECTION C

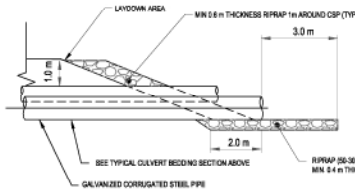

DOUBLE CULVERT CROSS SECTION *
N.T.S.

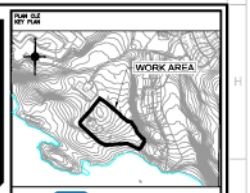

NOTES GENERALES / GENERAL NOTES

8. GRANULAR MATERIAL SHALL BE PLACED IN LIFTS NOT EXCEEDING 300mm AND COMPACTED TO A MINIMUM OF 95% OF MAXIMUM DRY DENSITY (STANDARD PROCTOR) UNLESS OTHERWISE SPECIFIED IN THE DRAWINGS AND SPECIFICATIONS. BORROW PIT MATERIAL GRANULAR FILL MATERIAL 0-600mm OR OVERBURDEN MATERIAL SHALL BE PLACED IN LIFTS NOT EXCEEDING 600mm AND COMPACTED TO A MINIMUM OF 90% OF MAXIMUM DRY DENSITY (STANDARD PROCTOR) UNLESS OTHERWISE SPECIFIED IN THE DRAWINGS AND SPECIFICATIONS MOISTURE CONDITIONING MAY BE REQUIRED PRIOR TO COMPACTION.
9. OVERBURDEN MATERIAL CAN BE USED FOR FILL IN THE INDICATED AREAS ON THE DRAWINGS, ONLY WHEN THE OVERBURDEN MATERIAL IS APPROVED BY THE THE FIELD GEOTECHNICAL ENGINEER.
10. DRILL AND BLAST WILL BE REQUIRED. THE CONTRACTOR IS RESPONSIBLE OF ENSURING THAT BLASTING PROCEDURES USED ARE WITHIN GUIDELINES SET BY ALL REGULATORY BODIES AND AUTHORITIES HAVING JURISDICTION IN THE AREA.
11. THE CONTRACTOR SHALL SUBMIT COMPLETE DETAILS AND BLASTING PROCEDURES OF THE PROPOSED CONTROLLED BLASTING TECHNIQUES FOR APPROVAL 15 DAYS PRIOR TO ANY WORK.

* THE FENCE, DITCH, AND THEIR RESPECTIVE MATERIAL QUANTITIES WILL BE INSTALLED AFTER THE AS-BUILT DRAWINGS ARE ISSUED.

DESSINS EN RÉFÉRENCE / REFERENCE DRAWINGS

DWG / ET #	DWG

AGNICO EAGLE

REV.	DATE	DESCRIPTION	PAR/BY	APP.	CLIENT
4	2019-01-28	ISSUED AS-BUILT	CJM.	JA.	
3	2018-01-25	ISSUED AS-BUILT	CJM.	JA.	
2	2017-10-13	ISSUED AS-BUILT	CJM.	JA.	
1	2017-04-12	ISSUED FOR CONSTRUCTION	PJL.	JA.	
0	2017-03-28	ISSUED FOR CONSTRUCTION	PJL.	JA.	
H	2017-03-24	ISSUED FOR TENDER	JGM.	JA.	

REVISIONS

PERMIT TO PRACTICE
TETRA TECH INDUSTRIAL INC.
O/A TETRA TECH
Signature
Date 2019-01-28
PERMIT NUMBER: P 1029
NT/NU Association of Professional Engineers and Geoscientists
2019-01-28

AGNICO—EAGLE — MEL/ADINE DIVISION
000—SITE PREP
230—GENERAL EARTH WORKS
RANKIN FUEL TANK FARM AND LAYDOWN AREA
CROSS—SECTIONS AND DETAILS

DESSINÉ PAR / DRAWN BY	PATRICK HAMEL	DATE 2017-03-28
VÉRIFIÉ PAR / CHECKED BY	MELANIE YIP WOON SUN	2017-03-28
APPROUVÉ PAR / APPROVED BY	JOSEE ALARIE	2017-03-28
ÉCHELLE / SCALE	H 1:2000, V 1:200	DATE 2015-07-16

NO. DESSIN / DRAWING NO.
65-131-230-201

NO. PROJET / PROJECT NO.	REVISION	FEUILLE / SHT
6515/28920	4	1 / 1

AE-GMT-ARCH D

P:\28920\12DESIN\12W-HYPM\12DESIN 9C TRAVAUX\AUTOCAD\65-131-230-200to202_R5.dwg

NO. DESSIN / DRAWING NO. 65-116-275-201_R1_ABD

FORMAT ARCH D

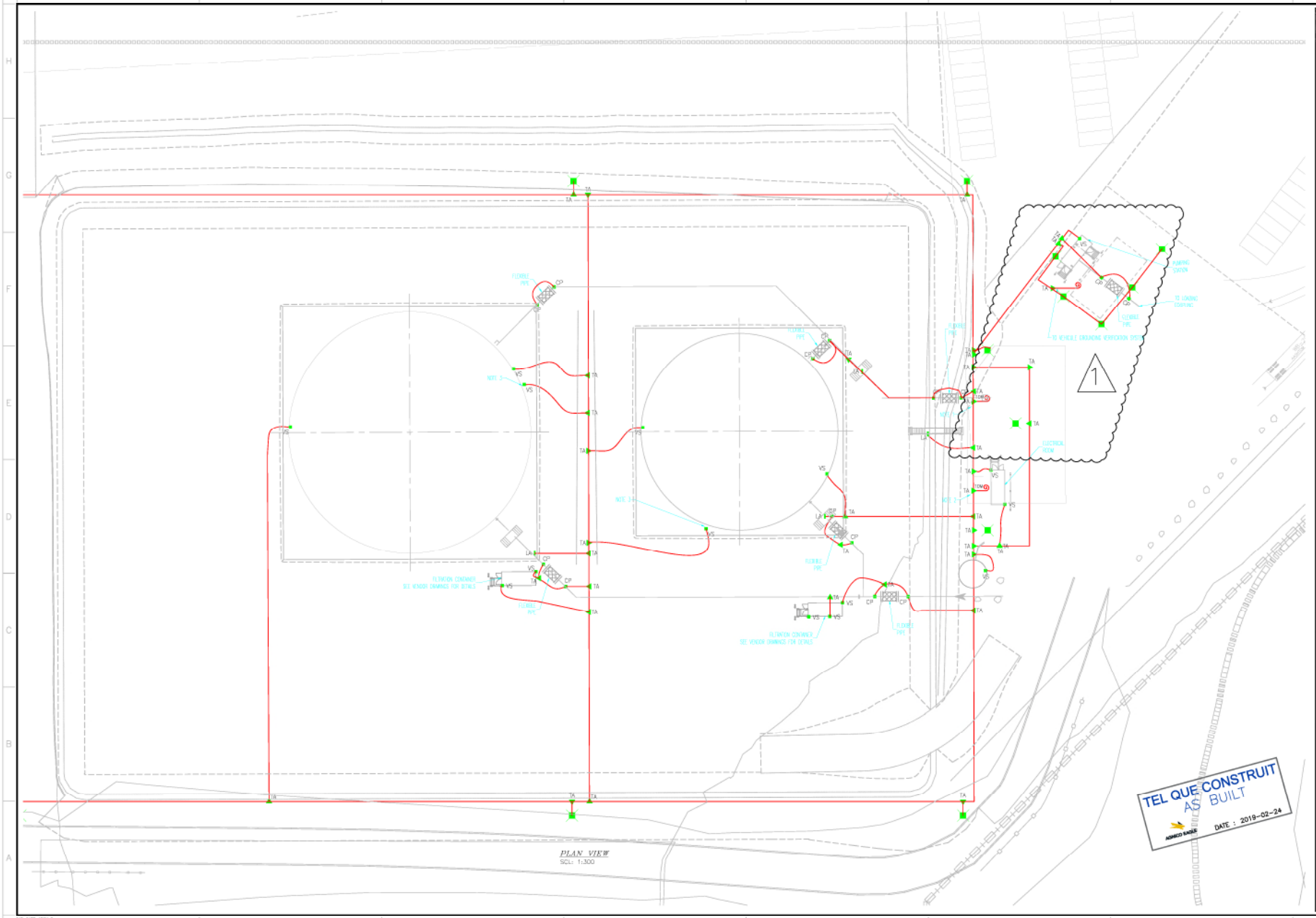

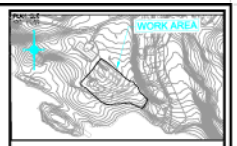

WSP

1075, 3e AVENUE EST
VAL-D'OR (QUÉBEC) CANADA J9P 0J7
TÉL. : 819 825-4274 | TÉLÉC. : 819 824-1514 | WWW.WSPGROUP.COM

Réf. 151-08440-40

NOTES GÉNÉRALES / GENERAL NOTES

1. GROUND EQUIPMENT INSIDE THE PUMPING STATION AT THE CONNECTION POINT.
2. GROUND THE MAIN SAFETY SWITCH IN THE ELECTRICAL ROOM CONTAINER.
3. GROUND THE STAIRWELL OF THE TANK.

- GROUND ALL THE PROTECTION BOLLARDS.
- GROUND ALL METALLIC ELEMENTS IN THE RETENTION BASIN AHLA AND IN TRUCK LOADING AREA.
- THE LOCATION OF THE GROUND CONNECTIONS AND CONDUCTORS ARE APPROXIMATIVE AND SHALL BE COORDINATED WITH OTHER CONTRACTORS.
- THE LOCATION OF CONTAINERS SHALL BE COORDINATED WITH OTHER CONTRACTORS.

INFORMATION DE CONTOUR ET DU PARCELLAIRE © AGNICO EAGLE LTÉE ET SES FILIALES RESERVÉS. TOUS DROITS RÉSERVÉS. CETTE INFORMATION EST FOURNIE SOUS LICENCE ET NE PEUT ÊTRE UTILISÉE QUE POUR L'EXÉCUTION DU PRÉSENT CONTRAT. CETTE INFORMATION NE PEUT ÊTRE COPIÉE, DISTRIBUÉE, TRANSMISE OU UTILISÉE À D'AUTRES FINS SANS LE CONSENTEMENT ÉCRIT D'AGNICO EAGLE LTÉE.

INFORMATION CONTOUR AND CADASTRAL © AGNICO EAGLE LTD AND ITS SUBSIDIARIES. ALL RIGHTS RESERVED. THIS INFORMATION IS PROVIDED UNDER LICENCE AND MAY NOT BE USED FOR ANY PURPOSE OTHER THAN THAT REQUIRED BY THIS CONTRACT. THIS INFORMATION MAY NOT BE COPIED, DISTRIBUTED, TRANSMITTED OR USED FOR ANY OTHER PURPOSE WITHOUT THE WRITTEN CONSENT OF AGNICO EAGLE LTD.

DESSINS EN RÉFÉRENCE / REFERENCE DRAWINGS

TITRE / TITLE	# DWG
GROUNDING LAYOUT	65-103-275-201
LEGEND, TABLES & DETAILS	65-116-275-200

AGNICO EAGLE

REV.	DATE	DESCRIPTION	RAM/INT	APP.	CLIENT
1	2019-02-24	AS BUILT	JGL	EL	
0	2017-07-10	ISSUED FOR CONSTRUCTION	FJMD	LS	

REVISIONS

TITRE / TITLE

AGNICO EAGLE – MEL IADINE DIVISION
116 – FUEL TANK FARM
275 – POWER ELECTRICAL
GROUNDING LAYOUT
PLAN VIEW

DESSINÉ PAR / DRAWN BY	RÉMI HÉNAULT, Tech.	2016-06-22
VÉRIFIÉ PAR / CHECKED BY	RÉMI HÉNAULT, Tech.	2016-06-22
APPROUVÉ PAR / APPROVED BY	LUC SÉNÉCAL, P.Eng.	2017-07-10
ÉCHELLE / SCALE	INDICATED	DATE: 2016-01-25

NO. DESSIN / DRAWING NO. 65-116-275-201

NO. PROJET / PROJECT NO.	REVISION	FEUILLE / SHT
6515	1	1 / 1

AE-CARR-ARCH D

C:\Users\joel.dalfortsbm\Desktop\65-116-275-201_R1_ABD.dwg-2019-02-19 14:03:29

FILE NO. 65-116-275-201_R1_ABD.dwg

NO. DESSIN / DRAWING NO. 65-116-275-202_R1_ABD

FORMAT ARCH D

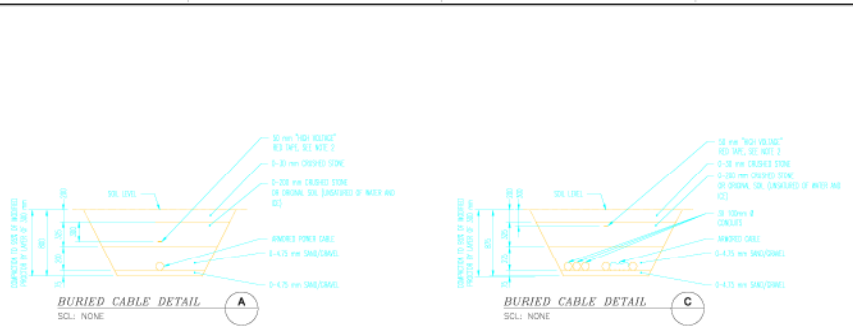

TEL QUE CONSTRUIT
AS BUILT
AGNICO EAGLE
DATE : 2019-02-24

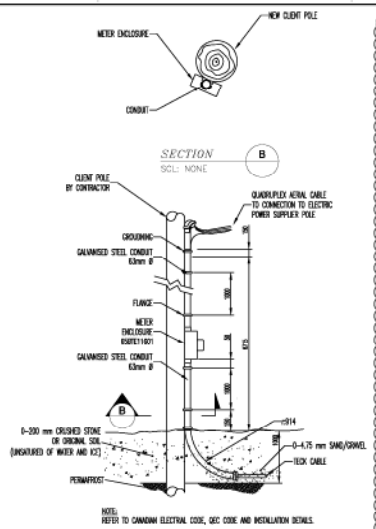

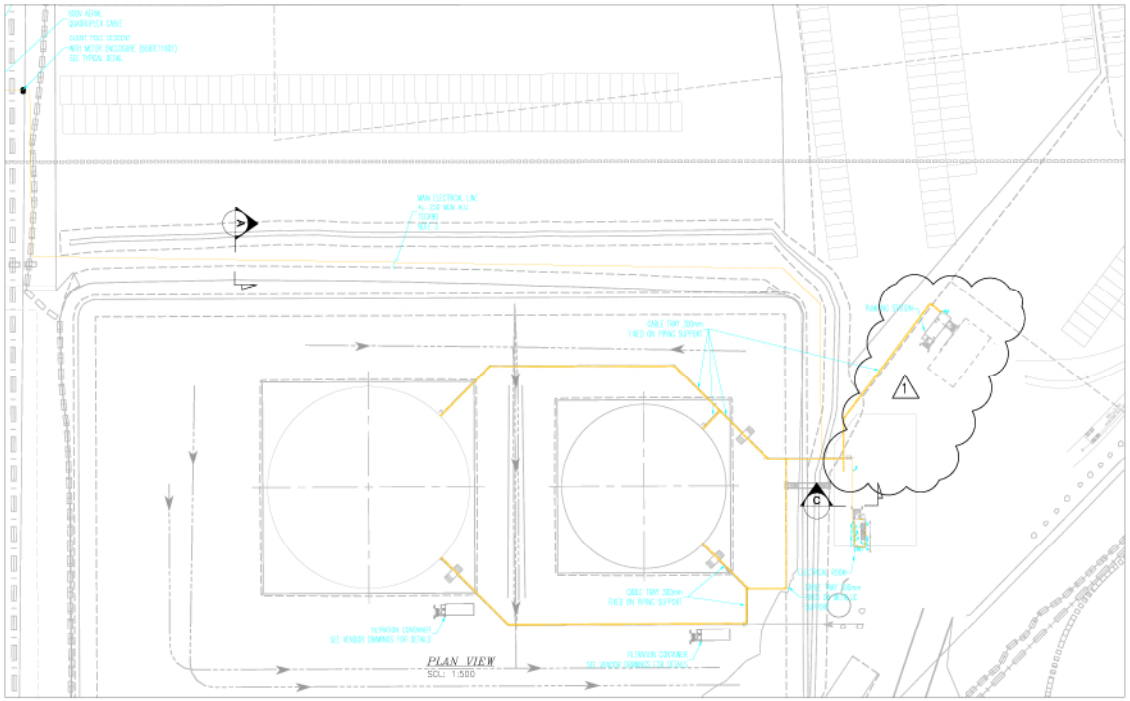

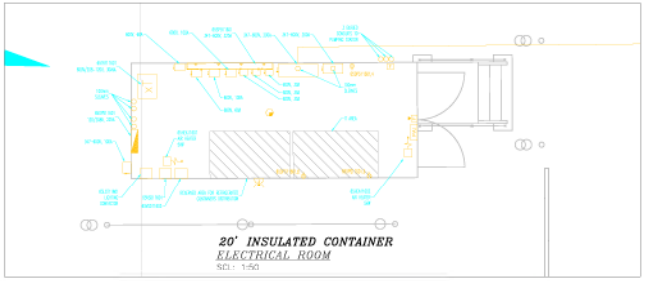

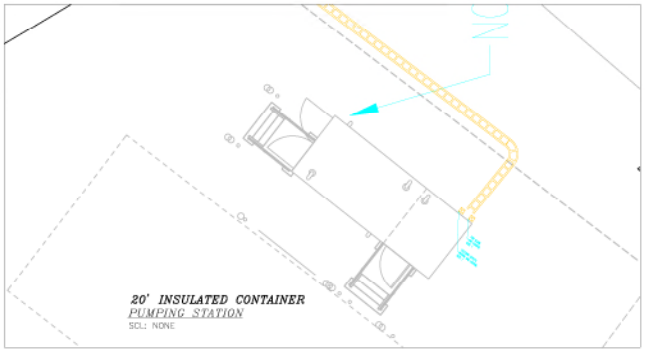

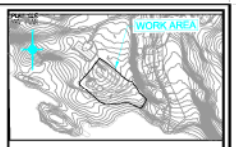

WSP
1300, 3e AVENUE EST
VAL-D'OR (QUÉBEC) CANADA J9P 0J7
TÉL. : 819 825-4274 ; TÉLÉC. : 819 824-1514 | WWW.WSPGROUP.COM
Réf. 151-08443-40

NOTES GÉNÉRALES / GENERAL NOTES

1. THE PUMPING STATION CONTAINER COMES PREWIRED WITH THOSE JONCTION BOXES. ELECTRICAL CONTRACTOR SHALL CONNECT THOSE JONCTION BOXES TO THE RIGHT SERVICES IN THE ELECTRICAL CONTAINER. ALL CABLES BETWEEN CONTAINERS SHALL BE TECK TYPE AND INSTALLED BURIED IN TRENCH. INSTALL 3X 100mm Ø CONDUITS FOR FUTURE CABLES.
2. THE RED TAPES SHALL BE INSTALLED ABOVE THE ELECTRICAL CABLES AND FOLLOW ALL THE BURIED PART OF THEM.
3. COORDINATE THE EXACT LOCATION AND DEPTH OF THE MAIN FEEDER CABLE.

- THE LOCATION OF PIPING IS APPROXIMATE AND SHALL BE COORDINATE WITH OTHER MECHANICAL DRAWINGS.

INFORMATION CONTENUE DANS CE DOCUMENT EST LA PROPRIÉTÉ DE AGNICO EAGLE ET NE DOIT PAS ÊTRE UTILISÉE, REPRODUITE OU DIVULGUÉE SANS L'AUTORISATION ÉCRITE PRÉALABLE DE AGNICO EAGLE. IL EST INTERDIT DE COPIER CE DESSIN OU TOUTE PARTIE DE CE DESSIN SANS AUTORISATION ÉCRITE DE AGNICO EAGLE.
THE INFORMATION CONTAINED IN THIS DRAWING IS THE PROPERTY OF AGNICO EAGLE. IT IS NOT TO BE USED, REPRODUCED OR DISCLOSED WITHOUT THE PRIOR WRITTEN PERMISSION OF AGNICO EAGLE. COPYING THIS DRAWING WITHOUT PERMISSION IS PROHIBITED.

DESSINS EN RÉFÉRENCE / REFERENCE DRAWINGS

TITRE / TITLE	# DWG
EQUIPMENT LAYOUT, DETAILS AND SERVICES PANEL	65-103-275-202
LIGHTING	65-116-280-201
LEGENDS, TABLES & DETAILS	65-116-275-200
SINGLE LINE DIAGRAM	65-116-275-203

AGNICO EAGLE

REV.	DATE	DESCRIPTION	PAR/BY	APP.	CLIENT
1	2019-03-04	AS BUILT	J.G.L.	E.L.	
0	2017-07-10	ISSUED FOR CONSTRUCTION	F.M.D.	L.S.	

REVISIONS

TITRE / TITLE:
AGNICO EAGLE – MELIADINE DIVISION
116 – FUEL TANK FARM
275 – POWER ELECTRICAL
EQUIPMENT LAYOUT, DETAILS AND SERVICES PANEL
PLAN VIEW

DESSINÉ PAR / DRAWN BY	BRIAN FILDES, Tech.	2016-06-22
VÉRIFIÉ PAR / CHECKED BY	RÉMI HÉNAULT, Tech.	2016-06-22
APPROUVÉ PAR / APPROVED BY	LUC SIÉMÉCAL, P.Eng.	2017-07-10
ÉCHELLE / SCALE	INDICATED	DATE 2016-01-25
NO. DESSIN / DRAWING NO.	65-116-275-202	
NO. PROJET / PROJECT NO.	6515	REVISION 1 / FEUILLE / SHT 1 / 1

AE-CNST-ARCH D

C:\Users\jael.charbonneau\Desktop\65-116-275-202_R1_ABD.dwg-2019-03-19 14:03:29

FILE NO. 65-116-275-202_R1_ABD.dwg

AS BUILT DRAWING BINDER TANK 1 – 20,000CUM

AEM PURCHASE ORDER: OC-568510
AEM PACKAGE NO.: 6515-C-260-002
PACKAGE TITLE: FUEL TANKS (SUPPLY & INSTALL)

ICL Project No.: 295
ICL Document No.: 295-B1 As-Built
AEM Document No.: 6515-C-260-002-141-QCR-0007_Sub001
Revision: 0

OWNER:

Agnico Eagle Mines Limited
145 King St. East, Suite 400
Toronto, ON
M5C 2Y7

GENERAL CONTRACTOR:

Inukshuk Construction Limited
PO Box 654
Rankin Inlet, NU
X0C 0G0

Contact: David Mosher

PH: (867) 645-4030
FX: (902) 429-7762

Submitted by: Inukshuk Construction Limited
Date Submitted: January 3, 2019

AGNICO EAGLE

Vendor Document Status

1 ☐ Proceed to next submission and status.

2 ☐ Proceed with exceptions as noted to next submission and status.

3 ☐ Do not proceed.
Revise as noted and resubmit next submission and status.

4 ☐ Complete, no further submission required.

By: Date:

Review and authorization to fabricate are only for general conformance with the design concept of the Project as expressed in the Contract Documents. Sole responsibility for the accuracy and completeness of this document, including but not limited to dimensions and quantities, remains with the Supplier/Contractor. Agnico Eagle does not warrant the accuracy or completeness of any of the information contained herein, nor does Agnico Eagle authorize or approve any construction means, methods, techniques, sequences or any safety precautions or procedures.

Agnico Eagle No. 6515-C-260-002-141-QCR-0007 R: Sub001

DOCUMENT FOR INFORMATION

Index Tank No. 1 - 20,000CUM

Drawing No.	Description	Sheet No.	Rev
TK#1ITP	Inspection & Test Plan	1, 2	B
TK#1FAST.	Fastener List	1	0
65-116-210-200	Rankin Inlet Fuel Tank Farm Fuel Distribution Plan General Arrangement (Reference Only)	1	0
295-M1	Floor & Roof Layouts	1, 2	1
295-M7	Shell Plates and Angle Rolling Details	1	4
295-M8	Reinforcing Plate Details	1, 2, 13	4
295-M9	Erection Drawing	1–7	6
295-M15	Manholes Details	1, 2	3
295-M16	Nozzles Detail	1-3, 8, 13-16, 18-22	3
295-M17	Pipe Support, Misc. Bracket, Grounding Lugs	1-5	2
295-M18	Manhole Cover Davit	1	0
17-03-1-001	Mid Platform Detail	1	0
17-03-1-002	Inside Stringer	1	0
17-03-1-003	Outside Stringer Detail	1	0
17-03-1-004	Stair Stringer Supports	1	0
17-03-1-005	Top Platform Detail	1	0
17-03-1-006	Stair Handrail Detail	1	0

INSPECTION & TEST PLAN

Client:	AGNICO EAGLE	**Tank Tag:**	TK #1	**Document:**	TK#1 ITP
Project ID:	MELIADINE GOLD MINE	**Work Order:**	295	**Revision:**	B

Item	Component	Activity	ITP Type	Documentation	Acceptance Criteria	Notes	Witness, Hold, Review Points	
							Client Sign/Date	Q.C. Sign/Date
1	Kick-Off Meeting	Kickoff Meeting	N/A	Meeting Minutes	N/A			H
2	Signature Log	Verify	N/A	Signature Log	N/A			H
3	Welder Qualification	Verify	N/A	Individual Welder Qualifications / Welder Log	API-650 / ASME IX			H
4	Inspector Qualification	Verify	N/A	In house Inspector & 3rd Party Qualifications	API-650			H
5	Weld Procedures	Verify	N/A	Approved Weld Procedures	API-650 / ASME IX, CWB W47.1			H
6	Welding Consumable	Electrode Storage	N/A	N/A	Manufacturer's Instructions			R
7	Foundation	Foundation Survey	DC	Foundation Acceptance Report, Compaction Report & Survey from 3rd Party	API-650 Para 7.5.5			H
8	Floor	Materials	FI	MTR Confirmation to Dwg	Drawing & API-650 Sect. 4	MTR of all plate under shell.		
		Fit up	VE, DC	As Built Drawing	Drawing	per API-650 5.1.5.4 - bottom plates under the shell shall have the outer ends of the joints fitted and lap-welded to form a smooth bearing surface.		R
		Welding	VE	Weld Map, Visual Report	API–650 Para 7.2 & 8.5 & WPS			R
		Vacuum Test	VB	Vacuum Box Test Report	API-650 Para 7.3.3(a) & 8.6			W
9	Shell to Floor Seams	Initial Weld Pass	VE	Weld Map, Visual Report	API-650 Para 8.5, 7.2.4.1			R
		Final Weld Pass	VE	Weld Map, Visual Report	API-650 Para 8.5, 7.2.4.1			R
		Vacuum Test	VB	Vacuum Box Test Report	API-650 Para 7.2.4.3 & 8.6			W
10	Shell	Materials	FI	MTR Confirmation to Dwg	Drawing & API-650 Sect. 4	MTR of all plate		H
		Fit up 1st Course	VE, DC	As Built Drawing	Drawing			R
		Roundness	DC	Dimension Report	API-650 Para 7.5.3			H
		Welding	VE	Weld Map, Visual Report	API–650 Para 7.2, 7.5, 8.5 & WPS			R
		Tolerance Check – Plumbness & Local Deviations	DC	Dimension Report	API-650 Para 7.5			H
		Diesel Test Shell Welds	NDT	Leak Test Report	API-650 Para 7.3.6 2)a)i)			W
		UT – All Shell	NDT	UT report / Log / Map	API-650 Para Annex U	Shell less than 3/8" shall be intrepreted as 3/8" as a modification of API-650. All T joint UT.		H
11	Compression Ring	Fit up	VE, DC	As Built Drawing	Drawing			R
		Welding	VE	Weld Map, Visual Report	API–650 Para 7.2 & 8.5 & WPS			R
12	Roof	Fit up	VE, DC	As Built Drawing	Drawing			R
		Welding	VE	Visual Report	API–650 Para 7.2 & 8.5 & WPS			R
13	Roof Structure	Fit up	VE, DC	As Built Drawing	Drawing			R
		Column Plumbness	DC	Dimension Report	API–650 Para 7.5.2 b)			H
		Welding	VE	Visual Report	API–650 Para 7.2 & 8.5 & WPS			R

Item	Component	Activity	ITP Type	Documentation	Acceptance Criteria	Notes	Witness, Hold, Review Points	
							Client Sign/Date	Q.C. Sign/Date
14	Nozzles	Layout	VE, DC	As Built Drawing	Drawing			H
		Fit up	VE, DC	As Built Drawing	Drawing			R
		Welding	VE	Weld Map, Visual Report	API–650 Para 7.2 & 8.5 & WPS			R
		Tolerance Check – Plumbness & Local Deviations	DC	Dimension Report	API-650 Para 7.5			H
		Shell Nozzle Repad Air test	AT	Leak Test Report	API-650 Para 7.3.5			W
		MPI	NDT	MPI Report	API-650 Para 7.2.3.6	All welds of Shell Nozzles		W
15	Manway	Layout	VE, DC	As Built Drawing	Drawing			H
		Fit up	VE, DC	As Built Drawing	Drawing			R
		Welding	VE	Weld Map, Visual Report	API–650 Para 7.2 & 8.5 & WPS			R
		Tolerance Check – Plumbness & Local Deviations	DC	Dimension Report	API-650 Para 7.5			H
		Shell Manway Repad Air test	AT	Leak Test Report	API-650 Para 7.3.5			W
		MPT	NDT	MPI Report	API-650 Para 7.2.3.6	All welds of Shell Manways		R
16	Internals	Layout / Fit up	VE, DC	As Built Drawing	Drawing			R
		Welding	VE	Visual Report	API–650 Para 7.2 & 8.5 & WPS			R
		Stillwell Plumbness	DC	Dimension Report	API–650 Para H.4.5			R
		MPI or LP	NDT	NDT Report	Sump Welds (if applicable) 7.3.4	MPI all welds		H
17	Externals	Layout / Fit up	VE, DC	As Built Drawing	Drawing			R
	Externals	Welding	VE	Visual Report	API–650 Para 7.2 & 8.5 & WPS			R
18	Stairs & Platforms	Fit up	VE, DC	As Built Drawing	Drawing			R
		Welding	VE	Visual Report	API–650 Para 7.2 & 8.5 & WPS			R
19	Bolts & Nuts	Inspection	VE, DC	As Built Drawing	Drawing	Bolt Torque		W
20	Final	Name Plate Verification	N/A	Scan of Name Plate	Drawings			H
		Final Inspection	FI	As Built Drawings, Data Sheet, Manufacturer's Certification (3rd Party), Punch List	Drawings			H

DEFINITIONS:

W - WITNESS: Specified activity to be observed by an outlined party. QC to provide the applicable party 24 hours notice of witness point.

H - HOLD: Specified component or installation to be inspected by an outlined party. No further activities specific to the component or installation may proceed until inspection is carried out. QC to provide the applicable party 24 hours notice of hold point.

R - REVIEW: Specified documentation and specifications applicable to a particular component and/or installation to be examined by an outlined party.

AT - AIR TEST: Specified component and/or installation to be air tested according to specified documentation and specifications.

DC - DIMENSION CHECK: Physical dimensions of component and/or installation to be verified according to specified documentation and specifications.

FI - FINAL INSPECTION: Specified inspection procedures to be executed prior to release of the component and/or installation and verified according to specified documentation and specifications.

NDT - NON DESTRUCTIVE TESTING: Specified component and/or installation to be inspected using a named non destructive testing method according to specified documentation and specifications.

VE - VISUAL Examination: Specified component and/or installation to be examined visually according to specified documentation and specification.

VB - VACUUM-BOX TEST: Specified component and/or installation to be vacuum box tested according to specified documentation and specifications.

Fastener List

Tank #	qty	Qty of Component	Connection	Description	Lght (in)
1	140.00	70	Shell to Rafter Connection	Bolt, Structural A325, 3/4"	2
1	70.00	35	Rafter to Center Column	Bolt, Structural A325, 3/4"	3.5
1	14.00	105	Rafter to intermediate beam	Bolt, Structural A325, 3/4"	2.25
1	112.00	7	Beam to top plate and intermediate colun	Bolt, Structural A325, 3/4"	2.5
1	336.00			Nut, Structural heavy hex 3/4"	
1	672.00			Washer, type A, 3/4"	
1	168.00	4	36"Shell Manhole	Stud, L7, 3/4"	3 3/4
1	16.00	2	8" in/out Nozzle	Stud, L7, 3/4"	4 1/4
1	48.00	6	6" in/out Nozzle	Stud, L7, 3/4"	4
1	-	0	3" Water Drawoff	Stud, L7, 5/8"	3 1/2
1	60.00	3	24" Roof manhole	Stud, L7, 5/8"	2 1/4
1	20.00	1	24" Roof manhole emergency vent	Stud, L7, 5/8"	9.5
1	16.00	1	16" Vent	Stud, L7, 1"	5 1/4
1	8.00	1	8" Roof Nozzle	Stud, L7, 3/4"	4 1/4
1	8.00	1	6" Gauge Hatch	Stud, L7, 3/4"	4
1	8.00	1	4" Roof Nozzle	Stud, L7, 5/8"	3.5
1	32.00			Nut, A194, Gr. 4, 1"	
1	496.00			Nut, A194, Gr. 4, 3/4"	
1	176.00			Nut, A194, Gr. 4, 5/8"	
1	4.00	4	36"Shell Manhole	Gasket, Ring, Durlon 8500, 1/8", 1051 o.d.x 914 i.d.	
1	2.00	2	8" in/out Nozzle	Gasket, Ring, Durlon 8500,1/8" x 8" x 150#	
1	6.00	6	6" in/out Nozzle	Gasket, Ring, Durlon 8500,1/8" x 6" x 150#	
1	-	6	3" Water Drawoff	Gasket, Ring, Durlon 8500,1/8" x 3" x 150#	
1	4.00	4	24" Roof manhole	Gasket, Ring, Durlon 8500, 1/16" x 762 x 610	
1	1.00	1	16" Vent	Gasket, Ring, Durlon 8500, 1/16" x 150#, 16"	
1	1.00	1	8" High Level	Gasket, Ring, Durlon 8500, 1/16" x 150#, 8"	
1	1.00	1	6" Gauge Hatch	Gasket, Full Face, Durlon 8500, 1/16" x 150#, 6"	
1	1.00	1	4" Roof Nozzle	Gasket, Full Face, Durlon 8500, 1/16" x 150#, 4"	
1	1.00	1	4" Roof Nozzle	Gasket, Full Face, Durlon 8500, 1/16" x 150#, 4"	

NO. DESSIN
DRAWING NO. 65-116-210-200

FORMAT ARCH D

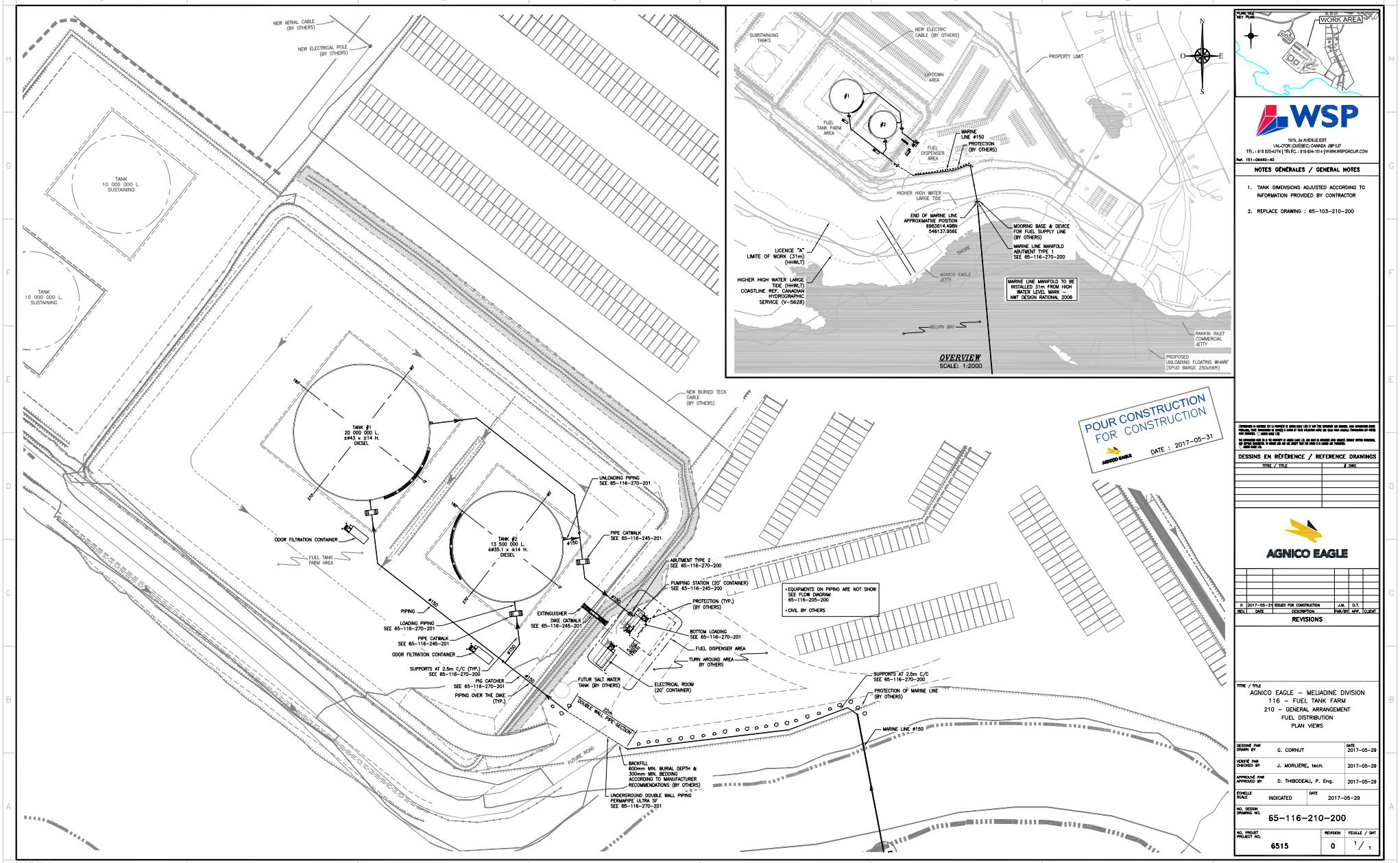

OVERVIEW
SCALE: 1:2000

POUR CONSTRUCTION
FOR CONSTRUCTION
DATE : 2017-05-31

WSP
1075, 3e AVENUE EST
VAL-D'OR (QUÉBEC) CANADA J9P 0J7
TÉL. : 819 825-4274 | TÉLÉC. : 819 824-1514 | WWW.WSPGROUP.COM

Ref. 151-06440-40

NOTES GÉNÉRALES / GENERAL NOTES

1. TANK DIMENSIONS ADJUSTED ACCORDING TO INFORMATION PROVIDED BY CONTRACTOR
2. REPLACE DRAWING : 65-103-210-200

CONFIDENTIALITÉ ET DROITS D'AUTEUR : CE DOCUMENT EST LA PROPRIÉTÉ DE AGNICO EAGLE LIMITÉE ET NE PEUT ÊTRE REPRODUIT EN ENTIER OU EN PARTIE, SOUS QUELQUE FORME QUE CE SOIT, SANS L'AUTORISATION ÉCRITE DE AGNICO EAGLE LIMITÉE.
CONFIDENTIALITY AND © COPYRIGHT : THIS DRAWING IS THE PROPERTY OF AGNICO EAGLE LTD. AND MAY BE REPRODUCED WHOLLY OR IN PART, IN ANY FORM OR MEDIUM WITHOUT EXPRESS WRITTEN PERMISSION FROM AGNICO EAGLE LTD.

DESSINS EN RÉFÉRENCE / REFERENCE DRAWINGS

TITRE / TITLE	# DWG

AGNICO EAGLE

REV.	DATE	DESCRIPTION	PAR/BY	APP.	CLIENT
0	2017-05-31	ISSUED FOR CONSTRUCTION	J.M.	D.T.	

REVISIONS

TITRE / TITLE
AGNICO EAGLE – MEL1ADINE DIVISION
116 – FUEL TANK FARM
210 – GENERAL ARRANGEMENT
FUEL DISTRIBUTION
PLAN VIEWS

DESSINÉ PAR DRAWN BY	G. CORNUT	DATE 2017-05-29
VÉRIFIÉ PAR CHECKED BY	J. MORLIÈRE, tech.	2017-05-29
APPROUVÉ PAR APPROVED BY	D. THIBODEAU, P. Eng.	2017-05-29

ÉCHELLE SCALE: INDICATED DATE 2017-05-29

NO. DESSIN DRAWING NO. 65-116-210-200

NO. PROJET PROJECT NO. 6515 | REVISION 0 | FEUILLE / SHT 1 / 1

AE-CART-ARCH D

\\CAMTL1DATA01\proj\eta\2015\1\151-06440-40\Genie Nordique\Dao\65-116-210-200_R0.dwg-2013-02-19 14:03:29

FILE NO. 65-116-210-200_R0.dwg

PARTS LIST			
ITEM	QTY	DESCRIPTION	MATERIAL
F1A	59	PL 6.35 X 3048 X 6096	G40.21M-260WT
F1B	6	PL 6.35 X 3048 X 5486	G40.21M-260WT
F1C	2	PL 6.35 X 3048 X 1018	G40.21M-260WT
F1D	4	PL 6.35 X 3048 X 3386	G40.21M-260WT
F1E	4	PL 6.35 X 3048 X 5993	G40.21M-260WT
F1F	4	PL 6.35 X 3048 X 2091	G40.21M-260WT
F1G	4	PL 6.35 X 3048 X 3733	G40.21M-260WT
F1H	4	PL 6.35 X 3048 X 4734	G40.21M-260WT
F2I	4	PL 6.35 X 3048 X 5427	G40.21M-260WT
F1J	2	PL 6.35 X 3156 X 1190	G40.21M-260WT
F1K	4	PL 6.35 X 6096 X 2046	G40.21M-260WT

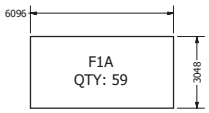

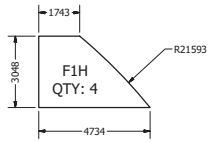

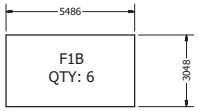

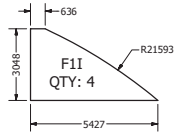

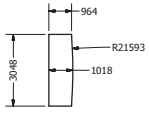

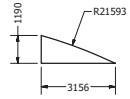

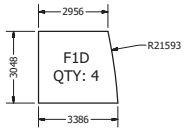

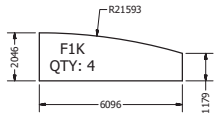

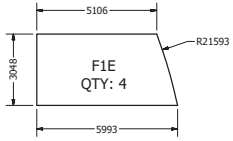

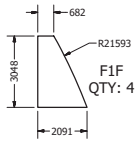

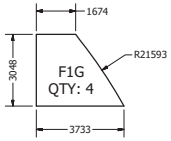

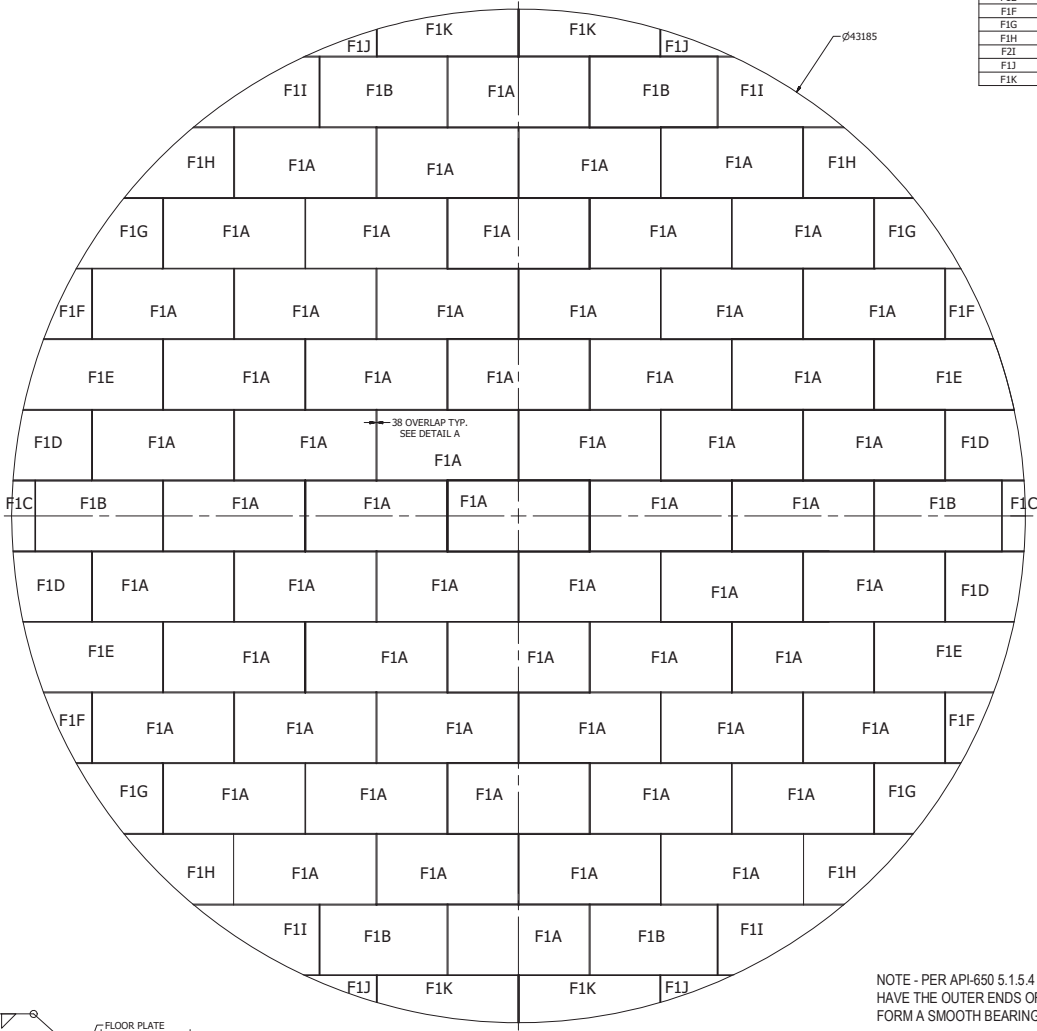

TANK 1 (20ML) FLOOR LAYOUT
SCALE 1 / 100

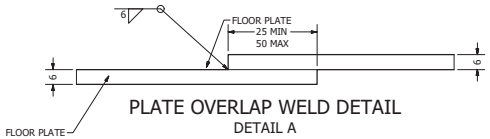

PLATE OVERLAP WELD DETAIL
DETAIL A

AS-BUILT
BY Inukshuk Construction Ltd. DATE 2018/07/25

NOTE - PER API-650 5.1.5.4 - BOTTOM PLATES UNDER THE SHELL SHALL HAVE THE OUTER ENDS OF THE JOINTS FITTED AND LAP-WELDED TO FORM A SMOOTH BEARING SURFACE.

19-Jul-2017
Permit Number: P471

DRAWN	JACOB SAUNDERS	1/5/2017	TK #1 (20ML) - FLOOR LAYOUT
CHECKED	MARC LOSIER	3/14/2017	
QA			TITLE: MELIADINE FIELD ERECTED TANK NO. 1 (20ML) - FLOOR AND ROOF LAYOUT
MFG			
APPROVED			SIZE: A1 — DWG NO: 295-M1 — REV: 1
			SCALE — SHEET 1 OF 2

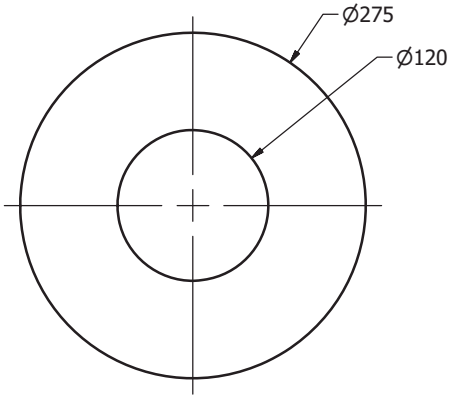

M81201 QTY	
Tank No.	QTY
1	1
2	1
3	1
4	1
5	1
6	1
TOTAL	6

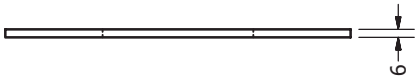

REINFORCING PLATE
100NS ROOF NOZZLE
QTY: 6
1 PER TANK
MARK 81201
SCALE 1/4

MATERIAL:
STEEL CSA G40.21-300W

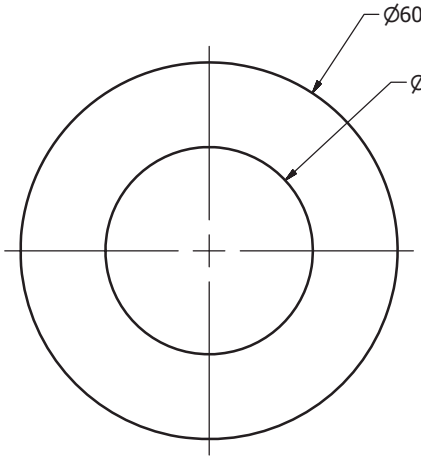

M81202 QTY	
Tank No.	QTY
1	2
2	1
3	0
4	0
5	0
6	0
TOTAL	10



REINFORCING PLATE
300NS ROOF NOZZLE FOR PV VENT
QTY: 10
MARK 81202
SCALE 1/8

AS-BUILT
BY Inukshuk Construction Ltd. DATE 2018/07/25



Permit Number: P471

REVISION HISTORY		
REV	DESCRIPTION	DATE
4	THIS SHEET ADDED	7/7/2017

DRAWN Jacob Saunders	2/2/2017	REINFORCING PAD FOR ECN-001
CHECKED Marc Losier	3/16/2017	TITLE: REINFORCING PLATE DETAILS
QA		
MFG		
APPROVED		

SIZE	DWG NO	REV
A3	295-M8	4

SCALE 1/4 SHEET 13 OF 13

PARTS LIST CENTER COLUMN				
ITEM	ITEM QTY	DESCRIPTION	MATERIAL	MASS
1M9301	1	16 [5/8"]THK X 1676 [5'-6"] DIA	G40.21M - 300W	275.061 kg
1M9302	1	25 [1"] THK X 2400 [7'-10 1/2"] DIA	G40.21M - 300W	873.193 kg
1M9303	1	25 [1"] THK X 2083 [6'-10"] DIA.	G40.21M-300W	679.342 kg
1M9304	7	16 [5/8"] THK X 902 [2'-11 1/2"] WD X 902 [2'-11 1/2"] LG	G40.21M - 300W	7.795 kg
1M9305	1	PIPE 406 [16"] DIA SCH30 X 14740 [48' - 4 3/16"] LG	ASTM A53 GR-B	3029.530 lbmass
1M9306	4	6 [1/4"] THK X 76 [3"] WD X 102 [4"] LG	G40.21M - 300W	0.851 lbmass

PARTS LIST FOR ONE INTERMEDIATE COLUMN (7 REQUIRED)				
ITEM	ITEM QTY	DESCRIPTION	MATERIAL	MASS
1M9308	1	13 [1/2"] THK X 1473 [4'-10"] DIA	G40.21M - 300W	169.937 kg
1M9309	1	13 [1/2"] THK X 434 [1'-5 1/8"] WD X 702 [2'-3 5/8"] LG	G40.21M 300W	18.624 kg
1M9310	1	HSS 324 X 9.4 (12.75" O.D X 3/8") 13684 [44'-10 3/4"] LG	G40.21M 350W CLASS H	2236.487 lbmass
1M9311	2	PL 10 (3/8") THK 164 [6 1/2"] WD x 164 [6 1/2"] LG	G40.21M 300W	0.789 kg
1M9312	1	25 [1"] THK X 1422 [4'-8"] DIA	G40.21M - 300W	523.752 kg
1M9313	4	6 [1/4"] THK X 76 [3"] WD X 102 [4"]LG	G40.21M - 300W	0.851 lbmass

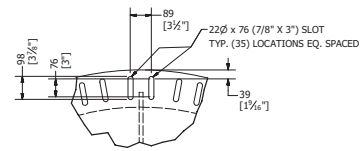

DETAIL A
SCALE 1/10

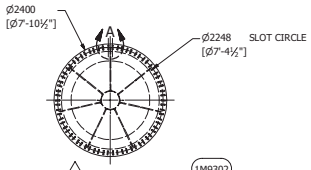

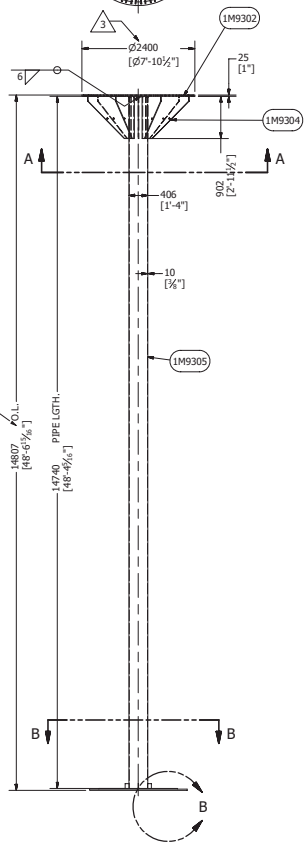

CENTER COLUMN
SCALE 1/50

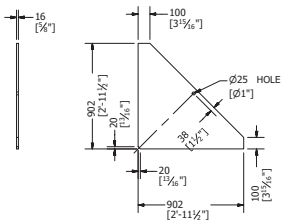

Pc 1M91304
SCALE 1/20

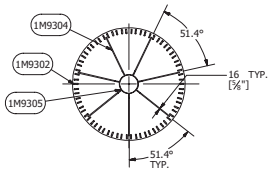

SECTION A-A
SCALE 1/50

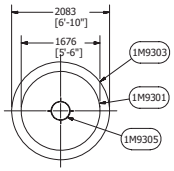

SECTION B-B
SCALE 1/50

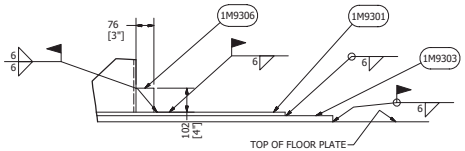

DETAIL B
SCALE 1 / 10

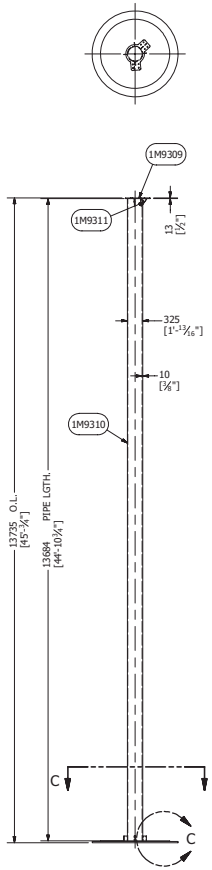

INTERMEDIATE COLUMN
QTY: 7
SCALE 1/50

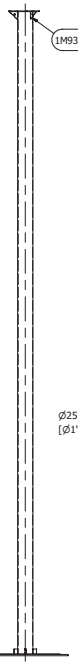

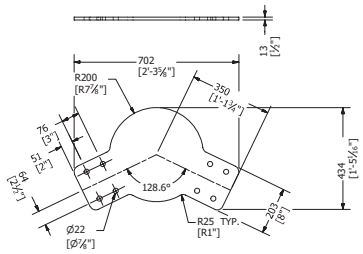

Pc 1M9309 DETAIL
SCALE 1/10

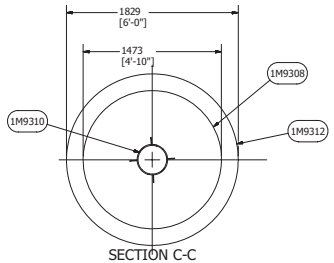

SECTION C-C
SCALE 1/25

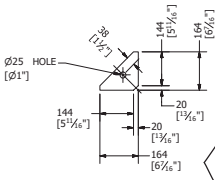

Pc 1M9311
SCALE 1/10

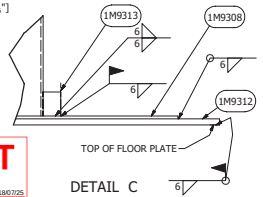

DETAIL C
SCALE 1 / 10

AS-BUILT
BY Inukshuk Construction Ltd. DATE 2018/07/25

17-Jul-2017
Permit Number: P471

REVISION HISTORY			
ZONE	REV	DESCRIPTION	DATE
	3	DOLLAR PLATE DIA CHG.	4/5/2017
C12, H11	3	CENTER COLUMN PIPE LENGTH INCREASED BY 14MM	4/10/17

DRAWN	MARC LOSIER	3/17/2017
CHECKED		
QA		
MFG		
APPROVED		

CENTER AND INTERMEDIATE COLUMN DETAILS

TITLE
AGNICO EAGLE -MELIADINE GOLD MINE -
TK #1 - 20,000CUM TANK 43M DIA X 14M H

SIZE	DWG NO	REV
A1	295-M9	6

SCALE

SHEET 3 OF 7

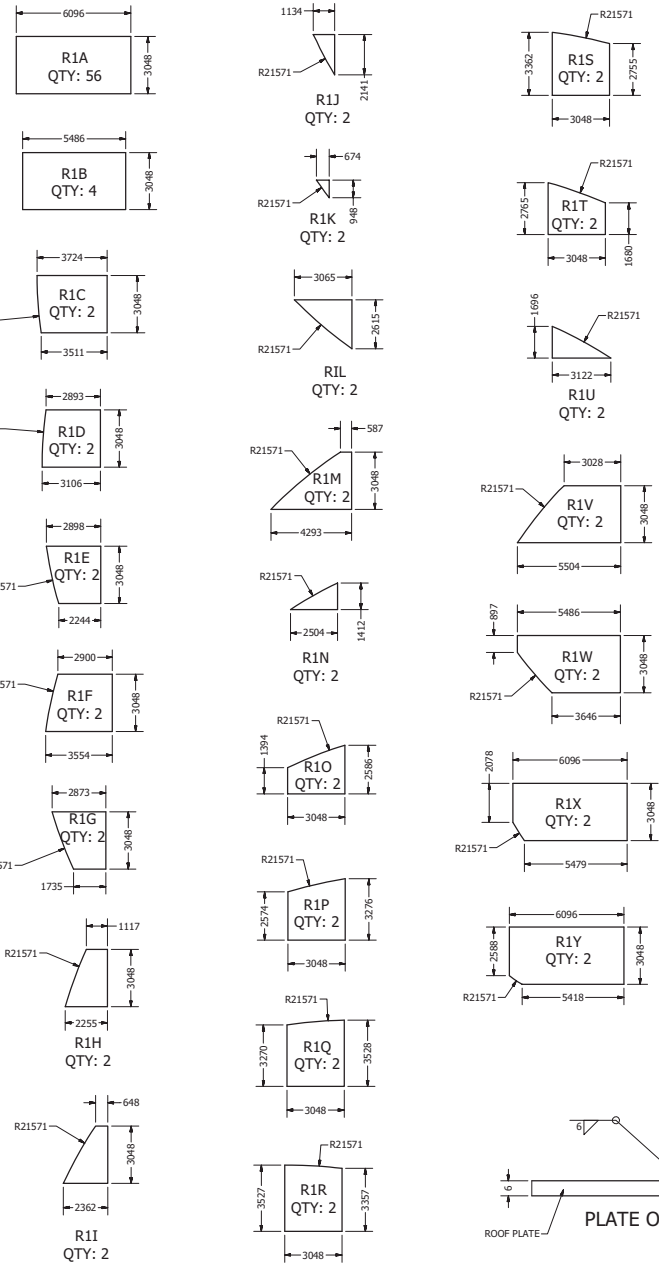

PARTS LIST			
ITEM	QTY	DESCRIPTION	MATERIAL
R1A	56	PL 6.35 X 3048 X 6096	G40.21M-260WT
R1B	4	PL 6.35 X 3048 X 5486	G40.21M-260WT
R1C	2	PL 6.35 X 3048 X 3724	G40.21M-260WT
R1D	2	PL 6.35 X 3048 X 3106	G40.21M-260WT
R1E	2	PL 6.35 X 3048 X 2898	G40.21M-260WT
R1F	2	PL 6.35 X 3048 X 3554	G40.21M-260WT
R1G	2	PL 6.35 X 3048 X 2873	G40.21M-260WT
R1H	2	PL 6.35 X 3048 X 2255	G40.21M-260WT
R1I	2	PL 6.35 X 3048 X 2362	G40.21M-260WT
R1J	2	PL 6.35 X 2141 X 1134	G40.21M-260WT
R1K	2	PL 6.35 X 948 X 674	G40.21M-260WT
R1L	2	PL 6.35 X 2615 X 3065	G40.21M-260WT
R1M	2	PL 6.35 X 3048 X 4293	G40.21M-260WT
R1N	2	PL 6.35 X 2504 X 1412	G40.21M-260WT
R1O	2	PL 6.35 X 3048 X 2586	G40.21M-260WT
R1P	2	PL 6.35 X 3048 X 3276	G40.21M-260WT
R1Q	2	PL 6.35 X 3048 X 3528	G40.21M-260WT
R1R	2	PL 6.35 X 3048 X 3357	G40.21M-260WT
R1S	2	PL 6.35 X 3048 X 3362	G40.21M-260WT
R1T	2	PL 6.35 X 3048 X 2765	G40.21M-260WT
R1U	2	PL 6.35 X 1696 X 3122	G40.21M-260WT
R1V	2	PL 6.35 X 3048 X 5504	G40.21M-260WT
R1W	2	PL 6.35 X 3048 X 5486	G40.21M-260WT
R1X	2	PL 6.35 X 3048 X 6096	G40.21M-260WT
R1Y	2	PL 6.35 X 3048 X 6096	G40.21M-260WT

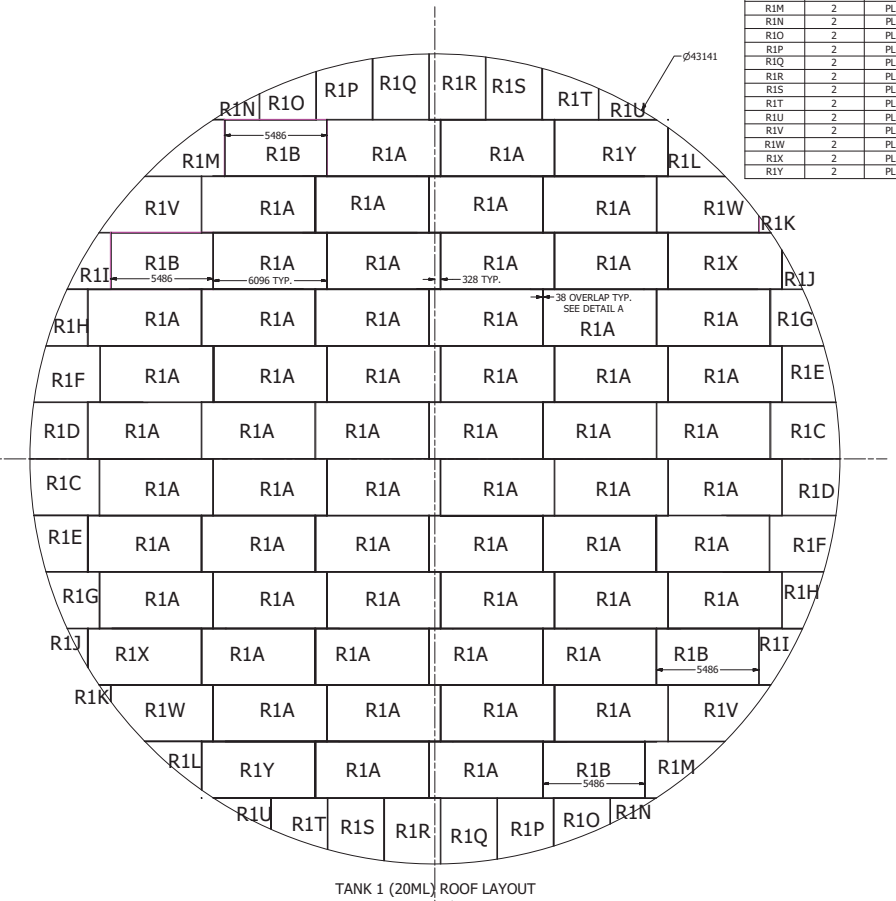

TANK 1 (20ML) ROOF LAYOUT
SCALE 1 / 125

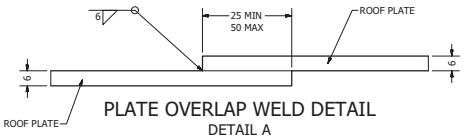

PLATE OVERLAP WELD DETAIL
DETAIL A

AS-BUILT
BY Inukshuk Construction Ltd. DATE 2018/07/25

19-Jul-2017
Permit Number: P471

DRAWN	JACOB SAUNDERS	1/5/2017	TK #1 (20ML) ROOF LAYOUT
CHECKED	MARC LOSIER	3/14/2017	TITLE: MELIADINE FIELD ERECTED TANK NO. 1 (20ML) - FLOOR AND ROOF LAYOUT
QA			
MFG			
APPROVED			
SIZE	A1	DWG NO	295-M1 REV 1
SCALE		SHEET 2 OF 2	

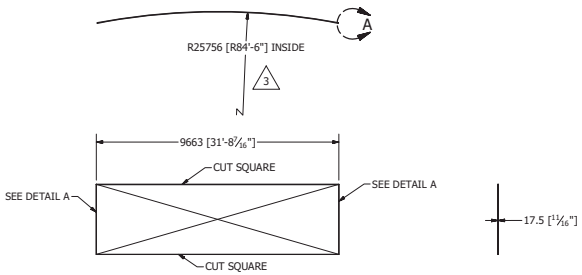

DEVELOPED VIEW
COURSE NO. 1 (BOTTOM) 17.5mm THK (11/16")
CUT FROM PLATE 2874mm x 9729mm
QTY: 14
MARK 7101

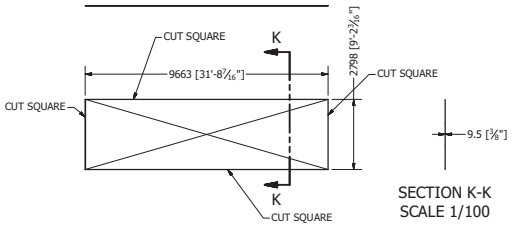

DEVELOPED VIEW
COURSE NO. 5 (TOP) 9.5mm THK (3/8")
CUT FROM PLATE 2874mm X 9729mm
QTY: 14
MARK 7104

SECTION K-K
SCALE 1/100

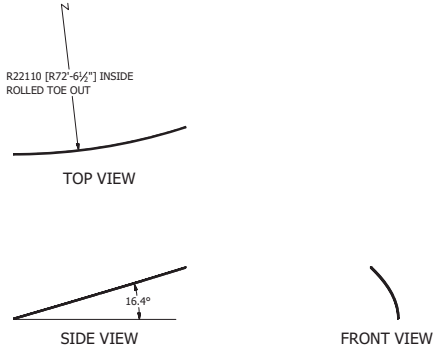

STAIRWAY HANDRAIL ANGLE
50.8 X 50.8 X 6.4 X 6096MM
(2" X 2" X 1/4" X 20' LONG)
STEEL CSA G40.21M 350W
QTY: 6
MARK 7107

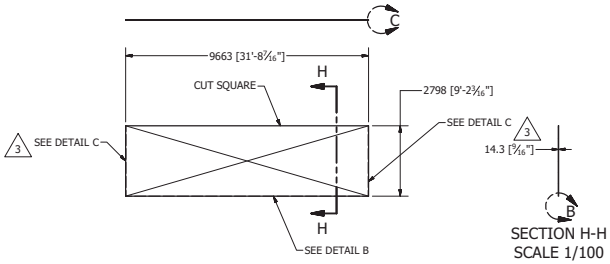

DEVELOPED VIEW
COURSE NO. 2 - 14.3mm THK (9/16")
CUT FROM PLATE 2874mm x 9729mm
QTY: 14
MARK 7102

SECTION H-H
SCALE 1/100

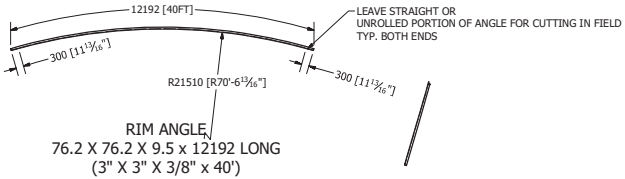

RIM ANGLE
76.2 X 76.2 X 9.5 x 12192 LONG
(3" X 3" X 3/8" x 40')
STEEL CSA G40.21M 350W
ROLLED TOE OUT
QTY: 12
MARK 7105

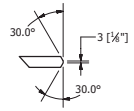

DETAIL A
COURSE NO. 1
VERT PREP. TYP. BOTH ENDS
SCALE 1 / 4

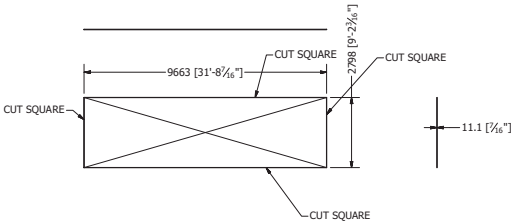

DEVELOPED VIEW
COURSE 3 & 4 - 11.2MM THK (7/16")
FROM PLAE 2874mm x 9729mm
QTY: 28
MARK 7103



ROOF TOP HANDRAIL ANGLE
50.8 X 50.8 X 6.4 (2" X 2" X 1/4")
STEEL CSA G40.21M 350W
ROLLED TOE OUT
QTY: 12
MARK 7106

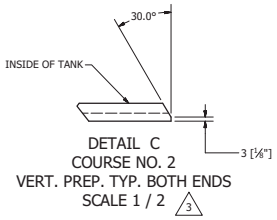

DETAIL C
COURSE NO. 2
VERT. PREP. TYP. BOTH ENDS
SCALE 1 / 2

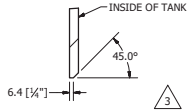

DETAIL B
COURSE NO. 2 BOTTOM
EDGE PREP.

NOTES:

ONLY COURSE NO. 1 SHELL PLATES REQUIRE SHOP ROLLING FOR TANK NO.1

SHELL PLATES TO BE CHECKED
CORNER TO CORNER FOR SQUARENESS

STEEL PLATES: 38WT SUPPLIED BY MEL
STEEL SHAPES: 350W SUPPLIED BY FORMATECH

AS-BUILT
BY Inukshuk Construction Ltd. DATE 2018/07/25

23-Jul-2017
Permit Number: P471

REVISION HISTORY			
ZONE	REV	DESCRIPTION	DATE
3D, 3B	3	DETAIL A & B MODIFIED	2/14/2017
11H, 4C	3	COURSE NO. 1 ROLLING RAD. CHANGED. DETAIL C ADDED (VERT. COURSE NO. 2 EDGE PREP.)	

DRAWN	Marc Losier	2/2/2017
CHECKED	Jacob Saunders	2/2/2017
QA		
MFG		
APPROVED		

TANK NO. 1 - 20,000 CUM

TITLE: MELIADINE FIELD ERECTED TANKS - SHELL PLATES AND ANGLES ROLLING DETAILS

SIZE	DWG NO	REV
A1	295-M7	4

SCALE

SHEET 1 OF 6

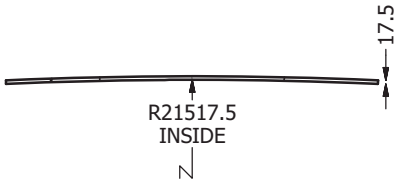

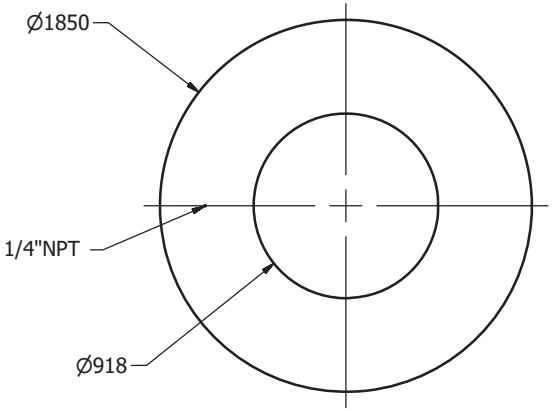

REINFORCING PLATE
SHELL MANHOLE 900MM (36")
TANK NO. 1 - 20ML
MARK: 8101
QTY: 4

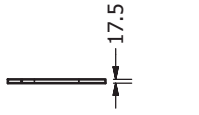

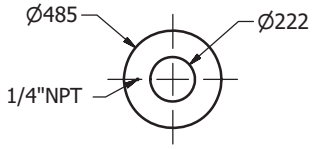

REINFORCING PLATE
SHELL NOZZLE LOADING 200MM (8")
TANK NO. 1 - 20ML
MARK: 8102
QTY: 1

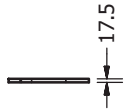

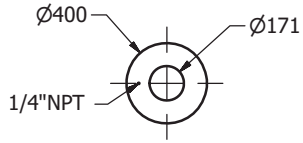

REINFORCING PLATE
SHELL NOZZLE UNLOADING 150MM (6")
TANK NO. 1 - 20ML
MARK: 8103
QTY: 3

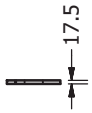

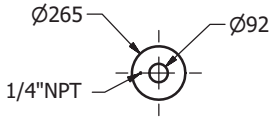

REINFORCING PLATE
SHELL WATER DRAW OFF 75MM (3")
TANK NO. 1 - 20ML
MARK: 8104
QTY: 6

AS-BUILT
BY Inukshuk Construction Ltd. DATE 2018/07/25

MATERIAL:
STEEL CSA G40.21-38WT
NORMALIZED
TRANSVERSE CHARPY: TCVN 13FT/LBS@-45F
LONGITUDINAL CHARPY: LCVN 15FT/LBS@-45F



Permit Number: P471

DRAWN Jacob Saunders	2/2/2017	TANK NO. 1 (20ML) SHELL
CHECKED Marc Losier	3/16/2017	TITLE: REINFORCING PLATE DETAILS
QA		
MFG		
APPROVED		

SIZE	DWG NO	REV
A3	295-M8	3

SCALE 1/25 SHEET 1 OF 12

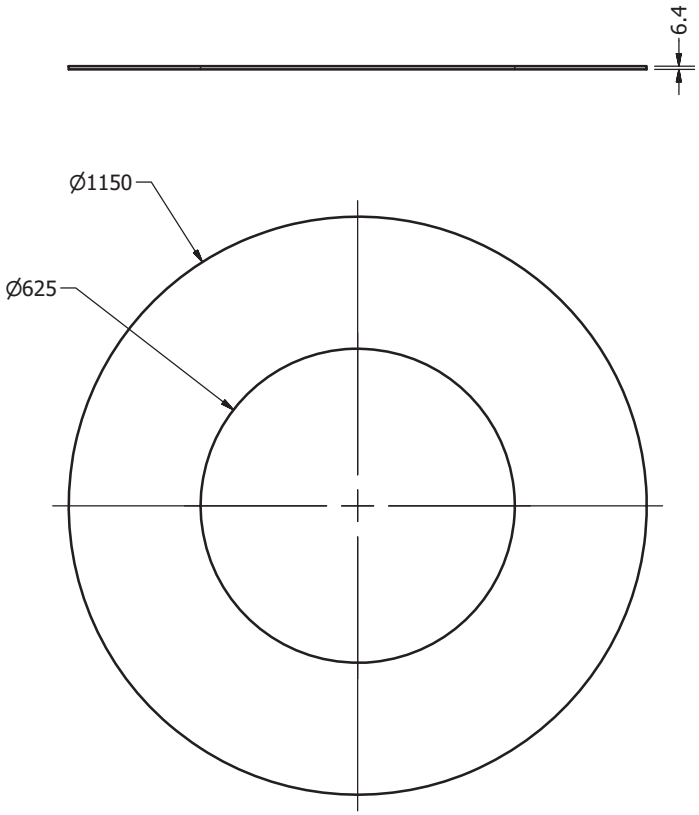

REINFORCING PLATE
ROOF MANHOLE 600MM
TANK NO. 1 - 20ML
MARK: 8105
QTY: 4

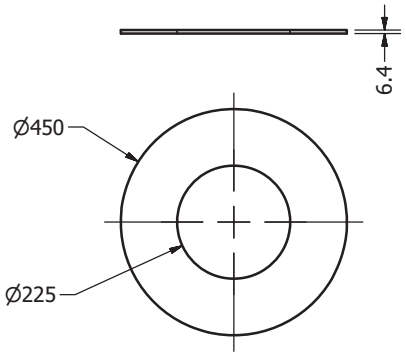

REINFORCING PLATE
ROOF NOZZLE 200MM
TANK NO. 1 - 20ML
MARK 8106
QTY: 1

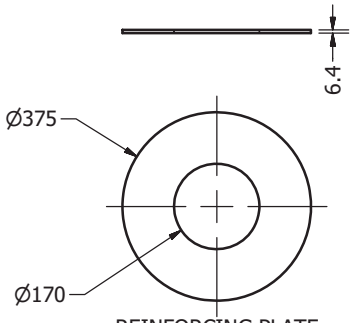

REINFORCING PLATE
ROOF GAUGE HATCH 150MM
TANK NO. 1 - 20ML
MARK: 8107
QTY: 1

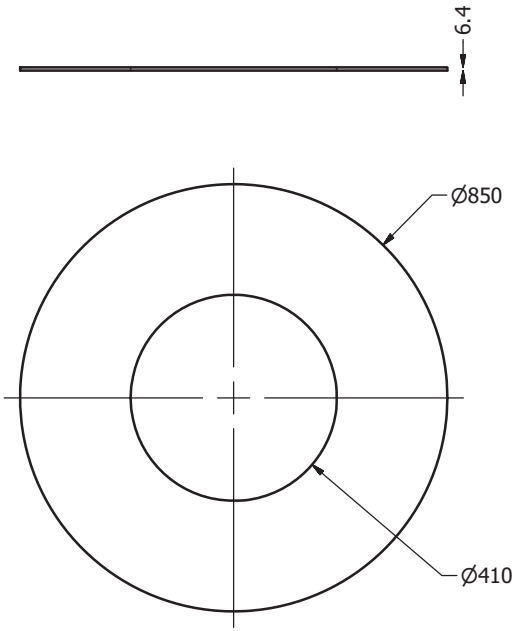

REINFORCING PLATE
ROOF VENT 400MM
TANK NO. 1 - 20ML
MARK: 8108
QTY: 1

AS-BUILT
BY Inukshuk Construction Ltd. DATE 2018/07/25

23-Jul-2017
Permit Number: P471

MATERIAL:
STEEL CSA G40.21-38WT
NORMALIZED
TRANSVERSE CHARPY: TCVN 13FT/LBS@-45F
LONGITUDINAL CHARPY: LCVN 15FT/LBS@-45F

DRAWN	Jacob Saunders	2/2/2017
CHECKED	Marc Losier	3/16/2017
QA		
MFG		
APPROVED		

TANK NO. 1 (20ML) ROOF

TITLE
REINFORCING PLATE DETAILS

SIZE	DWG NO	REV
A3	295-M8	3

SCALE 1/10 SHEET 2 OF 12

PARTS LIST			
ITEM	ITEM QTY	Description	MATERIAL
1M9200-8	70	OUTER RAFTER - SEE SHT. 2	G40.21M - 350W
1M9200-10	70	SHELL CLIP - SEE SHT. 2	G40.21M - 300W
1M9200-11	1	CENTER COLUMN - SEE SHT. 3	
1M9200-15	7	TOP INTERMEDIATE GIRDER CONNECTION PLATE - SEE SHT. 2	G40.21M - 300W
1M9200-37	7	INTERMEDIATE GIRDER BEAM ASSY - SEE SHT. 2	
1M9200-38	35	INNER RAFTER - SEE SHT. 2	G40.21M - 350W
1M9200-39	7	INTERMEDIATE COLUMN - SEE SHT. 3	
1M9200-40	4	FB50X6 [FB2"X1/4"] - 2184 [7'-2"] LG	G40.21M - 300W
1M9200-41	4	FB50X6 [FB2"X1/4"] - 1574 [5'-2"] LG	G40.21M - 300W

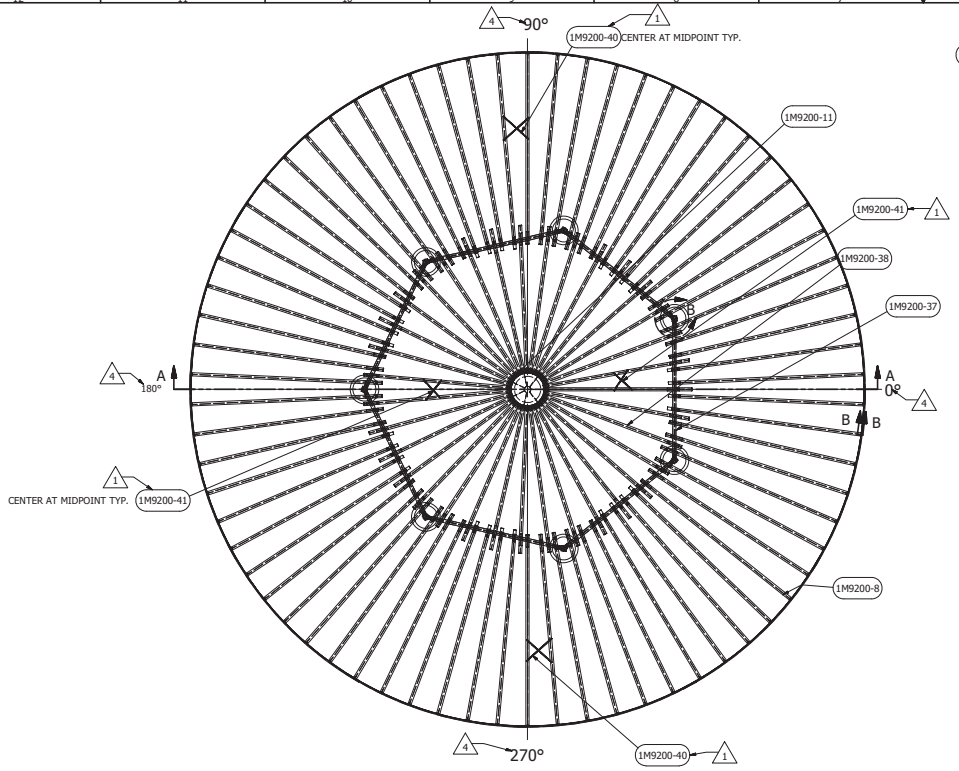

RAFTER LAYOUT
PLAN VIEW
ROOF REMOVED FOR CLARITY
SCALE 1/150

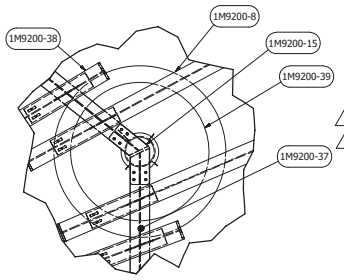

DETAIL B
SCALE 1/25

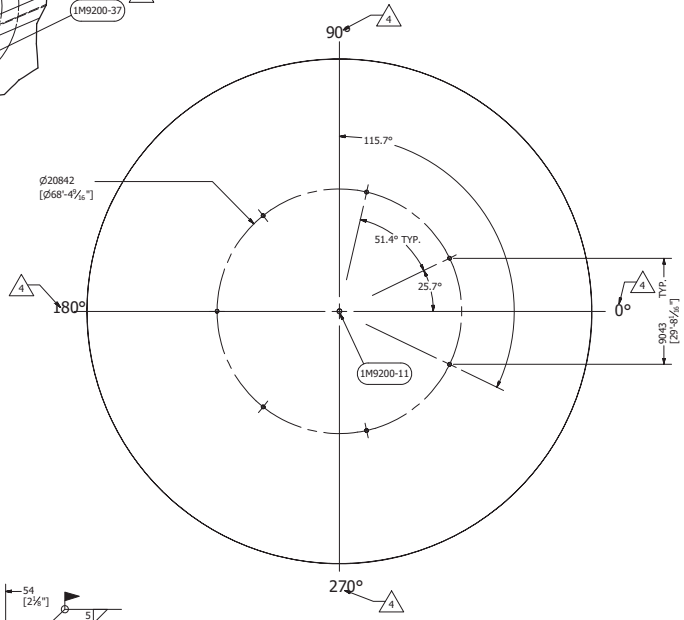

COLUMNS LAYOUT DETAILS
SCALE 1/200

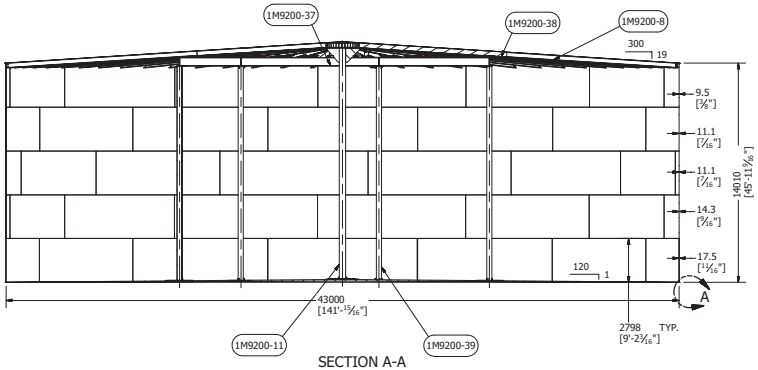

SECTION A-A
SCALE 1/150

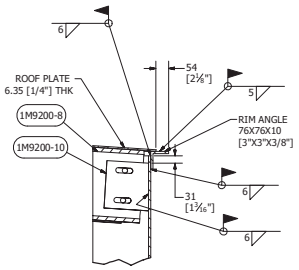

SECTION B-B
SHELL CLIP FITTING DETAIL
SCALE 1 / 10

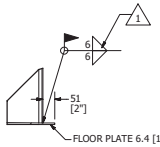

DETAIL A
SCALE 1 / 10

AS-BUILT
BY Inukshuk Construction Ltd. DATE 2018/07/25

17-Jul-2017
Permit Number: P471

REVISION HISTORY			
ZONE	REV	DESCRIPTION	DATE
G7, D8, H8, E12, B5	1	RAFTER BRACE ADDED, WELDING DETAIL ADDED IN DETAIL A	3/31/2017
F7, H9, F11, D9, F1, G3, F5, D3	4	REFERENCE ANGLES CHANGED	4/24/2017

DRAWN	MARC LOSIER	3/17/2017
CHECKED		
QA		
MFG		
APPROVED		

RAFTER AND COLUMN LAYOUT

TITLE
AGNICO EAGLE -MELIADINE GOLD MINE -
TK #1 - 20,000CUM TANK 43M DIA X 14M H

SIZE	DWG NO	REV
A1	295-M9	6

SCALE

SHEET 1 OF 7

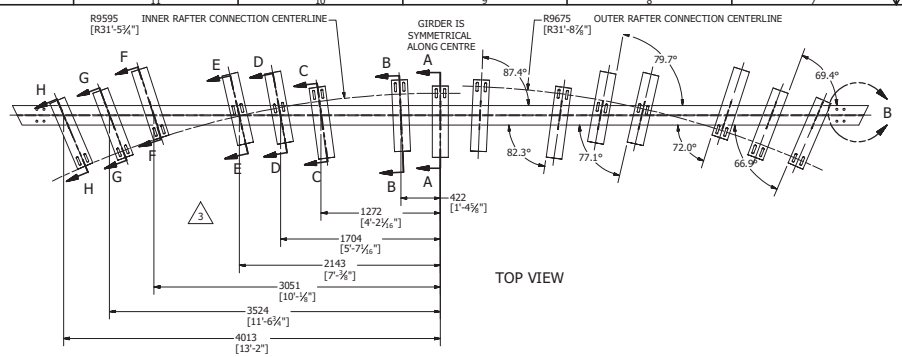

TOP VIEW

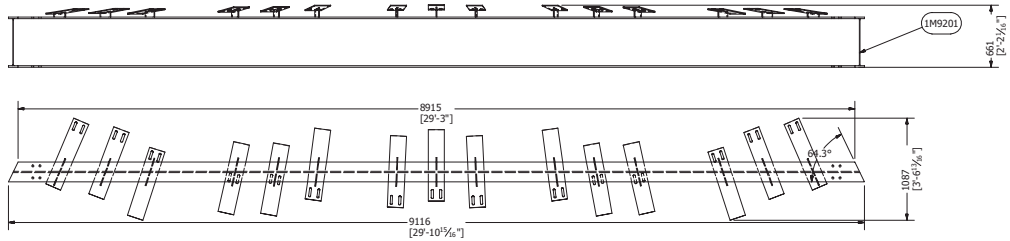

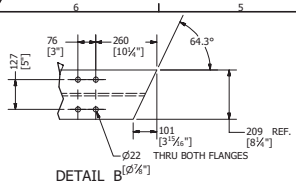

DETAIL B
SCALE 1/10

PARTS LIST				
ITEM	ITEM QTY	DESCRIPTION	MATERIAL	MASS
1M9201	1	W530X92 [W21"X62] X 9116 [29'-10 7/8"] LG	G40.21M-350W	832.884 kg
1M9202	1	10 [3/8"] THK X 106 [4 3/16"] WD X 305 [1'-0"] LG	G40.21M-300W	2.187 kg
1M9203	2	10 [3/8"] THK X 104 [4 1/8"] WD X 305 [1'-0"] LG	G40.21M-300W	2.146 kg
1M9204	2	10 [3/8"] THK X 53 [2 1/16"] WD X 305 [1'-0"] LG	G40.21M-300W	0.985 kg
1M9205	2	10 [3/8"] THK X 99 [3 1/8"] WD X 305 [1'-0"] LG	G40.21M-300W	2.034 kg
1M9206	11	10 [3/8"] THK X 171 [6 3/4"] WD X 762 [2'-6"] LG	G40.21M-300W	9.462 kg
1M9207	4	10 [3/8"] THK X 171 [6 3/4"] WD X 762 [2'-6"] LG	G40.21M-300W	9.462 kg
1M9208	2	10 [3/8"] THK X 89 [3 1/2"] WD X 305 [1'-0"] LG	G40.21M-300W	1.816 kg
1M9209	2	10 [3/8"] THK X 74 [2 7/8"] WD X 305 [1'-0"] LG	G40.21M-300W	1.458 kg
1M9210	2	10 [3/8"] THK X 63 [2 1/2"] WD X 305 [1'-0"] LG	G40.21M-300W	1.227 kg
1M9211	2	10 [3/8"] THK X 94 [3 11/16"] WD X 305 [1'-0"] LG	G40.21M-300W	1.926 kg

BILLING FOR ONE GIRDER ASSEMBLY SHOWN
TOTAL SEVEN GIRDER ASSEMBLIES REQUIRED

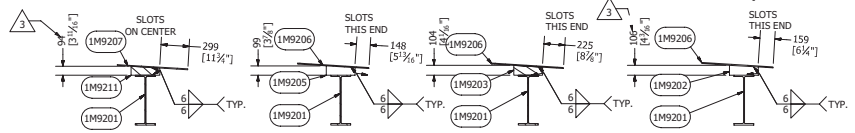

SECTION D-D SCALE 1/25
SECTION C-C SCALE 1/25
SECTION B-B SCALE 1/25
SECTION A-A SCALE 1/25

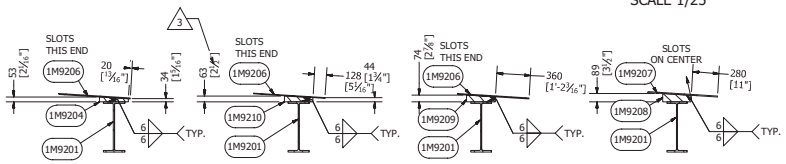

SECTION H-H SCALE 1/25
SECTION G-G SCALE 1/25
SECTION F-F SCALE 1/25
SECTION E-E SCALE 1/25

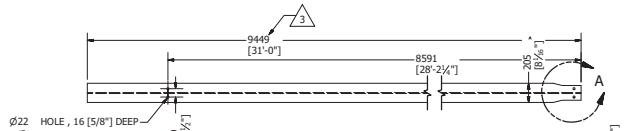

Pc 1M9200-38 DETAIL
INNER RAFTER
SCALE 1 / 25

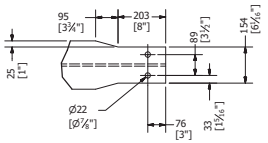

DETAIL A
SCALE 1/10

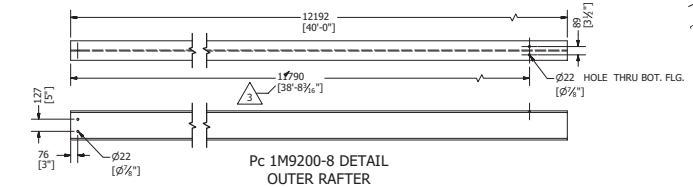

Pc 1M9200-8 DETAIL
OUTER RAFTER
SCALE 1 / 25

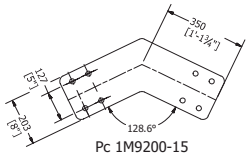

Pc 1M9200-15
TOP BEAM CONNECTION PLATE
SCALE 1/10

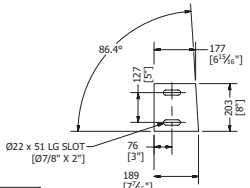

Pc 1M9200-10
SHELL CLIP
SCALE 1/10

PARTS LIST				
ITEM	ITEM QTY	DESCRIPTION	MATERIAL	MASS
1M9200-8	70	W310X74 [W12"X50#] X 12192 [40'-0"] LG OUTER RAFTER	G40.21M - 350W	1986.765 lbmass
1M9200-10	70	10 [3/8"] THK X 164 [6 1/2"] WD x 203 [8"] LG - SHELL CLIP	G40.21M - 300W	2.553 kg
1M9200-15	7	13 [1/2"] THK X 428 [1'-4 7/8"] WD x 637 [2'-1 1/8"] LG - TOP INTERMEDIATE GIRDER CONNECTION PLATE	G40.21M - 300W	13.812 kg
1M9200-38	35	W310x74 [W12"x50#] x 9449 [31'-0"] LG INNER RAFTER	G40.21M - 350W	1532.411 lbmass

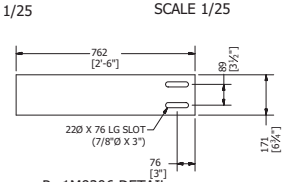

Pc 1M9206 DETAIL
SCALE 1/10

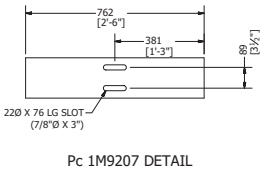

Pc 1M9207 DETAIL
SCALE 1/10

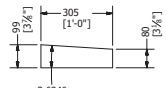

Pc 1M9205 DETAIL
SCALE 1/10

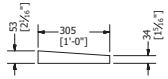

Pc 1M9204 DETAIL
SCALE 1/10

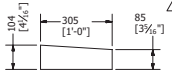

Pc 1M9203 DETAIL
SCALE 1/10

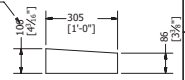

Pc 1M9202 DETAIL
SCALE 1/10

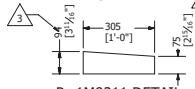

Pc 1M9211 DETAIL
SCALE 1/10

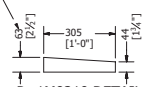

Pc 1M9210 DETAIL
SCALE 1/10

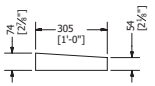

Pc 1M9209 DETAIL
SCALE 1/10

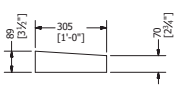

Pc 1M9208 DETAIL
SCALE 1/10

REVISION HISTORY			
ZONE	REV	DESCRIPTION	DATE
D10, G11, B10	3	INNER RAFTER LENTGH REDUCED, DIMENSIONS LOCATING RAFTER SUPPORT ADDED ON BEAM, HOLES IN INNER RAFTER OUTER HOLE LOCATION RELOCATED TO SUIT NEW DOLLAR PLATE DIA	4/3/2017
C4, C5, D2, F6, G6, G2, H4, G4	3	MODIFIED SECTION AA, DD, GG, AND DETAILS PC: 1M9202, 1M9210, 1M9211	4/10/2017

AS-BUILT
BY Inukshuk Construction Ltd. DATE 2018/07/05

17-Jul-2017
Permit Number: P471

DRAWN	MARC LOSIER	3/17/2017
CHECKED		
QA		
MFG		
APPROVED		

TITLE: INTERMEDIATE GIRDER AND RAFTER DETAILS

AGNICO EAGLE -MELIADINE GOLD MINE - TK #1 - 20,000CUM TANK 43M DIA X 14M H

SIZE A1 | DWG NO 295-M9 | REV 6

SCALE

SHEET 2 OF 7

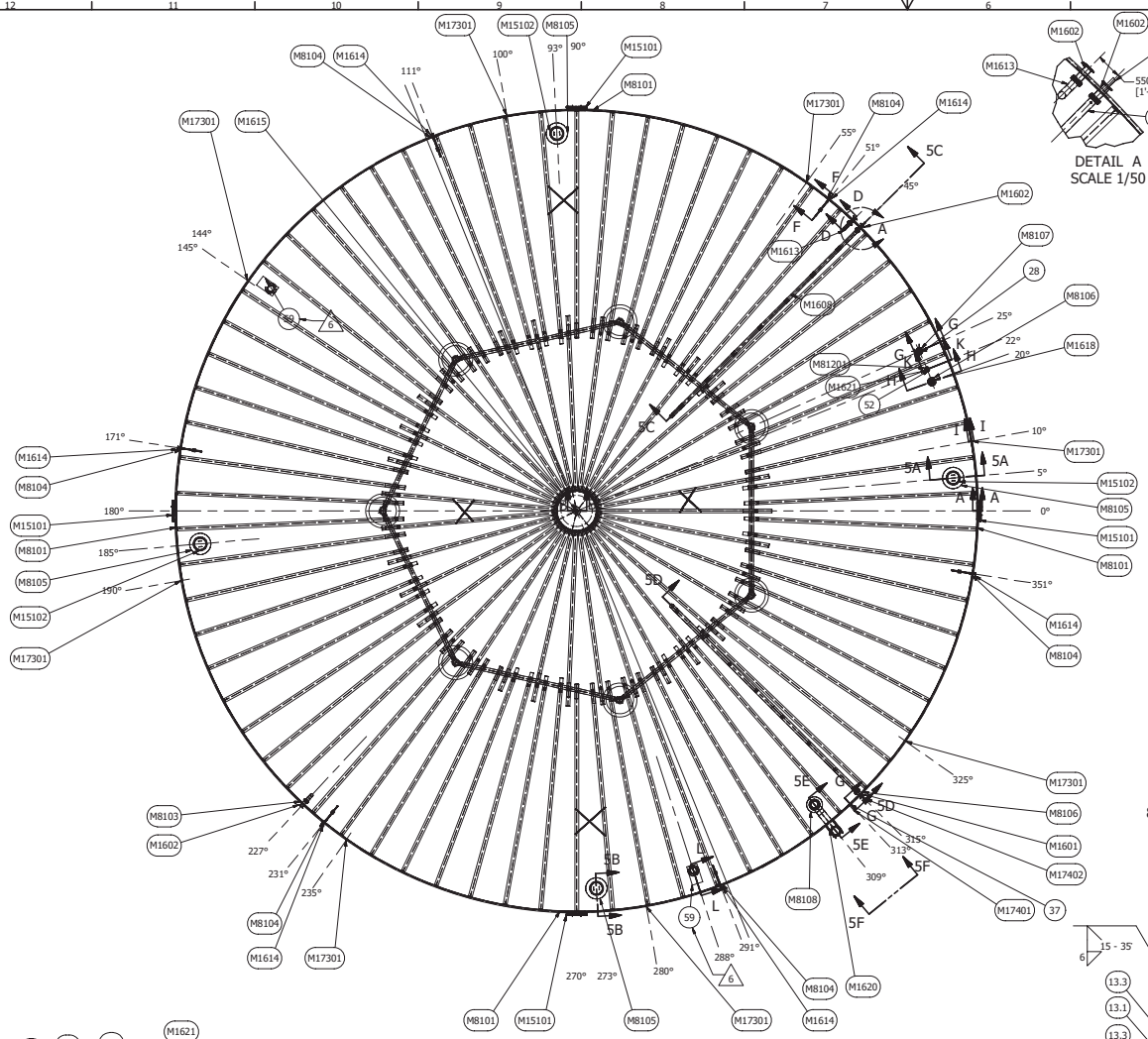

PLAN VIEW
ROOF PLATE NOT SHOWN FOR CLARITY
SCALE 1/125

DETAIL A
SCALE 1/50

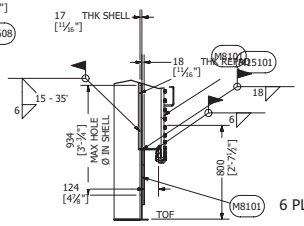

PART SECTION A-A
900NS MANHOLE
TYP. 4 PLACES: 0°, 90°, 180°, 270°
SCALE 1/20

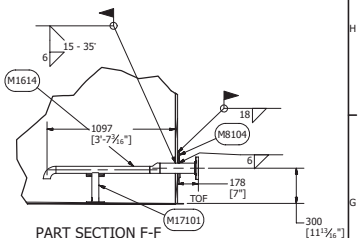

PART SECTION F-F
75MM [3"] WATER DRAWOFF
6 PLACES @ 51°, 111°, 171°, 231°, 291°351°
SCALE 1/20

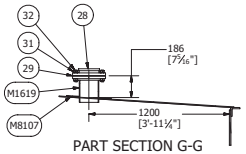

PART SECTION G-G
150NS [6"] GAUGE HATCH
SCALE 1/20

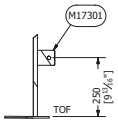

PART SECTION I-I
GROUNDING LUG
8 PLACES AT 10°, 55°, 100°, 145°, 190°, 235°, 280°, 325°
SCALE 1/10

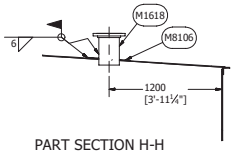

PART SECTION H-H
200NS [8"] OVERFILL PROTECTION
SCALE 1/25

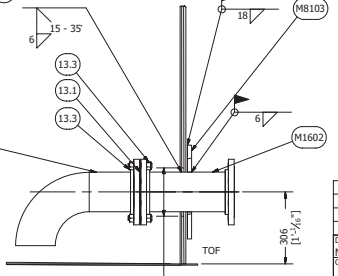

PART SECTION D-D
150NS [6"] LOW SUCTION
2 PLACES AT 47°, 227°
SCALE 1/10

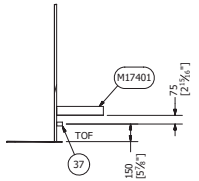

PART SECTION J-J
20NS [3/4"] TEMPERATURE
SENSOR CONNECTION
SCALE 1/20

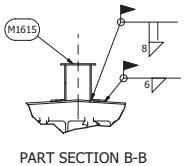

PART SECTION B-B
PAINTERS POST
SCALE 1/10

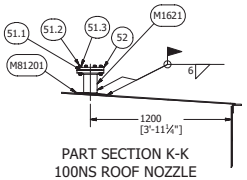

PART SECTION K-K
100NS ROOF NOZZLE
SCALE 1/20

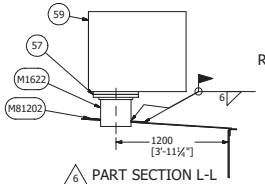

△6 PART SECTION L-L
PV VENT 300NS
5 PLACES AT 0°, 72°,144,216°, 288°
SCALE 1/25

NOTES:
ALL DIMENSIONS ARE IN MM UNLESS OTHERWISE NOTED
TOF DENOTES TOP OF FLOOR

AS-BUILT
BY Inukshuk Construction Ltd. DATE 2018/07/25

23-Jul-2017

Permit Number: P471

REVISION HISTORY		
REV	DESCRIPTION	DATE
6	THIS SHEET ADDED	6/23/2017
6	MODIFIED AS PER ECN-001	7/7/2017

DRAWN	MARC LOSIER	3/17/2017
CHECKED		
QA		
MFG		
APPROVED		

TITLE
AGNICO EAGLE -MELIADINE GOLD MINE -
TK #1 - 20,000CUM TANK 43M DIA X 14M H

SIZE	DWG NO	REV
A1	295-M9	6

SCALE

SHEET 4 OF 7

PARTS LIST

ITEM	ITEM QTY	DESCRIPTION	MATERIAL	FAB. DRG. NO.
13	3	150NS [6"] JOINT MATERIAL COMPRISING:		
13.1	1	150NS [6"] GASKET 150#, RING 3.2 [1/8"] THK.	DURLON 8500	
13.2	8	3/4" UNC X 4" STUD	L7	
13.3	16	3/4"-10 UNC HEAVY HEX NUTS	A194 GR.4	
15	1	200NS [8"] JOINT MATERIAL COMPRISING:		
15.1	1	200NS [8"] GASKET, 150#, RING, 3.2 [1/8"]THK.	DURL8500	
15.2	8	3/4" UNC X 4 1/4" LONG	L7	
15.3	16	3/4"-10 UNC HEAVY HEX NUTS	Steel, Mild	
19	1	400NS [16"] GASKET, RING, 1.6 [1/16"] THK	DURLON 8500	
21	16	1" UNC X 5 3/4" STUD	L7	
22	32	1" UNC HEAVY HEX NUT	A194 GR. 4	
26	2	25NS [1"] NPT COUPLING, 3000#, PRV PIPING CONNECION	A320LF2	
28	1	150NS [6"] GAUGE HATCH, SHANG AND JURS MODEL NO. 95010-02-00	ALUMINUM	
29	1	150NS [6"] GASKET, FULL FACE, 1.6 [1/16"] THK.	DURLON 8500	
31	16	3/4"-10 UNC HEAVY HEX NUTS	A194 GR. 4	
32	8	3/4" UNC X 4 1/4" LONG	L7	
37	1	20NS [3/4"] NPT COUPLING, 3000#, (TEMPERATURE SENSOR)	A350 LF2	
46	2	Pipe, XH, 3"NS X 3" LG	A53	
47	1	C150X12	G40.21M 350W	
48	1	U-BOLT 7/8"DIA FOR 400NS PIPE	Steel	
49	4	Hex Nuts (Inch Series) Heavy Hex Nut 7/8" UNC	A194 GR 4	
51	1	100NS JOINT COMPRISING		
51.1	1	GASKET, RING, 150#, 1.6 [1/16"] thk., 100NS [4"]	Garlok Gylon 3545	
51.2	8	STUD, 5/8" X 3 1/2" LONG	L7	
51.3	16	Hex Nut, HEAVY, 5/8" UNC	A194 GR 4	
52	1	Pipe Flanges - Flange Blind - Class 150.Inch	Steel	
57	2	GASKET, FLAT FACE, 1.6THK [1/16"], 300NS [12"]	Rubber	
59	2	PV Vent 300ns, SET PRESSURE: 1.35 oz/sqin	ENARDO 950	
M1601	1	200NS [8"] DOUBLE FLANGE SHELL NOZZLE		M16
M1602	3	150NS [6"] DOUBLE FLANGE SHELL NOZZLE		M16
M1603	1	200NS [8"] FIXED PIPE LOADING 14.3M LG		M16
M1608	1	150NS [6"] FIXED PIPE UNLOADING 14.3M LG		M16
M1613	2	Ø150 NS PIPING LOW LEVEL		M16
M1614	6	75NS [3"] WATER DRAWOFF VALVE SPOOL		M16
M1615	1	100NS [4"] PAINTERS POST		M16
M1616	1	400NS [16"] ROOF NOZZLE FOR VENT		M16
M1618	1	200NS [8"] ROOF NOZZLE FOR OVERFILL PROTECTION		M16
M1619	1	150NS [6"] ROOF NOZZLE FOR GAUGE HATCH		M16
M1620	1	400NS [16"] VENT RETURN BEND PIPE		M16
M1621	1	100NS ROOF NOZZLE AS PER ECN-001		M16
M1622	2	300NS ROOF NOZZLE		M16
M8101	4	900NS [36"] SHELL MANHOLE REINFORCING PAD		M8
M8102	1	200NS [8"] SHELL REINFORCING PAD FOR LOADING PIPE NOZZLE		M8
M8103	3	150NS [6"] SHELL NOZZLE REINFORCING PAD	Steel	M8
M8104	6	75NS [3"] SHELL NOZZLE REINFORCING PLATE FOR WATER DRAWOFF VALVE	Steel	M8
M8105	4	600NS [24"] ROOF MANHOLE REINFORCING PLATE		M8
M8106	1	200NS [8"] ROOF NOZZLE REINFORCING PLATE	Steel	M8
M8107	1	150NS [6"] ROOF NOZZLE REINFORCING PLATE FOR GAUGE HATCH	Steel, Mild	M8
M8108	1	400NS [16"] ROOF NOZZLE REINFORCING PLATE FOR VENT	Steel	M8
M15101	4	900NS [36"] SHELL MANHOLE		M15
M15102	4	600NS [24"] ROOF MANHOLE		M15
M17101	6	PIPE SUPPORT		M17
M17101	2	PIPE SUPPORT		M17
M17101	2	PIPE SUPPORT		M17
M17101	2	PIPE SUPPORT		M17
M17101	2	PIPE SUPPORT		M17
M17101	6	PIPE SUPPORT		M17
M17301	8	GROUNDING LUG	Stainless Steel, Austenitic	M17
M17401	1	L100X100X6 [L4"X4"X1/4"] 400 [15 3/4"] LG (TEMPERATURE SENSOR)		M17
M17402	14	L75X75X6 [L3"X3"X1/4"] 400 [15 3/4"] BRACKET FOR PIPING OR ELECTRICAL CONDUIT	Steel, Mild	M17
M81201	1	100NS ROOF NOZZLE REINFORCING PAD	Steel, Mild	M8
M81202	2	300NS ROOF NOZZLE REINFORCING PAD FOR PV VENT	Steel, Mild	M8
M17501L	1	PIPE SUPPORT 400NS VENT LEFT		M17
M17501R	1	PIPE SUPPORT 400NS VENT RIGHT		M17

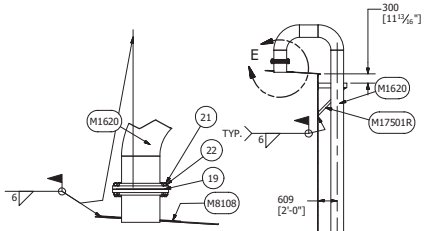

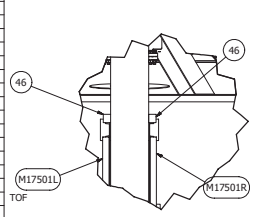

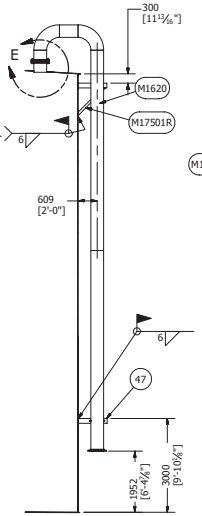

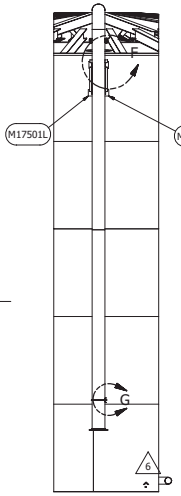

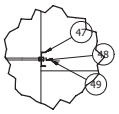

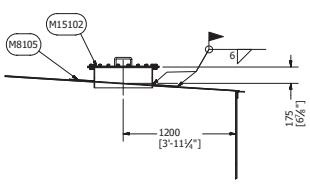

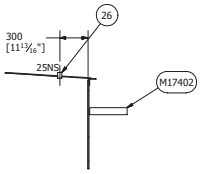

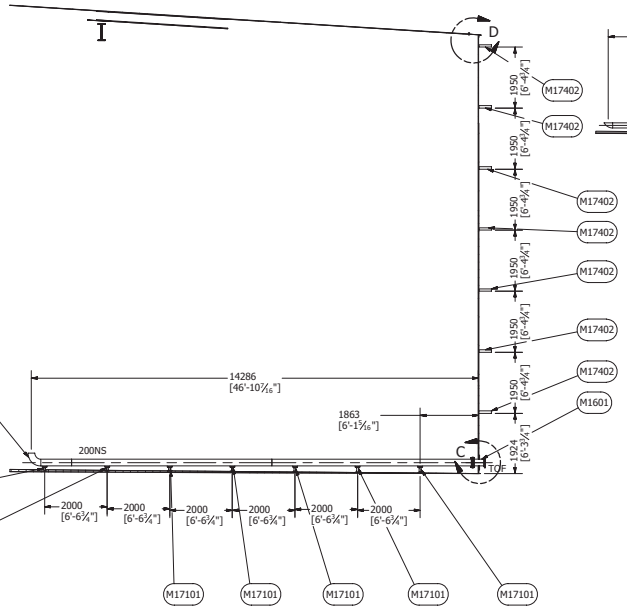

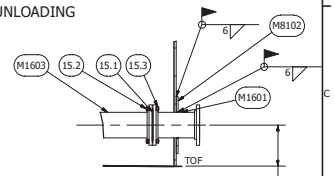

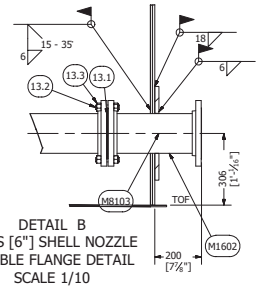

AS-BUILT
BY Inukshuk Construction Ltd. DATE 2018/07/25

23-Jul-2017
Permit Number: P471

NOTES:
ALL DIMENSIONS ARE IN MM UNLESS OTHERWISE NOTED
TOF DENOTES TOP OF FLOOR

REVISION HISTORY		
REV	DESCRIPTION	DATE
6	THIS SHEET ADDED	6/23/2017
6	MODIFIED AS PER ECN-001	7/7/17

DRAWN	MARC LOSIER	3/17/2017
CHECKED		
QA		
MFG		
APPROVED		

TITLE
AGNICO EAGLE -MELIADINE GOLD MINE -
TK #1 - 20,000CUM TANK 43M DIA X 14M H

SIZE	DWG NO	REV
A1	295-M9	6

SCALE
SHEET 5 OF 7

PARTS LIST			
ITEM	ITEM QTY	DESCRIPTION	MASS
1M09601	23	PREFABRICATED ROOF TOP SECTION. SEE DETAIL	122.184 kg
1M09602	1	HANDRAIL POST = L75X75X6 [L3"X3"X1/4"] X 1479 [4'-10 1/4"]	23.905 lbmass
4	1	L50X50X6 [L2"X2"X1/4"] 38 [1 1/2"] LG	0.402 lbmass
6	1		1889.380 kg

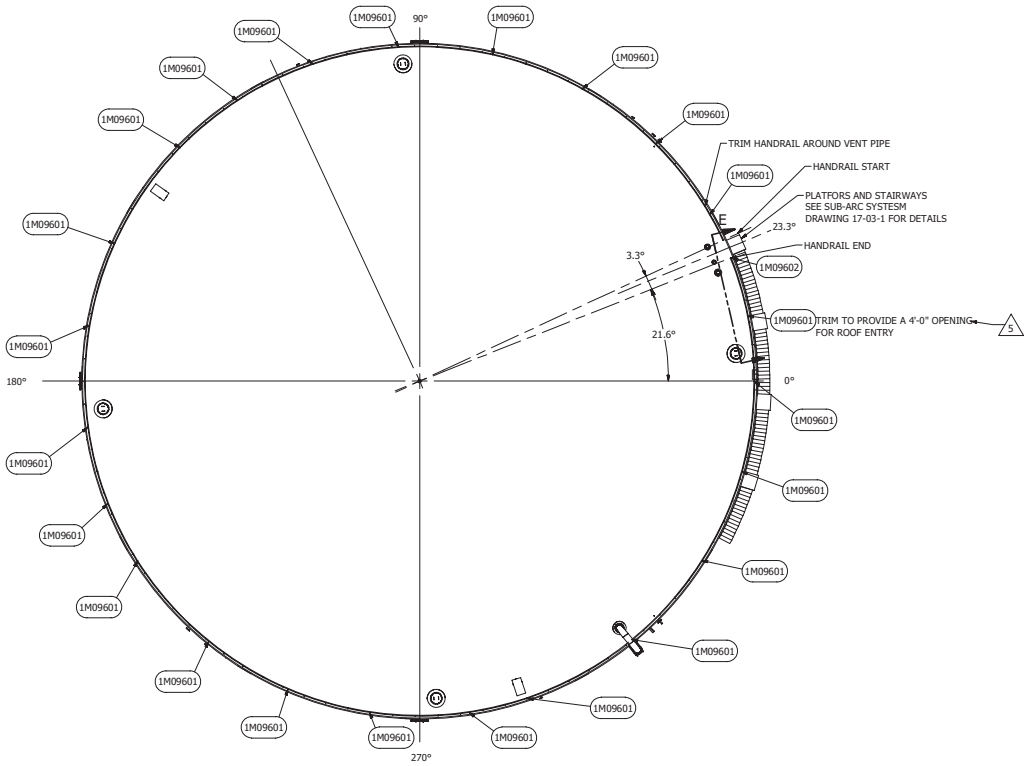

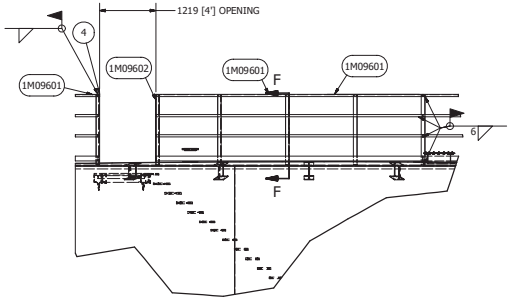

PART SECTION E-E
SCALE 1/50

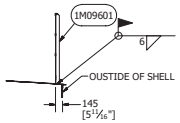

SECTION F-F
SCALE 1/50

PARTS LIST FOR ONE SECTION 23 REQUIRED						
ITEM	ITEM QTY	CUT (MM)	DESCRIPTION	PRE-FAB DRG #	MATERIAL	MASS
M17201	4	1479	L76X76X6 [3"X3"X1/4"]	M17	G40X21M 350W	23.905 lbmass
M7106	1	5791	L50X50X6[L2"X2"X6] ROOF HANDRAIL ROLLED ANGLE	M7	G40.21M 350W	27.482 kg
3	2	5791	FB50X6 [FB2"X1/4"]		G40.21M 300W	14.649 kg
4	1	5791	FB100X5 [4"X3/16"]		G40.21M 300W	22.033 kg

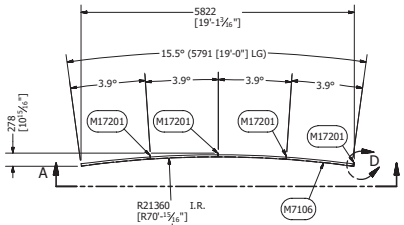

VIEW A-A
SCALE 1/50

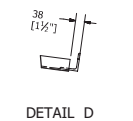

DETAIL D
SCALE 1/10

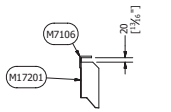

DETAIL C
SCALE 1/10

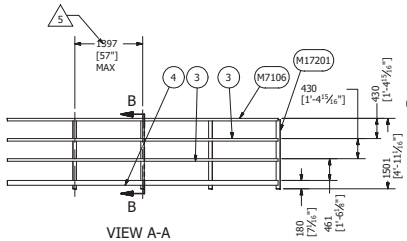

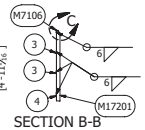

SECTION B-B
SCALE 1/50

Pc 1M09601
PREFABRICATED ROOF TOP HANDRAIL SECTION
QTY: 23
SCALE 1/50

FINISH:
SSPC SURFACE PREPERATION FOR PAINTING: SP6 COMMERCIAL SANDBLASTING
ONE COAT OF POLYVAL 390

AS-BUILT
BY Inukshuk Construction Ltd. DATE 2018/07/25

23-Jul-2017
Permit Number: P471

REVISION HISTORY			
ZONE	REV	DESCRIPTION	DATE
	4	THIS SHEET ADDED	4/25/2017
6F, 3F	5	NOTE ADDED AT ROOF ENTRY, MAX DIST. BTW POST ADDED	5/2/2017

DRAWN	MARC LOSIER	3/17/2017	ROOF HANDRAIL DETAIL
CHECKED			TITLE
QA			AGNICO EAGLE -MELIADINE GOLD MINE - TK #1 - 20,000CUM TANK 43M DIA X 14M H
MFG			
APPROVED			
			SIZE A1 / DWG NO 295-M9 / REV 6
			SCALE / SHEET 6 OF 7

PARTS LIST		
ITEM	ITEM QTY	PART NUMBER
1	65	SHELL PLATE 2798 X 9655
2	5	LAST SHELL PLATE PER COURSE 2798 X 9579 (TRIMMED AT SITE)
3	4	900NS SHELL MANHOLE
5	8	GROUNDING LUG
6	6	75NS WATER DRAWOFF VALVE
8	3	150NS SHELL NOZZLE
10	1	200NS SHELL NOZZLE
12	1	20NS TEMPERATURE SENSOR CONNECTION
13	1	AISC - L 4 x 4 x 1/4 - 15.748031 TEMPERATURE SENSOR PROTECTION
15	4	PLATFORM
16	68	STEPS
18	14	AISC - L 3 x 3 x 1/4 - 15.748031 PRV PIPE SUPPORTS
19	1	400NS VENT

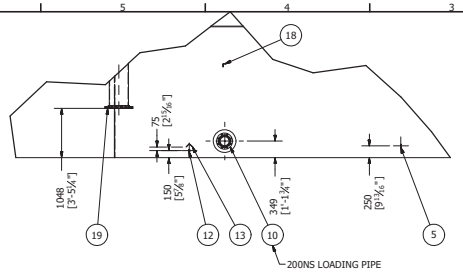

DETAIL A
SCALE 1/50

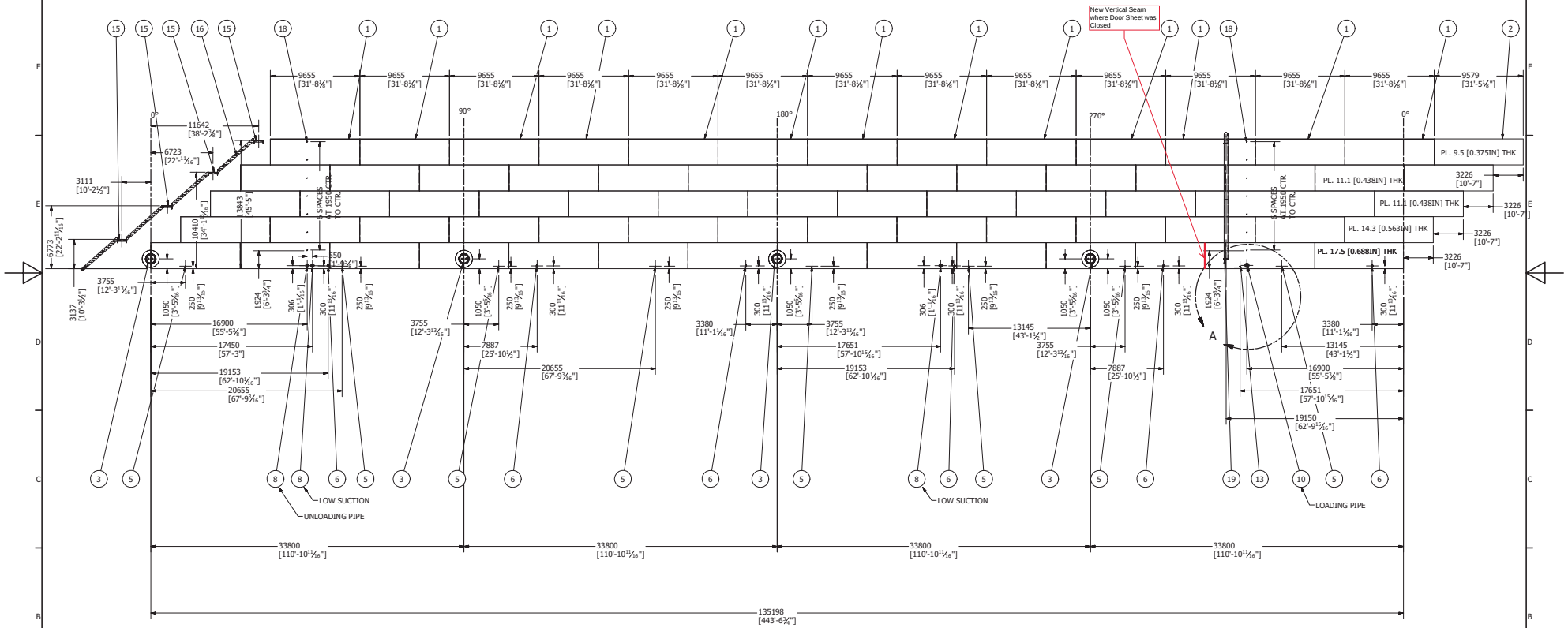

SHELL DEVELOP VIEW
SCALE 1/200

NOTES:
ALL DIMENSIONS ARE IN MM UNLESS OTHERWISE NOTED
ALL DIMENTIONS ARE TAKEN FROM THE OUTER SIDE OF THE SHELL

AS-BUILT
BY Inukshuk Construction Ltd. DATE 2018/07/25

17-Jul-2017
Permit Number: P471

REVISION HISTORY		
REV	DESCRIPTION	DATE
6	THIS SHEET ADDED	7/15/2017

DRAWN MARC LOSIER 3/17/2017
CHECKED
QA
MFG
APPROVED

TITLE
AGNICO EAGLE -MELIADINE GOLD MINE -
TK #1 - 20,000CUM TANK 43M DIA X 14M H

SIZE A1 | DWG NO 295-M9 | REV 6
SCALE
SHEET 7 OF 7

PARTS LIST					
ITEM	ITEM QTY	PART NUMBER	DESCRIPTION	MATERIAL	MASS
1	1	T1-2-4 SHELL NECK	10 [3/8"] THK X 194 [7 5/8"] WD. X 2842 [9'-3 7/8"] LONG	G40.21M - 350WT CAT. 4	40.783 kg
2	1	T1-2-4 SHELL BOLTING FLANGE	22 [7/8"] THK X 1137 [3'-8 3/4"] O.D. X 914 [3'-0"] I.D.	G40.21M - 350WT CAT. 4	54.904 kg
3	1	T1-2-4 SHELL GASKET	3 [1/8"] THK X 1051 [3'-5 3/8"] O.D. X 914 [3'-0"] I.D.	DURLON 8500	0.622 kg
4	1	T1-2-4 SHELL COVER PLATE	25 [1"] THK X 1137 [3'-8 3/4"] O.D.	G40.21M - 350WT CAT. 4	186.633 kg
5	2	T1-2-4 SHELL HANDLE ROD	10 [3/8"] THK X 314 [12 3/8"] LONG	MILD STEEL	0.175 kg
6	42	STUDS	STUD, 3/4" X 95 [3 3/4"] LG. NC	A320 L7	0.213 kg
7	84	NUTS	NUT, HEX HEAVY, 3/4" NC	A194A GR4	0.096 kg

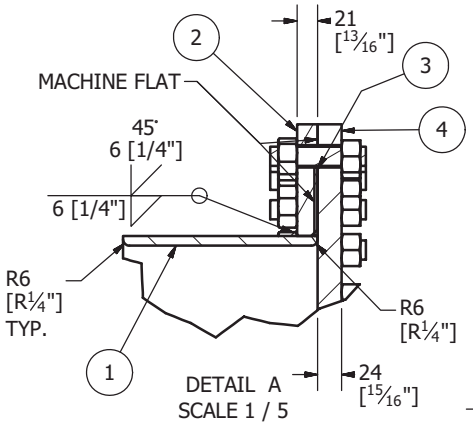

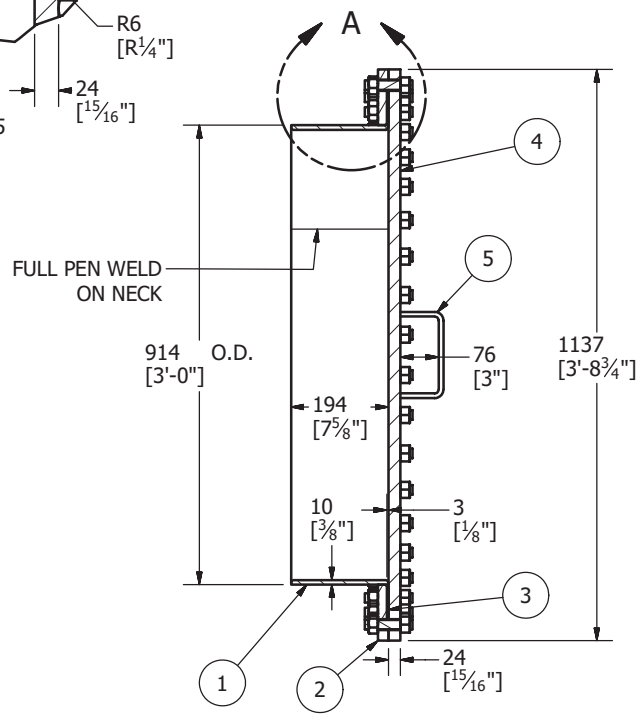

SECTION G-G
SCALE 1/10

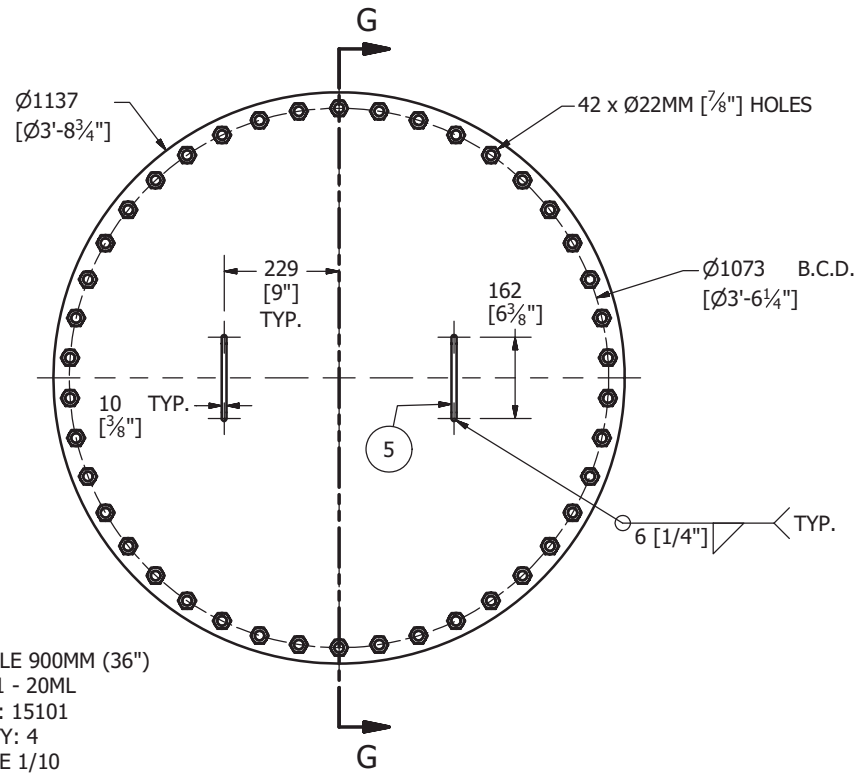

SHELL MANHOLE 900MM (36")
TANK 1 - 20ML
MARK: 15101
QTY: 4
SCALE 1/10

AS-BUILT
BY Inukshuk Construction Ltd. DATE 2018/07/25

REGISTERED PROFESSIONAL ENGINEER
G. BROWN
LICENSEE
NT/NU
23-Jul-2017

Permit Number: P471

ALTERNATE MATERIAL: ALL 350WT STEEL MAY BE SUBSTITUTED WITH 260WT IF EASIER TO SOURCE

DRAWN Jacob Saunders	3/22/2017	T1 (20ML) SHELL MANHOLE
CHECKED Marc Losier	3/27/2017	TITLE: MELIADINE FIELD ERECTED TANK - MANHOLES
QA		
MFG		
APPROVED		

SIZE	DWG NO	REV
A3	295-M15	3

SCALE

SHEET 1 OF 12

PARTS LIST BILLING FOR ONE MANHOLE 4 REQUIRED					
ITEM	ITEM QTY	PART NUMBER	DESCRIPTION	MATERIAL	MASS
1	1	ROOF NECK	6 [1/4"'] THK X 216 [8 1/2"] WD X 1935 [6' - 4 3/16"] LG	G40.21M 300W	20.825 kg
2	1	ROOF BOLTING FLANGE	6 [1/4"] THK X 762 [2'-6"] O.D. X 622 [2'-1/2"] I.D.	G40.21M 300W	7.287 kg
4	1	ROOF COVER PLATE	6 [1/4"] THK X 762 [2'-6"] DIA	G40.21M 300W	22.448 kg
5	2	ROOF HANDLE ROD	16 [5/8"] DIA X 314 [12 3/8"] LG.	Steel, MILD	0.506 kg
6	20	STUDS	STUD, 5/8" X 57 [2 1/4"] LG. NC	A320 L7	0.089 kg
7	40	NUTS	NUT, HEX HEAVY, 5/8"	A194A GR4	0.059 kg
8	1	295-P1 Gasket 24in (600mm)		Rubber	0.216 kg

SECTION H-H
SCALE 1/10

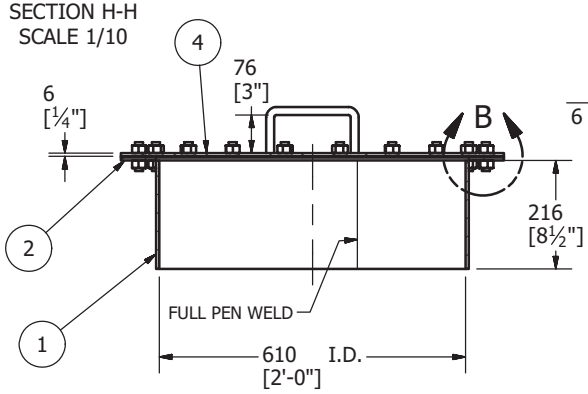

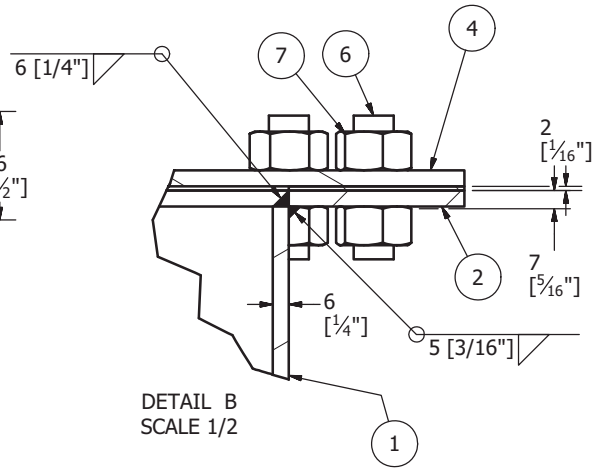

DETAIL B
SCALE 1/2

3

AS-BUILT
BY Inukshuk Construction Ltd. DATE 2018/07/25

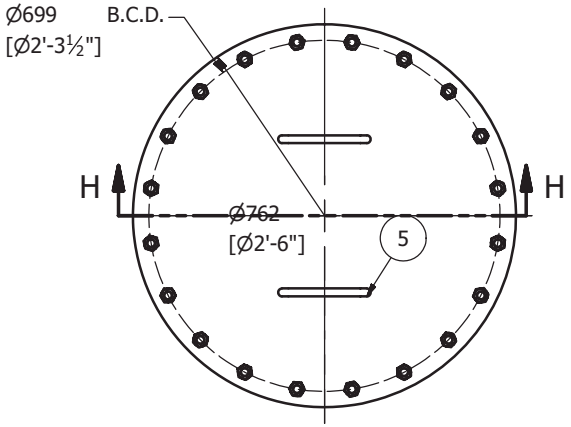

ROOF MANHOLE 600MM (24")
TANK 1 - 20ML
MARK: 15102
QTY: 4
SCALE 1/10

ALTERNATE MATERIAL: ALL 350WT STEEL MAY BE SUBSTITUTED WITH 260WT IF EASIER TO SOURCE

REVISION HISTORY			
ZONE	REV	DESCRIPTION	DATE
	2	EMERGENCY VENT/MANHOLE DETAIL ADDED	4/13/2017
	3	EMERGENCY VENT/MANHOLE DETAIL ADDED	7/9/2017

REGISTERED PROFESSIONAL ENGINEER
K.G. BROWN
LICENSEE
NT/NU
23-Jul-2017

Permit Number: P471

DRAWN Jacob Saunders	3/22/2017	T1 (20ML) ROOF MANHOLE
CHECKED Marc Losier	3/27/2017	TITLE
QA		MELIADINE FIELD ERECTED TANK - MANHOLES
MFG		
APPROVED		

SIZE	DWG NO	REV
A3	295-M15	3

SCALE

SHEET 2 OF 12

Parts List				
ITEM	ITEM QTY	CUT (MM)	PART NUMBER	MATERIAL
1	2		ASME B16.5 Flange Slip-On Welding - Class 150 8	A350 LF2
2	1	375	Pipe 8 - Schedule 80 - 14.76378	A333 GR. 6

Ø200 NS DOUBLE FLANGE SHELL LOADING
MARK: M1601
QTY: 2

WEIGHT/SPOOL: 48.2KG

M1601 QTY	
Tank No.	QTY
1	1
2	1
3	0
4	0
5	0
6	0
TOTAL	2

NOTES:
1. ALL DIMENSIONS ARE IN MM UNLESS OTHERWISE NOTED
2. FINISH: SANDBLAST TO SSP-6

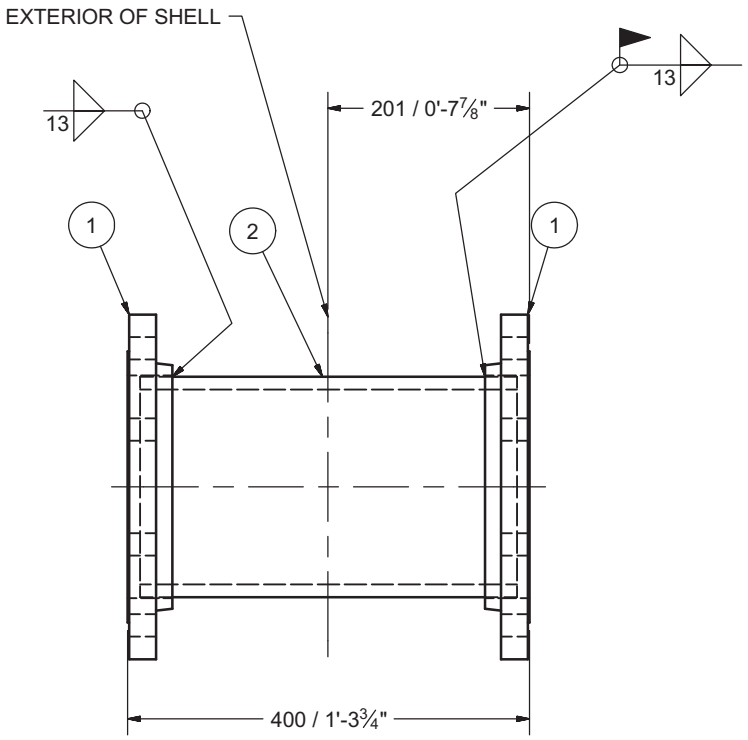

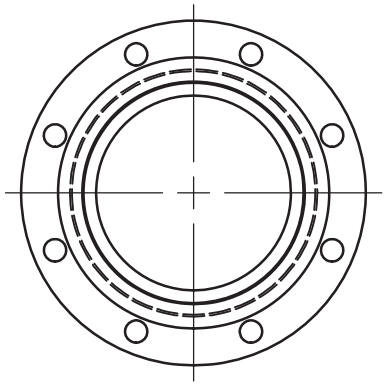

AS-BUILT
BY Inukshuk Construction Ltd. DATE 2018/07/25

REGISTERED PROFESSIONAL ENGINEER
K.G. BROWN
LICENSEE
NT/NU
16-Jul-2017
Permit Number: P471

REVISION HISTORY		
REV	DESCRIPTION	DATE
3	ALL SHEETS REVISED AS PER ENGINEER COMMENTS	5/1/2017

DRAWN Jacob Saunders	4/13/2017	AEM Meliadine Fuel Storage Tanks
CHECKED		
QA		TITLE
MFG		M1601 - 200NS DOUBLE FLG. SHELL
APPROVED		
		SIZE A3 / DWG NO 295-M16 / REV 3
		SCALE / SHEET 1 OF 22

Parts List				
ITEM	ITEM QTY	CUT (MM)	PART NUMBER	MATERIAL
1	2		ASME B16.5 Flange Slip-On Welding - Class 150 6	A350 LF2
2	1	375	Pipe 6 - Schedule 80 - 14.76378	A333 GR. 6

Ø150 NS DOUBLE FLANGE SHELL LOADING/UNLOADING

MARK: M1602

QTY: 26

WEIGHT/SPOOL: 30.8KG

M1602 QTY	
Tank No.	QTY
1	3
2	3
3	5
4	5
5	5
6	5
TOTAL	26

NOTES:
1. ALL DIMENSIONS ARE IN MM UNLESS OTHERWISE NOTED
2. FINISH: SANDBLAST TO SSP-6

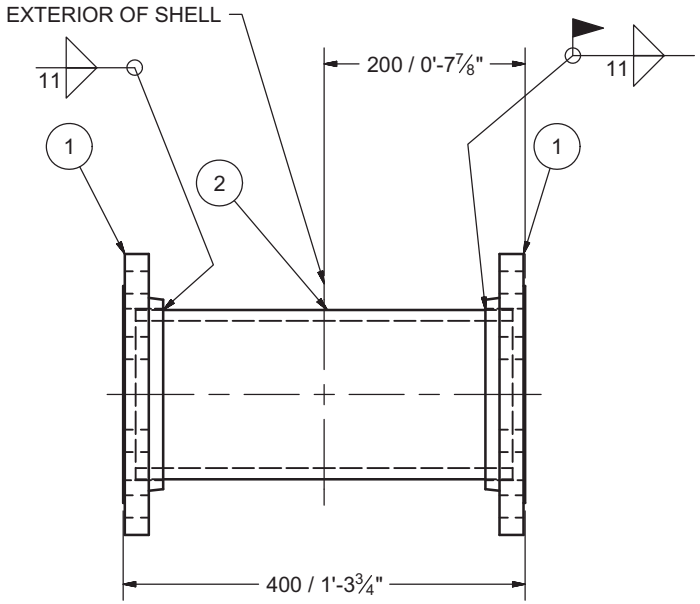

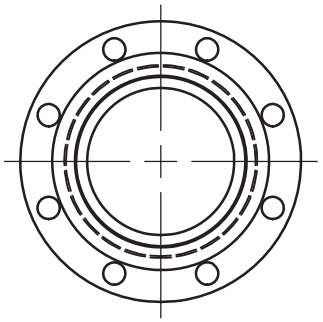

AS-BUILT
BY Inukshuk Construction Ltd. DATE 2018/07/25

16-Jul-2017
Permit Number: P471

DRAWN Jacob Saunders	4/13/2017	AEM Meliadine Fuel Storage Tanks
CHECKED		
QA		TITLE M1602 - 150NS DOUBLE FLG. SHELL
MFG		
APPROVED		
		SIZE A3 / DWG NO 295-M16 / REV 3
		SCALE / SHEET 2 OF 22

Parts List				
ITEM	ITEM QTY	CUT (MM)	PART NUMBER	MATERIAL
1	1		ASME B16.9 Long Radius 90 Deg Elbow (Inch) 8 x 0.322 SCH40	A420 WPL6
2	1		ASME B16.5 Flange Slip-On Welding - Class 150 8	A350 LF2
3	2	6401	Pipe 8 - Schedule 40 - 542.64	A333 GR. 6
4	1	981	ASTM A 53/A 53M Pipe 8 - Schedule 40 - 38.64	Steel

Ø200 NS FIXED PIPE LOADING
TANK 1 (20ML)
MARK: M1603
QTY: 1

WEIGHT/SPOOL: 619KG

M1603 QTY	
Tank No.	QTY
1	1
2	0
3	0
4	0
5	0
6	0
TOTAL	1

NOTES:
1. ALL DIMENSIONS ARE IN MM UNLESS OTHERWISE NOTED
2. FINISH: BARE

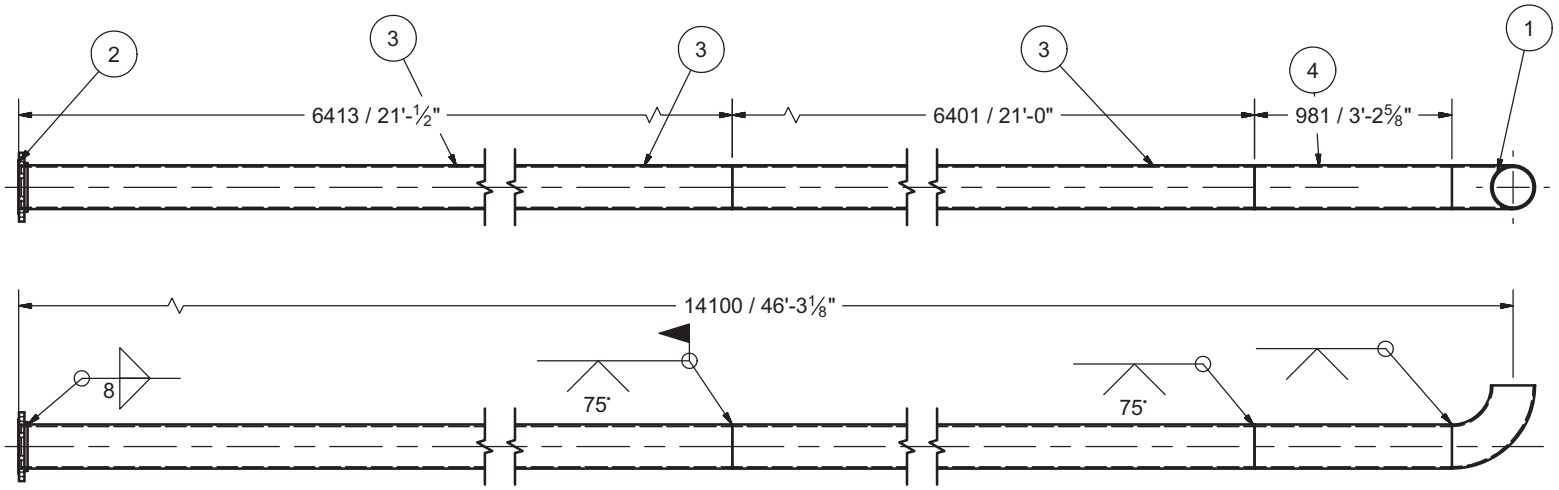

REVISION HISTORY		
REV	DESCRIPTION	DATE
2	NOTE 2 CHANGED, PIPE BROKEN IN SECTIONS	5/11/2017

DRAWN Jacob Saunders	4/13/2017	AEM Meliadine Fuel Storage Tanks
CHECKED		
QA		TITLE: M1603 - 200 NS FIXED PIPE LOADING
MFG		
APPROVED		SIZE A3 / DWG NO 295-M16 / REV 3
		SCALE / SHEET 3 OF 22

AS-BUILT
BY Inukshuk Construction Ltd. DATE 2018/07/25

PROFESSIONAL ENGINEER S. G. BROWN LICENSEE NT/NU
16-Jul-2017

Permit Number: P471

Parts List				
ITEM	ITEM QTY	CUT (MM)	PART NUMBER	MATERIAL
1	1		ASME B16.5 Flange Slip-On Welding - Class 150 6	A350 LF2
2	1		ASME B16.9 Long Radius 90 Deg Elbow (Inch) 6 x 0.28 SCH40	A420 WPL6
3	2	6401	Pipe 6 - Schedule 40 - 549.09512	A333 GR. 6
4	1	1145	Pipe 6 - Schedule 40 - 45.095118	A333 GR. 6

Ø150 NS FIXED PIPE UNLOADING
TANK 1 (20ML)
MARK: M1608
QTY: 1

WEIGHT/SPOOL: 407KG

M1608 QTY	
Tank No.	QTY
1	1
2	0
3	0
4	0
5	0
6	0
TOTAL	1

NOTES:
1. ALL DIMENSIONS ARE IN MM UNLESS OTHERWISE NOTED
2. FINISH: BARE

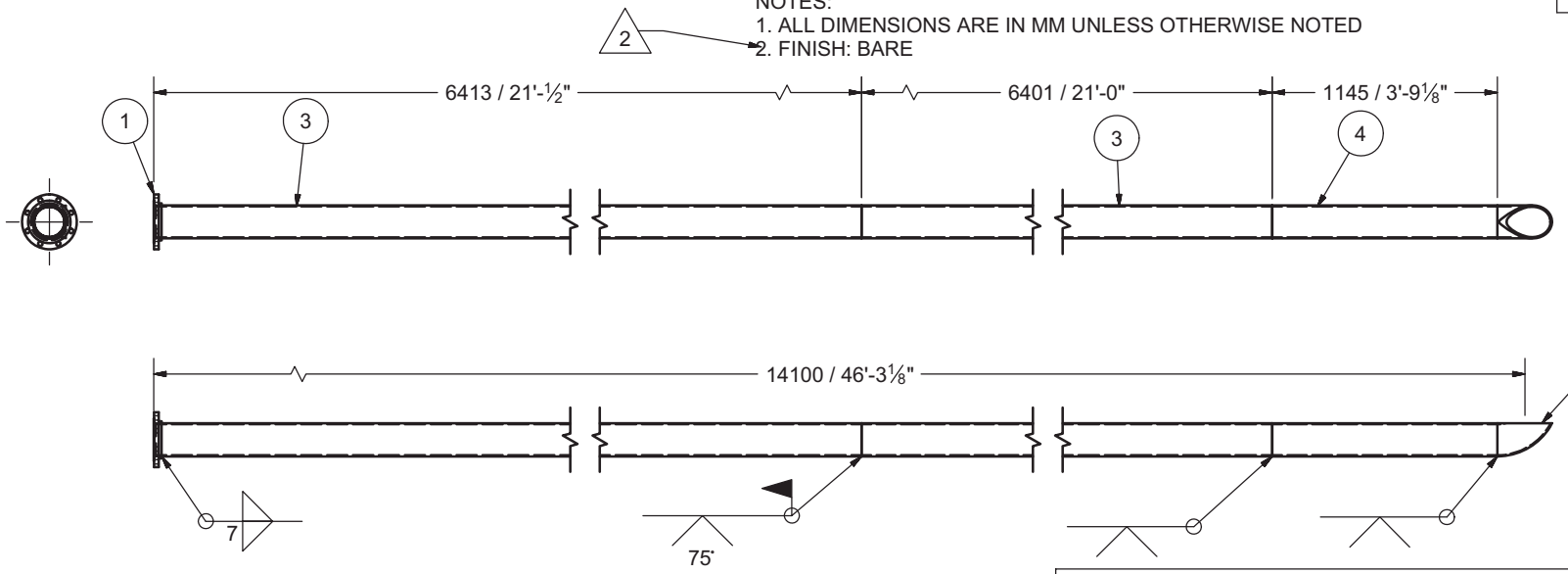

REVISION HISTORY		
REV	DESCRIPTION	DATE
2	NOTE 2 CHANGED, PIPE BROKEN IN SECTIONS	5/11/2017

AS-BUILT
BY Inukshuk Construction Ltd. DATE 2018/07/25

REGISTERED PROFESSIONAL ENGINEER J.D. BROWN LICENSEE NT/NU
16-Jul-2017
Permit Number: P471

DRAWN Jacob Saunders	4/13/2017	AEM Meliadine Fuel Storage Tanks
CHECKED		
QA		TITLE M1608 - 150NS FIXED PIPE UNLOADING
MFG		
APPROVED		SIZE A3 / DWG NO 295-M16 / REV 3
		SCALE / SHEET 8 OF 22

Parts List				
ITEM	ITEM QTY	CUT (MM)	PART NUMBER	MATERIAL
1	1		ASME B16.5 Flange Slip-On Welding - Class 150 6	A350 LF2
2	1	203	Pipe 6 - Schedule 40 - 8	A333 GR. 6
3	1		ASME B16.9 Long Radius 90 Deg Elbow - 6 SCH40	A420 WPL6

Ø150 NS PIPING LOW LEVEL
MARK: M1613
QTY: 16

WEIGHT/SPOOL: 23.3KG

M1613 QTY	
Tank No.	QTY
1	2
2	2
3	3
4	3
5	3
6	3
TOTAL	16

NOTES:
1. ALL DIMENSIONS ARE IN MM UNLESS OTHERWISE NOTED
2. FINISH: BARE

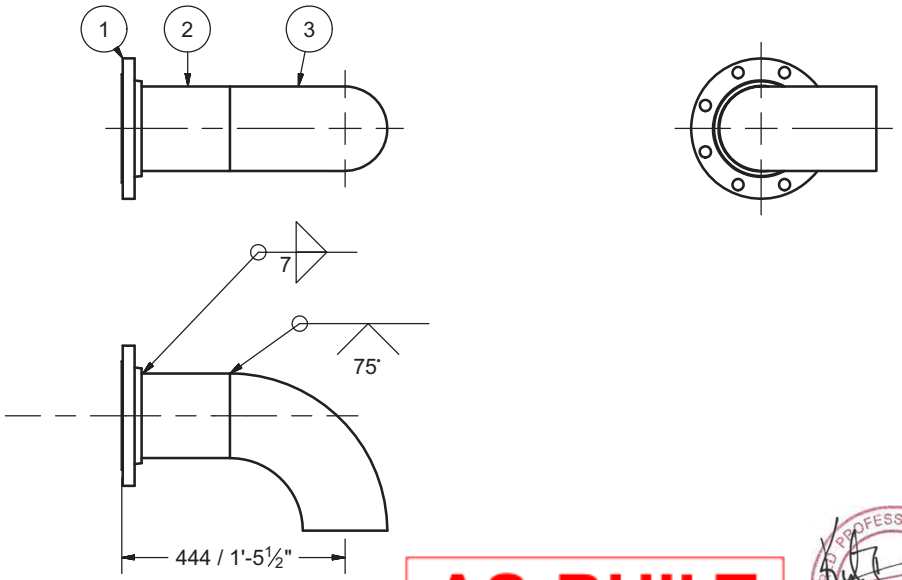

AS-BUILT
BY Inukshuk Construction Ltd. DATE 2018/07/25

PROFESSIONAL ENGINEERS
J.S. BROWN
LICENSEE
NT/NU
16-Jul-2017
Permit Number: P471

REVISION HISTORY		
REV	DESCRIPTION	DATE
2	NOTE 2 CHANGED	5/11/2017

DRAWN Jacob Saunders	4/13/2017	AEM Meliadine Fuel Storage Tanks
CHECKED		
QA		
MFG		TITLE: M1613 - 150NS PIPING LOW LEVEL
APPROVED		
SIZE A3	DWG NO 295-M16	REV 3
SCALE		SHEET 13 OF 22

Ø75 NS WATER DRAW OFF
MARK: M1614
QTY: 32
WEIGHT/SPOOL: 16.6KG

Parts List				
ITEM	ITEM QTY	CUT (MM)	PART NUMBER	MATERIAL
1	1		ASME B16.5 Flange Slip-On Welding - Class 150 3	A350 LF2
2	1	316	Pipe 3 - Schedule 80 - 12.440945	A333 GR. 6
3	1		ASME B16.9 Long Radius 90 Deg Elbow (Inch) 2 x 0.218 SCH80	A420
4	1		ASME B16.9 Eccentric Reducer 3 x 2 - Schedule 80	A420
5	1	799	Pipe 2 - Schedule 80 - 31.456693	A333 GR. 6

NOTES:
1. ALL DIMENSIONS ARE IN MM UNLESS OTHERWISE NOTED
2. FINISH: SANDBLAST TO SSP-6 AREA THAT WOULD BE LOCATED OUTSIDE THE TANK AS INDICATED.

M1614 QTY	
Tank No.	QTY
1	6
2	6
3	6
4	6
5	4
6	4
TOTAL	32

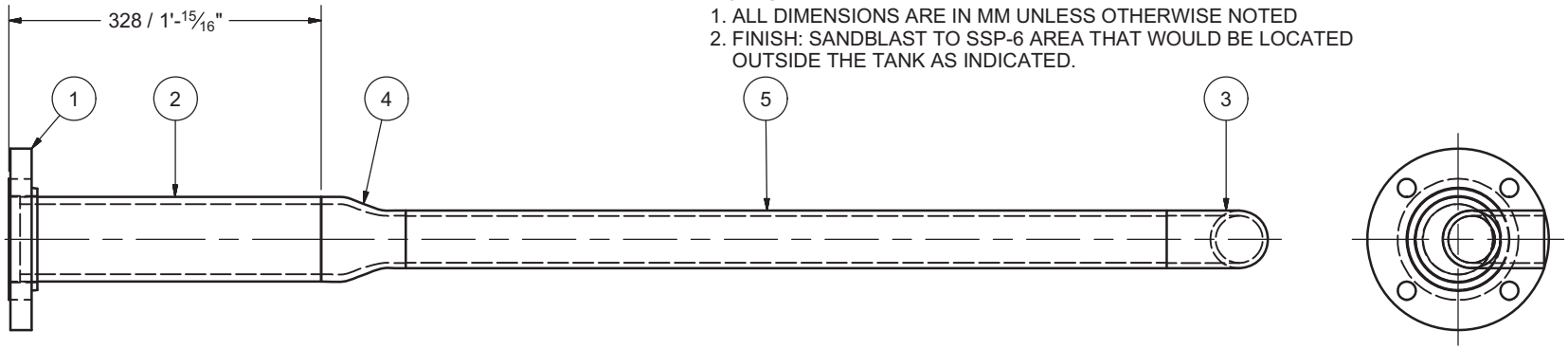

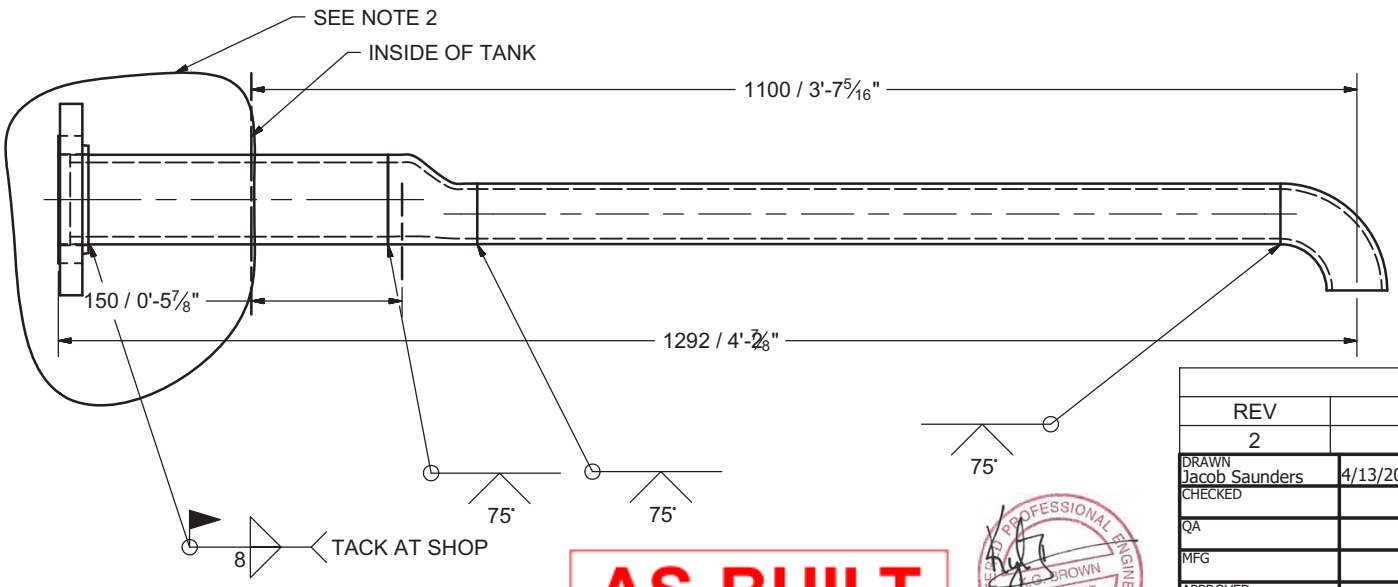

AS-BUILT
BY Inukshuk Construction Ltd. DATE 2018/07/25

16-Jul-2017
Permit Number: P471

REVISION HISTORY		
REV	DESCRIPTION	DATE
2	NOTE 2 CHANGED	5/11/2017

DRAWN Jacob Saunders	4/13/2017	AEM Meliadine Fuel Storage Tanks
CHECKED		
QA		TITLE M1614 - 75NS WATER DRAW OFF
MFG		
APPROVED		SIZE A3 / DWG NO 295-M16 / REV 3
		SCALE / SHEET 14 OF 22

Parts List					
ITEM	ITEM QTY	CUT (MM)	PART NUMBER	DESCRIPTION	MATERIAL
1	1		Plate, 1/4" Thick x 152 Dia	Steel, Mild	G40.21M 300W
2	1	152	PIPE SCH40 ANSI - 4 x .237 - 6	Pipe	A53
3	1		Painters Post Reinforcing Plate	Plate, Mild Steel, 3/8" thk x 133 I.D. x 229 O.D.	G40.21M 300W

Ø100 NS PAINTERS SCAFFOLD CABLE SUPPORT
MARK: M1615
QTY: 6

WEIGHT/SPOOL: 3.4KG

M1615 QTY	
Tank No.	QTY
1	1
2	1
3	1
4	1
5	1
6	1
TOTAL	6

NOTES:
1. ALL DIMENSIONS ARE IN MM UNLESS OTHERWISE NOTED
2. FINISH: SANDBLAST TO SSP-6

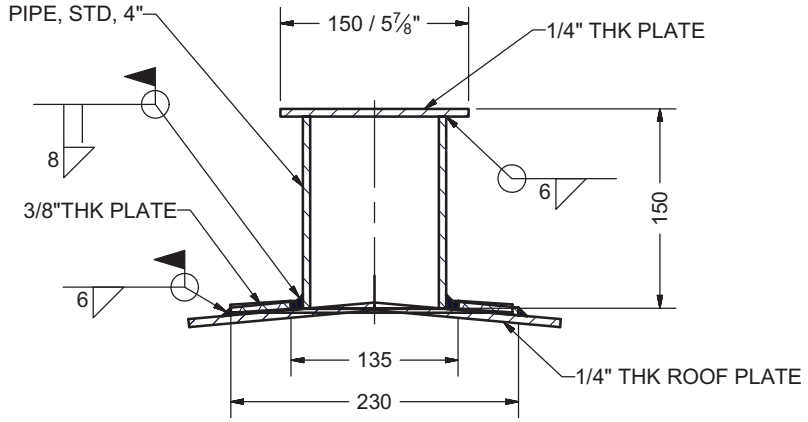

AS-BUILT
BY Inukshuk Construction Ltd. DATE 2018/07/25

PROFESSIONAL ENGINEER
BROWN
LICENSEE
NT/NU
16-Jul-2017
Permit Number: P471

MOSHER ENGINEERING LIMITED
-GRAVEL CRUSHING
-EARTHWORK
-PROCESS PIPE WELDING
-INDUSTRIAL CONTRACTING

1358 QUEEN ST
HALIFAX, NS
B3J 2H5
PH: (902) 429-0272
FAX: (902) 429-7762

DRAWN	Jacob Saunders	4/13/2017
CHECKED		
QA		
MFG		
APPROVED		

AEM Meliadine Fuel Storage Tanks

TITLE
M1615 - PAINTERS SCAFFOLD CABLE SUPPORT

SIZE	DWG NO	REV
A3	295-M16	3

SCALE

SHEET 15 OF 22

Parts List				
ITEM	ITEM QTY	CUT (MM)	PART NUMBER	MATERIAL
1	1		ASME B16.5 Flange Slip-On Welding - Class 150 16	A350 LF2
2	1	330	Pipe 16 - Schedule 30, 3/8" wall - 13"LG	A106

Ø400 NS ROOF NOZZLE
MARK: M1616
QTY: 6

WEIGHT/SPOOL: 83.5KG

M1616 QTY	
Tank No.	QTY
1	1
2	1
3	1
4	1
5	1
6	1
TOTAL	6

NOTES:
1. ALL DIMENSIONS ARE IN MM UNLESS OTHERWISE NOTED
2. FINISH: SANDBLAST TO SSP-6

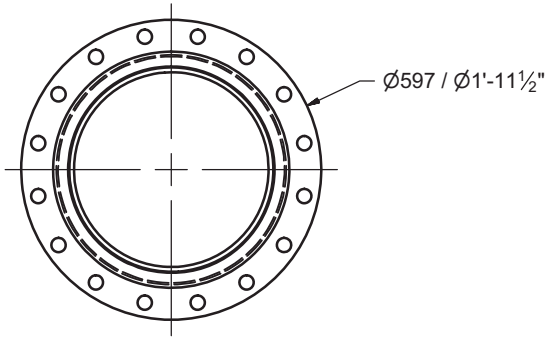

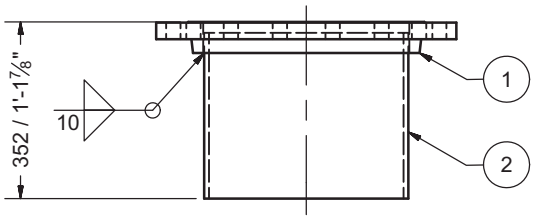

AS-BUILT
BY Inukshuk Construction Ltd. DATE 2018/07/25



Permit Number: P471

DRAWN Jacob Saunders	4/13/2017	AEM Meliadine Fuel Storage Tanks
CHECKED		
QA		TITLE M1616 - Ø400 NS ROOF NOZZLE
MFG		
APPROVED		SIZE A3 / DWG NO 295-M16 / REV 3
		SCALE / SHEET 16 OF 22

Parts List				
ITEM	ITEM QTY	CUT (MM)	PART NUMBER	MATERIAL
1	1		ASME B16.5 Flange Slip-On Welding - Class 150 8	A350 LF2
2	1	325	Pipe 8 - Schedule 40 - 12.795276	A333 GR. 6

Ø200 NS ROOF NOZZLE FOR OVERFILL PROT.
MARK: M1618
QTY: 6

WEIGHT/SPOOL: 25.8KG

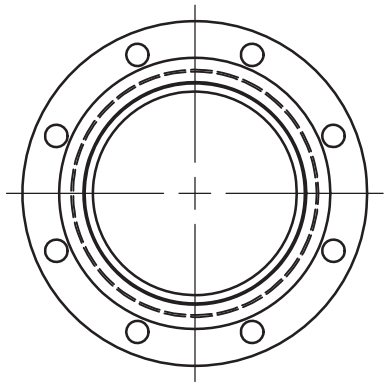

NOTES:
1. ALL DIMENSIONS ARE IN MM UNLESS OTHERWISE NOTED
2. FINISH: SANDBLAST TO SSP-6

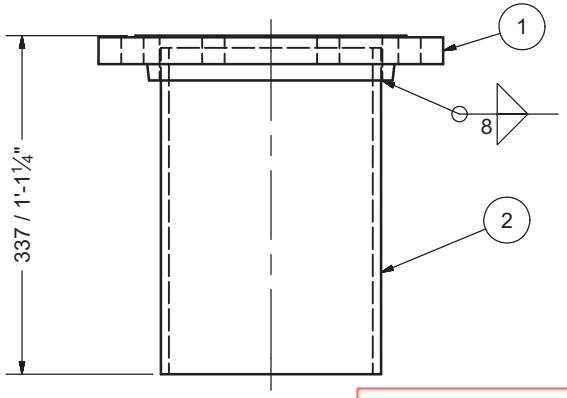

M1618 QTY	
Tank No.	QTY
1	1
2	1
3	1
4	1
5	1
6	1
TOTAL	6

AS-BUILT
BY Inukshuk Construction Ltd. DATE 2018/07/25

PROFESSIONAL ENGINEER
G.G. BROWN
LICENSEE
NT/NU
16-Jul-2017

Permit Number: P471

DRAWN Jacob Saunders	4/13/2017	AEM Meliadine Fuel Storage Tanks
CHECKED		
QA		TITLE M1618 - 200NS ROOF NOZZLE FOR OVERFILL PROT.
MFG		
APPROVED		SIZE A3 / DWG NO 295-M16 / REV 3
		SCALE / SHEET 18 OF 22

Parts List				
ITEM	ITEM QTY	CUT (MM)	PART NUMBER	MATERIAL
1	1		Flange 6in Flat Face, Slip On 150#, A105	A350 LF2
2	1	216	PIPE ANSI - 6 x .280" WALL SCH40	A333 GR. 6

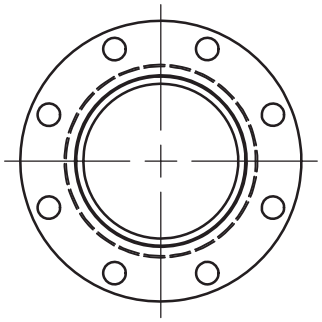

Ø150 NS ROOF NOZZLE FOR GAUGE HATCH
MARK: M1619
QTY: 6

WEIGHT/SPOOL: 13.3KG

NOTES:
1. ALL DIMENSIONS ARE IN MM UNLESS OTHERWISE NOTED
2. FINISH: SANDBLAST TO SSP-6

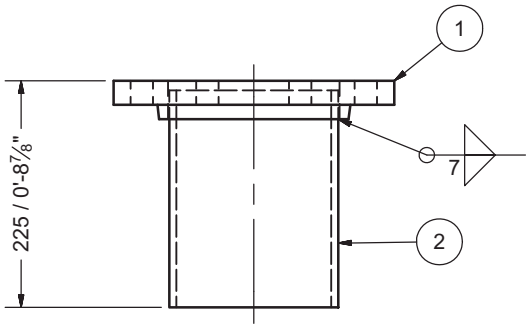

M1619 QTY	
Tank No.	QTY
1	1
2	1
3	1
4	1
5	1
6	1
TOTAL	6

AS-BUILT
BY Inukshuk Construction Ltd. DATE 2018/07/25



Permit Number: P471

DRAWN Jacob Saunders	4/13/2017	AEM Meliadine Fuel Storage Tanks
CHECKED		TITLE M1619 - 150 NS ROOF NOZZLE FOR GAUGE HATCH
QA		
MFG		
APPROVED		
SIZE A3	DWG NO 295-M16	REV 3
SCALE	SHEET 19 OF 22	

Parts List				
ITEM	ITEM QTY	CUT (MM)	PART NUMBER	MATERIAL
1	2		ASME B16.5 Flange Slip-On Welding - Class 150 16	A350 LF2
2	1	330	Pipe 16 - Schedule 10 - 13	A106
6	2		ASME B16.9 Long Radius 90 Deg Elbow (Metric) 16 x 9.5	A234
7	1	600	Pipe 16 - Schedule 10 - 23.622047	A106
8	2	6401	Pipe 16 - Schedule 10 - 252	A106

M1620 QTY	
Tank No.	QTY
1	1
2	1
3	0
4	0
5	0
6	0
TOTAL	2

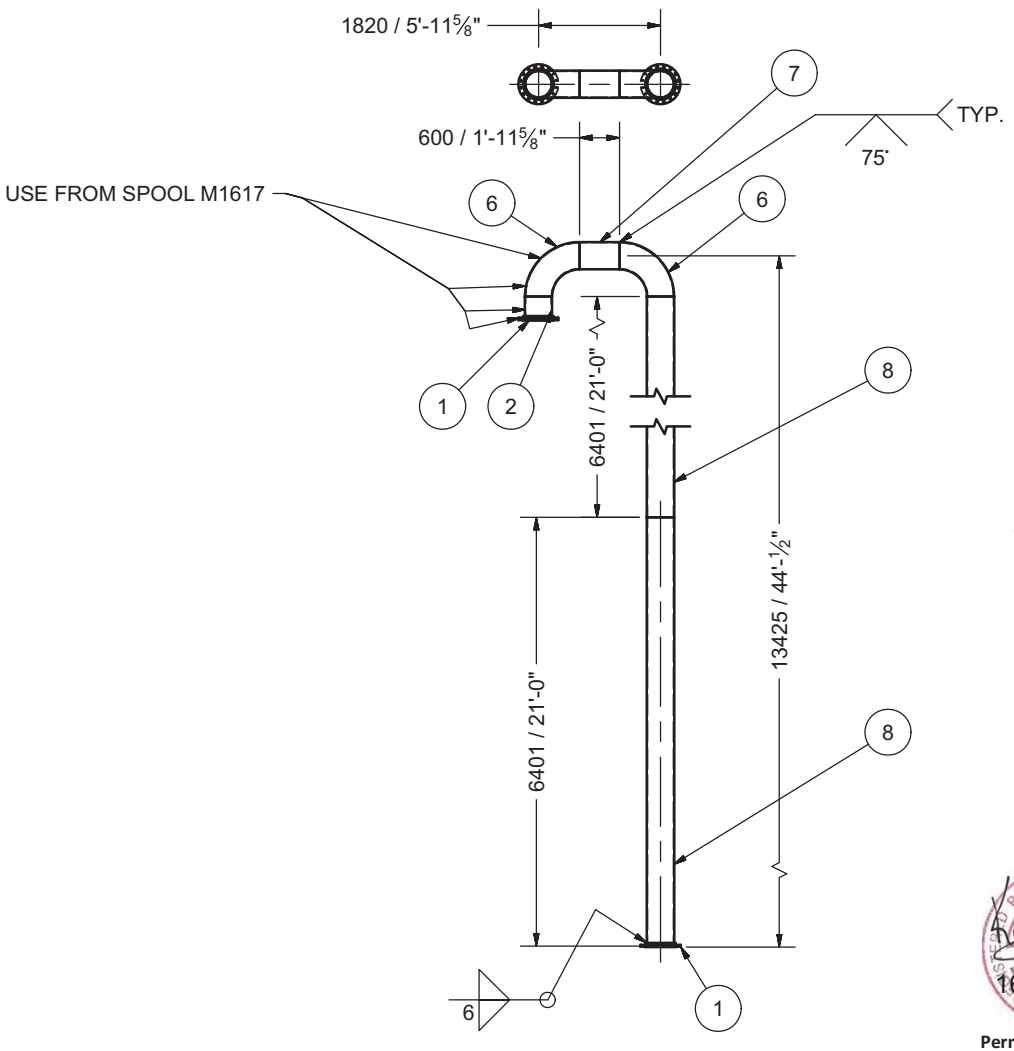

Ø400 NS VENT (RETURN BEND) FOR TANK NO. 1 & 2 AS PER ECN NO. 1

MARK: M1620

QTY: 2

WEIGHT/SPOOL: 1134KG

AS-BUILT

BY Inukshuk Construction Ltd. DATE 2018/07/25

REVISION HISTORY		
REV	DESCRIPTION	DATE
3	THIS SHEET ADDED	7/7/2017

DRAWN Jacob Saunders	4/13/2017	AEM Meliadine Fuel Storage Tanks
CHECKED		
QA		TITLE M1620 - 400 NS VENT TANK NO. 1 & 2
MFG		
APPROVED		SIZE A3 / DWG NO 295-M16 / REV 3
		SCALE / SHEET 20 OF 22

APEGGN PROFESSIONAL ENGINEER J.C. BROWN LICENSEE NT/NU
16-Jul-2017
Permit Number: P471

Parts List

ITEM	ITEM QTY	CUT (MM)	PART NUMBER	DESCRIPTION	STOCK NUMBER	MATERIAL
1	1		ASME B16.5 Flange Slip-On Welding - Class 150 4	FLANGE, R.F., SLIP ON, 150#, 100NS [4"]		A350 LF2
2	1	184	ASTM A 53/A 53M Pipe 4 - Schedule 40 - 7.2440945	PIPE, STD, 100NS [4"]	ASTM A 53/A 53M Pipe 4 - Schedule 40	A53

Ø100 NS ROOF NOZZLE
AS PER ECN NO. 1

MARK: M1621
QTY: 6

WEIGHT/SPOOL: 9 KG

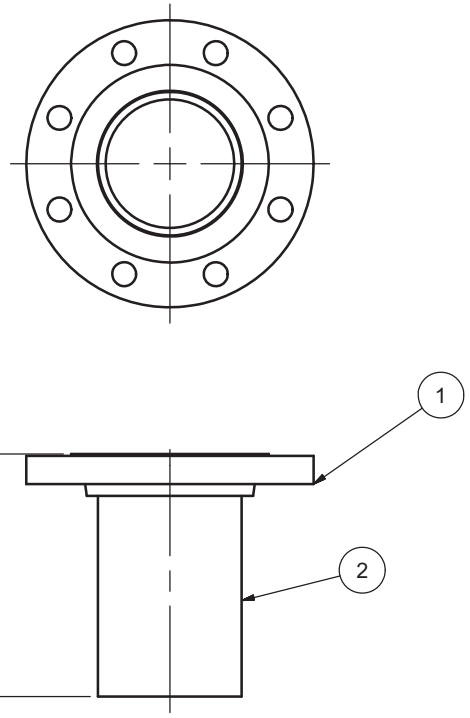

M1621 QTY	
Tank No.	QTY
1	1
2	1
3	1
4	1
5	1
6	1
TOTAL	6

REVISION HISTORY		
REV	DESCRIPTION	DATE
3	THIS SHEET ADDED AS PER ECN-001	7/7/2017

AS-BUILT
BY Inukshuk Construction Ltd. DATE 2018/07/25



Permit Number: P471

DRAWN Jacob Saunders	4/13/2017	AEM Meliadine Fuel Storage Tanks	
CHECKED			
QA			
MFG		TITLE M1621 - 100NS ROOF NOZZLE	
APPROVED			
		SIZE A3	DWG NO 295-M16 / REV 3
		SCALE	SHEET 21 OF 22

Parts List				
ITEM	ITEM QTY	CUT (MM)	PART NUMBER	MATERIAL
2	1	330	ASTM A 53/A 53M Pipe 12 - Schedule 40 - 12.992126	A53
3	1		ASME B16.5 Flange Slip-On Welding - Class 150 12 Flate Face	A106

Ø300 NS ROOF NOZZLE
FOR PRESSURE VACUUM VENT
AS PER ECN NO. 1

MARK: M1622
QTY: 3

WEIGHT/SPOOL: 51 KG

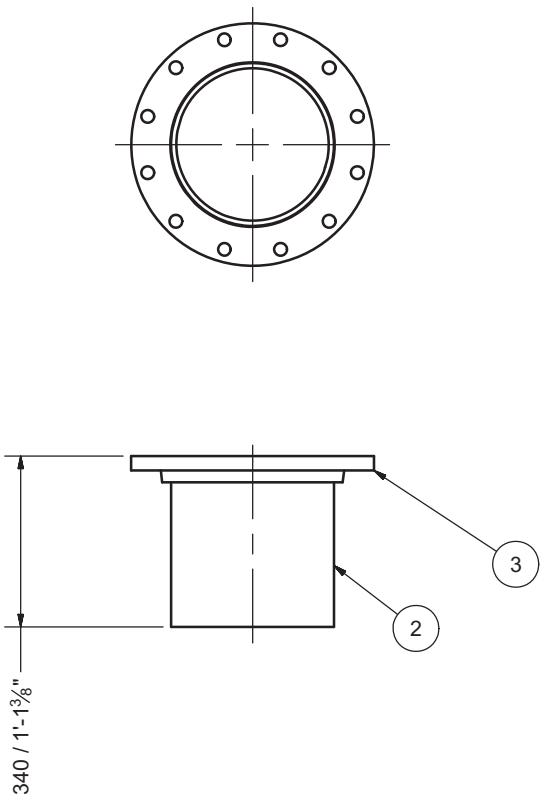

M1622 QTY	
Tank No.	QTY
1	2
2	1
3	0
4	0
5	0
6	0
TOTAL	3

REVISION HISTORY		
REV	DESCRIPTION	DATE
3	THIS SHEET ADDED AS PER ECN-001	7/7/2017

AS-BUILT
BY Inukshuk Construction Ltd. DATE 2018/07/25

REGISTERED PROFESSIONAL ENGINEER
K.G. BROWN
LICENSEE
NT/NU
16-Jul-2017
Permit Number: P471

DRAWN Jacob Saunders	4/13/2017	AEM Meliadine Fuel Storage Tanks
CHECKED		
QA		TITLE
MFG		M1622 - 300NS ROOF NOZZLE
APPROVED		
		SIZE A3 / DWG NO 295-M16 / REV 3
		SCALE / SHEET 22 OF 22

Parts List				
ITEM	ITEM QTY	CUT (MM)	DESCRIPTION	MATERIAL
1	1	152	L100X100X10 [4"X4"X3/8"]	G40.21M 350W
2	1	152	FB150X6 [6"X1/4"]	G40.21M 300W
3	1	305	50NS [2"] PIPE SCH. 40	A53 ERW

PIPE SUPPORT TYPE 1
MARK: M17101
QTY: 72

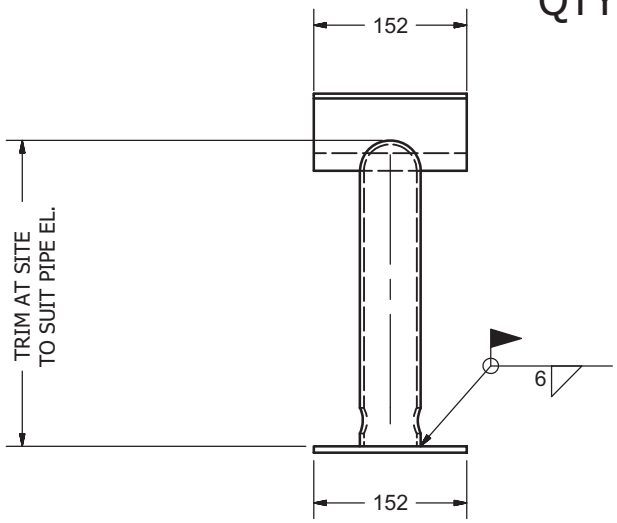

PIPE SUPPORT
SCALE 1/5

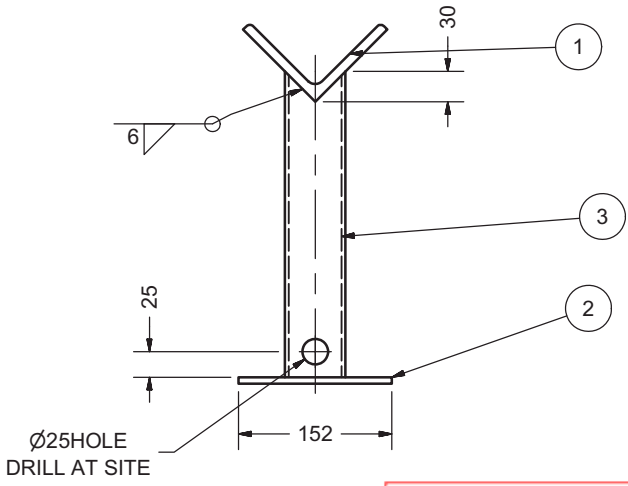

QTY PER TANK	
Tank No.	QTY
1	20
2	16
3	12
4	12
5	6
6	6
TOTAL	72

AS-BUILT
BY Inukshuk Construction Ltd. DATE 2018/07/25

REGISTERED PROFESSIONAL ENGINEER
K.G. BROWN
LICENSEE
NT/NU
16-Jul-2017
Permit Number: P471

NOTE:
ALL DIMENSIONS ARE IN MM UNLESS OTHERWISE NOTED

DRAWN Jacob Saunders	4/13/2017	PIPE SUPPORT
CHECKED		
QA		TITLE
MFG		MISC. SUPPORTS AND BRACKETS
APPROVED		
		SIZE A3 / DWG NO 295-M17 / REV 2
		SCALE / SHEET 1 OF 5

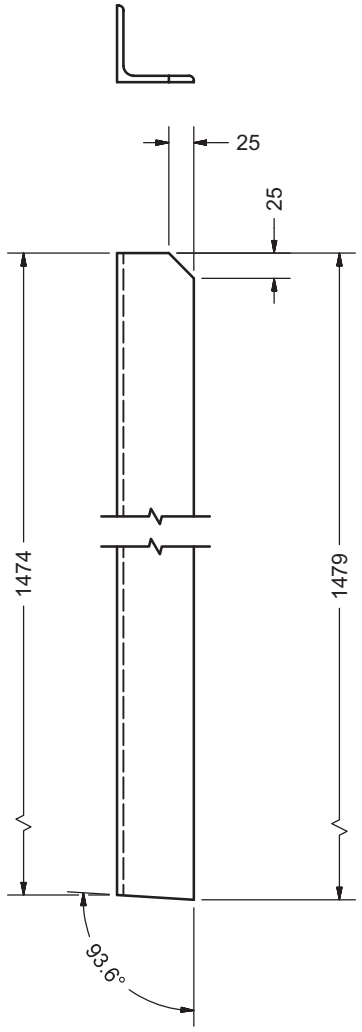

QTY PER TANK	
Tank No.	QTY
1	93
2	77
3	41
4	53
5	21
6	21
TOTAL	306

ROOF HANDRAIL POST
MARK M17201
QTY: 310
L76x76X6 [L3"X3"X1/4"] G40.21M 350W
SCALE 1/5

1

AS-BUILT

BY Inukshuk Construction Ltd. DATE 2018/07/25



Permit Number: P471

REVISION HISTORY		
REV	DESCRIPTION	DATE
1	ANGLE SIZE CHG TO 76X76X6 (3"X3"X1/4")	4/27/2017

DRAWN Jacob Saunders	4/13/2017	ROOF TOP HANDRAIL POST
CHECKED		
QA		TITLE
MFG		MISC. SUPPORTS AND BRACKETS
APPROVED		
		SIZE A3 / DWG NO 295-M17 / REV 2
		SCALE / SHEET 2 OF 5

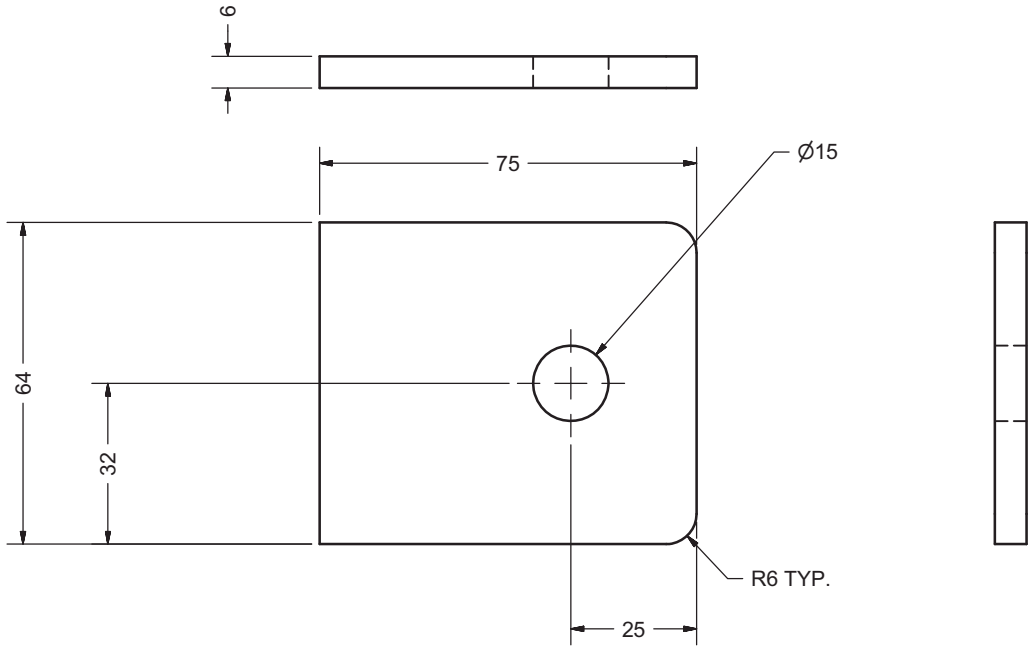

QTY PER TANK	
Tank No.	QTY
1	8
2	8
3	6
4	6
5	4
6	4
TOTAL	36

GROUNDING LUG
MARK M17301
QTY: 36
FB 75X6 [3"X1/4"]
STAINLESS STEEL 316
SCALE 1 : 1

AS-BUILT
BY Inukshuk Construction Ltd. DATE 2018/07/25

ASSOCIATION OF PROFESSIONAL ENGINEERS G.G. BROWN LICENSEE NT/NU
16-Jul-2017
Permit Number: P471

DRAWN Jacob Saunders	4/13/2017	GROUNDING LUG	
CHECKED		TITLE MISC. SUPPORTS AND BRACKETS	
QA			
MFG			
APPROVED		SIZE A3	DWG NO 295-M17
		SCALE	REV 2
			SHEET 3 OF 5

CUT LIST					UNIT QTY PER TANK					
MARK	QTY	CUT MM	DESCRIPTION	MATERIAL	TK #1	TK #2	TK #3	TK #4	TK #5	TK #6
M17401	6	400	L100X100X6 [L4"X4"X1/4"] TEMPERATOR SENSOR	G40.21M 350W	1	1	1	1	1	1
M17402	45	400	L75X75X6 [L3"X3"X1/4"] PIPING & ELECTRICAL BRACKET	G40.21M 350W	14	14	6	7	2	2

AS-BUILT

BY Inukshuk Construction Ltd. DATE 2018/07/25



Permit Number: P471

DRAWN Jacob Saunders	4/13/2017	MISC BRACKETS	
CHECKED			
QA		TITLE MISC. SUPPORTS AND BRACKETS	
MFG			
APPROVED		SIZE A3	DWG NO 295-M17 / REV 2
		SCALE	SHEET 4 OF 5

Parts List

ITEM	ITEM QTY	CUT (MM)	PART NUMBER	DESCRIPTION	STOCK NUMBER	MATERIAL
2	1	1230	AISC - L 3 x 3 x 3/8 - 48.426	Angle Steel	L 3 x 3 x 3/8	G40.21 350w
3	1	914	AISC - C 6 x 8.2 - 36	U-Shape	C 6 x 8.2	G40.21 350w
4	1	203	AISC - 6x1/4 - 8	Flat Bar Steel	6x1/4	G40.21 350w
5	1	229	AISC - 6x1/4 - 9	Flat Bar Steel	6x1/4	G40.21 350w



TOP VIEW
SCALE 1/10

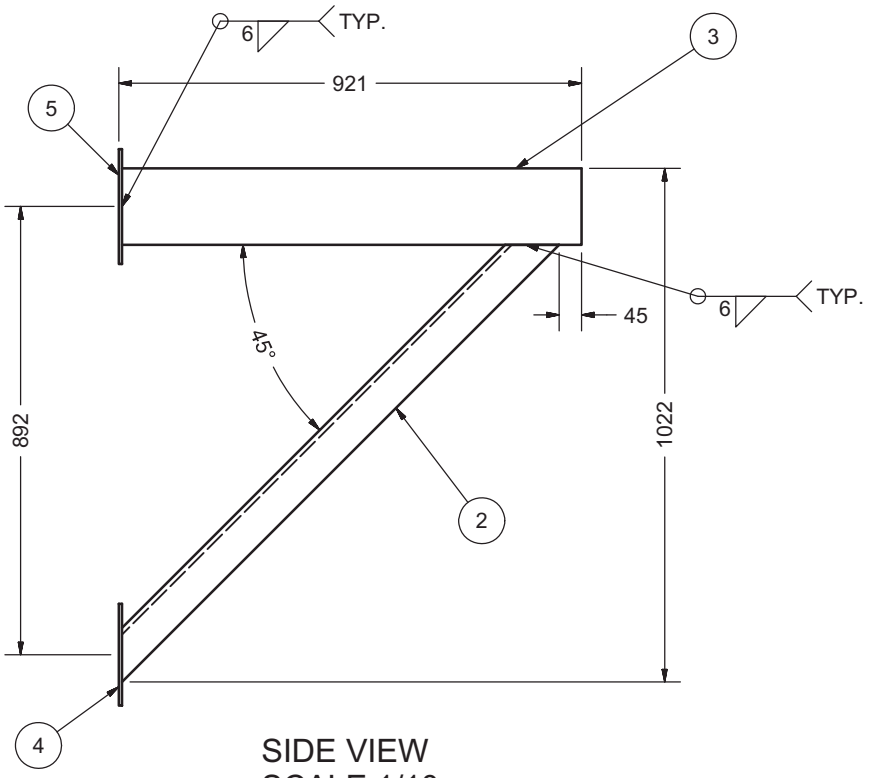

SIDE VIEW
SCALE 1/10

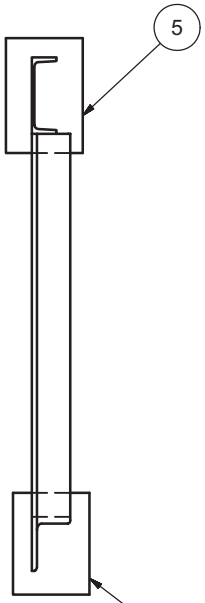

END VIEW
SCALE 1/10

PIPE SUPPORT FOR 400NS VENT SUPPORT FOR TANK NO. 1 & 2

MARK: M17501
QTY: 4
2 AS SHOWN
2 MIRROR

FINISH: SHOP SANDBLAST

AS-BUILT
BY Inukshuk Construction Ltd. DATE 2018/07/25



Permit Number: P471

REVISION HISTORY		
REV	DESCRIPTION	DATE
2	THIS SHEET ADDED	7/7/2017

DRAWN Jacob Saunders	4/13/2017				
CHECKED					
QA					
MFG					
APPROVED		TITLE: MISC. SUPPORTS AND BRACKETS			
		SIZE A3		DWG NO 295-M17	REV 2
		SCALE		SHEET 5 OF 5	

PARTS LIST FOR ONE (1) ASSY, SIXTEEN (16) REQUIRED				
ITEM	ITEM QTY	CUT (MM)	DESCRIPTION	MATERIAL
M18101	1	341	5/8"THK X 66 WIDE PLATE, SEE DETAIL	G40.21M 300W
M18102	1	373	2 1/2" STD PIPE	A53
M18103	1		DAVIT ARM, SEE DETAIL	
M18104	1	198	16 [5/8"] DIA LG SEE DETAIL	Steel
M18105	1		EYE-BOLT 5/8"DIA X 12" LG CROSBY G291	FORGED STEEL
M18106	2		5/8"-11UNC Hex Nuts (Inch Series) Heavy Hex Nut	A194 GR4

PARTS LIST FOR ONE (1) DAVIT ARM, FOUR (4) REQ'D				
ITEM	ITEM QTY	CUT (MM)	DESCRIPTION	MATERIAL
M18108	1	645	2"NS XXH PIPE	A53
M18109	1	25	2 1/2"NS STD PIPE	A53
M18110	1		2"NS XXH ELBOW BW 90DEG L.R.	A234
M18111	1	890	2"NS XXH PIPE	A53
M18112	1	520	FB10X50 [3/8"X2"]	G40.21M 300W

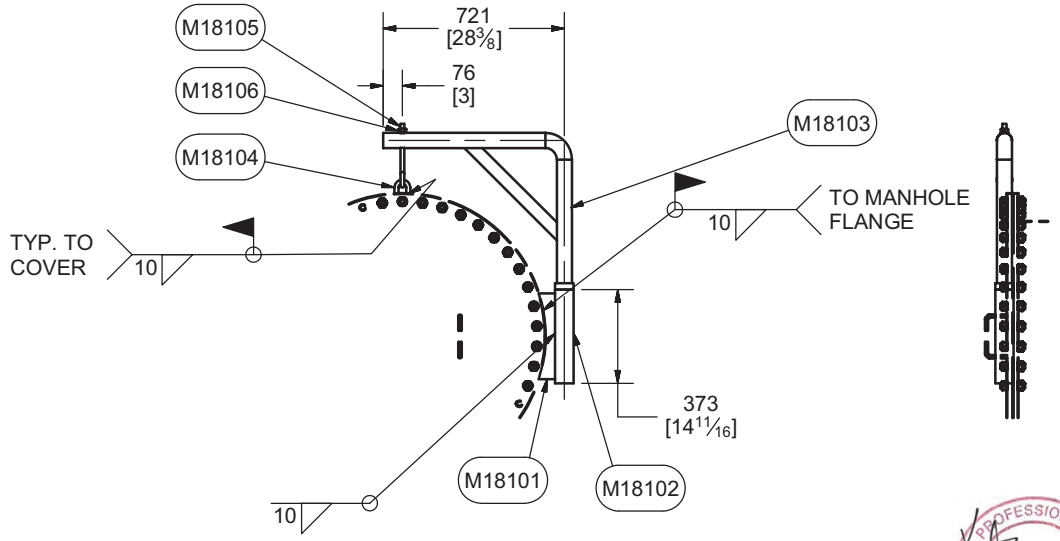

DAVIT ASSEMBLY
QTY: 16
SCALE 1/20

AS-BUILT
BY Inukshuk Construction Ltd. DATE 2018/07/25



Permit Number: P471

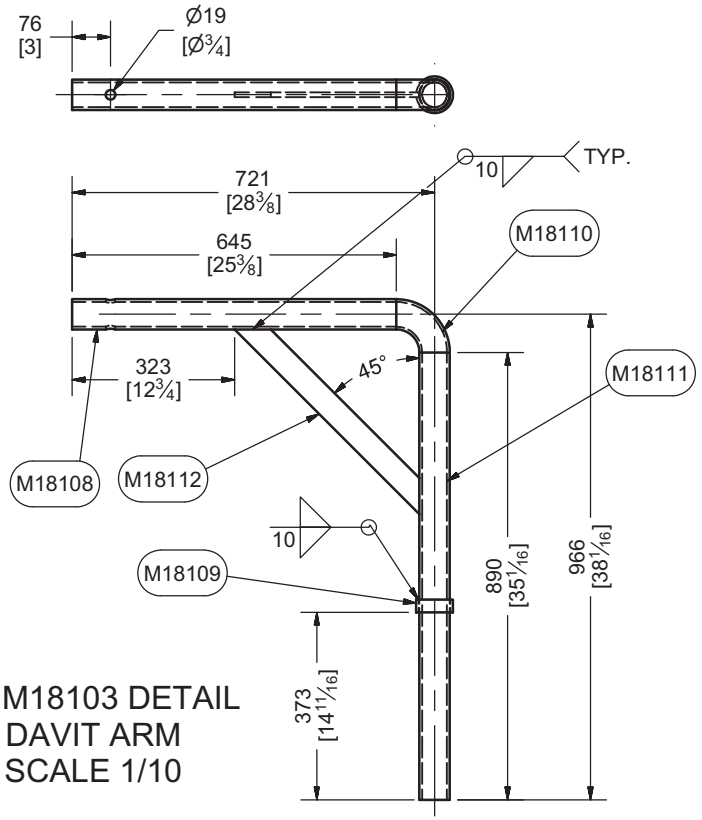

Pc. M18103 DETAIL
DAVIT ARM
SCALE 1/10

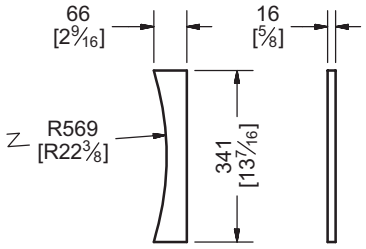

Pc M18101 DETAIL
SCALE 1/10

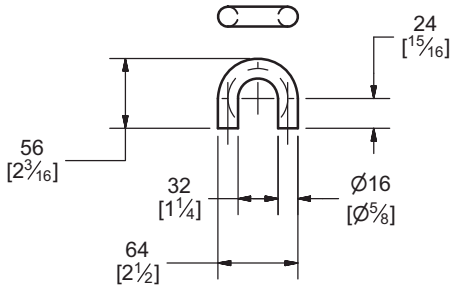

Pc M18104 DETAIL
SCALE 1/4

DRAWN MARC LOSIER	4/13/2017	900MM [36"] NS FOR TK1, 2, 3, 4	
CHECKED			
QA		TITLE	
MFG		MANHOLE COVER DAVIT	
APPROVED		SIZE A3	DWG NO 295-M18 REV
		SCALE	SHEET 1 OF 1

BILL OF MATERIALS

MARK	QTY.	DESCRIPTION	MATERIAL	MTR	WT #'s
1	1	C6Ø10.5# x 3'-4" LG (CBE)	G40.21-300W	C	–
2	2	C6Ø10.5# x 3'-1 15/16" LG (COE/POE)	G40.21-300W	C	–
3	1	C6Ø10.5# x 3'-1 27/32" LG (CBE)	G40.21-300W	C	–
4	1	3/8" x 3" x 3" ANGLE x 3'-2 17/32" LG (CBE)	G40.21-300W	C	–
5	2	3/8" THK x 3" x 5"	G40.21-260W	C	–
6	4	1/4" THK x 6" x 10" c/w 2" RADIUS CORNERS	G40.21-260W	C	–
7	16	5/8"Ø x 1 3/4" LG HEX HD BOLT c/w (1) NUT &	A325 GALV	C	–
		LOCK WASHER AND (2) FLAT WASHERS			
8	2	3/8" x 3" x 3" ANGLE x 3'-9 1/2" LG (CBE)	G40.21-300W	C	–
9	2	1/4" THK x 5" x 5 3/4" SEE DETAIL	G40.21-260W	C	–
10	4	1/4" THK x 6" x 6"	G40.21-260W	C	–

BILLING FOR ONE TANK SHOWN, THREE (3) REQUIRED

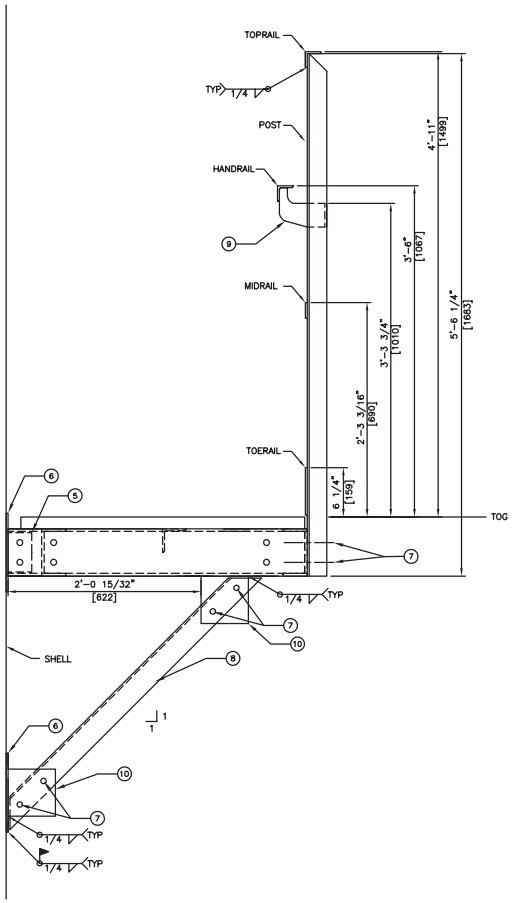

PLATFORM ELEVATION DETAIL

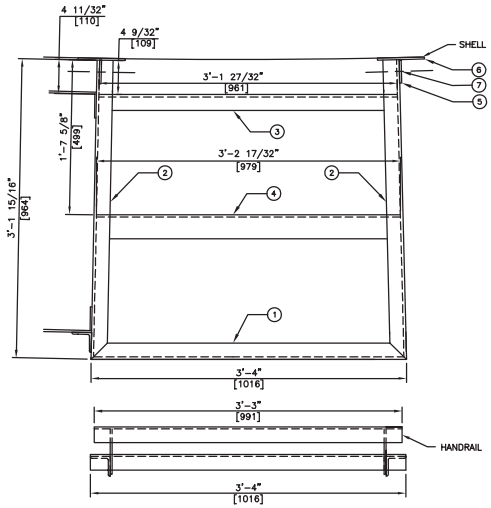

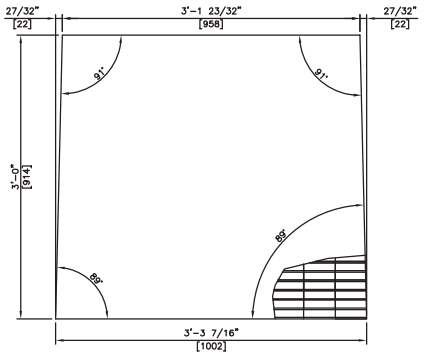

GRATING DETAIL

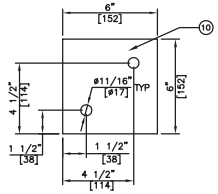

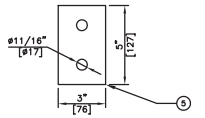

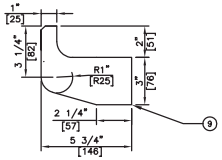

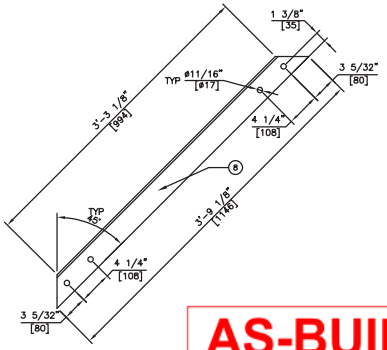

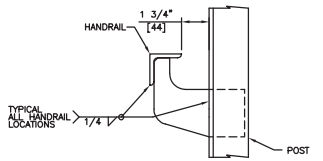

TYPICAL HANDRAIL/POST DETAIL

TYPICAL HANDRAIL DETAIL

TOPRAIL – 1/4" x 2" x 2" ANGLE
HANDRAIL – 1/4" x 2" x 2" ANGLE
MIDRAIL – 1/4" x 2" FLATBAR
TOERAIL – 1/4" x 6" FLATBAR
POST – 1/4" x 2 1/2" x 2 1/2" ANGLE
GRATING – 19-W-4 1 1/2" DEEP x 3/16" GALVANIZED SERRATED BAR GRATING

**HANDRAIL LOCATED ON OUTSIDE ONLY – BOLTED TO PLATFORM

**ALL GRATING TO BE SECURED TO PLATFORM FRAME USING SADDLE CLIPS (BOLTED).

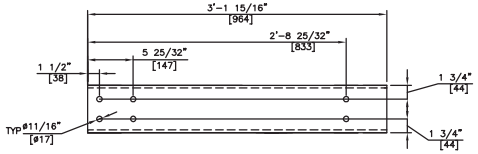

MARK 2 – RIGHT HAND SHOWN
LEFT HAND OPPOSITE

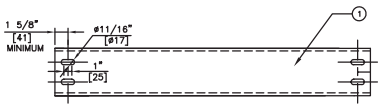

SLOTS MAY BE SHOP LOCATED TO MATCH HANDRAIL POST

AS-BUILT
BY Inukshuk Construction Ltd. DATE 2018/07/25

PROFESSIONAL ENGINEERS
L.C. BROWN
LICENSEE
NT/NU
23-Jul-2017

REV.	DATE	DRWN.	APP'D.	DESCRIPTION
0	5-MAY-17	ME	KB	ISSUED FOR CONSTRUCTION
B	11-APR-17	ME	KB	ISSUED FOR APPROVAL
A	8-APR-17	ME	KB	ISSUED FOR APPROVAL

REVISIONS

SUB-ARC SYSTEMS INC.

CUSTOMER: AGNICO EAGLE MINES LIMITED – MELIADINE PROJECT
TITLE: MID PLATFORM DETAIL
PROJECT NO.: 6515
LOCATION: RANKIN INLET, NUNAVUT
TANK NO.: TANK TAG: TK #1
SCALE: 3/4" = 1'-0"
W.O.: 17-03
DWG. No.: 17-03-1-001
Rev.: 0
DATE: 8-APR-17

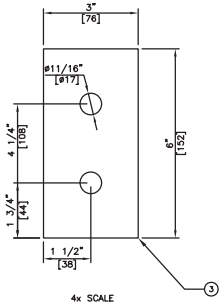

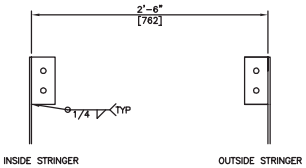

STRINGER CLIP TO PLATFORM

BILL OF MATERIALS

MARK	QTY.	DESCRIPTION	MATERIAL	MTR	WT #'s
1	1	1/4" THK x 12" x 17'-1 13/16" LG SEE DETAIL	G40.21-260W	C	–
2	3	1/4" THK x 12" x 17'-8" LG SEE DETAIL	G40.21-260W	C	–
3	14	1/4" THK x 3" x 6"	G40.21-260W	C	–
4	28	5/8"ø x 1 3/4" LG HEX HD BOLT c/w (1) NUT & LOCK WASHER AND (2) FLAT WASHERS	A325 GALV	C	–

BILLING FOR ONE TANK SHOWN, ONE REQUIRED

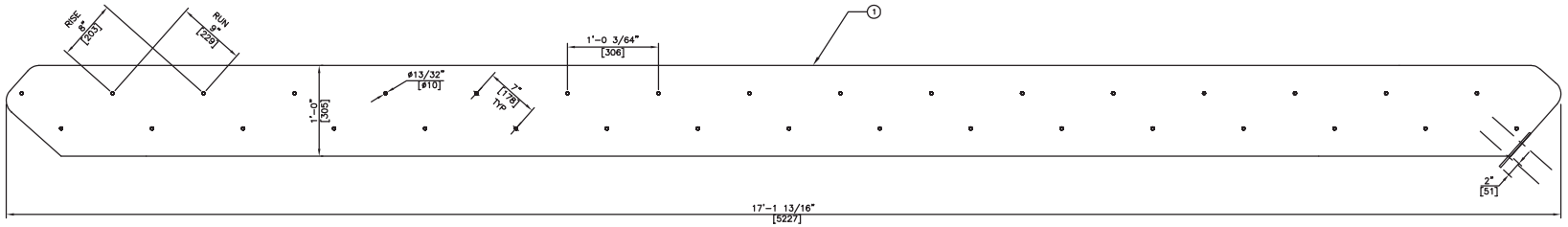

INSIDE BOTTOM STRINGER

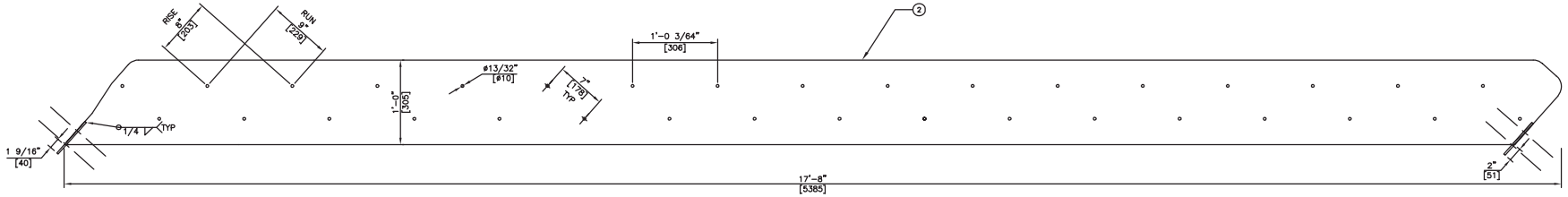

INSIDE STRINGER – THREE SECTIONS REQUIRED

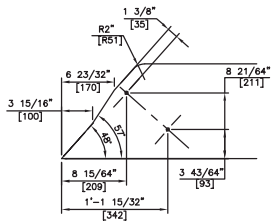

BOTTOM @ PLATFORM

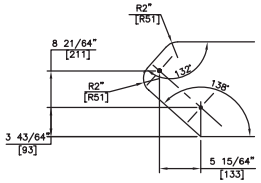

BOTTOM

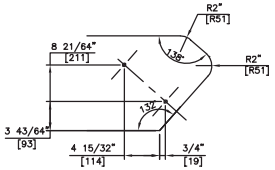

TOP

AS-BUILT

BY Inukshuk Construction Ltd. DATE 2018/07/25



NOTE: MARK 3 IS PLACED SAME SIDE AS STAIR.

REV.	DATE	DRWN.	APP'D.	DESCRIPTION
0	5-MAY-17	ME	KB	ISSUED FOR CONSTRUCTION
B	11-APR-17	ME	KB	ISSUED FOR APPROVAL
A	8-APR-17	ME	KB	ISSUED FOR APPROVAL

REVISIONS

SUB-ARC SYSTEMS INC.

CUSTOMER: AGNICO EAGLE MINES LIMITED – MELIADINE PROJECT

TITLE: INSIDE STRINGER DETAIL

PROJECT NO.: 6515

LOCATION: RANKIN INLET, NUNAVUT

TANK NO.: TANK TAG: TK #1

SCALE: 3/4" = 1'-0" | W.O.: 17-03 | DWG. No.: 17-03-1-002 | Rev.: 0

DATE: 8-APR-17

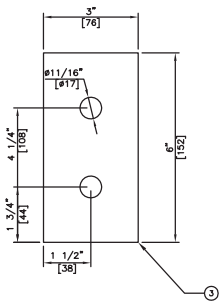

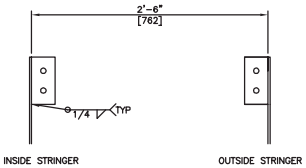

STRINGER CLIP TO PLATFORM

BILL OF MATERIALS

MARK	QTY.	DESCRIPTION	MATERIAL	MTR	WT #'s
1	1	1/4" THK x 12" x 17'-5 5/8" LG SEE DETAIL	G40.21-260W	C	–
2	3	1/4" THK x 12" x 17'-11 17/32" LG SEE DETAIL	G40.21-260W	C	–
3	14	1/4" THK x 3" x 6"	G40.21-260W	C	–
4	28	5/8"ø x 1 3/4" LG HEX HD BOLT c/w (1) NUT &	A325 GALV	C	–
		SERRATED BAR GRATING c/w CHECKER PLATE NOSE			
5	68	STAIR TREAD 9 3/4" WIDE x 30" LG x 1 1/2" x 3/16"	G40.21-260W	C	–
		SERRATED c/w CHECKER PLATE NOSE			
6	272	3/8"ø x 1 1/2" LG HEX HD BOLT c/w (1) NUT &	A325 GALV	C	–
		LOCK WASHER AND (2) FLAT WASHERS			

BILLING FOR ONE TANK SHOWN, ONE REQUIRED

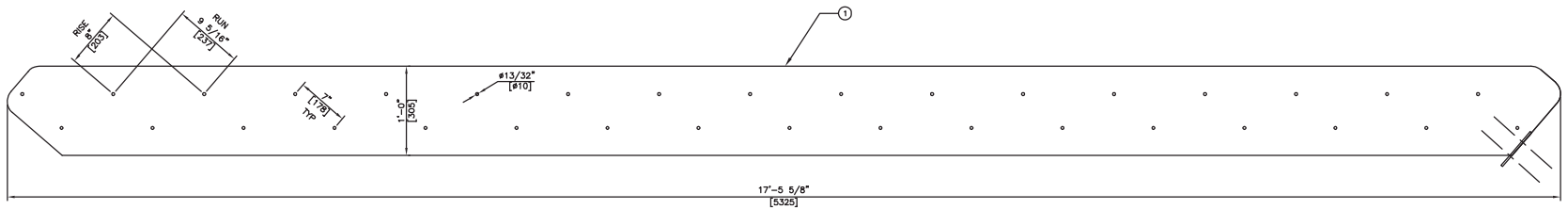

OUTSIDE BOTTOM STRINGER

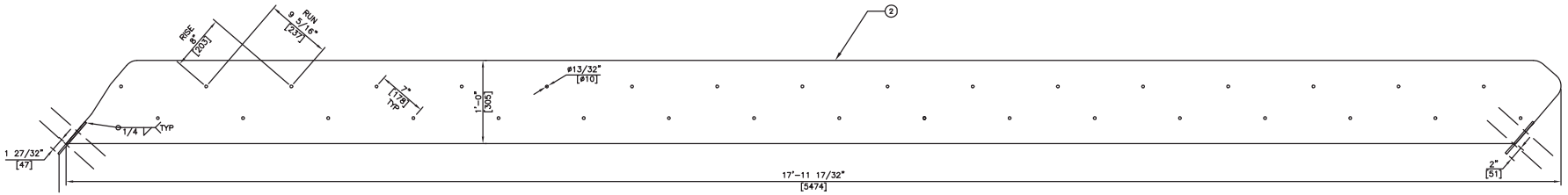

OUTSIDE STRINGER – THREE SECTIONS REQUIRED

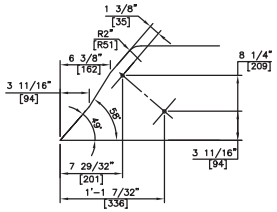

BOTTOM @ PLATFORM

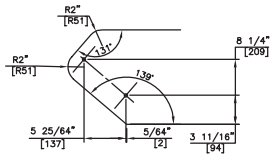

BOTTOM

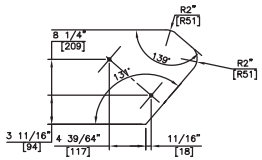

TOP



AS-BUILT

BY Inukshuk Construction Ltd. DATE 2018/07/25

NOTE: MARK 3 IS PLACED SAME SIDE AS STAIR.

REV.	DATE	DRWN.	APP'D.	DESCRIPTION
0	5-MAY-17	ME	KB	ISSUED FOR CONSTRUCTION
B	11-APR-17	ME	KB	ISSUED FOR APPROVAL
A	8-APR-17	ME	KB	ISSUED FOR APPROVAL

REVISIONS

SUB-ARC SYSTEMS INC.

CUSTOMER: AGNICO EAGLE MINES LIMITED – MELIADINE PROJECT

TITLE: OUTSIDE STRINGER DETAIL

PROJECT NO.: 6515

LOCATION: RANKIN INLET, NUNAVUT

TANK NO.: TANK TAG: TK #1

SCALE: 3/4" = 1'-0" | W.O.: 17-03 | DRWG. No.: 17-03-1-003 | Rev.: 0

DATE: 8-APR-17

BILL OF MATERIALS

MARK	QTY.	DESCRIPTION	MATERIAL	MTR	WT #'s
1	8	3/8" x 3" x 3" ANGLE x 3'-3" LG (PBE)	G40.21-300W	C	–
2	18	1/4" THK x 2 5/8" x 7" LG	G40.21-260W	C	–
3	8	3/8" x 3" x 3" ANGLE x 3'-9 1/8" LG	G40.21-300W	C	–
4	50	5/8"ø x 1 3/4" LG HEX HD BOLT c/w (1) NUT & LOCK WASHER AND (2) FLAT WASHERS	A325 GALV	C	–
5	17	1/4" THK x 6" x 10" c/w 2" RADIUS CORNERS	G40.21-260W	C	–
6	1	C6@10.5# x 2'-11" LG	G40.21-300W	C	–
7	16	1/4" THK x 6" x 6"	G40.21-260W	C	–

BILLING FOR ONE TANK SHOWN, ONE REQUIRED

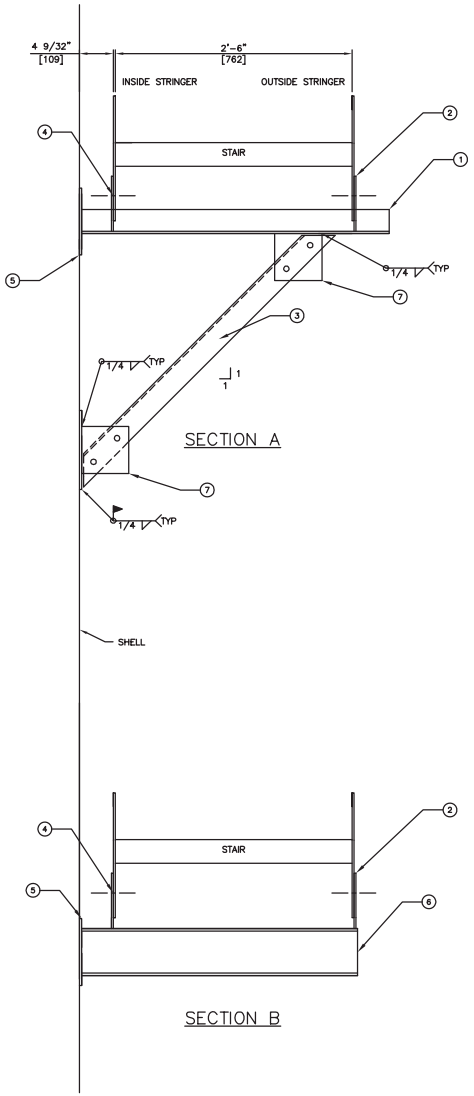

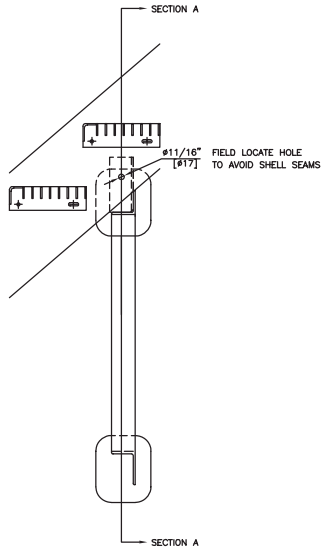

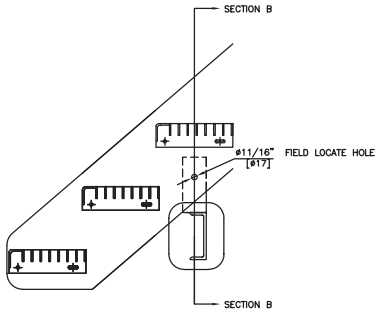

CHANNEL SUPPORT IS FOR BOTTOM OF STAIRS ONLY.

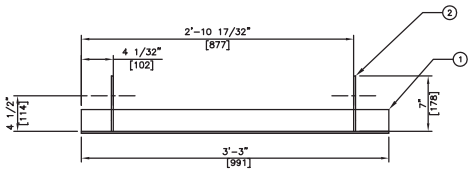

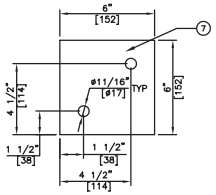

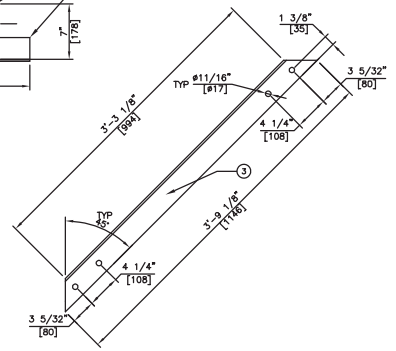

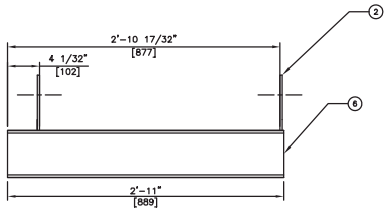



NOTE: MAXIMUM SUPPORT SPACING IS EVERY 7 STAIRS.

AS-BUILT
BY Inukshuk Construction Ltd. DATE 2018/07/25

REV.	DATE	DRWN.	APP'D.	DESCRIPTION
0	5-MAY-17	ME	KB	ISSUED FOR CONSTRUCTION
B	11-APR-17	ME	KB	ISSUED FOR APPROVAL
A	8-APR-17	ME	KB	ISSUED FOR APPROVAL

REVISIONS

SUB-ARC SYSTEMS INC.

CUSTOMER: AGNICO EAGLE MINES LIMITED – MELIADINE PROJECT

TITLE: STAIR STRINGER SUPPORTS

PROJECT NO.: 6515

LOCATION: RANKIN INLET, NUNAVUT

TANK NO.: TANK TAG: TK #1

SCALE: 3/4" = 1'-0" | W.O.: 17-03 | DRWG. No.: 17-03-1-004 | Rev.: 0

DATE: 8-APR-17

BILL OF MATERIALS

MARK	QTY.	DESCRIPTION	MATERIAL	MTR	WT #'s
1	1	C6⊕10.5# x 3'-4" LG (CBE)	G40.21-300W	C	–
2	2	C6⊕10.5# x 3'-1 15/16" LG (COE/POE)	G40.21-300W	C	–
3	1	C6⊕10.5# x 3'-1 27/32" LG (CBE)	G40.21-300W	C	–
4	1	3/8" x 3" x 3" ANGLE x 3'-2 17/32" LG (CBE)	G40.21-300W	C	–
5	2	3/8" THK x 3" x 5"	G40.21-260W	C	–
6	4	1/4" THK x 6" x 10" c/w 2" RADIUS CORNERS	G40.21-260W	C	–
7	20	5/8"⊕ x 1 3/4" LG HEX HD BOLT c/w (1) NUT & LOCK WASHER AND (2) FLAT WASHERS	A325 GALV	C	–
8	2	3/8" x 3" x 3" ANGLE x 4' - 0 27/32" LG (CBE)	G40.21-300W	C	–
9	4	1/4" THK x 5" x 5 3/4" SEE DETAIL	G40.21-260W	C	–

BILLING FOR ONE TANK SHOWN, ONE (1) REQUIRED

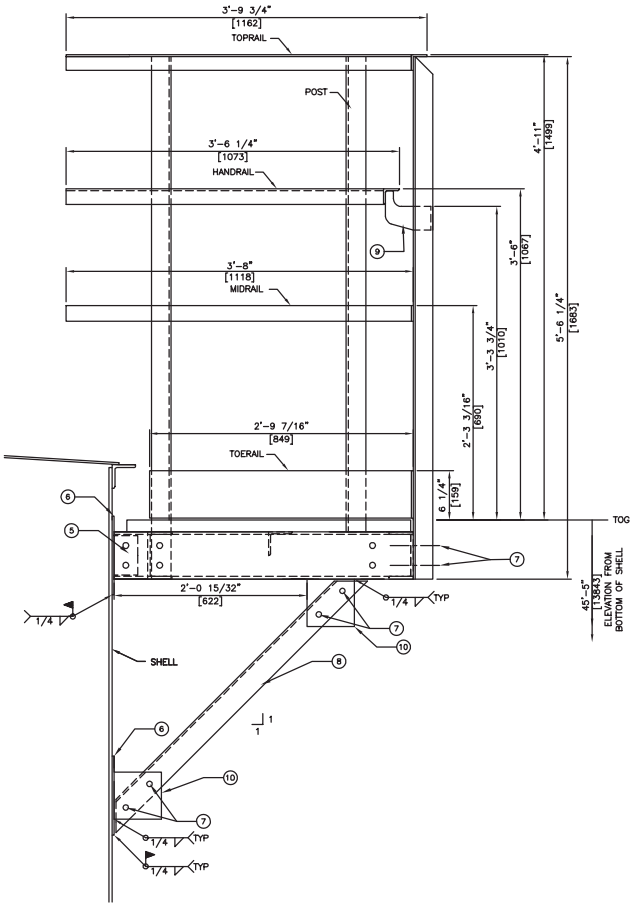

PLATFORM ELEVATION DETAIL

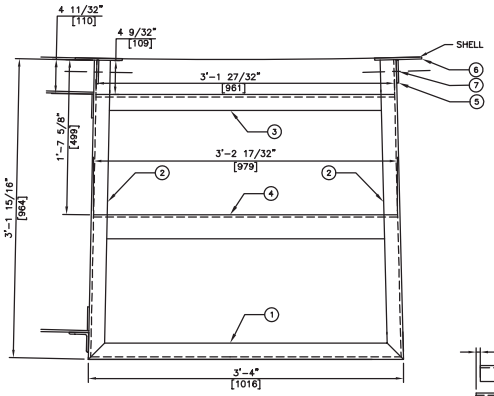

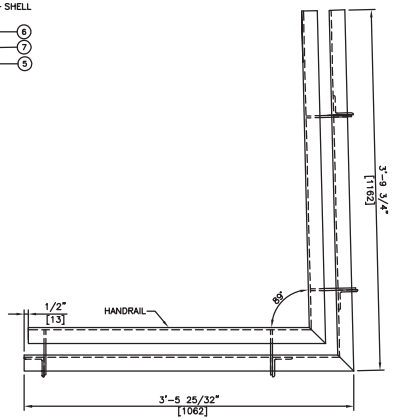

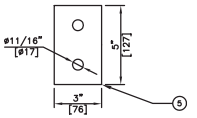

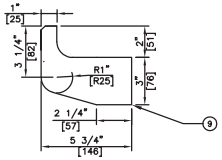

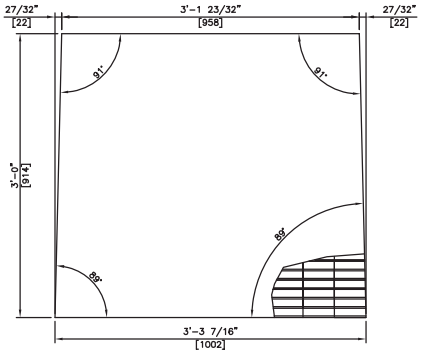

GRATING DETAIL

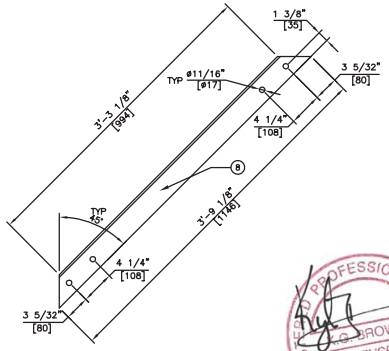

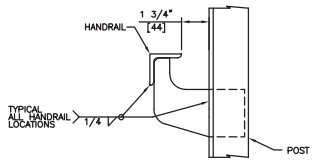

TYPICAL HANDRAIL/POST DETAIL

TYPICAL HANDRAIL DETAIL

TOPRAIL – 1/4" x 2" x 2" ANGLE
HANDRAIL – 1/4" x 2" x 2" ANGLE
MIDRAIL – 1/4" x 2" FLATBAR
TOERAIL – 1/4" x 6" FLATBAR
POST – 1/4" x 2 1/2" x 2 1/2" ANGLE
GRATING – 19-W-4 1 1/2" DEEP x 3/16" GALVANIZED SERRATED BAR GRATING

**HANDRAIL LOCATED ON OUTSIDE ONLY – BOLTED TO PLATFORM

**ALL GRATING TO BE SECURED TO PLATFORM FRAME USING SADDLE CLIPS (BOLTED).

FIELD TO TRIM HANDRAIL OVER TANK ROOF TO MATE WITH PERIMETER HANDRAIL

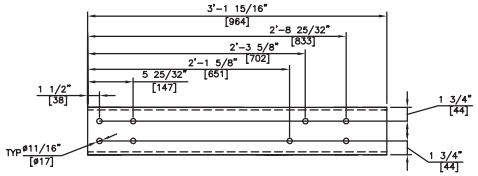

MARK 2 – RIGHT HAND SHOWN
LEFT HAND OPPOSITE

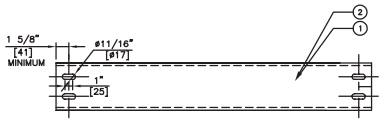

SLOTS MAY BE SHOP LOCATED TO MATCH HANDRAIL POST

ASSOCIATION OF PROFESSIONAL ENGINEERS GEOLOGISTS & GEOPHYSICISTS OF THE NWT/NU
K.G. BROWN
LICENSEE
23-Jul-2017

AS-BUILT
BY Inukshuk Construction Ltd. DATE 2018/07/25

REV.	DATE	DRWN.	APP'D.	DESCRIPTION
0	5-MAY-17	ME	KB	ISSUED FOR CONSTRUCTION
B	11-APR-17	ME	KB	ISSUED FOR APPROVAL
A	8-APR-17	ME	KB	ISSUED FOR APPROVAL

REVISIONS

SUB-ARC SYSTEMS INC.

CUSTOMER: AGNICO EAGLE MINES LIMITED – MELIADINE PROJECT
TITLE: TOP PLATFORM DETAIL
PROJECT NO.: 6515
LOCATION: RANKIN INLET, NUNAVUT
TANK NO.: TANK TAG: TK #1
SCALE: 3/4" = 1'-0" W.O.: 17-03
DATE: 8-APR-17
DRWG. No.: 17-03-1-005 Rev.: 0

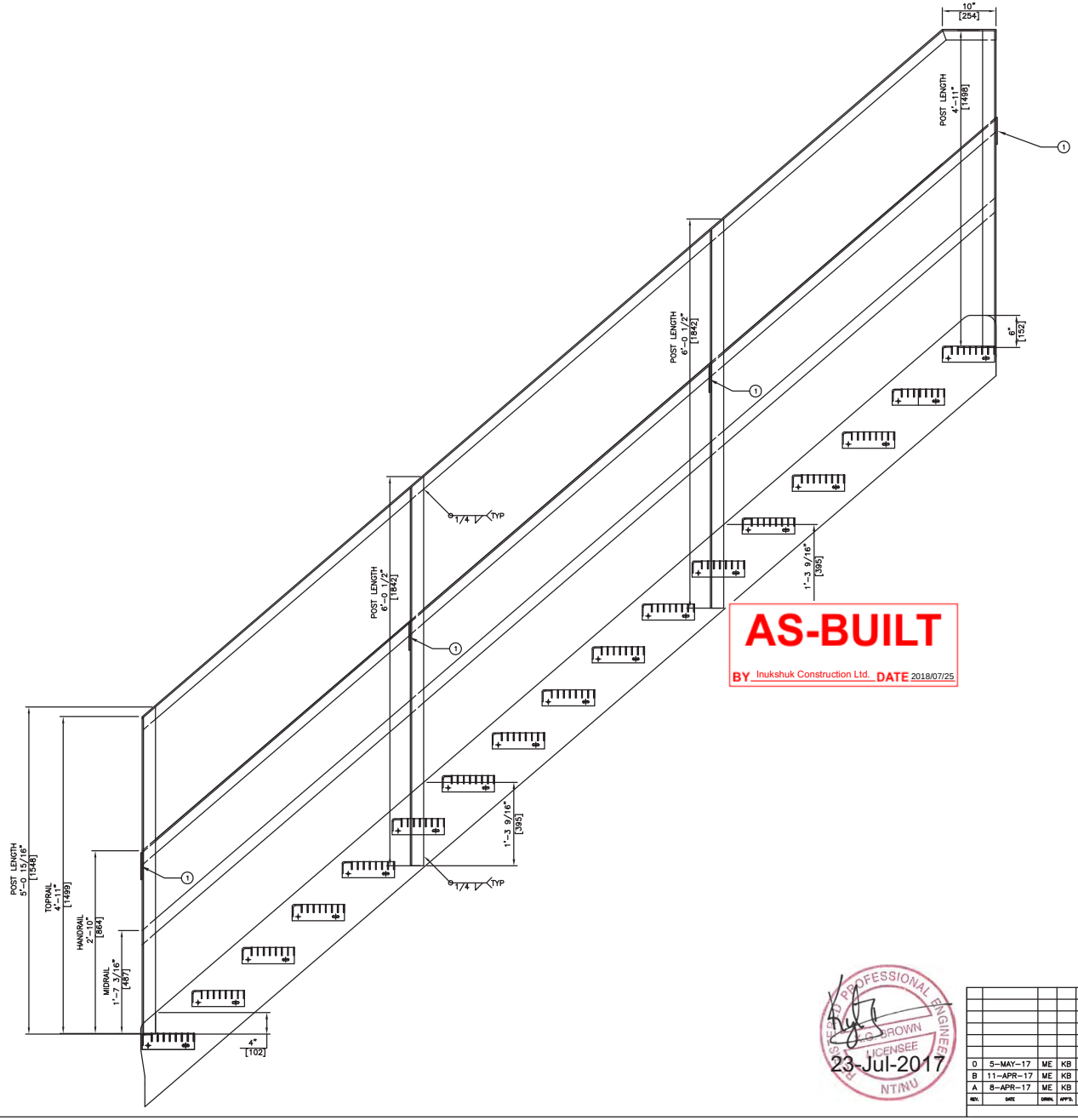

AS-BUILT

BY Inukshuk Construction Ltd. DATE 2018/07/25

BILL OF MATERIALS

MARK	QTY.	DESCRIPTION	MATERIAL	MTR	WT #'s
1	4	1/4" THK x 5" x 5 3/4" SEE DETAIL	G40.21-260W	C	–

BILLING FOR ONE TANK SHOWN, FOUR (4) REQUIRED

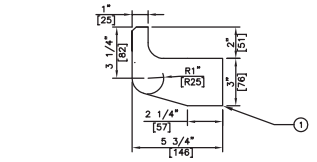

TYPICAL HANDRAIL/POST DETAIL

TYPICAL HANDRAIL DETAIL

TOPRAIL – 1/4" x 2" x 2" ANGLE
HANDRAIL – 1/4" x 2" x 2" ANGLE
MIDRAIL – 1/4" x 2" FLATBAR

POST – 1/4" x 2 1/2" x 2 1/2" ANGLE
POST SHALL BE SQUARE TO THE STAIR HOLES
1 POST AT EACH END, 2 POSTS EQUAL SPACE ON STRINGER

**HANDRAIL LOCATED ON OUTSIDE ONLY

PROFESSIONAL ENGINEER
S. D. BROWN
LICENSEE
NT/NU
23-Jul-2017

REV.	DATE	DRWN.	APP'D.	DESCRIPTION
0	5-MAY-17	ME	KB	ISSUED FOR CONSTRUCTION
B	11-APR-17	ME	KB	ISSUED FOR APPROVAL
A	8-APR-17	ME	KB	ISSUED FOR APPROVAL

REVISIONS

SUB-ARC SYSTEMS INC.

CUSTOMER: AGNICO EAGLE MINES LIMITED – MELIADINE PROJECT
TITLE: STAIR HANDRAIL DETAIL
PROJECT NO.: 6515
LOCATION: RANKIN INLET, NUNAVUT
TANK NO.: TANK TAG: TK #1
SCALE: 3/4" = 1'-0"
DATE: 8-APR-17
E.O.: 17-03
DRWG. No.: 17-03-1-006
Rev.: 0

Drawing Binder Tank 2 – 13,500CUM

AEM PURCHASE ORDER: OC-568510
AEM PACKAGE NO.: 6515-C-260-002
PACKAGE TITLE: FUEL TANKS (SUPPLY & INSTALL)

ICL Project No.: 295
ICL Document No.: 295-B2-AB
AEM Document No.: 6515-C-260-002-141-QCR-0008_Sub001
Revision: 0

OWNER:

Agnico Eagle Mines Limited
145 King St. East, Suite 400,
Toronto, Ontario M5C 2Y7

GENERAL CONTRACTOR:

Inukshuk Construction Limited
PO Box 654
Rankin Inlet NU
X0C 0G0

Contact: David Mosher

PH:(867)645-4030
FX: (902)429-7762

Submitted by: Inukshuk Construction Limited
Submitted: October 30, 2017

AGNICO EAGLE

Vendor Document Status

1 ☐ Proceed to next submission and status.

2 ☐ Proceed with exceptions as noted to next submission and status.

3 ☐ Do not proceed.
Revise as noted and resubmit next submission and status.

4 ☐ Complete, no further submission required.

By: Date:

Review and authorization to fabricate are only for general conformance with the design concept of the Project as expressed in the Contract Documents. Sole responsibility for the accuracy and completeness of this document, including but not limited to dimensions and quantities, remains with the Supplier/Contractor. Agnico Eagle does not warrant the accuracy or completeness of any of the information contained herein, nor does Agnico Eagle authorize or approve any construction means, methods, techniques, sequences or any safety precautions or procedures.

Agnico Eagle No. 6515-C-260-002-141-QCR-0008 R: Sub001

DOCUMENT FOR INFORMATION

AS-BUILT

BY Inukshuk Construction Ltd. DATE 2017/10/02

Index Tank No. 2 - 13,500CUM

Drawing No.	Description	Sheet No.	Rev
TK#2ITP	Inspection & Test Plan	1, 2	0
TK#2FAST.	Fastener List	1	0
65-116-210-200	Rankin Inlet Fuel Tank Farm Fuel Distribution Plan General Arrangement (Reference Only)	1	0
295-M2	Floor & Roof Layouts	1, 2	2
295-M7	Shell Plates and Angle Rolling Details	2	4
295-M8	Reinforcing Plate Details	3, 4, 13	4
295-M10	Erection Drawing	1–7	7
295-M15	Manholes Details	3, 4	3
295-M16	Nozzles Detail	1, 2, 4, 9,13-16, 18-22	4
295-M17	Pipe Support, Misc. Bracket, Grounding Lugs	1-5	2
295-M18	Manhole Cover Davit	1	0
17-03-2-001	Mid Platform Detail	1	0
17-03-2-002	Inside Stringer	1	0
17-03-2-003	Outside Stringer Detail	1	0
17-03-2-004	Stair Stringer Supports	1	0
17-03-2-005	Top Platform Detail	1	0
17-03-2-006	Stair Handrail Detail	1	0

INSPECTION & TEST PLAN

Client:	AGNICO EAGLE	**Tank Tag:**	TK #2	**Document:**	TK#2 ITP
Project ID:	MELIADINE GOLD MINE	**Work Order:**	295	**Revision:**	0

Item	Component	Activity	ITP Type	Documentation	Acceptance Criteria	Notes	Witness, Hold, Review Points	
							Client Sign/Date	Q.C. Sign/Date
1	Kick-Off Meeting	Kickoff Meeting	N/A	Meeting Minutes	N/A			H
2	Signature Log	Verify	N/A	Signature Log	N/A			H
3	Welder Qualification	Verify	N/A	Individual Welder Qualifications / Welder Log	API-650 / ASME IX			H
4	Inspector Qualification	Verify	N/A	In house Inspector & 3rd Party Qualifications	API-650			H
5	Weld Procedures	Verify	N/A	Approved Weld Procedures	API-650 / ASME IX, CWB W47.1			H
6	Welding Consumable	Electrode Storage	N/A	N/A	Manufacturer's Instructions			R
7	Foundation	Foundation Survey	DC	Foundation Acceptance Report, Compaction Report & Survey from 3rd Party	API-650 Para 7.5.5			H
8	Floor	Materials	FI	MTR Confirmation to Dwg	Drawing & API-650 Sect. 4	MTR of all plate under shell.		
		Fit up	VE, DC	As Built Drawing	Drawing	per API-650 5.1.5.4 - bottom plates under the shell shall have the outer ends of the joints fitted and lap-welded to form a smooth bearing surface.		R
		Welding	VE	Weld Map, Visual Report	API–650 Para 7.2 & 8.5 & WPS			R
		Vacuum Test	VB	Vacuum Box Test Report	API-650 Para 7.3.3(a) & 8.6			W
9	Shell to Floor Seams	Initial Weld Pass	VE	Weld Map, Visual Report	API-650 Para 8.5, 7.2.4.1			R
		Final Weld Pass	VE	Weld Map, Visual Report	API-650 Para 8.5, 7.2.4.1			R
		Diesel Test	NDT	Leak Test Report	API-650 Para 7.2.4.1 d)			W
10	Shell	Materials	FI	MTR Confirmation to Dwg	Drawing & API-650 Sect. 4	MTR of all plate		H
		Fit up 1st Course	VE, DC	As Built Drawing	Drawing			R
		Roundness	DC	Dimension Report	API-650 Para 7.5.3			H
		Welding	VE	Weld Map, Visual Report	API–650 Para 7.2, 7.5, 8.5 & WPS			R
		Tolerance Check – Plumbness & Local Deviations	DC	Dimension Report	API-650 Para 7.5			H
		Diesel Test Shell Welds	NDT	Leak Test Report	API-650 Para 7.3.6 2)a)i)			W
		UT – All Shell	NDT	UT report / Log / Map	API-650 Para Annex U	Shell less than 3/8" shall be intrepreted as 3/8" as a modification of API-650. All T joint UT.		H
11	Compression Ring	Fit up	VE, DC	As Built Drawing	Drawing			R
		Welding	VE	Weld Map, Visual Report	API–650 Para 7.2 & 8.5 & WPS			R
12	Roof	Fit up	VE, DC	As Built Drawing	Drawing			R
		Welding	VE	Visual Report	API–650 Para 7.2 & 8.5 & WPS			R
13	Roof Structure	Fit up	VE, DC	As Built Drawing	Drawing			R
		Column Plumbness	DC	Dimension Report	API–650 Para 7.5.2 b)			H
		Welding	VE	Visual Report	API–650 Para 7.2 & 8.5 & WPS			R

Item	Component	Activity	ITP Type	Documentation	Acceptance Criteria	Notes	Witness, Hold, Review Points	
							Client Sign/Date	Q.C. Sign/Date
14	Nozzles	Layout	VE, DC	As Built Drawing	Drawing			H
		Fit up	VE, DC	As Built Drawing	Drawing			R
		Welding	VE	Weld Map, Visual Report	API–650 Para 7.2 & 8.5 & WPS			R
		Tolerance Check – Plumbness & Local Deviations	DC	Dimension Report	API-650 Para 7.5			H
		Shell Nozzle Repad Air test	AT	Leak Test Report	API-650 Para 7.3.5			W
		MPI	NDT	MPI Report	API-650 Para 7.2.3.6	All welds of Shell Nozzles		W
15	Manway	Layout	VE, DC	As Built Drawing	Drawing			H
		Fit up	VE, DC	As Built Drawing	Drawing			R
		Welding	VE	Weld Map, Visual Report	API–650 Para 7.2 & 8.5 & WPS			R
		Tolerance Check – Plumbness & Local Deviations	DC	Dimension Report	API-650 Para 7.5			H
		Shell Manway Repad Air test	AT	Leak Test Report	API-650 Para 7.3.5			W
		MPT	NDT	MPI Report	API-650 Para 7.2.3.6	All welds of Shell Manways		R
16	Internals	Layout / Fit up	VE, DC	As Built Drawing	Drawing			R
		Welding	VE	Visual Report	API–650 Para 7.2 & 8.5 & WPS			R
		Stillwell Plumbness	DC	Dimension Report	API–650 Para H.4.5			R
		MPI or LP	NDT	NDT Report	Sump Welds (if applicable) 7.3.4	MPI all welds		H
17	Externals	Layout / Fit up	VE, DC	As Built Drawing	Drawing			R
	Externals	Welding	VE	Visual Report	API–650 Para 7.2 & 8.5 & WPS			R
18	Stairs & Platforms	Fit up	VE, DC	As Built Drawing	Drawing			R
		Welding	VE	Visual Report	API–650 Para 7.2 & 8.5 & WPS			R
19	Bolts & Nuts	Inspection	VE, DC	As Built Drawing	Drawing	Bolt Torque		W
20	Final	Name Plate Verification	N/A	Scan of Name Plate	Drawings			H
		Final Inspection	FI	As Built Drawings, Data Sheet, Manufacturer's Certification (3rd Party), Punch List	Drawings			H

DEFINITIONS:

W - WITNESS: Specified activity to be observed by an outlined party. QC to provide the applicable party 24 hours notice of witness point.

H - HOLD: Specified component or installation to be inspected by an outlined party. No further activities specific to the component or installation may proceed until inspection is carried out. QC to provide the applicable party 24 hours notice of hold point.

R - REVIEW: Specified documentation and specifications applicable to a particular component and/or installation to be examined by an outlined party.

AT - AIR TEST: Specified component and/or installation to be air tested according to specified documentation and specifications.

DC - DIMENSION CHECK: Physical dimensions of component and/or installation to be verified according to specified documentation and specifications.

FI - FINAL INSPECTION: Specified inspection procedures to be executed prior to release of the component and/or installation and verified according to specified documentation and specifications.

NDT - NON DESTRUCTIVE TESTING: Specified component and/or installation to be inspected using a named non destructive testing method according to specified documentation and specifications.

VE - VISUAL Examination: Specified component and/or installation to be examined visually according to specified documentation and specification.

VB - VACUUM-BOX TEST: Specified component and/or installation to be vacuum box tested according to specified documentation and specifications.

Fastener List

Tank #	qty	Qty of Component	Connection	Description	Lght (in)
2	128.00	64	Shell to Rafter Connection	Bolt, Structural A325, 3/4"	2
2	64.00	32	Rafter to Center Column	Bolt, Structural A325, 3/4"	3.5
2	14.00	96	Rafter to intermediate beam	Bolt, Structural A325, 3/4"	2.25
2	112.00	7	Beam to top plate and intermediate colun	Bolt, Structural A325, 3/4"	2.5
2	318.00			Nut, Structural heavy hex 3/4"	
2	636.00			Washer, type A, 3/4"	
2	168.00	4	36"Shell Manhole	Stud, L7, 3/4"	3 3/4
2	16.00	2	8" in/out Nozzle	Stud, L7, 3/4"	4 1/4
2	48.00	6	6" in/out Nozzle	Stud, L7, 3/4"	4
2	-	6	3" Water Drawoff	Stud, L7, 5/8"	3 1/2
2	60.00	3	24" Roof manhole	Stud, L7, 5/8"	2 1/4
2	20.00	1	24" Roof manhole emergency vent	Stud, L7, 5/8"	9.5
2	16.00	1	16" Vent	Stud, L7, 1"	5 1/4
2	8.00	1	8" Roof Nozzle	Stud, L7, 3/4"	4 1/4
2	8.00	1	6" Gauge Hatch	Stud, L7, 3/4"	4
2	8.00	1	4" Roof Nozzle	Stud, L7, 5/8"	3.5
2	32.00			Nut, A194, Gr. 4, 1"	
2	496.00			Nut, A194, Gr. 4, 3/4"	
2	176.00			Nut, A194, Gr. 4, 5/8"	
2	4.00	4	36"Shell Manhole	Gasket, Ring, Durlon 8500, 1/8", 1051 o.d.x 914 i.d.	
2	2.00	2	8" in/out Nozzle	Gasket, Ring, Durlon 8500,1/8" x 8" x 150#	
2	6.00	6	6" in/out Nozzle	Gasket, Ring, Durlon 8500,1/8" x 6" x 150#	
2	-	6	3" Water Drawoff	Gasket, Ring, Durlon 8500,1/8" x 3" x 150#	
2	4.00	4	24" Roof manhole	Gasket, Ring, Durlon 8500, 1/16" x 762 x 610	
2	1.00	1	8" High Level	Gasket, Ring, Durlon 8500, 1/16" x 150#, 8"	
2	1.00	1	6" Gauge Hatch	Gasket, Full Face, Durlon 8500, 1/16" x 150#, 6"	

NO. DESSIN
DRAWING NO. 65-116-210-200

FORMAT ARCH D

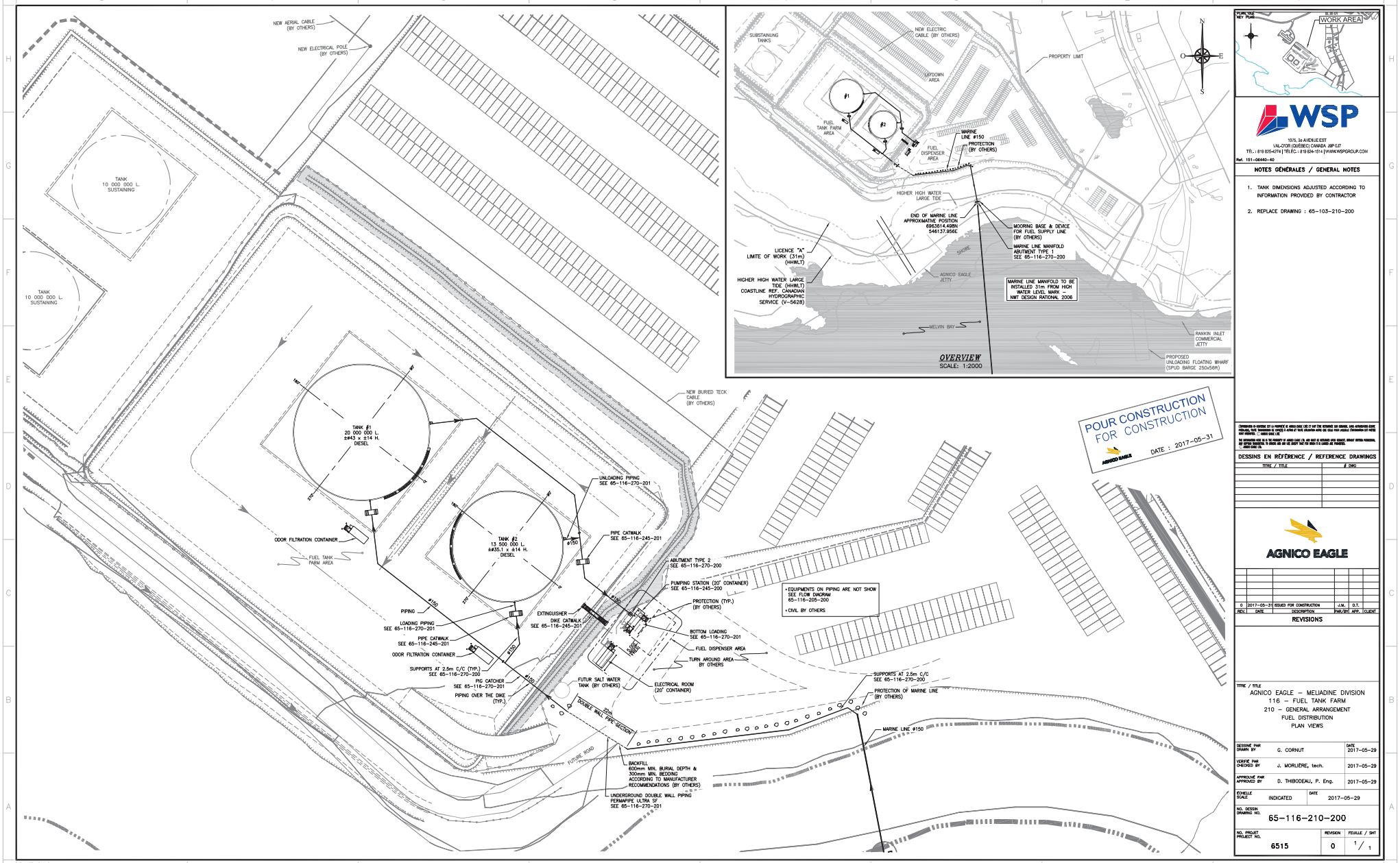

OVERVIEW
SCALE: 1:2000

POUR CONSTRUCTION
FOR CONSTRUCTION
DATE : 2017-05-31

WSP
1075, 3e AVENUE EST
VAL-D'OR (QUÉBEC) CANADA J9P 0J7
TÉL. : 819 825-4274 | TÉLÉC. : 819 824-1514 | WWW.WSPGROUP.COM
Ref. 151-06440-40

NOTES GÉNÉRALES / GENERAL NOTES

1. TANK DIMENSIONS ADJUSTED ACCORDING TO INFORMATION PROVIDED BY CONTRACTOR
2. REPLACE DRAWING : 65-103-210-200

CONFIDENTIEL ET PROPRIÉTÉ DE AGNICO EAGLE LTÉE ET NE PEUT ÊTRE DIVULGUÉ OU UTILISÉ SANS AUTORISATION ÉCRITE PRÉALABLE. TOUS DROITS RÉSERVÉS © 2016 / CONFIDENTIAL AND PROPRIETARY TO AGNICO EAGLE LTD. ALL RIGHTS RESERVED 2016.

DESSINS EN RÉFÉRENCE / REFERENCE DRAWINGS

TITRE / TITLE	# DWG

AGNICO EAGLE

REV.	DATE	DESCRIPTION	PAR/BY	APP.	CLIENT
0	2017-05-31	ISSUED FOR CONSTRUCTION	J.M.	D.T.	

REVISIONS

TITRE / TITLE
AGNICO EAGLE – MEL1ADINE DIVISION
116 – FUEL TANK FARM
210 – GENERAL ARRANGEMENT
FUEL DISTRIBUTION
PLAN VIEWS

DESSINÉ PAR / DRAWN BY	G. CORNUT	2017-05-29
VÉRIFIÉ PAR / CHECKED BY	J. MORLIÈRE, tech.	2017-05-29
APPROUVÉ PAR / APPROVED BY	D. THIBODEAU, P. Eng.	2017-05-29

ÉCHELLE / SCALE: INDICATED
DATE: 2017-05-29

NO. DESSIN / DRAWING NO.: 65-116-210-200

NO. PROJET / PROJECT NO.: 6515
REVISION: 0
FEUILLE / SHT: 1 / 1

AE-CART-ARCH D

\\CAMTL1DATA01\projets\2015\1\151-06440-40\Genie Nordique\Dao\65-116-210-200_R0.dwg 2013-02-19 14:03:29

FILE NO. 65-116-210-200_R0.dwg

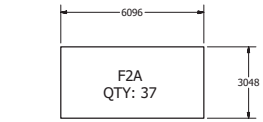

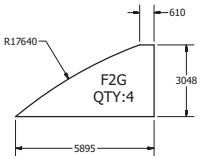

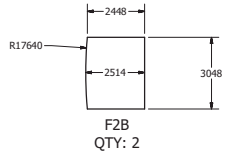

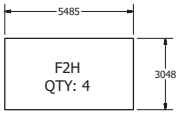

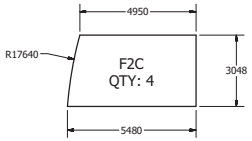

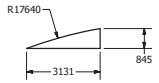

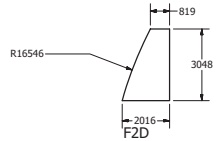

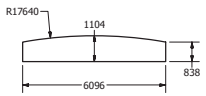

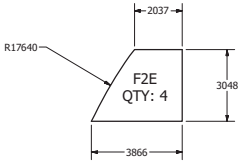

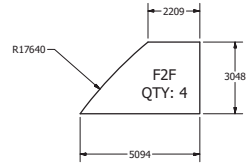

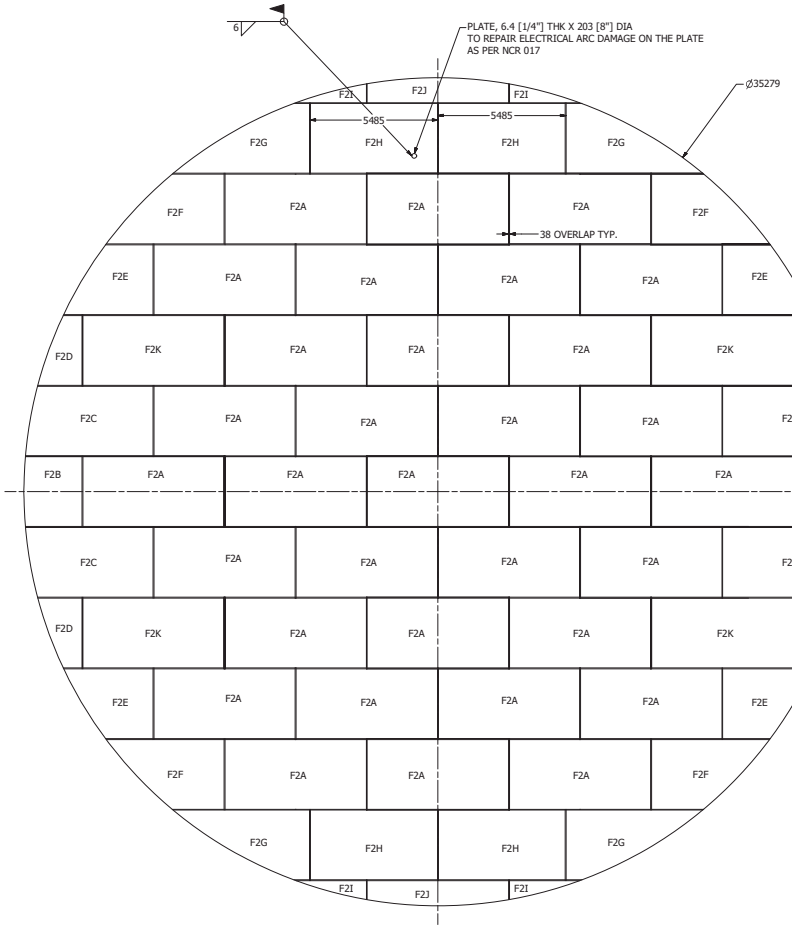

TANK 2 (13.5ML) FLOOR LAYOUT
SCALE 1 / 100

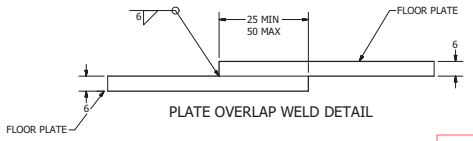

PLATE OVERLAP WELD DETAIL

PARTS LIST

ITEM	QTY	DESCRIPTION	MATERIAL
F2A	37	PL 6.35 X 3048 X 6096	G40.21M-260WT
F2B	2	PL 6.35 X 3048 X 2514	G40.21M-260WT
F2C	4	PL 6.35 X 3048 X 5480	G40.21M-260WT
F2D	4	PL 6.35 X 3048 X 1931	G40.21M-260WT
F2E	4	PL 6.35 X 3048 X3866	G40.21M-260WT
F2F	4	PL 6.35 X 3048 X 5094	G40.21M-260WT
F2G	4	PL 6.35 X 3048 X 5895	G40.21M-260WT
F2H	4	PL 6.35 X 3048 X 5485	G40.21M-260WT
F2I	4	PL 6.35 X 3131 X 845	G40.21M-260WT
F2J	2	PL 6.35 X 838 X 6096	G40.21M-260WT

AS-BUILT
BY Inukshuk Construction Ltd. DATE 2017/10/02

30-Sep-2017
Permit Number: P471

REVISION HISTORY		
REV	DESCRIPTION	DATE
2	INCORPORATE FIELD MODIFICATION	9/27/2017

DRAWN	JACOB SAUNDERS	1/10/2017
CHECKED	MARC LOSIER	3/14/2017
QA		
MFG		
APPROVED		

TITLE: TK #2 (13.5ML) - FLOOR LAYOUT

MELIADINE FIELD ERECTED TANKS - TANK #2 (13.5ML) FLOOR AND ROOF LAYOUT

SIZE	DWG NO	REV
A1	295-M2	2

SCALE 1 / 100 SHEET 1 OF 2

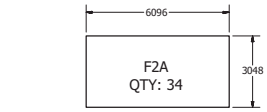

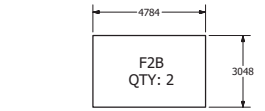

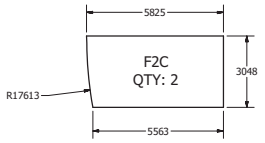

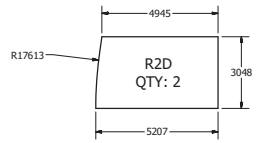

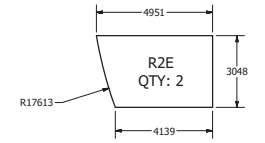

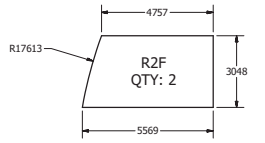

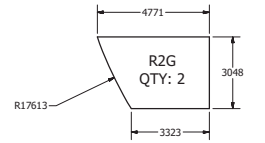

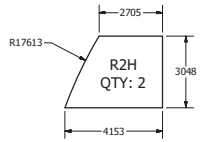

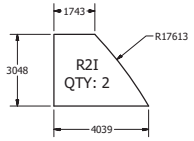

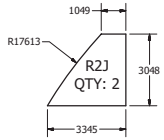

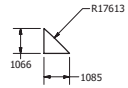

R2K
QTY: 2

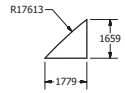

R2L
QTY: 2

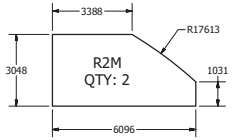

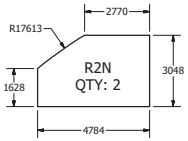

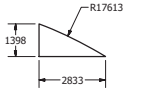

R2O
QTY: 2

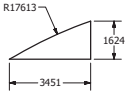

R2P
QTY: 2

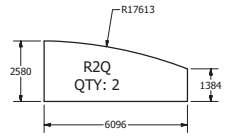

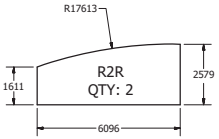

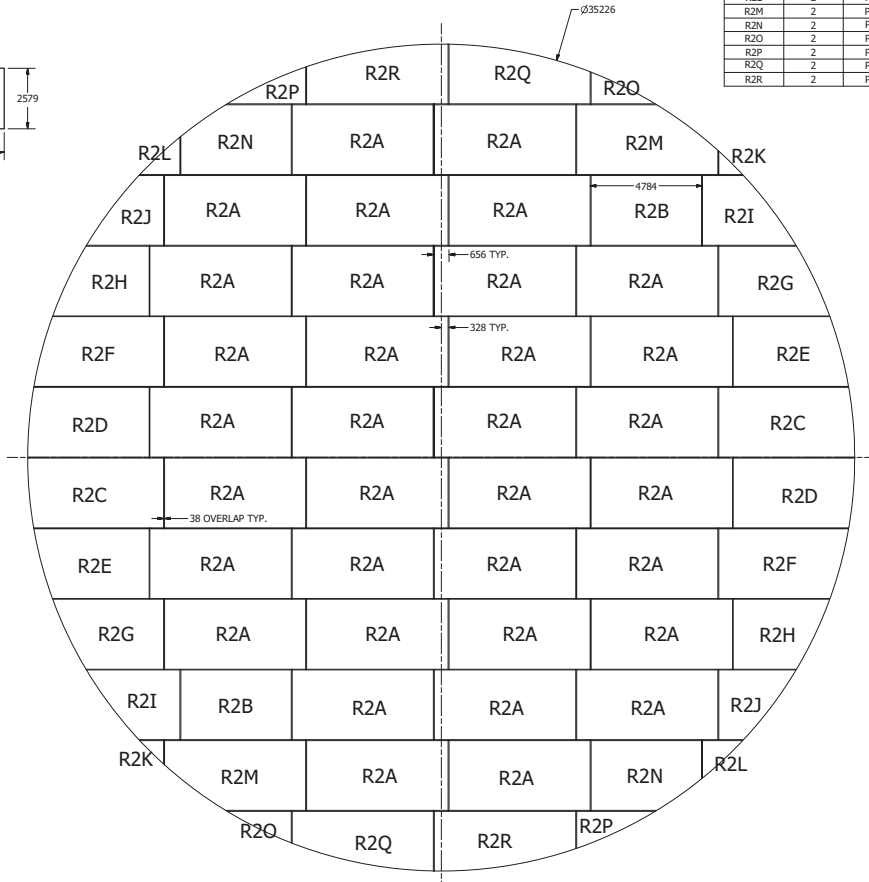

TANK 2 (13.5ML) ROOF LAYOUT
SCALE 1 / 100

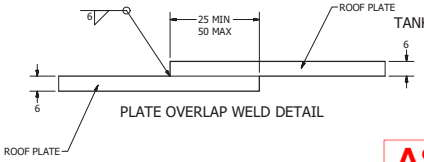

PLATE OVERLAP WELD DETAIL

PARTS LIST

ITEM	QTY	DESCRIPTION	MATERIAL
R2A	34	PL 6.35 X 3048 X 6096	G40.21M-260WT
R2B	2	PL 6.35 X 3048 X 4784	G40.21M-260WT
R2C	2	PL 6.35 X 3048 X 5825	G40.21M-260WT
R2D	2	PL 6.35 X 3048 X 5825	G40.21M-260WT
R2E	2	PL 6.35 X 3048 X 4951	G40.21M-260WT
R2F	2	PL 6.35 X 3048 X 5569	G40.21M-260WT
R2G	2	PL 6.35 X 3048 X 4771	G40.21M-260WT
R2H	2	PL 6.35 X 3048 X 4153	G40.21M-260WT
R2I	2	PL 6.35 X 3048 X 4039	G40.21M-260WT
R2J	2	PL 6.35 X 3048 X 3345	G40.21M-260WT
R2K	2	PL 6.35 X 1066 x 1085	G40.21M-260WT
R2L	2	PL 6.35 X 1659 x 1779	G40.21M-260WT
R2M	2	PL 6.35 X 3048 X 6096	G40.21M-260WT
R2N	2	PL 6.35 X 3048 X 4784	G40.21M-260WT
R2O	2	PL 6.35 X 2833 x 1398	G40.21M-260WT
R2P	2	PL 6.35 X 3451 x 1624	G40.21M-260WT
R2Q	2	PL 6.35 X 2580 x 6096	G40.21M-260WT
R2R	2	PL 6.35 X 2579 x 6096	G40.21M-260WT

AS-BUILT
BY Inukshuk Construction Ltd. DATE 2017/10/02

30-Sep-2017
Permit Number: P471

REVISION HISTORY		
REV	DESCRIPTION	DATE
2	INCORPORATE FIELD MODIFICATION	9/27/2017

DRAWN	JACOB SAUNDERS	1/10/2017
CHECKED	MARC LOSIER	3/14/2017
QA		
MFG		
APPROVED		

TK 2 (13.5ML) - ROOF LAYOUT

TITLE
MELIADINE FIELD ERECTED TANKS - TANK #2 (13.5ML) FLOOR AND ROOF LAYOUT

SIZE	DWG NO	REV
A1	295-M2	2

SCALE 1 / 100 SHEET 2 OF 2

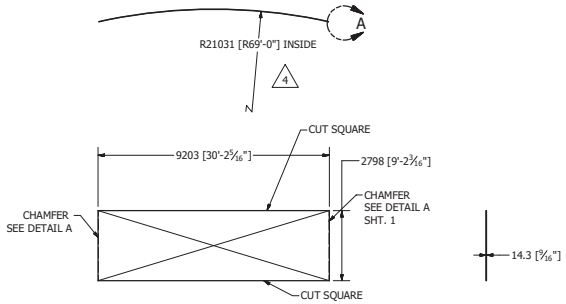

DEVELOP VIEW
COURSE NO. 1 (BOTTOM) 14.3mm THK (9/16")
CUT FROM PLATE 2874mm x 9269mm
QTY: 12
MARK 7201

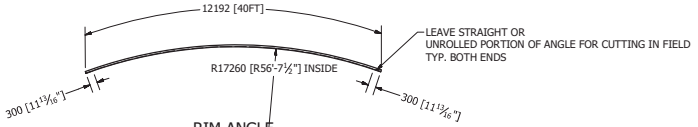

RIM ANGLE
76.2 X 76.2 X 9.5 x 12192 LONG
(3" X 3" X 3/8" x 40')
STEEL CSA G40.21M 350W
ROLLED TOE OUT
QTY: 10
MARK 7204

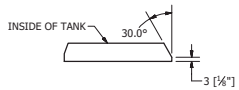

DETAIL A
COURSE NO. 1 VERT. PREP.
TYP. BOTH ENDS
SCALE 1 / 2

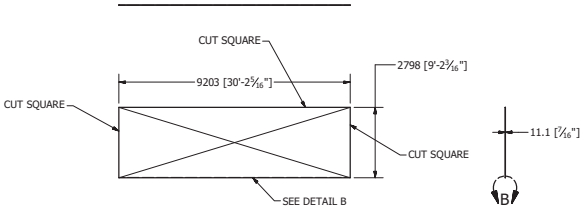

DEVELOP VIEW
COURSE NO. 2 - 11.1mm THK (7/16")
CUT FROM PLATE 2874mm x 9269mm
QTY: 12
MARK 7202

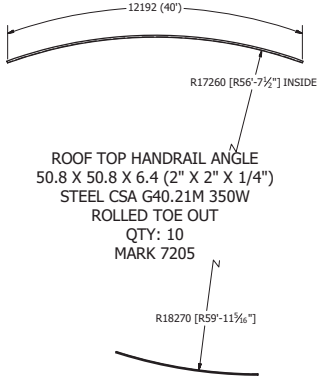

ROOF TOP HANDRAIL ANGLE
50.8 X 50.8 X 6.4 (2" X 2" X 1/4")
STEEL CSA G40.21M 350W
ROLLED TOE OUT
QTY: 10
MARK 7205

TOP VIEW

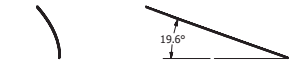

FRONT VIEW SIDE VIEW

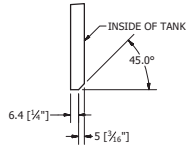

DETAIL B
COURSE NO. 2
BOTTOM EDGE PREP.
SCALE 1 / 2

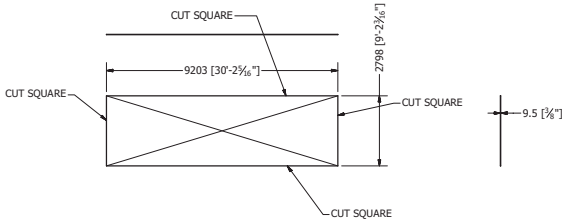

DEVELOP VIEW
COURSE NO. 3,4, & 5 - 9.5mm THK (3/8")
CUT FROM PLATE 2874mm x 9269mm
QTY: 36
MARK 7203

STAIRWAY HANDRAIL ANGLE
50.8 X 50.8 X 6.4 X 6096MM
(2" X 2" X 1/4" X 20' LONG)
STEEL CSA G40.21M 350W
QTY: 5
MARK 7206

NOTES:

ONLY COURSE NO. 1 SHELL PLATES REQUIRE SHOP ROLLING FOR TANK NO.2

SHELL PLATES TO BE CHECKED CORNER TO CORNER FOR SQUARENESS

STEEL PLATES: 38WT SUPPLIED BY MEL
STEEL SHAPES: 350W SUPPLIED BY FORMATECH

AS-BUILT
BY Inukshuk Construction Ltd. DATE 2017/10/02

REVISION HISTORY			
ZONE	REV	DESCRIPTION	DATE
2D, 2F, 10B, 10D, 10G	3	DETAIL A & B MODIFIED, COURSE NO. 2 VERT EDGE PREP. REM., COURSE NO. 3, 4, 5 HOR. EDGE PREP. REM.	2/14/2017
10H	4	COURSE NO. 1 RAD. CHANGED	2/14/2017

DRAWN	Marc Losier	2/2/2017
CHECKED	Jacob Saunders	2/2/2017
QA		
MFG		
APPROVED		

TANK NO. 2 - 13,500 CUM

TITLE: MELIADINE FIELD ERECTED TANKS - SHELL PLATES AND ANGLES ROLLING DETAILS

SIZE	DWG NO	REV
A1	295-M7	4

SCALE

SHEET 2 OF 6

30-Sep-2017
Permit Number: P471

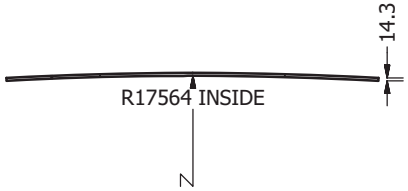

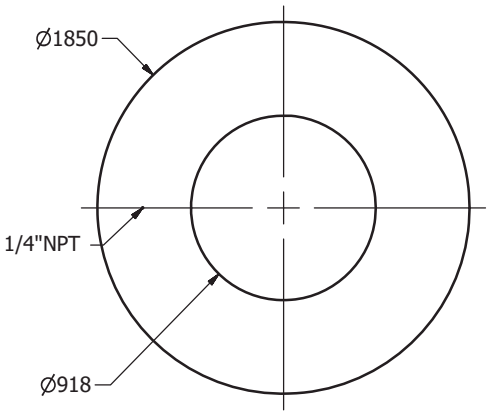

REINFORCING PLATE
SHELL MANHOLE 900MM (36")
TANK NO. 2 - 13.5ML
MARK: 8201
QTY: 4

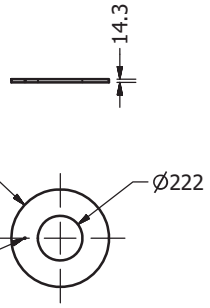

REINFORCING PLATE
SHELL NOZZLE LOADING 200MM (8")
TANK NO. 2 - 13.5ML
MARK: 8202
QTY: 1

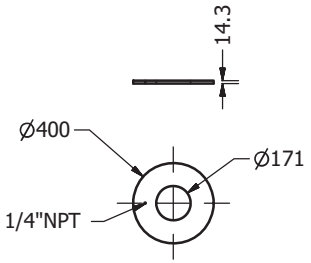

REINFORCING PLATE
SHELL NOZZLE UNLOADING 150MM (6")
TANK NO. 2 - 13.5ML
MARK: 8203
QTY: 3

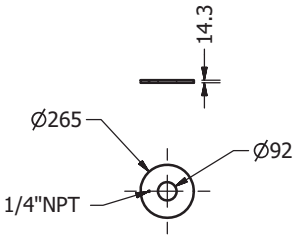

REINFORCING PLATE
SHELL WATER DRAW OFF 75MM (3")
TANK NO. 2 - 13.5ML
MARK: 8204
QTY: 6

MATERIAL:
STEEL CSA G40.21-38WT
NORMALIZED
TRANSVERSE CHARPY: TCVN 13FT/LBS@-45F
LONGITUDINAL CHARPY: LCVN 15FT/LBS@-45F

AS-BUILT
BY Inukshuk Construction Ltd. DATE 2017/10/02

30-Sep-2017

Permit Number: P471

DRAWN Jacob Saunders	2/2/2017	TANK NO. 2 (13.5ML) SHELL
CHECKED Marc Losier	3/16/2017	TITLE: REINFORCING PLATE DETAILS
QA		
MFG		
APPROVED		

SIZE	DWG NO	REV
A3	295-M8	4

SCALE 1/25 SHEET 3 OF 12

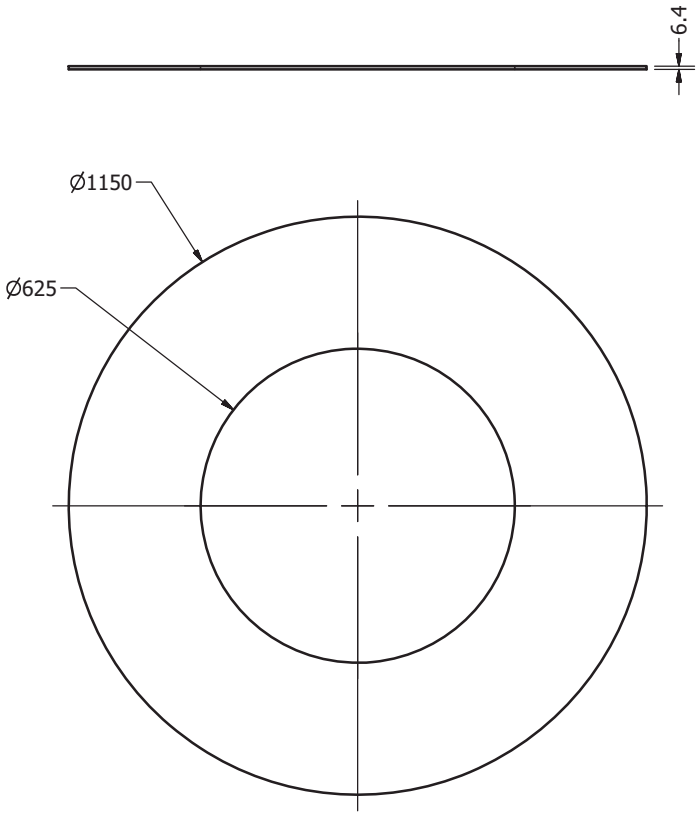

REINFORCING PLATE
ROOF MANHOLE 600MM
TANK NO. 2 - 13.5ML
MARK: 8205
QTY: 4

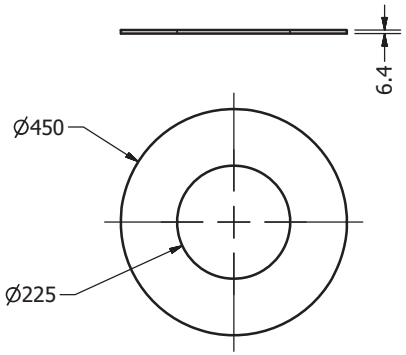

REINFORCING PLATE
ROOF NOZZLE 200MM
TANK NO. 2 - 13.5ML
MARK 8206
QTY: 1

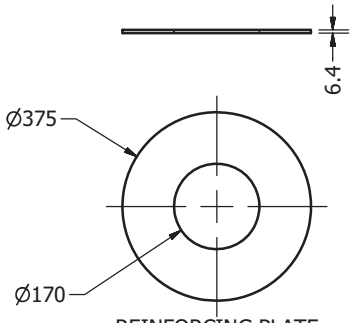

REINFORCING PLATE
ROOF GAUGE HATCH 150MM
TANK NO. 2 - 13.5ML
MARK: 8207
QTY: 1

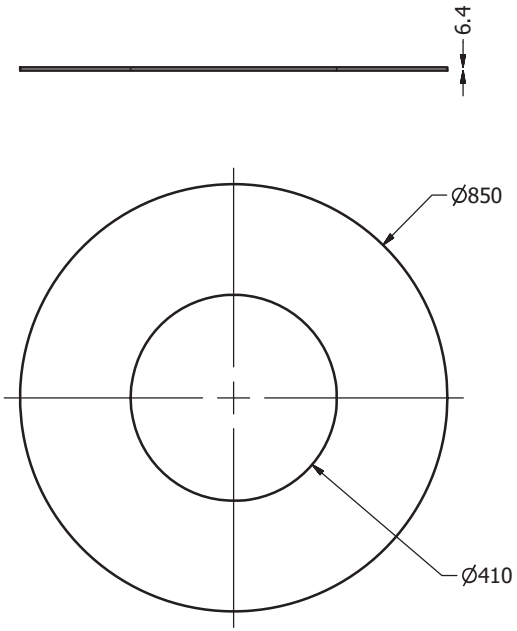

REINFORCING PLATE
ROOF VENT 400MM
TANK NO. 2 - 13.5ML
MARK: 8208
QTY: 1



Permit Number: P471

MATERIAL:
STEEL CSA G40.21-38WT
NORMALIZED
TRANSVERSE CHARPY: TCVN 13FT/LBS@-45F
LONGITUDINAL CHARPY: LCVN 15FT/LBS@-45F

AS-BUILT
BY Inukshuk Construction Ltd. DATE 2017/10/02

DRAWN	Jacob Saunders	2/2/2017
CHECKED	Marc Losier	3/16/2017
QA		
MFG		
APPROVED		

TANK NO. 2 (13.5ML) ROOF

TITLE

REINFORCING PLATE DETAILS

SIZE	DWG NO	REV
A3	295-M8	4

SCALE 1 / 10

SHEET 4 OF 12

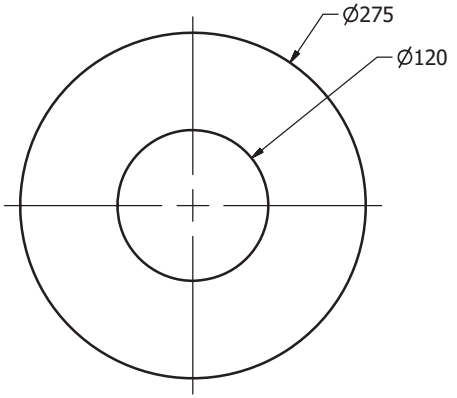

M81201 QTY	
Tank No.	QTY
1	1
2	1
3	1
4	1
5	1
6	1
TOTAL	6

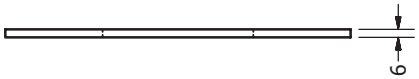

REINFORCING PLATE
100NS ROOF NOZZLE
QTY: 6
1 PER TANK
MARK 81201
SCALE 1/4

MATERIAL:
STEEL CSA G40.21-300W

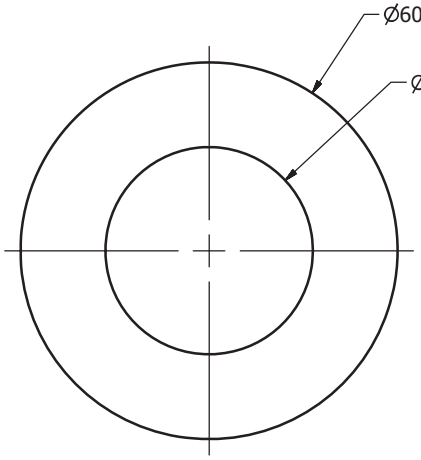

M81202 QTY	
Tank No.	QTY
1	2
2	1
3	0
4	0
5	0
6	0
TOTAL	10



REINFORCING PLATE
300NS ROOF NOZZLE FOR PV VENT
QTY: 10
MARK 81202
SCALE 1/8

AS-BUILT
BY Inukshuk Construction Ltd. DATE 2017/10/02

PROFESSIONAL ENGINEER
J.S. BROWN
LICENSEE
NT/NU
30-Sep-2017
Permit Number: P471

REVISION HISTORY		
REV	DESCRIPTION	DATE
4	THIS SHEET ADDED	7/7/2017

DRAWN Jacob Saunders	2/2/2017	REINFORCING PAD FOR ECN-001
CHECKED Marc Losier	3/16/2017	TITLE
QA		REINFORCING PLATE DETAILS
MFG		
APPROVED		

SIZE		DWG NO	REV
A3		295-M8	4

SCALE 1/4 SHEET 13 OF 13

PARTS LIST				
ITEM	ITEM QTY	DESCRIPTION	MATERIAL	MASS
2M10300-6	1	CENTER COLUMN - SEE SHT 3		2804.467 kg
2M10200-7	64	SHELL CLIP - SEE SHT 2	G40.21M-300W	2.553 kg
2M10200-8	32	INNER RAFTER - SEE SHT 2	G40.21M-350W	1021.718 lbmass
2M10200-9	64	OUTER RAFTER - SEE SHT 2	G40.21M-350W	1021.776 lbmass
2M10200-10	8	INTERMEDIATE GIRDER - SEE SHT 2		551.240 kg
2M10200-11	8	INTERMEDIATE GIRDER TOP CONNECTION PLATE - SEE SHT 2	G40.21M-300W	12.051 kg
2M-10300-12	8	INTERMEDIATE COLUMN - SEE SHT 3		1421.921 kg
2M-10300-15	4	FB50X50X6 [FB2"X2"X1/4"] X 1575 [5'-2"] LG	G40.21M-300W	8.792 lbmass
2M-10300-16	4	FB50X50X6 [FB2"X2"X1/4"] X 2184 [7'-2"] LG	G40.21M-300W	12.195 lbmass

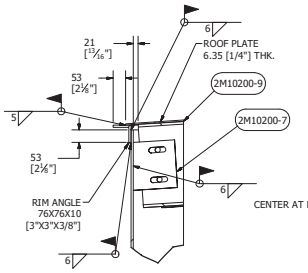

SECTION A-A
SCALE 1/10

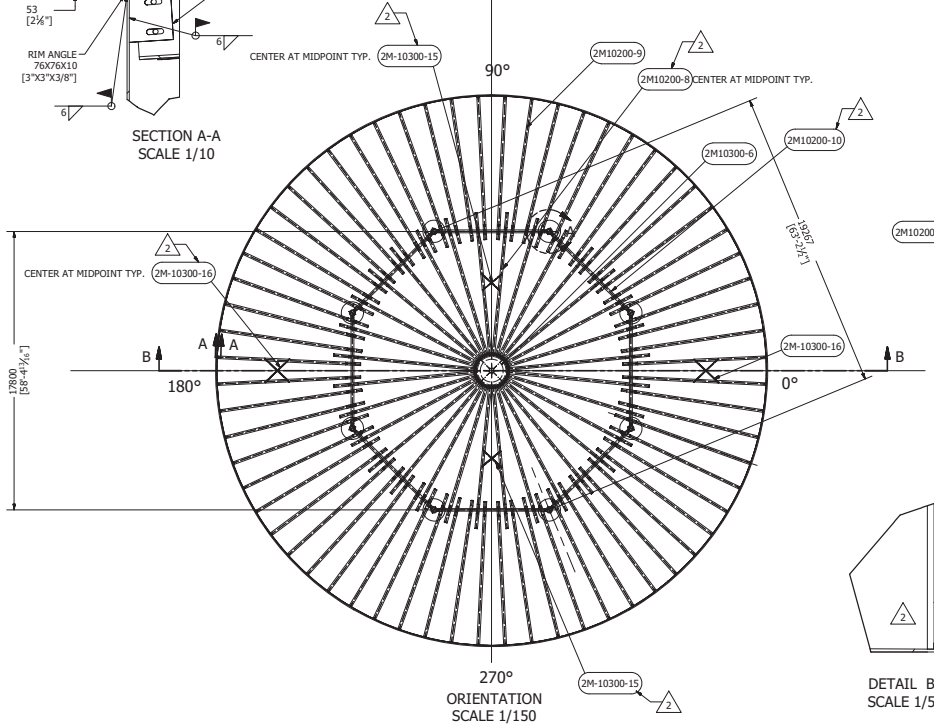

270°
ORIENTATION
SCALE 1/150

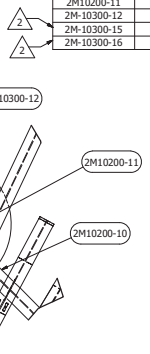

DETAIL A
SCALE 1/25

DETAIL B
SCALE 1/5

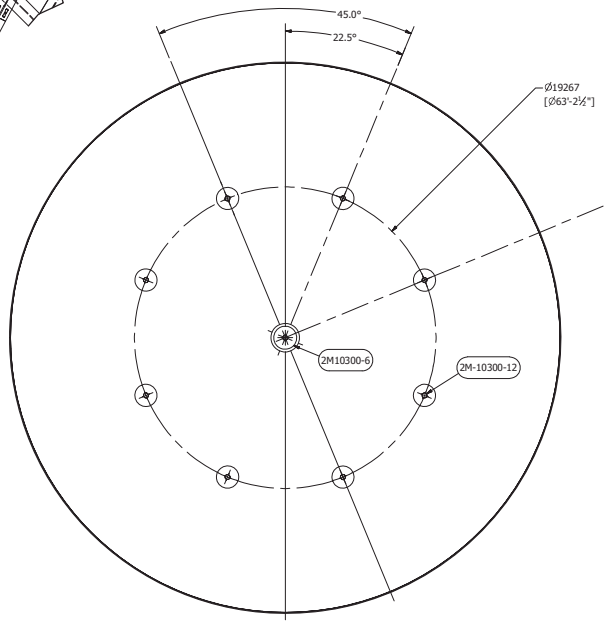

COLUMNS LAYOUT DETAIL
SCALE 1/150

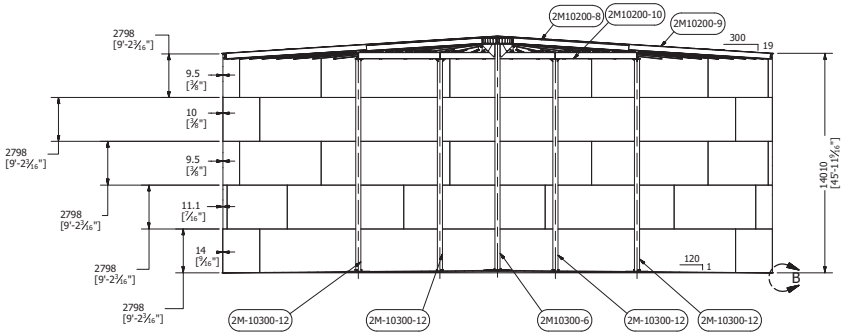

SECTION B-B
SCALE 1/150

NOTES:
ALL DIMENSIONS ARE IN MILLIMETRE UNLESS OTHERWISE NOTED

AS-BUILT
BY Inukshuk Construction Ltd. DATE 2017/10/02

Permit Number: P471

30-Sep-2017

REVISION HISTORY			
ZONE	REV	DESCRIPTION	DATE
F11, G10, G7, C8, D6	2	RAFTER BRACING ADDED, DETAIL B ADDED, WELDING DETAIL ADDED IN SECITON A-A	3/31/2017
	7	INCORPORATE FIELD MODIFICATION	9/27/2017

DRAWN	MARC LOSIER	3/9/2017
CHECKED		
QA		
MFG		
APPROVED		

RAFTER AND COLUMN LAYOUT

TITLE
AGNICO EAGLE - MELIADINE GOLD MINE - TK #2 - 13,500CUM 35.1M DIA X 14M H

SIZE	DWG NO	REV
A1	295-M10	7

SCALE

SHEET 1 OF 7

BILL OF MATERIAL - INTERMEDIATE GIRDER ASSEMBLY				
MARK	ITEM QTY	DESCRIPTION	MATERIAL	MASS
2M10201	1	W410X60 [W16"X40#] X 7420 [24'- 4 1/8"]	G40.21M-350W	437.619 kg
2M10202	2	10 [3/8"] THK X 127 [5"] WD X 250 [9 7/8"]	G40.21M-300W	2.230 kg
2M10203	2	10 [3/8"] THK X 125 [4 7/8"] WD X 250 [9 7/8"]	G40.21M-300W	2.192 kg
2M10204	2	10 [3/8"] THK X 121 [4 3/4"] WD X 250 [9 7/8"]	G40.21M-300W	2.113 kg
2M10205	2	10 [3/8"] THK X 110 [4 3/8"] WD X 250 [9 7/8"]	G40.21M-300W	1.904 kg
2M10206	2	10 [3/8"] THK X 101 [4"] WD X 250 [9 7/8"]	G40.21M-300W	1.748 kg
2M10207	2	10 [3/8"] THK X 92 [3 5/8"] WD X 250 [9 7/8"]	G40.21M-300W	1.576 kg
2M10208	10	10 [3/8"] THK X 171 [6 3/4"] WD X 610 [2'-0"]	G40.21M-300W	7.508 kg
2M10209	2	10 [3/8"] THK X 171 [6 3/4"] WD X 610 [2'-0"]	G40.21M-300W	7.508 kg

BILLING FOR ONE GIRDER ASSEMBLY SHOWN
TOTAL EIGHT GIRDER ASSEMBLIES REQUIRED

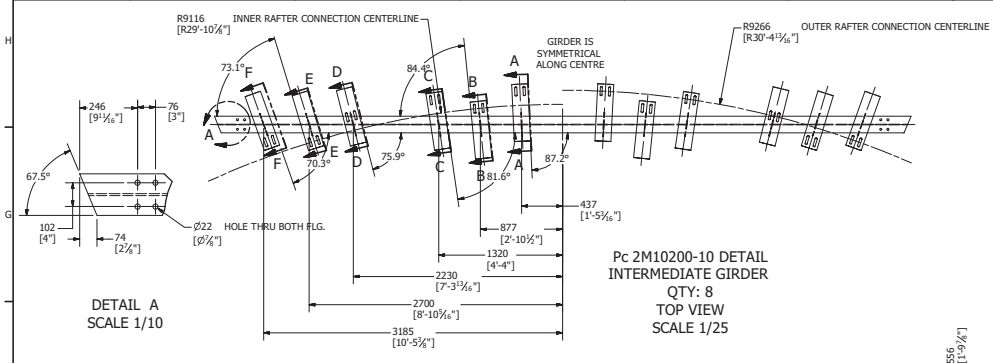

DETAIL A
SCALE 1/10

Pc 2M10200-10 DETAIL
INTERMEDIATE GIRDER
QTY: 8
TOP VIEW
SCALE 1/25

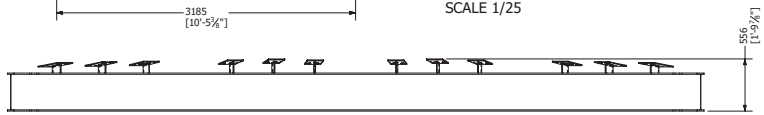

SIDE VIEW

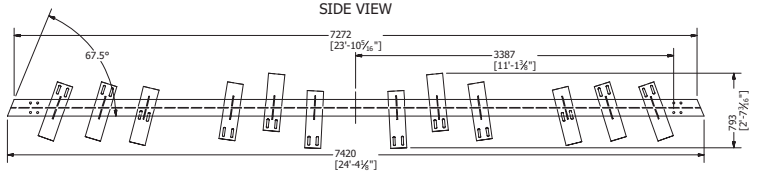

BOTTOM VIEW

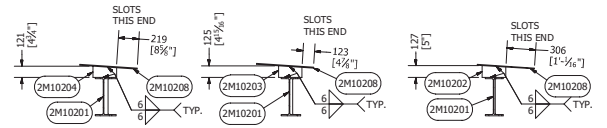

SECTION C-C
SCALE 1/25

SECTION B-B
SCALE 1/25

SECTION A-A
SCALE 1/25

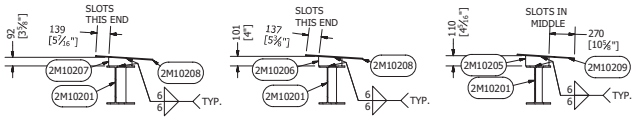

SECTION F-F
SCALE 1/25

SECTION E-E
SCALE 1/25

SECTION D-D
SCALE 1/25

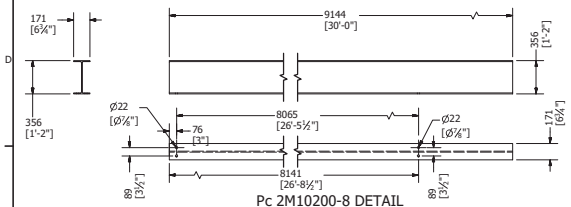

Pc 2M10200-8 DETAIL
INNER RAFTER
SCALE 1/25

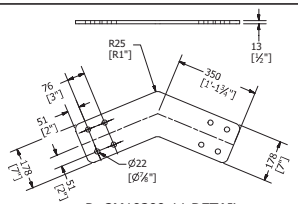

Pc 2M10200-11 DETAIL
INTERMEDIATE GIRDER BEAM
TOP CONNECTION PLATE
SCALE 1/10

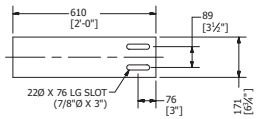

Pc 2M10208 DETAIL
SCALE 1/10

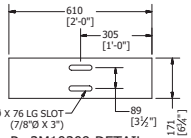

Pc 2M10209 DETAIL
SCALE 1/10

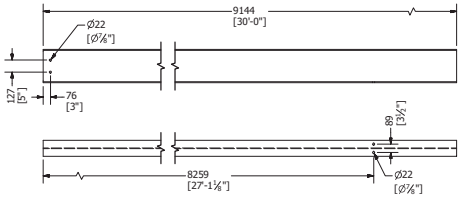

Pc 2M10200-9 DETAIL
OUTER RAFTER
SCALE 1/25

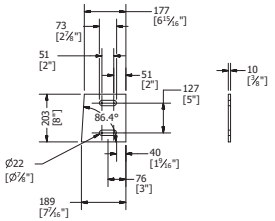

Pc 2M10200-7 DETAIL
SHELL CLIP
SCALE 1/10

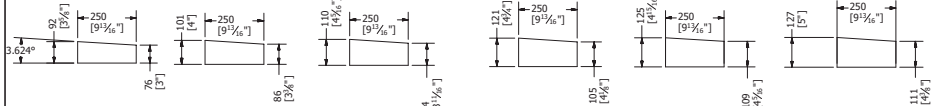

Pc 2M10207 DETAIL
SCALE 1/10

Pc 2M10206 DETAIL
SCALE 1/10

Pc 2M10205 DETAIL
SCALE 1/10

Pc 2M10204 DETAIL
SCALE 1/10

Pc 2M10203 DETAIL
SCALE 1/10

Pc 2M10202 DETAIL
SCALE 1/10

BILL OF MATERIAL				
ITEM	ITEM QTY	DESCRIPTION	MATERIAL	MASS
2M10200-7	64	10 [3/8"] THK X 189 [7 1/2"] WD X 203 [8"] LG	G40.21M-300W	2.553 kg
2M10200-8	32	W360X51 [W14"X34#] 9144 [30'-0"]	G40.21M-350W	1021.718 lbmass
2M10200-9	64	W360X51 [W14"X34#] 9144 [30'-0"]	G40.21M-350W	1021.776 lbmass
2M10200-11	8	13 [1/2"] THK X 357 [1'-2"] WD X 573 [1'-10 1/2"] LG	G40.21M-300W	12.051 kg

AS-BUILT
BY Inukshuk Construction Ltd. DATE 2017/10/02

30-Sep-2017
Permit Number: P471

NOTE:
ALL DIMENSIONS ARE IN MM UNLESS OTHERWISE NOTED

DRAWN	MARC LOSIER	3/9/2017
CHECKED		
QA		
MFG		
APPROVED		

INTERMEDIATE GIRDER AND RAFTER DETAIL

TITLE: AGNICO EAGLE - MELIADINE GOLD MINE - TK #2 - 13,500CUM 35.1M DIA X 14M H

SIZE A1 | DWG NO 295-M10 | REV 7

SCALE | SHEET 2 OF 7

BILL OF MATERIAL - CENTER COLUMN				
MARK	ITEM QTY	DESCRIPTION	MATERIAL	MASS
2M10301	1	25 [1"] THK X 2286 [7'-6"] DIA	G40.21M-300W	798.104 kg
2M10302	1	13 [1/2"] THK X 1473 [4'-10"] DIA.	G40.21M-300W	169.937 kg
2M10303	8	10 [3/8"] x 750 [2'-5 1/2"] WD x 750 [2'-5 1/2"] LG	G40.21M-300W	30.566 kg
2M10304	4	6 [1/4"] THK X 76 [3"] X 102 [4"]	G40.21M-300W	0.851 lbmass
2M10305	1	25 [1"] THK X 1828 [6'-0"] DIA.	G40.21M-300W	523.752 kg
2M10306	1	HSS 324 [12 3/4"] O.D. X 9.5 [3/8"] WALL x 14426 [47'-3 15/16"] LG	G40.21M-350W CLASS H	2348.230 lbmass
2M10307	1	19 [3/4"] THK X 89 [3 1/2"] WD X 203 [8"] LG	G40.21M-300W	1.461 kg

PARTS LIST				
ITEM	ITEM QTY	DESCRIPTION	MATERIAL	MASS
2M10321	1	13 [1/2"] THK x 407 [1'-4"] WD x 696 [2'-3 3/8"] LG	G40.21M-300W	17.744 kg
2M10322	1	HSS324 [12 3/4"] O.D. X 10 [3/8"] WALL x 13557 [44'-5 3/4"] LG	G40.21M-350W CLASS H	2215.665 lbmass
2M10323	1	32 [1 1/4"] THK X 1422 [4'-8"] DIA.	G40.21M-300W	396.047 kg
2M10324	4	6 [1/4"] THK X 76 [3"] WD X 102 [4"] LG	G40.21M-300W	0.851 lbmass
2M10325	2	6 [1/4"] THK X 164 [6 1/2"] WD X 164 [6 1/2"] LG	G40.21M-300W	0.789 kg

BILLING FOR ONE INTERMEDIATE COLUMN ASSEMBLY SHOWN
TOTAL EIGHT INTERMEDIATE COLUMN ASSEMBLIES REQUIRED

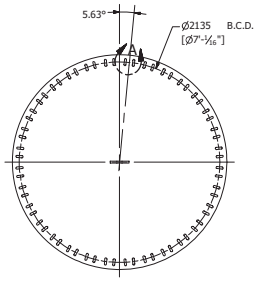

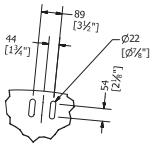

DETAIL A
TYPICAL (32) LOCATIONS EQ. SPACED
SCALE 1/10

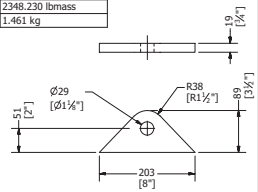

2M10307
SCALE 1/5

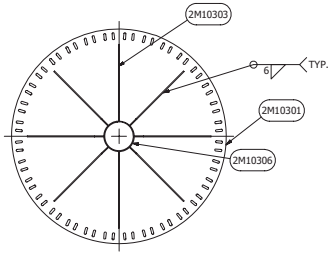

SECTION A-A
SCALE 1/25

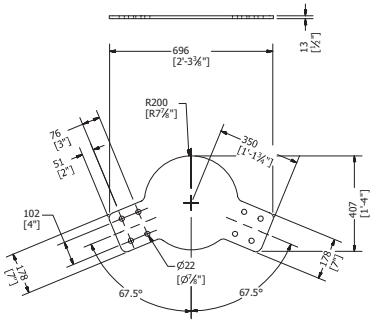

Pc 2M10321 DETAIL
INTERMEDIATE COLUMN CAP PLATE
SCALE 1/10

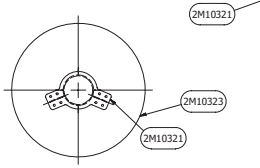

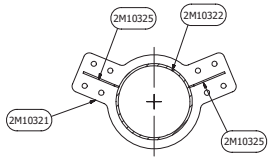

SECTION B-B
SCALE 1/10

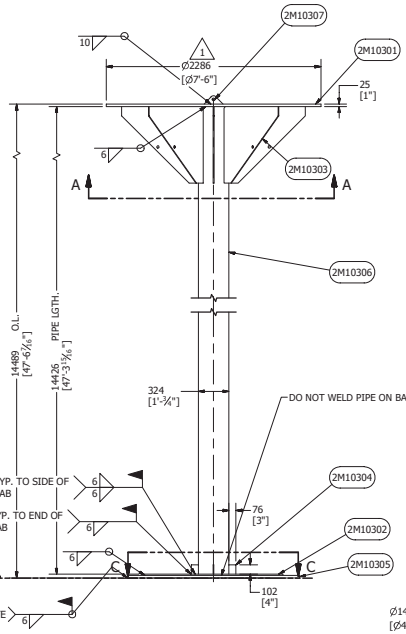

Pc 2M10300-6 DETAIL
CENTER COLUMN
SCALE 1/25

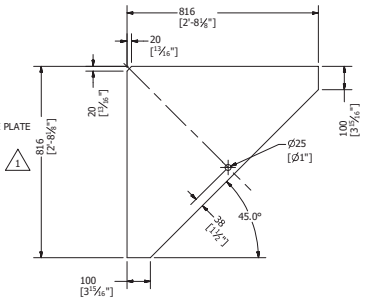

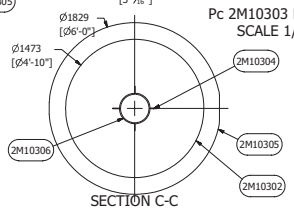

Pc 2M10303 DETAIL
SCALE 1/10

SECTION C-C
SCALE 1/25

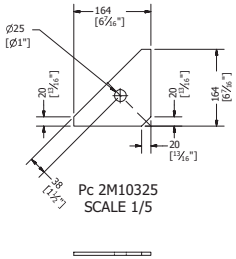

Pc 2M10325
SCALE 1/5

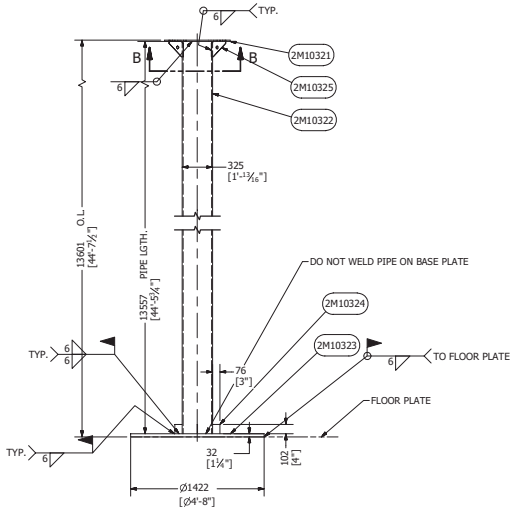

Pc 2M10300-12
INTERMEDIATE COLUMN
QTY: 8
SCALE 1/25

REVISION HISTORY			
ZONE	REV	DESCRIPTION	DATE
3H, 10H	1	CENTER COLUMN PIPE AND INTERMEDIATE COLUMN PIPE LGTH. CHG. TO SUITE SLOPE 1/120, INTERMEDIATE COLUMN PIPE CHG. FROM 10.75"X1/2"WALL TO 12.75"X 3/8"	3/13/2017

AS-BUILT
BY Inukshuk Construction Ltd. DATE 2017/10/02
30-Sep-2017
Permit Number: P471

NOTE:
ALL DIMENSIONS ARE IN MM UNLESS OTHERWISE NOTED

DRAWN	MARC LOSIER	3/9/2017
CHECKED		
QA		
MFG		
APPROVED		

CENTER AND INTERMEDIATE COLUMN DETAILS

TITLE: AGNICO EAGLE - MELIADINE GOLD MINE - TK #2 - 13,500CUM 35.1M DIA X 14M H

SIZE	DWG NO	REV
A1	295-M10	7

SCALE

SHEET 3 OF 7

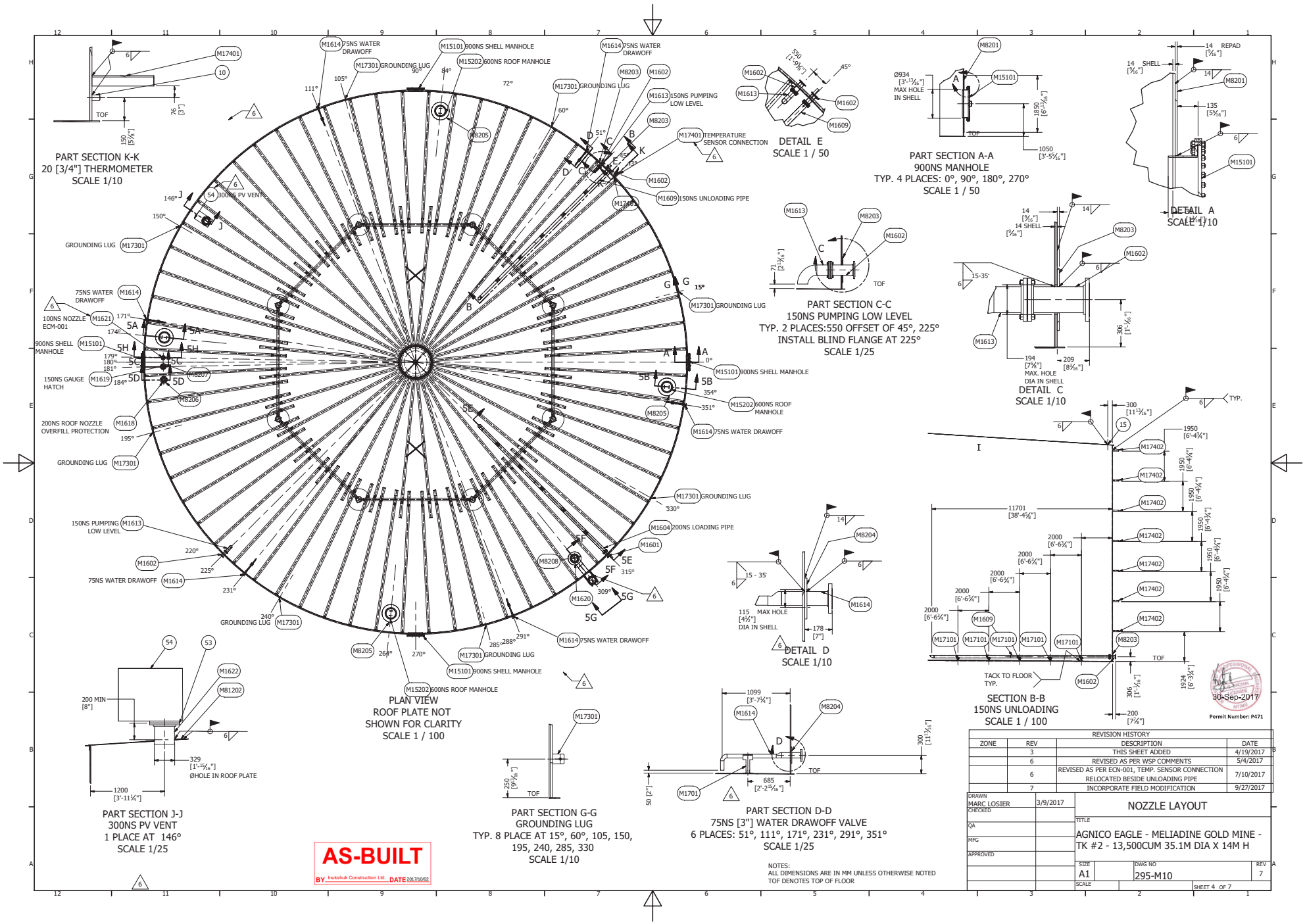
PART SECTION K-K
20 [3/4"] THERMOMETER
SCALE 1/10
PLAN VIEW
ROOF PLATE NOT
SHOWN FOR CLARITY
SCALE 1 / 100
DETAIL E
SCALE 1 / 50
PART SECTION A-A
900NS MANHOLE
TYP. 4 PLACES: 0°, 90°, 180°, 270°
SCALE 1 / 50
DETAIL A
SCALE 1/10
PART SECTION C-C
150NS PUMPING LOW LEVEL
TYP. 2 PLACES:550 OFFSET OF 45°, 225°
INSTALL BLIND FLANGE AT 225°
SCALE 1/25
DETAIL C
SCALE 1/10
DETAIL D
SCALE 1/10
SECTION B-B
150NS UNLOADING
SCALE 1 / 100
PART SECTION J-J
300NS PV VENT
1 PLACE AT 146°
SCALE 1/25
PART SECTION G-G
GROUNDING LUG
TYP. 8 PLACE AT 15°, 60°, 105°, 150,
195, 240, 285, 330
SCALE 1/10
PART SECTION D-D
75NS [3"] WATER DRAWOFF VALVE
6 PLACES: 51°, 111°, 171°, 231°, 291°, 351°
SCALE 1/25
AS-BUILT
BY Inukshuk Construction Ltd. DATE 2017/10/02
30-Sep-2017
Permit Number: P471
NOTES:
ALL DIMENSIONS ARE IN MM UNLESS OTHERWISE NOTED
TOF DENOTES TOP OF FLOOR
REVISION HISTORY
ZONE | REV | DESCRIPTION | DATE
3 | THIS SHEET ADDED | 4/19/2017
6 | REVISED AS PER WSP COMMENTS | 5/4/2017
6 | REVISED AS PER ECN-001, TEMP. SENSOR CONNECTION RELOCATED BESIDE UNLOADING PIPE | 7/10/2017
7 | INCORPORATE FIELD MODIFICATION | 9/27/2017
DRAWN MARC LOSIER 3/9/2017
CHECKED
QA
MFG
APPROVED
NOZZLE LAYOUT
AGNICO EAGLE - MELIADINE GOLD MINE -
TK #2 - 13,500CUM 35.1M DIA X 14M H
SIZE A1
DWG NO 295-M10
REV 7
SCALE
SHEET 4 OF 7

PARTS LIST FOR NOZZLE LAYOUT SHT 4

ITEM	ITEM QTY	DESCRIPTION	FAB. DRG. NO.	MATERIAL
10	1	20NS [3/4"] NPT COUPLING, 3000#, (TEMPERATURE SENSOR)		ASTM A350 LF2
15	2	COUPLING, 3000#, THREADED, 1"NPT PRV LINE CONNECTION		ASTM A350 LF2
31	1	400NS GASKET RUBBER 1.6 [1/16"] THK.		DURLON 8500
33	3	150NS [6"] X 3.2 [1/8"]THK GASKET		DURLON 8500
34	66	3/4" UNC HEAVY HEX NUT		A194 GR4
35	25	3/4"UNC X 4" LG STUD, L7		A320 L7
37	8	3/4"UNC X 4 3/4" LG STUD L7		A320 L7
38	1	150NS [6"] X 1.6 [1/16"] THK GASKET RUBBER 150#		Rubber
43	1	150NS GAUGE HATCH, SHANG AND JURS MODEL NO. 95010-02-00		ALUMINUM
44	16	1"UNC X 5 3/4" LG STUD L7		A320 I7
45	32	1" UNC HEAVY HEX NUT		A194 GR4
48	2	75NS [3"] PIPE, A53, 76 [3"] LG		Steel
49	1	C150X12 X 914 [36"] LG		350W
50	1	400NS [16"] UBOLT		Steel
51	4	5/8" UNC HEAVY HEX NUT		Steel, Mild
53	1	300NS [12"] GASKET, 150#, RING, 1.6 [1/16"] THK.		DURLON 8500
54	1	300NS [12"] PV Vent, SET PRESSURE = 0.48 KPAG = 1.00 oz/sqin, SET VACUUM = 0.22 KPA = 0.5 oz/sqin		ENARDO 950
57	1	100NS [4"] BLIND FLANGE, 150#		A320 LF2
59	1	100NS [4"] JOINT MATERIAL COMPRISING:		
59.1	1	100NS [4"] GASKET, RING, 150#, 1.6 [1/16"]		DURLON 8500
59.2	8	5/8"UNC X 3 1/2" LG, STUD		L7
59.3	16	5/8" UNC NUT		A194 GR.4
M1601	1	200NS [8"] DOUBLE FLANGE SHELL NOZZLE	M16	
M1602	3	150NS [6"] DOUBLE FLANGE SHELL NOZZLE	M16	
M1604	1	200NS [8"] X 11.7M [38'- 4 5/8"] LG LOADING PIPE	M16	
M1609	1	150NS [6"] X 11.7M [38'- 4 5/8"] LG UNLOADING PIPE	M16	
M1613	2	150NS [6"] PUMPING LOW LEVEL	M16	
M1614	6	75NS [3"] WATER DRAWOFF NOZZLE	M16	
M1615	1	100NS [4"] PAINTERS SCAFFOLD CABLE SUPPORT	M16	
M1616	1	400NS ROOF NOZZLE	M16	
M1618	1	200NS [6"] ROOF NOZZLE FOR OVERFILL PROTECTION	M16	
M1619	1	150NS [6"] ROOF NOZZLE FOR GAUGE HATCH	M16	
M1620	1	400NS [16"] ROOF VENT	M16	
M1621	1	100NS [4"] ROOF NOZZLE		
M1622	1	300NS [12"] ROOF NOZZLE	M16	
M8201	4	900NS [36"] REINFORCING PAD	M8	
M8202	1	200NS [8"] SHELL NOZZLE REINFORCING PAD	M8	
M8203	3	150NS [6"] SHELL NOZZLE REINFORCING PAD	M8	
M8204	6	75NS [3"] SHELL WATER DRAWING NOZZLE REINFORCING PAD	M8	
M8205	4	600NS [24"] ROOF MANHOLE REINFORCING PLATE	M8	
M8206	1	200NS [8"] ROOF NOZZLE REINFORCING PLATE	M8	
M8207	1	150NS [6"] ROOF NOZZLE REINFORCING PLATE	M8	
M8208	1	400NS [16"] REINFORCING PAD	M8	Steel
M15101	4	900NS [36"] SHELL MANHOLE	M15	
M15202	4	600NS [24"] ROOF MANHOLE	M15	
M17101	16	PIPE SUPPORT TYPE 1	M17	
M17301	8	GROUNDING LUG 76X65X6 [3"X2 1/2"X1/4"]	M17	Stainless Steel, Austenitic
M17401	1	L100X100X6 [L4"X4"X1/4"] 400 [15 3/4"] LG (TEMPERATURE SENSOR)	M17	G40.21M 350W
M17402	14	L75X75X6 [L3"X3"X1/4"] 400 [15 3/4"] BRACKET FOR PIPING OR ELECTRICAL CONDUIT	M17	G40.21M 350W
M81201	1	100NS ROOF NOZZLE REINFORIING PAD	M8	Steel, Mild
M81202	1	300 NS ROOF NOZZLE REINFORCING PAD	M8	Steel, Mild
M17501L	1	PIPE SUPPORT 400NS VENT LEFT	M17	
M17501R	1	PIPE SUPPORT 400NS VENT RIGHT	M17	

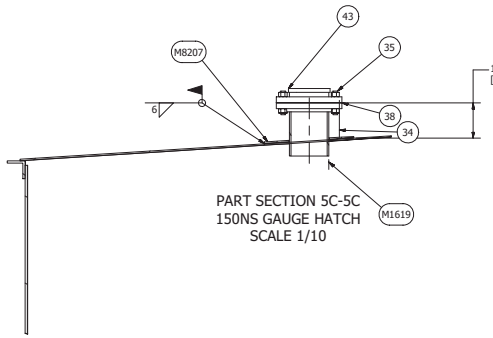

PART SECTION 5C-5C
150NS GAUGE HATCH
SCALE 1/10

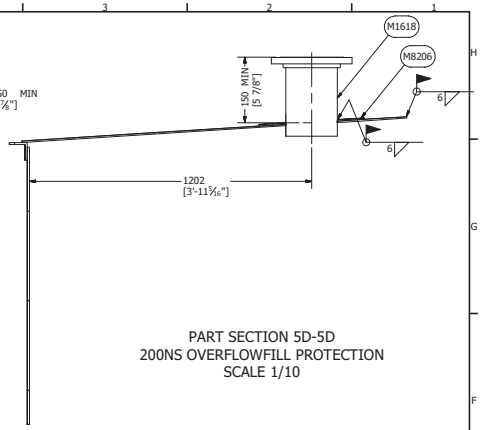

PART SECTION 5D-5D
200NS OVERFLOWFILL PROTECTION
SCALE 1/10

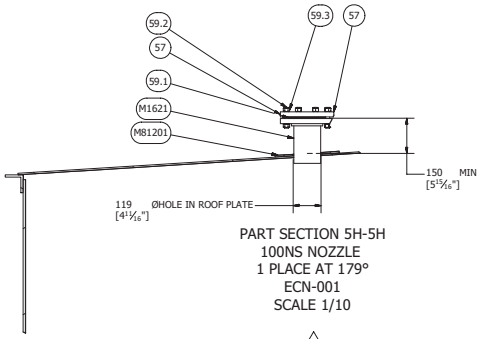

PART SECTION 5H-5H
100NS NOZZLE
1 PLACE AT 179°
ECN-001
SCALE 1/10

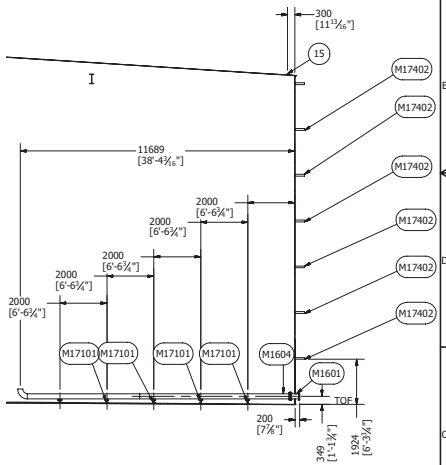

SECTION 5E-5E
200NS LOADING
SCALE 1 / 100

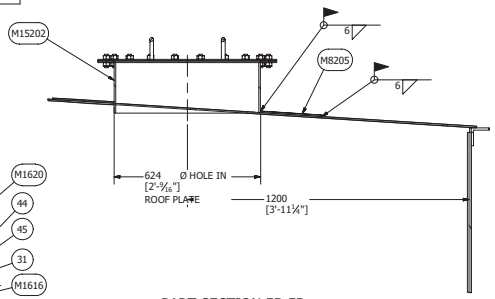

PART SECTION 5B-5B
600NS [24"} ROOF MANHOLE
4 PLACES AT 84°, 174°, 264°, 354°
SCALE 1/10

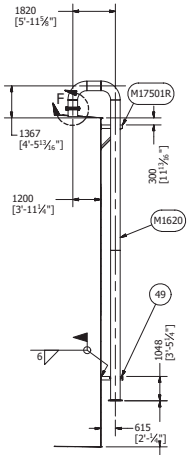

SECTION 5F-5F
SCALE 1 / 100

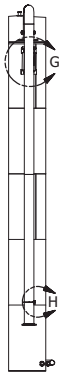

SECTION 5G-5G
SCALE 1 / 100

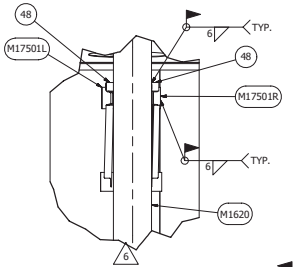

DETAIL G
SCALE 1/25

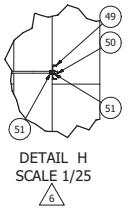

DETAIL H
SCALE 1/25

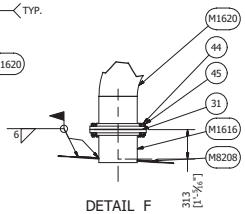

DETAIL F
SCALE 1/25

NOTE:
ALL DIMENSIONS ARE IN MM UNLESS OTHERWISE NOTED

REVISION HISTORY			
ZONE	REV	DESCRIPTION	DATE
	3	THIS SHEET ADDED	4/20/2017
	4	DIST ROOF MANHOLE FROM SHELL CHG FROM 1553 TO 1700	
	6	REVISED AS PER WSP COMMENTS	5/4/2017
	6	MODIFIED AS PER ECN-001	7/9/2017

AS-BUILT
BY Inukshuk Construction Ltd. DATE 2017/10/02

30-Sep-2017
Permit Number: P471

DRAWN	MARC LOSIER	3/9/2017
CHECKED		
QA		
MFG		
APPROVED		

NOZZLES LAYOUT PARTS LIST

TITLE
AGNICO EAGLE - MELIADINE GOLD MINE - TK #2 - 13,500CUM 35.1M DIA X 14M H

SIZE	DWG NO	REV
A1	295-M10	7

SCALE

SHEET 5 OF 7

PARTS LIST			
ITEM	ITEM QTY	PART NUMBER	DESCRIPTION
2M10601	18	T2 Roof Top Handrail Section	PREFABRICATED ROOF TOP HANDRAIL SECITON SEE DETAIL
2M10602	1	T2 Roof Top Handrail Section (3)	PREFABRICATED ROOF TOP HANDRAIL SECITON SEE DETAIL Pc 1M10601 TRIM AT SITE
M17201	1	AISC - L 3 x 3 x 1/4 - 58.228346	Angle Steel
5	1	AISC - L 2 x 2 x 1/4 - 1.5	Angle Steel
6	1	TK 2 Platforms and Stairways	

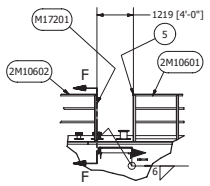

PART SECTION E-E
SCALE 1 / 75

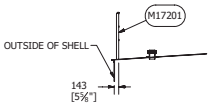

SECTION F-F
SCALE 1 / 75

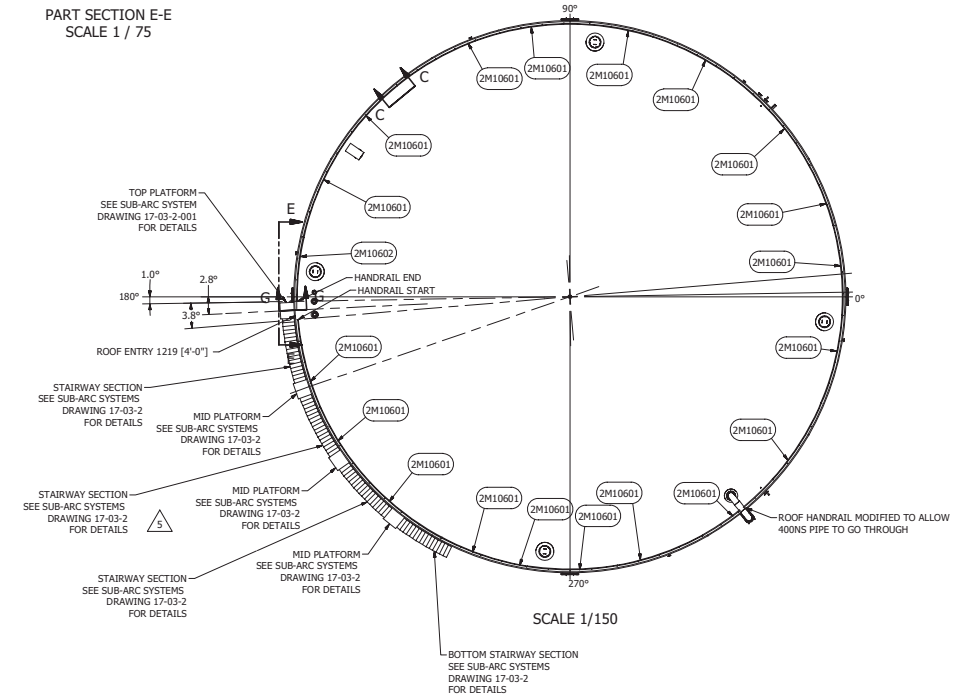

SCALE 1/150

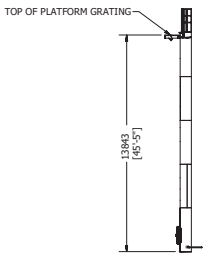

SECTION G-G
SCALE 1/150
5

PARTS LIST						
ITEM	ITEM QTY	CUT (MM)	DESCRIPTION	PRE-FAB DRG #	MATERIAL	MASS
M17201	4	1479	L76X76X6 [3"X3"X1/4"] X 1474 [58 1/4"]	M17	G40X21M 350W	23.905 lbmass
M7205	1	5791	L50X50X6[L2"X2"X6] ROOF HANDRAIL ROLLED ANGLE	M7	G40.21M 300W	27.480 kg
3	2	5791	FB50X6 [FB2"X1/4"] X 5791[19'] LG		G40.21M 300W	14.646 kg
4	1	5791	FB100X5 [4"X3/16"] x 5791 [19']LG		G40.21M 300W	22.029 kg

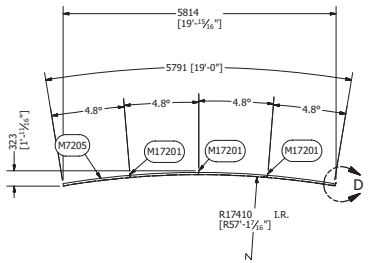

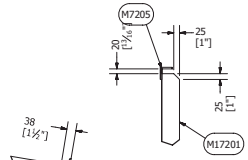

DETAIL C
SCALE 1/10



DETAIL D
SCALE 1/10

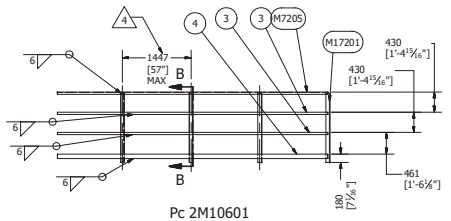

Pc 2M10601
PREFABRICATED ROOF TOP HANDRAIL SECTION
QTY: 19
SCALE 1/50

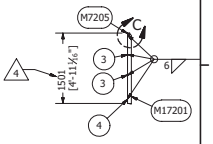

SECTION B-B
SCALE 1/50

FINISH:
SSPC SURFACE PREPERATION FOR PAINTING: SP6 COMMERCIAL SANDBLASTING
ONE COAT OF POLYVAL 390

NOTE:
ALL DIMENSIONS ARE IN MM UNLESS OTHERWISE NOTED

REVISION HISTORY			
ZONE	REV	DESCRIPTION	DATE
	3	THIS SHEET ADDED	4/20/2017
4D, 2D	4	MAX. DIST. BTW POST ADDED, HEIGHT SECTION B-B CHG TO 1501	5/2/2017
11F, 10A	5	PLATORMS AND STAIRWAY ADDED	6/28/2017

AS-BUILT
BY Inukshuk Construction Ltd. DATE 2017/10/02

30-Sep-2017
Permit Number: P471

DRAWN	MARC LOSIER	3/9/2017
CHECKED		
QA		
MFG		
APPROVED		

ROOF TOP HANDRAIL LAYOUT

TITLE
AGNICO EAGLE - MELIADINE GOLD MINE -
TK #2 - 13,500CUM 35.1M DIA X 14M H

SIZE	DWG NO	REV
A1	295-M10	7

SCALE

SHEET 6 OF 7

PARTS LIST		
ITEM	ITEM QTY	PART NUMBER
1	55	SHELL PLATE 2798 X 9203 THICKNESS
2	5	SHELL PLATE LAST ON COURSE 2798 X 9127 (TRIM AT SITE)
3	4	900ns SHELL MANHOLE
5	8	Grounding Lug
6	3	150NS SHELL NOZZLE
8	6	75NS WATER DRAWOFF
10	1	20NS THERMOMETER CONNECTION
11	1	AISC - L 4 x 4 x 1/4 - 15.748031 TEMPERATURE CONNECTION PROTECTION
12	1	400NS VENT
13	4	PLATFORM
14	115	STEPS
18	14	AISC - L 3 x 3 x 1/4 - 15.748031 PRV PIPE SUPPORT
19	1	200NS SHELL NOZZLE - FIX LOADING PIPE

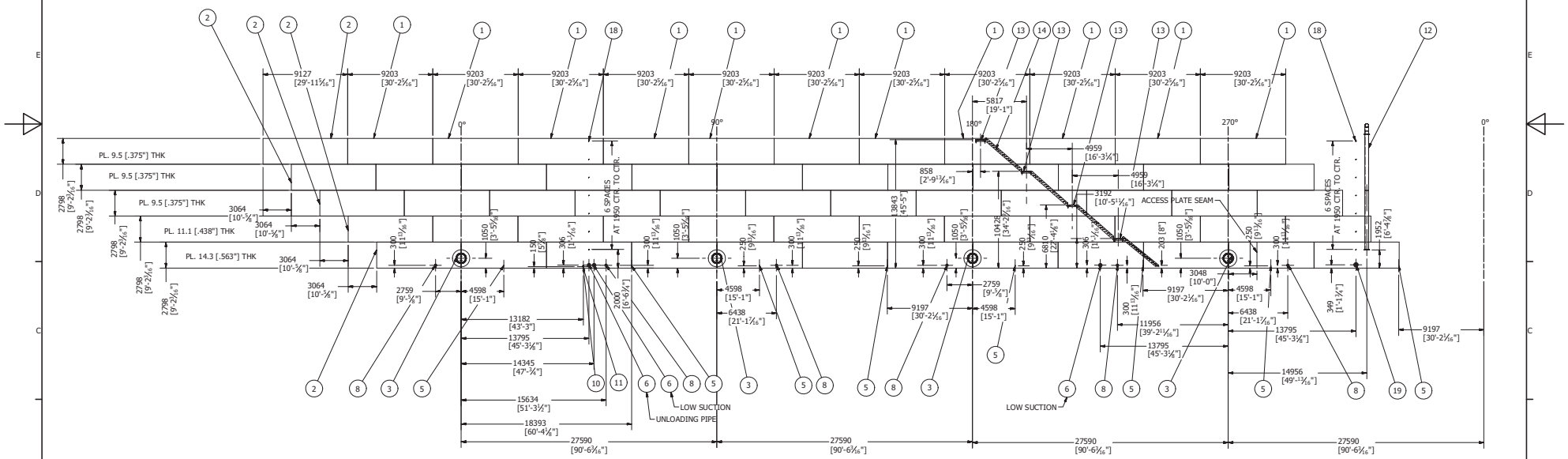

SHELL DEVELOPED VIEW
SCALE 1/200

AS-BUILT
BY Inukshuk Construction Ltd. DATE 2017/10/02

30-Sep-2017

Permit Number: P471

REVISION HISTORY		
REV	DESCRIPTION	DATE
6	THIS SHEET ADDED	7/12/2017
7	INCORPORATE FIELD MODIFICATION	9/27/2017

DRAWN MARC LOSIER 3/9/2017
CHECKED
QA
MFG
APPROVED

DEVELOP VIEW

TITLE
AGNICO EAGLE - MELIADINE GOLD MINE - TK #2 - 13,500CUM 35.1M DIA X 14M H

SIZE A1 | DWG NO 295-M10 | REV 7
SCALE
SHEET 7 OF 7

PARTS LIST

ITEM	ITEM QTY	PART NUMBER	DESCRIPTION	MATERIAL	MASS
1	1	T1-2-4 SHELL NECK	10 [3/8"] THK X 194 [7 5/8"] WD. X 2842 [9'-3 7/8"] LONG	G40.21M - 350WT CAT. 4	40.783 kg
2	1	T1-2-4 SHELL BOLTING FLANGE	22 [7/8"] THK X 1137 [3'-8 3/4"] O.D. X 914 [3'-0"] I.D.	G40.21M - 350WT CAT. 4	54.904 kg
3	1	T1-2-4 SHELL GASKET	3 [1/8"] THK X 1051 [3'-5 3/8"] O.D. X 914 [3'-0"] I.D.	DURLON 8500	0.622 kg
4	1	T1-2-4 SHELL COVER PLATE	25 [1"] THK X 1137 [3'-8 3/4"] O.D.	G40.21M - 350WT CAT. 4	186.633 kg
5	2	T1-2-4 SHELL HANDLE ROD	10 [3/8"] THK X 314 [12 3/8"] LONG	MILD STEEL	0.175 kg
6	42	STUDS	STUD, 3/4" X 95 [3 3/4"] LG. NC	A320 L7	0.213 kg
7	84	NUTS	NUT, HEX HEAVY, 3/4" NC	A194A GR4	0.096 kg

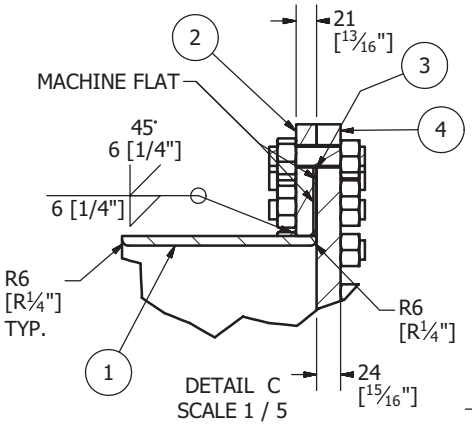

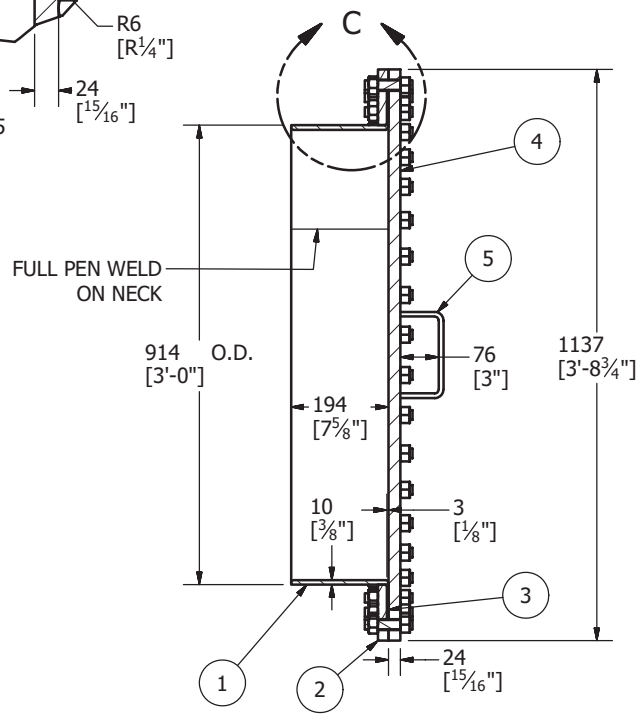

SECTION I-I
SCALE 1/10

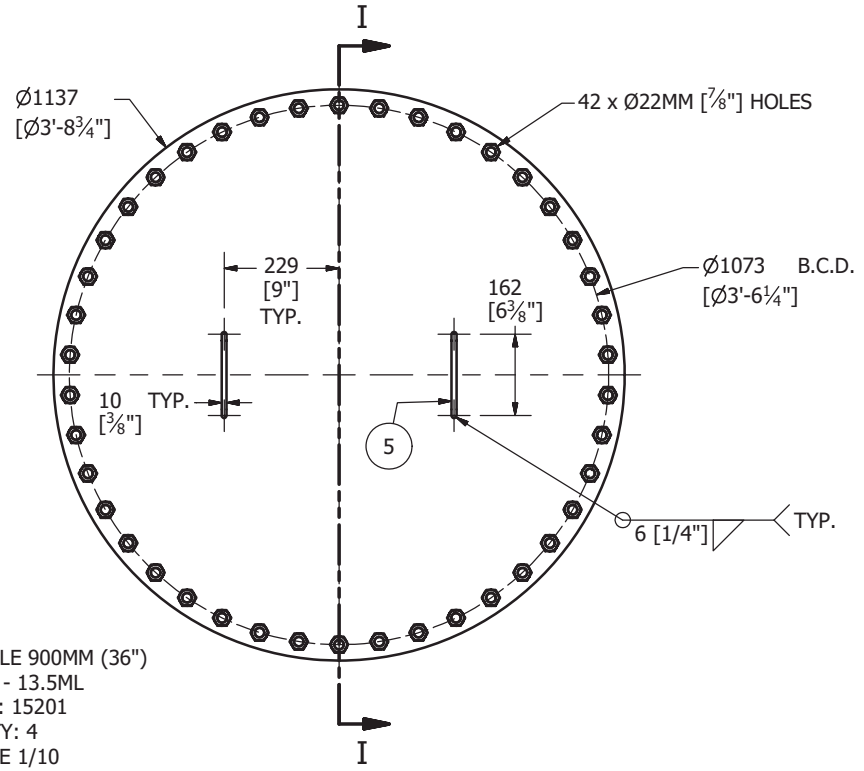

SHELL MANHOLE 900MM (36")
TANK 2 - 13.5ML
MARK: 15201
QTY: 4
SCALE 1/10

AS-BUILT
BY Inukshuk Construction Ltd. DATE 2017/10/02

30-Sep-2017
Permit Number: P471

ALTERNATE MATERIAL: ALL 350WT STEEL MAY BE SUBSTITUTED WITH 260WT IF EASIER TO SOURCE

DRAWN Jacob Saunders	3/22/2017	T2 (13.5ML) SHELL MANHOLE
CHECKED Marc Losier	3/27/2017	TITLE MELIADINE FIELD ERECTED TANK - MANHOLES
QA		
MFG		
APPROVED		

SIZE	DWG NO	REV
A3	295-M15	3

SCALE

SHEET 3 OF 12

PARTS LIST

ITEM	ITEM QTY	PART NUMBER	DESCRIPTION	MATERIAL	MASS
1	1	ROOF NECK	6 [1/4"] THK X 216 [8 1/2"] WD X 1935 [6' - 4 3/16"] LG	G40.21M 300W	20.825 kg
2	1	ROOF BOLTING FLANGE	6 [1/4"] THK X 762 [2'-6"] O.D. X 622 [2'-1/2"] I.D.	G40.21M 300W	7.287 kg
4	1	ROOF COVER PLATE	6 [1/4"] THK X 762 [2'-6"] DIA	G40.21M 300W	22.448 kg
5	2	ROOF HANDLE ROD	16 [5/8"] DIA X 314 [12 3/8"] LG.	Steel, MILD	0.506 kg
6	20	STUDS	STUD, 5/8" X 57 [2 1/4"] LG. NC	A320 L7	0.089 kg
7	40	NUTS	NUT, HEX HEAVY, 5/8"	A194A GR4	0.059 kg
8	1	295-P1 Gasket 24in (600mm)		Rubber	0.216 kg

SECTION J-J
SCALE 1/10

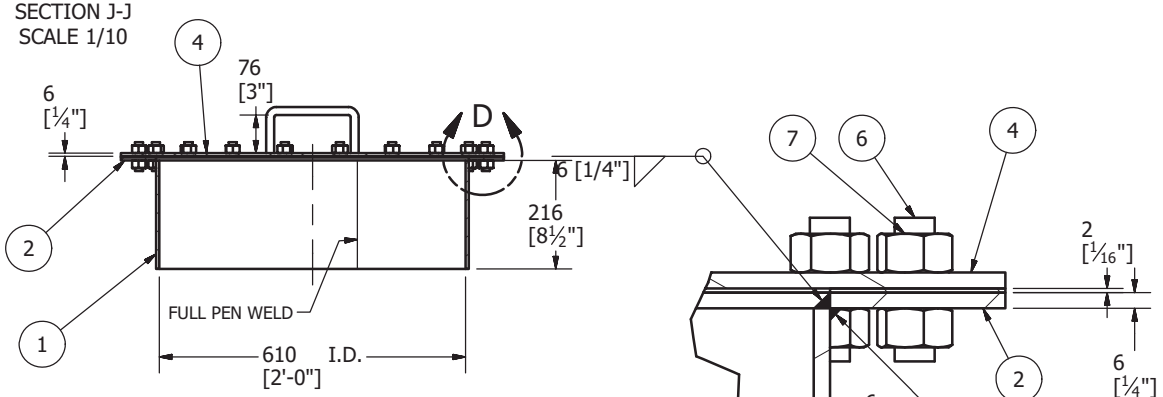

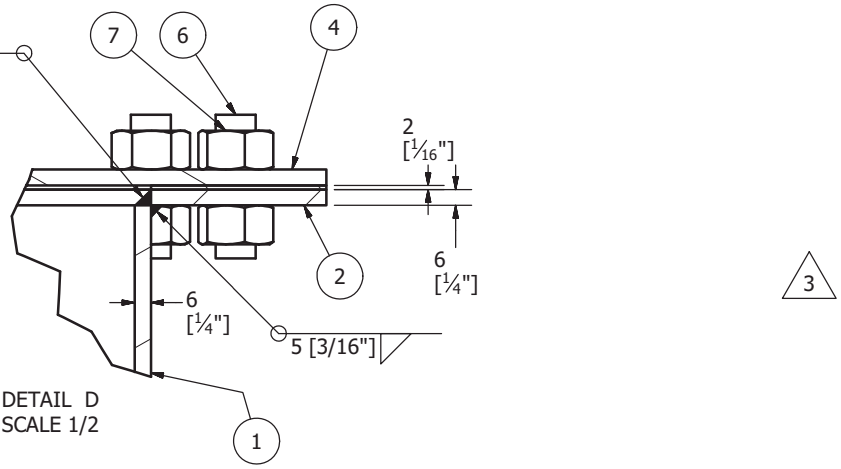

DETAIL D
SCALE 1/2

3

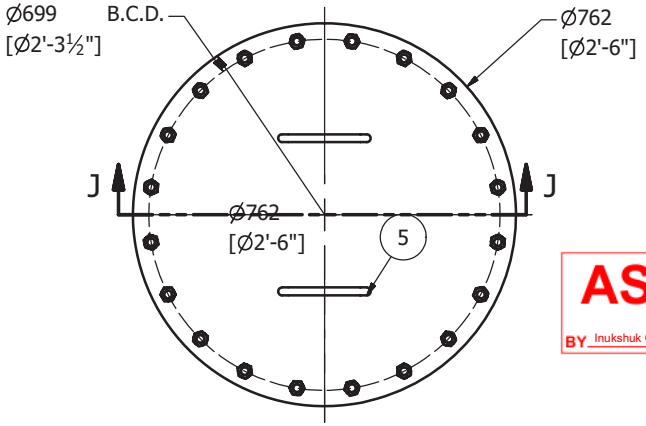

ROOF MANHOLE 600MM (24")
TANK 2 - 13.5ML
MARK: 15202
QTY: 4
SCALE 1/10

ALTERNATE MATERIAL: ALL 350WT STEEL MAY BE SUBSTITUTED WITH 260WT IF EASIER TO SOURCE

AS-BUILT
BY Inukshuk Construction Ltd. DATE 2017/10/02



Permit Number: P471

REVISION HISTORY

ZONE	REV	DESCRIPTION	DATE
	2	EMERGENCY VENT/MANHOLE DETAIL ADDED	4/13/2017
	3	EMERGENCY VENT/MANHOLE DETAIL REMOVED	7/9/2017

DRAWN	Jacob Saunders	3/22/2017
CHECKED	Marc Losier	3/27/2017
QA		
MFG		
APPROVED		

T2 (13.5ML) ROOF MANHOLE

TITLE

MELIADINE FIELD ERECTED TANK - MANHOLES

SIZE	DWG NO	REV
A3	295-M15	3

SCALE

SHEET 4 OF 12

SHOP DRAWING DATA SHEET

Affixing this stamp confirms that an administrative approval and/or a verification of compliance with shop drawings or specifications was made, but does not entail the liability of the author of the work or its owner with regards to this shop drawing or data sheet, for which the contractor is the sole responsible.

☑ Reviewed ☐ Reviewed as noted

☐ Rejected ☐ Filed for records

The contractor, supplier and/or sub-contractor is responsible for: comfirming and coordinating all quantities and dimensions; selecting fabrication processes and techniques of construction; coordinating his or her work with that of all other trades and performing all work in a safe and satisfactory manner.

By: J. morliere Date: 2017/07/14

Project #: 151-06440-40

Parts List				
ITEM	ITEM QTY	CUT (MM)	PART NUMBER	MATERIAL
1	2		ASME B16.5 Flange Slip-On Welding - Class 150 8	A350 LF2
2	1	375	Pipe 8 - Schedule 80 - 14.76378	A333 GR. 6

Ø200 NS DOUBLE FLANGE SHELL LOADING
MARK: M1601
QTY: 2

WEIGHT/SPOOL: 48.2KG

M1601 QTY	
Tank No.	QTY
1	1
2	1
3	0
4	0
5	0
6	0
TOTAL	2

NOTES:
1. ALL DIMENSIONS ARE IN MM UNLESS OTHERWISE NOTED
2. FINISH: SANDBLAST TO SSP-6

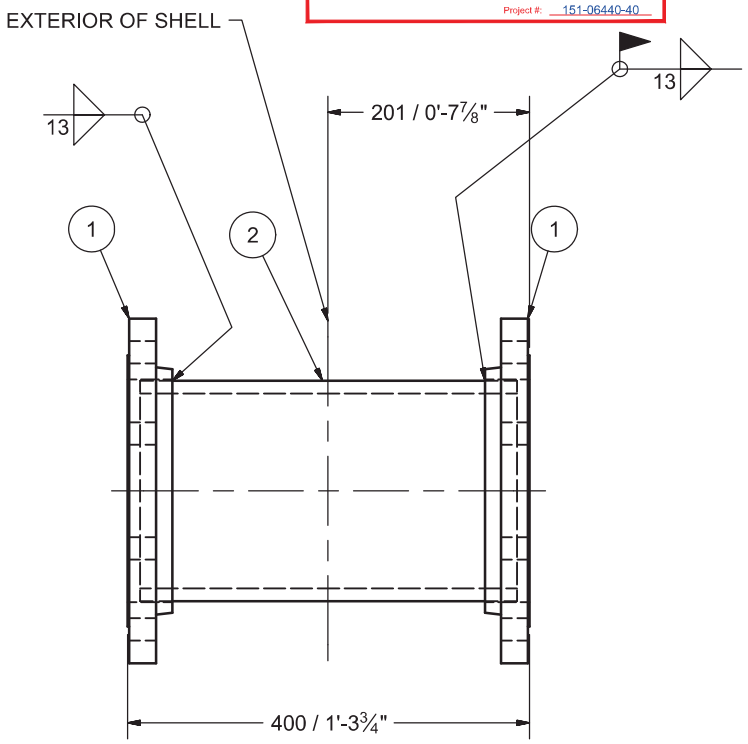

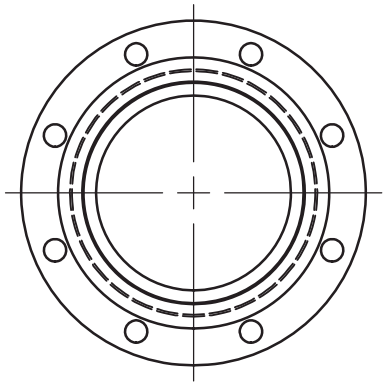

AS-BUILT

BY Inukshuk Construction Ltd. DATE 2017/10/02

PROFESSIONAL ENGINEERS J.S. BROWN LICENSEE NT/NU

16-Jul-2017

Permit Number: P471

REVISION HISTORY		
REV	DESCRIPTION	DATE
3	ALL SHEETS REVISED AS PER ENGINEER COMMENTS	5/1/2017

DRAWN Jacob Saunders	4/13/2017	AEM Meliadine Fuel Storage Tanks
CHECKED		
QA		TITLE: M1601 - 200NS DOUBLE FLG. SHELL
MFG		
APPROVED		
		SIZE A3 / DWG NO 295-M16 / REV 3
		SCALE / SHEET 1 OF 22

Parts List				
ITEM	ITEM QTY	CUT (MM)	PART NUMBER	MATERIAL
1	2		ASME B16.5 Flange Slip-On Welding - Class 150 6	A350 LF2
2	1	375	Pipe 6 - Schedule 80 - 14.76378	A333 GR. 6

Ø150 NS DOUBLE FLANGE SHELL LOADING/UNLOADING

MARK: M1602

QTY: 26

WEIGHT/SPOOL: 30.8KG

M1602 QTY	
Tank No.	QTY
1	3
2	3
3	5
4	5
5	5
6	5
TOTAL	26

NOTES:
1. ALL DIMENSIONS ARE IN MM UNLESS OTHERWISE NOTED
2. FINISH: SANDBLAST TO SSP-6

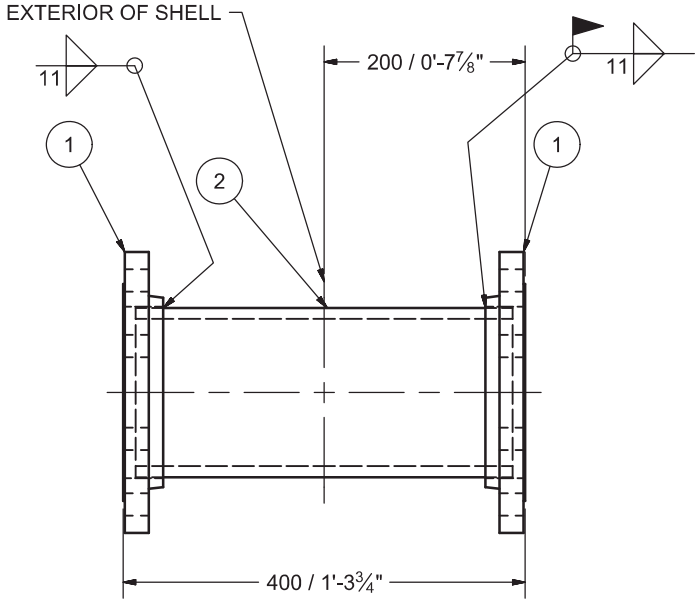

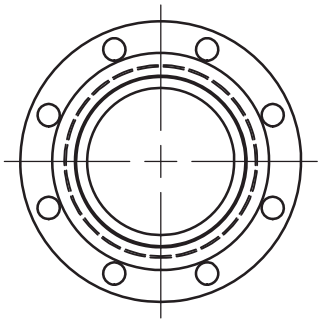

AS-BUILT

BY Inukshuk Construction Ltd. DATE 2017/10/02

16-Jul-2017

Permit Number: P471

DRAWN Jacob Saunders	4/13/2017	AEM Meliadine Fuel Storage Tanks	
CHECKED		TITLE M1602 - 150NS DOUBLE FLG. SHELL	
QA			
MFG			
APPROVED			
		SIZE A3	DWG NO 295-M16 / REV 3
		SCALE	SHEET 2 OF 22

Ø200 NS FIXED PIPE LOADING
TANK 2 (13.5ML)
MARK: M1604
QTY: 1

WEIGHT/SPOOL: 508.5KG

Parts List				
ITEM	ITEM QTY	CUT (MM)	PART NUMBER	MATERIAL
1	1		ASME B16.9 Long Radius 90 Deg Elbow (Inch) 8 x 0.322 SCH40	A420 WPL6
2	1		ASME B16.5 Flange Slip-On Welding - Class 150 8	A350 LF2
3	1	6401	Pipe 8 - Schedule 40 - 440.28	A333 GR. 6
4	1	4782	ASTM A 53/A 53M Pipe 8 - Schedule 40 - 188.27764	Steel

M1604 QTY	
Tank No.	QTY
1	0
2	1
3	0
4	0
5	0
6	0
TOTAL	1

NOTES:
1. ALL DIMENSIONS ARE IN MM UNLESS OTHERWISE NOTED
2. FINISH: BARE

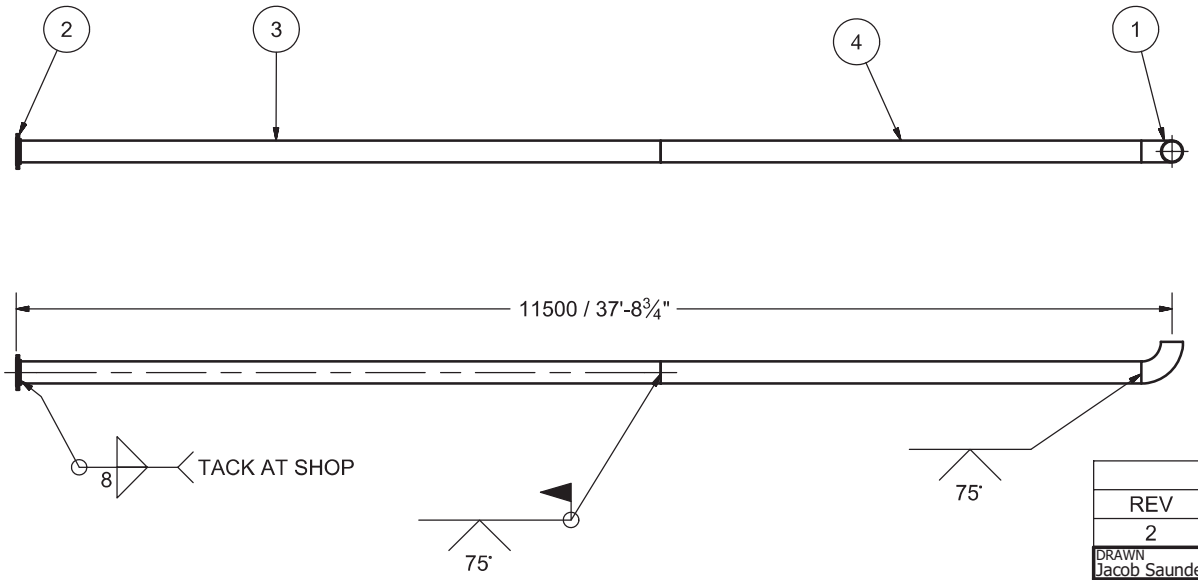

AS-BUILT

BY Inukshuk Construction Ltd. DATE 2017/10/02

16-Jul-2017

Permit Number: P471

REVISION HISTORY		
REV	DESCRIPTION	DATE
2	NOTE 2 CHANGED, PIPE BROKEN IN SECTIONS	5/11/2017

DRAWN Jacob Saunders	4/13/2017	AEM Meliadine Fuel Storage Tanks
CHECKED		
QA		TITLE: M1604 - 200NS FIXED PIPE LOADING
MFG		
APPROVED		SIZE A3 / DWG NO 295-M16 / REV 3
		SCALE / SHEET 4 OF 22

Parts List				
ITEM	ITEM QTY	CUT (MM)	PART NUMBER	MATERIAL
1	1		ASME B16.5 Flange Slip-On Welding - Class 150 6	A350 LF2
2	1		ASME B16.9 Long Radius 90 Deg Elbow (Inch) 6 x 0.28 SCH40	A420 WPL6
3	1	6401	Pipe 6 - Schedule 40 - 446.88977	A333 GR. 6
4	1	4950	Pipe 6 - Schedule 40 - 194.88976	A333 GR. 6

Ø150 NS FIXED PIPE UNLOADING
TANK 2 (13.5ML)
MARK: M1609
QTY: 1

WEIGHT/SPOOL: 326.1KG

M1609 QTY	
Tank No.	QTY
1	0
2	1
3	0
4	0
5	0
6	0
TOTAL	1

NOTES:
1. ALL DIMENSIONS ARE IN MM UNLESS OTHERWISE NOTED
2. FINISH: BARE

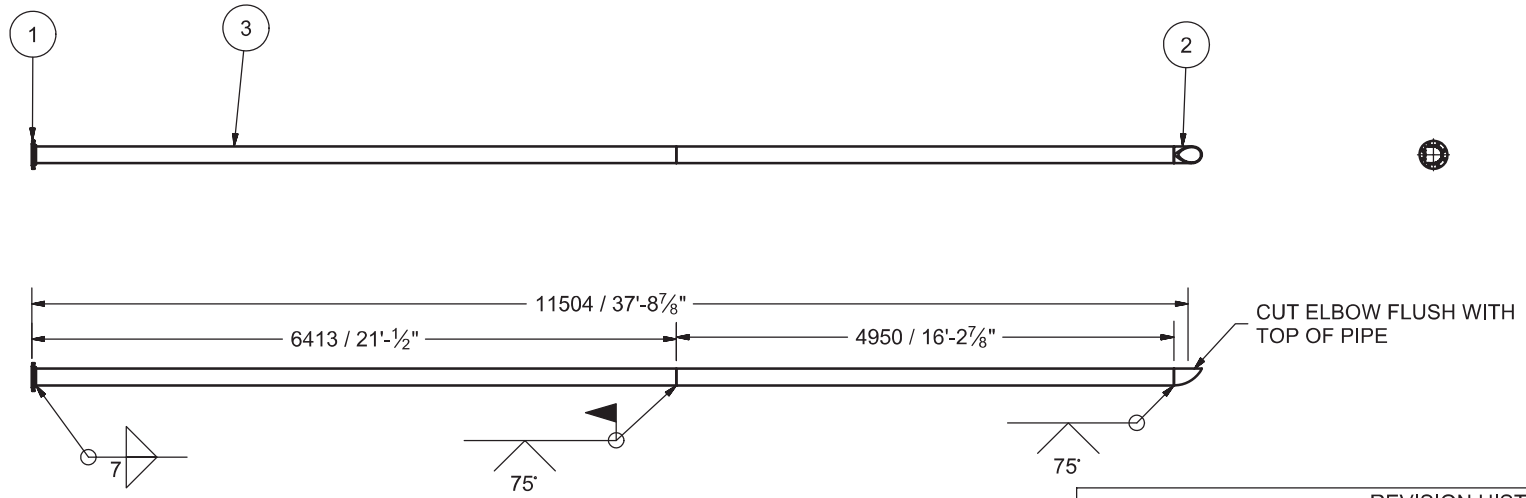

REVISION HISTORY		
REV	DESCRIPTION	DATE
2	NOTE 2 CHANGED, PIPE BROKEN IN SECTIONS	5/11/2017

AS-BUILT
BY Inukshuk Construction Ltd. DATE 2017/10/02

16-Jul-2017
Permit Number: P471

DRAWN Jacob Saunders	4/13/2017	AEM Meliadine Fuel Storage Tanks
CHECKED		
QA		
MFG		TITLE: M1609 - 150NS FIXED PIPE UNLOADING
APPROVED		
SIZE A3	DWG NO 295-M16	REV 3
SCALE		SHEET 9 OF 22

Parts List				
ITEM	ITEM QTY	CUT (MM)	PART NUMBER	MATERIAL
1	1		ASME B16.5 Flange Slip-On Welding - Class 150 6	A350 LF2
2	1	203	Pipe 6 - Schedule 40 - 8	A333 GR. 6
3	1		ASME B16.9 Long Radius 90 Deg Elbow - 6 SCH40	A420 WPL6

Ø150 NS PIPING LOW LEVEL
MARK: M1613
QTY: 16

WEIGHT/SPOOL: 23.3KG

M1613 QTY	
Tank No.	QTY
1	2
2	2
3	3
4	3
5	3
6	3
TOTAL	16

NOTES:
1. ALL DIMENSIONS ARE IN MM UNLESS OTHERWISE NOTED
2. FINISH: BARE

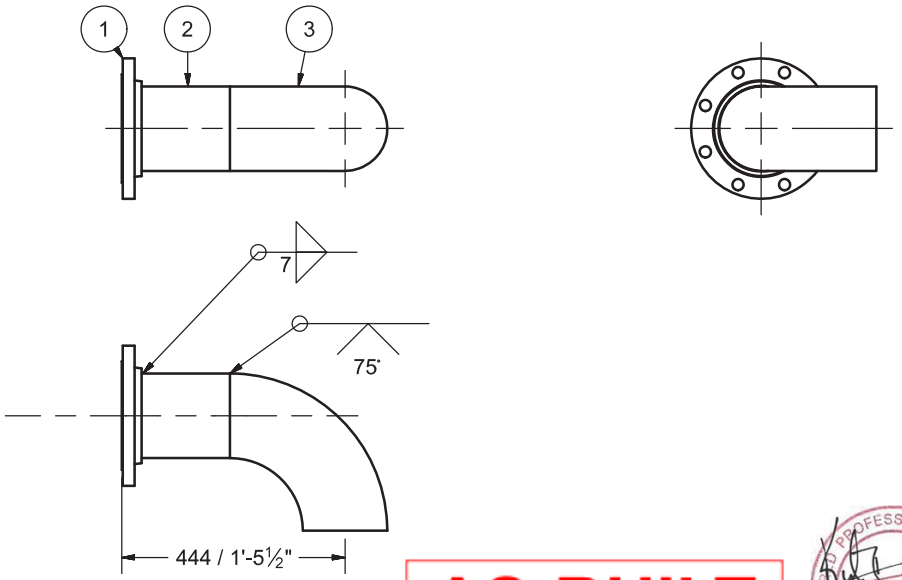

AS-BUILT
BY Inukshuk Construction Ltd. DATE 2017/10/02

16-Jul-2017
Permit Number: P471

REVISION HISTORY		
REV	DESCRIPTION	DATE
2	NOTE 2 CHANGED	5/11/2017

DRAWN Jacob Saunders	4/13/2017	AEM Meliadine Fuel Storage Tanks
CHECKED		
QA		TITLE M1613 - 150NS PIPING LOW LEVEL
MFG		
APPROVED		
		SIZE A3 / DWG NO 295-M16 / REV 3
		SCALE / SHEET 13 OF 22

Ø75 NS WATER DRAW OFF
MARK: M1614
QTY: 32

WEIGHT/SPOOL: 16.6KG

Parts List				
ITEM	ITEM QTY	CUT (MM)	PART NUMBER	MATERIAL
1	1		ASME B16.5 Flange Slip-On Welding - Class 150 3	A350 LF2
2	1	316	Pipe 3 - Schedule 80 - 12.440945	A333 GR. 6
3	1		ASME B16.9 Long Radius 90 Deg Elbow (Inch) 2 x 0.218 SCH80	A420
4	1		ASME B16.9 Eccentric Reducer 3 x 2 - Schedule 80	A420
5	1	799	Pipe 2 - Schedule 80 - 31.456693	A333 GR. 6
6	1	152	ASTM A 53/A 53M Pipe 2 - Schedule 40 - 6	Steel

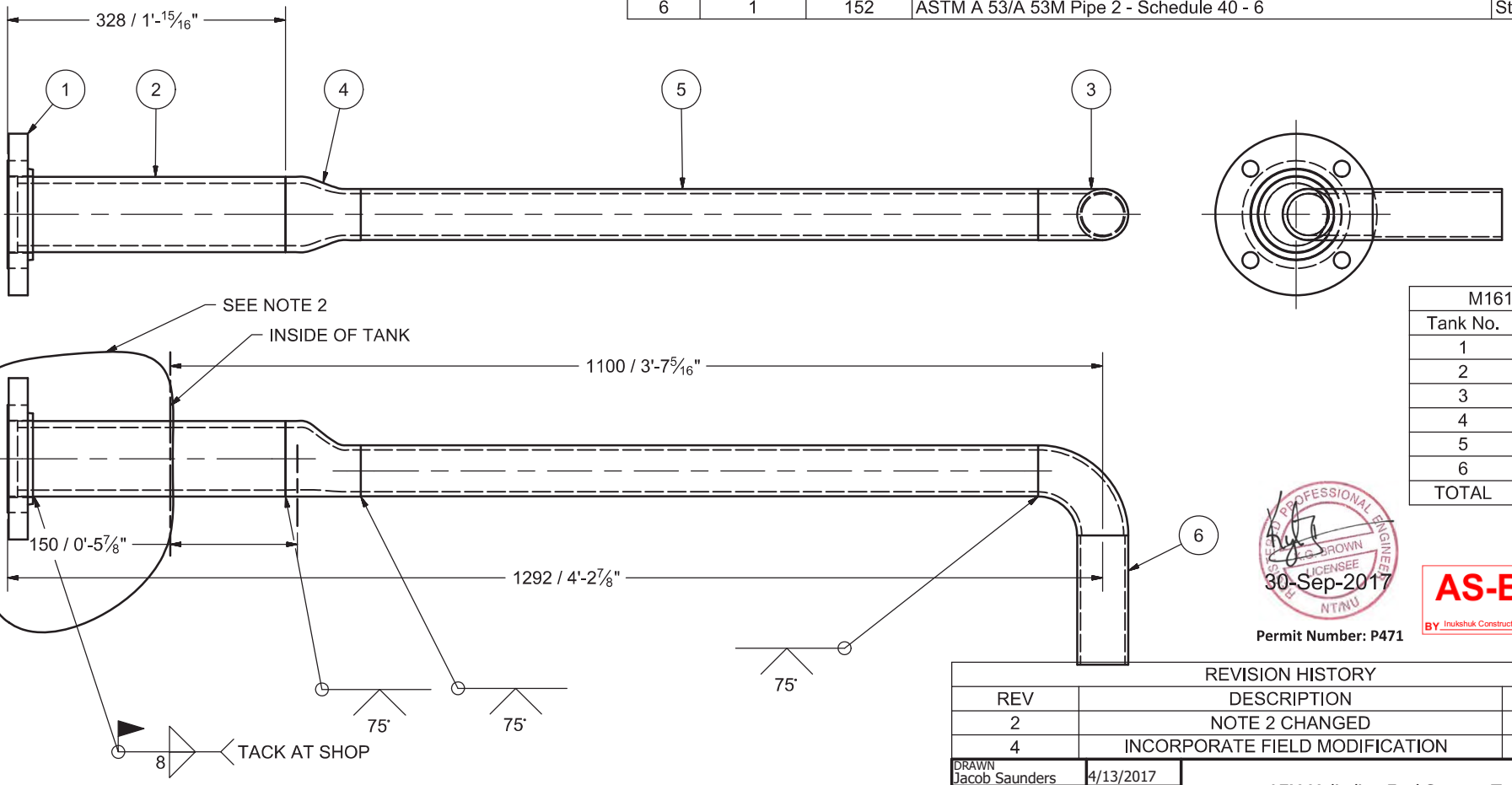

M1614 QTY	
Tank No.	QTY
1	6
2	6
3	6
4	6
5	4
6	4
TOTAL	32

Permit Number: P471

AS-BUILT
BY Inukshuk Construction Ltd. DATE 2017/10/02

NOTES:
1. ALL DIMENSIONS ARE IN MM UNLESS OTHERWISE NOTED
2. FINISH: SANDBLAST TO SSP-6 AREA THAT WOULD BE LOCATED OUTSIDE THE TANK AS INDICATED.

REVISION HISTORY		
REV	DESCRIPTION	DATE
2	NOTE 2 CHANGED	5/11/2017
4	INCORPORATE FIELD MODIFICATION	9/27/2017

DRAWN Jacob Saunders	4/13/2017	AEM Meliadine Fuel Storage Tanks
CHECKED		
QA		TITLE: M1614 - 75NS WATER DRAW OFF
MFG		
APPROVED		SIZE A3 / DWG NO 295-M16 / REV 4
		SCALE / SHEET 14 OF 22

Parts List					
ITEM	ITEM QTY	CUT (MM)	PART NUMBER	DESCRIPTION	MATERIAL
1	1		Plate, 1/4" Thick x 152 Dia	Steel, Mild	G40.21M 300W
2	1	152	PIPE SCH40 ANSI - 4 x .237 - 6	Pipe	A53
3	1		Painters Post Reinforcing Plate	Plate, Mild Steel, 3/8" thk x 133 I.D. x 229 O.D.	G40.21M 300W

Ø100 NS PAINTERS SCAFFOLD CABLE SUPPORT
MARK: M1615
QTY: 6

WEIGHT/SPOOL: 3.4KG

M1615 QTY	
Tank No.	QTY
1	1
2	1
3	1
4	1
5	1
6	1
TOTAL	6

NOTES:
1. ALL DIMENSIONS ARE IN MM UNLESS OTHERWISE NOTED
2. FINISH: SANDBLAST TO SSP-6

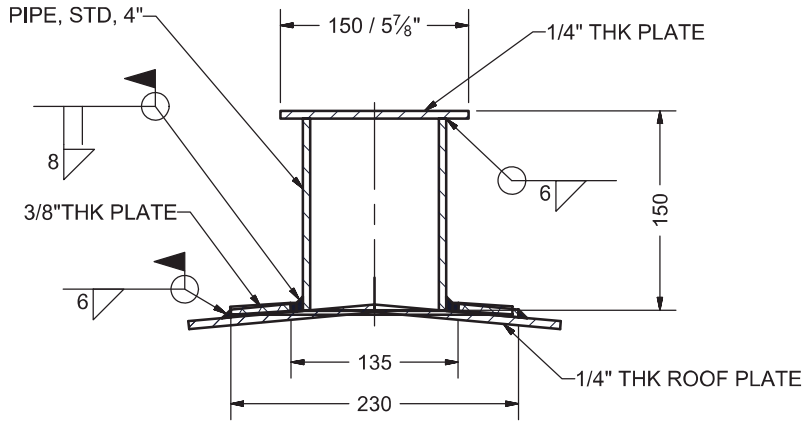

AS-BUILT
BY Inukshuk Construction Ltd. DATE 2017/10/02

PROFESSIONAL ENGINEER
BROWN
LICENSEE
NT/NU
16-Jul-2017

Permit Number: P471

MOSHER ENGINEERING LIMITED
-GRAVEL CRUSHING
-EARTHWORK
-PROCESS PIPE WELDING
-INDUSTRIAL CONTRACTING

1358 QUEEN ST
HALIFAX, NS
B3J 2H5
PH: (902) 429-0272
FAX: (902) 429-7762

DRAWN	Jacob Saunders	4/13/2017
CHECKED		
QA		
MFG		
APPROVED		

AEM Meliadine Fuel Storage Tanks

TITLE: M1615 - PAINTERS SCAFFOLD CABLE SUPPORT

SIZE	DWG NO	REV
A3	295-M16	3

SCALE

SHEET 15 OF 22

Parts List				
ITEM	ITEM QTY	CUT (MM)	PART NUMBER	MATERIAL
1	1		ASME B16.5 Flange Slip-On Welding - Class 150 16	A350 LF2
2	1	330	Pipe 16 - Schedule 30, 3/8" wall - 13"LG	A106

Ø400 NS ROOF NOZZLE
MARK: M1616
QTY: 6

WEIGHT/SPOOL: 83.5KG

M1616 QTY	
Tank No.	QTY
1	1
2	1
3	1
4	1
5	1
6	1
TOTAL	6

NOTES:
1. ALL DIMENSIONS ARE IN MM UNLESS OTHERWISE NOTED
2. FINISH: SANDBLAST TO SSP-6

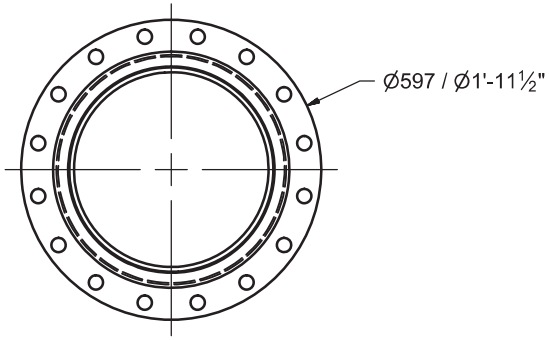

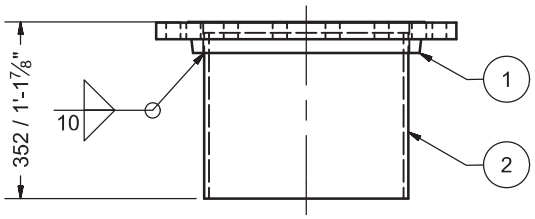

AS-BUILT
BY Inukshuk Construction Ltd. DATE 2017/10/02

APEGA PROFESSIONAL ENGINEER J.C. BROWN LICENSEE NT/NU
16-Jul-2017
Permit Number: P471

DRAWN Jacob Saunders	4/13/2017	AEM Meliadine Fuel Storage Tanks
CHECKED		
QA		TITLE: M1616 - Ø400 NS ROOF NOZZLE
MFG		
APPROVED		SIZE A3 | DWG NO 295-M16 | REV 3
		SCALE | SHEET 16 OF 22

Parts List				
ITEM	ITEM QTY	CUT (MM)	PART NUMBER	MATERIAL
1	1		ASME B16.5 Flange Slip-On Welding - Class 150 8	A350 LF2
2	1	325	Pipe 8 - Schedule 40 - 12.795276	A333 GR. 6

Ø200 NS ROOF NOZZLE FOR OVERFILL PROT.
MARK: M1618
QTY: 6

WEIGHT/SPOOL: 25.8KG

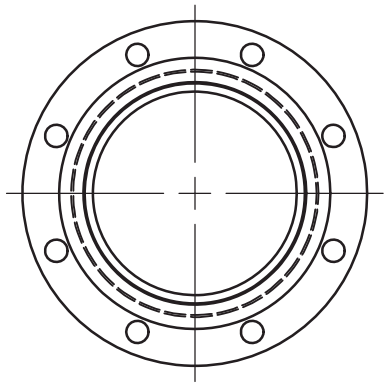

NOTES:
1. ALL DIMENSIONS ARE IN MM UNLESS OTHERWISE NOTED
2. FINISH: SANDBLAST TO SSP-6

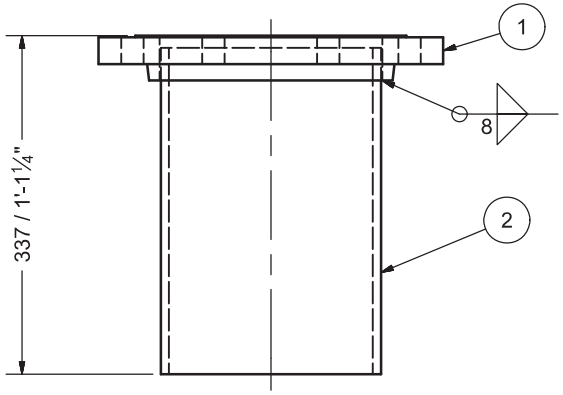

M1618 QTY	
Tank No.	QTY
1	1
2	1
3	1
4	1
5	1
6	1
TOTAL	6

AS-BUILT
BY Inukshuk Construction Ltd. DATE 2017/10/02

PROFESSIONAL ENGINEERS G.G. BROWN LICENSEE NT/NU
16-Jul-2017

Permit Number: P471

DRAWN Jacob Saunders	4/13/2017	AEM Meliadine Fuel Storage Tanks
CHECKED		TITLE M1618 - 200NS ROOF NOZZLE FOR OVERFILL PROT.
QA		
MFG		
APPROVED		
SIZE A3	DWG NO 295-M16	REV 3
SCALE	SHEET 18 OF 22	

Parts List				
ITEM	ITEM QTY	CUT (MM)	PART NUMBER	MATERIAL
1	1		Flange 6in Flat Face, Slip On 150#, A105	A350 LF2
2	1	216	PIPE ANSI - 6 x .280" WALL SCH40	A333 GR. 6

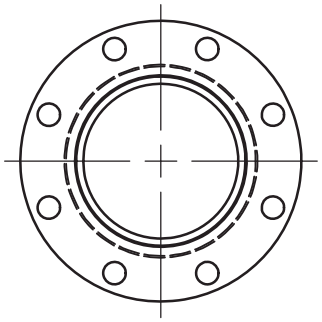

Ø150 NS ROOF NOZZLE FOR GAUGE HATCH
MARK: M1619
QTY: 6

WEIGHT/SPOOL: 13.3KG

NOTES:
1. ALL DIMENSIONS ARE IN MM UNLESS OTHERWISE NOTED
2. FINISH: SANDBLAST TO SSP-6

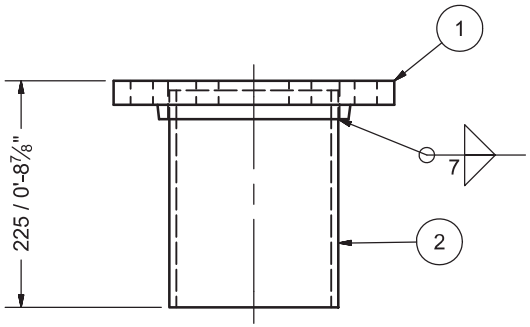

M1619 QTY	
Tank No.	QTY
1	1
2	1
3	1
4	1
5	1
6	1
TOTAL	6

AS-BUILT
BY Inukshuk Construction Ltd. DATE 2017/10/02



Permit Number: P471

DRAWN Jacob Saunders	4/13/2017	AEM Meliadine Fuel Storage Tanks
CHECKED		
QA		
MFG		TITLE M1619 - 150 NS ROOF NOZZLE FOR GAUGE HATCH
APPROVED		
SIZE A3	DWG NO 295-M16	REV 3
SCALE		SHEET 19 OF 22

Parts List				
ITEM	ITEM QTY	CUT (MM)	PART NUMBER	MATERIAL
1	2		ASME B16.5 Flange Slip-On Welding - Class 150 16	A350 LF2
2	1	330	Pipe 16 - Schedule 10 - 13	A106
6	2		ASME B16.9 Long Radius 90 Deg Elbow (Metric) 16 x 9.5	A234
7	1	600	Pipe 16 - Schedule 10 - 23.622047	A106
8	2	6401	Pipe 16 - Schedule 10 - 252	A106

M1620 QTY	
Tank No.	QTY
1	1
2	1
3	0
4	0
5	0
6	0
TOTAL	2

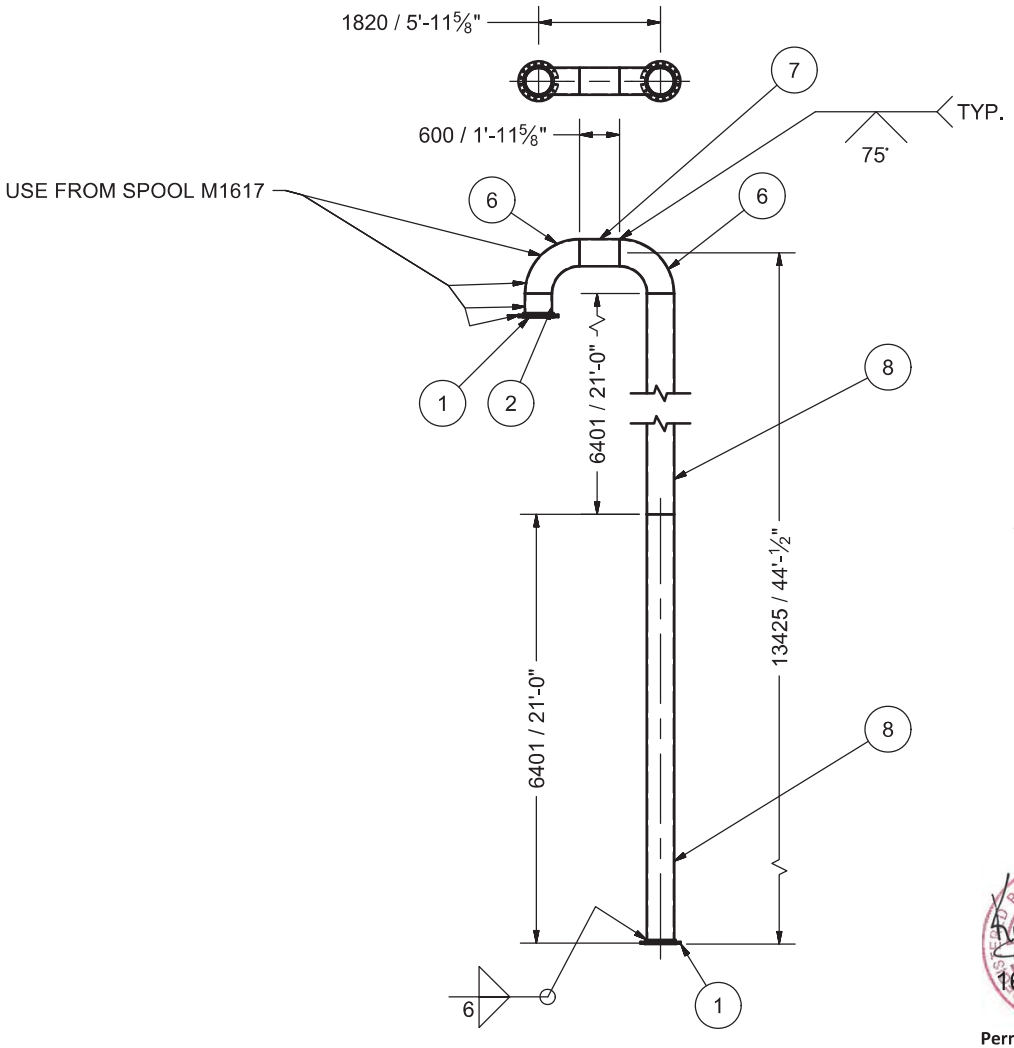

Ø400 NS VENT (RETURN BEND) FOR TANK NO. 1 & 2 AS PER ECN NO. 1

MARK: M1620

QTY: 2

WEIGHT/SPOOL: 1134KG

AS-BUILT

BY Inukshuk Construction Ltd. DATE 2017/10/02

REVISION HISTORY		
REV	DESCRIPTION	DATE
3	THIS SHEET ADDED	7/7/2017

DRAWN Jacob Saunders	4/13/2017	AEM Meliadine Fuel Storage Tanks
CHECKED		
QA		TITLE M1620 - 400 NS VENT TANK NO. 1 & 2
MFG		
APPROVED		SIZE A3 / DWG NO 295-M16 / REV 3
		SCALE / SHEET 20 OF 22



Permit Number: P471

Parts List

ITEM	ITEM QTY	CUT (MM)	PART NUMBER	DESCRIPTION	STOCK NUMBER	MATERIAL
1	1		ASME B16.5 Flange Slip-On Welding - Class 150 4	FLANGE, R.F., SLIP ON, 150#, 100NS [4"]		A350 LF2
2	1	184	ASTM A 53/A 53M Pipe 4 - Schedule 40 - 7.2440945	PIPE, STD, 100NS [4"]	ASTM A 53/A 53M Pipe 4 - Schedule 40	A53

Ø100 NS ROOF NOZZLE
AS PER ECN NO. 1

MARK: M1621
QTY: 6

WEIGHT/SPOOL: 9 KG

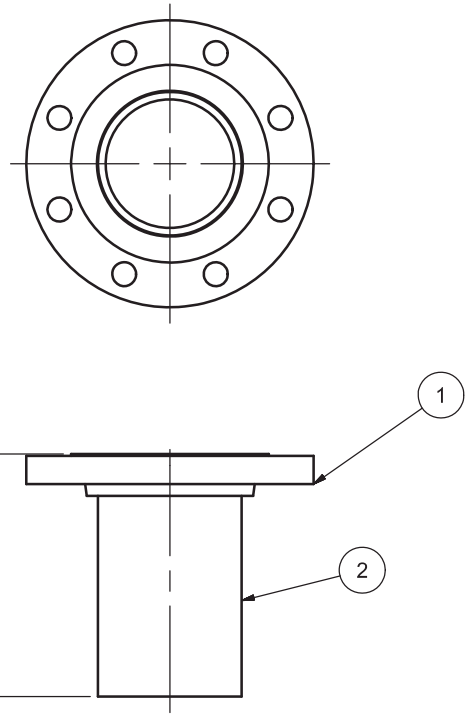

M1621 QTY	
Tank No.	QTY
1	1
2	1
3	1
4	1
5	1
6	1
TOTAL	6

AS-BUILT
BY Inukshuk Construction Ltd. DATE 2017/10/02

16-Jul-2017
Permit Number: P471

REVISION HISTORY		
REV	DESCRIPTION	DATE
3	THIS SHEET ADDED AS PER ECN-001	7/7/2017

DRAWN Jacob Saunders	4/13/2017	AEM Meliadine Fuel Storage Tanks
CHECKED		
QA		
MFG		TITLE: M1621 - 100NS ROOF NOZZLE
APPROVED		
		SIZE A3 / DWG NO 295-M16 / REV 3
		SCALE / SHEET 21 OF 22

Parts List				
ITEM	ITEM QTY	CUT (MM)	PART NUMBER	MATERIAL
2	1	330	ASTM A 53/A 53M Pipe 12 - Schedule 40 - 12.992126	A53
3	1		ASME B16.5 Flange Slip-On Welding - Class 150 12 Flate Face	A106

Ø300 NS ROOF NOZZLE
FOR PRESSURE VACUUM VENT
AS PER ECN NO. 1

MARK: M1622
QTY: 3

WEIGHT/SPOOL: 51 KG

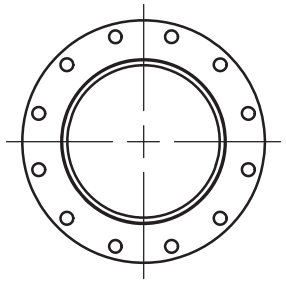

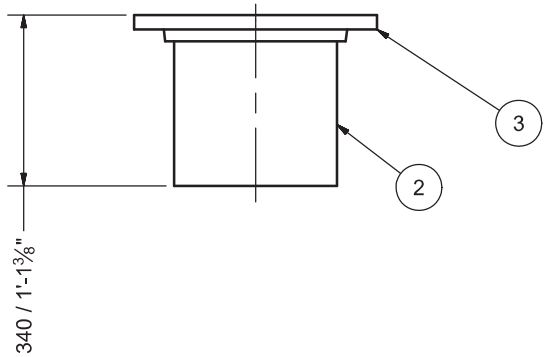

M1622 QTY	
Tank No.	QTY
1	2
2	1
3	0
4	0
5	0
6	0
TOTAL	3

AS-BUILT

BY Inukshuk Construction Ltd. DATE 2017/10/02



Permit Number: P471

REVISION HISTORY		
REV	DESCRIPTION	DATE
3	THIS SHEET ADDED AS PER ECN-001	7/7/2017

DRAWN Jacob Saunders	4/13/2017	AEM Meliadine Fuel Storage Tanks
CHECKED		
QA		TITLE: M1622 - 300NS ROOF NOZZLE
MFG		
APPROVED		SIZE A3 / DWG NO 295-M16 / REV 3
		SCALE / SHEET 22 OF 22

Parts List				
ITEM	ITEM QTY	CUT (MM)	DESCRIPTION	MATERIAL
1	1	152	L100X100X10 [4"X4"X3/8"]	G40.21M 350W
2	1	152	FB150X6 [6"X1/4"]	G40.21M 300W
3	1	305	50NS [2"] PIPE SCH. 40	A53 ERW

wsp

SHOP DRAWING
DATA SHEET

Affixing this stamp confirms that an administrative approval and/or a verification of compliance with shop drawings or specifications was made, but does not entail the liability of the author of the work or its owner with regards to this shop drawing or data sheet, for which the contractor is the sole responsible.

☑ Reviewed ☐ Reviewed as noted
☐ Rejected ☐ Filed for records

The contractor, supplier and/or sub-contractor is responsible for: comfirming and coordinating all quantities and dimensions; selecting fabrication processes and techniques of construction; coordinating his or her work with that of all other trades and performing all work in a safe and satisfactory manner.

By: J. morliere Date: 2017/07/14

Project #: 151-06440-40

PIPE SUPPORT TYPE 1
MARK: M17101
QTY: 72

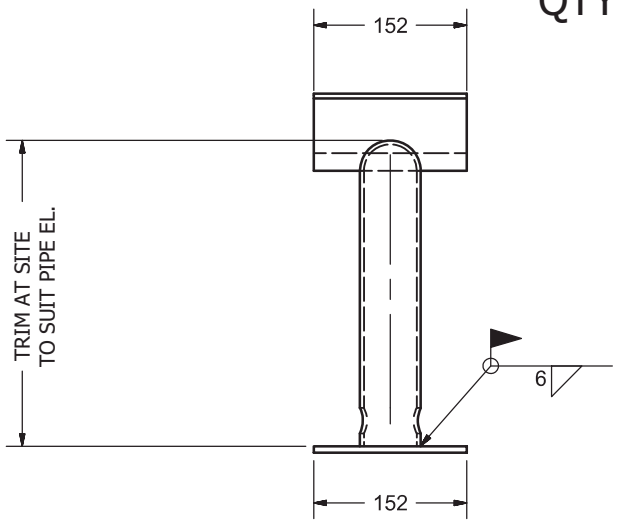

PIPE SUPPORT
SCALE 1/5

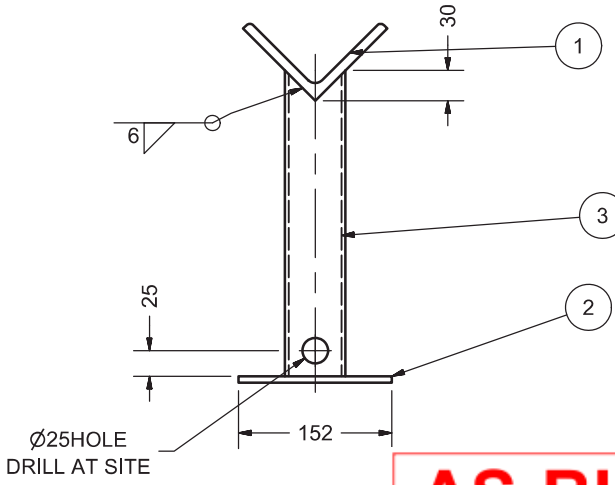

QTY PER TANK	
Tank No.	QTY
1	20
2	16
3	12
4	12
5	6
6	6
TOTAL	72

AS-BUILT
BY Inukshuk Construction Ltd. DATE 2017/10/02

16-Jul-2017
Permit Number: P471

NOTE:
ALL DIMENSIONS ARE IN MM UNLESS OTHERWISE NOTED

DRAWN Jacob Saunders	4/13/2017	PIPE SUPPORT	
CHECKED		TITLE MISC. SUPPORTS AND BRACKETS	
QA			
MFG			
APPROVED		SIZE A3	DWG NO 295-M17
			REV 2
		SCALE	SHEET 1 OF 5

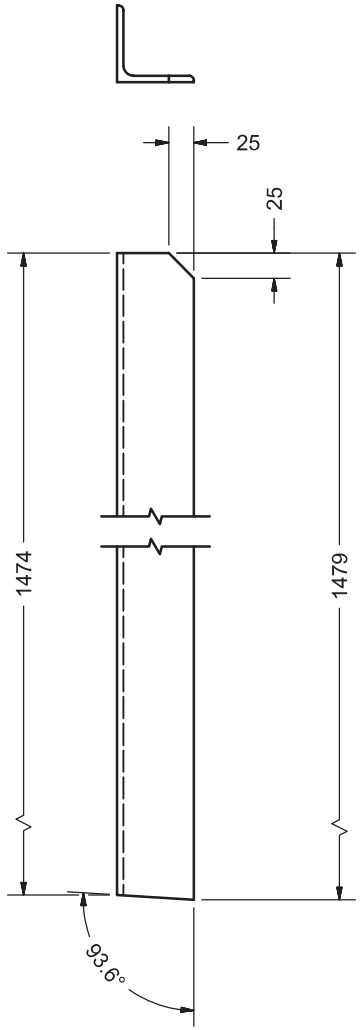

QTY PER TANK	
Tank No.	QTY
1	93
2	77
3	41
4	53
5	21
6	21
TOTAL	306

ROOF HANDRAIL POST
MARK M17201
QTY: 310
L76x76X6 [L3"X3"X1/4"] G40.21M 350W
SCALE 1/5

1

AS-BUILT
BY Inukshuk Construction Ltd. DATE 2017/10/02

PROFESSIONAL ENGINEER
J.G. BROWN
LICENSEE
NT/NU
16-Jul-2017
Permit Number: P471

REVISION HISTORY		
REV	DESCRIPTION	DATE
1	ANGLE SIZE CHG TO 76X76X6 (3"X3"X1/4")	4/27/2017

DRAWN Jacob Saunders	4/13/2017	ROOF TOP HANDRAIL POST
CHECKED		
QA		TITLE
MFG		MISC. SUPPORTS AND BRACKETS
APPROVED		
		SIZE A3 / DWG NO 295-M17 / REV 2
		SCALE / SHEET 2 OF 5

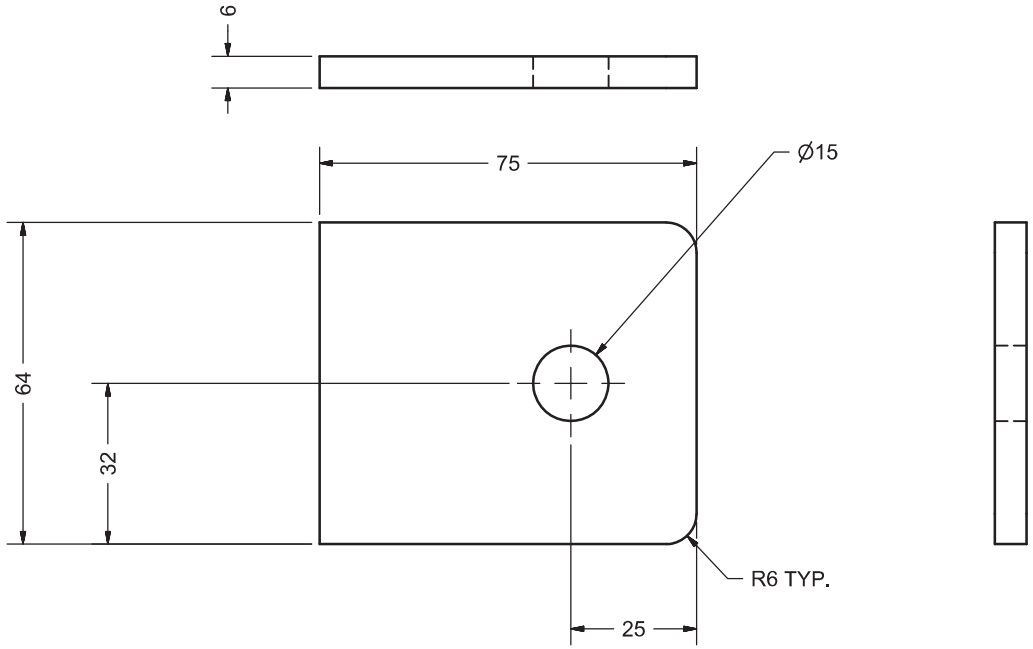

QTY PER TANK	
Tank No.	QTY
1	8
2	8
3	6
4	6
5	4
6	4
TOTAL	36

GROUNDING LUG
MARK M17301
QTY: 36
FB 75X6 [3"X1/4"]
STAINLESS STEEL 316
SCALE 1 : 1

AS-BUILT
BY Inukshuk Construction Ltd. DATE 2017/10/02

REGISTERED PROFESSIONAL ENGINEER
J.G. BROWN
LICENSEE
NT/NU
16-Jul-2017
Permit Number: P471

DRAWN Jacob Saunders	4/13/2017	GROUNDING LUG
CHECKED		
QA		TITLE
MFG		MISC. SUPPORTS AND BRACKETS
APPROVED		
		SIZE A3 / DWG NO 295-M17 / REV 2
		SCALE / SHEET 3 OF 5

CUT LIST					UNIT QTY PER TANK					
MARK	QTY	CUT MM	DESCRIPTION	MATERIAL	TK #1	TK #2	TK #3	TK #4	TK #5	TK #6
M17401	6	400	L100X100X6 [L4"X4"X1/4"] TEMPERATOR SENSOR	G40.21M 350W	1	1	1	1	1	1
M17402	45	400	L75X75X6 [L3"X3"X1/4"] PIPING & ELECTRICAL BRACKET	G40.21M 350W	14	14	6	7	2	2

AS-BUILT

BY Inukshuk Construction Ltd. DATE 2017/10/02

REGISTERED PROFESSIONAL ENGINEER
K.G. BROWN
LICENSEE
NT/NU

16-Jul-2017

Permit Number: P471

DRAWN Jacob Saunders	4/13/2017	MISC BRACKETS
CHECKED		
QA		TITLE
MFG		MISC. SUPPORTS AND BRACKETS
APPROVED		
		SIZE A3 / DWG NO 295-M17 / REV 2
		SCALE / SHEET 4 OF 5

Parts List

ITEM	ITEM QTY	CUT (MM)	PART NUMBER	DESCRIPTION	STOCK NUMBER	MATERIAL
2	1	1230	AISC - L 3 x 3 x 3/8 - 48.426	Angle Steel	L 3 x 3 x 3/8	G40.21 350w
3	1	914	AISC - C 6 x 8.2 - 36	U-Shape	C 6 x 8.2	G40.21 350w
4	1	203	AISC - 6x1/4 - 8	Flat Bar Steel	6x1/4	G40.21 350w
5	1	229	AISC - 6x1/4 - 9	Flat Bar Steel	6x1/4	G40.21 350w



TOP VIEW
SCALE 1/10

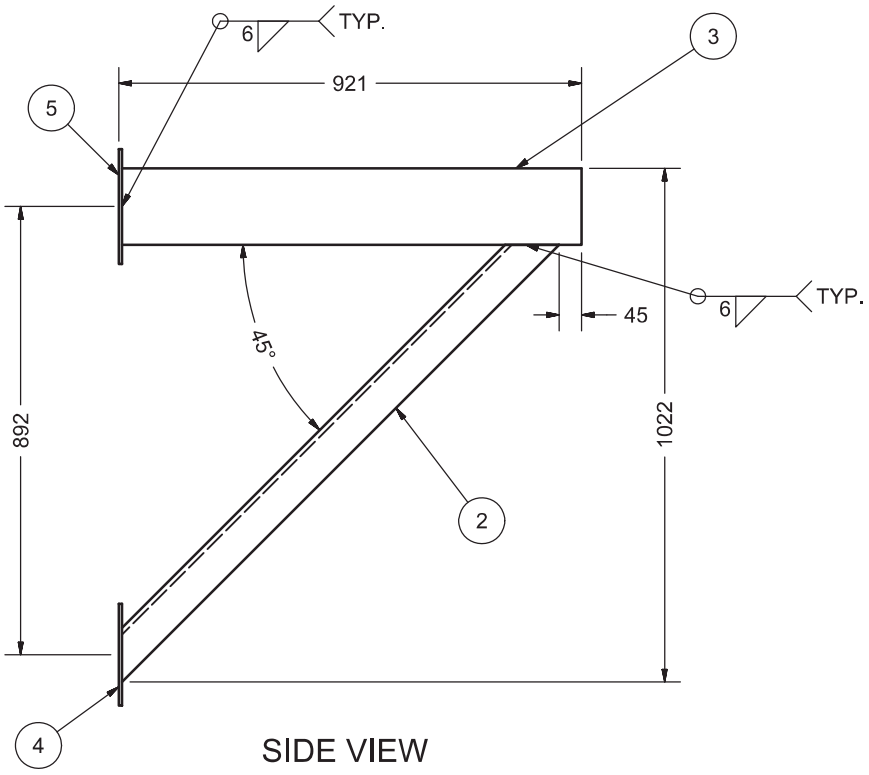

SIDE VIEW
SCALE 1/10

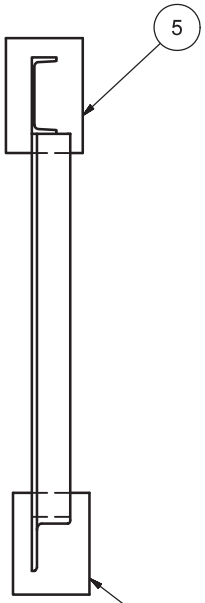

END VIEW
SCALE 1/10

PIPE SUPPORT FOR 400NS
VENT SUPPORT FOR TANK NO. 1 & 2
MARK: M17501
QTY: 4
2 AS SHOWN
2 MIRROR

FINISH: SHOP SANDBLAST

AS-BUILT
BY Inukshuk Construction Ltd. DATE 2017/10/02

PROFESSIONAL ENGINEER
K. G. BROWN
LICENSEE
NT/NU
16-Jul-2017
Permit Number: P471

REVISION HISTORY		
REV	DESCRIPTION	DATE
2	THIS SHEET ADDED	7/7/2017

DRAWN Jacob Saunders	4/13/2017	
CHECKED		
QA		TITLE: MISC. SUPPORTS AND BRACKETS
MFG		
APPROVED		
		SIZE A3 / DWG NO 295-M17 / REV 2
		SCALE / SHEET 5 OF 5

PARTS LIST FOR ONE (1) ASSY, SIXTEEN (16) REQUIRED				
ITEM	ITEM QTY	CUT (MM)	DESCRIPTION	MATERIAL
M18101	1	341	5/8"THK X 66 WIDE PLATE, SEE DETAIL	G40.21M 300W
M18102	1	373	2 1/2" STD PIPE	A53
M18103	1		DAVIT ARM, SEE DETAIL	
M18104	1	198	16 [5/8"] DIA LG SEE DETAIL	Steel
M18105	1		EYE-BOLT 5/8"DIA X 12" LG CROSBY G291	FORGED STEEL
M18106	2		5/8"-11UNC Hex Nuts (Inch Series) Heavy Hex Nut	A194 GR4

PARTS LIST FOR ONE (1) DAVIT ARM, SIXTEEN (16) REQ'D				
ITEM	ITEM QTY	CUT (MM)	DESCRIPTION	MATERIAL
M18108	1	645	2"NS XXH PIPE	A53
M18109	1	25	2 1/2"NS STD PIPE	A53
M18110	1		2"NS XXH ELBOW BW 90DEG L.R.	A234
M18111	1	890	2"NS XXH PIPE	A53
M18112	1	520	FB10X50 [3/8"X2"]	G40.21M 300W

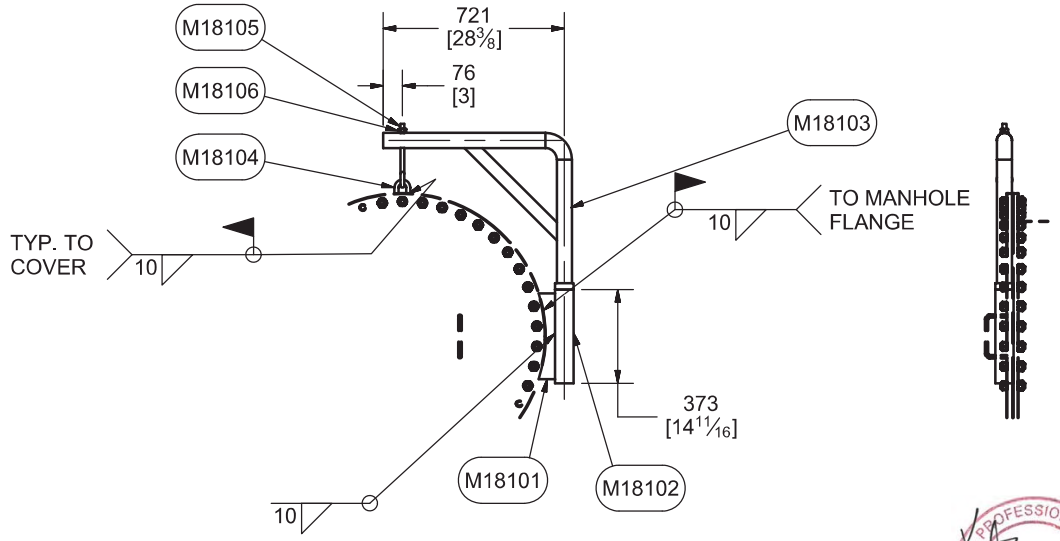

DAVIT ASSEMBLY
QTY: 16
SCALE 1/20

AS-BUILT
BY Inukshuk Construction Ltd. DATE 2017/10/02

04-May-2017

Permit Number: P471

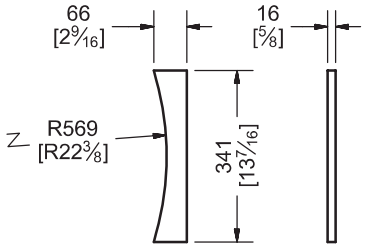

Pc M18101 DETAIL
SCALE 1/10

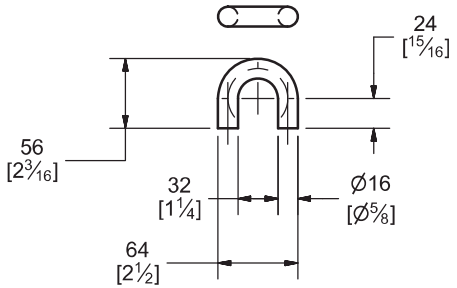

Pc M18104 DETAIL
SCALE 1/4

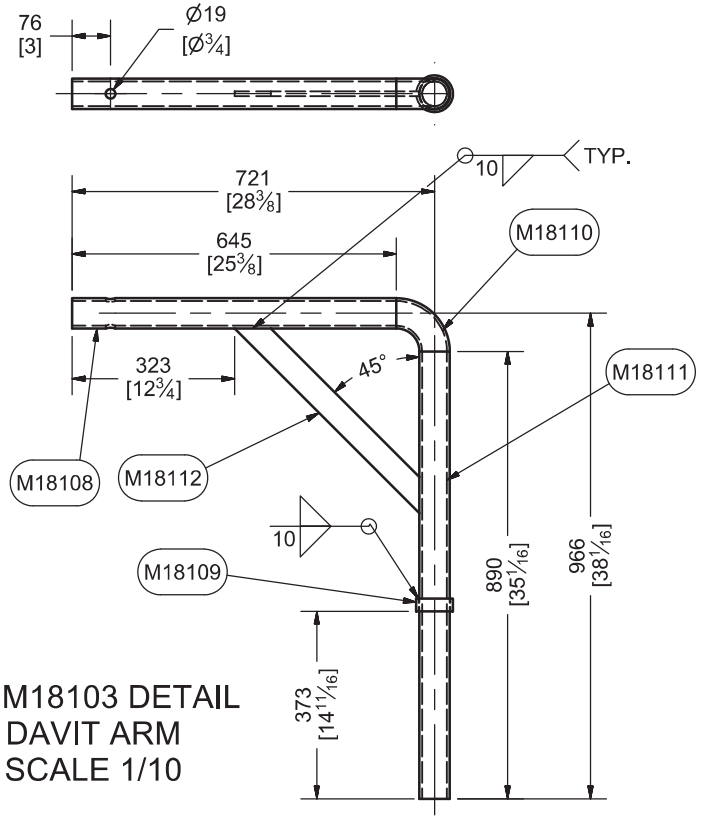

Pc. M18103 DETAIL
DAVIT ARM
SCALE 1/10

DRAWN MARC LOSIER	4/13/2017	900MM [36"] NS FOR TK1, 2, 3, 4
CHECKED		
QA		TITLE
MFG		MANHOLE COVER DAVIT
APPROVED		
		SIZE A3 / DWG NO 295-M18 / REV
		SCALE / SHEET 1 OF 1

BILL OF MATERIALS

MARK	QTY.	DESCRIPTION	MATERIAL	MTR	WT #'s
1	1	C6Ø10.5# x 3'-4" LG (CBE)	G40.21-300W	C	–
2	2	C6Ø10.5# x 3'-1 15/16" LG (COE/POE)	G40.21-300W	C	–
3	1	C6Ø10.5# x 3'-1 27/32" LG (CBE)	G40.21-300W	C	–
4	1	3/8" x 3" x 3" ANGLE x 3'-2 17/32" LG (CBE)	G40.21-300W	C	–
5	2	3/8" THK x 3" x 5"	G40.21-260W	C	–
6	4	1/4" THK x 6" x 10" c/w 2" RADIUS CORNERS	G40.21-260W	C	–
7	16	5/8"Ø x 1 3/4" LG HEX HD BOLT c/w (1) NUT & LOCK WASHER AND (2) FLAT WASHERS	A325 GALV	C	–
8	2	3/8" x 3" x 3" ANGLE x 3'-9 1/8" LG (CBE)	G40.21-300W	C	–
9	2	1/4" THK x 5" x 5 3/4" SEE DETAIL	G40.21-260W	C	–
10	4	1/4" THK x 6" x 6"	G40.21-260W	C	–

BILLING FOR ONE TANK SHOWN, THREE (3) REQUIRED

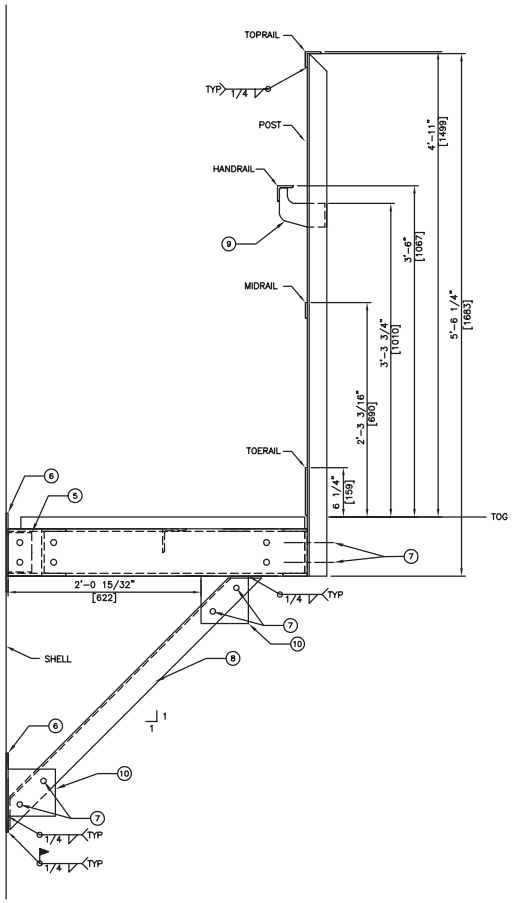

PLATFORM ELEVATION DETAIL

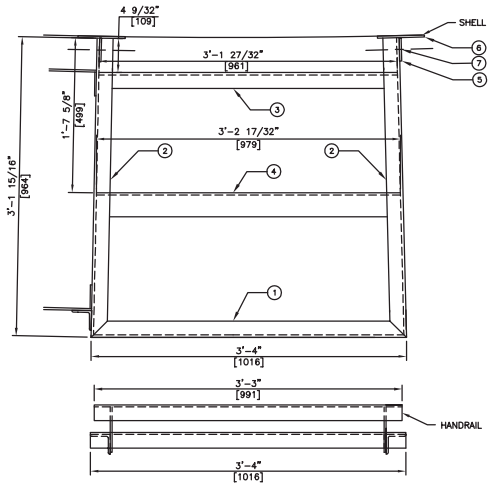

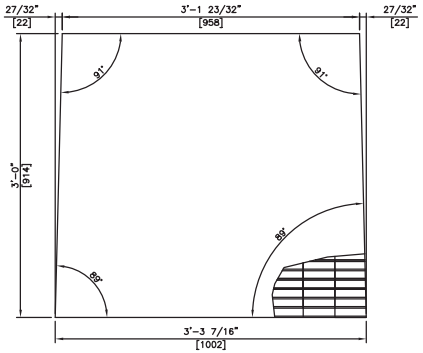

GRATING DETAIL

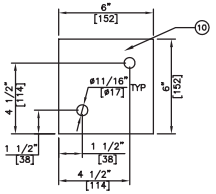

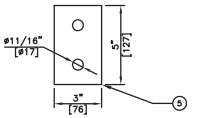

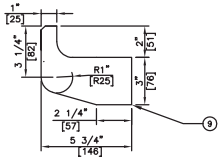

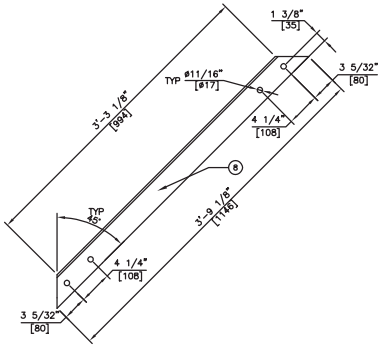

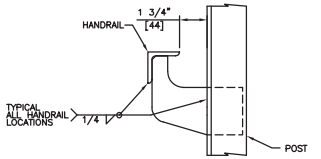

TYPICAL HANDRAIL/POST DETAIL

TYPICAL HANDRAIL DETAIL

TOPRAIL – 1/4" x 2" x 2" ANGLE
HANDRAIL – 1/4" x 2" x 2" ANGLE
MIDRAIL – 1/4" x 2" FLATBAR
TOERAIL – 1/4" x 6" FLATBAR
POST – 1/4" x 2 1/2" x 2 1/2" ANGLE
GRATING – 19-W-4 1 1/2" DEEP x 3/16" GALVANIZED SERRATED BAR GRATING

**HANDRAIL LOCATED ON OUTSIDE ONLY – BOLTED TO PLATFORM

**ALL GRATING TO BE SECURED TO PLATFORM FRAME USING SADDLE CLIPS (BOLTED).

PLATFORM IS CAPABLE OF SUPPORTING A MOVING CONCENTRATED LOAD OF 1000LBS, AND HANDRAIL LOAD OF 200LBS IN ANY DIRECTION.

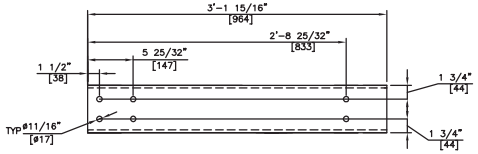

MARK 2 – RIGHT HAND SHOWN
LEFT HAND OPPOSITE



SLOTS MAY BE SHOP LOCATED TO MATCH HANDRAIL POST

AS-BUILT
BY Inukshuk Construction Ltd. DATE 2017/10/02

PROFESSIONAL ENGINEER
G. G. BROWN
LICENSEE
NT/NU
30-Sep-2017

REV.	DATE	DRWN.	APP'D.	DESCRIPTION
0	5-MAY-17	ME	KB	ISSUED FOR CONSTRUCTION
A	17-APR-17	ME	KB	ISSUED FOR APPROVAL

REVISIONS

SUB-ARC SYSTEMS INC.

CUSTOMER: AGNICO EAGLE MINES LIMITED – MELIADINE PROJECT
TITLE: MID PLATFORM DETAIL
PROJECT NO.: 6515
LOCATION: RANKIN INLET, NUNAVUT
TANK NO.: TANK TAG: TK #2
SCALE: 3/4" = 1'-0"
DATE: 17-APR-17
W.O.: 17-03
DRWG. No.: 17-03-2-001
Rev.: 0

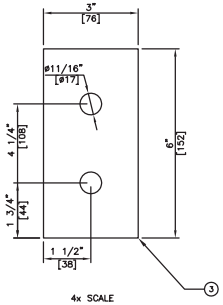

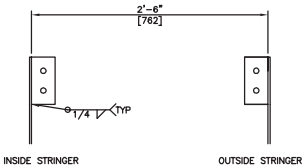

STRINGER CLIP TO PLATFORM

BILL OF MATERIALS

MARK	QTY.	DESCRIPTION	MATERIAL	MTR	WT #'s
1	1	1/4" THK x 12" x 17'-1 13/16" LG SEE DETAIL	G40.21-260W	C	–
2	3	1/4" THK x 12" x 17'-8" LG SEE DETAIL	G40.21-260W	C	–
3	14	1/4" THK x 3" x 6"	G40.21-260W	C	–
4	28	5/8"ø x 1 3/4" LG HEX HD BOLT c/w (1) NUT & LOCK WASHER AND (2) FLAT WASHERS	A325 GALV	C	–

BILLING FOR ONE TANK SHOWN, ONE REQUIRED

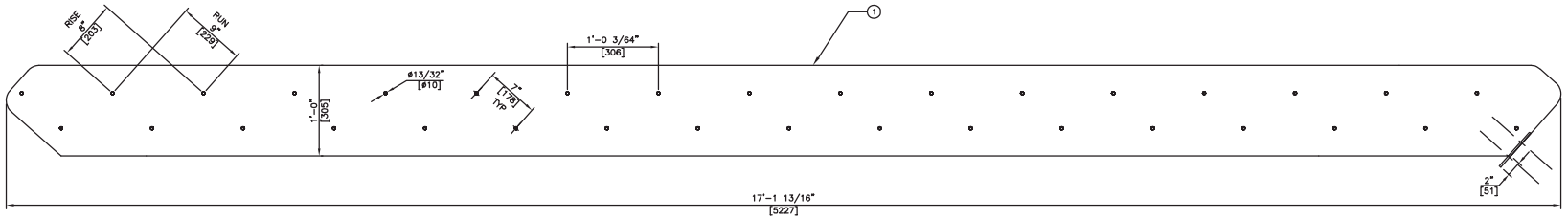

INSIDE BOTTOM STRINGER

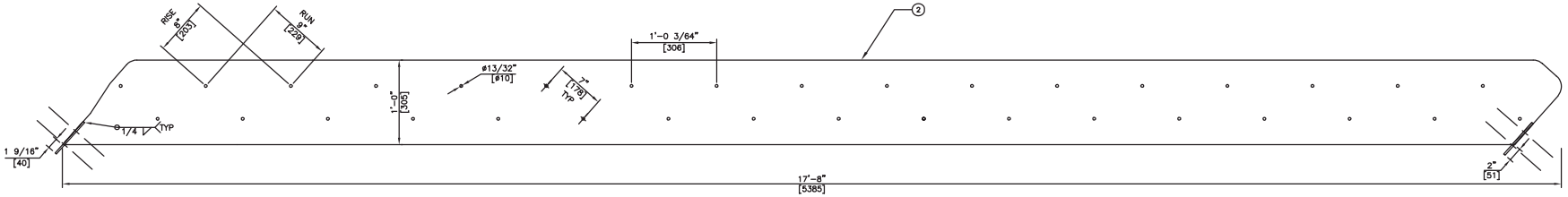

INSIDE STRINGER – THREE SECTIONS REQUIRED

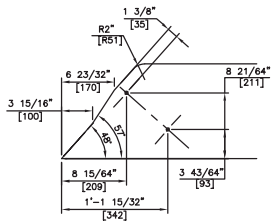

BOTTOM @ PLATFORM

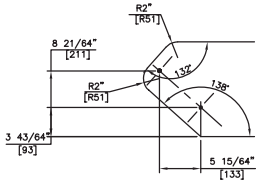

BOTTOM

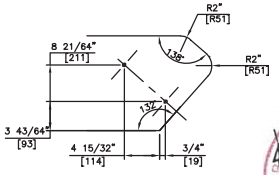

TOP



AS-BUILT

BY Inukshuk Construction Ltd. DATE 2017/10/02

NOTE: MARK 3 IS PLACED SAME SIDE AS STAIR.

REV.	DATE	DRWN.	APP'D.	DESCRIPTION
0	5-MAY-17	ME	KB	ISSUED FOR CONSTRUCTION
A	17-APR-17	ME	KB	ISSUED FOR APPROVAL

REVISIONS

SUB-ARC SYSTEMS INC.

CUSTOMER: AGNICO EAGLE MINES LIMITED – MELIADINE PROJECT

TITLE: INSIDE STRINGER DETAIL

PROJECT NO.: 6515

LOCATION: RANKIN INLET, NUNAVUT

TANK NO.: TANK TAG: TK #2

SCALE: 3/4" = 1'-0" | D.O.: 17-03 | DRWG. No.: 17-03-2-002 | Rev.: 0

DATE: 17-APR-17

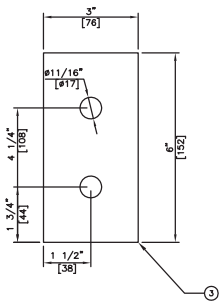

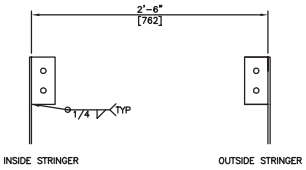

STRINGER CLIP TO PLATFORM

BILL OF MATERIALS

MARK	QTY.	DESCRIPTION	MATERIAL	MTR	WT #'s
1	1	1/4" THK x 12" x 17'-5 5/8" LG SEE DETAIL	G40.21-260W	C	–
2	3	1/4" THK x 12" x 17'-11 17/32" LG SEE DETAIL	G40.21-260W	C	–
3	14	1/4" THK x 3" x 6"	G40.21-260W	C	–
4	28	5/8"ø x 1 3/4" LG HEX HD BOLT c/w (1) NUT &	A325 GALV	C	–
		SERRATED BAR GRATING c/w CHECKER PLATE NOSE			
5	68	STAIR TREAD 9 3/4" WIDE x 30" LG x 1 1/2" x 3/16"	G40.21-260W	C	–
		SERRATED c/w CHECKER PLATE NOSE			
6	272	3/8"ø x 1 1/2" LG HEX HD BOLT c/w (1) NUT &	A325 GALV	C	–
		LOCK WASHER AND (2) FLAT WASHERS			

BILLING FOR ONE TANK SHOWN, ONE REQUIRED

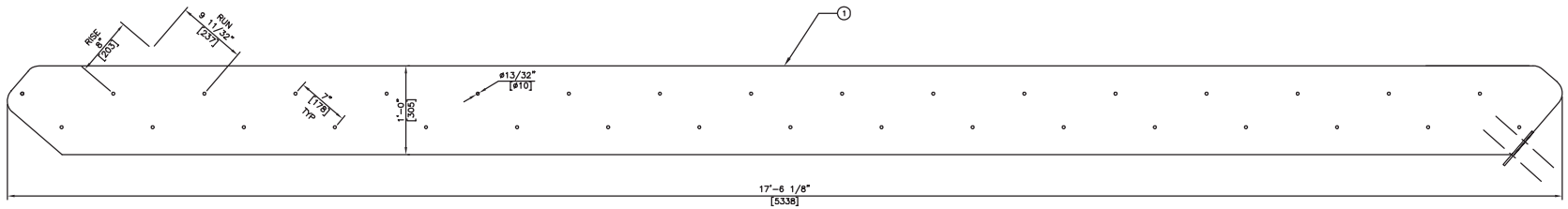

OUTSIDE BOTTOM STRINGER

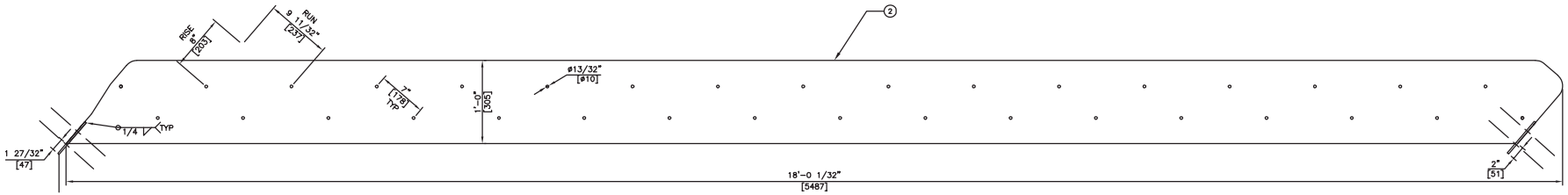

OUTSIDE STRINGER – THREE SECTIONS REQUIRED

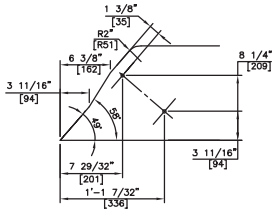

BOTTOM @ PLATFORM

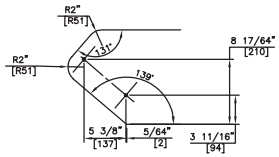

BOTTOM

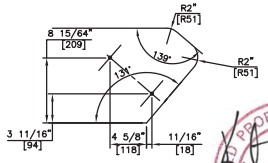

TOP

AS-BUILT

BY Inukshuk Construction Ltd. DATE 2017/10/02

NOTE: MARK 3 IS PLACED SAME SIDE AS STAIR.

REV.	DATE	DRWN.	APP'D.	DESCRIPTION
0	5-MAY-17	ME	KB	ISSUED FOR CONSTRUCTION
A	17-APR-17	ME	KB	ISSUED FOR APPROVAL

REVISIONS

30-Sep-2017

SUB-ARC SYSTEMS INC.

CUSTOMER: AGNICO EAGLE MINES LIMITED – MELIADINE PROJECT

TITLE: OUTSIDE STRINGER DETAIL

PROJECT NO.: 6515

LOCATION: RANKIN INLET, NUNAVUT

TANK NO.: TANK TAG: TK #2

SCALE: 3/4" = 1'-0"

W.O.: 17-03

DRWG. No.: 17-03-2-003

Rev.: 0

DATE: 17-APR-17

BILL OF MATERIALS

MARK	QTY.	DESCRIPTION	MATERIAL	MTR	WT #'s
1	8	3/8" x 3" x 3" ANGLE x 3'-3" LG (PBE)	G40.21-300W	C	–
2	18	1/4" THK x 2 5/8" x 7" LG	G40.21-260W	C	–
3	8	3/8" x 3" x 3" ANGLE x 3'-9 1/8" LG	G40.21-300W	C	–
4	50	5/8"ø x 1 3/4" LG HEX HD BOLT c/w (1) NUT & LOCK WASHER AND (2) FLAT WASHERS	A325 GALV	C	–
5	17	1/4" THK x 6" x 10" c/w 2" RADIUS CORNERS	G40.21-260W	C	–
6	1	C6@10.5# x 2'-11" LG	G40.21-300W	C	–
7	16	1/4" THK x 6" x 6"	G40.21-260W	C	–

BILLING FOR ONE TANK SHOWN, ONE REQUIRED

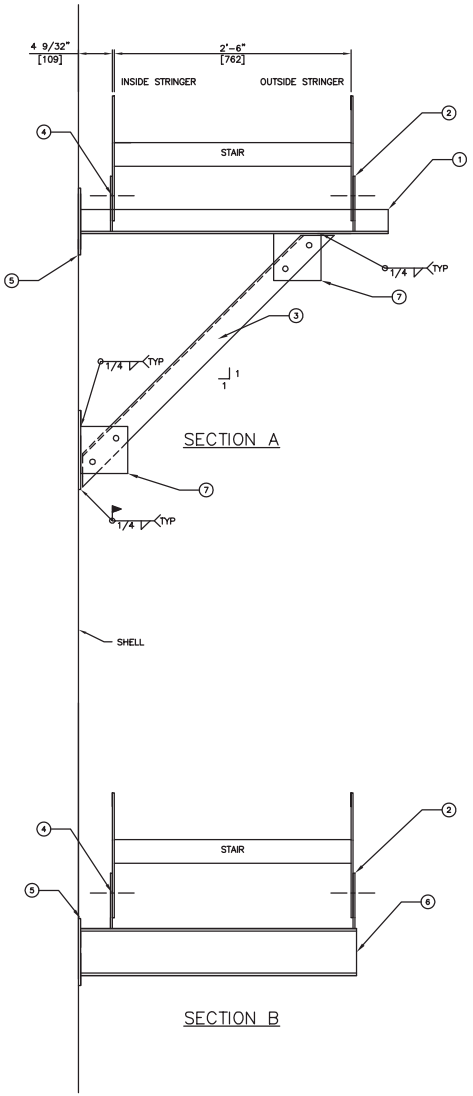

SECTION A

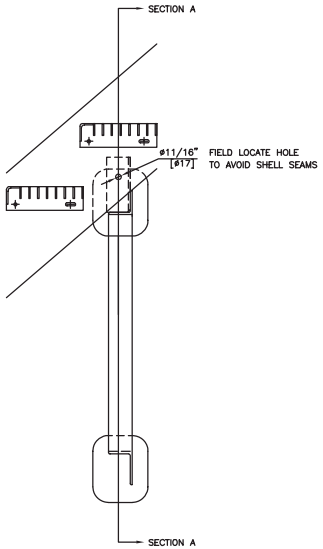

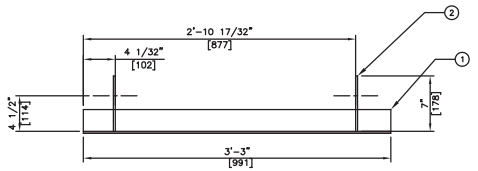

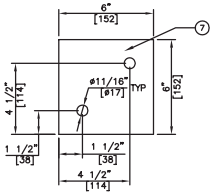

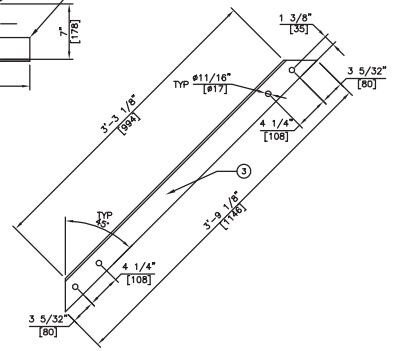

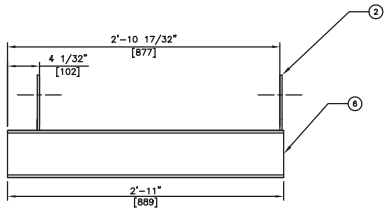

SECTION B

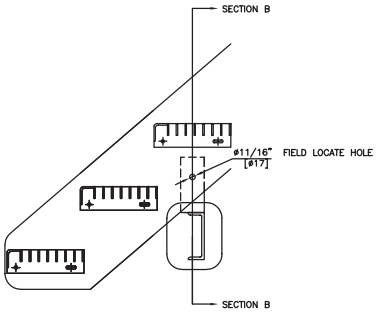

CHANNEL SUPPORT IS FOR BOTTOM OF STAIRS ONLY.

AS-BUILT

BY Inukshuk Construction Ltd. DATE 2017/10/02

NOTE: MAXIMUM SUPPORT SPACING IS EVERY 7 STAIRS.



REV.	DATE	DRWN.	APP'D.	DESCRIPTION
0	5-MAY-17	ME	KB	ISSUED FOR CONSTRUCTION
A	17-APR-17	ME	KB	ISSUED FOR APPROVAL

REVISIONS

SUB-ARC SYSTEMS INC.

CUSTOMER: AGNICO EAGLE MINES LIMITED – MELIADINE PROJECT

TITLE: STAIR STRINGER SUPPORTS

PROJECT NO.: 6515

LOCATION: RANKIN INLET, NUNAVUT

TANK NO.: TANK TAG: TK #2

SCALE: 3/4" = 1'-0"

DATE: 17-APR-17

E.O.: 17-03

DRWG. No.: 17-03-2-004

Rev.: 0

BILL OF MATERIALS

MARK	QTY.	DESCRIPTION	MATERIAL	MTR	WT #'s
1	1	C6⊕10.5# x 3'-4" LG (CBE)	G40.21-300W	C	–
2	2	C6⊕10.5# x 3'-1 15/16" LG (COE/POE)	G40.21-300W	C	–
3	1	C6⊕10.5# x 3'-1 27/32" LG (CBE)	G40.21-300W	C	–
4	1	3/8" x 3" x 3" ANGLE x 3'-2 17/32" LG (CBE)	G40.21-300W	C	–
5	2	3/8" THK x 3" x 5"	G40.21-260W	C	–
6	4	1/4" THK x 6" x 10" c/w 2" RADIUS CORNERS	G40.21-260W	C	–
7	20	5/8"⊕ x 1 3/4" LG HEX HD BOLT c/w (1) NUT & LOCK WASHER AND (2) FLAT WASHERS	A325 GALV	C	–
8	2	3/8" x 3" x 3" ANGLE x 3' - 9 1/8" LG (CBE)	G40.21-300W	C	–
9	4	1/4" THK x 5" x 5 3/4" SEE DETAIL	G40.21-260W	C	–

BILLING FOR ONE TANK SHOWN, ONE (1) REQUIRED

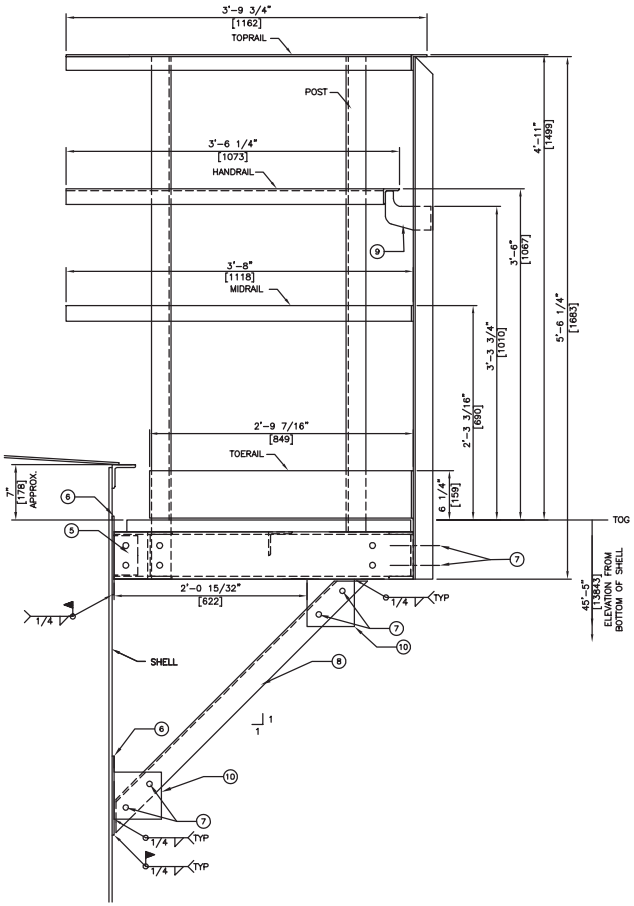

PLATFORM ELEVATION DETAIL

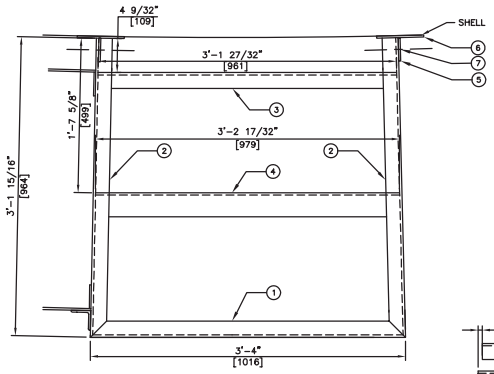

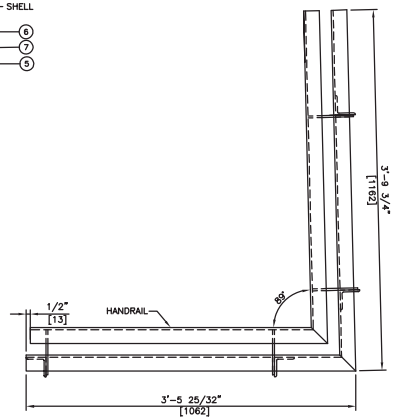

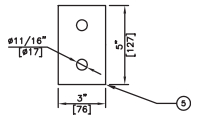

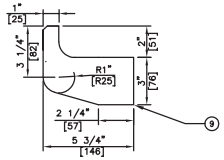

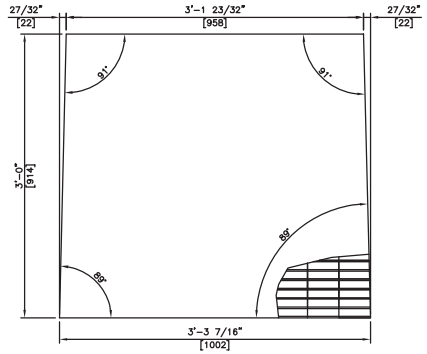

GRATING DETAIL

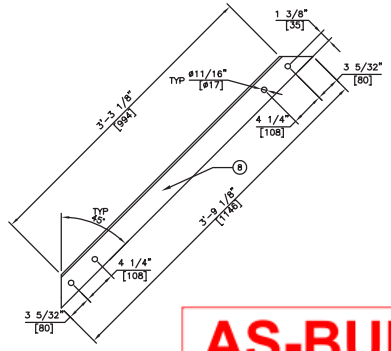

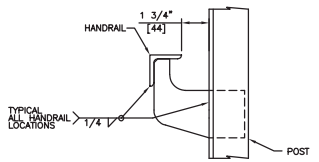

TYPICAL HANDRAIL/POST DETAIL

TYPICAL HANDRAIL DETAIL

TOPRAIL – 1/4" x 2" x 2" ANGLE
HANDRAIL – 1/4" x 2" x 2" ANGLE
MIDRAIL – 1/4" x 2" FLATBAR
TOERAIL – 1/4" x 6" FLATBAR
POST – 1/4" x 2 1/2" x 2 1/2" ANGLE
GRATING – 19-W-4 1 1/2" DEEP x 3/16" GALVANIZED SERRATED BAR GRATING

**HANDRAIL LOCATED ON OUTSIDE ONLY – BOLTED TO PLATFORM

**ALL GRATING TO BE SECURED TO PLATFORM FRAME USING SADDLE CLIPS (BOLTED).

FIELD TO TRIM HANDRAIL OVER TANK ROOF TO MATE WITH PERIMETER HANDRAIL

PLATFORM IS CAPABLE OF SUPPORTING A MOVING CONCENTRATED LOAD OF 1000LBS, AND HANDRAIL LOAD OF 200LBS IN ANY DIRECTION.

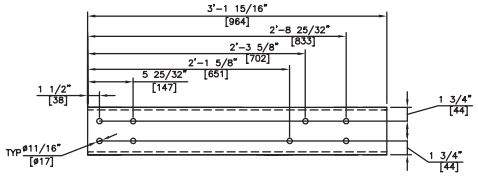

MARK 2 – RIGHT HAND SHOWN
LEFT HAND OPPOSITE

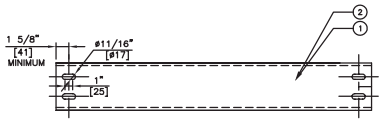

SLOTS MAY BE SHOP LOCATED TO MATCH HANDRAIL POST

AS-BUILT

BY Inukshuk Construction Ltd. DATE 2017/10/02



REV.	DATE	DRWN.	APP'D.	DESCRIPTION
0	5-MAY-17	ME	KB	ISSUED FOR CONSTRUCTION
A	17-APR-17	ME	KB	ISSUED FOR APPROVAL

REVISIONS

SUB-ARC SYSTEMS INC.

CUSTOMER: AGNICO EAGLE MINES LIMITED – MELIADINE PROJECT

TITLE: TOP PLATFORM DETAIL

PROJECT NO.: 6515

LOCATION: RANKIN INLET, NUNAVUT

TANK NO.: TANK TAG: TK #2

SCALE: 3/4" = 1'-0" | W.O.: 17-03 | DWG. No.: 17-03-2-005 | Rev.: 0

DATE: 17-APR-17

BILL OF MATERIALS

MARK	QTY.	DESCRIPTION	MATERIAL	MTR	WT #'s
1	4	1/4" THK x 5" x 5 3/4" SEE DETAIL	G40.21-260W	C	–

BILLING FOR ONE TANK SHOWN, FOUR (4) REQUIRED

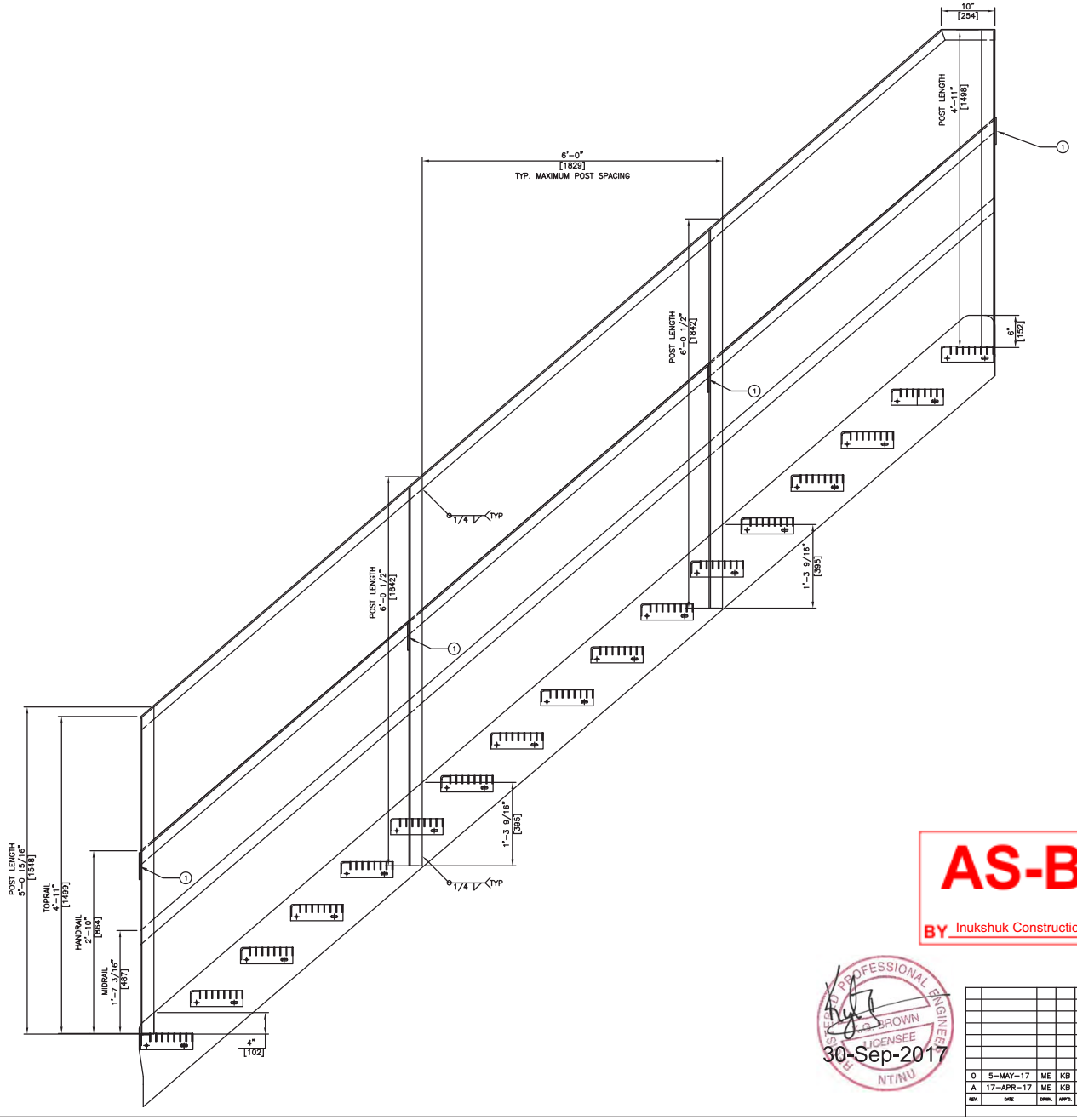

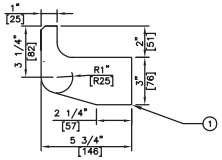

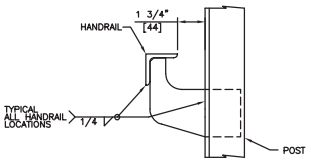

TYPICAL HANDRAIL/POST DETAIL

TYPICAL HANDRAIL DETAIL

TOPRAIL – 1/4" x 2" x 2" ANGLE
HANDRAIL – 1/4" x 2" x 2" ANGLE
MIDRAIL – 1/4" x 2" FLATBAR

POST – 1/4" x 2 1/2" x 2 1/2" ANGLE
POST SHALL BE SQUARE TO THE STAIR HOLES
1 POST AT EACH END, 2 POSTS EQUAL SPACE ON STRINGER

**HANDRAIL LOCATED ON OUTSIDE ONLY

STAIRS ARE CAPABLE OF SUPPORTING A MOVING CONCENTRATED LOAD OF 1000LBS, AND HANDRAIL LOAD OF 200LBS IN ANY DIRECTION.

AS-BUILT

BY Inukshuk Construction Ltd. DATE 2017/10/02

REV.	DATE	DRWN.	APP'D.	DESCRIPTION
0	5-MAY-17	ME	KB	ISSUED FOR CONSTRUCTION
A	17-APR-17	ME	KB	ISSUED FOR APPROVAL

REVISIONS

SUB-ARC SYSTEMS INC.

CUSTOMER: AGNICO EAGLE MINES LIMITED – MELIADINE PROJECT

TITLE: STAIR HANDRAIL DETAIL

PROJECT NO.: 6515

LOCATION: RANKIN INLET, NUNAVUT

TANK NO.: TANK TAG: TK #2

SCALE: 3/4" = 1'-0"

DATE: 17-APR-17

E.O.: 17-03

DRWG. No.: 17-03-2-006

REV.: 0

APPENDIX B

Survey Drawings of Rankin Inlet Itivia Site fuel storage and containment facility



HAMELARPENTAGE	AGNICO EAGLE	WORK EXECUTION DATE : 2017-10-13	EMISSION DATE : 2017-10-25
	COORD. SYSTEME: UTM15 NAD83	AS BUILT RANKIN FUEL FARM	DRAWN BY: R.CLOUATRE
	SCALE: 1:2000	PLAN NO.: 131-RANKIN-FUEL-FARM-QT-171025-01	APPROVED BY: Hamel arpentage

C:\Users\Utilisateur\Desktop\RANKIN INLET\SURVEY\DWG\FINAL-AS-BUILTS\AS_BUILT_FUEL_FARM-RANKIN-surfaces.dwg

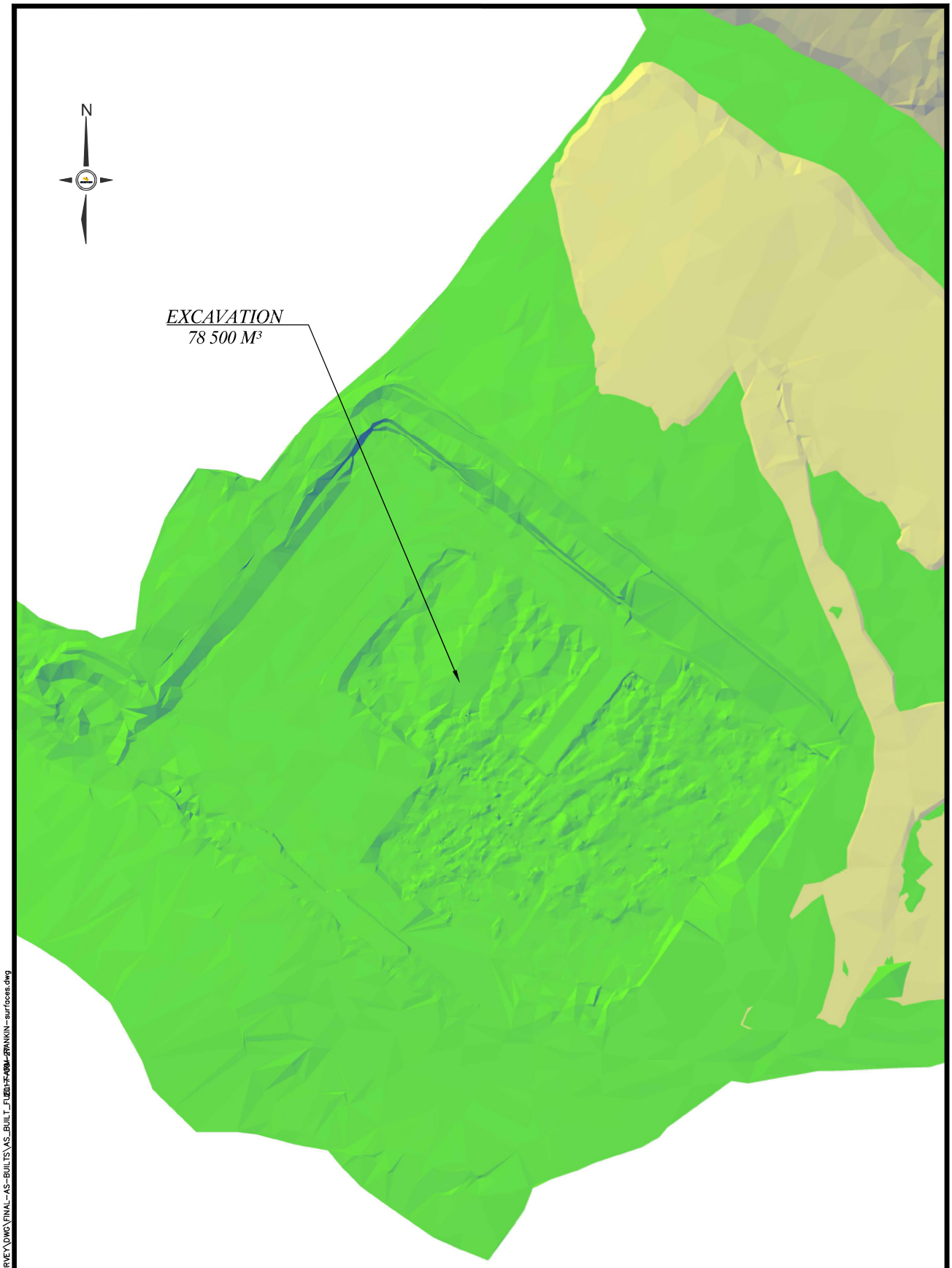

HAMELARPENTAGE	AGNICO EAGLE	WORK EXECUTION DATE : 2017-10-13	EMISSION DATE : 2017-10-25
	COORD. SYSTEME: UTM15 NAD83	AS BUILT EXCAVATION RANKIN FUEL FARM	DRAWN BY: R.CLOUATRE
	SCALE: 1:1000	PLAN NO.: 131-RANKIN-FUEL-FARM-QT-171025-02	APPROVED BY: Hamel arpentage

C:\Users\Utilisateur\Desktop\RANKIN INLET\SURVEY\DWG\FINAL-AS-BUILTS\AS_BUILT_FUEL FARM-RANKIN-surfaces.dwg



HAMELARPENTAGE	AGNICO EAGLE	WORK EXECUTION DATE : 2017-10-13	EMISSION DATE : 2017-10-25
	COORD. SYSTEME: UTM15 NAD83	AS BUILT OVERBURDEN RANKIN FUEL FARM	DRAWN BY: R.CLOUATRE
	SCALE: 1: 2000	PLAN NO.: 131-RANKIN-FUEL-FARM-QT-171025-03	APPROVED BY: Hamel arpentage

C:\Users\Utilisateur\Desktop\RANKIN INLET\SURVEY\DWG\FINAL-AS-BUILTS\AS_BUILT_FUEL_FARM-RANKIN-surfaces.dwg

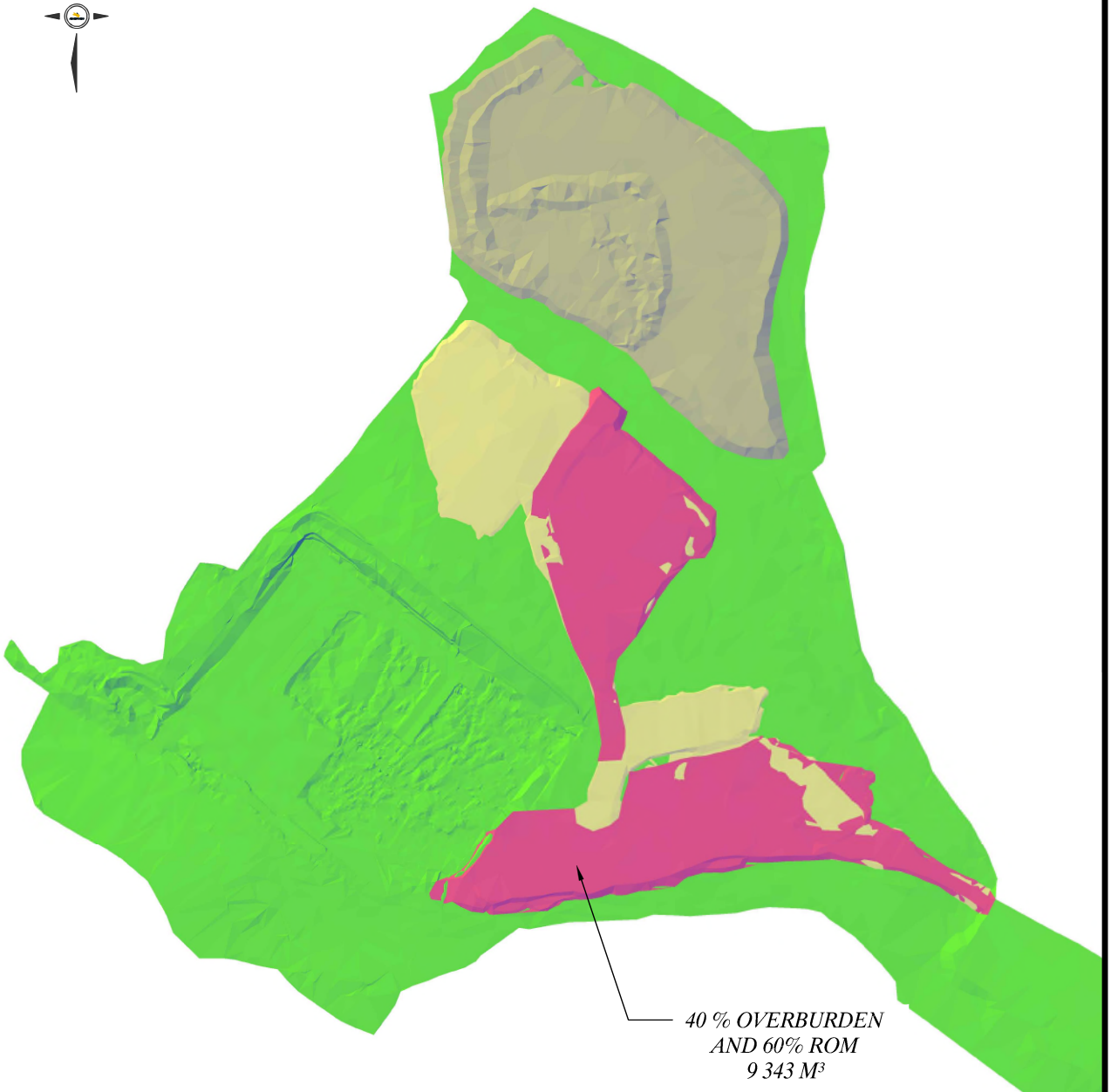

HAMELARPENTAGE	AGNICO EAGLE	WORK EXECUTION DATE : 2017-10-13	EMISSION DATE : 2017-10-25
	COORD. SYSTEME: UTM15 NAD83	AS BUILT OB-ROM-MIX RANKIN FUEL FARM	DRAWN BY: R.CLOUATRE
	SCALE: 1:2000	PLAN NO.: 131-RANKIN-FUEL-FARM-QT-171025-04	APPROVED BY: Hamel arpentage

C:\Users\Utilisateur\Desktop\RANKIN INLET\SURVEY\DWG\FINAL-AS-BUILTS\AS_BUILT_FUEL-FARM-RANKIN-surfaces.dwg



HAMELARPENTAGE	AGNICO EAGLE	WORK EXECUTION DATE : 2017-10-13	EMISSION DATE : 2017-10-25
	COORD. SYSTEME: UTM15 NAD83	AS BUILT 0-600 MM RANKIN FUEL FARM	DRAWN BY: R.CLOUATRE
	SCALE: 1: 2000	PLAN NO.: 131-RANKIN-FUEL-FARM-QT-171025-05	APPROVED BY: Hamel arpentage

C:\Users\Utilisateur\Desktop\RANKIN INLET\SURVEY\DWG\FINAL-AS-BUILTS\AS_BUILT_FUEL-FARM-RANKIN-surfaces.dwg



HAMELARPENTAGE	AGNICO EAGLE	WORK EXECUTION DATE : 2017-10-13	EMISSION DATE : 2017-10-25
	COORD. SYSTEME: UTM15 NAD83	AS BUILT 0-200 MM RANKIN FUEL FARM	DRAWN BY: R.CLOUATRE
	SCALE: 1:1000	PLAN NO.: 131-RANKIN-FUEL-FARM-QT-171025-06	APPROVED BY: Hamel arpentage

C:\Users\Utilisateur\Desktop\RANKIN INLET\SURVEY\DWG\FINAL-AS-BUILTS\AS_BUILT_FUEL[illegible]-RANKIN-surfaces.dwg



C:\Users\Utilisateur\Desktop\RANKIN INLET\SURVEY\DWG\FINAL-AS-BUILTS\AS_BUILT_FUEL FARM-RANKIN-surfaces.dwg

HAMELARPENTAGE

AGNICO EAGLE	WORK EXECUTION DATE : 2017-10-13	EMISSION DATE : 2017-10-25
COORD. SYSTEME: UTM15 NAD83	AS BUILT RANKIN FUEL FARM	DRAWN BY: R.CLOUATRE
SCALE: 1:1000	PLAN NO.: 131-RANKIN-FUEL-FARM-QT-171025-07	APPROVED BY: Hamel arpentage

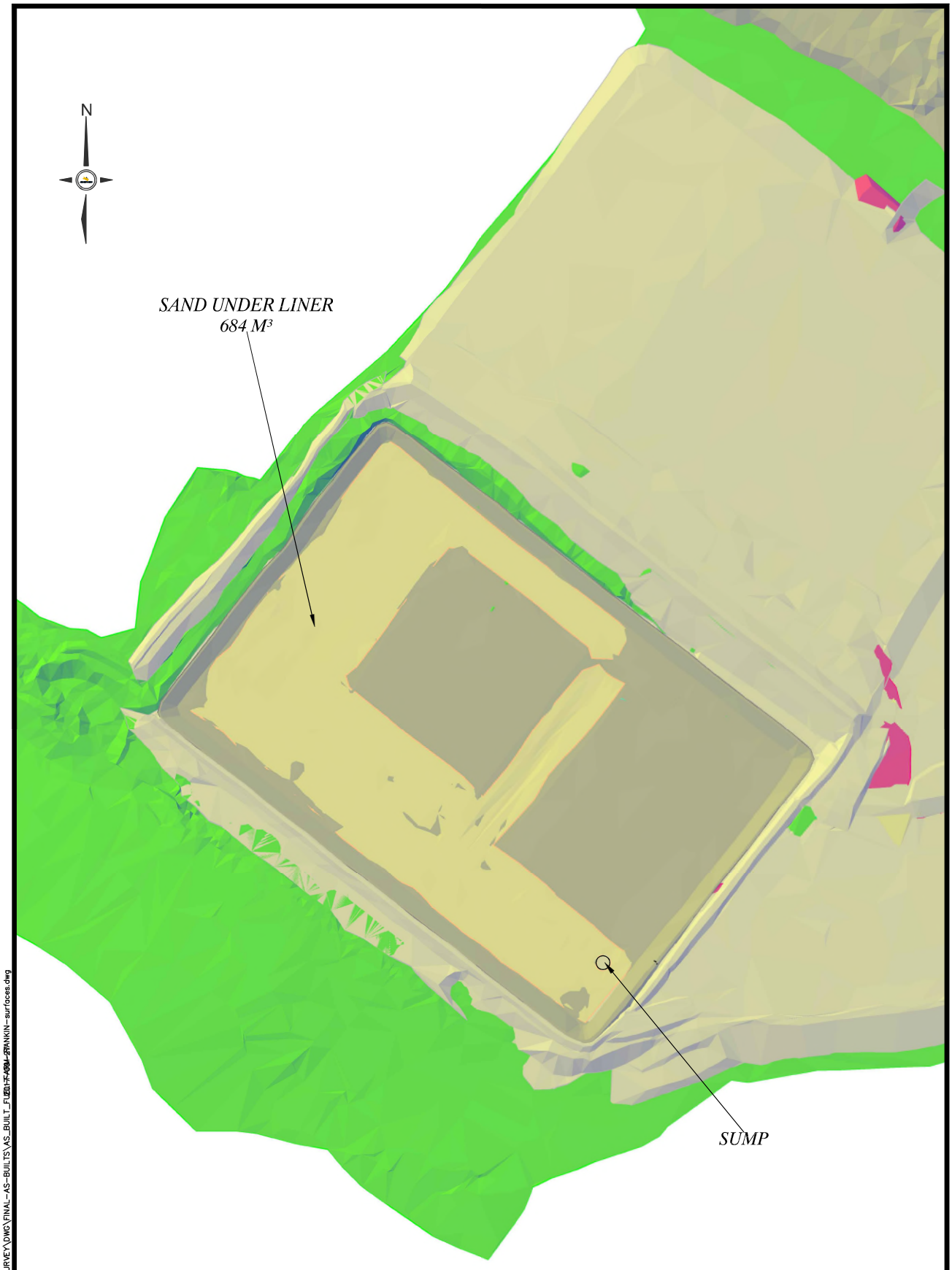

HAMELARPENTAGE	AGNICO EAGLE	WORK EXECUTION DATE : 2017-10-13	EMISSION DATE : 2017-10-25
	COORD. SYSTEME: UTM15 NAD83	A-B SAND UNDER LINER RANKIN FUEL FARM	DRAWN BY: R.CLOUATRE
	SCALE: 1:1000	PLAN NO.: 131-RANKIN-FUEL-FARM-QT-171025-08	APPROVED BY: Hamel arpentage

C:\Users\Utilisateur\Desktop\RANKIN INLET\SURVEY\DWG\FINAL-AS-BUILTS\AS_BUILT_FUEL FARM-RANKIN-surfaces.dwg



HAMELARPENTAGE	AGNICO EAGLE	WORK EXECUTION DATE : 2017-10-13	EMISSION DATE : 2017-10-25
	COORD. SYSTEME: UTM15 NAD83	AS BUILT LINER RANKIN FUEL FARM	DRAWN BY: R.CLOUATRE
	SCALE: 1:1000	PLAN NO.: 131-RANKIN-FUEL-FARM-QT-171025-09	APPROVED BY: Hamel arpentage

C:\Users\Utilisateur\Desktop\RANKIN INLET\SURVEY\DWG\FINAL-AS-BUILTS\AS_BUILT_FUEL FARM-RANKIN-surfaces.dwg

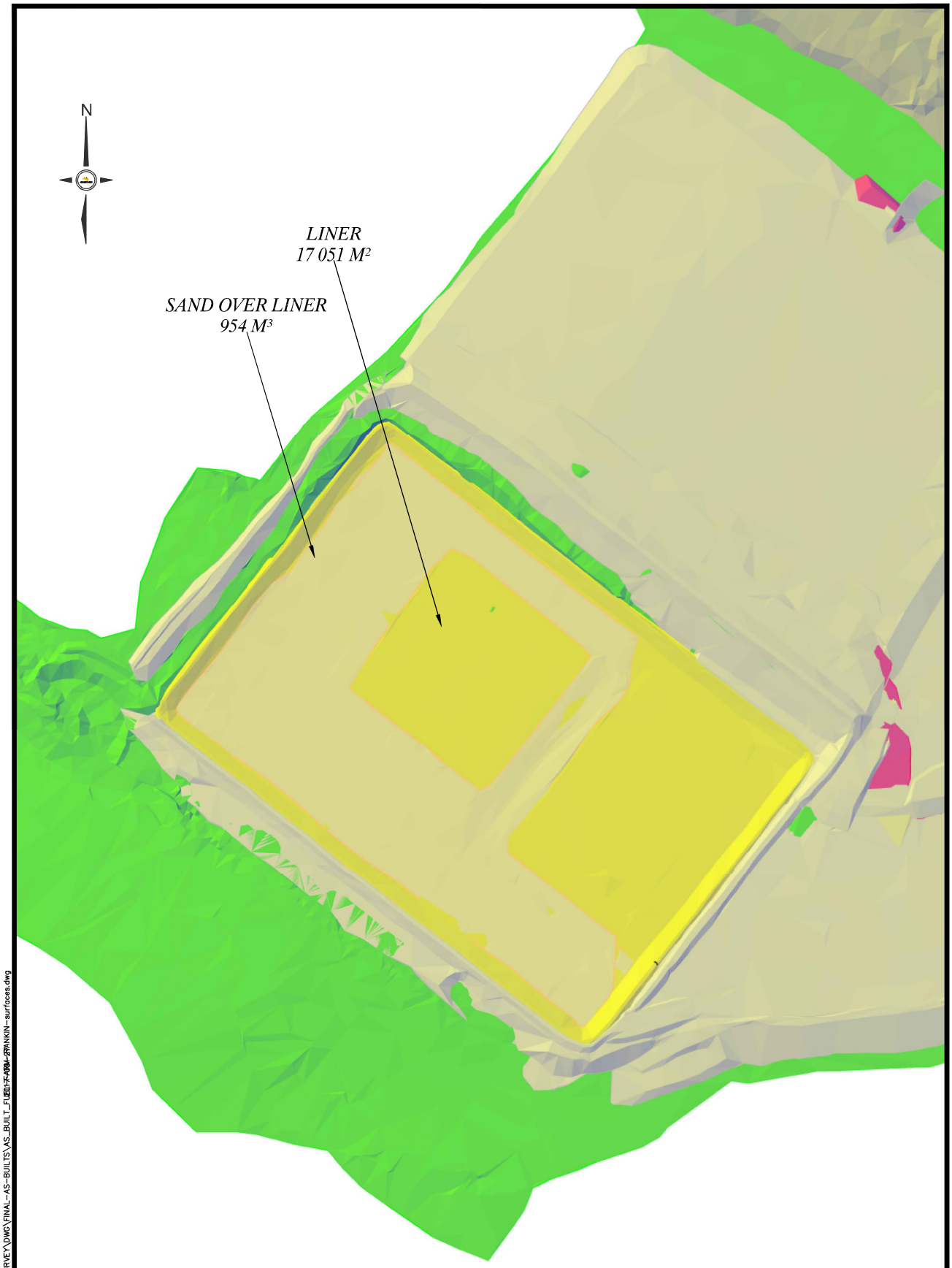

C:\Users\Utilisateur\Desktop\RANKIN INLET\SURVEY\DWG\FINAL-AS-BUILTS\AS_BUILT_FUEL FARM-RANKIN-surfaces.dwg

HAMELARPENTAGE

AGNICO EAGLE	WORK EXECUTION DATE : 2017-10-13	EMISSION DATE : 2017-10-25
COORD. SYSTEME: UTM15 NAD83	A-B SAND OVER LINER RANKIN FUEL FARM	DRAWN BY: R.CLOUATRE
SCALE: 1:1000	PLAN NO.: 131-RANKIN-FUEL-FARM-QT-171025-10	APPROVED BY: Hamel arpentage



HAMELARPENTAGE	AGNICO EAGLE	WORK EXECUTION DATE : 2017-10-13	EMISSION DATE : 2017-10-25
	COORD. SYSTEME: UTM15 NAD83	A-B 0-30 MM OVER LINER RANKIN FUEL FARM	DRAWN BY: R.CLOUATRE
	SCALE: 1:1000	PLAN NO.: 131-RANKIN-FUEL-FARM-QT-171025-11	APPROVED BY: Hamel arpentage

C:\Users\Utilisateur\Desktop\RANKIN INLET\SURVEY\DWG\FINAL-AS-BUILTS\AS_BUILT_FUEL FARM-RANKIN-surfaces.dwg



HAMELARPENTAGE	AGNICO EAGLE	WORK EXECUTION DATE : 2017-10-13	EMISSION DATE : 2017-10-25
	COORD. SYSTEME: UTM15 NAD83	AS BUILT 0-75 MM RANKIN FUEL FARM	DRAWN BY: R.CLOUATRE
	SCALE: 1: 2000	PLAN NO.: 131-RANKIN-FUEL-FARM-QT-171025-12	APPROVED BY: Hamel arpentage

C:\Users\Utilisateur\Desktop\RANKIN INLET\SURVEY\DWG\FINAL-AS-BUILTS\AS_BUILT_FUEL-FARM-RANKIN-surfaces.dwg

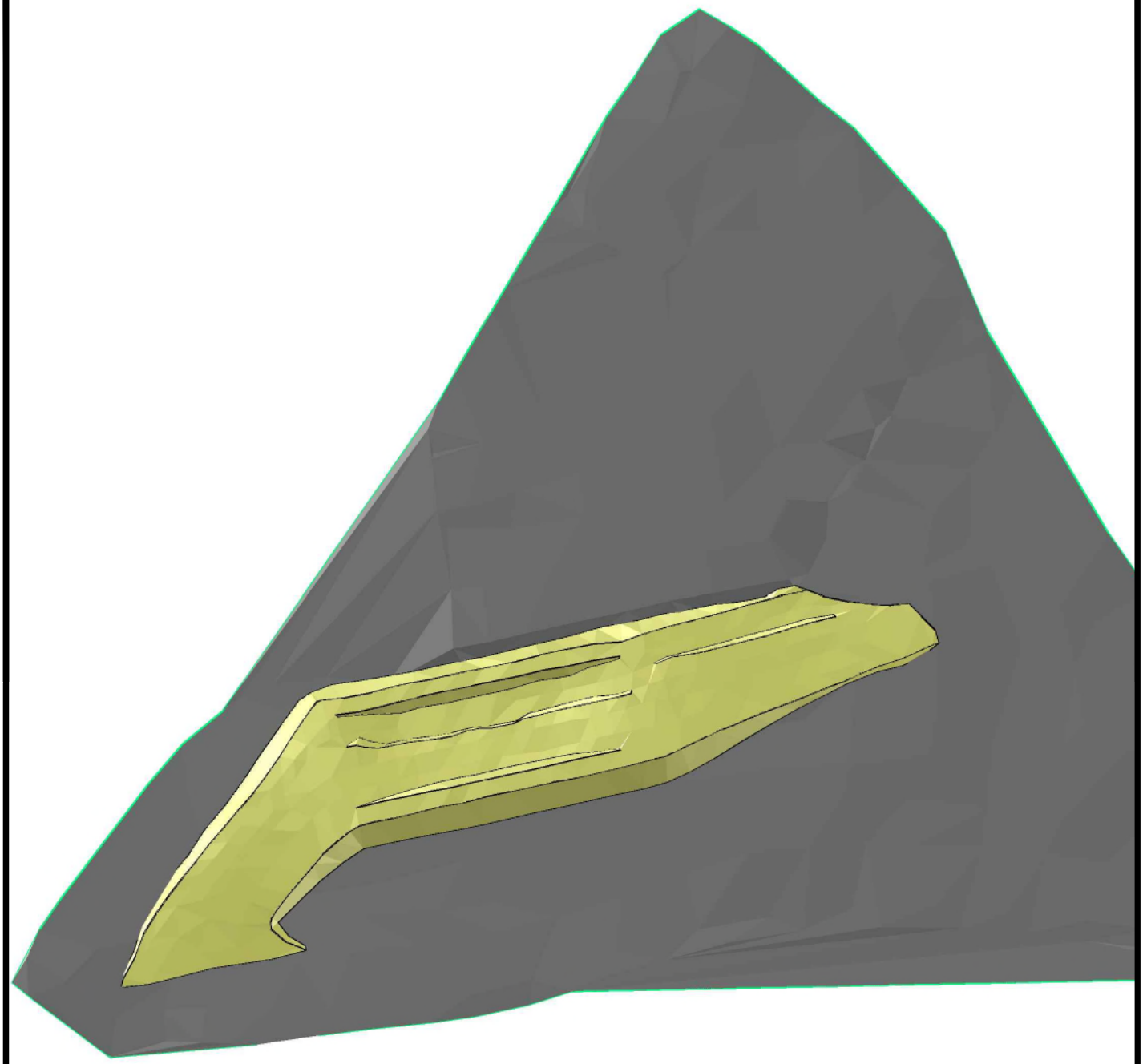

HAMELARPENTAGE

AGNICO	Date des travaux : 2018-07	Date d'envoi : 2019-02-01
Système de Coord.: UTM15NAD83	QUANTITY 0-30, 4358 M3	Dessine par: Y. Hamel
Echelle: NA	No plan: 65-131-142-200-R0-ABD	Approuve par: HAMEL ARP

APPENDIX C

Survey Drawings of Rankin Inlet Itivia Culvert

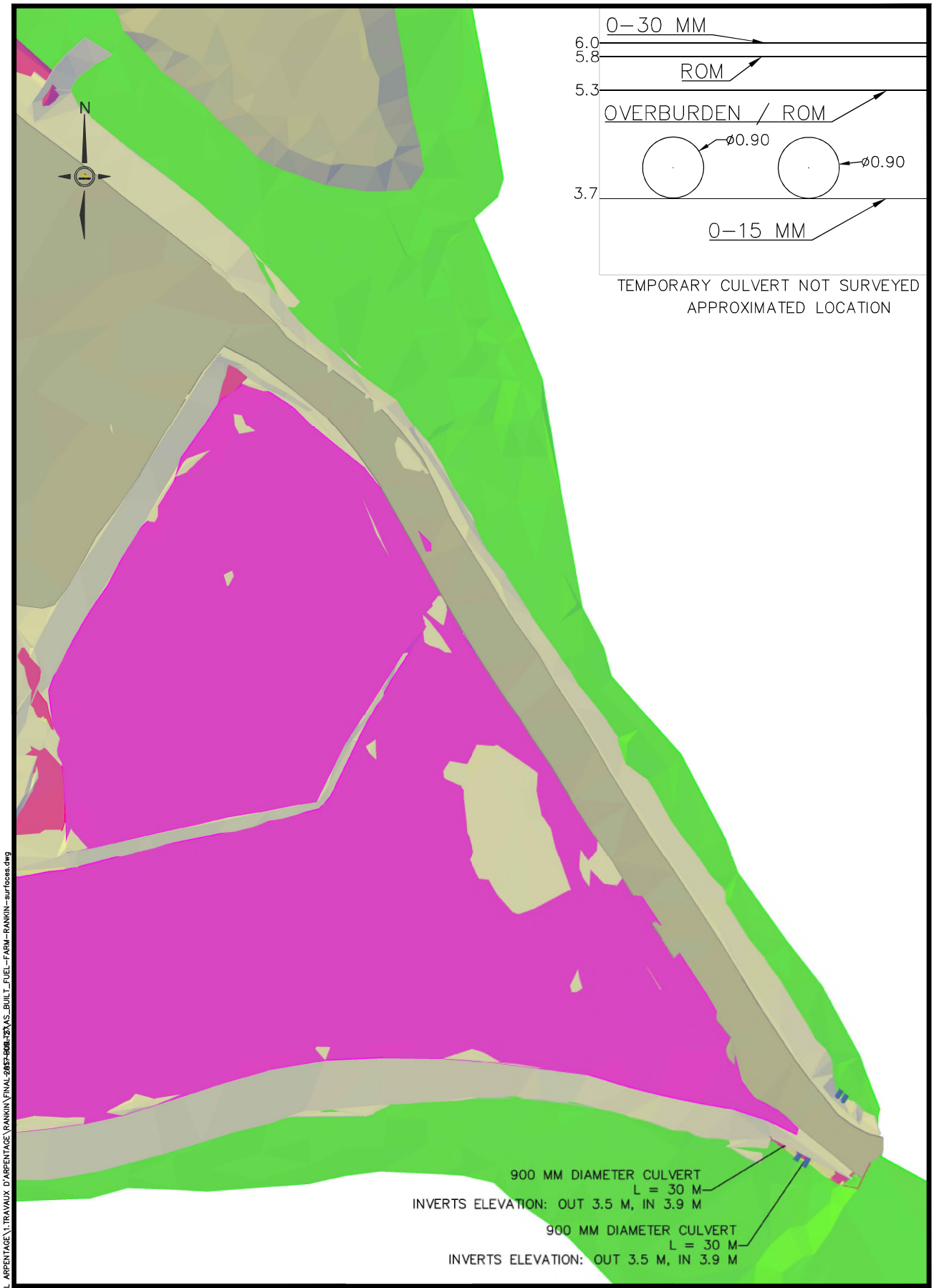

C:\Users\Utilisateur\Desktop\HAMEL ARPENTAGE\1.TRAVAUX D'ARPENTAGE\RANKIN\FINAL-2017-[illegible]AS_BUILT_FUEL-FARM-RANKIN-surfaces.dwg

HAMELARPENTAGE

AGNICO EAGLE	WORK EXECUTION DATE : 2017–10–13	EMISSION DATE : 2017–12–03
COORD. SYSTEME: UTM15 NAD83	AS BUILT 900 MM CULVERTS	DRAWN BY: R.CLOUATRE
SCALE: 1:750	PLAN NO.: 131–RANKIN–FUEL–FARM–QT–171203–01	APPROVED BY: Hamel arpentage

APPENDIX D

Photographs of Rankin Inlet Itivia Site fuel storage and containment facility

2017 - Excavation to rock under 13.5 ML tank looking south east



2017-06-20 - Compacting 0-200 under 13.5 ML tank looking south





2017-07-12 - General view fuel farm looking east from north west placing 0-30 mm prior to liner installation


2017-07-14 - Installation of geotextile under 13.5 ML Tank looking south west


2017-07-19 - 13.5 ML Tank pedestal looking south west


2017-07-29 - Placing sand under tank


2017-07-29 - Tank #2 Floor placement



2017-08-02 - Tank #2 Floor welding


2017-08-06 - Tank #2 Erection


2107 - Rankin Inlet Itivia Site Tank #1



2017-09-02 - Installation of underground double walled pipe


2017-09-10 - Sand underliner placement looking southeast
CAT



2017-09-12 - Start of liner installation east Tank #1



2017-09-13 - Liner installed before placing geotextile looking south east from top of Tank #2


2017-09-16 - 30 mm over liner placement 13.5 ML tank


2017-09-19 - Catwalk into Tank Farm


2017-10-04 - Over liner placement


2017-09-23 - Marine Line Connection


2017-10-29 - Marine Pipeline to Manifold


2017-10-29 - 16 inch Vaccum pipe to tank



2017 - Tank erection - Tank #1 is in the foreground and Tank #2 is in the background



2017-10-29 - Electrical and Pump Station Containers



Piping installation for Tank #1



Piping and pipe support for Tank #1



Valve installation



Valve installation



Elbowand flexible installation for scrubber line



Valve Installation tank 1



Elbow fabrication for scrubber line



Pipe Connection to Tank #1



Piping installation for scrubber line



Piping connection to the scrubber module



Scrubber module installation



Piping Connection to Tank #1



Scrubber Connection



Scrubber Connection



Pipe support installation



Pipe connection between scrubber and Tank #1



Pipe installation between Tank #1 and pumping station



Pipe installation between Tank #1 and pumping station



Catwalk installation



Pipe installation between Tank #1 and pumping station



Pipe installation between Tank #1 and pumping station



Pipe installation between Tank #1 and pumping station

APPENDIX E

Photographs of Rankin Inlet Itivia Culvert



2017-11-18 - Road excavation



2017-11-19 - Placement of bedding material


2017-11-19 - Culvert placement
CAT



2017-11-20 - Complete installation

APPENDIX F

Construction Summary of Rankin Inlet Fuel Tank Farm and Laydown Area Structural

Construction Summary- Rankin Fuel Tank Farm and Laydown Area

Construction and quality assurance performed by Agnico Eagle Construction

Contractor: Inukshuk Contacting Ltd (ICL)

All survey conducted by ICL

Design Variations

The tank 2 was built as per original design alignment (65-116-260-200-R0, 65-116-260-201-R0, 65-116-260-202-R0)

Tank #1 work was started and stop for the winter period. The work will resume in spring 2018

Field modification

No field modification was done during the construction of tank #2 and no change has been required on tank #1 at this point

Site preparations

Contractor mobilized on site and unloaded plates ready to install outside the tank perimeter and located the tank on the footprint.

Tank #1 and #2 erection

First phase of the construction started with the installation of floor plates and welding. Then proceeded with the second phase, installation of the tank rings and welding until design height obtained. Third phase of the construction consisted of erecting the interior structure columns and installation of all the openings at the base of the tank. The fourth and final phase consisted of placing, all the roof plates, assembling the permanent stairs and closing the opening located at south end of the tank for construction access. The construction of the tank #1 started in conjunction with tank #2 with the same process but was temporary discontinued after the 3rd ring

Equipment use

765-E Grove all terrain crane	Welding machine
65 ft JLG	267B skidd steer
45 ft JLG	Automatic welder

Remaining work

The tank #1 is presently completed at 60%. The work stopped mid September 2017 for the winter and will resume spring 2018. Completion of the tank #1 will occur prior to sea lift season.

Tanks erection construction Summary – Rankin tank farm 2017

1. Mobilization / Site preparation July26 – Aug 01

- Had kick off meeting with Inukshuk and their sub- contractor Sub-arctic.
- Mob equipment to site from Itivia quarry laydown.
- Inukshuk did the sand preparation under tank pedestals for their sub –contractor.
- Survey tanks pedestals, marked center on tank and placed stakes on circumference for contractor to begin laying floor plates.

2. Tank Erection Aug 02 –Sept 11

- All tank Steel was pre- cut by Inukshuk and shipped to site.
- Erection of tanks began by sorting all floor plates then laying them on tank foundation starting at the circumference survey marks working to the center over lapping each plate 1'' to 2''maximum. Each plate was tack welded in place then the rest of the welding was done with an automatic welding machine.
- The tanks consist of five ring courses 10'H X 30' L
- Before the first ring course was set in place on floor a water vacuum test was done to check welds close to the edge.
- First ring plates for the tanks were pre rolled plates, lug nuts were welded on the outside edge of the floor plate and the first ring was set to them to form the circumference of the tanks and then stick welded, the vertical welds on joints were done with stick weld.
- Motorized automatic welding machine was used the weld to horizontal welding around the tank. The vertical welding was done by using motorized man lift with a cage inside and outside that sets down over the top of each ring, the welder could access each side of the tank from the lift.
- Wind girders were set 3' down from the top of first ring around the circumference tank ,they were used in place of scaffolding which were moved to each ring as the tank was been build.
- The other four ring courses were flat plate. The circle was form by weld lug nuts on the top of the first ring and the bottom of the second ring then wedged in place the form the circumference , this same process was done with the other 4 ring courses.
- When fifth course was finished, they install and welded rim angle around top, welded rafter clips, Installed roof structure, install and weld roof plates , install and welded roof platforms, install roof hand rails, install roof nozzle, remove wind girder, install and weld stairs, do a final inspection.

4. QA/QC

- Testing was done as work proceeded,
- Water vacuum test was done on tank floors.
- Diesel test was done on all welds from inside tank
- Air test done on all re –pad welds
- Third party ultra sound done on all welds

- Mag particle completed on welds

5. Equipment used for construction,

- Miller welding machines
- 65 ton grove crane
- 60 ton link belt crove
- Cat skid steer
- Telehander
- Cat 980 loader
- Automatic welding machines
- 2 JLG Ariel platforms

APPENDIX G

Construction Summary of Rankin Inlet Itivia Site Mechanical and Electrical Equipment

Mechanical/Piping/Electrical/Instrumentation (MPEI) Construction Summary – Rankin Inlet Tank Farm

- Primary MPEI construction contractor was NUQSANA PROMEC MINING
- Engineering firm for NUQSANA PROMEC MINING was ULTRAGEN
- All survey conducted by Hamel Arpentage

1. Marine pipeline requisite for filling tanks (August 17th to October 14th)

- Pipefitters welding pipe supports and placing on pads on slope to manifold.
- Fabricating pipe
- Filling marine line pipe for testing
- Tested marine line from east of tank farm to manifold (completed)
- Installing and welding piping marine line inside containment to tank 2
- Air pressure testing marine line And discharge to pump station.
- Re-tested marine line after replacement of flexible
- Installed blind after valve of tank 2 on marine line

2. Miscellaneous steel elements associated to pumping station(September 2nd to October 14th)

- backfilling trench for underground pipe
- Installing wire mesh in form ready to pour
- Installing concrete block and manifold on marine line
- Installing concrete pads for walkways
- Installing walkways over berm and piping
- Excavator and backfill electrical trench power line to manifold
- Set ventilation container (scrubber) on concrete blocks
- Installing 16'' ventilation pipe from vac c-can to #2 tank.
- Installing stairs to electrical and pump container
- Welding 16'' flange on ventilation pipe
- Painting inside ventilation building
- Working on securing electrical tray welding reinforcement
- Anchor Catwalk
- Close opening on ventilation building
- Ventilation dock to install on building
- Paint touch up
- Install 16" flexible on scrubber

3. Piping interrelated to pumping station (September 16th to October 21st)

- Moving pipe and fitting in preparation to start work for tank 2
- Assembling and welding piping south of tank 2
- Assembling and welding piping combustible area
- Assembling and welding piping north of tank 2
- Welding piping combustible area
- Assembling and welding piping discharge line to pump station north of tank 2
- Installing pressure release valve piping on tank

- Install labeling on valves
- Installed pipe support at pump station building

- Torking bolts piping
- Install gauge at pumping station
- Install 2”drain valve that was missing (Completed)

4. Electrical construction 2017 (September 16th to October 21st)

- Prep work: relocating C-Can with electrical materiel
- Installing grounding east and north of tank containment
- Electrician installs cable tray, pulling wire and connection wires
- Electrician installing ground wire
- Tag installation on electrical
- Finish installation strobe
- Electricians working on installing meter for permanent power

5. Testing - Rankin Inlet Site (September 2nd to October 14th)

- Testing and connection wires sea–can container

- Pipefitters assisting tanker unloading

Equipment Used for Construction (NUQSANA PROMEC MINING):

- Excavator
- Sky Track

QA/QC Summary

1. Non destructive examination; an magnetic particles inspection was conducted on socket weld and was accepted and conform to the standard. These inspections were done by MISTRAS firm.
2. Piping testing and cleaning; Air pressure test and water pressure water were done by NUQSANA PROMEC MINING on all the fuel line. After that, the cleaning were done with the pigging
3. Fire Protection; Automatic dry chemical fire suppression are installed as defined by the NFPA Standard for Dry Chemical Extinguishing Systems, NFPA-17.
4. As built drawings; Red line have been done on the isometric drawing
5. Refer to annexe O, section 6 and 7

Construction summary Rankin tank farm 2017

Mechanical/ Piping/ Electrical / Instrumentation (Aug 20 –Oct 18

1.Site preparation

- Did kick off meeting with Promec Aug 10
- Mob office trailer to site Aug 21
- Started moving material from Itivia laydown to tank farm job site.
- Hauled 30mm minus granular fill and build pads the place electrical and pump station container
- Survey job area and set grades to start work.

2.Mechanical/ piping Aug 21 - Sept 28

- Prep piping and assemble lengths together for installation.
- Level gravel pads to set concrete block for place pump station and electrical containers.
- Install electrical and pumping station containers.
- Level gravel pads to set and place pipe supports for marine pipe line. Install marine pipe line from tank to marine manifold, install marine manifold.
- Excavate trench and install double wall pipe on marine line as per environment regulation.
- Build and level gravel pads for vacuum scrubber container, set container on concrete blocks, install 16'' piping from tank to scrubber.
- Installed pipe support for outlet pipe line installed pipe line from tank to pump station, installed foundation for pumping arm, install pump arm.
- Install vent piping on tank install walk ways over piping.

3.Electrical / Instrumentation / Aug 21 – Oct 18

- Excavate and place sand in electrical trench from electrical container to main utility power supply a distance of 300meter. Install cable and backfill trench.
- Pull and install cables in electrical container e –room. Install light bracket and fixtures on tank, power supply to manifold. Install cable tray, Test and terminate all cables, control valve, Etc

4.QA/OC

- Testing was done as work proceeded
- Water pressure done on double piping.
- Air pressure on outlet pipe from tank.

APPENDIX H

Inspection Reports – Inspection Test Plan

MTKSL

INSPECTION TEST PLAN

PROJECT:	AGNICO EAGLE MINES (AEM) –CIVIL WORKS – RANKIN LAYDOWN		
Contractor:	MTKSL		
Area/System No.:	Fuel Farms	Contract/Job No.:	6515-C-235-005
		ITP No.:	MTKSL_ITP_C005_001 20170630
Contact Person:	MTKSL – Mike Price		
Work Area:	Rankin Fuel Farm (RFF)		
Subcontractor:	Texel (Liner), Hamel (Survey), AEM Field Engineering (Materials Testing)		
CWP No.:	6515-C-235-005 – Civil Works – Rankin Laydown	EWP No.: N/A	

Verification Type				AEM Job Titles	
H:	Hold Point	T:	Test	CC	Construction Coordinator
I:	Inspection	V:	Verify Test Results	FE	Field Engineer
R:	Review Documentation	W:	Witness / Report	QA	Quality Assurance Representative

ACTIVITY DATA							VERIFICATION DATA[4]										
								Subcontractor QC			General Contractor QC			AEM			
No.	Description of Activities[1] (Describe in sequential order. Sequence must align with the execution sequence of the work to be performed.)	Functional[2] Responsibility	Characteristic (s)[3]	Verification[3] Frequency	Reference Document(s)	Acceptance Criteria	Verification[3] Document(s) (Reporting)	Type	Initials	Date	Type	Initials	Date	Type	Initials	Date	Title	Comments
1	IFCs Approved (Issued for Construction)	AEM / MTKSL	Verify all IFCs are approved and correct	Prior to Construction and ongoing	Issued IFCs	Stamped IFC Drawings and latest revisions	Drawing Log; AEM Transmittal	H			H	WA	July 17 2017	R	SC	17/07/17	GF	No work to proceed without Approved IFC Drawings issued froAEM Document Control ,Void older revisions
2	Materials Production	AEM/MTKSL	Material Acceptance	As required	Technical Specs	Passing material gradation	Sieve Analysis	N/A			H	WA	July 17 2017	RW	JP	29/7/17	RE	Sieve Analysis and moisture content testing. QC Testing by AEM.
3	Materials Assignment	AEM	Material Acceptance	Ongoing	Site Standards	Material suitability	Material Balance & Assignment Sheet	N/A			H	WA	July 17 2017	W	SC	17/07/17	GF	Materials sources for construction materials to be dictated by AEM.
4	Survey Layout	HAMEL	Layout area of construction	As required	Issued IFC's	Conforms to IFC's.	Survey Layout Report	V			H	WA	17/07/17	R	SC	17/07/17	GF	Survey provided by AEM (Hamel)
5	Site Preparation	MTKSL	Ensure site is acceptable for placement	Once	IFCs, Site Standards, Technical Specs	Conforms to IFCs and Technical specs	Release for backfill / Stripping Report	V			R/I	WA	17/07/17	WR	SC	17/07/17	GF	OG Surface to be surveyed prior to fill placement.
6	Placement of Material <600mm	MTKSL	Monitoring placement of materials	As required	IFCs, Site Standards, Technical Specs	Conforms to IFCs and Technical specs	Back Fill Report	V			R	WA	17/07/17	RW	SC	17/07/17	GF	Density testing by AEM. Survey by Hamel. Lift to be released by QA.
7	Placement of Material <200mm	MTKSL	Monitoring placement of materials	As required	IFCs, Site Standards, Technical Specs	Conforms to IFCs and Technical specs	Back Fill Report	V			R	WA	17/07/17	RW	SC	17/07/17	GF	Density testing by AEM. Survey by Hamel. Lift to be released by QA.
8	Placement of Material <30mm – Under liner	MTKSL	Monitoring placement of materials	As required	IFCs, Site Standards, Technical Specs	Conforms to IFCs and Technical specs	Back Fill Report	V			R	WA	17/07/17	RW	SC	17/07/17	GF	Density testing by AEM. Survey by Hamel. Moisture condition as required. Lift to be released by QA.

MTKSL

INSPECTION TEST PLAN

full liner placement

9	Placement of Liner	MTKSL/Texel	Monitoring placement of materials & verification	Ongoing	Manufacturers Specs, Technical Specs	Conforms to Manufacturers Specs, Install SOP, Technical Specs	Liner Installation Report	V	Only under the Tanks Pads		V/R	WA	17/07/17 10-29-17	RW	SG JP	17/05/17 29/10/17	GF RE	Liner ITP to be submitted separately.
10	Placement of Material <30mm – Over Liner	MKTSL	Monitoring placement of materials	As required	IFCs, Site Standards, Technical Specs	Conforms to IFCs and Technical specs	Back Fill Report	V	Only under the tank pads		R	MG	17/08/17 10-29-17	RW	CB JP	17-08-17 29/10/17	GF RE	Track pack liner cover.
11	Placement of Sand – Under Tank BY OTHERS.	MTKSL INUKSHUK	Monitoring placement of materials	As required	IFCs, Site Standards, Technical Specs	Conforms to IFCs and Technical specs	Back Fill Report	V			R	JW	17/07/28	RW	CB	17-07-28	GF	full liner
12	As built summary	AEM/MTKSL /HAMEL	Verify construction against IFC's	Once	Issued IFC's & Approved Field Changes	Conforms to IFC's & Approved Field Changes	Survey report & cleared ECN log	H			H	JC	10-29-17	RW	CB	17-10-28	GF	Survey to be completed as each material change or area
13	Walkdowns & Deficiency Correction	AEM/MTKSL	Verification	As Required	Asbuilt summary, IFCS, Field Changes	Conforms to IFC's & Approved Field Changes	Cleared Punch Log	N/A			H	JC	10-29-17	RW	CB	17-10-28	GF	
14	Final acceptance and turnover	AEM/MTKSL	Acceptance of final turnover	Once	Issued IFC's, Technical Specs	Conforms to IFCs, Technical Specs, Field Changes	Final Acceptance	H			H	JC	10-29-17	RW	CB	17-10-28	GF	

Comments:

Applicable Site Standard XXXXX-XXXXX

Applicable Technical Specification - 6515-GNS-014_R2.

ITP ISSUE APPROVALS

Contractor Construction Manager / Superintendent (Print)	Title	Signature	Date (mm/dd/yy)
Jim Cardinal	Construction Forman	[signature]	10-29-017

Contractor Site Quality Manager / Supervisor (Print)	Title	Signature	Date (mm/dd/yy)
	Owner		

AEM Quality Manager / Supervisor (Print)	Title	Signature	Date (mm/dd/yy)
Clem Bonia	General Supervisor	[signature]	2017-10-28

ITP CLOSEOUT AND WORK ACCEPTANCE APPROVALS

Contractor Site Quality Manager / Supervisor (Print)	Title	Signature	Date (mm/dd/yy)
Jim Cardinal	Construction Forman	[signature]	10-29-017

AEM Quality Manager / Supervisor / Designate (Print)	Title	Signature	Date (mm/dd/yy)
Clem Bonia	General Supervisor	[signature]	2017-10-28

Item Tested	Test Method	Result
Floor Welds	Visual	Acceptable
Floor Welds	Vacuum Box	Acceptable
Shell to Floor Weld	Visual	Acceptable
Shell to Bottom Weld	Visual	Acceptable
Tanks #2 Roundness	Visual	Acceptable
1st Horizontal Banding	Measure	Acceptable
2nd Horizontal Banding	Measure	Acceptable
3rd Horizontal Banding	Measure	Acceptable
4th Horizontal Banding	Measure	Acceptable
SR1 Verical Peaking	Measure	Acceptable
SR2 Verical Peaking	Measure	Acceptable
SR3 Verical Peaking	Measure	Acceptable
SR4 Verical Peaking	Measure	Acceptable
SR5 Verical Peaking	Measure	Acceptable
Tank Shell Plumbness	Measure	Acceptable
2nd Horizontal and 2nd Vert Leaks	Visual	Acceptable
3rd Horizontal and 3rd Vert Leaks	Visual	Acceptable
4th Horizontal and 4th Vert and 5th Vert Leaks	Visual	Acceptable
1st Horizontal and 1st Vert Leaks	Visual	Acceptable
Compression Ring Welding	Visual	Acceptable
Tank #2 Roof Welding	Visual	Acceptable
Roof Columns Plumbness	Measure	Acceptable
Roof Structure Weld & Bolting	Visual	Acceptable
Tank Shell Plumbness	Measure	Acceptable
Shell Nozzle Welding	Visual	Acceptable
Nozzle Repad Leaks	Air Test	Acceptable
Shell Manways Welding	Visual	Acceptable
Tank #2 Shell Plumbness	Measure	Acceptable
Manyway Leaks	Air Test	Acceptable
Internal Column Repads and Pipe Support Welding	Visual	Acceptable
External Brackets and Cabel Tray Welding	Visual	Acceptable
Roof Painter Post Welding	Visual	Acceptable
Staircase Support Brackets and Repad Welding	Visual	Acceptable
Sairs and Platforms and Welding	Visual	Acceptable

Page

119
120
123
124
136
139
140
141
142
143
144
145
146
147
148
149
150
151
152
160
162
169
170
173
176
177
188
189
190
198
202
203
206
207

APPENDIX I

Inspection Report – Handover Package of Tank #1

Handover Package Tank 1 – 20,000CUM

AEM PURCHASE ORDER: OC-568510
AEM PACKAGE NO.: 6515-C-260-002
PACKAGE TITLE: FUEL TANKS (SUPPLY & INSTALL)
TANK LOCATION: RANKIN INLET

ICL Project No.: 295
ICL Document No.: 295-H1
AEM Document No.: 6515-C-260-002-141-QCR-0001_Sub001
Revision: 0

OWNER:

Agnico Eagle Mines Limited
145 King St. East, Suite 400,
Toronto, Ontario M5C 2Y7

GENERAL CONTRACTOR:

Inukshuk Construction Limited
PO Box 654
Rankin Inlet NU
X0C 0G0

Contact: David Mosher

PH: (867) 645-4030
FX: (902) 429-7762

Submitted by: Inukshuk Construction Limited
Submitted: January 3, 2019

AGNICO EAGLE

Vendor Document Status

1 ☐ Proceed to next submission and status.

2 ☐ Proceed with exceptions as noted to next submission and status.

3 ☐ Do not proceed.
Revise as noted and resubmit next submission and status.

4 ☐ Complete, no further submission required.

By: Date:

Review and authorization to fabricate are only for general conformance with the design concept of the Project as expressed in the Contract Documents. Sole responsibility for the accuracy and completeness of this document, including but not limited to dimensions and quantities, remains with the Supplier/Contractor. Agnico Eagle does not warrant the accuracy or completeness of any of the information contained herein, nor does Agnico Eagle authorize or approve any construction means, methods, techniques, sequences or any safety precautions or procedures.

Agnico Eagle No. 6515-C-260-002-141-QCR-0001 R: Sub001

DOCUMENT FOR INFORMATION

Preamble:

This package contains all QA/QC documents and drawings for the field erected fuel storage tank. The Inspection and Test Plan (ITP) serves as a Table of Contents for the Handover Package. The contents have been divided into items 1-20, and a table of contents for each item of the ITP can be found at the beginning of each section (item). The As-Built Drawings can be found at the end of this package.

This package was compiled by the General Contractor: **Inukshuk Construction Ltd.** and reviewed by Mechanical Engineer: **Kyle Brown**.

Inukshuk Construction Limited
Industrial Contracting Project Management

PO Box 654
Rankin Inlet, NU X0C 0G0
T 867.645.4030 F 867.645.4064

Field Erected Fuel Storage Tank

Handover Package

Item 1 – Kick-off Meeting

Contents

1. Kickoff Meeting Minutes

KICKOFF MEETING FOR
CONTRACT No.6515-C-260-002
FUEL TANKS

AGNICO EAGLE

Meliadine Project
Agnico Eagle Mines

Date: 27 January, 2017

Location: 842, WSP Office Montreal

Contract No. 6515-C-260-002

Scope of Work: Fuel Tanks

Meeting Notes Number: Kickoff Meeting 001

Issue Date: 31 January, 2017

Distribution:

AEM	*Inukshuk Construction*
* Diane Derome	+ Marc Losier
+ Normand Menard	+ Tony King
+ Joel Morlière	+ Jacob Saunders
++ Pierre Cianni	
++ Jack Dutil	
++ Mathieu Grenier	
++ Denis Duquette	

*Legend: * Author + Attendee ++ Part-time # Teleconference*

Item No.	Discussion / Decision	Action By	Required Date
1,0	**INTRODUCTION** The purpose of this meeting is to kick-off the Engineering and Fabrication portions of Contract No.6515-C-260-002 "Field Erected Fuel Tanks – Supply & Install" with Inukshuk Construction Inc. hereinafter referred to as ICL.	Info	
2.0	**HSE & CONSTRUCTION**		
2.1	**AEM Construction contact** :		
2.2	**AEM's HSE Contact** : will be determined during the Construction Meeting to come prior to Mobilization.	Info	
2.3	**Workers Inductions** - E-learning: It is a mandatory requirement for all workers to complete the induction prior to working at Site. Induction forms can be obtained by Denis Duquette at denis.duquette@agnicoeagle.com.	Info	
2.4	**Risk Register & Risk Mitigation**: Prior to mobilization at Site the Contractor will need to develop a risk register identifying the major risk associated with the Work. A mitigation plan shall be developed to minimize the identified risks.	Info	Prior to Mob

Name	Position	Email	Phone
Jack Dutil	Construction Manager	jack.dutil@agnicoeagle.com	T: 819.759.3555 x 3957 M: 819.354.9081

AGNICO EAGLE

Meliadine Project
Agnico Eagle Mines

Item No.	Discussion / Decision	Action By	Required Date
2.5	**HSE Manual:** Contractor to submit a Work specific HSE Manuel including JSA's for review and Approval by AEM. The HSE Manual must be approved prior to mobilization at Site.	Info	Prior to Mob
2.6	**Working hours –** ICL Working hours are 12hrs/ day on two (2) shifts. ICL will be required to request from the WSCC an extended work hour permit. Instruction provided in the Supplemental Conditions.	ICL	Prior to Mob
2.7	**Workers Rotation** – 6 weeks on 2 weeks off.	Info	
2.8	**Hydro Testing –** The API requests hydrotesting if water is accessible. Therefore, hydro tests can be performed on the tanks in Rankin. ICL suggest that AEM proceed immediately with the water Permit Acquisition since the delay is 6-8 months to obtain permit from the water board.	AEM	URGENT
2.9	**Liquid penetration testing –** Is possible only when water is not accessible.	Info	
2.10	**Workers Accommodations –** Workers accommodations in Rankin are the Contractor's responsibility. Workers accommodations at Meliadine Site are AEM's responsibility	Info	
3.0	**LOGISTICS (MATERIAL AND EQUIPMENT)** AEM Contact shall be:		

Name	Position	Email	Phone
Martin Ouellet	Expediting Coordinator	martin.ouellet@agnicoeagle.com	M:514-703-9569
Mathieu Grenier	Lead Logistics Coordinator	mathieu.grenier@agnicoeagle.com	T: 819.759.3700 x 2924 M: 819.856.3046
Cathrine Carmantrand	Expediting and logistics coordinator	Catherine.Carmantrand@wspgroup.com	T : 514.343.0773 X 6072

3.1	**Package Identification**: All deliveries to Becancour must have the PO number clearly identified.	Info	
3.2	**Packaging and Shipping**: The packaging of material and equipment must be in compliance with AEM Packaging and Shipping Instructions. If packaging is not in accordance to the instructions, AEM will backcharge any costs associated with double handling and repackaging.	Info	
3.3	**Start of Shipping**: ICL can commence shipping as early as	Info	

AGNICO EAGLE

Meliadine Project
Agnico Eagle Mines

Item No.	Discussion / Decision	Action By	Required Date
	April.		
3.4	**Shipping Priorities**: Three (3) vessels are scheduled in July. Shipping priorities will need to be identified by ICL and communicated to AEM including dimensions and weights of bundles, skids and containers. ICL confirms that the priorities will be the floor shell plates and columns.	ICL	
3.5	**Logistic Meeting**: A Logistic meeting will be scheduled at the beginning March to identify shipping priorities.	Diane / Mathieu G.	Early-March
3.6	**Transport of X-ray machine for weld testing**: It will be very complicated for AEM to transport and store an x-ray machine at Site due to the radioactive content within the machine. AEM requests that ICL consider ultra-sonic testing as an alternative method. ICL to confirm this alternative is in compliance with API Standards.	ICL	
3.7	**Material Packing**: ¼" thick shell plate will be delivered in sections of 10' wide x 40' long. Shell plates will be mounted on skids. **POST MEETING NOTE: AEM confirms that these dimensions are acceptable for shipping.**	Info	
3.8	*Material Management and handling at site* AEM Contact shall be: **Name** | **Position** | **Email** | **Phone** Denis Duquette | Site Material & Logistics | denis.duquette@agnicoeagle.com | T: 819-759-3700 x 5616 M: 819.339.8134		
3.9	**Material Requisitions**: Once the Material has arrived at Site, ICL will be responsible for their own Material Requisitions. Additional details on the procedure to come.	Info	
4.0	**ENGINEERING & DELIVERABLES** AEM Contact shall be: **Name** | **Position** | **Email** | **Phone** Joel Morliere | Package Coordinator | Joel.Morliere@wspgroup.com | 438-843-7585 Normand Menard | Lead Mechanical AEM | Normand.menard@agniceagle.com | 418-454-0464 Denis Thibodeau | Lead Package Engineer | Denis.Thibodeau@wspgroup.com | 438-843-7442		
4.1	Issued for Construction drawings : AEM will be releasing the IFC's the week of Feb 1st. Changes include: -Re-numbering of tanks	AEM	Feb 1st

AGNICO EAGLE

Meliadine Project
Agnico Eagle Mines

<table>
<tr><th>Item No.</th><th>Discussion / Decision</th><th>Action By</th><th>Required Date</th></tr>
<tr><td></td><td>-Manhole on roof 600mm dia.
- Revised paint spec (Already considered in pricing)</td><td></td><td></td></tr>
<tr><td>4.2</td><td>Technical documents and shop drawings submittals & approval</td><td></td><td></td></tr>
<tr><td>4.2.1</td><td><u>DOCUMENTS SUBMITTAL</u>
AEM Contact shall be:
<table>
<tr><th>Name</th><th>Position</th><th>Email</th><th>Phone</th></tr>
<tr><td>Giovanni Cianni</td><td>Lead Document Control</td><td>giovanni.cianni@agnicoeagle.com</td><td>M: 438-396-3886</td></tr>
</table></td><td></td><td></td></tr>
<tr><td>4.2.2</td><td>Submittals
All VDT required documents have to be submitted through iPas DM for AEM's review and approval as per AEM's codification and submittal process.</td><td></td><td>info</td></tr>
<tr><td>4.2.3</td><td>Approvals
AEM will review and return the documents within ten (10) working days.</td><td></td><td>Info</td></tr>
<tr><td>4.2.4</td><td>iPasDM training
ICL to coordinate a training session with Giovanni Cianni, (Document Control Lead) on the uploading of documents</td><td></td><td>Info</td></tr>
<tr><td>4.2.5</td><td>Requests For Information (RFIs)
All Engineering and technical questions have to be submitted through RFIs (See attached RFI Template).
RFIs have to include a comprehensive level of detail to allow a quick reply and include potential cost or schedule impacts if any.
Any potential schedule or Cost impact resulting from a RFI reply is to be sent formally to AEM through a CCR.
RFIs to be sent to the Package Engineer, copy the Contract Administrator and Document Control.</td><td></td><td>Info</td></tr>
<tr><td>4.2.6</td><td>Vendor Data Requirements Table (VDT) Review
ICL must refer to the contract VDT for all technical document requirements.</td><td></td><td>Info</td></tr>
<tr><td>4.3</td><td>Tank Dimensions: Inukshuk has issued via e-mail the proposed diameters and height of the tanks. No design calculation were provided.
AEM confirms that the dimensions will be communicated / coordinated with the Civil / foundation contractor.</td><td></td><td>Info</td></tr>
</table>

AGNICO EAGLE

Meliadine Project
Agnico Eagle Mines

Item No.	Discussion / Decision	Action By	Required Date
5.0	**QA/QC** AEM Contact shall be: **Name** | **Position** | **Email** | **Phone** Jean-Francois Tremblay | Lead Quality | Jean.Francois.Tremblay3@wspgroup.com | T: 418-368-6069		
5.1	*Quality Plan* ICL to submit their Project Specific QA/QC Plan through iPas DM.	Info	Prior to Mobilization
5.2	*ITPs* ICL to submit their ITP through iPas DM. One Project specific General ITP for Fabrication and Installation including hold points. Detailed ITPs will be developed during work execution.	Info	Info
5.3	*Working & Welding Procedures* ICL to submit their standard working and welding procedures through iPas DM prior to work start.	Info	Prior to Mobilization
5.4	*Quality Management Requirements Turnover Requirements* ICL to submit their Quality management system through iPas DM for approval by AEM. Turnover will be progressive. ICL to work on the documents and forms all along the project to allow a smooth contract close-out.	Info	Prior to Fabrication start
6.0	**SCHEDULE** AEM Contact shall be: **Name** | **Position** | **Email** | **Phone** Pierre Cianni | Lead Planner | pierre.cianni@agnicoeagle.com | T: 819.825.4711 x 8010 M: 709 899-1711		
8.1	**Foundation Completion Date** : AEM confirms that the foundations shall be completed by mid-July.	Info	
8.2	**Hydro testing of 13.5M L Tank** : 11 days is scheduled for hydro testing the 13.5M Liter tank. API has constraints on the filling and discharge rate (50K liters / hr max)	Info	
8.3	**Completion date for 13.5M L Tanks**: AEM confirms that the 13.5M L tanks must be ready for filling on **September 25th 2017**	Info	
8.4	*Progress and Reporting* ICL will submit their progress reports on a Monthly basis. AEM will be scheduling a Bi-weekly Progress meetings once the	Diane	

AGNICO EAGLE

Meliadine Project
Agnico Eagle Mines

<table>
<tr><th>Item No.</th><th>Discussion / Decision</th><th>Action By</th><th>Required Date</th></tr>
<tr><td></td><td>fabrication has started. First meeting to be confirmed.</td><td></td><td></td></tr>
<tr><td>9.0</td><td><u>COMMERCIAL</u>
AEM Contact shall be:
<table>
<tr><th>Name</th><th>Position</th><th>Email</th><th>Phone</th></tr>
<tr><td>Diane Derome</td><td>Formation CA</td><td>diane.derome@agnicoeagle.com</td><td>T: 438.843.7585</td></tr>
<tr><td>Steve Tauber</td><td>Site CA</td><td>steve.tauber@agnicoeagle.com</td><td>T: 819.759.3555 x 3964</td></tr>
</table></td><td></td><td></td></tr>
<tr><td>9.1</td><td>ICL to provide the Insurance certificate and latest WCB Letter of good standing.</td><td>ICL</td><td>Prior to Mobilization</td></tr>
<tr><td>9.2</td><td>Verbal Instructions
AEM indicated that while day to day coordination instructions are normal practice, verbal instructions will not be tolerated. All instructions are to be in writing should there be any changes to the schedule and/or the Scope of Work.</td><td>Info</td><td></td></tr>
<tr><td>9.3</td><td>Contract Site Changes and Change Management
<u>General: No work can be executed nor paid unless a formal Contract Change Order (CCO) is fully executed by both Parties. All the below are tools and mechanisms used to capture changes but do not constitute a formal change until it is incorporated in a CCO.</u></td><td>Info</td><td></td></tr>
<tr><td>9.4</td><td>Contract Change Order (CCO)
Is the formal and only modification to the contract signed by both parties, which must be mutually agreed upon to effect a change to the contract. A Contract Change Order describes the scope, price, schedule, method of payment for a change to the contract.</td><td>Info</td><td></td></tr>
<tr><td>9.5</td><td>Contract Change Request (CCR)
ICL can initiate a request for a Contract Change Order due to different site conditions, construction change or similar event justifying issuance of a Contract Change Order (See attached CCR Template).</td><td>Info</td><td></td></tr>
<tr><td>9.6</td><td>Progress Payment Certificate (PPC)
AEM will create the PPC (Progress Payment Certificate) Template and issue to ICL.
ICL to send the PPC for AEM's approval prior to sending the invoice.</td><td>Info</td><td></td></tr>
<tr><td>9.7</td><td>Contract Signature: The contract is in preparation and will be ready for signature during the second week of February.</td><td>Diane</td><td>Feb, 2017</td></tr>
</table>

AGNICO EAGLE

Meliadine Project
Agnico Eagle Mines

Accepted By:

Marc Losier
Dated:

Inukshuk Construction ld.

Diane Derome
Dated:

Agnico Eagle Mines Ltd.

Attachments: Distribution List, CCR Form, RFI Form

Inukshuk Construction Limited
Industrial Contracting Project Management

PO Box 654
Rankin Inlet, NU X0C 0G0
T 867.645.4030 F 867.645.4064

Field Erected Fuel Storage Tank

Handover Package

Item 2 – Signature Log

Contents

1. Signature Log

QUALITY CONTROL MANUAL

Exhibit 20a, Rev 0

SIGNATURE LOG

PRINT	SIGNATURE	COMPANY	DATE
Robert Hoffman		SAS	Sept 30/17.
Keith Breedon		SAS	
Matthew Mackenzie		SAS	
Matthew Turmel		SAS	SEPT 30/17.
Sebastien Ouellet		SAS	SEPT 30/17
Stephane Gionet		AEM	
Clem Bonia		AEM	
Chris Jaques	C Jaques.	SAS	Sept 30/17

Inukshuk Construction Limited
Industrial Contracting Project Management

PO Box 654
Rankin Inlet, NU X0C 0G0
T 867.645.4030 F 867.645.4064

Field Erected Fuel Storage Tank

Handover Package

Item 3 – Welder Qualification

Contents

1. Individual Welder Qualifications / Welder Log

ALL CAN INSPECTION SERVICES (2011) INC.

Report # G2339

9323-37 Avenue, NW, Edmonton, Alberta T6E 5N4
SHOP: 780-462-1072 OFFICE: 780-462-9797 FAX: 780-462-4664
EMAIL: shop@allcaninspection.com www.allcaninspection.com

Client:	Sub Arc Systems	Client Job #	Welder Coupons
Address:	17 Exploration Way, Devon	P.O. #	Toby
Contact: Name:	Toby	Date:	June 21/17
Phone:			
Work Location:	All Can Inspection Shop	Work Description:	C.JA

CODES
1. ASME B31.3 N/S
2. ASME B31.3 S/C
3. ASME Sec. VIII Div 1 UW51
4. ASME Sec. VIII Div. 1 UW52
5. CSA Z662
6. CSA Z662 (Sour)
7. API 650
8. Other:

NDE No:	Size & thickness Plus Code Max. reinforcement	Material	Code	IQI	Technique Number	Source Side of Object to Film Distance	Source to Object Distance	Number of Exposures	Welder ID	Discontinuity	Severity	Accept	Reject
			1 - 8	See Back	See Back	Inches	Inches				1 - 3	√	X
2G SMAW	5/8" SPOT	P1	7	2	RT-2	0.750	25.000	1	C.JA			√	
3G SMAW	5/8" SPOT	P1	7	2	RT-2	0.750	25.000	1	C.JA			√	
4G SMAW	5/8" SPOT	P1	7	2	RT-2	0.750	25.000	1	C.JA	P @ 0" & 7"	1	√	

LF - Lack of Fusion; IP - Incomplete Penetration; IC - Internal Concavity; BT - Burn Through; TI - Tungsten Inclusion; IU: Internal Undercut; EU: External Undercut; EP - Excessive Penetration; P - Porosity; S - Slag; HL - High-Low; C - Crack; AB - Arc Burn; HB - Hollow Bead

Severity: 1 = Slight, 2 = Medium, 3 = Severe (Reject)

RT Technician:	Gordon Thomas	CGSB Level:	2	Reg. # :	6	SNT-TC-1A Level:	III	SNT-TC-1A No:	6
RT Assistant # 1	Victoria Sarnecki	CEDO #:	21927			SNT-TC-1A Level:	I	SNT-TC-1A No:	21927
RT Assistant # 2		CEDO #:				SNT-TC-1A Level:		SNT-TC-1A No:	

IMPORTANT: See reverse side of this form for All Can Inspection Services (2011) Inc. LIMITED LIABILITY POLICY

Technician Signature — June 21/17 Date

Client Representative Signature — Evaluation Date

The above interpretation is a technical opinion, not a guarantee.
Client signature indicates acceptance of the report and results.

Clock tape marker and start arrow marked on weldment.
It is the customer's responsibility to map welds on drawings.

Film Make / Brand	AGFA	Film Class / Type:	1-D5
Screens Lead	Front 0.010"	Back 0.010"	One (no.) film per screen
Film Density in H & D:	Min. 2.0	Max. 4.0	
Penetrometer (IQI hole type) designation:	N/A	Recommended Max. U.G.:	0.20"
Source Isotope:	IRIDIUM-192 (Gamma)	Wall Viewing:	Single
Effective Focal Spot Size:	0.146 inches	Processing:	Automatic

RADIOGRAPHIC EXAMINATION REPORT

ALL CAN INSPECTION SERVICES (2011) INC.

Report # G2340

9323-37 Avenue, NW, Edmonton, Alberta T6E 5N4
SHOP: 780-462-1072 OFFICE: 780-462-9797 FAX: 780-462-4664
EMAIL: shop@allcaninspection.com www.allcaninspection.com

Client:	**Sub Arc Systems**	Client Job #	**Welder Coupons**
Address:	17 Exploration Way, Devon	P.O. #	**Toby**
Contact: Name:	Toby	Date:	**June 21/17**
Phone:			
Work Location:	All Can Inspection Shop	Work Description:	J.OV

CODES
1. ASME B31.3 N/S
2. ASME B31.3 S/C
3. ASME Sec. VIII Div 1 UW51
4. ASME Sec. VIII Div. 1 UW52
5. CSA Z662
6. CSA Z662 (Sour)
7. API 650
8. Other:

LF - Lack of Fusion; IP - Incomplete Penetration; IC - Internal Concavity; BT - Burn Through; TI - Tungsten Inclusion; IU: Internal Undercut; EU: External Undercut; EP - Excessive Penetration; P - Porosity; S - Slag; HL - High-Low; C - Crack; AB - Arc Burn; HB - Hollow Bead

Severity: 1 = Slight, 2 = Medium, 3 = Severe (Reject)

NDE No:	Size & thickness Plus Code Max. reinforcement	Material	Code (1 - 8)	IQI (See Back)	Technique Number (See Back)	Source Side of Object to Film Distance (inches)	Source to Object Distance (inches)	Number of Exposures	Welder ID	Discontinuity	Severity (1 - 3)	Accept (√)	Reject (X)
2G SMAW	5/8" SPOT	P1	7	2	RT-2	0.750	25.000	1	J.OV	S & P @ 0", P @ 1 1/2" & 6"	2	√	
3G SMAW	5/8" SPOT	P1	7	2	RT-2	0.750	25.000	1	J.OV			√	
4G SMAW	5/8" SPOT	P1	7	2	RT-2	0.750	25.000	1	J.OV			√	

RT Technician:	Gordon Thomas	CGSB Level:	2	Reg. # :	6	SNT-TC-1A Level:	III	SNT-TC-1A No:	6
RT Assistant # 1	Victoria Sarnecki			CEDO #:	21927	SNT-TC-1A Level:	I	SNT-TC-1A No:	21927
RT Assistant # 2				CEDO #:		SNT-TC-1A Level:		SNT-TC-1A No:	

IMPORTANT: See reverse side of this form for All Can Inspection Services (2011) Inc. LIMITED LIABILITY POLICY

Technician Signature — June 21/17 Date

Client Representative Signature — Evaluation Date

The above interpretation is a technical opinion, not a guarantee.
Client signature indicates acceptance of the report and results.

Clock tape marker and start arrow marked on weldment.
It is the customer's responsibility to map welds on drawings.

Film Make / Brand	AGFA	Film Class / Type:	1-D5
Screens Lead	Front 0.010"	Back 0.010"	One (no.) film per screen
Film Density in H & D:	Min. 2.0	Max. 4.0	
Penetrometer (IQI hole type) designation:	N/A	Recommended Max. U.G.:	0.20"
Source Isotope:	IRIDIUM-192 (Gamma)	Wall Viewing:	Single
Effective Focal Spot Size:	0.146 inches	Processing:	Automatic

RADIOGRAPHIC EXAMINATION REPORT

ALL CAN INSPECTION SERVICES (2011) INC.

Report # G2341

9323-37 Avenue, NW, Edmonton, Alberta T6E 5N4
SHOP: 780-462-1072 OFFICE: 780-462-9797 FAX: 780-462-4664
EMAIL: shop@allcaninspection.com www.allcaninspection.com

Client: **Sub Arc Systems** Client Job # **Welder Coupons**
Address: 17 Exploration Way, Devon P.O. # **Toby**
Contact: Name: Toby Date: **June 21/17**
Phone:
Work Location: All Can Inspection Shop Work Description: M.GO

CODES
1. ASME B31.3 N/S
2. ASME B31.3 S/C
3. ASME Sec. VIII Div 1 UW51
4. ASME Sec. VIII Div. 1 UW52
5. CSA Z662
6. CSA Z662 (Sour)
7. API 650
8. Other:

NDE No:	Size & thickness Plus Code Max. reinforcement	Material	Code	IQI	Technique Number	Source Side of Object to Film Distance	Source to Object Distance	Number of Exposures	Welder ID	Discontinuity	Severity	Accept	Reject
			1 - 8	See Back	See Back	Inches	Inches			LF - Lack of Fusion; IP - Incomplete Penetration; IC - Internal Concavity; BT - Burn Through; TI - Tungsten Inclusion; IU: Internal Undercut; EU: External Undercut; EP - Excessive Penetration; P - Porosity; S - Slag; HL - High-Low; C - Crack; AB - Arc Burn; HB - Hollow Bead. **Severity:** 1 = Slight, 2 = Medium, 3 = Severe (Reject)	1 - 3	√	X
2G SMAW	5/8" SPOT	P1	7	2	RT-2	0.750	25.000	1	M.GO	IU @ 1", IC @ 2" & 6"	1	√	
3G SMAW	5/8" SPOT	P1	7	2	RT-2	0.750	25.000	1	M.GO	P @ 4"	1	√	
4G SMAW	5/8" SPOT	P1	7	2	RT-2	0.750	25.000	1	M.GO	P @ 0"	1	√	

RT Technician: Gordon Thomas CGSB Level: 2 Reg. # : 6 SNT-TC-1A Level: III SNT-TC-1A No: 6
RT Assistant # 1 Victoria Sarnecki CEDO #: 21927 SNT-TC-1A Level: I SNT-TC-1A No: 21927
RT Assistant # 2 CEDO #: SNT-TC-1A Level: SNT-TC-1A No:

IMPORTANT: See reverse side of this form for All Can Inspection Services (2011) Inc. LIMITED LIABILITY POLICY

Technician Signature — Date: June 21/17

Client Representative Signature — Evaluation Date

The above interpretation is a technical opinion, not a guarantee.
Client signature indicates acceptance of the report and results.

Clock tape marker and start arrow marked on weldment.
It is the customer's responsibility to map welds on drawings.

Film Make / Brand: AGFA Film Class / Type: 1-D5
Screens Lead: Front 0.010" Back 0.010" One (no.) film per screen
Film Density in H & D: Min. 2.0 Max. 4.0
Penetrometer (IQI hole type) designation: N/A Recommended Max. U.G.: 0.20"
Source Isotope: IRIDIUM-192 (Gamma) Wall Viewing: Single
Effective Focal Spot Size: 0.146 inches Processing: Automatic

RADIOGRAPHIC EXAMINATION REPORT

ALL CAN INSPECTION SERVICES (2011) INC.

Report # G2342

9323-37 Avenue, NW, Edmonton, Alberta T6E 5N4
SHOP: 780-462-1072 OFFICE: 780-462-9797 FAX: 780-462-4664
EMAIL: shop@allcaninspection.com www.allcaninspection.com

Client: **Sub Arc Systems** Client Job # **Welder Coupons**
Address: 17 Exploration Way, Devon P.O. # **Toby**
Contact: Name: Toby Date: **June 21/17**
Phone:
Work Location: All Can Inspection Shop Work Description: M.TU

CODES
1. ASME B31.3 N/S
2. ASME B31.3 S/C
3. ASME Sec. VIII Div 1 UW51
4. ASME Sec. VIII Div. 1 UW52
5. CSA Z662
6. CSA Z662 (Sour)
7. API 650
8. Other:

LF - Lack of Fusion; IP - Incomplete Penetration; IC - Internal Concavity; BT - Burn Through; TI - Tungsten Inclusion; IU: Internal Undercut; EU: External Undercut; EP - Excessive Penetration; P - Porosity; S - Slag; HL - High-Low; C - Crack; AB - Arc Burn; HB - Hollow Bead
Severity: 1 = Slight, 2 = Medium, 3 = Severe (Reject)

NDE No:	Size & thickness Plus Code Max. reinforcement	Material	Code	IQI	Technique Number	Source Side of Object to Film Distance	Source to Object Distance	Number of Exposures	Welder ID	Discontinuity	Severity	Accept	Reject
			1 - 8	See Back	See Back	Inches	Inches				1 - 3	√	X
2G SMAW	5/8" SPOT	P1	7	2	RT-2	0.750	25.000	1	M.TU	P @ 0"	1	√	
3G SMAW	5/8" SPOT	P1	7	2	RT-2	0.750	25.000	1	M.TU			√	
4G SMAW	5/8" SPOT	P1	7	2	RT-2	0.750	25.000	1	M.TU	S @ 1" & 2", P @ 5"	2	√	

RT Technician: Gordon Thomas CGSB Level: 2 Reg. # : 6 SNT-TC-1A Level: III SNT-TC-1A No: 6
RT Assistant # 1 Victoria Sarnecki CEDO #: 21927 SNT-TC-1A Level: I SNT-TC-1A No: 21927
RT Assistant # 2 CEDO #: SNT-TC-1A Level: SNT-TC-1A No:

IMPORTANT: See reverse side of this form for All Can Inspection Services (2011) Inc. LIMITED LIABILITY POLICY

Technician Signature — June 21/17 Date

Client Representative Signature — Evaluation Date

The above interpretation is a technical opinion, not a guarantee.
Client signature indicates acceptance of the report and results.

Clock tape marker and start arrow marked on weldment.
It is the customer's responsibility to map welds on drawings.

Film Make / Brand: AGFA Film Class / Type: 1-D5
Screens: Lead Front: 0.010" Back: 0.010" One (no.) film per screen
Film Density in H & D: Min. 2.0 Max. 4.0
Penetrometer (IQI hole type) designation: N/A Recommended Max. U.G.: 0.20"
Source Isotope: IRIDIUM-192 (Gamma) Wall Viewing: Single
Effective Focal Spot Size: 0.146 inches Processing: Automatic

RADIOGRAPHIC EXAMINATION REPORT

ALL CAN INSPECTION SERVICES (2011) INC.

Report # G2343

9323-37 Avenue, NW, Edmonton, Alberta T6E 5N4
SHOP: 780-462-1072 OFFICE: 780-462-9797 FAX: 780-462-4664
EMAIL: shop@allcaninspection.com www.allcaninspection.com

Client:	Sub Arc Systems	Client Job #	Welder Coupons
Address:	17 Exploration Way, Devon	P.O. #	Toby
Contact: Name:	Toby	Date:	June 21/17
Phone:			
Work Location:	All Can Inspection Shop	Work Description:	M.MA

CODES
1. ASME B31.3 N/S
2. ASME B31.3 S/C
3. ASME Sec. VIII Div 1 UW51
4. ASME Sec. VIII Div. 1 UW52
5. CSA Z662
6. CSA Z662 (Sour)
7. API 650
8. Other:

NDE No:	Size & thickness Plus Code Max. reinforcement	Material	Code	IQI	Technique Number	Source Side of Object to Film Distance	Source to Object Distance	Number of Exposures	Welder ID	Discontinuity (LF - Lack of Fusion; IP - Incomplete Penetration; IC - Internal Concavity; BT - Burn Through; TI - Tungsten Inclusion; IU: Internal Undercut; EU: External Undercut; EP - Excessive Penetration; P - Porosity; S - Slag; HL - High-Low; C - Crack; AB - Arc Burn; HB - Hollow Bead) Severity: 1 = Slight, 2 = Medium, 3 = Severe (Reject)	Severity	Accept	Reject
			1 - 8	See Back	See Back	Inches	Inches				1 - 3	√	X
2G SMAW	5/8" SPOT	P1	7	2	RT-2	0.750	25.000	1	M.MA			√	
3G SMAW	5/8" SPOT	P1	7	2	RT-2	0.750	25.000	1	M.MA			√	
4G SMAW	5/8" SPOT	P1	7	2	RT-2	0.750	25.000	1	M.MA	EU @ 2"	1	√	

RT Technician:	Gordon Thomas	CGSB Level:	2	Reg. # :	6	SNT-TC-1A Level:	III
SNT-TC-1A No:	6						
RT Assistant # 1	Victoria Sarnecki	CEDO #:	21927	SNT-TC-1A Level:	I	SNT-TC-1A No:	21927
RT Assistant # 2		CEDO #:		SNT-TC-1A Level:		SNT-TC-1A No:	

IMPORTANT: See reverse side of this form for All Can Inspection Services (2011) Inc. LIMITED LIABILITY POLICY

Technician Signature — Date: June 21/17

Client Representative Signature — Evaluation Date

The above interpretation is a technical opinion, not a guarantee.
Client signature indicates acceptance of the report and results.

Clock tape marker and start arrow marked on weldment.
It is the customer's responsibility to map welds on drawings.

Film Make / Brand	AGFA	Film Class / Type:	I-D5
Screens Lead	Front 0.010"	Back 0.010"	One (no.) film per screen
Film Density in H & D:	Min. 2.0	Max. 4.0	
Penetrometer (IQI hole type) designation:	N/A	Recommended Max. U.G.:	0.20"
Source Isotope:	IRIDIUM-192 (Gamma)	Wall Viewing:	Single
Effective Focal Spot Size:	0.146 inches	Processing:	Automatic

RADIOGRAPHIC EXAMINATION REPORT

ALL CAN INSPECTION SERVICES (2011) INC.

Report # G2344

9323-37 Avenue, NW, Edmonton, Alberta T6E 5N4
SHOP: 780-462-1072 OFFICE: 780-462-9797 FAX: 780-462-4664
EMAIL: shop@allcaninspection.com www.allcaninspection.com

Client:	**Sub Arc Systems**	Client Job #	**Welder Coupons**
Address:	17 Exploration Way, Devon	P.O. #	**Toby**
Contact: Name:	Toby	Date:	**June 21/17**
Phone:			
Work Location:	All Can Inspection Shop	Work Description:	Q.PO

CODES
1. ASME B31.3 N/S
2. ASME B31.3 S/C
3. ASME Sec. VIII Div 1 UW51
4. ASME Sec. VIII Div. 1 UW52
5. CSA Z662
6. CSA Z662 (Sour)
7. API 650
8. Other:

NDE No:	Size & thickness Plus Code Max. reinforcement	Material	Code	IQI	Technique Number	Source Side of Object to Film Distance	Source to Object Distance	Number of Exposures	Welder ID	LF - Lack of Fusion; IP - Incomplete Penetration; IC - Internal Concavity; BT - Burn Through; TI - Tungsten Inclusion; IU: Internal Undercut; EU: External Undercut; EP - Excessive Penetration; P - Porosity; S - Slag; HL - High-Low; C - Crack; AB - Arc Burn; HB - Hollow Bead. **Severity:** 1 = Slight, 2 = Medium, 3 = Severe (Reject) — Discontinuity	Severity	Accept	Reject
			1 - 8	See Back	See Back	Inches	Inches				1 - 3	√	x
2G SMAW	5/8" SPOT	P1	7	2	RT-2	0.750	25.000	1	Q.PO	IU @ 1", 2" & 6"	2	√	
3G SMAW	5/8" SPOT	P1	7	2	RT-2	0.750	25.000	1	Q.PO			√	
4G SMAW	5/8" SPOT	P1	7	2	RT-2	0.750	25.000	1	Q.PO			√	

RT Technician:	Gordon Thomas	CGSB Level:	2	Reg. # :	6	SNT-TC-1A Level:	III	SNT-TC-1A No:	6
RT Assistant # 1	Victoria Sarnecki	CEDO #:	21927			SNT-TC-1A Level:	I	SNT-TC-1A No:	21927
RT Assistant # 2		CEDO #:				SNT-TC-1A Level:		SNT-TC-1A No:	

IMPORTANT: See reverse side of this form for All Can Inspection Services (2011) Inc. LIMITED LIABILITY POLICY

Technician Signature — Date: June 21/17

Client Representative Signature — Evaluation Date

The above interpretation is a technical opinion, not a guarantee.
Client signature indicates acceptance of the report and results.

Clock tape marker and start arrow marked on weldment.
It is the customer's responsibility to map welds on drawings.

Film Make / Brand	AGFA	Film Class / Type:	1-D5
Screens Lead	Front 0.010"	Back 0.010"	One (no.) film per screen
Film Density in H & D:	Min. 2.0	Max. 4.0	
Penetrometer (IQI hole type) designation:	N/A	Recommended Max. U.G.:	0.20"
Source Isotope:	IRIDIUM-192 (Gamma)	Wall Viewing:	Single
Effective Focal Spot Size:	0.146 inches	Processing:	Automatic

RADIOGRAPHIC EXAMINATION REPORT

ALL CAN INSPECTION SERVICES (2011) INC.

Report # G2345

9323-37 Avenue, NW, Edmonton, Alberta T6E 5N4
SHOP: 780-462-1072 OFFICE: 780-462-9797 FAX: 780-462-4664
EMAIL: shop@allcaninspection.com www.allcaninspection.com

Client: **Sub Arc Systems** Client Job # **Welder Coupons**

Address: 17 Exploration Way, Devon P.O. # **Toby**

Contact: Name: Toby Date: **June 21/17**

Phone:

Work Location: All Can Inspection Shop Work Description: D.ZU

CODES
1. ASME B31.3 N/S
2. ASME B31.3 S/C
3. ASME Sec. VIII Div 1 UW51
4. ASME Sec. VIII Div. 1 UW52
5. CSA Z662
6. CSA Z662 (Sour)
7. API 650
8. Other:

NDE No:	Size & thickness Plus Code Max. reinforcement	Material	Code	IQI	Technique Number	Source Side of Object to Film Distance	Source to Object Distance	Number of Exposures	Welder ID	Discontinuity (LF - Lack of Fusion; IP - Incomplete Penetration; IC - Internal Concavity; BT - Burn Through; TI - Tungsten Inclusion; IU: Internal Undercut; EU: External Undercut; EP - Excessive Penetration; P - Porosity; S - Slag; HL - High-Low; C - Crack; AB - Arc Burn; HB - Hollow Bead) Severity: 1 = Slight, 2 = Medium, 3 = Severe (Reject)	Severity	Accept	Reject
			1 - 8	See Back	See Back	inches	inches				1 - 3	√	x
2G SMAW	5/8" SPOT	P1	7	2	RT-2	0.750	25.000	1	D.ZU			√	
3G SMAW	5/8" SPOT	P1	7	2	RT-2	0.750	25.000	1	D.ZU			√	
4G SMAW	5/8" SPOT	P1	7	2	RT-2	0.750	25.000	1	D.ZU			√	

RT Technician: Gordon Thomas CGSB Level: 2 Reg. # : 6 SNT-TC-1A Level: III SNT-TC-1A No: 6

RT Assistant # 1 Victoria Sarnecki CEDO #: 21927 SNT-TC-1A Level: I SNT-TC-1A No: 21927

RT Assistant # 2 CEDO #: SNT-TC-1A Level: SNT-TC-1A No:

IMPORTANT: See reverse side of this form for All Can Inspection Services (2011) Inc. LIMITED LIABILITY POLICY

Technician Signature June 21/17 Date

Client Representative Signature Evaluation Date

The above interpretation is a technical opinion, not a guarantee.
Client signature indicates acceptance of the report and results.

Clock tape marker and start arrow marked on weldment.
It is the customer's responsibility to map welds on drawings.

Film Make / Brand AGFA Film Class / Type: 1-D5

Screens Lead Front 0.010" Back 0.010" One (no.) film per screen

Film Density in H & D: Min. 2.0 Max. 4.0

Penetrometer (IQI hole type) designation: N/A Recommended Max. U.G.: 0.20"

Source Isotope: IRIDIUM-192 (Gamma) Wall Viewing: Single

Effective Focal Spot Size: 0.146 inches Processing: Automatic

RADIOGRAPHIC EXAMINATION REPORT

ALL CAN INSPECTION SERVICES (2011) INC.

Report # G2346

9323-37 Avenue, NW, Edmonton, Alberta T6E 5N4
SHOP: 780-462-1072 OFFICE: 780-462-9797 FAX: 780-462-4664
EMAIL: shop@allcaninspection.com www.allcaninspection.com

Client:	Sub Arc Systems	Client Job #	Welder Coupons
Address:	17 Exploration Way, Devon	P.O. #	Toby
Contact: Name:	Toby	Date:	June 21/17
Phone:			
Work Location:	All Can Inspection Shop	Work Description:	D.ZE

CODES
1. ASME B31.3 N/S
2. ASME B31.3 S/C
3. ASME Sec. VIII Div 1 UW51
4. ASME Sec. VIII Div. 1 UW52
5. CSA Z662
6. CSA Z662 (Sour)
7. API 650
8. Other:

LF - Lack of Fusion; IP - Incomplete Penetration; IC - Internal Concavity; BT - Burn Through; TI - Tungsten Inclusion; IU: Internal Undercut; EU: External Undercut; EP - Excessive Penetration; P - Porosity; S - Slag; HL - High-Low; C - Crack; AB - Arc Burn; HB - Hollow Bead

Severity: 1 = Slight, 2 = Medium, 3 = Severe (Reject)

NDE No:	Size & thickness Plus Code Max. reinforcement	Material	Code	IQI	Technique Number	Source Side of Object to Film Distance	Source to Object Distance	Number of Exposures	Welder ID	Discontinuity	Severity	Accept	Reject
			1 - 8	See Back	See Back	inches	inches				1 - 3	√	X
2G SMAW	5/8" SPOT	P1	7	2	RT-2	0.750	25.000	1	D.ZE	P @ 0"	1	√	
3G SMAW	5/8" SPOT	P1	7	2	RT-2	0.750	25.000	1	D.ZE			√	
4G SMAW	5/8" SPOT	P1	7	2	RT-2	0.750	25.000	1	D.ZE			√	

RT Technician:	Gordon Thomas	CGSB Level:	2	Reg. #:	6	SNT-TC-1A Level:	III	SNT-TC-1A No:	6
RT Assistant # 1	Victoria Sarnecki	CEDO #:	21927			SNT-TC-1A Level:	I	SNT-TC-1A No:	21927
RT Assistant # 2		CEDO #:				SNT-TC-1A Level:		SNT-TC-1A No:	

IMPORTANT: See reverse side of this form for All Can Inspection Services (2011) Inc. LIMITED LIABILITY POLICY

Technician Signature — Date: June 21/17

Client Representative Signature — Evaluation Date

The above interpretation is a technical opinion, not a guarantee.
Client signature indicates acceptance of the report and results.

Clock tape marker and start arrow marked on weldment.
It is the customer's responsibility to map welds on drawings.

Film Make / Brand	AGFA	Film Class / Type:	1-D5
Screens Lead	Front 0.010"	Back 0.010"	One (no.) film per screen
Film Density in H & D:	Min. 2.0	Max. 4.0	
Penetrometer (IQI hole type) designation:	N/A	Recommended Max. U.G.:	0.20"
Source Isotope:	IRIDIUM-192 (Gamma)	Wall Viewing:	Single
Effective Focal Spot Size:	0.146 inches	Processing:	Automatic

RADIOGRAPHIC EXAMINATION REPORT

RADIOGRAPHIC EXAMINATION TECHNIQUE REFERENCE SHEET

ALL CAN INSPECTION SERVICES (2011) INC. RT TECHNIQUES
ALL CAN **INSPECTION SERVICES (2011) INC. GENERAL RT PROCEDURE**
Important Note: Always check the QA/Procedures Manual for the most current Procedure Revision status.

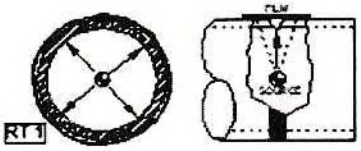

Tech #RT-1: Vessel Circumferential Weld
1 Exposure: QA Subsection 15.12.1

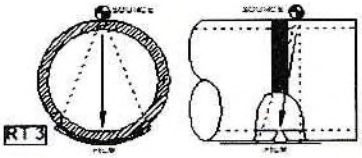

Tech #RT-3: Circ. Weld – Contact – Light Wall
3 Exposures@120° Spacing: QA Subsection 15.12.6

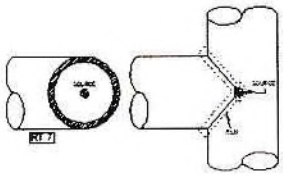

Tech #RT-7: Mitered "T" Joint - Single Wall - Source centered Exposures as required: *QA Subsection 15.12.11*

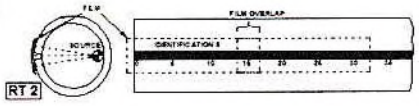

Tech #RT-2: Long. Weld - Light Wall – Source Inside
1 Exposure/15 inches: *QA Subsection 15.12.2*

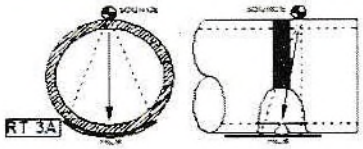

Tech #RT-3A: Circ. Weld – Contact – Heavy Wall
4 Exposures@90° Spacing: *QA Subsection 15.12.7*

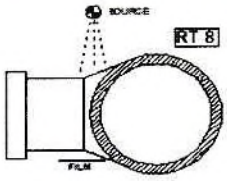

Tech #RT-8:Category "D" Weld
Exposures as required: *QA Subsection 15.12.12*

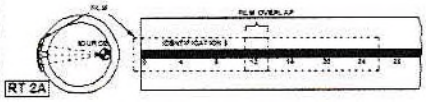

Tech #RT-2A: Long. Weld - Heavy Wall – Source Inside
1 Exposure/12 inches: *QA Subsection 15.12.3*

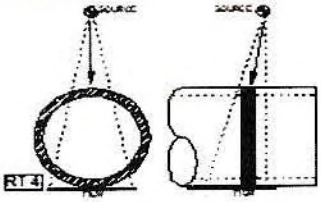

Tech #RT-4: Circ. Weld – Dbl Wall – Elipse
2 Exposures@90° Spacing: QA Subsection 15.12.8

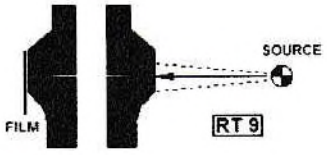

Tech #RT-9: Gap Check
1 Exposure: *QA Subsection 15.12.13*



Tech #RT-2B: Long. Weld – Light Wall – Source Outside
1 Exposure/15 inches: *QA Subsection 15.12.4*

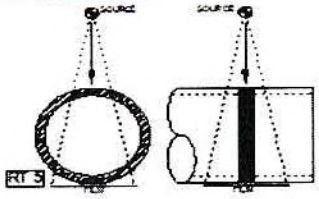

Tech #RT-5: Circ. Weld – Double Wall – Superimposed
3 Exposures@60° Spacing: QA Subsection 15.12.9

Penetrameter (IQI) Reference

1. ASTM A
2. ASTM B
3. ASTM C
4. FEEN/EN-462

5. DIN/EN-462 Set/Size 1 (Wire range 1 - 7)
6. DIN/EN 462 Set/Size 6 (Wire range 6 - 12)
7. DIN/EN-462 Set/Size 10 (Wire range 10 - 16)
8. DIN/EN-462 Set/Size 13 (Wire range 13 - 19)

9. Hole Type: Indicate IQI Designation Number



Tech #RT-2C: Long. Weld – Heavy Wall – Source Outside
1 Exposure/12 inches: *QA Subsection 15.12.5*

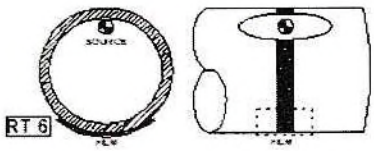

Tech #RT-6: Circumferential Weld - Source not Centered
Exposures as required: *QA Subsection 15.12.10*

IMPORTANT INFORMATION:

Scope of Services & Limits of Liability:

All Can Inspection Services (2011) Inc. does not warranty or imply warranty of services stated herein and shall not be held liable for services rendered as per established service agreements. At no time shall liability be placed upon All Can Inspection Services (2011) Inc. of which exceeds the amount paid for said services.

All Can Inspection Services shall utilize appropriate quality assurance measures, technical training, and safety parameters to assure services are provided to meet or exceed established NDE procedures, Practices and industry expectations and at no time shall warranty excess NDE services except those established in writing beyond those established prior to the services provided herein.

ALL CAN INSPECTION SERVICES (2011) INC.

Report # G2616

9323-37 Avenue, NW, Edmonton, Alberta T6E 5N4
SHOP: 780-462-1072 OFFICE: 780-462-9797 FAX: 780-462-4564
EMAIL: shop@allcaninspection.com www.allcaninspection.com

Client:	Sub Arc Systems	Client Job #	Coupon
Address:	17 Exploration Way, Devon	P.O. #	Toby
Contact: Name:	Toby	Date:	Aug 1/17
Phone:			
Work Location:	All Can Inspection Shop	Work Description:	Joe Niederhoff

CODES
1. ASME B31.3 N/S
2. ASME B31.3 S/C
3. ASME Sec. VIII Div 1 UW51
4. ASME Sec. VIII Div. 1 UW52
5. CSA Z662
6. CSA Z662 (Sour)
7. API 650
8. ASME IX (QW-191.2)

LF - Lack of Fusion; IP - Incomplete Penetration; IC - Internal Concavity; BT - Burn Through; TI - Tungsten Inclusion; IU: Internal Undercut; EU: External Undercut; EP - Excessive Penetration; P - Porosity; S - Slag; HL - High-Low; C - Crack; AB - Arc Burn; HB - Hollow Bead

Severity: 1 = Slight, 2 = Medium, 3 = Severe (Reject)

NDE No:	Size & thickness Plus Code Max. reinforcement	Material	Code (1 - 8)	IQI (See Back)	Technique Number (See Back)	Source Side of Object to Film Distance (inches)	Source to Object Distance (inches)	Number of Exposures	Welder ID	Discontinuity	Severity (1 - 3)	Accept (√)	Reject (x)
SAW 2G - Retest	5/8" Spot	P1	8	2	RT-2	0.750	25.000	1	J.NI			√	

RT Technician: Gordon Thomas CGSB Level: 2 Reg. #: 6 SNT-TC-1A Level: NI SNT-TC-1A No: 6
RT Assistant # 1 CEDO #: SNT-TC-1A Level: SNT-TC-1A No:
RT Assistant # 2 CEDO #: SNT-TC-1A Level: SNT-TC-1A No:

IMPORTANT: See reverse side of this form for All Can Inspection Services (2011) Inc. LIMITED LIABILITY POLICY

Technician Signature — Date: Aug 1/17

Client Representative Signature — Evaluation Date

The above interpretation is a technical opinion, not a guarantee.
Client signature indicates acceptance of the report and results.

Clock tape marker and start arrow marked on weldment.
It is the customer's responsibility to map welds on drawings.

Film Make / Brand	AGFA	Film Class / Type:	I-D5
Screens Lead	Front 0.010"	Back 0.010"	One (no.) film per screen
Film Density in H & D:	Min. 2.0	Max. 4.0	
Penetrometer (IQI hole type) designation:	N/A	Recommended Max. U.G.:	0.20"
Source Isotope:	IRIDIUM-192 (Gamma)	Wall Viewing:	Single
Effective Focal Spot Size:	0.146 inches	Processing:	Automatic

RADIOGRAPHIC EXAMINATION REPORT

ALL CAN INSPECTION SERVICES (2011) INC.

Report # G2615

9323-37 Avenue, NW, Edmonton, Alberta T6E 5N4
SHOP: 780-462-1072 OFFICE: 780-462-9797 FAX: 780-462-4664
EMAIL: shop@allcaninspection.com www.allcaninspection.com

Client:	Sub Arc Systems	Client Job #	Coupon
Address:	17 Exploration Way, Devon	P.O. #	Toby
Contact: Name:	Toby	Date:	Aug 1/17
Phone:			
Work Location:	All Can Inspection Shop	Work Description:	Matt Mackenzie

CODES
1. ASME B31.3 N/S
2. ASME B31.3 S/C
3. ASME Sec. VIII Div 1 UW51
4. ASME Sec. VIII Div. 1 UW52
5. CSA Z662
6. CSA Z662 (Sour)
7. API 650
8. ASME IX (QW-191.2)

LF - Lack of Fusion; IP - Incomplete Penetration; IC - Internal Concavity; BT - Burn Through; TI - Tungsten Inclusion; IU: Internal Undercut; EU: External Undercut; EP - Excessive Penetration; P - Porosity; S - Slag; HL - High-Low; C - Crack; AB - Arc Burn; HB - Hollow Bead

Severity: 1 = Slight, 2 = Medium, 3 = Severe (Reject)

NDE No:	Size & thickness Plus Code Max. reinforcement	Material	Code (1 - 8)	IQI (See Back)	Technique Number (See Back)	Source Side of Object to Film Distance (Inches)	Source to Object Distance (Inches)	Number of Exposures	Welder ID	Discontinuity	Severity (1 - 3)	Accept (√)	Reject (X)
SAW 2G	5/8" Spot	P1	8	2	RT-2	0.750	25.000	1	M.MA			√	

RT Technician: Gordon Thomas CGSB Level: 2 Reg. #: 6 SNT-TC-1A Level: III SNT-TC-1A No: 6
RT Assistant # 1 CEDO #: SNT-TC-1A Level: SNT-TC-1A No:
RT Assistant # 2 CEDO #: SNT-TC-1A Level: SNT-TC-1A No:

IMPORTANT: See reverse side of this form for All Can Inspection Services (2011) Inc. LIMITED LIABILITY POLICY

Technician Signature — Date: Aug 1/17

Client Representative Signature — Evaluation Date

The above interpretation is a technical opinion, not a guarantee.
Client signature indicates acceptance of the report and results.

Clock tape marker and start arrow marked on weldment.
It is the customer's responsibility to map welds on drawings.

Film Make / Brand	AGFA	Film Class / Type:	1-D5
Screens Lead	Front 0.010"	Back 0.010"	One (no.) film per screen
Film Density in H & D:	Min. 2.0	Max. 4.0	
Penetrometer (IQI hole type) designation:	N/A	Recommended Max. U.G.:	0.20"
Source Isotope:	IRIDIUM-192 (Gamma)	Wall Viewing:	Single
Effective Focal Spot Size:	0.146 inches	Processing:	Automatic

RADIOGRAPHIC EXAMINATION REPORT

ALL CAN INSPECTION SERVICES (2011) INC.

Report # G2614

9323-37 Avenue, NW, Edmonton, Alberta T6E 5N4
SHOP: 780-462-1072 OFFICE: 780-462-9797 FAX: 780-462-4664
EMAIL: shop@allcaninspection.com www.allcaninspection.com

Client:	**Sub Arc Systems**	Client Job #	**Coupon**
Address:	17 Exploration Way, Devon	P.O. #	**Toby**
Contact: Name:	Toby	Date:	**Aug 1/17**
Phone:			
Work Location:	All Can Inspection Shop	Work Description:	Mitch Gouligier

CODES
1. ASME B31.3 N/S
2. ASME B31.3 S/C
3. ASME Sec. VIII Div 1 UW51
4. ASME Sec. VIII Div. 1 UW52
5. CSA Z662
6. CSA Z662 (Sour)
7. API 650
8. ASME IX (QW-191.2)

LF - Lack of Fusion; IP - Incomplete Penetration; IC - Internal Concavity; BT - Burn Through; TI - Tungsten Inclusion; IU: Internal Undercut; EU: External Undercut; EP - Excessive Penetration; P - Porosity; S - Slag; HL - High-Low; C - Crack; AB - Arc Burn; HB - Hollow Bead

Severity: 1 = Slight, 2 = Medium, 3 = Severe (Reject)

NDE No:	Size & thickness Plus Code Max. reinforcement	Material	Code	IQI	Technique Number	Source Side of Object to Film Distance	Source to Object Distance	Number of Exposures	Welder ID	Discontinuity	Severity	Accept	Reject
			1 - 8	See Back	See Back	Inches	Inches				1 - 3	√	X
SAW 2G	5/8" Spot	P1	8	2	RT-2	0.750	25.000	1	M.GO			√	

RT Technician: Gordon Thomas CGSB Level: 2 Reg. #: 6 SNT-TC-1A Level: III SNT-TC-1A No: 6
RT Assistant # 1 CEDO #: SNT-TC-1A Level: SNT-TC-1A No:
RT Assistant # 2 CEDO #: SNT-TC-1A Level: SNT-TC-1A No:

IMPORTANT: See reverse side of this form for All Can Inspection Services (2011) Inc. LIMITED LIABILITY POLICY

Technician Signature — Date: Aug 1/17

Client Representative Signature — Evaluation Date

The above interpretation is a technical opinion, not a guarantee.
Client signature indicates acceptance of the report and results.

Clock tape marker and start arrow marked on weldment.
It is the customer's responsibility to map welds on drawings.

Film Make / Brand	AGFA	Film Class / Type:	1-D5
Screens Lead	Front 0.010"	Back 0.010"	One (no.) film per screen
Film Density in H & D:	Min. 2.0	Max. 4.0	
Penetrometer (IQI hole type) designation:	N/A	Recommended Max. U.G.:	0.20"
Source Isotope:	IRIDIUM-192 (Gamma)	Wall Viewing:	Single
Effective Focal Spot Size:	0.146 inches	Processing:	Automatic

RADIOGRAPHIC EXAMINATION REPORT

ALL CAN INSPECTION SERVICES (2011) INC.

Report # G2613

9323-37 Avenue, NW, Edmonton, Alberta T6E 5N4
SHOP: 780-462-1072 OFFICE: 780-462-9797 FAX: 780-462-4664
EMAIL: shop@allcaninspection.com www.allcaninspection.com

Client:	**Sub Arc Systems**	Client Job #	**Coupon**
Address:	17 Exploration Way, Devon	P.O. #	**Toby**
Contact: Name:	Toby	Date:	**Aug 1/17**
Phone:			
Work Location:	All Can Inspection Shop	Work Description:	Chris Jaques

CODES
1. ASME B31.3 N/S
2. ASME B31.3 S/C
3. ASME Sec. VIII Div 1 UW51
4. ASME Sec. VIII Div. 1 UW52
5. CSA Z662
6. CSA Z662 (Sour)
7. API 650
8. ASME IX (QW-191.2)

LF - Lack of Fusion; IP - Incomplete Penetration; IC - Internal Concavity; BT - Burn Through; TI - Tungsten Inclusion; IU: Internal Undercut; EU: External Undercut; EP - Excessive Penetration; P - Porosity; S - Slag; HL - High-Low; C - Crack; AB - Arc Burn; HB - Hollow Bead

Severity: 1 = Slight, 2 = Medium, 3 = Severe (Reject)

NDE No:	Size & thickness Plus Code Max. reinforcement	Material	Code (1 - 8)	IQI (See Back)	Technique Number (See Back)	Source Side of Object to Film Distance (inches)	Source to Object Distance (inches)	Number of Exposures	Welder ID	Discontinuity	Severity (1 - 3)	Accept (Y)	Reject (X)
SAW 2G	5/8" Spot	P1	8	2	RT-2	0.750	25.000	1	CJA			V	

RT Technician: Gordon Thomas CGSB Level: 2 Reg. #: 6 SNT-TC-1A Level: III SNT-TC-1A No: 6

RT Assistant # 1 CEDO #: SNT-TC-1A Level: SNT-TC-1A No:

RT Assistant # 2 CEDO #: SNT-TC-1A Level: SNT-TC-1A No:

IMPORTANT: See reverse side of this form for All Can Inspection Services (2011) Inc. LIMITED LIABILITY POLICY

Technician Signature — Date: Aug 1/17

Client Representative Signature — Evaluation Date

The above interpretation is a technical opinion, not a guarantee.
Client signature indicates acceptance of the report and results.

Clock tape marker and start arrow marked on weldment.
It is the customer's responsibility to map welds on drawings.

Film Make / Brand	AGFA	Film Class / Type:	1-D5
Screens Lead	Front 0.010"	Back 0.010"	One (no.) film per screen
Film Density in H & D:	Min. 2.0	Max. 4.0	
Penetrameter (IQI hole type) designation:	N/A	Recommended Max. U.G.:	0.20"
Source Isotope:	IRIDIUM-192 (Gamma)	Wall Viewing:	Single
Effective Focal Spot Size:	0.146 inches	Processing:	Automatic

RADIOGRAPHIC EXAMINATION REPORT

ALL CAN INSPECTION SERVICES (2011) INC.

Report # G2575

9323-37 Avenue, NW, Edmonton, Alberta T6E 5N4
SHOP: 780-462-1072 OFFICE: 780-462-9797 FAX: 780-462-4664
EMAIL: shop@allcaninspection.com www.allcaninspection.com

Client:	Sub Arc Systems	Client Job #	Welder Coupons
Address:	17 Exploration Way, Devon	P.O. #	Toby
Contact: Name:	Toby	Date:	July 26/17
Phone:			
Work Location:	All Can Inspection Shop	Work Description:	M.TV

CODES
1. ASME B31.3 N/S
2. ASME B31.3 S/C
3. ASME Sec. VIII Div 1 UW51
4. ASME Sec. VIII Div. 1 UW52
5. CSA Z662
6. CSA Z662 (Sour)
7. API 650
8. ASME IX (QW-191.2)

LF - Lack of Fusion; IP - Incomplete Penetration; IC - Internal Concavity; BT - Burn Through; TI - Tungsten Inclusion; IU: Internal Undercut; EU: External Undercut; EP - Excessive Penetration; P - Porosity; S - Slag; HL - High-Low; C - Crack; AB - Arc Burn; HB - Hollow Bead

Severity: 1 = Slight, 2 = Medium, 3 = Severe (Reject)

NDE No:	Size & thickness Plus Code Max. reinforcement	Material	Code	IQI	Technique Number	Source Side of Object to Film Distance	Source to Object Distance	Number of Exposures	Welder ID	Discontinuity	Severity	Accept	Reject
			1 - 8	See Back	See Back	Inches	Inches				1 - 3	√	X
2G SAW SAS 1	5/8" SPOT	P1	8	2	RT-2	0.750	25.000	1	M.TU			√	

RT Technician: Gordon Thomas — CGSB Level: 2 — Reg. #: 6 — SNT-TC-1A Level: III — SNT-TC-1A No: 6
RT Assistant # 1: Adele Kezama — CEDO #: 18988 — SNT-TC-1A Level: II — SNT-TC-1A No: 18988
RT Assistant # 2: — CEDO #: — SNT-TC-1A Level: — SNT-TC-1A No:

IMPORTANT: See reverse side of this form for All Can Inspection Services (2011) Inc. LIMITED LIABILITY POLICY

Technician Signature — Date: July 26/17

Client Representative Signature — Evaluation Date:

The above interpretation is a technical opinion, not a guarantee.
Client signature indicates acceptance of the report and results.

Clock tape marker and start arrow marked on weldment.
It is the customer's responsibility to map welds on drawings.

Film Make / Brand	AGFA	Film Class / Type:	1-D5
Screens Lead	Front 0.010"	Back 0.010"	One (no.) film per screen
Film Density in H & D:	Min. 2.0	Max. 4.0	
Penetrometer (IQI hole type) designation:	N/A	Recommended Max. U.G.:	0.20"
Source Isotope:	IRIDIUM-192 (Gamma)	Wall Viewing:	Single
Effective Focal Spot Size:	0.146 inches	Processing:	Automatic

RADIOGRAPHIC EXAMINATION REPORT

ALL CAN INSPECTION SERVICES (2011) INC.

Report # G2574

9323-37 Avenue, NW, Edmonton, Alberta T6E 5N4
SHOP: 780-462-1072 OFFICE: 780-462-9797 FAX: 780-462-4664
EMAIL: shop@allcaninspection.com www.allcaninspection.com

Client:	**Sub Arc Systems**	Client Job #	**Welder Coupons**
Address:	17 Exploration Way, Devon	P.O. #	**Toby**
Contact: Name:	Toby	Date:	**July 26/17**
Phone:			
Work Location:	All Can Inspection Shop	Work Description:	J.OV

CODES
1. ASME B31.3 N/S
2. ASME B31.3 S/C
3. ASME Sec. VIII Div 1 UW51
4. ASME Sec. VIII Div. 1 UW52
5. CSA Z662
6. CSA Z662 (Sour)
7. API 650
8. ASME IX (QW-191.2)

LF - Lack of Fusion; IP - Incomplete Penetration; IC - Internal Concavity; BT - Burn Through; TI - Tungsten Inclusion; IU: Internal Undercut; EU: External Undercut; EP - Excessive Penetration; P - Porosity; S - Slag; HL - High-Low; C - Crack; AB - Arc Burn; HB - Hollow Bead

Severity: 1 = Slight, 2 = Medium, 3 = Severe (Reject)

NDE No:	Size & thickness Plus Code Max. reinforcement	Material	Code	IQI	Technique Number	Source Side of Object to Film Distance	Source to Object Distance	Number of Exposures	Welder ID	Discontinuity	Severity	Accept	Reject
			1 - 8	See Back	See Back	Inches	Inches				1 - 3	√	X
2G SAW SAS 1	5/8" SPOT	P1	8	2	RT-2	0.750	25.000	1	J.OV			√	

RT Technician: Gordon Thomas CGSB Level: 2 Reg. #: 6 SNT-TC-1A Level: III SNT-TC-1A No: 6

RT Assistant # 1: Adele Kezama CEDO #: 18988 SNT-TC-1A Level: II SNT-TC-1A No: 18988

RT Assistant # 2: CEDO #: SNT-TC-1A Level: SNT-TC-1A No:

IMPORTANT: See reverse side of this form for All Can Inspection Services (2011) Inc. LIMITED LIABILITY POLICY

Technician Signature — Date: July 26/17

Client Representative Signature — Evaluation Date

The above interpretation is a technical opinion, not a guarantee. Client signature indicates acceptance of the report and results.

Clock tape marker and start arrow marked on weldment.
It is the customer's responsibility to map welds on drawings.

Film Make / Brand	AGFA	Film Class / Type:	1-D5
Screens Lead	Front 0.010"	Back 0.010"	One (no.) film per screen
Film Density in H & D:	Min. 2.0	Max. 4.0	
Penetrometer (IQI hole type) designation:	N/A	Recommended Max. U.G.:	0.20"
Source Isotope:	IRIDIUM-192 (Gamma)	Wall Viewing:	Single
Effective Focal Spot Size:	0.146 inches	Processing:	Automatic

RADIOGRAPHIC EXAMINATION REPORT

ALL CAN INSPECTION SERVICES (2011) INC.

Report # G2573

9323-37 Avenue, NW, Edmonton, Alberta T6E 5N4
SHOP: 780-462-1072 OFFICE: 780-462-9797 FAX: 780-462-4664
EMAIL: shop@allcaninspection.com www.allcaninspection.com

Client:	Sub Arc Systems	Client Job #	Welder Coupons
Address:	17 Exploration Way, Devon	P.O. #	Toby
Contact: Name:	Toby	Date:	July 26/17
Phone:			
Work Location:	All Can Inspection Shop	Work Description:	J.Ni

CODES
1. ASME B31.3 N/S
2. ASME B31.3 S/C
3. ASME Sec. VIII Div 1 UW51
4. ASME Sec. VIII Div. 1 UW52
5. CSA Z662
6. CSA Z662 (Sour)
7. API 650
8. ASME IX (QW-191.2)

LF - Lack of Fusion; IP - Incomplete Penetration; IC - Internal Concavity; BT - Burn Through; TI - Tungsten Inclusion; IU: Internal Undercut; EU: External Undercut; EP - Excessive Penetration; P - Porosity; S - Slag; HL - High-Low; C - Crack; AB - Arc Burn; HB - Hollow Bead

Severity: 1 = Slight, 2 = Medium, 3 = Severe (Reject)

NDE No:	Size & thickness Plus Code Max. reinforcement	Material	Code	IQI	Technique Number	Source Side of Object to Film Distance	Source to Object Distance	Number of Exposures	Welder ID	Discontinuity	Severity	Accept	Reject
			1 - 8	See Back	See Back	Inches	Inches				1 - 3	√	X
2G SMAW-SAS 1	5/8" SPOT	P1	8	2	RT-2	0.750	25.000	1	J.Ni	(P @ 2" & 6"(ok)) S @ 0"-1"	3		X
3G SMAW-SAS 1	5/8" SPOT	P1	8	2	RT-2	0.750	25.000	1	J.Ni			√	
4G SMAW-SAS 1	5/8" SPOT	P1	8	2	RT-2	0.750	25.000	1	J.Ni	P @ 0"	1	√	

RT Technician:	Gordon Thomas	CGSB Level: 2	Reg. # : 6	SNT-TC-1A Level:	III	SNT-TC-1A No:	6
RT Assistant # 1	Adele Kezama	CEDO #:	18988	SNT-TC-1A Level:	II	SNT-TC-1A No:	18988
RT Assistant # 2		CEDO #:		SNT-TC-1A Level:		SNT-TC-1A No:	

IMPORTANT: See reverse side of this form for All Can Inspection Services (2011) Inc. LIMITED LIABILITY POLICY

Technician Signature — Date: July 26/17

Client Representative Signature — Evaluation Date

The above interpretation is a technical opinion, not a guarantee.
Client signature indicates acceptance of the report and results.
Clock tape marker and start arrow marked on weldment.
It is the customer's responsibility to map welds on drawings.

Film Make / Brand	AGFA	Film Class / Type:	1-D5
Screens Lead	Front 0.010"	Back 0.010"	One (no.) film per screen
Film Density in H & D:	Min. 2.0	Max. 4.0	
Penetrometer (IQI hole type) designation:	N/A	Recommended Max. U.G.:	0.20"
Source Isotope:	IRIDIUM-192 (Gamma)	Wall Viewing:	Single
Effective Focal Spot Size:	0.146 inches	Processing:	Automatic

RADIOGRAPHIC EXAMINATION REPORT

ALL CAN INSPECTION SERVICES (2011) INC.

Report # G2572

9323-37 Avenue, NW, Edmonton, Alberta T6E 5N4
SHOP: 780-462-1072 OFFICE: 780-462-9797 FAX: 780-462-4664
EMAIL: shop@allcaninspection.com www.allcaninspection.com

Client:	Sub Arc Systems	Client Job #	Welder Coupons
Address:	17 Exploration Way, Devon	P.O. #	Toby
Contact: Name:	Toby	Date:	July 26/17
Phone:			
Work Location:	All Can Inspection Shop	Work Description:	K.WR

CODES
1. ASME B31.3 N/S
2. ASME B31.3 S/C
3. ASME Sec. VIII Div 1 UW51
4. ASME Sec. VIII Div. 1 UW52
5. CSA Z662
6. CSA Z662 (Sour)
7. API 650
8. ASME IX (QW-191.2)

NDE No:	Size & thickness Plus Code Max. reinforcement	Material	Code (1 - 8)	IQI (See Back)	Technique Number (See Back)	Source Side of Object to Film Distance (Inches)	Source to Object Distance (Inches)	Number of Exposures	Welder ID	Discontinuity	Severity (1 - 3)	Accept (√)	Reject (x)
2G SMAW-SAS 1	5/8" SPOT	P1	8	2	RT-2	0.750	25.000	1	K.WR			√	
3G SMAW-SAS 1	5/8" SPOT	P1	8	2	RT-2	0.750	25.000	1	K.WR			√	
4G SMAW-SAS 1	5/8" SPOT	P1	8	2	RT-2	0.750	25.000	1	K.WR			√	
2G SAW	5/8" SPOT	P1	8	2	RT-2	0.750	25.000	1	K.WR			√	

LF - Lack of Fusion
IP - Incomplete Penetration
IC - Internal Concavity
BT - Burn Through
TI - Tungsten Inclusion
IU: Internal Undercut
EU: External Undercut
EP - Excessive Penetration
P - Porosity
S - Slag
HL - High-Low
C - Crack
AB - Arc Burn
HB - Hollow Bead

Severity: 1 = Slight, 2 = Medium, 3 = Severe (Reject)

RT Technician:	Gordon Thomas	CGSB Level:	2	Reg. # :	6	SNT-TC-1A Level: III	SNT-TC-1A No: 6
RT Assistant # 1	Adele Kezama	CEDO #:	18988			SNT-TC-1A Level: II	SNT-TC-1A No: 18988
RT Assistant # 2		CEDO #:				SNT-TC-1A Level:	SNT-TC-1A No:

IMPORTANT: See reverse side of this form for All Can Inspection Services (2011) Inc. LIMITED LIABILITY POLICY

Technician Signature — Date: July 26/17

Client Representative Signature — Evaluation Date

The above interpretation is a technical opinion, not a guarantee.
Client signature indicates acceptance of the report and results.

Clock tape marker and start arrow marked on weldment.
It is the customer's responsibility to map welds on drawings.

Film Make / Brand	AGFA	Film Class / Type:	1-D5
Screens Lead	Front 0.010"	Back 0.010"	One (no.) film per screen
Film Density in H & D:	Min. 2.0	Max. 4.0	
Penetrometer (IQI hole type) designation:	N/A	Recommended Max. U.G.:	0.20"
Source Isotope:	IRIDIUM-192 (Gamma)	Wall Viewing:	Single
Effective Focal Spot Size:	0.146 inches	Processing:	Automatic

RADIOGRAPHIC EXAMINATION REPORT

ALL CAN INSPECTION SERVICES (2011) INC.

Report # G2571

9323-37 Avenue, NW, Edmonton, Alberta T6E 5N4
SHOP: 780-462-1072 OFFICE: 780-462-9797 FAX: 780-462-4664
EMAIL: shop@allcaninspection.com www.allcaninspection.com

Client:	Sub Arc Systems	Client Job #	Welder Coupons
Address:	17 Exploration Way, Devon	P.O. #	Toby
Contact: Name:	Toby	Date:	July 26/17
Phone:			
Work Location:	All Can Inspection Shop	Work Description:	T.MO

CODES
1. ASME B31.3 N/S
2. ASME B31.3 S/C
3. ASME Sec. VIII Div 1 UW51
4. ASME Sec. VIII Div. 1 UW52
5. CSA Z662
6. CSA Z662 (Sour)
7. API 650
8. ASME IX (QW-191.2)

NDE No:	Size & thickness Plus Code Max. reinforcement	Material	Code	IQI	Technique Number	Source Side of Object to Film Distance	Source to Object Distance	Number of Exposures	Welder ID	Severity: 1 = Slight, 2 = Medium, 3 = Severe (Reject) Discontinuity	Severity	Accept	Reject
			1 - 8	See Back	See Back	Inches	Inches				1 - 3	√	X
2G SMAW-SAS 1	5/8" SPOT	P1	8	2	RT-2	0.750	25.000	1	T.MO			√	
3G SMAW-SAS 1	5/8" SPOT	P1	8	2	RT-2	0.750	25.000	1	T.MO			√	
4G SMAW-SAS 1	5/8" SPOT	P1	8	2	RT-2	0.750	25.000	1	T.MO			√	

LF - Lack of Fusion
IP - Incomplete Penetration
IC - Internal Concavity
BT - Burn Through
TI - Tungsten Inclusion
IU: Internal Undercut
EU: External Undercut
EP - Excessive Penetration
P - Porosity
S - Slag
HL - High-Low
C - Crack
AB - Arc Burn
HB - Hollow Bead

RT Technician: Gordon Thomas CGSB Level: 2 Reg. #: 6 SNT-TC-1A Level: III SNT-TC-1A No: 6
RT Assistant # 1 Adele Kezama CEDO #: 18988 SNT-TC-1A Level: II SNT-TC-1A No: 18988
RT Assistant # 2 CEDO #: SNT-TC-1A Level: SNT-TC-1A No:

IMPORTANT: See reverse side of this form for All Can Inspection Services (2011) Inc. LIMITED LIABILITY POLICY

Technician Signature — Date: July 26/17

Client Representative Signature — Evaluation Date

The above interpretation is a technical opinion, not a guarantee.
Client signature indicates acceptance of the report and results.
Clock tape marker and start arrow marked on weldment.
It is the customer's responsibility to map welds on drawings.

Film Make / Brand	AGFA	Film Class / Type:	I-D5
Screens Lead	Front 0.010"	Back 0.010"	One (no.) film per screen
Film Density in H & D:	Min. 2.0	Max. 4.0	
Penetrometer (IQI hole type) designation:	N/A	Recommended Max. U.G.:	0.20"
Source Isotope:	IRIDIUM-192 (Gamma)	Wall Viewing:	Single
Effective Focal Spot Size:	0.146 inches	Processing:	Automatic

RADIOGRAPHIC EXAMINATION REPORT

ALL CAN INSPECTION SERVICES (2011) INC.

Report # G2570

9323-37 Avenue, NW, Edmonton, Alberta T6E 5N4
SHOP: 780-462-1072 OFFICE: 780-462-9797 FAX: 780-462-4664
EMAIL: shop@allcaninspection.com www.allcaninspection.com

Client: **Sub Arc Systems** Client Job # **Welder Coupons**

Address: 17 Exploration Way, Devon P.O. # **Toby**

Contact: Name: Toby Date: **July 26/17**

Phone:

Work Location: All Can Inspection Shop Work Description: J.Hi

CODES
1. ASME B31.3 N/S
2. ASME B31.3 S/C
3. ASME Sec. VIII Div 1 UW51
4. ASME Sec. VIII Div. 1 UW52
5. CSA Z662
6. CSA Z662 (Sour)
7. API 650
8. ASME IX (QW-191.2)

NDE No:	Size & thickness Plus Code Max. reinforcement	Material	Code	IQI	Technique Number	Source Side of Object to Film Distance	Source to Object Distance	Number of Exposures	Welder ID	Discontinuity	Severity	Accept	Reject
			1 - 8	See Back	See Back	Inches	Inches				1 - 3	√	x
2G SMAW-SAS 1	5/8" SPOT	P1	8	2	RT-2	0.750	25.000	1	J.Hi			√	
3G SMAW-SAS 1	5/8" SPOT	P1	8	2	RT-2	0.750	25.000	1	J.Hi			√	
4G SMAW-SAS 1	5/8" SPOT	P1	8	2	RT-2	0.750	25.000	1	J.Hi			√	

LF - Lack of Fusion; IP - Incomplete Penetration; IC - Internal Concavity; BT - Burn Through; TI - Tungsten Inclusion; IU: Internal Undercut; EU: External Undercut; EP - Excessive Penetration; P - Porosity; S - Slag; HL - High-Low; C - Crack; AB - Arc Burn; HB - Hollow Bead

Severity: 1 = Slight, 2 = Medium, 3 = Severe (Reject)

RT Technician: Gordon Thomas CGSB Level: 2 Reg. # : 6 SNT-TC-1A Level: III SNT-TC-1A No: 6

RT Assistant # 1 Adele Kezama CEDO #: 18988 SNT-TC-1A Level: II SNT-TC-1A No: 18988

RT Assistant # 2 CEDO #: SNT-TC-1A Level: SNT-TC-1A No:

IMPORTANT: See reverse side of this form for All Can Inspection Services (2011) Inc. LIMITED LIABILITY POLICY

Technician Signature July 26/17 Date

Client Representative Signature Evaluation Date

The above interpretation is a technical opinion, not a guarantee.
Client signature indicates acceptance of the report and results.

Clock tape marker and start arrow marked on weldment.
It is the customer's responsibility to map welds on drawings.

Film Make / Brand: AGFA Film Class / Type: I-D5

Screens: Lead Front: 0.010" Back: 0.010" One (no.) film per screen

Film Density in H & D: Min. 2.0 Max. 4.0

Penetrometer (IQI hole type) designation: N/A Recommended Max. U.G.: 0.20"

Source Isotope: IRIDIUM-192 (Gamma) Wall Viewing: Single

Effective Focal Spot Size: 0.146 inches Processing: Automatic

RADIOGRAPHIC EXAMINATION REPORT

ALL CAN INSPECTION SERVICES (2011) INC.

Report # G2779

9323-37 Avenue, NW, Edmonton, Alberta T6E 5N4
SHOP: 780-462-1072 **OFFICE:** 780-462-9797 **FAX:** 780-462-4664
EMAIL: shop@allcaninspection.com **www.allcaninspection.com**

Client: **Sub Arc Systems** Client Job # **Welder Coupons**

Address: 17 Exploration Way, Devon P.O. # **Sebastian**

Contact: Name: Sebastian Date: **May 22/18**

Phone:

Work Location: All Can Inspection Shop Work Description: L.MA

CODES
1. ASME B31.3 N/S
2. ASME B31.3 S/C
3. ASME Sec. VIII Div 1 UW51
4. ASME Sec. VIII Div. 1 UW52
5. CSA Z662
6. CSA Z662 (Sour)
7. API 650
8. Other:

LF - Lack of Fusion; IP - Incomplete Penetration; IC - Internal Concavity; BT - Burn Through; TI - Tungsten Inclusion; IU: Internal Undercut; EU: External Undercut; EP - Excessive Penetration; P - Porosity; S - Slag; HL - High-Low; C - Crack; AB - Arc Burn; HB - Hollow Bead

Severity: 1 = Slight, 2 = Medium, 3 = Severe (Reject)

NDE No:	Size & thickness Plus Code Max. reinforcement	Material	Code	IQI	Technique Number	Source Side of Object to Film Distance	Source to Object Distance	Number of Exposures	Welder ID	Discontinuity	Severity	Accept	Reject
			1 - 8	See Back	See Back	inches	inches				1 - 3	√	X
2G SMAW	5/8" SPOT	P1	7	2	RT-2	0.750	25.000	1	L.MA			√	
3G SMAW	5/8" SPOT	P1	7	2	RT-2	0.750	25.000	1	L.MA	P @ 1"	1	√	
4G SMAW	5/8" SPOT	P1	7	2	RT-2	0.750	25.000	1	L.MA			√	

RT Technician: Gordon Thomas CGSB Level: 2 Reg. # : 6 SNT-TC-1A Level: III SNT-TC-1A No: 6

RT Assistant # 1 Ken Brunlees CEDO #: 15425 SNT-TC-1A Level: II SNT-TC-1A No: 15425

RT Assistant # 2 CEDO #: SNT-TC-1A Level: SNT-TC-1A No:

IMPORTANT: See reverse side of this form for All Can Inspection Services (2011) Inc. LIMITED LIABILITY POLICY

Technician Signature — Date: May 22/18

Client Representative Signature — Evaluation Date

The above interpretation is a technical opinion, not a guarantee.
Client signature indicates acceptance of the report and results.

Clock tape marker and start arrow marked on weldment.
It is the customer's responsibility to map welds on drawings.

Film Make / Brand: AGFA Film Class / Type: 1-D5

Screens Lead: Front 0.010" Back 0.010" One (no.) film per screen

Film Density in H & D: Min. 2.0 Max. 4.0

Penetrometer (IQI hole type) designation: N/A Recommended Max. U.G.: 0.20"

Source Isotope: IRIDIUM-192 (Gamma) Wall Viewing: Single

Effective Focal Spot Size: 0.146 inches Processing: Automatic

RADIOGRAPHIC EXAMINATION REPORT

ALL CAN INSPECTION SERVICES (2011) INC.

Report # G2339

9323-37 Avenue, NW, Edmonton, Alberta T6E 5N4
SHOP: 780-462-1072 OFFICE: 780-462-9797 FAX: 780-462-4664
EMAIL: shop@allcaninspection.com www.allcaninspection.com

Client:	Sub Arc Systems	Client Job #	Welder Coupons
Address:	17 Exploration Way, Devon	P.O. #	Toby
Contact: Name:	Toby	Date:	June 21/17
Phone:			
Work Location:	All Can Inspection Shop	Work Description:	C.JA

CODES
1. ASME B31.3 N/S
2. ASME B31.3 S/C
3. ASME Sec. VIII Div 1 UW51
4. ASME Sec. VIII Div. 1 UW52
5. CSA Z662
6. CSA Z662 (Sour)
7. API 650
8. Other:

NDE No:	Size & thickness Plus Code Max. reinforcement	Material	Code	IQI	Technique Number	Source Side of Object to Film Distance	Source to Object Distance	Number of Exposures	Welder ID	Discontinuity	Severity	Accept	Reject
			1 - 8	See Back	See Back	Inches	Inches				1 - 3	√	X
2G SMAW	5/8" SPOT	P1	7	2	RT-2	0.750	25.000	1	C.JA			√	
3G SMAW	5/8" SPOT	P1	7	2	RT-2	0.750	25.000	1	C.JA			√	
4G SMAW	5/8" SPOT	P1	7	2	RT-2	0.750	25.000	1	C.JA	P @ 0" & 7"	1	√	

LF - Lack of Fusion; IP - Incomplete Penetration; IC - Internal Concavity; BT - Burn Through; TI - Tungsten Inclusion; IU: Internal Undercut; EU: External Undercut; EP - Excessive Penetration; P - Porosity; S - Slag; HL - High-Low; C - Crack; AB - Arc Burn; HB - Hollow Bead

Severity: 1 = Slight, 2 = Medium, 3 = Severe (Reject)

RT Technician:	Gordon Thomas	CGSB Level:	2	Reg. # :	6	SNT-TC-1A Level:	III	SNT-TC-1A No:	6
RT Assistant # 1	Victoria Sarnecki	CEDO #:	21927			SNT-TC-1A Level:	I	SNT-TC-1A No:	21927
RT Assistant # 2		CEDO #:				SNT-TC-1A Level:		SNT-TC-1A No:	

IMPORTANT: See reverse side of this form for All Can Inspection Services (2011) Inc. LIMITED LIABILITY POLICY

Technician Signature — June 21/17 Date

Client Representative Signature — Evaluation Date

The above interpretation is a technical opinion, not a guarantee.
Client signature indicates acceptance of the report and results.

Clock tape marker and start arrow marked on weldment.
It is the customer's responsibility to map welds on drawings.

Film Make / Brand	AGFA	Film Class / Type:	1-D5
Screens Lead	Front 0.010"	Back 0.010"	One (no.) film per screen
Film Density in H & D:	Min. 2.0	Max. 4.0	
Penetrometer (IQI hole type) designation:	N/A	Recommended Max. U.G.:	0.20"
Source Isotope:	IRIDIUM-192 (Gamma)	Wall Viewing:	Single
Effective Focal Spot Size:	0.146 inches	Processing:	Automatic

RADIOGRAPHIC EXAMINATION REPORT

ALL CAN INSPECTION SERVICES (2011) INC.

Report # G2340

9323-37 Avenue, NW, Edmonton, Alberta T6E 5N4
SHOP: 780-462-1072 OFFICE: 780-462-9797 FAX: 780-462-4664
EMAIL: shop@allcaninspection.com www.allcaninspection.com

Client:	**Sub Arc Systems**	Client Job #	**Welder Coupons**
Address:	17 Exploration Way, Devon	P.O. #	**Toby**
Contact: Name:	Toby	Date:	**June 21/17**
Phone:			
Work Location:	All Can Inspection Shop	Work Description:	J.OV

CODES
1. ASME B31.3 N/S
2. ASME B31.3 S/C
3. ASME Sec. VIII Div 1 UW51
4. ASME Sec. VIII Div. 1 UW52
5. CSA Z662
6. CSA Z662 (Sour)
7. API 650
8. Other:

LF - Lack of Fusion; IP - Incomplete Penetration; IC - Internal Concavity; BT - Burn Through; TI - Tungsten Inclusion; IU: Internal Undercut; EU: External Undercut; EP - Excessive Penetration; P - Porosity; S - Slag; HL - High-Low; C - Crack; AB - Arc Burn; HB - Hollow Bead

Severity: 1 = Slight, 2 = Medium, 3 = Severe (Reject)

NDE No:	Size & thickness Plus Code Max. reinforcement	Material	Code (1 - 8)	IQI (See Back)	Technique Number (See Back)	Source Side of Object to Film Distance (inches)	Source to Object Distance (inches)	Number of Exposures	Welder ID	Discontinuity	Severity (1 - 3)	Accept (√)	Reject (X)
2G SMAW	5/8" SPOT	P1	7	2	RT-2	0.750	25.000	1	J.OV	S & P @ 0", P @ 1 1/2" & 6"	2	√	
3G SMAW	5/8" SPOT	P1	7	2	RT-2	0.750	25.000	1	J.OV			√	
4G SMAW	5/8" SPOT	P1	7	2	RT-2	0.750	25.000	1	J.OV			√	

RT Technician:	Gordon Thomas	CGSB Level:	2	Reg. # :	6	SNT-TC-1A Level:	III	SNT-TC-1A No:	6
RT Assistant # 1	Victoria Sarnecki			CEDO #:	21927	SNT-TC-1A Level:	I	SNT-TC-1A No:	21927
RT Assistant # 2				CEDO #:		SNT-TC-1A Level:		SNT-TC-1A No:	

IMPORTANT: See reverse side of this form for All Can Inspection Services (2011) Inc. LIMITED LIABILITY POLICY

Technician Signature — June 21/17 Date

Client Representative Signature — Evaluation Date

The above interpretation is a technical opinion, not a guarantee.
Client signature indicates acceptance of the report and results.

Clock tape marker and start arrow marked on weldment.
It is the customer's responsibility to map welds on drawings.

Film Make / Brand	AGFA	Film Class / Type:	1-D5
Screens Lead	Front 0.010"	Back 0.010"	One (no.) film per screen
Film Density in H & D:	Min. 2.0	Max. 4.0	
Penetrometer (IQI hole type) designation:	N/A	Recommended Max. U.G.:	0.20"
Source Isotope:	IRIDIUM-192 (Gamma)	Wall Viewing:	Single
Effective Focal Spot Size:	0.146 inches	Processing:	Automatic

RADIOGRAPHIC EXAMINATION REPORT

ALL CAN INSPECTION SERVICES (2011) INC.

Report # G2341

9323-37 Avenue, NW, Edmonton, Alberta T6E 5N4
SHOP: 780-462-1072 OFFICE: 780-462-9797 FAX: 780-462-4664
EMAIL: shop@allcaninspection.com www.allcaninspection.com

Client: **Sub Arc Systems** Client Job # **Welder Coupons**
Address: 17 Exploration Way, Devon P.O. # **Toby**
Contact: Name: Toby Date: **June 21/17**
Phone:
Work Location: All Can Inspection Shop Work Description: M.GO

CODES
1. ASME B31.3 N/S
2. ASME B31.3 S/C
3. ASME Sec. VIII Div 1 UW51
4. ASME Sec. VIII Div. 1 UW52
5. CSA Z662
6. CSA Z662 (Sour)
7. API 650
8. Other:

NDE No:	Size & thickness Plus Code Max. reinforcement	Material	Code	IQI	Technique Number	Source Side of Object to Film Distance	Source to Object Distance	Number of Exposures	Welder ID	Discontinuity	Severity	Accept	Reject
			1 - 8	See Back	See Back	Inches	Inches			LF - Lack of Fusion; IP - Incomplete Penetration; IC - Internal Concavity; BT - Burn Through; TI - Tungsten Inclusion; IU: Internal Undercut; EU: External Undercut; EP - Excessive Penetration; P - Porosity; S - Slag; HL - High-Low; C - Crack; AB - Arc Burn; HB - Hollow Bead. **Severity:** 1 = Slight, 2 = Medium, 3 = Severe (Reject)	1 - 3	√	X
2G SMAW	5/8" SPOT	P1	7	2	RT-2	0.750	25.000	1	M.GO	IU @ 1", IC @ 2" & 6"	1	√	
3G SMAW	5/8" SPOT	P1	7	2	RT-2	0.750	25.000	1	M.GO	P @ 4"	1	√	
4G SMAW	5/8" SPOT	P1	7	2	RT-2	0.750	25.000	1	M.GO	P @ 0"	1	√	

RT Technician: Gordon Thomas CGSB Level: 2 Reg. # : 6 SNT-TC-1A Level: III SNT-TC-1A No: 6
RT Assistant # 1 Victoria Sarnecki CEDO #: 21927 SNT-TC-1A Level: I SNT-TC-1A No: 21927
RT Assistant # 2 CEDO #: SNT-TC-1A Level: SNT-TC-1A No:

IMPORTANT: See reverse side of this form for All Can Inspection Services (2011) Inc. LIMITED LIABILITY POLICY

Technician Signature — Date: June 21/17

Client Representative Signature — Evaluation Date

The above interpretation is a technical opinion, not a guarantee.
Client signature indicates acceptance of the report and results.

Clock tape marker and start arrow marked on weldment.
It is the customer's responsibility to map welds on drawings.

Film Make / Brand: AGFA Film Class / Type: 1-D5
Screens Lead: Front 0.010" Back 0.010" One (no.) film per screen
Film Density in H & D: Min. 2.0 Max. 4.0
Penetrometer (IQI hole type) designation: N/A Recommended Max. U.G.: 0.20"
Source Isotope: IRIDIUM-192 (Gamma) Wall Viewing: Single
Effective Focal Spot Size: 0.146 inches Processing: Automatic

RADIOGRAPHIC EXAMINATION REPORT

ALL CAN INSPECTION SERVICES (2011) INC.

Report # G2342

9323-37 Avenue, NW, Edmonton, Alberta T6E 5N4
SHOP: 780-462-1072 OFFICE: 780-462-9797 FAX: 780-462-4664
EMAIL: shop@allcaninspection.com www.allcaninspection.com

Client: **Sub Arc Systems** Client Job # **Welder Coupons**
Address: 17 Exploration Way, Devon P.O. # **Toby**
Contact: Name: Toby Date: **June 21/17**
Phone:
Work Location: All Can Inspection Shop Work Description: M.TU

CODES
1. ASME B31.3 N/S
2. ASME B31.3 S/C
3. ASME Sec. VIII Div 1 UW51
4. ASME Sec. VIII Div. 1 UW52
5. CSA Z662
6. CSA Z662 (Sour)
7. API 650
8. Other:

LF - Lack of Fusion; IP - Incomplete Penetration; IC - Internal Concavity; BT - Burn Through; TI - Tungsten Inclusion; IU: Internal Undercut; EU: External Undercut; EP - Excessive Penetration; P - Porosity; S - Slag; HL - High-Low; C - Crack; AB - Arc Burn; HB - Hollow Bead
Severity: 1 = Slight, 2 = Medium, 3 = Severe (Reject)

NDE No:	Size & thickness Plus Code Max. reinforcement	Material	Code	IQI	Technique Number	Source Side of Object to Film Distance	Source to Object Distance	Number of Exposures	Welder ID	Discontinuity	Severity	Accept	Reject
			1 - 8	See Back	See Back	Inches	Inches				1 - 3	√	X
2G SMAW	5/8" SPOT	P1	7	2	RT-2	0.750	25.000	1	M.TU	P @ 0"	1	√	
3G SMAW	5/8" SPOT	P1	7	2	RT-2	0.750	25.000	1	M.TU			√	
4G SMAW	5/8" SPOT	P1	7	2	RT-2	0.750	25.000	1	M.TU	S @ 1" & 2", P @ 5"	2	√	

RT Technician: Gordon Thomas CGSB Level: 2 Reg. # : 6 SNT-TC-1A Level: III SNT-TC-1A No: 6
RT Assistant # 1 Victoria Sarnecki CEDO #: 21927 SNT-TC-1A Level: I SNT-TC-1A No: 21927
RT Assistant # 2 CEDO #: SNT-TC-1A Level: SNT-TC-1A No:

IMPORTANT: See reverse side of this form for All Can Inspection Services (2011) Inc. LIMITED LIABILITY POLICY

Technician Signature — June 21/17 Date

Client Representative Signature — Evaluation Date

The above interpretation is a technical opinion, not a guarantee.
Client signature indicates acceptance of the report and results.

Clock tape marker and start arrow marked on weldment.
It is the customer's responsibility to map welds on drawings.

Film Make / Brand: AGFA Film Class / Type: 1-D5
Screens: Lead Front: 0.010" Back: 0.010" One (no.) film per screen
Film Density in H & D: Min. 2.0 Max. 4.0
Penetrometer (IQI hole type) designation: N/A Recommended Max. U.G.: 0.20"
Source Isotope: IRIDIUM-192 (Gamma) Wall Viewing: Single
Effective Focal Spot Size: 0.146 inches Processing: Automatic

RADIOGRAPHIC EXAMINATION REPORT

ALL CAN INSPECTION SERVICES (2011) INC.

Report # G2343

9323-37 Avenue, NW, Edmonton, Alberta T6E 5N4
SHOP: 780-462-1072 OFFICE: 780-462-9797 FAX: 780-462-4664
EMAIL: shop@allcaninspection.com www.allcaninspection.com

Client:	Sub Arc Systems	Client Job #	Welder Coupons
Address:	17 Exploration Way, Devon	P.O. #	Toby
Contact: Name:	Toby	Date:	June 21/17
Phone:			
Work Location:	All Can Inspection Shop	Work Description:	M.MA

CODES
1. ASME B31.3 N/S
2. ASME B31.3 S/C
3. ASME Sec. VIII Div 1 UW51
4. ASME Sec. VIII Div. 1 UW52
5. CSA Z662
6. CSA Z662 (Sour)
7. API 650
8. Other:

NDE No:	Size & thickness Plus Code Max. reinforcement	Material	Code	IQI	Technique Number	Source Side of Object to Film Distance	Source to Object Distance	Number of Exposures	Welder ID	Discontinuity (LF - Lack of Fusion; IP - Incomplete Penetration; IC - Internal Concavity; BT - Burn Through; TI - Tungsten Inclusion; IU: Internal Undercut; EU: External Undercut; EP - Excessive Penetration; P - Porosity; S - Slag; HL - High-Low; C - Crack; AB - Arc Burn; HB - Hollow Bead) Severity: 1 = Slight, 2 = Medium, 3 = Severe (Reject)	Severity	Accept	Reject
			1 - 8	See Back	See Back	Inches	Inches				1 - 3	√	X
2G SMAW	5/8" SPOT	P1	7	2	RT-2	0.750	25.000	1	M.MA			√	
3G SMAW	5/8" SPOT	P1	7	2	RT-2	0.750	25.000	1	M.MA			√	
4G SMAW	5/8" SPOT	P1	7	2	RT-2	0.750	25.000	1	M.MA	EU @ 2"	1	√	

RT Technician:	Gordon Thomas	CGSB Level:	2	Reg. # :	6	SNT-TC-1A Level:	III
SNT-TC-1A No:	6						
RT Assistant # 1	Victoria Sarnecki	CEDO #:	21927	SNT-TC-1A Level:	I	SNT-TC-1A No:	21927
RT Assistant # 2		CEDO #:		SNT-TC-1A Level:		SNT-TC-1A No:	

IMPORTANT: See reverse side of this form for All Can Inspection Services (2011) Inc. LIMITED LIABILITY POLICY

Technician Signature — Date: June 21/17

Client Representative Signature — Evaluation Date

The above interpretation is a technical opinion, not a guarantee.
Client signature indicates acceptance of the report and results.

Clock tape marker and start arrow marked on weldment.
It is the customer's responsibility to map welds on drawings.

Film Make / Brand	AGFA	Film Class / Type:	I-D5
Screens Lead	Front 0.010"	Back 0.010"	One (no.) film per screen
Film Density in H & D:	Min. 2.0	Max. 4.0	
Penetrometer (IQI hole type) designation:	N/A	Recommended Max. U.G.:	0.20"
Source Isotope:	IRIDIUM-192 (Gamma)	Wall Viewing:	Single
Effective Focal Spot Size:	0.146 inches	Processing:	Automatic

RADIOGRAPHIC EXAMINATION REPORT

ALL CAN INSPECTION SERVICES (2011) INC.

Report # G2344

9323-37 Avenue, NW, Edmonton, Alberta T6E 5N4
SHOP: 780-462-1072 OFFICE: 780-462-9797 FAX: 780-462-4664
EMAIL: shop@allcaninspection.com www.allcaninspection.com

Client:	**Sub Arc Systems**	Client Job #	**Welder Coupons**
Address:	17 Exploration Way, Devon	P.O. #	**Toby**
Contact: Name:	Toby	Date:	**June 21/17**
Phone:			
Work Location:	All Can Inspection Shop	Work Description:	Q.PO

CODES
1. ASME B31.3 N/S
2. ASME B31.3 S/C
3. ASME Sec. VIII Div 1 UW51
4. ASME Sec. VIII Div. 1 UW52
5. CSA Z662
6. CSA Z662 (Sour)
7. API 650
8. Other:

NDE No:	Size & thickness Plus Code Max. reinforcement	Material	Code	IQI	Technique Number	Source Side of Object to Film Distance	Source to Object Distance	Number of Exposures	Welder ID	LF - Lack of Fusion; IP - Incomplete Penetration; IC - Internal Concavity; BT - Burn Through; TI - Tungsten Inclusion; IU: Internal Undercut; EU: External Undercut; EP - Excessive Penetration; P - Porosity; S - Slag; HL - High-Low; C - Crack; AB - Arc Burn; HB - Hollow Bead. **Severity:** 1 = Slight, 2 = Medium, 3 = Severe (Reject) — Discontinuity	Severity	Accept	Reject
			1 - 8	See Back	See Back	Inches	Inches				1 - 3	√	x
2G SMAW	5/8" SPOT	P1	7	2	RT-2	0.750	25.000	1	Q.PO	IU @ 1", 2" & 6"	2	√	
3G SMAW	5/8" SPOT	P1	7	2	RT-2	0.750	25.000	1	Q.PO			√	
4G SMAW	5/8" SPOT	P1	7	2	RT-2	0.750	25.000	1	Q.PO			√	

RT Technician:	Gordon Thomas	CGSB Level:	2	Reg. # :	6	SNT-TC-1A Level:	III	SNT-TC-1A No:	6
RT Assistant # 1	Victoria Sarnecki	CEDO #:	21927			SNT-TC-1A Level:	I	SNT-TC-1A No:	21927
RT Assistant # 2		CEDO #:				SNT-TC-1A Level:		SNT-TC-1A No:	

IMPORTANT: See reverse side of this form for All Can Inspection Services (2011) Inc. LIMITED LIABILITY POLICY

Technician Signature — Date: June 21/17

Client Representative Signature — Evaluation Date

The above interpretation is a technical opinion, not a guarantee.
Client signature indicates acceptance of the report and results.

Clock tape marker and start arrow marked on weldment.
It is the customer's responsibility to map welds on drawings.

Film Make / Brand	AGFA	Film Class / Type:	1-D5
Screens Lead	Front 0.010"	Back 0.010"	One (no.) film per screen
Film Density in H & D:	Min. 2.0	Max. 4.0	
Penetrometer (IQI hole type) designation:	N/A	Recommended Max. U.G.:	0.20"
Source Isotope:	IRIDIUM-192 (Gamma)	Wall Viewing:	Single
Effective Focal Spot Size:	0.146 inches	Processing:	Automatic

RADIOGRAPHIC EXAMINATION REPORT

ALL CAN INSPECTION SERVICES (2011) INC.

Report # G2345

9323-37 Avenue, NW, Edmonton, Alberta T6E 5N4
SHOP: 780-462-1072 OFFICE: 780-462-9797 FAX: 780-462-4664
EMAIL: shop@allcaninspection.com www.allcaninspection.com

Client: **Sub Arc Systems** Client Job # **Welder Coupons**

Address: 17 Exploration Way, Devon P.O. # **Toby**

Contact: Name: Toby Date: **June 21/17**

Phone:

Work Location: All Can Inspection Shop Work Description: D.ZU

CODES
1. ASME B31.3 N/S
2. ASME B31.3 S/C
3. ASME Sec. VIII Div 1 UW51
4. ASME Sec. VIII Div. 1 UW52
5. CSA Z662
6. CSA Z662 (Sour)
7. API 650
8. Other:

NDE No:	Size & thickness Plus Code Max. reinforcement	Material	Code	IQI	Technique Number	Source Side of Object to Film Distance	Source to Object Distance	Number of Exposures	Welder ID	Discontinuity (LF - Lack of Fusion; IP - Incomplete Penetration; IC - Internal Concavity; BT - Burn Through; TI - Tungsten Inclusion; IU: Internal Undercut; EU: External Undercut; EP - Excessive Penetration; P - Porosity; S - Slag; HL - High-Low; C - Crack; AB - Arc Burn; HB - Hollow Bead) Severity: 1 = Slight, 2 = Medium, 3 = Severe (Reject)	Severity	Accept	Reject
			1 - 8	See Back	See Back	inches	inches				1 - 3	√	x
2G SMAW	5/8" SPOT	P1	7	2	RT-2	0.750	25.000	1	D.ZU			√	
3G SMAW	5/8" SPOT	P1	7	2	RT-2	0.750	25.000	1	D.ZU			√	
4G SMAW	5/8" SPOT	P1	7	2	RT-2	0.750	25.000	1	D.ZU			√	

RT Technician: Gordon Thomas CGSB Level: 2 Reg. # : 6 SNT-TC-1A Level: III SNT-TC-1A No: 6

RT Assistant # 1 Victoria Sarnecki CEDO #: 21927 SNT-TC-1A Level: I SNT-TC-1A No: 21927

RT Assistant # 2 CEDO #: SNT-TC-1A Level: SNT-TC-1A No:

IMPORTANT: See reverse side of this form for All Can Inspection Services (2011) Inc. LIMITED LIABILITY POLICY

Technician Signature June 21/17 Date

Client Representative Signature Evaluation Date

The above interpretation is a technical opinion, not a guarantee.
Client signature indicates acceptance of the report and results.

Clock tape marker and start arrow marked on weldment.
It is the customer's responsibility to map welds on drawings.

Film Make / Brand AGFA Film Class / Type: 1-D5

Screens Lead Front 0.010" Back 0.010" One (no.) film per screen

Film Density in H & D: Min. 2.0 Max. 4.0

Penetrometer (IQI hole type) designation: N/A Recommended Max. U.G.: 0.20"

Source Isotope: IRIDIUM-192 (Gamma) Wall Viewing: Single

Effective Focal Spot Size: 0.146 inches Processing: Automatic

RADIOGRAPHIC EXAMINATION REPORT

ALL CAN INSPECTION SERVICES (2011) INC.

Report # G2346

9323-37 Avenue, NW, Edmonton, Alberta T6E 5N4
SHOP: 780-462-1072 OFFICE: 780-462-9797 FAX: 780-462-4664
EMAIL: shop@allcaninspection.com www.allcaninspection.com

Client:	Sub Arc Systems	Client Job #	Welder Coupons
Address:	17 Exploration Way, Devon	P.O. #	Toby
Contact: Name:	Toby	Date:	June 21/17
Phone:			
Work Location:	All Can Inspection Shop	Work Description:	D.ZE

CODES
1. ASME B31.3 N/S
2. ASME B31.3 S/C
3. ASME Sec. VIII Div 1 UW51
4. ASME Sec. VIII Div. 1 UW52
5. CSA Z662
6. CSA Z662 (Sour)
7. API 650
8. Other:

LF - Lack of Fusion; IP - Incomplete Penetration; IC - Internal Concavity; BT - Burn Through; TI - Tungsten Inclusion; IU: Internal Undercut; EU: External Undercut; EP - Excessive Penetration; P - Porosity; S - Slag; HL - High-Low; C - Crack; AB - Arc Burn; HB - Hollow Bead

Severity: 1 = Slight, 2 = Medium, 3 = Severe (Reject)

NDE No:	Size & thickness Plus Code Max. reinforcement	Material	Code	IQI	Technique Number	Source Side of Object to Film Distance	Source to Object Distance	Number of Exposures	Welder ID	Discontinuity	Severity	Accept	Reject
			1 - 8	See Back	See Back	inches	inches				1 - 3	√	X
2G SMAW	5/8" SPOT	P1	7	2	RT-2	0.750	25.000	1	D.ZE	P @ 0"	1	√	
3G SMAW	5/8" SPOT	P1	7	2	RT-2	0.750	25.000	1	D.ZE			√	
4G SMAW	5/8" SPOT	P1	7	2	RT-2	0.750	25.000	1	D.ZE			√	

RT Technician:	Gordon Thomas	CGSB Level:	2	Reg. #:	6	SNT-TC-1A Level:	III	SNT-TC-1A No:	6
RT Assistant # 1	Victoria Sarnecki	CEDO #:	21927			SNT-TC-1A Level:	I	SNT-TC-1A No:	21927
RT Assistant # 2		CEDO #:				SNT-TC-1A Level:		SNT-TC-1A No:	

IMPORTANT: See reverse side of this form for All Can Inspection Services (2011) Inc. LIMITED LIABILITY POLICY

Technician Signature — Date: June 21/17

Client Representative Signature — Evaluation Date

The above interpretation is a technical opinion, not a guarantee.
Client signature indicates acceptance of the report and results.

Clock tape marker and start arrow marked on weldment.
It is the customer's responsibility to map welds on drawings.

Film Make / Brand	AGFA	Film Class / Type:	1-D5
Screens Lead	Front 0.010"	Back 0.010"	One (no.) film per screen
Film Density in H & D:	Min. 2.0	Max. 4.0	
Penetrometer (IQI hole type) designation:	N/A	Recommended Max. U.G.:	0.20"
Source Isotope:	IRIDIUM-192 (Gamma)	Wall Viewing:	Single
Effective Focal Spot Size:	0.146 inches	Processing:	Automatic

RADIOGRAPHIC EXAMINATION REPORT

RADIOGRAPHIC EXAMINATION TECHNIQUE REFERENCE SHEET

ALL CAN INSPECTION SERVICES (2011) INC. RT TECHNIQUES
ALL CAN **INSPECTION SERVICES (2011) INC. GENERAL RT PROCEDURE**
Important Note: Always check the QA/Procedures Manual for the most current Procedure Revision status.

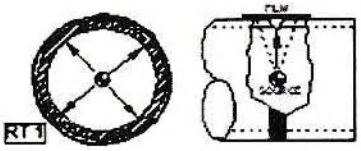

Tech #RT-1: Vessel Circumferential Weld
1 Exposure: QA Subsection 15.12.1

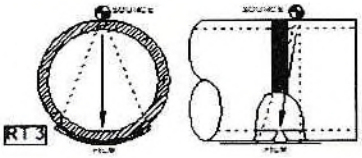

Tech #RT-3: Circ. Weld – Contact – Light Wall
3 Exposures@120° Spacing: QA Subsection 15.12.6

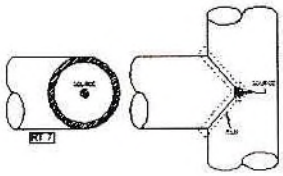

Tech #RT-7: Mitered "T" Joint - Single Wall - Source centered Exposures as required: *QA Subsection 15.12.11*

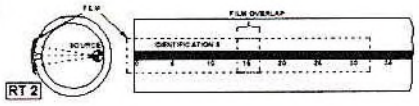

Tech #RT-2: Long. Weld - Light Wall – Source Inside
1 Exposure/15 inches: *QA Subsection 15.12.2*

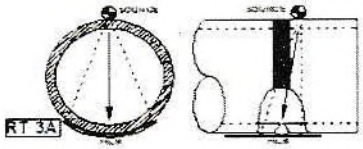

Tech #RT-3A: Circ. Weld – Contact – Heavy Wall
4 Exposures@90° Spacing: *QA Subsection 15.12.7*

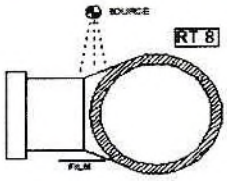

Tech #RT-8:Category "D" Weld
Exposures as required: *QA Subsection 15.12.12*

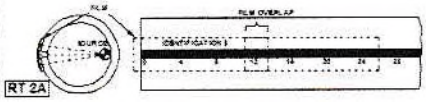

Tech #RT-2A: Long. Weld - Heavy Wall – Source Inside
1 Exposure/12 inches: *QA Subsection 15.12.3*

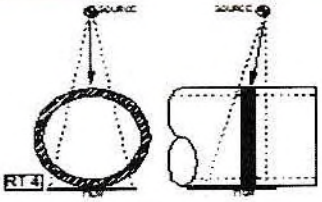

Tech #RT-4: Circ. Weld – Dbl Wall – Elipse
2 Exposures@90° Spacing: QA Subsection 15.12.8

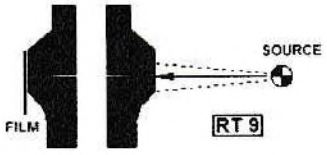

Tech #RT-9: Gap Check
1 Exposure: *QA Subsection 15.12.13*



Tech #RT-2B: Long. Weld – Light Wall – Source Outside
1 Exposure/15 inches: *QA Subsection 15.12.4*

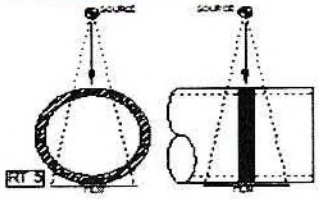

Tech #RT-5: Circ. Weld – Double Wall – Superimposed
3 Exposures@60° Spacing: QA Subsection 15.12.9

Penetrameter (IQI) Reference

1. ASTM A
2. ASTM B
3. ASTM C
4. FEEN/EN-462

5. DIN/EN-462 Set/Size 1 (Wire range 1 - 7)
6. DIN/EN 462 Set/Size 6 (Wire range 6 - 12)
7. DIN/EN-462 Set/Size 10 (Wire range 10 - 16)
8. DIN/EN-462 Set/Size 13 (Wire range 13 - 19)

9. Hole Type: Indicate IQI Designation Number



Tech #RT-2C: Long. Weld – Heavy Wall – Source Outside
1 Exposure/12 inches: *QA Subsection 15.12.5*

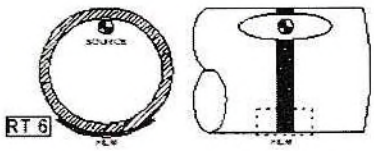

Tech #RT-6: Circumferential Weld - Source not Centered
Exposures as required: *QA Subsection 15.12.10*

IMPORTANT INFORMATION:

Scope of Services & Limits of Liability:

All Can Inspection Services (2011) Inc. does not warranty or imply warranty of services stated herein and shall not be held liable for services rendered as per established service agreements. At no time shall liability be placed upon All Can Inspection Services (2011) Inc. of which exceeds the amount paid for said services.

All Can Inspection Services shall utilize appropriate quality assurance measures, technical training, and safety parameters to assure services are provided to meet or exceed established NDE procedures, Practices and industry expectations and at no time shall warranty excess NDE services except those established in writing beyond those established prior to the services provided herein.

ALL CAN INSPECTION SERVICES (2011) INC.

Report # G2616

9323-37 Avenue, NW, Edmonton, Alberta T6E 5N4
SHOP: 780-462-1072 OFFICE: 780-462-9797 FAX: 780-462-4564
EMAIL: shop@allcaninspection.com www.allcaninspection.com

Client:	Sub Arc Systems	Client Job #	Coupon
Address:	17 Exploration Way, Devon	P.O. #	Toby
Contact: Name:	Toby	Date:	Aug 1/17
Phone:			
Work Location:	All Can Inspection Shop	Work Description:	Joe Niederhoff

CODES
1. ASME B31.3 N/S
2. ASME B31.3 S/C
3. ASME Sec. VIII Div 1 UW51
4. ASME Sec. VIII Div. 1 UW52
5. CSA Z662
6. CSA Z662 (Sour)
7. API 650
8. ASME IX (QW-191.2)

LF - Lack of Fusion; IP - Incomplete Penetration; IC - Internal Concavity; BT - Burn Through; TI - Tungsten Inclusion; IU: Internal Undercut; EU: External Undercut; EP - Excessive Penetration; P - Porosity; S - Slag; HL - High-Low; C - Crack; AB - Arc Burn; HB - Hollow Bead

Severity: 1 = Slight, 2 = Medium, 3 = Severe (Reject)

NDE No:	Size & thickness Plus Code Max. reinforcement	Material	Code (1 - 8)	IQI (See Back)	Technique Number (See Back)	Source Side of Object to Film Distance (inches)	Source to Object Distance (inches)	Number of Exposures	Welder ID	Discontinuity	Severity (1 - 3)	Accept (√)	Reject (x)
SAW 2G - Retest	5/8" Spot	P1	8	2	RT-2	0.750	25.000	1	J.NI			√	

RT Technician: Gordon Thomas CGSB Level: 2 Reg. #: 6 SNT-TC-1A Level: NI SNT-TC-1A No: 6
RT Assistant # 1 CEDO #: SNT-TC-1A Level: SNT-TC-1A No:
RT Assistant # 2 CEDO #: SNT-TC-1A Level: SNT-TC-1A No:

IMPORTANT: See reverse side of this form for All Can Inspection Services (2011) Inc. LIMITED LIABILITY POLICY

Technician Signature — Date: Aug 1/17

Client Representative Signature — Evaluation Date

The above interpretation is a technical opinion, not a guarantee.
Client signature indicates acceptance of the report and results.

Clock tape marker and start arrow marked on weldment.
It is the customer's responsibility to map welds on drawings.

Film Make / Brand	AGFA	Film Class / Type:	I-D5
Screens Lead	Front 0.010"	Back 0.010"	One (no.) film per screen
Film Density in H & D:	Min. 2.0	Max. 4.0	
Penetrometer (IQI hole type) designation:	N/A	Recommended Max. U.G.:	0.20"
Source Isotope:	IRIDIUM-192 (Gamma)	Wall Viewing:	Single
Effective Focal Spot Size:	0.146 inches	Processing:	Automatic

RADIOGRAPHIC EXAMINATION REPORT

ALL CAN INSPECTION SERVICES (2011) INC.

Report # G2615

9323-37 Avenue, NW, Edmonton, Alberta T6E 5N4
SHOP: 780-462-1072 OFFICE: 780-462-9797 FAX: 780-462-4664
EMAIL: shop@allcaninspection.com www.allcaninspection.com

Client:	Sub Arc Systems	Client Job #	Coupon
Address:	17 Exploration Way, Devon	P.O. #	Toby
Contact: Name:	Toby	Date:	Aug 1/17
Phone:			
Work Location:	All Can Inspection Shop	Work Description:	Matt Mackenzie

CODES
1. ASME B31.3 N/S
2. ASME B31.3 S/C
3. ASME Sec. VIII Div 1 UW51
4. ASME Sec. VIII Div. 1 UW52
5. CSA Z662
6. CSA Z662 (Sour)
7. API 650
8. ASME IX (QW-191.2)

LF - Lack of Fusion; IP - Incomplete Penetration; IC - Internal Concavity; BT - Burn Through; TI - Tungsten Inclusion; IU: Internal Undercut; EU: External Undercut; EP - Excessive Penetration; P - Porosity; S - Slag; HL - High-Low; C - Crack; AB - Arc Burn; HB - Hollow Bead

Severity: 1 = Slight, 2 = Medium, 3 = Severe (Reject)

NDE No:	Size & thickness Plus Code Max. reinforcement	Material	Code (1 - 8)	IQI (See Back)	Technique Number (See Back)	Source Side of Object to Film Distance (Inches)	Source to Object Distance (Inches)	Number of Exposures	Welder ID	Discontinuity	Severity (1 - 3)	Accept (√)	Reject (X)
SAW 2G	5/8" Spot	P1	8	2	RT-2	0.750	25.000	1	M.MA			√	

RT Technician: Gordon Thomas CGSB Level: 2 Reg. #: 6 SNT-TC-1A Level: III SNT-TC-1A No: 6
RT Assistant # 1 CEDO #: SNT-TC-1A Level: SNT-TC-1A No:
RT Assistant # 2 CEDO #: SNT-TC-1A Level: SNT-TC-1A No:

IMPORTANT: See reverse side of this form for All Can Inspection Services (2011) Inc. LIMITED LIABILITY POLICY

Technician Signature — Date: Aug 1/17

Client Representative Signature — Evaluation Date

The above interpretation is a technical opinion, not a guarantee.
Client signature indicates acceptance of the report and results.

Clock tape marker and start arrow marked on weldment.
It is the customer's responsibility to map welds on drawings.

Film Make / Brand	AGFA	Film Class / Type:	1-D5
Screens Lead	Front 0.010"	Back 0.010"	One (no.) film per screen
Film Density in H & D:	Min. 2.0	Max. 4.0	
Penetrometer (IQI hole type) designation:	N/A	Recommended Max. U.G.:	0.20"
Source Isotope:	IRIDIUM-192 (Gamma)	Wall Viewing:	Single
Effective Focal Spot Size:	0.146 inches	Processing:	Automatic

RADIOGRAPHIC EXAMINATION REPORT

ALL CAN INSPECTION SERVICES (2011) INC.

Report # G2614

9323-37 Avenue, NW, Edmonton, Alberta T6E 5N4
SHOP: 780-462-1072 OFFICE: 780-462-9797 FAX: 780-462-4664
EMAIL: shop@allcaninspection.com www.allcaninspection.com

Client:	**Sub Arc Systems**	Client Job #	**Coupon**
Address:	17 Exploration Way, Devon	P.O. #	**Toby**
Contact: Name:	Toby	Date:	**Aug 1/17**
Phone:			
Work Location:	All Can Inspection Shop	Work Description:	Mitch Gouligier

CODES
1. ASME B31.3 N/S
2. ASME B31.3 S/C
3. ASME Sec. VIII Div 1 UW51
4. ASME Sec. VIII Div. 1 UW52
5. CSA Z662
6. CSA Z662 (Sour)
7. API 650
8. ASME IX (QW-191.2)

LF - Lack of Fusion; IP - Incomplete Penetration; IC - Internal Concavity; BT - Burn Through; TI - Tungsten Inclusion; IU: Internal Undercut; EU: External Undercut; EP - Excessive Penetration; P - Porosity; S - Slag; HL - High-Low; C - Crack; AB - Arc Burn; HB - Hollow Bead

Severity: 1 = Slight, 2 = Medium, 3 = Severe (Reject)

NDE No:	Size & thickness Plus Code Max. reinforcement	Material	Code	IQI	Technique Number	Source Side of Object to Film Distance	Source to Object Distance	Number of Exposures	Welder ID	Discontinuity	Severity	Accept	Reject
			1 - 8	See Back	See Back	Inches	Inches				1 - 3	√	X
SAW 2G	5/8" Spot	P1	8	2	RT-2	0.750	25.000	1	M.GO			√	

RT Technician: Gordon Thomas CGSB Level: 2 Reg. #: 6 SNT-TC-1A Level: III SNT-TC-1A No: 6
RT Assistant # 1 CEDO #: SNT-TC-1A Level: SNT-TC-1A No:
RT Assistant # 2 CEDO #: SNT-TC-1A Level: SNT-TC-1A No:

IMPORTANT: See reverse side of this form for All Can Inspection Services (2011) Inc. LIMITED LIABILITY POLICY

Technician Signature — Date: Aug 1/17

Client Representative Signature — Evaluation Date

The above interpretation is a technical opinion, not a guarantee.
Client signature indicates acceptance of the report and results.

Clock tape marker and start arrow marked on weldment.
It is the customer's responsibility to map welds on drawings.

Film Make / Brand	AGFA	Film Class / Type:	1-D5
Screens Lead	Front 0.010"	Back 0.010"	One (no.) film per screen
Film Density in H & D:	Min. 2.0	Max. 4.0	
Penetrometer (IQI hole type) designation:	N/A	Recommended Max. U.G.:	0.20"
Source Isotope:	IRIDIUM-192 (Gamma)	Wall Viewing:	Single
Effective Focal Spot Size:	0.146 inches	Processing:	Automatic

RADIOGRAPHIC EXAMINATION REPORT

ALL CAN INSPECTION SERVICES (2011) INC.

Report # G2613

9323-37 Avenue, NW, Edmonton, Alberta T6E 5N4
SHOP: 780-462-1072 OFFICE: 780-462-9797 FAX: 780-462-4664
EMAIL: shop@allcaninspection.com www.allcaninspection.com

Client:	**Sub Arc Systems**	Client Job #	**Coupon**
Address:	17 Exploration Way, Devon	P.O. #	**Toby**
Contact: Name:	Toby	Date:	**Aug 1/17**
Phone:			
Work Location:	All Can Inspection Shop	Work Description:	Chris Jaques

CODES
1. ASME B31.3 N/S
2. ASME B31.3 S/C
3. ASME Sec. VIII Div 1 UW51
4. ASME Sec. VIII Div. 1 UW52
5. CSA Z662
6. CSA Z662 (Sour)
7. API 650
8. ASME IX (QW-191.2)

LF - Lack of Fusion; IP - Incomplete Penetration; IC - Internal Concavity; BT - Burn Through; TI - Tungsten Inclusion; IU: Internal Undercut; EU: External Undercut; EP - Excessive Penetration; P - Porosity; S - Slag; HL - High-Low; C - Crack; AB - Arc Burn; HB - Hollow Bead

Severity: 1 = Slight, 2 = Medium, 3 = Severe (Reject)

NDE No:	Size & thickness Plus Code Max. reinforcement	Material	Code (1 - 8)	IQI (See Back)	Technique Number (See Back)	Source Side of Object to Film Distance (inches)	Source to Object Distance (inches)	Number of Exposures	Welder ID	Discontinuity	Severity (1 - 3)	Accept (Y)	Reject (X)
SAW 2G	5/8" Spot	P1	8	2	RT-2	0.750	25.000	1	CJA			V	

RT Technician: Gordon Thomas CGSB Level: 2 Reg. #: 6 SNT-TC-1A Level: III SNT-TC-1A No: 6

RT Assistant # 1 CEDO #: SNT-TC-1A Level: SNT-TC-1A No:

RT Assistant # 2 CEDO #: SNT-TC-1A Level: SNT-TC-1A No:

IMPORTANT: See reverse side of this form for All Can Inspection Services (2011) Inc. LIMITED LIABILITY POLICY

Technician Signature — Date: Aug 1/17

Client Representative Signature — Evaluation Date

The above interpretation is a technical opinion, not a guarantee.
Client signature indicates acceptance of the report and results.

Clock tape marker and start arrow marked on weldment.
It is the customer's responsibility to map welds on drawings.

Film Make / Brand	AGFA	Film Class / Type:	1-D5
Screens Lead	Front 0.010"	Back 0.010"	One (no.) film per screen
Film Density in H & D:	Min. 2.0	Max. 4.0	
Penetrameter (IQI hole type) designation:	N/A	Recommended Max. U.G.:	0.20"
Source Isotope:	IRIDIUM-192 (Gamma)	Wall Viewing:	Single
Effective Focal Spot Size:	0.146 inches	Processing:	Automatic

RADIOGRAPHIC EXAMINATION REPORT

ALL CAN INSPECTION SERVICES (2011) INC.

Report # G2575

9323-37 Avenue, NW, Edmonton, Alberta T6E 5N4
SHOP: 780-462-1072 OFFICE: 780-462-9797 FAX: 780-462-4664
EMAIL: shop@allcaninspection.com www.allcaninspection.com

Client:	Sub Arc Systems	Client Job #	Welder Coupons
Address:	17 Exploration Way, Devon	P.O. #	Toby
Contact: Name:	Toby	Date:	July 26/17
Phone:			
Work Location:	All Can Inspection Shop	Work Description:	M.TV

CODES
1. ASME B31.3 N/S
2. ASME B31.3 S/C
3. ASME Sec. VIII Div 1 UW51
4. ASME Sec. VIII Div. 1 UW52
5. CSA Z662
6. CSA Z662 (Sour)
7. API 650
8. ASME IX (QW-191.2)

LF - Lack of Fusion; IP - Incomplete Penetration; IC - Internal Concavity; BT - Burn Through; TI - Tungsten Inclusion; IU: Internal Undercut; EU: External Undercut; EP - Excessive Penetration; P - Porosity; S - Slag; HL - High-Low; C - Crack; AB - Arc Burn; HB - Hollow Bead

Severity: 1 = Slight, 2 = Medium, 3 = Severe (Reject)

NDE No:	Size & thickness Plus Code Max. reinforcement	Material	Code	IQI	Technique Number	Source Side of Object to Film Distance	Source to Object Distance	Number of Exposures	Welder ID	Discontinuity	Severity	Accept	Reject
			1 - 8	See Back	See Back	Inches	Inches				1 - 3	√	X
2G SAW SAS 1	5/8" SPOT	P1	8	2	RT-2	0.750	25.000	1	M.TU			√	

RT Technician: Gordon Thomas — CGSB Level: 2 — Reg. #: 6 — SNT-TC-1A Level: III — SNT-TC-1A No: 6
RT Assistant # 1: Adele Kezama — CEDO #: 18988 — SNT-TC-1A Level: II — SNT-TC-1A No: 18988
RT Assistant # 2: — CEDO #: — SNT-TC-1A Level: — SNT-TC-1A No:

IMPORTANT: See reverse side of this form for All Can Inspection Services (2011) Inc. LIMITED LIABILITY POLICY

Technician Signature — Date: July 26/17

Client Representative Signature — Evaluation Date:

The above interpretation is a technical opinion, not a guarantee.
Client signature indicates acceptance of the report and results.

Clock tape marker and start arrow marked on weldment.
It is the customer's responsibility to map welds on drawings.

Film Make / Brand	AGFA	Film Class / Type:	1-D5
Screens Lead	Front 0.010"	Back 0.010"	One (no.) film per screen
Film Density in H & D:	Min. 2.0	Max. 4.0	
Penetrometer (IQI hole type) designation:	N/A	Recommended Max. U.G.:	0.20"
Source Isotope:	IRIDIUM-192 (Gamma)	Wall Viewing:	Single
Effective Focal Spot Size:	0.146 inches	Processing:	Automatic

RADIOGRAPHIC EXAMINATION REPORT

ALL CAN INSPECTION SERVICES (2011) INC.

Report # G2574

9323-37 Avenue, NW, Edmonton, Alberta T6E 5N4
SHOP: 780-462-1072 OFFICE: 780-462-9797 FAX: 780-462-4664
EMAIL: shop@allcaninspection.com www.allcaninspection.com

Client:	**Sub Arc Systems**	Client Job #	**Welder Coupons**
Address:	17 Exploration Way, Devon	P.O. #	**Toby**
Contact: Name:	Toby	Date:	**July 26/17**
Phone:			
Work Location:	All Can Inspection Shop	Work Description:	J.OV

CODES
1. ASME B31.3 N/S
2. ASME B31.3 S/C
3. ASME Sec. VIII Div 1 UW51
4. ASME Sec. VIII Div. 1 UW52
5. CSA Z662
6. CSA Z662 (Sour)
7. API 650
8. ASME IX (QW-191.2)

LF - Lack of Fusion; IP - Incomplete Penetration; IC - Internal Concavity; BT - Burn Through; TI - Tungsten Inclusion; IU: Internal Undercut; EU: External Undercut; EP - Excessive Penetration; P - Porosity; S - Slag; HL - High-Low; C - Crack; AB - Arc Burn; HB - Hollow Bead

Severity: 1 = Slight, 2 = Medium, 3 = Severe (Reject)

NDE No:	Size & thickness Plus Code Max. reinforcement	Material	Code	IQI	Technique Number	Source Side of Object to Film Distance	Source to Object Distance	Number of Exposures	Welder ID	Discontinuity	Severity	Accept	Reject
			1 - 8	See Back	See Back	Inches	Inches				1 - 3	√	X
2G SAW SAS 1	5/8" SPOT	P1	8	2	RT-2	0.750	25.000	1	J.OV			√	

RT Technician: Gordon Thomas CGSB Level: 2 Reg. #: 6 SNT-TC-1A Level: III SNT-TC-1A No: 6

RT Assistant # 1: Adele Kezama CEDO #: 18988 SNT-TC-1A Level: II SNT-TC-1A No: 18988

RT Assistant # 2: CEDO #: SNT-TC-1A Level: SNT-TC-1A No:

IMPORTANT: See reverse side of this form for All Can Inspection Services (2011) Inc. LIMITED LIABILITY POLICY

Technician Signature — Date: July 26/17

Client Representative Signature — Evaluation Date

The above interpretation is a technical opinion, not a guarantee. Client signature indicates acceptance of the report and results.

Clock tape marker and start arrow marked on weldment.
It is the customer's responsibility to map welds on drawings.

Film Make / Brand	AGFA	Film Class / Type:	1-D5
Screens Lead	Front 0.010"	Back 0.010"	One (no.) film per screen
Film Density in H & D:	Min. 2.0	Max. 4.0	
Penetrometer (IQI hole type) designation:	N/A	Recommended Max. U.G.:	0.20"
Source Isotope:	IRIDIUM-192 (Gamma)	Wall Viewing:	Single
Effective Focal Spot Size:	0.146 inches	Processing:	Automatic

RADIOGRAPHIC EXAMINATION REPORT

ALL CAN INSPECTION SERVICES (2011) INC.

Report # G2573

9323-37 Avenue, NW, Edmonton, Alberta T6E 5N4
SHOP: 780-462-1072 OFFICE: 780-462-9797 FAX: 780-462-4664
EMAIL: shop@allcaninspection.com www.allcaninspection.com

Client:	Sub Arc Systems	Client Job #	Welder Coupons
Address:	17 Exploration Way, Devon	P.O. #	Toby
Contact: Name:	Toby	Date:	July 26/17
Phone:			
Work Location:	All Can Inspection Shop	Work Description:	J.Ni

CODES
1. ASME B31.3 N/S
2. ASME B31.3 S/C
3. ASME Sec. VIII Div 1 UW51
4. ASME Sec. VIII Div. 1 UW52
5. CSA Z662
6. CSA Z662 (Sour)
7. API 650
8. ASME IX (QW-191.2)

LF - Lack of Fusion; IP - Incomplete Penetration; IC - Internal Concavity; BT - Burn Through; TI - Tungsten Inclusion; IU: Internal Undercut; EU: External Undercut; EP - Excessive Penetration; P - Porosity; S - Slag; HL - High-Low; C - Crack; AB - Arc Burn; HB - Hollow Bead

Severity: 1 = Slight, 2 = Medium, 3 = Severe (Reject)

NDE No:	Size & thickness Plus Code Max. reinforcement	Material	Code	IQI	Technique Number	Source Side of Object to Film Distance	Source to Object Distance	Number of Exposures	Welder ID	Discontinuity	Severity	Accept	Reject
			1 - 8	See Back	See Back	Inches	Inches				1 - 3	√	X
2G SMAW-SAS 1	5/8" SPOT	P1	8	2	RT-2	0.750	25.000	1	J.Ni	(P @ 2" & 6"(ok)) S @ 0"-1"	3		X
3G SMAW-SAS 1	5/8" SPOT	P1	8	2	RT-2	0.750	25.000	1	J.Ni			√	
4G SMAW-SAS 1	5/8" SPOT	P1	8	2	RT-2	0.750	25.000	1	J.Ni	P @ 0"	1	√	

RT Technician:	Gordon Thomas	CGSB Level: 2	Reg. # : 6	SNT-TC-1A Level:	III	SNT-TC-1A No:	6
RT Assistant # 1	Adele Kezama	CEDO #:	18988	SNT-TC-1A Level:	II	SNT-TC-1A No:	18988
RT Assistant # 2		CEDO #:		SNT-TC-1A Level:		SNT-TC-1A No:	

IMPORTANT: See reverse side of this form for All Can Inspection Services (2011) Inc. LIMITED LIABILITY POLICY

Technician Signature — Date: July 26/17

Client Representative Signature — Evaluation Date

The above interpretation is a technical opinion, not a guarantee.
Client signature indicates acceptance of the report and results.
Clock tape marker and start arrow marked on weldment.
It is the customer's responsibility to map welds on drawings.

Film Make / Brand	AGFA	Film Class / Type:	1-D5
Screens Lead	Front 0.010"	Back 0.010"	One (no.) film per screen
Film Density in H & D:	Min. 2.0	Max. 4.0	
Penetrometer (IQI hole type) designation:	N/A	Recommended Max. U.G.:	0.20"
Source Isotope:	IRIDIUM-192 (Gamma)	Wall Viewing:	Single
Effective Focal Spot Size:	0.146 inches	Processing:	Automatic

RADIOGRAPHIC EXAMINATION REPORT

ALL CAN INSPECTION SERVICES (2011) INC.

Report # G2572

9323-37 Avenue, NW, Edmonton, Alberta T6E 5N4
SHOP: 780-462-1072 OFFICE: 780-462-9797 FAX: 780-462-4664
EMAIL: shop@allcaninspection.com www.allcaninspection.com

Client:	Sub Arc Systems	Client Job #	Welder Coupons
Address:	17 Exploration Way, Devon	P.O. #	Toby
Contact: Name:	Toby	Date:	July 26/17
Phone:			
Work Location:	All Can Inspection Shop	Work Description:	K.WR

CODES
1. ASME B31.3 N/S
2. ASME B31.3 S/C
3. ASME Sec. VIII Div 1 UW51
4. ASME Sec. VIII Div. 1 UW52
5. CSA Z662
6. CSA Z662 (Sour)
7. API 650
8. ASME IX (QW-191.2)

NDE No:	Size & thickness Plus Code Max. reinforcement	Material	Code (1 - 8)	IQI (See Back)	Technique Number (See Back)	Source Side of Object to Film Distance (Inches)	Source to Object Distance (Inches)	Number of Exposures	Welder ID	Discontinuity	Severity (1 - 3)	Accept (√)	Reject (x)
2G SMAW-SAS 1	5/8" SPOT	P1	8	2	RT-2	0.750	25.000	1	K.WR			√	
3G SMAW-SAS 1	5/8" SPOT	P1	8	2	RT-2	0.750	25.000	1	K.WR			√	
4G SMAW-SAS 1	5/8" SPOT	P1	8	2	RT-2	0.750	25.000	1	K.WR			√	
2G SAW	5/8" SPOT	P1	8	2	RT-2	0.750	25.000	1	K.WR			√	

LF - Lack of Fusion
IP - Incomplete Penetration
IC - Internal Concavity
BT - Burn Through
TI - Tungsten Inclusion
IU: Internal Undercut
EU: External Undercut
EP - Excessive Penetration
P - Porosity
S - Slag
HL - High-Low
C - Crack
AB - Arc Burn
HB - Hollow Bead

Severity: 1 = Slight, 2 = Medium, 3 = Severe (Reject)

RT Technician:	Gordon Thomas	CGSB Level:	2	Reg. # :	6	SNT-TC-1A Level: III	SNT-TC-1A No: 6
RT Assistant # 1	Adele Kezama	CEDO #:	18988			SNT-TC-1A Level: II	SNT-TC-1A No: 18988
RT Assistant # 2		CEDO #:				SNT-TC-1A Level:	SNT-TC-1A No:

IMPORTANT: See reverse side of this form for All Can Inspection Services (2011) Inc. LIMITED LIABILITY POLICY

Technician Signature — Date: July 26/17

Client Representative Signature — Evaluation Date

The above interpretation is a technical opinion, not a guarantee.
Client signature indicates acceptance of the report and results.

Clock tape marker and start arrow marked on weldment.
It is the customer's responsibility to map welds on drawings.

Film Make / Brand	AGFA	Film Class / Type:	1-D5
Screens Lead	Front 0.010"	Back 0.010"	One (no.) film per screen
Film Density in H & D:	Min. 2.0	Max. 4.0	
Penetrometer (IQI hole type) designation:	N/A	Recommended Max. U.G.:	0.20"
Source Isotope:	IRIDIUM-192 (Gamma)	Wall Viewing:	Single
Effective Focal Spot Size:	0.146 inches	Processing:	Automatic

RADIOGRAPHIC EXAMINATION REPORT

ALL CAN INSPECTION SERVICES (2011) INC.

Report # G2571

9323-37 Avenue, NW, Edmonton, Alberta T6E 5N4
SHOP: 780-462-1072 OFFICE: 780-462-9797 FAX: 780-462-4664
EMAIL: shop@allcaninspection.com www.allcaninspection.com

Client:	Sub Arc Systems	Client Job #	Welder Coupons
Address:	17 Exploration Way, Devon	P.O. #	Toby
Contact: Name:	Toby	Date:	July 26/17
Phone:			
Work Location:	All Can Inspection Shop	Work Description:	T.MO

CODES
1. ASME B31.3 N/S
2. ASME B31.3 S/C
3. ASME Sec. VIII Div 1 UW51
4. ASME Sec. VIII Div. 1 UW52
5. CSA Z662
6. CSA Z662 (Sour)
7. API 650
8. ASME IX (QW-191.2)

NDE No:	Size & thickness Plus Code Max. reinforcement	Material	Code	IQI	Technique Number	Source Side of Object to Film Distance	Source to Object Distance	Number of Exposures	Welder ID	Severity: 1 = Slight, 2 = Medium, 3 = Severe (Reject) Discontinuity	Severity	Accept	Reject
			1 - 8	See Back	See Back	Inches	Inches				1 - 3	√	X
2G SMAW-SAS 1	5/8" SPOT	P1	8	2	RT-2	0.750	25.000	1	T.MO			√	
3G SMAW-SAS 1	5/8" SPOT	P1	8	2	RT-2	0.750	25.000	1	T.MO			√	
4G SMAW-SAS 1	5/8" SPOT	P1	8	2	RT-2	0.750	25.000	1	T.MO			√	

LF - Lack of Fusion
IP - Incomplete Penetration
IC - Internal Concavity
BT - Burn Through
TI - Tungsten Inclusion
IU: Internal Undercut
EU: External Undercut
EP - Excessive Penetration
P - Porosity
S - Slag
HL - High-Low
C - Crack
AB - Arc Burn
HB - Hollow Bead

RT Technician: Gordon Thomas CGSB Level: 2 Reg. #: 6 SNT-TC-1A Level: III SNT-TC-1A No: 6
RT Assistant # 1 Adele Kezama CEDO #: 18988 SNT-TC-1A Level: II SNT-TC-1A No: 18988
RT Assistant # 2 CEDO #: SNT-TC-1A Level: SNT-TC-1A No:

IMPORTANT: See reverse side of this form for All Can Inspection Services (2011) Inc. LIMITED LIABILITY POLICY

Technician Signature — Date: July 26/17

Client Representative Signature — Evaluation Date

The above interpretation is a technical opinion, not a guarantee.
Client signature indicates acceptance of the report and results.
Clock tape marker and start arrow marked on weldment.
It is the customer's responsibility to map welds on drawings.

Film Make / Brand	AGFA	Film Class / Type:	I-D5
Screens Lead	Front 0.010"	Back 0.010"	One (no.) film per screen
Film Density in H & D:	Min. 2.0	Max. 4.0	
Penetrometer (IQI hole type) designation:	N/A	Recommended Max. U.G.:	0.20"
Source Isotope:	IRIDIUM-192 (Gamma)	Wall Viewing:	Single
Effective Focal Spot Size:	0.146 inches	Processing:	Automatic

RADIOGRAPHIC EXAMINATION REPORT

ALL CAN INSPECTION SERVICES (2011) INC.

Report # G2570

9323-37 Avenue, NW, Edmonton, Alberta T6E 5N4
SHOP: 780-462-1072 OFFICE: 780-462-9797 FAX: 780-462-4664
EMAIL: shop@allcaninspection.com www.allcaninspection.com

Client: **Sub Arc Systems** Client Job # **Welder Coupons**

Address: 17 Exploration Way, Devon P.O. # **Toby**

Contact: Name: Toby Date: **July 26/17**

Phone:

Work Location: All Can Inspection Shop Work Description: J.Hi

CODES
1. ASME B31.3 N/S
2. ASME B31.3 S/C
3. ASME Sec. VIII Div 1 UW51
4. ASME Sec. VIII Div. 1 UW52
5. CSA Z662
6. CSA Z662 (Sour)
7. API 650
8. ASME IX (QW-191.2)

NDE No:	Size & thickness Plus Code Max. reinforcement	Material	Code	IQI	Technique Number	Source Side of Object to Film Distance	Source to Object Distance	Number of Exposures	Welder ID	Discontinuity	Severity	Accept	Reject
			1 - 8	See Back	See Back	Inches	Inches				1 - 3	√	x
2G SMAW-SAS 1	5/8" SPOT	P1	8	2	RT-2	0.750	25.000	1	J.Hi			√	
3G SMAW-SAS 1	5/8" SPOT	P1	8	2	RT-2	0.750	25.000	1	J.Hi			√	
4G SMAW-SAS 1	5/8" SPOT	P1	8	2	RT-2	0.750	25.000	1	J.Hi			√	

LF - Lack of Fusion; IP - Incomplete Penetration; IC - Internal Concavity; BT - Burn Through; TI - Tungsten Inclusion; IU: Internal Undercut; EU: External Undercut; EP - Excessive Penetration; P - Porosity; S - Slag; HL - High-Low; C - Crack; AB - Arc Burn; HB - Hollow Bead

Severity: 1 = Slight, 2 = Medium, 3 = Severe (Reject)

RT Technician: Gordon Thomas CGSB Level: 2 Reg. # : 6 SNT-TC-1A Level: III SNT-TC-1A No: 6

RT Assistant # 1 Adele Kezama CEDO #: 18988 SNT-TC-1A Level: II SNT-TC-1A No: 18988

RT Assistant # 2 CEDO #: SNT-TC-1A Level: SNT-TC-1A No:

IMPORTANT: See reverse side of this form for All Can Inspection Services (2011) Inc. LIMITED LIABILITY POLICY

Technician Signature July 26/17 Date

Client Representative Signature Evaluation Date

The above interpretation is a technical opinion, not a guarantee.
Client signature indicates acceptance of the report and results.

Clock tape marker and start arrow marked on weldment.
It is the customer's responsibility to map welds on drawings.

Film Make / Brand: AGFA Film Class / Type: I-D5

Screens: Lead Front: 0.010" Back: 0.010" One (no.) film per screen

Film Density in H & D: Min. 2.0 Max. 4.0

Penetrometer (IQI hole type) designation: N/A Recommended Max. U.G.: 0.20"

Source Isotope: IRIDIUM-192 (Gamma) Wall Viewing: Single

Effective Focal Spot Size: 0.146 inches Processing: Automatic

RADIOGRAPHIC EXAMINATION REPORT

ALL CAN INSPECTION SERVICES (2011) INC.

Report # G2779

9323-37 Avenue, NW, Edmonton, Alberta T6E 5N4
SHOP: 780-462-1072 **OFFICE:** 780-462-9797 **FAX:** 780-462-4664
EMAIL: shop@allcaninspection.com **www.allcaninspection.com**

Client: **Sub Arc Systems** Client Job # **Welder Coupons**

Address: 17 Exploration Way, Devon P.O. # **Sebastian**

Contact: Name: Sebastian Date: **May 22/18**

Phone:

Work Location: All Can Inspection Shop Work Description: L.MA

CODES
1. ASME B31.3 N/S
2. ASME B31.3 S/C
3. ASME Sec. VIII Div 1 UW51
4. ASME Sec. VIII Div. 1 UW52
5. CSA Z662
6. CSA Z662 (Sour)
7. API 650
8. Other:

LF - Lack of Fusion; IP - Incomplete Penetration; IC - Internal Concavity; BT - Burn Through; TI - Tungsten Inclusion; IU: Internal Undercut; EU: External Undercut; EP - Excessive Penetration; P - Porosity; S - Slag; HL - High-Low; C - Crack; AB - Arc Burn; HB - Hollow Bead

Severity: 1 = Slight, 2 = Medium, 3 = Severe (Reject)

NDE No:	Size & thickness Plus Code Max. reinforcement	Material	Code	IQI	Technique Number	Source Side of Object to Film Distance	Source to Object Distance	Number of Exposures	Welder ID	Discontinuity	Severity	Accept	Reject
			1 - 8	See Back	See Back	inches	inches				1 - 3	√	X
2G SMAW	5/8" SPOT	P1	7	2	RT-2	0.750	25.000	1	L.MA			√	
3G SMAW	5/8" SPOT	P1	7	2	RT-2	0.750	25.000	1	L.MA	P @ 1"	1	√	
4G SMAW	5/8" SPOT	P1	7	2	RT-2	0.750	25.000	1	L.MA			√	

RT Technician: Gordon Thomas CGSB Level: 2 Reg. # : 6 SNT-TC-1A Level: III SNT-TC-1A No: 6

RT Assistant # 1 Ken Brunlees CEDO #: 15425 SNT-TC-1A Level: II SNT-TC-1A No: 15425

RT Assistant # 2 CEDO #: SNT-TC-1A Level: SNT-TC-1A No:

IMPORTANT: See reverse side of this form for All Can Inspection Services (2011) Inc. LIMITED LIABILITY POLICY

Technician Signature — Date: May 22/18

Client Representative Signature — Evaluation Date

The above interpretation is a technical opinion, not a guarantee.
Client signature indicates acceptance of the report and results.

Clock tape marker and start arrow marked on weldment.
It is the customer's responsibility to map welds on drawings.

Film Make / Brand: AGFA Film Class / Type: 1-D5

Screens Lead: Front 0.010" Back 0.010" One (no.) film per screen

Film Density in H & D: Min. 2.0 Max. 4.0

Penetrometer (IQI hole type) designation: N/A Recommended Max. U.G.: 0.20"

Source Isotope: IRIDIUM-192 (Gamma) Wall Viewing: Single

Effective Focal Spot Size: 0.146 inches Processing: Automatic

RADIOGRAPHIC EXAMINATION REPORT

4605-47 Street
Vermillion, AB, T9X 1L6
780-608-9589

QUALITY CONTROL MANUAL

Sub-Arc Systems Inc.	**WELDERS' QUALIFICATION RECORD** **API 650**	**Exhibit 8, Rev A**

WELDER NAME	WELDER SYMBOL	DATE QUALIF.	QUALIFICATION PROCEDURE	LIMITATIONS					REMARKS
				PROCESS	ELECTRODE	POSITION	THICKNESS RANGE	DIAMETER RANGE	
MATT MACKENZIE	M.MA	06,21,17	SAS 1	SMAW	F3, F4	2G	1 1/4"		X-RAY G2343
	M.MA	06,21,17	SAS 1	SMAW	F3, F4	3G	1 1/4"		X-RAY G2343
	M.MA.	06.21,17	SAS 1	SMAW	F3, F4	4G	1 1/4"		X-RAY G2343
	M.MA.	08,01,17	SAS 2	SAW	F7A6	2G	1 1/4"		X-RAY G 2615.

QC (PRINT) **SIGN:**	**DATE** (yyyy-MM-dd):
QA (PRINT) ROBERT HOFFMAN **SIGN:**	**DATE** (yyyy-MM-dd): 2017,08,01

Sub-Arc Systems Inc.	WELDERS' QUALIFICATION RECORD API 650	Exhibit 8, Rev A

WELDER NAME	WELDER SYMBOL	DATE QUALIF.	QUALIFICATION PROCEDURE	LIMITATIONS					REMARKS
				PROCESS	ELECTRODE	POSITION	THICKNESS RANGE	DIAMETER RANGE	
MITCH GOULIGER	M.GO	06,21,17	SAS 1	SMAW	F3, F4	2G	1 1/4"		X-RAY G2341
	M.GO	06,21,17	SAS 1	SMAW	F3, F4	3G	1 1/4"		X-RAY G2341
	M.GO	06,21,17	SAS 1	SMAW	F3, F4	4G	1 1/4"		X-RAY G2341
	M.GO	08,01,17	SAS 2	SAW	F7A6	2G	1 1/4"		X-RAY G 2614.

QC (PRINT) SIGN:	DATE (yyyy-MM-dd):
QA (PRINT) ROBERT HOFFMAN SIGN:	DATE (yyyy-MM-dd): 2017, 08, 01

Sub-Arc Systems Inc.	**WELDERS' QUALIFICATION RECORD** **API 650**	**Exhibit 8, Rev A**

WELDER NAME	WELDER SYMBOL	DATE QUALIF.	QUALIFICATION PROCEDURE	LIMITATIONS					REMARKS
				PROCESS	ELECTRODE	POSITION	THICKNESS RANGE	DIAMETER RANGE	
CHRIS JAQUES	C.JA	06,21,17	SAS 1	SMAW	F3, F4	2G	1 1/4"		X-RAY G2339
	C.JA.	06,21,17	SAS 1	SMAW	F3, F4	3G	1 1/4"		X-RAY G2339
	C.JA.	06,21,17	SAS 1	SMAW	F3, F4	4G	1 1/4"		X-RAY G2339
	C.JA	08,01,17	SAS2	SAW	F7A6	2G	1 1/4"		X-RAY G2613

QC (PRINT) **SIGN:**	**DATE** (yyyy-MM-dd):
QA (PRINT) ROBERT HOFFMAN **SIGN:**	**DATE** (yyyy-MM-dd): 2017,08,01

4605-47 Street
Vermillion, AB, T9X 1L6
780-608-9589

QUALITY CONTROL MANUAL

Sub-Arc Systems Inc.	**WELDERS' QUALIFICATION RECORD** **API 650**	**Exhibit 8, Rev A**

WELDER NAME	WELDER SYMBOL	DATE QUALIF.	QUALIFICATION PROCEDURE	LIMITATIONS					REMARKS
				PROCESS	ELECTRODE	POSITION	THICKNESS RANGE	DIAMETER RANGE	
MATT TURMEL	M.TU	06,21,17	SAS 1	SMAW	F3, F4	2G	1 1/4"		X-RAY G2342
	M.TU	06,21,17	SAS 1	SMAW	F3, F4	3G	1 1/4"		X-RAY G2342
	M.TU	06,21,17	SAS 1	SMAW	F3, F4	4G	1 1/4"		X-RAY G2342
	M.TU	07,26,17	SAS 2	SAW	F7A6	2G	1 1/4"		X-RAY G2575

QC (PRINT) **SIGN:**	**DATE** (yyyy-MM-dd):
QA (PRINT) ROBERT HOFFMAN **SIGN:**	**DATE** (yyyy-MM-dd): 2017,07,26

Sub-Arc Systems Inc.	**WELDERS' QUALIFICATION RECORD** **API 650**	**Exhibit 8, Rev A**

WELDER NAME	WELDER SYMBOL	DATE QUALIF.	QUALIFICATION PROCEDURE	LIMITATIONS					REMARKS
				PROCESS	ELECTRODE	POSITION	THICKNESS RANGE	DIAMETER RANGE	
JOEL OVEREARD	J.OV	06,21,17	SAS 1	SMAW	F3. F4	2G.	1 1/4"		X-RAY G2340
	J.OV	06,21,17	SAS 1	SMAW	F3. F4	3G	1 1/4"		X-RAY G2340
	J.OV	06,21,17	SAS 1	SMAW	F3. F4	4G	1 1/4"		X-RAY G2340
	J.OV	07.26.17	SAS 2	SAW	F7A6	2G	1 1/4"		X-Ray G2574

QC (PRINT) **SIGN:**	**DATE** (yyyy-MM-dd):
QA (PRINT) ROBERT HOFFMAN **SIGN:**	**DATE** (yyyy-MM-dd): 2017, 07, 26.

Sub-Arc Systems Inc.	**WELDERS' QUALIFICATION RECORD** **API 650**	**Exhibit 8, Rev A**

WELDER NAME	WELDER SYMBOL	DATE QUALIF.	QUALIFICATION PROCEDURE	LIMITATIONS					REMARKS
				PROCESS	ELECTRODE	POSITION	THICKNESS RANGE	DIAMETER RANGE	
KEVIN WRIGHT	K.W.R	07,26,17	SAS 1	SMAW	F3, F4	2G	1 1/4"		X-RAY G2572
	K.W.R	07,26,17	SAS 1	SMAW	F3, F4	3G	1 1/4"		X-RAY G2572
	K.W.R.	07,26,17	SAS 1	SMAW	F3 F4	4G	1 1/4"		X-RAY G 2572
	K.W.R	07,26,17	SAS 2	SAW	F7 A6	2G	1 1/4"		X-RAY G2572

QC (PRINT) **SIGN:**	**DATE** (yyyy-MM-dd):
QA (PRINT) ROBERT HOFFMAN **SIGN:**	**DATE** (yyyy-MM-dd): 2017, 07, 28

Sub-Arc Systems Inc.	**WELDERS' QUALIFICATION RECORD** **API 650**	**Exhibit 8, Rev A**

WELDER NAME	WELDER SYMBOL	DATE QUALIF.	QUALIFICATION PROCEDURE	LIMITATIONS					REMARKS
				PROCESS	ELECTRODE	POSITION	THICKNESS RANGE	DIAMETER RANGE	
JOEL OVERGAARD	J.OV	07,26,17	SAS 2	SAW	F7A6	2G	1 1/4"		X Ray # G2574

QC (PRINT) **SIGN:**	**DATE** (yyyy-MM-dd):
QA (PRINT) ROBERT HOFFMAN **SIGN:**	**DATE** (yyyy-MM-dd): 2017, 07, 28

Sub-Arc Systems Inc.	**WELDERS' QUALIFICATION RECORD** **API 650**	**Exhibit 8, Rev A**

WELDER NAME	WELDER SYMBOL	DATE QUALIF.	QUALIFICATION PROCEDURE	LIMITATIONS					REMARKS
				PROCESS	ELECTRODE	POSITION	THICKNESS RANGE	DIAMETER RANGE	
JOE NIEDERHOFF	J.NI	07,26,17	SAS 1	SMAW	F3, F4	3G	1 1/4"		X RAY # G2573
	J.NI	07,26,17	SAS 1	SMAW	F3, F4	4G	1 1/4"		X RAY # G2573
	J.NI	08,01,17	SAS 1	SMAW	F3, F4	2G	1 1/4"		X RAY G 2616.

QC (PRINT) **SIGN:**	**DATE** (yyyy-MM-dd):
QA (PRINT) ROBERT HOFFMAN **SIGN:** Robert Hoffman	**DATE** (yyyy-MM-dd): 2017, 08, 01

4605-47 Street
Vermillion, AB, T9X 1L6
780-608-9589

QUALITY CONTROL MANUAL

Sub-Arc Systems Inc.	**WELDERS' QUALIFICATION RECORD** **API 650**	**Exhibit 8, Rev A**

WELDER NAME	WELDER SYMBOL	DATE QUALIF.	QUALIFICATION PROCEDURE	LIMITATIONS					REMARKS
				PROCESS	ELECTRODE	POSITION	THICKNESS RANGE	DIAMETER RANGE	
JUSTIN HILL	J. HI	07,26,17	SAS 1	SMAW	F3, F4	2G	1 1/4"		X-RAY G2570
	J. HI	07,26,17	SAS 1	SMAW	F3, F4	3G	1 1/4"		X-RAY G2570
	J. HI	07,26,17	SAS 1	SMAW	F3 F4	4G	1 1/4"		X-RAY G 2570

QC (PRINT) **SIGN:**	**DATE** (yyyy-MM-dd):
QA (PRINT) ROBERT HOFFMAN **SIGN:**	**DATE** (yyyy-MM-dd): 2017, 07, 28

Sub-Arc Systems Inc.	**WELDERS' QUALIFICATION RECORD** **API 650**	**Exhibit 8, Rev A**

WELDER NAME	WELDER SYMBOL	DATE QUALIF.	QUALIFICATION PROCEDURE	LIMITATIONS					REMARKS
				PROCESS	ELECTRODE	POSITION	THICKNESS RANGE	DIAMETER RANGE	
JOE NIEDERHOFF	J.NI	07,26,17	SAS 1	SMAW	F3, F4	3G	1 1/4"		X RAY #E2573
	J.NI	07,26,17	SAS 1	SMAW	F3, F4	4G	1 1/4"		X RAY #E2573

QC (PRINT) **SIGN:**	**DATE** (yyyy-MM-dd):
QA (PRINT) ROBERT HOFFMAN **SIGN:**	**DATE** (yyyy-MM-dd): 2017, 07, 28

Sub-Arc Systems Inc.	**WELDERS' QUALIFICATION RECORD** **API 650**	**Exhibit 8, Rev A**

WELDER NAME	WELDER SYMBOL	DATE QUALIF.	QUALIFICATION PROCEDURE	LIMITATIONS					REMARKS
				PROCESS	ELECTRODE	POSITION	THICKNESS RANGE	DIAMETER RANGE	
MATT TURNER	M.TU.	07,26,17		SAW	F7A6	2F	1 1/4"		XRAY # G2575

QC (PRINT) **SIGN:**	**DATE** (yyyy-MM-dd):
QA (PRINT) ROBERT HOFFMAN **SIGN:**	**DATE** (yyyy-MM-dd): 2017, 07, 28

4605-47 Street
Vermillion, AB, T9X 1L6
780-608-9589

QUALITY CONTROL MANUAL

Sub-Arc Systems Inc.	**WELDERS' QUALIFICATION RECORD** **API 650**	**Exhibit 8, Rev A**

WELDER NAME	WELDER SYMBOL	DATE QUALIF.	QUALIFICATION PROCEDURE	LIMITATIONS					REMARKS
				PROCESS	ELECTRODE	POSITION	THICKNESS RANGE	DIAMETER RANGE	
JOEL OVERGAARD	J.OV	07,26,17		SAW	F7A6	2G	1 1/4"		X Ray # G2574

QC (PRINT) **SIGN:**	**DATE** (yyyy-MM-dd):
QA (PRINT) ROBERT HOFFMAN **SIGN:**	**DATE** (yyyy-MM-dd): 2017, 07, 28

Sub-Arc Systems Inc.	**WELDERS' QUALIFICATION RECORD** **API 650**	**Exhibit 8, Rev A**

WELDER NAME	WELDER SYMBOL	DATE QUALIF.	QUALIFICATION PROCEDURE	LIMITATIONS					REMARKS
				PROCESS	ELECTRODE	POSITION	THICKNESS RANGE	DIAMETER RANGE	
KEVIN WRIGHT	K.W.R	07,26,17	SAS 1	SMAW	F3, F4	2G	1 1/4"		X-Ray G2572
	K.W.R	07,26,17	SAS 1	SMAW	F3, F4	3G	1 1/4"		X-Ray G2572
	K.W.R.	07,26,17	SAS 1	SMAW	F3 F4	4G	1 1/4"		X-Ray G 2572
	K.W.R	07,26,17		SAW	F7 A6	2G	1 1/4"		X-Ray G 2572

QC (PRINT) **SIGN:**	**DATE** (yyyy-MM-dd):
QA (PRINT) ROBERT HOFFMAN **SIGN:**	**DATE** (yyyy-MM-dd): 2017, 07, 28

Sub-Arc Systems Inc.	WELDERS' QUALIFICATION RECORD API 650	Exhibit 8, Rev A

WELDER NAME	WELDER SYMBOL	DATE QUALIF.	QUALIFICATION PROCEDURE	LIMITATIONS					REMARKS
				PROCESS	ELECTRODE	POSITION	THICKNESS RANGE	DIAMETER RANGE	
TYLER MONCRIEF	T. MO	07.26.17	SAS 1	SMAW	F3, F4	2G	1 1/4"		XRAY # G2571
	T. MO	07.26.17	SAS 1	SMAW	F3, F4	3G	1 1/4"		XRAY # G2571
	T. MO	07.26.17	SAS 1	SMAW	F3 F4	4G	1 1/4"		XRAY # G2571.

QC (PRINT)	DATE (yyyy-MM-dd):
SIGN:	
QA (PRINT) ROBERT HOFFMAN	DATE (yyyy-MM-dd):
SIGN: [signature]	2017, 07, 28

4605-47 Street
Vermillion, AB, T9X 1L6
780-608-9589

QUALITY CONTROL MANUAL

Sub-Arc Systems Inc.	**WELDERS' QUALIFICATION RECORD** **API 650**	**Exhibit 8, Rev A**

WELDER NAME	WELDER SYMBOL	DATE QUALIF.	QUALIFICATION PROCEDURE	LIMITATIONS					REMARKS
				PROCESS	ELECTRODE	POSITION	THICKNESS RANGE	DIAMETER RANGE	
MATT MACKENZIE	M.MA	06,21,17	SAS 1	SMAW	F3, F4	2G	1 1/4"		X-RAY G2343
	M.MA	06,21,17	SAS 1	SMAW	F3, F4	3G	1 1/4"		X-RAY G2343
	M.MA.	06.21,17	SAS 1	SMAW	F3, F4	4G	1 1/4"		X-RAY G2343
	M.MA.	08,01,17	SAS 2	SAW	F7A6	2G	1 1/4"		X-RAY G 2615.

QC (PRINT) **SIGN:**	**DATE** (yyyy-MM-dd):
QA (PRINT) ROBERT HOFFMAN **SIGN:**	**DATE** (yyyy-MM-dd): 2017,08,01

Sub-Arc Systems Inc.	WELDERS' QUALIFICATION RECORD API 650	Exhibit 8, Rev A

WELDER NAME	WELDER SYMBOL	DATE QUALIF.	QUALIFICATION PROCEDURE	LIMITATIONS					REMARKS
				PROCESS	ELECTRODE	POSITION	THICKNESS RANGE	DIAMETER RANGE	
MITCH GOULIGER	M.GO	06,21,17	SAS 1	SMAW	F3, F4	2G	1 1/4"		X-RAY G2341
	M.GO	06,21,17	SAS 1	SMAW	F3, F4	3G	1 1/4"		X-RAY G2341
	M.GO	06,21,17	SAS 1	SMAW	F3, F4	4G	1 1/4"		X-RAY G2341
	M.GO	08,01,17	SAS 2	SAW	F7A6	2G	1 1/4"		X-RAY G 2614.

QC (PRINT) SIGN:	DATE (yyyy-MM-dd):
QA (PRINT) ROBERT HOFFMAN SIGN:	DATE (yyyy-MM-dd): 2017, 08, 01

Sub-Arc Systems Inc.	**WELDERS' QUALIFICATION RECORD** **API 650**	**Exhibit 8, Rev A**

WELDER NAME	WELDER SYMBOL	DATE QUALIF.	QUALIFICATION PROCEDURE	LIMITATIONS					REMARKS
				PROCESS	ELECTRODE	POSITION	THICKNESS RANGE	DIAMETER RANGE	
CHRIS JAQUES	C.JA	06,21,17	SAS 1	SMAW	F3, F4	2G	1 1/4"		X-RAY G2339
	C.JA.	06,21,17	SAS 1	SMAW	F3, F4	3G	1 1/4"		X-RAY G2339
	C.JA.	06,21,17	SAS 1	SMAW	F3, F4	4G	1 1/4"		X-RAY G2339
	C.JA	08,01,17	SAS2	SAW	F7A6	2G	1 1/4"		X-RAY G2613

QC (PRINT) **SIGN:**	**DATE** (yyyy-MM-dd):
QA (PRINT) ROBERT HOFFMAN **SIGN:**	**DATE** (yyyy-MM-dd): 2017,08,01

4605-47 Street
Vermillion, AB, T9X 1L6
780-608-9589

QUALITY CONTROL MANUAL

Sub-Arc Systems Inc.	**WELDERS' QUALIFICATION RECORD** **API 650**	**Exhibit 8, Rev A**

WELDER NAME	WELDER SYMBOL	DATE QUALIF.	QUALIFICATION PROCEDURE	LIMITATIONS					REMARKS
				PROCESS	ELECTRODE	POSITION	THICKNESS RANGE	DIAMETER RANGE	
MATT TURMEL	M.TU	06,21,17	SAS 1	SMAW	F3, F4	2G	1 1/4"		X-RAY G2342
	M.TU	06,21,17	SAS 1	SMAW	F3, F4	3G	1 1/4"		X-RAY G2342
	M.TU	06,21,17	SAS 1	SMAW	F3, F4	4G	1 1/4"		X-RAY G2342
	M.TU	07,26,17	SAS 2	SAW	F7A6	2G	1 1/4"		X-RAY G2575

QC (PRINT) **SIGN:**	**DATE** (yyyy-MM-dd):
QA (PRINT) ROBERT HOFFMAN **SIGN:**	**DATE** (yyyy-MM-dd): 2017,07,26

Sub-Arc Systems Inc.	**WELDERS' QUALIFICATION RECORD** **API 650**	**Exhibit 8, Rev A**

WELDER NAME	WELDER SYMBOL	DATE QUALIF.	QUALIFICATION PROCEDURE	LIMITATIONS					REMARKS
				PROCESS	ELECTRODE	POSITION	THICKNESS RANGE	DIAMETER RANGE	
JOEL OVEREARD	J.OV	06,21,17	SAS 1	SMAW	F3. F4	2G.	1 1/4"		X-RAY G2340
	J.OV	06,21,17	SAS 1	SMAW	F3. F4	3G	1 1/4"		X-RAY G2340
	J.OV	06,21,17	SAS 1	SMAW	F3. F4	4G	1 1/4"		X-RAY G2340
	J.OV	07.26.17	SAS 2	SAW	F7A6	2G	1 1/4"		X-Ray G2574

QC (PRINT) **SIGN:**	**DATE** (yyyy-MM-dd):
QA (PRINT) ROBERT HOFFMAN **SIGN:**	**DATE** (yyyy-MM-dd): 2017, 07, 26.

Sub-Arc Systems Inc.	**WELDERS' QUALIFICATION RECORD** **API 650**	**Exhibit 8, Rev A**

WELDER NAME	WELDER SYMBOL	DATE QUALIF.	QUALIFICATION PROCEDURE	LIMITATIONS					REMARKS
				PROCESS	ELECTRODE	POSITION	THICKNESS RANGE	DIAMETER RANGE	
KEVIN WRIGHT	K.W.R	07,26,17	SAS 1	SMAW	F3, F4	2G	1 1/4"		X-RAY G2572
	K.W.R	07,26,17	SAS 1	SMAW	F3, F4	3G	1 1/4"		X-RAY G2572
	K.W.R.	07,26,17	SAS 1	SMAW	F3 F4	4G	1 1/4"		X-RAY G 2572
	K.W.R	07,26,17	SAS 2	SAW	F7 A6	2G	1 1/4"		X-RAY G2572

QC (PRINT) **SIGN:**	**DATE** (yyyy-MM-dd):
QA (PRINT) ROBERT HOFFMAN **SIGN:**	**DATE** (yyyy-MM-dd): 2017, 07, 28

Sub-Arc Systems Inc.	**WELDERS' QUALIFICATION RECORD** **API 650**	**Exhibit 8, Rev A**

WELDER NAME	WELDER SYMBOL	DATE QUALIF.	QUALIFICATION PROCEDURE	LIMITATIONS					REMARKS
				PROCESS	ELECTRODE	POSITION	THICKNESS RANGE	DIAMETER RANGE	
JOEL OVERGAARD	J.OV	07,26,17	SAS 2	SAW	F7A6	2G	1 1/4"		X Ray # G2574

QC (PRINT) **SIGN:**	**DATE** (yyyy-MM-dd):
QA (PRINT) ROBERT HOFFMAN **SIGN:**	**DATE** (yyyy-MM-dd): 2017, 07, 28

Sub-Arc Systems Inc.	**WELDERS' QUALIFICATION RECORD** **API 650**	**Exhibit 8, Rev A**

WELDER NAME	WELDER SYMBOL	DATE QUALIF.	QUALIFICATION PROCEDURE	LIMITATIONS					REMARKS
				PROCESS	ELECTRODE	POSITION	THICKNESS RANGE	DIAMETER RANGE	
JOE NIEDERHOFF	J.NI	07,26,17	SAS 1	SMAW	F3, F4	3G	1 1/4"		X RAY # G2573
	J.NI	07,26,17	SAS 1	SMAW	F3, F4	4G	1 1/4"		X RAY # G2573
	J.NI	08,01,17	SAS 1	SMAW	F3, F4	2G	1 1/4"		X RAY G 2616.

QC (PRINT) **SIGN:**	**DATE** (yyyy-MM-dd):
QA (PRINT) ROBERT HOFFMAN **SIGN:** Robert Hoffman	**DATE** (yyyy-MM-dd): 2017, 08, 01

4605-47 Street
Vermillion, AB, T9X 1L6
780-608-9589

QUALITY CONTROL MANUAL

Sub-Arc Systems Inc.	**WELDERS' QUALIFICATION RECORD** **API 650**	**Exhibit 8, Rev A**

WELDER NAME	WELDER SYMBOL	DATE QUALIF.	QUALIFICATION PROCEDURE	LIMITATIONS					REMARKS
				PROCESS	ELECTRODE	POSITION	THICKNESS RANGE	DIAMETER RANGE	
JUSTIN HILL	J.HI	07,26,17	SAS 1	SMAW	F3, F4	2G	1 1/4"		X-RAY G2570
	J.HI	07,26,17	SAS 1	SMAW	F3, F4	3G	1 1/4"		X-RAY G2570
	J.HI	07,26,17	SAS 1	SMAW	F3 F4	4G	1 1/4"		X-RAY G2570

QC (PRINT) **SIGN:**	**DATE** (yyyy-MM-dd):
QA (PRINT) ROBERT HOFFMAN **SIGN:**	**DATE** (yyyy-MM-dd): 2017, 07, 28

Sub-Arc Systems Inc.	**WELDERS' QUALIFICATION RECORD** **API 650**	**Exhibit 8, Rev A**

WELDER NAME	WELDER SYMBOL	DATE QUALIF.	QUALIFICATION PROCEDURE	LIMITATIONS					REMARKS
				PROCESS	ELECTRODE	POSITION	THICKNESS RANGE	DIAMETER RANGE	
JOE NIEDERHOFF	J.NI	07,26,17	SAS 1	SMAW	F3, F4	3G	1 1/4"		X RAY #E2573
	J.NI	07,26,17	SAS 1	SMAW	F3, F4	4G	1 1/4"		X RAY #E2573

QC (PRINT) **SIGN:**	**DATE** (yyyy-MM-dd):
QA (PRINT) ROBERT HOFFMAN **SIGN:**	**DATE** (yyyy-MM-dd): 2017, 07, 28

Sub-Arc Systems Inc.	**WELDERS' QUALIFICATION RECORD** **API 650**	**Exhibit 8, Rev A**

WELDER NAME	WELDER SYMBOL	DATE QUALIF.	QUALIFICATION PROCEDURE	LIMITATIONS					REMARKS
				PROCESS	ELECTRODE	POSITION	THICKNESS RANGE	DIAMETER RANGE	
MATT TURNER	M.TU.	07,26,17		SAW	F7A6	2F	1 1/4"		XRAY # G2575

QC (PRINT) **SIGN:**	**DATE** (yyyy-MM-dd):
QA (PRINT) ROBERT HOFFMAN **SIGN:**	**DATE** (yyyy-MM-dd): 2017, 07, 28

4605-47 Street
Vermillion, AB, T9X 1L6
780-608-9589

QUALITY CONTROL MANUAL

Sub-Arc Systems Inc.	**WELDERS' QUALIFICATION RECORD** **API 650**	**Exhibit 8, Rev A**

WELDER NAME	WELDER SYMBOL	DATE QUALIF.	QUALIFICATION PROCEDURE	LIMITATIONS					REMARKS
				PROCESS	ELECTRODE	POSITION	THICKNESS RANGE	DIAMETER RANGE	
JOEL OVERGAARD	J.OV	07,26,17		SAW	F7A6	2G	1 1/4"		X Ray # G2574

QC (PRINT) **SIGN:**	**DATE** (yyyy-MM-dd):
QA (PRINT) ROBERT HOFFMAN **SIGN:**	**DATE** (yyyy-MM-dd): 2017, 07, 28

Sub-Arc Systems Inc.	**WELDERS' QUALIFICATION RECORD** **API 650**	**Exhibit 8, Rev A**

WELDER NAME	WELDER SYMBOL	DATE QUALIF.	QUALIFICATION PROCEDURE	LIMITATIONS					REMARKS
				PROCESS	ELECTRODE	POSITION	THICKNESS RANGE	DIAMETER RANGE	
KEVIN WRIGHT	K.W.R	07,26,17	SAS 1	SMAW	F3, F4	2G	1 1/4"		X-Ray G2572
	K.W.R	07,26,17	SAS 1	SMAW	F3, F4	3G	1 1/4"		X-Ray G2572
	K.W.R.	07,26,17	SAS 1	SMAW	F3 F4	4G	1 1/4"		X-Ray G 2572
	K.W.R	07,26,17		SAW	F7 A6	2G	1 1/4"		X-Ray G 2572

QC (PRINT) **SIGN:**	**DATE** (yyyy-MM-dd):
QA (PRINT) ROBERT HOFFMAN **SIGN:**	**DATE** (yyyy-MM-dd): 2017, 07, 28

Sub-Arc Systems Inc.	WELDERS' QUALIFICATION RECORD API 650	Exhibit 8, Rev A

WELDER NAME	WELDER SYMBOL	DATE QUALIF.	QUALIFICATION PROCEDURE	LIMITATIONS					REMARKS
				PROCESS	ELECTRODE	POSITION	THICKNESS RANGE	DIAMETER RANGE	
TYLER MONCRIEF	T. MO	07.26.17	SAS 1	SMAW	F3, F4	2G	1 1/4"		XRAY # G2571
	T. MO	07.26.17	SAS 1	SMAW	F3, F4	3G	1 1/4"		XRAY # G2571
	T. MO	07.26.17	SAS 1	SMAW	F3 F4	4G	1 1/4"		XRAY # G2571.

QC (PRINT)	DATE (yyyy-MM-dd):
SIGN:	
QA (PRINT) ROBERT HOFFMAN	DATE (yyyy-MM-dd):
SIGN: [signature]	2017, 07, 28

Inukshuk Construction Limited
Industrial Contracting Project Management

PO Box 654
Rankin Inlet, NU X0C 0G0
T 867.645.4030 F 867.645.4064

Field Erected Fuel Storage Tank

Handover Package

Item 4 – Inspector Qualification

Contents

1. In House & 3rd Party Inspector Qualifications

SGS

Certificate Number: EM1-RT-1-CA

THIS IS TO CERTIFY THAT

Étienne Munger

Has been examined and found to satisfy the requirements of SGS Canada inc Company Written Practice – Document No. NEP-01 rev. 16, which is in accordance with, ASNT Recommended Practice No. SNT-TC-1A and is hereby certified in the following method.

Level: Two
Products: Industrial components
Specific to: ASTM E94

Method: Radiographic Testing
Technique: X-Ray and Gamma Ray

Issue Date: January 9th, 2014
Expiry Date: January 8th, 2019

Examiner Name: Douglas Hanna
Examiner Certificate Number: 112320

Signature of Employer's Certifying Authority:

Examiner Signature:

The examination records, results notice and relevant training records are held on file at the SGS facility and can be made available on request.

SGS Canada Inc. | Industrial Services 3420, Boulevard St-Joseph Est, Montréal (Québec) H1X 1W6 p (800) 361-1679 f (514) 252-0071 ww.sgs.ca

SGS Training and Examination Centre

SGS-EC-SNT-MT
Issue 3: July 2013

SGS

Certificate Number: EC-S-MT-002A



This is to certify that

Étienne Munger

Has been examined and found to satisfy the requirements of **SGS Canada** Company Written Practice - Document No **NEP-01**, which is in accordance with, ASNT Reccomended Practice No. **SNT-TC-1A(2006)** and is hereby certified in the following method

Level: *Two*

Method: *Magnetic Testing*

Products: *Engineering,Materials and components Sector*

Technique: *Fixed installations & Portable equipment*

Specific to: *ASMT V Article 7,ASTM E 709 & GEN-MP-32(E)*

On Behalf of Third Party (SGS NDT Training & Examination Centre)

Examiner Name: **Kai Ning**

Issue Date: ***Apr.28,2014***

Examiner Certificate Number: **181065**

Expiry Date: ***Apr.27,2019***

NDT TRAINING & EXAMINATION CENTRE SGS Kai Ning

Signature of Employer's Certifying Authority: _____

Examiner Signature: _____

The examination records, results notice and relevant training records are held on file at the SGS facility and can be made availale on request.

SGS - 2F,The 8th building, No.69 ,Block 1159 ,Kangqiao East Road, Pudong district, Shanghai, 201319, China
E-mail:ndt.training@sgs.com Tel:+86 (0)21 6818 3905 Fax:+86 (0)21 6818 3265

SGS Training and Examination Centre

SGS-EC-SNT-PT
Issue 3: July 2013

SGS

Certificate Number: EC-S-PT-002A



This is to certify that

Étienne Munger

Has been examined and found to satisfy the requirements of **SGS Canada** Company Written Practice - Document No **NEP-01** , which is in accordance with, ASNT Reccomended Practice No. **SNT-TC-1A(2006)** and is hereby certified in the following

Level: *Two*

Method: *Penetrant Testing*

Products: Engineering,Materials and components Sector

Technique: *Dye penetrants & Fluorescent penetrants*

Specific to: *ASTM E165:2012 & GEN-LP-27(E)*

On Behalf of Third Party (SGS NDT Training & Examination Centre)

Issue Date: ***Apr.28,2014***

Expiry Date: ***Apr.27,2019***

Examiner Name: **Kai Ning**

Examiner Certificate Number: **181065**

NDT TRAINING & EXAMINATION CENTRE SGS Kai Ning

Signature of Employer's Certifying Authority: _____

Examiner Signature: _____

The examination records, results notice and relevant training records are held on file at the SGS facility and can be made availale on request.

SGS - 2F,The 8th building, No.69 ,Block 1159 ,Kangqiao East Road, Pudong district, Shanghai, 201319, China
E-mail:ndt.training@sgs.com Tel:+86 (0)21 6818 3905 Fax:+86 (0)21 6818 3265

SGS Training and Examination Centre

SGS-EC-SNT-UT
Issue 3: July 2013

SGS

Certificate Number: EC-S-UT-002 A



This is to certify that

Étienne Munger

Has been examined and found to satisfy the requirements of **SGS Canada** Company Written Practice - Document No **NEP-01** , which is in accordance with, ASNT Reccomended Practice No. **SNT-TC-1A(2006)** and is hereby certified in the following

Level: *Two*

Method: *Ultrasonic Testing*

Products: *Engineering,Materials and components Sector*

Technique: *PULSE ECHO DIRECT CONTACT*

Specific to: *ASME Section V article 4,5 and 23 Section VIII, Division I,Appendix 12;GEN-UT-63(E)*

On Behalf of Third Party (SGS NDT Training & Examination Centre)

Examiner Name: **Kai Ning**

Issue Date: ***Apr.29, 2014***

Examiner Certificate Number: **181065**

Expiry Date: ***Apr.28, 2019***

NDT TRAINING & EXAMINATION CENTRE SGS

Signature of Employer's Certifying Authority: _____

Examiner Signature: _____

The examination records, results notice and relevant training records are held on file at the SGS facility and can be made availale on request.

SGS - 2F,The 8th building, No.69 ,Block 1159 ,Kangqiao East Road, Pudong district, Shanghai, 201319, China
E-mail:ndt.training@sgs.com Tel:+86 (0)21 6818 3905 Fax:+86 (0)21 6818 3265

Inspecteur en Soudage Certifié

ETIENNE MUNGER **No. Enr# 2711**

est un Inspecteur en soudage certifié de **Niveau2** et satisfait aux exigences de la norme CSA W178.2 « Qualification des inspecteurs en soudage ».

Valide jusqu'au **avril 30, 2021**

Cette certification est valide pour le(s) code(s) et/ou la norme(s) suivant(es) :

CSA W47.1-09/W59-03

Expiration de recertification après 6 ans **avril 30, 2024**

Conditions

1. La possession de cette carte ne signifie nullement que son détenteur représente un organisme d'inspection certifiée en vertu de la norme CSA W178.1 et ayant du personnel et des procédures approuvées par le Bureau canadien de soudage.
2. Cette carte demeure la propriété du Bureau et peut être rappelée en tout temps.
3. L'usage de la présente carte à des fins frauduleuses peut entraîner son annulation.

Pour toute question concernant cette qualification, veuillez communiquer avec :

1-800-844-6790 | www.cwbgroup.org

Natural Resources Canada

Ressources naturelles Canada



Name/
Nom: Etienne Munger

Reg. No./
No. matricule: 4778

Issue Date/
Date d'emission: 2016/01/04

This card does not identify the above individual to be an employee or representative of Natural Resources Canada, Government of Canada.
Cette carte n'identifie pas l'individu ci-dessus comme étant un employé ou un représentant de Ressources naturelles Canada, Gouvernement du Canada

Corrective lenses for [X] near [ ] far vision.
Verres correctifs pour la vision de [X] près [ ] distance.

Signature

Canada

Natural Resources Canada

Ressources naturelles Canada

Certified to/Certifié selon : CAN/CGSB-48.9712

4778

Method Methode	Level Niveau	Sector Secteur	Cert. Date Date cert.	Date recert. Date recert.	Expires Expiration
MT	2	EMC	1994/04/18		2020/02/15
PT	1	EMC	1990/07/03		2020/02/15
RT	2	EMC	1996/05/31		2020/02/15
UT	1	EMC	1993/11/04		2020/02/15

For verification of certification status, policies and definitions, visit website: http://edt.arcan.gc.ca/ Pour la vérification de la certification, les politiques, et les définitions, visitez le site-web: http://edt.arcan.gc.ca/

Manager: Certifying Agency
Gestionnaire: Organisme de certification

Etienne Munger

4778

Registration Number
Numéro de matricule

is certified by the Canadian Nuclear Safety Commission as an Exposure Device Operator.

est accrédité par la Commission canadienne de sûreté nucléaire à titre d'opérateur d'appareil d'exposition.

2013/02/01
Issue Date
Date d'émission

2019/10/01
Expiry Date
Date d'expiration

Designated Officer
Fonctionnaire désigné

Canadian Nuclear Safety Commission
Commission canadienne de sûreté nucléaire

Canada

This card, when accompanied by the photo identification card issued by the NRCan National NTD Certification Body bearing the same registration number, is evidence that the holder has been certified by the Canadian Nuclear Safety Commission pursuant to Section 25 of the Nuclear Substance and Radiation Devices Regulations

The card holder is authorized to operate an exposure device in Canada

Cette carte, lorsqu'elle est accompagnée de la carte d'identité avec photo portant le même numéro de matricule, émise par l'Organisme national de certification en END RNCan, est reconnue comme une preuve que le titulaire a été accrédité par la Commission canadienne de sûreté nucléaire en vertu de l'article 25 du Règlement sur les substances nucléaires et les appareils à rayonnement.

Le titulaire de la carte est autorisé à faire fonctionner un appareil d'exposition au Canada

Inukshuk Construction Limited
Industrial Contracting Project Management

PO Box 654
Rankin Inlet, NU X0C 0G0
T 867.645.4030 F 867.645.4064

Field Erected Fuel Storage Tank

Handover Package

Item 5 – Weld Procedures

Contents

1. Approved Weld Procedures

SUB-ARC SYSTEMS INC.

Welding Procedure Specification

in accordance with

ASME Section IX

Welding Procedure Specification No.: SAS-1 Revision 1[1]

Supporting PQR No. (s): SAS-1-1, SAS-1-2, SAS-1-3 Revision 1, SAS-1-4

Qualified for

Process(es):	SMAW / SMAW / SAW	**Position(s):**	All / All / Flat or Horizontal[2]
Filler Metal F-No.:	F-3 / F-4 / F-6	**A-No.:**	A-1 / A-1 / A-1
AWS Classification:	E6010 / E7018-1 / F7A6-EM12K	**Weld Type(s):**	Groove, Fillet, Weld buildup
Base Metal:	P-1 Group 1 or 2	To:	P-1 Group 1 or 2
Typical Materials:	This procedure is qualified for all P-1 materials as specified in Table QW-422 of ASME Section IX for applications where proven notch toughness properties are not required, and P-1 Group 1 or 2 materials only for applications where proven notch toughness properties are required.		
Diameter Range:	All diameters	**Condition(s):**	As welded

Thickness Range:	Normal Service	Impact Tested to -50°F
ASME Section IX	0.062” to 1.500”	0.125” to 1.500”
ASME Section VIII	0.062” to 1.500”	0.125” to 1.500”
ASME B31.1	0.062” to 0.750”	0.125” to 0.750”
ASME B31.3	0.062” to 0.750”	0.125” to 0.750”

[1]**Revision 1: Revision to accommodate revision of PQR SAS-1-3 as well as the addition PQR SAS-1-4 to expand the base metal thickness range where proven notch toughness properties are required at -50°F.**

[2]**SAW position limited by process usability.**

Provincial Registration

ABSA

SAFETY CODES ACT - PROVINCE OF ALBERTA
WELDING PROCEDURE

Reg. No. WP 2389.2
Spec No. SAS-1 (Rev 1)
Weld Process SMAW / SMAW / SAW
Matl. Gr. P No. 1 Gr 1+2 to P No. 1 Gr 1+2
Elect Gr. F No. 3+4+6 A No. 1
Th. Qual For 38.1mm P.W.H.T. NO
MIN TH QUAL 3.2mm, CVN -46°C

Yr. 14 Mo. 11 Day 5 Signed
JASON REINHART, P.ENG.
WELDING SPECIALIST

Provincial Registration

WELDING PROCEDURE SPECIFICATION (WPS) QW-482

(Section IX, ASME Boiler and Pressure Vessel Code)

Company Name:	Sub-Arc Systems Inc.	**By:**	Gary Kohlman
WPS No.:	SAS-1	**Date:**	January 4, 2002
Revision No.:	1[1]	**Revision Date:**	July 15, 2014
Supporting PQR's:	SAS-1-1, SAS-1-2, SAS-1-3 Revision 1, SAS-1-4		
Welding Process(es):	SMAW / SMAW / SAW	**Type(s):**	Manual / Manual / Machine

JOINTS QW-402		**Joint Details**
Joint Design:	Butt, Tee, Lap, Corner, etc.	**All ASME joint designs.** Reference construction
Backing:	F-3 SMAW with or without backing.	drawings for joint details. Where joint details are not
	F-4 SMAW with backing only.	specified, refer to typical joint detail sheet provided.
	SAW with backing only.	-----
Backing Material (Type):	Similar base or weld metal or backwelding as required. No Retainers.	

BASE METALS QW-403

P-No.:	P-1	**Group No.:**	*1 or 2	**to P-No.:** P-1 **Group No.:** *1 or 2
OR				
Spec. type & grade:	Not Applicable			**to Spec. type & grade:** Not Applicable
OR				
Chem. Analysis & Mech. Prop.:	Not Applicable			**to Chem. Analysis & Mech. Prop.:** Not Applicable

Thickness Range

		Normal Service	Impact Tested to -50°F		
Base Metal: Groove:	Section IX	0.062" to 1.500"	0.125" to 1.500"	**Fillet:**	All
	Section VIII	0.062" to 1.500"	0.125" to 1.500"	**Fillet:**	All
	B31.1	0.062" to 0.750"	0.125" to 0.750"	**Fillet:**	All
	B31.3	0.062" to 0.750"	0.125" to 0.750"	**Fillet:**	All
Pipe Dia Range: Groove:	All diameters			**Fillet:**	All

Other: Maximum thickness of any weld layer shall not exceed 0.500"

*Limited to P-1 Group 1 or 2 only when proven notch toughness properties are required.

FILLER METALS QW-404

Process:	**SMAW**	**SMAW**	**SAW**
Specification No. (SFA):	5.1	5.1	5.17
AWS Classification No.:	E6010	E7018-1	EM12K
F-No.:	F-3	F-4	F-6
A-No.:	A-1	A-1	A-1
Size of Filler Metals:	3/32", 1/8", 5/32"	3/32", 1/8", 5/32, 3/16", 1/4"	3/32", 1/8", 5/32", 3/16"
Weld Metal Thickness - Groove:	0.250" max.	1.500" max.	1.500" max.
- Fillet:	Unlimited	Unlimited	Unlimited
Electrode-Flux (Class):	Not Applicable	Not Applicable	F7A6-EM12K-H8
Manufacturer:	Not Applicable	Not Applicable	Lincoln Electric
Tradename:	Not Applicable	Not Applicable	LA-61
Flux Trade Name:	Not Applicable	Not Applicable	Lincoln 882 Flux
Alloy Flux:	Not Applicable	Not Applicable	Neutral
Consumable Insert:	Not Applicable	Not Applicable	Not Applicable
Supplemental Filler Metals:	Not Applicable	Not Applicable	Not Applicable
Product Form:	Covered Electrode	Covered Electrode	Coiled Solid Wire
Other:	E6010 limited to root pass only when proven notch toughness properties are required.		

[1]Revision 1: Revision to accommodate revision of PQR SAS-1-3 as well as the addition PQR SAS-1-4 to expand the base metal thickness range where proven notch toughness properties are required at -50°F.

WELDING PROCEDURE SPECIFICATION (WPS) QW-482

(Section IX, ASME Boiler and Pressure Vessel Code)

WPS # SAS-1 Rev.1

POSITIONS QW-405		POSTWELD HEAT TREATMENT QW-407	
Position(s) of Groove:	All	**Temp. Range:**	
Welding Progression:	F-3 SMAW Vertical Up or Down	**Time Range:**	
	F-4 SMAW Vertical Up or Down	**Heating:**	***(None – As Welded)***
	F-6 SAW Flat or Horizontal[1]		
Position(s) of Fillet:	All	**Cooling:**	
PREHEAT QW-406		**GAS QW-408**	
Temperature Min.:		**Shielding Gas(es):**	
Interpass Temp. Max.:	(***See Next Page***)	**Composition:**	
Interpass Min.:		**Flow Rate:**	***(Not Applicable)***
Preheat Maintenance:	Monitor using tempilstiks, pyrometer or other suitable methods.	**Gas Backing:**	
		Other:	

ELECTRICAL CHARACTERISTICS QW-409

Current:	**F-3 SMAW:**	Direct - DC	**F-4 SMAW:**	Direct - DC	**F-6 SAW:**	Direct - DC
Polarity:	**F-3 SMAW:**	Reverse - EP	**F-4 SMAW:**	Reverse - EP	**F-6 SAW:**	Reverse - EP
Amps (Range):	**F-3 SMAW:**	50 - 180	**F-4 SMAW:**	50 - 360	**F-6 SAW:**	250 - 750
Volts (Range):	**F-3 SMAW:**	18 - 34	**F-4 SMAW:**	18 - 34	**F-6 SAW:**	22 - 38
Travel Speed (Range):	**F-3 SMAW:**	1 - 16	**F-4 SMAW:**	1 - 20	**F-6 SAW:**	4 - 35
Maximum Heat Input: 0.125" to 0.625":	**F-3 SMAW:**	25 200 J/in	**F-4 SMAW:**	29 640 J/in	**F-6 SAW:**	36 428 J/in
0.625" to 1.500":	**F-3 SMAW:**	69 300 J/in	**F-4 SMAW:**	63 000 J/in	**F-6 SAW:**	73 636 J/in
Electrode Wire feed speed range:	50 - 550 ipm					
Tungsten Electrode Size & Type:	Not Applicable					
Mode of Metal Transfer for GMAW:	Not Applicable					
Other:	Maximum heat input mandatory only when proven notch toughness is required.					

TECHNIQUE QW-410

String or Weave Bead:	String and weave. Weave size shall be controlled to prevent exceeding maximum heat inputs.
Orifice or Gas Cup Size:	Not Applicable
Initial Cleaning:	Base material must be thoroughly cleaned of all foreign material (scale, rust, oil, grease, paint, tar, etc.) at least 1" back on each side of the joint prior to welding. All surfaces to be welded shall be smooth, uniform and free from notches, slag, fins and burrs.
Interpass Cleaning:	Perform by wire brush, chipping hammer, power brushing, grinding, etc. after each weld layer.
Method of Back Gouging:	Arc air, gouge, grind, etc., grind to clean metal where thermal processes are used if required.
Oscillation:	Not Applicable
Contact Tube to Work Distance:	1/4" to 1 1/4"
Multiple or Single Pass (per side):	Single or multiple passes per side, multiple only when proven notch toughness properties are required.
Multiple or Single Electrodes & Spacing:	Single or Multiple, multiple only when proven notch toughness properties are required.
Peening:	Peening is not allowed

TYPICAL WELDING PARAMETERS

	Filler Metal		Current			
Process	**AWS Classification**	**Diameter (in)**	**Type & Polarity**	**Amp. Range**	**Volt Range**	**Travel Speed (IPM)**
SMAW	E6010	3/32	DC EP	50 - 100	18 - 30	1 - 12
SMAW	E6010	1/8	DC EP	50 - 150	20 - 32	2 - 14
SMAW	E6010	5/32	DC EP	60 - 180	22 - 34	4 - 16
SMAW	E7018-1	3/32	DC EP	50 - 130	18 - 28	1 - 14
SMAW	E7018-1	1/8	DC EP	70 - 180	19 - 30	2 - 16
SMAW	E7018-1	5/32	DC EP	90 - 230	20 - 32	3 - 18
SMAW	E7018-1	3/16	DC-EP	130 - 290	20 - 34	4 - 19
SMAW	E7018-1	1/4	DC-EP	180 - 360	22 - 34	4 - 20
SAW	F7A6-EM12K	3/32	DC EP	250 - 750	22 - 38	4 - 35
SAW	F7A6-EM12K	1/8				
SAW	F7A6-EM12K	5/32				
SAW	F7A6-EM12K	3/16				

Notes: Number of weld layers and size of filler metal may vary with thickness of base material and position of weld.

[1]**SAW position limited by process usability.**

WELDING PROCEDURE SPECIFICATION (WPS) QW-482

(Section IX, ASME Boiler and Pressure Vessel Code)

WPS # SAS-1 Rev.1

PREHEAT & INTERPASS TEMPERATURE MINIMUM AND MAXIMUM	
Section VIII :	50°F minimum for all P-1 materials except as listed below :
	175°F if the joint thickness exceeds 1.000" and the specified carbon content exceeds 0.30%
	200°F if the joint thickness is 1.250" to 1.500"
B31.1 :	50°F minimum for all P-1 materials
B31.3 :	50°F for all P-1 materials except as listed below:
	175°F if the specified minimum tensile strength of the base material exceeds 71 ksi
Max. Interpass Temp.:	650°F for normal service, 550°F for applications where proven notch toughness is required

Reference to relevant construction codes is mandatory prior to production welding to determine any supplementary restrictions.

Typical Joint Details QW-482

Prepared by: Qualimet

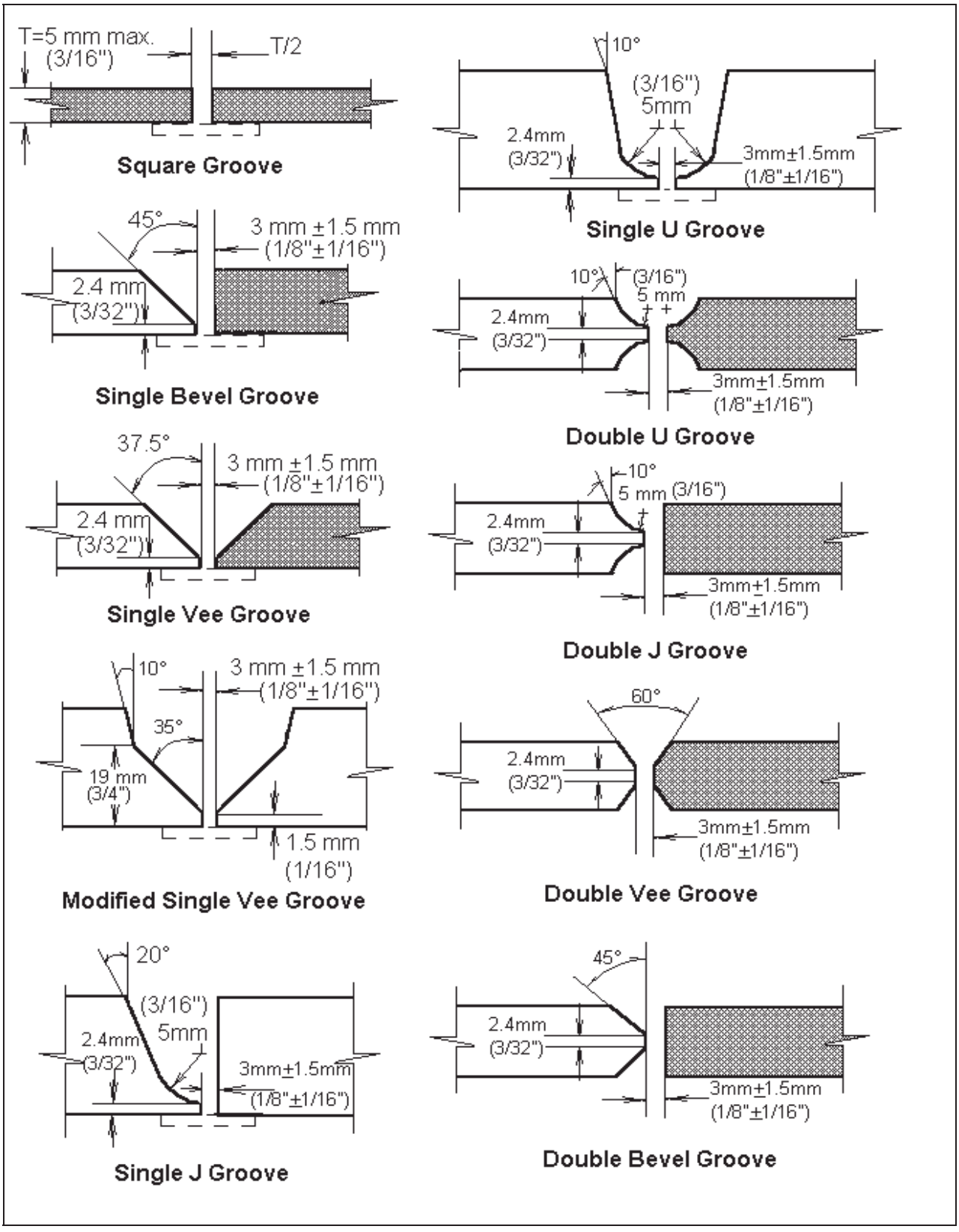

PROCEDURE QUALIFICATION RECORD (PQR) QW-483
(Section IX, ASME Boiler and Pressure Vessel Code)

Company Name:	Sub Arc Systems		
PQR No:	SAS-1-1	**Date:**	January 4, 2002
Revision No.:	-----	**Revision Date:**	-----
WPS No:	SAS-1		
Welding Process(es):	SMAW/ SMAW/ SAW		
Types:	Manual/ Manual/ Machine		

JOINTS QW-402

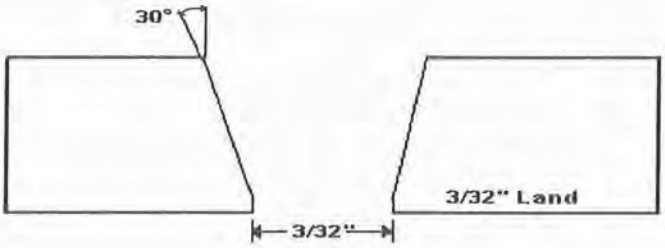

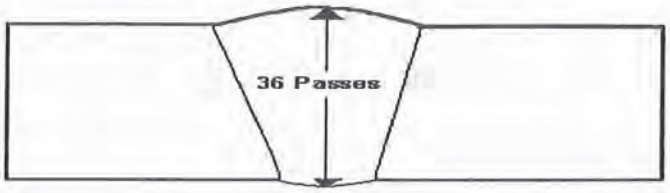

BASE METALS QW-403

Material Spec.:	SA-516	to	SA-516
Type or Grade:	Grade 60		Grade 70
P-No.:	P-1 Group 1		P-1 Group 2
Thickness of Test Coupon:	1.75" wt.		
Diameter of Test Coupon:	Plate		
Other:	Carbon Equivalent (C.E) : 0.40		

POSTWELD HEAT TREATMENT QW-407

Temperature:	
Time:	
Other:	*Not Applicable*

PREHEAT QW-406

Preheat & Interpass Min.:	175 °F
Interpass Max.:	600°F
	Temperature monitored using Tempilstick

SHIELDING GAS QW-408

Shielding Gas:	N/A
Composition:	N/A
Flow Rate:	N/A

FILLER METALS QW-404

Process	SMAW	SMAW	SAW
SFA Spec No:	5.1	5.1	5.17
AWS Class. No:	E6010	E7018-1	EM12K
F-No:	F-3	F-4	F-6
A-No:	A-1	A-1	A-1
Size of Filler Metal:	1/8"	1/8"	3/32"
Deposited Metal:	0.250"	0.750"	0.750"
Flux Class:	N/A	N/A	F7A6 (Neutral)
Other:	Covered Electrode	Covered Electrode	Coiled Solid Wire
			(Lincoln L61/882)

ELECTRICAL CHARACTERISTICS QW-409

Process:	SMAW	SMAW	SAW
Current:	Direct (DC)	Direct (DC)	Direct (DC)
Polarity:	Reverse (EP)	Reverse (EP)	Reverse (EP)
Volts:	21	21	31
Amps:	110	125	450
Heat Input (J/in):	69 300	63 000	73 636

TECHNIQUE QW-410

Process:	SMAW	SMAW	SAW
Position:	3G	3G	2G
Progression:	Vertical Up	Vertical Up	Horizontal
Travel Speed (ipm):	2.5	2.25	16
String or Weave:	String	String and Weave	String
Oscillation:	N/A	N/A	N/A
Single / Multi Pass:	Multiple	Multiple	Multiple
Single / Multi Electrodes:	Single	Single	Single
Wire Feed Rate:	N/A	N/A	80 ipm

PROCEDURE QUALIFICATION RECORD (PQR) QW-483
(Section IX, ASME Boiler and Pressure Vessel Code)

PQR # SAS-1-1

Tensile Test
QW-462

Specimen No.	Width In	Thickness In	Area in^2	Ultimate Total Load Lb	Ultimate Unit Stress psi	Type of Failure & Location
		See Attached Report				

Guided Bend Tests
QW-462

Type and Figure No.	Result
See Attached Report	

Toughness Tests
QW-170

Specimen No.	Notch Location	Notch Type	Test Temp	Impact Values	Lateral Exp % Shear	Lateral Exp Mils	Drop Weight Break	Drop Weight No Brk
			See Attached Report					

Fillet-Weld Tests
Not Applicable

Result-Satisfactory: Yes ____ No ____ Pen. Into Parent Material: Yes ____ No ____
Macro-Results:

Other Tests

Type of Test: Vickers Hardness Test to NACE MR01
Deposit Analysis: N/A

Welder's Name: Gary Kolman Clock No.: W-2638 Stamp ID: CC
Tests Conducted By: Qualimet Inc. Lab. Test No.: 636 – 01001

We certify that the statements in this record are correct and that the test welds were prepared, welded, and tested in accordance with the requirements of Section IX of the ASME Code.

Manufacturer: Sub Arc Systems

Date: January 4, 2002 By: Gary Kolman

• 7817 CORONET ROAD, EDMONTON, AB T6E 4N7 • (780) 469-5670 • FAX (780) 465-5829
• CALGARY (403) 278-9862 • 1-800-621-8979 • www.qualimetinc.com

"Your source of Quality Materials Engineering"

MECHANICAL TEST REPORT

for Procedure Qualification Record # SAS-1-1

Client:	Sub Arc Systems	**Job Number:**	636-01001
Address:	4605-47 Steet Vermillion, AB	**Date:**	January 4, 2002
Materials:	SA-516 Grade 60 to 70		
Size:	1.750" wt plate	**Condition:**	As Welded
Test Specification:	ASME Section IX		

Tensile Tests QW - 462.1(a)

Sample Identification:	CCT1	CCT2
Sample Size – inch:(W x T)	1.723 x 0.753	1.717 x 0.759
Least X-Sect. Area - in^2:	1.30	1.30
Ultimate Load - lbs:	102 526	104 116
Ult. Ten. Strength - ksi:	72.3	71.6
Character of Failure:	Ductile	Ductile
Location of Failure:	Base Metal 516 Gr.60 Side	Base Metal 516 Gr.60 Side
Req'd Tensile Strength - ksi:	60.0	60.0
Pass or Fail:	Passed	Passed
Remarks:		

*Bend Test QW - 462.2

Sample Identification:	CCB1	CCB2	CCB3	CCB4
Type of Bend Test:	TSB	TSB	TSB	TSB
Pass or Fail:	Pass	Pass	Pass	Pass
Remarks:				

*Types of Bend Tests

TSB, TFB, TRB = transverse side, face or root bend

LSB, LFB, LRB = longitudinal side, face or root bend

We certify that the statements in this record are acceptable, in accordance with the requirements of ASME Section IX.

TEST RESULTS CERTIFIED BY: QUALIMET INC.

• 7817 CORONET ROAD, EDMONTON, AB T6E 4N7 • (780) 469-5870 • FAX (780) 465-5829
• CALGARY (403) 278-9862 • 1-800-621-8979 • www.qualimetinc.com

"Your source of Quality Materials Engineering"

HARDNESS TEST REPORT

for Procedure Qualification Record # SAS-1-1

Client:	Sub Arc Systems	**Job Number:**	636-01001
Address:	4605-47 Steet Vermillion, Alberta T9X-1L6	**Date:**	January 4, 2002
Materials:	SA-516 Grade 60 to 70		
Size:	1.750" wt plate	**Condition:**	As Welded
Test Method:	Hardness testing performed in accordance with ASTM E-92 using a Vickers Hardness Tester with a 10 kg load. (HV10)		
Equipment:	Matsuzawa Seiki Co. Ltd. Vickers Hardness Tester S/N: 7193M		
Calibration:	**Test Block :** 197 ± 6 DPH	**Act. Reading:**	197 DPH

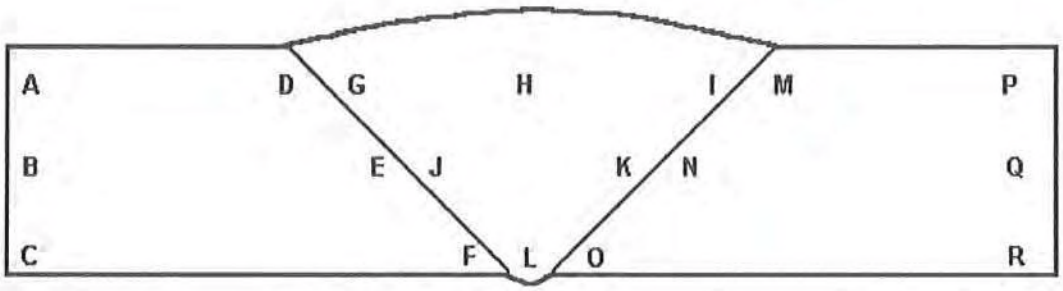

Hardness Values

A	177	D	198	G	205	J	210	M	189	P	178
B	182	E	205	H	103	K	207	N	196	Q	181
C	173	F	201	I	208	L	202	O	194	R	179

These hardness values do not exceed 248 HV10 (HRC 22).

We certify that the statements in this record are acceptable, in accordance with the requirements of ASME Section IX and NACE MR01

Test Results Certified by: QUALIMET INC.

• 7817 CORONET ROAD, EDMONTON, AB T6E 4N7 • (780) 468-5870 • FAX (780) 465-5829
• CALGARY (403) 278-9862 • 1-800-621-8979 • www.qualimetinc.com

"Your source of Quality Materials Engineering"

CHARPY V-NOTCH IMPACT TEST RESULTS

For Procedure Qualification Report # SAS-1

Client:	Sub Arc Systems	**Job Number:**	636-01001
Address:	4605-47 Steet Vermillion, AB	**Date:**	January 4, 2002
Materials:	SA-516 Grade 60 to 70		
Size:	1.750" wt plate	**Condition:**	As Welded
Specimen Type:	10.0 mm Charpy V Notch impact specimens		
Specification:	ASTM A-370, ASME Section VIII UG-84		
Qualification Temp.:	-46°C (-50°F)		

Sample Set	Sample Number	Impact Energy Ft-lb	(Joule)	Converted Full Size Impact Energy (J)	% Shear
Weld Zone – Root	1	14	19	24	20
Includes Both	2	48	65	81	20
SMAW Processes	3	38	51	64	20
	Average:	33	45	57	20
Weld Zone – Fill	1	58	79	79	10
	2	45	61	61	20
	3	88	119	119	40
	Average:	64	86	86	23
Heat Affected Zone	1	18	24	24	20
SA-516 Gr. 70	2	122	165	165	60
	3	101	137	137	70
	Average:	80	109	109	50
Heat Affected Zone	1	98	133	133	40
SA-516 Gr. 70	2	132	179	179	100
	3	86	117	117	40
	Average:	105	143	143	60

Remarks: These Charpy v-notch impact test results exceed the minimum requirements of ASME Section VIII and B31.3 Codes for –46°C; or CSA Z662-99 Codes for -46°C.

We certify that the statements in this record are acceptable, in accordance with the requirements of ASME Section IX.

Test Results Certified By: M Flynn **QUALIMET INC.**

PROCEDURE QUALIFICATION RECORD (PQR) QW-483
(Section IX, ASME Boiler and Pressure Vessel Code)

Company Name:	Sub Arc Systems		
PQR No:	SAS-1-2	**Date:**	January 4, 2002
Revision No.:	-----	**Revision Date:**	-----
WPS No:	SAS-1		
Welding Process(es):	SMAW/ SMAW/ SAW		
Types:	Manual/ Manual/ Machine		

JOINTS QW-402

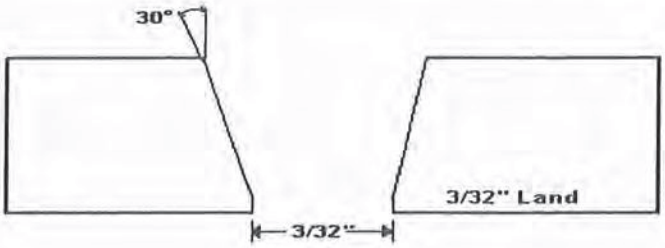

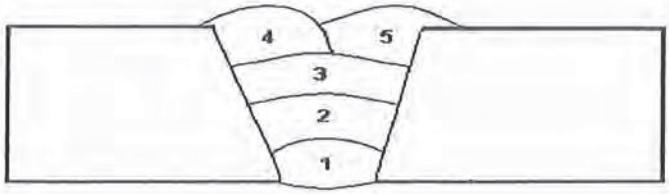

BASE METALS QW-403

Material Spec.:	SA-516	To	SA-516
Type or Grade:	Grade 60		Grade 70
P-No.:	P-1 Group 1		P-1 Group 2
Thickness of Test Coupon:	0.375" wt.		
Diameter of Test Coupon:	Plate		
Other:	Carbon Equivalent (C.E) : 0.38		

POSTWELD HEAT TREATMENT QW-407

Temperature:
Time:
Other: *Not Applicable*

PREHEAT QW-406

Preheat & Interpass Min.: 50 °F
Interpass Max.: 600°F
Temperature monitored using Tempilstick

SHIELDING GAS QW-408

Shielding Gas: N/A
Composition: N/A
Flow Rate: N/A

FILLER METALS QW-404

Process	SMAW	SMAW	SAW
SFA Spec No:	5.1	5.1	5.17
AWS Class. No:	E6010	E7018-1	EM12K
F-No:	F-3	F-4	F-6
A-No:	A-1	A-1	A-1
Size of Filler Metal:	1/8"	3/32"	3/32"
Deposited Metal:	0.100"	0.125"	0.150"
Flux Class:	N/A	N/A	F7A6 (Neutral)
Other:	Covered Electrode	Covered Electrode	Coiled Solid Wire
			(Lincoln L61/882)

ELECTRICAL CHARACTERISTICS QW-409

Process:	SMAW	SMAW	SAW
Current:	Direct (DC)	Direct (DC)	Direct (DC)
Polarity:	Reverse (EP)	Reverse (EP)	Reverse (EP)
Volts:	21	21	30
Amps:	110	110	425
Heat Input (J/in):	39 610	55 428	36 428

TECHNIQUE QW-410

Process:	SMAW	SMAW	SAW
Position:	3G	3G	2G
Progression:	Vertical Up	Vertical Up	Horizontal
Travel Speed (ipm):	3.5	2.5	21
String or Weave:	String	String and Weave	String
Oscillation:	N/A	N/A	N/A
Single / Multi Pass:	Multiple	Multiple	Multiple
Single / Multi Electrodes:	Single	Single	Single
Wire Feed Rate:	N/A	N/A	83 ipm

PROCEDURE QUALIFICATION RECORD (PQR) QW-483
(Section IX, ASME Boiler and Pressure Vessel Code)

PQR # SAS-1-2

Tensile Test
QW-462

Specimen No.	Width In	Thickness In	Area In^2	Ultimate Total Load Lb	Ultimate Unit Stress psi	Type of Failure & Location
		See Attached Report				

Guided Bend Tests
QW-462

Type and Figure No.	Result
See Attached Report	

Toughness Tests
QW-170

Specimen No.	Notch Location	Notch Type	Test Temp	Impact Values	Lateral Exp % Shear	Lateral Exp Mils	Drop Weight Break	Drop Weight No Brk
			See Attached Report					

Fillet-Weld Tests
Not Applicable

Result-Satisfactory: Yes ____ No ____ Pen. Into Parent Material: Yes ____ No ____
Macro-Results:

Other Tests

Type of Test: Vickers Hardness Test to NACE MR01
Deposit Analysis: N/A

Welder's Name: Gary Kolman **Clock No.:** W-2368 **Stamp ID:** CD
Tests Conducted By: Qualimet Inc. **Lab. Test No.:** 636 – 01001

We certify that the statements in this record are correct and that the test welds were prepared, welded, and tested in accordance with the requirements of Section IX of the ASME Code.

Manufacturer: Sub Arc Systems

Date: January 4, 2002 **By:** Gary Kolman Gary Kolman

• 7817 CORONET ROAD, EDMONTON, AB T6E 4N7 • (780) 469-5870 • FAX (780) 465-5829
• CALGARY (403) 278-9862 • 1-800-621-8979 • www.qualimetinc.com

"Your source of Quality Materials Engineering"

MECHANICAL TEST REPORT

for Procedure Qualification Record # SAS-1-2

Client:	Sub Arc Systems	Job Number:	636-01001
Address:	4605-47 Steet Vermillion, AB	Date:	January 4, 2002
Materials:	SA-516 Grade 60 to 70		
Size:	0.375" wt plate	Condition:	As Welded
Test Specification:	ASME Section IX		

Tensile Tests QW - 462.1(a)

Sample Identification:	CDT1	CDT2
Sample Size - inch:(W x T)	0.7300 x 0.3600	0.7200 x 0.380
Least X-Sect. Area – in^2:	0.263	0.360
Ultimate Load – lbs:	22 340	22 408
Ult. Ten. Strength – ksi:	85.0	86.4
Character of Failure:	Ductile	Ductile
Location of Failure:	Base Metal SA-516 Gr.60 Side	Base Metal SA-516 Gr.60 Side
Req'd Tensile Strength – ksi:	60.0	60.0
Pass or Fail:	Passed	Passed
Remarks:		

*Bend Test QW - 462.2

Sample Identification:	CDB1	CDB2	CDB3	CDB4
Type of Bend Test:	TSB	TSB	TSB	TSB
Pass or Fail:	Pass	Pass	Pass	Pass
Remarks:				

*Types of Bend Tests
TSB, TFB, TRB = transverse side, face or root bend
LSB, LFB, LRB = longitudinal side, face or root bend

We certify that the statements in this record are acceptable, in accordance with the requirements of ASME Section IX.

TEST RESULTS CERTIFIED BY: QUALIMET INC.

• 7817 CORONET ROAD, EDMONTON, AB T6E 4N7 • (780) 469-5870 • FAX (780) 465-5829
• CALGARY (403) 278-9862 • 1-800-621-8979 • www.qualimetinc.com

"Your source of Quality Material Engineering"

HARDNESS TEST REPORT

for Procedure Qualification Record # SAS-1-2

Client:	Sub Arc Systems	**Job Number:**	636-01001
Address:	4605-47 Steet Vermillion, AB	**Date:**	January 4, 2002
Materials:	SA-516 Grade 60 to 70		
Size:	0.375" wt plate	**Condition:**	As Welded
Test Method:	Hardness testing performed in accordance with ASTM E-92 using a Vickers Hardness Tester with a 10 kg load. (HV10)		
Equipment:	Matsuzawa Seiki Co. Ltd. Vickers Hardness Tester S/N: 7193M		
Calibration:	**Test Block :** 197 ± 6 DPH	**Act. Reading:**	197 DPH

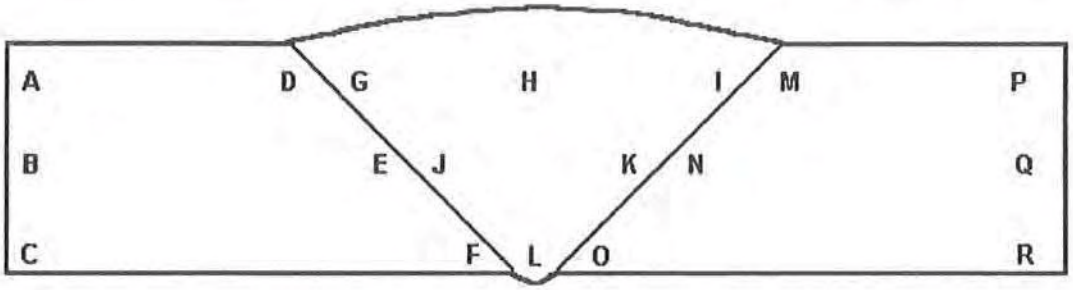

Hardness Values

A	198	D	208	G	215	J	212	M	204	P	193
B	195	E	203	H	211	K	215	N	202	Q	189
C	196	F	206	I	210	L	209	O	207	R	195

These hardness values do not exceed 248 HV10 (22 HRC).

We certify that the statements in this record are acceptable, in accordance with the requirements of ASME Section IX and NACE MR01

Test Results Certified by: M Ramu **QUALIMET INC.**

• 7817 CORONET ROAD, EDMONTON, AB T6E 4N7 • (780) 469-5870 • FAX (780) 465-5829
• CALGARY (403) 278-9862 • 1-800-621-8979 • www.qualimetinc.com

"Your source of Quality Materials Engineering"

CHARPY V-NOTCH IMPACT TEST RESULTS

For Procedure Qualification Report # SAS-1-2

Client:	Sub Arc Systems	**Job Number:**	636-01001
Address:	4605-47 Steet Vermillion, AB	**Date:**	January 4, 2002
Materials:	SA-516 Grade 60 to 70		
Size:	0.375" wt plate	**Condition:**	As Welded
Specimen Type:	8.5 mm Charpy V Notch impact specimens		
Specification:	ASTM A-370, ASME Section VIII UG-84		
Qualification Temp.:	-46°C (-50°F)		

Sample Set	Sample Number	Impact Energy Ft-lb	(Joule)	Converted Full Size Impact Energy (J)	% Shear
	1	10	14	16	20
Weld	2	12	16	19	20
	3	24	33	38	20
	Average:	15	21	24	20
Heat Affected Zone	1	82	111	131	70
SA516 Gr. 60	2	106	144	169	80
	3	146	198	233	100
	Average:	111	151	178	83
Heat Affected Zone	1	98	133	166	40
SA516 Gr. 70	2	132	179	224	100
	3	86	117	146	40
	Average:	105	143	179	60

Remarks: These Charpy v-notch impact test results exceed the minimum requirements of ASME Section VIII and B31.3 Codes for -46°C; or CSA Z662-99 Codes for -46°C.

We certify that the statements in this record are acceptable, in accordance with the requirements of ASME Section IX.

Test Results Certified By: **QUALIMET INC.**

PROCEDURE QUALIFICATION RECORD (PQR) QW-483

(Section IX, ASME Boiler and Pressure Vessel Code)

Company Name:	Sub Arc Systems	**By:**	Gary Kohlman
PQR No.:	SAS-1-3	**Date:**	January 4, 2002
Revision No.:	1[1]	**Revision Date:**	July 15, 2014
Welding Process(es):	SMAW / SMAW / SAW	**Types:**	Manual / Manual / Machine

JOINTS QW-402

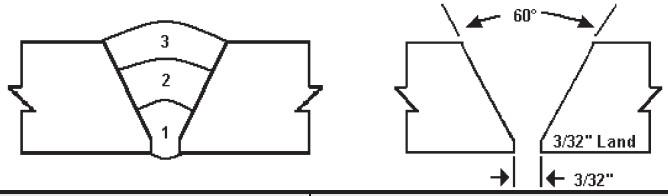

BASE METALS QW-403

Material Spec.:	SA-516		SA-516
Grade/Type/Class:	Gr. 60		Gr. 70
P-No. Group No.:	P-1 Group 1	**to**	P-1 Group 2
Heat No.:	Not Recorded		Not Recorded
ASME C.E.:	Not Recorded		Not Recorded
CSA C.E.:	Not Recorded		Not Recorded
Thickness & Diameter:	0.249" thick plate (machined)		
Max Weld Deposit:	<0.500" per pass		

POSTWELD HEAT TREATMENT QW-407

Temperature:	
Time:	
Heating:	
	(Not Applicable)
Cooling:	
Other:	

PREHEAT QW-406

Preheat Temp. Min.:	50°F
Interpass Temp. Max.:	600°F
Interpass Temp. Min.:	50°F
Other:	Temperature monitored by tempilstiks

POSITIONS QW-405

Process:	F-3 SMAW	F-4 SMAW	SAW
Position:	3-G	3-G	2-G
Progression:	Vertical Up	Vertical Up	Horizontal
Other:	Not Applicable	Not Applicable	Not Applicable

FILLER METALS QW-404

Process:	**SMAW**	**SMAW**	**SAW**
SFA Specification No.:	5.1	5.1	5.17
AWS Classification No.:	E6010	E7018-1	EM12K
F-No.:	F-3	F-4	F-6
A-No.:	A-1	A-1	A-1
Size of Filler Metal:	1/8"	3/32"	3/32"
Deposited Weld Metal:	0.050"	0.075"	0.125"
Electrode-Flux (Class):	Not Applicable	Not Applicable	F7A6
Flux Trade Name:	Not Applicable	Not Applicable	Lincolnweld 882
Alloy Element/Flux:	Not Applicable	Not Applicable	None
Manufacturer:	Not Recorded	Not Recorded	Lincoln Electric
Trade Name:	Not Recorded	Not Recorded	L-61
Heat Number:	Not Recorded	Not Recorded	Not Recorded
Product Form:	Covered Electrode	Covered Electrode	Coiled Metal Cored Wire

SHIELDING GAS QW-408

Shielding Gas:			
Composition:			
Flow Rate:	***(Not Applicable)***	***(Not Applicable)***	***(Not Applicable)***
Trailing / Backing Gas:			
Flow Rate:			

ELECTRICAL CHARACTERISTICS QW-409

Current:	Direct (DC)	Direct (DC)	Direct (DC)
Polarity:	Reverse (EP)	Reverse (EP)	Reverse (EP)
Volts:	21	20	30
Amps:	110	105	425
Travel Speed (ipm):	5.5	4.3	24
Maximum Heat Input (J/in):	25 200	29 640	36 428
Wire Feed Speed (ipm):	Not Applicable	Not Applicable	82
Mode of Metal Transfer:	Not Applicable	Not Applicable	Not Applicable

TECHNIQUE QW-410

String or Weave:	String	String & Weave	String
Oscillation:	Not Applicable	Not Applicable	Not Applicable
Single / Multi Pass:	Single Pass from one side	Single Pass from one side	Single Pass from one side
Single / Multi Electrodes:	Single	Single	Single
Thermal Processes	Not Applicable	Not Applicable	Not Applicable
Wire Stick Out:	Not Applicable	Not Applicable	Not Recorded
Nozzle / Cup Size:	Not Applicable	Not Applicable	Not Applicable

[1] **Revision 1: Revision to correct editorial error.**

PROCEDURE QUALIFICATION RECORD (PQR) QW-483
(Section IX, ASME Boiler and Pressure Vessel Code)

PQR # SAS-1-3 Revision 1

Tensile Test
QW-462

Specimen No.	Width in	Thickness in	Area in^2	Ultimate Total Load Lb	Ultimate Unit Stress ksi	Type of Failure & Location
		(Not Applicable)				

Guided Bend Tests
QW-462

Specimen No.	Type	Figure	Result
	(Not Applicable)		

Toughness Tests
QW-170

Specimen No.	Notch Location	Notch Type	Test Temp	Full Size Values (ft-lbs)	% Shear	Lateral Exp Inches	Drop Weight Break	Drop Weight No Brk
CE-1	Weld	V-Notch	-50°F	76	80	Not Recorded	N/A	N/A
CE-2	Weld	V-Notch	-50°F	92	80	Not Recorded	N/A	N/A
CE-3	Weld	V-Notch	-50°F	100	100	Not Recorded	N/A	N/A
CE-4	HAZ (Grade 60)	V-Notch	-50°F	56	40	Not Recorded	N/A	N/A
CE-5	HAZ (Grade 60)	V-Notch	-50°F	72	40	Not Recorded	N/A	N/A
CE-6	HAZ (Grade 60)	V-Notch	-50°F	52	30	Not Recorded	N/A	N/A
CE-7	HAZ (Grade 70)	V-Notch	-50°F	82	40	Not Recorded	N/A	N/A
CE-8	HAZ (Grade 70)	V-Notch	-50°F	74	40	Not Recorded	N/A	N/A
CE-9	HAZ (Grade 70)	V-Notch	-50°F	72	40	Not Recorded	N/A	N/A

Fillet-Weld Tests
Not Applicable

Result-Satisfactory: **Yes** _____ **No** _____ Pen. into Parent Material: **Yes** _____ **No** _____
Macro-Results:

Other Tests
Not Applicable

Type of Test:
Other:

Welder's Name: Gary Kohlman **Reg. No.:** W-2368 **Stamp ID:** CE
Tests Conducted By: Qualimet **Lab. Test No.:** 100-14010
Revisions By: Qualimet

We hereby recertify that the statements in this record have been revised in accordance with paragraph QW-200.2 are correct and that the test welds were prepared, welded, and tested in accordance with the requirements of Section IX of the ASME Code.

Manufacturer: Sub Arc Systems

Original Cert. Date: January 4, 2002 **Certified By:** Gary Kohlman

Recertification Date: July 16, 14 **Certified By:**

• 8055 CORONET ROAD, EDMONTON, AB T6E 4N7 • (780) 469-5870 • FAX (780) 465-5829
• CALGARY (403) 278-9862 • 1-800-621-8979 • www.qualimet.ca

"Your source of Quality Materials Engineering"

REVISED CHARPY IMPACT TEST REPORT**

for Procedure Qualification Record # SAS-1-3

Client:	Sub-Arc Systems Inc.	**Job Number:**	636-01001
Address:	4605-47 Street, Vermillion AB, T9X 1L6	**Date:**	January 4, 2002
Materials:	SA-516 Grade 60/70 to SA-516 Grade 60/70	**Revision Date:**	July 15, 2014
Size:	0.249" w.t. Plate (machined)	**Condition:**	As Welded
Test Specification:	ASME Section VIII UG-84, ASTM A-370		
Test Equipment:	Satec Model S1-10, S/N: 1164		

Specimen Type:	Charpy V-Notch		
Qualification Temperature:	-50.0°F	**Test Temperature:**	-50.0°F

Specimen Size (mm): 5

Sample Set	Sample Number	Actual Impact Energy (ft-lb)	Full Size (ft-lb)	Shear (%)	Lat. Exp. (in.)
Weld (Includes all processes)	1	38	76	80	Not Recorded
	2	46	92	80	Not Recorded
	3	50	100	100	Not Recorded
	Average:	**45**	**89**	**87**	**Not Recorded**

We certify that the statements in this record are acceptable and that the specimen(s) were prepared and tested in accordance with the requirements of the current edition of ASTM A370, ASTM E23 and their latest editions.

**Revision of test report to correct editorial error.

TEST RESULTS CERTIFIED BY: Qualimet

Hanibal Ghile, E.I.T.

• 8055 CORONET ROAD, EDMONTON, AB T6E 4N7 • (780) 469-5870 • FAX (780) 465-5829
• CALGARY (403) 278-9862 • 1-800-621-8979 • www.qualimet.ca
"Your source of Quality Materials Engineering"

REVISED CHARPY IMPACT TEST REPORT**

for Procedure Qualification Record # SAS-1-3

Client:	Sub-Arc Systems Inc.	**Job Number:**	636-01001
Address:	4605-47 Street, Vermillion AB, T9X 1L6	**Date:**	January 4, 2002
Materials:	SA-516 Grade 60/70 to SA-516 Grade 60/70	**Revision Date:**	July 15, 2014
Size:	0.249" w.t. Plate (machined)	**Condition:**	As Welded
Test Specification:	ASME Section VIII UG-84, ASTM A-370		
Test Equipment:	Satec Model S1-10, S/N: 1164		

Specimen Type:	Charpy V-Notch		
Qualification Temperature:	-50.0°F	**Test Temperature:**	-50.0°F

Sample Set	Sample Number	Actual Impact Energy (ft-lb)	Full Size (ft-lb)	Shear (%)	Lat. Exp. (in.)
HAZ (Grade 60)	1	28	56	40	Not Recorded
	2	36	72	40	Not Recorded
	3	26	52	30	Not Recorded
	Average:	**30**	**60**	**37**	**Not Recorded**

We certify that the statements in this record are acceptable and that the specimen(s) were prepared and tested in accordance with the requirements of the current edition of ASTM A370, ASTM E23 and their latest editions.

****Revision of test report to correct editorial error.**

TEST RESULTS CERTIFIED BY: Qualimet

Hanibal Ghile, E.I.T.

• 8055 CORONET ROAD, EDMONTON, AB T6E 4N7 • (780) 469-5870 • FAX (780) 465-5829
• CALGARY (403) 278-9862 • 1-800-621-8979 • www.qualimet.ca

"Your source of Quality Materials Engineering"

REVISED CHARPY IMPACT TEST REPORT**

for Procedure Qualification Record # SAS-1-3

Client:	Sub-Arc Systems Inc.	**Job Number:**	636-01001
Address:	4605-47 Street, Vermillion AB, T9X 1L6	**Date:**	January 4, 2002
Materials:	SA-516 Grade 60/70 to SA-516 Grade 60/70	**Revision Date:**	July 15, 2014
Size:	0.249" w.t. Plate (machined)	**Condition:**	As Welded
Test Specification:	ASME Section VIII UG-84, ASTM A-370		
Test Equipment:	Satec Model S1-10, S/N: 1164		

Specimen Type:	Charpy V-Notch		
Qualification Temperature:	-50.0°F	**Test Temperature:**	-50.0°F

Specimen Size (mm): 5

Sample Set	Sample Number	Actual Impact Energy (ft-lb)	Full Size (ft-lb)	Shear (%)	Lat. Exp. (in.)
HAZ (Grade 70)	1	41	82	40	Not Recorded
	2	37	74	40	Not Recorded
	3	36	72	40	Not Recorded
	Average:	**38**	**76**	**40**	**Not Recorded**

We certify that the statements in this record are acceptable and that the specimen(s) were prepared and tested in accordance with the requirements of the current edition of ASTM A370, ASTM E23 and their latest editions.

**Revision of test report to correct editorial error.

TEST RESULTS CERTIFIED BY: Qualimet

Hanibal Ghile, E.I.T.

PROCEDURE QUALIFICATION RECORD (PQR) QW-483

(Section IX, ASME Boiler and Pressure Vessel Code)

Company Name:	Sub-Arc Systems Inc.	**By:**	Gary Kohlman
PQR No.:	SAS-1-4	**Date:**	July 15, 2014
Revision No.:	0	**Revision Date:**	-----
Welding Process(es):	SMAW / SMAW /SAW	**Type(s):**	Manual / Manual / Machine

JOINTS QW-402

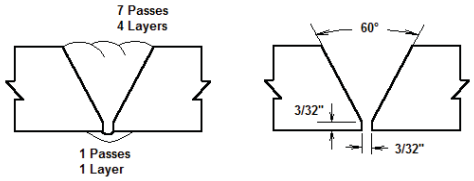

BASE METALS QW-403

Material Spec.:	SA-516		SA-516
Grade/Type/Class:	Grade 60/70		Grade 60/70
P-No. Group No.:	P-1 Group 1/2	**to**	P-1 Group 1/2
Heat No.:	E3D260		E3D260
Carbon Equivalent (ASME):	0.42		0.42
Carbon Equivalent (CSA):	0.42		0.42
Thickness & Diameter:	0.500" w.t. Plate		
Max Weld Deposit:	<0.500" per pass		

POSTWELD HEAT TREATMENT QW-407

Temperature:	
Time:	
Heating:	***(None – As Welded)***
Cooling:	
Other:	

PREHEAT QW-406

Preheat Temp. Min.:	50°F
Interpass Temp. Max.:	600°F
Interpass Temp. Min.:	50°F
Other:	Temperature monitored using tempilstiks

POSITIONS QW-405

Process:	F-3 SMAW	F-4 SMAW	SAW
Position:	3-G	3-G	2-G
Progression:	Vertical Up	Vertical Up	Horizontal
Other:	N/A	N/A	N/A

FILLER METALS QW-404

Process:	**SMAW**	**SMAW**	**SAW**
SFA Specification No.:	5.1	5.1	5.17
AWS Classification No.:	E6010	E7018-1	EM12K-H8
F-No.:	F-3	F-4	F-6
A-No.:	A-1	A-1	A-1
Size of Filler Metal:	1/8"	3/32"	3/32"
Deposited Weld Metal:	0.125"	0.125"	0.250"
Manufacturer:	Lincoln Electric	ESAB	Lincoln Electric
Trade Name:	Fleetweld 5P+	OK55	LA-61
Heat / Lot Number:	ED511111	SB248224	500344
Electrode-Flux (Class):	Not Applicable	Not Applicable	F7A6-EM12K-H8
Flux Tradename:	Not Applicable	Not Applicable	Lincolnweld 882 Flux
Flux Heat / Lot Number.:	Not Applicable	Not Applicable	12R13
Product Form:	Covered Electrode	Covered Electrode	Coiled Solid Wire

SHIELDING GAS QW-408

Shielding Gas:			
Composition:	***(Not Applicable)***	***(Not Applicable)***	***(Not Applicable)***
Flow Rate:			
Backing Gas:			

ELECTRICAL CHARACTERISTICS QW-409

Current:	Direct (DC)	Direct (DC)	Direct (DC)
Polarity:	Reverse (EP)	Reverse (EP)	Reverse (EP)
Volts:	22	22	30
Amps:	80	80 - 90	420
Travel Speed (ipm):	5.9	4.9 - 5.7	21.8
Maximum Heat Input (J/in):	18 040	23 704	34 650
Tungsten Electrode:	Not Applicable	Not Applicable	Not Applicable
STT Program Settings:	Not Applicable	Not Applicable	Not Applicable

TECHNIQUE QW-410

String or Weave:	String	String	String
Oscillation:	Not Applicable	Not Applicable	Not Applicable
Single / Multi Pass:	Single Pass from one side	Multiple Passes from one side	Multiple Passes from one side
Single / Multi Electrodes:	Single	Single	Single
Wire Stick Out:	Not Applicable	Not Applicable	1/4" to 1 1/4"
Nozzle / Cup Size:	Not Applicable	Not Applicable	Not Applicable

PROCEDURE QUALIFICATION RECORD (PQR) QW-483
(Section IX, ASME Boiler and Pressure Vessel Code)

PQR # SAS-1-4 Rev.0

Tensile Test
QW-462

Specimen No.	Width (in)	Thickness (in)	Area (in^2)	Ultimate Total Load (lbs)	Ultimate Unit Stress (ksi)	Type of Failure & Location
			(Not Applicable)			

Guided Bend Tests
QW-462

Specimen No.	Type	Figure	Result
		(Not Applicable)	

Toughness Tests
QW-170

Specimen No.	Notch Location	Notch Type	Qual. Temp	Full Size Values (ft-lbs)	% Shear	Lateral Exp Inches	Drop Weight Break	Drop Weight No Brk
DG-1	Weld	V-Notch	-50°F	56	30	0.040	-----	-----
DG-2	Weld	V-Notch	-50°F	58	40	0.041	-----	-----
DG-3	Weld	V-Notch	-50°F	66	40	0.044	-----	-----
DG-4	HAZ	V-Notch	-50°F	56	-----**	-----**	-----	-----
DG-5	HAZ	V-Notch	-50°F	28	30	0.019	-----	-----
DG-6	HAZ	V-Notch	-50°F	89	-----**	-----**	-----	-----

**Shear and Lateral Expansion not recorded – specimen did not break

Fillet-Weld Tests
Not Applicable

Result-Satisfactory: **Yes** _____ **No** _____ Pen. into Parent Material: **Yes** ___ **No** _____
Macro-Results:

Other Tests

Type of Test: Not Applicable
Other: Not Applicable

Welder's Name: Keith Breedon **Reg. No.:** W-11618 **Stamp ID:** DG
Tests Conducted By: Qualimet **Lab. Test No.:** 100-14010

We certify that the statements in this record are correct and that the test welds were prepared, welded, and tested in accordance with the requirements of Section IX of the ASME code.

Manufacturer: Sub-Arc Systems Inc.
Date: July 15, 2014 **Certified By:** Gary Kohlman

• 8055 CORONET ROAD, EDMONTON, AB T6E 4N7 • (780) 469-5870 • FAX (780) 465-5829
• CALGARY (403) 278-9862 • 1-800-621-8979 • www.qualimet.ca

"Your source of Quality Materials Engineering"

CHARPY IMPACT TEST REPORT

for Procedure Qualification Record # SAS-1-4

Client:	Sub-Arc Systems Inc.	**Job Number:**	100-14010
Address:	4605-47 Street, Vermillion AB, T9X 1L6	**Date:**	July 15, 2014
Materials:	SA-516 Grade 60/70 to SA-516 Grade 60/70		
Size:	0.500" w.t. Plate	**Condition:**	As Welded
Test Specification:	ASME Section VIII UG-84, ASTM A-370		
Test Equipment:	Satec Model S1-10, S/N: 1164		

Specimen Type:	Charpy V-Notch		
Qualification Temperature:	-50.0°F	**Test Temperature:**	-50.0°F

Specimen Size (mm): 10

Sample Set	Sample Number	Actual Impact Energy (ft-lb)	Full Size (ft-lb)	Shear (%)	Lateral Expansion Inches
Weld (includes all processes)	DG-1	56	56	30	0.040
	DG-2	58	58	40	0.041
	DG-3	66	66	40	0.044
	Average:	**60**	**60**	**37**	**0.042**

We certify that the statements in this record are acceptable and that the specimen(s) were prepared and tested in accordance with the requirements of the current edition of ASTM A370, ASTM E23 and their latest editions.

TEST RESULTS CERTIFIED BY: Qualimet

Hanibal Ghile, E.I.T.

• 8055 CORONET ROAD, EDMONTON, AB T6E 4N7 • (780) 469-5870 • FAX (780) 465-5829
• CALGARY (403) 278-9862 • 1-800-621-8979 • www.qualimet.ca

"Your source of Quality Materials Engineering"

CHARPY IMPACT TEST REPORT

for Procedure Qualification Record # SAS-1-4

Client:	Sub-Arc Systems Inc.	**Job Number:**	100-14010
Address:	4605-47 Street, Vermillion AB, T9X 1L6	**Date:**	July 15, 2014
Materials:	SA-516 Grade 60/70 to SA-516 Grade 60/70		
Size:	0.500" w.t. Plate	**Condition:**	As Welded
Test Specification:	ASME Section VIII UG-84, ASTM A-370		
Test Equipment:	Satec Model S1-10, S/N: 1164		

Specimen Type:	Charpy V-Notch		
Qualification Temperature:	-50.0°F	**Test Temperature:**	-50.0°F

Specimen Size (mm): 10

Sample Set	Sample Number	Actual Impact Energy (ft-lb)	Full Size (ft-lb)	Shear (%)	Lateral Expansion Inches
HAZ	DG-4	56	56	-----**	-----**
	DG-5	28	28	30	0.019
	DG-6	89	89	-----**	-----**
	Average:	**58**	**58**	-----**	-----**

**Shear and Lateral Expansion not recorded – specimen did not break

We certify that the statements in this record are acceptable and that the specimen(s) were prepared and tested in accordance with the requirements of the current edition of ASTM A370, ASTM E23 and their latest editions.

TEST RESULTS CERTIFIED BY: Qualimet

Hanibal Ghile, E.I.T.

SUB-ARC SYSTEMS INC.

Welding Procedure Specification

in accordance with

ASME Section IX

Welding Procedure Specification No.: SAS-2 Revision 2[1]

Supporting PQR No. (s): SAS-2-1 Revision 1, SAS-2-2 Revision 1, SAS-2-3 Revision 1, SAS-2-4 Revision 1

Qualified for

Process(es):	SAW (Leading) / SAW (Trailing)	**Position(s):**	Flat, Horizontal
Filler Metal F-No.:	F7A6-EM12K -H8 / F7A6-EM12K-H8	**A-No.:**	A-1 / A-1
AWS Classification:	F-6 / F-6	**Weld Type(s):**	Groove, Fillet, Weld buildup
Base Metal:	P-1 Group 1 or 2	To:	P-1 Group 1 or 2
Typical Materials:	This procedure is qualified for all P-1 materials as specified in Table QW-422 of ASME Section IX for applications where proven notch toughness properties are not required, and P-1 Group 1 or 2 materials only for applications where proven notch toughness properties are required.		
Diameter Range:	All diameters	**Condition(s):**	As Welded

Thickness Range:

	Normal Service	Impact Tested to -50°F
ASME Section IX	0.062" to 1.500"	0.125" to 1.500"
ASME Section VIII	0.062" to 1.500"	0.125" to 1.500"
ASME B31.1	0.062" to 0.750"	0.125" to 0.750"
ASME B31.3	0.062" to 0.750"	0.125" to 0.750"

[1]**Revision 2:** Review and update to the current edition of the ASME code.

Provincial Registration

ABSA

SAFETY CODES ACT - PROVINCE OF ALBERTA
WELDING PROCEDURE

Reg. No. WP 2389.2
Spec No. SAS-2 (Rev 2)
Weld Process SAW
Matl. Gr. P No. 1 Gr 1+2 to P No. 1 Gr 1+2
Elect Gr. F No. 6 A No. 1
Th. Qual For 38.1mm P.W.H.T. NO
MIN TH QUAL 3.2mm., CVN -46°C

Yr. 14 Mo. 11 Day 5 Signed

JASON REINHART, P.ENG.
WELDING SPECIALIST

Provincial Registration

WELDING PROCEDURE SPECIFICATION (WPS) QW-482

(Section IX, ASME Boiler and Pressure Vessel Code)

Company Name:	Sub-Arc Systems Inc.	**By:**	Gary Kohlman
WPS No.:	SAS-2	**Date:**	June 4, 2010
Revision No.:	2[1]	**Revision Date:**	October 3, 2014
Supporting PQR's:	SAS-2-1 Revision 1, SAS-2-2 Revision 1, SAS-2-3 Revision 1, SAS-2-4 Revision 1		
Welding Process(es):	SAW / SAW	**Type(s):**	Machine / Machine

JOINTS QW-402		**Joint Details**
Joint Design:	Butt, Tee, Lap, Corner, etc.	**All ASME joint designs.** Reference construction
Backing:	F-6 SAW (Leading) with or without backing	drawings for joint details. Where joint details are not
	F-6 SAW (Trailing) with backing only	specified, refer to typical joint detail sheet provided.
Backing Material (Type):	Similar base or weld metal or backwelding as required. No Retainers.	

BASE METALS QW-403

P-No.: P-1 **Group No.:** *1 or 2 **to P-No.:** P-1 **Group No.:** *1 or 2

OR

Spec. type & grade: Not Applicable **to Spec. type & grade:** Not Applicable

OR

Chem. Analysis & Mech. Prop.: Not Applicable **to Chem. Analysis & Mech. Prop.:** Not Applicable

Thickness Range

		Normal Service	Impact Tested to -50°F		
Base Metal: Groove:	Section IX	0.062" to 1.500"	0.125" to 1.500"	**Fillet:**	All
	Section VIII	0.062" to 1.500"	0.125" to 1.500"	**Fillet:**	All
	B31.1	0.062" to 0.750"	0.125" to 0.750"	**Fillet:**	All
	B31.3	0.062" to 0.750"	0.125" to 0.750"	**Fillet:**	All
Pipe Dia Range: Groove:	All diameters			**Fillet:**	All

Other: *Limited to P-1 Group 1 or 2 only when proven notch toughness properties are required.

Maximum thickness of any weld layer shall not exceed .500"

FILLER METALS QW-404

Process:	**SAW (Leading)**	**SAW (Trailing)**
Specification No. (SFA):	5.17	5.17
AWS Classification No.:	F7A6-EM12K	F7A6-EM12K
F-No.:	F-6	F-6
A-No.:	A-1	A-1
Size of Filler Metals:	3/32", 1/8", 5/32", 3/16"	3/32", 1/8", 5/32", 3/16"
Weld Metal Thickness - Groove:	1.000"	1.000"
- Fillet:	Unlimited	Unlimited
Electrode-Flux (Class):	F7A6-EM12K-H8	F7A6-EM12K-H8
Manufacturer:	Lincoln Electric	Lincoln Electric
Tradename:	LA-61	LA-61
Flux Trade Name:	Lincoln 882 Flux	Lincoln 882 Flux
Alloy Flux:	Neutral	Neutral
Consumable Insert:	Not Applicable	Not Applicable
Supplemental Filler Metals:	Not Applicable	Not Applicable
Product Form:	Coiled Solid Wire	Coiled Solid Wire

[1]**Revision 2:** Review and update to the current edition of the ASME code.

WELDING PROCEDURE SPECIFICATION (WPS) QW-482

(Section IX, ASME Boiler and Pressure Vessel Code)

WPS # SAS-2 Rev.2

POSITIONS QW-405		POSTWELD HEAT TREATMENT QW-407	
Position(s) of Groove:	All	**Temp. Range:**	
Welding Progression:	F-6 SAW (Leading) Flat or Horizontal only.	**Time Range:**	***(None – As Welded)***
	F-6 SAW (Trailing) Flat or Horizontal only.	**Heating:**	
Position(s) of Fillet:	All	**Cooling:**	
PREHEAT QW-406		**GAS QW-408**	
Temperature Min.:		**Shielding Gas(es):**	
Interpass Temp. Max.:	***(See Next Page)***	**Composition:**	
Interpass Min.:		**Flow Rate:**	***(Not Applicable)***
Preheat Maintenance:	Monitor using tempilstiks, pyrometer or other suitable methods.	**Gas Backing:**	
		Other:	

ELECTRICAL CHARACTERISTICS QW-409

Current:	**F-6 SAW (Leading):**	Direct - DC	**F-6 SAW (Trailing):**	Direct - DC
Polarity:	**F-6 SAW (Leading):**	Reverse - EP	**F-6 SAW (Trailing):**	Reverse - EP
Amps (Range):	**F-6 SAW (Leading):**	250 - 750	**F-6 SAW (Trailing):**	250 - 750
Volts (Range):	**F-6 SAW (Leading):**	22 - 38	**F-6 SAW (Trailing):**	22 - 38
Travel Speed (Range):	**F-6 SAW (Leading):**	4 - 35	**F-6 SAW (Trailing):**	4 - 35
Maximum Heat Input: 0.125" to 0.625":	**F-6 SAW (Leading):**	30 240 J/in	**F-6 SAW (Trailing):**	30 240 J/in
0.625" to 1.500":	**F-6 SAW (Leading):**	30 240 J/in	**F-6 SAW (Trailing):**	30 240 J/in
Electrode Wire feed speed range:	50 - 550 ipm			
Tungsten Electrode Size & Type:	Not Applicable			
Mode of Metal Transfer for GMAW:	Not Applicable			
Other:	Maximum heat input mandatory only when proven notch toughness is required			

TECHNIQUE QW-410

String or Weave Bead:	String and weave. Weave size shall be controlled to prevent exceeding maximum heat inputs.
Orifice or Gas Cup Size:	1/4" to 1"
Initial Cleaning:	Base material must be thoroughly cleaned of all foreign material (scale, rust, oil, grease, paint, tar, etc.) at least 1" back on each side of the joint prior to welding. All surfaces to be welded shall be smooth, uniform and free from notches, slag, fins and burrs.
Interpass Cleaning:	Perform by wire brush, chipping hammer, power brushing, grinding, etc. after each weld layer.
Method of Back Gouging:	Arc air, gouge, grind, etc., grind to clean metal where thermal processes are used if required.
Oscillation:	Not Applicable
Contact Tube to Work Distance:	1/4" to 1 1/4"
Electrode Spacing:	1" to 6"
Multiple or Single Pass (per side):	Single or multiple passes per side, multiple only when proven notch toughness properties are required.
Multiple or Single Electrodes & Spacing:	Single or Multiple, multiple only when proven notch toughness properties are required.
Peening:	Peening is not allowed

TYPICAL WELDING PARAMETERS

	Filler Metal		Current			
Process	**AWS Classification**	**Diameter (in)**	**Type & Polarity**	**Amp. Range**	**Volt Range**	**Travel Speed (IPM)**
SAW	F7A6-EM12K	3/32	DC EP	250 - 750	22 - 38	4 - 35
SAW	F7A6-EM12K	1/8				
SAW	F7A6-EM12K	5/32				
SAW	F7A6-EM12K	3/16				

Notes: Number of weld layers and size of filler metal may vary with thickness of base material and position of weld.

WELDING PROCEDURE SPECIFICATION (WPS) QW-482

(Section IX, ASME Boiler and Pressure Vessel Code)

WPS # SAS-2 Rev.2

PREHEAT & INTERPASS TEMPERATURE MINIMUM AND MAXIMUM	
Section VIII :	50°F minimum for all P-1 materials except as listed below :
	175°F if the joint thickness exceeds 1.000" and the specified carbon content exceeds 0.30%
	200°F if the joint thickness is 1.250" to 1.500"
B31.1 :	50°F minimum for all P-1 materials except as listed below :
	175°F if the joint thickness exceeds 1.00" and the specified carbon content exceeds 0.30%
B31.3 :	50°F for all P-1 materials except as listed below:
	175°F if the specified minimum tensile strength of the base material exceeds 71 ksi
	175°F if the nominal wall thickness exceeds 1"
Max. Interpass Temp.:	650°F for normal service, 550°F for applications where proven notch toughness is required

Reference to relevant construction codes is mandatory prior to production welding to determine any supplementary restrictions.

Typical Joint Details QW-482

Prepared by: Qualimet

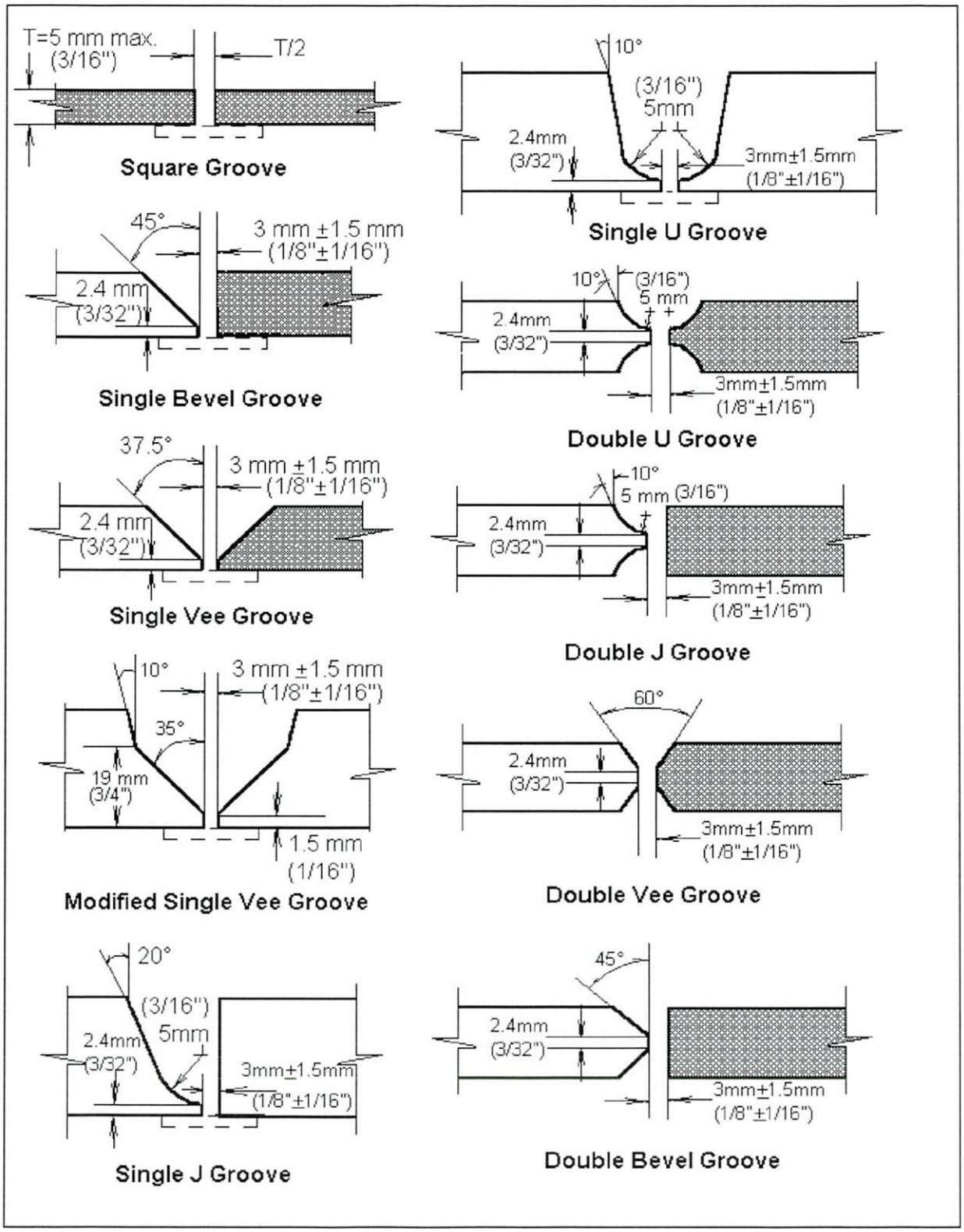

PROCEDURE QUALIFICATION RECORD (PQR) QW-483

(Section IX, ASME Boiler and Pressure Vessel Code)

Company Name:	Sub-Arc Systems Inc.	**By:**	Gary Kohlman
PQR No.:	SAS-2-1	**Date:**	June 4, 2010
Revision No.:	1[1]	**Revision Date:**	October 3, 2014
Welding Process(es):	SAW / SAW	**Types:**	Machine / Machine

JOINTS QW-402

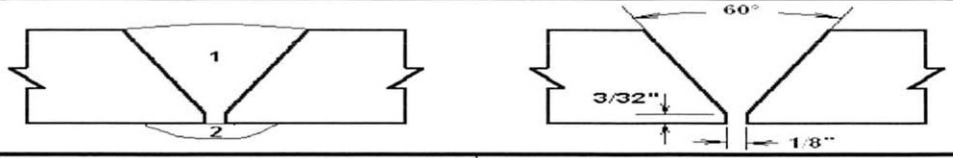

BASE METALS QW-403			POSTWELD HEAT TREATMENT QW-407	
Material Spec.:	SA-516	SA-516	**Temperature:**	
Grade/Type/Class:	Grade 70	Grade 70	**Time:**	
P-No. Group No.:	P-1 Group 2 to	P-1 Group 2	**Heating:**	*(Not Applicable)*
Heat No.:	0934K-54	0934K-54	**Cooling:**	
Carbon Equivalent (CE):	0.39	0.39	**Other:**	
Thickness & Diameter:	0.249" Plate (machined)			
Max Weld Deposit:	<0.500" per pass			

PREHEAT QW-406		POSITIONS QW-405		
Preheat Temp. Min.:	50°F	**Process:**	**SAW (Leading)**	**SAW (Trailing)**
Interpass Temp. Max.:	550°F	**Position:**	2-G	2-G
Interpass Temp. Min.:	50°F	**Progression:**	Horizontal	Horizontal
Other:	Temperature monitored by tempilsticks	**Other:**	Not Applicable	Not Applicable

FILLER METALS QW-404

Process:	**SAW (Leading)**	**SAW (Trailing)**
SFA Specification No.:	5.17	5.17
AWS Classification No.:	EM12K-H8	EM12K-H8
F-No.:	F-6	F-6
A-No.:	A-1	A-1
Size of Filler Metal:	3/32"	3/32"
Deposited Weld Metal:	0.125"	0.125"
Manufacturer:	Lincoln Electric Co.	Lincoln Electric Co.
Trade Name:	LA-61	LA-61
Heat / Lot Number:	Not Recorded	Not Recorded
Electrode-Flux (Class):	F7A6-EM12K-H8	F7A6-EM12K-H8
Flux Tradename:	Lincolnweld 882 Flux	Lincolnweld 882 Flux
Flux Heat / Lot Number.:	Not Recorded	Not Recorded
Product Form:	Coiled Solid Wire	Coiled Solid Wire
Other:	Recrushed Slag Not Permitted	Recrushed Slag Not Permitted

ELECTRICAL CHARACTERISTICS QW-409

Process:	**SAW (Leading)**	**SAW (Trailing)**
Current:	Direct - DC	Direct - DC
Polarity:	Reverse - EP	Reverse - EP
Volts:	27	27
Amps:	400	300
Travel Speed (ipm):	20.0 - 26.0	20.0 - 24.0
Maximum Heat Input (J/in):	32 400	24 300
Tungsten Electrode:	Not Applicable	Not Applicable
STT Program Settings:	Not Appilcable	Not Appilcable
Other:	Not Applicable	Not Applicable

TECHNIQUE QW-410

String or Weave:	String	String
Oscillation:	Not Applicable	Not Applicable
Single / Multi Pass:	Single Pass Per Side	
Single / Multi Electrodes:	Multiple Electrodes	
Wire Stick Out:	1/4" to 1 1/4"	1/4" to 1 1/4"
Electrode Spacing:	Not Recorded	Not Recorded
Nozzle / Cup Size:	Not Recorded	Not Recorded

[1]**Revision 1:** Review and update to the current edition of the ASME code.

PROCEDURE QUALIFICATION RECORD (PQR) QW-483
(Section IX, ASME Boiler and Pressure Vessel Code)

PQR # SAS-2-1 Revision 1

Tensile Test
QW-462

Specimen No.	Width in	Thickness in	Area in²	Ultimate Total Load Lb	Ultimate Unit Stress ksi	Type of Failure & Location
ZB-T1	0.742	0.244	0.181	15 054	83.0	Ductile - Base
ZB-T2	0.746	0.241	0.180	14 656	81.5	Ductile - Base

Guided Bend Tests
QW-462

Specimen No.	Type	Figure	Result
ZB-B1	TFB	QW-462.3(a)	Pass
ZB-B2	TFB	QW-462.3(a)	Pass
ZB-B3	TRB	QW-462.3(a)	Pass
ZB-B4	TRB	QW-462.3(a)	Pass

Toughness Tests
QW-170

Specimen No.	Notch Location	Notch Type	Test Temp	Impact Values (ft-lbs)	% Shear	Lateral Exp Inches	Drop Weight Break	Drop Weight No Brk
ZB-1	Weld	V-Notch	-50°F	49	50	0.040	N/A	N/A
ZB-2	Weld	V-Notch	-50°F	30	40	0.026	N/A	N/A
ZB-3	Weld	V-Notch	-50°F	67	60	0.053	N/A	N/A
ZB-4	HAZ	V-Notch	-50°F	67	60	0.054	N/A	N/A
ZB-5	HAZ	V-Notch	-50°F	75	70	0.056	N/A	N/A
ZB-6	HAZ	V-Notch	-50°F	123	100	0.065	N/A	N/A

Fillet-Weld Tests
Not Applicable

Result-Satisfactory: Yes _____ No _____ Pen. into Parent Material: Yes _____ No _____
Macro-Results:

Other Tests

Type of Test: Hardness Testing - See Attached Report
Other:

Welder's Name: Matt MacKenzie **Reg. No.:** Not Applicable
Welder's Name: Joel Overguard **Reg. No.:** Not Applicable **Stamp ID:** ZB
Tests Conducted By: Qualimet **Lab. Test No.:** 636-10004
Revised By: Qualimet

We hereby recertify that the statements in this record have been revised in accordance with paragraph QW-200.2 are correct and that the test welds were prepared, welded, and tested in accordance with the requirements of Section IX of the ASME Code.

Manufacturer: Sub-Arc Systems Inc.
Original Cert. Date: June 4, 2010 **By:** Gary Kohlman
Recertification Date: October 3, 2014 **By:** Gary Kohlman

Qualimet

• 7817 CORONET ROAD, EDMONTON, AB T6E 1H2 • (780) 469-5870 • FAX (780) 465-5829
• CALGARY (403) 278-9862 • 1-800-621-8979 • www.qualimetinc.com

"Your source of Quality Materials Engineering"

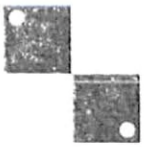

MECHANICAL TEST REPORT

for Procedure Qualification Record # SAS-2-1

Client:	Sub-Arc Systems Inc.	**Job Number:**	636-10004
Address:	4605-47 Street Vermillion AB T9X 1L6	**Date:**	June 4, 2010
Materials:	SA-516 Grade 70		
Size:	0.249" Plate (machined)	**Condition:**	As Welded
Test Specification:	**ASME Section IX**		

Tensile Tests QW-462.1(a)

Sample Identification:	ZB-T1	ZB-T2
Sample Size - inch:(W × T)	0.742 x 0.244	0.746 x 0.241
Least X-Sect. Area - in2:	0.181	0.180
Ultimate Load - lbs:	15 054	14 656
Ult. Ten. Strength - ksi:	83.0	81.5
Character of Failure:	Ductile	Ductile
Location of Failure:	Base Metal	Base Metal
Req'd Tensile Strength - ksi:	70.0	70.0
Pass or Fail:	Pass	Pass
Remarks:	-----	-----

Bend Tests QW-462.3 (a)

Sample Identification:	ZB-B1	ZB-B2	ZB-B3	ZB-B4
***Type of Bend Test:**	TFB	TFB	TRB	TRB
Pass or Fail:	Pass	Pass	Pass	Pass
Remarks:	-----	-----	-----	-----

*Types of Bend Tests TSB, TFB, TRB = transverse side, face or root bend LSB, LFB, LRB = longitudinal side, face or root bend

We certify that the statements in this record are acceptable, in accordance with the requirements of ASME Section IX.

TEST RESULTS CERTIFIED BY: Qualimet

Sean Lepine, E.I.T.

CHARPY IMPACT TEST REPORT

for Procedure Qualification Record # SAS-2-1

Client:	Sub-Arc Systems Inc.	**Job Number:**	636-10004
Address:	4605-47 Street Vermillion AB T9X 1L6	**Date:**	June 4, 2010
Materials:	SA-516 Grade 70		
Size:	0.249" Plate (machined)	**Condition:**	As Welded
Test Specification:	ASME Section IX, ASME Section VIII UG-84, ASTM A-370		

Specimen Type:	Charpy V-Notch
Qualification Temperature:	-50°F
Test Temperature:	-50°F

Specimen Size (mm): 5.35

Sample Set	Sample Number	Actual Impact Energy (ft-lb)	Full Size (ft-lb)	Shear (%)	Lateral Expansion Inches
Weld Zone	ZB-1	26	49	50	0.040
	ZB-2	16	30	40	0.026
	ZB-3	36	67	60	0.053
	Average:	**26**	**49**	**50**	**0.040**

We certify that the statements in this record are acceptable and that the specimen(s) were prepared and tested in accordance with the requirements of the current edition of ASME Section IX and the latest addenda.

TEST RESULTS CERTIFIED BY:

Qualimet

Sean Lepine, E.I.T.

CHARPY IMPACT TEST REPORT

for Procedure Qualification Record # SAS-2-1

Client:	Sub-Arc Systems Inc.	**Job Number:**	636-10004
Address:	4605-47 Street Vermillion AB T9X 1L6	**Date:**	June 4, 2010
Materials:	SA-516 Grade 70		
Size:	0.249" Plate (machined)	**Condition:**	As Welded
Test Specification:	ASME Section IX, ASME Section VIII UG-84, ASTM A-370		

Specimen Type:	Charpy V-Notch
Qualification Temperature:	-50°F
Test Temperature:	-50°F

Specimen Size (mm): 5.35

Sample Set	Sample Number	Actual Impact Energy (ft-lb)	Full Size (ft-lb)	Shear (%)	Lateral Expansion Inches
HAZ	ZB-4	36	67	60	0.054
	ZB-5	40	75	70	0.056
	ZB-6	66	123	100	0.065
	Average:	**47**	**88**	**77**	**0.058**

We certify that the statements in this record are acceptable and that the specimen(s) were prepared and tested in accordance with the requirements of the current edition of ASME Section IX and the latest addenda.

TEST RESULTS CERTIFIED BY:

Qualimet

Sean Lepine, E.I.T.

HARDNESS TEST REPORT

for Procedure Qualification Record # SAS-2-1

Client:	Sub-Arc Systems Inc.	**Job Number:**	636-10004
Address:	4605-47 Street Vermillion AB T9X 1L6	**Date:**	June 4, 2010
Materials:	SA-516 Grade 70		
Size:	0.249" Plate (machined)	**Condition:**	As Welded
Test Specification:	NACE RP0472		

Test Method:	Hardness testing performed in accordance with ASTM E-92 (Vickers Hardness of Metallic Materials) using a Vickers tester with a 1kg load.

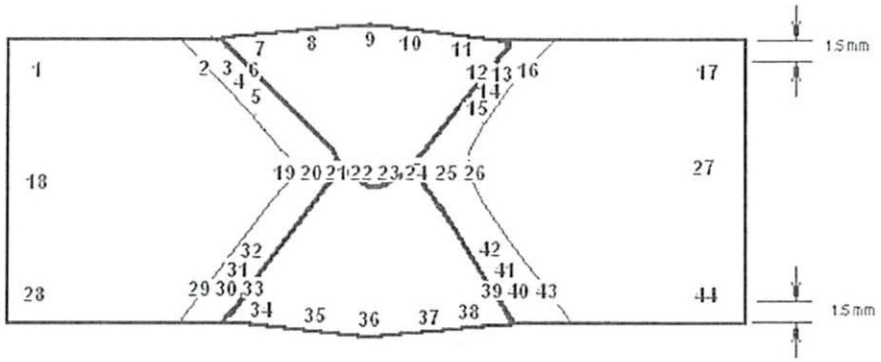

Vickers Hardness Values

1	153	10	190	19	165	28	172	37	193
2	156	11	192	20	171	29	158	38	192
3	169	12	183	21	191	30	189	39	195
4	167	13	183	22	186	31	182	40	176
5	169	14	179	23	204	32	181	41	175
6	182	15	185	24	195	33	206	42	178
7	182	16	163	25	180	34	189	43	172
8	198	17	159	26	169	35	203	44	167
9	179	18	160	27	165	36	203		

We certify that the statements in this record are acceptable, in accordance with the requirements of NACE RP 0472. RP 0472-2005 paragraph 5.3 states "The maximum allowable HAZ hardness shall be 248 HV the maximum weld deposit hardness should be 248 HV and the average weld deposit hardness should not exceed 210 HV"

TEST RESULTS CERTIFIED BY:

Qualimet

Sean Lepine, E.I.T.

PROCEDURE QUALIFICATION RECORD (PQR) QW-483

(Section IX, ASME Boiler and Pressure Vessel Code)

Company Name:	Sub-Arc Systems Inc.	**By:**	Gary Kohlman
PQR No.:	SAS-2-2	**Date:**	June 4, 2010
Revision No.:	1[1]	**Revision Date:**	October 3, 2014
Welding Process(es):	SAW / SAW	**Types:**	Machine / Machine

JOINTS QW-402

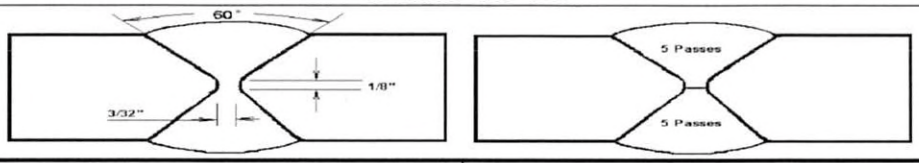

BASE METALS QW-403				POSTWELD HEAT TREATMENT QW-407	
Material Spec.:	SA-516		SA-516	**Temperature:**	
Grade/Type/Class:	Grade 70		Grade 70	**Time:**	
P-No. Group No.:	P-1 Group 2	**to**	P-1 Group 2	**Heating:**	***(Not Applicable)***
Heat No.:	8277J		8277J	**Cooling:**	
Carbon Equivalent (CE):	0.40		0.40	**Other:**	
Thickness & Diameter:	1.000" Plate				
Max Weld Deposit:	<0.500" per pass				

PREHEAT QW-406		POSITIONS QW-405		
Preheat Temp. Min.:	50°F	**Process:**	**SAW (Leading)**	**SAW (Trailing)**
Interpass Temp. Max.:	550°F	**Position:**	2-G	2-G
Interpass Temp. Min.:	50°F	**Progression:**	Horizontal	Horizontal
Other:	Temperature monitored by tempilsticks	**Other:**	Not Applicable	Not Applicable

FILLER METALS QW-404

Process:	**SAW (Leading)**	**SAW (Trailing)**
SFA Specification No.:	5.17	5.17
AWS Classification No.:	EM12K-H8	EM12K-H8
F-No.:	F-6	F-6
A-No.:	A-1	A-1
Size of Filler Metal:	3/32"	3/32"
Deposited Weld Metal:	0.500"	0.500"
Manufacturer:	Lincoln Electric Co.	Lincoln Electric Co.
Trade Name:	LA-61	LA-61
Heat / Lot Number:	Not Recorded	Not Recorded
Electrode-Flux (Class):	F7A6-EM12K-H8	F7A6-EM12K-H8
Flux Tradename:	Lincolnweld 882 Flux	Lincolnweld 882 Flux
Flux Heat / Lot Number.:	Not Recorded	Not Recorded
Product Form:	Coiled Solid Wire	Coiled Solid Wire
Other:	Recrushed Slag Not Permitted	Recrushed Slag Not Permitted

ELECTRICAL CHARACTERISTICS QW-409

Process:	**SAW (Leading)**	**SAW (Trailing)**
Current:	Direct - DC	Direct - DC
Polarity:	Reverse - EP	Reverse - EP
Volts:	27	27 - 29
Amps:	400 - 420	320 - 415
Travel Speed (ipm):	18.0 - 25.0	18.0 - 25.0
Maximum Heat Input (J/in):	35 998	33 615
Wirefeed Speed (ipm):	410	400
STT Program Settings:	Not Appilcable	Not Appilcable
Other:	Not Applicable	Not Applicable

TECHNIQUE QW-410

String or Weave:	String	String
Oscillation:	Not Applicable	Not Applicable
Single / Multi Pass:	Multiple Passes Per Side	
Single / Multi Electrodes:	Multiple Electrodes	
Wire Stick Out:	1/4" to 1 1/4"	1/4" to 1 1/4"
Electrode Spacing:	Not Recorded	Not Recorded
Nozzle / Cup Size:	Not Recorded	Not Recorded

[1]**Revision 1:** Review and update to the current edition of the ASME code.

PROCEDURE QUALIFICATION RECORD (PQR) QW-483
(Section IX, ASME Boiler and Pressure Vessel Code)

PQR # SAS-2-2 Revision 1

Tensile Test
QW-462

Specimen No.	Width in	Thickness in	Area in^2	Ultimate Total Load Lb	Ultimate Unit Stress ksi	Type of Failure & Location
YE-T1	0.741	0.983	0.728	58 240	80.0	Ductile - Base
YE-T2	0.735	0.994	0.731	57 482	79.0	Ductile - Base

Guided Bend Tests
QW-462

Specimen No.	Type	Figure	Result
YE-B1	TSB	QW-462.2	Pass
YE-B2	TSB	QW-462.2	Pass
YE-B3	TSB	QW-462.2	Pass
YE-B4	TSB	QW-462.2	Pass

Toughness Tests
QW-170

Specimen No.	Notch Location	Notch Type	Test Temp	Impact Values (ft-lbs)	% Shear	Lateral Exp Inches	Drop Weight Break	Drop Weight No Brk
YE-1	Weld	V-Notch	-50°F	24	40	0.038	N/A	N/A
YE-2	Weld	V-Notch	-50°F	16	30	0.019	N/A	N/A
YE-3	Weld	V-Notch	-50°F	50	50	0.015	N/A	N/A
YE-4	HAZ	V-Notch	-50°F	58	60	0.044	N/A	N/A
YE-5	HAZ	V-Notch	-50°F	16	30	0.013	N/A	N/A
YE-6	HAZ	V-Notch	-50°F	53	60	0.078	N/A	N/A

Fillet-Weld Tests
Not Applicable

Result-Satisfactory: Yes _____ No _____ Pen. into Parent Material: Yes _____ No _____
Macro-Results:

Other Tests

Type of Test: Hardness Testing - See Attached Report
Other:

Welder's Name: Matt MacKenzie **Reg. No.:** Not Applicable
Welder's Name: Joel Overguard **Reg. No.:** Not Applicable **Stamp ID:** YE
Tests Conducted By: Qualimet **Lab. Test No.:** 636-10004
Revised By: Qualimet

We hereby recertify that the statements in this record have been revised in accordance with paragraph QW-200.2 are correct and that the test welds were prepared, welded, and tested in accordance with the requirements of Section IX of the ASME Code.

Manufacturer: Sub-Arc Systems Inc.
Original Cert. Date: June 4, 2010 **By:** Gary Kohlman
Recertification Date: October 3, 2014 **By:** Gary Kohlman

MECHANICAL TEST REPORT

for Procedure Qualification Record # SAS-2-2

Client:	Sub-Arc Systems Inc.	**Job Number:**	636-10004
Address:	4605-47 Street Vermillion AB T9X 1L6	**Date:**	June 4, 2010
Materials:	SA-516 Grade 70		
Size:	1.000" Plate	**Condition:**	As Welded
Test Specification:	ASME Section IX		

Tensile Tests QW-462.1(a)

Sample Identification:	YE-T1	YE-T2
Sample Size - inch:(W x T)	0.741 x 0.983	0.735 x 0.994
Least X-Sect. Area - in2:	0.728	0.731
Ultimate Load - lbs:	58 240	57 482
Ult. Ten. Strength - ksi:	80.0	79.0
Character of Failure:	Ductile	Ductile
Location of Failure:	Base Metal	Base Metal
Req'd Tensile Strength - ksi:	70.0	70.0
Pass or Fail:	Pass	Pass
Remarks:	-----	-----

Bend Tests QW-462.2

Sample Identification:	YE-B1	YE-B2	YE-B3	YE-B4
***Type of Bend Test:**	TSB	TSB	TSB	TSB
Pass or Fail:	Pass	Pass	Pass	Pass
Remarks:	-----	-----	-----	-----

*Types of Bend Tests **TSB, TFB, TRB = transverse side, face or root bend** **LSB, LFB, LRB = longitudinal side, face or root bend**

We certify that the statements in this record are acceptable, in accordance with the requirements of ASME Section IX.

TEST RESULTS CERTIFIED BY:



Qualimet

Sean Lepine, E.I.T.

CHARPY IMPACT TEST REPORT

for Procedure Qualification Record # SAS-2-2

Client:	Sub-Arc Systems Inc.	**Job Number:**	636-10004
Address:	4605-47 Street Vermillion AB T9X 1L6	**Date:**	June 4, 2010
Materials:	SA-516 Grade 70		
Size:	1.000" Plate	**Condition:**	As Welded
Test Specification:	ASME Section IX, ASME Section VIII UG-84, ASTM A-370		

Specimen Type:	Charpy V-Notch
Qualification Temperature:	-50°F
Test Temperature:	-50°F

Specimen Size (mm): 10

Sample Set	Sample Number	Actual Impact Energy (ft-lb)	Full Size (ft-lb)	Shear (%)	Lateral Expansion Inches
Weld	YE-1	24	24	40	0.038
	YE-2	16	16	30	0.019
	YE-3	50	50	50	0.015
	Average:	**30**	**30**	**40**	**0.024**

We certify that the statements in this record are acceptable and that the specimen(s) were prepared and tested in accordance with the requirements of the current edition of ASME Section IX and the latest addenda.

TEST RESULTS CERTIFIED BY:

Qualimet

Sean Lepine, E.I.T.

CHARPY IMPACT TEST REPORT

for Procedure Qualification Record # SAS-2-2

Client:	Sub-Arc Systems Inc.	**Job Number:**	636-10004
Address:	4605-47 Street Vermillion AB T9X 1L6	**Date:**	June 4, 2010
Materials:	SA-516 Grade 70		
Size:	1.000" Plate	**Condition:**	As Welded
Test Specification:	ASME Section IX, ASME Section VIII UG-84, ASTM A-370		

Specimen Type:	Charpy V-Notch
Qualification Temperature:	-50°F
Test Temperature:	-50°F

Specimen Size (mm): 10

Sample Set	Sample Number	Actual Impact Energy (ft-lb)	Full Size (ft-lb)	Shear (%)	Lateral Expansion Inches
HAZ	YE-4	58	58	60	0.044
	YE-5	16	16	30	0.013
	YE-6	53	53	60	0.078
	Average:	**42**	**42**	**50**	**0.045**

We certify that the statements in this record are acceptable and that the specimen(s) were prepared and tested in accordance with the requirements of the current edition of ASME Section IX and the latest addenda.

TEST RESULTS CERTIFIED BY:

Qualimet

Sean Lepine, E.I.T.

HARDNESS TEST REPORT

for Procedure Qualification Record # SAS-2-2

Client:	Sub-Arc Systems Inc.	**Job Number:**	636-10004
Address:	4605-47 Street Vermillion AB T9X 1L6	**Date:**	June 4, 2010
Materials:	SA-516 Grade 70		
Size:	1.000" Plate	**Condition:**	As Welded
Test Specification:	NACE RP0472		

Test Method:	Hardness testing performed in accordance with ASTM E-92 (Vickers Hardness of Metallic Materials) using a Vickers tester with a 1kg load.

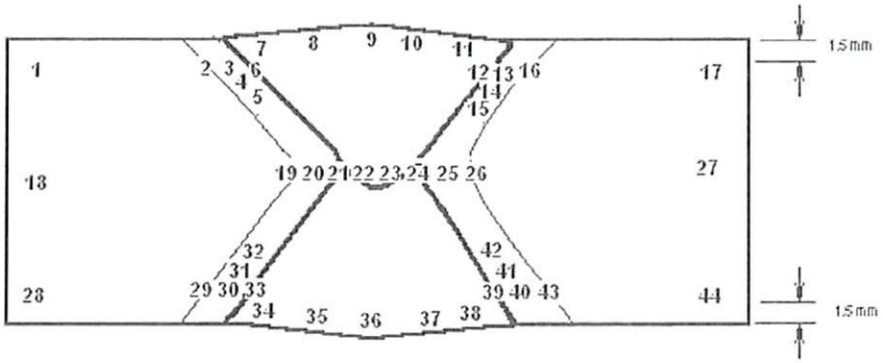

Vickers Hardness Values

1	165	**10**	231	**19**	195	**28**	173	**37**	212
2	191	**11**	212	**20**	183	**29**	191	**38**	224
3	234	**12**	220	**21**	180	**30**	206	**39**	214
4	216	**13**	245	**22**	179	**31**	193	**40**	206
5	219	**14**	246	**23**	184	**32**	187	**41**	197
6	235	**15**	232	**24**	184	**33**	199	**42**	207
7	208	**16**	187	**25**	173	**34**	209	**43**	174
8	194	**17**	164	**26**	170	**35**	208	**44**	161
9	181	**18**	158	**27**	152	**36**	202		

We certify that the statements in this record are acceptable, in accordance with the requirements of NACE RP 0472. RP 0472-2005 paragraph 5.3 states "The maximum allowable HAZ hardness shall be 248 HV the maximum weld deposit hardness should be 248 HV and the average weld deposit hardness should not exceed 210 HV"

TEST RESULTS CERTIFIED BY:

Qualimet

Sean Lepine, E.I.T.

PROCEDURE QUALIFICATION RECORD (PQR) QW-483

(Section IX, ASME Boiler and Pressure Vessel Code)

Company Name:	Sub-Arc Systems Inc.	**By:**	Gary Kohlman
PQR No.:	SAS-2-3	**Date:**	January 20, 2014
Revision No.:	1[1]	**Revision Date:**	October 3, 2014
Welding Process(es):	SAW / SAW	**Type(s):**	Machine / Machine

JOINTS QW-402

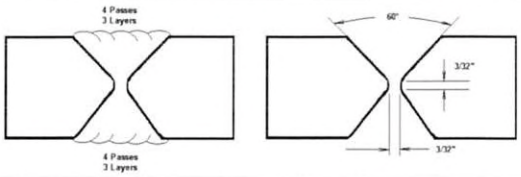

BASE METALS QW-403				POSTWELD HEAT TREATMENT QW-407	
Material Spec.:	SA-516		SA-516	**Temperature:**	
Grade/Type/Class:	Grade 60/70		Grade 60/70	**Time:**	
P-No. Group No.:	P-1 Group 1/2	**to**	P-1 Group 1/2	**Heating:**	***(None – As Welded)***
Heat No.:	H6/5888		H6/5888	**Cooling:**	
Carbon Equivalent (ASME):	0.41		0.41	**Other:**	
Carbon Equivalent (CSA):	0.41		0.41		
Thickness & Diameter:	1.000" w.t. Plate				
Max Weld Deposit:	<0.500" per pass				

PREHEAT QW-406		POSITIONS QW-405		
Preheat Temp. Min.:	50°F	**Process:**	**SAW (Leading)**	**SAW (Trailing)**
Interpass Temp. Max.:	550°F	**Position:**	2-G	2-G
Interpass Temp. Min.:	50°F	**Progression:**	Horizontal	Horizontal
Other:	Temperature monitored using tempilstiks	**Other:**	Not Applicable	Not Applicable

FILLER METALS QW-404		
Process:	**SAW (Leading)**	**SAW (Trailing)**
SFA Specification No.:	5.17	5.17
AWS Classification No.:	EM12K-H8	EM12K-H8
F-No.:	F-6	F-6
A-No.:	A-1	A-1
Size of Filler Metal:	3/32"	3/32"
Deposited Weld Metal:	0.500"	0.500"
Manufacturer:	Lincoln Electric	Lincoln Electric
Trade Name:	LA-61	LA-61
Heat / Lot Number:	Not Recorded	Not Recorded
Electrode-Flux (Class):	F7A6-EM12K-H8	F7A6-EM12K-H8
Flux Tradename:	Lincolnweld 882 Flux	Lincolnweld 882 Flux
Flux Heat / Lot Number.:	Not Recorded	Not Recorded
Product Form:	Coiled Solid Wire	Coiled Solid Wire

SHIELDING GAS QW-408		
Shielding Gas:		
Composition:	***(Not Applicable)***	***(Not Applicable)***
Flow Rate:		
Backing Gas:		

ELECTRICAL CHARACTERISTICS QW-409		
Current:	Direct (DC)	Direct (DC)
Polarity:	Reverse (EP)	Reverse (EP)
Volts:	28 - 30	28 - 30
Amps:	380 - 420	380 - 420
Travel Speed (ipm):	25.0	25.0
Maximum Heat Input (J/in):	30 240	30 240

TECHNIQUE QW-410		
String or Weave:	String	String
Oscillation:	Not Applicable	Not Applicable
Single / Multi Pass:	Multiple Passes from both sides	
Single / Multi Electrodes:	Multi	Multi
Wire Stick Out:	1/4" to 1 1/4"	1/4" to 1 1/4"
Electrode Spacing:	Not Recorded	Not Recorded
Nozzle / Cup Size:	Not Recorded	Not Recorded

[1]**Revision 1:** Review and update to the current edition of the ASME code.

PROCEDURE QUALIFICATION RECORD (PQR) QW-483
(Section IX, ASME Boiler and Pressure Vessel Code)

PQR # SAS-2-3 Revision 1

Tensile Test
QW-462

Specimen No.	Width (in)	Thickness (in)	Area (in^2)	Ultimate Total Load (lbs)	Ultimate Unit Stress (ksi)	Type of Failure & Location
			(Not Applicable)			

Guided Bend Tests
QW-462

Specimen No.	Type	Figure	Result
		(Not Applicable)	

Toughness Tests
QW-170

Specimen No.	Notch Location	Notch Type	Qual. Temp	Full Size Values (ft-lbs)	% Shear	Lateral Exp Inches	Drop Weight Break	Drop Weight No Brk
BH-1	Weld	V-Notch	-50°F	94	60	0.064	----	----
BH-2	Weld	V-Notch	-50°F	105	70	0.063	----	----
BH-3	Weld	V-Notch	-50°F	115	80	0.072	----	----
BH-4	HAZ	V-Notch	-50°F	74	40	0.046	----	----
BH-5	HAZ	V-Notch	-50°F	68	30	0.044	----	----
BH-6	HAZ	V-Notch	-50°F	83	----**	----**	----	----

**Shear and Lateral Expansion not recorded – specimen did not break

Fillet-Weld Tests
Not Applicable

Result-Satisfactory: **Yes** _____ **No** _____ Pen. into Parent Material: **Yes** ___ **No** _____
Macro-Results:

Other Tests

Type of Test: Not Applicable
Other: Not Applicable

Welder's Name: Keith Breedon **Reg. No.:** W-11618 **Stamp ID:** BH
Tests Conducted By: Qualimet **Lab. Test No.:** 636-13001
Revised By: Qualimet

We hereby recertify that the statements in this record have been revised in accordance with paragraph QW-200.2 are correct and that the test welds were prepared, welded, and tested in accordance with the requirements of Section IX of the ASME Code.

Manufacturer: Sub-Arc Systems Inc.
Original Cert. Date: January 20, 2014 **By:** Gary Kohlman
Recertification Date: October 3, 2014 **By:** Gary Kohlman

Qualimet

• 8055 CORONET ROAD, EDMONTON, AB T6E 4N7 • (780) 469-5870 • FAX (780) 465-5829
• CALGARY (403) 278-9862 • 1-800-621-8979 • www.qualimet.ca

"Your source of Quality Materials Engineering"

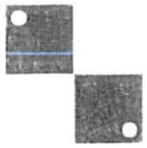

CHARPY IMPACT TEST REPORT

for Procedure Qualification Record # SAS-2-3

Client:	Sub-Arc Systems Inc.	**Job Number:**	636-13001
Address:	4605-47 Street Vermillion AB T9X 1L6	**Date:**	January 20, 2014
Materials:	SA-516 Grade 60/70 to SA-516 Grade 60/70		
Size:	1.000" w.t. Plate	**Condition:**	As Welded
Test Specification:	ASME Section IX, ASME Section VIII UG-84, ASTM A-370		
Test Equipment:	Satec Model S1-10, S/N: 1164		

Specimen Type:	Charpy V-Notch
Qualification Temperature:	-50.0°F
Test Temperature:	-50.0°F

Specimen Size (mm): 10

Sample Set	Sample Number	Actual Impact Energy (ft-lb)	Full Size (ft-lb)	Shear (%)	Lateral Expansion Inches
Weld (includes all processes)	BH-1	94	94	60	0.064
	BH-2	105	105	70	0.063
	BH-3	115	115	80	0.072
	Average:	**105**	**105**	**70**	**0.066**

We certify that the statements in this record are acceptable and that the specimen(s) were prepared and tested in accordance with the requirements of the current edition of ASTM A370, ASTM E23 and their latest editions.

TEST RESULTS CERTIFIED BY: Qualimet

Hanibal Ghile, E.I.T.

Qualimet 40th Anniversary

• 8055 CORONET ROAD, EDMONTON, AB T6E 4N7 • (780) 469-5870 • FAX (780) 465-5829
• CALGARY (403) 278-9862 • 1-800-621-8979 • www.qualimet.ca

"Your source of Quality Materials Engineering"

CHARPY IMPACT TEST REPORT

for Procedure Qualification Record # SAS-2-3

Client:	Sub-Arc Systems Inc.	**Job Number:**	636-13001
Address:	4605-47 Street Vermillion AB T9X 1L6	**Date:**	January 20, 2014
Materials:	SA-516 Grade 60/70 to SA-516 Grade 60/70		
Size:	1.000" w.t. Plate	**Condition:**	As Welded
Test Specification:	ASME Section IX, ASME Section VIII UG-84, ASTM A-370		
Test Equipment:	Satec Model S1-10, S/N: 1164		

Specimen Type:	Charpy V-Notch
Qualification Temperature:	-50.0°F
Test Temperature:	-50.0°F

Specimen Size (mm): 10

Sample Set	Sample Number	Actual Impact Energy (ft-lb)	Full Size (ft-lb)	Shear (%)	Lateral Expansion Inches
HAZ	BH-4	74	74	40	0.046
	BH-5	68	68	30	0.044
	BH-6	83	83	-----**	-----**
	Average:	**75**	**75**	-----**	-----**

**Shear and Lateral Expansion not recorded – specimen did not break

We certify that the statements in this record are acceptable and that the specimen(s) were prepared and tested in accordance with the requirements of the current edition of ASTM A370, ASTM E23 and their latest editions.

TEST RESULTS CERTIFIED BY: Qualimet

Hanibal Ghile, E.I.T.

PROCEDURE QUALIFICATION RECORD (PQR) QW-483

(Section IX, ASME Boiler and Pressure Vessel Code)

Company Name:	Sub-Arc Systems Inc.	**By:**	Gary Kohlman
PQR No.:	SAS-2-4	**Date:**	January 20, 2014
Revision No.:	1[1]	**Revision Date:**	October 3, 2014
Welding Process(es):	SAW / SAW	**Type(s):**	Machine / Machine

JOINTS QW-402

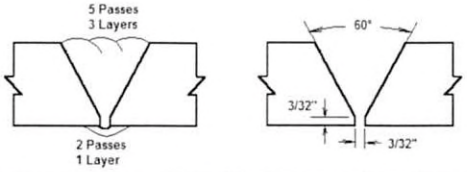

BASE METALS QW-403				POSTWELD HEAT TREATMENT QW-407	
Material Spec.:	SA-516		SA-516	**Temperature:**	
Grade/Type/Class:	Grade 60/70		Grade 60/70	**Time:**	
P-No. Group No.:	P-1 Group 1/2	**to**	P-1 Group 1/2	**Heating:**	***(None – As Welded)***
Heat No.:	53293		53293	**Cooling:**	
Carbon Equivalent (ASME):	0.39		0.39	**Other:**	
Carbon Equivalent (CSA):	0.39		0.39		
Thickness & Diameter:	0.249" w.t. Plate (machined)				
Max Weld Deposit:	<0.500" per pass				

PREHEAT QW-406		POSITIONS QW-405		
Preheat Temp. Min.:	50°F	**Process:**	**SAW (Leading)**	**SAW (Trailing)**
Interpass Temp. Max.:	550°F	**Position:**	2-G	2-G
Interpass Temp. Min.:	50°F	**Progression:**	Horizontal	Horizontal
Other:	Temperature monitored using tempilstiks	**Other:**	Not Applicable	Not Applicable

FILLER METALS QW-404		
Process:	**SAW (Leading)**	**SAW (Trailing)**
SFA Specification No.:	5.17	5.17
AWS Classification No.:	EM12K-H8	EM12K-H8
F-No.:	F-6	F-6
A-No.:	A-1	A-1
Size of Filler Metal:	3/32"	3/32"
Deposited Weld Metal:	0.125"	0.125"
Manufacturer:	Lincoln Electric	Lincoln Electric
Trade Name:	LA-61	LA-61
Heat / Lot Number:	Not Recorded	Not Recorded
Electrode-Flux (Class):	F7A6-EM12K-H8	F7A6-EM12K-H8
Flux Tradename:	Lincolnweld 882 Flux	Lincolnweld 882 Flux
Flux Heat / Lot Number.:	Not Recorded	Not Recorded
Product Form:	Coiled Solid Wire	Coiled Solid Wire

SHIELDING GAS QW-408		
Shielding Gas:		
Composition:	***(Not Applicable)***	***(Not Applicable)***
Flow Rate:		
Backing Gas:		

ELECTRICAL CHARACTERISTICS QW-409		
Current:	Direct (DC)	Direct (DC)
Polarity:	Reverse (EP)	Reverse (EP)
Volts:	30	30
Amps:	420	420
Travel Speed (ipm):	25.0	25.0
Maximum Heat Input (J/in):	30 240	30 240

TECHNIQUE QW-410		
String or Weave:	String	String
Oscillation:	Not Applicable	Not Applicable
Single / Multi Pass:	Multiple Passes from both sides	
Single / Multi Electrodes:	Multi	Multi
Wire Stick Out:	1/4" to 1 1/4"	1/4" to 1 1/4"
Electrode Spacing:	Not Recorded	Not Recorded
Nozzle / Cup Size:	Not Recorded	Not Recorded

[1]**Revision 1:** Review and update to the current edition of the ASME code.

PROCEDURE QUALIFICATION RECORD (PQR) QW-483

(Section IX, ASME Boiler and Pressure Vessel Code)

PQR # SAS-2-4 Revision 1

Tensile Test

QW-462

Specimen No.	Width (in)	Thickness (in)	Area (in^2)	Ultimate Total Load (lbs)	Ultimate Unit Stress (ksi)	Type of Failure & Location
			(Not Applicable)			

Guided Bend Tests

QW-462

Specimen No.	Type	Figure	Result
		(Not Applicable)	

Toughness Tests

QW-170

Specimen No.	Notch Location	Notch Type	Qual. Temp	Full Size Values (ft-lbs)	% Shear	Lateral Exp Inches	Drop Weight Break	Drop Weight No Brk
BG-1	Weld	V-Notch	-50°F	104	80	0.078	----	----
BG-2	Weld	V-Notch	-50°F	81	70	0.060	----	----
BG-3	Weld	V-Notch	-50°F	77	70	0.058	----	----
BG-4	HAZ	V-Notch	-50°F	40	30	0.027	----	----
BG-5	HAZ	V-Notch	-50°F	35	30	0.024	----	----
BG-6	HAZ	V-Notch	-50°F	46	40	0.033	----	----

Fillet-Weld Tests

Not Applicable

Result-Satisfactory: **Yes** _____ **No** _____ Pen. into Parent Material: **Yes** ___ **No** _____

Macro-Results:

Other Tests

Type of Test: Not Applicable

Other: Not Applicable

Welder's Name: Keith Breedon **Reg. No.:** W-11618 **Stamp ID:** BG

Tests Conducted By: Qualimet **Lab. Test No.:** 636-13001

Revised By: Qualimet

We hereby recertify that the statements in this record have been revised in accordance with paragraph QW-200.2 are correct and that the test welds were prepared, welded, and tested in accordance with the requirements of Section IX of the ASME Code.

Manufacturer: Sub-Arc Systems Inc.

Original Cert. Date: January 20, 2014 **By:** Gary Kohlman

Recertification Date: October 3, 2014 **By:** Gary Kohlman

Qualimet 40th Anniversary

• 8055 CORONET ROAD, EDMONTON, AB T6E 4N7 • (780) 469-5870 • FAX (780) 465-5829
• CALGARY (403) 278-9862 • 1-800-621-8979 • www.qualimet.ca
"Your source of Quality Materials Engineering"

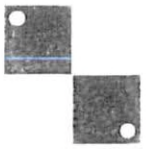

CHARPY IMPACT TEST REPORT

for Procedure Qualification Record # SAS-2-4

Client:	Sub-Arc Systems Inc.	**Job Number:**	636-13001
Address:	4605-47 Street Vermillion AB T9X 1L6	**Date:**	January 20, 2014
Materials:	SA-516 Grade 60/70 to SA-516 Grade 60/70		
Size:	0.249" w.t. Plate (machined)	**Condition:**	As Welded
Test Specification:	ASME Section IX, ASME Section VIII UG-84, ASTM A-370		
Test Equipment:	Satec Model S1-10, S/N: 1164		

Specimen Type:	Charpy V-Notch
Qualification Temperature:	-50.0°F
Test Temperature:	-50.0°F

Specimen Size (mm): 5.2

Sample Set	Sample Number	Actual Impact Energy (ft-lb)	Full Size (ft-lb)	Shear (%)	Lateral Expansion Inches
Weld (includes all processes)	BG-1	54	104	80	0.078
	BG-2	42	81	70	0.060
	BG-3	40	77	70	0.058
	Average:	**45**	**87**	**73**	**0.065**

We certify that the statements in this record are acceptable and that the specimen(s) were prepared and tested in accordance with the requirements of the current edition of ASTM A370, ASTM E23 and their latest editions.

TEST RESULTS CERTIFIED BY: Qualimet

Hanibal Ghile, E.I.T.

• 8055 CORONET ROAD, EDMONTON, AB T6E 4N7 • (780) 469-5870 • FAX (780) 465-5829
• CALGARY (403) 278-9862 • 1-800-621-8979 • www.qualimet.ca

"Your source of Quality Materials Engineering"

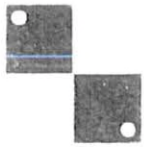

CHARPY IMPACT TEST REPORT

for Procedure Qualification Record # SAS-2-4

Client:	Sub-Arc Systems Inc.	**Job Number:**	636-13001
Address:	4605-47 Street Vermillion AB T9X 1L6	**Date:**	January 20, 2014
Materials:	SA-516 Grade 60/70 to SA-516 Grade 60/70		
Size:	0.249" w.t. Plate (machined)	**Condition:**	As Welded
Test Specification:	ASME Section IX, ASME Section VIII UG-84, ASTM A-370		
Test Equipment:	Satec Model S1-10, S/N: 1164		

Specimen Type:	Charpy V-Notch
Qualification Temperature:	-50.0°F
Test Temperature:	-50.0°F

Specimen Size (mm): 5.2

Sample Set	Sample Number	Actual Impact Energy (ft-lb)	Full Size (ft-lb)	Shear (%)	Lateral Expansion Inches
HAZ	BG-4	21	40	30	0.027
	BG-5	18	35	30	0.024
	BG-6	24	46	40	0.033
	Average:	**21**	**40**	**33**	**0.028**

We certify that the statements in this record are acceptable and that the specimen(s) were prepared and tested in accordance with the requirements of the current edition of ASTM A370, ASTM E23 and their latest editions.

TEST RESULTS CERTIFIED BY: Qualimet

Hanibal Ghile, E.I.T.

Inukshuk Construction Limited
Industrial Contracting Project Management

PO Box 654
Rankin Inlet, NU X0C 0G0
T 867.645.4030 F 867.645.4064

Field Erected Fuel Storage Tank

Handover Package

Item 6 – Welding Consumable

Contents

N/A

Inukshuk Construction Limited
Industrial Contracting Project Management

PO Box 654
Rankin Inlet, NU X0C 0G0
T 867.645.4030 F 867.645.4064

Field Erected Fuel Storage Tank

Handover Package

Item 7 – Foundation

Contents

1. Foundation Acceptance Report

Inukshuk Construction Limited
Industrial Contracting Project Management

PO Box 654
Rankin Inlet, NU X0C 0G0
T 867.645.4030 F 867.645.4064

PROJECT #:	AEM Tank #1 Pad Sand Grade
PROJECT TITLE:	AEM Tank Farm
SITE:	Rankin Inlet , NU
Date:	August 1 , 2017

No.	Northing	Easting	Elevation	Description
300	6963737.346	545954.026	8.054	PAD1
301	6963740.458	545952.630	8.059	PAD1
302	6963743.315	545951.784	8.057	PAD1
303	6963746.513	545951.383	8.054	PAD1
304	6963749.682	545951.423	8.054	PAD1
305	6963752.775	545951.879	8.053	PAD1
306	6963755.838	545952.869	8.058	PAD1
307	6963758.834	545954.348	8.063	PAD1
308	6963761.671	545956.401	8.063	PAD1
309	6963764.206	545958.864	8.056	PAD1
310	6963766.093	545961.489	8.048	PAD1
311	6963767.641	545964.474	8.058	PAD1
312	6963768.748	545967.669	8.067	PAD1
313	6963769.364	545971.524	8.064	PAD1
314	6963769.359	545974.717	8.066	PAD1
315	6963768.771	545978.029	8.061	PAD1
316	6963767.673	545981.331	8.065	PAD1
317	6963766.171	545984.319	8.061	PAD1
318	6963764.018	545987.196	8.055	PAD1
319	6963761.651	545989.480	8.058	PAD1

LOW HIGH
48 - 67

Inukshuk Construction Limited
Industrial Contracting Project Management

PO Box 654
Rankin Inlet, NU X0C 0G0
T 867.645.4030 F 867.645.4064

320	6963758.918	545991.414	8.061	PAD1	3
321	6963756.150	545992.846	8.058	PAD1	3
322	6963753.008	545993.885	8.060	PAD1	2
323	6963749.564	545994.437	8.062	PAD1	2
324	6963746.202	545994.439	8.057	PAD1	5
325	6963742.665	545993.877	8.061	PAD1	4
326	6963739.693	545992.922	8.060	PAD1	1
327	6963736.281	545991.195	8.059	PAD1	1
328	6963733.505	545989.112	8.056	PAD1	3
329	6963731.219	545986.748	8.056	PAD1	—
330	6963729.294	545984.046	8.055	PAD1	1
331	6963727.759	545980.958	8.054	PAD1	1
332	6963726.757	545977.744	8.060	PAD1	6
333	6963726.262	545974.288	8.058	PAD1	2
334	6963726.277	545971.053	8.059	PAD1	1
335	6963726.886	545967.806	8.059	PAD1	—
336	6963727.897	545964.563	8.056	PAD1	3
337	6963729.624	545961.285	8.054	PAD1	2
338	6963732.149	545958.086	8.055	PAD1	1
339	6963734.862	545955.642	8.054	PAD1	1
340	6963738.258	545960.139	8.085	PAD1	
341	6963740.005	545958.939	8.084	PAD1	
342	6963742.360	545957.903	8.080	PAD1	
343	6963744.398	545957.251	8.088	PAD1	
344	6963746.898	545956.970	8.086	PAD1	
345	6963749.179	545956.740	8.086	PAD1	
346	6963751.493	545957.461	8.087	PAD1	

Inukshuk Construction Limited
Industrial Contracting Project Management

PO Box 654
Rankin Inlet, NU X0C 0G0
T 867.645.4030 F 867.645.4064

347	6963753.763	545958.058	8.086	PAD1
348	6963755.993	545959.176	8.088	PAD1
349	6963758.159	545960.796	8.088	PAD1
350	6963760.065	545962.491	8.090	PAD1
351	6963761.401	545964.427	8.087	PAD1
352	6963762.523	545966.670	8.086	PAD1
353	6963763.350	545969.057	8.083	PAD1
354	6963763.749	545971.959	8.083	PAD1
355	6963763.769	545974.217	8.086	PAD1
356	6963763.489	545976.759	8.080	PAD1
357	6963762.564	545979.161	8.086	PAD1
358	6963761.413	545981.417	8.082	PAD1
359	6963759.793	545983.526	8.084	PAD1
360	6963757.914	545985.149	8.083	PAD1
361	6963755.952	545986.609	8.089	PAD1
362	6963753.910	545987.691	8.083	PAD1
363	6963751.616	545988.463	8.086	PAD1
364	6963749.022	545988.862	8.084	PAD1
365	6963746.593	545988.864	8.087	PAD1
366	6963743.858	545988.421	8.086	PAD1
367	6963741.812	545987.766	8.087	PAD1
368	6963739.211	545986.428	8.088	PAD1
369	6963737.125	545984.869	8.090	PAD1
370	6963735.526	545983.172	8.090	PAD1
371	6963734.118	545981.104	8.088	PAD1
372	6963733.070	545978.285	8.088	PAD1
373	6963732.355	545976.367	8.088	PAD1

Inukshuk Construction Limited
Industrial Contracting Project Management

PO Box 654
Rankin Inlet, NU X0C 0G0
T 867.645.4030 F 867.645.4064

374	6963731.860	545973.908	8.085	PAD1
375	6963731.947	545971.447	8.085	PAD1
376	6963732.302	545969.097	8.086	PAD1
377	6963733.011	545966.853	8.087	PAD1
378	6963734.343	545964.358	8.088	PAD1
379	6963736.781	545961.426	8.080	PAD1
380	6963739.078	545964.701	8.128	PAD1
381	6963741.972	545962.437	8.131	PAD1
382	6963745.275	545961.119	8.130	PAD1
383	6963748.779	545960.906	8.120	PAD1
384	6963752.231	545961.794	8.125	PAD1
385	6963755.478	545963.811	8.128	PAD1
386	6963757.952	545966.575	8.128	PAD1
387	6963759.425	545970.088	8.133	PAD1
388	6963759.795	545973.895	8.128	PAD1
389	6963758.822	545977.619	8.123	PAD1
390	6963756.731	545980.917	8.125	PAD1
391	6963753.943	545983.205	8.124	PAD1
392	6963750.645	545984.569	8.125	PAD1
393	6963746.927	545984.870	8.126	PAD1
394	6963743.386	545984.056	8.124	PAD1
395	6963739.779	545981.925	8.125	PAD1
396	6963736.592	545977.402	8.132	PAD1
397	6963735.794	545973.546	8.133	PAD1
398	6963736.234	545970.054	8.137	PAD1
399	6963737.676	545966.460	8.139	PAD1
400	6963740.662	545963.296	8.136	PAD1

Inukshuk Construction Limited
Industrial Contracting Project Management

PO Box 654
Rankin Inlet, NU X0C 0G0
T 867.645.4030 F 867.645.4064

401	6963743.059	545966.527	8.182	PAD1
402	6963747.280	545964.929	8.179	PAD1
403	6963750.742	545965.430	8.178	PAD1
404	6963753.760	545967.593	8.175	PAD1
405	6963755.532	545971.013	8.170	PAD1
406	6963755.622	545974.653	8.170	PAD1
407	6963753.716	545978.252	8.173	PAD1
408	6963749.645	545980.735	8.168	PAD1
409	6963745.662	545980.664	8.162	PAD1
410	6963741.597	545978.009	8.160	PAD1
411	6963739.674	545973.383	8.164	PAD1
412	6963741.008	545968.622	8.163	PAD1
413	6963744.836	545970.234	8.191	PAD1
414	6963748.073	545968.887	8.189	PAD1
415	6963751.090	545970.655	8.183	PAD1
416	6963751.481	545974.572	8.192	PAD1
417	6963749.442	545976.572	8.193	PAD1
418	6963746.438	545976.630	8.198	PAD1
419	6963744.324	545974.917	8.193	PAD1
420	6963743.788	545972.521	8.193	PAD1
421	6963747.773	545972.950	8.229	CENTER

August 1, 2017

Tank #1 Sand Grade

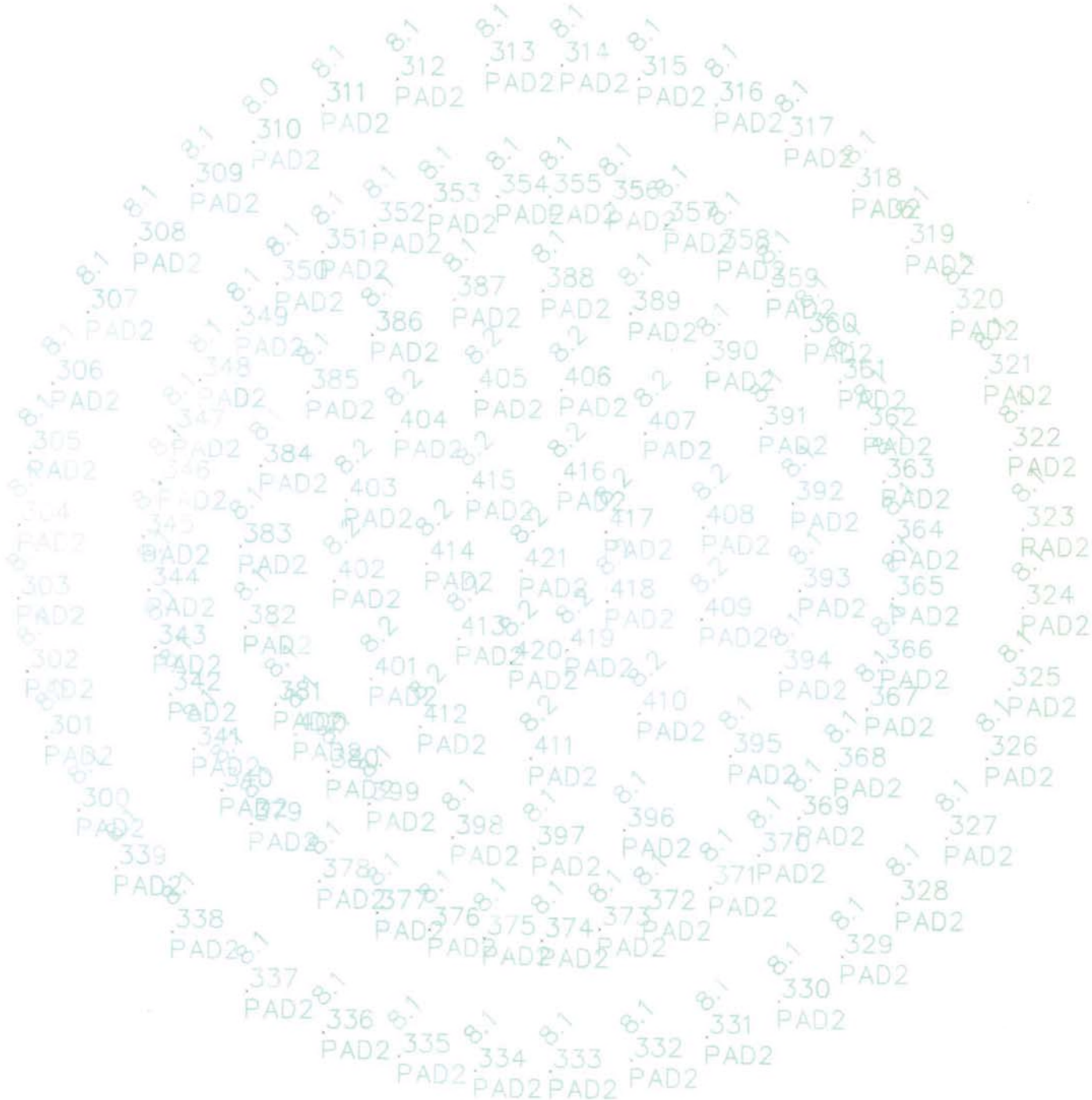

Inukshuk Construction Limited
Industrial Contracting Project Management

PO Box 654
Rankin Inlet, NU X0C 0G0
T 867.645.4030 F 867.645.4064

Field Erected Fuel Storage Tank

Handover Package

Item 8 – Floor

Contents

1. Weld Map
2. Visual Report
3. Vacuum Box Test Report

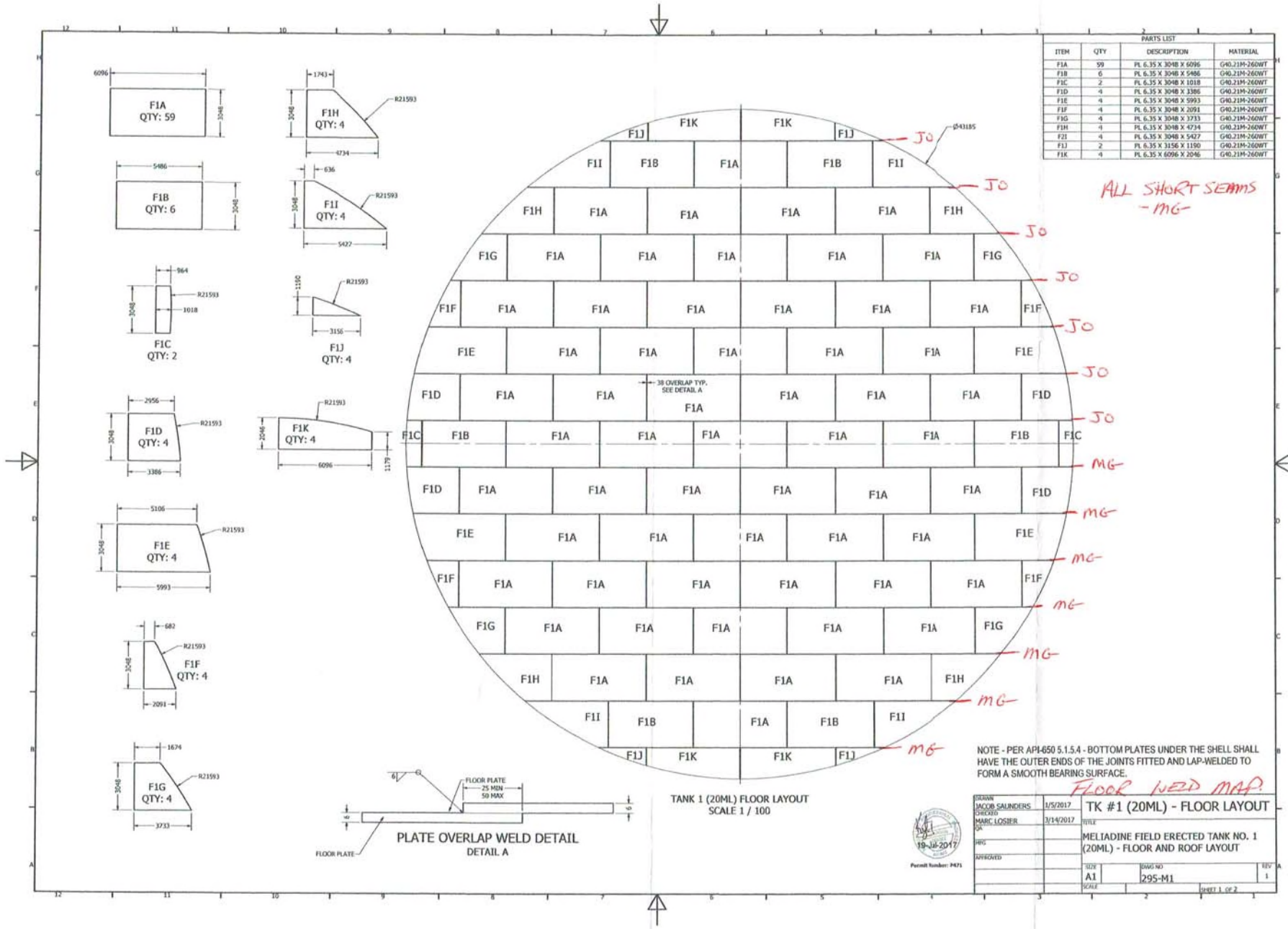
F1A QTY: 59
F1B QTY: 6
F1C QTY: 2
F1D QTY: 4
F1E QTY: 4
F1F QTY: 4
F1G QTY: 4
F1H QTY: 4
F1I QTY: 4
F1J QTY: 4
F1K QTY: 4
PARTS LIST
ITEM | QTY | DESCRIPTION | MATERIAL
F1A | 59 | PL 6.35 X 3048 X 6096 | G40.21M-260WT
F1B | 6 | PL 6.35 X 3048 X 5486 | G40.21M-260WT
F1C | 2 | PL 6.35 X 3048 X 1018 | G40.21M-260WT
F1D | 4 | PL 6.35 X 3048 X 3386 | G40.21M-260WT
F1E | 4 | PL 6.35 X 3048 X 5993 | G40.21M-260WT
F1F | 4 | PL 6.35 X 3048 X 2091 | G40.21M-260WT
F1G | 4 | PL 6.35 X 3048 X 3733 | G40.21M-260WT
F1H | 4 | PL 6.35 X 3048 X 4734 | G40.21M-260WT
F1I | 4 | PL 6.35 X 3048 X 5427 | G40.21M-260WT
F1J | 2 | PL 6.35 X 3156 X 1150 | G40.21M-260WT
F1K | 4 | PL 6.35 X 6096 X 2046 | G40.21M-260WT
ALL SHORT SEAMS - MG
38 OVERLAP TYP. SEE DETAIL A
JO
MG
PLATE OVERLAP WELD DETAIL
DETAIL A
FLOOR PLATE
25 MIN
50 MAX
TANK 1 (20ML) FLOOR LAYOUT
SCALE 1 / 100
NOTE - PER API-650 5.1.5.4 - BOTTOM PLATES UNDER THE SHELL SHALL HAVE THE OUTER ENDS OF THE JOINTS FITTED AND LAP-WELDED TO FORM A SMOOTH BEARING SURFACE.
FLOOR WELD MAP
DRAWN JACOB SAUNDERS 3/5/2017
CHECKED MARC LOSIER 3/14/2017
QA
MFG
APPROVED
TK #1 (20ML) - FLOOR LAYOUT
MELIADINE FIELD ERECTED TANK NO. 1 (20ML) - FLOOR AND ROOF LAYOUT
SIZE A1
DWG NO 295-M1
REV 1
SCALE
SHEET 1 OF 2
19-Jul-2017
Permit Number: P471

4605-47 Street
Vermillion, AB, T9X 1L6
780-608-9589

Exhibit 15c, Rev 1

QUALITY CONTROL MANUAL

VISUAL TEST REPORT

Customer: Agnico Eagle

Location: Rankin Inlet

Code Requiring Test: API 650 (section 8.5.2) Reason for Test: New Construction

A weld shall be acceptable by visual examination if the inspection shows the following.

a) There are no crater cracks, other surface cracks or arc strikes in or adjacent to the welded joints.
b) Maximum permissible undercut is 0.4 mm (1/64 in.) in depth for vertical butt joints, vertically oriented permanent attachments, attachment welds for nozzles, manholes, flush-type openings, and the inside shell-to-bottom welds. For horizontal butt joints, horizontally oriented permanent attachments, and annular-ring butt joints, the maximum permissible undercut is 0.8 mm (1/32 in.) in depth.
c) The frequency of surface porosity in the weld does not exceed one cluster (one or more pores) in any 100 mm (4 in.) of length, and the diameter of each cluster does not exceed 2.5 mm (3/32 in.).
d) The reinforcement of the welds on all thicknesses:

Plate Thickness mm (in.)	Maximum Reinforcement Thickness mm (in.)	
	Vertical Joints	Horizontal Joints
≤ 13 (1/2)	2.5 (3/32)	3 (1/8)
> 13 (1/2) to 25 (1)	3 (1/8)	5 (3/16)
> 25 (1)	5 (3/16)	6 (1/4)

Surface Condition (As Welded)

Test Solution: N/A Test Date(s): Sept. 7

Tested by: Chris Jaques Ambient Conditions:

Items Tested:

Floor TK1

Results:

No defects found, all welding acceptable

Sub-Arc Representative Signature: _____ Date: Sept 7. 2017

Client Representative Signature: Stephane Gignac Date: Sept 11, 2017

Client Signature: _____ Date: _____

4605-47 Street
Vermillion, AB, T9X 1L6
780-608-9589

QUALITY CONTROL MANUAL

Exhibit 14, Rev 1

VACUUM BOX TEST REPORT – FLOOR PLATE WELDS

Customer: agnico eagle

Location: Rankin Inlet

Equipment Tag No.:

Equipment Description: Vac Box

Code Requiring Test: API 650 Reason for Test: New Construction

(A vacuum box/soap solution test for floor plate weld seams is required for new construction or major alterations, no visible leaks should be observed)

Test Solution: Water / Snoop Ambient Conditions: 10°

Test Date(s): Sept 8-9 Surface Condition: Clean

Tested by: Quinton Potts Surface Test Temperature: 5°

Pressure Gauge:

Items Tested:

floor TK 1

Results:

no leaks found, all welds acceptable

Sub-Arc Representative Signature: _____ Date: Sept 11, 2017

Client Representative Signature: Stephane Giard Date: Sept 11, 2017

Client Signature: _____ Date: _____

Inukshuk Construction Limited
Industrial Contracting Project Management

PO Box 654
Rankin Inlet, NU X0C 0G0
T 867.645.4030 F 867.645.4064

Field Erected Fuel Storage Tank

Handover Package

Item 9 – Floor to Shell

Contents

1. Weld Map - Inside Pass
2. Weld Map - Outside Pass
3. Leak (Diesel) Test Report - Visual Report

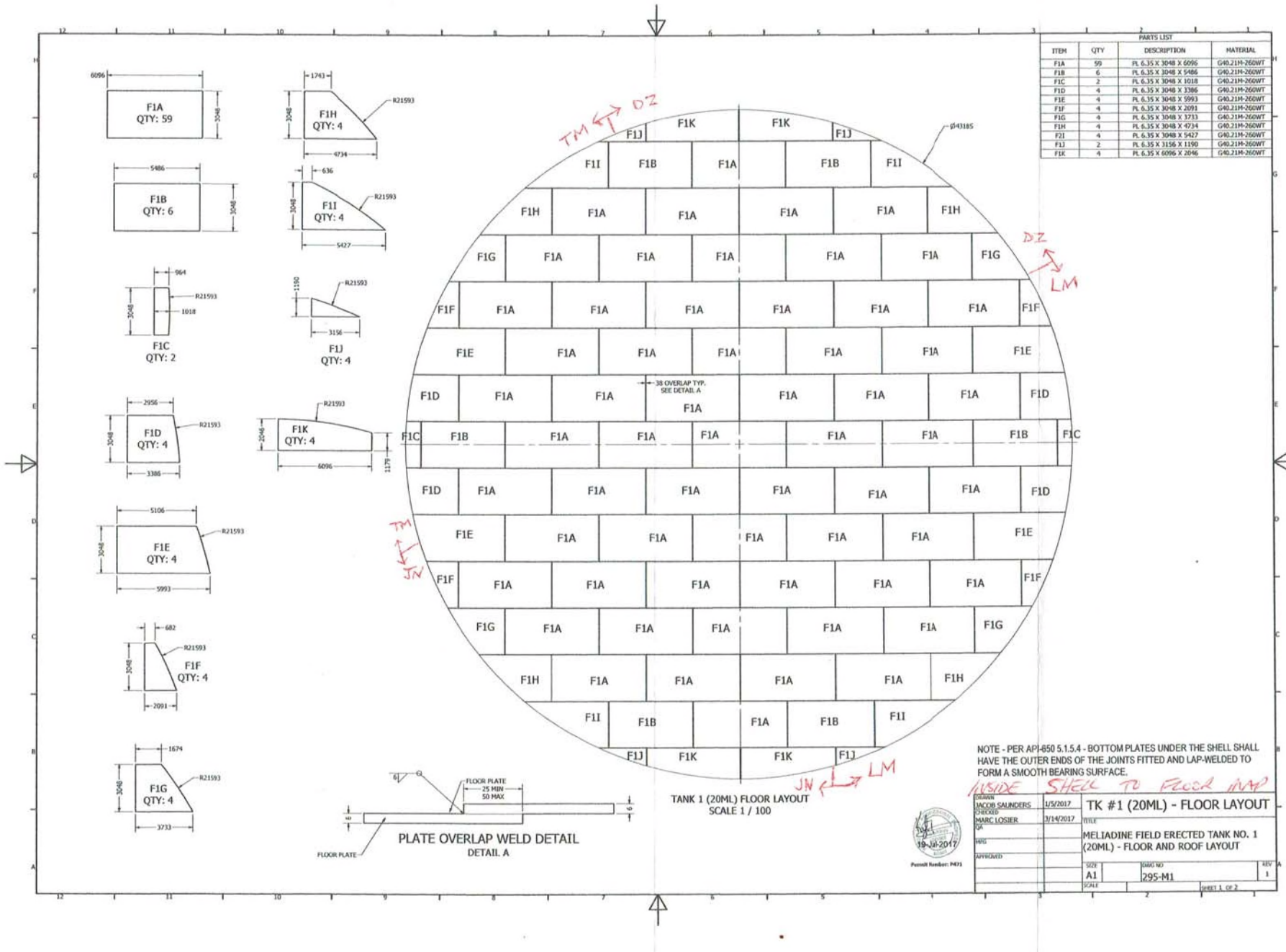

PARTS LIST

ITEM	QTY	DESCRIPTION	MATERIAL
F1A	59	PL 6.35 X 3048 X 6096	G40.21M-260WT
F1B	6	PL 6.35 X 3048 X 5486	G40.21M-260WT
F1C	2	PL 6.35 X 3048 X 1018	G40.21M-260WT
F1D	4	PL 6.35 X 3048 X 3386	G40.21M-260WT
F1E	4	PL 6.35 X 3048 X 5993	G40.21M-260WT
F1F	4	PL 6.35 X 3048 X 2091	G40.21M-260WT
F1G	4	PL 6.35 X 3048 X 3733	G40.21M-260WT
F1H	4	PL 6.35 X 3048 X 4734	G40.21M-260WT
F2I	4	PL 6.35 X 3048 X 5427	G40.21M-260WT
F1J	2	PL 6.35 X 3156 X 1190	G40.21M-260WT
F1K	4	PL 6.35 X 6096 X 2046	G40.21M-260WT

NOTE - PER API-650 5.1.5.4 - BOTTOM PLATES UNDER THE SHELL SHALL HAVE THE OUTER ENDS OF THE JOINTS FITTED AND LAP-WELDED TO FORM A SMOOTH BEARING SURFACE.

INSIDE SHELL TO FLOOR MAP

DRAWN	JACOB SAUNDERS	1/5/2017
CHECKED	MARC LOSIER	3/14/2017
QA		
MFG		
APPROVED		

TK #1 (20ML) - FLOOR LAYOUT

MELIADINE FIELD ERECTED TANK NO. 1 (20ML) - FLOOR AND ROOF LAYOUT

SIZE	DWG NO	REV
A1	295-M1	1

SCALE

SHEET 1 OF 2

19-Jul-2017

Permit Number: P471

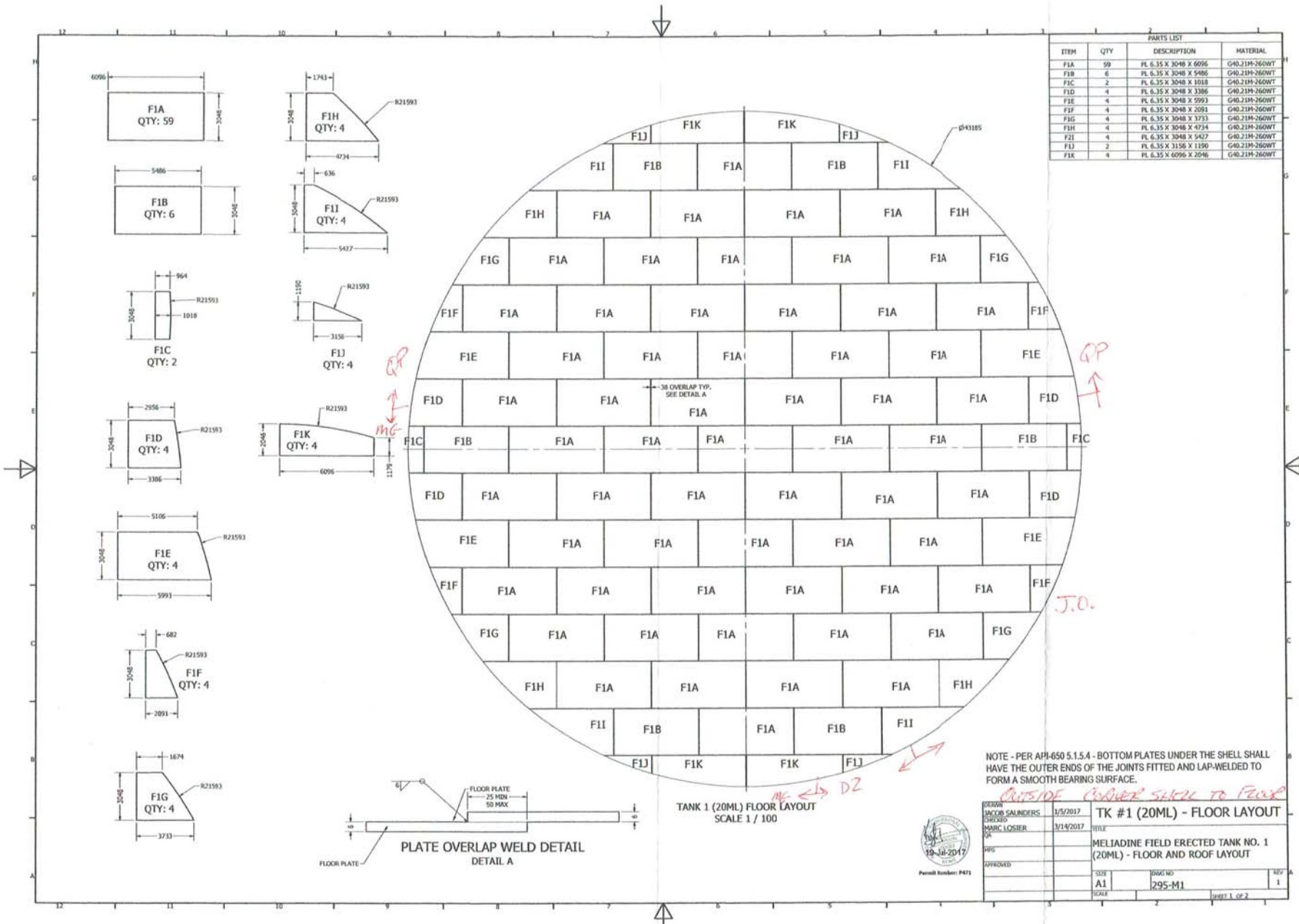
F1A QTY: 59
F1B QTY: 6
F1C QTY: 2
F1D QTY: 4
F1E QTY: 4
F1F QTY: 4
F1G QTY: 4
F1H QTY: 4
F1I QTY: 4
F1J QTY: 4
F1K QTY: 4
PARTS LIST
ITEM | QTY | DESCRIPTION | MATERIAL
F1A | 59 | PL 6.35 X 3048 X 6096 | G40.21M-260WT
F1B | 6 | PL 6.35 X 3048 X 5486 | G40.21M-260WT
F1C | 2 | PL 6.35 X 3048 X 1018 | G40.21M-260WT
F1D | 4 | PL 6.35 X 3048 X 3386 | G40.21M-260WT
F1E | 4 | PL 6.35 X 3048 X 5993 | G40.21M-260WT
F1F | 4 | PL 6.35 X 3048 X 2091 | G40.21M-260WT
F1G | 4 | PL 6.35 X 3048 X 3733 | G40.21M-260WT
F1H | 4 | PL 6.35 X 3048 X 4734 | G40.21M-260WT
F1I | 4 | PL 6.35 X 3048 X 5427 | G40.21M-260WT
F1J | 2 | PL 6.35 X 3156 X 1190 | G40.21M-260WT
F1K | 4 | PL 6.35 X 6096 X 2046 | G40.21M-260WT
Ø43185
38 OVERLAP TYP. SEE DETAIL A
TANK 1 (20ML) FLOOR LAYOUT
SCALE 1 / 100
PLATE OVERLAP WELD DETAIL
DETAIL A
FLOOR PLATE
25 MIN
50 MAX
NOTE - PER API-650 5.1.5.4 - BOTTOM PLATES UNDER THE SHELL SHALL HAVE THE OUTER ENDS OF THE JOINTS FITTED AND LAP-WELDED TO FORM A SMOOTH BEARING SURFACE.
OUTSIDE CORNER SHALL TO FLOOR
J.O.
DRAWN JACOB SAUNDERS 1/5/2017
CHECKED MARC LOSIER 3/14/2017
QA
MFG
APPROVED
TK #1 (20ML) - FLOOR LAYOUT
MELIADINE FIELD ERECTED TANK NO. 1 (20ML) - FLOOR AND ROOF LAYOUT
SIZE A1
DWG NO 295-M1
REV 1
SCALE
SHEET 1 OF 2
19-Jul-2017
Permit Number: P471

4605-47 Street
Vermillion, AB, T9X 1L6
780-608-9589

QUALITY CONTROL MANUAL

Exhibit 15c, Rev 1

VISUAL TEST REPORT

Customer: Agnico Eagle

Location: Rankin Inlet

Code Requiring Test: API 650 (section 8.5.2) Reason for Test: New Construction

A weld shall be acceptable by visual examination if the inspection shows the following.

a) There are no crater cracks, other surface cracks or arc strikes in or adjacent to the welded joints.
b) Maximum permissible undercut is 0.4 mm (1/64 in.) in depth for vertical butt joints, vertically oriented permanent attachments, attachment welds for nozzles, manholes, flush-type openings, and the inside shell-to-bottom welds. For horizontal butt joints, horizontally oriented permanent attachments, and annular-ring butt joints, the maximum permissible undercut is 0.8 mm (1/32 in.) in depth.
c) The frequency of surface porosity in the weld does not exceed one cluster (one or more pores) in any 100 mm (4 in.) of length, and the diameter of each cluster does not exceed 2.5 mm (3/32 in.).
d) The reinforcement of the welds on all thicknesses:

Plate Thickness mm (in.)	Maximum Reinforcement Thickness mm (in.)	
	Vertical Joints	Horizontal Joints
≤ 13 (1/2)	2.5 (3/32)	3 (1/8)
> 13 (1/2) to 25 (1)	3 (1/8)	5 (3/16)
> 25 (1)	5 (3/16)	6 (1/4)

Surface Condition (As Welded)

Test Solution: N/A Test Date(s): June 24/18

Tested by: MATT MACKENZIE Ambient Conditions: 5°

Items Tested:

INNER WELD INSIDE FLOOR TO SHELL

Results:

NO DEFECTS FOUND. ALL WELDING ACCEPTABLE

Sub-Arc Representative Signature: Matt MacKenzie Date: June 24/18

Client Representative Signature: Glen Boivin Date: June 24/18

Client Signature: _____ Date: _____

Sub-Arc Systems Inc.

4605-47 Street
Vermillion, AB, T9X 1L6
780-608-9589

Exhibit 15c, Rev 1

QUALITY CONTROL MANUAL

VISUAL TEST REPORT

Customer: Agnico Eagle

Location: Rankin Inlet

Code Requiring Test: API 650 (section 8.5.2) Reason for Test: New Construction

A weld shall be acceptable by visual examination if the inspection shows the following.

a) There are no crater cracks, other surface cracks or arc strikes in or adjacent to the welded joints.
b) Maximum permissible undercut is 0.4 mm (1/64 in.) in depth for vertical butt joints, vertically oriented permanent attachments, attachment welds for nozzles, manholes, flush-type openings, and the inside shell-to-bottom welds. For horizontal butt joints, horizontally oriented permanent attachments, and annular-ring butt joints, the maximum permissible undercut is 0.8 mm (1/32 in.) in depth.
c) The frequency of surface porosity in the weld does not exceed one cluster (one or more pores) in any 100 mm (4 in.) of length, and the diameter of each cluster does not exceed 2.5 mm (3/32 in.).
d) The reinforcement of the welds on all thicknesses:

Plate Thickness, mm (in.)	Maximum Reinforcement Thickness mm (in.)	
	Vertical Joints	Horizontal Joints
≤ 13 (1/2)	2.5 (3/32)	3 (1/8)
> 13 (1/2) to 25 (1)	3 (1/8)	5 (3/16)
> 25 (1)	5 (3/16)	6 (1/4)

Surface Condition (As Welded)

Test Solution: N/A Test Date(s): June 24/18

Tested by: MATT MACKENZIE Ambient Conditions: 5°

Items Tested:

FINAL WELD SHELL TO FLOOR.

Results:

NO DEFECTS WERE FOUND. ARC WELDING ACCEPTABLE

Sub-Arc Representative Signature: [signature] Date: June 24/18

Client Representative Signature: Clem Bourque Date: June 24/18

Client Signature: _____ Date: _____

4605-47 Street
Vermillion, AB, T9X 1L6
780-608-9589

QUALITY CONTROL MANUAL

Exhibit 15a, Rev 1

DIESEL TEST REPORT (SHELL TO BOTTOM WELD)

Customer: Agnico Eagle

Location: Rankin Inlet

Equipment Tag No.: N/A

Equipment Type: N/A

Equipment Description: N/A

Code Requiring Test: API 650 (section 7.2.4) Reason for Test: New Construction

(The initial weld pass inside the shell shall have all slag and non-metals removed from the surface of the weld and then examined for its entire circumference both visually and applying a high Flash-point penetrating oil such as light diesel to the gap between the shell and the bottom, letting stand for at least four hours, and examining the weld for evidence of wicking.)

Surface Condition (As Welded)

Test Solution: Diesel Test Date(s): JUNE 23/18

Tested by: MATT MACKENZIE Ambient Conditions: 10°

Items Tested:

INSIDE CORNER WELD. SHELL TO FLOOR.

Results:

NO LEAKS WERE FOUND. ALL WELDING ACCEPTABLE.

Sub-Arc Representative Signature: _____ Date: June 23/18

Client Representative Signature: _____ Date: June 23/18

Client Signature: _____ Date: _____

Inukshuk Construction Limited
Industrial Contracting Project Management

PO Box 654
Rankin Inlet, NU X0C 0G0
T 867.645.4030 F 867.645.4064

Field Erected Fuel Storage Tank

Handover Package

Item 10 - Shell

Contents

1. MTR Shell Plates
2. Roundness Dimension Report
3. Weld Map, Visual Report
4. Plumbness & Local Deviations (Peaking and Banding)
5. Leak (Diesel) Test Report
6. UT Report / Log / Map

SSAB

Test Certificate

Form TC1: Revision 2: Date 23 Apr 2014

12400 Highway 43 North, Axis, Alabama 36505, US

Customer:
SAMUEL, SON & CO. LTD
1250 APPLEBY LINE

BURLINGTON
ON L7L5G6

Customer P.O.No.: C41966 & 41-490196 | **Mill Order No.** 41-491119-01 | **Shipping Manifest:** AR239887

Product Description: CSA G40.21(2013) 38WT/260WT - CAT 5;LCVN 15FT.LBS,TCVN13FT.LBS@-45F/A673-P ALLOYS API650(12TH ED) TABLE 4-1 GR.IIIA NORMALIZED

Size: 0.687 X 113.0 X 383.0 (IN)

Ship Date: 16 Feb 17
Cert Date: 16 Feb 17

Cert No: 081596749
(Page 1 of 1)

Tested Pieces:				Tensiles:						Charpy Impact Tests							
Heat Id	Piece Id	Tested Thickness	Tst Loc	YS (KSI)	UTS (KSI)	%RA	Elong % 2in 8in	Tst Dir	Hardness	Abs. Energy(FTLB) 1 2 3 Avg	% Shear 1 2 3 Avg	Tst Tmp	Tst Dir	Tst Siz (mm)	BDWTT Tmp %Shr
W7B609	B19	0.693 (DISCRT)	C	51	73		27	T		101 106 99 102		-45F	L	10.	
			C							89 78 107 91		-45F	T	10.	
W7B609	B20	0.693 (DISCRT)	C	51	73		26	T		107 77 103 96		-45F	L	10.	
			C							60 68 90 73		-45F	T	10.	

Heat Id	Chemical Analysis C	Mn	P	S	Si	Tot Al	Sol Al	Cu	Ni	Cr	Mo	Cb	V	Ti	B	N	ORGN
W7B609	.18	.93	.010	.002	.24	.030	.029	.27	.19	.15	.06	.002	.005	.012	.0002	.0064	USA

KILLED STEEL
MERCURY IS NOT A METALLURGICAL COMPONENT OF THE STEEL AND NO MERCURY WAS INTENTIONALLY ADDED DURING THE MANUFACTURE OF THIS PRODUCT.
KILLED STEEL, PRODUCED TO A FINE GRAIN PRACTICE
MTR EN 10204:2004 INSPECTION CERTIFICATE 3.1 COMPLIANT
NORMALIZED PLATES. HEATED AT 1665F FOR 31 MINUTES.
TEST COUPONS TAKEN FROM HEAT TREATED PLATE.
PRODUCTS SHIPPED:

W7B609 B19	6704675	PCES:	1,	LBS:	8432	W7B609 B19	6704676	PCES:	1,	LBS:	8432
W7B609 B19	6704677	PCES:	1,	LBS:	8432	W7B609 B20	6704672	PCES:	1,	LBS:	8432
W7B609 B19	6704673	PCES:	1,	LBS:	8432	W7B609 B19	6704678	PCES:	1,	LBS:	8432
W7B609 B19	6704674	PCES:	1,	LBS:	8432	W7B609 B19	6704679	PCES:	1,	LBS:	8432

(P) Cust Part #:

WE HEREBY CERTIFY THAT THIS MATERIAL WAS TESTED IN ACCORDANCE WITH, AND MEETS THE REQUIREMENTS OF, THE APPROPRIATE SPECIFICATION

Justin Ward +1 251 662 4400
SENIOR METALLURGIST - PRODUCT

SSAB

Test Certificate

Form TC1: Revision 2: Date 23 Apr 2014

12400 Highway 43 North, Axis, Alabama 36505, US

Customer:
SAMUEL, SON & CO. LTD
1250 APPLEBY LINE

BURLINGTON
ON L7L5G6

Customer P.O.No.: C41966 & 41-490196 | **Mill Order No.** 41-491119-01 | **Shipping Manifest:** AR239890

Product Description: CSA G40.21(2013) 38WT/260WT - CAT 5;LCVN 15FT.LBS,TCVN13FT.LBS@-45F/A673-P ALLOYS API650(12TH ED) TABLE 4-1 GR.IIIA NORMALIZED

Ship Date: 16 Feb 17 | **Cert No:** 081596769
Cert Date: 16 Feb 17 | (Page 1 of 1)

Size: 0.687 X 113.0 X 383.0 (IN)

Tested Pieces:				Tensiles:						Charpy Impact Tests							
Heat Id	Piece Id	Tested Thickness	Tst Loc	YS (KSI)	UTS (KSI)	%RA	Elong % 2in 8in	Tst Dir	Hardness	Abs. Energy(FTLB) 1 2 3 Avg	% Shear 1 2 3 Avg	Tst Tmp	Tst Dir	Tst Siz (mm)	BDWTT Tmp %Shr
W7B609	B20	0.693 (DISCRT)	C	51	73		26	T		107 77 103 96		-45F	L	10.	
			C							60 68 90 73		-45F	T	10.	

Heat Id	Chemical Analysis C	Mn	P	S	Si	Tot Al	Sol Al	Cu	Ni	Cr	Mo	Cb	V	Ti	B	N	ORGN
W7B609	.18	.93	.010	.002	.24	.030	.029	.27	.19	.15	.06	.002	.005	.012	.0002	.0064	USA

KILLED STEEL
MERCURY IS NOT A METALLURGICAL COMPONENT OF THE STEEL AND NO MERCURY WAS INTENTIONALLY ADDED DURING THE MANUFACTURE OF THIS PRODUCT.
KILLED STEEL, PRODUCED TO A FINE GRAIN PRACTICE
MTR EN 10204:2004 INSPECTION CERTIFICATE 3.1 COMPLIANT
NORMALIZED PLATES. HEATED AT 1665F FOR 31 MINUTES.
TEST COUPONS TAKEN FROM HEAT TREATED PLATE.
PRODUCTS SHIPPED:

W7B609	B20	6704796	PCES:	1,	LBS:	8432	W7B609	B20	6704668	PCES:	1, LBS: 8432
W7B609	B20	6704669	PCES:	1,	LBS:	8432	W7B609	B20	6704667	PCES:	1, LBS: 8432
W7B609	B20	6704671	PCES:	1,	LBS:	8432	W7B609	B20	6704670	PCES:	1, LBS: 8432

(P) Cust Part #:

WE HEREBY CERTIFY THAT THIS MATERIAL WAS TESTED IN ACCORDANCE WITH, AND MEETS THE REQUIREMENTS OF, THE APPROPRIATE SPECIFICATION

Justin Ward +1 251 662 4400
SENIOR METALLURGIST - PRODUCT

SSAB

Test Certificate

Form TC1: Revision 2: Date 23 Apr 2014

12400 Highway 43 North, Axis, Alabama 36505, US

Customer:
SAMUEL, SON & CO. LTD
1250 APPLEBY LINE

BURLINGTON
ON L7L5G6

Customer P.O.No.: C41966 & 41-490196 | **Mill Order No.** 41-491119-03 | **Shipping Manifest:** AR239887

Product Description: CSA G40.21(2013) 38WT/260WT - CAT 5;LCVN 15FT.LBS,TCVN13FT.LBS@-45F/A673-P ALLOYS API650(12TH ED) TABLE 4-1 GR.IIIA NORMALIZED

Ship Date: 16 Feb 17 | **Cert No:** 081596750
Cert Date: 16 Feb 17 | (Page 1 of 1)

Size: 0.562 X 113.0 X 383.0 (IN)

Tested Pieces:				Tensiles:						Charpy Impact Tests							
Heat Id	Piece Id	Tested Thickness	Tst Loc	YS (KSI)	UTS (KSI)	%RA	Elong % 2in 8in	Tst Dir	Hardness	Abs. Energy(FTLB) 1 2 3 Avg	% Shear 1 2 3 Avg	Tst Tmp	Tst Dir	Tst Siz (mm)	BDWTT Tmp %Shr
E7B111	B18	0.568 (DISCRT)	C	52	73		26	T		119 138 164 140		-45F	L	10.	
			C							76 70 63 70		-45F	T	10.	

Heat Id	Chemical Analysis C	Mn	P	S	Si	Tot Al	Sol Al	Cu	Ni	Cr	Mo	Cb	V	Ti	B	N	ORGN
E7B111	.18	.92	.010	<.001	.24	.027	.026	.26	.14	.11	.04	.002	.005	.011	.0002	.0074	USA

KILLED STEEL
MERCURY IS NOT A METALLURGICAL COMPONENT OF THE STEEL AND NO MERCURY WAS INTENTIONALLY ADDED DURING THE MANUFACTURE OF THIS PRODUCT.
KILLED STEEL, PRODUCED TO A FINE GRAIN PRACTICE
MTR EN 10204:2004 INSPECTION CERTIFICATE 3.1 COMPLIANT
NORMALIZED PLATES. HEATED AT 1665F FOR 26 MINUTES.
TEST COUPONS TAKEN FROM HEAT TREATED PLATE.
PRODUCTS SHIPPED:

E7B111 B18	6704697	PCES:	1,	LBS:	6898	E7B111 B18	6704700	PCES:	1,	LBS:	6898
E7B111 B18	6704701	PCES:	1,	LBS:	6898	E7B111 B18	6704698	PCES:	1,	LBS:	6898
E7B111 B18	6704703	PCES:	1,	LBS:	6898	E7B111 B18	6704702	PCES:	1,	LBS:	6898
E7B111 B18	6704699	PCES:	1,	LBS:	6898						

(P) Cust Part #:

WE HEREBY CERTIFY THAT THIS MATERIAL WAS TESTED IN ACCORDANCE WITH, AND MEETS THE REQUIREMENTS OF, THE APPROPRIATE SPECIFICATION

Justin Ward +1 251 662 4400
SENIOR METALLURGIST - PRODUCT

SSAB

Test Certificate

Form TC1: Revision 2: Date 23 Apr 2014

12400 Highway 43 North, Axis, Alabama 36505, US

Customer:
SAMUEL, SON & CO. LTD
1250 APPLEBY LINE

BURLINGTON
ON L7L5G6

Customer P.O.No.: C41966 & 41-490196 | **Mill Order No.** 41-491119-03 | **Shipping Manifest:** AR239890

Product Description: CSA G40.21(2013) 38WT/260WT - CAT 5;LCVN 15FT.LBS,TCVN13FT.LBS@-45F/A673-P ALLOYS API650(12TH ED) TABLE 4-1 GR.IIIA NORMALIZED

Ship Date: 16 Feb 17 | **Cert No:** 081596770
Cert Date: 16 Feb 17 | (Page 1 of 1)

Size: 0.562 X 113.0 X 383.0 (IN)

Tested Pieces:				Tensiles:						Charpy Impact Tests						
Heat Id	Piece Id	Tested Thickness	Tst Loc	YS (KSI)	UTS (KSI)	%RA	Elong % 2in 8in	Tst Dir	Hardness	Abs. Energy(FTLB) 1 2 3 Avg	% Shear 1 2 3 Avg	Tst Tmp	Tst Dir	Tst Siz (mm)	BDWTT Tmp %Shr
E7B111	B16	0.568 (DISCRT)	C	50	72		27	T		135 123 122 127		-45F	L	10.	
			C							112 84 96 97		-45F	T	10.	

Chemical Analysis

Heat Id	C	Mn	P	S	Si	Tot Al	Sol Al	Cu	Ni	Cr	Mo	Cb	V	Ti	B	N	ORGN
E7B111	.18	.92	.010	<.001	.24	.027	.026	.26	.14	.11	.04	.002	.005	.011	.0002	.0074	USA

KILLED STEEL
MERCURY IS NOT A METALLURGICAL COMPONENT OF THE STEEL AND NO MERCURY WAS INTENTIONALLY ADDED DURING THE MANUFACTURE OF THIS PRODUCT.
KILLED STEEL, PRODUCED TO A FINE GRAIN PRACTICE
MTR EN 10204:2004 INSPECTION CERTIFICATE 3.1 COMPLIANT
NORMALIZED PLATES. HEATED AT 1665F FOR 26 MINUTES.
TEST COUPONS TAKEN FROM HEAT TREATED PLATE.
PRODUCTS SHIPPED:

E7B111 B16	6704871	PCES:	1,	LBS:	6898	E7B111 B16	6704870	PCES:	1,	LBS:	6898
E7B111 B16	6704869	PCES:	1,	LBS:	6898	E7B111 B16	6704868	PCES:	1,	LBS:	6898
E7B111 B16	6704875	PCES:	1,	LBS:	6898	E7B111 B16	6704874	PCES:	1,	LBS:	6898
E7B111 B16	6704873	PCES:	1,	LBS:	6898						

(P) Cust Part #:

WE HEREBY CERTIFY THAT THIS MATERIAL WAS TESTED IN ACCORDANCE WITH, AND MEETS THE REQUIREMENTS OF, THE APPROPRIATE SPECIFICATION

Justin Ward +1 251 662 4400
SENIOR METALLURGIST - PRODUCT

SSAB

Test Certificate

Form TC1: Revision 2: Date 23 Apr 2014

12400 Highway 43 North, Axis, Alabama 36505, US

Customer:
SAMUEL, SON & CO. LTD
1250 APPLEBY LINE

BURLINGTON
ON L7L5G6

Customer P.O.No.: C41966 & 41-490196 | **Mill Order No.** 41-491119-04 | **Shipping Manifest:** AR239891

Product Description: CSA G40.21(2013) 38WT/260WT - CAT 5;LCVN 15FT.LBS,TCVN13FT.LBS@-45F/A673-P ALLOYS API650(12TH ED) TABLE 4-1 GR.IIIA NORMALIZED

Size: 0.437 X 113.0 X 383.0 (IN)

Ship Date: 16 Feb 17 | **Cert No:** 081596773
Cert Date: 16 Feb 17 | (Page 1 of 1)

Tested Pieces:				Tensiles:						Charpy Impact Tests						
Heat Id	Piece Id	Tested Thickness	Tst Loc	YS (KSI)	UTS (KSI)	%RA	Elong % 2in 8in	Tst Dir	Hardness	Abs. Energy(FTLB) 1 2 3 Avg	% Shear 1 2 3 Avg	Tst Tmp	Tst Dir	Tst Siz (mm)	BDWTT Tmp %Shr
E7B111	B17	0.442 (DISCRT)	C	54	75		27	T		125 118 101 115		-45F	L	10.	
			C							113 74 83 90		-45F	T	10.	

Heat Id	Chemical Analysis C	Mn	P	S	Si	Tot Al	Sol Al	Cu	Ni	Cr	Mo	Cb	V	Ti	B	N	ORGN
E7B111	.18	.92	.010	<.001	.24	.027	.026	.26	.14	.11	.04	.002	.005	.011	.0002	.0074	USA

KILLED STEEL
MERCURY IS NOT A METALLURGICAL COMPONENT OF THE STEEL AND NO MERCURY WAS INTENTIONALLY ADDED DURING THE MANUFACTURE OF THIS PRODUCT.
KILLED STEEL, PRODUCED TO A FINE GRAIN PRACTICE
MTR EN 10204:2004 INSPECTION CERTIFICATE 3.1 COMPLIANT
NORMALIZED PLATES. HEATED AT 1665F FOR 21 MINUTES.
TEST COUPONS TAKEN FROM HEAT TREATED PLATE.
PRODUCTS SHIPPED:
E7B111 B17 6704662 PCES: 1, LBS: 5364 E7B111 B17 6704661 PCES: 1, LBS: 5364

(P) Cust Part #:

WE HEREBY CERTIFY THAT THIS MATERIAL WAS TESTED IN ACCORDANCE WITH, AND MEETS THE REQUIREMENTS OF, THE APPROPRIATE SPECIFICATION

Justin Ward +1 251 662 4400
SENIOR METALLURGIST - PRODUCT

SSAB

Test Certificate

Form TC1: Revision 2: Date 23 Apr 2014

12400 Highway 43 North, Axis, Alabama 36505, US

Customer:
SAMUEL, SON & CO. LTD
1250 APPLEBY LINE

BURLINGTON
ON L7L5G6

Customer P.O.No.: C41966 & 41-490196 | **Mill Order No.** 41-491119-04 | **Shipping Manifest:** AR239890

Product Description: CSA G40.21(2013) 38WT/260WT - CAT 5;LCVN 15FT.LBS,TCVN13FT.LBS@-45F/A673-P ALLOYS API650(12TH ED) TABLE 4-1 GR.IIIA NORMALIZED

Size: 0.437 X 113.0 X 383.0 (IN)

Ship Date: 16 Feb 17
Cert Date: 16 Feb 17

Cert No: 081596771
(Page 1 of 1)

Tested Pieces:				Tensiles:						Charpy Impact Tests							
Heat Id	Piece Id	Tested Thickness	Tst Loc	YS (KSI)	UTS (KSI)	%RA	Elong % 2in 8in	Tst Dir	Hardness	Abs. Energy(FTLB) 1 2 3 Avg	% Shear 1 2 3 Avg	Tst Tmp	Tst Dir	Tst Siz (mm)	BDWTT Tmp %Shr
E7B111	B17	0.442 (DISCRT)	C	54	75		27	T		125 118 101 115		-45F	L	10.	
			C							113 74 83 90		-45F	T	10.	
W7B608	B12	0.443 (DISCRT)	C	53	75		24	T		124 120 125 123		-50F	L	10.	
			C							75 53 80 69		-50F	T	10.	

Chemical Analysis

Heat Id	C	Mn	P	S	Si	Tot Al	Sol Al	Cu	Ni	Cr	Mo	Cb	V	Ti	B	N	ORGN
E7B111	.18	.92	.010	<.001	.24	.027	.026	.26	.14	.11	.04	.002	.005	.011	.0002	.0074	USA
W7B608	.18	.92	.008	.001	.24	.027	.026	.26	.18	.10	.05	.001	.005	.011	.0002	.0079	USA

KILLED STEEL
MERCURY IS NOT A METALLURGICAL COMPONENT OF THE STEEL AND NO MERCURY WAS INTENTIONALLY ADDED DURING THE MANUFACTURE OF THIS PRODUCT.
KILLED STEEL, PRODUCED TO A FINE GRAIN PRACTICE
MTR EN 10204:2004 INSPECTION CERTIFICATE 3.1 COMPLIANT
NORMALIZED PLATES. HEATED AT 1665F FOR 21 MINUTES.
TEST COUPONS TAKEN FROM HEAT TREATED PLATE.
PRODUCTS SHIPPED:

W7B608 B12	6704651	PCES:	1,	LBS:	5364	W7B608 B12	6704650	PCES:	1,	LBS:	5364
E7B111 B17	6704653	PCES:	1,	LBS:	5364	E7B111 B17	6704665	PCES:	1,	LBS:	5364

(P) Cust Part #:

WE HEREBY CERTIFY THAT THIS MATERIAL WAS TESTED IN ACCORDANCE WITH, AND MEETS THE REQUIREMENTS OF, THE APPROPRIATE SPECIFICATION

Justin Ward +1 251 662 4400
SENIOR METALLURGIST - PRODUCT

SSAB

Test Certificate

Form TC1: Revision 2: Date 23 Apr 2014

12400 Highway 43 North, Axis, Alabama 36505, US

Customer:
SAMUEL, SON & CO. LTD
1250 APPLEBY LINE

BURLINGTON
ON L7L5G6

Customer P.O.No.: C41966 & 41-490196 | **Mill Order No.** 41-491119-04 | **Shipping Manifest:** AR239886

Product Description: CSA G40.21(2013) 38WT/260WT - CAT 5;LCVN 15FT.LBS,TCVN13FT.LBS@-45F/A673-P ALLOYS API650(12TH ED) TABLE 4-1 GR.IIIA NORMALIZED

Ship Date: 16 Feb 17
Cert Date: 16 Feb 17

Cert No: 081596743
(Page 1 of 1)

Size: 0.437 X 113.0 X 383.0 (IN)

Tested Pieces:				Tensiles:						Charpy Impact Tests							
Heat Id	Piece Id	Tested Thickness	Tst Loc	YS (KSI)	UTS (KSI)	%RA	Elong % 2in 8in	Tst Dir	Hardness	Abs. Energy(FTLB) 1 2 3 Avg	% Shear 1 2 3 Avg	Tst Tmp	Tst Dir	Tst Siz (mm)	BDWTT Tmp %Shr
E7B111	B17	0.442 (DISCRT)	C	54	75		27	T		125 118 101 115		-45F	L	10.	
			C							113 74 83 90		-45F	T	10.	

Heat Id	Chemical Analysis C	Mn	P	S	Si	Tot Al	Sol Al	Cu	Ni	Cr	Mo	Cb	V	Ti	B	N	ORGN
E7B111	.18	.92	.010	<.001	.24	.027	.026	.26	.14	.11	.04	.002	.005	.011	.0002	.0074	USA

KILLED STEEL
MERCURY IS NOT A METALLURGICAL COMPONENT OF THE STEEL AND NO MERCURY WAS INTENTIONALLY ADDED DURING THE MANUFACTURE OF THIS PRODUCT.
KILLED STEEL, PRODUCED TO A FINE GRAIN PRACTICE
MTR EN 10204:2004 INSPECTION CERTIFICATE 3.1 COMPLIANT
NORMALIZED PLATES. HEATED AT 1665F FOR 21 MINUTES.
TEST COUPONS TAKEN FROM HEAT TREATED PLATE.
PRODUCTS SHIPPED:

E7B111	B17	6704664	PCES:	1,	LBS:	5364	E7B111	B17	6704666	PCES:	1,	LBS: 5364
E7B111	B17	6704654	PCES:	1,	LBS:	5364	E7B111	B17	6704663	PCES:	1,	LBS: 5364
E7B111	B17	6704655	PCES:	1,	LBS:	5364						

(P) Cust Part #:

WE HEREBY CERTIFY THAT THIS MATERIAL WAS TESTED IN ACCORDANCE WITH, AND MEETS THE REQUIREMENTS OF, THE APPROPRIATE SPECIFICATION

Justin Ward +1 251 662 4400
SENIOR METALLURGIST - PRODUCT

SSAB

Test Certificate

Form TC1: Revision 2: Date 23 Apr 2014

12400 Highway 43 North, Axis, Alabama 36505, US

Customer:
SAMUEL, SON & CO. LTD
1250 APPLEBY LINE

BURLINGTON
ON L7L5G6

Customer P.O.No.: C41966 & 41-490196 | **Mill Order No.** 41-491119-04 | **Shipping Manifest:** AR239888

Product Description: CSA G40.21(2013) 38WT/260WT - CAT 5;LCVN 15FT.LBS,TCVN13FT.LBS@-45F/A673-P ALLOYS API650(12TH ED) TABLE 4-1 GR.IIIA NORMALIZED

Ship Date: 16 Feb 17 | **Cert No:** 081596753
Cert Date: 16 Feb 17 | (Page 1 of 1)

Size: 0.437 X 113.0 X 383.0 (IN)

Tested Pieces:				Tensiles:						Charpy Impact Tests						
Heat Id	Piece Id	Tested Thickness	Tst Loc	YS (KSI)	UTS (KSI)	%RA	Elong % 2in 8in	Tst Dir	Hardness	Abs. Energy(FTLB) 1 2 3 Avg	% Shear 1 2 3 Avg	Tst Tmp	Tst Dir	Tst Siz (mm)	BDWTT Tmp %Shr
E7B111	B13	0.442 (DISCRT)	C	53	74		26	T		123 176 131 143		-50F	L	10.	
			C							117 81 86 95		-50F	T	10.	
E7B111	B14	0.443 (DISCRT)	C	53	74		27	T		143 155 114 137		-45F	L	10.	
			C							90 102 80 91		-45F	T	10.	
W7B608	B12	0.443 (DISCRT)	C	53	75		24	T		124 120 125 123		-50F	L	10.	
			C							75 53 80 69		-50F	T	10.	

Chemical Analysis

Heat Id	C	Mn	P	S	Si	Tot Al	Sol Al	Cu	Ni	Cr	Mo	Cb	V	Ti	B	N	ORGN
E7B111	.18	.92	.010	<.001	.24	.027	.026	.26	.14	.11	.04	.002	.005	.011	.0002	.0074	USA
W7B608	.18	.92	.008	.001	.24	.027	.026	.26	.18	.10	.05	.001	.005	.011	.0002	.0079	USA

KILLED STEEL
MERCURY IS NOT A METALLURGICAL COMPONENT OF THE STEEL AND NO MERCURY WAS INTENTIONALLY ADDED DURING THE MANUFACTURE OF THIS PRODUCT.
KILLED STEEL, PRODUCED TO A FINE GRAIN PRACTICE
MTR EN 10204:2004 INSPECTION CERTIFICATE 3.1 COMPLIANT
NORMALIZED PLATES. HEATED AT 1665F FOR 21 MINUTES.
TEST COUPONS TAKEN FROM HEAT TREATED PLATE.
PRODUCTS SHIPPED:

E7B111	B13	6704432	PCES:	1,	LBS:	5364	E7B111	B13	6704436	PCES:	1, LBS: 5364
E7B111	B13	6704435	PCES:	1,	LBS:	5364	E7B111	B13	6704431	PCES:	1, LBS: 5364
E7B111	B14	6704426	PCES:	1,	LBS:	5364	E7B111	B13	6704434	PCES:	1, LBS: 5364
E7B111	B13	6704430	PCES:	1,	LBS:	5364	E7B111	B13	6704429	PCES:	1, LBS: 5364
W7B608	B12	6704433	PCES:	1,	LBS:	5364	E7B111	B13	6704441	PCES:	1, LBS: 5364
E7B111	B13	6704440	PCES:	1,	LBS:	5364	W7B608	B12	6704438	PCES:	1, LBS: 5364
W7B608	B12	6704437	PCES:	1,	LBS:	5364	W7B608	B12	6704443	PCES:	1, LBS: 5364
W7B608	B12	6704439	PCES:	1,	LBS:	5364	W7B608	B12	6704444	PCES:	1, LBS: 5364
W7B608	B12	6704445	PCES:	1,	LBS:	5364					

(P) Cust Part #:

WE HEREBY CERTIFY THAT THIS MATERIAL WAS TESTED IN ACCORDANCE WITH, AND MEETS THE REQUIREMENTS OF, THE APPROPRIATE SPECIFICATION

Justin Ward +1 251 662 4400
SENIOR METALLURGIST - PRODUCT

SSAB

Test Certificate

Form TC1: Revision 2: Date 23 Apr 2014

12400 Highway 43 North, Axis, Alabama 36505, US

Customer:
SAMUEL, SON & CO. LTD
1250 APPLEBY LINE

BURLINGTON
ON L7L5G6

Customer P.O.No.: C41966 & 41-490196 | **Mill Order No.** 41-491119-05 | **Shipping Manifest:** AR239890

Product Description: CSA G40.21(2013) 38WT/260WT - CAT 5;LCVN 15FT.LBS,TCVN13FT.LBS@-45F/A673-P ALLOYS API650(12TH ED) TABLE 4-1 GR.IIIA NORMALIZED

Ship Date: 16 Feb 17 | **Cert No:** 081596772
Cert Date: 16 Feb 17 | (Page 1 of 1)

Size: 0.375 X 113.0 X 383.0 (IN)

Tested Pieces:				Tensiles:						Charpy Impact Tests								
Heat Id	Piece Id	Tested Thickness	Tst Loc	YS (KSI)	UTS (KSI)	%RA	Elong % 2in 8in	Tst Dir	Hardness	Abs. Energy(FTLB) 1 2 3 Avg	% Shear 1 2 3 Avg	Tst Tmp	Tst Dir	Tst Siz (mm)	BDWTT Tmp %Shr
W7B608	B08	0.381 (DISCRT)	C	53	74		26	T		100 122 119 114		-45F	L	7.5	
			C							40 57 79 59		-45F	T	7.5	
W7B608	B09	0.381 (DISCRT)	C	52	73		26	T		97 83 96 92		-45F	L	7.5	
			C							50 58 48 52		-45F	T	7.5	
W7B608	B10	0.380 (DISCRT)	C	52	74		23	T		120 92 86 99		-45F	L	7.5	
			C							53 51 57 54		-45F	T	7.5	

Chemical Analysis

Heat Id	C	Mn	P	S	Si	Tot Al	Sol Al	Cu	Ni	Cr	Mo	Cb	V	Ti	B	N	ORGN
W7B608	.18	.92	.008	.001	.24	.027	.026	.26	.18	.10	.05	.001	.005	.011	.0002	.0079	USA

KILLED STEEL
MERCURY IS NOT A METALLURGICAL COMPONENT OF THE STEEL AND NO MERCURY WAS INTENTIONALLY ADDED DURING THE MANUFACTURE OF THIS PRODUCT.
KILLED STEEL, PRODUCED TO A FINE GRAIN PRACTICE
MTR EN 10204:2004 INSPECTION CERTIFICATE 3.1 COMPLIANT
CHARPY FULL SIZE EQUIVALENT = ABSORBED ENERGY AVG X 10 / TEST SIZE IN MM
NORMALIZED PLATES. HEATED AT 1665F FOR 19 MINUTES.
TEST COUPONS TAKEN FROM HEAT TREATED PLATE.
PRODUCTS SHIPPED:

W7B608 B10	6704852	PCES:	1,	LBS:	4603	W7B608 B10	6704859	PCES:	1,	LBS:	4603
W7B608 B10	6704851	PCES:	1,	LBS:	4603	W7B608 B09	6704845	PCES:	1,	LBS:	4603
W7B608 B10	6704860	PCES:	1,	LBS:	4603	W7B608 B10	6704861	PCES:	1,	LBS:	4603
W7B608 B10	6704862	PCES:	1,	LBS:	4603	W7B608 B08	6704572	PCES:	1,	LBS:	4603

(P) Cust Part #:

WE HEREBY CERTIFY THAT THIS MATERIAL WAS TESTED IN ACCORDANCE WITH, AND MEETS THE REQUIREMENTS OF, THE APPROPRIATE SPECIFICATION

Justin Ward +1 251 662 4400
SENIOR METALLURGIST - PRODUCT

SSAB

Test Certificate

12400 Highway 43 North, Axis, Alabama 36505, US

Form TC1: Revision 2: Date 23 Apr 2014

Customer:
SAMUEL, SON & CO. LTD
1250 APPLEBY LINE

BURLINGTON
ON L7L5G6

Customer P.O.No.: C41966 & 41-490196 | **Mill Order No.** 41-491119-05 | **Shipping Manifest:** AR239891

Product Description: CSA G40.21(2013) 38WT/260WT - CAT 5;LCVN 15FT.LBS,TCVN13FT.LBS@-45F/A673-P ALLOYS API650(12TH ED) TABLE 4-1 GR.IIIA NORMALIZED

Ship Date: 16 Feb 17
Cert Date: 16 Feb 17

Cert No: 081596774
(Page 1 of 1)

Size: 0.375 X 113.0 X 383.0 (IN)

Tested Pieces:				Tensiles:						Charpy Impact Tests								
Heat Id	Piece Id	Tested Thickness	Tst Loc	YS (KSI)	UTS (KSI)	%RA	Elong % 2in 8in	Tst Dir	Hardness	Abs. Energy(FTLB) 1 2 3 Avg	% Shear 1 2 3 Avg	Tst Tmp	Tst Dir	Tst Siz (mm)	BDWTT Tmp %Shr
W7B608	B06	0.381 (DISCRT)	C	53	75		27	T		77 78 103 86		-50F	L	7.5	
			C							46 31 49 42		-50F	T	7.5	
W7B608	B09	0.381 (DISCRT)	C	52	73		26	T		97 83 96 92		-45F	L	7.5	
			C							50 58 48 52		-45F	T	7.5	

Heat	Chemical Analysis																	
Id	C	Mn	P	S	Si	Tot Al	Sol Al	Cu	Ni	Cr	Mo	Cb	V	Ti	B	N		ORGN
W7B608	.18	.92	.008	.001	.24	.027	.026	.26	.18	.10	.05	.001	.005	.011	.0002	.0079		USA

KILLED STEEL
MERCURY IS NOT A METALLURGICAL COMPONENT OF THE STEEL AND NO MERCURY WAS INTENTIONALLY ADDED DURING THE MANUFACTURE OF THIS PRODUCT.
KILLED STEEL, PRODUCED TO A FINE GRAIN PRACTICE
MTR EN 10204:2004 INSPECTION CERTIFICATE 3.1 COMPLIANT
CHARPY FULL SIZE EQUIVALENT = ABSORBED ENERGY AVG X 10 / TEST SIZE IN MM
NORMALIZED PLATES. HEATED AT 1665F FOR 19 MINUTES.
TEST COUPONS TAKEN FROM HEAT TREATED PLATE.
PRODUCTS SHIPPED:
W7B608 B06 6704482 PCES: 1, LBS: 4603 W7B608 B09 6704584 PCES: 1, LBS: 4603

(P) Cust Part #:

WE HEREBY CERTIFY THAT THIS MATERIAL WAS TESTED IN ACCORDANCE WITH, AND MEETS THE REQUIREMENTS OF, THE APPROPRIATE SPECIFICATION

Justin Ward +1 251 662 4400
SENIOR METALLURGIST - PRODUCT

SSAB

Test Certificate

12400 Highway 43 North, Axis, Alabama 36505, US

Form TC1: Revision 2: Date 23 Apr 2014

Customer:
SAMUEL, SON & CO. LTD
1250 APPLEBY LINE

BURLINGTON
ON L7L5G6

Customer P.O.No.: C41966 & 41-490196 | **Mill Order No.** 41-491119-05 | **Shipping Manifest:** AR239886

Product Description: CSA G40.21(2013) 38WT/260WT - CAT 5;LCVN 15FT.LBS,TCVN13FT.LBS@-45F/A673-P ALLOYS API650(12TH ED) TABLE 4-1 GR.IIIA NORMALIZED

Size: 0.375 X 113.0 X 383.0 (IN)

Ship Date: 16 Feb 17
Cert Date: 16 Feb 17

Cert No: 081596744
(Page 1 of 1)

Tested Pieces:				Tensiles:						Charpy Impact Tests						
Heat Id	Piece Id	Tested Thickness	Tst Loc	YS (KSI)	UTS (KSI)	%RA	Elong % 2in 8in	Tst Dir	Hardness	Abs. Energy(FTLB) 1 2 3 Avg	% Shear 1 2 3 Avg	Tst Tmp	Tst Dir	Tst Siz (mm)	BDWTT Tmp %Shr
W7B608	B08	0.381 (DISCRT)	C	53	74		26	T		100 122 119 114		-45F	L	7.5	
			C							40 57 79 59		-45F	T	7.5	

Chemical Analysis

Heat Id	C	Mn	P	S	Si	Tot Al	Sol Al	Cu	Ni	Cr	Mo	Cb	V	Ti	B	N	ORGN
W7B608	.18	.92	.008	.001	.24	.027	.026	.26	.18	.10	.05	.001	.005	.011	.0002	.0079	USA

KILLED STEEL
MERCURY IS NOT A METALLURGICAL COMPONENT OF THE STEEL AND NO MERCURY WAS INTENTIONALLY ADDED DURING THE MANUFACTURE OF THIS PRODUCT.
KILLED STEEL, PRODUCED TO A FINE GRAIN PRACTICE
MTR EN 10204:2004 INSPECTION CERTIFICATE 3.1 COMPLIANT
CHARPY FULL SIZE EQUIVALENT = ABSORBED ENERGY AVG X 10 / TEST SIZE IN MM
NORMALIZED PLATES. HEATED AT 1665F FOR 19 MINUTES.
TEST COUPONS TAKEN FROM HEAT TREATED PLATE.
PRODUCTS SHIPPED:
W7B608 B08 6704573 PCES: 1, LBS: 4603

(P) Cust Part #:

WE HEREBY CERTIFY THAT THIS MATERIAL WAS TESTED IN ACCORDANCE WITH, AND MEETS THE REQUIREMENTS OF, THE APPROPRIATE SPECIFICATION

Justin Ward +1 251 662 4400
SENIOR METALLURGIST - PRODUCT

SSAB

Test Certificate

Form TC1: Revision 2: Date 23 Apr 2014

12400 Highway 43 North, Axis, Alabama 36505, US

Customer:
SAMUEL, SON & CO. LTD
1250 APPLEBY LINE

BURLINGTON
ON L7L5G6

Customer P.O.No.: C41966 & 41-490196 | **Mill Order No.** 41-491119-05 | **Shipping Manifest:** AR239888

Product Description: CSA G40.21(2013) 38WT/260WT - CAT 5;LCVN 15FT.LBS,TCVN13FT.LBS@-45F/A673-P ALLOYS API650(12TH ED) TABLE 4-1 GR.IIIA NORMALIZED

Ship Date: 16 Feb 17 | **Cert No:** 081596754
Cert Date: 16 Feb 17 | (Page 1 of 1)

Size: 0.375 X 113.0 X 383.0 (IN)

Tested Pieces:				Tensiles:						Charpy Impact Tests								
Heat Id	Piece Id	Tested Thickness	Tst Loc	YS (KSI)	UTS (KSI)	%RA	Elong % 2in 8in	Tst Dir	Hardness	Abs. Energy(FTLB) 1 2 3 Avg	% Shear 1 2 3 Avg	Tst Tmp	Tst Dir	Tst Siz (mm)	BDWTT Tmp %Shr
W7B608	B06	0.381 (DISCRT)	C	53	75		27	T		77 78 103 86		-50F	L	7.5	
			C							46 31 49 42		-50F	T	7.5	
W7B608	B07	0.380 (DISCRT)	C	52	75		27	T		88 103 87 93		-45F	L	7.5	
			C							54 52 48 51		-45F	T	7.5	

Chemical Analysis

Heat Id	C	Mn	P	S	Si	Tot Al	Sol Al	Cu	Ni	Cr	Mo	Cb	V	Ti	B	N	ORGN
W7B608	.18	.92	.008	.001	.24	.027	.026	.26	.18	.10	.05	.001	.005	.011	.0002	.0079	USA

KILLED STEEL
MERCURY IS NOT A METALLURGICAL COMPONENT OF THE STEEL AND NO MERCURY WAS INTENTIONALLY ADDED DURING THE MANUFACTURE OF THIS PRODUCT.
KILLED STEEL, PRODUCED TO A FINE GRAIN PRACTICE
MTR EN 10204:2004 INSPECTION CERTIFICATE 3.1 COMPLIANT
CHARPY FULL SIZE EQUIVALENT = ABSORBED ENERGY AVG X 10 / TEST SIZE IN MM
NORMALIZED PLATES. HEATED AT 1665F FOR 19 MINUTES.
TEST COUPONS TAKEN FROM HEAT TREATED PLATE.
PRODUCTS SHIPPED:
W7B608 B07 6704494 PCES: 1, LBS: 4603
W7B608 B07 6704493 PCES: 1, LBS: 4603
W7B608 B06 6704483 PCES: 1, LBS: 4603

(P) Cust Part #:

WE HEREBY CERTIFY THAT THIS MATERIAL WAS TESTED IN ACCORDANCE WITH, AND MEETS THE REQUIREMENTS OF, THE APPROPRIATE SPECIFICATION

Justin Ward +1 251 662 4400
SENIOR METALLURGIST - PRODUCT

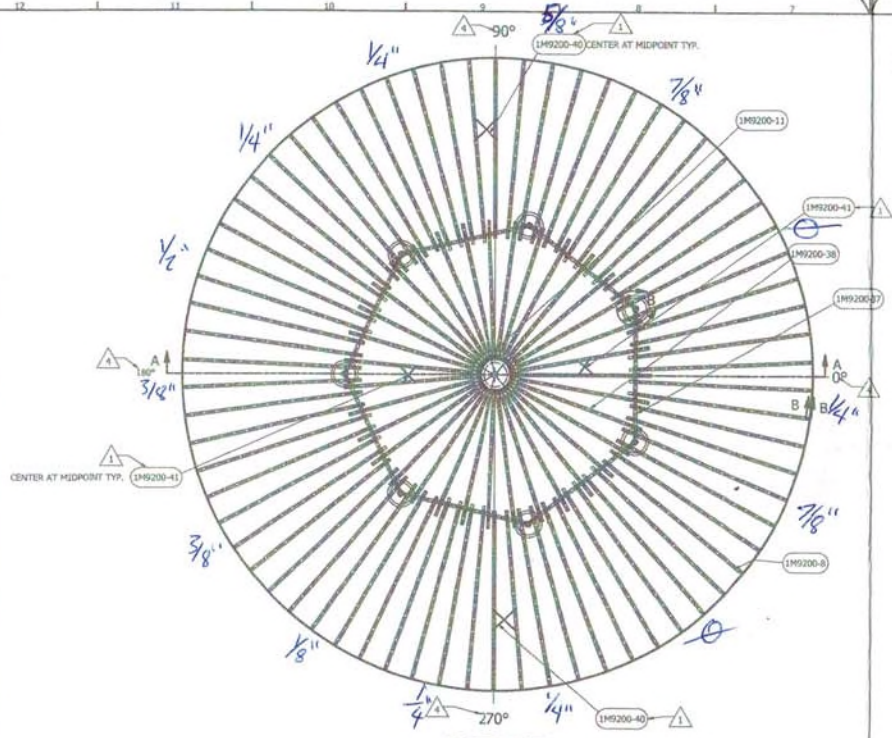

RAFTER LAYOUT
PLAN VIEW
ROOF REMOVED FOR CLARITY
SCALE 1/150

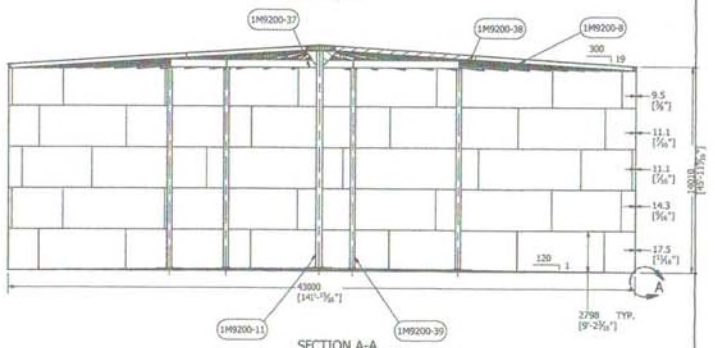

SECTION A-A
SCALE 1/150

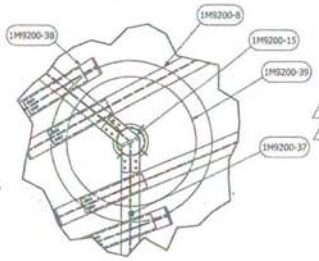

DETAIL B
SCALE 1/25

PARTS LIST			
ITEM	ITEM QTY	Description	MATERIAL
1M9200-8	70	OUTER RAFTER - SEE SHT. 2	G40.21M - 350W
1M9200-10	70	SHELL CLIP - SEE SHT. 2	G40.21M - 300W
1M9200-11	1	CENTER COLUMN - SEE SHT. 3	
1M9200-15	7	TOP INTERMEDIATE GIRDER CONNECTION PLATE - SEE SHT. 2	G40.21M - 300W
1M9200-37	7	INTERMEDIATE GIRDER BEAM ASSY - SEE SHT. 2	
1M9200-38	35	INNER RAFTER - SEE SHT. 2	G40.21M - 350W
1M9200-39	7	INTERMEDIATE COLUMN - SEE SHT. 3	
1M9200-40	4	FBSQX6 [FB2"X1/4"] - 2184 [7'-2"] LG	G40.21M - 300W
1M9200-41	4	FBSQX6 [FB2"X1/4"] - 1574 [5'-2"] LG	G40.21M - 300W

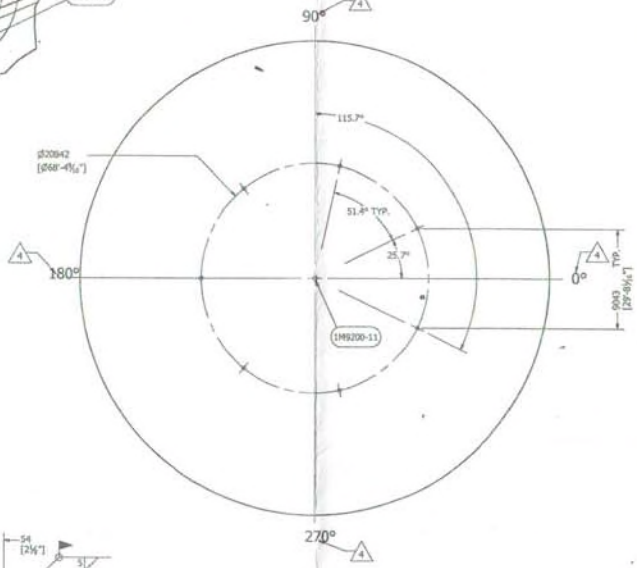

COLUMNS LAYOUT DETAILS
SCALE 1/200

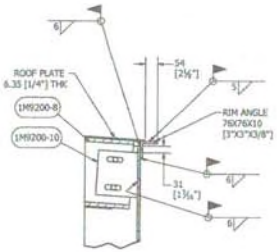

SECTION B-B
SHELL CLIP FITTING DETAIL
SCALE 1 / 10

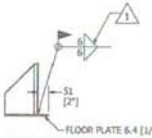

DETAIL A
SCALE 1 / 10

PLUMBNESS CHECKS.

REVISION HISTORY			
ZONE	REV	DESCRIPTION	DATE
G7, D8, H8, E12, I15	1	RAFTER BRACE ADDED, WELDING DETAIL ADDED IN DETAIL A	3/31/2017
F7, H9, F11, D9, F1, G3, F5, D3	4	REFERENCE ANGLES CHANGED	4/24/2017

DRAWN	MARC LOSIER	3/17/2017
CHECKED		
QA		
MFG		
APPROVED		

RAFTER AND COLUMN LAYOUT

TITLE
AGNICO EAGLE -MELIADINE GOLD MINE -
TK #1 - 20,000CUM TANK 43M DIA X 14M H

17-Jul-2017
Permit Number: P471

SIZE	DWG NO	REV
A1	295-M9	6
SCALE		SHEET 1 OF 7

Tank #1 Rankin Inlet (AEM)

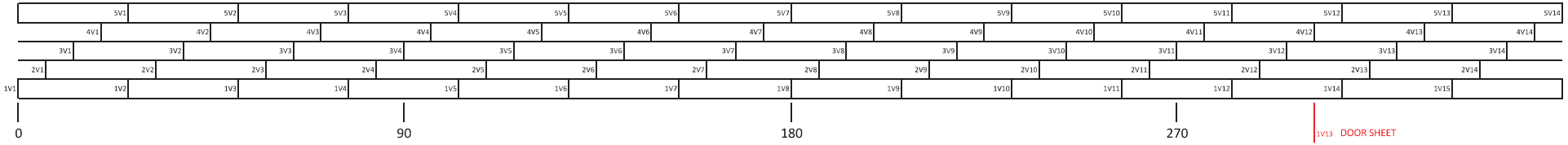

VERTS (Welder ID)

	IN	OUT
1V1	DZ	DZ
1V2	JH	JH
1V3	DZ	DZ
1V4	JH	JH
1V5	JH	JH
1V6	JN	JN
1V7	JN	JN
1V8	JN	JN
1V9	KW	KW
1V10	KW	KW
1V11	KW	KW
1V12	MT	MT
1V13 DOOR	LM	LM
1V14	DZ	DZ
1V15	DZ	DZ

	IN	OUT
2V1	JN	JN
2V2	JN	JN
2V3	JN	JN
2V4	JN	JN
2V5	KW	JN
2V6	KW	JN
2V7	KW	JN
2V8	KW	KW
2V9	DZ	KW
2V10	DZ	KW
2V11	DZ	KW
2V12	DZ	KW
2V13	DZ	DZ
2V14	DZ	DZ

	IN	OUT
3V1	JN	JN
3V2	JN	JN
3V3	DZ	DZ
3V4	DZ	DZ
3V5	DZ	DZ
3V6	JN	JN
3V7	JN	JN
3V8	JN	JN
3V9	KW	KW
3V10	KW	KW
3V11	KW	KW
3V12	DZ	DZ
3V13	DZ	DZ
3V14	DZ	DZ

	IN	OUT
4V1	LM	LM
4V2	LM	LM
4V3	LM	JN
4V4	JN	JN
4V5	JN	JN
4V6	JN	JN
4V7	CJ	TM
4V8	CJ	TM
4V9	CJ	TM
4V10	DZ	DZ
4V11	DZ	DZ
4V12	DZ	DZ
4V13	DZ	DZ
4V14	LM	LM

	IN	OUT
5V1	LM	LM
5V2	LM	LM
5V3	LM	LM
5V4	JN	JN
5V5	JN	JN
5V6	JN	JN
5V7	CJ	JN
5V8	CJ	TM
5V9	CJ	DZ
5V10	DZ	DZ
5V11	DZ	DZ
5V12	DZ	DZ
5V13	DZ	DZ
5V14	DZ	DZ

HORIZONTAL (Welder ID)

	IN	OUT
H1	JO	MG
DOOR SHEET	LM/DZ	LM/DZ

	IN	OUT
H2	JO	MG

	IN	OUT
H3	MM	CJ

	IN	OUT
H4	MM	CJ

PLATES IDENTIFICATION (heat numbers)

	Heat Number
1V1	W7B609B20
1V2	W7B609B20
1V3	W7B609B19
1V4	W7B609B19
1V5	W7B609B20
1V6	W7B609B20
1V7	W7B609B20
1V8	W7B609B20
1V9	W7B609B20
1V10	W7B609B19
1V11	W7B609B19
1V12	W7B609B19
1V13	W7B609B19
1V14	W7B609B19
1V15	W7B609B19

	Heat Number
2V1	E7B111B16
2V2	E7B111B16
2V3	E7B111B18
2V4	E7B111B18
2V5	E7B111B18
2V6	E7B111B16
2V7	E7B111B16
2V8	E7B111B16
2V9	E7B111B18
2V10	E7B111B18
2V11	E7B111B18
2V12	E7B111B18
2V13	E7B111B16
2V14	E7B111B16

	Heat Number
3V1	E7B111B17
3V2	E7B111B14
3V3	E7B111B13
3V4	W7B608B12
3V5	E7B111B17
3V6	E7B111B17
3V7	W7B608B12
3V8	E7B111B13
3V9	E7B111B17
3V10	W7B608B12
3V11	W7B608B12
3V12	E7B111B17
3V13	W7B608B12
3V14	E7B111B13

	Heat Number
4V1	E7B111B13
4V2	E7B111B17
4V3	E7B111B13
4V4	W7B608B12
4V5	E7B111B17
4V6	W7B608B12
4V7	E7B111B13
4V8	E7B111B13
4V9	E7B111B13
4V10	W7B608B12
4V11	E7B111B17
4V12	W7B608B12
4V13	E7B111B13
4V14	E7B111B17

	Heat Number
5V1	W7B608B06
5V2	W7B608B10
5V3	W7B608B08
5V4	W7B608B10
5V5	W7B608B09
5V6	W7B608B07
5V7	W7B608B10
5V8	W7B608B06
5V9	W7B608B10
5V10	W7B608B08
5V11	W7B608B10
5V12	W7B608B07
5V13	W7B608B09
5V14	W7B608B10

4605-47 Street
Vermillion, AB, T9X 1L6
780-608-9589

QUALITY CONTROL MANUAL

Exhibit 18, Rev A

DIMENSIONAL CHECK REPORT – ROUNDNESS

Customer: A.E.M.

Location: RANKIN INLET TK-1

Equipment Tag No.:

Equipment Type:

Equipment Description:

Code Requiring Test: API 650 Reason for Test: New Construction

(The tank shell will be checked for roundness at 12" above the tank floor. Roundness will be checked at 45 degree intervals or less, max. 20' spacing)

Test Date(s): JUNE 5/18

Tested by: MATT MACKENZIE

Seam Test Results:

ALL MEASUREMENTS ARE ACCEPTABLE.

Sub-Arc Representative Signature: _____ Date: June 5/18

Client Representative Signature: _____ Date: June 25/18

Client Signature: _____ Date: _____

4605-47 Street
Vermillion, AB, T9X 1L6
780-608-9589

Exhibit 15c, Rev 1

QUALITY CONTROL MANUAL

VISUAL TEST REPORT

Customer: Agnico Eagle

Location: Rankin Inlet

Code Requiring Test: API 650 (section 8.5.2) Reason for Test: New Construction

A weld shall be acceptable by visual examination if the inspection shows the following.

a) There are no crater cracks, other surface cracks or arc strikes in or adjacent to the welded joints.
b) Maximum permissible undercut is 0.4 mm (1/64 in.) in depth for vertical butt joints, vertically oriented permanent attachments, attachment welds for nozzles, manholes, flush-type openings, and the inside shell-to-bottom welds. For horizontal butt joints, horizontally oriented permanent attachments, and annular-ring butt joints, the maximum permissible undercut is 0.8 mm (1/32 in.) in depth.
c) The frequency of surface porosity in the weld does not exceed one cluster (one or more pores) in any 100 mm (4 in.) of length, and the diameter of each cluster does not exceed 2.5 mm (3/32 in.).
d) The reinforcement of the welds on all thicknesses:

Plate Thickness mm (in.)	Maximum Reinforcement Thickness mm (in.)	
	Vertical Joints	Horizontal Joints
≤ 13 (1/2)	2.5 (3/32)	3 (1/8)
> 13 (1/2) to 25 (1)	3 (1/8)	5 (3/16)
> 25 (1)	5 (3/16)	6 (1/4)

Surface Condition (As Welded)

Test Solution: N/A Test Date(s): JUNE 12/18

Tested by: MATT MACKENZIE. Ambient Conditions: 4°

Items Tested:

SR1 VERTS

Results:

NO DEFECTS WERE FOUND. ALL WELDING ACCEPTABLE.

Sub-Arc Representative Signature: _____ Date: June 12/18

Client Representative Signature: _____ Date: June 25/18

Client Signature: _____ Date: _____

4605-47 Street
Vermillion, AB, T9X 1L6
780-608-9589

Exhibit 16, Rev A

DIMENSIONAL CHECK REPORT – PEAKING

Customer: AGNICO EAGLE

Location: RANKIN INLET TK. 1

Equipment Tag No.:

Equipment Type:

Equipment Description:

Code Requiring Test: API 650 Reason for Test: New Construction

(Each vertical seam will be checked for peaking and max. peak dimension recorded for that seam.)

Test Date(s): JUNE 12/18

Tested by: MATT MACKENZIE.

Seam Test Results:

SRI VERTS. ARE ALL ACCEPTABLE

Sub-Arc Representative Signature: _____ Date: June 12/18

Client Representative Signature: _____ Date: June 25/18

Client: _____ Date: _____

Sub-Arc Systems Inc.

4605-47 Street
Vermillion, AB, T9X 1L6
780-608-9589

QUALITY CONTROL MANUAL

Exhibit 15c, Rev 1

VISUAL TEST REPORT

Customer: Agnico Eagle

Location: Rankin Inlet

Code Requiring Test: API 650 (section 8.5.2) Reason for Test: New Construction

A weld shall be acceptable by visual examination if the inspection shows the following.

a) There are no crater cracks, other surface cracks or arc strikes in or adjacent to the welded joints.
b) Maximum permissible undercut is 0.4 mm (1/64 in.) in depth for vertical butt joints, vertically oriented permanent attachments, attachment welds for nozzles, manholes, flush-type openings, and the inside shell-to-bottom welds. For horizontal butt joints, horizontally oriented permanent attachments, and annular-ring butt joints, the maximum permissible undercut is 0.8 mm (1/32 in.) in depth.
c) The frequency of surface porosity in the weld does not exceed one cluster (one or more pores) in any 100 mm (4 in.) of length, and the diameter of each cluster does not exceed 2.5 mm (3/32 in.).
d) The reinforcement of the welds on all thicknesses:

Plate Thickness mm (in.)	Maximum Reinforcement Thickness mm (in.)	
	Vertical Joints	Horizontal Joints
≤ 13 (1/2)	2.5 (3/32)	3 (1/8)
> 13 (1/2) to 25 (1)	3 (1/8)	5 (3/16)
> 25 (1)	5 (3/16)	6 (1/4)

Surface Condition (As Welded)

Test Solution: N/A Test Date(s): JUNE 12/18

Tested by: MATT MACKENZIE. Ambient Conditions: 4°

Items Tested:

SR2 VERTS. & HORIZONTAL 1

Results:

NO DEFECTS WERE FOUND. ALL WELDING ACCEPTABLE.

Sub-Arc Representative Signature: _____ Date: June 12/18

Client Representative Signature: Clem Bonnes Date: June 25/18

Client Signature: _____ Date: _____

Exhibit 16, Rev A

DIMENSIONAL CHECK REPORT – PEAKING

Customer: AGNICO EAGLE

Location: RANKIN INLET TK-1

Equipment Tag No.:

Equipment Type:

Equipment Description:

Code Requiring Test: API 650 Reason for Test: New Construction

(Each vertical seam will be checked for peaking and max. peak dimension recorded for that seam.)

Test Date(s): JUNE 12/18

Tested by: MATT MACKENZIE

Seam Test Results:

SR2 VERTS ARE ALL ACCEPTABLE

Sub-Arc Representative Signature: _____ Date: June 12/18

Client Representative Signature: _____ Date: June 25/18

Client: _____ Date: _____

4605-47 Street
Vermillion, AB, T9X 1L6
780-608-9589

QUALITY CONTROL MANUAL

Exhibit 17, Rev A

DIMENSIONAL CHECK REPORT – BANDING

Customer: AGNICO EAGLE

Location: RANKIN INLET JK 1

Equipment Tag No.:

Equipment Type:

Equipment Description:

Code Requiring Test: API 650 Reason for Test: New Construction

(Each circumferential seam will be checked for banding and max. banding dimension recorded for that seam. Circumferential seams will be checked at 45 degree intervals or less, max. 20' spacing)

Test Date(s): JUNE 12/18

Tested by: MATT MACKENZIE.

Seam Test Results:

HORIZONTAL 1 BANDING ACCEPTABLE.

Sub-Arc Representative Signature: Matt MacKenzie Date: June 12/18

Client Representative Signature: Clem Bonin Date: June 25/18

Client Signature: _____ Date: _____

4605-47 Street
Vermillion, AB, T9X 1L6
780-608-9589

QUALITY CONTROL MANUAL

Exhibit 15c, Rev 1

VISUAL TEST REPORT

Customer: Agnico Eagle

Location: Rankin Inlet

Code Requiring Test: API 650 (section 8.5.2) Reason for Test: New Construction

A weld shall be acceptable by visual examination if the inspection shows the following.

a) There are no crater cracks, other surface cracks or arc strikes in or adjacent to the welded joints.
b) Maximum permissible undercut is 0.4 mm (1/64 in.) in depth for vertical butt joints, vertically oriented permanent attachments, attachment welds for nozzles, manholes, flush-type openings, and the inside shell-to-bottom welds. For horizontal butt joints, horizontally oriented permanent attachments, and annular-ring butt joints, the maximum permissible undercut is 0.8 mm (1/32 in.) in depth.
c) The frequency of surface porosity in the weld does not exceed one cluster (one or more pores) in any 100 mm (4 in.) of length, and the diameter of each cluster does not exceed 2.5 mm (3/32 in.).
d) The reinforcement of the welds on all thicknesses:

Plate Thickness mm (in.)	Maximum Reinforcement Thickness mm (in.)	
	Vertical Joints	Horizontal Joints
≤ 13 (1/2)	2.5 (3/32)	3 (1/8)
> 13 (1/2) to 25 (1)	3 (1/8)	5 (3/16)
> 25 (1)	5 (3/16)	6 (1/4)

Surface Condition (As Welded)

Test Solution: N/A Test Date(s): JUNE 12/18

Tested by: MATT MACKENZIE Ambient Conditions: 4°

Items Tested:

SR3 VERTS + HORIZONTAL 2

Results:

NO DEFECTS WERE FOUND. ALL WELDING ACCEPTABLE.

Sub-Arc Representative Signature: _____ Date: June 12/18

Client Representative Signature: _____ Date: June 25/18

Client Signature: _____ Date: _____

Exhibit 16, Rev A

DIMENSIONAL CHECK REPORT – PEAKING

Customer: AGNICO EAGLE

Location: RANKIN INLET

Equipment Tag No.:

Equipment Type:

Equipment Description:

Code Requiring Test: API 650 Reason for Test: New Construction

(Each vertical seam will be checked for peaking and max. peak dimension recorded for that seam.)

Test Date(s): JUNE 12/18

Tested by: MATT MACKENZIE

Seam Test Results:

SR3 VERTS ARE ALL ACCEPTABLE.

Sub-Arc Representative Signature: _____ Date: June 12/18

Client Representative Signature: _____ Date: June 25/18

Client: _____ Date: _____

4605-47 Street
Vermillion, AB, T9X 1L6
780-608-9589

QUALITY CONTROL MANUAL

Exhibit 17, Rev A

DIMENSIONAL CHECK REPORT – BANDING

Customer: AGNICO EAGLE

Location: RANKIN INLET TK 1

Equipment Tag No.:

Equipment Type:

Equipment Description:

Code Requiring Test: API 650 Reason for Test: New Construction

(Each circumferential seam will be checked for banding and max. banding dimension recorded for that seam. Circumferential seams will be checked at 45 degree intervals or less, max. 20' spacing)

Test Date(s): JUNE 12/18

Tested by: MATT MACKENZIE

Seam Test Results:

HORIZONTAL 2 BANDING ACCEPTABLE

Sub-Arc Representative Signature: _____ Date: June 12/18

Client Representative Signature: Clem Bonnee Date: June 25/18

Client Signature: _____ Date: _____

4605-47 Street
Vermillion, AB, T9X 1L6
780-608-9589

QUALITY CONTROL MANUAL

Exhibit 15c, Rev 1

VISUAL TEST REPORT

Customer: Agnico Eagle

Location: Rankin Inlet

Code Requiring Test: API 650 (section 8.5.2) Reason for Test: New Construction

A weld shall be acceptable by visual examination if the inspection shows the following.

a) There are no crater cracks, other surface cracks or arc strikes in or adjacent to the welded joints.
b) Maximum permissible undercut is 0.4 mm (1/64 in.) in depth for vertical butt joints, vertically oriented permanent attachments, attachment welds for nozzles, manholes, flush-type openings, and the inside shell-to-bottom welds. For horizontal butt joints, horizontally oriented permanent attachments, and annular-ring butt joints, the maximum permissible undercut is 0.8 mm (1/32 in.) in depth.
c) The frequency of surface porosity in the weld does not exceed one cluster (one or more pores) in any 100 mm (4 in.) of length, and the diameter of each cluster does not exceed 2.5 mm (3/32 in.).
d) The reinforcement of the welds on all thicknesses:

Plate Thickness mm (in.)	Maximum Reinforcement Thickness mm (in.)	
	Vertical Joints	Horizontal Joints
≤ 13 (1/2)	2.5 (3/32)	3 (1/8)
> 13 (1/2) to 25 (1)	3 (1/8)	5 (3/16)
> 25 (1)	5 (3/16)	6 (1/4)

Surface Condition (As Welded)

Test Solution: N/A Test Date(s): JUNE 12/18

Tested by: MATT MACKENZIE Ambient Conditions: 4°

Items Tested:

SR4 VERTS + HORIZONTAL 3

Results:

NO DEFECTS WERE FOUND. ALL WELDING ACCEPTABLE.

Sub-Arc Representative Signature: _____ Date: June 12/18

Client Representative Signature: _____ Date: June 25/18

Client Signature: _____ Date: _____

Exhibit 16, Rev A

DIMENSIONAL CHECK REPORT – PEAKING

Customer: AGNICO EAGLE

Location: RANKIN INLET

Equipment Tag No.:

Equipment Type:

Equipment Description:

Code Requiring Test: API 650 Reason for Test: New Construction

(Each vertical seam will be checked for peaking and max. peak dimension recorded for that seam.)

Test Date(s): JUNE 12/18

Tested by: MATT MACKENZIE

Seam Test Results:

SR4 VERTS ARE ALL ACCEPTABLE.

Sub-Arc Representative Signature: _____ Date: June 12/18

Client Representative Signature: _____ Date: June 25/18

Client: _____ Date: _____

4605-47 Street
Vermillion, AB, T9X 1L6
780-608-9589

QUALITY CONTROL MANUAL

Exhibit 17, Rev A

DIMENSIONAL CHECK REPORT – BANDING

Customer: AGNICO EAGLE

Location: RANKIN INLET TK - 1

Equipment Tag No.:

Equipment Type:

Equipment Description:

Code Requiring Test: API 650 Reason for Test: New Construction

(Each circumferential seam will be checked for banding and max. banding dimension recorded for that seam. Circumferential seams will be checked at 45 degree intervals or less, max. 20' spacing)

Test Date(s): JUNE 12/18

Tested by: MATT MACKENZIE

Seam Test Results:

HORIZONTAL 3 BANDING ACCEPTABLE.

Sub-Arc Representative Signature: _____ Date: June 12/18

Client Representative Signature: _____ Date: June 25/18

Client Signature: _____ Date: _____

Sub-Arc Systems Inc.

4605-47 Street
Vermillion, AB, T9X 1L6
780-608-9589

QUALITY CONTROL MANUAL

Exhibit 15c, Rev 1

VISUAL TEST REPORT

Customer: Agnico Eagle

Location: Rankin Inlet

Code Requiring Test: API 650 (section 8.5.2) Reason for Test: New Construction

A weld shall be acceptable by visual examination if the inspection shows the following.

a) There are no crater cracks, other surface cracks or arc strikes in or adjacent to the welded joints.
b) Maximum permissible undercut is 0.4 mm (1/64 in.) in depth for vertical butt joints, vertically oriented permanent attachments, attachment welds for nozzles, manholes, flush-type openings, and the inside shell-to-bottom welds. For horizontal butt joints, horizontally oriented permanent attachments, and annular-ring butt joints, the maximum permissible undercut is 0.8 mm (1/32 in.) in depth.
c) The frequency of surface porosity in the weld does not exceed one cluster (one or more pores) in any 100 mm (4 in.) of length, and the diameter of each cluster does not exceed 2.5 mm (3/32 in.).
d) The reinforcement of the welds on all thicknesses:

Plate Thickness mm (in.)	Maximum Reinforcement Thickness mm (in.)	
	Vertical Joints	Horizontal Joints
≤ 13 (1/2)	2.5 (3/32)	3 (1/8)
> 13 (1/2) to 25 (1)	3 (1/8)	5 (3/16)
> 25 (1)	5 (3/16)	6 (1/4)

Surface Condition (As Welded)

Test Solution: N/A Test Date(s): JUNE 12/18

Tested by: MATT MACKENZIE Ambient Conditions: 4°

Items Tested:

SR5 VERTS. + HORIZONTAL 4

Results:

NO DEFECTS WERE FOUND. ALL WELDING ACCEPTABLE.

Sub-Arc Representative Signature: _____ Date: June 12/18

Client Representative Signature: Clem Boire Date: June 25/18

Client Signature: _____ Date: _____

Exhibit 16, Rev A

DIMENSIONAL CHECK REPORT – PEAKING

Customer: AGNICO EAGLE

Location: RANKIN INLET TK 1

Equipment Tag No.:

Equipment Type:

Equipment Description:

Code Requiring Test: API 650 Reason for Test: New Construction

(Each vertical seam will be checked for peaking and max. peak dimension recorded for that seam.)

Test Date(s): JUNE 12/18

Tested by: MATT MACKENZIE

Seam Test Results:

SR5 VERTS ARE ALL ACCEPTABLE.

Sub-Arc Representative Signature: _____ Date: June 12/18

Client Representative Signature: _____ Date: June 25/18

Client: _____ Date: _____

4605-47 Street
Vermillion, AB, T9X 1L6
780-608-9589

QUALITY CONTROL MANUAL

Exhibit 17, Rev A

DIMENSIONAL CHECK REPORT – BANDING

Customer: AGNICO EAGLE

Location: RANKIN INLET TK-1

Equipment Tag No.:

Equipment Type:

Equipment Description:

Code Requiring Test: API 650 Reason for Test: New Construction

(Each circumferential seam will be checked for banding and max. banding dimension recorded for that seam. Circumferential seams will be checked at 45 degree intervals or less, max. 20' spacing)

Test Date(s): JUNE 12/18

Tested by: MATT MACKENZIE

Seam Test Results:

HORIZONTAL 4/ BANDING ACCEPTABLE

Sub-Arc Representative Signature: _____ Date: June 12/18

Client Representative Signature: Glen Bonea Date: June 25/18

Client Signature: _____ Date: _____

Sub-Arc Systems Inc.

4605-47 Street
Vermillion, AB, T9X 1L6
780-608-9589

QUALITY CONTROL MANUAL

Exhibit 19, Rev A

DIMENSIONAL CHECK REPORT – PLUMBNESS

Customer: AGNICO EAGLE

Location: RANKIN INLET TK 1

Equipment Tag No.:

Equipment Type:

Equipment Description:

Code Requiring Test: API 650 Reason for Test: New Construction

(The tank shell will be checked for plumb at 12" below the tank roof. Plumb measurements will be checked at 45 degree intervals or less, max. 20' spacing)

Test Date(s): JUNE 21, 18

Tested by: MATT MACKENZIE.

Seam Test Results:

0, 7/8", 5/8", 1/4", 1/4", 1/2", 3/8", 3/8", 1/8", 1/4", 1/4", 0, 7/8", 1/4"

PLUMBNESS ACCEPTABLE ON SHELL

Sub-Arc Representative Signature: _____ Date: June 21/18

Client Representative Signature: _____ Date: June 25/18

Client Signature: _____ Date: _____

4605-47 Street
Vermillion, AB. T9X 1L6
780-608-9589

QUALITY CONTROL MANUAL

Exhibit 15b, Rev 1

DIESEL TEST REPORT (SHELL)

Customer: Agnico Eagle

Location: Rankin Inlet

Equipment Tag No.: N/A

Equipment Type: N/A

Equipment Description: N/A

Code Requiring Test: API 650 (section 7.3.5) Reason for Test: New Construction

(The shell shall be tested by painting all of the joints on the inside with a highly penetrating oil and carefully examining the outside of the joints for leakage.)

Surface Condition (As Welded)

Test Solution: Diesel Test Date(s): June 21/18

Tested by: MATT MARKERIE Ambient Conditions: 7°

Items Tested:

SR1, SR2, SR3, SR4, SR5

Results:

No leaks were found.

Sub-Arc Representative Signature: [signature] Date: June 21/18

Client Representative Signature: _____ Date: _____

Client Signature: _____ Date: _____

Tank #1 Rankin Inlet (AEM)

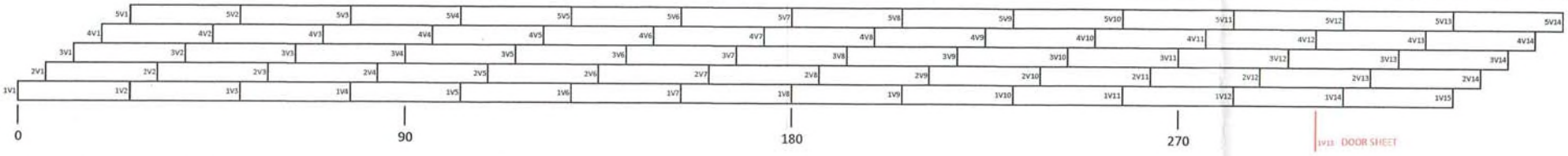

NDT TECHNICIAN WILL INITIAL EACH BOX WHEN WELD IS ACCEPTABLE

B ----> BOTTOM OF THE VERT (0-6") | M ----> MIDDLE OF THE VERT (53"-59") | T ----> TOP OF THE VERT (104 3/16" - 110 3/16")

VERTICAL SEAMS MAPPING UT

	B	M	T	FULL
1V1	UT FULL BECAUSE NOZZLE INTO VERT			
1V2	Ext	Ext	Ext	
1V3	Ext	Ext	Ext	
1V4	Ext	Ext	Ext	
1V5	Ext	Ext	Ext	
1V6	Ext	Ext	Ext	
1V7	Ext	Ext	Ext	
1V8	UT FULL BECAUSE NOZZLE INTO VERT			Ext
1V9	Ext	Ext	Ext	
1V10	Ext	Ext	Ext	
1V11	Ext	Ext	Ext	
1V12	Ext	Ext	Ext	
1V13 DOOR	Ext	Ext	Ext	
1V14	Ext	Ext	Ext	
1V15	Ext	Ext	Ext	

	B	M	T
2V1	Ext	Ext	Ext
2V2	Ext	Ext	Ext
2V3	Ext	Ext	Ext
2V4	Ext	Ext	Ext
2V5	Ext	Ext	Ext
2V6	Ext	Ext	Ext
2V7	Ext	Ext	Ext
2V8	Ext	Ext	Ext
2V9	Ext	Ext	Ext
2V10	Ext	Ext	Ext
2V11	Ext	Ext	Ext
2V12	Ext	Ext	Ext
2V13	Ext	Ext	Ext
2V14	Ext RI	Ext	Ext

	B	M	T
3V1	Ext	Ext	Ext
3V2	Ext	Ext	Ext
3V3	Ext	Ext	Ext
3V4	Ext	Ext	Ext
3V5	Ext	Ext	Ext
3V6	Ext RI	Ext	Ext
3V7	Ext	Ext	Ext
3V8	Ext	Ext	Ext RI
3V9	Ext	Ext	Ext
3V10	Ext	Ext	Ext
3V11	Ext	Ext	Ext
3V12	Ext	Ext	Ext
3V13	Ext RI	Ext	Ext
3V14	Ext	Ext	Ext

	B	M	T
4V1	Ext RI	Ext	Ext
4V2	Ext RI	Ext	Ext
4V3	Ext	Ext	Ext RI
4V4	Ext	Ext	Ext
4V5	Ext RI	Ext RI	Ext
4V6	Ext	Ext	Ext RI
4V7	Ext	Ext	Ext
4V8	Ext	Ext RI	Ext
4V9	Ext	Ext RI	Ext
4V10	Ext	Ext	Ext
4V11	Ext	Ext	Ext
4V12	Ext	Ext	Ext
4V13	Ext	Ext	Ext
4V14	Ext	Ext	Ext

	B	T
5V1	Ext	Ext
5V2	Ext	Ext
5V3	Ext	Ext
5V4	Ext	Ext
5V5	Ext	Ext
5V6	Ext	Ext
5V7	Ext RI	Ext
5V8	Ext	Ext
5V9	Ext	Ext
5V10	Ext	Ext
5V11	Ext	Ext
5V12	Ext	Ext
5V13	Ext	Ext
5V14	Ext	Ext

HORIZONTAL SEAMS MAPPING UT

H1V2	48"-54"	Ext
H1V8	60"-66"	Ext
H1V13	42"-48"	Ext

H2V3	48"-54"	Ext
H2V9	72"-78"	Ext

H3V1	60"-66"	Ext
H3V7	42"-48"	Ext

H4V5	30"-36"	Ext
H4V11	72"-78"	Ext

Sub-Arc Representative Signature: [signature] Date: June 25/18.

Client Representative Signature: [signature] Date: June 25/18

NDT Representative Signature: [signature] Date: 2018-06-23

Tank #1 Rankin Inlet (AEM)

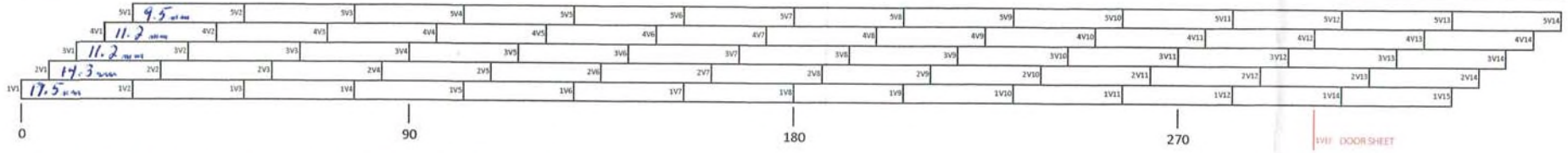

NDT TECHNICIAN WILL INITIAL EACH BOX WHEN WELD IS ACCEPTABLE

B ----> BOTTOM OF THE VERT (0-6")	M ----> MIDDLE OF THE VERT (53"-59")	T ----> TOP OF THE VERT (104 3/16" - 110 3/16")

VERTICAL SEAMS MAPPING UT

	B	M	T	FULL
1V1	UT FULL BECAUSE NOZZLE INTO VERT			Ext
1V2	Ext	Ext	Ext	
1V3	Ext	Ext	Ext	
1V4	Ext	Ext	Ext	
1V5	Ext	Ext	Ext	
1V6	Ext	Ext	Ext	
1V7	Ext	Ext	Ext	
1V8	UT FULL BECAUSE NOZZLE INTO VERT			Ext
1V9	Ext	Ext	Ext	
1V10	Ext	Ext	Ext	
1V11	Ext	Ext	Ext	
1V12	Ext	Ext	Ext	
1V13 DOOR	Ext	Ext	Ext	
1V14	Ext	Ext	Ext	
1V15	Ext	Ext	Ext	

	B	M	T
2V1	Ext	Ext	Ext
2V2	Ext	Ext	Ext
2V3	Ext	Ext	Ext
2V4	Ext	Ext	Ext
2V5	Ext	Ext	Ext
2V6	Ext	Ext	Ext
2V7	Ext	Ext	Ext
2V8	Ext	Ext	Ext
2V9	Ext	Ext	Ext
2V10	Ext	Ext	Ext
2V11	Ext	Ext	Ext
2V12	Ext	Ext	Ext
2V13	Ext	Ext	Ext
2V14	Ext	Ext	Ext

	B	M	T
3V1	Ext	Ext	Ext
3V2	Ext	Ext	Ext
3V3	Ext	Ext	Ext
3V4	Ext	Ext	Ext
3V5	Ext	Ext	Ext
3V6	Ext	Ext	Ext
3V7	Ext	Ext	Ext
3V8	Ext	Ext	Ext
3V9	Ext	Ext	Ext
3V10	Ext	Ext	Ext
3V11	Ext	Ext	Ext
3V12	Ext	Ext	Ext
3V13	Ext	Ext	Ext
3V14	Ext	Ext	Ext

	B	M	T
4V1	Ext	Ext	Ext
4V2	Ext	Ext	Ext
4V3	Ext	Ext	Ext
4V4	Ext	Ext	Ext
4V5	Ext	Ext	Ext
4V6	Ext	Ext	Ext
4V7	Ext	Ext	Ext
4V8	Ext	Ext	Ext
4V9	Ext	Ext	Ext
4V10	Ext	Ext	Ext
4V11	Ext	Ext	Ext
4V12	Ext	Ext	Ext
4V13	Ext	Ext	Ext
4V14	Ext	Ext	Ext

	B	T
5V1	Ext	Ext
5V2	Ext	Ext
5V3	Ext	Ext
5V4	Ext	Ext
5V5	Ext	Ext
5V6	Ext	Ext
5V7	Ext	Ext
5V8	Ext	Ext
5V9	Ext	Ext
5V10	Ext	Ext
5V11	Ext	Ext
5V12	Ext	Ext
5V13	Ext	Ext
5V14	Ext	Ext

HORIZONTAL SEAMS MAPPING UT

H1V2	48"-54"	Ext
H1V8	60"-66"	Ext
H1V13	42"-48"	Ext

H2V3	48"-54"	Ext
H2V9	72"-78"	Ext
H2V13	48"-54"	Ext

H3V1	60"-66"	Ext
H3V7	42"-48"	Ext
H3V13	30"-36"	Ext

H4V5	30"-36"	Ext
H4V11	72"-78"	Ext
H4V13	36"-42"	Ext

MAG PARTICLE

NOZZLE M1601 (x1)	Ext
NOZZLE M1602 (x3)	Ext
NOZZLE M1614 (x6)	Ext

TEMP CONNECTION COUPLING	Ext
ROOF NOZZLES	Ext

SHELL MANHOLE 0°	Ext
SHELL MANHOLE 90°	Ext
SHELL MANHOLE 180°	Ext
SHELL MANHOLE 270°	Ext

SHELL MANHOLE NECK (SEAM) 0°	Ext
SHELL MANHOLE NECK (SEAM) 90°	Ext
SHELL MANHOLE NECK (SEAM) 180°	Ext
SHELL MANHOLE NECK (SEAM) 270°	Ext

Sub-Arc Representative Signature: [signature] Date: June 24/18

Client Representative Signature: [signature] Date: June 24/18

NDT Representative Signature: [signature] Date: 2018-06-24 (SGS)

Client :	**Inukshuk Construction Ltd,**	**Date d'intervention :** **Intervention date :**	2018-06-19 to 24
Adresse/Address :	, PO Box 654 Rankin Inlet, Nunavut X0C 0G0	**Date du rapport :** **Report date :**	2018-06-27
Contact :	Marc Losier		
Entrepreneur : **Contractor :**	tClient	**N° dossier :** **File no :**	**INS-118016-02**
Endroit du travail : **Job location :**	Site Meliadine Gold Mine at Rankin Inlet	**Commande :** **Order :**	295-1024

INSP. VISUELLE / VISUAL INSP. ☐ **MAGNÉTOSCOPIE / MAGNETIC PARTICLES** ☐ **RESSUAGE / LIQUID PENETRANT** ☐ **ULTRASONS / ULTRASONIC** ☒

DESCRIPTION :

Project: Meliadine Gold Mine (Agnico Eagle).

Ultrasonic inspection in accordance to API 650 Tank No 1 at Site Rankin Inlet

Note: The client is opting to use an ultrasonic testing, instead of radiographic testing

INSP. VISUELLE / VISUAL INSP.

NORME : **SPECIFICATION :** **N° équip. :** **Equip. no :**

MAGNÉTOSCOPIE / MAGNETIC PARTICLES

NORME : **SPECIFICATION :** **N° équip. :** **Equip. no :**

Ampérage : **Amperage :**	Culasse/Yoke	**Continue** **Continuous**	☐	**Résiduelle** **Residual**	☐	**Humide** **Wet**	☐	**Sèche** **Dry**	☐
Longitudinale **Longitudinal**	☐	**Circulaire** **Circular**	☐	**C.A.** **A.C.**	☐	**C.C.** **D.C.**	☐	**Démagnétisée** **Demagnetized**	☐

RESSUAGE / LIQUID PENETRANT

NORME : **SPECIFICATION :** **N° équip. :** **Equip. no :**

Pénétrant/Penetrant : **Émulsifiant/Emulsifier :** **Révélateur/Developer :**

Temps/Time : **Temps/Time :** **Temps/Time :**

ULTRASONS / ULTRASONIC

NORME : **SPECIFICATION :** API 650

ÉTALONNAGE/CALIBRATION :

Bloc/Block : ASME **Trou/Hole :** 3/32 **C.A.D. /D.A.C. :** ☒

APPAREIL/EQUIPMENT :

Instrument : USM GO+ **Couplant :** Ecogel **Échelle/Sweep length :** 150mm

N° équip./Equip. no : UT-92 **Palpeur/Transducer :** 0 Ø, 1/2"Ø, 5Mhz and 70 Ø, 0.75 X0.625", 2,25Mhz

RÉSULTATS/RESULTS :

Ultrasonic inspection performed on TANK No. 1 :

- 43M Diameter, 5 rings
- The first ring plate thickness is 17.5mm
- Other plates thickness were 14.3mm, 11.2mm, 11.2mm and 9.5mm

Remark: Visual inspection was performed by client

Techniciens : **Technicians :**	Etienne Munger	**Assistants:**		**Approuvé par :** **Approved by :**	Patrick Brodeur Technical Supervisor
	CGSB 48.9712 MT Level 2 UT/PT niv.1		Qualification		CSA W178.2 niv.3

Ce rapport ne doit pas être reproduit, sinon en entier, sans l'autorisation écrite de SGS CANADA inc.
Le présent rapport est émis par la Société conformément à ses Conditions Générales de Service accessibles sur http://www.sgs.ca/fr-FR/Terms-and-Conditions.aspx
This report is confidential and shall not be reproduced without the written approval of SGS CANADA Inc
This document is issued by the Company under its General Conditions of Service accessible at http://www.sgs.ca/en/Terms-and-Conditions.aspx

Item inspected	UT Inspection	Results
Intersection(T)150mm each weld	All Intersections Accepted	Accepted After 12 repairs intersections Note 1
Vertical weld spot first ring	– two spots (Bottom and middle) on each vertical weld -The viatical 1V1 and 1V8 100% of vertical weld because nozzles	Accepted
Vertical weld – Ring 2 to ring 5	One spot (middle) on the each vertical welds	Accepted After 3 repair spots Note 1
Horizontal weld	3 spots on first horizontal weld (including spot of door plate longer 250mm) and 3 spots on 3 other horizontal welds (total 12 spots)	Accepted
Door plate	- Two intersections - Two spots (bottom and middle) on each vertical weld - One spot 250mm on horizontal weld	

Note1: The repair spots requirements extension, it was done according to article 8.1.6 the standard - API 650



DWG 295-M9 (TANK No 1)

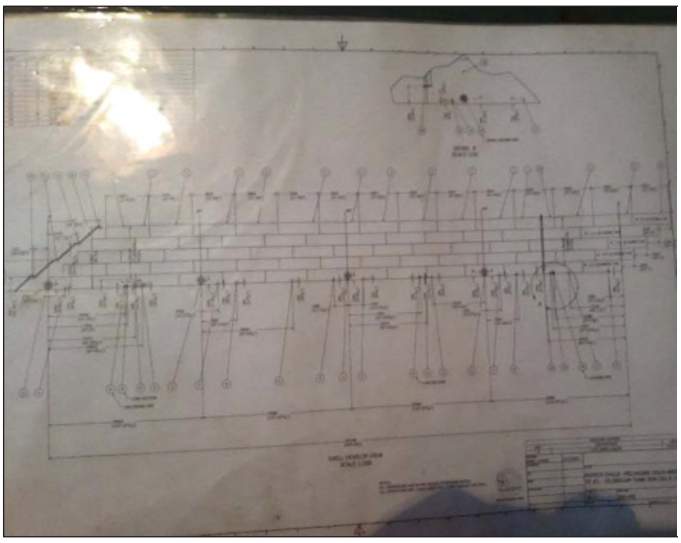

DWG for manholes on shell

Techniciens : **Technicians :**	Etienne Munger CGSB 48.9712 MT Level 2 UT/PT niv.1	**Assistants:** Qualification	**Approuvé par :** **Approved by :**	Patrick Brodeur Technical Supervisor CSA W178.2 niv.3

Ce rapport ne doit pas être reproduit, sinon en entier, sans l'autorisation écrite de SGS CANADA inc.
Le présent rapport est émis par la Société conformément à ses Conditions Générales de Service accessibles sur http://www.sgs.ca/fr-FR/Terms-and-Conditions.aspx
This report is confidential and shall not be reproduced without the written approval of SGS CANADA Inc
This document is issued by the Company under its General Conditions of Service accessible at http://www.sgs.ca/en/Terms-and-Conditions.aspx

Client : **Adresse/Address :**	**Inukshuk Construction Ltd,** , PO Box 654 Rankin Inlet, Nunavut X0C 0G0	**Date d'intervention :** **Intervention date :**	2018-06-19 to 24
Contact :	Marc Losier	**Date du rapport :** **Report date :**	2018-06-27
Entrepreneur : **Contractor :**	tClient	**N° dossier :** **File no :**	**INS-118016-02**
Endroit du travail : **Job location :**	Site Meliadine Gold Mine at Rankin Inlet	**Commande :** **Order :**	295-1024

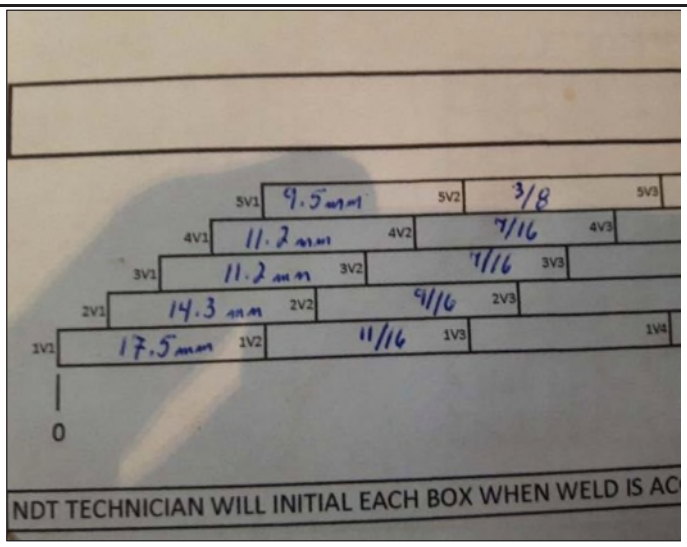

Thickness plate on ring tank No 1



Meliadine gold mine at rankin inlet site



Door plate UT on 7 spots

Techniciens : **Technicians :**	Etienne Munger CGSB 48.9712 MT Level 2 UT/PT niv.1	**Assistants:** Qualification	**Approuvé par :** **Approved by :**	Patrick Brodeur Technical Supervisor CSA W178.2 niv.3

Ce rapport ne doit pas être reproduit, sinon en entier, sans l'autorisation écrite de SGS CANADA inc.
Le présent rapport est émis par la Société conformément à ses Conditions Générales de Service accessibles sur http://www.sgs.ca/fr-FR/Terms-and-Conditions.aspx
This report is confidential and shall not be reproduced without the written approval of SGS CANADA Inc
This document is issued by the Company under its General Conditions of Service accessible at http://www.sgs.ca/en/Terms-and-Conditions.aspx

Client :	**Inukshuk Construction Ltd,**	**Date d'intervention :** **Intervention date :**	2018-06-19 to 24
Adresse/Address :	, PO Box 654 Rankin Inlet, Nunavut X0C 0G0	**Date du rapport :** **Report date :**	2018-06-27
Contact :	Marc Losier		
Entrepreneur : **Contractor :**	tClient	**N° dossier :** **File no :**	**INS-118016-02**
Endroit du travail : **Job location :**	Site Meliadine Gold Mine at Rankin Inlet	**Commande :** **Order :**	295-1024



List the spots repairs with regulated length and accepted after repair R1

Techniciens : **Technicians :**	Etienne Munger	**Assistants:**	**Approuvé par :** **Approved by :** Patrick Brodeur Technical Supervisor
	CGSB 48.9712 MT Level 2 UT/PT niv.1	Qualification	CSA W178.2 niv.3

Ce rapport ne doit pas être reproduit, sinon en entier, sans l'autorisation écrite de SGS CANADA inc.
Le présent rapport est émis par la Société conformément à ses Conditions Générales de Service accessibles sur http://www.sgs.ca/fr-FR/Terms-and-Conditions.aspx
This report is confidential and shall not be reproduced without the written approval of SGS CANADA Inc
This document is issued by the Company under its General Conditions of Service accessible at http://www.sgs.ca/en/Terms-and-Conditions.aspx

Client :	**Inukshuk Construction Ltd,**	**Date d'intervention :**	2018-06-19 to 24
Adresse/Address :	, PO Box 654 Rankin Inlet, Nunavut X0C 0G0	**Intervention date :**	
Contact :	Marc Losier	**Date du rapport :**	2018-06-27
		Report date :	
Entrepreneur :	tClient	**N° dossier :**	**INS-118016-02**
Contractor :		**File no :**	
Endroit du travail :	Site Meliadine Gold Mine at	**Commande :**	295-1024
Job location :	Rankin Inlet	**Order :**	

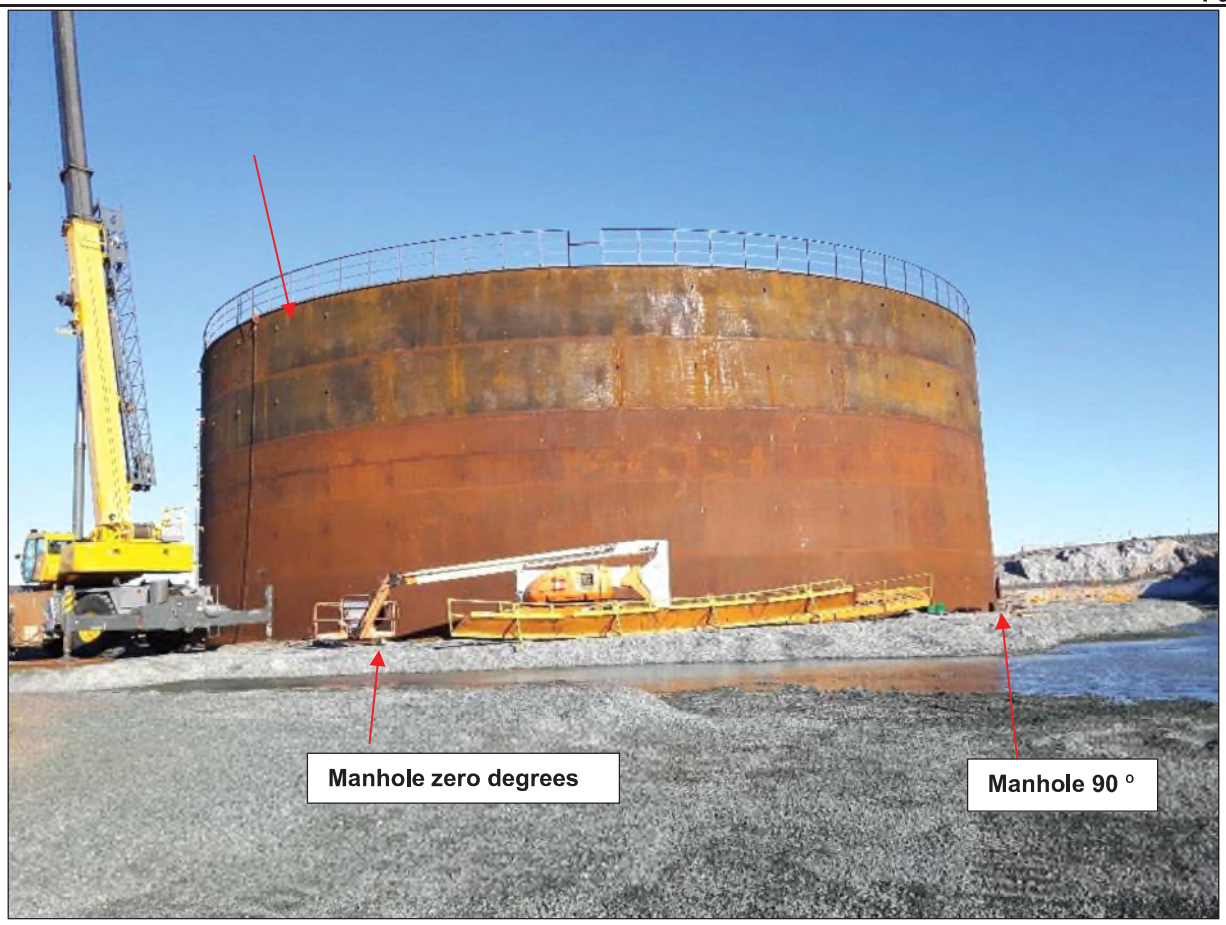

Tank No 1 – Zero degrees

Techniciens :	Etienne Munger	**Assistants:**	**Approuvé par :** Patrick Brodeur
Technicians :			**Approved by :** Technical Supervisor
	CGSB 48.9712 MT Level 2 UT/PT niv.1	Qualification	CSA W178.2 niv.3

Ce rapport ne doit pas être reproduit, sinon en entier, sans l'autorisation écrite de SGS CANADA inc.
Le présent rapport est émis par la Société conformément à ses Conditions Générales de Service accessibles sur http://www.sgs.ca/fr-FR/Terms-and-Conditions.aspx
This report is confidential and shall not be reproduced without the written approval of SGS CANADA Inc
This document is issued by the Company under its General Conditions of Service accessible at http://www.sgs.ca/en/Terms-and-Conditions.aspx

Client : **Adresse/Address :**	**Inukshuk Construction Ltd,** , PO Box 654 Rankin Inlet, Nunavut X0C 0G0	**Date d'intervention :** **Intervention date :**	2018-06-19 to 24
Contact :	Marc Losier	**Date du rapport :** **Report date :**	2018-06-27
Entrepreneur : **Contractor :**	tClient	**N° dossier :** **File no :**	**INS-118016-02**
Endroit du travail : **Job location :**	Site Meliadine Gold Mine at Rankin Inlet	**Commande :** **Order :**	295-1024

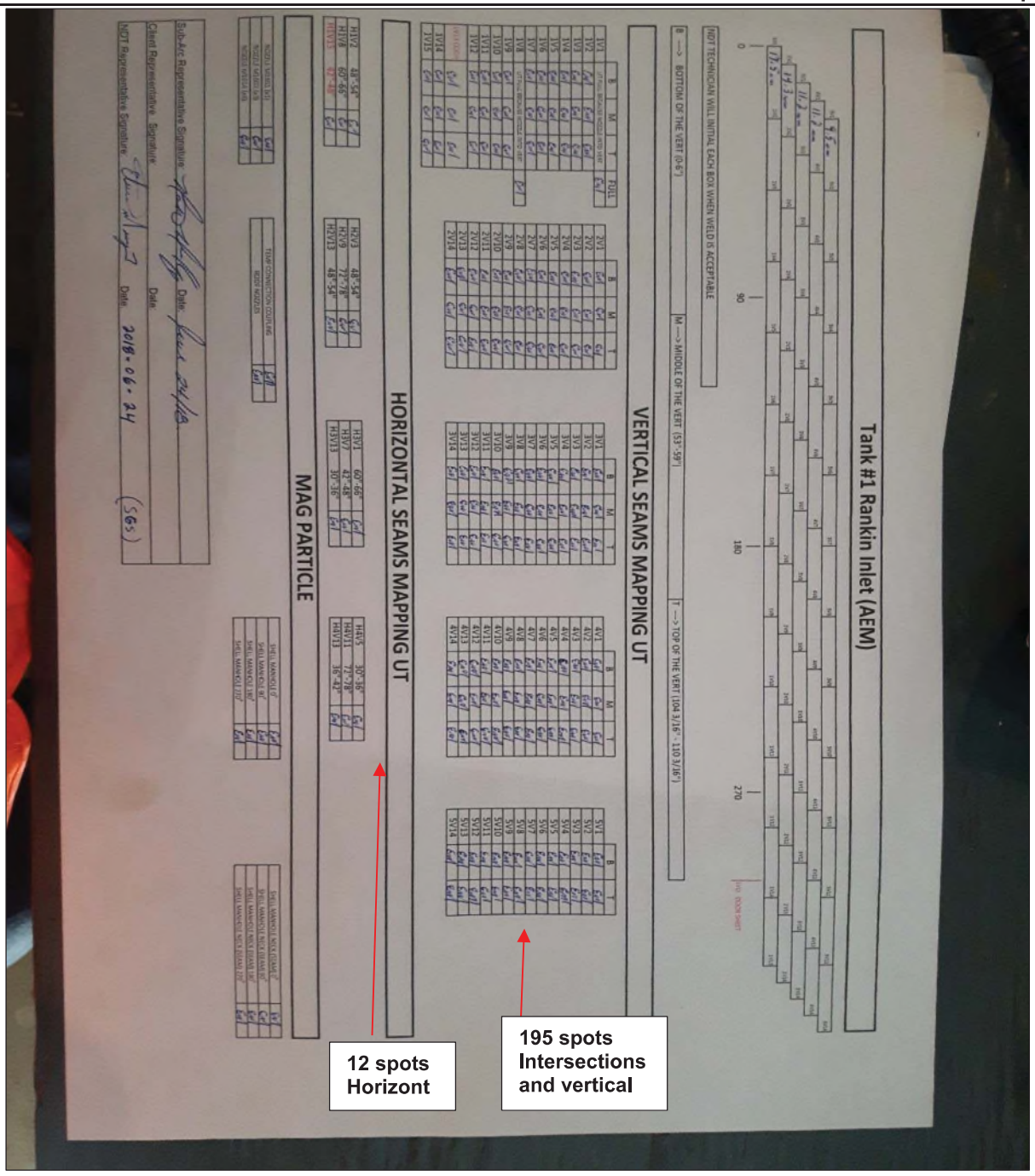

Mapping UT

Techniciens : **Technicians :**	Etienne Munger CGSB 48.9712 MT Level 2 UT/PT niv.1	**Assistants:** Qualification	**Approuvé par :** **Approved by :**	Patrick Brodeur Technical Supervisor CSA W178.2 niv.3

Ce rapport ne doit pas être reproduit, sinon en entier, sans l'autorisation écrite de SGS CANADA inc.
Le présent rapport est émis par la Société conformément à ses Conditions Générales de Service accessibles sur http://www.sgs.ca/fr-FR/Terms-and-Conditions.aspx
This report is confidential and shall not be reproduced without the written approval of SGS CANADA Inc
This document is issued by the Company under its General Conditions of Service accessible at http://www.sgs.ca/en/Terms-and-Conditions.aspx

Inukshuk Construction Limited
Industrial Contracting Project Management

PO Box 654
Rankin Inlet, NU X0C 0G0
T 867.645.4030 F 867.645.4064

Field Erected Fuel Storage Tank

Handover Package

Item 11 – Compression Ring

Contents

1. Weld Map
2. Visual Report

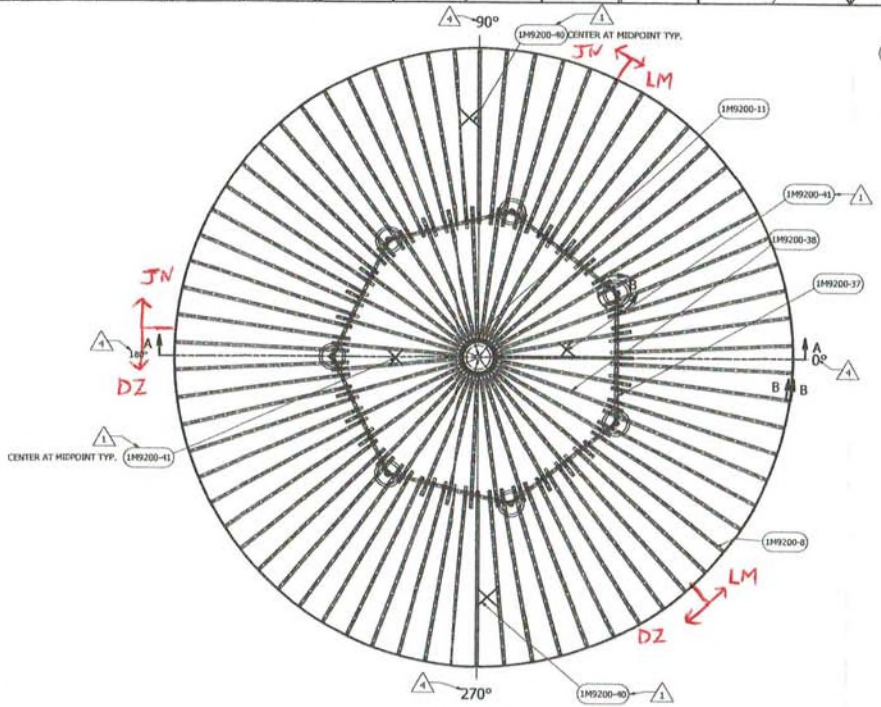

RAFTER LAYOUT
PLAN VIEW
ROOF REMOVED FOR CLARITY
SCALE 1/150

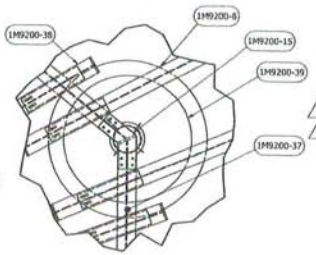

DETAIL B
SCALE 1/25

PARTS LIST			
ITEM	ITEM QTY	Description	MATERIAL
1M9200-8	70	OUTER RAFTER - SEE SHT. 2	G40.21M - 350W
1M9200-10	70	SHELL CLIP - SEE SHT. 2	G40.21M - 300W
1M9200-11	1	CENTER COLUMN - SEE SHT. 3	
1M9200-15	7	TOP INTERMEDIATE GIRDER CONNECTION PLATE - SEE SHT. 2	G40.21M - 300W
1M9200-37	7	INTERMEDIATE GIRDER BEAM ASSY - SEE SHT. 2	
1M9200-38	35	INNER RAFTER - SEE SHT. 2	G40.21M - 350W
1M9200-39	7	INTERMEDIATE COLUMN - SEE SHT. 3	
1M9200-40	4	PB50X6 (PB2"X1/4") - 2184 [7'-2"] LG	G40.21M - 300W
1M9200-41	4	PB50X6 (PB2"X1/4") - 1574 [5'-2"] LG	G40.21M - 300W

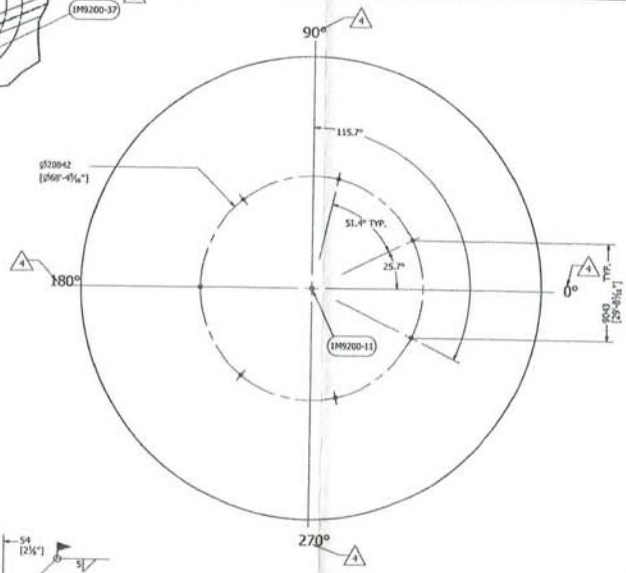

COLUMNS LAYOUT DETAILS
SCALE 1/200

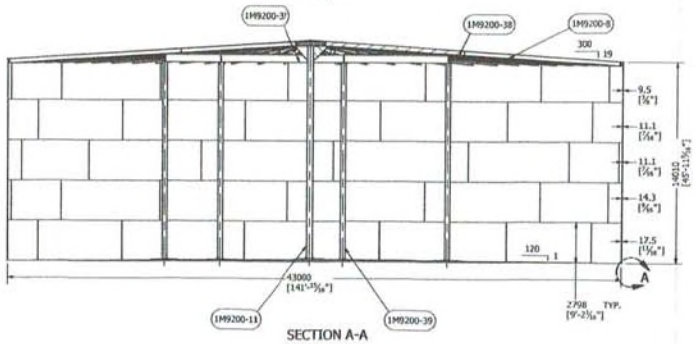

SECTION A-A
SCALE 1/150

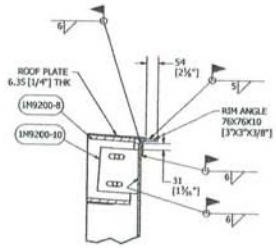

SECTION B-B
SHELL CLIP FITTING DETAIL
SCALE 1 / 10

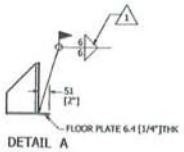

DETAIL A
SCALE 1 / 10

COMPRESSION RING - NEW PLATE

REVISION HISTORY			
ZONE	REV	DESCRIPTION	DATE
G7, D8, H8, E12, B5	1	RAFTER BRACE ADDED, WELDING DETAIL ADDED IN DETAIL A	3/31/2017
F7, H9, F11, D9, F1, G3, F5, D3	4	REFERENCE ANGLES CHANGED	4/24/2017

DRAWN MARC LOSIER 3/17/2017
CHECKED
QA
MFG
APPROVED

12-Jul-2017
Permit Number: P421

RAFTER AND COLUMN LAYOUT

TITLE
AGNICO EAGLE -MELIADINE GOLD MINE -
TK #1 - 20,000CUM TANK 43M DIA X 14M H

SIZE A1 | DWG NO 295-M9 | REV 6
SCALE | SHEET 1 OF 7

4605-47 Street
Vermillion, AB, T9X 1L6
780-608-9589

QUALITY CONTROL MANUAL

Exhibit 15c, Rev 1

VISUAL TEST REPORT

Customer: Agnico Eagle

Location: Rankin Inlet

Code Requiring Test: API 650 (section 8.5.2) Reason for Test: New Construction

A weld shall be acceptable by visual examination if the inspection shows the following.

a) There are no crater cracks, other surface cracks or arc strikes in or adjacent to the welded joints.
b) Maximum permissible undercut is 0.4 mm (1/64 in.) in depth for vertical butt joints, vertically oriented permanent attachments, attachment welds for nozzles, manholes, flush-type openings, and the inside shell-to-bottom welds. For horizontal butt joints, horizontally oriented permanent attachments, and annular-ring butt joints, the maximum permissible undercut is 0.8 mm (1/32 in.) in depth.
c) The frequency of surface porosity in the weld does not exceed one cluster (one or more pores) in any 100 mm (4 in.) of length, and the diameter of each cluster does not exceed 2.5 mm (3/32 in.).
d) The reinforcement of the welds on all thicknesses:

Plate Thickness mm (in.)	Maximum Reinforcement Thickness mm (in.)	
	Vertical Joints	Horizontal Joints
≤ 13 (1/2)	2.5 (3/32)	3 (1/8)
> 13 (1/2) to 25 (1)	3 (1/8)	5 (3/16)
> 25 (1)	5 (3/16)	6 (1/4)

Surface Condition (As Welded)

Test Solution: N/A Test Date(s): JUNE 10/18

Tested by: MATT MACKENZIE Ambient Conditions: 4°

Items Tested:

COMPRESSION RING - TOP + BOTTOM SIDE.

Results:

NO DEFECTS WERE FOUND. ALL WELDING ACCEPTABLE.

Sub-Arc Representative Signature: [signature] Date: June 10/18

Client Representative Signature: Clem Bonnie Date: June 24/18

Client Signature: _____ Date: _____

Inukshuk Construction Limited
Industrial Contracting Project Management

PO Box 654
Rankin Inlet, NU X0C 0G0
T 867.645.4030 F 867.645.4064

Field Erected Fuel Storage Tank

Handover Package

Item 12 - Roof

Contents

1. Visual Report

Sub-Arc Systems Inc.

4605-47 Street
Vermillion, AB, T9X 1L6
780-608-9589

QUALITY CONTROL MANUAL

Exhibit 15c, Rev 1

VISUAL TEST REPORT

Customer: Agnico Eagle

Location: Rankin Inlet

Code Requiring Test: API 650 (section 8.5.2) Reason for Test: New Construction

A weld shall be acceptable by visual examination if the inspection shows the following.

a) There are no crater cracks, other surface cracks or arc strikes in or adjacent to the welded joints.
b) Maximum permissible undercut is 0.4 mm (1/64 in.) in depth for vertical butt joints, vertically oriented permanent attachments, attachment welds for nozzles, manholes, flush-type openings, and the inside shell-to-bottom welds. For horizontal butt joints, horizontally oriented permanent attachments, and annular-ring butt joints, the maximum permissible undercut is 0.8 mm (1/32 in.) in depth.
c) The frequency of surface porosity in the weld does not exceed one cluster (one or more pores) in any 100 mm (4 in.) of length, and the diameter of each cluster does not exceed 2.5 mm (3/32 in.).
d) The reinforcement of the welds on all thicknesses:

Plate Thickness mm (in.)	Maximum Reinforcement Thickness mm (in.)	
	Vertical Joints	Horizontal Joints
≤ 13 (1/2)	2.5 (3/32)	3 (1/8)
> 13 (1/2) to 25 (1)	3 (1/8)	5 (3/16)
> 25 (1)	5 (3/16)	6 (1/4)

Surface Condition (As Welded)

Test Solution: N/A Test Date(s): JUNE 23/18

Tested by: MATT MACKENZIE Ambient Conditions: 10°

Items Tested:

TK-1 ROOF

Results:

NO DEFECTS WERE FOUND. ALL WELDING ACCEPTABLE.

Sub-Arc Representative Signature: _____ Date: June 25/18.

Client Representative Signature: _____ Date: June 25/18

Client Signature: _____ Date: _____

Inukshuk Construction Limited
Industrial Contracting Project Management

PO Box 654
Rankin Inlet, NU X0C 0G0
T 867.645.4030 F 867.645.4064

Field Erected Fuel Storage Tank

Handover Package

Item 13 – Roof Structure

Contents

1. Column Plumbness Dimension Report
2. Welding Visual Report

4605-47 Street
Vermillion, AB, T9X 1L6
780-608-9589

Exhibit 19, Rev A

QUALITY CONTROL MANUAL

DIMENSIONAL CHECK REPORT – PLUMBNESS

Customer: AEM.

Location: RANKIN INLET. TK. 1

Equipment Tag No.:

Equipment Type:

Equipment Description:

Code Requiring Test: API 650 Reason for Test: New Construction

(The tank shell will be checked for plumb at 12" below the tank roof. Plumb measurements will be checked at 45 degree intervals or less, max. 20' spacing)

Test Date(s): JUNE 9/18

Tested by: MATT MACKENZIE.

Seam Test Results:

ALL STRUCTURE COLUMNS ARE PLUMB.

Sub-Arc Representative Signature: Matt MacKenzie Date: June 9/18

Client Representative Signature: Clem Bonnar Date: June 25/18

Client Signature: _____ Date: _____

4605-47 Street
Vermillion, AB, T9X 1L6
780-608-9589

QUALITY CONTROL MANUAL

Exhibit 15c, Rev 1

VISUAL TEST REPORT

Customer: Agnico Eagle

Location: Rankin Inlet

Code Requiring Test: API 650 (section 8.5.2) Reason for Test: New Construction

A weld shall be acceptable by visual examination if the inspection shows the following.

a) There are no crater cracks, other surface cracks or arc strikes in or adjacent to the welded joints.
b) Maximum permissible undercut is 0.4 mm (1/64 in.) in depth for vertical butt joints, vertically oriented permanent attachments, attachment welds for nozzles, manholes, flush-type openings, and the inside shell-to-bottom welds. For horizontal butt joints, horizontally oriented permanent attachments, and annular-ring butt joints, the maximum permissible undercut is 0.8 mm (1/32 in.) in depth.
c) The frequency of surface porosity in the weld does not exceed one cluster (one or more pores) in any 100 mm (4 in.) of length, and the diameter of each cluster does not exceed 2.5 mm (3/32 in.).
d) The reinforcement of the welds on all thicknesses:

Plate Thickness mm (in.)	Maximum Reinforcement Thickness mm (in.)	
	Vertical Joints	Horizontal Joints
≤ 13 (1/2)	2.5 (3/32)	3 (1/8)
> 13 (1/2) to 25 (1)	3 (1/8)	5 (3/16)
> 25 (1)	5 (3/16)	6 (1/4)

Surface Condition (As Welded)

Test Solution: N/A Test Date(s): JUNE 9/18

Tested by: MATT MACKENZIE. Ambient Conditions: 3°

Items Tested:

COLUMN REPADS.

Results:

NO DEFECTS WERE FOUND. ALL WELDING ACCEPTABLE.

Sub-Arc Representative Signature: _____ Date: June 9/18

Client Representative Signature: _____ Date: June 25/18

Client Signature: _____ Date: _____

Inukshuk Construction Limited
Industrial Contracting Project Management

PO Box 654
Rankin Inlet, NU X0C 0G0
T 867.645.4030 F 867.645.4064

Field Erected Fuel Storage Tank

Handover Package

Item 14 – Nozzles

Contents

1. Weld Map
2. Visual Report
3. Leak Test Report – Shell Nozzle Repad Air Test
4. MPI Report

PARTS LIST		
ITEM	ITEM QTY	PART NUMBER
1	65	SHELL PLATE 2798 X 9655
2	5	LAST SHELL PLATE PER COURSE 2798 X 9579 (TRIMMED AT SITE)
3	4	900NS SHELL MANHOLE
5	8	GROUNDING LUG
6	6	75NS WATER DRAWOFF VALVE
8	3	150NS SHELL NOZZLE
10	1	200NS SHELL NOZZLE
12	1	20NS TEMPERATURE SENSOR CONNECTION
13	1	AISC - L 4 x 4 x 1/4 - 15.748031 TEMPERATURE SENSOR PROTECTION
15	4	PLATFORM
16	68	STEPS
18	14	AISC - L 3 x 3 x 1/4 - 15.748031 PRV PIPE SUPPORTS
19	1	400NS VENT

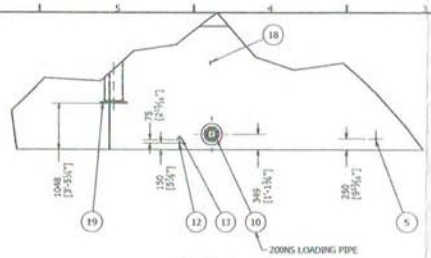

DETAIL A
SCALE 1/50

ALL NOZZLES - D.Z

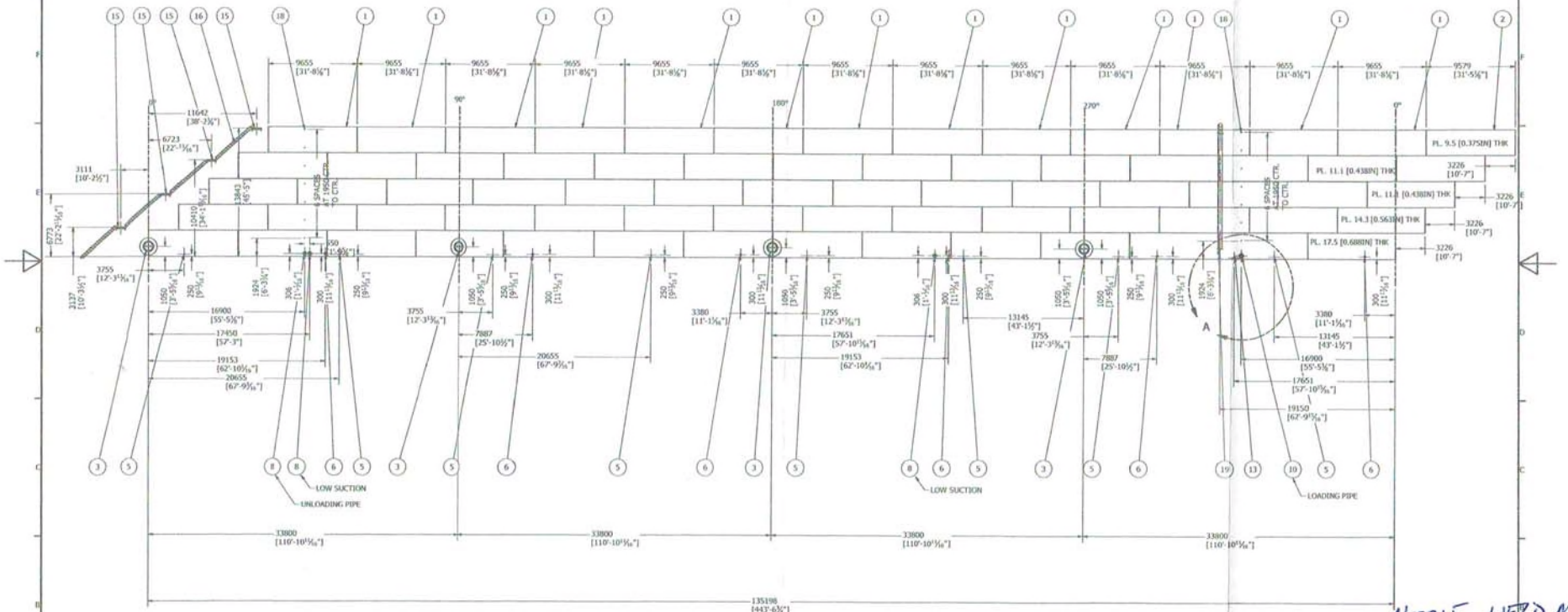

SHELL DEVELOP VIEW
SCALE 1/200

NOZZLE WELD MAP

NOTES:
ALL DIMENSIONS ARE IN MM UNLESS OTHERWISE NOTED
ALL DIMENTIONS ARE TAKEN FROM THE OUTER SIDE OF THE SHELL

17-Jul-2017
Permit Number: P471

REVISION HISTORY		
REV	DESCRIPTION	DATE
6	THIS SHEET ADDED	7/15/2017

DRAWN: MARC LOSIER 3/17/2017
CHECKED
QA
MFG
APPROVED

TITLE: AGNICO EAGLE -MELIADINE GOLD MINE - TK #1 - 20,000CUM TANK 43M DIA X 14M H

SIZE: A1 | DWG NO: 295-M9 | REV: 6
SCALE | SHEET 7 OF 7

4605-47 Street
Vermillion, AB, T9X 1L6
780-608-9589

QUALITY CONTROL MANUAL

Exhibit 15c, Rev 1

VISUAL TEST REPORT

Customer: Agnico Eagle

Location: Rankin Inlet

Code Requiring Test: API 650 (section 8.5.2) Reason for Test: New Construction

A weld shall be acceptable by visual examination if the inspection shows the following.

a) There are no crater cracks, other surface cracks or arc strikes in or adjacent to the welded joints.
b) Maximum permissible undercut is 0.4 mm (1/64 in.) in depth for vertical butt joints, vertically oriented permanent attachments, attachment welds for nozzles, manholes, flush-type openings, and the inside shell-to-bottom welds. For horizontal butt joints, horizontally oriented permanent attachments, and annular-ring butt joints, the maximum permissible undercut is 0.8 mm (1/32 in.) in depth.
c) The frequency of surface porosity in the weld does not exceed one cluster (one or more pores) in any 100 mm (4 in.) of length, and the diameter of each cluster does not exceed 2.5 mm (3/32 in.).
d) The reinforcement of the welds on all thicknesses:

Plate Thickness mm (in.)	Maximum Reinforcement Thickness mm (in.)	
	Vertical Joints	Horizontal Joints
≤ 13 (1/2)	2.5 (3/32)	3 (1/8)
> 13 (1/2) to 25 (1)	3 (1/8)	5 (3/16)
> 25 (1)	5 (3/16)	6 (1/4)

Surface Condition (As Welded)

Test Solution: N/A Test Date(s): June 20/18

Tested by: MATT MACKENZIE Ambient Conditions: 7°

Items Tested:

SHELL NOZZLES.

Results:

NO DEFECTS WERE FOUND. ALL WELDING ACCEPTABLE.

Sub-Arc Representative Signature: _____ Date: June 20/18

Client Representative Signature: _____ Date: June 20/18

Client Signature: _____ Date: _____

QUALITY CONTROL MANUAL

Exhibit 19, Rev A

DIMENSIONAL CHECK REPORT – PLUMBNESS

Customer: AGNICO EAGLE

Location: RANKIN INLET

Equipment Tag No.:

Equipment Type:

Equipment Description:

Code Requiring Test: API 650 Reason for Test: New Construction

(The tank shell will be checked for plumb at 12" below the tank roof. Plumb measurements will be checked at 45 degree intervals or less, max. 20' spacing)

Test Date(s): JUNE 20

Tested by: MATT MACKENZIE

Seam Test Results:

Nozzles checked for plumbness. All Nozzles acceptable.

Sub-Arc Representative Signature: _____ Date: June 20/18

Client Representative Signature: _____ Date: June 20/18

Client Signature: _____ Date: _____

Exhibit 12, Rev 1

AIR TEST REPORT – NOZZLE REINFORCEMENT PLATE WELDS

Customer: AGNICO EAGLE

Location: RANKIN INLET TK-1

Equipment Tag No.:

Equipment Type:

Equipment Description:

Code Requiring Test: API 650 Reason for Test: New Construction

(An air pressure/soap solution test for nozzle reinforcement plate weld seams is required for new construction or major alterations, no visible leaks should be observed)

Test Pressure: 100 kPa (15 psi) Surface Condition (As Welded, Painted, Blasted)

Test Solution: Water / Snoop: Test Date(s): JUNE 24/18

Tested by: MATT MACKENZIE Pressure Gauge: 149985 Ambient Conditions: 5°

Items Tested:

SHELL NOZZLES

Results:

NO LEAKS WERE FOUND

Sub-Arc Representative Signature: [signature] Date: June 24/18.

Client Representative Signature: [signature] Date: June 24/18

Client Signature: _____ Date: _____


M1614
291°
ST OK MM C
NE 24/18
PSI


M1601
315°
AIR TEST OK MM
JUNE 24/18


M1614
351°
TEST OK MMCB
E 24/18


M1.02
45°
AIR TEST OK
JUNE 24/18


M1602
AIR TEST
JUNE 24/18


M1614
51°
AIR TEST
JUNE 24/18
OK MMC


M1614
111°
AIR TEST OK MM CB
JUNE 24/18
psi


M1614
171°
AIR TEST OK MM CB
JUNE 24/18
psi


M1602
227°
AIR TEST OK MM
JUNE 24/18
CB
psi


M1614
231'
AIR TEST OK MM CB
JUNE 24/18
psi

Client :	**Inukshuk Construction Ltd,**	**Date d'intervention :** **Intervention date :**	2018-06-19 to 24
Adresse/Address :	, PO Box 654 Rankin Inlet, Nunavut X0C 0G0	**Date du rapport :** **Report date :**	2018-06-27
Contact :	Marc Losier		
Entrepreneur : **Contractor :**	tClient	**N° dossier :** **File no :**	**INS-118016-02**
Endroit du travail : **Job location :**	Meliadine Gold Mine Nunavut	**Commande :** **Order :**	295-1024

INSP. VISUELLE / VISUAL INSP. ☐ **MAGNÉTOSCOPIE / MAGNETIC PARTICLES** ☒ **RESSUAGE / LIQUID PENETRANT** ☐ **ULTRASONS / ULTRASONIC** ☐

DESCRIPTION :

Project: Meliadine Gold Mine (Agnico Eagle).

Magnetic particles inspection on tank no 1 at Rankin Inlet Installation (Nozzles only)

Remark: Visual inspection was performed by client

INSP. VISUELLE / VISUAL INSP.

NORME : **SPECIFICATION :**

N° équip. : **Equip. no :**

MAGNÉTOSCOPIE / MAGNETIC PARTICLES

NORME : **SPECIFICATION :** API 650

N° équip. : **Equip. no :** MP-Q-22

Ampérage : **Amperage :**	Culasse/Yoke	**Continue** **Continuous**	☒	**Résiduelle** **Residual**	☐	**Humide** **Wet**	☐	**Sèche** **Dry**	☒
Longitudinale **Longitudinal**	☒	**Circulaire** **Circular**	☐	**C.A.** **A.C.**	☒	**C.C.** **D.C.**	☐	**Démagnétisée** **Demagnetized**	☐

RESSUAGE / LIQUID PENETRANT

NORME : **SPECIFICATION :**

N° équip. : **Equip. no :**

Pénétrant/Penetrant : **Émulsifiant/Emulsifier :** **Révélateur/Developer :**

Temps/Time : **Temps/Time :** **Temps/Time :**

ULTRASONS / ULTRASONIC

NORME : **SPECIFICATION :**

ÉTALONNAGE/CALIBRATION :

Bloc/Block : **Trou/Hole :** **C.A.D. /D.A.C. :** ☐

APPAREIL/EQUIPMENT :

Instrument : **Couplant :** **Échelle/Sweep length :**

N° équip./Equip. no : **Palpeur/Transducer :**

RÉSULTATS/RESULTS :

TANK No. 1

Item inspected	MPI 100% of Weld outside	MPI 100% of Weld inside
15 nozzles on shell (Including 4 manholes)	14 Pads / shell - Accepted 14 Nozzles / Pads - Accepted 1 nozzle / shell - Accepted	15 nozzles on shell Accepted
Seam on each manhole (4)	Accepted	Accepted
11 Nozzles on top tanks	11 Pads on top Shell - Accepted 11 Nozzles / Pads – Accepted 2 nozzles no pad	N/A

Note: Accepted after two repairs on manhole 270º interior weld

Techniciens : **Technicians :**	Etienne Munger ASNT-TC-1A Level 2 CAN/CGSB 48.9712 MT Level 2	**Assistants:**	Qualification	**Approuvé par :** **Approved by :**	Patrick Brodeur Superviseur technique CSA W178.2 niv.3

Ce rapport ne doit pas être reproduit, sinon en entier, sans l'autorisation écrite de SGS CANADA inc.
Le présent rapport est émis par la Société conformément à ses Conditions Générales de Service accessibles sur http://www.sgs.ca/fr-FR/Terms-and-Conditions.aspx
This report is confidential and shall not be reproduced without the written approval of SGS CANADA Inc
This document is issued by the Company under its General Conditions of Service accessible at http://www.sgs.ca/en/Terms-and-Conditions.aspx

Client : **Adresse/Address :**	**Inukshuk Construction Ltd,** , PO Box 654 Rankin Inlet, Nunavut X0C 0G0	**Date d'intervention :** **Intervention date :**	2018-06-19 to 24
Contact :	Marc Losier	**Date du rapport :** **Report date :**	2018-06-27
Entrepreneur : **Contractor :**	tClient	**N° dossier :** **File no :**	**INS-118016-02**
Endroit du travail : **Job location :**	Meliadine Gold Mine Nunavut	**Commande :** **Order :**	295-1024



DWG 295-M9 (TANK No 1)

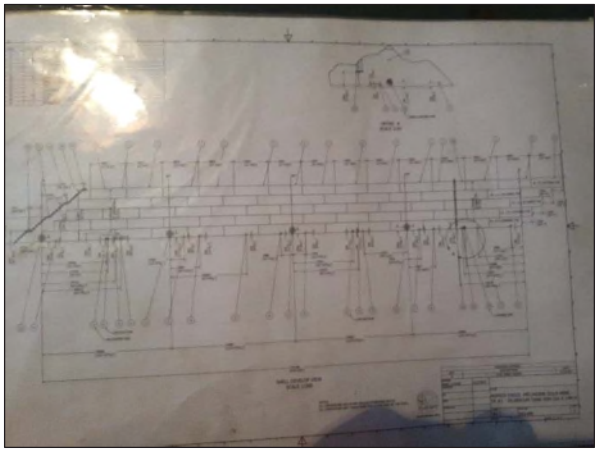

DWG Nozzles on Shell

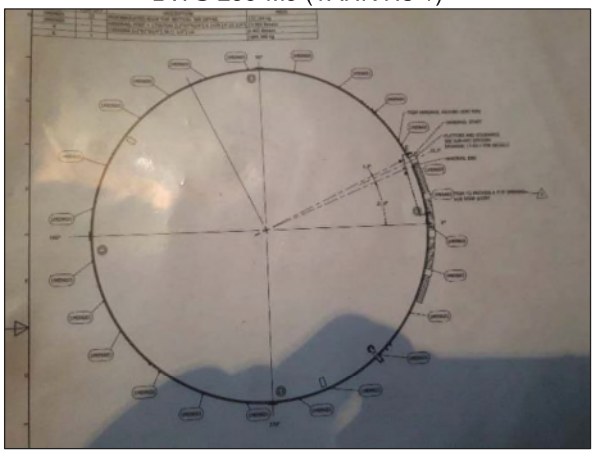

DWG Nozzles on Top Shell

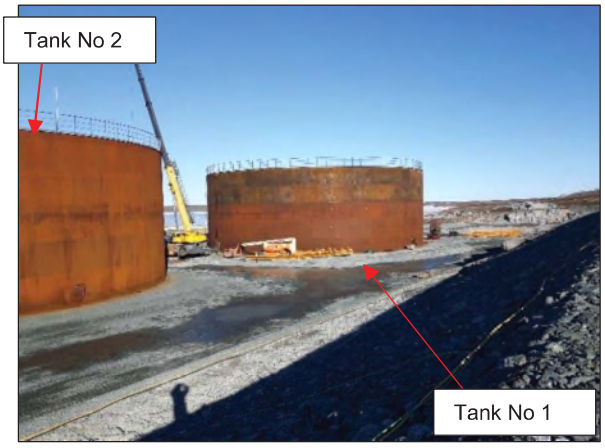

Site of Tank No 1 & No 2 at Rankin Inlet



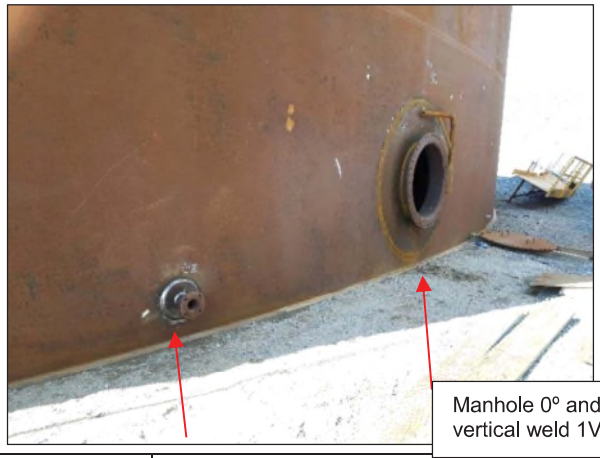

Techniciens : **Technicians :**	Etienne Munger ASNT-TC-1A Level 2 CAN/CGSB 48.9712 MT Level 2	**Assistants:** Qualification	**Approuvé par :** **Approved by :**	Patrick Brodeur Superviseur technique CSA W178.2 niv.3

Ce rapport ne doit pas être reproduit, sinon en entier, sans l'autorisation écrite de SGS CANADA inc.
Le présent rapport est émis par la Société conformément à ses Conditions Générales de Service accessibles sur http://www.sgs.ca/fr-FR/Terms-and-Conditions.aspx
This report is confidential and shall not be reproduced without the written approval of SGS CANADA Inc
This document is issued by the Company under its General Conditions of Service accessible at http://www.sgs.ca/en/Terms-and-Conditions.aspx

Client :	**Inukshuk Construction Ltd,**	**Date d'intervention :**	2018-06-19 to 24
Adresse/Address :	, PO Box 654 Rankin Inlet, Nunavut X0C 0G0	**Intervention date :**	
Contact :	Marc Losier	**Date du rapport :**	2018-06-27
		Report date :	
Entrepreneur :	tClient	**N° dossier :**	**INS-118016-02**
Contractor :		**File no :**	
Endroit du travail :	Meliadine Gold Mine Nunavut	**Commande :**	295-1024
Job location :		**Order :**	

Nozzles 1 and 2 of 15 on Shell



Nozzles 3 and 4 of 15 on Shell

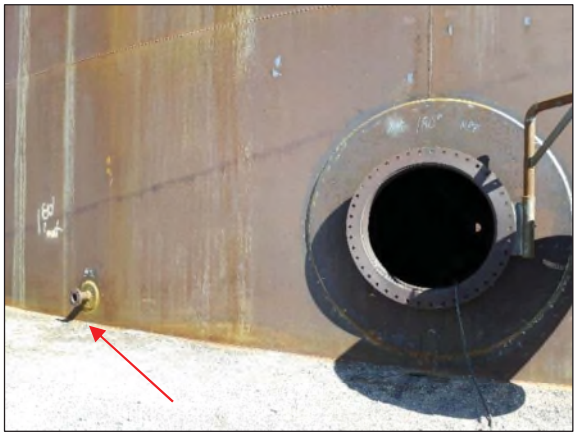

Nozzle 5 of 15 on Shell (Manhole 90°)



Nozzles 6 and 7 (Manhole 180°)



Nozzle 8 of 15 (Manhole 270°)



Nozzles 9, 10 and 11 of 15



Nozzles 12 and 13 of 15

Nozzle 14 of 15

Techniciens : **Technicians :**	Etienne Munger ASNT-TC-1A Level 2 CAN/CGSB 48.9712 MT Level 2	**Assistants:**	Qualification	**Approuvé par :** **Approved by :**	Patrick Brodeur Superviseur technique CSA W178.2 niv.3

Ce rapport ne doit pas être reproduit, sinon en entier, sans l'autorisation écrite de SGS CANADA inc.
Le présent rapport est émis par la Société conformément à ses Conditions Générales de Service accessibles sur http://www.sgs.ca/fr-FR/Terms-and-Conditions.aspx
This report is confidential and shall not be reproduced without the written approval of SGS CANADA Inc
This document is issued by the Company under its General Conditions of Service accessible at http://www.sgs.ca/en/Terms-and-Conditions.aspx

Client : **Adresse/Address :**	**Inukshuk Construction Ltd,** , PO Box 654 Rankin Inlet, Nunavut X0C 0G0	**Date d'intervention :** **Intervention date :**	2018-06-19 to 24
Contact :	Marc Losier	**Date du rapport :** **Report date :**	2018-06-27
Entrepreneur : **Contractor :**	tClient	**N° dossier :** **File no :**	**INS-118016-02**
Endroit du travail : **Job location :**	Meliadine Gold Mine Nunavut	**Commande :** **Order :**	295-1024



Nozzle 15 of 15 on Shell



Nozzles 1, 2, of 13 on top tank



Nozzles 3 to 6 of 13 on top tank



Nozzles 7 o of 13 on top tank

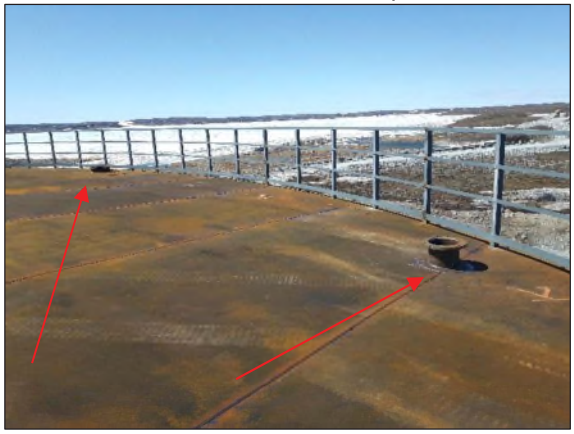

Nozzles 8, 9 of 13 on top tankl

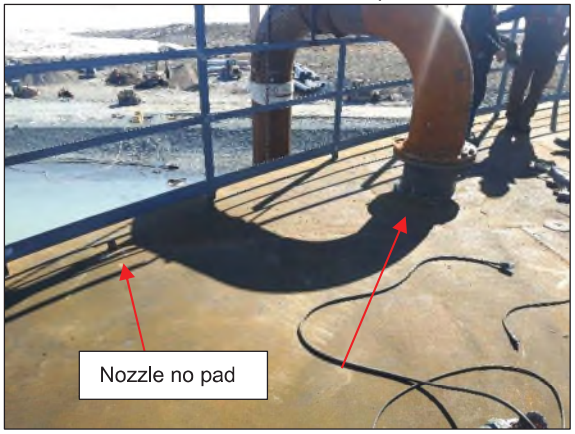

Nozzles 10, 11 of 13 on top tank

Techniciens : **Technicians :**	Etienne Munger ASNT-TC-1A Level 2 CAN/CGSB 48.9712 MT Level 2	**Assistants:** Qualification	**Approuvé par :** **Approved by :**	Patrick Brodeur Superviseur technique CSA W178.2 niv.3

Ce rapport ne doit pas être reproduit, sinon en entier, sans l'autorisation écrite de SGS CANADA inc.
Le présent rapport est émis par la Société conformément à ses Conditions Générales de Service accessibles sur http://www.sgs.ca/fr-FR/Terms-and-Conditions.aspx
This report is confidential and shall not be reproduced without the written approval of SGS CANADA Inc
This document is issued by the Company under its General Conditions of Service accessible at http://www.sgs.ca/en/Terms-and-Conditions.aspx

Client : **Adresse/Address :**	**Inukshuk Construction Ltd,** , PO Box 654 Rankin Inlet, Nunavut X0C 0G0	**Date d'intervention :** **Intervention date :**	2018-06-19 to 24
Contact :	Marc Losier	**Date du rapport :** **Report date :**	2018-06-27
Entrepreneur : **Contractor :**	tClient	**N° dossier :** **File no :**	**INS-118016-02**
Endroit du travail : **Job location :**	Meliadine Gold Mine Nunavut	**Commande :** **Order :**	295-1024



Nozzle 12 of 13 on top tank



Nozzles 13 of 13 on top tank

Techniciens : **Technicians :**	Etienne Munger ASNT-TC-1A Level 2 CAN/CGSB 48.9712 MT Level 2	**Assistants:** Qualification	**Approuvé par :** **Approved by :**	Patrick Brodeur Superviseur technique CSA W178.2 niv.3

Ce rapport ne doit pas être reproduit, sinon en entier, sans l'autorisation écrite de SGS CANADA inc.
Le présent rapport est émis par la Société conformément à ses Conditions Générales de Service accessibles sur http://www.sgs.ca/fr-FR/Terms-and-Conditions.aspx
This report is confidential and shall not be reproduced without the written approval of SGS CANADA Inc
This document is issued by the Company under its General Conditions of Service accessible at http://www.sgs.ca/en/Terms-and-Conditions.aspx

Client : **Adresse/Address :**	**Inukshuk Construction Ltd,** , PO Box 654 Rankin Inlet, Nunavut X0C 0G0	**Date d'intervention :** **Intervention date :**	2018-06-19 to 24
Contact :	Marc Losier	**Date du rapport :** **Report date :**	2018-06-27
Entrepreneur : **Contractor :**	tClient	**N° dossier :** **File no :**	**INS-118016-02**
Endroit du travail : **Job location :**	Meliadine Gold Mine Nunavut	**Commande :** **Order :**	295-1024

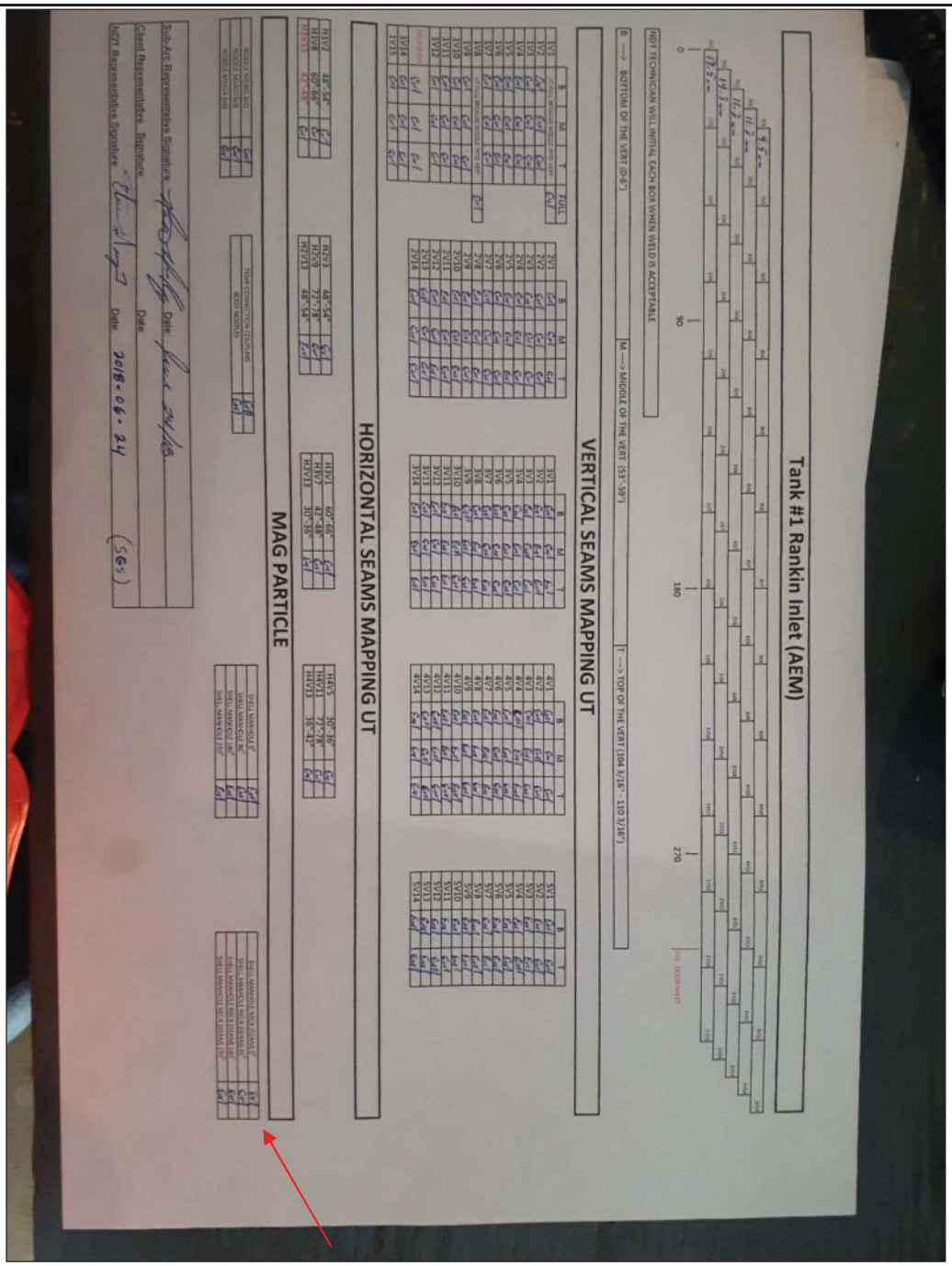

Magnetic particles mapping

Techniciens : **Technicians :**	Etienne Munger ASNT-TC-1A Level 2 CAN/CGSB 48.9712 MT Level 2	**Assistants:** Qualification	**Approuvé par :** **Approved by :**	Patrick Brodeur Superviseur technique CSA W178.2 niv.3

Ce rapport ne doit pas être reproduit, sinon en entier, sans l'autorisation écrite de SGS CANADA inc.
Le présent rapport est émis par la Société conformément à ses Conditions Générales de Service accessibles sur http://www.sgs.ca/fr-FR/Terms-and-Conditions.aspx
This report is confidential and shall not be reproduced without the written approval of SGS CANADA Inc
This document is issued by the Company under its General Conditions of Service accessible at http://www.sgs.ca/en/Terms-and-Conditions.aspx

Inukshuk Construction Limited
Industrial Contracting Project Management

PO Box 654
Rankin Inlet, NU X0C 0G0
T 867.645.4030 F 867.645.4064

Field Erected Fuel Storage Tank

Handover Package

Item 15 – Manways

Contents

1. Weld Map
2. Visual Report
3. Leak Test Report – Shell Manway Repad Air Test
4. Manway Torque Specs
5. MPI Report

PARTS LIST		
ITEM	ITEM QTY	PART NUMBER
1	65	SHELL PLATE 2798 X 9655
2	5	LAST SHELL PLATE PER COURSE 2798 X 9579 (TRIMMED AT SITE)
3	4	900NS SHELL MANHOLE
5	8	GROUNDING LUG
6	6	75NS WATER DRAWOFF VALVE
8	3	150NS SHELL NOZZLE
10	1	200NS SHELL NOZZLE
12	1	20NS TEMPERATURE SENSOR CONNECTION
13	1	ABSC - L 4 x 4 x 1/4 - 15.748031 TEMPERATURE SENSOR PROTECTION
15	4	PLATFORM
16	68	STEPS
18	14	ABSC - L 3 x 3 x 1/4 - 15.748031 PRV PIPE SUPPORTS
19	1	400NS VENT

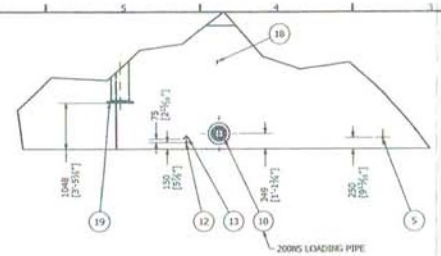

DETAIL A
SCALE 1/50

ALL MANWAYS
-D.Z

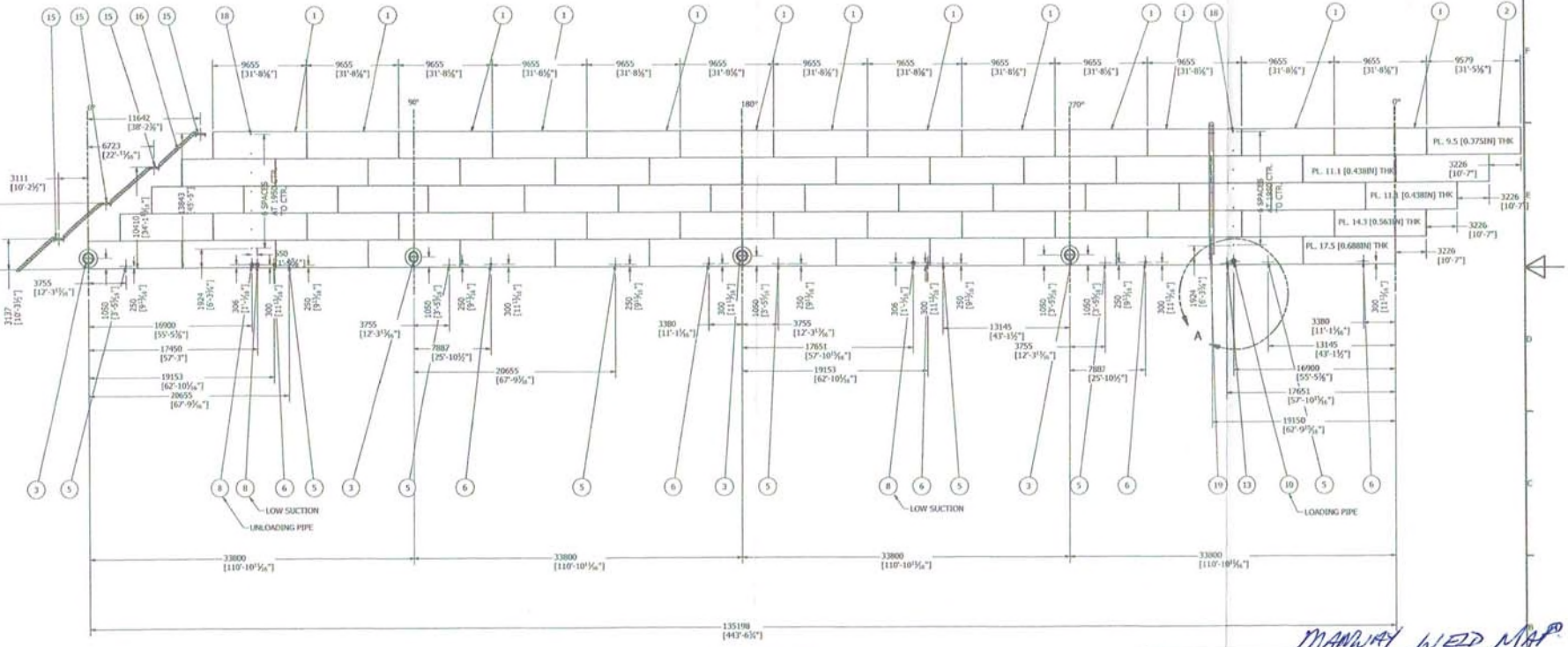

SHELL DEVELOP VIEW
SCALE 1/200

MANWAY WELD MAP

NOTES:
ALL DIMENSIONS ARE IN MM UNLESS OTHERWISE NOTED
ALL DIMENTIONS ARE TAKEN FROM THE OUTER SIDE OF THE SHELL

17-Jul-2017
Permit Number: P471

REVISION HISTORY		
REV	DESCRIPTION	DATE
6	THIS SHEET ADDED	7/15/2017

DRAWN	MARC LOSIER	3/17/2017
CHECKED		
QA		
MFG		
APPROVED		

TITLE: AGNICO EAGLE -MELIADINE GOLD MINE - TK #1 - 20,000CUM TANK 43M DIA X 14M H

SIZE	DWG NO	REV
A1	295-M9	6

SCALE

SHEET 7 OF 7

4605-47 Street
Vermillion, AB, T9X 1L6
780-608-9589

Exhibit 15c, Rev 1

QUALITY CONTROL MANUAL

VISUAL TEST REPORT

Customer: Agnico Eagle

Location: Rankin Inlet

Code Requiring Test: API 650 (section 8.5.2) Reason for Test: New Construction

A weld shall be acceptable by visual examination if the inspection shows the following.

a) There are no crater cracks, other surface cracks or arc strikes in or adjacent to the welded joints.
b) Maximum permissible undercut is 0.4 mm (1/64 in.) in depth for vertical butt joints, vertically oriented permanent attachments, attachment welds for nozzles, manholes, flush-type openings, and the inside shell-to-bottom welds. For horizontal butt joints, horizontally oriented permanent attachments, and annular-ring butt joints, the maximum permissible undercut is 0.8 mm (1/32 in.) in depth.
c) The frequency of surface porosity in the weld does not exceed one cluster (one or more pores) in any 100 mm (4 in.) of length, and the diameter of each cluster does not exceed 2.5 mm (3/32 in.).
d) The reinforcement of the welds on all thicknesses:

Plate Thickness, mm (in.)	Maximum Reinforcement Thickness mm (in.)	
	Vertical Joints	Horizontal Joints
≤ 13 (1/2)	2.5 (3/32)	3 (1/8)
> 13 (1/2) to 25 (1)	3 (1/8)	5 (3/16)
> 25 (1)	5 (3/16)	6 (1/4)

Surface Condition (As Welded)

Test Solution: N/A Test Date(s): JUNE 20/18

Tested by: MATT MACKENZIE Ambient Conditions: 7°

Items Tested:

SHELL MANWAYS.

NO DEFECTS WERE FOUND. ALL WELDING ACCEPTABLE.

Results:

Sub-Arc Representative Signature: Matt MacKenzie Date: June 20/18

Client Representative Signature: Glen Bonner Date: June 20/18

Client Signature: _____ Date: _____

4605-47 Street
Vermillion, AB, T9X 1L6
780-608-9589

QUALITY CONTROL MANUAL

Exhibit 19, Rev A

DIMENSIONAL CHECK REPORT – PLUMBNESS

Customer: AGNICO EAGLE

Location: RANKIN INLET

Equipment Tag No.:

Equipment Type:

Equipment Description:

Code Requiring Test: API 650 Reason for Test: New Construction

(The tank shell will be checked for plumb at 12" below the tank roof. Plumb measurements will be checked at 45 degree intervals or less, max. 20' spacing)

Test Date(s): June 20/18

Tested by: MATT MACKENZIE.

Seam Test Results:

ALL MANWAYS ARE ACCEPTABLE.

Sub-Arc Representative Signature: _____ Date: June 20/18

Client Representative Signature: _____ Date: June 20/18

Client Signature: _____ Date: _____

QUALITY CONTROL MANUAL

Exhibit 12, Rev 1

AIR TEST REPORT – NOZZLE REINFORCEMENT PLATE WELDS

Customer: AGNICO EAGLE

Location: RANKIN INLET TK 1

Equipment Tag No.:

Equipment Type:

Equipment Description:

Code Requiring Test: API 650 Reason for Test: New Construction

(An air pressure/soap solution test for nozzle reinforcement plate weld seams is required for new construction or major alterations, no visible leaks should be observed)

Test Pressure: 100 kPa (15 psi) Surface Condition (As Welded, Painted, Blasted)

Test Solution: Water / Snoop: Test Date(s): JUNE 24/18

Tested by: MATT MACKENZIE. Pressure Gauge: 149985 Ambient Conditions: 5°

Items Tested:

SHELL MANWAYS.

Results:

NO LEAKS WERE FOUND.

Sub-Arc Representative Signature: Matt MacKenzie Date: June 24/18.

Client Representative Signature: Clem Boisvert Date: June 24/18

Client Signature: _____ Date: _____


MAN HOLE
270°
AIR TEST OK
JUNE 24/18 MM. CB
5
10
15
20
25
30
psi

MAN HOLE
0°
AIRTEST OK MM
JUNE 24/18

MAN H
90°
AIR TES
JUNE 2


MAN HOLE
180°
AIR TEST OK MM CB
JUNE 24/18

4605-47 Street
Vermillion, AB, T9X 1L6
780-608-9589

Exhibit 15c, Rev 1

QUALITY CONTROL MANUAL

VISUAL TEST REPORT

Customer: Agnico Eagle

Location: Rankin Inlet

Code Requiring Test: API 650 (section 8.5.2) Reason for Test: New Construction

A weld shall be acceptable by visual examination if the inspection shows the following.

a) There are no crater cracks, other surface cracks or arc strikes in or adjacent to the welded joints.
b) Maximum permissible undercut is 0.4 mm (1/64 in.) in depth for vertical butt joints, vertically oriented permanent attachments, attachment welds for nozzles, manholes, flush-type openings, and the inside shell-to-bottom welds. For horizontal butt joints, horizontally oriented permanent attachments, and annular-ring butt joints, the maximum permissible undercut is 0.8 mm (1/32 in.) in depth.
c) The frequency of surface porosity in the weld does not exceed one cluster (one or more pores) in any 100 mm (4 in.) of length, and the diameter of each cluster does not exceed 2.5 mm (3/32 in.).
d) The reinforcement of the welds on all thicknesses:

Plate Thickness mm (in.)	Maximum Reinforcement Thickness mm (in.)	
	Vertical Joints	Horizontal Joints
≤ 13 (1/2)	2.5 (3/32)	3 (1/8)
> 13 (1/2) to 25 (1)	3 (1/8)	5 (3/16)
> 25 (1)	5 (3/16)	6 (1/4)

Surface Condition (As Welded)

Test Solution: N/A Test Date(s): June 27/18

Tested by: MATT MCKENZIE Ambient Conditions: 10°

Items Tested: MANWAY BOLTS.

MANWAY TORQUE

Results:

MANWAYS TORQUED TO REQUIRED SPEC.

Sub-Arc Representative Signature: _____ Date: June 27/18.

Client Representative Signature: _____ Date: June 27/18

Client Signature: _____ Date: _____

Client :	**Inukshuk Construction Ltd,**	**Date d'intervention :** **Intervention date :**	2018-06-19 to 24
Adresse/Address :	, PO Box 654 Rankin Inlet, Nunavut X0C 0G0	**Date du rapport :** **Report date :**	2018-06-27
Contact :	Marc Losier		
Entrepreneur : **Contractor :**	tClient	**N° dossier :** **File no :**	**INS-118016-02**
Endroit du travail : **Job location :**	Meliadine Gold Mine Nunavut	**Commande :** **Order :**	295-1024

INSP. VISUELLE / VISUAL INSP. ☐ **MAGNÉTOSCOPIE / MAGNETIC PARTICLES** ☒ **RESSUAGE / LIQUID PENETRANT** ☐ **ULTRASONS / ULTRASONIC** ☐

DESCRIPTION :

Project: Meliadine Gold Mine (Agnico Eagle).

Magnetic particles inspection on tank no 1 at Rankin Inlet Installation (Nozzles only)

Remark: Visual inspection was performed by client

INSP. VISUELLE / VISUAL INSP.

NORME : **SPECIFICATION :**

N° équip. : **Equip. no :**

MAGNÉTOSCOPIE / MAGNETIC PARTICLES

NORME : **SPECIFICATION :** API 650

N° équip. : **Equip. no :** MP-Q-22

Ampérage : **Amperage :**	Culasse/Yoke	**Continue** **Continuous**	☒	**Résiduelle** **Residual**	☐	**Humide** **Wet**	☐	**Sèche** **Dry**	☒
Longitudinale **Longitudinal**	☒	**Circulaire** **Circular**	☐	**C.A.** **A.C.**	☒	**C.C.** **D.C.**	☐	**Démagnétisée** **Demagnetized**	☐

RESSUAGE / LIQUID PENETRANT

NORME : **SPECIFICATION :**

N° équip. : **Equip. no :**

Pénétrant/Penetrant : **Émulsifiant/Emulsifier :** **Révélateur/Developer :**

Temps/Time : **Temps/Time :** **Temps/Time :**

ULTRASONS / ULTRASONIC

NORME : **SPECIFICATION :**

ÉTALONNAGE/CALIBRATION :

Bloc/Block : **Trou/Hole :** **C.A.D. /D.A.C. :** ☐

APPAREIL/EQUIPMENT :

Instrument : **Couplant :** **Échelle/Sweep length :**

N° équip./Equip. no : **Palpeur/Transducer :**

RÉSULTATS/RESULTS :

TANK No. 1

Item inspected	MPI 100% of Weld outside	MPI 100% of Weld inside
15 nozzles on shell (Including 4 manholes)	14 Pads / shell - Accepted 14 Nozzles / Pads - Accepted 1 nozzle / shell - Accepted	15 nozzles on shell Accepted
Seam on each manhole (4)	Accepted	Accepted
11 Nozzles on top tanks	11 Pads on top Shell - Accepted 11 Nozzles / Pads – Accepted 2 nozzles no pad	N/A

Note: Accepted after two repairs on manhole 270º interior weld

Techniciens : **Technicians :**	Etienne Munger ASNT-TC-1A Level 2 CAN/CGSB 48.9712 MT Level 2	**Assistants:**	Qualification	**Approuvé par :** **Approved by :**	Patrick Brodeur Superviseur technique CSA W178.2 niv.3

Ce rapport ne doit pas être reproduit, sinon en entier, sans l'autorisation écrite de SGS CANADA inc.
Le présent rapport est émis par la Société conformément à ses Conditions Générales de Service accessibles sur http://www.sgs.ca/fr-FR/Terms-and-Conditions.aspx
This report is confidential and shall not be reproduced without the written approval of SGS CANADA Inc
This document is issued by the Company under its General Conditions of Service accessible at http://www.sgs.ca/en/Terms-and-Conditions.aspx

Client : **Adresse/Address :**	**Inukshuk Construction Ltd,** , PO Box 654 Rankin Inlet, Nunavut X0C 0G0	**Date d'intervention :** **Intervention date :**	2018-06-19 to 24
Contact :	Marc Losier	**Date du rapport :** **Report date :**	2018-06-27
Entrepreneur : **Contractor :**	tClient	**N° dossier :** **File no :**	**INS-118016-02**
Endroit du travail : **Job location :**	Meliadine Gold Mine Nunavut	**Commande :** **Order :**	295-1024



DWG 295-M9 (TANK No 1)

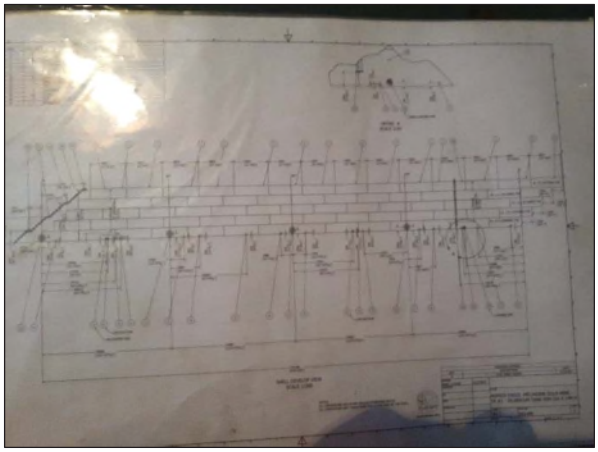

DWG Nozzles on Shell

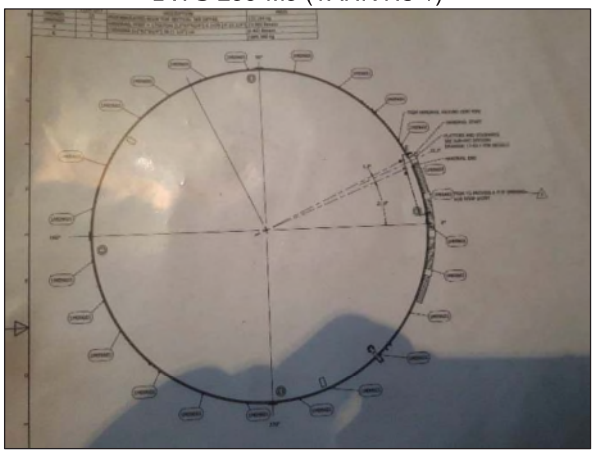

DWG Nozzles on Top Shell

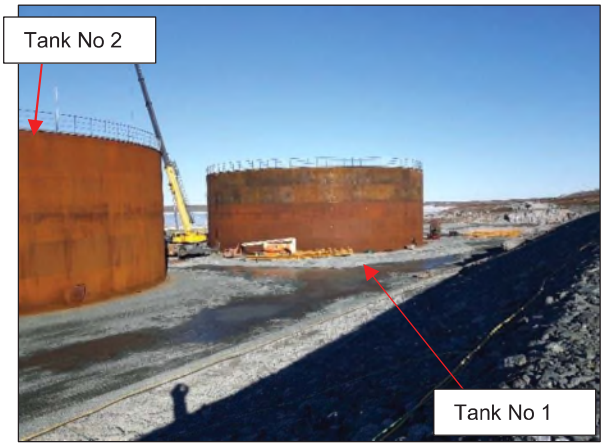

Site of Tank No 1 & No 2 at Rankin Inlet



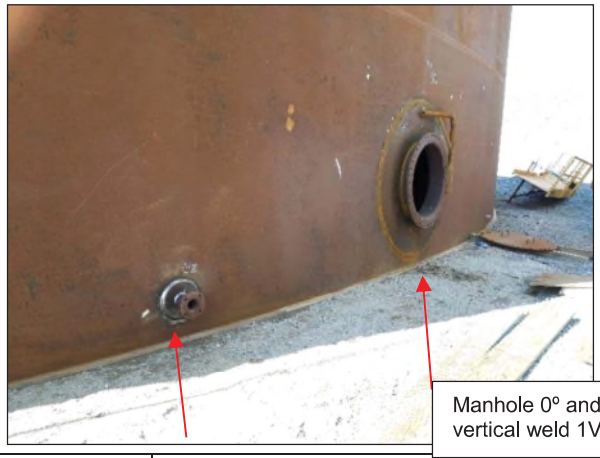

Techniciens : **Technicians :**	Etienne Munger ASNT-TC-1A Level 2 CAN/CGSB 48.9712 MT Level 2	**Assistants:** Qualification	**Approuvé par :** **Approved by :**	Patrick Brodeur Superviseur technique CSA W178.2 niv.3

Ce rapport ne doit pas être reproduit, sinon en entier, sans l'autorisation écrite de SGS CANADA inc.
Le présent rapport est émis par la Société conformément à ses Conditions Générales de Service accessibles sur http://www.sgs.ca/fr-FR/Terms-and-Conditions.aspx
This report is confidential and shall not be reproduced without the written approval of SGS CANADA Inc
This document is issued by the Company under its General Conditions of Service accessible at http://www.sgs.ca/en/Terms-and-Conditions.aspx

Client :	**Inukshuk Construction Ltd,**	**Date d'intervention :**	2018-06-19 to 24
Adresse/Address :	, PO Box 654 Rankin Inlet, Nunavut X0C 0G0	**Intervention date :**	
Contact :	Marc Losier	**Date du rapport :**	2018-06-27
		Report date :	
Entrepreneur :	tClient	**N° dossier :**	**INS-118016-02**
Contractor :		**File no :**	
Endroit du travail :	Meliadine Gold Mine Nunavut	**Commande :**	295-1024
Job location :		**Order :**	

Nozzles 1 and 2 of 15 on Shell



Nozzles 3 and 4 of 15 on Shell

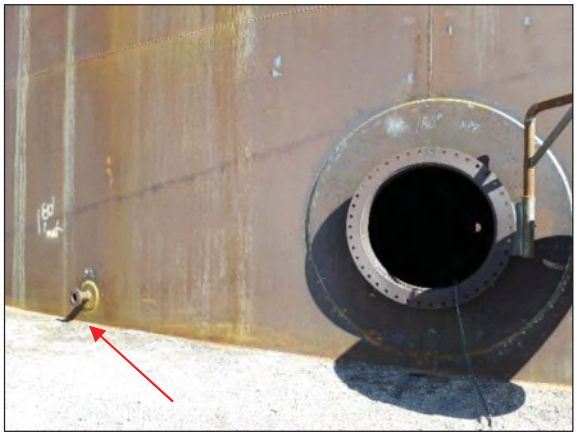

Nozzle 5 of 15 on Shell (Manhole 90°)



Nozzles 6 and 7 (Manhole 180°)



Nozzle 8 of 15 (Manhole 270°)



Nozzles 9, 10 and 11 of 15



Nozzles 12 and 13 of 15

Nozzle 14 of 15

Techniciens : **Technicians :**	Etienne Munger ASNT-TC-1A Level 2 CAN/CGSB 48.9712 MT Level 2	**Assistants:**	Qualification	**Approuvé par :** **Approved by :**	Patrick Brodeur Superviseur technique CSA W178.2 niv.3

Ce rapport ne doit pas être reproduit, sinon en entier, sans l'autorisation écrite de SGS CANADA inc.
Le présent rapport est émis par la Société conformément à ses Conditions Générales de Service accessibles sur http://www.sgs.ca/fr-FR/Terms-and-Conditions.aspx
This report is confidential and shall not be reproduced without the written approval of SGS CANADA Inc
This document is issued by the Company under its General Conditions of Service accessible at http://www.sgs.ca/en/Terms-and-Conditions.aspx

Client : **Adresse/Address :**	**Inukshuk Construction Ltd,** , PO Box 654 Rankin Inlet, Nunavut X0C 0G0	**Date d'intervention :** **Intervention date :**	2018-06-19 to 24
Contact :	Marc Losier	**Date du rapport :** **Report date :**	2018-06-27
Entrepreneur : **Contractor :**	tClient	**N° dossier :** **File no :**	**INS-118016-02**
Endroit du travail : **Job location :**	Meliadine Gold Mine Nunavut	**Commande :** **Order :**	295-1024



Nozzle 15 of 15 on Shell



Nozzles 1, 2, of 13 on top tank



Nozzles 3 to 6 of 13 on top tank



Nozzles 7 o of 13 on top tank

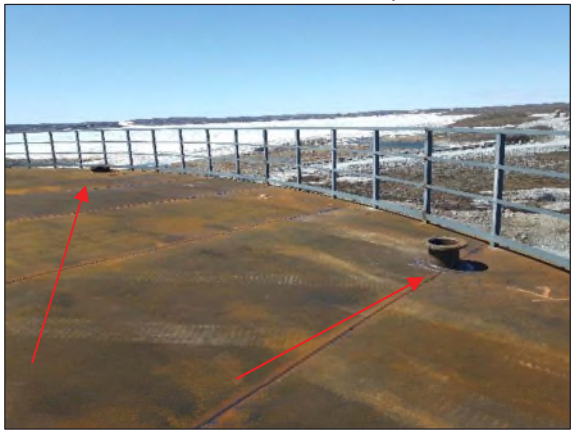

Nozzles 8, 9 of 13 on top tankl

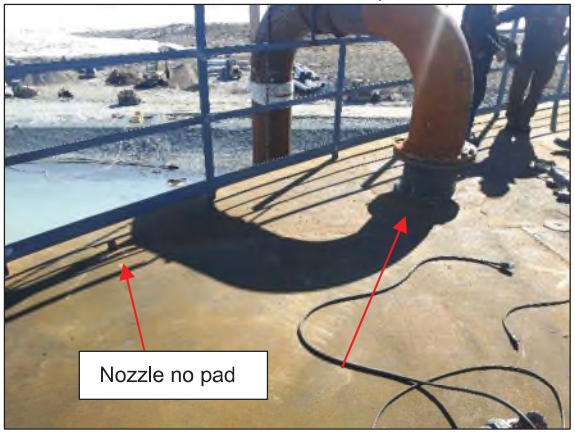

Nozzles 10, 11 of 13 on top tank

Techniciens : **Technicians :**	Etienne Munger ASNT-TC-1A Level 2 CAN/CGSB 48.9712 MT Level 2	**Assistants:** Qualification	**Approuvé par :** **Approved by :**	Patrick Brodeur Superviseur technique CSA W178.2 niv.3

Ce rapport ne doit pas être reproduit, sinon en entier, sans l'autorisation écrite de SGS CANADA inc.
Le présent rapport est émis par la Société conformément à ses Conditions Générales de Service accessibles sur http://www.sgs.ca/fr-FR/Terms-and-Conditions.aspx
This report is confidential and shall not be reproduced without the written approval of SGS CANADA Inc
This document is issued by the Company under its General Conditions of Service accessible at http://www.sgs.ca/en/Terms-and-Conditions.aspx

Client : **Adresse/Address :**	**Inukshuk Construction Ltd,** , PO Box 654 Rankin Inlet, Nunavut X0C 0G0	**Date d'intervention :** **Intervention date :**	2018-06-19 to 24
Contact :	Marc Losier	**Date du rapport :** **Report date :**	2018-06-27
Entrepreneur : **Contractor :**	tClient	**N° dossier :** **File no :**	**INS-118016-02**
Endroit du travail : **Job location :**	Meliadine Gold Mine Nunavut	**Commande :** **Order :**	295-1024



Nozzle 12 of 13 on top tank



Nozzles 13 of 13 on top tank

Techniciens : **Technicians :**	Etienne Munger ASNT-TC-1A Level 2 CAN/CGSB 48.9712 MT Level 2	**Assistants:** Qualification	**Approuvé par :** **Approved by :**	Patrick Brodeur Superviseur technique CSA W178.2 niv.3

Ce rapport ne doit pas être reproduit, sinon en entier, sans l'autorisation écrite de SGS CANADA inc.
Le présent rapport est émis par la Société conformément à ses Conditions Générales de Service accessibles sur http://www.sgs.ca/fr-FR/Terms-and-Conditions.aspx
This report is confidential and shall not be reproduced without the written approval of SGS CANADA Inc
This document is issued by the Company under its General Conditions of Service accessible at http://www.sgs.ca/en/Terms-and-Conditions.aspx

Client : **Adresse/Address :**	**Inukshuk Construction Ltd,** , PO Box 654 Rankin Inlet, Nunavut X0C 0G0	**Date d'intervention :** **Intervention date :**	2018-06-19 to 24
Contact :	Marc Losier	**Date du rapport :** **Report date :**	2018-06-27
Entrepreneur : **Contractor :**	tClient	**N° dossier :** **File no :**	**INS-118016-02**
Endroit du travail : **Job location :**	Meliadine Gold Mine Nunavut	**Commande :** **Order :**	295-1024

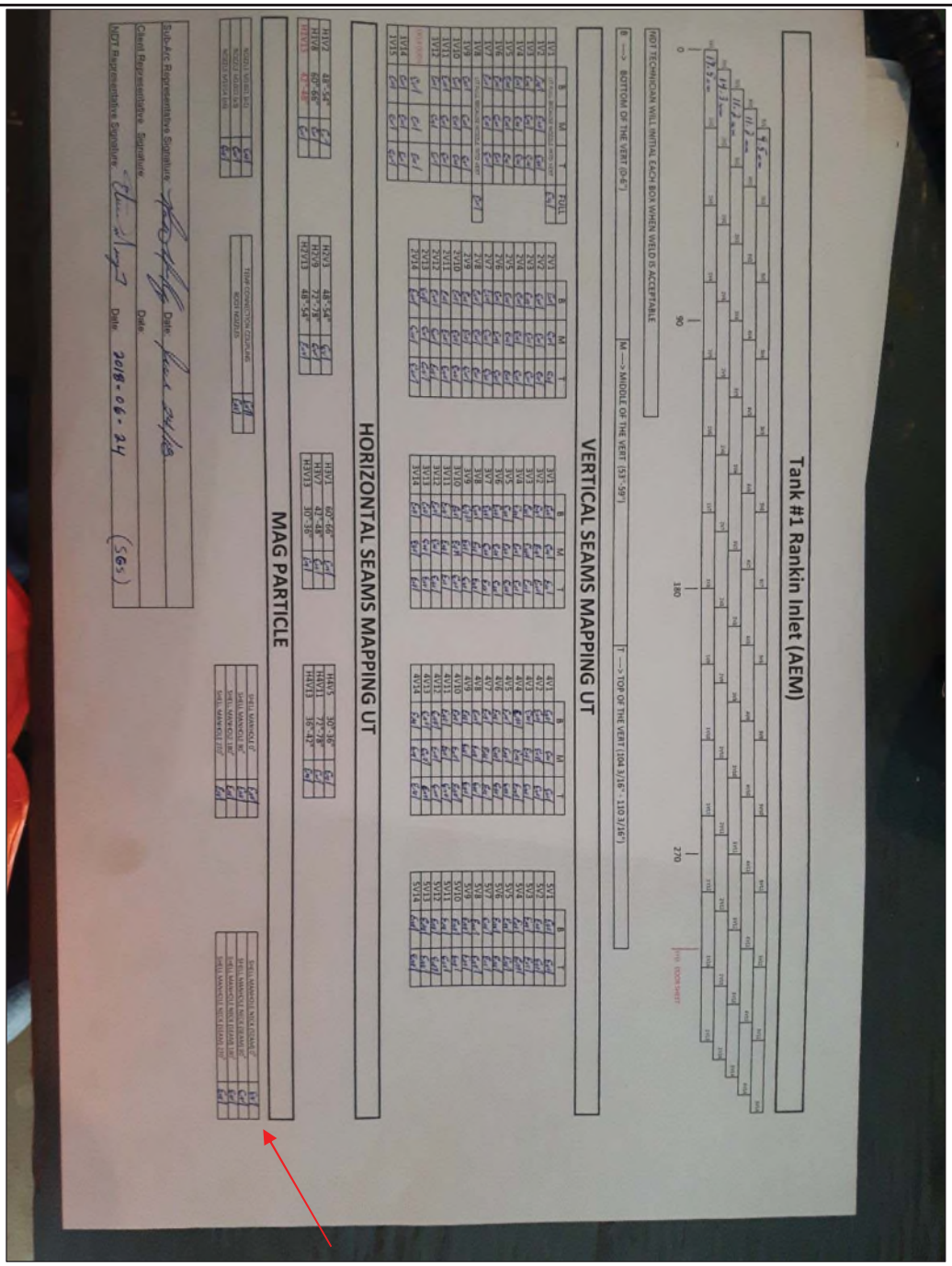

Magnetic particles mapping

Techniciens : **Technicians :**	Etienne Munger ASNT-TC-1A Level 2 CAN/CGSB 48.9712 MT Level 2	**Assistants:** Qualification	**Approuvé par :** **Approved by :**	Patrick Brodeur Superviseur technique CSA W178.2 niv.3

Ce rapport ne doit pas être reproduit, sinon en entier, sans l'autorisation écrite de SGS CANADA inc.
Le présent rapport est émis par la Société conformément à ses Conditions Générales de Service accessibles sur http://www.sgs.ca/fr-FR/Terms-and-Conditions.aspx
This report is confidential and shall not be reproduced without the written approval of SGS CANADA Inc
This document is issued by the Company under its General Conditions of Service accessible at http://www.sgs.ca/en/Terms-and-Conditions.aspx

Inukshuk Construction Limited
Industrial Contracting Project Management

PO Box 654
Rankin Inlet, NU X0C 0G0
T 867.645.4030 F 867.645.4064

Field Erected Fuel Storage Tank

Handover Package

Item 16 – Internals

Contents

1. Welding Visual Report
2. NDT Report

4605-47 Street
Vermillion, AB, T9X 1L6
780-608-9589

QUALITY CONTROL MANUAL

Exhibit 15c, Rev 1

VISUAL TEST REPORT

Customer: Agnico Eagle

Location: Rankin Inlet

Code Requiring Test: API 650 (section 8.5.2) Reason for Test: New Construction

A weld shall be acceptable by visual examination if the inspection shows the following.

a) There are no crater cracks, other surface cracks or arc strikes in or adjacent to the welded joints.
b) Maximum permissible undercut is 0.4 mm (1/64 in.) in depth for vertical butt joints, vertically oriented permanent attachments, attachment welds for nozzles, manholes, flush-type openings, and the inside shell-to-bottom welds. For horizontal butt joints, horizontally oriented permanent attachments, and annular-ring butt joints, the maximum permissible undercut is 0.8 mm (1/32 in.) in depth.
c) The frequency of surface porosity in the weld does not exceed one cluster (one or more pores) in any 100 mm (4 in.) of length, and the diameter of each cluster does not exceed 2.5 mm (3/32 in.).
d) The reinforcement of the welds on all thicknesses:

Plate Thickness mm (in.)	Maximum Reinforcement Thickness mm (in.)	
	Vertical Joints	Horizontal Joints
≤ 13 (1/2)	2.5 (3/32)	3 (1/8)
> 13 (1/2) to 25 (1)	3 (1/8)	5 (3/16)
> 25 (1)	5 (3/16)	6 (1/4)

Surface Condition (As Welded)

Test Solution: N/A Test Date(s): June 20/18

Tested by: MATT MACKENZIE Ambient Conditions: 7°

Items Tested:

INTERNALS / PIPE SUPPORTS.

Results:

NO DEFECTS WERE FOUND. ALL WELDING ACCEPTABLE

Sub-Arc Representative Signature: _____ Date: June 20/18

Client Representative Signature: Clem Bonnar Date: June 20/18

Client Signature: _____ Date: _____

Inukshuk Construction Limited
Industrial Contracting Project Management

PO Box 654
Rankin Inlet, NU X0C 0G0
T 867.645.4030 F 867.645.4064

Field Erected Fuel Storage Tank

Handover Package

Item 17 – Externals

Contents

1. Welding Visual Report

4605-47 Street
Vermillion, AB, T9X 1L6
780-608-9589

QUALITY CONTROL MANUAL

Exhibit 15c, Rev 1

VISUAL TEST REPORT

Customer: Agnico Eagle

Location: Rankin Inlet

Code Requiring Test: API 650 (section 8.5.2) Reason for Test: New Construction

A weld shall be acceptable by visual examination if the inspection shows the following.

a) There are no crater cracks, other surface cracks or arc strikes in or adjacent to the welded joints.
b) Maximum permissible undercut is 0.4 mm (1/64 in.) in depth for vertical butt joints, vertically oriented permanent attachments, attachment welds for nozzles, manholes, flush-type openings, and the inside shell-to-bottom welds. For horizontal butt joints, horizontally oriented permanent attachments, and annular-ring butt joints, the maximum permissible undercut is 0.8 mm (1/32 in.) in depth.
c) The frequency of surface porosity in the weld does not exceed one cluster (one or more pores) in any 100 mm (4 in.) of length, and the diameter of each cluster does not exceed 2.5 mm (3/32 in.).
d) The reinforcement of the welds on all thicknesses:

Plate Thickness mm (in.)	Maximum Reinforcement Thickness mm (in.)	
	Vertical Joints	Horizontal Joints
≤ 13 (1/2)	2.5 (3/32)	3 (1/8)
> 13 (1/2) to 25 (1)	3 (1/8)	5 (3/16)
> 25 (1)	5 (3/16)	6 (1/4)

Surface Condition (As Welded)

Test Solution: N/A Test Date(s): June 24/18

Tested by: MATT MACKENZIE Ambient Conditions: 5°

Items Tested:

Externals / Pipe Supports.

Results:

No Defects Were Found. ALL WELDS ACCEPTABLE.

Sub-Arc Representative Signature: _____ Date: June 24/18

Client Representative Signature: _____ Date: June 24/18

Client Signature: _____ Date: _____

Inukshuk Construction Limited
Industrial Contracting Project Management

PO Box 654
Rankin Inlet, NU X0C 0G0
T 867.645.4030 F 867.645.4064

Field Erected Fuel Storage Tank

Handover Package

Item 18 – Stairs and Platforms

Contents

1. Visual Report

Sub-Arc Systems Inc.

4605-47 Street
Vermillion, AB, T9X 1L6
780-608-9589

Exhibit 15c, Rev 1

QUALITY CONTROL MANUAL

VISUAL TEST REPORT

Customer: Agnico Eagle

Location: Rankin Inlet

Code Requiring Test: API 650 (section 8.5.2) Reason for Test: New Construction

A weld shall be acceptable by visual examination if the inspection shows the following.

a) There are no crater cracks, other surface cracks or arc strikes in or adjacent to the welded joints.
b) Maximum permissible undercut is 0.4 mm (1/64 in.) in depth for vertical butt joints, vertically oriented permanent attachments, attachment welds for nozzles, manholes, flush-type openings, and the inside shell-to-bottom welds. For horizontal butt joints, horizontally oriented permanent attachments, and annular-ring butt joints, the maximum permissible undercut is 0.8 mm (1/32 in.) in depth.
c) The frequency of surface porosity in the weld does not exceed one cluster (one or more pores) in any 100 mm (4 in.) of length, and the diameter of each cluster does not exceed 2.5 mm (3/32 in.).
d) The reinforcement of the welds on all thicknesses:

Plate Thickness mm (in.)	Maximum Reinforcement Thickness mm (in.)	
	Vertical Joints	Horizontal Joints
≤ 13 (1/2)	2.5 (3/32)	3 (1/8)
> 13 (1/2) to 25 (1)	3 (1/8)	5 (3/16)
> 25 (1)	5 (3/16)	6 (1/4)

Surface Condition (As Welded)

Test Solution: N/A Test Date(s): JUNE 24/18

Tested by: MATT MACKENZIE Ambient Conditions: 5°

Items Tested:

STAIRS & PLATFORMS

Results:

NO DEFECTS WERE FOUND. ALL WELDING ACCEPTABLE.

Sub-Arc Representative Signature: _____ Date: June 24/18.

Client Representative Signature: _____ Date: June 24/18

Client Signature: _____ Date: _____

Inukshuk Construction Limited
Industrial Contracting Project Management

PO Box 654
Rankin Inlet, NU X0C 0G0
T 867.645.4030 F 867.645.4064

Field Erected Fuel Storage Tank

Handover Package

Item 19 – Bolts & Nuts

Contents

1. Hardware Schedule

Inukshuk Construction Limited
Industrial Contracting Project Management

PO Box 654
Rankin Inlet, NU X0C 0G0
T 867.645.4030 F 867.645.4064

Field Erected Fuel Storage Tank

Handover Package

Item 20 – Final

Contents

1. Scan of Name Plate
2. Punch List
3. Data Sheet (Calibration of Tank)
4. Manufacturer's Certification

API STANDARD 650

APPENDIX	B, K, T	YEAR COMPLETED	2018
EDITION	TWELFTH	ADDENDUM NO.	2
NOMINAL DIAMETER	43m	NOMINAL HEIGHT	14M
MAXIMUM CAPACITY	20,000CUM	DESIGN LIQUID LEVEL	14M
DESIGN SPECIFIC GRAVITY	0.85	DESIGN METAL TEMP.	-40 DEG C
DESIGN PRESSURE	ATM	MAXIMUM OPERATING TEMP.	90 DEG C
MANUFACTURE'S SERIAL NO.	295-1	PARTIAL STRESS RELIEF	-
		PURCHASER'S TANK NO.	65TNK11601
FABRICATED BY	INUKSHUK CONSTRUCTION LIMITED		
ERECTED BY	SUB-ARC SYSTEMS INC.		

SHELL COURSE	MATERIAL
1 TO 5	CSA G40.21M-260WT NORMALIZED TCVN 13FT/LBS@-45DEG F TRANSVERSE CHARPY TCVN 15FT/LBS@-45DEG F LONGITUDINAL CHARPY

4605-47 Street
Vermillion, AB, T9X 1L6
780-608-9589

QUALITY CONTROL MANUAL

Exhibit 21a, Rev 1

DEFICIENCY PUNCH LIST RECORD

Project: AEM, Rankin Inlet		**Project No.:** Inukshuk Construction -1	**Tank Tag:** Tk-1 **Date:** June 25, 2018	
Item No.	Drawing No.	Deficiency	Date Completed	Sign Off
1		TORQUE SEQUENCE MANHOLES	June 27/18	MM. CB.
2		COVER OPEN NOZZLES WITH BAGS	June 27/18	MM. CB
3				
4				
5				
6				
7				
8				
9				
10				
11				
12				

Matthew MacKenzie — Signature — June 27/18. Date:
Sub-Arc Representative

Clem Bonia — Signature — June 27/18 Date:
Agnico Eagle Representative

Meliadine
Rankin Inlet

Tank No. 1
INNAGE TABLE

Calibration@AmSpecGroup.com

CAPACITIES GIVEN IN CUBIC METERS

GAUGE HEIGHT: 14.275 M

mm	0 M	mm	0 M	mm	0 M	mm	0 M	mm	0 M	mm	0 M	mm	0 M	mm	0 M	mm	0 M	mm	0 M
0.000	CROWN BOTTOM 6.462	0.100	CROWN BOTTOM 91.606	0.200	230.561	0.300	375.466	0.400	520.403	0.500	665.397	0.600	810.403	0.700	955.453	0.800	1,100.503	0.900	1,245.552
0.001	7.009	0.101	92.863	0.201	232.010	0.301	376.915	0.401	521.853	0.501	666.847	0.601	811.853	0.701	956.903	0.801	1,101.953	0.901	1,247.003
0.002	7.556	0.102	94.121	0.202	233.459	0.302	378.364	0.402	523.302	0.502	668.297	0.602	813.304	0.702	958.354	0.802	1,103.404	0.902	1,248.453
0.003	8.102	0.103	95.378	0.203	234.908	0.303	379.813	0.403	524.752	0.503	669.747	0.603	814.754	0.703	959.804	0.803	1,104.854	0.903	1,249.904
0.004	8.649	0.104	96.635	0.204	236.356	0.304	381.262	0.404	526.202	0.504	671.197	0.604	816.205	0.704	961.255	0.804	1,106.305	0.904	1,251.354
0.005	9.196	0.105	97.892	0.205	237.805	0.305	382.712	0.405	527.652	0.505	672.647	0.605	817.655	0.705	962.705	0.805	1,107.755	0.905	1,252.805
0.006	9.743	0.106	99.150	0.206	239.254	0.306	384.161	0.406	529.102	0.506	674.097	0.606	819.106	0.706	964.156	0.806	1,109.206	0.906	1,254.255
0.007	10.290	0.107	100.407	0.207	240.703	0.307	385.610	0.407	530.552	0.507	675.547	0.607	820.556	0.707	965.606	0.807	1,110.656	0.907	1,255.706
0.008	10.837	0.108	101.664	0.208	242.152	0.308	387.059	0.408	532.002	0.508	676.997	0.608	822.007	0.708	967.057	0.808	1,112.107	0.908	1,257.156
0.009	11.384	0.109	102.921	0.209	243.601	0.309	388.508	0.409	533.452	0.509	678.447	0.609	823.457	0.709	968.507	0.809	1,113.557	0.909	1,258.607
0.010	11.931	0.110	104.179	0.210	245.050	0.310	389.958	0.410	534.902	0.510	679.896	0.610	824.908	0.710	969.958	0.810	1,115.008	0.910	1,260.057
0.011	12.478	0.111	105.436	0.211	246.499	0.311	391.407	0.411	536.352	0.511	681.346	0.611	826.358	0.711	971.408	0.811	1,116.458	0.911	1,261.508
0.012	13.025	0.112	106.693	0.212	247.948	0.312	392.856	0.412	537.802	0.512	682.796	0.612	827.809	0.712	972.859	0.812	1,117.909	0.912	1,262.958
0.013	13.572	0.113	107.951	0.213	249.397	0.313	394.305	0.413	539.252	0.513	684.246	0.613	829.259	0.713	974.309	0.813	1,119.359	0.913	1,264.409
0.014	14.119	0.114	109.208	0.214	250.846	0.314	395.754	0.414	540.702	0.514	685.696	0.614	830.710	0.714	975.760	0.814	1,120.810	0.914	1,265.859
0.015	14.666	0.115	110.465	0.215	252.295	0.315	397.203	0.415	542.151	0.515	687.146	0.615	832.160	0.715	977.210	0.815	1,122.260	0.915	1,267.310
0.016	15.212	0.116	111.722	0.216	253.744	0.316	398.653	0.416	543.601	0.516	688.596	0.616	833.611	0.716	978.661	0.816	1,123.711	0.916	1,268.760
0.017	15.759	0.117	112.980	0.217	255.193	0.317	400.102	0.417	545.051	0.517	690.046	0.617	835.061	0.717	980.111	0.817	1,125.161	0.917	1,270.211
0.018	16.306	0.118	114.237	0.218	256.642	0.318	401.551	0.418	546.501	0.518	691.496	0.618	836.512	0.718	981.562	0.818	1,126.612	0.918	1,271.661
0.019	16.853	0.119	115.494	0.219	258.091	0.319	403.000	0.419	547.951	0.519	692.946	0.619	837.962	0.719	983.012	0.819	1,128.062	0.919	1,273.112
0.020	17.400	0.120	116.751	0.220	259.540	0.320	404.449	0.420	549.401	0.520	694.396	0.620	839.413	0.720	984.463	0.820	1,129.513	0.920	1,274.562
0.021	17.947	0.121	118.009	0.221	260.988	0.321	405.899	0.421	550.851	0.521	695.846	0.621	840.863	0.721	985.913	0.821	1,130.963	0.921	1,276.013
0.022	18.494	0.122	119.266	0.222	262.437	0.322	407.348	0.422	552.301	0.522	697.296	0.622	842.314	0.722	987.364	0.822	1,132.414	0.922	1,277.463
0.023	19.041	0.123	120.523	0.223	263.886	0.323	408.797	0.423	553.751	0.523	698.746	0.623	843.764	0.723	988.814	0.823	1,133.864	0.923	1,278.914
0.024	19.588	0.124	121.781	0.224	265.335	0.324	410.246	0.424	555.201	0.524	700.196	0.624	845.215	0.724	990.265	0.824	1,135.315	0.924	1,280.364
0.025	20.135	0.125	123.038	0.225	266.784	0.325	411.695	0.425	556.651	0.525	701.646	0.625	846.665	0.725	991.715	0.825	1,136.765	0.925	1,281.815
0.026	20.931	0.126	124.445	0.226	268.233	0.326	413.145	0.426	558.101	0.526	703.096	0.626	848.116	0.726	993.166	0.826	1,138.216	0.926	1,283.265
0.027	21.728	0.127	125.851	0.227	269.682	0.327	414.594	0.427	559.551	0.527	704.546	0.627	849.566	0.727	994.616	0.827	1,139.666	0.927	1,284.716
0.028	22.524	0.128	127.258	0.228	271.131	0.328	416.043	0.428	561.001	0.528	705.996	0.628	851.017	0.728	996.067	0.828	1,141.117	0.928	1,286.166
0.029	23.321	0.129	128.665	0.229	272.580	0.329	417.492	0.429	562.451	0.529	707.445	0.629	852.467	0.729	997.517	0.829	1,142.567	0.929	1,287.617
0.030	24.117	0.130	130.072	0.230	274.029	0.330	418.941	0.430	563.901	0.530	708.895	0.630	853.918	0.730	998.968	0.830	1,144.018	0.930	1,289.067
0.031	24.914	0.131	131.478	0.231	275.478	0.331	420.390	0.431	565.351	0.531	710.345	0.631	855.368	0.731	1,000.418	0.831	1,145.468	0.931	1,290.518
0.032	25.710	0.132	132.885	0.232	276.927	0.332	421.840	0.432	566.801	0.532	711.795	0.632	856.819	0.732	1,001.869	0.832	1,146.919	0.932	1,291.968
0.033	26.507	0.133	134.292	0.233	278.376	0.333	423.289	0.433	568.251	0.533	713.245	0.633	858.269	0.733	1,003.319	0.833	1,148.369	0.933	1,293.419
0.034	27.303	0.134	135.699	0.234	279.825	0.334	424.738	0.434	569.700	0.534	714.695	0.634	859.720	0.734	1,004.770	0.834	1,149.820	0.934	1,294.869
0.035	28.100	0.135	137.105	0.235	281.274	0.335	426.187	0.435	571.150	0.535	716.145	0.635	861.170	0.735	1,006.220	0.835	1,151.270	0.935	1,296.320
0.036	28.896	0.136	138.512	0.236	282.723	0.336	427.636	0.436	572.600	0.536	717.595	0.636	862.621	0.736	1,007.671	0.836	1,152.721	0.936	1,297.770
0.037	29.693	0.137	139.919	0.237	284.172	0.337	429.085	0.437	574.050	0.537	719.045	0.637	864.071	0.737	1,009.121	0.837	1,154.171	0.937	1,299.221
0.038	30.489	0.138	141.326	0.238	285.621	0.338	430.535	0.438	575.500	0.538	720.495	0.638	865.522	0.738	1,010.572	0.838	1,155.622	0.938	1,300.671
0.039	31.286	0.139	142.732	0.239	287.070	0.339	431.984	0.439	576.950	0.539	721.945	0.639	866.972	0.739	1,012.022	0.839	1,157.072	0.939	1,302.122
0.040	32.082	0.140	144.139	0.240	288.519	0.340	433.433	0.440	578.400	0.540	723.395	0.640	868.423	0.740	1,013.473	0.840	1,158.523	0.940	1,303.572
0.041	32.879	0.141	145.546	0.241	289.968	0.341	434.882	0.441	579.850	0.541	724.845	0.641	869.873	0.741	1,014.923	0.841	1,159.973	0.941	1,305.023
0.042	33.675	0.142	146.952	0.242	291.417	0.342	436.331	0.442	581.300	0.542	726.295	0.642	871.324	0.742	1,016.374	0.842	1,161.424	0.942	1,306.473
0.043	34.472	0.143	148.359	0.243	292.866	0.343	437.781	0.443	582.750	0.543	727.745	0.643	872.774	0.743	1,017.824	0.843	1,162.874	0.943	1,307.924
0.044	35.268	0.144	149.766	0.244	294.315	0.344	439.230	0.444	584.200	0.544	729.195	0.644	874.225	0.744	1,019.275	0.844	1,164.325	0.944	1,309.374
0.045	36.065	0.145	151.173	0.245	295.764	0.345	440.679	0.445	585.650	0.545	730.645	0.645	875.675	0.745	1,020.725	0.845	1,165.775	0.945	1,310.825
0.046	36.861	0.146	152.579	0.246	297.213	0.346	442.128	0.446	587.100	0.546	732.095	0.646	877.126	0.746	1,022.176	0.846	1,167.226	0.946	1,312.275
0.047	37.658	0.147	153.986	0.247	298.662	0.347	443.577	0.447	588.550	0.547	733.545	0.647	878.576	0.747	1,023.626	0.847	1,168.676	0.947	1,313.726
0.048	38.454	0.148	155.393	0.248	300.111	0.348	445.026	0.448	590.000	0.548	734.994	0.648	880.027	0.748	1,025.077	0.848	1,170.127	0.948	1,315.176
0.049	39.251	0.149	156.800	0.249	301.560	0.349	446.476	0.449	591.450	0.549	736.444	0.649	881.477	0.749	1,026.527	0.849	1,171.577	0.949	1,316.627
0.050	40.047	0.150	158.206	0.250	303.009	0.350	447.925	0.450	592.900	0.550	737.894	0.650	882.928	0.750	1,027.978	0.850	1,173.028	0.950	1,318.077
0.051	40.995	0.151	159.651	0.251	304.458	0.351	449.374	0.451	594.350	0.551	739.344	0.651	884.378	0.751	1,029.428	0.851	1,174.478	0.951	1,319.528
0.052	41.943	0.152	161.095	0.252	305.907	0.352	450.823	0.452	595.800	0.552	740.794	0.652	885.829	0.752	1,030.879	0.852	1,175.928	0.952	1,320.978
0.053	42.891	0.153	162.539	0.253	307.356	0.353	452.273	0.453	597.249	0.553	742.244	0.653	887.279	0.753	1,032.329	0.853	1,177.379	0.953	1,322.429
0.054	43.839	0.154	163.983	0.254	308.805	0.354	453.723	0.454	598.699	0.554	743.694	0.654	888.730	0.754	1,033.780	0.854	1,178.829	0.954	1,323.879
0.055	44.787	0.155	165.428	0.255	310.254	0.355	455.172	0.455	600.149	0.555	745.144	0.655	890.180	0.755	1,035.230	0.855	1,180.280	0.955	1,325.330
0.056	45.734	0.156	166.872	0.256	311.703	0.356	456.622	0.456	601.599	0.556	746.594	0.656	891.631	0.756	1,036.681	0.856	1,181.730	0.956	1,326.780
0.057	46.682	0.157	168.316	0.257	313.152	0.357	458.071	0.457	603.049	0.557	748.044	0.657	893.081	0.757	1,038.131	0.857	1,183.181	0.957	1,328.231
0.058	47.630	0.158	169.760	0.258	314.601	0.358	459.521	0.458	604.499	0.558	749.494	0.658	894.532	0.758	1,039.582	0.858	1,184.631	0.958	1,329.681
0.059	48.578	0.159	171.204	0.259	316.050	0.359	460.971	0.459	605.949	0.559	750.944	0.659	895.982	0.759	1,041.032	0.859	1,186.082	0.959	1,331.132
0.060	49.526	0.160	172.649	0.260	317.499	0.360	462.420	0.460	607.399	0.560	752.394	0.660	897.433	0.760	1,042.483	0.860	1,187.532	0.960	1,332.582
0.061	50.474	0.161	174.093	0.261	318.948	0.361	463.870	0.461	608.849	0.561	753.844	0.661	898.883	0.761	1,043.933	0.861	1,188.983	0.961	1,334.033
0.062	51.422	0.162	175.537	0.262	320.397	0.362	465.319	0.462	610.299	0.562	755.294	0.662	900.334	0.762	1,045.384	0.862	1,190.433	0.962	1,335.483
0.063	52.369	0.163	176.981	0.263	321.846	0.363	466.769	0.463	611.749	0.563	756.744	0.663	901.784	0.763	1,046.834	0.863	1,191.884	0.963	1,336.934
0.064	53.317	0.164	178.425	0.264	323.295	0.364	468.218	0.464	613.199	0.564	758.194	0.664	903.235	0.764	1,048.285	0.864	1,193.334	0.964	1,338.384
0.065	54.265	0.165	179.870	0.265	324.744	0.365	469.668	0.465	614.649	0.565	759.644	0.665	904.685	0.765	1,049.735	0.865	1,194.785	0.965	1,339.835
0.066	55.213	0.166	181.314	0.266	326.193	0.366	471.118	0.466	616.099	0.566	761.094	0.666	906.136	0.766	1,051.186	0.866	1,196.235	0.966	1,341.285
0.067	56.161	0.167	182.758	0.267	327.642	0.367	472.567	0.467	617.549	0.567	762.543	0.667	907.586	0.767	1,052.636	0.867	1,197.686	0.967	1,342.736
0.068	57.109	0.168	184.202	0.268	329.091	0.368	474.017	0.468	618.999	0.568	763.993	0.668	909.037	0.768	1,054.087	0.868	1,199.136	0.968	1,344.186
0.069	58.056	0.169	185.646	0.269	330.540	0.369	475.466	0.469	620.449	0.569	765.443	0.669	910.487	0.769	1,055.537	0.869	1,200.587	0.969	1,345.637
0.070	59.004	0.170	187.091	0.270	331.989	0.370	476.916	0.470	621.899	0.570	766.893	0.670	911.938	0.770	1,056.988	0.870	1,202.037	0.970	1,347.087
0.071	59.952	0.171	188.535	0.271	333.438	0.371	478.365	0.471	623.349	0.571	768.343	0.671	913.388	0.771	1,058.438	0.871	1,203.488	0.971	1,348.538
0.072	60.900	0.172	189.979	0.272	334.888	0.372	479.815	0.472	624.798	0.572	769.793	0.672	914.839	0.772	1,059.889	0.872	1,204.938	0.972	1,349.988
0.073	61.848	0.173	191.423	0.273	336.337	0.373	481.265	0.473	626.248	0.573	771.243	0.673	916.289	0.773	1,061.339	0.873	1,206.389	0.973	1,351.439
0.074	62.796	0.174	192.867	0.274	337.786	0.374	482.714	0.474	627.698	0.574	772.693	0.674	917.740	0.774	1,062.790	0.874	1,207.839	0.974	1,352.889
0.075	63.744	0.175	194.312	0.275	339.235	0.375	484.164	0.475	629.148	0.575	774.143	0.675	919.190	0.775	1,064.240	0.875	1,209.290	0.975	1,354.340
0.076	64.858	0.176	195.762	0.276	340.684	0.376	485.613	0.476	630.598	0.576	775.593	0.676	920.641	0.776	1,065.691	0.876	1,210.740	0.976	1,355.790
0.077	65.973	0.177	197.212	0.277	342.133	0.377	487.063	0.477	632.048	0.577	777.043	0.677	922.091	0.777	1,067.141	0.877	1,212.191	0.977	1,357.241
0.078	67.087	0.178	198.662	0.278	343.582	0.378	488.512	0.478	633.498	0.578	778.493	0.678	923.542	0.778	1,068.592	0.878	1,213.641	0.978	1,358.691
0.079	68.202	0.179	200.112	0.279	345.031	0.379	489.962	0.479	634.948	0.579	779.943	0.679	924.992	0.779	1,070.042	0.879	1,215.092	0.979	1,360.142
0.080	69.316	0.180	201.562	0.280	346.481	0.380	491.412	0.480	636.398	0.580	781.393	0.680	926.443	0.780	1,071.493	0.880	1,216.542	0.980	1,361.592
0.081	70.431	0.181	203.011	0.281	347.930	0.381	492.861	0.481	637.848	0.581	782.843	0.681	927.893	0.781	1,072.943	0.881	1,217.993	0.981	1,363.043
0.082	71.545	0.182	204.461	0.282	349.379	0.382	494.311	0.482	639.298	0.582	784.294	0.682	929.344	0.782	1,074.394	0.882	1,219.443	0.982	1,364.493
0.083	72.660	0.183	205.911	0.283	350.828	0.383	495.760	0.483	640.748	0.583	785.744	0.683	930.794	0.783	1,075.844	0.883	1,220.894	0.983	1,365.944
0.084	73.774	0.184	207.361	0.284	352.278	0.384	497.210	0.484	642.198	0.584	787.195	0.684	932.245	0.784	1,077.295	0.884	1,222.344	0.984	1,367.394
0.085	74.889	0.185	208.811	0.285	353.727	0.385	498.659	0.485	643.648	0.585	788.645	0.685	933.695	0.785	1,078.745	0.885	1,223.795	0.985	1,368.845
0.086	76.003	0.186	210.261	0.286	355.176	0.386	500.109	0.486	645.098	0.586	790.096	0.686	935.146	0.786	1,080.196	0.886	1,225.245	0.986	1,370.295
0.087	77.118	0.187	211.711	0.287	356.625	0.387	501.559	0.487	646.548	0.587	791.546	0.687	936.596	0.787	1,081.646	0.887	1,226.696	0.987	1,371.746
0.088	78.232	0.188	213.161	0.288	358.075	0.388	503.008	0.488	647.998	0.588	792.997	0.688	938.047	0.788	1,083.097	0.888	1,228.146	0.988	1,373.196
0.089	79.347	0.189	214.611	0.289	359.524	0.389	504.458	0.489	649.448	0.589	794.447	0.689	939.497	0.789	1,084.547	0.889	1,229.597	0.989	1,374.647
0.090	80.461	0.190	216.061	0.290	360.973	0.390	505.907	0.490	650.898	0.590	795.898	0.690	940.948	0.790	1,085.998	0.890	1,231.047	0.990	1,376.097
0.091	81.576	0.191	217.511	0.291	362.422	0.391	507.357	0.491	652.347	0.591	797.348	0.691	942.398	0.791	1,087.448	0.891	1,232.498	0.991	1,377.548
0.092	82.690	0.192	218.961	0.292	363.872	0.392	508.806	0.492	653.797	0.592	798.799	0.692	943.849	0.792	1,088.899	0.892	1,233.948	0.992	1,378.998
0.093	83.805	0.193	220.411	0.293	365.321	0.393	510.256	0.493	655.247	0.593	800.249	0.693	945.299	0.793	1,090.349	0.893	1,235.399	0.993	1,380.449
0.094	84.919	0.194	221.861	0.294	366.770	0.394	511.706	0.494	656.697	0.594	801.700	0.694	946.750	0.794	1,091.800	0.894	1,236.849	0.994	1,381.899
0.095	86.034	0.195	223.311	0.295	368.219	0.395	513.155	0.495	658.147	0.595	803.150	0.695	948.200	0.795	1,093.250	0.895	1,238.300	0.995	1,383.350
0.096	87.148	0.196	224.761	0.296	369.669	0.396	514.605	0.496	659.597	0.596	804.601	0.696	949.651	0.796	1,094.701	0.896	1,239.750	0.996	1,384.800
0.097	88.263	0.197	226.211	0.297	371.118	0.397	516.054	0.497	661.047	0.597	806.051	0.697	951.101	0.797	1,096.151	0.897	1,241.201	0.997	1,386.251
0.098	89.377	0.198	227.661	0.298	372.567	0.398	517.504	0.498	662.497	0.598	807.502	0.698	952.552	0.798	1,097.602	0.898	1,242.651	0.998	1,387.701
0.099	90.492	0.199	229.111	0.299	374.016	0.399	518.953	0.499	663.947	0.599	808.952	0.699	954.002	0.799	1,099.052	0.899	1,244.102	0.999	1,389.152

NOTE: TANK STRAPPED AND COMPUTED IN ACCORDANCE WITH API STANDARD MPMS CHAPTER 2.2C.

NOTE: CAPACITY TABLE REFLECTS AN OPERATING TEMPERATURE OF 60 DEGREES F.

NOTE: LIQUID HEAD STRESS HAS BEEN APPLIED TO CAPACITY TABLE AT SPECIFIC GRAVITY 0.8500.

NOTE: A 22.2 CM CROWN BOTTOM HAS BEEN APPLIED BELOW 18 CM

NOTE: NOMINAL TANK DIAMETER = 42.98 M SHELL HEIGHT = 13.84 M

DATE STRAPPED: 06/26/18 BY: RJ

DATE COMPUTED: 07/03/18 BY: WLH

DATE ISSUED: 07/03/18

AMSPEC

Meliadine
Rankin Inlet

Tank No. 1
INNAGE TABLE

Calibration@AmSpecGroup.com

CAPACITIES GIVEN IN CUBIC METERS

GAUGE HEIGHT: 14.275 M

mm	1 M	mm	1 M	mm	1 M	mm	1 M	mm	1 M	mm	1 M	mm	1 M	mm	1 M	mm	1 M	mm	1 M
0.000	1,390.602	0.100	1,535.652	0.200	1,680.702	0.300	1,825.752	0.400	1,970.802	0.500	2,115.821	0.600	2,260.816	0.700	2,405.810	0.800	2,550.805	0.900	2,695.800
0.001	1,392.053	0.101	1,537.103	0.201	1,682.153	0.301	1,827.202	0.401	1,972.252	0.501	2,117.271	0.601	2,262.266	0.701	2,407.260	0.801	2,552.255	0.901	2,697.250
0.002	1,393.503	0.102	1,538.553	0.202	1,683.603	0.302	1,828.653	0.402	1,973.703	0.502	2,118.721	0.602	2,263.716	0.702	2,408.710	0.802	2,553.705	0.902	2,698.700
0.003	1,394.954	0.103	1,540.004	0.203	1,685.054	0.303	1,830.103	0.403	1,975.153	0.503	2,120.171	0.603	2,265.165	0.703	2,410.160	0.803	2,555.155	0.903	2,700.150
0.004	1,396.404	0.104	1,541.454	0.204	1,686.504	0.304	1,831.554	0.404	1,976.604	0.504	2,121.621	0.604	2,266.615	0.704	2,411.610	0.804	2,556.605	0.904	2,701.600
0.005	1,397.855	0.105	1,542.905	0.205	1,687.955	0.305	1,833.004	0.405	1,978.054	0.505	2,123.071	0.605	2,268.065	0.705	2,413.060	0.805	2,558.055	0.905	2,703.050
0.006	1,399.305	0.106	1,544.355	0.206	1,689.405	0.306	1,834.455	0.406	1,979.505	0.506	2,124.521	0.606	2,269.515	0.706	2,414.510	0.806	2,559.505	0.906	2,704.500
0.007	1,400.756	0.107	1,545.806	0.207	1,690.856	0.307	1,835.905	0.407	1,980.955	0.507	2,125.970	0.607	2,270.965	0.707	2,415.960	0.807	2,560.955	0.907	2,705.950
0.008	1,402.206	0.108	1,547.256	0.208	1,692.306	0.308	1,837.356	0.408	1,982.406	0.508	2,127.420	0.608	2,272.415	0.708	2,417.410	0.808	2,562.405	0.908	2,707.399
0.009	1,403.657	0.109	1,548.707	0.209	1,693.757	0.309	1,838.806	0.409	1,983.856	0.509	2,128.870	0.609	2,273.865	0.709	2,418.860	0.809	2,563.855	0.909	2,708.849
0.010	1,405.107	0.110	1,550.157	0.210	1,695.207	0.310	1,840.257	0.410	1,985.307	0.510	2,130.320	0.610	2,275.315	0.710	2,420.310	0.810	2,565.305	0.910	2,710.299
0.011	1,406.558	0.111	1,551.608	0.211	1,696.658	0.311	1,841.707	0.411	1,986.757	0.511	2,131.770	0.611	2,276.765	0.711	2,421.760	0.811	2,566.755	0.911	2,711.749
0.012	1,408.008	0.112	1,553.058	0.212	1,698.108	0.312	1,843.158	0.412	1,988.208	0.512	2,133.220	0.612	2,278.215	0.712	2,423.210	0.812	2,568.204	0.912	2,713.199
0.013	1,409.459	0.113	1,554.509	0.213	1,699.559	0.313	1,844.608	0.413	1,989.658	0.513	2,134.670	0.613	2,279.665	0.713	2,424.660	0.813	2,569.654	0.913	2,714.649
0.014	1,410.909	0.114	1,555.959	0.214	1,701.009	0.314	1,846.059	0.414	1,991.109	0.514	2,136.120	0.614	2,281.115	0.714	2,426.110	0.814	2,571.104	0.914	2,716.099
0.015	1,412.360	0.115	1,557.410	0.215	1,702.460	0.315	1,847.509	0.415	1,992.559	0.515	2,137.570	0.615	2,282.565	0.715	2,427.560	0.815	2,572.554	0.915	2,717.549
0.016	1,413.810	0.116	1,558.860	0.216	1,703.910	0.316	1,848.960	0.416	1,994.010	0.516	2,139.020	0.616	2,284.015	0.716	2,429.010	0.816	2,574.004	0.916	2,718.999
0.017	1,415.261	0.117	1,560.311	0.217	1,705.361	0.317	1,850.410	0.417	1,995.460	0.517	2,140.470	0.617	2,285.465	0.717	2,430.459	0.817	2,575.454	0.917	2,720.449
0.018	1,416.711	0.118	1,561.761	0.218	1,706.811	0.318	1,851.861	0.418	1,996.911	0.518	2,141.920	0.618	2,286.915	0.718	2,431.909	0.818	2,576.904	0.918	2,721.899
0.019	1,418.162	0.119	1,563.212	0.219	1,708.262	0.319	1,853.311	0.419	1,998.361	0.519	2,143.370	0.619	2,288.365	0.719	2,433.359	0.819	2,578.354	0.919	2,723.349
0.020	1,419.612	0.120	1,564.662	0.220	1,709.712	0.320	1,854.762	0.420	1,999.812	0.520	2,144.820	0.620	2,289.815	0.720	2,434.809	0.820	2,579.804	0.920	2,724.799
0.021	1,421.063	0.121	1,566.113	0.221	1,711.163	0.321	1,856.212	0.421	2,001.262	0.521	2,146.270	0.621	2,291.265	0.721	2,436.259	0.821	2,581.254	0.921	2,726.249
0.022	1,422.513	0.122	1,567.563	0.222	1,712.613	0.322	1,857.663	0.422	2,002.713	0.522	2,147.720	0.622	2,292.714	0.722	2,437.709	0.822	2,582.704	0.922	2,727.699
0.023	1,423.964	0.123	1,569.014	0.223	1,714.064	0.323	1,859.113	0.423	2,004.163	0.523	2,149.170	0.623	2,294.164	0.723	2,439.159	0.823	2,584.154	0.923	2,729.149
0.024	1,425.414	0.124	1,570.464	0.224	1,715.514	0.324	1,860.564	0.424	2,005.614	0.524	2,150.620	0.624	2,295.614	0.724	2,440.609	0.824	2,585.604	0.924	2,730.599
0.025	1,426.865	0.125	1,571.915	0.225	1,716.965	0.325	1,862.014	0.425	2,007.064	0.525	2,152.070	0.625	2,297.064	0.725	2,442.059	0.825	2,587.054	0.925	2,732.049
0.026	1,428.315	0.126	1,573.365	0.226	1,718.415	0.326	1,863.465	0.426	2,008.515	0.526	2,153.520	0.626	2,298.514	0.726	2,443.509	0.826	2,588.504	0.926	2,733.499
0.027	1,429.766	0.127	1,574.816	0.227	1,719.866	0.327	1,864.915	0.427	2,009.965	0.527	2,154.969	0.627	2,299.964	0.727	2,444.959	0.827	2,589.954	0.927	2,734.948
0.028	1,431.216	0.128	1,576.266	0.228	1,721.316	0.328	1,866.366	0.428	2,011.416	0.528	2,156.419	0.628	2,301.414	0.728	2,446.409	0.828	2,591.404	0.928	2,736.398
0.029	1,432.667	0.129	1,577.717	0.229	1,722.767	0.329	1,867.816	0.429	2,012.866	0.529	2,157.869	0.629	2,302.864	0.729	2,447.859	0.829	2,592.854	0.929	2,737.848
0.030	1,434.117	0.130	1,579.167	0.230	1,724.217	0.330	1,869.267	0.430	2,014.317	0.530	2,159.319	0.630	2,304.314	0.730	2,449.309	0.830	2,594.304	0.930	2,739.298
0.031	1,435.568	0.131	1,580.618	0.231	1,725.668	0.331	1,870.717	0.431	2,015.767	0.531	2,160.769	0.631	2,305.764	0.731	2,450.759	0.831	2,595.753	0.931	2,740.748
0.032	1,437.018	0.132	1,582.068	0.232	1,727.118	0.332	1,872.168	0.432	2,017.218	0.532	2,162.219	0.632	2,307.214	0.732	2,452.209	0.832	2,597.203	0.932	2,742.198
0.033	1,438.469	0.133	1,583.519	0.233	1,728.569	0.333	1,873.618	0.433	2,018.668	0.533	2,163.669	0.633	2,308.664	0.733	2,453.659	0.833	2,598.653	0.933	2,743.648
0.034	1,439.919	0.134	1,584.969	0.234	1,730.019	0.334	1,875.069	0.434	2,020.119	0.534	2,165.119	0.634	2,310.114	0.734	2,455.109	0.834	2,600.103	0.934	2,745.098
0.035	1,441.370	0.135	1,586.420	0.235	1,731.470	0.335	1,876.519	0.435	2,021.569	0.535	2,166.569	0.635	2,311.564	0.735	2,456.559	0.835	2,601.553	0.935	2,746.548
0.036	1,442.820	0.136	1,587.870	0.236	1,732.920	0.336	1,877.970	0.436	2,023.020	0.536	2,168.019	0.636	2,313.014	0.736	2,458.008	0.836	2,603.003	0.936	2,747.998
0.037	1,444.271	0.137	1,589.321	0.237	1,734.371	0.337	1,879.420	0.437	2,024.470	0.537	2,169.469	0.637	2,314.464	0.737	2,459.458	0.837	2,604.453	0.937	2,749.448
0.038	1,445.721	0.138	1,590.771	0.238	1,735.821	0.338	1,880.871	0.438	2,025.921	0.538	2,170.919	0.638	2,315.914	0.738	2,460.908	0.838	2,605.903	0.938	2,750.898
0.039	1,447.172	0.139	1,592.222	0.239	1,737.272	0.339	1,882.321	0.439	2,027.371	0.539	2,172.369	0.639	2,317.364	0.739	2,462.358	0.839	2,607.353	0.939	2,752.348
0.040	1,448.622	0.140	1,593.672	0.240	1,738.722	0.340	1,883.772	0.440	2,028.822	0.540	2,173.819	0.640	2,318.814	0.740	2,463.808	0.840	2,608.803	0.940	2,753.798
0.041	1,450.073	0.141	1,595.123	0.241	1,740.173	0.341	1,885.222	0.441	2,030.272	0.541	2,175.269	0.641	2,320.263	0.741	2,465.258	0.841	2,610.253	0.941	2,755.248
0.042	1,451.523	0.142	1,596.573	0.242	1,741.623	0.342	1,886.673	0.442	2,031.723	0.542	2,176.719	0.642	2,321.713	0.742	2,466.708	0.842	2,611.703	0.942	2,756.698
0.043	1,452.974	0.143	1,598.024	0.243	1,743.074	0.343	1,888.123	0.443	2,033.173	0.543	2,178.169	0.643	2,323.163	0.743	2,468.158	0.843	2,613.153	0.943	2,758.148
0.044	1,454.424	0.144	1,599.474	0.244	1,744.524	0.344	1,889.574	0.444	2,034.624	0.544	2,179.619	0.644	2,324.613	0.744	2,469.608	0.844	2,614.603	0.944	2,759.598
0.045	1,455.875	0.145	1,600.925	0.245	1,745.975	0.345	1,891.024	0.445	2,036.074	0.545	2,181.069	0.645	2,326.063	0.745	2,471.058	0.845	2,616.053	0.945	2,761.048
0.046	1,457.325	0.146	1,602.375	0.246	1,747.425	0.346	1,892.475	0.446	2,037.524	0.546	2,182.518	0.646	2,327.513	0.746	2,472.508	0.846	2,617.503	0.946	2,762.497
0.047	1,458.776	0.147	1,603.826	0.247	1,748.876	0.347	1,893.925	0.447	2,038.974	0.547	2,183.968	0.647	2,328.963	0.747	2,473.958	0.847	2,618.953	0.947	2,763.947
0.048	1,460.226	0.148	1,605.276	0.248	1,750.326	0.348	1,895.376	0.448	2,040.424	0.548	2,185.418	0.648	2,330.413	0.748	2,475.408	0.848	2,620.403	0.948	2,765.397
0.049	1,461.677	0.149	1,606.727	0.249	1,751.777	0.349	1,896.826	0.449	2,041.874	0.549	2,186.868	0.649	2,331.863	0.749	2,476.858	0.849	2,621.853	0.949	2,766.847
0.050	1,463.127	0.150	1,608.177	0.250	1,753.227	0.350	1,898.277	0.450	2,043.323	0.550	2,188.318	0.650	2,333.313	0.750	2,478.308	0.850	2,623.303	0.950	2,768.297
0.051	1,464.578	0.151	1,609.628	0.251	1,754.678	0.351	1,899.727	0.451	2,044.773	0.551	2,189.768	0.651	2,334.763	0.751	2,479.758	0.851	2,624.752	0.951	2,769.747
0.052	1,466.028	0.152	1,611.078	0.252	1,756.128	0.352	1,901.178	0.452	2,046.223	0.552	2,191.218	0.652	2,336.213	0.752	2,481.208	0.852	2,626.202	0.952	2,771.197
0.053	1,467.479	0.153	1,612.529	0.253	1,757.579	0.353	1,902.628	0.453	2,047.673	0.553	2,192.668	0.653	2,337.663	0.753	2,482.658	0.853	2,627.652	0.953	2,772.647
0.054	1,468.929	0.154	1,613.979	0.254	1,759.029	0.354	1,904.079	0.454	2,049.123	0.554	2,194.118	0.654	2,339.113	0.754	2,484.108	0.854	2,629.102	0.954	2,774.097
0.055	1,470.380	0.155	1,615.430	0.255	1,760.480	0.355	1,905.529	0.455	2,050.573	0.555	2,195.568	0.655	2,340.563	0.755	2,485.557	0.855	2,630.552	0.955	2,775.547
0.056	1,471.830	0.156	1,616.880	0.256	1,761.930	0.356	1,906.980	0.456	2,052.023	0.556	2,197.018	0.656	2,342.013	0.756	2,487.007	0.856	2,632.002	0.956	2,776.997
0.057	1,473.281	0.157	1,618.331	0.257	1,763.381	0.357	1,908.430	0.457	2,053.473	0.557	2,198.468	0.657	2,343.463	0.757	2,488.457	0.857	2,633.452	0.957	2,778.447
0.058	1,474.731	0.158	1,619.781	0.258	1,764.831	0.358	1,909.881	0.458	2,054.923	0.558	2,199.918	0.658	2,344.913	0.758	2,489.907	0.858	2,634.902	0.958	2,779.897
0.059	1,476.182	0.159	1,621.232	0.259	1,766.282	0.359	1,911.331	0.459	2,056.373	0.559	2,201.368	0.659	2,346.363	0.759	2,491.357	0.859	2,636.352	0.959	2,781.347
0.060	1,477.632	0.160	1,622.682	0.260	1,767.732	0.360	1,912.782	0.460	2,057.823	0.560	2,202.818	0.660	2,347.812	0.760	2,492.807	0.860	2,637.802	0.960	2,782.797
0.061	1,479.083	0.161	1,624.133	0.261	1,769.183	0.361	1,914.232	0.461	2,059.273	0.561	2,204.268	0.661	2,349.262	0.761	2,494.257	0.861	2,639.252	0.961	2,784.247
0.062	1,480.533	0.162	1,625.583	0.262	1,770.633	0.362	1,915.683	0.462	2,060.723	0.562	2,205.718	0.662	2,350.712	0.762	2,495.707	0.862	2,640.702	0.962	2,785.697
0.063	1,481.984	0.163	1,627.034	0.263	1,772.084	0.363	1,917.133	0.463	2,062.173	0.563	2,207.168	0.663	2,352.162	0.763	2,497.157	0.863	2,642.152	0.963	2,787.147
0.064	1,483.434	0.164	1,628.484	0.264	1,773.534	0.364	1,918.584	0.464	2,063.623	0.564	2,208.618	0.664	2,353.612	0.764	2,498.607	0.864	2,643.602	0.964	2,788.597
0.065	1,484.885	0.165	1,629.935	0.265	1,774.985	0.365	1,920.034	0.465	2,065.073	0.565	2,210.067	0.665	2,355.062	0.765	2,500.057	0.865	2,645.052	0.965	2,790.046
0.066	1,486.335	0.166	1,631.385	0.266	1,776.435	0.366	1,921.485	0.466	2,066.523	0.566	2,211.517	0.666	2,356.512	0.766	2,501.507	0.866	2,646.502	0.966	2,791.496
0.067	1,487.786	0.167	1,632.836	0.267	1,777.886	0.367	1,922.935	0.467	2,067.973	0.567	2,212.967	0.667	2,357.962	0.767	2,502.957	0.867	2,647.952	0.967	2,792.946
0.068	1,489.236	0.168	1,634.286	0.268	1,779.336	0.368	1,924.386	0.468	2,069.423	0.568	2,214.417	0.668	2,359.412	0.768	2,504.407	0.868	2,649.402	0.968	2,794.396
0.069	1,490.687	0.169	1,635.737	0.269	1,780.787	0.369	1,925.836	0.469	2,070.872	0.569	2,215.867	0.669	2,360.862	0.769	2,505.857	0.869	2,650.852	0.969	2,795.846
0.070	1,492.137	0.170	1,637.187	0.270	1,782.237	0.370	1,927.287	0.470	2,072.322	0.570	2,217.317	0.670	2,362.312	0.770	2,507.307	0.870	2,652.301	0.970	2,797.296
0.071	1,493.588	0.171	1,638.638	0.271	1,783.688	0.371	1,928.737	0.471	2,073.772	0.571	2,218.767	0.671	2,363.762	0.771	2,508.757	0.871	2,653.751	0.971	2,798.746
0.072	1,495.038	0.172	1,640.088	0.272	1,785.138	0.372	1,930.188	0.472	2,075.222	0.572	2,220.217	0.672	2,365.212	0.772	2,510.207	0.872	2,655.201	0.972	2,800.196
0.073	1,496.489	0.173	1,641.539	0.273	1,786.589	0.373	1,931.638	0.473	2,076.672	0.573	2,221.667	0.673	2,366.662	0.773	2,511.657	0.873	2,656.651	0.973	2,801.646
0.074	1,497.939	0.174	1,642.989	0.274	1,788.039	0.374	1,933.089	0.474	2,078.122	0.574	2,223.117	0.674	2,368.112	0.774	2,513.106	0.874	2,658.101	0.974	2,803.096
0.075	1,499.390	0.175	1,644.440	0.275	1,789.490	0.375	1,934.539	0.475	2,079.572	0.575	2,224.567	0.675	2,369.562	0.775	2,514.556	0.875	2,659.551	0.975	2,804.546
0.076	1,500.840	0.176	1,645.890	0.276	1,790.940	0.376	1,935.990	0.476	2,081.022	0.576	2,226.017	0.676	2,371.012	0.776	2,516.006	0.876	2,661.001	0.976	2,805.996
0.077	1,502.291	0.177	1,647.341	0.277	1,792.391	0.377	1,937.440	0.477	2,082.472	0.577	2,227.467	0.677	2,372.462	0.777	2,517.456	0.877	2,662.451	0.977	2,807.446
0.078	1,503.741	0.178	1,648.791	0.278	1,793.841	0.378	1,938.891	0.478	2,083.922	0.578	2,228.917	0.678	2,373.912	0.778	2,518.906	0.878	2,663.901	0.978	2,808.896
0.079	1,505.192	0.179	1,650.242	0.279	1,795.291	0.379	1,940.341	0.479	2,085.372	0.579	2,230.367	0.679	2,375.361	0.779	2,520.356	0.879	2,665.351	0.979	2,810.346
0.080	1,506.642	0.180	1,651.692	0.280	1,796.742	0.380	1,941.792	0.480	2,086.822	0.580	2,231.817	0.680	2,376.811	0.780	2,521.806	0.880	2,666.801	0.980	2,811.796
0.081	1,508.093	0.181	1,653.143	0.281	1,798.192	0.381	1,943.242	0.481	2,088.272	0.581	2,233.267	0.681	2,378.261	0.781	2,523.256	0.881	2,668.251	0.981	2,813.246
0.082	1,509.543	0.182	1,654.593	0.282	1,799.643	0.382	1,944.693	0.482	2,089.722	0.582	2,234.717	0.682	2,379.711	0.782	2,524.706	0.882	2,669.701	0.982	2,814.696
0.083	1,510.994	0.183	1,656.044	0.283	1,801.093	0.383	1,946.143	0.483	2,091.172	0.583	2,236.167	0.683	2,381.161	0.783	2,526.156	0.883	2,671.151	0.983	2,816.146
0.084	1,512.444	0.184	1,657.494	0.284	1,802.544	0.384	1,947.594	0.484	2,092.622	0.584	2,237.616	0.684	2,382.611	0.784	2,527.606	0.884	2,672.601	0.984	2,817.595
0.085	1,513.895	0.185	1,658.945	0.285	1,803.994	0.385	1,949.044	0.485	2,094.072	0.585	2,239.066	0.685	2,384.061	0.785	2,529.056	0.885	2,674.051	0.985	2,819.045
0.086	1,515.345	0.186	1,660.395	0.286	1,805.445	0.386	1,950.495	0.486	2,095.522	0.586	2,240.516	0.686	2,385.511	0.786	2,530.506	0.886	2,675.501	0.986	2,820.495
0.087	1,516.796	0.187	1,661.846	0.287	1,806.895	0.387	1,951.945	0.487	2,096.972	0.587	2,241.966	0.687	2,386.961	0.787	2,531.956	0.887	2,676.951	0.987	2,821.945
0.088	1,518.246	0.188	1,663.296	0.288	1,808.346	0.388	1,953.396	0.488	2,098.421	0.588	2,243.416	0.688	2,388.411	0.788	2,533.406	0.888	2,678.401	0.988	2,823.395
0.089	1,519.697	0.189	1,664.747	0.289	1,809.796	0.389	1,954.846	0.489	2,099.871	0.589	2,244.866	0.689	2,389.861	0.789	2,534.856	0.889	2,679.850	0.989	2,824.845
0.090	1,521.147	0.190	1,666.197	0.290	1,811.247	0.390	1,956.297	0.490	2,101.321	0.590	2,246.316	0.690	2,391.311	0.790	2,536.306	0.890	2,681.300	0.990	2,826.295
0.091	1,522.598	0.191	1,667.648	0.291	1,812.697	0.391	1,957.747	0.491	2,102.771	0.591	2,247.766	0.691	2,392.761	0.791	2,537.756	0.891	2,682.750	0.991	2,827.745
0.092	1,524.048	0.192	1,669.098	0.292	1,814.148	0.392	1,959.198	0.492	2,104.221	0.592	2,249.216	0.692	2,394.211	0.792	2,539.206	0.892	2,684.200	0.992	2,829.195
0.093	1,525.499	0.193	1,670.549	0.293	1,815.598	0.393	1,960.648	0.493	2,105.671	0.593	2,250.666	0.693	2,395.661	0.793	2,540.655	0.893	2,685.650	0.993	2,830.645
0.094	1,526.949	0.194	1,671.999	0.294	1,817.049	0.394	1,962.099	0.494	2,107.121	0.594	2,252.116	0.694	2,397.111	0.794	2,542.105	0.894	2,687.100	0.994	2,832.095
0.095	1,528.400	0.195	1,673.450	0.295	1,818.499	0.395	1,963.549	0.495	2,108.571	0.595	2,253.566	0.695	2,398.561	0.795	2,543.555	0.895	2,688.550	0.995	2,833.545
0.096	1,529.850	0.196	1,674.900	0.296	1,819.950	0.396	1,965.000	0.496	2,110.021	0.596	2,255.016	0.696	2,400.011	0.796	2,545.005	0.896	2,690.000	0.996	2,834.995
0.097	1,531.301	0.197	1,676.351	0.297	1,821.400	0.397	1,966.450	0.497	2,111.471	0.597	2,256.466	0.697	2,401.461	0.797	2,546.455	0.897	2,691.450	0.997	2,836.445
0.098	1,532.751	0.198	1,677.801	0.298	1,822.851	0.398	1,967.901	0.498	2,112.921	0.598	2,257.916	0.698	2,402.910	0.798	2,547.905	0.898	2,692.900	0.998	2,837.895
0.099	1,534.202	0.199	1,679.252	0.299	1,824.301	0.399	1,969.351	0.499	2,114.371	0.599	2,259.366	0.699	2,404.360	0.799	2,549.355	0.899	2,694.350	0.999	2,839.345

DATE STRAPPED: 06/26/18 BY: RJ
DATE COMPUTED: 07/03/18 BY: WLH
DATE ISSUED: 07/03/18

AMSPEC

Meliadine
Rankin Inlet

Tank No. 1
INNAGE TABLE

Calibration@AmSpecGroup.com

CAPACITIES GIVEN IN CUBIC METERS — **GAUGE HEIGHT: 14.275 M**

mm	2 M	mm	2 M	mm	2 M	mm	2 M	mm	2 M	mm	2 M	mm	2 M	mm	2 M	mm	2 M	mm	2 M
0.000	2,840.795	0.100	2,985.789	0.200	3,130.784	0.300	3,275.779	0.400	3,420.774	0.500	3,565.768	0.600	3,710.763	0.700	3,855.758	0.800	4,000.718	0.900	4,145.650
0.001	2,842.245	0.101	2,987.239	0.201	3,132.234	0.301	3,277.229	0.401	3,422.224	0.501	3,567.218	0.601	3,712.213	0.701	3,857.208	0.801	4,002.167	0.901	4,147.099
0.002	2,843.695	0.102	2,988.689	0.202	3,133.684	0.302	3,278.679	0.402	3,423.674	0.502	3,568.668	0.602	3,713.663	0.702	3,858.658	0.802	4,003.617	0.902	4,148.548
0.003	2,845.144	0.103	2,990.139	0.203	3,135.134	0.303	3,280.129	0.403	3,425.123	0.503	3,570.118	0.603	3,715.113	0.703	3,860.108	0.803	4,005.066	0.903	4,149.998
0.004	2,846.594	0.104	2,991.589	0.204	3,136.584	0.304	3,281.579	0.404	3,426.573	0.504	3,571.568	0.604	3,716.563	0.704	3,861.558	0.804	4,006.515	0.904	4,151.447
0.005	2,848.044	0.105	2,993.039	0.205	3,138.034	0.305	3,283.029	0.405	3,428.023	0.505	3,573.018	0.605	3,718.013	0.705	3,863.008	0.805	4,007.965	0.905	4,152.896
0.006	2,849.494	0.106	2,994.489	0.206	3,139.484	0.306	3,284.479	0.406	3,429.473	0.506	3,574.468	0.606	3,719.463	0.706	3,864.458	0.806	4,009.414	0.906	4,154.346
0.007	2,850.944	0.107	2,995.939	0.207	3,140.934	0.307	3,285.929	0.407	3,430.923	0.507	3,575.918	0.607	3,720.913	0.707	3,865.908	0.807	4,010.863	0.907	4,155.795
0.008	2,852.394	0.108	2,997.389	0.208	3,142.384	0.308	3,287.378	0.408	3,432.373	0.508	3,577.368	0.608	3,722.363	0.708	3,867.357	0.808	4,012.313	0.908	4,157.244
0.009	2,853.844	0.109	2,998.839	0.209	3,143.834	0.309	3,288.828	0.409	3,433.823	0.509	3,578.818	0.609	3,723.813	0.709	3,868.807	0.809	4,013.762	0.909	4,158.694
0.010	2,855.294	0.110	3,000.289	0.210	3,145.284	0.310	3,290.278	0.410	3,435.273	0.510	3,580.268	0.610	3,725.263	0.710	3,870.257	0.810	4,015.211	0.910	4,160.143
0.011	2,856.744	0.111	3,001.739	0.211	3,146.734	0.311	3,291.728	0.411	3,436.723	0.511	3,581.718	0.611	3,726.713	0.711	3,871.707	0.811	4,016.661	0.911	4,161.592
0.012	2,858.194	0.112	3,003.189	0.212	3,148.184	0.312	3,293.178	0.412	3,438.173	0.512	3,583.168	0.612	3,728.163	0.712	3,873.157	0.812	4,018.110	0.912	4,163.042
0.013	2,859.644	0.113	3,004.639	0.213	3,149.633	0.313	3,294.628	0.413	3,439.623	0.513	3,584.618	0.613	3,729.612	0.713	3,874.607	0.813	4,019.559	0.913	4,164.491
0.014	2,861.094	0.114	3,006.089	0.214	3,151.083	0.314	3,296.078	0.414	3,441.073	0.514	3,586.068	0.614	3,731.062	0.714	3,876.057	0.814	4,021.009	0.914	4,165.940
0.015	2,862.544	0.115	3,007.539	0.215	3,152.533	0.315	3,297.528	0.415	3,442.523	0.515	3,587.518	0.615	3,732.512	0.715	3,877.507	0.815	4,022.458	0.915	4,167.390
0.016	2,863.994	0.116	3,008.989	0.216	3,153.983	0.316	3,298.978	0.416	3,443.973	0.516	3,588.968	0.616	3,733.962	0.716	3,878.957	0.816	4,023.907	0.916	4,168.839
0.017	2,865.444	0.117	3,010.438	0.217	3,155.433	0.317	3,300.428	0.417	3,445.423	0.517	3,590.418	0.617	3,735.412	0.717	3,880.407	0.817	4,025.356	0.917	4,170.288
0.018	2,866.894	0.118	3,011.888	0.218	3,156.883	0.318	3,301.878	0.418	3,446.873	0.518	3,591.867	0.618	3,736.862	0.718	3,881.857	0.818	4,026.806	0.918	4,171.737
0.019	2,868.344	0.119	3,013.338	0.219	3,158.333	0.319	3,303.328	0.419	3,448.323	0.519	3,593.317	0.619	3,738.312	0.719	3,883.307	0.819	4,028.255	0.919	4,173.187
0.020	2,869.794	0.120	3,014.788	0.220	3,159.783	0.320	3,304.778	0.420	3,449.773	0.520	3,594.767	0.620	3,739.762	0.720	3,884.757	0.820	4,029.704	0.920	4,174.636
0.021	2,871.244	0.121	3,016.238	0.221	3,161.233	0.321	3,306.228	0.421	3,451.223	0.521	3,596.217	0.621	3,741.212	0.721	3,886.207	0.821	4,031.154	0.921	4,176.085
0.022	2,872.693	0.122	3,017.688	0.222	3,162.683	0.322	3,307.678	0.422	3,452.672	0.522	3,597.667	0.622	3,742.662	0.722	3,887.657	0.822	4,032.603	0.922	4,177.535
0.023	2,874.143	0.123	3,019.138	0.223	3,164.133	0.323	3,309.128	0.423	3,454.122	0.523	3,599.117	0.623	3,744.112	0.723	3,889.107	0.823	4,034.052	0.923	4,178.984
0.024	2,875.593	0.124	3,020.588	0.224	3,165.583	0.324	3,310.578	0.424	3,455.572	0.524	3,600.567	0.624	3,745.562	0.724	3,890.557	0.824	4,035.502	0.924	4,180.433
0.025	2,877.043	0.125	3,022.038	0.225	3,167.033	0.325	3,312.028	0.425	3,457.022	0.525	3,602.017	0.625	3,747.012	0.725	3,892.007	0.825	4,036.951	0.925	4,181.883
0.026	2,878.493	0.126	3,023.488	0.226	3,168.483	0.326	3,313.478	0.426	3,458.472	0.526	3,603.467	0.626	3,748.462	0.726	3,893.457	0.826	4,038.400	0.926	4,183.332
0.027	2,879.943	0.127	3,024.938	0.227	3,169.933	0.327	3,314.927	0.427	3,459.922	0.527	3,604.917	0.627	3,749.912	0.727	3,894.906	0.827	4,039.850	0.927	4,184.781
0.028	2,881.393	0.128	3,026.388	0.228	3,171.383	0.328	3,316.377	0.428	3,461.372	0.528	3,606.367	0.628	3,751.362	0.728	3,896.356	0.828	4,041.299	0.928	4,186.231
0.029	2,882.843	0.129	3,027.838	0.229	3,172.833	0.329	3,317.827	0.429	3,462.822	0.529	3,607.817	0.629	3,752.812	0.729	3,897.806	0.829	4,042.748	0.929	4,187.680
0.030	2,884.293	0.130	3,029.288	0.230	3,174.283	0.330	3,319.277	0.430	3,464.272	0.530	3,609.267	0.630	3,754.262	0.730	3,899.256	0.830	4,044.198	0.930	4,189.129
0.031	2,885.743	0.131	3,030.738	0.231	3,175.733	0.331	3,320.727	0.431	3,465.722	0.531	3,610.717	0.631	3,755.712	0.731	3,900.706	0.831	4,045.647	0.931	4,190.579
0.032	2,887.193	0.132	3,032.188	0.232	3,177.182	0.332	3,322.177	0.432	3,467.172	0.532	3,612.167	0.632	3,757.161	0.732	3,902.156	0.832	4,047.096	0.932	4,192.028
0.033	2,888.643	0.133	3,033.638	0.233	3,178.632	0.333	3,323.627	0.433	3,468.622	0.533	3,613.617	0.633	3,758.611	0.733	3,903.606	0.833	4,048.546	0.933	4,193.477
0.034	2,890.093	0.134	3,035.088	0.234	3,180.082	0.334	3,325.077	0.434	3,470.072	0.534	3,615.067	0.634	3,760.061	0.734	3,905.056	0.834	4,049.995	0.934	4,194.927
0.035	2,891.543	0.135	3,036.538	0.235	3,181.532	0.335	3,326.527	0.435	3,471.522	0.535	3,616.517	0.635	3,761.511	0.735	3,906.506	0.835	4,051.444	0.935	4,196.376
0.036	2,892.993	0.136	3,037.987	0.236	3,182.982	0.336	3,327.977	0.436	3,472.972	0.536	3,617.967	0.636	3,762.961	0.736	3,907.956	0.836	4,052.894	0.936	4,197.825
0.037	2,894.443	0.137	3,039.437	0.237	3,184.432	0.337	3,329.427	0.437	3,474.422	0.537	3,619.416	0.637	3,764.411	0.737	3,909.406	0.837	4,054.343	0.937	4,199.274
0.038	2,895.893	0.138	3,040.887	0.238	3,185.882	0.338	3,330.877	0.438	3,475.872	0.538	3,620.866	0.638	3,765.861	0.738	3,910.856	0.838	4,055.792	0.938	4,200.724
0.039	2,897.343	0.139	3,042.337	0.239	3,187.332	0.339	3,332.327	0.439	3,477.322	0.539	3,622.316	0.639	3,767.311	0.739	3,912.306	0.839	4,057.241	0.939	4,202.173
0.040	2,898.793	0.140	3,043.787	0.240	3,188.782	0.340	3,333.777	0.440	3,478.772	0.540	3,623.766	0.640	3,768.761	0.740	3,913.755	0.840	4,058.691	0.940	4,203.622
0.041	2,900.242	0.141	3,045.237	0.241	3,190.232	0.341	3,335.227	0.441	3,480.221	0.541	3,625.216	0.641	3,770.211	0.741	3,915.205	0.841	4,060.140	0.941	4,205.072
0.042	2,901.692	0.142	3,046.687	0.242	3,191.682	0.342	3,336.677	0.442	3,481.671	0.542	3,626.666	0.642	3,771.661	0.742	3,916.654	0.842	4,061.589	0.942	4,206.521
0.043	2,903.142	0.143	3,048.137	0.243	3,193.132	0.343	3,338.127	0.443	3,483.121	0.543	3,628.116	0.643	3,773.111	0.743	3,918.104	0.843	4,063.039	0.943	4,207.970
0.044	2,904.592	0.144	3,049.587	0.244	3,194.582	0.344	3,339.577	0.444	3,484.571	0.544	3,629.566	0.644	3,774.561	0.744	3,919.553	0.844	4,064.488	0.944	4,209.420
0.045	2,906.042	0.145	3,051.037	0.245	3,196.032	0.345	3,341.027	0.445	3,486.021	0.545	3,631.016	0.645	3,776.011	0.745	3,921.003	0.845	4,065.937	0.945	4,210.869
0.046	2,907.492	0.146	3,052.487	0.246	3,197.482	0.346	3,342.476	0.446	3,487.471	0.546	3,632.466	0.646	3,777.461	0.746	3,922.452	0.846	4,067.387	0.946	4,212.318
0.047	2,908.942	0.147	3,053.937	0.247	3,198.932	0.347	3,343.926	0.447	3,488.921	0.547	3,633.916	0.647	3,778.911	0.747	3,923.902	0.847	4,068.836	0.947	4,213.768
0.048	2,910.392	0.148	3,055.387	0.248	3,200.382	0.348	3,345.376	0.448	3,490.371	0.548	3,635.366	0.648	3,780.361	0.748	3,925.351	0.848	4,070.285	0.948	4,215.217
0.049	2,911.842	0.149	3,056.837	0.249	3,201.832	0.349	3,346.826	0.449	3,491.821	0.549	3,636.816	0.649	3,781.811	0.749	3,926.801	0.849	4,071.735	0.949	4,216.666
0.050	2,913.292	0.150	3,058.287	0.250	3,203.282	0.350	3,348.276	0.450	3,493.271	0.550	3,638.266	0.650	3,783.261	0.750	3,928.250	0.850	4,073.184	0.950	4,218.116
0.051	2,914.742	0.151	3,059.737	0.251	3,204.731	0.351	3,349.726	0.451	3,494.721	0.551	3,639.716	0.651	3,784.710	0.751	3,929.700	0.851	4,074.633	0.951	4,219.565
0.052	2,916.192	0.152	3,061.187	0.252	3,206.181	0.352	3,351.176	0.452	3,496.171	0.552	3,641.166	0.652	3,786.160	0.752	3,931.149	0.852	4,076.083	0.952	4,221.014
0.053	2,917.642	0.153	3,062.637	0.253	3,207.631	0.353	3,352.626	0.453	3,497.621	0.553	3,642.616	0.653	3,787.610	0.753	3,932.598	0.853	4,077.532	0.953	4,222.464
0.054	2,919.092	0.154	3,064.087	0.254	3,209.081	0.354	3,354.076	0.454	3,499.071	0.554	3,644.066	0.654	3,789.060	0.754	3,934.048	0.854	4,078.981	0.954	4,223.913
0.055	2,920.542	0.155	3,065.536	0.255	3,210.531	0.355	3,355.526	0.455	3,500.521	0.555	3,645.516	0.655	3,790.510	0.755	3,935.497	0.855	4,080.431	0.955	4,225.362
0.056	2,921.992	0.156	3,066.986	0.256	3,211.981	0.356	3,356.976	0.456	3,501.971	0.556	3,646.965	0.656	3,791.960	0.756	3,936.947	0.856	4,081.880	0.956	4,226.811
0.057	2,923.442	0.157	3,068.436	0.257	3,213.431	0.357	3,358.426	0.457	3,503.421	0.557	3,648.415	0.657	3,793.410	0.757	3,938.396	0.857	4,083.329	0.957	4,228.261
0.058	2,924.892	0.158	3,069.886	0.258	3,214.881	0.358	3,359.876	0.458	3,504.871	0.558	3,649.865	0.658	3,794.860	0.758	3,939.846	0.858	4,084.778	0.958	4,229.710
0.059	2,926.342	0.159	3,071.336	0.259	3,216.331	0.359	3,361.326	0.459	3,506.321	0.559	3,651.315	0.659	3,796.310	0.759	3,941.295	0.859	4,086.228	0.959	4,231.159
0.060	2,927.791	0.160	3,072.786	0.260	3,217.781	0.360	3,362.776	0.460	3,507.770	0.560	3,652.765	0.660	3,797.760	0.760	3,942.745	0.860	4,087.677	0.960	4,232.609
0.061	2,929.241	0.161	3,074.236	0.261	3,219.231	0.361	3,364.226	0.461	3,509.220	0.561	3,654.215	0.661	3,799.210	0.761	3,944.194	0.861	4,089.126	0.961	4,234.058
0.062	2,930.691	0.162	3,075.686	0.262	3,220.681	0.362	3,365.676	0.462	3,510.670	0.562	3,655.665	0.662	3,800.660	0.762	3,945.644	0.862	4,090.576	0.962	4,235.507
0.063	2,932.141	0.163	3,077.136	0.263	3,222.131	0.363	3,367.126	0.463	3,512.120	0.563	3,657.115	0.663	3,802.110	0.763	3,947.093	0.863	4,092.025	0.963	4,236.957
0.064	2,933.591	0.164	3,078.586	0.264	3,223.581	0.364	3,368.576	0.464	3,513.570	0.564	3,658.565	0.664	3,803.560	0.764	3,948.543	0.864	4,093.474	0.964	4,238.406
0.065	2,935.041	0.165	3,080.036	0.265	3,225.031	0.365	3,370.025	0.465	3,515.020	0.565	3,660.015	0.665	3,805.010	0.765	3,949.992	0.865	4,094.924	0.965	4,239.855
0.066	2,936.491	0.166	3,081.486	0.266	3,226.481	0.366	3,371.475	0.466	3,516.470	0.566	3,661.465	0.666	3,806.460	0.766	3,951.441	0.866	4,096.373	0.966	4,241.305
0.067	2,937.941	0.167	3,082.936	0.267	3,227.931	0.367	3,372.925	0.467	3,517.920	0.567	3,662.915	0.667	3,807.910	0.767	3,952.891	0.867	4,097.822	0.967	4,242.754
0.068	2,939.391	0.168	3,084.386	0.268	3,229.381	0.368	3,374.375	0.468	3,519.370	0.568	3,664.365	0.668	3,809.360	0.768	3,954.340	0.868	4,099.272	0.968	4,244.203
0.069	2,940.841	0.169	3,085.836	0.269	3,230.831	0.369	3,375.825	0.469	3,520.820	0.569	3,665.815	0.669	3,810.810	0.769	3,955.789	0.869	4,100.721	0.969	4,245.653
0.070	2,942.291	0.170	3,087.286	0.270	3,232.280	0.370	3,377.275	0.470	3,522.270	0.570	3,667.265	0.670	3,812.259	0.770	3,957.239	0.870	4,102.170	0.970	4,247.102
0.071	2,943.741	0.171	3,088.736	0.271	3,233.730	0.371	3,378.725	0.471	3,523.720	0.571	3,668.715	0.671	3,813.709	0.771	3,958.688	0.871	4,103.620	0.971	4,248.551
0.072	2,945.191	0.172	3,090.186	0.272	3,235.180	0.372	3,380.175	0.472	3,525.170	0.572	3,670.165	0.672	3,815.159	0.772	3,960.137	0.872	4,105.069	0.972	4,250.001
0.073	2,946.641	0.173	3,091.636	0.273	3,236.630	0.373	3,381.625	0.473	3,526.620	0.573	3,671.615	0.673	3,816.609	0.773	3,961.587	0.873	4,106.518	0.973	4,251.450
0.074	2,948.091	0.174	3,093.086	0.274	3,238.080	0.374	3,383.075	0.474	3,528.070	0.574	3,673.065	0.674	3,818.059	0.774	3,963.036	0.874	4,107.968	0.974	4,252.899
0.075	2,949.541	0.175	3,094.535	0.275	3,239.530	0.375	3,384.525	0.475	3,529.520	0.575	3,674.514	0.675	3,819.509	0.775	3,964.485	0.875	4,109.417	0.975	4,254.349
0.076	2,950.991	0.176	3,095.985	0.276	3,240.980	0.376	3,385.975	0.476	3,530.970	0.576	3,675.964	0.676	3,820.959	0.776	3,965.935	0.876	4,110.866	0.976	4,255.798
0.077	2,952.441	0.177	3,097.435	0.277	3,242.430	0.377	3,387.425	0.477	3,532.420	0.577	3,677.414	0.677	3,822.409	0.777	3,967.384	0.877	4,112.315	0.977	4,257.247
0.078	2,953.891	0.178	3,098.885	0.278	3,243.880	0.378	3,388.875	0.478	3,533.870	0.578	3,678.864	0.678	3,823.859	0.778	3,968.833	0.878	4,113.765	0.978	4,258.696
0.079	2,955.340	0.179	3,100.335	0.279	3,245.330	0.379	3,390.325	0.479	3,535.319	0.579	3,680.314	0.679	3,825.309	0.779	3,970.282	0.879	4,115.214	0.979	4,260.146
0.080	2,956.790	0.180	3,101.785	0.280	3,246.780	0.380	3,391.775	0.480	3,536.769	0.580	3,681.764	0.680	3,826.759	0.780	3,971.732	0.880	4,116.663	0.980	4,261.595
0.081	2,958.240	0.181	3,103.235	0.281	3,248.230	0.381	3,393.225	0.481	3,538.219	0.581	3,683.214	0.681	3,828.209	0.781	3,973.181	0.881	4,118.113	0.981	4,263.044
0.082	2,959.690	0.182	3,104.685	0.282	3,249.680	0.382	3,394.675	0.482	3,539.669	0.582	3,684.664	0.682	3,829.659	0.782	3,974.630	0.882	4,119.562	0.982	4,264.494
0.083	2,961.140	0.183	3,106.135	0.283	3,251.130	0.383	3,396.125	0.483	3,541.119	0.583	3,686.114	0.683	3,831.109	0.783	3,976.080	0.883	4,121.011	0.983	4,265.943
0.084	2,962.590	0.184	3,107.585	0.284	3,252.580	0.384	3,397.574	0.484	3,542.569	0.584	3,687.564	0.684	3,832.559	0.784	3,977.529	0.884	4,122.461	0.984	4,267.392
0.085	2,964.040	0.185	3,109.035	0.285	3,254.030	0.385	3,399.024	0.485	3,544.019	0.585	3,689.014	0.685	3,834.009	0.785	3,978.978	0.885	4,123.910	0.985	4,268.842
0.086	2,965.490	0.186	3,110.485	0.286	3,255.480	0.386	3,400.474	0.486	3,545.469	0.586	3,690.464	0.686	3,835.459	0.786	3,980.428	0.886	4,125.359	0.986	4,270.291
0.087	2,966.940	0.187	3,111.935	0.287	3,256.930	0.387	3,401.924	0.487	3,546.919	0.587	3,691.914	0.687	3,836.909	0.787	3,981.877	0.887	4,126.809	0.987	4,271.740
0.088	2,968.390	0.188	3,113.385	0.288	3,258.380	0.388	3,403.374	0.488	3,548.369	0.588	3,693.364	0.688	3,838.359	0.788	3,983.326	0.888	4,128.258	0.988	4,273.190
0.089	2,969.840	0.189	3,114.835	0.289	3,259.829	0.389	3,404.824	0.489	3,549.819	0.589	3,694.814	0.689	3,839.808	0.789	3,984.776	0.889	4,129.707	0.989	4,274.639
0.090	2,971.290	0.190	3,116.285	0.290	3,261.279	0.390	3,406.274	0.490	3,551.269	0.590	3,696.264	0.690	3,841.258	0.790	3,986.225	0.890	4,131.157	0.990	4,276.088
0.091	2,972.740	0.191	3,117.735	0.291	3,262.729	0.391	3,407.724	0.491	3,552.719	0.591	3,697.714	0.691	3,842.708	0.791	3,987.674	0.891	4,132.606	0.991	4,277.538
0.092	2,974.190	0.192	3,119.185	0.292	3,264.179	0.392	3,409.174	0.492	3,554.169	0.592	3,699.164	0.692	3,844.158	0.792	3,989.124	0.892	4,134.055	0.992	4,278.987
0.093	2,975.640	0.193	3,120.635	0.293	3,265.629	0.393	3,410.624	0.493	3,555.619	0.593	3,700.614	0.693	3,845.608	0.793	3,990.573	0.893	4,135.505	0.993	4,280.436
0.094	2,977.090	0.194	3,122.084	0.294	3,267.079	0.394	3,412.074	0.494	3,557.069	0.594	3,702.063	0.694	3,847.058	0.794	3,992.022	0.894	4,136.954	0.994	4,281.886
0.095	2,978.540	0.195	3,123.534	0.295	3,268.529	0.395	3,413.524	0.495	3,558.519	0.595	3,703.513	0.695	3,848.508	0.795	3,993.472	0.895	4,138.403	0.995	4,283.335
0.096	2,979.990	0.196	3,124.984	0.296	3,269.979	0.396	3,414.974	0.496	3,559.969	0.596	3,704.963	0.696	3,849.958	0.796	3,994.921	0.896	4,139.853	0.996	4,284.784
0.097	2,981.440	0.197	3,126.434	0.297	3,271.429	0.397	3,416.424	0.497	3,561.419	0.597	3,706.413	0.697	3,851.408	0.797	3,996.370	0.897	4,141.302	0.997	4,286.233
0.098	2,982.889	0.198	3,127.884	0.298	3,272.879	0.398	3,417.874	0.498	3,562.869	0.598	3,707.863	0.698	3,852.858	0.798	3,997.819	0.898	4,142.751	0.998	4,287.683
0.099	2,984.339	0.199	3,129.334	0.299	3,274.329	0.399	3,419.324	0.499	3,564.318	0.599	3,709.313	0.699	3,854.308	0.799	3,999.269	0.899	4,144.200	0.999	4,289.132

NOTE: 42.0 GALLONS EQUAL 1.0 BARRELS
NOTE: 1 KILOLITER EQUALS 1 CUBIC METER

DATE STRAPPED: 06/26/18 BY: RJ
DATE COMPUTED: 07/03/18 BY: WLH
DATE ISSUED: 07/03/18

AMSPEC

Meliadine
Rankin Inlet

Tank No. 1
INNAGE TABLE

Calibration@AmSpecGroup.com

CAPACITIES GIVEN IN CUBIC METERS

GAUGE HEIGHT: 14.275 M

mm	3 M	mm	3 M	mm	3 M	mm	3 M	mm	3 M	mm	3 M	mm	3 M	mm	3 M	mm	3 M	mm	3 M
0.000	4,290.581	0.100	4,435.513	0.200	4,580.445	0.300	4,725.376	0.400	4,870.308	0.500	5,015.240	0.600	5,160.171	0.700	5,305.103	0.800	5,450.035	0.900	5,594.966
0.001	4,292.031	0.101	4,436.962	0.201	4,581.894	0.301	4,726.826	0.401	4,871.757	0.501	5,016.689	0.601	5,161.621	0.701	5,306.552	0.801	5,451.484	0.901	5,596.416
0.002	4,293.480	0.102	4,438.412	0.202	4,583.343	0.302	4,728.275	0.402	4,873.207	0.502	5,018.138	0.602	5,163.070	0.702	5,308.002	0.802	5,452.933	0.902	5,597.865
0.003	4,294.929	0.103	4,439.861	0.203	4,584.793	0.303	4,729.724	0.403	4,874.656	0.503	5,019.588	0.603	5,164.519	0.703	5,309.451	0.803	5,454.383	0.903	5,599.314
0.004	4,296.379	0.104	4,441.310	0.204	4,586.242	0.304	4,731.174	0.404	4,876.105	0.504	5,021.037	0.604	5,165.969	0.704	5,310.900	0.804	5,455.832	0.904	5,600.764
0.005	4,297.828	0.105	4,442.760	0.205	4,587.691	0.305	4,732.623	0.405	4,877.555	0.505	5,022.486	0.605	5,167.418	0.705	5,312.350	0.805	5,457.281	0.905	5,602.213
0.006	4,299.277	0.106	4,444.209	0.206	4,589.141	0.306	4,734.072	0.406	4,879.004	0.506	5,023.936	0.606	5,168.867	0.706	5,313.799	0.806	5,458.731	0.906	5,603.662
0.007	4,300.727	0.107	4,445.658	0.207	4,590.590	0.307	4,735.522	0.407	4,880.453	0.507	5,025.385	0.607	5,170.317	0.707	5,315.248	0.807	5,460.180	0.907	5,605.112
0.008	4,302.176	0.108	4,447.108	0.208	4,592.039	0.308	4,736.971	0.408	4,881.903	0.508	5,026.834	0.608	5,171.766	0.708	5,316.698	0.808	5,461.629	0.908	5,606.561
0.009	4,303.625	0.109	4,448.557	0.209	4,593.489	0.309	4,738.420	0.409	4,883.352	0.509	5,028.284	0.609	5,173.215	0.709	5,318.147	0.809	5,463.079	0.909	5,608.010
0.010	4,305.075	0.110	4,450.006	0.210	4,594.938	0.310	4,739.870	0.410	4,884.801	0.510	5,029.733	0.610	5,174.665	0.710	5,319.596	0.810	5,464.528	0.910	5,609.460
0.011	4,306.524	0.111	4,451.456	0.211	4,596.387	0.311	4,741.319	0.411	4,886.251	0.511	5,031.182	0.611	5,176.114	0.711	5,321.046	0.811	5,465.977	0.911	5,610.909
0.012	4,307.973	0.112	4,452.905	0.212	4,597.837	0.312	4,742.768	0.412	4,887.700	0.512	5,032.632	0.612	5,177.563	0.712	5,322.495	0.812	5,467.426	0.912	5,612.358
0.013	4,309.423	0.113	4,454.354	0.213	4,599.286	0.313	4,744.218	0.413	4,889.149	0.513	5,034.081	0.613	5,179.012	0.713	5,323.944	0.813	5,468.876	0.913	5,613.807
0.014	4,310.872	0.114	4,455.804	0.214	4,600.735	0.314	4,745.667	0.414	4,890.598	0.514	5,035.530	0.614	5,180.462	0.714	5,325.393	0.814	5,470.325	0.914	5,615.257
0.015	4,312.321	0.115	4,457.253	0.215	4,602.184	0.315	4,747.116	0.415	4,892.048	0.515	5,036.979	0.615	5,181.911	0.715	5,326.843	0.815	5,471.774	0.915	5,616.706
0.016	4,313.770	0.116	4,458.702	0.216	4,603.634	0.316	4,748.565	0.416	4,893.497	0.516	5,038.429	0.616	5,183.360	0.716	5,328.292	0.816	5,473.224	0.916	5,618.155
0.017	4,315.220	0.117	4,460.151	0.217	4,605.083	0.317	4,750.015	0.417	4,894.946	0.517	5,039.878	0.617	5,184.810	0.717	5,329.741	0.817	5,474.673	0.917	5,619.605
0.018	4,316.669	0.118	4,461.601	0.218	4,606.532	0.318	4,751.464	0.418	4,896.396	0.518	5,041.327	0.618	5,186.259	0.718	5,331.191	0.818	5,476.122	0.918	5,621.054
0.019	4,318.118	0.119	4,463.050	0.219	4,607.982	0.319	4,752.913	0.419	4,897.845	0.519	5,042.777	0.619	5,187.708	0.719	5,332.640	0.819	5,477.572	0.919	5,622.503
0.020	4,319.568	0.120	4,464.499	0.220	4,609.431	0.320	4,754.363	0.420	4,899.294	0.520	5,044.226	0.620	5,189.158	0.720	5,334.089	0.820	5,479.021	0.920	5,623.953
0.021	4,321.017	0.121	4,465.949	0.221	4,610.880	0.321	4,755.812	0.421	4,900.744	0.521	5,045.675	0.621	5,190.607	0.721	5,335.539	0.821	5,480.470	0.921	5,625.402
0.022	4,322.466	0.122	4,467.398	0.222	4,612.330	0.322	4,757.261	0.422	4,902.193	0.522	5,047.125	0.622	5,192.056	0.722	5,336.988	0.822	5,481.920	0.922	5,626.851
0.023	4,323.916	0.123	4,468.847	0.223	4,613.779	0.323	4,758.711	0.423	4,903.642	0.523	5,048.574	0.623	5,193.506	0.723	5,338.437	0.823	5,483.369	0.923	5,628.301
0.024	4,325.365	0.124	4,470.297	0.224	4,615.228	0.324	4,760.160	0.424	4,905.092	0.524	5,050.023	0.624	5,194.955	0.724	5,339.887	0.824	5,484.818	0.924	5,629.750
0.025	4,326.814	0.125	4,471.746	0.225	4,616.678	0.325	4,761.609	0.425	4,906.541	0.525	5,051.473	0.625	5,196.404	0.725	5,341.336	0.825	5,486.268	0.925	5,631.199
0.026	4,328.264	0.126	4,473.195	0.226	4,618.127	0.326	4,763.059	0.426	4,907.990	0.526	5,052.922	0.626	5,197.854	0.726	5,342.785	0.826	5,487.717	0.926	5,632.649
0.027	4,329.713	0.127	4,474.645	0.227	4,619.576	0.327	4,764.508	0.427	4,909.440	0.527	5,054.371	0.627	5,199.303	0.727	5,344.235	0.827	5,489.166	0.927	5,634.098
0.028	4,331.162	0.128	4,476.094	0.228	4,621.026	0.328	4,765.957	0.428	4,910.889	0.528	5,055.821	0.628	5,200.752	0.728	5,345.684	0.828	5,490.616	0.928	5,635.547
0.029	4,332.612	0.129	4,477.543	0.229	4,622.475	0.329	4,767.407	0.429	4,912.338	0.529	5,057.270	0.629	5,202.202	0.729	5,347.133	0.829	5,492.065	0.929	5,636.997
0.030	4,334.061	0.130	4,478.993	0.230	4,623.924	0.330	4,768.856	0.430	4,913.788	0.530	5,058.719	0.630	5,203.651	0.730	5,348.583	0.830	5,493.514	0.930	5,638.446
0.031	4,335.510	0.131	4,480.442	0.231	4,625.374	0.331	4,770.305	0.431	4,915.237	0.531	5,060.169	0.631	5,205.100	0.731	5,350.032	0.831	5,494.964	0.931	5,639.895
0.032	4,336.960	0.132	4,481.891	0.232	4,626.823	0.332	4,771.755	0.432	4,916.686	0.532	5,061.618	0.632	5,206.550	0.732	5,351.481	0.832	5,496.413	0.932	5,641.344
0.033	4,338.409	0.133	4,483.341	0.233	4,628.272	0.333	4,773.204	0.433	4,918.136	0.533	5,063.067	0.633	5,207.999	0.733	5,352.930	0.833	5,497.862	0.933	5,642.794
0.034	4,339.858	0.134	4,484.790	0.234	4,629.722	0.334	4,774.653	0.434	4,919.585	0.534	5,064.516	0.634	5,209.448	0.734	5,354.380	0.834	5,499.311	0.934	5,644.243
0.035	4,341.308	0.135	4,486.239	0.235	4,631.171	0.335	4,776.102	0.435	4,921.034	0.535	5,065.966	0.635	5,210.897	0.735	5,355.829	0.835	5,500.761	0.935	5,645.692
0.036	4,342.757	0.136	4,487.688	0.236	4,632.620	0.336	4,777.552	0.436	4,922.483	0.536	5,067.415	0.636	5,212.347	0.736	5,357.278	0.836	5,502.210	0.936	5,647.142
0.037	4,344.206	0.137	4,489.138	0.237	4,634.069	0.337	4,779.001	0.437	4,923.933	0.537	5,068.864	0.637	5,213.796	0.737	5,358.728	0.837	5,503.659	0.937	5,648.591
0.038	4,345.655	0.138	4,490.587	0.238	4,635.519	0.338	4,780.450	0.438	4,925.382	0.538	5,070.314	0.638	5,215.245	0.738	5,360.177	0.838	5,505.109	0.938	5,650.040
0.039	4,347.105	0.139	4,492.036	0.239	4,636.968	0.339	4,781.900	0.439	4,926.831	0.539	5,071.763	0.639	5,216.695	0.739	5,361.626	0.839	5,506.558	0.939	5,651.490
0.040	4,348.554	0.140	4,493.486	0.240	4,638.417	0.340	4,783.349	0.440	4,928.281	0.540	5,073.212	0.640	5,218.144	0.740	5,363.076	0.840	5,508.007	0.940	5,652.939
0.041	4,350.003	0.141	4,494.935	0.241	4,639.867	0.341	4,784.798	0.441	4,929.730	0.541	5,074.662	0.641	5,219.593	0.741	5,364.525	0.841	5,509.457	0.941	5,654.388
0.042	4,351.453	0.142	4,496.384	0.242	4,641.316	0.342	4,786.248	0.442	4,931.179	0.542	5,076.111	0.642	5,221.043	0.742	5,365.974	0.842	5,510.906	0.942	5,655.838
0.043	4,352.902	0.143	4,497.834	0.243	4,642.765	0.343	4,787.697	0.443	4,932.629	0.543	5,077.560	0.643	5,222.492	0.743	5,367.424	0.843	5,512.355	0.943	5,657.287
0.044	4,354.351	0.144	4,499.283	0.244	4,644.215	0.344	4,789.146	0.444	4,934.078	0.544	5,079.010	0.644	5,223.941	0.744	5,368.873	0.844	5,513.805	0.944	5,658.736
0.045	4,355.801	0.145	4,500.732	0.245	4,645.664	0.345	4,790.596	0.445	4,935.527	0.545	5,080.459	0.645	5,225.391	0.745	5,370.322	0.845	5,515.254	0.945	5,660.186
0.046	4,357.250	0.146	4,502.182	0.246	4,647.113	0.346	4,792.045	0.446	4,936.977	0.546	5,081.908	0.646	5,226.840	0.746	5,371.772	0.846	5,516.703	0.946	5,661.635
0.047	4,358.699	0.147	4,503.631	0.247	4,648.563	0.347	4,793.494	0.447	4,938.426	0.547	5,083.358	0.647	5,228.289	0.747	5,373.221	0.847	5,518.153	0.947	5,663.084
0.048	4,360.149	0.148	4,505.080	0.248	4,650.012	0.348	4,794.944	0.448	4,939.875	0.548	5,084.807	0.648	5,229.739	0.748	5,374.670	0.848	5,519.602	0.948	5,664.534
0.049	4,361.598	0.149	4,506.530	0.249	4,651.461	0.349	4,796.393	0.449	4,941.325	0.549	5,086.256	0.649	5,231.188	0.749	5,376.120	0.849	5,521.051	0.949	5,665.983
0.050	4,363.047	0.150	4,507.979	0.250	4,652.911	0.350	4,797.842	0.450	4,942.774	0.550	5,087.706	0.650	5,232.637	0.750	5,377.569	0.850	5,522.501	0.950	5,667.432
0.051	4,364.497	0.151	4,509.428	0.251	4,654.360	0.351	4,799.292	0.451	4,944.223	0.551	5,089.155	0.651	5,234.087	0.751	5,379.018	0.851	5,523.950	0.951	5,668.882
0.052	4,365.946	0.152	4,510.878	0.252	4,655.809	0.352	4,800.741	0.452	4,945.673	0.552	5,090.604	0.652	5,235.536	0.752	5,380.468	0.852	5,525.399	0.952	5,670.331
0.053	4,367.395	0.153	4,512.327	0.253	4,657.259	0.353	4,802.190	0.453	4,947.122	0.553	5,092.054	0.653	5,236.985	0.753	5,381.917	0.853	5,526.848	0.953	5,671.780
0.054	4,368.845	0.154	4,513.776	0.254	4,658.708	0.354	4,803.640	0.454	4,948.571	0.554	5,093.503	0.654	5,238.434	0.754	5,383.366	0.854	5,528.298	0.954	5,673.229
0.055	4,370.294	0.155	4,515.225	0.255	4,660.157	0.355	4,805.089	0.455	4,950.020	0.555	5,094.952	0.655	5,239.884	0.755	5,384.815	0.855	5,529.747	0.955	5,674.679
0.056	4,371.743	0.156	4,516.675	0.256	4,661.606	0.356	4,806.538	0.456	4,951.470	0.556	5,096.401	0.656	5,241.333	0.756	5,386.265	0.856	5,531.196	0.956	5,676.128
0.057	4,373.192	0.157	4,518.124	0.257	4,663.056	0.357	4,807.987	0.457	4,952.919	0.557	5,097.851	0.657	5,242.782	0.757	5,387.714	0.857	5,532.646	0.957	5,677.577
0.058	4,374.642	0.158	4,519.573	0.258	4,664.505	0.358	4,809.437	0.458	4,954.368	0.558	5,099.300	0.658	5,244.232	0.758	5,389.163	0.858	5,534.095	0.958	5,679.027
0.059	4,376.091	0.159	4,521.023	0.259	4,665.954	0.359	4,810.886	0.459	4,955.818	0.559	5,100.749	0.659	5,245.681	0.759	5,390.613	0.859	5,535.544	0.959	5,680.476
0.060	4,377.540	0.160	4,522.472	0.260	4,667.404	0.360	4,812.335	0.460	4,957.267	0.560	5,102.199	0.660	5,247.130	0.760	5,392.062	0.860	5,536.994	0.960	5,681.925
0.061	4,378.990	0.161	4,523.921	0.261	4,668.853	0.361	4,813.785	0.461	4,958.716	0.561	5,103.648	0.661	5,248.580	0.761	5,393.511	0.861	5,538.443	0.961	5,683.375
0.062	4,380.439	0.162	4,525.371	0.262	4,670.302	0.362	4,815.234	0.462	4,960.166	0.562	5,105.097	0.662	5,250.029	0.762	5,394.961	0.862	5,539.892	0.962	5,684.824
0.063	4,381.888	0.163	4,526.820	0.263	4,671.752	0.363	4,816.683	0.463	4,961.615	0.563	5,106.547	0.663	5,251.478	0.763	5,396.410	0.863	5,541.342	0.963	5,686.273
0.064	4,383.338	0.164	4,528.269	0.264	4,673.201	0.364	4,818.133	0.464	4,963.064	0.564	5,107.996	0.664	5,252.928	0.764	5,397.859	0.864	5,542.791	0.964	5,687.723
0.065	4,384.787	0.165	4,529.719	0.265	4,674.650	0.365	4,819.582	0.465	4,964.514	0.565	5,109.445	0.665	5,254.377	0.765	5,399.309	0.865	5,544.240	0.965	5,689.172
0.066	4,386.236	0.166	4,531.168	0.266	4,676.100	0.366	4,821.031	0.466	4,965.963	0.566	5,110.895	0.666	5,255.826	0.766	5,400.758	0.866	5,545.690	0.966	5,690.621
0.067	4,387.686	0.167	4,532.617	0.267	4,677.549	0.367	4,822.481	0.467	4,967.412	0.567	5,112.344	0.667	5,257.276	0.767	5,402.207	0.867	5,547.139	0.967	5,692.071
0.068	4,389.135	0.168	4,534.067	0.268	4,678.998	0.368	4,823.930	0.468	4,968.862	0.568	5,113.793	0.668	5,258.725	0.768	5,403.657	0.868	5,548.588	0.968	5,693.520
0.069	4,390.584	0.169	4,535.516	0.269	4,680.448	0.369	4,825.379	0.469	4,970.311	0.569	5,115.243	0.669	5,260.174	0.769	5,405.106	0.869	5,550.038	0.969	5,694.969
0.070	4,392.034	0.170	4,536.965	0.270	4,681.897	0.370	4,826.829	0.470	4,971.760	0.570	5,116.692	0.670	5,261.624	0.770	5,406.555	0.870	5,551.487	0.970	5,696.419
0.071	4,393.483	0.171	4,538.415	0.271	4,683.346	0.371	4,828.278	0.471	4,973.210	0.571	5,118.141	0.671	5,263.073	0.771	5,408.005	0.871	5,552.936	0.971	5,697.868
0.072	4,394.932	0.172	4,539.864	0.272	4,684.796	0.372	4,829.727	0.472	4,974.659	0.572	5,119.591	0.672	5,264.522	0.772	5,409.454	0.872	5,554.385	0.972	5,699.317
0.073	4,396.382	0.173	4,541.313	0.273	4,686.245	0.373	4,831.177	0.473	4,976.108	0.573	5,121.040	0.673	5,265.971	0.773	5,410.903	0.873	5,555.835	0.973	5,700.766
0.074	4,397.831	0.174	4,542.763	0.274	4,687.694	0.374	4,832.626	0.474	4,977.557	0.574	5,122.489	0.674	5,267.421	0.774	5,412.352	0.874	5,557.284	0.974	5,702.216
0.075	4,399.280	0.175	4,544.212	0.275	4,689.143	0.375	4,834.075	0.475	4,979.007	0.575	5,123.938	0.675	5,268.870	0.775	5,413.802	0.875	5,558.733	0.975	5,703.665
0.076	4,400.729	0.176	4,545.661	0.276	4,690.593	0.376	4,835.524	0.476	4,980.456	0.576	5,125.388	0.676	5,270.319	0.776	5,415.251	0.876	5,560.183	0.976	5,705.114
0.077	4,402.179	0.177	4,547.110	0.277	4,692.042	0.377	4,836.974	0.477	4,981.905	0.577	5,126.837	0.677	5,271.769	0.777	5,416.700	0.877	5,561.632	0.977	5,706.564
0.078	4,403.628	0.178	4,548.560	0.278	4,693.491	0.378	4,838.423	0.478	4,983.355	0.578	5,128.286	0.678	5,273.218	0.778	5,418.150	0.878	5,563.081	0.978	5,708.013
0.079	4,405.077	0.179	4,550.009	0.279	4,694.941	0.379	4,839.872	0.479	4,984.804	0.579	5,129.736	0.679	5,274.667	0.779	5,419.599	0.879	5,564.531	0.979	5,709.462
0.080	4,406.527	0.180	4,551.458	0.280	4,696.390	0.380	4,841.322	0.480	4,986.253	0.580	5,131.185	0.680	5,276.117	0.780	5,421.048	0.880	5,565.980	0.980	5,710.912
0.081	4,407.976	0.181	4,552.908	0.281	4,697.839	0.381	4,842.771	0.481	4,987.703	0.581	5,132.634	0.681	5,277.566	0.781	5,422.498	0.881	5,567.429	0.981	5,712.361
0.082	4,409.425	0.182	4,554.357	0.282	4,699.289	0.382	4,844.220	0.482	4,989.152	0.582	5,134.084	0.682	5,279.015	0.782	5,423.947	0.882	5,568.879	0.982	5,713.810
0.083	4,410.875	0.183	4,555.806	0.283	4,700.738	0.383	4,845.670	0.483	4,990.601	0.583	5,135.533	0.683	5,280.465	0.783	5,425.396	0.883	5,570.328	0.983	5,715.260
0.084	4,412.324	0.184	4,557.256	0.284	4,702.187	0.384	4,847.119	0.484	4,992.051	0.584	5,136.982	0.684	5,281.914	0.784	5,426.846	0.884	5,571.777	0.984	5,716.709
0.085	4,413.773	0.185	4,558.705	0.285	4,703.637	0.385	4,848.568	0.485	4,993.500	0.585	5,138.432	0.685	5,283.363	0.785	5,428.295	0.885	5,573.227	0.985	5,718.158
0.086	4,415.223	0.186	4,560.154	0.286	4,705.086	0.386	4,850.018	0.486	4,994.949	0.586	5,139.881	0.686	5,284.813	0.786	5,429.744	0.886	5,574.676	0.986	5,719.608
0.087	4,416.672	0.187	4,561.604	0.287	4,706.535	0.387	4,851.467	0.487	4,996.399	0.587	5,141.330	0.687	5,286.262	0.787	5,431.194	0.887	5,576.125	0.987	5,721.057
0.088	4,418.121	0.188	4,563.053	0.288	4,707.985	0.388	4,852.916	0.488	4,997.848	0.588	5,142.780	0.688	5,287.711	0.788	5,432.643	0.888	5,577.575	0.988	5,722.506
0.089	4,419.571	0.189	4,564.502	0.289	4,709.434	0.389	4,854.366	0.489	4,999.297	0.589	5,144.229	0.689	5,289.161	0.789	5,434.092	0.889	5,579.024	0.989	5,723.956
0.090	4,421.020	0.190	4,565.952	0.290	4,710.883	0.390	4,855.815	0.490	5,000.747	0.590	5,145.678	0.690	5,290.610	0.790	5,435.542	0.890	5,580.473	0.990	5,725.405
0.091	4,422.469	0.191	4,567.401	0.291	4,712.333	0.391	4,857.264	0.491	5,002.196	0.591	5,147.128	0.691	5,292.059	0.791	5,436.991	0.891	5,581.923	0.991	5,726.854
0.092	4,423.919	0.192	4,568.850	0.292	4,713.782	0.392	4,858.714	0.492	5,003.645	0.592	5,148.577	0.692	5,293.509	0.792	5,438.440	0.892	5,583.372	0.992	5,728.303
0.093	4,425.368	0.193	4,570.300	0.293	4,715.231	0.393	4,860.163	0.493	5,005.095	0.593	5,150.026	0.693	5,294.958	0.793	5,439.889	0.893	5,584.821	0.993	5,729.753
0.094	4,426.817	0.194	4,571.749	0.294	4,716.681	0.394	4,861.612	0.494	5,006.544	0.594	5,151.475	0.694	5,296.407	0.794	5,441.339	0.894	5,586.270	0.994	5,731.202
0.095	4,428.267	0.195	4,573.198	0.295	4,718.130	0.395	4,863.061	0.495	5,007.993	0.595	5,152.925	0.695	5,297.856	0.795	5,442.788	0.895	5,587.720	0.995	5,732.651
0.096	4,429.716	0.196	4,574.647	0.296	4,719.579	0.396	4,864.511	0.496	5,009.442	0.596	5,154.374	0.696	5,299.306	0.796	5,444.237	0.896	5,589.169	0.996	5,734.101
0.097	4,431.165	0.197	4,576.097	0.297	4,721.028	0.397	4,865.960	0.497	5,010.892	0.597	5,155.823	0.697	5,300.755	0.797	5,445.687	0.897	5,590.618	0.997	5,735.550
0.098	4,432.614	0.198	4,577.546	0.298	4,722.478	0.398	4,867.409	0.498	5,012.341	0.598	5,157.273	0.698	5,302.204	0.798	5,447.136	0.898	5,592.068	0.998	5,736.999
0.099	4,434.064	0.199	4,578.995	0.299	4,723.927	0.399	4,868.859	0.499	5,013.790	0.599	5,158.722	0.699	5,303.654	0.799	5,448.585	0.899	5,593.517	0.999	5,738.449

DATE STRAPPED: 06/26/18 BY: RJ
DATE COMPUTED: 07/03/18 BY: WLH
DATE ISSUED: 07/03/18

AMSPEC

Meliadine
Rankin Inlet

Tank No. 1
INNAGE TABLE

Calibration@AmSpecGroup.com

CAPACITIES GIVEN IN CUBIC METERS

GAUGE HEIGHT: 14.275 M

mm	4 M	mm	4 M	mm	4 M	mm	4 M	mm	4 M	mm	4 M	mm	4 M	mm	4 M	mm	4 M	mm	4 M
0.000	5,739.898	0.100	5,884.830	0.200	6,029.761	0.300	6,174.693	0.400	6,319.625	0.500	6,464.556	0.600	6,609.488	0.700	6,754.420	0.800	6,899.351	0.900	7,044.283
0.001	5,741.347	0.101	5,886.279	0.201	6,031.211	0.301	6,176.142	0.401	6,321.074	0.501	6,466.006	0.601	6,610.937	0.701	6,755.869	0.801	6,900.801	0.901	7,045.732
0.002	5,742.797	0.102	5,887.728	0.202	6,032.660	0.302	6,177.592	0.402	6,322.523	0.502	6,467.455	0.602	6,612.387	0.702	6,757.318	0.802	6,902.250	0.902	7,047.182
0.003	5,744.246	0.103	5,889.178	0.203	6,034.109	0.303	6,179.041	0.403	6,323.973	0.503	6,468.904	0.603	6,613.836	0.703	6,758.768	0.803	6,903.699	0.903	7,048.631
0.004	5,745.695	0.104	5,890.627	0.204	6,035.559	0.304	6,180.490	0.404	6,325.422	0.504	6,470.354	0.604	6,615.285	0.704	6,760.217	0.804	6,905.149	0.904	7,050.080
0.005	5,747.145	0.105	5,892.076	0.205	6,037.008	0.305	6,181.940	0.405	6,326.871	0.505	6,471.803	0.605	6,616.735	0.705	6,761.666	0.805	6,906.598	0.905	7,051.530
0.006	5,748.594	0.106	5,893.526	0.206	6,038.457	0.306	6,183.389	0.406	6,328.321	0.506	6,473.252	0.606	6,618.184	0.706	6,763.116	0.806	6,908.047	0.906	7,052.979
0.007	5,750.043	0.107	5,894.975	0.207	6,039.907	0.307	6,184.838	0.407	6,329.770	0.507	6,474.702	0.607	6,619.633	0.707	6,764.565	0.807	6,909.497	0.907	7,054.428
0.008	5,751.493	0.108	5,896.424	0.208	6,041.356	0.308	6,186.288	0.408	6,331.219	0.508	6,476.151	0.608	6,621.083	0.708	6,766.014	0.808	6,910.946	0.908	7,055.877
0.009	5,752.942	0.109	5,897.874	0.209	6,042.805	0.309	6,187.737	0.409	6,332.669	0.509	6,477.600	0.609	6,622.532	0.709	6,767.463	0.809	6,912.395	0.909	7,057.327
0.010	5,754.391	0.110	5,899.323	0.210	6,044.255	0.310	6,189.186	0.410	6,334.118	0.510	6,479.049	0.610	6,623.981	0.710	6,768.913	0.810	6,913.844	0.910	7,058.776
0.011	5,755.840	0.111	5,900.772	0.211	6,045.704	0.311	6,190.635	0.411	6,335.567	0.511	6,480.499	0.611	6,625.430	0.711	6,770.362	0.811	6,915.294	0.911	7,060.225
0.012	5,757.290	0.112	5,902.221	0.212	6,047.153	0.312	6,192.085	0.412	6,337.016	0.512	6,481.948	0.612	6,626.880	0.712	6,771.811	0.812	6,916.743	0.912	7,061.675
0.013	5,758.739	0.113	5,903.671	0.213	6,048.602	0.313	6,193.534	0.413	6,338.466	0.513	6,483.397	0.613	6,628.329	0.713	6,773.261	0.813	6,918.192	0.913	7,063.124
0.014	5,760.188	0.114	5,905.120	0.214	6,050.052	0.314	6,194.983	0.414	6,339.915	0.514	6,484.847	0.614	6,629.778	0.714	6,774.710	0.814	6,919.642	0.914	7,064.573
0.015	5,761.638	0.115	5,906.569	0.215	6,051.501	0.315	6,196.433	0.415	6,341.364	0.515	6,486.296	0.615	6,631.228	0.715	6,776.159	0.815	6,921.091	0.915	7,066.023
0.016	5,763.087	0.116	5,908.019	0.216	6,052.950	0.316	6,197.882	0.416	6,342.814	0.516	6,487.745	0.616	6,632.677	0.716	6,777.609	0.816	6,922.540	0.916	7,067.472
0.017	5,764.536	0.117	5,909.468	0.217	6,054.400	0.317	6,199.331	0.417	6,344.263	0.517	6,489.195	0.617	6,634.126	0.717	6,779.058	0.817	6,923.990	0.917	7,068.921
0.018	5,765.986	0.118	5,910.917	0.218	6,055.849	0.318	6,200.781	0.418	6,345.712	0.518	6,490.644	0.618	6,635.576	0.718	6,780.507	0.818	6,925.439	0.918	7,070.371
0.019	5,767.435	0.119	5,912.367	0.219	6,057.298	0.319	6,202.230	0.419	6,347.162	0.519	6,492.093	0.619	6,637.025	0.719	6,781.957	0.819	6,926.888	0.919	7,071.820
0.020	5,768.884	0.120	5,913.816	0.220	6,058.748	0.320	6,203.679	0.420	6,348.611	0.520	6,493.543	0.620	6,638.474	0.720	6,783.406	0.820	6,928.338	0.920	7,073.269
0.021	5,770.334	0.121	5,915.265	0.221	6,060.197	0.321	6,205.129	0.421	6,350.060	0.521	6,494.992	0.621	6,639.924	0.721	6,784.855	0.821	6,929.787	0.921	7,074.719
0.022	5,771.783	0.122	5,916.715	0.222	6,061.646	0.322	6,206.578	0.422	6,351.510	0.522	6,496.441	0.622	6,641.373	0.722	6,786.305	0.822	6,931.236	0.922	7,076.168
0.023	5,773.232	0.123	5,918.164	0.223	6,063.096	0.323	6,208.027	0.423	6,352.959	0.523	6,497.891	0.623	6,642.822	0.723	6,787.754	0.823	6,932.686	0.923	7,077.617
0.024	5,774.682	0.124	5,919.613	0.224	6,064.545	0.324	6,209.477	0.424	6,354.408	0.524	6,499.340	0.624	6,644.272	0.724	6,789.203	0.824	6,934.135	0.924	7,079.067
0.025	5,776.131	0.125	5,921.063	0.225	6,065.994	0.325	6,210.926	0.425	6,355.858	0.525	6,500.789	0.625	6,645.721	0.725	6,790.653	0.825	6,935.584	0.925	7,080.516
0.026	5,777.580	0.126	5,922.512	0.226	6,067.444	0.326	6,212.375	0.426	6,357.307	0.526	6,502.239	0.626	6,647.170	0.726	6,792.102	0.826	6,937.034	0.926	7,081.965
0.027	5,779.030	0.127	5,923.961	0.227	6,068.893	0.327	6,213.825	0.427	6,358.756	0.527	6,503.688	0.627	6,648.620	0.727	6,793.551	0.827	6,938.483	0.927	7,083.414
0.028	5,780.479	0.128	5,925.411	0.228	6,070.342	0.328	6,215.274	0.428	6,360.206	0.528	6,505.137	0.628	6,650.069	0.728	6,795.000	0.828	6,939.932	0.928	7,084.864
0.029	5,781.928	0.129	5,926.860	0.229	6,071.792	0.329	6,216.723	0.429	6,361.655	0.529	6,506.586	0.629	6,651.518	0.729	6,796.450	0.829	6,941.381	0.929	7,086.313
0.030	5,783.378	0.130	5,928.309	0.230	6,073.241	0.330	6,218.172	0.430	6,363.104	0.530	6,508.036	0.630	6,652.967	0.730	6,797.899	0.830	6,942.831	0.930	7,087.762
0.031	5,784.827	0.131	5,929.758	0.231	6,074.690	0.331	6,219.622	0.431	6,364.553	0.531	6,509.485	0.631	6,654.417	0.731	6,799.348	0.831	6,944.280	0.931	7,089.212
0.032	5,786.276	0.132	5,931.208	0.232	6,076.139	0.332	6,221.071	0.432	6,366.003	0.532	6,510.934	0.632	6,655.866	0.732	6,800.798	0.832	6,945.729	0.932	7,090.661
0.033	5,787.725	0.133	5,932.657	0.233	6,077.589	0.333	6,222.520	0.433	6,367.452	0.533	6,512.384	0.633	6,657.315	0.733	6,802.247	0.833	6,947.179	0.933	7,092.110
0.034	5,789.175	0.134	5,934.106	0.234	6,079.038	0.334	6,223.970	0.434	6,368.901	0.534	6,513.833	0.634	6,658.765	0.734	6,803.696	0.834	6,948.628	0.934	7,093.560
0.035	5,790.624	0.135	5,935.556	0.235	6,080.487	0.335	6,225.419	0.435	6,370.351	0.535	6,515.282	0.635	6,660.214	0.735	6,805.146	0.835	6,950.077	0.935	7,095.009
0.036	5,792.073	0.136	5,937.005	0.236	6,081.937	0.336	6,226.868	0.436	6,371.800	0.536	6,516.732	0.636	6,661.663	0.736	6,806.595	0.836	6,951.527	0.936	7,096.458
0.037	5,793.523	0.137	5,938.454	0.237	6,083.386	0.337	6,228.318	0.437	6,373.249	0.537	6,518.181	0.637	6,663.113	0.737	6,808.044	0.837	6,952.976	0.937	7,097.908
0.038	5,794.972	0.138	5,939.904	0.238	6,084.835	0.338	6,229.767	0.438	6,374.699	0.538	6,519.630	0.638	6,664.562	0.738	6,809.494	0.838	6,954.425	0.938	7,099.357
0.039	5,796.421	0.139	5,941.353	0.239	6,086.285	0.339	6,231.216	0.439	6,376.148	0.539	6,521.080	0.639	6,666.011	0.739	6,810.943	0.839	6,955.875	0.939	7,100.806
0.040	5,797.871	0.140	5,942.802	0.240	6,087.734	0.340	6,232.666	0.440	6,377.597	0.540	6,522.529	0.640	6,667.461	0.740	6,812.392	0.840	6,957.324	0.940	7,102.256
0.041	5,799.320	0.141	5,944.252	0.241	6,089.183	0.341	6,234.115	0.441	6,379.047	0.541	6,523.978	0.641	6,668.910	0.741	6,813.842	0.841	6,958.773	0.941	7,103.705
0.042	5,800.769	0.142	5,945.701	0.242	6,090.633	0.342	6,235.564	0.442	6,380.496	0.542	6,525.428	0.642	6,670.359	0.742	6,815.291	0.842	6,960.223	0.942	7,105.154
0.043	5,802.219	0.143	5,947.150	0.243	6,092.082	0.343	6,237.014	0.443	6,381.945	0.543	6,526.877	0.643	6,671.809	0.743	6,816.740	0.843	6,961.672	0.943	7,106.604
0.044	5,803.668	0.144	5,948.600	0.244	6,093.531	0.344	6,238.463	0.444	6,383.395	0.544	6,528.326	0.644	6,673.258	0.744	6,818.190	0.844	6,963.121	0.944	7,108.053
0.045	5,805.117	0.145	5,950.049	0.245	6,094.981	0.345	6,239.912	0.445	6,384.844	0.545	6,529.776	0.645	6,674.707	0.745	6,819.639	0.845	6,964.571	0.945	7,109.502
0.046	5,806.567	0.146	5,951.498	0.246	6,096.430	0.346	6,241.362	0.446	6,386.293	0.546	6,531.225	0.646	6,676.157	0.746	6,821.088	0.846	6,966.020	0.946	7,110.952
0.047	5,808.016	0.147	5,952.948	0.247	6,097.879	0.347	6,242.811	0.447	6,387.743	0.547	6,532.674	0.647	6,677.606	0.747	6,822.538	0.847	6,967.469	0.947	7,112.401
0.048	5,809.465	0.148	5,954.397	0.248	6,099.329	0.348	6,244.260	0.448	6,389.192	0.548	6,534.124	0.648	6,679.055	0.748	6,823.987	0.848	6,968.918	0.948	7,113.850
0.049	5,810.915	0.149	5,955.846	0.249	6,100.778	0.349	6,245.710	0.449	6,390.641	0.549	6,535.573	0.649	6,680.504	0.749	6,825.436	0.849	6,970.368	0.949	7,115.299
0.050	5,812.364	0.150	5,957.296	0.250	6,102.227	0.350	6,247.159	0.450	6,392.090	0.550	6,537.022	0.650	6,681.954	0.750	6,826.885	0.850	6,971.817	0.950	7,116.749
0.051	5,813.813	0.151	5,958.745	0.251	6,103.676	0.351	6,248.608	0.451	6,393.540	0.551	6,538.471	0.651	6,683.403	0.751	6,828.335	0.851	6,973.266	0.951	7,118.198
0.052	5,815.262	0.152	5,960.194	0.252	6,105.126	0.352	6,250.057	0.452	6,394.989	0.552	6,539.921	0.652	6,684.852	0.752	6,829.784	0.852	6,974.716	0.952	7,119.647
0.053	5,816.712	0.153	5,961.643	0.253	6,106.575	0.353	6,251.507	0.453	6,396.438	0.553	6,541.370	0.653	6,686.302	0.753	6,831.233	0.853	6,976.165	0.953	7,121.097
0.054	5,818.161	0.154	5,963.093	0.254	6,108.024	0.354	6,252.956	0.454	6,397.888	0.554	6,542.819	0.654	6,687.751	0.754	6,832.683	0.854	6,977.614	0.954	7,122.546
0.055	5,819.610	0.155	5,964.542	0.255	6,109.474	0.355	6,254.405	0.455	6,399.337	0.555	6,544.269	0.655	6,689.200	0.755	6,834.132	0.855	6,979.064	0.955	7,123.995
0.056	5,821.060	0.156	5,965.991	0.256	6,110.923	0.356	6,255.855	0.456	6,400.786	0.556	6,545.718	0.656	6,690.650	0.756	6,835.581	0.856	6,980.513	0.956	7,125.445
0.057	5,822.509	0.157	5,967.441	0.257	6,112.372	0.357	6,257.304	0.457	6,402.236	0.557	6,547.167	0.657	6,692.099	0.757	6,837.031	0.857	6,981.962	0.957	7,126.894
0.058	5,823.958	0.158	5,968.890	0.258	6,113.822	0.358	6,258.753	0.458	6,403.685	0.558	6,548.617	0.658	6,693.548	0.758	6,838.480	0.858	6,983.412	0.958	7,128.343
0.059	5,825.408	0.159	5,970.339	0.259	6,115.271	0.359	6,260.203	0.459	6,405.134	0.559	6,550.066	0.659	6,694.998	0.759	6,839.929	0.859	6,984.861	0.959	7,129.793
0.060	5,826.857	0.160	5,971.789	0.260	6,116.720	0.360	6,261.652	0.460	6,406.584	0.560	6,551.515	0.660	6,696.447	0.760	6,841.379	0.860	6,986.310	0.960	7,131.242
0.061	5,828.306	0.161	5,973.238	0.261	6,118.170	0.361	6,263.101	0.461	6,408.033	0.561	6,552.965	0.661	6,697.896	0.761	6,842.828	0.861	6,987.760	0.961	7,132.691
0.062	5,829.756	0.162	5,974.687	0.262	6,119.619	0.362	6,264.551	0.462	6,409.482	0.562	6,554.414	0.662	6,699.346	0.762	6,844.277	0.862	6,989.209	0.962	7,134.141
0.063	5,831.205	0.163	5,976.137	0.263	6,121.068	0.363	6,266.000	0.463	6,410.932	0.563	6,555.863	0.663	6,700.795	0.763	6,845.727	0.863	6,990.658	0.963	7,135.590
0.064	5,832.654	0.164	5,977.586	0.264	6,122.518	0.364	6,267.449	0.464	6,412.381	0.564	6,557.313	0.664	6,702.244	0.764	6,847.176	0.864	6,992.108	0.964	7,137.039
0.065	5,834.104	0.165	5,979.035	0.265	6,123.967	0.365	6,268.899	0.465	6,413.830	0.565	6,558.762	0.665	6,703.694	0.765	6,848.625	0.865	6,993.557	0.965	7,138.489
0.066	5,835.553	0.166	5,980.485	0.266	6,125.416	0.366	6,270.348	0.466	6,415.280	0.566	6,560.211	0.666	6,705.143	0.766	6,850.075	0.866	6,995.006	0.966	7,139.938
0.067	5,837.002	0.167	5,981.934	0.267	6,126.866	0.367	6,271.797	0.467	6,416.729	0.567	6,561.661	0.667	6,706.592	0.767	6,851.524	0.867	6,996.455	0.967	7,141.387
0.068	5,838.452	0.168	5,983.383	0.268	6,128.315	0.368	6,273.247	0.468	6,418.178	0.568	6,563.110	0.668	6,708.041	0.768	6,852.973	0.868	6,997.905	0.968	7,142.836
0.069	5,839.901	0.169	5,984.833	0.269	6,129.764	0.369	6,274.696	0.469	6,419.627	0.569	6,564.559	0.669	6,709.491	0.769	6,854.422	0.869	6,999.354	0.969	7,144.286
0.070	5,841.350	0.170	5,986.282	0.270	6,131.213	0.370	6,276.145	0.470	6,421.077	0.570	6,566.008	0.670	6,710.940	0.770	6,855.872	0.870	7,000.803	0.970	7,145.735
0.071	5,842.799	0.171	5,987.731	0.271	6,132.663	0.371	6,277.594	0.471	6,422.526	0.571	6,567.458	0.671	6,712.389	0.771	6,857.321	0.871	7,002.253	0.971	7,147.184
0.072	5,844.249	0.172	5,989.180	0.272	6,134.112	0.372	6,279.044	0.472	6,423.975	0.572	6,568.907	0.672	6,713.839	0.772	6,858.770	0.872	7,003.702	0.972	7,148.634
0.073	5,845.698	0.173	5,990.630	0.273	6,135.561	0.373	6,280.493	0.473	6,425.425	0.573	6,570.356	0.673	6,715.288	0.773	6,860.220	0.873	7,005.151	0.973	7,150.083
0.074	5,847.147	0.174	5,992.079	0.274	6,137.011	0.374	6,281.942	0.474	6,426.874	0.574	6,571.806	0.674	6,716.737	0.774	6,861.669	0.874	7,006.601	0.974	7,151.532
0.075	5,848.597	0.175	5,993.528	0.275	6,138.460	0.375	6,283.392	0.475	6,428.323	0.575	6,573.255	0.675	6,718.187	0.775	6,863.118	0.875	7,008.050	0.975	7,152.982
0.076	5,850.046	0.176	5,994.978	0.276	6,139.909	0.376	6,284.841	0.476	6,429.773	0.576	6,574.704	0.676	6,719.636	0.776	6,864.568	0.876	7,009.499	0.976	7,154.431
0.077	5,851.495	0.177	5,996.427	0.277	6,141.359	0.377	6,286.290	0.477	6,431.222	0.577	6,576.154	0.677	6,721.085	0.777	6,866.017	0.877	7,010.949	0.977	7,155.880
0.078	5,852.945	0.178	5,997.876	0.278	6,142.808	0.378	6,287.740	0.478	6,432.671	0.578	6,577.603	0.678	6,722.535	0.778	6,867.466	0.878	7,012.398	0.978	7,157.330
0.079	5,854.394	0.179	5,999.326	0.279	6,144.257	0.379	6,289.189	0.479	6,434.121	0.579	6,579.052	0.679	6,723.984	0.779	6,868.916	0.879	7,013.847	0.979	7,158.779
0.080	5,855.843	0.180	6,000.775	0.280	6,145.707	0.380	6,290.638	0.480	6,435.570	0.580	6,580.502	0.680	6,725.433	0.780	6,870.365	0.880	7,015.297	0.980	7,160.228
0.081	5,857.293	0.181	6,002.224	0.281	6,147.156	0.381	6,292.088	0.481	6,437.019	0.581	6,581.951	0.681	6,726.883	0.781	6,871.814	0.881	7,016.746	0.981	7,161.678
0.082	5,858.742	0.182	6,003.674	0.282	6,148.605	0.382	6,293.537	0.482	6,438.469	0.582	6,583.400	0.682	6,728.332	0.782	6,873.264	0.882	7,018.195	0.982	7,163.127
0.083	5,860.191	0.183	6,005.123	0.283	6,150.055	0.383	6,294.986	0.483	6,439.918	0.583	6,584.850	0.683	6,729.781	0.783	6,874.713	0.883	7,019.645	0.983	7,164.576
0.084	5,861.641	0.184	6,006.572	0.284	6,151.504	0.384	6,296.436	0.484	6,441.367	0.584	6,586.299	0.684	6,731.231	0.784	6,876.162	0.884	7,021.094	0.984	7,166.026
0.085	5,863.090	0.185	6,008.022	0.285	6,152.953	0.385	6,297.885	0.485	6,442.817	0.585	6,587.748	0.685	6,732.680	0.785	6,877.612	0.885	7,022.543	0.985	7,167.475
0.086	5,864.539	0.186	6,009.471	0.286	6,154.403	0.386	6,299.334	0.486	6,444.266	0.586	6,589.198	0.686	6,734.129	0.786	6,879.061	0.886	7,023.993	0.986	7,168.924
0.087	5,865.989	0.187	6,010.920	0.287	6,155.852	0.387	6,300.784	0.487	6,445.715	0.587	6,590.647	0.687	6,735.579	0.787	6,880.510	0.887	7,025.442	0.987	7,170.373
0.088	5,867.438	0.188	6,012.370	0.288	6,157.301	0.388	6,302.233	0.488	6,447.165	0.588	6,592.096	0.688	6,737.028	0.788	6,881.959	0.888	7,026.891	0.988	7,171.823
0.089	5,868.887	0.189	6,013.819	0.289	6,158.751	0.389	6,303.682	0.489	6,448.614	0.589	6,593.545	0.689	6,738.477	0.789	6,883.409	0.889	7,028.340	0.989	7,173.272
0.090	5,870.337	0.190	6,015.268	0.290	6,160.200	0.390	6,305.131	0.490	6,450.063	0.590	6,594.995	0.690	6,739.926	0.790	6,884.858	0.890	7,029.790	0.990	7,174.721
0.091	5,871.786	0.191	6,016.717	0.291	6,161.649	0.391	6,306.581	0.491	6,451.512	0.591	6,596.444	0.691	6,741.376	0.791	6,886.307	0.891	7,031.239	0.991	7,176.171
0.092	5,873.235	0.192	6,018.167	0.292	6,163.098	0.392	6,308.030	0.492	6,452.962	0.592	6,597.893	0.692	6,742.825	0.792	6,887.757	0.892	7,032.688	0.992	7,177.620
0.093	5,874.684	0.193	6,019.616	0.293	6,164.548	0.393	6,309.479	0.493	6,454.411	0.593	6,599.343	0.693	6,744.274	0.793	6,889.206	0.893	7,034.138	0.993	7,179.069
0.094	5,876.134	0.194	6,021.065	0.294	6,165.997	0.394	6,310.929	0.494	6,455.860	0.594	6,600.792	0.694	6,745.724	0.794	6,890.655	0.894	7,035.587	0.994	7,180.519
0.095	5,877.583	0.195	6,022.515	0.295	6,167.446	0.395	6,312.378	0.495	6,457.310	0.595	6,602.241	0.695	6,747.173	0.795	6,892.105	0.895	7,037.036	0.995	7,181.968
0.096	5,879.032	0.196	6,023.964	0.296	6,168.896	0.396	6,313.827	0.496	6,458.759	0.596	6,603.691	0.696	6,748.622	0.796	6,893.554	0.896	7,038.486	0.996	7,183.417
0.097	5,880.482	0.197	6,025.413	0.297	6,170.345	0.397	6,315.277	0.497	6,460.208	0.597	6,605.140	0.697	6,750.072	0.797	6,895.003	0.897	7,039.935	0.997	7,184.867
0.098	5,881.931	0.198	6,026.863	0.298	6,171.794	0.398	6,316.726	0.498	6,461.658	0.598	6,606.589	0.698	6,751.521	0.798	6,896.453	0.898	7,041.384	0.998	7,186.316
0.099	5,883.380	0.199	6,028.312	0.299	6,173.244	0.399	6,318.175	0.499	6,463.107	0.599	6,608.039	0.699	6,752.970	0.799	6,897.902	0.899	7,042.834	0.999	7,187.765

DATE STRAPPED: 06/26/18 BY: RJ
DATE COMPUTED: 07/03/18 BY: WLH
DATE ISSUED: 07/03/18

AMSPEC

Meliadine
Rankin Inlet

Tank No. 1
INNAGE TABLE

Calibration@AmSpecGroup.com

CAPACITIES GIVEN IN CUBIC METERS

GAUGE HEIGHT: 14.275 M

mm	5 M	mm	5 M	mm	5 M	mm	5 M	mm	5 M	mm	5 M	mm	5 M	mm	5 M	mm	5 M	mm	5 M
0.000	7,189.215	0.100	7,334.146	0.200	7,479.078	0.300	7,624.010	0.400	7,768.941	0.500	7,913.873	0.600	8,058.765	0.700	8,203.655	0.800	8,348.545	0.900	8,493.434
0.001	7,190.664	0.101	7,335.596	0.201	7,480.527	0.301	7,625.459	0.401	7,770.391	0.501	7,915.322	0.601	8,060.214	0.701	8,205.104	0.801	8,349.994	0.901	8,494.883
0.002	7,192.113	0.102	7,337.045	0.202	7,481.977	0.302	7,626.908	0.402	7,771.840	0.502	7,916.772	0.602	8,061.663	0.702	8,206.553	0.802	8,351.442	0.902	8,496.332
0.003	7,193.563	0.103	7,338.494	0.203	7,483.426	0.303	7,628.358	0.403	7,773.289	0.503	7,918.221	0.603	8,063.112	0.703	8,208.002	0.803	8,352.891	0.903	8,497.781
0.004	7,195.012	0.104	7,339.944	0.204	7,484.875	0.304	7,629.807	0.404	7,774.739	0.504	7,919.670	0.604	8,064.561	0.704	8,209.451	0.804	8,354.340	0.904	8,499.230
0.005	7,196.461	0.105	7,341.393	0.205	7,486.325	0.305	7,631.256	0.405	7,776.188	0.505	7,921.119	0.605	8,066.010	0.705	8,210.900	0.805	8,355.789	0.905	8,500.679
0.006	7,197.911	0.106	7,342.842	0.206	7,487.774	0.306	7,632.705	0.406	7,777.637	0.506	7,922.569	0.606	8,067.459	0.706	8,212.348	0.806	8,357.238	0.906	8,502.128
0.007	7,199.360	0.107	7,344.291	0.207	7,489.223	0.307	7,634.155	0.407	7,779.086	0.507	7,924.018	0.607	8,068.908	0.707	8,213.797	0.807	8,358.687	0.907	8,503.576
0.008	7,200.809	0.108	7,345.741	0.208	7,490.672	0.308	7,635.604	0.408	7,780.536	0.508	7,925.467	0.608	8,070.357	0.708	8,215.246	0.808	8,360.136	0.908	8,505.025
0.009	7,202.258	0.109	7,347.190	0.209	7,492.122	0.309	7,637.053	0.409	7,781.985	0.509	7,926.916	0.609	8,071.806	0.709	8,216.695	0.809	8,361.585	0.909	8,506.474
0.010	7,203.708	0.110	7,348.639	0.210	7,493.571	0.310	7,638.503	0.410	7,783.434	0.510	7,928.365	0.610	8,073.254	0.710	8,218.144	0.810	8,363.034	0.910	8,507.923
0.011	7,205.157	0.111	7,350.089	0.211	7,495.020	0.311	7,639.952	0.411	7,784.884	0.511	7,929.814	0.611	8,074.703	0.711	8,219.593	0.811	8,364.482	0.911	8,509.372
0.012	7,206.606	0.112	7,351.538	0.212	7,496.470	0.312	7,641.401	0.412	7,786.333	0.512	7,931.263	0.612	8,076.152	0.712	8,221.042	0.812	8,365.931	0.912	8,510.821
0.013	7,208.056	0.113	7,352.987	0.213	7,497.919	0.313	7,642.851	0.413	7,787.782	0.513	7,932.711	0.613	8,077.601	0.713	8,222.491	0.813	8,367.380	0.913	8,512.270
0.014	7,209.505	0.114	7,354.437	0.214	7,499.368	0.314	7,644.300	0.414	7,789.232	0.514	7,934.160	0.614	8,079.050	0.714	8,223.940	0.814	8,368.829	0.914	8,513.719
0.015	7,210.954	0.115	7,355.886	0.215	7,500.818	0.315	7,645.749	0.415	7,790.681	0.515	7,935.609	0.615	8,080.499	0.715	8,225.388	0.815	8,370.278	0.915	8,515.168
0.016	7,212.404	0.116	7,357.335	0.216	7,502.267	0.316	7,647.199	0.416	7,792.130	0.516	7,937.058	0.616	8,081.948	0.716	8,226.837	0.816	8,371.727	0.916	8,516.617
0.017	7,213.853	0.117	7,358.785	0.217	7,503.716	0.317	7,648.648	0.417	7,793.580	0.517	7,938.507	0.617	8,083.397	0.717	8,228.286	0.817	8,373.176	0.917	8,518.065
0.018	7,215.302	0.118	7,360.234	0.218	7,505.166	0.318	7,650.097	0.418	7,795.029	0.518	7,939.956	0.618	8,084.846	0.718	8,229.735	0.818	8,374.625	0.918	8,519.514
0.019	7,216.752	0.119	7,361.683	0.219	7,506.615	0.319	7,651.547	0.419	7,796.478	0.519	7,941.405	0.619	8,086.294	0.719	8,231.184	0.819	8,376.074	0.919	8,520.963
0.020	7,218.201	0.120	7,363.133	0.220	7,508.064	0.320	7,652.996	0.420	7,797.928	0.520	7,942.854	0.620	8,087.743	0.720	8,232.633	0.820	8,377.523	0.920	8,522.412
0.021	7,219.650	0.121	7,364.582	0.221	7,509.514	0.321	7,654.445	0.421	7,799.377	0.521	7,944.303	0.621	8,089.192	0.721	8,234.082	0.821	8,378.971	0.921	8,523.861
0.022	7,221.100	0.122	7,366.031	0.222	7,510.963	0.322	7,655.895	0.422	7,800.826	0.522	7,945.752	0.622	8,090.641	0.722	8,235.531	0.822	8,380.420	0.922	8,525.310
0.023	7,222.549	0.123	7,367.481	0.223	7,512.412	0.323	7,657.344	0.423	7,802.276	0.523	7,947.200	0.623	8,092.090	0.723	8,236.980	0.823	8,381.869	0.923	8,526.759
0.024	7,223.998	0.124	7,368.930	0.224	7,513.862	0.324	7,658.793	0.424	7,803.725	0.524	7,948.649	0.624	8,093.539	0.724	8,238.429	0.824	8,383.318	0.924	8,528.208
0.025	7,225.448	0.125	7,370.379	0.225	7,515.311	0.325	7,660.242	0.425	7,805.174	0.525	7,950.098	0.625	8,094.988	0.725	8,239.877	0.825	8,384.767	0.925	8,529.657
0.026	7,226.897	0.126	7,371.828	0.226	7,516.760	0.326	7,661.692	0.426	7,806.623	0.526	7,951.547	0.626	8,096.437	0.726	8,241.326	0.826	8,386.216	0.926	8,531.106
0.027	7,228.346	0.127	7,373.278	0.227	7,518.209	0.327	7,663.141	0.427	7,808.073	0.527	7,952.996	0.627	8,097.886	0.727	8,242.775	0.827	8,387.665	0.927	8,532.554
0.028	7,229.795	0.128	7,374.727	0.228	7,519.659	0.328	7,664.590	0.428	7,809.522	0.528	7,954.445	0.628	8,099.335	0.728	8,244.224	0.828	8,389.114	0.928	8,534.003
0.029	7,231.245	0.129	7,376.176	0.229	7,521.108	0.329	7,666.040	0.429	7,810.971	0.529	7,955.894	0.629	8,100.783	0.729	8,245.673	0.829	8,390.563	0.929	8,535.452
0.030	7,232.694	0.130	7,377.626	0.230	7,522.557	0.330	7,667.489	0.430	7,812.421	0.530	7,957.343	0.630	8,102.232	0.730	8,247.122	0.830	8,392.012	0.930	8,536.901
0.031	7,234.143	0.131	7,379.075	0.231	7,524.007	0.331	7,668.938	0.431	7,813.870	0.531	7,958.792	0.631	8,103.681	0.731	8,248.571	0.831	8,393.460	0.931	8,538.350
0.032	7,235.593	0.132	7,380.524	0.232	7,525.456	0.332	7,670.388	0.432	7,815.319	0.532	7,960.241	0.632	8,105.130	0.732	8,250.020	0.832	8,394.909	0.932	8,539.799
0.033	7,237.042	0.133	7,381.974	0.233	7,526.905	0.333	7,671.837	0.433	7,816.769	0.533	7,961.689	0.633	8,106.579	0.733	8,251.469	0.833	8,396.358	0.933	8,541.248
0.034	7,238.491	0.134	7,383.423	0.234	7,528.355	0.334	7,673.286	0.434	7,818.218	0.534	7,963.138	0.634	8,108.028	0.734	8,252.917	0.834	8,397.807	0.934	8,542.697
0.035	7,239.941	0.135	7,384.872	0.235	7,529.804	0.335	7,674.736	0.435	7,819.667	0.535	7,964.587	0.635	8,109.477	0.735	8,254.366	0.835	8,399.256	0.935	8,544.146
0.036	7,241.390	0.136	7,386.322	0.236	7,531.253	0.336	7,676.185	0.436	7,821.117	0.536	7,966.036	0.636	8,110.926	0.736	8,255.815	0.836	8,400.705	0.936	8,545.594
0.037	7,242.839	0.137	7,387.771	0.237	7,532.703	0.337	7,677.634	0.437	7,822.566	0.537	7,967.485	0.637	8,112.375	0.737	8,257.264	0.837	8,402.154	0.937	8,547.043
0.038	7,244.289	0.138	7,389.220	0.238	7,534.152	0.338	7,679.084	0.438	7,824.015	0.538	7,968.934	0.638	8,113.823	0.738	8,258.713	0.838	8,403.603	0.938	8,548.492
0.039	7,245.738	0.139	7,390.670	0.239	7,535.601	0.339	7,680.533	0.439	7,825.465	0.539	7,970.383	0.639	8,115.272	0.739	8,260.162	0.839	8,405.052	0.939	8,549.941
0.040	7,247.187	0.140	7,392.119	0.240	7,537.051	0.340	7,681.982	0.440	7,826.914	0.540	7,971.832	0.640	8,116.721	0.740	8,261.611	0.840	8,406.500	0.940	8,551.390
0.041	7,248.637	0.141	7,393.568	0.241	7,538.500	0.341	7,683.432	0.441	7,828.363	0.541	7,973.281	0.641	8,118.170	0.741	8,263.060	0.841	8,407.949	0.941	8,552.839
0.042	7,250.086	0.142	7,395.018	0.242	7,539.949	0.342	7,684.881	0.442	7,829.813	0.542	7,974.729	0.642	8,119.619	0.742	8,264.509	0.842	8,409.398	0.942	8,554.288
0.043	7,251.535	0.143	7,396.467	0.243	7,541.399	0.343	7,686.330	0.443	7,831.262	0.543	7,976.178	0.643	8,121.068	0.743	8,265.958	0.843	8,410.847	0.943	8,555.737
0.044	7,252.985	0.144	7,397.916	0.244	7,542.848	0.344	7,687.780	0.444	7,832.711	0.544	7,977.627	0.644	8,122.517	0.744	8,267.406	0.844	8,412.296	0.944	8,557.186
0.045	7,254.434	0.145	7,399.366	0.245	7,544.297	0.345	7,689.229	0.445	7,834.160	0.545	7,979.076	0.645	8,123.966	0.745	8,268.855	0.845	8,413.745	0.945	8,558.635
0.046	7,255.883	0.146	7,400.815	0.246	7,545.746	0.346	7,690.678	0.446	7,835.610	0.546	7,980.525	0.646	8,125.415	0.746	8,270.304	0.846	8,415.194	0.946	8,560.083
0.047	7,257.332	0.147	7,402.264	0.247	7,547.196	0.347	7,692.127	0.447	7,837.059	0.547	7,981.974	0.647	8,126.864	0.747	8,271.753	0.847	8,416.643	0.947	8,561.532
0.048	7,258.782	0.148	7,403.713	0.248	7,548.645	0.348	7,693.577	0.448	7,838.508	0.548	7,983.423	0.648	8,128.312	0.748	8,273.202	0.848	8,418.092	0.948	8,562.981
0.049	7,260.231	0.149	7,405.163	0.249	7,550.094	0.349	7,695.026	0.449	7,839.958	0.549	7,984.872	0.649	8,129.761	0.749	8,274.651	0.849	8,419.541	0.949	8,564.430
0.050	7,261.680	0.150	7,406.612	0.250	7,551.544	0.350	7,696.475	0.450	7,841.407	0.550	7,986.321	0.650	8,131.210	0.750	8,276.100	0.850	8,420.989	0.950	8,565.879
0.051	7,263.130	0.151	7,408.061	0.251	7,552.993	0.351	7,697.925	0.451	7,842.856	0.551	7,987.770	0.651	8,132.659	0.751	8,277.549	0.851	8,422.438	0.951	8,567.328
0.052	7,264.579	0.152	7,409.511	0.252	7,554.442	0.352	7,699.374	0.452	7,844.306	0.552	7,989.218	0.652	8,134.108	0.752	8,278.998	0.852	8,423.887	0.952	8,568.777
0.053	7,266.028	0.153	7,410.960	0.253	7,555.892	0.353	7,700.823	0.453	7,845.755	0.553	7,990.667	0.653	8,135.557	0.753	8,280.447	0.853	8,425.336	0.953	8,570.226
0.054	7,267.478	0.154	7,412.409	0.254	7,557.341	0.354	7,702.273	0.454	7,847.204	0.554	7,992.116	0.654	8,137.006	0.754	8,281.895	0.854	8,426.785	0.954	8,571.675
0.055	7,268.927	0.155	7,413.859	0.255	7,558.790	0.355	7,703.722	0.455	7,848.654	0.555	7,993.565	0.655	8,138.455	0.755	8,283.344	0.855	8,428.234	0.955	8,573.124
0.056	7,270.376	0.156	7,415.308	0.256	7,560.240	0.356	7,705.171	0.456	7,850.103	0.556	7,995.014	0.656	8,139.904	0.756	8,284.793	0.856	8,429.683	0.956	8,574.572
0.057	7,271.826	0.157	7,416.757	0.257	7,561.689	0.357	7,706.621	0.457	7,851.552	0.557	7,996.463	0.657	8,141.353	0.757	8,286.242	0.857	8,431.132	0.957	8,576.021
0.058	7,273.275	0.158	7,418.207	0.258	7,563.138	0.358	7,708.070	0.458	7,853.002	0.558	7,997.912	0.658	8,142.801	0.758	8,287.691	0.858	8,432.581	0.958	8,577.470
0.059	7,274.724	0.159	7,419.656	0.259	7,564.588	0.359	7,709.519	0.459	7,854.451	0.559	7,999.361	0.659	8,144.250	0.759	8,289.140	0.859	8,434.029	0.959	8,578.919
0.060	7,276.174	0.160	7,421.105	0.260	7,566.037	0.360	7,710.969	0.460	7,855.900	0.560	8,000.810	0.660	8,145.699	0.760	8,290.589	0.860	8,435.478	0.960	8,580.368
0.061	7,277.623	0.161	7,422.555	0.261	7,567.486	0.361	7,712.418	0.461	7,857.350	0.561	8,002.258	0.661	8,147.148	0.761	8,292.038	0.861	8,436.927	0.961	8,581.817
0.062	7,279.072	0.162	7,424.004	0.262	7,568.936	0.362	7,713.867	0.462	7,858.799	0.562	8,003.707	0.662	8,148.597	0.762	8,293.487	0.862	8,438.376	0.962	8,583.266
0.063	7,280.522	0.163	7,425.453	0.263	7,570.385	0.363	7,715.317	0.463	7,860.248	0.563	8,005.156	0.663	8,150.046	0.763	8,294.935	0.863	8,439.825	0.963	8,584.715
0.064	7,281.971	0.164	7,426.903	0.264	7,571.834	0.364	7,716.766	0.464	7,861.698	0.564	8,006.605	0.664	8,151.495	0.764	8,296.384	0.864	8,441.274	0.964	8,586.164
0.065	7,283.420	0.165	7,428.352	0.265	7,573.284	0.365	7,718.215	0.465	7,863.147	0.565	8,008.054	0.665	8,152.944	0.765	8,297.833	0.865	8,442.723	0.965	8,587.612
0.066	7,284.870	0.166	7,429.801	0.266	7,574.733	0.366	7,719.664	0.466	7,864.596	0.566	8,009.503	0.666	8,154.393	0.766	8,299.282	0.866	8,444.172	0.966	8,589.061
0.067	7,286.319	0.167	7,431.250	0.267	7,576.182	0.367	7,721.114	0.467	7,866.045	0.567	8,010.952	0.667	8,155.841	0.767	8,300.731	0.867	8,445.621	0.967	8,590.510
0.068	7,287.768	0.168	7,432.700	0.268	7,577.631	0.368	7,722.563	0.468	7,867.495	0.568	8,012.401	0.668	8,157.290	0.768	8,302.180	0.868	8,447.070	0.968	8,591.959
0.069	7,289.217	0.169	7,434.149	0.269	7,579.081	0.369	7,724.012	0.469	7,868.944	0.569	8,013.850	0.669	8,158.739	0.769	8,303.629	0.869	8,448.518	0.969	8,593.408
0.070	7,290.667	0.170	7,435.598	0.270	7,580.530	0.370	7,725.462	0.470	7,870.393	0.570	8,015.299	0.670	8,160.188	0.770	8,305.078	0.870	8,449.967	0.970	8,594.857
0.071	7,292.116	0.171	7,437.048	0.271	7,581.979	0.371	7,726.911	0.471	7,871.843	0.571	8,016.747	0.671	8,161.637	0.771	8,306.527	0.871	8,451.416	0.971	8,596.306
0.072	7,293.565	0.172	7,438.497	0.272	7,583.429	0.372	7,728.360	0.472	7,873.292	0.572	8,018.196	0.672	8,163.086	0.772	8,307.976	0.872	8,452.865	0.972	8,597.755
0.073	7,295.015	0.173	7,439.946	0.273	7,584.878	0.373	7,729.810	0.473	7,874.741	0.573	8,019.645	0.673	8,164.535	0.773	8,309.424	0.873	8,454.314	0.973	8,599.204
0.074	7,296.464	0.174	7,441.396	0.274	7,586.327	0.374	7,731.259	0.474	7,876.191	0.574	8,021.094	0.674	8,165.984	0.774	8,310.873	0.874	8,455.763	0.974	8,600.653
0.075	7,297.913	0.175	7,442.845	0.275	7,587.777	0.375	7,732.708	0.475	7,877.640	0.575	8,022.543	0.675	8,167.433	0.775	8,312.322	0.875	8,457.212	0.975	8,602.101
0.076	7,299.363	0.176	7,444.294	0.276	7,589.226	0.376	7,734.158	0.476	7,879.089	0.576	8,023.992	0.676	8,168.882	0.776	8,313.771	0.876	8,458.661	0.976	8,603.550
0.077	7,300.812	0.177	7,445.744	0.277	7,590.675	0.377	7,735.607	0.477	7,880.539	0.577	8,025.441	0.677	8,170.330	0.777	8,315.220	0.877	8,460.110	0.977	8,604.999
0.078	7,302.261	0.178	7,447.193	0.278	7,592.125	0.378	7,737.056	0.478	7,881.988	0.578	8,026.890	0.678	8,171.779	0.778	8,316.669	0.878	8,461.559	0.978	8,606.448
0.079	7,303.711	0.179	7,448.642	0.279	7,593.574	0.379	7,738.506	0.479	7,883.437	0.579	8,028.339	0.679	8,173.228	0.779	8,318.118	0.879	8,463.007	0.979	8,607.897
0.080	7,305.160	0.180	7,450.092	0.280	7,595.023	0.380	7,739.955	0.480	7,884.887	0.580	8,029.788	0.680	8,174.677	0.780	8,319.567	0.880	8,464.456	0.980	8,609.346
0.081	7,306.609	0.181	7,451.541	0.281	7,596.473	0.381	7,741.404	0.481	7,886.336	0.581	8,031.236	0.681	8,176.126	0.781	8,321.016	0.881	8,465.905	0.981	8,610.795
0.082	7,308.059	0.182	7,452.990	0.282	7,597.922	0.382	7,742.854	0.482	7,887.785	0.582	8,032.685	0.682	8,177.575	0.782	8,322.465	0.882	8,467.354	0.982	8,612.244
0.083	7,309.508	0.183	7,454.440	0.283	7,599.371	0.383	7,744.303	0.483	7,889.235	0.583	8,034.134	0.683	8,179.024	0.783	8,323.913	0.883	8,468.803	0.983	8,613.693
0.084	7,310.957	0.184	7,455.889	0.284	7,600.821	0.384	7,745.752	0.484	7,890.684	0.584	8,035.583	0.684	8,180.473	0.784	8,325.362	0.884	8,470.252	0.984	8,615.141
0.085	7,312.407	0.185	7,457.338	0.285	7,602.270	0.385	7,747.201	0.485	7,892.133	0.585	8,037.032	0.685	8,181.922	0.785	8,326.811	0.885	8,471.701	0.985	8,616.590
0.086	7,313.856	0.186	7,458.787	0.286	7,603.719	0.386	7,748.651	0.486	7,893.582	0.586	8,038.481	0.686	8,183.370	0.786	8,328.260	0.886	8,473.150	0.986	8,618.039
0.087	7,315.305	0.187	7,460.237	0.287	7,605.168	0.387	7,750.100	0.487	7,895.032	0.587	8,039.930	0.687	8,184.819	0.787	8,329.709	0.887	8,474.599	0.987	8,619.488
0.088	7,316.754	0.188	7,461.686	0.288	7,606.618	0.388	7,751.549	0.488	7,896.481	0.588	8,041.379	0.688	8,186.268	0.788	8,331.158	0.888	8,476.047	0.988	8,620.937
0.089	7,318.204	0.189	7,463.135	0.289	7,608.067	0.389	7,752.999	0.489	7,897.930	0.589	8,042.828	0.689	8,187.717	0.789	8,332.607	0.889	8,477.496	0.989	8,622.386
0.090	7,319.653	0.190	7,464.585	0.290	7,609.516	0.390	7,754.448	0.490	7,899.380	0.590	8,044.276	0.690	8,189.166	0.790	8,334.056	0.890	8,478.945	0.990	8,623.835
0.091	7,321.102	0.191	7,466.034	0.291	7,610.966	0.391	7,755.897	0.491	7,900.829	0.591	8,045.725	0.691	8,190.615	0.791	8,335.505	0.891	8,480.394	0.991	8,625.284
0.092	7,322.552	0.192	7,467.483	0.292	7,612.415	0.392	7,757.347	0.492	7,902.278	0.592	8,047.174	0.692	8,192.064	0.792	8,336.953	0.892	8,481.843	0.992	8,626.733
0.093	7,324.001	0.193	7,468.933	0.293	7,613.864	0.393	7,758.796	0.493	7,903.728	0.593	8,048.623	0.693	8,193.513	0.793	8,338.402	0.893	8,483.292	0.993	8,628.182
0.094	7,325.450	0.194	7,470.382	0.294	7,615.314	0.394	7,760.245	0.494	7,905.177	0.594	8,050.072	0.694	8,194.962	0.794	8,339.851	0.894	8,484.741	0.994	8,629.630
0.095	7,326.900	0.195	7,471.831	0.295	7,616.763	0.395	7,761.695	0.495	7,906.626	0.595	8,051.521	0.695	8,196.411	0.795	8,341.300	0.895	8,486.190	0.995	8,631.079
0.096	7,328.349	0.196	7,473.281	0.296	7,618.212	0.396	7,763.144	0.496	7,908.076	0.596	8,052.970	0.696	8,197.859	0.796	8,342.749	0.896	8,487.639	0.996	8,632.528
0.097	7,329.798	0.197	7,474.730	0.297	7,619.662	0.397	7,764.593	0.497	7,909.525	0.597	8,054.419	0.697	8,199.308	0.797	8,344.198	0.897	8,489.088	0.997	8,633.977
0.098	7,331.248	0.198	7,476.179	0.298	7,621.111	0.398	7,766.043	0.498	7,910.974	0.598	8,055.868	0.698	8,200.757	0.798	8,345.647	0.898	8,490.536	0.998	8,635.426
0.099	7,332.697	0.199	7,477.629	0.299	7,622.560	0.399	7,767.492	0.499	7,912.424	0.599	8,057.317	0.699	8,202.206	0.799	8,347.096	0.899	8,491.985	0.999	8,636.875

DATE STRAPPED: 06/26/18 BY: RJ
DATE COMPUTED: 07/03/18 BY: WLH
DATE ISSUED: 07/03/18

AMSPEC

Meliadine
Rankin Inlet

Tank No. 1
INNAGE TABLE

Calibration@AmSpecGroup.com

CAPACITIES GIVEN IN CUBIC METERS

GAUGE HEIGHT: 14.275 M

mm	6 M	mm	6 M	mm	6 M	mm	6 M	mm	6 M	mm	6 M	mm	6 M	mm	6 M	mm	6 M	mm	6 M
0.000	8,638.324	0.100	8,783.213	0.200	8,928.103	0.300	9,072.993	0.400	9,217.882	0.500	9,362.772	0.600	9,507.661	0.700	9,652.551	0.800	9,797.441	0.900	9,942.330
0.001	8,639.773	0.101	8,784.662	0.201	8,929.552	0.301	9,074.442	0.401	9,219.331	0.501	9,364.221	0.601	9,509.110	0.701	9,654.000	0.801	9,798.889	0.901	9,943.779
0.002	8,641.222	0.102	8,786.111	0.202	8,931.001	0.302	9,075.890	0.402	9,220.780	0.502	9,365.670	0.602	9,510.559	0.702	9,655.449	0.802	9,800.338	0.902	9,945.228
0.003	8,642.671	0.103	8,787.560	0.203	8,932.450	0.303	9,077.339	0.403	9,222.229	0.503	9,367.118	0.603	9,512.008	0.703	9,656.898	0.803	9,801.787	0.903	9,946.677
0.004	8,644.119	0.104	8,789.009	0.204	8,933.899	0.304	9,078.788	0.404	9,223.678	0.504	9,368.567	0.604	9,513.457	0.704	9,658.347	0.804	9,803.236	0.904	9,948.126
0.005	8,645.568	0.105	8,790.458	0.205	8,935.347	0.305	9,080.237	0.405	9,225.127	0.505	9,370.016	0.605	9,514.906	0.705	9,659.795	0.805	9,804.685	0.905	9,949.575
0.006	8,647.017	0.106	8,791.907	0.206	8,936.796	0.306	9,081.686	0.406	9,226.576	0.506	9,371.465	0.606	9,516.355	0.706	9,661.244	0.806	9,806.134	0.906	9,951.024
0.007	8,648.466	0.107	8,793.356	0.207	8,938.245	0.307	9,083.135	0.407	9,228.024	0.507	9,372.914	0.607	9,517.804	0.707	9,662.693	0.807	9,807.583	0.907	9,952.472
0.008	8,649.915	0.108	8,794.805	0.208	8,939.694	0.308	9,084.584	0.408	9,229.473	0.508	9,374.363	0.608	9,519.253	0.708	9,664.142	0.808	9,809.032	0.908	9,953.921
0.009	8,651.364	0.109	8,796.253	0.209	8,941.143	0.309	9,086.033	0.409	9,230.922	0.509	9,375.812	0.609	9,520.701	0.709	9,665.591	0.809	9,810.481	0.909	9,955.370
0.010	8,652.813	0.110	8,797.702	0.210	8,942.592	0.310	9,087.482	0.410	9,232.371	0.510	9,377.261	0.610	9,522.150	0.710	9,667.040	0.810	9,811.930	0.910	9,956.819
0.011	8,654.262	0.111	8,799.151	0.211	8,944.041	0.311	9,088.930	0.411	9,233.820	0.511	9,378.710	0.611	9,523.599	0.711	9,668.489	0.811	9,813.378	0.911	9,958.268
0.012	8,655.711	0.112	8,800.600	0.212	8,945.490	0.312	9,090.379	0.412	9,235.269	0.512	9,380.159	0.612	9,525.048	0.712	9,669.938	0.812	9,814.827	0.912	9,959.717
0.013	8,657.159	0.113	8,802.049	0.213	8,946.939	0.313	9,091.828	0.413	9,236.718	0.513	9,381.607	0.613	9,526.497	0.713	9,671.387	0.813	9,816.276	0.913	9,961.166
0.014	8,658.608	0.114	8,803.498	0.214	8,948.388	0.314	9,093.277	0.414	9,238.167	0.514	9,383.056	0.614	9,527.946	0.714	9,672.836	0.814	9,817.725	0.914	9,962.615
0.015	8,660.057	0.115	8,804.947	0.215	8,949.836	0.315	9,094.726	0.415	9,239.616	0.515	9,384.505	0.615	9,529.395	0.715	9,674.284	0.815	9,819.174	0.915	9,964.064
0.016	8,661.506	0.116	8,806.396	0.216	8,951.285	0.316	9,096.175	0.416	9,241.065	0.516	9,385.954	0.616	9,530.844	0.716	9,675.733	0.816	9,820.623	0.916	9,965.513
0.017	8,662.955	0.117	8,807.845	0.217	8,952.734	0.317	9,097.624	0.417	9,242.513	0.517	9,387.403	0.617	9,532.293	0.717	9,677.182	0.817	9,822.072	0.917	9,966.961
0.018	8,664.404	0.118	8,809.294	0.218	8,954.183	0.318	9,099.073	0.418	9,243.962	0.518	9,388.852	0.618	9,533.742	0.718	9,678.631	0.818	9,823.521	0.918	9,968.410
0.019	8,665.853	0.119	8,810.742	0.219	8,955.632	0.319	9,100.522	0.419	9,245.411	0.519	9,390.301	0.619	9,535.190	0.719	9,680.080	0.819	9,824.970	0.919	9,969.859
0.020	8,667.302	0.120	8,812.191	0.220	8,957.081	0.320	9,101.971	0.420	9,246.860	0.520	9,391.750	0.620	9,536.639	0.720	9,681.529	0.820	9,826.419	0.920	9,971.308
0.021	8,668.751	0.121	8,813.640	0.221	8,958.530	0.321	9,103.419	0.421	9,248.309	0.521	9,393.199	0.621	9,538.088	0.721	9,682.978	0.821	9,827.867	0.921	9,972.757
0.022	8,670.200	0.122	8,815.089	0.222	8,959.979	0.322	9,104.868	0.422	9,249.758	0.522	9,394.648	0.622	9,539.537	0.722	9,684.427	0.822	9,829.316	0.922	9,974.206
0.023	8,671.648	0.123	8,816.538	0.223	8,961.428	0.323	9,106.317	0.423	9,251.207	0.523	9,396.096	0.623	9,540.986	0.723	9,685.876	0.823	9,830.765	0.923	9,975.655
0.024	8,673.097	0.124	8,817.987	0.224	8,962.877	0.324	9,107.766	0.424	9,252.656	0.524	9,397.545	0.624	9,542.435	0.724	9,687.324	0.824	9,832.214	0.924	9,977.104
0.025	8,674.546	0.125	8,819.436	0.225	8,964.325	0.325	9,109.215	0.425	9,254.105	0.525	9,398.994	0.625	9,543.884	0.725	9,688.773	0.825	9,833.663	0.925	9,978.553
0.026	8,675.995	0.126	8,820.885	0.226	8,965.774	0.326	9,110.664	0.426	9,255.554	0.526	9,400.443	0.626	9,545.333	0.726	9,690.222	0.826	9,835.112	0.926	9,980.001
0.027	8,677.444	0.127	8,822.334	0.227	8,967.223	0.327	9,112.113	0.427	9,257.002	0.527	9,401.892	0.627	9,546.782	0.727	9,691.671	0.827	9,836.561	0.927	9,981.450
0.028	8,678.893	0.128	8,823.783	0.228	8,968.672	0.328	9,113.562	0.428	9,258.451	0.528	9,403.341	0.628	9,548.230	0.728	9,693.120	0.828	9,838.010	0.928	9,982.899
0.029	8,680.342	0.129	8,825.231	0.229	8,970.121	0.329	9,115.011	0.429	9,259.900	0.529	9,404.790	0.629	9,549.679	0.729	9,694.569	0.829	9,839.459	0.929	9,984.348
0.030	8,681.791	0.130	8,826.680	0.230	8,971.570	0.330	9,116.459	0.430	9,261.349	0.530	9,406.239	0.630	9,551.128	0.730	9,696.018	0.830	9,840.907	0.930	9,985.797
0.031	8,683.240	0.131	8,828.129	0.231	8,973.019	0.331	9,117.908	0.431	9,262.798	0.531	9,407.688	0.631	9,552.577	0.731	9,697.467	0.831	9,842.356	0.931	9,987.246
0.032	8,684.688	0.132	8,829.578	0.232	8,974.468	0.332	9,119.357	0.432	9,264.247	0.532	9,409.136	0.632	9,554.026	0.732	9,698.916	0.832	9,843.805	0.932	9,988.695
0.033	8,686.137	0.133	8,831.027	0.233	8,975.917	0.333	9,120.806	0.433	9,265.696	0.533	9,410.585	0.633	9,555.475	0.733	9,700.365	0.833	9,845.254	0.933	9,990.144
0.034	8,687.586	0.134	8,832.476	0.234	8,977.365	0.334	9,122.255	0.434	9,267.145	0.534	9,412.034	0.634	9,556.924	0.734	9,701.813	0.834	9,846.703	0.934	9,991.593
0.035	8,689.035	0.135	8,833.925	0.235	8,978.814	0.335	9,123.704	0.435	9,268.594	0.535	9,413.483	0.635	9,558.373	0.735	9,703.262	0.835	9,848.152	0.935	9,993.042
0.036	8,690.484	0.136	8,835.374	0.236	8,980.263	0.336	9,125.153	0.436	9,270.042	0.536	9,414.932	0.636	9,559.822	0.736	9,704.711	0.836	9,849.601	0.936	9,994.490
0.037	8,691.933	0.137	8,836.823	0.237	8,981.712	0.337	9,126.602	0.437	9,271.491	0.537	9,416.381	0.637	9,561.271	0.737	9,706.160	0.837	9,851.050	0.937	9,995.939
0.038	8,693.382	0.138	8,838.271	0.238	8,983.161	0.338	9,128.051	0.438	9,272.940	0.538	9,417.830	0.638	9,562.719	0.738	9,707.609	0.838	9,852.499	0.938	9,997.388
0.039	8,694.831	0.139	8,839.720	0.239	8,984.610	0.339	9,129.500	0.439	9,274.389	0.539	9,419.279	0.639	9,564.168	0.739	9,709.058	0.839	9,853.948	0.939	9,998.837
0.040	8,696.280	0.140	8,841.169	0.240	8,986.059	0.340	9,130.948	0.440	9,275.838	0.540	9,420.728	0.640	9,565.617	0.740	9,710.507	0.840	9,855.396	0.940	10,000.286
0.041	8,697.729	0.141	8,842.618	0.241	8,987.508	0.341	9,132.397	0.441	9,277.287	0.541	9,422.177	0.641	9,567.066	0.741	9,711.956	0.841	9,856.845	0.941	10,001.735
0.042	8,699.177	0.142	8,844.067	0.242	8,988.957	0.342	9,133.846	0.442	9,278.736	0.542	9,423.625	0.642	9,568.515	0.742	9,713.405	0.842	9,858.294	0.942	10,003.184
0.043	8,700.626	0.143	8,845.516	0.243	8,990.406	0.343	9,135.295	0.443	9,280.185	0.543	9,425.074	0.643	9,569.964	0.743	9,714.854	0.843	9,859.743	0.943	10,004.633
0.044	8,702.075	0.144	8,846.965	0.244	8,991.854	0.344	9,136.744	0.444	9,281.634	0.544	9,426.523	0.644	9,571.413	0.744	9,716.302	0.844	9,861.192	0.944	10,006.082
0.045	8,703.524	0.145	8,848.414	0.245	8,993.303	0.345	9,138.193	0.445	9,283.083	0.545	9,427.972	0.645	9,572.862	0.745	9,717.751	0.845	9,862.641	0.945	10,007.531
0.046	8,704.973	0.146	8,849.863	0.246	8,994.752	0.346	9,139.642	0.446	9,284.531	0.546	9,429.421	0.646	9,574.311	0.746	9,719.200	0.846	9,864.090	0.946	10,008.979
0.047	8,706.422	0.147	8,851.312	0.247	8,996.201	0.347	9,141.091	0.447	9,285.980	0.547	9,430.870	0.647	9,575.760	0.747	9,720.649	0.847	9,865.539	0.947	10,010.428
0.048	8,707.871	0.148	8,852.760	0.248	8,997.650	0.348	9,142.540	0.448	9,287.429	0.548	9,432.319	0.648	9,577.208	0.748	9,722.098	0.848	9,866.988	0.948	10,011.877
0.049	8,709.320	0.149	8,854.209	0.249	8,999.099	0.349	9,143.989	0.449	9,288.878	0.549	9,433.768	0.649	9,578.657	0.749	9,723.547	0.849	9,868.436	0.949	10,013.326
0.050	8,710.769	0.150	8,855.658	0.250	9,000.548	0.350	9,145.437	0.450	9,290.327	0.550	9,435.217	0.650	9,580.106	0.750	9,724.996	0.850	9,869.885	0.950	10,014.775
0.051	8,712.218	0.151	8,857.107	0.251	9,001.997	0.351	9,146.886	0.451	9,291.776	0.551	9,436.665	0.651	9,581.555	0.751	9,726.445	0.851	9,871.334	0.951	10,016.224
0.052	8,713.666	0.152	8,858.556	0.252	9,003.446	0.352	9,148.335	0.452	9,293.225	0.552	9,438.114	0.652	9,583.004	0.752	9,727.894	0.852	9,872.783	0.952	10,017.673
0.053	8,715.115	0.153	8,860.005	0.253	9,004.895	0.353	9,149.784	0.453	9,294.674	0.553	9,439.563	0.653	9,584.453	0.753	9,729.342	0.853	9,874.232	0.953	10,019.122
0.054	8,716.564	0.154	8,861.454	0.254	9,006.343	0.354	9,151.233	0.454	9,296.123	0.554	9,441.012	0.654	9,585.902	0.754	9,730.791	0.854	9,875.681	0.954	10,020.571
0.055	8,718.013	0.155	8,862.903	0.255	9,007.792	0.355	9,152.682	0.455	9,297.571	0.555	9,442.461	0.655	9,587.351	0.755	9,732.240	0.855	9,877.130	0.955	10,022.019
0.056	8,719.462	0.156	8,864.352	0.256	9,009.241	0.356	9,154.131	0.456	9,299.020	0.556	9,443.910	0.656	9,588.800	0.756	9,733.689	0.856	9,878.579	0.956	10,023.468
0.057	8,720.911	0.157	8,865.800	0.257	9,010.690	0.357	9,155.580	0.457	9,300.469	0.557	9,445.359	0.657	9,590.248	0.757	9,735.138	0.857	9,880.028	0.957	10,024.917
0.058	8,722.360	0.158	8,867.249	0.258	9,012.139	0.358	9,157.029	0.458	9,301.918	0.558	9,446.808	0.658	9,591.697	0.758	9,736.587	0.858	9,881.477	0.958	10,026.366
0.059	8,723.809	0.159	8,868.698	0.259	9,013.588	0.359	9,158.477	0.459	9,303.367	0.559	9,448.257	0.659	9,593.146	0.759	9,738.036	0.859	9,882.925	0.959	10,027.815
0.060	8,725.258	0.160	8,870.147	0.260	9,015.037	0.360	9,159.926	0.460	9,304.816	0.560	9,449.706	0.660	9,594.595	0.760	9,739.485	0.860	9,884.374	0.960	10,029.264
0.061	8,726.706	0.161	8,871.596	0.261	9,016.486	0.361	9,161.375	0.461	9,306.265	0.561	9,451.154	0.661	9,596.044	0.761	9,740.934	0.861	9,885.823	0.961	10,030.713
0.062	8,728.155	0.162	8,873.045	0.262	9,017.935	0.362	9,162.824	0.462	9,307.714	0.562	9,452.603	0.662	9,597.493	0.762	9,742.383	0.862	9,887.272	0.962	10,032.162
0.063	8,729.604	0.163	8,874.494	0.263	9,019.383	0.363	9,164.273	0.463	9,309.163	0.563	9,454.052	0.663	9,598.942	0.763	9,743.831	0.863	9,888.721	0.963	10,033.611
0.064	8,731.053	0.164	8,875.943	0.264	9,020.832	0.364	9,165.722	0.464	9,310.612	0.564	9,455.501	0.664	9,600.391	0.764	9,745.280	0.864	9,890.170	0.964	10,035.060
0.065	8,732.502	0.165	8,877.392	0.265	9,022.281	0.365	9,167.171	0.465	9,312.060	0.565	9,456.950	0.665	9,601.840	0.765	9,746.729	0.865	9,891.619	0.965	10,036.508
0.066	8,733.951	0.166	8,878.841	0.266	9,023.730	0.366	9,168.620	0.466	9,313.509	0.566	9,458.399	0.666	9,603.289	0.766	9,748.178	0.866	9,893.068	0.966	10,037.957
0.067	8,735.400	0.167	8,880.289	0.267	9,025.179	0.367	9,170.069	0.467	9,314.958	0.567	9,459.848	0.667	9,604.737	0.767	9,749.627	0.867	9,894.517	0.967	10,039.406
0.068	8,736.849	0.168	8,881.738	0.268	9,026.628	0.368	9,171.518	0.468	9,316.407	0.568	9,461.297	0.668	9,606.186	0.768	9,751.076	0.868	9,895.966	0.968	10,040.855
0.069	8,738.298	0.169	8,883.187	0.269	9,028.077	0.369	9,172.966	0.469	9,317.856	0.569	9,462.746	0.669	9,607.635	0.769	9,752.525	0.869	9,897.414	0.969	10,042.304
0.070	8,739.747	0.170	8,884.636	0.270	9,029.526	0.370	9,174.415	0.470	9,319.305	0.570	9,464.195	0.670	9,609.084	0.770	9,753.974	0.870	9,898.863	0.970	10,043.753
0.071	8,741.195	0.171	8,886.085	0.271	9,030.975	0.371	9,175.864	0.471	9,320.754	0.571	9,465.643	0.671	9,610.533	0.771	9,755.423	0.871	9,900.312	0.971	10,045.202
0.072	8,742.644	0.172	8,887.534	0.272	9,032.424	0.372	9,177.313	0.472	9,322.203	0.572	9,467.092	0.672	9,611.982	0.772	9,756.872	0.872	9,901.761	0.972	10,046.651
0.073	8,744.093	0.173	8,888.983	0.273	9,033.872	0.373	9,178.762	0.473	9,323.652	0.573	9,468.541	0.673	9,613.431	0.773	9,758.320	0.873	9,903.210	0.973	10,048.100
0.074	8,745.542	0.174	8,890.432	0.274	9,035.321	0.374	9,180.211	0.474	9,325.101	0.574	9,469.990	0.674	9,614.880	0.774	9,759.769	0.874	9,904.659	0.974	10,049.548
0.075	8,746.991	0.175	8,891.881	0.275	9,036.770	0.375	9,181.660	0.475	9,326.549	0.575	9,471.439	0.675	9,616.329	0.775	9,761.218	0.875	9,906.108	0.975	10,050.997
0.076	8,748.440	0.176	8,893.330	0.276	9,038.219	0.376	9,183.109	0.476	9,327.998	0.576	9,472.888	0.676	9,617.777	0.776	9,762.667	0.876	9,907.557	0.976	10,052.446
0.077	8,749.889	0.177	8,894.778	0.277	9,039.668	0.377	9,184.558	0.477	9,329.447	0.577	9,474.337	0.677	9,619.226	0.777	9,764.116	0.877	9,909.006	0.977	10,053.895
0.078	8,751.338	0.178	8,896.227	0.278	9,041.117	0.378	9,186.006	0.478	9,330.896	0.578	9,475.786	0.678	9,620.675	0.778	9,765.565	0.878	9,910.454	0.978	10,055.344
0.079	8,752.787	0.179	8,897.676	0.279	9,042.566	0.379	9,187.455	0.479	9,332.345	0.579	9,477.235	0.679	9,622.124	0.779	9,767.014	0.879	9,911.903	0.979	10,056.793
0.080	8,754.236	0.180	8,899.125	0.280	9,044.015	0.380	9,188.904	0.480	9,333.794	0.580	9,478.683	0.680	9,623.573	0.780	9,768.463	0.880	9,913.352	0.980	10,058.242
0.081	8,755.684	0.181	8,900.574	0.281	9,045.464	0.381	9,190.353	0.481	9,335.243	0.581	9,480.132	0.681	9,625.022	0.781	9,769.912	0.881	9,914.801	0.981	10,059.691
0.082	8,757.133	0.182	8,902.023	0.282	9,046.912	0.382	9,191.802	0.482	9,336.692	0.582	9,481.581	0.682	9,626.471	0.782	9,771.360	0.882	9,916.250	0.982	10,061.140
0.083	8,758.582	0.183	8,903.472	0.283	9,048.361	0.383	9,193.251	0.483	9,338.141	0.583	9,483.030	0.683	9,627.920	0.783	9,772.809	0.883	9,917.699	0.983	10,062.589
0.084	8,760.031	0.184	8,904.921	0.284	9,049.810	0.384	9,194.700	0.484	9,339.589	0.584	9,484.479	0.684	9,629.369	0.784	9,774.258	0.884	9,919.148	0.984	10,064.037
0.085	8,761.480	0.185	8,906.370	0.285	9,051.259	0.385	9,196.149	0.485	9,341.038	0.585	9,485.928	0.685	9,630.818	0.785	9,775.707	0.885	9,920.597	0.985	10,065.486
0.086	8,762.929	0.186	8,907.818	0.286	9,052.708	0.386	9,197.598	0.486	9,342.487	0.586	9,487.377	0.686	9,632.266	0.786	9,777.156	0.886	9,922.046	0.986	10,066.935
0.087	8,764.378	0.187	8,909.267	0.287	9,054.157	0.387	9,199.047	0.487	9,343.936	0.587	9,488.826	0.687	9,633.715	0.787	9,778.605	0.887	9,923.495	0.987	10,068.384
0.088	8,765.827	0.188	8,910.716	0.288	9,055.606	0.388	9,200.495	0.488	9,345.385	0.588	9,490.275	0.688	9,635.164	0.788	9,780.054	0.888	9,924.943	0.988	10,069.833
0.089	8,767.276	0.189	8,912.165	0.289	9,057.055	0.389	9,201.944	0.489	9,346.834	0.589	9,491.724	0.689	9,636.613	0.789	9,781.503	0.889	9,926.392	0.989	10,071.282
0.090	8,768.724	0.190	8,913.614	0.290	9,058.504	0.390	9,203.393	0.490	9,348.283	0.590	9,493.172	0.690	9,638.062	0.790	9,782.952	0.890	9,927.841	0.990	10,072.731
0.091	8,770.173	0.191	8,915.063	0.291	9,059.953	0.391	9,204.842	0.491	9,349.732	0.591	9,494.621	0.691	9,639.511	0.791	9,784.401	0.891	9,929.290	0.991	10,074.180
0.092	8,771.622	0.192	8,916.512	0.292	9,061.401	0.392	9,206.291	0.492	9,351.181	0.592	9,496.070	0.692	9,640.960	0.792	9,785.849	0.892	9,930.739	0.992	10,075.629
0.093	8,773.071	0.193	8,917.961	0.293	9,062.850	0.393	9,207.740	0.493	9,352.630	0.593	9,497.519	0.693	9,642.409	0.793	9,787.298	0.893	9,932.188	0.993	10,077.078
0.094	8,774.520	0.194	8,919.410	0.294	9,064.299	0.394	9,209.189	0.494	9,354.078	0.594	9,498.968	0.694	9,643.858	0.794	9,788.747	0.894	9,933.637	0.994	10,078.526
0.095	8,775.969	0.195	8,920.859	0.295	9,065.748	0.395	9,210.638	0.495	9,355.527	0.595	9,500.417	0.695	9,645.307	0.795	9,790.196	0.895	9,935.086	0.995	10,079.975
0.096	8,777.418	0.196	8,922.307	0.296	9,067.197	0.396	9,212.087	0.496	9,356.976	0.596	9,501.866	0.696	9,646.755	0.796	9,791.645	0.896	9,936.535	0.996	10,081.424
0.097	8,778.867	0.197	8,923.756	0.297	9,068.646	0.397	9,213.536	0.497	9,358.425	0.597	9,503.315	0.697	9,648.204	0.797	9,793.094	0.897	9,937.984	0.997	10,082.873
0.098	8,780.316	0.198	8,925.205	0.298	9,070.095	0.398	9,214.984	0.498	9,359.874	0.598	9,504.764	0.698	9,649.653	0.798	9,794.543	0.898	9,939.432	0.998	10,084.322
0.099	8,781.765	0.199	8,926.654	0.299	9,071.544	0.399	9,216.433	0.499	9,361.323	0.599	9,506.213	0.699	9,651.102	0.799	9,795.992	0.899	9,940.881	0.999	10,085.771

DATE STRAPPED: 06/26/18 BY: RJ
DATE COMPUTED: 07/03/18 BY: WLH
DATE ISSUED: 07/03/18

AMSPEC

Meliadine
Rankin Inlet

Tank No. 1
INNAGE TABLE

Calibration@AmSpecGroup.com

CAPACITIES GIVEN IN CUBIC METERS

GAUGE HEIGHT: 14.275 M

mm	7 M	mm	7 M	mm	7 M	mm	7 M	mm	7 M	mm	7 M	mm	7 M	mm	7 M	mm	7 M	mm	7 M
0.000	10,087.220	0.100	10,232.109	0.200	10,376.999	0.300	10,521.889	0.400	10,666.778	0.500	10,811.668	0.600	10,956.557	0.700	11,101.447	0.800	11,246.337	0.900	11,391.226
0.001	10,088.669	0.101	10,233.558	0.201	10,378.448	0.301	10,523.337	0.401	10,668.227	0.501	10,813.117	0.601	10,958.006	0.701	11,102.896	0.801	11,247.785	0.901	11,392.675
0.002	10,090.118	0.102	10,235.007	0.202	10,379.897	0.302	10,524.786	0.402	10,669.676	0.502	10,814.566	0.602	10,959.455	0.702	11,104.345	0.802	11,249.234	0.902	11,394.124
0.003	10,091.566	0.103	10,236.456	0.203	10,381.346	0.303	10,526.235	0.403	10,671.125	0.503	10,816.014	0.603	10,960.904	0.703	11,105.794	0.803	11,250.683	0.903	11,395.573
0.004	10,093.015	0.104	10,237.905	0.204	10,382.795	0.304	10,527.684	0.404	10,672.574	0.504	10,817.463	0.604	10,962.353	0.704	11,107.243	0.804	11,252.132	0.904	11,397.022
0.005	10,094.464	0.105	10,239.354	0.205	10,384.243	0.305	10,529.133	0.405	10,674.023	0.505	10,818.912	0.605	10,963.802	0.705	11,108.691	0.805	11,253.581	0.905	11,398.471
0.006	10,095.913	0.106	10,240.803	0.206	10,385.692	0.306	10,530.582	0.406	10,675.472	0.506	10,820.361	0.606	10,965.251	0.706	11,110.140	0.806	11,255.030	0.906	11,399.920
0.007	10,097.362	0.107	10,242.252	0.207	10,387.141	0.307	10,532.031	0.407	10,676.920	0.507	10,821.810	0.607	10,966.700	0.707	11,111.589	0.807	11,256.479	0.907	11,401.368
0.008	10,098.811	0.108	10,243.701	0.208	10,388.590	0.308	10,533.480	0.408	10,678.369	0.508	10,823.259	0.608	10,968.149	0.708	11,113.038	0.808	11,257.928	0.908	11,402.817
0.009	10,100.260	0.109	10,245.149	0.209	10,390.039	0.309	10,534.929	0.409	10,679.818	0.509	10,824.708	0.609	10,969.597	0.709	11,114.487	0.809	11,259.377	0.909	11,404.266
0.010	10,101.709	0.110	10,246.598	0.210	10,391.488	0.310	10,536.378	0.410	10,681.267	0.510	10,826.157	0.610	10,971.046	0.710	11,115.936	0.810	11,260.826	0.910	11,405.715
0.011	10,103.158	0.111	10,248.047	0.211	10,392.937	0.311	10,537.826	0.411	10,682.716	0.511	10,827.606	0.611	10,972.495	0.711	11,117.385	0.811	11,262.274	0.911	11,407.164
0.012	10,104.607	0.112	10,249.496	0.212	10,394.386	0.312	10,539.275	0.412	10,684.165	0.512	10,829.055	0.612	10,973.944	0.712	11,118.834	0.812	11,263.723	0.912	11,408.613
0.013	10,106.055	0.113	10,250.945	0.213	10,395.835	0.313	10,540.724	0.413	10,685.614	0.513	10,830.503	0.613	10,975.393	0.713	11,120.283	0.813	11,265.172	0.913	11,410.062
0.014	10,107.504	0.114	10,252.394	0.214	10,397.284	0.314	10,542.173	0.414	10,687.063	0.514	10,831.952	0.614	10,976.842	0.714	11,121.732	0.814	11,266.621	0.914	11,411.511
0.015	10,108.953	0.115	10,253.843	0.215	10,398.732	0.315	10,543.622	0.415	10,688.512	0.515	10,833.401	0.615	10,978.291	0.715	11,123.180	0.815	11,268.070	0.915	11,412.960
0.016	10,110.402	0.116	10,255.292	0.216	10,400.181	0.316	10,545.071	0.416	10,689.961	0.516	10,834.850	0.616	10,979.740	0.716	11,124.629	0.816	11,269.519	0.916	11,414.408
0.017	10,111.851	0.117	10,256.741	0.217	10,401.630	0.317	10,546.520	0.417	10,691.409	0.517	10,836.299	0.617	10,981.189	0.717	11,126.078	0.817	11,270.968	0.917	11,415.857
0.018	10,113.300	0.118	10,258.190	0.218	10,403.079	0.318	10,547.969	0.418	10,692.858	0.518	10,837.748	0.618	10,982.637	0.718	11,127.527	0.818	11,272.417	0.918	11,417.306
0.019	10,114.749	0.119	10,259.638	0.219	10,404.528	0.319	10,549.418	0.419	10,694.307	0.519	10,839.197	0.619	10,984.086	0.719	11,128.976	0.819	11,273.866	0.919	11,418.755
0.020	10,116.198	0.120	10,261.087	0.220	10,405.977	0.320	10,550.866	0.420	10,695.756	0.520	10,840.646	0.620	10,985.535	0.720	11,130.425	0.820	11,275.314	0.920	11,420.204
0.021	10,117.647	0.121	10,262.536	0.221	10,407.426	0.321	10,552.315	0.421	10,697.205	0.521	10,842.095	0.621	10,986.984	0.721	11,131.874	0.821	11,276.763	0.921	11,421.653
0.022	10,119.095	0.122	10,263.985	0.222	10,408.875	0.322	10,553.764	0.422	10,698.654	0.522	10,843.543	0.622	10,988.433	0.722	11,133.323	0.822	11,278.212	0.922	11,423.102
0.023	10,120.544	0.123	10,265.434	0.223	10,410.324	0.323	10,555.213	0.423	10,700.103	0.523	10,844.992	0.623	10,989.882	0.723	11,134.772	0.823	11,279.661	0.923	11,424.551
0.024	10,121.993	0.124	10,266.883	0.224	10,411.772	0.324	10,556.662	0.424	10,701.552	0.524	10,846.441	0.624	10,991.331	0.724	11,136.220	0.824	11,281.110	0.924	11,426.000
0.025	10,123.442	0.125	10,268.332	0.225	10,413.221	0.325	10,558.111	0.425	10,703.001	0.525	10,847.890	0.625	10,992.780	0.725	11,137.669	0.825	11,282.559	0.925	11,427.449
0.026	10,124.891	0.126	10,269.781	0.226	10,414.670	0.326	10,559.560	0.426	10,704.449	0.526	10,849.339	0.626	10,994.229	0.726	11,139.118	0.826	11,284.008	0.926	11,428.897
0.027	10,126.340	0.127	10,271.230	0.227	10,416.119	0.327	10,561.009	0.427	10,705.898	0.527	10,850.788	0.627	10,995.678	0.727	11,140.567	0.827	11,285.457	0.927	11,430.346
0.028	10,127.789	0.128	10,272.678	0.228	10,417.568	0.328	10,562.458	0.428	10,707.347	0.528	10,852.237	0.628	10,997.126	0.728	11,142.016	0.828	11,286.906	0.928	11,431.795
0.029	10,129.238	0.129	10,274.127	0.229	10,419.017	0.329	10,563.907	0.429	10,708.796	0.529	10,853.686	0.629	10,998.575	0.729	11,143.465	0.829	11,288.355	0.929	11,433.244
0.030	10,130.687	0.130	10,275.576	0.230	10,420.466	0.330	10,565.355	0.430	10,710.245	0.530	10,855.135	0.630	11,000.024	0.730	11,144.914	0.830	11,289.803	0.930	11,434.693
0.031	10,132.136	0.131	10,277.025	0.231	10,421.915	0.331	10,566.804	0.431	10,711.694	0.531	10,856.584	0.631	11,001.473	0.731	11,146.363	0.831	11,291.252	0.931	11,436.142
0.032	10,133.584	0.132	10,278.474	0.232	10,423.364	0.332	10,568.253	0.432	10,713.143	0.532	10,858.032	0.632	11,002.922	0.732	11,147.812	0.832	11,292.701	0.932	11,437.591
0.033	10,135.033	0.133	10,279.923	0.233	10,424.813	0.333	10,569.702	0.433	10,714.592	0.533	10,859.481	0.633	11,004.371	0.733	11,149.261	0.833	11,294.150	0.933	11,439.040
0.034	10,136.482	0.134	10,281.372	0.234	10,426.261	0.334	10,571.151	0.434	10,716.041	0.534	10,860.930	0.634	11,005.820	0.734	11,150.709	0.834	11,295.599	0.934	11,440.489
0.035	10,137.931	0.135	10,282.821	0.235	10,427.710	0.335	10,572.600	0.435	10,717.490	0.535	10,862.379	0.635	11,007.269	0.735	11,152.158	0.835	11,297.048	0.935	11,441.938
0.036	10,139.380	0.136	10,284.270	0.236	10,429.159	0.336	10,574.049	0.436	10,718.938	0.536	10,863.828	0.636	11,008.718	0.736	11,153.607	0.836	11,298.497	0.936	11,443.386
0.037	10,140.829	0.137	10,285.719	0.237	10,430.608	0.337	10,575.498	0.437	10,720.387	0.537	10,865.277	0.637	11,010.167	0.737	11,155.056	0.837	11,299.946	0.937	11,444.835
0.038	10,142.278	0.138	10,287.167	0.238	10,432.057	0.338	10,576.947	0.438	10,721.836	0.538	10,866.726	0.638	11,011.615	0.738	11,156.505	0.838	11,301.395	0.938	11,446.284
0.039	10,143.727	0.139	10,288.616	0.239	10,433.506	0.339	10,578.396	0.439	10,723.285	0.539	10,868.175	0.639	11,013.064	0.739	11,157.954	0.839	11,302.843	0.939	11,447.733
0.040	10,145.176	0.140	10,290.065	0.240	10,434.955	0.340	10,579.844	0.440	10,724.734	0.540	10,869.624	0.640	11,014.513	0.740	11,159.403	0.840	11,304.292	0.940	11,449.182
0.041	10,146.625	0.141	10,291.514	0.241	10,436.404	0.341	10,581.293	0.441	10,726.183	0.541	10,871.072	0.641	11,015.962	0.741	11,160.852	0.841	11,305.741	0.941	11,450.631
0.042	10,148.073	0.142	10,292.963	0.242	10,437.853	0.342	10,582.742	0.442	10,727.632	0.542	10,872.521	0.642	11,017.411	0.742	11,162.301	0.842	11,307.190	0.942	11,452.080
0.043	10,149.522	0.143	10,294.412	0.243	10,439.302	0.343	10,584.191	0.443	10,729.081	0.543	10,873.970	0.643	11,018.860	0.743	11,163.749	0.843	11,308.639	0.943	11,453.529
0.044	10,150.971	0.144	10,295.861	0.244	10,440.750	0.344	10,585.640	0.444	10,730.530	0.544	10,875.419	0.644	11,020.309	0.744	11,165.198	0.844	11,310.088	0.944	11,454.978
0.045	10,152.420	0.145	10,297.310	0.245	10,442.199	0.345	10,587.089	0.445	10,731.978	0.545	10,876.868	0.645	11,021.758	0.745	11,166.647	0.845	11,311.537	0.945	11,456.426
0.046	10,153.869	0.146	10,298.759	0.246	10,443.648	0.346	10,588.538	0.446	10,733.427	0.546	10,878.317	0.646	11,023.207	0.746	11,168.096	0.846	11,312.986	0.946	11,457.875
0.047	10,155.318	0.147	10,300.207	0.247	10,445.097	0.347	10,589.987	0.447	10,734.876	0.547	10,879.766	0.647	11,024.655	0.747	11,169.545	0.847	11,314.435	0.947	11,459.324
0.048	10,156.767	0.148	10,301.656	0.248	10,446.546	0.348	10,591.436	0.448	10,736.325	0.548	10,881.215	0.648	11,026.104	0.748	11,170.994	0.848	11,315.884	0.948	11,460.773
0.049	10,158.216	0.149	10,303.105	0.249	10,447.995	0.349	10,592.884	0.449	10,737.774	0.549	10,882.664	0.649	11,027.553	0.749	11,172.443	0.849	11,317.332	0.949	11,462.222
0.050	10,159.665	0.150	10,304.554	0.250	10,449.444	0.350	10,594.333	0.450	10,739.223	0.550	10,884.113	0.650	11,029.002	0.750	11,173.892	0.850	11,318.781	0.950	11,463.671
0.051	10,161.113	0.151	10,306.003	0.251	10,450.893	0.351	10,595.782	0.451	10,740.672	0.551	10,885.561	0.651	11,030.451	0.751	11,175.341	0.851	11,320.230	0.951	11,465.120
0.052	10,162.562	0.152	10,307.452	0.252	10,452.342	0.352	10,597.231	0.452	10,742.121	0.552	10,887.010	0.652	11,031.900	0.752	11,176.790	0.852	11,321.679	0.952	11,466.569
0.053	10,164.011	0.153	10,308.901	0.253	10,453.790	0.353	10,598.680	0.453	10,743.570	0.553	10,888.459	0.653	11,033.349	0.753	11,178.238	0.853	11,323.128	0.953	11,468.018
0.054	10,165.460	0.154	10,310.350	0.254	10,455.239	0.354	10,600.129	0.454	10,745.019	0.554	10,889.908	0.654	11,034.798	0.754	11,179.687	0.854	11,324.577	0.954	11,469.467
0.055	10,166.909	0.155	10,311.799	0.255	10,456.688	0.355	10,601.578	0.455	10,746.467	0.555	10,891.357	0.655	11,036.247	0.755	11,181.136	0.855	11,326.026	0.955	11,470.915
0.056	10,168.358	0.156	10,313.248	0.256	10,458.137	0.356	10,603.027	0.456	10,747.916	0.556	10,892.806	0.656	11,037.696	0.756	11,182.585	0.856	11,327.475	0.956	11,472.364
0.057	10,169.807	0.157	10,314.696	0.257	10,459.586	0.357	10,604.476	0.457	10,749.365	0.557	10,894.255	0.657	11,039.144	0.757	11,184.034	0.857	11,328.924	0.957	11,473.813
0.058	10,171.256	0.158	10,316.145	0.258	10,461.035	0.358	10,605.925	0.458	10,750.814	0.558	10,895.704	0.658	11,040.593	0.758	11,185.483	0.858	11,330.373	0.958	11,475.262
0.059	10,172.705	0.159	10,317.594	0.259	10,462.484	0.359	10,607.373	0.459	10,752.263	0.559	10,897.153	0.659	11,042.042	0.759	11,186.932	0.859	11,331.821	0.959	11,476.711
0.060	10,174.154	0.160	10,319.043	0.260	10,463.933	0.360	10,608.822	0.460	10,753.712	0.560	10,898.602	0.660	11,043.491	0.760	11,188.381	0.860	11,333.270	0.960	11,478.160
0.061	10,175.602	0.161	10,320.492	0.261	10,465.382	0.361	10,610.271	0.461	10,755.161	0.561	10,900.050	0.661	11,044.940	0.761	11,189.830	0.861	11,334.719	0.961	11,479.609
0.062	10,177.051	0.162	10,321.941	0.262	10,466.831	0.362	10,611.720	0.462	10,756.610	0.562	10,901.499	0.662	11,046.389	0.762	11,191.279	0.862	11,336.168	0.962	11,481.058
0.063	10,178.500	0.163	10,323.390	0.263	10,468.279	0.363	10,613.169	0.463	10,758.059	0.563	10,902.948	0.663	11,047.838	0.763	11,192.727	0.863	11,337.617	0.963	11,482.507
0.064	10,179.949	0.164	10,324.839	0.264	10,469.728	0.364	10,614.618	0.464	10,759.508	0.564	10,904.397	0.664	11,049.287	0.764	11,194.176	0.864	11,339.066	0.964	11,483.955
0.065	10,181.398	0.165	10,326.288	0.265	10,471.177	0.365	10,616.067	0.465	10,760.956	0.565	10,905.846	0.665	11,050.736	0.765	11,195.625	0.865	11,340.515	0.965	11,485.404
0.066	10,182.847	0.166	10,327.737	0.266	10,472.626	0.366	10,617.516	0.466	10,762.405	0.566	10,907.295	0.666	11,052.184	0.766	11,197.074	0.866	11,341.964	0.966	11,486.853
0.067	10,184.296	0.167	10,329.185	0.267	10,474.075	0.367	10,618.965	0.467	10,763.854	0.567	10,908.744	0.667	11,053.633	0.767	11,198.523	0.867	11,343.413	0.967	11,488.302
0.068	10,185.745	0.168	10,330.634	0.268	10,475.524	0.368	10,620.413	0.468	10,765.303	0.568	10,910.193	0.668	11,055.082	0.768	11,199.972	0.868	11,344.861	0.968	11,489.751
0.069	10,187.194	0.169	10,332.083	0.269	10,476.973	0.369	10,621.862	0.469	10,766.752	0.569	10,911.642	0.669	11,056.531	0.769	11,201.421	0.869	11,346.310	0.969	11,491.200
0.070	10,188.643	0.170	10,333.532	0.270	10,478.422	0.370	10,623.311	0.470	10,768.201	0.570	10,913.090	0.670	11,057.980	0.770	11,202.870	0.870	11,347.759	0.970	11,492.649
0.071	10,190.091	0.171	10,334.981	0.271	10,479.871	0.371	10,624.760	0.471	10,769.650	0.571	10,914.539	0.671	11,059.429	0.771	11,204.319	0.871	11,349.208	0.971	11,494.098
0.072	10,191.540	0.172	10,336.430	0.272	10,481.319	0.372	10,626.209	0.472	10,771.099	0.572	10,915.988	0.672	11,060.878	0.772	11,205.767	0.872	11,350.657	0.972	11,495.547
0.073	10,192.989	0.173	10,337.879	0.273	10,482.768	0.373	10,627.658	0.473	10,772.548	0.573	10,917.437	0.673	11,062.327	0.773	11,207.216	0.873	11,352.106	0.973	11,496.996
0.074	10,194.438	0.174	10,339.328	0.274	10,484.217	0.374	10,629.107	0.474	10,773.996	0.574	10,918.886	0.674	11,063.776	0.774	11,208.665	0.874	11,353.555	0.974	11,498.444
0.075	10,195.887	0.175	10,340.777	0.275	10,485.666	0.375	10,630.556	0.475	10,775.445	0.575	10,920.335	0.675	11,065.225	0.775	11,210.114	0.875	11,355.004	0.975	11,499.893
0.076	10,197.336	0.176	10,342.225	0.276	10,487.115	0.376	10,632.005	0.476	10,776.894	0.576	10,921.784	0.676	11,066.673	0.776	11,211.563	0.876	11,356.453	0.976	11,501.342
0.077	10,198.785	0.177	10,343.674	0.277	10,488.564	0.377	10,633.454	0.477	10,778.343	0.577	10,923.233	0.677	11,068.122	0.777	11,213.012	0.877	11,357.902	0.977	11,502.791
0.078	10,200.234	0.178	10,345.123	0.278	10,490.013	0.378	10,634.902	0.478	10,779.792	0.578	10,924.682	0.678	11,069.571	0.778	11,214.461	0.878	11,359.350	0.978	11,504.240
0.079	10,201.683	0.179	10,346.572	0.279	10,491.462	0.379	10,636.351	0.479	10,781.241	0.579	10,926.131	0.679	11,071.020	0.779	11,215.910	0.879	11,360.799	0.979	11,505.689
0.080	10,203.131	0.180	10,348.021	0.280	10,492.911	0.380	10,637.800	0.480	10,782.690	0.580	10,927.579	0.680	11,072.469	0.780	11,217.359	0.880	11,362.248	0.980	11,507.138
0.081	10,204.580	0.181	10,349.470	0.281	10,494.360	0.381	10,639.249	0.481	10,784.139	0.581	10,929.028	0.681	11,073.918	0.781	11,218.808	0.881	11,363.697	0.981	11,508.587
0.082	10,206.029	0.182	10,350.919	0.282	10,495.808	0.382	10,640.698	0.482	10,785.588	0.582	10,930.477	0.682	11,075.367	0.782	11,220.256	0.882	11,365.146	0.982	11,510.036
0.083	10,207.478	0.183	10,352.368	0.283	10,497.257	0.383	10,642.147	0.483	10,787.037	0.583	10,931.926	0.683	11,076.816	0.783	11,221.705	0.883	11,366.595	0.983	11,511.485
0.084	10,208.927	0.184	10,353.817	0.284	10,498.706	0.384	10,643.596	0.484	10,788.485	0.584	10,933.375	0.684	11,078.265	0.784	11,223.154	0.884	11,368.044	0.984	11,512.933
0.085	10,210.376	0.185	10,355.266	0.285	10,500.155	0.385	10,645.045	0.485	10,789.934	0.585	10,934.824	0.685	11,079.714	0.785	11,224.603	0.885	11,369.493	0.985	11,514.382
0.086	10,211.825	0.186	10,356.714	0.286	10,501.604	0.386	10,646.494	0.486	10,791.383	0.586	10,936.273	0.686	11,081.162	0.786	11,226.052	0.886	11,370.942	0.986	11,515.831
0.087	10,213.274	0.187	10,358.163	0.287	10,503.053	0.387	10,647.943	0.487	10,792.832	0.587	10,937.722	0.687	11,082.611	0.787	11,227.501	0.887	11,372.391	0.987	11,517.280
0.088	10,214.723	0.188	10,359.612	0.288	10,504.502	0.388	10,649.391	0.488	10,794.281	0.588	10,939.171	0.688	11,084.060	0.788	11,228.950	0.888	11,373.839	0.988	11,518.729
0.089	10,216.172	0.189	10,361.061	0.289	10,505.951	0.389	10,650.840	0.489	10,795.730	0.589	10,940.620	0.689	11,085.509	0.789	11,230.399	0.889	11,375.288	0.989	11,520.178
0.090	10,217.620	0.190	10,362.510	0.290	10,507.400	0.390	10,652.289	0.490	10,797.179	0.590	10,942.068	0.690	11,086.958	0.790	11,231.848	0.890	11,376.737	0.990	11,521.627
0.091	10,219.069	0.191	10,363.959	0.291	10,508.849	0.391	10,653.738	0.491	10,798.628	0.591	10,943.517	0.691	11,088.407	0.791	11,233.296	0.891	11,378.186	0.991	11,523.076
0.092	10,220.518	0.192	10,365.408	0.292	10,510.297	0.392	10,655.187	0.492	10,800.077	0.592	10,944.966	0.692	11,089.856	0.792	11,234.745	0.892	11,379.635	0.992	11,524.525
0.093	10,221.967	0.193	10,366.857	0.293	10,511.746	0.393	10,656.636	0.493	10,801.525	0.593	10,946.415	0.693	11,091.305	0.793	11,236.194	0.893	11,381.084	0.993	11,525.973
0.094	10,223.416	0.194	10,368.306	0.294	10,513.195	0.394	10,658.085	0.494	10,802.974	0.594	10,947.864	0.694	11,092.754	0.794	11,237.643	0.894	11,382.533	0.994	11,527.422
0.095	10,224.865	0.195	10,369.754	0.295	10,514.644	0.395	10,659.534	0.495	10,804.423	0.595	10,949.313	0.695	11,094.202	0.795	11,239.092	0.895	11,383.982	0.995	11,528.871
0.096	10,226.314	0.196	10,371.203	0.296	10,516.093	0.396	10,660.983	0.496	10,805.872	0.596	10,950.762	0.696	11,095.651	0.796	11,240.541	0.896	11,385.431	0.996	11,530.320
0.097	10,227.763	0.197	10,372.652	0.297	10,517.542	0.397	10,662.431	0.497	10,807.321	0.597	10,952.211	0.697	11,097.100	0.797	11,241.990	0.897	11,386.879	0.997	11,531.769
0.098	10,229.212	0.198	10,374.101	0.298	10,518.991	0.398	10,663.880	0.498	10,808.770	0.598	10,953.660	0.698	11,098.549	0.798	11,243.439	0.898	11,388.328	0.998	11,533.218
0.099	10,230.660	0.199	10,375.550	0.299	10,520.440	0.399	10,665.329	0.499	10,810.219	0.599	10,955.108	0.699	11,099.998	0.799	11,244.888	0.899	11,389.777	0.999	11,534.667

DATE STRAPPED: 06/26/18 BY: RJ
DATE COMPUTED: 07/03/18 BY: WLH
DATE ISSUED: 07/03/18

AMSPEC

Meliadine
Rankin Inlet

Tank No. 1
INNAGE TABLE

Calibration@AmSpecGroup.com

CAPACITIES GIVEN IN CUBIC METERS

GAUGE HEIGHT: 14.275 M

mm	8 M	mm	8 M	mm	8 M	mm	8 M	mm	8 M	mm	8 M	mm	8 M	mm	8 M	mm	8 M	mm	8 M
0.000	11,536.116	0.100	11,681.005	0.200	11,825.895	0.300	11,970.830	0.400	12,115.907	0.500	12,260.984	0.600	12,406.062	0.700	12,551.139	0.800	12,696.216	0.900	12,841.294
0.001	11,537.565	0.101	11,682.454	0.201	11,827.344	0.301	11,972.280	0.401	12,117.358	0.501	12,262.435	0.601	12,407.513	0.701	12,552.590	0.801	12,697.667	0.901	12,842.745
0.002	11,539.014	0.102	11,683.903	0.202	11,828.793	0.302	11,973.731	0.402	12,118.809	0.502	12,263.886	0.602	12,408.963	0.702	12,554.041	0.802	12,699.118	0.902	12,844.195
0.003	11,540.462	0.103	11,685.352	0.203	11,830.242	0.303	11,975.182	0.403	12,120.259	0.503	12,265.337	0.603	12,410.414	0.703	12,555.491	0.803	12,700.569	0.903	12,845.646
0.004	11,541.911	0.104	11,686.801	0.204	11,831.691	0.304	11,976.633	0.404	12,121.710	0.504	12,266.787	0.604	12,411.865	0.704	12,556.942	0.804	12,702.020	0.904	12,847.097
0.005	11,543.360	0.105	11,688.250	0.205	11,833.139	0.305	11,978.083	0.405	12,123.161	0.505	12,268.238	0.605	12,413.316	0.705	12,558.393	0.805	12,703.470	0.905	12,848.548
0.006	11,544.809	0.106	11,689.699	0.206	11,834.588	0.306	11,979.534	0.406	12,124.612	0.506	12,269.689	0.606	12,414.766	0.706	12,559.844	0.806	12,704.921	0.906	12,849.999
0.007	11,546.258	0.107	11,691.148	0.207	11,836.037	0.307	11,980.985	0.407	12,126.062	0.507	12,271.140	0.607	12,416.217	0.707	12,561.295	0.807	12,706.372	0.907	12,851.449
0.008	11,547.707	0.108	11,692.597	0.208	11,837.486	0.308	11,982.436	0.408	12,127.513	0.508	12,272.591	0.608	12,417.668	0.708	12,562.745	0.808	12,707.823	0.908	12,852.900
0.009	11,549.156	0.109	11,694.045	0.209	11,838.935	0.309	11,983.887	0.409	12,128.964	0.509	12,274.041	0.609	12,419.119	0.709	12,564.196	0.809	12,709.273	0.909	12,854.351
0.010	11,550.605	0.110	11,695.494	0.210	11,840.384	0.310	11,985.337	0.410	12,130.415	0.510	12,275.492	0.610	12,420.569	0.710	12,565.647	0.810	12,710.724	0.910	12,855.802
0.011	11,552.054	0.111	11,696.943	0.211	11,841.833	0.311	11,986.788	0.411	12,131.865	0.511	12,276.943	0.611	12,422.020	0.711	12,567.098	0.811	12,712.175	0.911	12,857.252
0.012	11,553.502	0.112	11,698.392	0.212	11,843.282	0.312	11,988.239	0.412	12,133.316	0.512	12,278.394	0.612	12,423.471	0.712	12,568.548	0.812	12,713.626	0.912	12,858.703
0.013	11,554.951	0.113	11,699.841	0.213	11,844.731	0.313	11,989.690	0.413	12,134.767	0.513	12,279.844	0.613	12,424.922	0.713	12,569.999	0.813	12,715.077	0.913	12,860.154
0.014	11,556.400	0.114	11,701.290	0.214	11,846.179	0.314	11,991.140	0.414	12,136.218	0.514	12,281.295	0.614	12,426.373	0.714	12,571.450	0.814	12,716.527	0.914	12,861.605
0.015	11,557.849	0.115	11,702.739	0.215	11,847.628	0.315	11,992.591	0.415	12,137.669	0.515	12,282.746	0.615	12,427.823	0.715	12,572.901	0.815	12,717.978	0.915	12,863.055
0.016	11,559.298	0.116	11,704.188	0.216	11,849.077	0.316	11,994.042	0.416	12,139.119	0.516	12,284.197	0.616	12,429.274	0.716	12,574.351	0.816	12,719.429	0.916	12,864.506
0.017	11,560.747	0.117	11,705.637	0.217	11,850.526	0.317	11,995.493	0.417	12,140.570	0.517	12,285.648	0.617	12,430.725	0.717	12,575.802	0.817	12,720.880	0.917	12,865.957
0.018	11,562.196	0.118	11,707.085	0.218	11,851.975	0.318	11,996.944	0.418	12,142.021	0.518	12,287.098	0.618	12,432.176	0.718	12,577.253	0.818	12,722.330	0.918	12,867.408
0.019	11,563.645	0.119	11,708.534	0.219	11,853.424	0.319	11,998.394	0.419	12,143.472	0.519	12,288.549	0.619	12,433.626	0.719	12,578.704	0.819	12,723.781	0.919	12,868.859
0.020	11,565.094	0.120	11,709.983	0.220	11,854.873	0.320	11,999.845	0.420	12,144.922	0.520	12,290.000	0.620	12,435.077	0.720	12,580.155	0.820	12,725.232	0.920	12,870.309
0.021	11,566.543	0.121	11,711.432	0.221	11,856.322	0.321	12,001.296	0.421	12,146.373	0.521	12,291.451	0.621	12,436.528	0.721	12,581.605	0.821	12,726.683	0.921	12,871.760
0.022	11,567.991	0.122	11,712.881	0.222	11,857.771	0.322	12,002.747	0.422	12,147.824	0.522	12,292.901	0.622	12,437.979	0.722	12,583.056	0.822	12,728.134	0.922	12,873.211
0.023	11,569.440	0.123	11,714.330	0.223	11,859.220	0.323	12,004.197	0.423	12,149.275	0.523	12,294.352	0.623	12,439.430	0.723	12,584.507	0.823	12,729.584	0.923	12,874.662
0.024	11,570.889	0.124	11,715.779	0.224	11,860.668	0.324	12,005.648	0.424	12,150.726	0.524	12,295.803	0.624	12,440.880	0.724	12,585.958	0.824	12,731.035	0.924	12,876.112
0.025	11,572.338	0.125	11,717.228	0.225	11,862.117	0.325	12,007.099	0.425	12,152.176	0.525	12,297.254	0.625	12,442.331	0.725	12,587.408	0.825	12,732.486	0.925	12,877.563
0.026	11,573.787	0.126	11,718.677	0.226	11,863.566	0.326	12,008.550	0.426	12,153.627	0.526	12,298.704	0.626	12,443.782	0.726	12,588.859	0.826	12,733.937	0.926	12,879.014
0.027	11,575.236	0.127	11,720.126	0.227	11,865.015	0.327	12,010.000	0.427	12,155.078	0.527	12,300.155	0.627	12,445.233	0.727	12,590.310	0.827	12,735.387	0.927	12,880.465
0.028	11,576.685	0.128	11,721.574	0.228	11,866.464	0.328	12,011.451	0.428	12,156.529	0.528	12,301.606	0.628	12,446.683	0.728	12,591.761	0.828	12,736.838	0.928	12,881.916
0.029	11,578.134	0.129	11,723.023	0.229	11,867.913	0.329	12,012.902	0.429	12,157.979	0.529	12,303.057	0.629	12,448.134	0.729	12,593.212	0.829	12,738.289	0.929	12,883.366
0.030	11,579.583	0.130	11,724.472	0.230	11,869.362	0.330	12,014.353	0.430	12,159.430	0.530	12,304.508	0.630	12,449.585	0.730	12,594.662	0.830	12,739.740	0.930	12,884.817
0.031	11,581.032	0.131	11,725.921	0.231	11,870.811	0.331	12,015.804	0.431	12,160.881	0.531	12,305.958	0.631	12,451.036	0.731	12,596.113	0.831	12,741.190	0.931	12,886.268
0.032	11,582.480	0.132	11,727.370	0.232	11,872.260	0.332	12,017.254	0.432	12,162.332	0.532	12,307.409	0.632	12,452.486	0.732	12,597.564	0.832	12,742.641	0.932	12,887.719
0.033	11,583.929	0.133	11,728.819	0.233	11,873.709	0.333	12,018.705	0.433	12,163.783	0.533	12,308.860	0.633	12,453.937	0.733	12,599.015	0.833	12,744.092	0.933	12,889.169
0.034	11,585.378	0.134	11,730.268	0.234	11,875.157	0.334	12,020.156	0.434	12,165.233	0.534	12,310.311	0.634	12,455.388	0.734	12,600.465	0.834	12,745.543	0.934	12,890.620
0.035	11,586.827	0.135	11,731.717	0.235	11,876.606	0.335	12,021.607	0.435	12,166.684	0.535	12,311.761	0.635	12,456.839	0.735	12,601.916	0.835	12,746.994	0.935	12,892.071
0.036	11,588.276	0.136	11,733.166	0.236	11,878.055	0.336	12,023.057	0.436	12,168.135	0.536	12,313.212	0.636	12,458.290	0.736	12,603.367	0.836	12,748.444	0.936	12,893.522
0.037	11,589.725	0.137	11,734.614	0.237	11,879.504	0.337	12,024.508	0.437	12,169.586	0.537	12,314.663	0.637	12,459.740	0.737	12,604.818	0.837	12,749.895	0.937	12,894.972
0.038	11,591.174	0.138	11,736.063	0.238	11,880.953	0.338	12,025.959	0.438	12,171.036	0.538	12,316.114	0.638	12,461.191	0.738	12,606.269	0.838	12,751.346	0.938	12,896.423
0.039	11,592.623	0.139	11,737.512	0.239	11,882.402	0.339	12,027.410	0.439	12,172.487	0.539	12,317.565	0.639	12,462.642	0.739	12,607.719	0.839	12,752.797	0.939	12,897.874
0.040	11,594.072	0.140	11,738.961	0.240	11,883.851	0.340	12,028.861	0.440	12,173.938	0.540	12,319.015	0.640	12,464.093	0.740	12,609.170	0.840	12,754.247	0.940	12,899.325
0.041	11,595.520	0.141	11,740.410	0.241	11,885.300	0.341	12,030.311	0.441	12,175.389	0.541	12,320.466	0.641	12,465.543	0.741	12,610.621	0.841	12,755.698	0.941	12,900.776
0.042	11,596.969	0.142	11,741.859	0.242	11,886.749	0.342	12,031.762	0.442	12,176.839	0.542	12,321.917	0.642	12,466.994	0.742	12,612.072	0.842	12,757.149	0.942	12,902.226
0.043	11,598.418	0.143	11,743.308	0.243	11,888.197	0.343	12,033.213	0.443	12,178.290	0.543	12,323.368	0.643	12,468.445	0.743	12,613.522	0.843	12,758.600	0.943	12,903.677
0.044	11,599.867	0.144	11,744.757	0.244	11,889.646	0.344	12,034.664	0.444	12,179.741	0.544	12,324.818	0.644	12,469.896	0.744	12,614.973	0.844	12,760.051	0.944	12,905.128
0.045	11,601.316	0.145	11,746.206	0.245	11,891.095	0.345	12,036.114	0.445	12,181.192	0.545	12,326.269	0.645	12,471.347	0.745	12,616.424	0.845	12,761.501	0.945	12,906.579
0.046	11,602.765	0.146	11,747.655	0.246	11,892.544	0.346	12,037.565	0.446	12,182.643	0.546	12,327.720	0.646	12,472.797	0.746	12,617.875	0.846	12,762.952	0.946	12,908.029
0.047	11,604.214	0.147	11,749.103	0.247	11,893.993	0.347	12,039.016	0.447	12,184.093	0.547	12,329.171	0.647	12,474.248	0.747	12,619.325	0.847	12,764.403	0.947	12,909.480
0.048	11,605.663	0.148	11,750.552	0.248	11,895.442	0.348	12,040.467	0.448	12,185.544	0.548	12,330.621	0.648	12,475.699	0.748	12,620.776	0.848	12,765.854	0.948	12,910.931
0.049	11,607.112	0.149	11,752.001	0.249	11,896.891	0.349	12,041.918	0.449	12,186.995	0.549	12,332.072	0.649	12,477.150	0.749	12,622.227	0.849	12,767.304	0.949	12,912.382
0.050	11,608.561	0.150	11,753.450	0.250	11,898.340	0.350	12,043.368	0.450	12,188.446	0.550	12,333.523	0.650	12,478.600	0.750	12,623.678	0.850	12,768.755	0.950	12,913.833
0.051	11,610.009	0.151	11,754.899	0.251	11,899.789	0.351	12,044.819	0.451	12,189.896	0.551	12,334.974	0.651	12,480.051	0.751	12,625.129	0.851	12,770.206	0.951	12,915.283
0.052	11,611.458	0.152	11,756.348	0.252	11,901.238	0.352	12,046.270	0.452	12,191.347	0.552	12,336.425	0.652	12,481.502	0.752	12,626.579	0.852	12,771.657	0.952	12,916.734
0.053	11,612.907	0.153	11,757.797	0.253	11,902.686	0.353	12,047.721	0.453	12,192.798	0.553	12,337.875	0.653	12,482.953	0.753	12,628.030	0.853	12,773.107	0.953	12,918.185
0.054	11,614.356	0.154	11,759.246	0.254	11,904.135	0.354	12,049.171	0.454	12,194.249	0.554	12,339.326	0.654	12,484.404	0.754	12,629.481	0.854	12,774.558	0.954	12,919.636
0.055	11,615.805	0.155	11,760.695	0.255	11,905.584	0.355	12,050.622	0.455	12,195.700	0.555	12,340.777	0.655	12,485.854	0.755	12,630.932	0.855	12,776.009	0.955	12,921.086
0.056	11,617.254	0.156	11,762.144	0.256	11,907.033	0.356	12,052.073	0.456	12,197.150	0.556	12,342.228	0.656	12,487.305	0.756	12,632.382	0.856	12,777.460	0.956	12,922.537
0.057	11,618.703	0.157	11,763.592	0.257	11,908.482	0.357	12,053.524	0.457	12,198.601	0.557	12,343.678	0.657	12,488.756	0.757	12,633.833	0.857	12,778.911	0.957	12,923.988
0.058	11,620.152	0.158	11,765.041	0.258	11,909.931	0.358	12,054.974	0.458	12,200.052	0.558	12,345.129	0.658	12,490.207	0.758	12,635.284	0.858	12,780.361	0.958	12,925.439
0.059	11,621.601	0.159	11,766.490	0.259	11,911.380	0.359	12,056.425	0.459	12,201.503	0.559	12,346.580	0.659	12,491.657	0.759	12,636.735	0.859	12,781.812	0.959	12,926.890
0.060	11,623.050	0.160	11,767.939	0.260	11,912.829	0.360	12,057.876	0.460	12,202.953	0.560	12,348.031	0.660	12,493.108	0.760	12,638.186	0.860	12,783.263	0.960	12,928.340
0.061	11,624.498	0.161	11,769.388	0.261	11,914.278	0.361	12,059.327	0.461	12,204.404	0.561	12,349.482	0.661	12,494.559	0.761	12,639.636	0.861	12,784.714	0.961	12,929.791
0.062	11,625.947	0.162	11,770.837	0.262	11,915.726	0.362	12,060.778	0.462	12,205.855	0.562	12,350.932	0.662	12,496.010	0.762	12,641.087	0.862	12,786.164	0.962	12,931.242
0.063	11,627.396	0.163	11,772.286	0.263	11,917.175	0.363	12,062.228	0.463	12,207.306	0.563	12,352.383	0.663	12,497.460	0.763	12,642.538	0.863	12,787.615	0.963	12,932.693
0.064	11,628.845	0.164	11,773.735	0.264	11,918.624	0.364	12,063.679	0.464	12,208.756	0.564	12,353.834	0.664	12,498.911	0.764	12,643.989	0.864	12,789.066	0.964	12,934.143
0.065	11,630.294	0.165	11,775.184	0.265	11,920.073	0.365	12,065.130	0.465	12,210.207	0.565	12,355.285	0.665	12,500.362	0.765	12,645.439	0.865	12,790.517	0.965	12,935.594
0.066	11,631.743	0.166	11,776.632	0.266	11,921.522	0.366	12,066.581	0.466	12,211.658	0.566	12,356.735	0.666	12,501.813	0.766	12,646.890	0.866	12,791.968	0.966	12,937.045
0.067	11,633.192	0.167	11,778.081	0.267	11,922.971	0.367	12,068.031	0.467	12,213.109	0.567	12,358.186	0.667	12,503.264	0.767	12,648.341	0.867	12,793.418	0.967	12,938.496
0.068	11,634.641	0.168	11,779.530	0.268	11,924.420	0.368	12,069.482	0.468	12,214.560	0.568	12,359.637	0.668	12,504.714	0.768	12,649.792	0.868	12,794.869	0.968	12,939.946
0.069	11,636.090	0.169	11,780.979	0.269	11,925.869	0.369	12,070.933	0.469	12,216.010	0.569	12,361.088	0.669	12,506.165	0.769	12,651.242	0.869	12,796.320	0.969	12,941.397
0.070	11,637.538	0.170	11,782.428	0.270	11,927.318	0.370	12,072.384	0.470	12,217.461	0.570	12,362.539	0.670	12,507.616	0.770	12,652.693	0.870	12,797.771	0.970	12,942.848
0.071	11,638.987	0.171	11,783.877	0.271	11,928.767	0.371	12,073.835	0.471	12,218.912	0.571	12,363.989	0.671	12,509.067	0.771	12,654.144	0.871	12,799.221	0.971	12,944.299
0.072	11,640.436	0.172	11,785.326	0.272	11,930.215	0.372	12,075.285	0.472	12,220.363	0.572	12,365.440	0.672	12,510.517	0.772	12,655.595	0.872	12,800.672	0.972	12,945.750
0.073	11,641.885	0.173	11,786.775	0.273	11,931.664	0.373	12,076.736	0.473	12,221.813	0.573	12,366.891	0.673	12,511.968	0.773	12,657.046	0.873	12,802.123	0.973	12,947.200
0.074	11,643.334	0.174	11,788.224	0.274	11,933.113	0.374	12,078.187	0.474	12,223.264	0.574	12,368.342	0.674	12,513.419	0.774	12,658.496	0.874	12,803.574	0.974	12,948.651
0.075	11,644.783	0.175	11,789.673	0.275	11,934.562	0.375	12,079.638	0.475	12,224.715	0.575	12,369.792	0.675	12,514.870	0.775	12,659.947	0.875	12,805.025	0.975	12,950.102
0.076	11,646.232	0.176	11,791.121	0.276	11,936.011	0.376	12,081.088	0.476	12,226.166	0.576	12,371.243	0.676	12,516.321	0.776	12,661.398	0.876	12,806.475	0.976	12,951.553
0.077	11,647.681	0.177	11,792.570	0.277	11,937.462	0.377	12,082.539	0.477	12,227.617	0.577	12,372.694	0.677	12,517.771	0.777	12,662.849	0.877	12,807.926	0.977	12,953.003
0.078	11,649.130	0.178	11,794.019	0.278	11,938.913	0.378	12,083.990	0.478	12,229.067	0.578	12,374.145	0.678	12,519.222	0.778	12,664.299	0.878	12,809.377	0.978	12,954.454
0.079	11,650.579	0.179	11,795.468	0.279	11,940.363	0.379	12,085.441	0.479	12,230.518	0.579	12,375.595	0.679	12,520.673	0.779	12,665.750	0.879	12,810.828	0.979	12,955.905
0.080	11,652.027	0.180	11,796.917	0.280	11,941.814	0.380	12,086.892	0.480	12,231.969	0.580	12,377.046	0.680	12,522.124	0.780	12,667.201	0.880	12,812.278	0.980	12,957.356
0.081	11,653.476	0.181	11,798.366	0.281	11,943.265	0.381	12,088.342	0.481	12,233.420	0.581	12,378.497	0.681	12,523.574	0.781	12,668.652	0.881	12,813.729	0.981	12,958.807
0.082	11,654.925	0.182	11,799.815	0.282	11,944.716	0.382	12,089.793	0.482	12,234.870	0.582	12,379.948	0.682	12,525.025	0.782	12,670.103	0.882	12,815.180	0.982	12,960.257
0.083	11,656.374	0.183	11,801.264	0.283	11,946.166	0.383	12,091.244	0.483	12,236.321	0.583	12,381.399	0.683	12,526.476	0.783	12,671.553	0.883	12,816.631	0.983	12,961.708
0.084	11,657.823	0.184	11,802.713	0.284	11,947.617	0.384	12,092.695	0.484	12,237.772	0.584	12,382.849	0.684	12,527.927	0.784	12,673.004	0.884	12,818.081	0.984	12,963.159
0.085	11,659.272	0.185	11,804.161	0.285	11,949.068	0.385	12,094.145	0.485	12,239.223	0.585	12,384.300	0.685	12,529.377	0.785	12,674.455	0.885	12,819.532	0.985	12,964.610
0.086	11,660.721	0.186	11,805.610	0.286	11,950.519	0.386	12,095.596	0.486	12,240.674	0.586	12,385.751	0.686	12,530.828	0.786	12,675.906	0.886	12,820.983	0.986	12,966.060
0.087	11,662.170	0.187	11,807.059	0.287	11,951.970	0.387	12,097.047	0.487	12,242.124	0.587	12,387.202	0.687	12,532.279	0.787	12,677.356	0.887	12,822.434	0.987	12,967.511
0.088	11,663.619	0.188	11,808.508	0.288	11,953.420	0.388	12,098.498	0.488	12,243.575	0.588	12,388.652	0.688	12,533.730	0.788	12,678.807	0.888	12,823.885	0.988	12,968.962
0.089	11,665.067	0.189	11,809.957	0.289	11,954.871	0.389	12,099.948	0.489	12,245.026	0.589	12,390.103	0.689	12,535.181	0.789	12,680.258	0.889	12,825.335	0.989	12,970.413
0.090	11,666.516	0.190	11,811.406	0.290	11,956.322	0.390	12,101.399	0.490	12,246.477	0.590	12,391.554	0.690	12,536.631	0.790	12,681.709	0.890	12,826.786	0.990	12,971.863
0.091	11,667.965	0.191	11,812.855	0.291	11,957.773	0.391	12,102.850	0.491	12,247.927	0.591	12,393.005	0.691	12,538.082	0.791	12,683.160	0.891	12,828.237	0.991	12,973.314
0.092	11,669.414	0.192	11,814.304	0.292	11,959.223	0.392	12,104.301	0.492	12,249.378	0.592	12,394.456	0.692	12,539.533	0.792	12,684.610	0.892	12,829.688	0.992	12,974.765
0.093	11,670.863	0.193	11,815.753	0.293	11,960.674	0.393	12,105.752	0.493	12,250.829	0.593	12,395.906	0.693	12,540.984	0.793	12,686.061	0.893	12,831.138	0.993	12,976.216
0.094	11,672.312	0.194	11,817.202	0.294	11,962.125	0.394	12,107.202	0.494	12,252.280	0.594	12,397.357	0.694	12,542.434	0.794	12,687.512	0.894	12,832.589	0.994	12,977.667
0.095	11,673.761	0.195	11,818.650	0.295	11,963.576	0.395	12,108.653	0.495	12,253.730	0.595	12,398.808	0.695	12,543.885	0.795	12,688.963	0.895	12,834.040	0.995	12,979.117
0.096	11,675.210	0.196	11,820.099	0.296	11,965.027	0.396	12,110.104	0.496	12,255.181	0.596	12,400.259	0.696	12,545.336	0.796	12,690.413	0.896	12,835.491	0.996	12,980.568
0.097	11,676.659	0.197	11,821.548	0.297	11,966.477	0.397	12,111.555	0.497	12,256.632	0.597	12,401.709	0.697	12,546.787	0.797	12,691.864	0.897	12,836.942	0.997	12,982.019
0.098	11,678.108	0.198	11,822.997	0.298	11,967.928	0.398	12,113.005	0.498	12,258.083	0.598	12,403.160	0.698	12,548.238	0.798	12,693.315	0.898	12,838.392	0.998	12,983.470
0.099	11,679.556	0.199	11,824.446	0.299	11,969.379	0.399	12,114.456	0.499	12,259.534	0.599	12,404.611	0.699	12,549.688	0.799	12,694.766	0.899	12,839.843	0.999	12,984.920

DATE STRAPPED: 06/26/18 BY: RJ
DATE COMPUTED: 07/03/18 BY: WLH
DATE ISSUED: 07/03/18

AMSPEC

Meliadine
Rankin Inlet

Tank No. 1
INNAGE TABLE

Calibration@AmSpecGroup.com

CAPACITIES GIVEN IN CUBIC METERS

GAUGE HEIGHT: 14.275 M

mm	9 M	mm	9 M	mm	9 M	mm	9 M	mm	9 M	mm	9 M	mm	9 M	mm	9 M	mm	9 M	mm	9 M
0.000	12,986.371	0.100	13,131.449	0.200	13,276.526	0.300	13,421.603	0.400	13,566.681	0.500	13,711.758	0.600	13,856.835	0.700	14,001.913	0.800	14,146.990	0.900	14,292.068
0.001	12,987.822	0.101	13,132.899	0.201	13,277.977	0.301	13,423.054	0.401	13,568.132	0.501	13,713.209	0.601	13,858.286	0.701	14,003.364	0.801	14,148.441	0.901	14,293.518
0.002	12,989.273	0.102	13,134.350	0.202	13,279.428	0.302	13,424.505	0.402	13,569.582	0.502	13,714.660	0.602	13,859.737	0.702	14,004.814	0.802	14,149.892	0.902	14,294.969
0.003	12,990.724	0.103	13,135.801	0.203	13,280.878	0.303	13,425.956	0.403	13,571.033	0.503	13,716.110	0.603	13,861.188	0.703	14,006.265	0.803	14,151.343	0.903	14,296.420
0.004	12,992.174	0.104	13,137.252	0.204	13,282.329	0.304	13,427.406	0.404	13,572.484	0.504	13,717.561	0.604	13,862.639	0.704	14,007.716	0.804	14,152.793	0.904	14,297.871
0.005	12,993.625	0.105	13,138.702	0.205	13,283.780	0.305	13,428.857	0.405	13,573.935	0.505	13,719.012	0.605	13,864.089	0.705	14,009.167	0.805	14,154.244	0.905	14,299.321
0.006	12,995.076	0.106	13,140.153	0.206	13,285.231	0.306	13,430.308	0.406	13,575.385	0.506	13,720.463	0.606	13,865.540	0.706	14,010.618	0.806	14,155.695	0.906	14,300.772
0.007	12,996.527	0.107	13,141.604	0.207	13,286.681	0.307	13,431.759	0.407	13,576.836	0.507	13,721.914	0.607	13,866.991	0.707	14,012.068	0.807	14,157.146	0.907	14,302.223
0.008	12,997.977	0.108	13,143.055	0.208	13,288.132	0.308	13,433.210	0.408	13,578.287	0.508	13,723.364	0.608	13,868.442	0.708	14,013.519	0.808	14,158.596	0.908	14,303.674
0.009	12,999.428	0.109	13,144.506	0.209	13,289.583	0.309	13,434.660	0.409	13,579.738	0.509	13,724.815	0.609	13,869.892	0.709	14,014.970	0.809	14,160.047	0.909	14,305.125
0.010	13,000.879	0.110	13,145.956	0.210	13,291.034	0.310	13,436.111	0.410	13,581.188	0.510	13,726.266	0.610	13,871.343	0.710	14,016.421	0.810	14,161.498	0.910	14,306.575
0.011	13,002.330	0.111	13,147.407	0.211	13,292.484	0.311	13,437.562	0.411	13,582.639	0.511	13,727.717	0.611	13,872.794	0.711	14,017.871	0.811	14,162.949	0.911	14,308.026
0.012	13,003.781	0.112	13,148.858	0.212	13,293.935	0.312	13,439.013	0.412	13,584.090	0.512	13,729.167	0.612	13,874.245	0.712	14,019.322	0.812	14,164.400	0.912	14,309.477
0.013	13,005.231	0.113	13,150.309	0.213	13,295.386	0.313	13,440.463	0.413	13,585.541	0.513	13,730.618	0.613	13,875.696	0.713	14,020.773	0.813	14,165.850	0.913	14,310.928
0.014	13,006.682	0.114	13,151.759	0.214	13,296.837	0.314	13,441.914	0.414	13,586.992	0.514	13,732.069	0.614	13,877.146	0.714	14,022.224	0.814	14,167.301	0.914	14,312.378
0.015	13,008.133	0.115	13,153.210	0.215	13,298.288	0.315	13,443.365	0.415	13,588.442	0.515	13,733.520	0.615	13,878.597	0.715	14,023.674	0.815	14,168.752	0.915	14,313.829
0.016	13,009.584	0.116	13,154.661	0.216	13,299.738	0.316	13,444.816	0.416	13,589.893	0.516	13,734.970	0.616	13,880.048	0.716	14,025.125	0.816	14,170.203	0.916	14,315.280
0.017	13,011.034	0.117	13,156.112	0.217	13,301.189	0.317	13,446.267	0.417	13,591.344	0.517	13,736.421	0.617	13,881.499	0.717	14,026.576	0.817	14,171.653	0.917	14,316.731
0.018	13,012.485	0.118	13,157.563	0.218	13,302.640	0.318	13,447.717	0.418	13,592.795	0.518	13,737.872	0.618	13,882.949	0.718	14,028.027	0.818	14,173.104	0.918	14,318.182
0.019	13,013.936	0.119	13,159.013	0.219	13,304.091	0.319	13,449.168	0.419	13,594.245	0.519	13,739.323	0.619	13,884.400	0.719	14,029.478	0.819	14,174.555	0.919	14,319.632
0.020	13,015.387	0.120	13,160.464	0.220	13,305.541	0.320	13,450.619	0.420	13,595.696	0.520	13,740.774	0.620	13,885.851	0.720	14,030.928	0.820	14,176.006	0.920	14,321.083
0.021	13,016.837	0.121	13,161.915	0.221	13,306.992	0.321	13,452.070	0.421	13,597.147	0.521	13,742.224	0.621	13,887.302	0.721	14,032.379	0.821	14,177.456	0.921	14,322.534
0.022	13,018.288	0.122	13,163.366	0.222	13,308.443	0.322	13,453.520	0.422	13,598.598	0.522	13,743.675	0.622	13,888.753	0.722	14,033.830	0.822	14,178.907	0.922	14,323.985
0.023	13,019.739	0.123	13,164.816	0.223	13,309.894	0.323	13,454.971	0.423	13,600.049	0.523	13,745.126	0.623	13,890.203	0.723	14,035.281	0.823	14,180.358	0.923	14,325.435
0.024	13,021.190	0.124	13,166.267	0.224	13,311.345	0.324	13,456.422	0.424	13,601.499	0.524	13,746.577	0.624	13,891.654	0.724	14,036.731	0.824	14,181.809	0.924	14,326.886
0.025	13,022.641	0.125	13,167.718	0.225	13,312.795	0.325	13,457.873	0.425	13,602.950	0.525	13,748.027	0.625	13,893.105	0.725	14,038.182	0.825	14,183.260	0.925	14,328.337
0.026	13,024.091	0.126	13,169.169	0.226	13,314.246	0.326	13,459.323	0.426	13,604.401	0.526	13,749.478	0.626	13,894.556	0.726	14,039.633	0.826	14,184.710	0.926	14,329.788
0.027	13,025.542	0.127	13,170.620	0.227	13,315.697	0.327	13,460.774	0.427	13,605.852	0.527	13,750.929	0.627	13,896.006	0.727	14,041.084	0.827	14,186.161	0.927	14,331.239
0.028	13,026.993	0.128	13,172.070	0.228	13,317.148	0.328	13,462.225	0.428	13,607.302	0.528	13,752.380	0.628	13,897.457	0.728	14,042.535	0.828	14,187.612	0.928	14,332.689
0.029	13,028.444	0.129	13,173.521	0.229	13,318.598	0.329	13,463.676	0.429	13,608.753	0.529	13,753.831	0.629	13,898.908	0.729	14,043.985	0.829	14,189.063	0.929	14,334.140
0.030	13,029.894	0.130	13,174.972	0.230	13,320.049	0.330	13,465.127	0.430	13,610.204	0.530	13,755.281	0.630	13,900.359	0.730	14,045.436	0.830	14,190.513	0.930	14,335.591
0.031	13,031.345	0.131	13,176.423	0.231	13,321.500	0.331	13,466.577	0.431	13,611.655	0.531	13,756.732	0.631	13,901.809	0.731	14,046.887	0.831	14,191.964	0.931	14,337.042
0.032	13,032.796	0.132	13,177.873	0.232	13,322.951	0.332	13,468.028	0.432	13,613.106	0.532	13,758.183	0.632	13,903.260	0.732	14,048.338	0.832	14,193.415	0.932	14,338.492
0.033	13,034.247	0.133	13,179.324	0.233	13,324.402	0.333	13,469.479	0.433	13,614.556	0.533	13,759.634	0.633	13,904.711	0.733	14,049.788	0.833	14,194.866	0.933	14,339.943
0.034	13,035.698	0.134	13,180.775	0.234	13,325.852	0.334	13,470.930	0.434	13,616.007	0.534	13,761.084	0.634	13,906.162	0.734	14,051.239	0.834	14,196.317	0.934	14,341.394
0.035	13,037.148	0.135	13,182.226	0.235	13,327.303	0.335	13,472.380	0.435	13,617.458	0.535	13,762.535	0.635	13,907.613	0.735	14,052.690	0.835	14,197.767	0.935	14,342.845
0.036	13,038.599	0.136	13,183.676	0.236	13,328.754	0.336	13,473.831	0.436	13,618.909	0.536	13,763.986	0.636	13,909.063	0.736	14,054.141	0.836	14,199.218	0.936	14,344.295
0.037	13,040.050	0.137	13,185.127	0.237	13,330.205	0.337	13,475.282	0.437	13,620.359	0.537	13,765.437	0.637	13,910.514	0.737	14,055.591	0.837	14,200.669	0.937	14,345.746
0.038	13,041.501	0.138	13,186.578	0.238	13,331.655	0.338	13,476.733	0.438	13,621.810	0.538	13,766.888	0.638	13,911.965	0.738	14,057.042	0.838	14,202.120	0.938	14,347.197
0.039	13,042.951	0.139	13,188.029	0.239	13,333.106	0.339	13,478.184	0.439	13,623.261	0.539	13,768.338	0.639	13,913.416	0.739	14,058.493	0.839	14,203.570	0.939	14,348.648
0.040	13,044.402	0.140	13,189.480	0.240	13,334.557	0.340	13,479.634	0.440	13,624.712	0.540	13,769.789	0.640	13,914.866	0.740	14,059.944	0.840	14,205.021	0.940	14,350.099
0.041	13,045.853	0.141	13,190.930	0.241	13,336.008	0.341	13,481.085	0.441	13,626.162	0.541	13,771.240	0.641	13,916.317	0.741	14,061.395	0.841	14,206.472	0.941	14,351.549
0.042	13,047.304	0.142	13,192.381	0.242	13,337.458	0.342	13,482.536	0.442	13,627.613	0.542	13,772.691	0.642	13,917.768	0.742	14,062.845	0.842	14,207.923	0.942	14,353.000
0.043	13,048.755	0.143	13,193.832	0.243	13,338.909	0.343	13,483.987	0.443	13,629.064	0.543	13,774.141	0.643	13,919.219	0.743	14,064.296	0.843	14,209.374	0.943	14,354.451
0.044	13,050.205	0.144	13,195.283	0.244	13,340.360	0.344	13,485.437	0.444	13,630.515	0.544	13,775.592	0.644	13,920.670	0.744	14,065.747	0.844	14,210.824	0.944	14,355.902
0.045	13,051.656	0.145	13,196.733	0.245	13,341.811	0.345	13,486.888	0.445	13,631.966	0.545	13,777.043	0.645	13,922.120	0.745	14,067.198	0.845	14,212.275	0.945	14,357.352
0.046	13,053.107	0.146	13,198.184	0.246	13,343.262	0.346	13,488.339	0.446	13,633.416	0.546	13,778.494	0.646	13,923.571	0.746	14,068.648	0.846	14,213.726	0.946	14,358.803
0.047	13,054.558	0.147	13,199.635	0.247	13,344.712	0.347	13,489.790	0.447	13,634.867	0.547	13,779.944	0.647	13,925.022	0.747	14,070.099	0.847	14,215.177	0.947	14,360.254
0.048	13,056.008	0.148	13,201.086	0.248	13,346.163	0.348	13,491.241	0.448	13,636.318	0.548	13,781.395	0.648	13,926.473	0.748	14,071.550	0.848	14,216.627	0.948	14,361.705
0.049	13,057.459	0.149	13,202.537	0.249	13,347.614	0.349	13,492.691	0.449	13,637.769	0.549	13,782.846	0.649	13,927.923	0.749	14,073.001	0.849	14,218.078	0.949	14,363.156
0.050	13,058.910	0.150	13,203.987	0.250	13,349.065	0.350	13,494.142	0.450	13,639.219	0.550	13,784.297	0.650	13,929.374	0.750	14,074.452	0.850	14,219.529	0.950	14,364.606
0.051	13,060.361	0.151	13,205.438	0.251	13,350.515	0.351	13,495.593	0.451	13,640.670	0.551	13,785.748	0.651	13,930.825	0.751	14,075.902	0.851	14,220.980	0.951	14,366.057
0.052	13,061.811	0.152	13,206.889	0.252	13,351.966	0.352	13,497.044	0.452	13,642.121	0.552	13,787.198	0.652	13,932.276	0.752	14,077.353	0.852	14,222.430	0.952	14,367.508
0.053	13,063.262	0.153	13,208.340	0.253	13,353.417	0.353	13,498.494	0.453	13,643.572	0.553	13,788.649	0.653	13,933.727	0.753	14,078.804	0.853	14,223.881	0.953	14,368.959
0.054	13,064.713	0.154	13,209.790	0.254	13,354.868	0.354	13,499.945	0.454	13,645.023	0.554	13,790.100	0.654	13,935.177	0.754	14,080.255	0.854	14,225.332	0.954	14,370.409
0.055	13,066.164	0.155	13,211.241	0.255	13,356.319	0.355	13,501.396	0.455	13,646.473	0.555	13,791.551	0.655	13,936.628	0.755	14,081.705	0.855	14,226.783	0.955	14,371.860
0.056	13,067.615	0.156	13,212.692	0.256	13,357.769	0.356	13,502.847	0.456	13,647.924	0.556	13,793.001	0.656	13,938.079	0.756	14,083.156	0.856	14,228.234	0.956	14,373.311
0.057	13,069.065	0.157	13,214.143	0.257	13,359.220	0.357	13,504.297	0.457	13,649.375	0.557	13,794.452	0.657	13,939.530	0.757	14,084.607	0.857	14,229.684	0.957	14,374.762
0.058	13,070.516	0.158	13,215.593	0.258	13,360.671	0.358	13,505.748	0.458	13,650.826	0.558	13,795.903	0.658	13,940.980	0.758	14,086.058	0.858	14,231.135	0.958	14,376.212
0.059	13,071.967	0.159	13,217.044	0.259	13,362.122	0.359	13,507.199	0.459	13,652.276	0.559	13,797.354	0.659	13,942.431	0.759	14,087.509	0.859	14,232.586	0.959	14,377.663
0.060	13,073.418	0.160	13,218.495	0.260	13,363.572	0.360	13,508.650	0.460	13,653.727	0.560	13,798.805	0.660	13,943.882	0.760	14,088.959	0.860	14,234.037	0.960	14,379.114
0.061	13,074.868	0.161	13,219.946	0.261	13,365.023	0.361	13,510.101	0.461	13,655.178	0.561	13,800.255	0.661	13,945.333	0.761	14,090.410	0.861	14,235.487	0.961	14,380.565
0.062	13,076.319	0.162	13,221.397	0.262	13,366.474	0.362	13,511.551	0.462	13,656.629	0.562	13,801.706	0.662	13,946.783	0.762	14,091.861	0.862	14,236.938	0.962	14,382.016
0.063	13,077.770	0.163	13,222.847	0.263	13,367.925	0.363	13,513.002	0.463	13,658.079	0.563	13,803.157	0.663	13,948.234	0.763	14,093.312	0.863	14,238.389	0.963	14,383.466
0.064	13,079.221	0.164	13,224.298	0.264	13,369.376	0.364	13,514.453	0.464	13,659.530	0.564	13,804.608	0.664	13,949.685	0.764	14,094.762	0.864	14,239.840	0.964	14,384.917
0.065	13,080.672	0.165	13,225.749	0.265	13,370.826	0.365	13,515.904	0.465	13,660.981	0.565	13,806.058	0.665	13,951.136	0.765	14,096.213	0.865	14,241.291	0.965	14,386.368
0.066	13,082.122	0.166	13,227.200	0.266	13,372.277	0.366	13,517.354	0.466	13,662.432	0.566	13,807.509	0.666	13,952.587	0.766	14,097.664	0.866	14,242.741	0.966	14,387.819
0.067	13,083.573	0.167	13,228.650	0.267	13,373.728	0.367	13,518.805	0.467	13,663.883	0.567	13,808.960	0.667	13,954.037	0.767	14,099.115	0.867	14,244.192	0.967	14,389.269
0.068	13,085.024	0.168	13,230.101	0.268	13,375.179	0.368	13,520.256	0.468	13,665.333	0.568	13,810.411	0.668	13,955.488	0.768	14,100.565	0.868	14,245.643	0.968	14,390.720
0.069	13,086.475	0.169	13,231.552	0.269	13,376.629	0.369	13,521.707	0.469	13,666.784	0.569	13,811.862	0.669	13,956.939	0.769	14,102.016	0.869	14,247.094	0.969	14,392.171
0.070	13,087.925	0.170	13,233.003	0.270	13,378.080	0.370	13,523.158	0.470	13,668.235	0.570	13,813.312	0.670	13,958.390	0.770	14,103.467	0.870	14,248.544	0.970	14,393.622
0.071	13,089.376	0.171	13,234.454	0.271	13,379.531	0.371	13,524.608	0.471	13,669.686	0.571	13,814.763	0.671	13,959.840	0.771	14,104.918	0.871	14,249.995	0.971	14,395.073
0.072	13,090.827	0.172	13,235.904	0.272	13,380.982	0.372	13,526.059	0.472	13,671.136	0.572	13,816.214	0.672	13,961.291	0.772	14,106.369	0.872	14,251.446	0.972	14,396.523
0.073	13,092.278	0.173	13,237.355	0.273	13,382.432	0.373	13,527.510	0.473	13,672.587	0.573	13,817.665	0.673	13,962.742	0.773	14,107.819	0.873	14,252.897	0.973	14,397.974
0.074	13,093.728	0.174	13,238.806	0.274	13,383.883	0.374	13,528.961	0.474	13,674.038	0.574	13,819.115	0.674	13,964.193	0.774	14,109.270	0.874	14,254.348	0.974	14,399.425
0.075	13,095.179	0.175	13,240.257	0.275	13,385.334	0.375	13,530.411	0.475	13,675.489	0.575	13,820.566	0.675	13,965.644	0.775	14,110.721	0.875	14,255.798	0.975	14,400.876
0.076	13,096.630	0.176	13,241.707	0.276	13,386.785	0.376	13,531.862	0.476	13,676.940	0.576	13,822.017	0.676	13,967.094	0.776	14,112.172	0.876	14,257.249	0.976	14,402.326
0.077	13,098.081	0.177	13,243.158	0.277	13,388.236	0.377	13,533.313	0.477	13,678.390	0.577	13,823.468	0.677	13,968.545	0.777	14,113.622	0.877	14,258.700	0.977	14,403.777
0.078	13,099.532	0.178	13,244.609	0.278	13,389.686	0.378	13,534.764	0.478	13,679.841	0.578	13,824.918	0.678	13,969.996	0.778	14,115.073	0.878	14,260.151	0.978	14,405.228
0.079	13,100.982	0.179	13,246.060	0.279	13,391.137	0.379	13,536.214	0.479	13,681.292	0.579	13,826.369	0.679	13,971.447	0.779	14,116.524	0.879	14,261.601	0.979	14,406.679
0.080	13,102.433	0.180	13,247.511	0.280	13,392.588	0.380	13,537.665	0.480	13,682.743	0.580	13,827.820	0.680	13,972.897	0.780	14,117.975	0.880	14,263.052	0.980	14,408.130
0.081	13,103.884	0.181	13,248.961	0.281	13,394.039	0.381	13,539.116	0.481	13,684.193	0.581	13,829.271	0.681	13,974.348	0.781	14,119.426	0.881	14,264.503	0.981	14,409.580
0.082	13,105.335	0.182	13,250.412	0.282	13,395.489	0.382	13,540.567	0.482	13,685.644	0.582	13,830.722	0.682	13,975.799	0.782	14,120.876	0.882	14,265.954	0.982	14,411.031
0.083	13,106.785	0.183	13,251.863	0.283	13,396.940	0.383	13,542.018	0.483	13,687.095	0.583	13,832.172	0.683	13,977.250	0.783	14,122.327	0.883	14,267.404	0.983	14,412.482
0.084	13,108.236	0.184	13,253.314	0.284	13,398.391	0.384	13,543.468	0.484	13,688.546	0.584	13,833.623	0.684	13,978.700	0.784	14,123.778	0.884	14,268.855	0.984	14,413.933
0.085	13,109.687	0.185	13,254.764	0.285	13,399.842	0.385	13,544.919	0.485	13,689.997	0.585	13,835.074	0.685	13,980.151	0.785	14,125.229	0.885	14,270.306	0.985	14,415.383
0.086	13,111.138	0.186	13,256.215	0.286	13,401.293	0.386	13,546.370	0.486	13,691.447	0.586	13,836.525	0.686	13,981.602	0.786	14,126.679	0.886	14,271.757	0.986	14,416.834
0.087	13,112.589	0.187	13,257.666	0.287	13,402.743	0.387	13,547.821	0.487	13,692.898	0.587	13,837.975	0.687	13,983.053	0.787	14,128.130	0.887	14,273.208	0.987	14,418.285
0.088	13,114.039	0.188	13,259.117	0.288	13,404.194	0.388	13,549.271	0.488	13,694.349	0.588	13,839.426	0.688	13,984.504	0.788	14,129.581	0.888	14,274.658	0.988	14,419.736
0.089	13,115.490	0.189	13,260.567	0.289	13,405.645	0.389	13,550.722	0.489	13,695.800	0.589	13,840.877	0.689	13,985.954	0.789	14,131.032	0.889	14,276.109	0.989	14,421.186
0.090	13,116.941	0.190	13,262.018	0.290	13,407.096	0.390	13,552.173	0.490	13,697.250	0.590	13,842.328	0.690	13,987.405	0.790	14,132.483	0.890	14,277.560	0.990	14,422.637
0.091	13,118.392	0.191	13,263.469	0.291	13,408.546	0.391	13,553.624	0.491	13,698.701	0.591	13,843.779	0.691	13,988.856	0.791	14,133.933	0.891	14,279.011	0.991	14,424.088
0.092	13,119.842	0.192	13,264.920	0.292	13,409.997	0.392	13,555.075	0.492	13,700.152	0.592	13,845.229	0.692	13,990.307	0.792	14,135.384	0.892	14,280.461	0.992	14,425.539
0.093	13,121.293	0.193	13,266.371	0.293	13,411.448	0.393	13,556.525	0.493	13,701.603	0.593	13,846.680	0.693	13,991.757	0.793	14,136.835	0.893	14,281.912	0.993	14,426.990
0.094	13,122.744	0.194	13,267.821	0.294	13,412.899	0.394	13,557.976	0.494	13,703.053	0.594	13,848.131	0.694	13,993.208	0.794	14,138.286	0.894	14,283.363	0.994	14,428.440
0.095	13,124.195	0.195	13,269.272	0.295	13,414.349	0.395	13,559.427	0.495	13,704.504	0.595	13,849.582	0.695	13,994.659	0.795	14,139.736	0.895	14,284.814	0.995	14,429.891
0.096	13,125.646	0.196	13,270.723	0.296	13,415.800	0.396	13,560.878	0.496	13,705.955	0.596	13,851.032	0.696	13,996.110	0.796	14,141.187	0.896	14,286.265	0.996	14,431.342
0.097	13,127.096	0.197	13,272.174	0.297	13,417.251	0.397	13,562.328	0.497	13,707.406	0.597	13,852.483	0.697	13,997.561	0.797	14,142.638	0.897	14,287.715	0.997	14,432.793
0.098	13,128.547	0.198	13,273.624	0.298	13,418.702	0.398	13,563.779	0.498	13,708.857	0.598	13,853.934	0.698	13,999.011	0.798	14,144.089	0.898	14,289.166	0.998	14,434.243
0.099	13,129.998	0.199	13,275.075	0.299	13,420.153	0.399	13,565.230	0.499	13,710.307	0.599	13,855.385	0.699	14,000.462	0.799	14,145.539	0.899	14,290.617	0.999	14,435.694

DATE STRAPPED: 06/26/18 BY: RJ
DATE COMPUTED: 07/03/18 BY: WLH
DATE ISSUED: 07/03/18

AMSPEC

Meliadine
Rankin Inlet

Tank No. 1
INNAGE TABLE

Calibration@AmSpecGroup.com

CAPACITIES GIVEN IN CUBIC METERS

GAUGE HEIGHT: 14.275 M

mm	10 M	mm	10 M	mm	10 M	mm	10 M	mm	10 M	mm	10 M	mm	10 M	mm	10 M	mm	10 M	mm	10 M
0.000	14,437.145	0.100	14,582.222	0.200	14,727.300	0.300	14,872.377	0.400	15,017.455	0.500	15,162.532	0.600	15,307.609	0.700	15,452.687	0.800	15,597.764	0.900	15,742.841
0.001	14,438.596	0.101	14,583.673	0.201	14,728.751	0.301	14,873.828	0.401	15,018.905	0.501	15,163.983	0.601	15,309.060	0.701	15,454.137	0.801	15,599.215	0.901	15,744.292
0.002	14,440.047	0.102	14,585.124	0.202	14,730.201	0.302	14,875.279	0.402	15,020.356	0.502	15,165.433	0.602	15,310.511	0.702	15,455.588	0.802	15,600.666	0.902	15,745.743
0.003	14,441.497	0.103	14,586.575	0.203	14,731.652	0.303	14,876.729	0.403	15,021.807	0.503	15,166.884	0.603	15,311.962	0.703	15,457.039	0.803	15,602.116	0.903	15,747.194
0.004	14,442.948	0.104	14,588.025	0.204	14,733.103	0.304	14,878.180	0.404	15,023.258	0.504	15,168.335	0.604	15,313.412	0.704	15,458.490	0.804	15,603.567	0.904	15,748.644
0.005	14,444.399	0.105	14,589.476	0.205	14,734.554	0.305	14,879.631	0.405	15,024.708	0.505	15,169.786	0.605	15,314.863	0.705	15,459.941	0.805	15,605.018	0.905	15,750.095
0.006	14,445.850	0.106	14,590.927	0.206	14,736.004	0.306	14,881.082	0.406	15,026.159	0.506	15,171.237	0.606	15,316.314	0.706	15,461.391	0.806	15,606.469	0.906	15,751.546
0.007	14,447.300	0.107	14,592.378	0.207	14,737.455	0.307	14,882.533	0.407	15,027.610	0.507	15,172.687	0.607	15,317.765	0.707	15,462.842	0.807	15,607.919	0.907	15,752.997
0.008	14,448.751	0.108	14,593.829	0.208	14,738.906	0.308	14,883.983	0.408	15,029.061	0.508	15,174.138	0.608	15,319.215	0.708	15,464.293	0.808	15,609.370	0.908	15,754.448
0.009	14,450.202	0.109	14,595.279	0.209	14,740.357	0.309	14,885.434	0.409	15,030.511	0.509	15,175.589	0.609	15,320.666	0.709	15,465.744	0.809	15,610.821	0.909	15,755.898
0.010	14,451.653	0.110	14,596.730	0.210	14,741.807	0.310	14,886.885	0.410	15,031.962	0.510	15,177.040	0.610	15,322.117	0.710	15,467.194	0.810	15,612.272	0.910	15,757.349
0.011	14,453.104	0.111	14,598.181	0.211	14,743.258	0.311	14,888.336	0.411	15,033.413	0.511	15,178.490	0.611	15,323.568	0.711	15,468.645	0.811	15,613.723	0.911	15,758.800
0.012	14,454.554	0.112	14,599.632	0.212	14,744.709	0.312	14,889.786	0.412	15,034.864	0.512	15,179.941	0.612	15,325.019	0.712	15,470.096	0.812	15,615.173	0.912	15,760.251
0.013	14,456.005	0.113	14,601.082	0.213	14,746.160	0.313	14,891.237	0.413	15,036.315	0.513	15,181.392	0.613	15,326.469	0.713	15,471.547	0.813	15,616.624	0.913	15,761.701
0.014	14,457.456	0.114	14,602.533	0.214	14,747.611	0.314	14,892.688	0.414	15,037.765	0.514	15,182.843	0.614	15,327.920	0.714	15,472.997	0.814	15,618.075	0.914	15,763.152
0.015	14,458.907	0.115	14,603.984	0.215	14,749.061	0.315	14,894.139	0.415	15,039.216	0.515	15,184.293	0.615	15,329.371	0.715	15,474.448	0.815	15,619.526	0.915	15,764.603
0.016	14,460.357	0.116	14,605.435	0.216	14,750.512	0.316	14,895.590	0.416	15,040.667	0.516	15,185.744	0.616	15,330.822	0.716	15,475.899	0.816	15,620.976	0.916	15,766.054
0.017	14,461.808	0.117	14,606.886	0.217	14,751.963	0.317	14,897.040	0.417	15,042.118	0.517	15,187.195	0.617	15,332.272	0.717	15,477.350	0.817	15,622.427	0.917	15,767.505
0.018	14,463.259	0.118	14,608.336	0.218	14,753.414	0.318	14,898.491	0.418	15,043.568	0.518	15,188.646	0.618	15,333.723	0.718	15,478.801	0.818	15,623.878	0.918	15,768.955
0.019	14,464.710	0.119	14,609.787	0.219	14,754.864	0.319	14,899.942	0.419	15,045.019	0.519	15,190.097	0.619	15,335.174	0.719	15,480.251	0.819	15,625.329	0.919	15,770.406
0.020	14,466.160	0.120	14,611.238	0.220	14,756.315	0.320	14,901.393	0.420	15,046.470	0.520	15,191.547	0.620	15,336.625	0.720	15,481.702	0.820	15,626.779	0.920	15,771.857
0.021	14,467.611	0.121	14,612.689	0.221	14,757.766	0.321	14,902.843	0.421	15,047.921	0.521	15,192.998	0.621	15,338.076	0.721	15,483.153	0.821	15,628.230	0.921	15,773.308
0.022	14,469.062	0.122	14,614.139	0.222	14,759.217	0.322	14,904.294	0.422	15,049.372	0.522	15,194.449	0.622	15,339.526	0.722	15,484.604	0.822	15,629.681	0.922	15,774.758
0.023	14,470.513	0.123	14,615.590	0.223	14,760.668	0.323	14,905.745	0.423	15,050.822	0.523	15,195.900	0.623	15,340.977	0.723	15,486.054	0.823	15,631.132	0.923	15,776.209
0.024	14,471.964	0.124	14,617.041	0.224	14,762.118	0.324	14,907.196	0.424	15,052.273	0.524	15,197.350	0.624	15,342.428	0.724	15,487.505	0.824	15,632.583	0.924	15,777.660
0.025	14,473.414	0.125	14,618.492	0.225	14,763.569	0.325	14,908.646	0.425	15,053.724	0.525	15,198.801	0.625	15,343.879	0.725	15,488.956	0.825	15,634.033	0.925	15,779.111
0.026	14,474.865	0.126	14,619.942	0.226	14,765.020	0.326	14,910.097	0.426	15,055.175	0.526	15,200.252	0.626	15,345.329	0.726	15,490.407	0.826	15,635.484	0.926	15,780.562
0.027	14,476.316	0.127	14,621.393	0.227	14,766.471	0.327	14,911.548	0.427	15,056.625	0.527	15,201.703	0.627	15,346.780	0.727	15,491.858	0.827	15,636.935	0.927	15,782.012
0.028	14,477.767	0.128	14,622.844	0.228	14,767.921	0.328	14,912.999	0.428	15,058.076	0.528	15,203.154	0.628	15,348.231	0.728	15,493.308	0.828	15,638.386	0.928	15,783.463
0.029	14,479.217	0.129	14,624.295	0.229	14,769.372	0.329	14,914.450	0.429	15,059.527	0.529	15,204.604	0.629	15,349.682	0.729	15,494.759	0.829	15,639.836	0.929	15,784.914
0.030	14,480.668	0.130	14,625.746	0.230	14,770.823	0.330	14,915.900	0.430	15,060.978	0.530	15,206.055	0.630	15,351.132	0.730	15,496.210	0.830	15,641.287	0.930	15,786.365
0.031	14,482.119	0.131	14,627.196	0.231	14,772.274	0.331	14,917.351	0.431	15,062.428	0.531	15,207.506	0.631	15,352.583	0.731	15,497.661	0.831	15,642.738	0.931	15,787.815
0.032	14,483.570	0.132	14,628.647	0.232	14,773.725	0.332	14,918.802	0.432	15,063.879	0.532	15,208.957	0.632	15,354.034	0.732	15,499.111	0.832	15,644.189	0.932	15,789.266
0.033	14,485.021	0.133	14,630.098	0.233	14,775.175	0.333	14,920.253	0.433	15,065.330	0.533	15,210.407	0.633	15,355.485	0.733	15,500.562	0.833	15,645.640	0.933	15,790.717
0.034	14,486.471	0.134	14,631.549	0.234	14,776.626	0.334	14,921.703	0.434	15,066.781	0.534	15,211.858	0.634	15,356.936	0.734	15,502.013	0.834	15,647.090	0.934	15,792.168
0.035	14,487.922	0.135	14,632.999	0.235	14,778.077	0.335	14,923.154	0.435	15,068.232	0.535	15,213.309	0.635	15,358.386	0.735	15,503.464	0.835	15,648.541	0.935	15,793.618
0.036	14,489.373	0.136	14,634.450	0.236	14,779.528	0.336	14,924.605	0.436	15,069.682	0.536	15,214.760	0.636	15,359.837	0.736	15,504.914	0.836	15,649.992	0.936	15,795.069
0.037	14,490.824	0.137	14,635.901	0.237	14,780.978	0.337	14,926.056	0.437	15,071.133	0.537	15,216.211	0.637	15,361.288	0.737	15,506.365	0.837	15,651.443	0.937	15,796.520
0.038	14,492.274	0.138	14,637.352	0.238	14,782.429	0.338	14,927.507	0.438	15,072.584	0.538	15,217.661	0.638	15,362.739	0.738	15,507.816	0.838	15,652.893	0.938	15,797.971
0.039	14,493.725	0.139	14,638.803	0.239	14,783.880	0.339	14,928.957	0.439	15,074.035	0.539	15,219.112	0.639	15,364.189	0.739	15,509.267	0.839	15,654.344	0.939	15,799.422
0.040	14,495.176	0.140	14,640.253	0.240	14,785.331	0.340	14,930.408	0.440	15,075.485	0.540	15,220.563	0.640	15,365.640	0.740	15,510.718	0.840	15,655.795	0.940	15,800.872
0.041	14,496.627	0.141	14,641.704	0.241	14,786.781	0.341	14,931.859	0.441	15,076.936	0.541	15,222.014	0.641	15,367.091	0.741	15,512.168	0.841	15,657.246	0.941	15,802.323
0.042	14,498.077	0.142	14,643.155	0.242	14,788.232	0.342	14,933.310	0.442	15,078.387	0.542	15,223.464	0.642	15,368.542	0.742	15,513.619	0.842	15,658.697	0.942	15,803.774
0.043	14,499.528	0.143	14,644.606	0.243	14,789.683	0.343	14,934.760	0.443	15,079.838	0.543	15,224.915	0.643	15,369.993	0.743	15,515.070	0.843	15,660.147	0.943	15,805.225
0.044	14,500.979	0.144	14,646.056	0.244	14,791.134	0.344	14,936.211	0.444	15,081.289	0.544	15,226.366	0.644	15,371.443	0.744	15,516.521	0.844	15,661.598	0.944	15,806.675
0.045	14,502.430	0.145	14,647.507	0.245	14,792.585	0.345	14,937.662	0.445	15,082.739	0.545	15,227.817	0.645	15,372.894	0.745	15,517.971	0.845	15,663.049	0.945	15,808.126
0.046	14,503.881	0.146	14,648.958	0.246	14,794.035	0.346	14,939.113	0.446	15,084.190	0.546	15,229.267	0.646	15,374.345	0.746	15,519.422	0.846	15,664.500	0.946	15,809.577
0.047	14,505.331	0.147	14,650.409	0.247	14,795.486	0.347	14,940.563	0.447	15,085.641	0.547	15,230.718	0.647	15,375.796	0.747	15,520.873	0.847	15,665.950	0.947	15,811.028
0.048	14,506.782	0.148	14,651.860	0.248	14,796.937	0.348	14,942.014	0.448	15,087.092	0.548	15,232.169	0.648	15,377.246	0.748	15,522.324	0.848	15,667.401	0.948	15,812.479
0.049	14,508.233	0.149	14,653.310	0.249	14,798.388	0.349	14,943.465	0.449	15,088.542	0.549	15,233.620	0.649	15,378.697	0.749	15,523.775	0.849	15,668.852	0.949	15,813.929
0.050	14,509.684	0.150	14,654.761	0.250	14,799.838	0.350	14,944.916	0.450	15,089.993	0.550	15,235.071	0.650	15,380.148	0.750	15,525.225	0.850	15,670.303	0.950	15,815.380
0.051	14,511.134	0.151	14,656.212	0.251	14,801.289	0.351	14,946.367	0.451	15,091.444	0.551	15,236.521	0.651	15,381.599	0.751	15,526.676	0.851	15,671.753	0.951	15,816.831
0.052	14,512.585	0.152	14,657.663	0.252	14,802.740	0.352	14,947.817	0.452	15,092.895	0.552	15,237.972	0.652	15,383.049	0.752	15,528.127	0.852	15,673.204	0.952	15,818.282
0.053	14,514.036	0.153	14,659.113	0.253	14,804.191	0.353	14,949.268	0.453	15,094.346	0.553	15,239.423	0.653	15,384.500	0.753	15,529.578	0.853	15,674.655	0.953	15,819.732
0.054	14,515.487	0.154	14,660.564	0.254	14,805.642	0.354	14,950.719	0.454	15,095.796	0.554	15,240.874	0.654	15,385.951	0.754	15,531.028	0.854	15,676.106	0.954	15,821.183
0.055	14,516.938	0.155	14,662.015	0.255	14,807.092	0.355	14,952.170	0.455	15,097.247	0.555	15,242.324	0.655	15,387.402	0.755	15,532.479	0.855	15,677.557	0.955	15,822.634
0.056	14,518.388	0.156	14,663.466	0.256	14,808.543	0.356	14,953.620	0.456	15,098.698	0.556	15,243.775	0.656	15,388.853	0.756	15,533.930	0.856	15,679.007	0.956	15,824.085
0.057	14,519.839	0.157	14,664.916	0.257	14,809.994	0.357	14,955.071	0.457	15,100.149	0.557	15,245.226	0.657	15,390.303	0.757	15,535.381	0.857	15,680.458	0.957	15,825.535
0.058	14,521.290	0.158	14,666.367	0.258	14,811.445	0.358	14,956.522	0.458	15,101.599	0.558	15,246.677	0.658	15,391.754	0.758	15,536.832	0.858	15,681.909	0.958	15,826.986
0.059	14,522.741	0.159	14,667.818	0.259	14,812.895	0.359	14,957.973	0.459	15,103.050	0.559	15,248.128	0.659	15,393.205	0.759	15,538.282	0.859	15,683.360	0.959	15,828.437
0.060	14,524.191	0.160	14,669.269	0.260	14,814.346	0.360	14,959.424	0.460	15,104.501	0.560	15,249.578	0.660	15,394.656	0.760	15,539.733	0.860	15,684.810	0.960	15,829.888
0.061	14,525.642	0.161	14,670.720	0.261	14,815.797	0.361	14,960.874	0.461	15,105.952	0.561	15,251.029	0.661	15,396.106	0.761	15,541.184	0.861	15,686.261	0.961	15,831.339
0.062	14,527.093	0.162	14,672.170	0.262	14,817.248	0.362	14,962.325	0.462	15,107.402	0.562	15,252.480	0.662	15,397.557	0.762	15,542.635	0.862	15,687.712	0.962	15,832.789
0.063	14,528.544	0.163	14,673.621	0.263	14,818.698	0.363	14,963.776	0.463	15,108.853	0.563	15,253.931	0.663	15,399.008	0.763	15,544.085	0.863	15,689.163	0.963	15,834.240
0.064	14,529.995	0.164	14,675.072	0.264	14,820.149	0.364	14,965.227	0.464	15,110.304	0.564	15,255.381	0.664	15,400.459	0.764	15,545.536	0.864	15,690.614	0.964	15,835.691
0.065	14,531.445	0.165	14,676.523	0.265	14,821.600	0.365	14,966.677	0.465	15,111.755	0.565	15,256.832	0.665	15,401.910	0.765	15,546.987	0.865	15,692.064	0.965	15,837.142
0.066	14,532.896	0.166	14,677.973	0.266	14,823.051	0.366	14,968.128	0.466	15,113.206	0.566	15,258.283	0.666	15,403.360	0.766	15,548.438	0.866	15,693.515	0.966	15,838.592
0.067	14,534.347	0.167	14,679.424	0.267	14,824.502	0.367	14,969.579	0.467	15,114.656	0.567	15,259.734	0.667	15,404.811	0.767	15,549.888	0.867	15,694.966	0.967	15,840.043
0.068	14,535.798	0.168	14,680.875	0.268	14,825.952	0.368	14,971.030	0.468	15,116.107	0.568	15,261.184	0.668	15,406.262	0.768	15,551.339	0.868	15,696.417	0.968	15,841.494
0.069	14,537.248	0.169	14,682.326	0.269	14,827.403	0.369	14,972.481	0.469	15,117.558	0.569	15,262.635	0.669	15,407.713	0.769	15,552.790	0.869	15,697.867	0.969	15,842.945
0.070	14,538.699	0.170	14,683.777	0.270	14,828.854	0.370	14,973.931	0.470	15,119.009	0.570	15,264.086	0.670	15,409.163	0.770	15,554.241	0.870	15,699.318	0.970	15,844.396
0.071	14,540.150	0.171	14,685.227	0.271	14,830.305	0.371	14,975.382	0.471	15,120.459	0.571	15,265.537	0.671	15,410.614	0.771	15,555.692	0.871	15,700.769	0.971	15,845.846
0.072	14,541.601	0.172	14,686.678	0.272	14,831.755	0.372	14,976.833	0.472	15,121.910	0.572	15,266.988	0.672	15,412.065	0.772	15,557.142	0.872	15,702.220	0.972	15,847.297
0.073	14,543.051	0.173	14,688.129	0.273	14,833.206	0.373	14,978.284	0.473	15,123.361	0.573	15,268.438	0.673	15,413.516	0.773	15,558.593	0.873	15,703.670	0.973	15,848.748
0.074	14,544.502	0.174	14,689.580	0.274	14,834.657	0.374	14,979.734	0.474	15,124.812	0.574	15,269.889	0.674	15,414.967	0.774	15,560.044	0.874	15,705.121	0.974	15,850.199
0.075	14,545.953	0.175	14,691.030	0.275	14,836.108	0.375	14,981.185	0.475	15,126.263	0.575	15,271.340	0.675	15,416.417	0.775	15,561.495	0.875	15,706.572	0.975	15,851.649
0.076	14,547.404	0.176	14,692.481	0.276	14,837.559	0.376	14,982.636	0.476	15,127.713	0.576	15,272.791	0.676	15,417.868	0.776	15,562.945	0.876	15,708.023	0.976	15,853.100
0.077	14,548.855	0.177	14,693.932	0.277	14,839.009	0.377	14,984.087	0.477	15,129.164	0.577	15,274.241	0.677	15,419.319	0.777	15,564.396	0.877	15,709.474	0.977	15,854.551
0.078	14,550.305	0.178	14,695.383	0.278	14,840.460	0.378	14,985.537	0.478	15,130.615	0.578	15,275.692	0.678	15,420.770	0.778	15,565.847	0.878	15,710.924	0.978	15,856.002
0.079	14,551.756	0.179	14,696.834	0.279	14,841.911	0.379	14,986.988	0.479	15,132.066	0.579	15,277.143	0.679	15,422.220	0.779	15,567.298	0.879	15,712.375	0.979	15,857.453
0.080	14,553.207	0.180	14,698.284	0.280	14,843.362	0.380	14,988.439	0.480	15,133.516	0.580	15,278.594	0.680	15,423.671	0.780	15,568.749	0.880	15,713.826	0.980	15,858.903
0.081	14,554.658	0.181	14,699.735	0.281	14,844.812	0.381	14,989.890	0.481	15,134.967	0.581	15,280.045	0.681	15,425.122	0.781	15,570.199	0.881	15,715.277	0.981	15,860.354
0.082	14,556.108	0.182	14,701.186	0.282	14,846.263	0.382	14,991.341	0.482	15,136.418	0.582	15,281.495	0.682	15,426.573	0.782	15,571.650	0.882	15,716.727	0.982	15,861.805
0.083	14,557.559	0.183	14,702.637	0.283	14,847.714	0.383	14,992.791	0.483	15,137.869	0.583	15,282.946	0.683	15,428.023	0.783	15,573.101	0.883	15,718.178	0.983	15,863.256
0.084	14,559.010	0.184	14,704.087	0.284	14,849.165	0.384	14,994.242	0.484	15,139.319	0.584	15,284.397	0.684	15,429.474	0.784	15,574.552	0.884	15,719.629	0.984	15,864.706
0.085	14,560.461	0.185	14,705.538	0.285	14,850.616	0.385	14,995.693	0.485	15,140.770	0.585	15,285.848	0.685	15,430.925	0.785	15,576.002	0.885	15,721.080	0.985	15,866.157
0.086	14,561.912	0.186	14,706.989	0.286	14,852.066	0.386	14,997.144	0.486	15,142.221	0.586	15,287.298	0.686	15,432.376	0.786	15,577.453	0.886	15,722.531	0.986	15,867.608
0.087	14,563.362	0.187	14,708.440	0.287	14,853.517	0.387	14,998.594	0.487	15,143.672	0.587	15,288.749	0.687	15,433.827	0.787	15,578.904	0.887	15,723.981	0.987	15,869.059
0.088	14,564.813	0.188	14,709.890	0.288	14,854.968	0.388	15,000.045	0.488	15,145.123	0.588	15,290.200	0.688	15,435.277	0.788	15,580.355	0.888	15,725.432	0.988	15,870.509
0.089	14,566.264	0.189	14,711.341	0.289	14,856.419	0.389	15,001.496	0.489	15,146.573	0.589	15,291.651	0.689	15,436.728	0.789	15,581.805	0.889	15,726.883	0.989	15,871.960
0.090	14,567.715	0.190	14,712.792	0.290	14,857.869	0.390	15,002.947	0.490	15,148.024	0.590	15,293.102	0.690	15,438.179	0.790	15,583.256	0.890	15,728.334	0.990	15,873.411
0.091	14,569.165	0.191	14,714.243	0.291	14,859.320	0.391	15,004.398	0.491	15,149.475	0.591	15,294.552	0.691	15,439.630	0.791	15,584.707	0.891	15,729.784	0.991	15,874.862
0.092	14,570.616	0.192	14,715.694	0.292	14,860.771	0.392	15,005.848	0.492	15,150.926	0.592	15,296.003	0.692	15,441.080	0.792	15,586.158	0.892	15,731.235	0.992	15,876.313
0.093	14,572.067	0.193	14,717.144	0.293	14,862.222	0.393	15,007.299	0.493	15,152.376	0.593	15,297.454	0.693	15,442.531	0.793	15,587.609	0.893	15,732.686	0.993	15,877.763
0.094	14,573.518	0.194	14,718.595	0.294	14,863.672	0.394	15,008.750	0.494	15,153.827	0.594	15,298.905	0.694	15,443.982	0.794	15,589.059	0.894	15,734.137	0.994	15,879.214
0.095	14,574.969	0.195	14,720.046	0.295	14,865.123	0.395	15,010.201	0.495	15,155.278	0.595	15,300.355	0.695	15,445.433	0.795	15,590.510	0.895	15,735.588	0.995	15,880.665
0.096	14,576.419	0.196	14,721.497	0.296	14,866.574	0.396	15,011.651	0.496	15,156.729	0.596	15,301.806	0.696	15,446.884	0.796	15,591.961	0.896	15,737.038	0.996	15,882.116
0.097	14,577.870	0.197	14,722.947	0.297	14,868.025	0.397	15,013.102	0.497	15,158.180	0.597	15,303.257	0.697	15,448.334	0.797	15,593.412	0.897	15,738.489	0.997	15,883.566
0.098	14,579.321	0.198	14,724.398	0.298	14,869.476	0.398	15,014.553	0.498	15,159.630	0.598	15,304.708	0.698	15,449.785	0.798	15,594.862	0.898	15,739.940	0.998	15,885.017
0.099	14,580.772	0.199	14,725.849	0.299	14,870.926	0.399	15,016.004	0.499	15,161.081	0.599	15,306.158	0.699	15,451.236	0.799	15,596.313	0.899	15,741.391	0.999	15,886.468

DATE STRAPPED: 06/26/18 BY: RJ
DATE COMPUTED: 07/03/18 BY: WLH
DATE ISSUED: 07/03/18

AMSPEC

Meliadine
Rankin Inlet

Tank No. 1
INNAGE TABLE

Calibration@AmSpecGroup.com

CAPACITIES GIVEN IN CUBIC METERS

GAUGE HEIGHT: 14.275 M

mm	11 M	mm	11 M	mm	11 M	mm	11 M	mm	11 M	mm	11 M	mm	11 M	mm	11 M	mm	11 M	mm	11 M
0.000	15,887.919	0.100	16,033.032	0.200	16,178.175	0.300	16,323.318	0.400	16,468.461	0.500	16,613.604	0.600	16,758.747	0.700	16,903.890	0.800	17,049.033	0.900	17,194.176
0.001	15,889.370	0.101	16,034.484	0.201	16,179.627	0.301	16,324.770	0.401	16,469.913	0.501	16,615.056	0.601	16,760.199	0.701	16,905.341	0.801	17,050.484	0.901	17,195.627
0.002	15,890.820	0.102	16,035.935	0.202	16,181.078	0.302	16,326.221	0.402	16,471.364	0.502	16,616.507	0.602	16,761.650	0.702	16,906.793	0.802	17,051.936	0.902	17,197.079
0.003	15,892.271	0.103	16,037.387	0.203	16,182.529	0.303	16,327.672	0.403	16,472.815	0.503	16,617.958	0.603	16,763.101	0.703	16,908.244	0.803	17,053.387	0.903	17,198.530
0.004	15,893.722	0.104	16,038.838	0.204	16,183.981	0.304	16,329.124	0.404	16,474.267	0.504	16,619.410	0.604	16,764.553	0.704	16,909.696	0.804	17,054.839	0.904	17,199.982
0.005	15,895.173	0.105	16,040.289	0.205	16,185.432	0.305	16,330.575	0.405	16,475.718	0.505	16,620.861	0.605	16,766.004	0.705	16,911.147	0.805	17,056.290	0.905	17,201.433
0.006	15,896.623	0.106	16,041.741	0.206	16,186.884	0.306	16,332.027	0.406	16,477.170	0.506	16,622.313	0.606	16,767.456	0.706	16,912.599	0.806	17,057.742	0.906	17,202.885
0.007	15,898.074	0.107	16,043.192	0.207	16,188.335	0.307	16,333.478	0.407	16,478.621	0.507	16,623.764	0.607	16,768.907	0.707	16,914.050	0.807	17,059.193	0.907	17,204.336
0.008	15,899.525	0.108	16,044.644	0.208	16,189.787	0.308	16,334.930	0.408	16,480.073	0.508	16,625.216	0.608	16,770.359	0.708	16,915.501	0.808	17,060.644	0.908	17,205.787
0.009	15,900.976	0.109	16,046.095	0.209	16,191.238	0.309	16,336.381	0.409	16,481.524	0.509	16,626.667	0.609	16,771.810	0.709	16,916.953	0.809	17,062.096	0.909	17,207.239
0.010	15,902.426	0.110	16,047.547	0.210	16,192.689	0.310	16,337.832	0.410	16,482.975	0.510	16,628.118	0.610	16,773.261	0.710	16,918.404	0.810	17,063.547	0.910	17,208.690
0.011	15,903.877	0.111	16,048.998	0.211	16,194.141	0.311	16,339.284	0.411	16,484.427	0.511	16,629.570	0.611	16,774.713	0.711	16,919.856	0.811	17,064.999	0.911	17,210.142
0.012	15,905.328	0.112	16,050.449	0.212	16,195.592	0.312	16,340.735	0.412	16,485.878	0.512	16,631.021	0.612	16,776.164	0.712	16,921.307	0.812	17,066.450	0.912	17,211.593
0.013	15,906.779	0.113	16,051.901	0.213	16,197.044	0.313	16,342.187	0.413	16,487.330	0.513	16,632.473	0.613	16,777.616	0.713	16,922.759	0.813	17,067.902	0.913	17,213.045
0.014	15,908.230	0.114	16,053.352	0.214	16,198.495	0.314	16,343.638	0.414	16,488.781	0.514	16,633.924	0.614	16,779.067	0.714	16,924.210	0.814	17,069.353	0.914	17,214.496
0.015	15,909.680	0.115	16,054.804	0.215	16,199.947	0.315	16,345.090	0.415	16,490.233	0.515	16,635.376	0.615	16,780.519	0.715	16,925.662	0.815	17,070.804	0.915	17,215.947
0.016	15,911.131	0.116	16,056.255	0.216	16,201.398	0.316	16,346.541	0.416	16,491.684	0.516	16,636.827	0.616	16,781.970	0.716	16,927.113	0.816	17,072.256	0.916	17,217.399
0.017	15,912.582	0.117	16,057.707	0.217	16,202.849	0.317	16,347.992	0.417	16,493.135	0.517	16,638.278	0.617	16,783.421	0.717	16,928.564	0.817	17,073.707	0.917	17,218.850
0.018	15,914.033	0.118	16,059.158	0.218	16,204.301	0.318	16,349.444	0.418	16,494.587	0.518	16,639.730	0.618	16,784.873	0.718	16,930.016	0.818	17,075.159	0.918	17,220.302
0.019	15,915.483	0.119	16,060.609	0.219	16,205.752	0.319	16,350.895	0.419	16,496.038	0.519	16,641.181	0.619	16,786.324	0.719	16,931.467	0.819	17,076.610	0.919	17,221.753
0.020	15,916.934	0.120	16,062.061	0.220	16,207.204	0.320	16,352.347	0.420	16,497.490	0.520	16,642.633	0.620	16,787.776	0.720	16,932.919	0.820	17,078.062	0.920	17,223.205
0.021	15,918.385	0.121	16,063.512	0.221	16,208.655	0.321	16,353.798	0.421	16,498.941	0.521	16,644.084	0.621	16,789.227	0.721	16,934.370	0.821	17,079.513	0.921	17,224.656
0.022	15,919.836	0.122	16,064.964	0.222	16,210.107	0.322	16,355.250	0.422	16,500.393	0.522	16,645.536	0.622	16,790.679	0.722	16,935.822	0.822	17,080.964	0.922	17,226.107
0.023	15,921.287	0.123	16,066.415	0.223	16,211.558	0.323	16,356.701	0.423	16,501.844	0.523	16,646.987	0.623	16,792.130	0.723	16,937.273	0.823	17,082.416	0.923	17,227.559
0.024	15,922.737	0.124	16,067.867	0.224	16,213.010	0.324	16,358.152	0.424	16,503.295	0.524	16,648.438	0.624	16,793.581	0.724	16,938.724	0.824	17,083.867	0.924	17,229.010
0.025	15,924.188	0.125	16,069.318	0.225	16,214.461	0.325	16,359.604	0.425	16,504.747	0.525	16,649.890	0.625	16,795.033	0.725	16,940.176	0.825	17,085.319	0.925	17,230.462
0.026	15,925.639	0.126	16,070.769	0.226	16,215.912	0.326	16,361.055	0.426	16,506.198	0.526	16,651.341	0.626	16,796.484	0.726	16,941.627	0.826	17,086.770	0.926	17,231.913
0.027	15,927.090	0.127	16,072.221	0.227	16,217.364	0.327	16,362.507	0.427	16,507.650	0.527	16,652.793	0.627	16,797.936	0.727	16,943.079	0.827	17,088.222	0.927	17,233.365
0.028	15,928.540	0.128	16,073.672	0.228	16,218.815	0.328	16,363.958	0.428	16,509.101	0.528	16,654.244	0.628	16,799.387	0.728	16,944.530	0.828	17,089.673	0.928	17,234.816
0.029	15,929.991	0.129	16,075.124	0.229	16,220.267	0.329	16,365.410	0.429	16,510.553	0.529	16,655.696	0.629	16,800.839	0.729	16,945.982	0.829	17,091.124	0.929	17,236.267
0.030	15,931.442	0.130	16,076.575	0.230	16,221.718	0.330	16,366.861	0.430	16,512.004	0.530	16,657.147	0.630	16,802.290	0.730	16,947.433	0.830	17,092.576	0.930	17,237.719
0.031	15,932.893	0.131	16,078.027	0.231	16,223.170	0.331	16,368.312	0.431	16,513.455	0.531	16,658.598	0.631	16,803.741	0.731	16,948.884	0.831	17,094.027	0.931	17,239.170
0.032	15,934.344	0.132	16,079.478	0.232	16,224.621	0.332	16,369.764	0.432	16,514.907	0.532	16,660.050	0.632	16,805.193	0.732	16,950.336	0.832	17,095.479	0.932	17,240.622
0.033	15,935.794	0.133	16,080.929	0.233	16,226.072	0.333	16,371.215	0.433	16,516.358	0.533	16,661.501	0.633	16,806.644	0.733	16,951.787	0.833	17,096.930	0.933	17,242.073
0.034	15,937.245	0.134	16,082.381	0.234	16,227.524	0.334	16,372.667	0.434	16,517.810	0.534	16,662.953	0.634	16,808.096	0.734	16,953.239	0.834	17,098.382	0.934	17,243.525
0.035	15,938.696	0.135	16,083.832	0.235	16,228.975	0.335	16,374.118	0.435	16,519.261	0.535	16,664.404	0.635	16,809.547	0.735	16,954.690	0.835	17,099.833	0.935	17,244.976
0.036	15,940.147	0.136	16,085.284	0.236	16,230.427	0.336	16,375.570	0.436	16,520.713	0.536	16,665.856	0.636	16,810.999	0.736	16,956.142	0.836	17,101.285	0.936	17,246.427
0.037	15,941.597	0.137	16,086.735	0.237	16,231.878	0.337	16,377.021	0.437	16,522.164	0.537	16,667.307	0.637	16,812.450	0.737	16,957.593	0.837	17,102.736	0.937	17,247.879
0.038	15,943.048	0.1380	16,088.187	0.238	16,233.330	0.338	16,378.472	0.438	16,523.615	0.538	16,668.758	0.638	16,813.901	0.738	16,959.044	0.838	17,104.187	0.938	17,249.330
0.039	15,944.499	0.139	16,089.638	0.239	16,234.781	0.339	16,379.924	0.439	16,525.067	0.539	16,670.210	0.639	16,815.353	0.739	16,960.496	0.839	17,105.639	0.939	17,250.782
0.040	15,945.950	0.140	16,091.089	0.240	16,236.232	0.340	16,381.375	0.440	16,526.518	0.540	16,671.661	0.640	16,816.804	0.740	16,961.947	0.840	17,107.090	0.940	17,252.233
0.041	15,947.400	0.141	16,092.541	0.241	16,237.684	0.341	16,382.827	0.441	16,527.970	0.541	16,673.113	0.641	16,818.256	0.741	16,963.399	0.841	17,108.542	0.941	17,253.685
0.042	15,948.851	0.142	16,093.992	0.242	16,239.135	0.342	16,384.278	0.442	16,529.421	0.542	16,674.564	0.642	16,819.707	0.742	16,964.850	0.842	17,109.993	0.942	17,255.136
0.043	15,950.302	0.143	16,095.444	0.243	16,240.587	0.343	16,385.730	0.443	16,530.873	0.543	16,676.016	0.643	16,821.159	0.743	16,966.302	0.843	17,111.445	0.943	17,256.587
0.044	15,951.753	0.144	16,096.895	0.244	16,242.038	0.344	16,387.181	0.444	16,532.324	0.544	16,677.467	0.644	16,822.610	0.744	16,967.753	0.844	17,112.896	0.944	17,258.039
0.045	15,953.204	0.145	16,098.347	0.245	16,243.490	0.345	16,388.633	0.445	16,533.775	0.545	16,678.918	0.645	16,824.061	0.745	16,969.204	0.845	17,114.347	0.945	17,259.490
0.046	15,954.655	0.146	16,099.798	0.246	16,244.941	0.346	16,390.084	0.446	16,535.227	0.546	16,680.370	0.646	16,825.513	0.746	16,970.656	0.846	17,115.799	0.946	17,260.942
0.047	15,956.106	0.147	16,101.249	0.247	16,246.392	0.347	16,391.535	0.447	16,536.678	0.547	16,681.821	0.647	16,826.964	0.747	16,972.107	0.847	17,117.250	0.947	17,262.393
0.048	15,957.558	0.148	16,102.701	0.248	16,247.844	0.348	16,392.987	0.448	16,538.130	0.548	16,683.273	0.648	16,828.416	0.748	16,973.559	0.848	17,118.702	0.948	17,263.845
0.049	15,959.009	0.149	16,104.152	0.249	16,249.295	0.349	16,394.438	0.449	16,539.581	0.549	16,684.724	0.649	16,829.867	0.749	16,975.010	0.849	17,120.153	0.949	17,265.296
0.050	15,960.461	0.150	16,105.604	0.250	16,250.747	0.350	16,395.890	0.450	16,541.033	0.550	16,686.176	0.650	16,831.319	0.750	16,976.462	0.850	17,121.605	0.950	17,266.747
0.051	15,961.912	0.151	16,107.055	0.251	16,252.198	0.351	16,397.341	0.451	16,542.484	0.551	16,687.627	0.651	16,832.770	0.751	16,977.913	0.851	17,123.056	0.951	17,268.199
0.052	15,963.364	0.152	16,108.507	0.252	16,253.650	0.352	16,398.793	0.452	16,543.935	0.552	16,689.078	0.652	16,834.221	0.752	16,979.364	0.852	17,124.507	0.952	17,269.650
0.053	15,964.815	0.153	16,109.958	0.253	16,255.101	0.353	16,400.244	0.453	16,545.387	0.553	16,690.530	0.653	16,835.673	0.753	16,980.816	0.853	17,125.959	0.953	17,271.102
0.054	15,966.266	0.154	16,111.409	0.254	16,256.552	0.354	16,401.695	0.454	16,546.838	0.554	16,691.981	0.654	16,837.124	0.754	16,982.267	0.854	17,127.410	0.954	17,272.553
0.055	15,967.718	0.155	16,112.861	0.255	16,258.004	0.355	16,403.147	0.455	16,548.290	0.555	16,693.433	0.655	16,838.576	0.755	16,983.719	0.855	17,128.862	0.955	17,274.005
0.056	15,969.169	0.156	16,114.312	0.256	16,259.455	0.356	16,404.598	0.456	16,549.741	0.556	16,694.884	0.656	16,840.027	0.756	16,985.170	0.856	17,130.313	0.956	17,275.456
0.057	15,970.621	0.157	16,115.764	0.257	16,260.907	0.357	16,406.050	0.457	16,551.193	0.557	16,696.336	0.657	16,841.479	0.757	16,986.622	0.857	17,131.765	0.957	17,276.908
0.058	15,972.072	0.158	16,117.215	0.258	16,262.358	0.358	16,407.501	0.458	16,552.644	0.558	16,697.787	0.658	16,842.930	0.758	16,988.073	0.858	17,133.216	0.958	17,278.359
0.059	15,973.524	0.159	16,118.667	0.259	16,263.810	0.359	16,408.953	0.459	16,554.095	0.559	16,699.238	0.659	16,844.381	0.759	16,989.524	0.859	17,134.667	0.959	17,279.810
0.060	15,974.975	0.160	16,120.118	0.260	16,265.261	0.360	16,410.404	0.460	16,555.547	0.560	16,700.690	0.660	16,845.833	0.760	16,990.976	0.860	17,136.119	0.960	17,281.262
0.061	15,976.426	0.161	16,121.569	0.261	16,266.712	0.361	16,411.855	0.461	16,556.998	0.561	16,702.141	0.661	16,847.284	0.761	16,992.427	0.861	17,137.570	0.961	17,282.713
0.062	15,977.878	0.162	16,123.021	0.262	16,268.164	0.362	16,413.307	0.462	16,558.450	0.562	16,703.593	0.662	16,848.736	0.762	16,993.879	0.862	17,139.022	0.962	17,284.165
0.063	15,979.329	0.163	16,124.472	0.263	16,269.615	0.363	16,414.758	0.463	16,559.901	0.563	16,705.044	0.663	16,850.187	0.763	16,995.330	0.863	17,140.473	0.963	17,285.616
0.064	15,980.781	0.164	16,125.924	0.264	16,271.067	0.364	16,416.210	0.464	16,561.353	0.564	16,706.496	0.664	16,851.639	0.764	16,996.782	0.864	17,141.925	0.964	17,287.068
0.065	15,982.232	0.165	16,127.375	0.265	16,272.518	0.365	16,417.661	0.465	16,562.804	0.565	16,707.947	0.665	16,853.090	0.765	16,998.233	0.865	17,143.376	0.965	17,288.519
0.066	15,983.684	0.166	16,128.827	0.266	16,273.970	0.366	16,419.113	0.466	16,564.256	0.566	16,709.398	0.666	16,854.541	0.766	16,999.684	0.866	17,144.827	0.966	17,289.970
0.067	15,985.135	0.167	16,130.278	0.267	16,275.421	0.367	16,420.564	0.467	16,565.707	0.567	16,710.850	0.667	16,855.993	0.767	17,001.136	0.867	17,146.279	0.967	17,291.422
0.068	15,986.586	0.168	16,131.729	0.268	16,276.872	0.368	16,422.015	0.468	16,567.158	0.568	16,712.301	0.668	16,857.444	0.768	17,002.587	0.868	17,147.730	0.968	17,292.873
0.069	15,988.038	0.169	16,133.181	0.269	16,278.324	0.369	16,423.467	0.469	16,568.610	0.569	16,713.753	0.669	16,858.896	0.769	17,004.039	0.869	17,149.182	0.969	17,294.325
0.070	15,989.489	0.170	16,134.632	0.270	16,279.775	0.370	16,424.918	0.470	16,570.061	0.570	16,715.204	0.670	16,860.347	0.770	17,005.490	0.870	17,150.633	0.970	17,295.776
0.071	15,990.941	0.171	16,136.084	0.271	16,281.227	0.371	16,426.370	0.471	16,571.513	0.571	16,716.656	0.671	16,861.799	0.771	17,006.942	0.871	17,152.085	0.971	17,297.228
0.072	15,992.392	0.172	16,137.535	0.272	16,282.678	0.372	16,427.821	0.472	16,572.964	0.572	16,718.107	0.672	16,863.250	0.772	17,008.393	0.872	17,153.536	0.972	17,298.679
0.073	15,993.844	0.173	16,138.987	0.273	16,284.130	0.373	16,429.273	0.473	16,574.416	0.573	16,719.558	0.673	16,864.701	0.773	17,009.844	0.873	17,154.987	0.973	17,300.130
0.074	15,995.295	0.174	16,140.438	0.274	16,285.581	0.374	16,430.724	0.474	16,575.867	0.574	16,721.010	0.674	16,866.153	0.774	17,011.296	0.874	17,156.439	0.974	17,301.582
0.075	15,996.746	0.175	16,141.889	0.275	16,287.032	0.375	16,432.175	0.475	16,577.318	0.575	16,722.461	0.675	16,867.604	0.775	17,012.747	0.875	17,157.890	0.975	17,303.033
0.076	15,998.198	0.176	16,143.341	0.276	16,288.484	0.376	16,433.627	0.476	16,578.770	0.576	16,723.913	0.676	16,869.056	0.776	17,014.199	0.876	17,159.342	0.976	17,304.485
0.077	15,999.649	0.177	16,144.792	0.277	16,289.935	0.377	16,435.078	0.477	16,580.221	0.577	16,725.364	0.677	16,870.507	0.777	17,015.650	0.877	17,160.793	0.977	17,305.936
0.078	16,001.101	0.178	16,146.244	0.278	16,291.387	0.378	16,436.530	0.478	16,581.673	0.578	16,726.816	0.678	16,871.959	0.778	17,017.102	0.878	17,162.245	0.978	17,307.388
0.079	16,002.552	0.179	16,147.695	0.279	16,292.838	0.379	16,437.981	0.479	16,583.124	0.579	16,728.267	0.679	16,873.410	0.779	17,018.553	0.879	17,163.696	0.979	17,308.839
0.080	16,004.004	0.180	16,149.147	0.280	16,294.290	0.380	16,439.433	0.480	16,584.576	0.580	16,729.718	0.680	16,874.861	0.780	17,020.004	0.880	17,165.147	0.980	17,310.290
0.081	16,005.455	0.181	16,150.598	0.281	16,295.741	0.381	16,440.884	0.481	16,586.027	0.581	16,731.170	0.681	16,876.313	0.781	17,021.456	0.881	17,166.599	0.981	17,311.742
0.082	16,006.906	0.182	16,152.049	0.282	16,297.192	0.382	16,442.335	0.482	16,587.478	0.582	16,732.621	0.682	16,877.764	0.782	17,022.907	0.882	17,168.050	0.982	17,313.193
0.083	16,008.358	0.183	16,153.501	0.283	16,298.644	0.383	16,443.787	0.483	16,588.930	0.583	16,734.073	0.683	16,879.216	0.783	17,024.359	0.883	17,169.502	0.983	17,314.645
0.084	16,009.809	0.184	16,154.952	0.284	16,300.095	0.384	16,445.238	0.484	16,590.381	0.584	16,735.524	0.684	16,880.667	0.784	17,025.810	0.884	17,170.953	0.984	17,316.096
0.085	16,011.261	0.185	16,156.404	0.285	16,301.547	0.385	16,446.690	0.485	16,591.833	0.585	16,736.976	0.685	16,882.119	0.785	17,027.262	0.885	17,172.405	0.985	17,317.548
0.086	16,012.712	0.186	16,157.855	0.286	16,302.998	0.386	16,448.141	0.486	16,593.284	0.586	16,738.427	0.686	16,883.570	0.786	17,028.713	0.886	17,173.856	0.986	17,318.999
0.087	16,014.164	0.187	16,159.307	0.287	16,304.450	0.387	16,449.593	0.487	16,594.736	0.587	16,739.878	0.687	16,885.021	0.787	17,030.164	0.887	17,175.307	0.987	17,320.450
0.088	16,015.615	0.188	16,160.758	0.288	16,305.901	0.388	16,451.044	0.488	16,596.187	0.588	16,741.330	0.688	16,886.473	0.788	17,031.616	0.888	17,176.759	0.988	17,321.902
0.089	16,017.066	0.189	16,162.209	0.289	16,307.352	0.389	16,452.495	0.489	16,597.638	0.589	16,742.781	0.689	16,887.924	0.789	17,033.067	0.889	17,178.210	0.989	17,323.353
0.090	16,018.518	0.190	16,163.661	0.290	16,308.804	0.390	16,453.947	0.490	16,599.090	0.590	16,744.233	0.690	16,889.376	0.790	17,034.519	0.890	17,179.662	0.990	17,324.805
0.091	16,019.969	0.191	16,165.112	0.291	16,310.255	0.391	16,455.398	0.491	16,600.541	0.591	16,745.684	0.691	16,890.827	0.791	17,035.970	0.891	17,181.113	0.991	17,326.256
0.092	16,021.421	0.192	16,166.564	0.292	16,311.707	0.392	16,456.850	0.492	16,601.993	0.592	16,747.136	0.692	16,892.279	0.792	17,037.422	0.892	17,182.565	0.992	17,327.708
0.093	16,022.872	0.193	16,168.015	0.293	16,313.158	0.393	16,458.301	0.493	16,603.444	0.593	16,748.587	0.693	16,893.730	0.793	17,038.873	0.893	17,184.016	0.993	17,329.159
0.094	16,024.324	0.194	16,169.467	0.294	16,314.610	0.394	16,459.753	0.494	16,604.896	0.594	16,750.039	0.694	16,895.181	0.794	17,040.324	0.894	17,185.467	0.994	17,330.610
0.095	16,025.775	0.195	16,170.918	0.295	16,316.061	0.395	16,461.204	0.495	16,606.347	0.595	16,751.490	0.695	16,896.633	0.795	17,041.776	0.895	17,186.919	0.995	17,332.062
0.096	16,027.226	0.196	16,172.369	0.296	16,317.512	0.396	16,462.655	0.496	16,607.798	0.596	16,752.941	0.696	16,898.084	0.796	17,043.227	0.896	17,188.370	0.996	17,333.513
0.097	16,028.678	0.197	16,173.821	0.297	16,318.964	0.397	16,464.107	0.497	16,609.250	0.597	16,754.393	0.697	16,899.536	0.797	17,044.679	0.897	17,189.822	0.997	17,334.965
0.098	16,030.129	0.198	16,175.272	0.298	16,320.415	0.398	16,465.558	0.498	16,610.701	0.598	16,755.844	0.698	16,900.987	0.798	17,046.130	0.898	17,191.273	0.998	17,336.416
0.099	16,031.581	0.199	16,176.724	0.299	16,321.867	0.399	16,467.010	0.499	16,612.153	0.599	16,757.296	0.699	16,902.439	0.799	17,047.582	0.899	17,192.725	0.999	17,337.868

DATE STRAPPED: 06/26/18 BY: RJ
DATE COMPUTED: 07/03/18 BY: WLH
DATE ISSUED: 07/03/18

AMSPEC

Meliadine
Rankin Inlet

Tank No. 1
INNAGE TABLE

Calibration@AmSpecGroup.com

CAPACITIES GIVEN IN CUBIC METERS

GAUGE HEIGHT: 14.275 M

mm	12 M	mm	12 M	mm	12 M	mm	12 M	mm	12 M	mm	12 M	mm	12 M	mm	12 M	mm	12 M	mm	12 M
0.000	17,339.319	0.100	17,484.462	0.200	17,629.605	0.300	17,774.748	0.400	17,919.891	0.500	18,065.034	0.600	18,210.177	0.700	18,355.320	0.800	18,500.463	0.900	18,645.606
0.001	17,340.770	0.101	17,485.913	0.201	17,631.056	0.301	17,776.199	0.401	17,921.342	0.501	18,066.485	0.601	18,211.628	0.701	18,356.771	0.801	18,501.914	0.901	18,647.057
0.002	17,342.222	0.102	17,487.365	0.202	17,632.508	0.302	17,777.651	0.402	17,922.794	0.502	18,067.937	0.602	18,213.080	0.702	18,358.223	0.802	18,503.366	0.902	18,648.509
0.003	17,343.673	0.103	17,488.816	0.203	17,633.959	0.303	17,779.102	0.403	17,924.245	0.503	18,069.388	0.603	18,214.531	0.703	18,359.674	0.803	18,504.817	0.903	18,649.960
0.004	17,345.125	0.104	17,490.268	0.204	17,635.411	0.304	17,780.554	0.404	17,925.697	0.504	18,070.840	0.604	18,215.983	0.704	18,361.126	0.804	18,506.268	0.904	18,651.411
0.005	17,346.576	0.105	17,491.719	0.205	17,636.862	0.305	17,782.005	0.405	17,927.148	0.505	18,072.291	0.605	18,217.434	0.705	18,362.577	0.805	18,507.720	0.905	18,652.863
0.006	17,348.028	0.106	17,493.171	0.206	17,638.314	0.306	17,783.456	0.406	17,928.599	0.506	18,073.742	0.606	18,218.885	0.706	18,364.028	0.806	18,509.171	0.906	18,654.314
0.007	17,349.479	0.107	17,494.622	0.207	17,639.765	0.307	17,784.908	0.407	17,930.051	0.507	18,075.194	0.607	18,220.337	0.707	18,365.480	0.807	18,510.623	0.907	18,655.766
0.008	17,350.930	0.108	17,496.073	0.208	17,641.216	0.308	17,786.359	0.408	17,931.502	0.508	18,076.645	0.608	18,221.788	0.708	18,366.931	0.808	18,512.074	0.908	18,657.217
0.009	17,352.382	0.109	17,497.525	0.209	17,642.668	0.309	17,787.811	0.409	17,932.954	0.509	18,078.097	0.609	18,223.240	0.709	18,368.383	0.809	18,513.526	0.909	18,658.669
0.010	17,353.833	0.110	17,498.976	0.210	17,644.119	0.310	17,789.262	0.410	17,934.405	0.510	18,079.548	0.610	18,224.691	0.710	18,369.834	0.810	18,514.977	0.910	18,660.120
0.011	17,355.285	0.111	17,500.428	0.211	17,645.571	0.311	17,790.714	0.411	17,935.857	0.511	18,081.000	0.611	18,226.143	0.711	18,371.286	0.811	18,516.429	0.911	18,661.571
0.012	17,356.736	0.112	17,501.879	0.212	17,647.022	0.312	17,792.165	0.412	17,937.308	0.512	18,082.451	0.612	18,227.594	0.712	18,372.737	0.812	18,517.880	0.912	18,663.023
0.013	17,358.188	0.113	17,503.331	0.213	17,648.474	0.313	17,793.616	0.413	17,938.759	0.513	18,083.902	0.613	18,229.045	0.713	18,374.188	0.813	18,519.331	0.913	18,664.474
0.014	17,359.639	0.114	17,504.782	0.214	17,649.925	0.314	17,795.068	0.414	17,940.211	0.514	18,085.354	0.614	18,230.497	0.714	18,375.640	0.814	18,520.783	0.914	18,665.926
0.015	17,361.090	0.115	17,506.233	0.215	17,651.376	0.315	17,796.519	0.415	17,941.662	0.515	18,086.805	0.615	18,231.948	0.715	18,377.091	0.815	18,522.234	0.915	18,667.377
0.016	17,362.542	0.116	17,507.685	0.216	17,652.828	0.316	17,797.971	0.416	17,943.114	0.516	18,088.257	0.616	18,233.400	0.716	18,378.543	0.816	18,523.686	0.916	18,668.829
0.017	17,363.993	0.117	17,509.136	0.217	17,654.279	0.317	17,799.422	0.417	17,944.565	0.517	18,089.708	0.617	18,234.851	0.717	18,379.994	0.817	18,525.137	0.917	18,670.280
0.018	17,365.445	0.118	17,510.588	0.218	17,655.731	0.318	17,800.874	0.418	17,946.017	0.518	18,091.160	0.618	18,236.303	0.718	18,381.446	0.818	18,526.589	0.918	18,671.731
0.019	17,366.896	0.119	17,512.039	0.219	17,657.182	0.319	17,802.325	0.419	17,947.468	0.519	18,092.611	0.619	18,237.754	0.719	18,382.897	0.819	18,528.040	0.919	18,673.183
0.020	17,368.348	0.120	17,513.491	0.220	17,658.634	0.320	17,803.776	0.420	17,948.919	0.520	18,094.062	0.620	18,239.205	0.720	18,384.348	0.820	18,529.491	0.920	18,674.634
0.021	17,369.799	0.121	17,514.942	0.221	17,660.085	0.321	17,805.228	0.421	17,950.371	0.521	18,095.514	0.621	18,240.657	0.721	18,385.800	0.821	18,530.943	0.921	18,676.086
0.022	17,371.250	0.122	17,516.393	0.222	17,661.536	0.322	17,806.679	0.422	17,951.822	0.522	18,096.965	0.622	18,242.108	0.722	18,387.251	0.822	18,532.394	0.922	18,677.537
0.023	17,372.702	0.123	17,517.845	0.223	17,662.988	0.323	17,808.131	0.423	17,953.274	0.523	18,098.417	0.623	18,243.560	0.723	18,388.703	0.823	18,533.846	0.923	18,678.989
0.024	17,374.153	0.124	17,519.296	0.224	17,664.439	0.324	17,809.582	0.424	17,954.725	0.524	18,099.868	0.624	18,245.011	0.724	18,390.154	0.824	18,535.297	0.924	18,680.440
0.025	17,375.605	0.125	17,520.748	0.225	17,665.891	0.325	17,811.034	0.425	17,956.177	0.525	18,101.320	0.625	18,246.463	0.725	18,391.606	0.825	18,536.749	0.925	18,681.891
0.026	17,377.056	0.126	17,522.199	0.226	17,667.342	0.326	17,812.485	0.426	17,957.628	0.526	18,102.771	0.626	18,247.914	0.726	18,393.057	0.826	18,538.200	0.926	18,683.343
0.027	17,378.508	0.127	17,523.651	0.227	17,668.794	0.327	17,813.937	0.427	17,959.079	0.527	18,104.222	0.627	18,249.365	0.727	18,394.508	0.827	18,539.651	0.927	18,684.794
0.028	17,379.959	0.128	17,525.102	0.228	17,670.245	0.328	17,815.388	0.428	17,960.531	0.528	18,105.674	0.628	18,250.817	0.728	18,395.960	0.828	18,541.103	0.928	18,686.246
0.029	17,381.410	0.129	17,526.553	0.229	17,671.696	0.329	17,816.839	0.429	17,961.982	0.529	18,107.125	0.629	18,252.268	0.729	18,397.411	0.829	18,542.554	0.929	18,687.697
0.030	17,382.862	0.130	17,528.005	0.230	17,673.148	0.330	17,818.291	0.430	17,963.434	0.530	18,108.577	0.630	18,253.720	0.730	18,398.863	0.830	18,544.006	0.930	18,689.149
0.031	17,384.313	0.131	17,529.456	0.231	17,674.599	0.331	17,819.742	0.431	17,964.885	0.531	18,110.028	0.631	18,255.171	0.731	18,400.314	0.831	18,545.457	0.931	18,690.600
0.032	17,385.765	0.132	17,530.908	0.232	17,676.051	0.332	17,821.194	0.432	17,966.337	0.532	18,111.480	0.632	18,256.623	0.732	18,401.766	0.832	18,546.909	0.932	18,692.052
0.033	17,387.216	0.133	17,532.359	0.233	17,677.502	0.333	17,822.645	0.433	17,967.788	0.533	18,112.931	0.633	18,258.074	0.733	18,403.217	0.833	18,548.360	0.933	18,693.503
0.034	17,388.668	0.134	17,533.811	0.234	17,678.954	0.334	17,824.097	0.434	17,969.239	0.534	18,114.382	0.634	18,259.525	0.734	18,404.668	0.834	18,549.811	0.934	18,694.954
0.035	17,390.119	0.135	17,535.262	0.235	17,680.405	0.335	17,825.548	0.435	17,970.691	0.535	18,115.834	0.635	18,260.977	0.735	18,406.120	0.835	18,551.263	0.935	18,696.406
0.036	17,391.570	0.136	17,536.713	0.236	17,681.856	0.336	17,826.999	0.436	17,972.142	0.536	18,117.285	0.636	18,262.428	0.736	18,407.571	0.836	18,552.714	0.936	18,697.857
0.037	17,393.022	0.137	17,538.165	0.237	17,683.308	0.337	17,828.451	0.437	17,973.594	0.537	18,118.737	0.637	18,263.880	0.737	18,409.023	0.837	18,554.166	0.937	18,699.309
0.038	17,394.473	0.1380	17,539.616	0.238	17,684.759	0.338	17,829.902	0.438	17,975.045	0.538	18,120.188	0.638	18,265.331	0.738	18,410.474	0.838	18,555.617	0.938	18,700.760
0.039	17,395.925	0.139	17,541.068	0.239	17,686.211	0.339	17,831.354	0.439	17,976.497	0.539	18,121.640	0.639	18,266.783	0.739	18,411.926	0.839	18,557.069	0.939	18,702.212
0.040	17,397.376	0.140	17,542.519	0.240	17,687.662	0.340	17,832.805	0.440	17,977.948	0.540	18,123.091	0.640	18,268.234	0.740	18,413.377	0.840	18,558.520	0.940	18,703.663
0.041	17,398.828	0.141	17,543.971	0.241	17,689.114	0.341	17,834.257	0.441	17,979.399	0.541	18,124.542	0.641	18,269.685	0.741	18,414.828	0.841	18,559.971	0.941	18,705.114
0.042	17,400.279	0.142	17,545.422	0.242	17,690.565	0.342	17,835.708	0.442	17,980.851	0.542	18,125.994	0.642	18,271.137	0.742	18,416.280	0.842	18,561.423	0.942	18,706.566
0.043	17,401.730	0.143	17,546.873	0.243	17,692.016	0.343	17,837.159	0.443	17,982.302	0.543	18,127.445	0.643	18,272.588	0.743	18,417.731	0.843	18,562.874	0.943	18,708.017
0.044	17,403.182	0.144	17,548.325	0.244	17,693.468	0.344	17,838.611	0.444	17,983.754	0.544	18,128.897	0.644	18,274.040	0.744	18,419.183	0.844	18,564.326	0.944	18,709.469
0.045	17,404.633	0.145	17,549.776	0.245	17,694.919	0.345	17,840.062	0.445	17,985.205	0.545	18,130.348	0.645	18,275.491	0.745	18,420.634	0.845	18,565.777	0.945	18,710.920
0.046	17,406.085	0.146	17,551.228	0.246	17,696.371	0.346	17,841.514	0.446	17,986.657	0.546	18,131.800	0.646	18,276.943	0.746	18,422.086	0.846	18,567.229	0.946	18,712.372
0.047	17,407.536	0.147	17,552.679	0.247	17,697.822	0.347	17,842.965	0.447	17,988.108	0.547	18,133.251	0.647	18,278.394	0.747	18,423.537	0.847	18,568.680	0.947	18,713.823
0.048	17,408.988	0.148	17,554.131	0.248	17,699.274	0.348	17,844.417	0.448	17,989.560	0.548	18,134.702	0.648	18,279.845	0.748	18,424.988	0.848	18,570.131	0.948	18,715.274
0.049	17,410.439	0.149	17,555.582	0.249	17,700.725	0.349	17,845.868	0.449	17,991.011	0.549	18,136.154	0.649	18,281.297	0.749	18,426.440	0.849	18,571.583	0.949	18,716.726
0.050	17,411.890	0.150	17,557.033	0.250	17,702.176	0.350	17,847.319	0.450	17,992.462	0.550	18,137.605	0.650	18,282.748	0.750	18,427.891	0.850	18,573.034	0.950	18,718.177
0.051	17,413.342	0.151	17,558.485	0.251	17,703.628	0.351	17,848.771	0.451	17,993.914	0.551	18,139.057	0.651	18,284.200	0.751	18,429.343	0.851	18,574.486	0.951	18,719.629
0.052	17,414.793	0.152	17,559.936	0.252	17,705.079	0.352	17,850.222	0.452	17,995.365	0.552	18,140.508	0.652	18,285.651	0.752	18,430.794	0.852	18,575.937	0.952	18,721.080
0.053	17,416.245	0.153	17,561.388	0.253	17,706.531	0.353	17,851.674	0.453	17,996.817	0.553	18,141.960	0.653	18,287.103	0.753	18,432.246	0.853	18,577.389	0.953	18,722.532
0.054	17,417.696	0.154	17,562.839	0.254	17,707.982	0.354	17,853.125	0.454	17,998.268	0.554	18,143.411	0.654	18,288.554	0.754	18,433.697	0.854	18,578.840	0.954	18,723.983
0.055	17,419.148	0.155	17,564.291	0.255	17,709.434	0.355	17,854.577	0.455	17,999.720	0.555	18,144.862	0.655	18,290.005	0.755	18,435.148	0.855	18,580.291	0.955	18,725.434
0.056	17,420.599	0.156	17,565.742	0.256	17,710.885	0.356	17,856.028	0.456	18,001.171	0.556	18,146.314	0.656	18,291.457	0.756	18,436.600	0.856	18,581.743	0.956	18,726.886
0.057	17,422.050	0.157	17,567.193	0.257	17,712.336	0.357	17,857.479	0.457	18,002.622	0.557	18,147.765	0.657	18,292.908	0.757	18,438.051	0.857	18,583.194	0.957	18,728.337
0.058	17,423.502	0.158	17,568.645	0.258	17,713.788	0.358	17,858.931	0.458	18,004.074	0.558	18,149.217	0.658	18,294.360	0.758	18,439.503	0.858	18,584.646	0.958	18,729.789
0.059	17,424.953	0.159	17,570.096	0.259	17,715.239	0.359	17,860.382	0.459	18,005.525	0.559	18,150.668	0.659	18,295.811	0.759	18,440.954	0.859	18,586.097	0.959	18,731.240
0.060	17,426.405	0.160	17,571.548	0.260	17,716.691	0.360	17,861.834	0.460	18,006.977	0.560	18,152.120	0.660	18,297.263	0.760	18,442.406	0.860	18,587.549	0.960	18,732.692
0.061	17,427.856	0.161	17,572.999	0.261	17,718.142	0.361	17,863.285	0.461	18,008.428	0.561	18,153.571	0.661	18,298.714	0.761	18,443.857	0.861	18,589.000	0.961	18,734.143
0.062	17,429.308	0.162	17,574.451	0.262	17,719.594	0.362	17,864.737	0.462	18,009.880	0.562	18,155.022	0.662	18,300.165	0.762	18,445.308	0.862	18,590.451	0.962	18,735.594
0.063	17,430.759	0.163	17,575.902	0.263	17,721.045	0.363	17,866.188	0.463	18,011.331	0.563	18,156.474	0.663	18,301.617	0.763	18,446.760	0.863	18,591.903	0.963	18,737.046
0.064	17,432.210	0.164	17,577.353	0.264	17,722.496	0.364	17,867.639	0.464	18,012.782	0.564	18,157.925	0.664	18,303.068	0.764	18,448.211	0.864	18,593.354	0.964	18,738.497
0.065	17,433.662	0.165	17,578.805	0.265	17,723.948	0.365	17,869.091	0.465	18,014.234	0.565	18,159.377	0.665	18,304.520	0.765	18,449.663	0.865	18,594.806	0.965	18,739.949
0.066	17,435.113	0.166	17,580.256	0.266	17,725.399	0.366	17,870.542	0.466	18,015.685	0.566	18,160.828	0.666	18,305.971	0.766	18,451.114	0.866	18,596.257	0.966	18,741.400
0.067	17,436.565	0.167	17,581.708	0.267	17,726.851	0.367	17,871.994	0.467	18,017.137	0.567	18,162.280	0.667	18,307.423	0.767	18,452.566	0.867	18,597.709	0.967	18,742.852
0.068	17,438.016	0.168	17,583.159	0.268	17,728.302	0.368	17,873.445	0.468	18,018.588	0.568	18,163.731	0.668	18,308.874	0.768	18,454.017	0.868	18,599.160	0.968	18,744.303
0.069	17,439.468	0.169	17,584.611	0.269	17,729.754	0.369	17,874.897	0.469	18,020.040	0.569	18,165.183	0.669	18,310.325	0.769	18,455.468	0.869	18,600.611	0.969	18,745.754
0.070	17,440.919	0.170	17,586.062	0.270	17,731.205	0.370	17,876.348	0.470	18,021.491	0.570	18,166.634	0.670	18,311.777	0.770	18,456.920	0.870	18,602.063	0.970	18,747.206
0.071	17,442.370	0.171	17,587.513	0.271	17,732.656	0.371	17,877.799	0.471	18,022.942	0.571	18,168.085	0.671	18,313.228	0.771	18,458.371	0.871	18,603.514	0.971	18,748.657
0.072	17,443.822	0.172	17,588.965	0.272	17,734.108	0.372	17,879.251	0.472	18,024.394	0.572	18,169.537	0.672	18,314.680	0.772	18,459.823	0.872	18,604.966	0.972	18,750.109
0.073	17,445.273	0.173	17,590.416	0.273	17,735.559	0.373	17,880.702	0.473	18,025.845	0.573	18,170.988	0.673	18,316.131	0.773	18,461.274	0.873	18,606.417	0.973	18,751.560
0.074	17,446.725	0.174	17,591.868	0.274	17,737.011	0.374	17,882.154	0.474	18,027.297	0.574	18,172.440	0.674	18,317.583	0.774	18,462.726	0.874	18,607.869	0.974	18,753.012
0.075	17,448.176	0.175	17,593.319	0.275	17,738.462	0.375	17,883.605	0.475	18,028.748	0.575	18,173.891	0.675	18,319.034	0.775	18,464.177	0.875	18,609.320	0.975	18,754.463
0.076	17,449.628	0.176	17,594.771	0.276	17,739.914	0.376	17,885.057	0.476	18,030.200	0.576	18,175.343	0.676	18,320.485	0.776	18,465.628	0.876	18,610.771	0.976	18,755.914
0.077	17,451.079	0.177	17,596.222	0.277	17,741.365	0.377	17,886.508	0.477	18,031.651	0.577	18,176.794	0.677	18,321.937	0.777	18,467.080	0.877	18,612.223	0.977	18,757.366
0.078	17,452.531	0.178	17,597.673	0.278	17,742.816	0.378	17,887.959	0.478	18,033.102	0.578	18,178.245	0.678	18,323.388	0.778	18,468.531	0.878	18,613.674	0.978	18,758.817
0.079	17,453.982	0.179	17,599.125	0.279	17,744.268	0.379	17,889.411	0.479	18,034.554	0.579	18,179.697	0.679	18,324.840	0.779	18,469.983	0.879	18,615.126	0.979	18,760.269
0.080	17,455.433	0.180	17,600.576	0.280	17,745.719	0.380	17,890.862	0.480	18,036.005	0.580	18,181.148	0.680	18,326.291	0.780	18,471.434	0.880	18,616.577	0.980	18,761.720
0.081	17,456.885	0.181	17,602.028	0.281	17,747.171	0.381	17,892.314	0.481	18,037.457	0.581	18,182.600	0.681	18,327.743	0.781	18,472.886	0.881	18,618.029	0.981	18,763.172
0.082	17,458.336	0.182	17,603.479	0.282	17,748.622	0.382	17,893.765	0.482	18,038.908	0.582	18,184.051	0.682	18,329.194	0.782	18,474.337	0.882	18,619.480	0.982	18,764.623
0.083	17,459.788	0.183	17,604.931	0.283	17,750.074	0.383	17,895.217	0.483	18,040.360	0.583	18,185.503	0.683	18,330.645	0.783	18,475.788	0.883	18,620.931	0.983	18,766.074
0.084	17,461.239	0.184	17,606.382	0.284	17,751.525	0.384	17,896.668	0.484	18,041.811	0.584	18,186.954	0.684	18,332.097	0.784	18,477.240	0.884	18,622.383	0.984	18,767.526
0.085	17,462.691	0.185	17,607.833	0.285	17,752.976	0.385	17,898.119	0.485	18,043.262	0.585	18,188.405	0.685	18,333.548	0.785	18,478.691	0.885	18,623.834	0.985	18,768.977
0.086	17,464.142	0.186	17,609.285	0.286	17,754.428	0.386	17,899.571	0.486	18,044.714	0.586	18,189.857	0.686	18,335.000	0.786	18,480.143	0.886	18,625.286	0.986	18,770.429
0.087	17,465.593	0.187	17,610.736	0.287	17,755.879	0.387	17,901.022	0.487	18,046.165	0.587	18,191.308	0.687	18,336.451	0.787	18,481.594	0.887	18,626.737	0.987	18,771.880
0.088	17,467.045	0.188	17,612.188	0.288	17,757.331	0.388	17,902.474	0.488	18,047.617	0.588	18,192.760	0.688	18,337.903	0.788	18,483.046	0.888	18,628.189	0.988	18,773.332
0.089	17,468.496	0.189	17,613.639	0.289	17,758.782	0.389	17,903.925	0.489	18,049.068	0.589	18,194.211	0.689	18,339.354	0.789	18,484.497	0.889	18,629.640	0.989	18,774.783
0.090	17,469.948	0.190	17,615.091	0.290	17,760.234	0.390	17,905.377	0.490	18,050.520	0.590	18,195.663	0.690	18,340.806	0.790	18,485.948	0.890	18,631.091	0.990	18,776.234
0.091	17,471.399	0.191	17,616.542	0.291	17,761.685	0.391	17,906.828	0.491	18,051.971	0.591	18,197.114	0.691	18,342.257	0.791	18,487.400	0.891	18,632.543	0.991	18,777.686
0.092	17,472.851	0.192	17,617.993	0.292	17,763.136	0.392	17,908.279	0.492	18,053.422	0.592	18,198.565	0.692	18,343.708	0.792	18,488.851	0.892	18,633.994	0.992	18,779.137
0.093	17,474.302	0.193	17,619.445	0.293	17,764.588	0.393	17,909.731	0.493	18,054.874	0.593	18,200.017	0.693	18,345.160	0.793	18,490.303	0.893	18,635.446	0.993	18,780.589
0.094	17,475.753	0.194	17,620.896	0.294	17,766.039	0.394	17,911.182	0.494	18,056.325	0.594	18,201.468	0.694	18,346.611	0.794	18,491.754	0.894	18,636.897	0.994	18,782.040
0.095	17,477.205	0.195	17,622.348	0.295	17,767.491	0.395	17,912.634	0.495	18,057.777	0.595	18,202.920	0.695	18,348.063	0.795	18,493.206	0.895	18,638.349	0.995	18,783.492
0.096	17,478.656	0.196	17,623.799	0.296	17,768.942	0.396	17,914.085	0.496	18,059.228	0.596	18,204.371	0.696	18,349.514	0.796	18,494.657	0.896	18,639.800	0.996	18,784.943
0.097	17,480.108	0.197	17,625.251	0.297	17,770.394	0.397	17,915.537	0.497	18,060.680	0.597	18,205.823	0.697	18,350.966	0.797	18,496.108	0.897	18,641.251	0.997	18,786.394
0.098	17,481.559	0.198	17,626.702	0.298	17,771.845	0.398	17,916.988	0.498	18,062.131	0.598	18,207.274	0.698	18,352.417	0.798	18,497.560	0.898	18,642.703	0.998	18,787.846
0.099	17,483.011	0.199	17,628.154	0.299	17,773.296	0.399	17,918.439	0.499	18,063.582	0.599	18,208.725	0.699	18,353.868	0.799	18,499.011	0.899	18,644.154	0.999	18,789.297

DATE STRAPPED: 06/26/18 BY: RJ
DATE COMPUTED: 07/03/18 BY: WLH
DATE ISSUED: 07/03/18

AMSPEC

Meliadine
Rankin Inlet

Tank No. 1
INNAGE TABLE

Calibration@AmSpecGroup.com

CAPACITIES GIVEN IN CUBIC METERS

GAUGE HEIGHT: 14.275 M

mm	13 M	mm	13 M	mm	13 M	mm	13 M	mm	13 M	mm	13 M	mm	13 M	mm	13 M	mm	13 M	mm	13 M
0.000	18,790.749	0.100	18,935.892	0.200	19,081.035	0.300	19,226.178	0.400	19,371.321	0.500	19,516.464	0.600	19,661.607	0.700	19,806.750	0.800		0.900	
0.001	18,792.200	0.101	18,937.343	0.201	19,082.486	0.301	19,227.629	0.401	19,372.772	0.501	19,517.915	0.601	19,663.058	0.701	19,808.201	0.801		0.901	
0.002	18,793.652	0.102	18,938.795	0.202	19,083.938	0.302	19,229.081	0.402	19,374.223	0.502	19,519.366	0.602	19,664.509	0.702	19,809.652	0.802		0.902	
0.003	18,795.103	0.103	18,940.246	0.203	19,085.389	0.303	19,230.532	0.403	19,375.675	0.503	19,520.818	0.603	19,665.961	0.703	19,811.104	0.803		0.903	
0.004	18,796.554	0.104	18,941.697	0.204	19,086.840	0.304	19,231.983	0.404	19,377.126	0.504	19,522.269	0.604	19,667.412	0.704	19,812.555	0.804		0.904	
0.005	18,798.006	0.105	18,943.149	0.205	19,088.292	0.305	19,233.435	0.405	19,378.578	0.505	19,523.721	0.605	19,668.864	0.705	19,814.007	0.805		0.905	
0.006	18,799.457	0.106	18,944.600	0.206	19,089.743	0.306	19,234.886	0.406	19,380.029	0.506	19,525.172	0.606	19,670.315	0.706	19,815.458	0.806		0.906	
0.007	18,800.909	0.107	18,946.052	0.207	19,091.195	0.307	19,236.338	0.407	19,381.481	0.507	19,526.624	0.607	19,671.767	0.707	19,816.910	0.807		0.907	
0.008	18,802.360	0.108	18,947.503	0.208	19,092.646	0.308	19,237.789	0.408	19,382.932	0.508	19,528.075	0.608	19,673.218	0.708	19,818.361	0.808		0.908	
0.009	18,803.812	0.109	18,948.955	0.209	19,094.098	0.309	19,239.241	0.409	19,384.383	0.509	19,529.526	0.609	19,674.669	0.709	19,819.812	0.809		0.909	
0.010	18,805.263	0.110	18,950.406	0.210	19,095.549	0.310	19,240.692	0.410	19,385.835	0.510	19,530.978	0.610	19,676.121	0.710	19,821.264	0.810		0.910	
0.011	18,806.714	0.111	18,951.857	0.211	19,097.000	0.311	19,242.143	0.411	19,387.286	0.511	19,532.429	0.611	19,677.572	0.711	19,822.715	0.811		0.911	
0.012	18,808.166	0.112	18,953.309	0.212	19,098.452	0.312	19,243.595	0.412	19,388.738	0.512	19,533.881	0.612	19,679.024	0.712	19,824.167	0.812		0.912	
0.013	18,809.617	0.113	18,954.760	0.213	19,099.903	0.313	19,245.046	0.413	19,390.189	0.513	19,535.332	0.613	19,680.475	0.713	19,825.618	0.813		0.913	
0.014	18,811.069	0.114	18,956.212	0.214	19,101.355	0.314	19,246.498	0.414	19,391.641	0.514	19,536.784	0.614	19,681.927	0.714	19,827.070	0.814		0.914	
0.015	18,812.520	0.115	18,957.663	0.215	19,102.806	0.315	19,247.949	0.415	19,393.092	0.515	19,538.235	0.615	19,683.378	0.715	19,828.521	0.815		0.915	
0.016	18,813.972	0.116	18,959.115	0.216	19,104.258	0.316	19,249.401	0.416	19,394.543	0.516	19,539.686	0.616	19,684.829	0.716	19,829.972	0.816		0.916	
0.017	18,815.423	0.117	18,960.566	0.217	19,105.709	0.317	19,250.852	0.417	19,395.995	0.517	19,541.138	0.617	19,686.281	0.717	19,831.424	0.817		0.917	
0.018	18,816.874	0.118	18,962.017	0.218	19,107.160	0.318	19,252.303	0.418	19,397.446	0.518	19,542.589	0.618	19,687.732	0.718	19,832.875	0.818		0.918	
0.019	18,818.326	0.119	18,963.469	0.219	19,108.612	0.319	19,253.755	0.419	19,398.898	0.519	19,544.041	0.619	19,689.184	0.719	19,834.327	0.819		0.919	
0.020	18,819.777	0.120	18,964.920	0.220	19,110.063	0.320	19,255.206	0.420	19,400.349	0.520	19,545.492	0.620	19,690.635	0.720	19,835.778	0.820		0.920	
0.021	18,821.229	0.121	18,966.372	0.221	19,111.515	0.321	19,256.658	0.421	19,401.801	0.521	19,546.944	0.621	19,692.087	0.721	19,837.230	0.821		0.921	
0.022	18,822.680	0.122	18,967.823	0.222	19,112.966	0.322	19,258.109	0.422	19,403.252	0.522	19,548.395	0.622	19,693.538	0.722	19,838.681	0.822		0.922	
0.023	18,824.132	0.123	18,969.275	0.223	19,114.418	0.323	19,259.561	0.423	19,404.704	0.523	19,549.846	0.623	19,694.989	0.723	19,840.132	0.823		0.923	
0.024	18,825.583	0.124	18,970.726	0.224	19,115.869	0.324	19,261.012	0.424	19,406.155	0.524	19,551.298	0.624	19,696.441	0.724	19,841.584	0.824		0.924	
0.025	18,827.034	0.125	18,972.177	0.225	19,117.320	0.325	19,262.463	0.425	19,407.606	0.525	19,552.749	0.625	19,697.892	0.725	19,843.035	0.825		0.925	
0.026	18,828.486	0.126	18,973.629	0.226	19,118.772	0.326	19,263.915	0.426	19,409.058	0.526	19,554.201	0.626	19,699.344	0.726	19,844.487	0.826		0.926	
0.027	18,829.937	0.127	18,975.080	0.227	19,120.223	0.327	19,265.366	0.427	19,410.509	0.527	19,555.652	0.627	19,700.795	0.727	19,845.938	0.827		0.927	
0.028	18,831.389	0.128	18,976.532	0.228	19,121.675	0.328	19,266.818	0.428	19,411.961	0.528	19,557.104	0.628	19,702.247	0.728	19,847.390	0.828		0.928	
0.029	18,832.840	0.129	18,977.983	0.229	19,123.126	0.329	19,268.269	0.429	19,413.412	0.529	19,558.555	0.629	19,703.698	0.729	19,848.841	0.829		0.929	
0.030	18,834.292	0.130	18,979.435	0.230	19,124.578	0.330	19,269.721	0.430	19,414.864	0.530	19,560.006	0.630	19,705.149	0.730	19,850.292	0.830		0.930	
0.031	18,835.743	0.131	18,980.886	0.231	19,126.029	0.331	19,271.172	0.431	19,416.315	0.531	19,561.458	0.631	19,706.601	0.731	19,851.744	0.831		0.931	
0.032	18,837.194	0.132	18,982.337	0.232	19,127.480	0.332	19,272.623	0.432	19,417.766	0.532	19,562.909	0.632	19,708.052	0.732	19,853.195	0.832		0.932	
0.033	18,838.646	0.133	18,983.789	0.233	19,128.932	0.333	19,274.075	0.433	19,419.218	0.533	19,564.361	0.633	19,709.504	0.733	19,854.647	0.833		0.933	
0.034	18,840.097	0.134	18,985.240	0.234	19,130.383	0.334	19,275.526	0.434	19,420.669	0.534	19,565.812	0.634	19,710.955	0.734	19,856.098	0.834		0.934	
0.035	18,841.549	0.135	18,986.692	0.235	19,131.835	0.335	19,276.978	0.435	19,422.121	0.535	19,567.264	0.635	19,712.407	0.735	19,857.550	0.835		0.935	
0.036	18,843.000	0.136	18,988.143	0.236	19,133.286	0.336	19,278.429	0.436	19,423.572	0.536	19,568.715	0.636	19,713.858	0.736	19,859.001	0.836		0.936	
0.037	18,844.452	0.137	18,989.595	0.237	19,134.738	0.337	19,279.881	0.437	19,425.024	0.537	19,570.166	0.637	19,715.309	0.737	19,860.452	0.837		0.937	
0.038	18,845.903	0.1380	18,991.046	0.238	19,136.189	0.338	19,281.332	0.438	19,426.475	0.538	19,571.618	0.638	19,716.761	0.738	19,861.904	0.838		0.938	
0.039	18,847.354	0.139	18,992.497	0.239	19,137.640	0.339	19,282.783	0.439	19,427.926	0.539	19,573.069	0.639	19,718.212	0.739	19,863.355	0.839		0.939	
0.040	18,848.806	0.140	18,993.949	0.240	19,139.092	0.340	19,284.235	0.440	19,429.378	0.540	19,574.521	0.640	19,719.664	0.740	19,864.807	0.840		0.940	
0.041	18,850.257	0.141	18,995.400	0.241	19,140.543	0.341	19,285.686	0.441	19,430.829	0.541	19,575.972	0.641	19,721.115	0.741	19,866.258	0.841		0.941	
0.042	18,851.709	0.142	18,996.852	0.242	19,141.995	0.342	19,287.138	0.442	19,432.281	0.542	19,577.424	0.642	19,722.567	0.742	19,867.710	0.842		0.942	
0.043	18,853.160	0.143	18,998.303	0.243	19,143.446	0.343	19,288.589	0.443	19,433.732	0.543	19,578.875	0.643	19,724.018	0.743	19,869.161	0.843		0.943	
0.044	18,854.612	0.144	18,999.755	0.244	19,144.898	0.344	19,290.041	0.444	19,435.184	0.544	19,580.327	0.644	19,725.469	0.744	19,870.612	0.844		0.944	
0.045	18,856.063	0.145	19,001.206	0.245	19,146.349	0.345	19,291.492	0.445	19,436.635	0.545	19,581.778	0.645	19,726.921	0.745	19,872.064	0.845		0.945	
0.046	18,857.514	0.146	19,002.657	0.246	19,147.800	0.346	19,292.943	0.446	19,438.086	0.546	19,583.229	0.646	19,728.372	0.746	19,873.515	0.846		0.946	
0.047	18,858.966	0.147	19,004.109	0.247	19,149.252	0.347	19,294.395	0.447	19,439.538	0.547	19,584.681	0.647	19,729.824	0.747	19,874.967	0.847		0.947	
0.048	18,860.417	0.148	19,005.560	0.248	19,150.703	0.348	19,295.846	0.448	19,440.989	0.548	19,586.132	0.648	19,731.275	0.748	19,876.418	0.848		0.948	
0.049	18,861.869	0.149	19,007.012	0.249	19,152.155	0.349	19,297.298	0.449	19,442.441	0.549	19,587.584	0.649	19,732.727	0.749	19,877.870	0.849		0.949	
0.050	18,863.320	0.150	19,008.463	0.250	19,153.606	0.350	19,298.749	0.450	19,443.892	0.550	19,589.035	0.650	19,734.178	0.750	19,879.321	0.850		0.950	
0.051	18,864.772	0.151	19,009.915	0.251	19,155.058	0.351	19,300.201	0.451	19,445.344	0.551	19,590.487	0.651	19,735.629	0.751	19,880.772	0.851		0.951	
0.052	18,866.223	0.152	19,011.366	0.252	19,156.509	0.352	19,301.652	0.452	19,446.795	0.552	19,591.938	0.652	19,737.081	0.752	19,882.224	0.852		0.952	
0.053	18,867.675	0.153	19,012.817	0.253	19,157.960	0.353	19,303.103	0.453	19,448.246	0.553	19,593.389	0.653	19,738.532	0.753	19,883.675	0.853		0.953	
0.054	18,869.126	0.154	19,014.269	0.254	19,159.412	0.354	19,304.555	0.454	19,449.698	0.554	19,594.841	0.654	19,739.984	0.754	19,885.127	0.854		0.954	
0.055	18,870.577	0.155	19,015.720	0.255	19,160.863	0.355	19,306.006	0.455	19,451.149	0.555	19,596.292	0.655	19,741.435	0.755	19,886.578	0.855		0.955	
0.056	18,872.029	0.156	19,017.172	0.256	19,162.315	0.356	19,307.458	0.456	19,452.601	0.556	19,597.744	0.656	19,742.887	0.756	19,888.030	0.856		0.956	
0.057	18,873.480	0.157	19,018.623	0.257	19,163.766	0.357	19,308.909	0.457	19,454.052	0.557	19,599.195	0.657	19,744.338	0.757	19,889.481	0.857		0.957	
0.058	18,874.932	0.158	19,020.075	0.258	19,165.218	0.358	19,310.361	0.458	19,455.504	0.558	19,600.647	0.658	19,745.789	0.758	19,890.932	0.858		0.958	
0.059	18,876.383	0.159	19,021.526	0.259	19,166.669	0.359	19,311.812	0.459	19,456.955	0.559	19,602.098	0.659	19,747.241	0.759	19,892.384	0.859		0.959	
0.060	18,877.835	0.160	19,022.977	0.260	19,168.120	0.360	19,313.263	0.460	19,458.406	0.560	19,603.549	0.660	19,748.692	0.760	19,893.835	0.860		0.960	
0.061	18,879.286	0.161	19,024.429	0.261	19,169.572	0.361	19,314.715	0.461	19,459.858	0.561	19,605.001	0.661	19,750.144	0.761	19,895.287	0.861		0.961	
0.062	18,880.737	0.162	19,025.880	0.262	19,171.023	0.362	19,316.166	0.462	19,461.309	0.562	19,606.452	0.662	19,751.595	0.762	19,896.738	0.862		0.962	
0.063	18,882.189	0.163	19,027.332	0.263	19,172.475	0.363	19,317.618	0.463	19,462.761	0.563	19,607.904	0.663	19,753.047	0.763	19,898.190	0.863		0.963	
0.064	18,883.640	0.164	19,028.783	0.264	19,173.926	0.364	19,319.069	0.464	19,464.212	0.564	19,609.355	0.664	19,754.498	0.764	19,899.641	0.864		0.964	
0.065	18,885.092	0.165	19,030.235	0.265	19,175.378	0.365	19,320.521	0.465	19,465.664	0.565	19,610.807	0.665	19,755.950	0.765	19,901.093	0.865		0.965	
0.066	18,886.543	0.166	19,031.686	0.266	19,176.829	0.366	19,321.972	0.466	19,467.115	0.566	19,612.258	0.666	19,757.401	0.766	19,902.544	0.866		0.966	
0.067	18,887.995	0.167	19,033.137	0.267	19,178.280	0.367	19,323.423	0.467	19,468.566	0.567	19,613.709	0.667	19,758.852	0.767	19,903.996	0.867		0.967	
0.068	18,889.446	0.168	19,034.589	0.268	19,179.732	0.368	19,324.875	0.468	19,470.018	0.568	19,615.161	0.668	19,760.304	0.768	19,905.447	0.868		0.968	
0.069	18,890.897	0.169	19,036.040	0.269	19,181.183	0.369	19,326.326	0.469	19,471.469	0.569	19,616.612	0.669	19,761.755	0.769	19,906.899	0.869		0.969	
0.070	18,892.349	0.170	19,037.492	0.270	19,182.635	0.370	19,327.778	0.470	19,472.921	0.570	19,618.064	0.670	19,763.207	0.770	19,908.350	0.870		0.970	
0.071	18,893.800	0.171	19,038.943	0.271	19,184.086	0.371	19,329.229	0.471	19,474.372	0.571	19,619.515	0.671	19,764.658	0.771	19,909.802	0.871		0.971	
0.072	18,895.252	0.172	19,040.395	0.272	19,185.538	0.372	19,330.681	0.472	19,475.824	0.572	19,620.967	0.672	19,766.110	0.772	19,911.253	0.872		0.972	
0.073	18,896.703	0.173	19,041.846	0.273	19,186.989	0.373	19,332.132	0.473	19,477.275	0.573	19,622.418	0.673	19,767.561	0.773	19,912.705	0.873		0.973	
0.074	18,898.155	0.174	19,043.297	0.274	19,188.440	0.374	19,333.583	0.474	19,478.726	0.574	19,623.869	0.674	19,769.012	0.774	19,914.156	0.874		0.974	
0.075	18,899.606	0.175	19,044.749	0.275	19,189.892	0.375	19,335.035	0.475	19,480.178	0.575	19,625.321	0.675	19,770.464	0.775	19,915.608	0.875		0.975	
0.076	18,901.057	0.176	19,046.200	0.276	19,191.343	0.376	19,336.486	0.476	19,481.629	0.576	19,626.772	0.676	19,771.915	0.776	19,917.059	0.876		0.976	
0.077	18,902.509	0.177	19,047.652	0.277	19,192.795	0.377	19,337.938	0.477	19,483.081	0.577	19,628.224	0.677	19,773.367	0.777	19,918.511	0.877		0.977	
0.078	18,903.960	0.178	19,049.103	0.278	19,194.246	0.378	19,339.389	0.478	19,484.532	0.578	19,629.675	0.678	19,774.818	0.778	19,919.962	0.878		0.978	
0.079	18,905.412	0.179	19,050.555	0.279	19,195.698	0.379	19,340.841	0.479	19,485.984	0.579	19,631.127	0.679	19,776.270	0.779	19,921.414	0.879		0.979	
0.080	18,906.863	0.180	19,052.006	0.280	19,197.149	0.380	19,342.292	0.480	19,487.435	0.580	19,632.578	0.680	19,777.721	0.780	19,922.865	0.880		0.980	
0.081	18,908.315	0.181	19,053.458	0.281	19,198.600	0.381	19,343.743	0.481	19,488.886	0.581	19,634.029	0.681	19,779.172	0.781	19,924.317	0.881		0.981	
0.082	18,909.766	0.182	19,054.909	0.282	19,200.052	0.382	19,345.195	0.482	19,490.338	0.582	19,635.481	0.682	19,780.624	0.782	19,925.768	0.882		0.982	
0.083	18,911.217	0.183	19,056.360	0.283	19,201.503	0.383	19,346.646	0.483	19,491.789	0.583	19,636.932	0.683	19,782.075	0.783	19,927.220	0.883		0.983	
0.084	18,912.669	0.184	19,057.812	0.284	19,202.955	0.384	19,348.098	0.484	19,493.241	0.584	19,638.384	0.684	19,783.527	0.784	19,928.671	0.884		0.984	
0.085	18,914.120	0.185	19,059.263	0.285	19,204.406	0.385	19,349.549	0.485	19,494.692	0.585	19,639.835	0.685	19,784.978	0.785	19,930.123	0.885		0.985	
0.086	18,915.572	0.186	19,060.715	0.286	19,205.858	0.386	19,351.001	0.486	19,496.144	0.586	19,641.287	0.686	19,786.430	0.786	19,931.574	0.886		0.986	
0.087	18,917.023	0.187	19,062.166	0.287	19,207.309	0.387	19,352.452	0.487	19,497.595	0.587	19,642.738	0.687	19,787.881	0.787	19,933.026	0.887		0.987	
0.088	18,918.475	0.188	19,063.618	0.288	19,208.760	0.388	19,353.903	0.488	19,499.046	0.588	19,644.189	0.688	19,789.332	0.788	19,934.477	0.888		0.988	
0.089	18,919.926	0.189	19,065.069	0.289	19,210.212	0.389	19,355.355	0.489	19,500.498	0.589	19,645.641	0.689	19,790.784	0.789	19,935.929	0.889		0.989	
0.090	18,921.377	0.190	19,066.520	0.290	19,211.663	0.390	19,356.806	0.490	19,501.949	0.590	19,647.092	0.690	19,792.235	0.790	19,937.380	0.890		0.990	
0.091	18,922.829	0.191	19,067.972	0.291	19,213.115	0.391	19,358.258	0.491	19,503.401	0.591	19,648.544	0.691	19,793.687	0.791	19,938.832	0.891		0.991	
0.092	18,924.280	0.192	19,069.423	0.292	19,214.566	0.392	19,359.709	0.492	19,504.852	0.592	19,649.995	0.692	19,795.138	0.792	19,939.512	0.892		0.992	
0.093	18,925.732	0.193	19,070.875	0.293	19,216.018	0.393	19,361.161	0.493	19,506.304	0.593	19,651.447	0.693	19,796.590	0.793		0.893		0.993	
0.094	18,927.183	0.194	19,072.326	0.294	19,217.469	0.394	19,362.612	0.494	19,507.755	0.594	19,652.898	0.694	19,798.041	0.794		0.894		0.994	
0.095	18,928.635	0.195	19,073.778	0.295	19,218.920	0.395	19,364.063	0.495	19,509.206	0.595	19,654.349	0.695	19,799.492	0.795		0.895		0.995	
0.096	18,930.086	0.196	19,075.229	0.296	19,220.372	0.396	19,365.515	0.496	19,510.658	0.596	19,655.801	0.696	19,800.944	0.796		0.896		0.996	
0.097	18,931.537	0.197	19,076.680	0.297	19,221.823	0.397	19,366.966	0.497	19,512.109	0.597	19,657.252	0.697	19,802.395	0.797		0.897		0.997	
0.098	18,932.989	0.198	19,078.132	0.298	19,223.275	0.398	19,368.418	0.498	19,513.561	0.598	19,658.704	0.698	19,803.847	0.798		0.898		0.998	
0.099	18,934.440	0.199	19,079.583	0.299	19,224.726	0.399	19,369.869	0.499	19,515.012	0.599	19,660.155	0.699	19,805.298	0.799		0.899		0.999	

DATE STRAPPED: 06/26/18 BY: RJ
DATE COMPUTED: 07/03/18 BY: WLH
DATE ISSUED: 07/03/18

AMSPEC

AGNICO EAGLE

Vendor Document Status

1 ☐	Proceed to next submission and status.
2 ☐	Proceed with exceptions as noted to next submission and status.
3 ☐	Do not proceed. Revise as noted and resubmit next submission and status.
4 ☐	Complete, no further submission required.

By: **Date:**

Review and authorization to fabricate are only for general conformance with the design concept of the Project as expressed in the Contract Documents. Sole responsibility for the accuracy and completeness of this document, including but not limited to dimensions and quantities, remains with the Supplier/Contractor. Agnico Eagle does not warrant the accuracy or completeness of any of the information contained herein, nor does Agnico Eagle authorize or approve any construction means, methods, techniques, sequences or any safety precautions or procedures.

Agnico Eagle No. 6515-C-270-007-141-QCR-0007 **R:** Sub001

DOCUMENT FOR INFORMATION

AGNICO-EAGLE MINES

Contract No. 6515-C-270-007

22466T

Rankin Inlet Tank #1

Site installation

Quality Control Documents

AGNICO EAGLE

Vendor Document Status

1 ☐ Proceed to next submission and status.

2 ☐ Proceed with exceptions as noted to next submission and status.

3 ☐ Do not proceed.
Revise as noted and resubmit next submission and status.

4 ☑ Complete, no further submission required.

By: JEAN-FRANCOIS TREMBLAY Date: 2017-06-09

Review and authorization to fabricate are only for general conformance with the design concept of the Project as expressed in the Contract Documents. Sole responsibility for the accuracy and completeness of this document, including but not limited to dimensions and quantities, remains with the Supplier/Contractor. Agnico Eagle does not warrant the accuracy or completeness of any of the information contained herein, nor does Agnico Eagle authorize or approve any construction means, methods, techniques, sequences or any safety precautions or procedures.

Agnico Eagle No. 6515-C-270-007-141-TES-0031 R: Sub002

DOCUMENT FOR INFORMATION

Inspection and Testing Plan

NUQSANA PROMEC MINING

AGNICO EAGLE

Contract title:	Meliadine Fuel Tanks Piping Supply and Installation	**ITP #**	**AEM-ITP-001**
Contract number:	6515-C-270-007	**Area**	**Rankin Inlet**
Promec Ref.:	C22466T	**System**	**Pumping container**
		Discipline	**Mechanical** **Piping** **Structure**
Approved on :	_____	**Approval Signature**	
Approved by:	_____		

Updated on: 2017-06-06

Legend

H - Hold
W - Witness
I - Inspect
R - Review

Activity No. and CDRL Code	Activity Description (Per Scope of Work)	Responsibility Contractor and/or Sub	Acceptance Criteria (Specifications, Drawings, Industry Code, Regulatory Authority, Manufacturers O&M manual, Controlling Procedure, Quality/Engineering Bulletins, Other/ Site Quality Plan, Contractor Quality Manuals, etc.)	Verification Point				Verification Document(s) 1. List ONLY the Form(s) applicable to installation. 2. ▲ Commissioning Required Document
				Contractor		Client		
				H W I R	Initials & Date	H W I R	Initials & Date	
1.0	**GENERAL**							
1.1	Inspection and Test Plan	Promec / CLIENT		H/R		R		Approved ITP
1.2	Document review (Acquire and review all applicable documentation)	Promec / CLIENT	Quality Plan	H/R		R		
1.3	Procedures Submitted and Approved (Hydrostatic/Pneumatic Testing, Pre-Commissioning, etc.)	Promec / CLIENT	Quality Plan	H/R		R		All Applicable Approved Procedures
1.4	Drawing Index (IFC) to Latest Revision	Promec	Quality Plan	I/R				
2.0	**ITP SPECIFIC**							
2.1	Non-Conformance Report & Log (Both CLIENT & Contractor Issued)	Promec / CLIENT	Quality Plan	H/R		R		AEM-GE-ITR-002 (Non-Conformance Report) ▲ AEM-GE-LOG-002 (Non-Conformance Log)
2.2	Weld Procedures Submitted and Approved Specification/Procedure (WPS)	Promec / CLIENT	Quality Plan	H/R		R		Approved Procedure
2.3	Welders Qualification Approved	Promec / CLIENT	Quality Plan	H/R		R		Welders qualifications records
2.4	Inspect Material/Equipment for Damages or Deficiencies	Promec	Quality Plan	I/R		R		AEM-GE-ITR-005 (Inspection Deficiency Report) ▲ AEM-GE-LOG-004 (Inspection Deficiency Log)

Inspection and Testing Plan

NUQSANA PROMEC MINING

AGNICO EAGLE

Contract title: Meliadine Fuel Tanks Piping Supply and Installation
Contract number: 6515-C-270-007
Promec Ref.: C22466T

Approved on : _____
Approved by: _____

Approval Signature

ITP # AEM-ITP-001
Area Rankin Inlet
System Pumping container
Discipline Mechanical / Piping / Structure

Updated on: 2017-06-06

Legend
H - Hold
W - Witness
I - Inspect
R - Review

Activity No. and CDRL Code	Activity Description (Per Scope of Work)	Responsibility Contractor and/or Sub	Acceptance Criteria (Specifications, Drawings, Industry Code, Regulatory Authority, Manufacturers O&M manual, Controlling Procedure, Quality/Engineering Bulletins, Other/ Site Quality Plan, Contractor Quality Manuals, etc.)	Verification Point				Verification Document(s) 1. List ONLY the Form(s) applicable to installation. 2. ▲ Commissioning Required Document
				Contractor		Client		
				H W I R	Initials & Date	H W I R	Initials & Date	
3.0	**Preparation of the electrical and pumping station containers (Offsite)**							
3.1	Dimensions of the container verification	Promec / CLIENT / Third-Party	IFC Drawings	I/R		I		AirMP Report
3.2	Insulation and cladding verification	Promec / CLIENT / Third-Party	IFC Drawings	I/R		I		AirMP Report
3.3	Doors verification	Promec / CLIENT / Third-Party	6515-C-270-007-SPT-001_R3 (Technical Specifications)	I/R		I		AirMP Report
3.4	Exterior paint verification	Promec / CLIENT / Third-Party	AirMP specifications	I/R		I		AirMP Report
4.0	**Preparation of the DEF containers (Offsite)**							
4,1	Fabrication of the DEF containers	Promec / CLIENT / Third-Party	P.D.McLaren specifications	I/R		I		P.D.McLaren Report

Inspection and Testing Plan

NUQSANA PROMEC MINING

AGNICO EAGLE

Contract title: Meliadine Fuel Tanks Piping Supply and Installation
Contract number: 6515-C-270-007
Promec Ref.: C22466T

Approved on : _____
Approved by: _____

Approval Signature

ITP # AEM-ITP-001
Area Rankin Inlet
System Pumping container

Discipline: Mechanical, Piping, Structure

Updated on: 2017-06-06

Legend
H - Hold
W - Witness
I - Inspect
R - Review

Activity No. and CDRL Code	Activity Description (Per Scope of Work)	Responsibility Contractor and/or Sub	Acceptance Criteria (Specifications, Drawings, Industry Code, Regulatory Authority, Manufacturers O&M manual, Controlling Procedure, Quality/Engineering Bulletins, Other/ Site Quality Plan, Contractor Quality Manuals, etc.)	Verification Point				Verification Document(s) 1. List ONLY the Form(s) applicable to installation. 2. ▲ Commissioning Required Document
				Contractor		Client		
				H W I R	Initials & Date	H W I R	Initials & Date	
5.0	**Mechanical & Piping (Offsite)**							
5,1	Fabrication of piping spools	Promec / CLIENT	AEM-PI-PRO-003 (Piping Erection Procedure) AEM-WE-PRO-001 (Welding Control Procedure)	W/R		W/R		AEM-WE-ITR-001 (Daily Weld Report) AEM-GE-LOG-005 (Weld Log)
5,2	Painting of the piping spools (Safety Orange)	Promec / CLIENT / Third-Party	6515-GGD-022_R0 (Project Standard paint specifications) AEM-PI-PRO-003 (Piping Erection Procedure)	I/R		I/R		Third-Party Report AEM-PI-ITR-002 (Check List for Pipe Systems)
5,3	Pump Installation	Promec / CLIENT	AEM-ME-PRO-001 (Pump Installation Procedure)	H/R		H/R		AEM-ME-ITR-001 (Pump Alignment Report)
5,4	Piping installation	Promec / CLIENT	AEM-PI-PRO-003 (Piping Erection Procedure) AEM-WE-PRO-001 (Welding Control Procedure) CODES / STANDARDS B31,3	I/R		I/R		AEM-PI-ITR-002 (Check List for Pipe Systems)
5,5	Support fabrication and installation	Promec / CLIENT / Third-Party	IFC Drawings AEM-PI-PRO-003 (Piping Erection Procedure)	W/R		W/R		Third-Party Report AEM-PI-ITR-002 (Check List for Pipe Systems)
5,6	Perform all non-destructive examination required (NDE)	Promec / CLIENT / Third-Party	AEM-WE-PRO-002 (Non-Destructive Exam. Procedure) 5%, by ultrasound or penetrating liquid	W/R		W/R		Third-Party Report AEM-GE-LOG-005 (Weld Log)
5,7	Inspection Release prior to shipment	Promec / CLIENT	7.01_R0_Packing_Shipping_Instruct (Shipping requirements for AEM)	H/R				Partial History Docket

Inspection and Testing Plan

NUQSANA PROMEC MINING

AGNICO EAGLE

Contract title:	Meliadine Fuel Tanks Piping Supply and Installation	**ITP #**	**AEM-ITP-001**
Contract number:	6515-C-270-007	**Area**	**Rankin Inlet**
Promec Ref.:	C22466T	**System**	**Pumping container**
Approved on :	_____	**Discipline**	**Mechanical**
Approved by:	_____		**Piping**
Approval Signature			**Structure**

Updated on: 2017-06-06

Legend

H - Hold
W - Witness
I - Inspect
R - Review

Activity No. and CDRL Code	Activity Description (Per Scope of Work)	Responsibility Contractor and/or Sub	Acceptance Criteria (Specifications, Drawings, Industry Code, Regulatory Authority, Manufacturers O&M manual, Controlling Procedure, Quality/Engineering Bulletins, Other/ Site Quality Plan, Contractor Quality Manuals, etc.)	Verification Point				Verification Document(s) 1. List ONLY the Form(s) applicable to Installation. 2. ▲ Commissioning Required Document
				Contractor		Client		
				H W I R	Initials & Date	H W I R	Initials & Date	
6.0	**Mechanical & Piping (Onsite)**							
6,1	Piping installation	Promec / CLIENT	AEM-PI-PRO-003 (Piping Erection Procedure) AEM-WE-PRO-001 (Welding Control Procedure) CODES / STANDARDS B31,3	I/R		I/R		AEM-PI-ITR-002 (Check List for Pipe Systems)
6,2	Perform all non-destructive examination required (NDE)	Promec / CLIENT / Third-Party	AEM-WE-PRO-002 (Non-Destructive Exam. Procedure) 5%, by ultrasound or penetrating liquid	W/R		W/R		Third-Party Report AEM-GE-LOG-005 (Weld Log)
6,3	Piping Testing & Cleaning	Promec / CLIENT	AEM-PI-PRO-001 (Hydrostatic/Pneumatic Test Procedure)	H/R		H/R		▲ AEM-PI-ITR-001 (Pressure Test Report)
6,4	Identification of piping (tagging)	Promec / CLIENT	6515-C-270-007-SPT-001_R3 (Technical Specifications)	I/R		I/R		AEM-PI-ITR-002 (Check List for Pipe Systems)
6,5	Install connecting piping	Promec / CLIENT	AEM-PI-PRO-003 (Piping Erection Procedure) AEM-WE-PRO-001 (Welding Control Procedure)	W/R		W/R		AEM-PI-ITR-002 (Check List for Pipe Systems)

Inspection and Testing Plan

NUQSANA PROMEC MINING

AGNICO EAGLE

Contract title:	Meliadine Fuel Tanks Piping Supply and Installation	**ITP #**	**AEM-ITP-001**
Contract number:	6515-C-270-007	**Area**	**Rankin Inlet**
Promec Ref.:	C22466T	**System**	**Pumping container**
		Discipline	**Mechanical**
			Piping
			Structure

Approval Signature

Approved on : _____

Approved by: _____

Updated on: 2017-06-06

Legend

H - Hold
W - Witness
I - Inspect
R - Review

Activity No. and CDRL Code	Activity Description (Per Scope of Work)	Responsibility Contractor and/or Sub	Acceptance Criteria (Specifications, Drawings, Industry Code, Regulatory Authority, Manufacturers O&M manual, Controlling Procedure, Quality/Engineering Bulletins, Other/ Site Quality Plan, Contractor Quality Manuals, etc.)	Verification Point – Contractor (H W I R)	Contractor Initials & Date	Verification Point – Client (H W I R)	Client Initials & Date	Verification Document(s) 1. List ONLY the Form(s) applicable to installation. 2. ▲ Commissioning Required Document
7.0	**FINAL TURNOVER**							
7,1	Construction Completion (Contractor Punchlist & Joint Walkdown Punchlist)	Promec / CLIENT	Quality Plan AEM-PI-PRO-002 (Pre-Commissioning Piping Procedure)	H/R		H/R		▲ AEM-GE-ITR-003 (Punchlist)
7,2	Final Acceptance of Turnover Package	Promec / CLIENT	Quality Plan	H/R		H/R		Signed ITP History Docket
7,3	Declaration of Completion	Promec	Quality Plan	H/R		H/R		AEM-GE-ITR-004 (Notice of Final Completion)
7,4	As-Built Drawings	Promec	Quality Plan	H/R		H/R		All Required As-Built Drawings
7,5	Weld Map	Promec	Quality Plan	H/R		H/R		All Required Weld Maps

PROMEC's Representatives			CLIENT's Representative	
QA/QC	Project Manager			
Name	Name		Name	
Signature	Signature	Date	Signature	Date

AGNICO EAGLE

Vendor Document Status

1 ☐ Proceed to next submission and status.

2 ☐ Proceed with exceptions as noted to next submission and status.

3 ☐ Do not proceed.
Revise as noted and resubmit next submission and status.

4 ☑ Complete, no further submission required.

By: JEAN-FRANCOIS TREMBLAY Date: 2017-06-09

Review and authorization to fabricate are only for general conformance with the design concept of the Project as expressed in the Contract Documents. Sole responsibility for the accuracy and completeness of this document, including but not limited to dimensions and quantities, remains with the Supplier/Contractor. Agnico Eagle does not warrant the accuracy or completeness of any of the information contained herein, nor does Agnico Eagle authorize or approve any construction means, methods, techniques, sequences or any safety precautions or procedures.

Agnico Eagle No. 6515-C-270-007-141-TES-0032 R: Sub002

DOCUMENT FOR INFORMATION

Inspection and Testing Plan

NUQSANA PROMEC MINING

AGNICO EAGLE

Contract title: Meliadine Fuel Tanks Piping Supply and Installation
Contract number: 6515-C-270-007
Promec Ref.: C22466T

Approved on : _____
Approved by: _____

Approval Signature

ITP # AEM-ITP-002
Area Rankin Inlet
System Fuel farm

Discipline: Mechanical, Piping, Structure

Updated on: 2017-06-06

Legend
H - Hold
W - Witness
I - Inspect
R - Review

Activity No. and CDRL Code	Activity Description (Per Scope of Work)	Responsibility Contractor and/or Sub	Acceptance Criteria (Specifications, Drawings, Industry Code, Regulatory Authority, Manufacturers O&M manual, Controlling Procedure, Quality/Engineering Bulletins, Other/ Site Quality Plan, Contractor Quality Manuals, etc.)	Verification Point				Verification Document(s) 1. List ONLY the Form(s) applicable to Installation. 2. ▲ Commissioning Required Document
				Contractor		Client		
				H W I R	Initials & Date	H W I R	Initials & Date	
1.0	**GENERAL**							
1.1	Inspection and Test Plan	Promec / CLIENT		H/R		R		Approved ITP
1.2	Document review (Acquire and review all applicable documentation)	Promec / CLIENT	Quality Plan	H/R		R		
1.3	Procedures Submitted and Approved (Hydrostatic/Pneumatic Testing, Pre-Commissioning, etc.)	Promec / CLIENT	Quality Plan	H/R		R		All Applicable Approved Procedures
1.4	Drawing Index (IFC) to Latest Revision	Promec	Quality Plan	I/R		R		VDRL
2.0	**ITP SPECIFIC**							
2.1	Non-Conformance Report & Log (Both CLIENT & Contractor Issued)	Promec / CLIENT	Quality Plan	H/R		H/R		AEM-GE-ITR-002 (Non-Conformance Report) ▲ AEM-GE-LOG-002 (Non-Conformance Log)
2.2	Weld Procedures Submitted and Approved Specification/Procedure (WPS)	Promec / CLIENT	Quality Plan	H/R		R		Approved Procedure
2.3	Welders Qualification Approved	Promec / CLIENT	Quality Plan	H/R		R		Welders Qualifications Records
2.4	Inspect Material/Equipment for Damages or Deficiencies	Promec	Quality Plan	I/R		R		AEM-GE-ITR-005 (Inspection Deficiency Report) ▲ AEM-GE-LOG-004 (Inspection Deficiency Log)
3.0	**Fabrication (Offsite)**							
3.1	Catwalks	Promec / CLIENT / Third-Party	IFC Drawings	W/R		W/R		Third-party-report
3.2	Steel fuel tanks	Promec / CLIENT / Third-Party	6515-C-270-007-SPT-001_R3 (Technical Specifications)	W/R		W/R		Third-party-report

Inspection and Testing Plan

NUQSANA PROMEC MINING

AGNICO EAGLE

Contract title: Meliadine Fuel Tanks Piping Supply and Installation
Contract number: 6515-C-270-007
Promec Ref.: C22466T

Approved on : _____
Approved by: _____

Approval Signature

ITP # AEM-ITP-002
Area Rankin Inlet
System Fuel farm
Discipline Mechanical / Piping / Structure

Updated on: 2017-06-06

Legend
H - Hold
W - Witness
I - Inspect
R - Review

Activity No. and CDRL Code	Activity Description (Per Scope of Work)	Responsibility Contractor and/or Sub	Acceptance Criteria (Specifications, Drawings, Industry Code, Regulatory Authority, Manufacturers O&M manual, Controlling Procedure, Quality/Engineering Bulletins, Other/ Site Quality Plan, Contractor Quality Manuals, etc.)	Verification Point				Verification Document(s) 1. List ONLY the Form(s) applicable to installation. 2. ▲ Commissioning Required Document
				Contractor		Client		
				H W I R	Initials & Date	H W I R	Initials & Date	
4.0	**Mechanical & Piping (Offsite)**							
4,1	Fabrication of piping spools	Promec / CLIENT	AEM-PI-PRO-003 (Piping Erection Procedure) AEM-WE-PRO-001 (Welding Control Procedure) CODES / STANDARDS B31,3	W/R		W/R		AEM-WE-ITR-001 (Daily Weld Report) AEM-GE-LOG-005 (Weld Log)
4,2	Painting of the piping spools (Safety Orange)	Promec / CLIENT / Third-Party	6515-GGD-022_R0 (Project Standard paint specifications) AEM-PI-PRO-003 (Piping Erection Procedure)	I/R		H/R		Third-Party Report AEM-PI-ITR-002 (Check List for Pipe Systems)
4,3	Support fabrication	Promec / CLIENT / Third-Party	IFC Drawings AEM-PI-PRO-003 (Piping Erection Procedure)	W/R		W/R		Third-Party Report AEM-PI-ITR-002 (Check List for Pipe Systems)
4,4	Perform all non-destructive examination required (NDE)	Promec / CLIENT / Third-Party	AEM-WE-PRO-002 (Non-Destructive Exam. Procedure) 5%, by ultrasound or penetrating liquid	W/R		W/R		Third-Party Report AEM-GE-LOG-005 (Weld Log)
4,5	Inspection Release prior to shipment	Promec / CLIENT	7.01_R0_Packing_Shipping_Instruct (Shipping requirements for AEM)	H/R		H/R		Partial History Docket

Inspection and Testing Plan

NUQSANA PROMEC MINING

AGNICO EAGLE

Contract title: Meliadine Fuel Tanks Piping Supply and Installation
Contract number: 6515-C-270-007
Promec Ref.: C22466T

Approved on : _____
Approved by: _____

Approval Signature

ITP # AEM-ITP-002
Area Rankin Inlet
System Fuel farm

Discipline: Mechanical, Piping, Structure

Updated on: 2017-06-06

Legend
H - Hold
W - Witness
I - Inspect
R - Review

Activity No. and CDRL Code	Activity Description (Per Scope of Work)	Responsibility Contractor and/or Sub	Acceptance Criteria (Specifications, Drawings, Industry Code, Regulatory Authority, Manufacturers O&M manual, Controlling Procedure, Quality/Engineering Bulletins, Other/ Site Quality Plan, Contractor Quality Manuals, etc.)	Verification Point				Verification Document(s) 1. List ONLY the Form(s) applicable to installation. 2. ▲ Commissioning Required Document
				Contractor		Client		
				H W I R	Initials & Date	H W I R	Initials & Date	
5.0	**Mechanical & Piping (Onsite)**							
5.1	Installation of the tanks	Promec / CLIENT	AEM-ME-PRO-002 (Fuel Tank Installation Procedure)	W/R		W/R		AEM-ME-ITR-003 (Fuel Tank Checklist)
5.2	Installation of the catwalks	Promec / CLIENT	AEM-PI-PRO-003 (Piping Erection Procedure)	I/R		I/R		AEM-ME-ITR-004 Catwalks & Stairways Checklist
5.3	Support fabrication and installation	Promec / CLIENT	AEM-PI-PRO-003 (Piping Erection Procedure)	W/R		I		AEM-PI-ITR-002 (Check List for Pipe Systems)
5.4	Piping installation	Promec / CLIENT	AEM-PI-PRO-003 (Piping Erection Procedure) AEM-WE-PRO-001 (Welding Control Procedure) CODES / STANDARDS B31,3	I/R		I/R		AEM-PI-ITR-002 (Check List for Pipe Systems)
5.5	Perform all non-destructive examination required (NDE)	Promec / CLIENT / Third-Party	AEM-WE-PRO-002 (Non-Destructive Exam. Procedure) 5%, by ultrasound or penetrating liquid	W/R		W/R		Third-Party Report AEM-GE-LOG-005 (Weld Log)
5.6	Piping Testing & Cleaning	Promec / CLIENT	AEM-PI-PRO-001 (Hydrostatic/Pneumatic Test Procedure)	H/R		H/R		▲ AEM-PI-ITR-001 (Pressure Test Report)
5.7	Identification of piping (tagging)	Promec / CLIENT	6515-C-270-007-SPT-001_R3 (Technical Specifications)	I/R		I		AEM-PI-ITR-002 (Check List for Pipe Systems)

Inspection and Testing Plan

NUQSANA PROMEC MINING

AGNICO EAGLE

Contract title: Meliadine Fuel Tanks Piping Supply and Installation
Contract number: 6515-C-270-007
Promec Ref.: C22466T

Approved on : _____
Approved by: _____

Approval Signature

ITP # AEM-ITP-002
Area Rankin Inlet
System Fuel farm
Discipline Mechanical / Piping / Structure

Updated on: 2017-06-06

Legend
H - Hold
W - Witness
I - Inspect
R - Review

Activity No. and CDRL Code	Activity Description (Per Scope of Work)	Responsibility Contractor and/or Sub	Acceptance Criteria (Specifications, Drawings, Industry Code, Regulatory Authority, Manufacturers O&M manual, Controlling Procedure, Quality/Engineering Bulletins, Other/ Site Quality Plan, Contractor Quality Manuals, etc.)	Verification Point				Verification Document(s) 1. List ONLY the Form(s) applicable to installation. 2. ▲ Commissioning Required Document
				Contractor		Client		
				H W I R	Initials & Date	H W I R	Initials & Date	
6.0	FINAL TURNOVER							
6.1	Construction Completion (Contractor Punchlist & Joint Walkdown Punchlist)	Promec / CLIENT	Quality Plan AEM-PI-PRO-002 (Pre-Commissioning Piping Procedure)	H/R		H/R		▲ AEM-GE-ITR-003 (Punchlist)
6.2	Final Acceptance of Turnover Package	Promec / CLIENT	Quality Plan	H/R		H/R		Signed ITP History Docket
6.3	Declaration of Completion	Promec	Quality Plan	H/R		H/R		AEM-GE-ITR-004 (Notice of Final Completion)
6.4	As-Built Drawings	Promec	Quality Plan	H/R		H/R		All Required As-Built Drawings
6.5	Weld Map	Promec	Quality Plan	H/R		H/R		All Required Weld Maps

PROMEC's Representatives			CLIENT's Representative	
QA/QC	Project Manager			
Name	Name		Name	
Signature	Signature	Date	Signature	Date

AGNICO EAGLE

Vendor Document Status

1 ☐ Proceed to next submission and status.

2 ☐ Proceed with exceptions as noted to next submission and status.

3 ☐ Do not proceed.
Revise as noted and resubmit next submission and status.

4 ☑ Complete, no further submission required.

By: JEAN-FRANCOIS TREMBLAY Date: 2017-05-08

Review and authorization to fabricate are only for general conformance with the design concept of the Project as expressed in the Contract Documents. Sole responsibility for the accuracy and completeness of this document, including but not limited to dimensions and quantities, remains with the Supplier/Contractor. Agnico Eagle does not warrant the accuracy or completeness of any of the information contained herein, nor does Agnico Eagle authorize or approve any construction means, methods, techniques, sequences or any safety precautions or procedures.

Agnico Eagle No. 6515-C-270-007-141-TES-0035 R: Sub001

DOCUMENT FOR INFORMATION

Agnico-Eagle Mines Ltd.

Contract no. 6515-C-270-007

Hydrostatic / Pneumatic Test Procedure for Piping

AEM-PI-PRO-001

Area No.: All

System No.: All

PROMEC Approvals

Prepared by:	Stéphane Doré	**Signature:**		**Date:**	2017-04-26
Verified by:	Jérémy Duval	**Signature:**		**Date:**	2017-04-26
Approved by:	Éric Poulin	**Signature:**		**Date:**	2017-04-26

CLIENT Approvals

Verified by:	Rene Fillion	**Signature:**		**Date:**	2017-05-07
Approved by:		**Signature:**		**Date:**	

Table of Contents

Page

1. PURPOSE 3
2. CODES AND STANDARDS 3
3. SAFETY AND ENVIRONMENT MEASURES 3
   - 3.1 Safety Measures during the Preparation of the Test 3
   - 3.2 Disposal of Test Medium 3
   - *3.2.1 Glycols Diluted with Water* 4
   - *3.2.2 Test Water Release Authorization* 4
   - *3.2.3 Liquid Disposal Documents* 4
4. GENERAL 5
   - 4.1 Introduction 5
   - 4.2 Applied Regulations and Standards 6
   - 4.3 Hydrostatic/Pneumatic Test Package 6
5. PREPARATION FOR THE PRESSURE TEST 6
   - 5.1 Spring Supports 6
   - 5.2 Wireless Communication 6
6. HYDROSTATIC/PNEUMATIC TEST PROCEDURE 6
   - 6.1 System Inspection 6
   - 6.2 System Water Filling, Air Venting, Draining and Flushing 7
   - 6.3 Water Requirements 7
   - 6.4 Inspection of the Pressurized System 7
   - 6.5 Acceptability Standard 7
   - 6.6 Hydrostatic/Pneumatic Test Procedure Completion 8
7. WATER RELEASE COMPLETION 8
8. RESPONSIBILITIES 8
   - 8.1 Responsibilities and Duties of Contractors 8
   - 8.2 Supervisor of the Hydrostatic Test Procedure (CLIENT) 8
9. PNEUMATIC TEST 9

APPENDIX C – STATUS OF INSTRUMENTS DURING PRESSURE TEST

APPENDIX D – ALL APPLICABLE ITRs & LOGs

1. PURPOSE

This procedure provides the requirements for hydrostatic & Pneumatic pressing testing of piping system.

2. CODES AND STANDARDS

- ASME B31.1
- ASME B31.3 (CSA B 51-03)

3. SAFETY AND ENVIRONMENT MEASURES

Promec will set the organisation and implement the safety measures with the help of CLIENT's staff.

Moving proper containments, for the disposal of spilled hydrostatic fluids and any contaminated soil that results hydrostatic fluids.

All activities must be fully documented and provided to R&E.

3.1 Safety Measures during the Preparation of the Test

- Define a specific area for each pressure test.
- Make a list of authorized personnel that will have access to the area during the test.
- Advise other sub-contractors of the terms of tests and the forbidden works to be performed in the area of the test.
- Inspect temporary installations and equipment before conducting the tests to comply with current safety measures.
- Inspect and check temporary scaffolding and lights for inspection, if required.
- List all equipment that will be handled during filling, pressurizing and drainage of the system.
- Check gauge calibration list for measurement and control equipment. (Pressure test gauges shall be calibrated once every six months).
- Ensure that all the test fluids shall be stored and/or disposed of in a safe and acceptable manner.

3.2 Disposal of Test Medium

The release of hydrostatic test water in an amount of 1,000 m^3, or more, requires a registration number from AENV as proof of authorization to release hydrostatic test water. Contact R&E at least one month prior to beginning testing so applications can be completed and a registration number received the following information is required for applications:

- Name, address, fax and phone numbers of the person responsible for the testing.
- Type of pipeline, storage tank or vessel.
- Legal land descriptions for the beginning and end of the pipeline section(s), storage tank or vessel to be tested.

- Total length of pipeline to be tested.
- Inside diameter of the pipeline (mm) to be tested.
- Total volume of hydrostatic test water to be used (m^3).
- Source of the hydrostatic test water: groundwater, surface water, municipal, or other.
- Origin or name of source water.
- Anticipated date of withdrawal of source water.
- Location of release of test water (legal land description).
- Start and end dates for release.
- Volume of release (m^3).
- Approximate rate of release(s) (m^3/hr).
- Name and location of receptor: land, surface water, injection well, other.
- Additives used (MSDS sheet(s) must be included).
- A description of the treatment and mitigative methods used prior to and during release.
- A map, diagram, or air photo of the release area showing release location, receiving land, direction of receiving water flow (if applicable) and sampling locations (soil and water).

If there are any changes to the registration information after submission, R&E must be notified immediately. The application must be signed by the person responsible for the pipeline/ storage tank indicating that the testing will be done in accordance with AENV's Code of Practice.

3.2.1 Glycols Diluted with Water

Glycols diluted with water may be used for hydrostatic testing, but must be properly managed so as not to spill, contaminate soils, or contaminate ground or surface waters and must be disposed off site in an environmentally safe manner. All activities must be fully documented.

3.2.2 Test Water Release Authorization

Upon completion of testing and prior to release, a representative grab sample of the hydrostatic test water must be obtained from the testing pipes and analyzed as specified in Appendix A – "Monitoring Requirements and Limits for Release to Land" and Appendix B – "Monitoring Requirements and Limits for Release to Receiving Water". Hydrostatic test water must not be released before to obtain R&E approval.

3.2.3 Liquid Disposal Documents

The testing crew supervisor must compile the following information for each hydrostatic test:

- A schematic diagram and details of the monitoring and release operations, including monitoring points, holding system, conveyance system, hydrostatic test water release flow rate and area of receiving water.

- Where the release is to receiving water, the name of the receiving water, the estimated rate of flow of the receiving water at the time of the release and photographs taken before, during and after release at the point of release and downstream of a distance of at least 100 meters from the point of release for flowing water.
- Photographs of the sampling points, holding system and conveyance system.
- Where released to land, photographs of the land taken 7 days after the release is complete.
- All analytical results obtained for the hydrostatic testing.
- All information must be retained for a minimum of 5 years after completion of the hydrostatic testing.

4. GENERAL

4.1 Introduction

As the line designation total this procedure describes the pressure tests that have to be achieved on the following systems:

CH: Chemicals
CRW: Cold Recycle Waters
CWR: Cooling water return
CWS: Cooling water supply
DW: Drinking water
FW: Fire water
IWR: Inhibited water return
HC: High pressure condensate
HRW: Hot recycle water
HS: High pressure steam
IWS: Inhibited water supply
LC: Low pressure condensate
LS: Low pressure steam
IA: Instrument Air
LLS: Low low pressure steam
MS: Medium pressure steam
UA: Utility air
UW: Utility water
WRW: Warn recycle water
DR: Drain
EQT: Equipment trim
PA: Plant air

4.2 Applied Regulations and Standards

The pressure tests will be conducted according to standard ASME B 31.1, Article 137, and ASME B 31.3 (CSA B 51-03) - Pressure Test.

4.3 Hydrostatic/Pneumatic Test Package

The Pressure Test Package consists of:

- Piping Pressure Test Record.
- Copy of the Line Designation Table.
- A copy of the P & ID showing the lines involved.
- Isometrics drawings.
- Copy of the drawings gauges calibration sheet.
- All NDE approved.

The Pressure Test Package will be submitted to CLIENT's for review and approval to proceed prior to testing.

5. PREPARATION FOR THE PRESSURE TEST

5.1 Spring Supports

If necessary, the spring supports must be blocked before filling.

Promec will check that all pipe supports are entirely installed according to the drawings.

5.2 Wireless Communication

To ensure at all times that communications are constant between the operator of the pressurizing pump and the workers monitoring the control gauge on the highest location of the piping system installation, two ways radio communication shall be used.

6. HYDROSTATIC/PNEUMATIC TEST PROCEDURE

6.1 System Inspection

- Promec shall check pipe loop with all approved documentation:
  - NDT/PWHT.
  - Check that all specified bolts and gaskets are installed.
  - Check that all vents and drains are installed.
  - Check that all pressure connections are installed correctly.
  - Check for direction of flow through filters and strainers, traps, check valve, etc.
  - Check that all temporary pipe supports have been removed.
  - Check that all in-one valves installed are completely open and protected (secured against unauthorized closing.
  - Check that temporary spools have been installed.
  - Check test medium for conformity to requirement
  - Check pressure gauge calibration.

6.2 System Water Filling, Air Venting, Draining and Flushing

Considering that the water filling for the pressure test is done for the first time, it is necessary to flush the piping system by filling and draining. For this purpose, water from the fire hydrant will be used. If fire hydrants are not available, water shall be trucked in and pumped into the system.

Promec shall ensure that the water that flows out in the period of drainage does not contain any hazardous contaminant for the environment so it can be directly poured into the sewer. One complete fillings and flushes should be enough.

Air venting is accomplished with valves installed for this purpose on the highest locations of the tested systems.

Air venting is completed when water is flowing from the air venting valves in a continuous flow free of air bubbles.

Speckable, blind, blinds flanges, temporary pipe plug or caps will be installed at locations indicated on isometrics and/ or P &ID's drawings.

Place of nozzles for connection on pressurised pump, gauges and air venting valve are shown on schematics, which will be attached for each hydrostatic testing system. The form to be used will be developed with CLIENT.

6.3 Water Requirements

For hydrostatic test, the test fluid shall be clean filtered water that will not corrode or damage the system being tested.

Approval must be obtained from CLIENT if the test fluid is anything other than clean water.

6.4 Inspection of the Pressurized System

The hydrostatic test must be performed during at least 10 minutes.

Visual inspection is mandatory. In the case of a leakage, the inspector will visibly mark the area with paint marker.

6.5 Acceptability Standard

The pressure test procedure is considered successfully conducted when:

- The test pressure is reached and kept constant.
- No trace of cracks, leaks and changes in the shape of parts of the system have been observed during inspection.
- The verification of the written report is noted and approved by all participants witnessing the pressure test.

6.6 Hydrostatic/Pneumatic Test Procedure Completion

A test record shall be prepared for each piping system tested and shall include the following:

- Date of test
- Identification of piping system tested
- Test fluid
- Test pressure
- Duration of test
- Test fluid temperature
- Ambiant temperature
- Pressure gauge number
- Certification of results by examiner with name and signature.
- Approval by CLIENT

N.B.: For testing an austenitic stainless steel piping, checked that the chlorine is under than 50 ppm.

7. WATER RELEASE COMPLETION

When the hydrostatic test is completed, the water stay in the pipe or in a holding vessel until Promec obtains the authorization for releasing the testing fluid. After, we use a truck to transport the water to the release area or, if possible, a water disposal ditch is used.

8. RESPONSIBILITIES

8.1 Responsibilities and Duties of Contractors

Promec's working team shall be responsible for the quality of work and for the compliance of the test procedure. Complete activities shall be registered in the hydrostatic test procedures log book. During the hydrostatic test, Promec shall provide a working team to cover the following activities:

- Water filling and air venting of system under test.
- Pressurizing of system.
- Control of pressure at highest point of system.
- Drainage of system after testing.

8.2 Supervisor of the Hydrostatic Test Procedure (CLIENT)

The hydrostatic test supervisor shall be nominated by CLIENT and coordinate the work with all other participants.

9. PNEUMATIC TEST

Wherever a hydrostatic test cannot be performed, a pneumatic test should be carried out upon CLIENT's approval.

Appendix C

STATUS OF INSTRUMENTS DURING PRESSURE TEST

STATUS OF INSTRUMENTS DURING PRESSURE TEST

Remove:

- Control Valves
- FlowInstruments-Rotameters (Do not force reverse flow)
- Flow Meters-positive displacement type
- Flow Switches-van type
- Orifice Plates (Install after hydrotesting and line flushing)
- Pressure Regulators
- PSV's, TSV's- 3/4" & 1 " screwed

Block and Vents:

- Analyzers
- Flow Instruments-D/P cell & bellow types
- FlowMeters – turbine type
- Flow Indicating Switches-bellows type
- Level Instruments-C/P cell & bellows type
- Pressure Gauges
- Pressure Instruments-all types
- Pressure Switches

Blind Off:

- PSV's (Test gauge may be used if one is furnished; Blinds not required on PSV outlets discharging into a system being tested at 103kPa (15 PSI) or less.)

Include in Test:

- Gauge glasses
- Level Instruments-displacer type (Do not overpressure. If in doubt, block and drain instead.)
- Level Switches-float type (Do not overpressure. If in doubt, block and drain instead.)

To avoid damage due to freezing, all instruments shall be protected. As a good practice it is recommended that instruments be drained and process lead lines blown out with air or nitrogen in preparation for cold weather and during cold weather.

Appendix D

ALL APPLICABLE ITRs & LOGs

AGNICO EAGLE

Vendor Document Status

1 ☐ Proceed to next submission and status.

2 ☐ Proceed with exceptions as noted to next submission and status.

3 ☐ Do not proceed.
Revise as noted and resubmit next submission and status.

4 ☑ Complete, no further submission required.

By: JEAN-FRANCOIS TREMBLAY JG Date: 2017-05-16

Review and authorization to fabricate are only for general conformance with the design concept of the Project as expressed in the Contract Documents. Sole responsibility for the accuracy and completeness of this document, including but not limited to dimensions and quantities, remains with the Supplier/Contractor. Agnico Eagle does not warrant the accuracy or completeness of any of the information contained herein, nor does Agnico Eagle authorize or approve any construction means, methods, techniques, sequences or any safety precautions or procedures.

Agnico Eagle No. 6515-C-270-007-141-TES-0036 R: Sub001

DOCUMENT FOR INFORMATION

Agnico-Eagle Mines Ltd.

Contract no. 6515-C-270-007

Pre-Commissioning Piping Procedure

AEM-PI-PRO-002

Area No.: All

System No.: All

PROMEC Approvals

Prepared by:	Stéphane Doré	**Signature:**		**Date:**	2017-04-26
Verified by:	Jérémy Duval	**Signature:**		**Date:**	2017-04-26
Approved by:	Éric Poulin	**Signature:**		**Date:**	2017-04-26

CLIENT Approvals

Verified by:		**Signature:**		**Date:**	
Approved by:		**Signature:**		**Date:**	

Table of Contents

Page

1. **SCOPE** 3
2. **"SYSTEMS" METHODOLOGY** 3
   - 2.1 SYSTEM DEFINITION 3
3. **PRE-COMMISSIONING** 3
   - 3.1 MECHANICAL COMPLETION (MC) 3
     - *3.1.1 Conformity Check* 3
     - *3.1.2 Energized tests* 3
     - *3.1.3 Flushing and cleaning* 4
4. **PUNCH LIST** 4
5. **RESPONSIBILITY MATRIX** 4

APPENDIX A – RESPONSIBILITY MATRIX

1. SCOPE

This procedure summarizes Promec activities to achieve a "Ready for Pre-commissioning" status.

2. "SYSTEMS" METHODOLOGY

The basic principle of the plant completion scheduling will be to define, prepare, carry out and report all pre-commissioning by system.

2.1 System Definition

The partition of the plant into systems is a key preparation activity that has a major impact on all aspects of completion operation: the system must be defined so as to be independent as possible, not too small, but of the manageable size and exactly adapted to the start-up sequence.

The partition takes place as early as possible in accordance with precise system boundaries, system sequences and system numbering defined by the client and reported on marked-up P & ID's Single Line Diagrams as support documents.

3. PRE-COMMISSIONING

3.1 Mechanical Completion (MC)

A walk-down and punch list will be completed by the client and Promec on each system as early as practical before the end of the MC.

If both parties are satisfied that the system is mechanically completed enough to go into the commissioning phase, all outstanding deficiencies are noted on the punch list, and handover documents are completed and signed.

3.1.1 CONFORMITY CHECK

Carried out on each item of equipment or component, such as pressure gauges, valves, vents and drains, safety vales, etc. to verify the condition of the equipment, the quality of the installation, the compliance with project drawings and specifications, manufacturer's instruction, safety rules, codes, standards and good practice. These activities are generally carried out in an "un-energized" state, like no pressure in the pipe.

3.1.2 ENERGIZED TESTS

These "energized" tests concern the pressure testing of piping. This pressure testing will need to be done using the approved Promec's Procedure.

3.1.3 FLUSHING AND CLEANING

Piping systems must be flushed or air blown to remove construction debris. Under special circumstances, the client's approval is required to combine the hydrostatic/pneumatic test with the flushing activities.

4. PUNCH LIST

While the construction checks and tests are being performed, all discrepancies, damaged or missing equipment, malfunctions, missing documents, etc. are recorded in the punch list, if the situation was not able to be corrected immediately.

5. RESPONSIBILITY MATRIX

The Completion Activities are now further defined in the following Appendix A - "Responsibility Matrix".

This matrix provides a useful list of the piping completion activities and it establishes to which category they belong pre-commissioning (de-energized) and pre-commissioning (under-pres).

Appendix A

RESPONSIBILITY MATRIX

Responsibility Matrix	Contractor Responsibility	CLIENT Responsibility
LEGEND X = Contractor responsibility	X	
O = CLIENT responsibility		O
A = CLIENT approval hold point		A
W = CLIENT witness notification		W
R = CLIENT documentation review		R

CLIENT's APPROVAL HOLD POINT (A)

When Promec is ready to pre-commission any part of any system, which is identified as requiring CLIENT's approval, Promec shall duly notify CLIENT's representative, with 4 days written notification. Timely Review Meetings shall also be conducted between Promec's Pre-commissioning Manager and CLIENT's Commissioning Representative for the purpose of advising CLIENT on the specific Status/ Timing of all Pre-Commissioning Activities Requiring CLIENT's approval.

CLIENT WITNESS POINT (W)

When Promec is ready to pre-commission any part of any system, which is identified as requiring CLIENT witness, Promec shall duly notify CLIENT's Representative, with two days written notification. Timely review meetings shall also be conducted between Promec's QA/QC and CLIENT's Commissioning Representative for the purpose of advising CLIENT on the specific status/ timing of all pre-commissioning activities requiring CLIENT witness.

CLIENT DOCUMENTATION REVIEW (R)

When Promec has drafted the pre-commissioning procedures, descriptive and operating manuals, maintenance manuals, system schedules, and/or related final documentation etc. pertaining to pre-commissioning of any system, Promec shall formally issue via transmittal to CLIENT's Representative, for review & comment purposes. These documents must be received by CLIENT 14 days in advance of final issue.

NOTES:

CLIENT Signatures on Pre-commissioning Documentation

CLIENT's Representative in attendance will personally sign only for the relevant Pre-commissioning Documentation for which he/she approves, witnesses or reviews.

Functional Test Certificates & CLIENT Signatures

Upon completion of a functional test and proven that it has been successful when referring to the Contract requirements, CLIENT and Promec representatives will sign the test certificate.

Ready for Commissioning Standard					
	PIPING	Pre-Com De-energized	Pre-Com Energized	Comm.	Start-Up
1)	Issue Piping Flushing & Cleaning Procedures	XR			
2)	Complete Vendor Package Piping Punch Lists	XA			
3)	Maintain As-Built/ Red Line Mark-Ups of P&IDS	XA			
4)	Remove all In-Line Instruments prior to Hydro-Testing/Flushing & Cleaning including CA/s, Check & Safety Valves	X			
5)	Remove all temporary supports, protections, bracings, sea fastening stops that were installed to prevent equipment damage during shipping, storage and erection	X			
6)	Install temporary spool pieces	X			
7)	Check conditions of equipment, quality of installation, compliance with Project Drawings, Manufacturers instructions, safety rules, specifications, structural supports, and good practice prior to hydrotest	XA			
8)	Hydrostatic test / Pneumatic test		X		
9)	Set or check pipe anchors, guides, spring hangers and supports after hydrotest. Provide cold and hot setting data	XR			
10)	Define, provide, install and remove all temporary blanks and flushing connections.	X			
11)	Execute & Perform Piping Flushing & Cleaning/ Pickling/ Air Blows and Draining as per the Approved Procedures (Except Steam Blows)		XA		
12)	Execute & Perform Critical Body & Seat Testing TSO Valves at Site of All ESD, BDV		XA		
13)	Carry out piping water or air flushing operations		XA		
14)	Drain all lines including low points	XA			
15)	Provide and Install all Permanent Blinds, Spacers, & Spades as per P&ID's in open/closed position as specified by CLIENT	XW			
16)	Disposal of Test Medium following Hydro-Testing/ Flushing & Cleaning	XW			
17)	Remove as necessary and transport all safety valves to and from test facilities	XW			

Ready for Commissioning Standard				
PIPING	Pre-Com De-energized	Pre-Com Energized	Comm.	Start-Up
18) Test, set and tag all safety valves, then carry out safety valves final installation		XW		
19) Perform all Gross Leak Tests Tightness & Service Tests (above & under ground)		X		
20) Remove all Temporary Blinds	X			
21) Supply/ Install & Issue As-Installed Blind List	XR			
22) Compile & Issue RFC Handover Package per System	XR			
23) Alleviate any excess piping stresses that may be imposed on pipes, compressors or pump flanges	XA			
24) Check packing and packing materials and lubrication of valves; repack and lubricate if necessary	XW			
25) Install corrosion probes	XA			
26) Prepare Punch List	XR			

AGNICO EAGLE

Vendor Document Status

1 ☐ Proceed to next submission and status.

2 ☐ Proceed with exceptions as noted to next submission and status.

3 ☐ Do not proceed.
Revise as noted and resubmit next submission and status.

4 ☑ Complete, no further submission required.

By: JEAN-FRANCOIS TREMBLAY Date: 2017-06-09

Review and authorization to fabricate are only for general conformance with the design concept of the Project as expressed in the Contract Documents. Sole responsibility for the accuracy and completeness of this document, including but not limited to dimensions and quantities, remains with the Supplier/Contractor. Agnico Eagle does not warrant the accuracy or completeness of any of the information contained herein, nor does Agnico Eagle authorize or approve any construction means, methods, techniques, sequences or any safety precautions or procedures.

Agnico Eagle No. 6515-C-270-007-141-TES-0037 R: Sub002

DOCUMENT FOR INFORMATION

Agnico-Eagle Mines Ltd.

Contract no. 6515-C-270-007

Piping Erection Procedure

AEM-PI-PRO-003

Area No.: All

System No.: All

PROMEC Approvals

Prepared by:	Stéphane Doré	**Signature:**		**Date:**	2017-04-26
Verified by:	Jérémy Duval	**Signature:**		**Date:**	2017-04-26
Approved by:	Éric Poulin	**Signature:**		**Date:**	2017-04-26

CLIENT Approvals

Verified by:		**Signature:**		**Date:**	
Approved by:		**Signature:**		**Date:**	

Table of Contents

Page

1. **PURPOSE** 3
2. **PREREQUISITE** 3
3. **CODES AND STANDARDS** 3
4. **FIELD FABRICATION** 3
   - 4.1 PIPING 3
   - 4.2 INTERNAL MISALIGNMENT 4
   - 4.3 FLANGES AND FITTINGS 4
   - 4.4 REINFORCING PADS 4
   - 4.5 PIPING VERIFIED AGAINST THE ISOMETRIC DRAWINGS 5
   - 4.6 FABRICATION TOLERANCES 5
5. **ERECTION AND INSTALLATION** 5
   - 5.1 ERECTION 5
   - 5.2 INSTALLATION 5
     - *5.2.1 General* 5
     - *5.2.2 Flange Bolting* 5
     - *5.2.3 Supports* 6
     - *5.2.4 Branch Connections* 6
     - *5.2.5 Cleanliness of Piping* 6
     - *5.2.6 Field Pressure Testing* 6

APPENDIX A – ALL APPLICABLE ITRs & LOGs

1. PURPOSE

The purpose of this procedure is to specify the requirements for erection, joining and installation of shop fabricated spools. It will ensure that the right piece of pipe is installed at the right location and complies with the codes, standards, and isometric drawings.

2. PREREQUISITE

The following measures shall be taken before starting works:

- All technical documents are available (latest version):
  - Isometric drawings.
  - Line lists.
  - General Arrangement drawings.
- No other work is achieved on the same place of work.
- Piping spools and piping equipment have been identified and inspected.
- Transportation equipment and lifting equipment are available.
- Tools, lifting equipment, levelling equipment, etc. are available and have been inspected.

3. CODES AND STANDARDS

n/a

4. FIELD FABRICATION

4.1 Piping

Fabricator shall shape or bevel the joints to be field welded.

Adjacent sections of longitudinal welded pipe that are joined by butt welding shall have the longitudinal weld seams positioned so that they are at least 30 degrees apart and above the horizontal centerline.

Wherever possible, Promec shall not position the longitudinal weld seam on the top or bottom of the line so that branch connections such as couplings and stub-ons are located on the seam.

4.2 Internal Misalignment

Internal misalignment criteria shall be governed by the following:

- Pipe-to-pipe or pipe-to-fitting NPS (Nominal Pipe Size) 24 and smaller: ±1/16 of an inch deviation.
- Pipe-to-pipe or pipe-to-fitting NPS 26 and larger: ±1/8 of an inch deviation.
- If the deviation factors are exceeded, one of the following procedures shall be used:
  - Rotate the pipe or fittings to reduce misalignment to the acceptable tolerances (before attempting any of the following methods).
  - Use spreaders or internal or external lineup clamps to correct moderate out-of round condition.
  - Backweld the root pass.
  - Taper the wall of the component internally, after obtaining approval from the client, to ensure wall thickness is not reduced below the minimum required by the code.

4.3 Flanges and Fittings

Flange bolt holes are to be oriented as follows, unless otherwise indicated on the piping drawings:

- Flange face vertical: bolt holes to straddle vertical centerline.
- Flange face horizontal: bolt holes to straddle north-south centerline.
- Orifice flanges shall be fabricated with the taps in the exact orientation shown on the piping drawings. The up and down stream sections of pipe to which the orifice flanges are attached may be standard mill run pipe, but each piece shall be a choice hand-selected piece, and the interior of the pipe shall be round, smooth, and free from blisters and scale; welds shall be grounded flush. Field welds shall be kept at a maximum distance from the face of the orifice.
- Where line taps and 'olets are required, first attach the connection fitting then, the hole for each line tap shall be drilled square to the axial centerline, clean, sharp, and free from burrs, wire edges, or other irregularities.
- Slip-on flanges shall be welded inside and outside. Refer to Figure 328.5.2B of ASME B31.3. The weld shall be applied so that the flange face shall be free of weld spatter and does not require refacing.

4.4 Reinforcing Pads

Reinforcing pads shall be installed only where called for on the piping drawing. Pad material shall be the same as the pipe material, unless otherwise authorized by the client. Drawing will specify size and pad thickness.

4.5 Piping verified against the isometric drawings

Check that the position of the piping satisfied the isometric drawings informations: level, horizontal and vertical measurement, etc.

4.6 Fabrication Tolerances

The fabrication tolerances for fabricated piping shall be in accordance with client's specifications and standards.

5. ERECTION AND INSTALLATION

5.1 Erection

The following equipment will be used at different steps during pipe erection works: slings, shackles, mechanical or hydraulic jacks, come-along, measuring tapes, laser tool, temporary supports, boom trucks, etc.

5.2 Installation

5.2.1 GENERAL

Except where shown otherwise on the drawings, piping shall conform to the following:

- Be run level and plumb.
- Be run on North-South and East-West axis.

Evaluation of piping installation works sequence:

- Preparation of pipe to be welded: bevels, cleanliness, etc.
- Mounting of spools at ground level.
- Evaluation of how to handle the spools.
- Lifting of spools to their final location.
- Welding or assembling of spools.
- Identification of the welds.
- Installation of temporary supports.
- Etc.

Interior cleaning of piping:

- Marine Line, cleaning will be perform by pigging.
- Diesel Line (fuel farm and pumping station), cleaning will be perform by air blowing.

5.2.2 FLANGE BOLTING

Use a logical sequence of bolt tightening to ensure even gasket compression, as indicated in ASME B16.5

Unless specified otherwise, provide a bolt stress of 30,000 psi minimum or 45,000 psi maximum using a lubricant on the bolt threads (Refer to AEM-PI-PRO-004 Flanges Bolting Procedure).

Prior to bolt-up, examine flange faces. Flange faces shall be in as-new condition, and shall be wiped clean of any debris, excess oil, grease, and dirt. Restore damaged flange faces to as-new condition. Do not perform weld repairs on flange faces or flanges.

Do not use washers or spacers to make up bolt length. Bolt lengths are specified to prevent oversizing.

5.2.3 SUPPORTS

Install supports as indicated on the drawings.

Install spring supports in compliance with Manufacturer's instructions; keep them blocked until after line closure and hydrotest. Adjust them in the installed position and check them when operating conditions are reached.

Install all required temporary supports for hydrostatic testing.

Welding of supports shall be as indicated on the drawings.

5.2.4 BRANCH CONNECTIONS

Take care in shaping the ends of branch nozzles, as well as holes burned into the pipe for branch connections, to ensure fit with suitable provision for weld metal and so that the branch connections do not project inside the pipes.

5.2.5 CLEANLINESS OF PIPING

Open-end and flange protection shall be used throughout installation. Protect open pipes at times when work on them is not actually taking place.

Inspect individual pipe sections, prefabricated spools, and pipeline items internally during installation, and remove any foreign matter before final welding or bolting.

Piping contiguous with special equipment, which requires cleaning to the equipment Manufacturer's procedure, shall be inspected by and have cleaning supervised by the Manufacturer's representative.

5.2.6 FIELD PRESSURE TESTING

Testing of installed piping systems shall be in accordance with the previously referenced standards. (Refer to AEM-PI-PRO-001 Hydrostatic-Pneumatic Test Procedure for Piping).

Appendix A

ALL APPLICABLE ITRs & LOGs

AGNICO EAGLE

Vendor Document Status

1 ☐ Proceed to next submission and status.

2 ☐ Proceed with exceptions as noted to next submission and status.

3 ☐ Do not proceed.
Revise as noted and resubmit next submission and status.

4 ☑ Complete, no further submission required.

By: JEAN-FRANCOIS TREMBLAY Date: 2017-06-22

Review and authorization to fabricate are only for general conformance with the design concept of the Project as expressed in the Contract Documents. Sole responsibility for the accuracy and completeness of this document, including but not limited to dimensions and quantities, remains with the Supplier/Contractor. Agnico Eagle does not warrant the accuracy or completeness of any of the information contained herein, nor does Agnico Eagle authorize or approve any construction means, methods, techniques, sequences or any safety precautions or procedures.

Agnico Eagle No. 6515-C-270-007-141-TES-0033 R: Sub002

DOCUMENT FOR INFORMATION

Agnico-Eagle Mines Ltd.

Contract no. 6515-C-270-007

Pump Installation Procedure

AEM-ME-PRO-001

Area No.: All

System No.: All

PROMEC Approvals

Prepared by:	Stéphane Doré	**Signature:**		**Date:**	2017-04-26
Verified by:	Jérémy Duval	**Signature:**		**Date:**	2017-04-26
Approved by:	Éric Poulin	**Signature:**		**Date:**	2017-04-26

CLIENT Approvals

Verified by:		**Signature:**		**Date:**	
Approved by:		**Signature:**		**Date:**	

Table of Contents

Page

1. SCOPE 3
2. PREREQUISITE 3
3. VISUAL INSPECTION AND PREPARATION 3
4. LEVELLING AND FIXING 3
5. PUMP AUXILIARIES INSTALLATION 4
6. PIPING INSTALLATION 4
7. PRE-COMMISSIONING 4
8. FINAL ACCEPTANCE 4

APPENDIX A – ALL APPLICABLE ITRs & LOG

1. SCOPE

This procedure provides primary inspection and installation requirements pertaining to the pumps installation.

2. PREREQUISITE

- Relevant isometric drawings are up-to-date.
- Shop drawings, vendor manuals and technical specs up-to-date.
- Preservation and storage plan in place.
- Relevant team mobilized and ready.
- Pump Installation Procedure prepared and approved.
- Materials and tools available with calibration certificates and calibration log entries.

3. VISUAL INSPECTION AND PREPARATION

- Check equipment skid for any sign of damage prior to installation.
- Begin preservation program.
- Verify elevation and centerlines are correct and are clearly marked on foundation.
- Pump installation includes foundation preparation, confirmation of center lines and elevations, preliminary alignment, machinery distortion to be checked at piping bolt up, soft foot check, final alignment, flushing and recharging of lubricants (pump, gear-box, drivers and lube oil tanks) in accordance with the manufacturer's recommendations.
- Mark appropriately on the foundation the jacking screw pads and anchor bolts locations.
- Jack-up equipment skid with external jacks to allow jacking screws pads installation and secure it with temporary supports.
- Circular jackscrew leveling plate shall be made of 2-inche diameter, 12 mm thick, CSA grade 300 Structural Steel Plate, or equivalent type round stock material. The plate shall be clean and free of all scale and oil will be readjusted.

4. LEVELLING AND FIXING

- Install the jacking bolts in their respective screw location. Use the installed jacking bolts to bring the skid to the designed elevation. Ensure that pump nozzles are in proper orientation on the centerlines.
- Level the skid properly with an accurate leveling instrument using the equipment base machined faces. Align and adjust the pumps inlet and outlet flanges with the relevant pipe centerlines.
- After base plate leveling first alignment shall be performed. Soft-foot tolerance and coupling gaps shall be checked while the alignment is being confirmed. Coupling gap to be confirmed.

5. PUMP AUXILIARIES INSTALLATION

- Lube oil console is brought to design elevation and centerlines by the use of stainless steel shims and external lifting.
- Lube oil piping is loosely installed to verify best position.
- Electrical and instrumentation will be done by those disciplines using the relevant ITP's and procedures.

6. PIPING INSTALLATION

- Piping will be cleaned and installed by the piping discipline.
- Interconnecting lube oil piping, cooling water, suction / discharge and steam piping will be subject to fit up measurements. Pipe strain measurements and adjustment shall be carried out.
- Seal flushing lines to be cleaned and connected.
- Distortion due to piping stress: If distortion exceeds allowances, piping alignment shall be re-worked and re-checked.
- All piping that is attached to the equipment for the purpose of field welding will be electrically isolated from the equipment by use of isolating kits.
- A final pipe strain check will be performed and recorded.

7. PRE-COMMISSIONING, (AEM STD TO APPLY, TO BE DETAILED BY AEM)

- If applicable, vendor presence requirements shall be requested prior to final work.
- Lube oil pipe strain to witnessed
- Lube oil system to be flushed.
- Steam pipe blowing to be done by piping discipline.
- Running oil to be installed in lube oil console and pump bearing sumps.
- Motor bump test (uncoupled) to verify rotation will be performed on electric motor drive units.
- Final alignments with cold offsets to be witnessed.
- Pipe strain checks of steam lines and pump suction / discharge lines to be witnessed.
- All couplings and guards to be in place.
- Touch up painting will be completed.
- Mark in red on isometric drawing copy all final dimensions for as-built drawing preparation.

8. FINAL ACCEPTANCE, (AEM STD TO APPLY, TO BE DETAILED BY AEM)

- All inspection test records along with preservation records will be verified for handover to the turnover coordinator, along with relevant RFI's, NCR's and field trouble reports.
- A final punchlist will be cleared with no outstanding NCR's.
- Upon completion of work, final acceptance shall be obtained from CLIENT.

Appendix A

ALL APPLICABLE ITRs & LOGs

AGNICO EAGLE

Vendor Document Status

1 ☐ Proceed to next submission and status.

2 ☐ Proceed with exceptions as noted to next submission and status.

3 ☐ Do not proceed.
Revise as noted and resubmit next submission and status.

4 ☑ Complete, no further submission required.

By: JEAN-FRANCOIS TREMBLAY Date: 2017-05-02

Review and authorization to fabricate are only for general conformance with the design concept of the Project as expressed in the Contract Documents. Sole responsibility for the accuracy and completeness of this document, including but not limited to dimensions and quantities, remains with the Supplier/Contractor. Agnico Eagle does not warrant the accuracy or completeness of any of the information contained herein, nor does Agnico Eagle authorize or approve any construction means, methods, techniques, sequences or any safety precautions or procedures.

Agnico Eagle No. 6515-C-270-007-141-TES-0034 R: Sub001

DOCUMENT FOR INFORMATION

Agnico-Eagle Mines Ltd.

Contract no. 6515-C-270-007

Fuel Tank Installation Procedure

AEM-ME-PRO-002

Area No.: All

System No.: All

PROMEC Approvals

Prepared by:	Stéphane Doré	**Signature:**		**Date:**	2017-04-26
Verified by:	Jérémy Duval	**Signature:**		**Date:**	2017-04-26
Approved by:	Éric Poulin	**Signature:**		**Date:**	2017-04-26

CLIENT Approvals

Verified by:		**Signature:**		**Date:**	
Approved by:		**Signature:**		**Date:**	

Table of Contents

Page

1. SCOPE 3
2. PREREQUISITE 3
3. VISUAL INSPECTION AND PREPARATION 3
4. LEVELING AND FIXING 3
5. AUXILIARIES INSTALLATIONS & INSPECTION 3
6. PRE-COMMISSIONING 3
7. TOUCH-UP PAINTING 4
8. FINAL ACCEPTANCE 4

APPENDIX A – ALL APPLICABLE ITRs & LOGs

1. SCOPE

- This procedure provides inspection steps and requirements pertaining to a fuel tank.
- Each package is composed of a single unit.

2. PREREQUISITE

- Relevant isometric drawings are up-to-date.
- Shop drawings, vendor's manual and technical specs up-to-date.
- Relevant team mobilized and ready.
- Pertaining material and tools are prepared and ready.

3. VISUAL INSPECTION AND PREPARATION

- Check equipment for any sign of damage prior to installation.
- Mark on the foundation center lines and elevation references.
- If required, clean the foundation and skid exposed surfaces using compressed air.

4. LEVELING AND FIXING

- Jack up the equipment skid using external jacks keeping the skid level up to design elevation and center lines.
- Level the skid properly with an accurate leveling instrument. Align and adjust vessels inlet and outlet flanges with the relevant pipe axes (see relevant isometric drawing).
- Leveling shims shall to be installed on both sides of each anchor bolt. Wherever the distance between adjacent anchor bolts exceed 800 mm, additional leveling pads shall be installed midway between the anchor bolts.

5. AUXILIARIES INSTALLATIONS & INSPECTION

- Extemal-Interconnecting pipes to be installed. Promec piping ITP to be followed for piping gaskets, studs and flange bolt-up.
- Internal inspection and cleaning to be performed if required.
- Instrumentation installation and verification to be performed by Promec instrumentation team.
- Complete equipment closing record form.

6. PRE-COMMISSIONING

- Follow vendor's operation manual procedure.

7. TOUCH-UP PAINTING

- Touch up painting shall be carried out on surfaces that have scratches or scrapes or other damages that have occurred during transportation and installation (paint is supplied by equipment vendor).

8. FINAL ACCEPTANCE

- All inspection and test records to be reviewed for completeness and securely filed for hand-over to turnover coordinator.
- Upon completion of works, final acceptance shall be obtained from the client.

Appendix A

ALL APPLICABLE ITRs & LOGs

AGNICO EAGLE

Vendor Document Status

1 ☐ Proceed to next submission and status.

2 ☐ Proceed with exceptions as noted to next submission and status.

3 ☐ Do not proceed.
Revise as noted and resubmit next submission and status.

4 ☑ Complete, no further submission required.

By: JEAN-FRANCOIS TREMBLAY Date: 2017-05-02

Review and authorization to fabricate are only for general conformance with the design concept of the Project as expressed in the Contract Documents. Sole responsibility for the accuracy and completeness of this document, including but not limited to dimensions and quantities, remains with the Supplier/Contractor. Agnico Eagle does not warrant the accuracy or completeness of any of the information contained herein, nor does Agnico Eagle authorize or approve any construction means, methods, techniques, sequences or any safety precautions or procedures.

Agnico Eagle No. 6515-C-270-007-141-TES-0038 R: Sub001

DOCUMENT FOR INFORMATION

Agnico-Eagle Mines Ltd.

Contract no. 6515-C-270-007

Welding Control Procedure

AEM-WE-PRO-001

Area No.: All

System No.: All

PROMEC Approvals

Prepared by:	Stéphane Doré	**Signature:**		**Date:**	2017-04-26
Verified by:	Jérémy Duval	**Signature:**		**Date:**	2017-04-26
Approved by:	Éric Poulin	**Signature:**		**Date:**	2017-04-26

CLIENT Approvals

Verified by:		**Signature:**		**Date:**	
Approved by:		**Signature:**		**Date:**	

TABLE OF CONTENTS

Page

1. SCOPE 3
2. REFERENCES 3
3. WELDING PROCEDURES 3
4. WELDER PERFORMANCE QUALIFICATION 3
5. WELDING MATERIAL CONTROL 4
6. FIT-UP AND WELDING 4
7. RADIOGRAPHIC INSPECTION 5

APPENDIX A – ALL APPLICABLE ITRs & LOGs

1. Scope

- This procedure describes the system for maintaining control of all production welding to the requirements of the applicable engineering specifications, codes and standards.

2. References

- ASME, Section IX - Welding and Brazing Qualifications
- ANSI, B-31.3 - Petroleum Refinery Piping
- ANSI, B-31.1 - Power Piping
- AWS, American Welding Society

3. Welding Procedures

- All welding performed on site will comply with applicable qualified welding procedures as specified in the Standard S40 05 13.
- Prime contractor's welders will be qualified to weld procedures in accordance with contract specifications. Prime contractor is responsible for certifying their own welders.
- Copies of the qualified welding procedures approved for that project shall be maintained on site by the Welding Foreman and Site Q/C Representative for reference and permanent retention.

4. Welder Performance Qualification

- It is the responsibility of the Site Q/C Representative to conduct or supervise the Welder Performance Qualification tests. At the discretion of the Corporate Quality Control Manager, a Welding Foreman or other qualified site supervisor may conduct these tests.
- Records attesting to the Welder Performance Qualification tests shall be generated and maintained by the Site Q/C Representative and the Welding Foreman.
- The Site Q/C Representative and the Welding Foreman shall maintain a complete listing of welders and welding operators employed. The form, Welder Qualification Log, is to be updated and reissued on a monthly basis and is to be distributed as required.

5. Welding Material Control

- The Site Q/C Representative and Welding Foreman shall make certain that the welding material used conforms to that of the welding procedure. No substitutions for the specified material will be made without written approval from the client.

6. Fit-Up and Welding

- Visual surveillance shall be performed to establish compliance to welding procedures. The inspection parameters listed below are recommended as guidelines
  - ✓ Inspect end preparation and joint configuration as established by applicable weld procedures and engineering specifications.
  - ✓ Inspect internal alignment and root opening prior to welding.
  - ✓ Check tack welds that are to be incorporated into the final weld, and be assured of proper blend grinding and absence of visual defects.
  - ✓ Check for proper welding materials and other essential variables of applicable weld procedures.
  - ✓ Check visually root pass for cracks, porosity, slag, fusion lines and quality workmanship (if required use LP).
  - ✓ Inspect completed welds for proper reinforcement. All welds should blend smoothly into the base metal and be free of cold lap or fusion at the toe.
  - ✓ Inspect weld for surface discontinuities such as undercut. Surface porosity is to be considered as an injurious defect and shall be repaired.
  - ✓ All repairs are to be made in accordance with approved procedures.
  - ✓ Each welder shall be responsible for stamping his assigned symbol immediately after completion of the weld. A smooth, flat spot shall be ground or filed on the reinforcement cap. The welder shall stamp his/hers identifying mark upon this spot.
- For ferrous material less than 1/4" (1/2" for nonferrous), the welder's symbol shall be recorded on the base metal by use of a halogen-free paint marker, or recorded on isometric drawings by the welding supervisor which shall be available to the Quality Control Inspector.

7. Radiographic Inspection

- The Site Q/C Representative or Welding Foreman will schedule radiographic inspections.
- Radiographic requirements shall be determined by the client standard to assure compliance to contract Codes and specifications.
- Welds requiring radiography will be flagged by a suitable means which will be consistent through contract completion.
- The Site Q/C Representative will complete the Radiographic Inspection Status Record, to indicate status of radio graphically-inspected welds. This form will be forwarded to appropriate supervision for distribution.
- In addition to the records generated under this procedure, marked-up isometric and orthographic drawings will be used as weld maps to indicate completion of radiographic inspection. This will allow a progressive record and give system status.

Appendix A

ALL APPLICABLE ITRs & LOGs

AGNICO EAGLE

Vendor Document Status

1 ☐ Proceed to next submission and status.

2 ☐ Proceed with exceptions as noted to next submission and status.

3 ☐ Do not proceed.
Revise as noted and resubmit next submission and status.

4 ☑ Complete, no further submission required.

By: JEAN-FRANCOIS TREMBLAY Date: 2017-05-02

Review and authorization to fabricate are only for general conformance with the design concept of the Project as expressed in the Contract Documents. Sole responsibility for the accuracy and completeness of this document, including but not limited to dimensions and quantities, remains with the Supplier/Contractor. Agnico Eagle does not warrant the accuracy or completeness of any of the information contained herein, nor does Agnico Eagle authorize or approve any construction means, methods, techniques, sequences or any safety precautions or procedures.

Agnico Eagle No. 6515-C-270-007-141-TES-0039 R: Sub001

DOCUMENT FOR INFORMATION

Agnico-Eagle Mines Ltd.

Contract no. 6515-C-270-007

Non-Destructive Examination Procedure

AEM-WE-PRO-002

Area No.: All

System No.: All

PROMEC Approvals

Prepared by:	Stéphane Doré	**Signature:**		**Date:**	2017-04-26
Verified by:	Jérémy Duval	**Signature:**		**Date:**	2017-04-26
Approved by:	Éric Poulin	**Signature:**		**Date:**	2017-04-26

CLIENT Approvals

Verified by:		**Signature:**		**Date:**	
Approved by:		**Signature:**		**Date:**	

TABLE OF CONTENTS

Page

1. Qualified Individual 3
2. Qualified Firm 3
3. NDE Purchasing Language 4

The Authorized Company for carrying out NDT and its personnel engaged in non-destructive examinations should be familiar with Promec's examination methods and the methods prescribed by the applicable drawings, specifications, codes and standards. The following list outlines the most commonly used examination methods on a Promec project:

- VT - Visual Testing
- LT - Leak Testing
- PT - Liquid Penetrant Testing
- RT - Radiographic Testing (X-ray)
- MT - Magnetic Particle Testing
- UT - Ultrasonic Testing

These methods as well as other methods may or may not, in whole or in part be sub-contracted to "qualified individuals" or firms to perform. The size and scope of the project dictates these conditions as well as the contract.

1. Qualified Individual

- The term "qualified individual" refers to the assigned person responsible for performing or reviewing the nondestructive examinations. All conflicts between the "qualified individual" and any other party will be resolved through the Project Manager and/or the Site Q/C Representative.

2. Qualified Firm

- The term "qualified firm" refers to a licensed NDE organization that performs NDE testing by subcontract for Promec. The qualified firms' contract must be governed by the contract between Promec and its client.
  - ✓ The selection of the NDE firm will be confirmed by the Corporate Quality Control Manager prior to awarding a contract.
  - ✓ The NDE firm will conduct its work in support of Promec.
  - ✓ All work performed by the NDE firm will meet the codes and specifications, quality and integrity.
  - ✓ The productivity and efficiency of the NDE firm shall be monitored to ensure that GSI and its client are receiving maximum value.

3. NDE Purchasing Language

- The following NDE Language shall be added to all Field PO's or subcontracts issued to a NDE firm. The following notes are to be used as a guide and the particular methods, codes and standards shall be verified prior to insertion into the P.O.

  - ✓ All work will be performed in accordance with ASME Section 5, Article 2 Radiographic Standards or ASME requirements.
  - ✓ All radiographic personnel shall be certified in accordance with CAN/CGSB-48.9712-2005 Latest Adopted Edition.
  - ✓ Prior to commencing any radiographic services, one copy of the following must be submitted to the Promec Quality Control Manager.
    - a) Liability Insurance Certificate. Retain copy and forward the original to the Site Project Manager.
    - b) State, Provincial and Federal Radiation Licenses (If Applicable).
    - c) All anticipated personnel certifications (For methods outlined in the contract).
    - d) Each radiographic technique procedure to be used (within the scope of the project).
  - ✓ Each crew shall have one (1) certified Level II Technician on site when working.
  - ✓ All subcontractor radiography shall be interpreted by the subcontractor for film quality and defects prior to surrendering the film and record sheets to the Promec Representative.
  - ✓ All record sheets shall be filled out completely, listing all weldment defects seen on film, whether the defects are acceptable or rejectable to codes or specifications, and shall be signed by the Subcontractor's Level II Technician.

NO. DESSIN DRAWING NO. 65-116-205-200_R3.dwg

FORMAT ARCHD

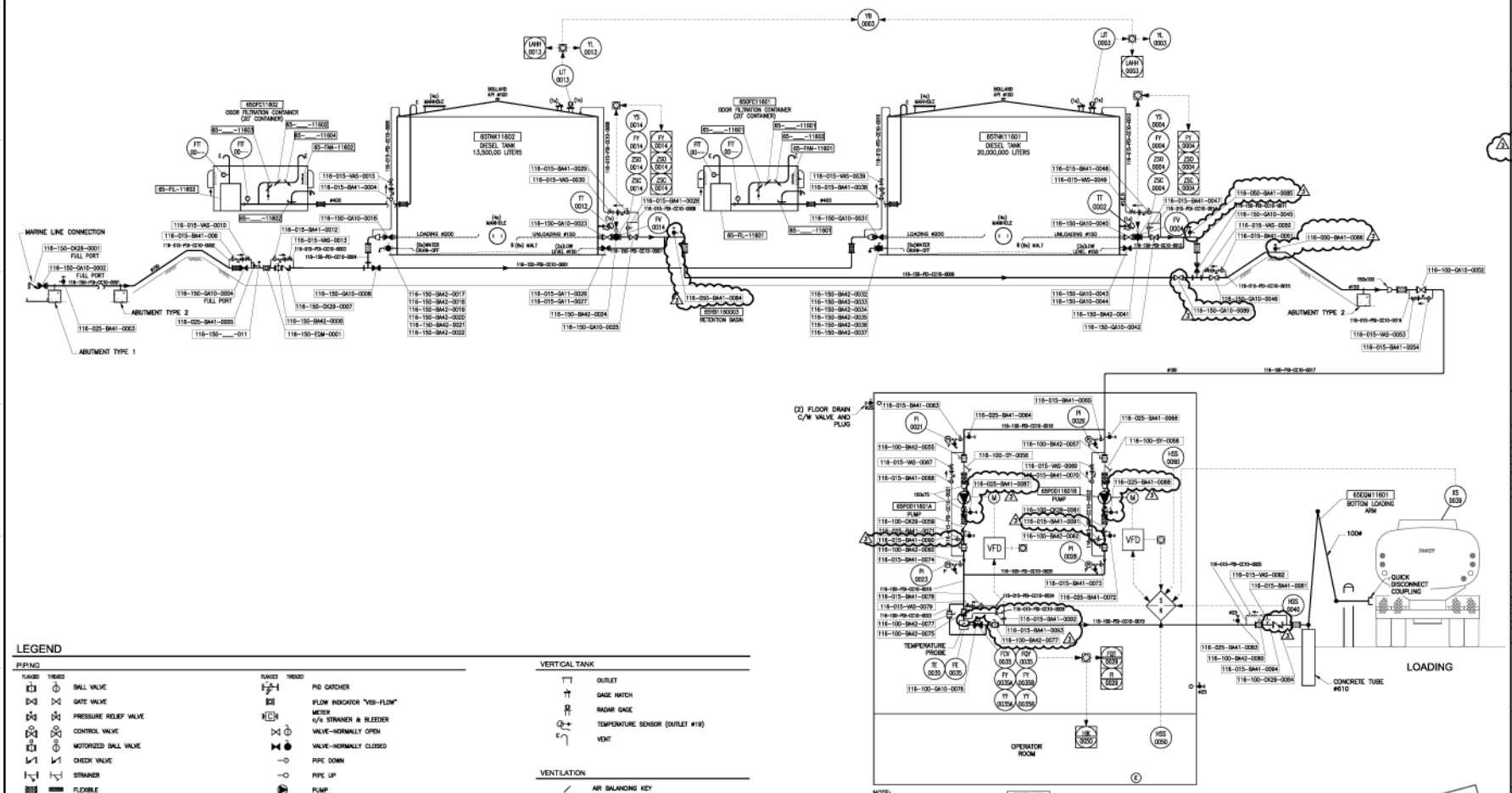

NOTE:
INSTALL DRAIN VALVE #25
WITH PLUG AT LOW POINTS.

LEGEND

PIPING

FLANGED	THREADED		FLANGED	THREADED	
		BALL VALVE			PIG CATCHER
		GATE VALVE			FLOW INDICATOR "VISI-FLOW"
		PRESSURE RELIEF VALVE			METER c/s STRAINER & BLEEDER
		CONTROL VALVE			VALVE-NORMALLY OPEN
		MOTORIZED BALL VALVE			VALVE-NORMALLY CLOSED
		CHECK VALVE			PIPE DOWN
		STRAINER			PIPE UP
		FLEXIBLE			PUMP
		REDUCER			PRESSURE RELIEF VALVE KIT: PIPING #12,5 SCH. 80, PRESSURE RELIEF VALVE (AJUSTED TO 5 PSI UNLESS OTHERWISE SPECIFIED), UNION, T WITH PLUG & BALL VALVE
		UNION			
		FLANGES			
		BLANK FLANGE			PRESSURE GAGE TO VACUUM OF POMPE (VACUUM)
		CAP			PRESSURE GAGE TO DISHARGE OF PUMP (POSITIVE PRESSURE)
		CONNECTION			TEMPERATURE PROBE

VERTICAL TANK

- OUTLET
- GAGE HATCH
- RADAR GAGE
- TEMPERATURE SENSOR (OUTLET #19)
- VENT

VENTILATION

- AIR BALANCING KEY
- AIR PRESSURE RELIEF OR BACK-DRAFT DAMPER
- MANUEL FLAP
- AIR FLOW SWITCH

GENERAL

- EXTINGUISHER 20 BC

P&ID

SEE DWG 65-500-205-207

POUR CONSTRUCTION
FOR CONSTRUCTION
AGNICO EAGLE
DATE : 2018-04-16

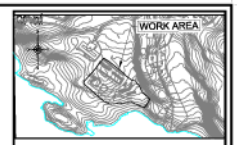

WSP

1075, 3e AVENUE E
VAL-D'OR (QUÉBEC) CANADA J9P 5N1
TÉL : 1-819-825-4711 | TÉLÉC : 1-819-825-4715 | WWW.WSPGROUP.COM
Ref. 181-08440-40

NOTES GÉNÉRALES / GENERAL NOTES

1. REPLACE DRAWING : 65-103-205-200
2. EQUIPMENTS NUMBERING AS PER AEM STANDARDS, DOCUMENTS: 0102-000-100-STD-002 & 0102-CDL-02
3. ALL DRAINS TO BE INSTALLED HORIZONTALLY.

DESSINS EN RÉFÉRENCE / REFERENCE DRAWINGS

TYPE / TITLE	# DWG

AGNICO EAGLE

REV.	DATE	DESCRIPTION	PAR/BY	APP.	CLIENT
3	2018-04-16	EQUIPMENTS ADDED	J.M.	S.T.	
2	2017-06-05	NUMBERING OF EQUIPMENTS	J.M.	S.T.	
1	2017-07-20	INSTRUMENTATION ADDED	F.M.G.	L.S.	
0	2017-05-31	ISSUED FOR CONSTRUCTION	J.M.	S.T.	

REVISIONS

TYPE / TITLE
AGNICO EAGLE – MELIADINE DIVISION
116 – FUEL TANK FARM
205 – P&ID
FUEL DISTRIBUTION
FLOW DIAGRAM

DESSINÉ PAR DRAWN BY	GHISLAINE CORNUT, tech.	DATE 2017-05-26
VÉRIFIÉ PAR CHECKED BY	JÖEL MORLIÈRE, tech.	2017-05-26
APPROUVÉ PAR APPROVED BY	DENIS THIBODEAU, P. Eng.	2017-05-26
ÉCHELLE SCALE	NONE	DATE 2017-05-26
NO. DESSIN DRAWING NO.	65-116-205-200	
NO. PROJET PROJECT NO.	6515	REVISION 3 / FEUILLE / SHT 1/1

AC-CART-ARCH D

\\CAMTL10A0001\projets\2019\1\181-08440-40\Genie Montique\Dwg\65-116-205-200_R3.dwg

FILE NO. 65-116-205-200_R3.dwg

NO. DESSIN
DRAWING NO. 65-116-210-200

FORMAT ARCH D

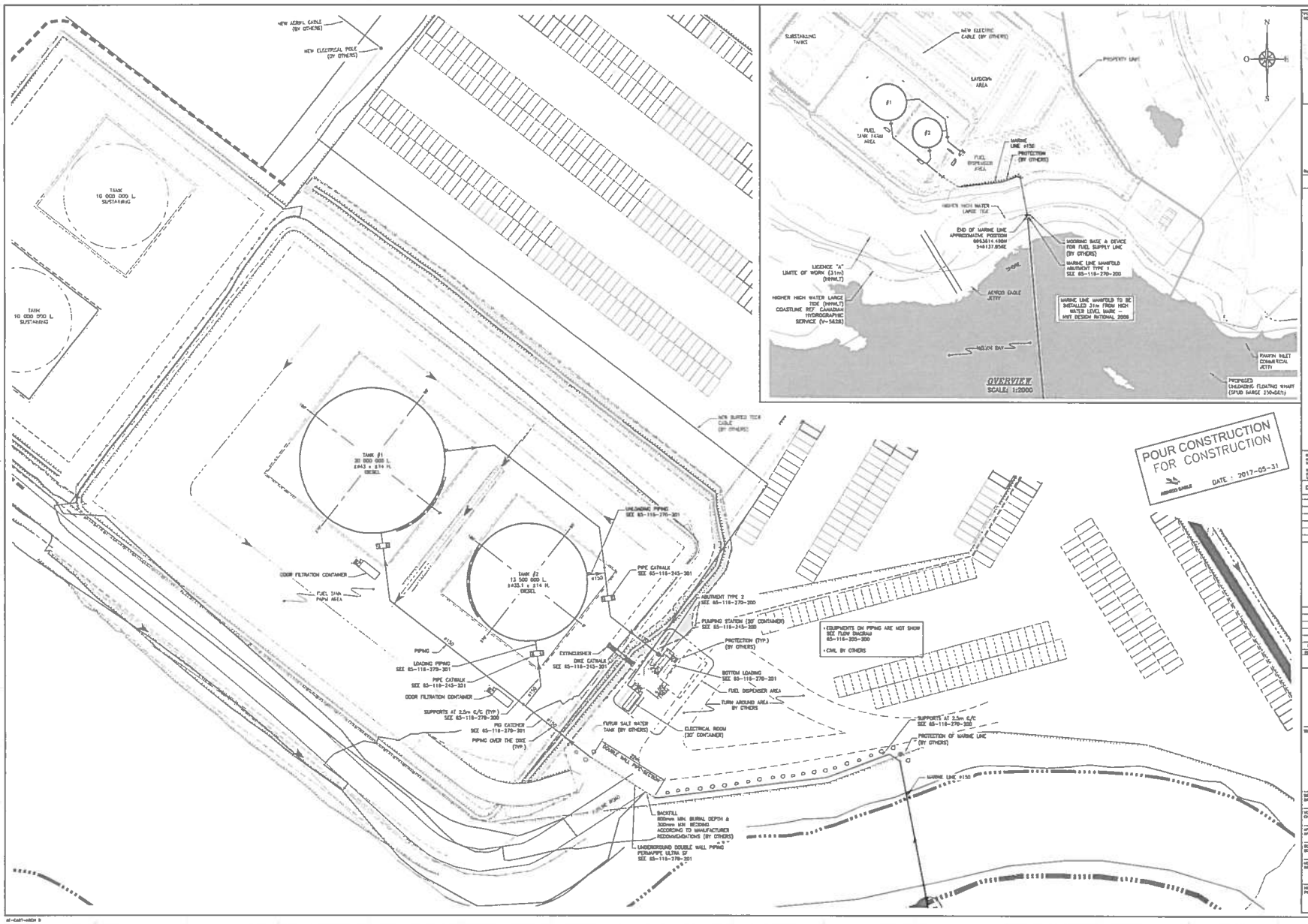

\\Cad\ti\6539\f\projets\2017\f\151-00040-00\dwns bentley\dwn\65-116-210-200_00.dwg - 2017-05-19 14:03:38

FILE NO. 65-116-210-200_00.dwg

NO. REVISION
DRAWING NO. 65-116-245-201

FORMAT ARCH D

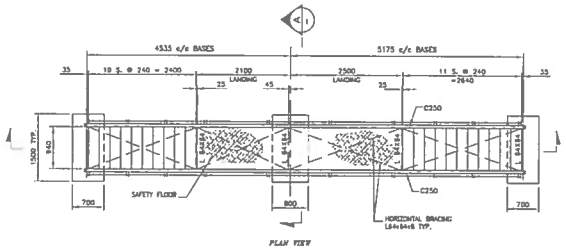

PLAN VIEW

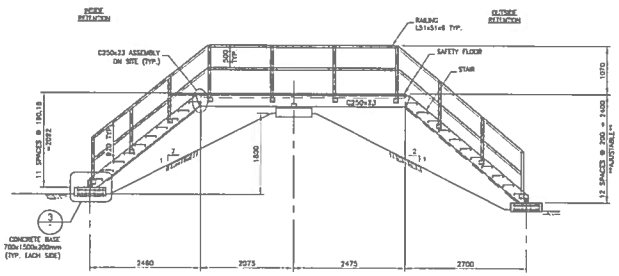

SECTION

DIKE CATWALK 1
SCALE: 1:50
QTY: 1

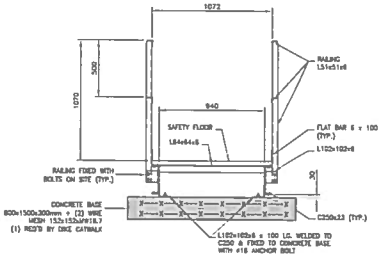

SECTION A
SCALE: 1.20

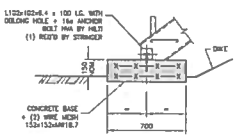

DETAIL 3
SCALE: 1:20

NOTES:

CATWALK, RAILINGS AND STAIRS ARE ASSEMBLED AND BOLTED ON SITE.

DEAD LOAD = 0.5 Kpa
LIVE LOAD = 4.8 Kpa
MAXIMUM ARROW = L/300

MATERIAL

GRATING OF LANDING

GRIP SPAN SAFETY GRATING, GALVANIZED STEEL, (D-5121S-G, 5 DIAMONDS, Ga 2.7mm, 38.1mm DEEP) BY FISHER LUDLOW OR APPROVED EQUIVALENT, MAX. 368mm WIDTH EXCEPT WHEN INDICATED DIFFERENTLY.

STAIR

GRIP SPAN SAFETY GRATING, GALVANIZED STEEL, (D-4121S-G, 4 DIAMONDS, Ga 2.7mm, 38.1mm DEEP) BY FISHER LUDLOW OR APPROVED EQUIVALENT, MAX. 241mm WIDTH EXCEPT WHEN INDICATED DIFFERENTLY.

POUR CONSTRUCTION
FOR CONSTRUCTION
AGNICO EAGLE
DATE : 2017-05-31

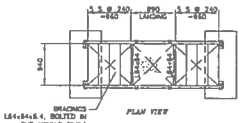

PLAN VIEW

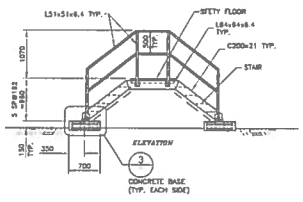

ELEVATION

PIPE CATWALK 2
SCALE: 1:50
QTY: 3

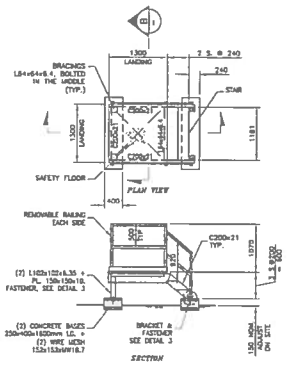

SECTION

CONTAINER CATWALK 2
SCALE: 1:50
(2) PUMPING STATION

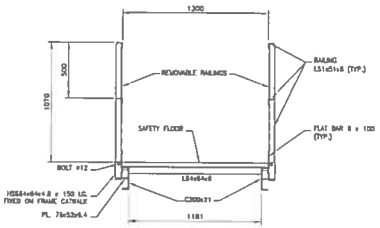

SECTION B
SCALE: 1.20



NOTES GENERALES / GENERAL NOTES

SEE SPECIFICATIONS

1. REPLACE DRAWING : 65-103-245-201

DESIGNS EN REFERENCE / REFERENCE DRAWINGS

ITEM / ÉLÉM.	# DWG

AGNICO EAGLE

NO.	DATE	DESCRIPTION	PAR. APP.	ÉQUIP.
0	2017-05-31	ISSUED FOR CONSTRUCTION	J.M.	G.T.

REVISIONS

DWG / DESSIN
AGNICO EAGLE – MEADOWBANK DIVISION
116 – FUEL TANK FARM
245 – STRUCTURAL STEEL
FUEL DISTRIBUTION
DIKE, PIPE & CONTAINERS CATWALKS

DESIGNED PAR DESSINÉ PAR	C. CORMIER	DATE 2017-05-29
VERIFIED PAR VÉRIFIÉ PAR	J. MORLIERE, Tech.	2017-05-29
APPROVED PAR APPROUVÉ PAR	D. THIBODEAU, P. Eng.	2017-05-29
SCALE ÉCHELLE	INDICATED	DATE 2017-05-29

NO. DESSIN DRAWING NO. 65-116-245-201

NO. PROJET PROJECT NO.	REVISION	FEUILLE / SHT
6515	0	1 / 1

sf-CAD7-ARCH D

\\CAM1_1DATA1\Projects\13818\P\151-06410-00\Data Distribution\Dwg\65-116-245-201_RD.dwg

FILE NO. 65-116-245-201_RD.dwg

NO. DESSIN Drawing no.	65-116-260-200

FORMAT ARCH D

NEW TANK #1 - DIESEL

SPECIFICATIONS:
NOMINAL DIAMETER (METERS): ±43m
ORIGINAL NOMINALE HEIGHT (METERS): ±14m
NOMINAL CAPACITY: 20,000,000 liters

no.	QTY	DESCRIPTION	REMARKS
1	4	ø600 ROOF MANHOLE	TO API 650 STANDARDS
2	4	ø900 SHELL MANHOLE	TO API 650 STANDARDS
3	1	ø100 PAINTER SCAFFOLD CABLE SUPPORT	TO API 650 STANDARDS
4	4	SHELL NOZZLE - INLET/OUTLET	TO API 650 STANDARDS
5	-	VENT OPENING	TO API 2000 & 650 STANDARDS, DIAMETER & QTY TO BE DETERMINE BY THE MANUFACTURER, SEE DETAIL
6	6	WATER DRAW-OFF	TO API 650 STANDARDS, SEE DETAIL
7	2	ROOF PRESSURE RELIEF LINE CONNECTION, HALF COUPLING ø25 (THREADED)	TO API 650 STANDARDS & MBC
8	1	ROOF ø150 GAUGE HATCH	TO API 650 STANDARDS, SEE DETAIL
9	1	FIXED PIPE - TANK LOADING ø200 x 14.3m LG.	TO API 650 STANDARDS
10			
11			
12	2	SHELL BRACKET FOR PIPING & CONDUIT	SEE DETAIL
13			
14	1	ROOF INSPECTION FRAME	TO API 650 STANDARDS
15	1	ROOF GUARDRAIL	TO API 650 STANDARDS & MBC
16	1	SPIRAL STAIRWAY, GUARDRAIL & HANDRAIL	TO API 650 STANDARDS & MBC
17	1	FIXED PIPE - TANK UNLOADING ø150 x 14.3m LG.	TO API 650 STANDARDS
18	2	PUMPING LOW LEVEL ø150	TO API 650 STANDARDS, SEE DETAIL
19	8	GROUNDING LUG	TO API 650 STANDARDS, SEE DETAIL
20	1	ROOF NOZZLE ø200 FOR OVERFILL PROTECTION	TO API 650 STANDARDS, SEE DETAIL

NOTE:

1. APPROXIMATIVE STAIRWAY LOCATION: CONTRACTOR HAVE TO ENSURE A MINIMUM CLEARANCE OF 1000mm IN ELEVATION BETWEEN STAIRS AND ANY SHELL CONNECTION

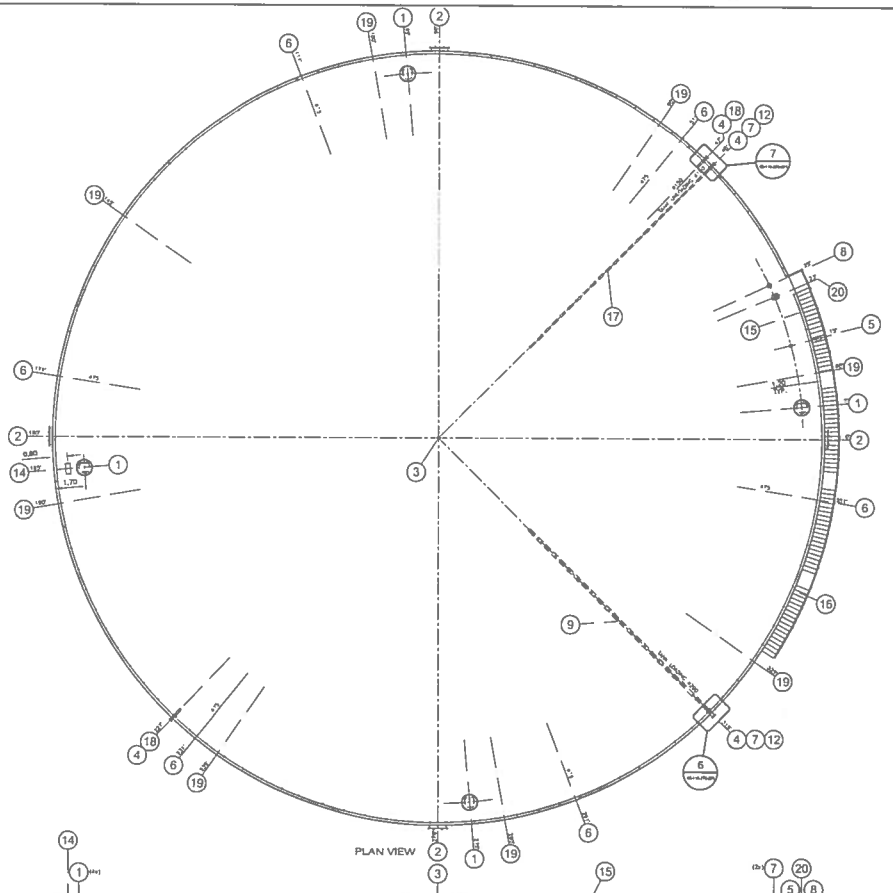

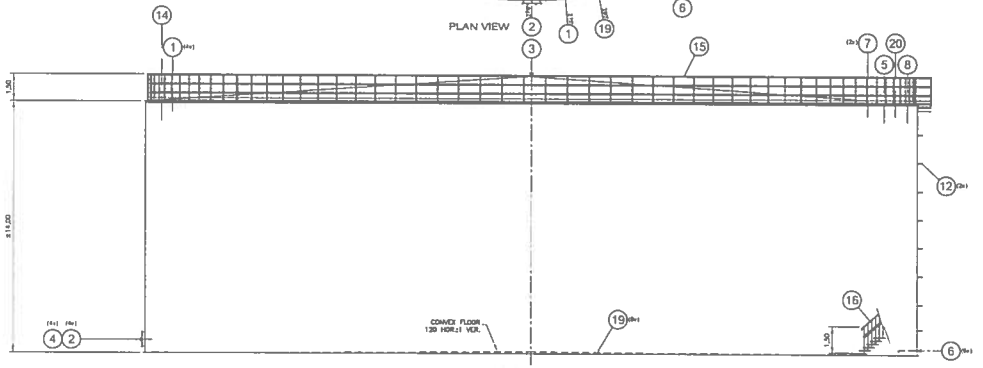

POUR CONSTRUCTION
FOR CONSTRUCTION
ARMOR BARLO
DATE : 2017-05-31



WSP
1075 3e AVENUE EST
VAL-D'OR (QUÉBEC) CANADA J9P 0J7
TÉL.: 819 825-4214 | TÉLÉC.: 819 824-1414 WWW.WSPGROUP.COM

Ref. 181-00440-40

NOTES GÉNÉRALES / GENERAL NOTES

1. TANK DIMENSIONS ADJUSTED ACCORDING TO INFORMATION PROVIDED BY CONTRACTOR
2. REPLACE DRAWING : 65-103-260-200

DESSINS DE RÉFÉRENCE / REFERENCE DRAWINGS

TITRE / TITLE	# (REV.)

AGNICO EAGLE

REV.	DATE	DESCRIPTION	PRÉP. / BY	APP.	P.I. APP.
0	2017-05-31	ISSUED FOR CONSTRUCTION	J.A.	G.T.	

REVISIONS

PERMIT TO PRACTICE
WSP CANADA INC.
AUTHORIZATION
2017-05-29

TITRE / TITLE
AGNICO EAGLE – MEADOWBANK DIVISION
116 – FUEL TANK FARM
260 – PLATEWORK
TANK #1 – 20,000,000 liters
ø43m x 14m H.
GENERAL ARRANGEMENT

DESSINÉ PAR Drawn BY	GHISLAINE CORMIER	DATE 2017-05-29
VÉRIFIÉ PAR CHECKED BY	JOEL MORLIERE, tech.	2017-05-29
APPROUVÉ PAR APPROVED BY	DENIS THEBODEAU, ing.	2017-05-29
ÉCHELLE SCALE	1:125	DATE 2017-05-29
NO. DESSIN Drawing NO.	65-116-260-200	
NO. PROJET PROJECT NO.	6515	REVISION 0
FEUILLE / SHT	1 / 1	

M=MM/MM=INCH ⊕

\\Cad\LVDATA\projets\2015\15_1\181-00440-40\Divers Montreal\Dwg\65-116-260-200-REL.dwg-2017-05-19 14:03:28

FILE NO. 65-116-260-200.dwg

NO. SESSION
Shortcut NO. 65-116-260-202

FORMAT ARCH D

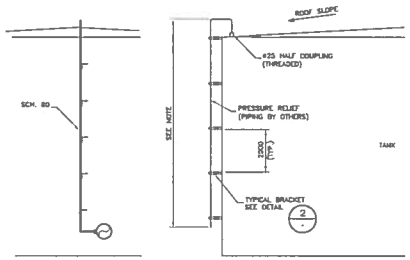

NOTE:
WELDED JOINTS & TESTED ON THIS SECTION (NOT THREADED JOINTS)

1 — PRESSURE RELIEF LINE
Detail — NTS

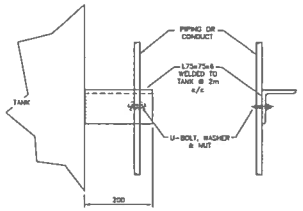

NOTE: FOR ITEMS 8 & 13

2 — BRACKET FOR PIPING OR ELECTRICAL CONDUIT TO THE SHELL TANK
Detail — scale 1:5

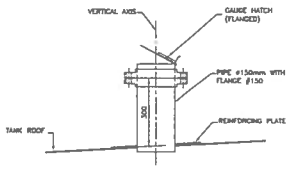

3 — GAUGE HATCH
Detail — scale 1:10

POUR CONSTRUCTION
FOR CONSTRUCTION
DATE : 2017-05-31

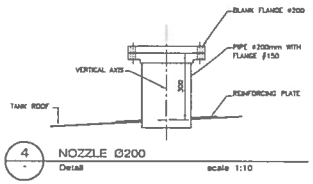

4 — NOZZLE Ø200
Detail — scale 1:10

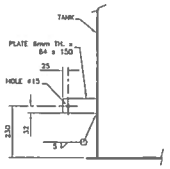

6 — GROUNDING LUG
Detail — scale 1:10

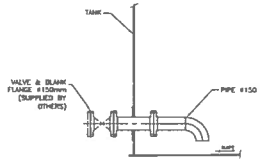

7 — PUMPING LOW LEVEL
Detail — scale 1:20

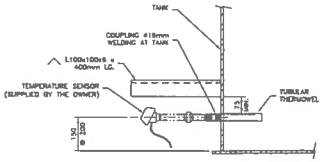

8 — TEMPERATURE SENSOR ON SHELL TANK
Detail — scale 1:10

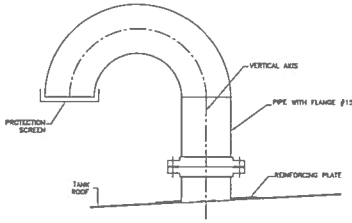

5 — VENT
Typical detail — scale 1:10

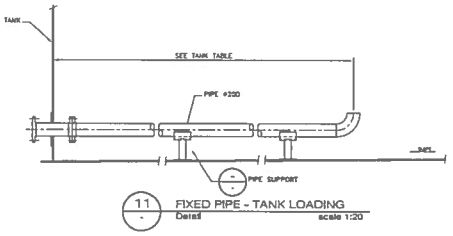

11 — FIXED PIPE - TANK LOADING
Detail — scale 1:20

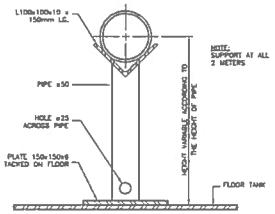

9 — PIPE SUPPORT
Detail — scale 1:5

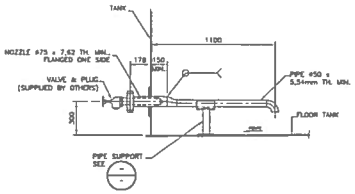

10 — WATER DRAW-OFF
Detail — scale 1:20

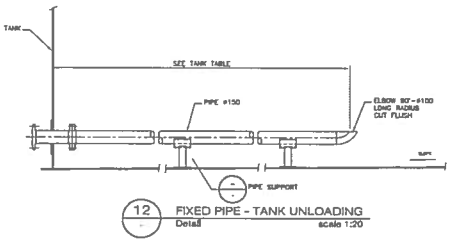

12 — FIXED PIPE - TANK UNLOADING
Detail — scale 1:20



WSP
1075, 3e AVENUE EST
VAL-D'OR (QUÉBEC) CANADA J9P 0L7
TEL.: 819 825-0374 | TÉLÉC.: 819 824-1544 | WWW.WSPGROUP.COM

NOTES GÉNÉRALES / GENERAL NOTES

1. REPLACE DRAWING : 65-103-260-202

DESSINS EN RÉFÉRENCE / REFERENCE DRAWINGS

NUMÉRO / TITLE	# (MM)

AGNICO EAGLE

NO.	DATE	DESCRIPTION	DES.	APP.
0	2017-05-31	ISSUED FOR CONSTRUCTION	J.M.	G.T.

REVISIONS

TITRE / TITLE
AGNICO EAGLE – MEADOWBANK DIVISION
116 – FUEL TANK FARM
260 – PLATEWORK
TANK #1 @ #6
DETAILS

DESSINÉ PAR / Drawn BY	ONELAINE CORNUT	2017-05-29
VÉRIFIÉ PAR / CHECKED BY	JOEL MORLIÈRE, Ing.	2017-05-29
APPROUVÉ PAR / APPROVED BY	DENIS THIBODEAU, Ing.	2017-05-29
ÉCHELLE / SCALE	INDICATED	DATE 2017-05-29

NO. SESSION / Shortcut NO.
65-116-260-202

NO. PROJET / PROJECT NO.	REVISION	FEUILLE / SHT
6515	0	1/1

A1 – CAN – ARCH D

\\Cad\1104\N\projets\13019\1\131-65x40-GP\dwg\Dessin\65-116-260-202-REL.dwg – 2017-05-19 14:08:38

FILE NO. 65-116-260-202-REL.dwg

NO. DESSIN
DRAWING NO. 65-116-270-200

FORMAT ARCH D

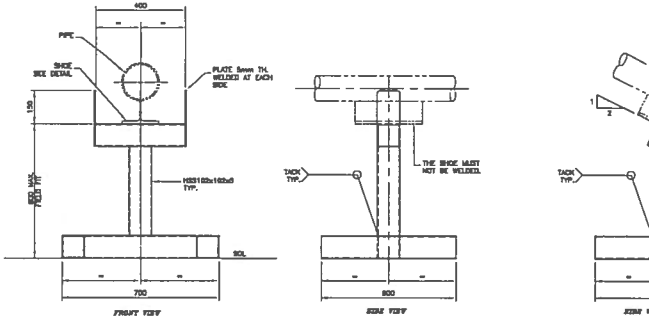

NOTE:
1. GROUND FOR THE SUPPORT TO BE FLAT AND STABLE. PAD WITH NATURAL GRANULAR BACKFILL IF NEEDED.

PIPING SUPPORT 1
SCALE: 1:10

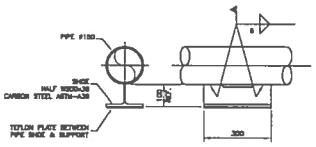

PIPE SHOE 2
SCALE: 1:10

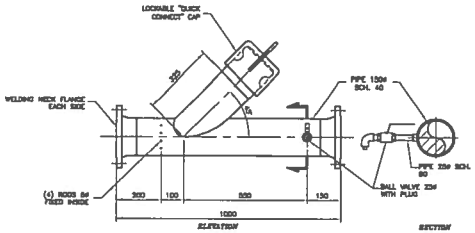

PIC CATCHER 8
SCALE: 1:10

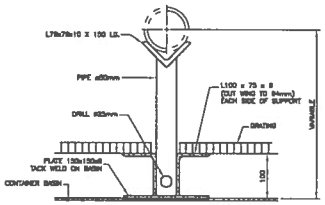

NOTE:
GRATING CUT ON SITE AROUND SUPPORT

SUPPORT INSIDE PUMPING STATION 9
SCALE: 1:5

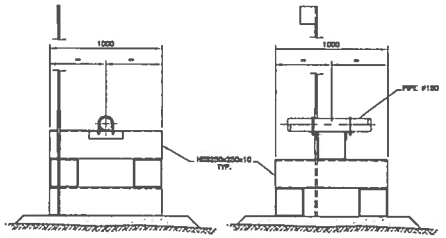

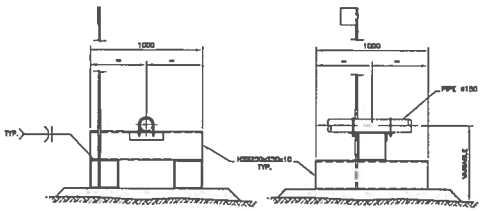

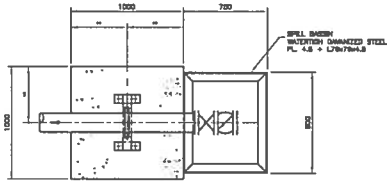

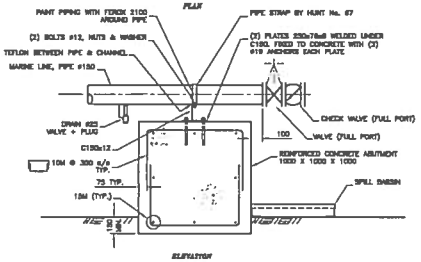

MARINE LINE MANIFOLD ABUTMENT-TYPE 1 4
SCALE: 1:20
QTY: 1

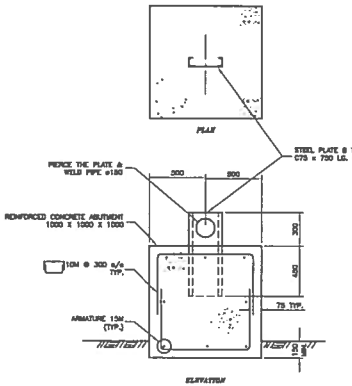

ABUTMENT-TYPE 2 5
SCALE: 1:20
QTY: 1

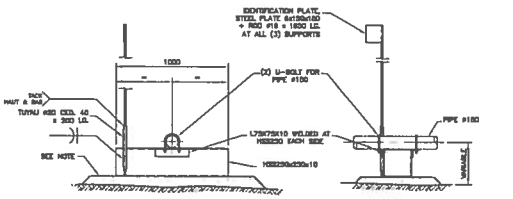

NOTE:
1. GROUND FOR THE SUPPORT TO BE FLAT AND STABLE. PAD WITH NATURAL GRANULAR BACKFILL IF NEEDED.

MARINE LINE SUPPORT 3
SCALE: 1:20

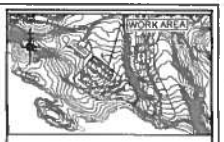

WSP
1611 3e AVENUE EST
VAL-D'OR (QUÉBEC) CANADA J9P 0J7
TEL.: 819 825-2174 | TÉLÉC.: 819 824-1541 | www.wspgroup.ca
Rés. 101-65040-00

NOTES GÉNÉRALES / GENERAL NOTES

1. REPLACE DRAWING : 65-103-270-300

POUR CONSTRUCTION
FOR CONSTRUCTION
DATE : 2017-05-31

DESSINS DE RÉFÉRENCE / REFERENCE DRAWINGS

TITRE / TITLE	# DWG

AGNICO EAGLE

#	DATE	DESCRIPTION	VÉRIFIÉ APPR.	DATE
0	2017-05-31	ISSUED FOR CONSTRUCTION	JJL	S.T.

REVISIONS

TITRE / TITLE
AGNICO EAGLE – MEADOWBANK DIVISION
116 – FUEL TANK FARM
270 – PIPING
FUEL DISTRIBUTION
DETAILS

DESSINÉ PAR / DRAWN BY	G. CORNUT	DATE 2017-05-29
VÉRIFIÉ PAR / CHECKED BY	J. MORISSET, biom.	2017-05-29
APPROUVÉ PAR / APPROVED BY	D. THIBODEAU P. Eng.	2017-05-29
ÉCHELLE / SCALE	INDICATED	DATE 2017-05-29

NO. DESSIN / DRAWING NO. 65-116-270-200

NO. PROJET / PROJECT NO.	REVISION	FEUILLE / SHT
8515	0	1/1

FILE NO. 65-116-270-200_R0.dwg

65-116-270-201

FORMAT ARCH D

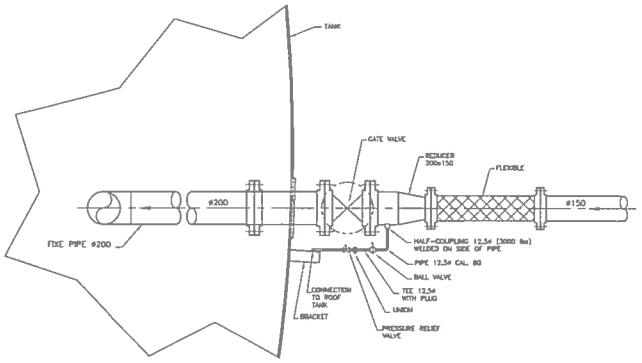

LOADING TANK PIPING 6
SCALE: 1:15

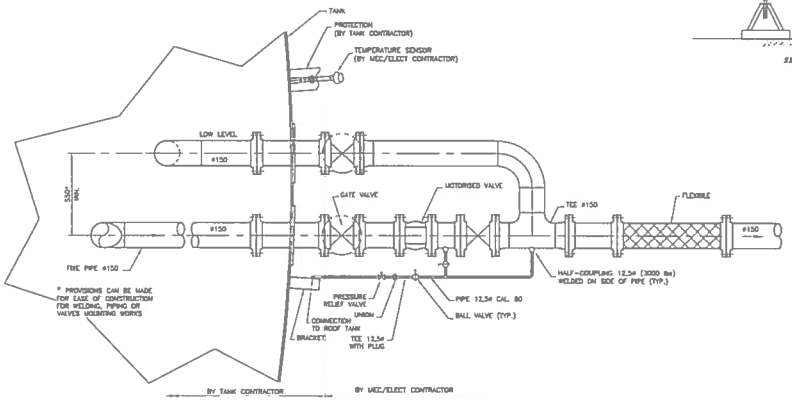

UNLOADING TANK PIPING 7
SCALE: 1:15

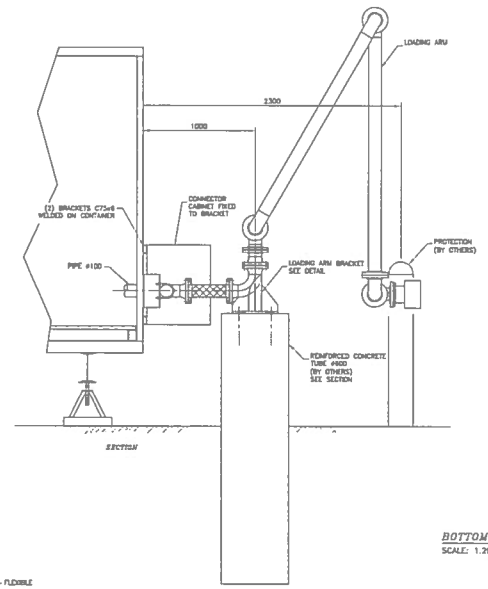

SECTION

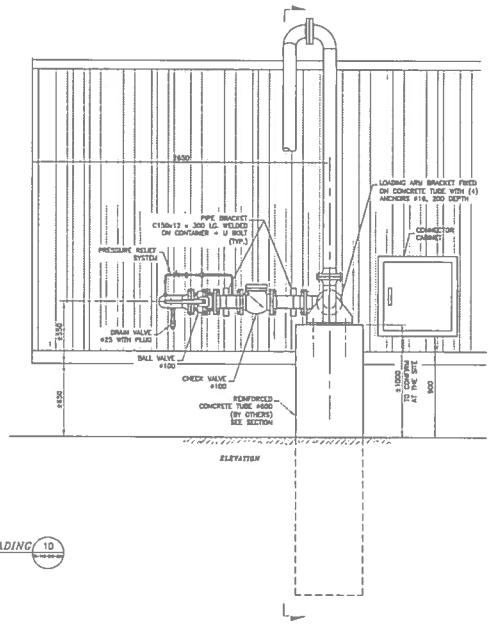

ELEVATION

BOTTOM LOADING 10
SCALE: 1:20

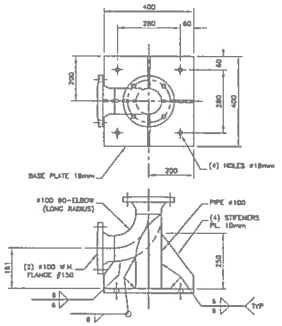

LOADING ARM BRACKET 11
SCALE: 1:10

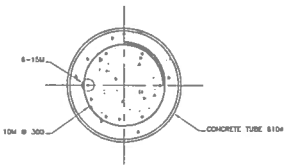

CONCRETE TUBE SECTION 12
SCALE: 1:10

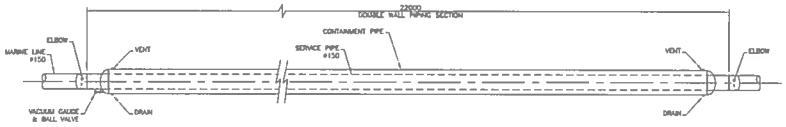

UNDERGROUND PIPING 13
SCALE: 1:25



WSP
1075, 3e AVENUE EST
VAL-D'OR (QUÉBEC) CANADA J9P 0J2
TÉL.: 819 825-4274 | TÉLÉC.: 819 824-1241 | WWW.WSPGROUP.COM
Ref. 151-00440-40

NOTES GENERALES / GENERAL NOTES

1. REPLACE DRAWING : 65-103-270-201

POUR CONSTRUCTION
FOR CONSTRUCTION
AGNICO EAGLE
DATE : 2017-05-31

DESSINS EN REFERENCE / REFERENCE DRAWINGS

PCM / PCL	# dwg

AGNICO EAGLE

DATE	DESCRIPTION	PCM/PCL	APP. CLIENT
0 2017-05-31	ISSUED FOR CONSTRUCTION	J.M.	G.C.

REVISIONS

TITRE / TITLE
AGNICO EAGLE – MEADOWBANK DIVISION
116 – FUEL TANK FARM
270 – PIPING
FUEL DISTRIBUTION
DETAILS

DESSINÉ PAR DRAWN BY	C. CORMIER	2017-05-25
VÉRIFIÉ PAR CHECKED BY	J. MORIJERE, tech.	2017-05-25
APPROUVÉ PAR APPROVED BY	D. THIBODEAU, P. Eng.	2017-05-25
ÉCHELLE SCALE	INDICATED	DATE 2017-05-25
NO. DESSIN DRAWING NO.	65-116-270-201	
NO. PROJET PROJECT NO.	6515	REVISION 0
		FEUILLE / SHT 1 / 1

\\Cad\fl_104301\projets\3819\f\151-00440-40\Dwg mandeq\Dwg\65-116-270-201_00.dwg

FILE NO. 65-116-270-201_00.dwg

65-ULT-116-MP-001

FORMAT ARCHD

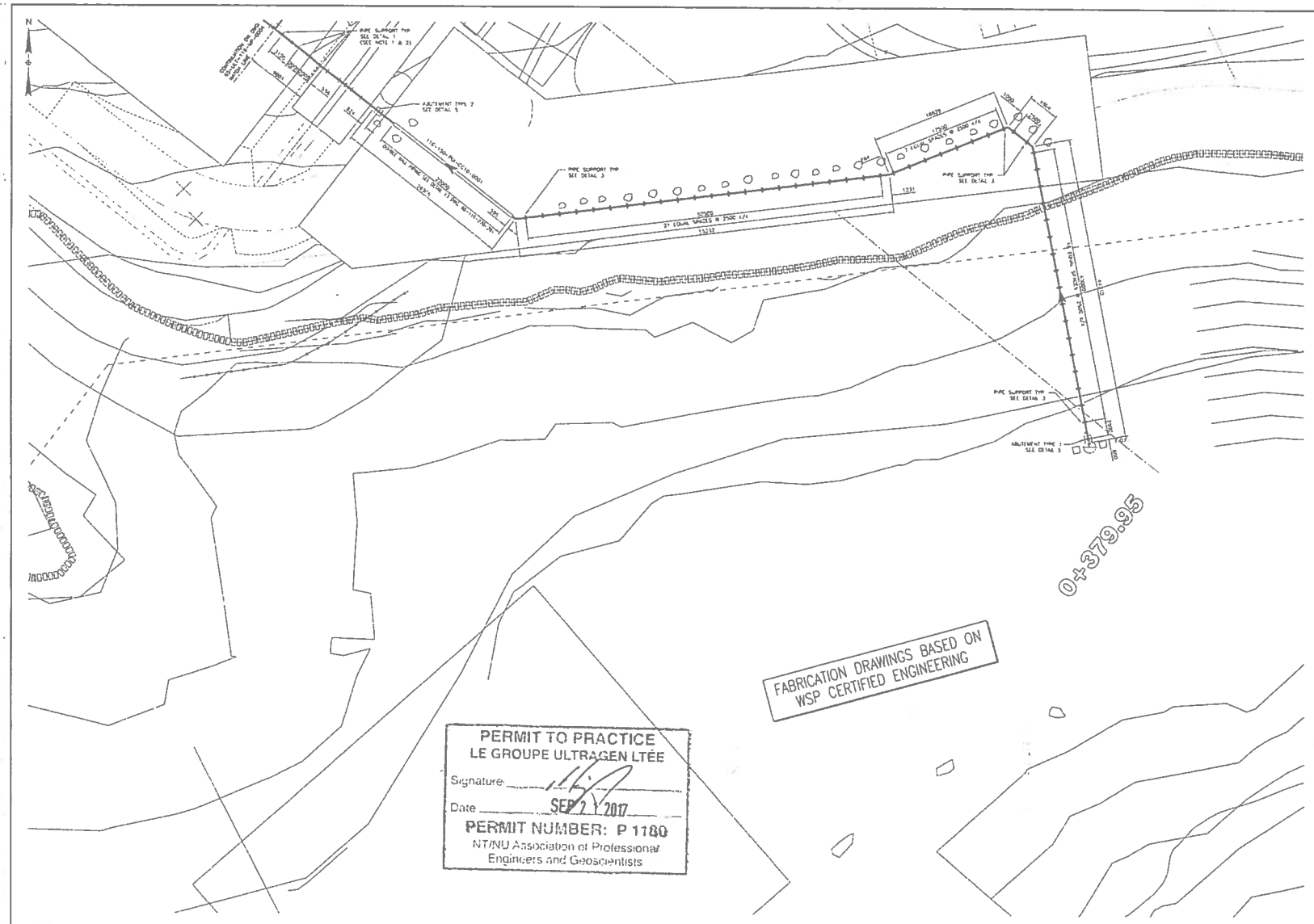

PERMIT TO PRACTICE
LE GROUPE ULTRAGEN LTÉE
Signature
Date SEP 2 1 2017
PERMIT NUMBER: P 1180
NT/NU Association of Professional Engineers and Geoscientists



NOTES GENERALES / GENERAL NOTES

1. GUIDES SHALL BE PLACED AT LEAST 40 TO 60 PIPE DIAMETERS AWAY FROM PIPE EXPANSION LOOPS OR CHANGES IN DIRECTION.
2. IN GENERAL GUIDES USED ON LINES ON 100 AND SMALLER ARE SPACED AT EVERY 10 PIPE DIAMETERS AND ON LINES ON 100 AND LARGER AT EVERY 20 PIPE DIAMETERS.

REGISTERED PROFESSIONAL ENGINEER
D TRUONG
LICENSEE
NT/NU
2017/09/21

DESSINS EN REFERENCE / REFERENCE DRAWINGS

TITRE / TITLE	DWG
GENERAL ARRANGEMENT – PLAN VIEW	65-ULT-116-MP-002
GENERAL ARRANGEMENT – PLAN VIEW	65-ULT-116-MP-003
FUEL DISTRIBUTION – FLOW DIAGRAM	65-116-205-200
PIPING & PIPE SUPPORT DETAILS	65-116-270-250
PIPING DETAILS	65-116-270-201

AGNICO EAGLE

REV	DATE	DESCRIPTION	DRAWN BY	CHECKED BY
2	2017-09-21	PROJECT TITLE REVISED		
1	2017-09-11	LINE NUMBERS REVISED		
0	2017-09-11	ISSUED FOR CONSTRUCTION		

REVISIONS

NUCLEAR PROJECT MANAGEMENT

ultragen

NO. PROJET / PROJECT NO. 591700

TITLE / TITLE
AGNICO EAGLE – MELIADINE DIVISION
116 – FUEL TANK FARM
FUEL DISTRIBUTION
GENERAL ARRANGEMENT
PLAN VIEW

DESSINÉ PAR / DRAWN BY	A. HEBERT	DATE	2017-03-10
VERIFIÉ PAR / CHECKED BY	–		–
APPROUVÉ PAR / APPROVED BY	–		–
ÉCHELLE / SCALE	1 = 200	DATE	2017-04-28

NO. DESSIN / DRAWING NO. 65-ULT-116-MP-001

NO. PROJET / PROJECT NO. 6515 | REVISION 2 | ÉCHELLE / SHEET 1/1

FILE NO. 65-ULT-116-MP-001.dwg

65-ULT-116-MP-002

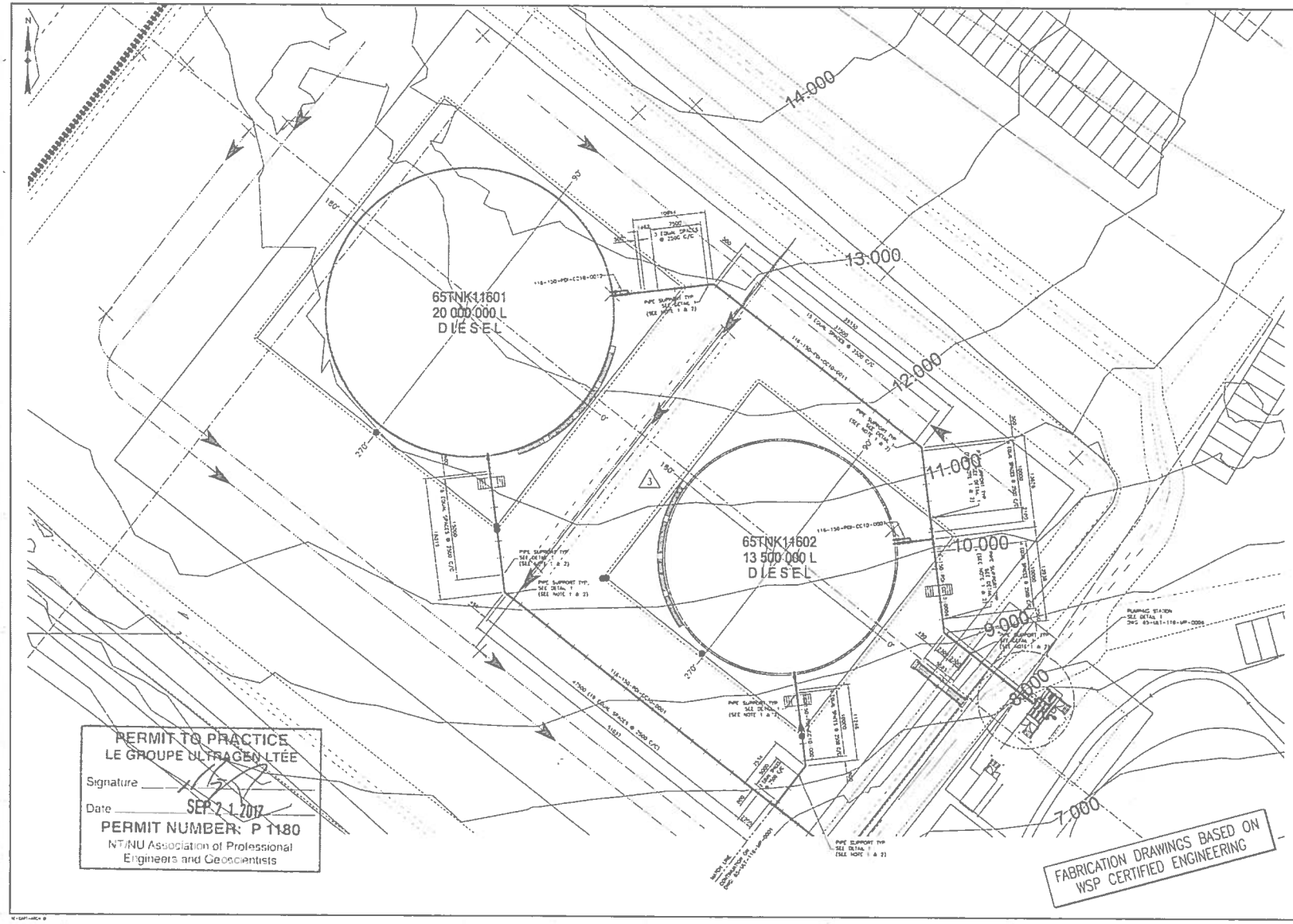



NOTES GENERALES / GENERAL NOTES

1. GUIDES SHALL BE PLACED AT LEAST 40 TO 80 PIPE DIAMETERS AWAY FROM PIPE EXPANSION LOOPS OR CHANGES IN DIRECTION.
2. IN GENERAL, GUIDES USED ON LINES IN TRENCHES AND SHALLOW ARE CLEARANCES AT EACH SIDE AND SUPPORT AND ON LINES ON THE HIGH LEVELS OF EACH PIPE SUPPORT.

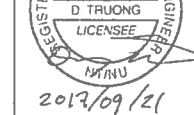

DESSINS EN REFERENCE / REFERENCE DRAWINGS

NO. / No.	TITRE / TITLE
GENERAL ARRANGEMENT PLAN VIEWS	65-ULT-116-MP-001
GENERAL ARRANGEMENT PLAN VIEWS	65-ULT-116-MP-002
FUEL DISTRIBUTION - FLOW DIAGRAM	65-116-PID-200
PIPING & PIPE SUPPORT DETAILS	65-116-PID-201
PIPING DETAILS	65-116-PID-202
GROUP & ARRANGEMENT OF PIPE SUPPORTS	65-116-PID-300

AGNICO EAGLE

NO.	DATE	REVISIONS	BY
3	2017-09-21	PROJECT ISSUE REVISED	MMF
2	2017-09-15	CLIENT COMMENTS REVISED	TMG
1	2017-09-01	SCALE FOR CERTIFICATION	MMF
0	2017-08-18	ISSUED FOR CERTIFICATION	MMF

ultragen

NO. PROJET / PROJECT NO. 581700

TITRE / TITLE
AGNICO EAGLE - MEADOWBANK DIVISION
116 - FUEL TANK FARM
FUEL DISTRIBUTION
GENERAL ARRANGEMENT
PLAN VIEWS

DESSINÉ PAR / DRAWN BY	A. HEBERT	DATE 2017-08-18
VÉRIFIÉ PAR / CHECKED BY	-	
APPROUVÉ PAR / APPROVED BY		
ÉCHELLE / SCALE	1 = 250	DATE 2017-04-28

NO. DU DESSIN / DRAWING NO.
65-ULT-116-MP-002

NO. PROJET / PROJECT NO. 6515

RÉVISION / REVISION 2

PERMIT TO PRACTICE
LE GROUPE ULTRAGEN LTÉE
Signature
Date SEP 2 1 2017
PERMIT NUMBER: P 1180
NT/NU Association of Professional Engineers and Geoscientists

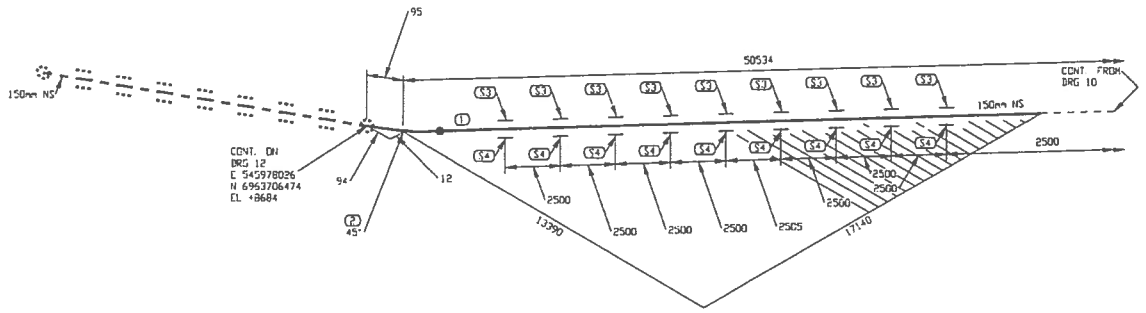

PERMIT TO PRACTICE
LE GROUPE ULTRAGEN LTÉE
Signature SEP 21 2017
Date
PERMIT NUMBER: P 1180
NT/NU Association of Professional Engineers and Geoscientists

FABRICATION DRAWINGS BASED ON WSP CERTIFIED ENGINEERING

LISTE DE MATERIEL

No	QTE	DIA	MATERIEL/CATALOGUE	DESCRIPTION
1	21655 MM	150	A 333 Gr 6	SCH STD, SMLS PIPE
2	1	150	A 420 Gr WPL6	SCH STD, BW LR 45 DEG ELBOW
3	9	150		PIPE SUPPORT AS PER DETAIL 1, DWG 65-116-270-200
4	9	150		PIPE SHOE AS PER DETAIL 2, DWG 65-116-270-200

No.	DATE	REVISION	PAR / APP.
2	2017/09/21	PROJECT TITLE REVISED	KHV
1	2017/09/11	LINE NUMBERS REVISED	KHV
0	2017/05/15	ISSUED FOR CONSTRUCTION	KHV

CLIENT: AGNICO EAGLE

NUOSANA PROMEC MINING

ultragen

CONSULTANT PROJECT NO. 591700

NO. DE CONDUITE		SPECIFICATION	PRODUIT	SYSTEME REVETEMENT	CODE DE COULEUR	ISOLATION ET TRAÇAGE	EPAISS. D'ISOLATION		
116-150-PDI-CC10-0001		CC10	PDI		-			65-116-270-200	PIPE SUPPORT DETAILS
PRESSION D'OPERATION	TEMPERATURE D'OPERATION	PRESSION DE CONCEPTION	TEMPERATURE DE CONCEPTION	PRESSION D'ESSAI	CLASSE D'INSPECTION	CODE DE SERVICE	TRAITEMENT THERMIQUE	65-116-205-200	P&ID
PSIG	°F	PSIG	°F	PSIG				No. DESSIN	DESSINS DE REFERENCE

SCEAU PROFESSIONNEL
REGISTERED PROFESSIONAL ENGINEER
D. TRUONG
LICENSEE
NT/NU
2017/09/21

CONC.: KHV
DATE: 2017/04/25
DESSINÉ PAR: KVE
DATE: 2017/04/25
VER. PAR: -
DATE: -
APP.: -
DATE: -
ÉCHELLE: AUCUNE

PROJET: AGNICO EAGLE - MELIADINE DIVISION
116 - FUEL TANK FARM

TITRE: RANKIN INLET
FABRICATION ISOMETRIC
MARINE LINE TO 65TNK11601 & 65TNK11602

No PROJET	No DESSIN	PAGES	REV.
6515	116-150-PDI-CC10-0001	11/13	2

116-MN-01

IMPRIMÉ LE: Sep 20, 2017, 2:44pm

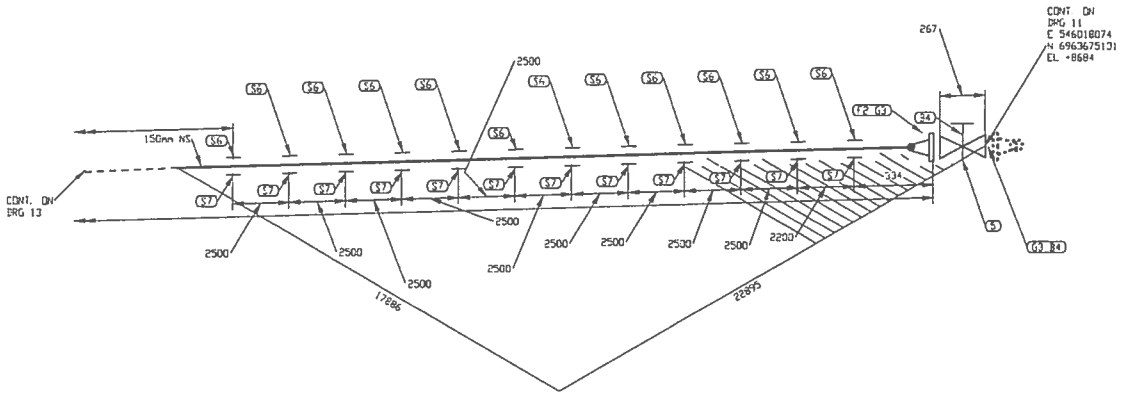

LISTE DE MATERIEL

No	QTE	DIA	MATERIEL/CATALOGUE	DESCRIPTION
1	28696 MM	150	A 333 Gr 6	SCH STD, SMLS PIPE
2	1	150	A 350 Gr LF2	CL 150, SCH STD, RF, WN FLANGE
3	2	150	ASME B16.20	CL 150, GARLOCK 5500, RING TYPE GASKET 1/8" THK
4	16	19	A 193 B7/A 194 2H	CL 150, Ø - 19.05 X 100 STUD BOLTS c/w TWO HEAVY HEX NUTS
5	1	150	GA-10	CL 150, RF, CS, GATE VALVE
6	12	150		PIPE SUPPORT AS PER DETAIL 1, DWG 65-116-270-200
7	12	150		PIPE SHOE AS PER DETAIL 2, DWG 65-116-270-200

PERMIT TO PRACTICE
LE GROUPE ULTRAGEN LTÉE
Signature
Date SEP 2 1 2017
PERMIT NUMBER: P 1180
NT/NU Association of Professional Engineers and Geoscientists

FABRICATION DRAWINGS BASED ON WSP CERTIFIED ENGINEERING

No.	DATE	REVISION	PAR APP.
2	2017/09/21	PROJECT TITLE REVISED	KHV
1	2017/09/11	LINE NUMBERS REVISED	KHV
0	2017/05/15	ISSUED FOR CONSTRUCTION	KHV

CLIENT: AGNICO EAGLE

NUQSANA-PROMEC MINING

Ultragen

CONSULTANT PROJECT NO. 591700

NO. DE CONDUITE		SPECIFICATION	PRODUIT	SYSTEME REVETEMENT	CODE DE COULEUR	ISOLATION ET TRACAGE	EPAISS. D'ISOLATION		
116-150-PDI-CC10-0001		CC10	PDI		-			65-116-270-200	PIPE SUPPORT DETAILS
PRESSION D'OPERATION	TEMPERATURE D'OPERATION	PRESSION DE CONCEPTION	TEMPERATURE DE CONCEPTION	PRESSION D'ESSAI	CLASSE D'INSPECTION	CODE DE SERVICE	TRAITEMENT THERMIQUE	65-116-205-200	P&ID
PSIG	°F	PSIG	°F	PSIG				No. DESSIN	DESSINS DE REFERENCE

REGISTERED PROFESSIONAL ENGINEER
D. TRUONG
LICENSEE
NT/NU
2017/09/21

CONC.: KHV DATE: 2017/04/25
DESSINÉ PAR: KVE DATE: 2017/04/25
VER. PAR: - DATE: -
APP.: - DATE: -
ÉCHELLE: AUCUNE

PROJET: AGNICO EAGLE - MELIADINE DIVISION
116 - FUEL TANK FARM

TITRE: RANKIN INLET
FABRICATION ISOMETRIC
MARINE LINE TO 65TNK11601 & 65TNK11602

No PROJET	No DESSIN	PAGES	REV.
6515	116-150-PDI-CC10-0001	12/13	2

116-MN-01

POWER: \\ Vancs1\eng\Modele\LYH.TKO (Last Refreshed by:KVB, Saved by:KVB, Name:Engineering\01. Revit Projects\116-150-PDI-CC10-0001-12.DWG
APPROVE LE Sep 20, 2017 2:44pm

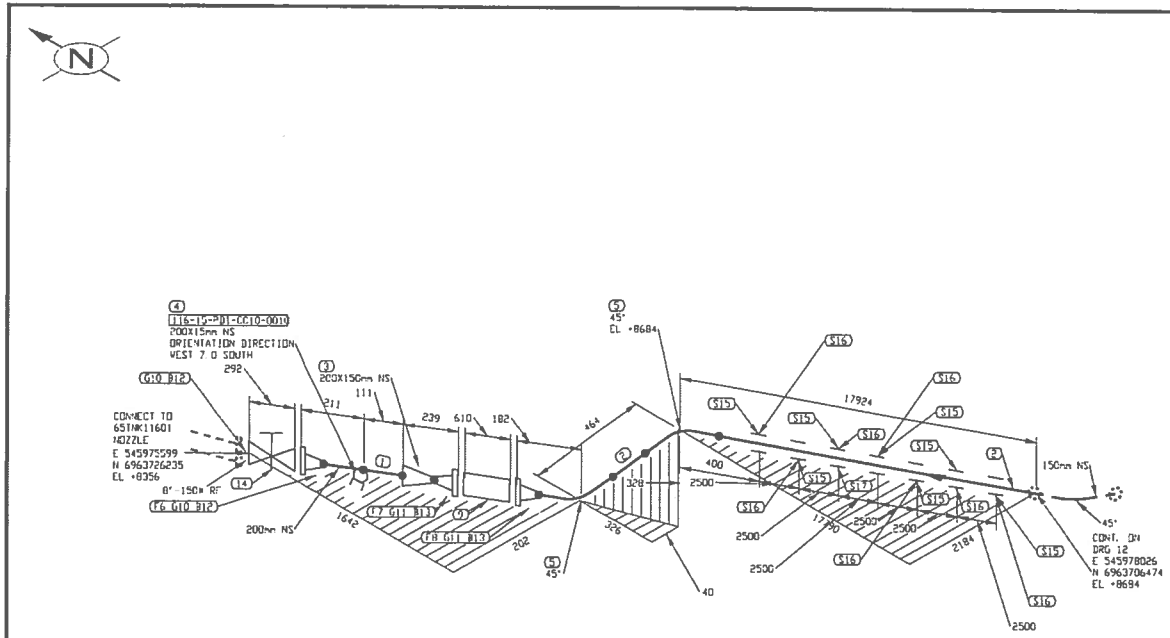

LISTE DE MATERIEL

No	QTE	DIA	MATERIEL/CATALOGUE	DESCRIPTION
1	222 MM	200	A 333 Gr. 6	SCH STD, SMLS PIPE
2	18103 MM	150	A 333 Gr. 6	SCH STD, SMLS PIPE
3	1	200X150	A 420 Gr. WPL6	SCH STD, BW CONC RED
4	1	200X15	A 350 Gr. LF2	CL 3000, THREDOLET
5	2	150	A 420 Gr. WPL6	SCH STD, BW LR 45 DEG ELBOW
6	1	200	A 350 Gr. LF2	CL 150, SCH STD, RF, WN FLANGE
7	1	150	A 350 Gr. LF2	CL 150, SCH STD, RF, WN FLANGE
8	1	150	A 350 Gr. LF2	CL 150, SCH STD, RF, WN FLANGE
9	1	150		CL 150, SINGLE BRAIDED HOSE ASSEMBLY
10	2	200	ASME B16.20	CL 150, GARLOCK 5500, RING TYPE GASKET 1/8" THK
11	2	150	ASME B16.20	CL 150, GARLOCK 5500, RING TYPE GASKET 1/8" THK
12	16	19	A 193 B7/A 194 2H	CL 150, 8 - 19.05 X 110 STUD BOLTS c/w TWO HEAVY HEX NUTS
13	16	19	A 193 B7/A 194 2H	CL 150, 8 - 19.05 X 100 STUD BOLTS c/w TWO HEAVY HEX NUTS
14	1	200	GA-10	CL 150, RF, CS, FULL PORT GATE VALVE
15	7	150		PIPE SUPPORT AS PER DETAIL 1, DWG: 65-116-270-200
16	7	150		PIPE SHOE AS PER DETAIL 2, DWG: 65-116-270-200
17	1	150		PIPE SHOE AS PER DETAIL 2, DWG: 65-116-270-200

PERMIT TO PRACTICE
LE GROUPE ULTRAGEN LTÉE
Signature
Date SEP 21 2017
PERMIT NUMBER: P 1180
NT/NU Association of Professional Engineers and Geoscientists

FABRICATION DRAWINGS BASED ON WSP CERTIFIED ENGINEERING

No.	DATE	REVISION	PAR / APP.
2	2017/09/21	PROJECT TITLE REVISED	KHV
1	2017/09/11	LINE NUMBERS REVISED	KHV
0	2017/05/15	ISSUED FOR CONSTRUCTION	KHV

CLIENT:

AGNICO EAGLE

NUQSANA PROMEC MINING

ultragen

CONSULTANT PROJECT NO. 591700

NO. DE CONDUITE		SPECIFICATION	PRODUIT	SYSTEME REVETEMENT	CODE DE COULEUR	ISOLATION ET TRACAGE	EPAISS. D'ISOLATION		
116-150-PDI-CC10-0001		CC10	PDI		-			65-116-270-200	PIPE SUPPORT DETAILS
PRESSION D'OPERATION	TEMPERATURE D'OPERATION	PRESSION DE CONCEPTION	TEMPERATURE DE CONCEPTION	PRESSION D'ESSAI	CLASSE D'INSPECTION	CODE DE SERVICE	TRAITEMENT THERMIQUE	65-116-205-200	P&ID
PSIG	°F	PSIG	°F	PSIG				No. DESSIN	DESSINS DE REFERENCE

SCEAU PROFESSIONNEL
REGISTERED PROFESSIONAL ENGINEER
D TRUONG
LICENSEE
NT/NU
2017/09/21

CONC.: KHV
DATE: 2017/04/25
DESSINE PAR: KVE
DATE: 2017/04/25
VER. PAR: -
DATE: -
APP.: -
DATE: -
ECHELLE: AUCUNE

PROJET: AGNICO EAGLE - MELIADINE DIVISION
116 - FUEL TANK FARM

TITRE: RANKIN INLET
FABRICATION ISOMETRIC
MARINE LINE TO 65TNK11601 & 65TNK11602

No PROJET	No DESSIN	PAGES	REV.
6515	116-150-PDI-CC10-0001	13/13	2

116-MN-01

IMPRIME LE Sep 20, 2017, 2:44pm

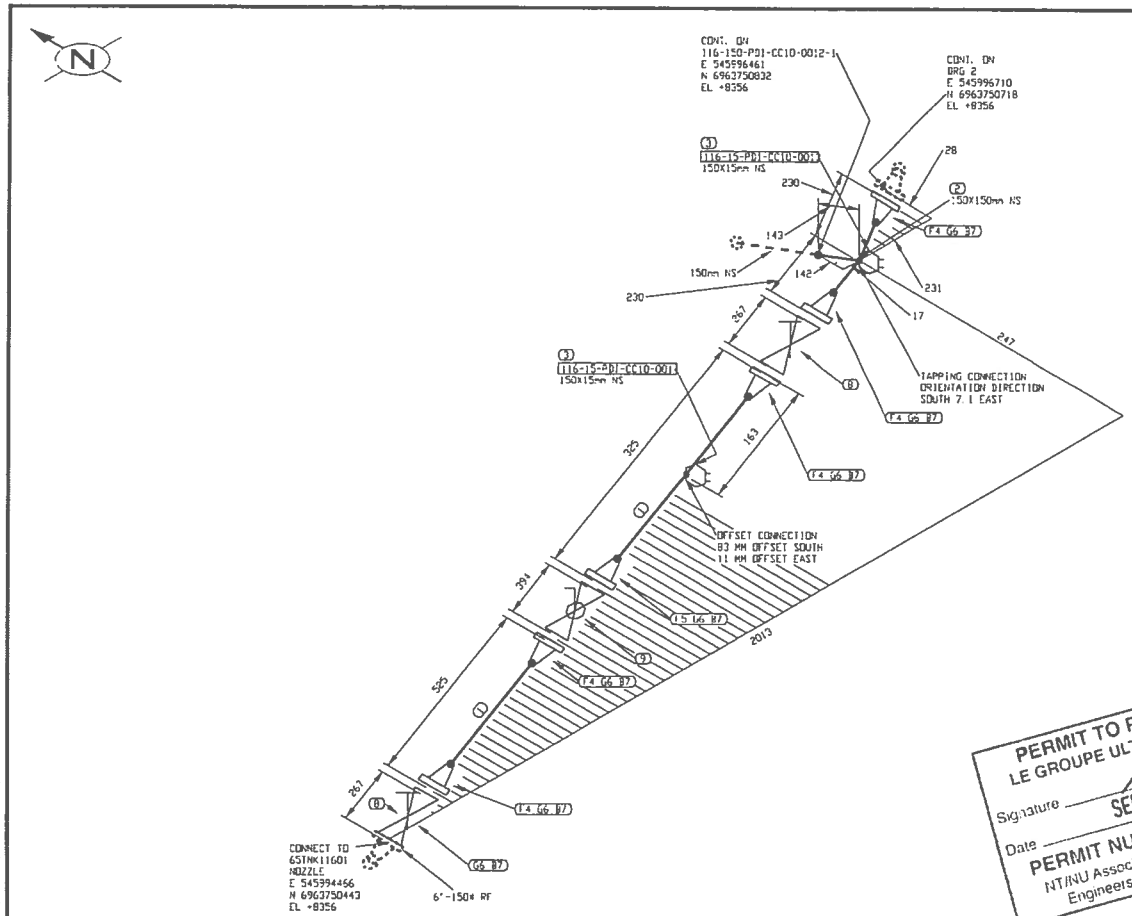

PERMIT TO PRACTICE
LE GROUPE ULTRAGEN LTEE
Signature
Date SEP 2 1 2017
PERMIT NUMBER: P 1180
NT/NU Association of Professional Engineers and Geoscientists

FABRICATION DRAWINGS BASED ON WSP CERTIFIED ENGINEERING

LISTE DE MATERIEL

No	QTE	DIA	MATERIEL/CATALOGUE	DESCRIPTION
1	502 MM	150	A 333 Gr. 6	SCH STD, SMLS PIPE
2	1	150X150	A 420 Gr. WPL6	SCH STD, BW STRAIGHT TEE
3	2	150X15	A 350 Gr. LF2	CL 3000, THREDOLET
4	5	150	A 350 Gr. LF2	CL 150, SCH STD, RF, WN FLANGE
5	1	150	A 350 Gr. LF2	CL 150, SCH STD, RF, WN FLANGE
6	7	150	ASME B16.20	CL 150, GARLOCK 5500, RING TYPE GASKET 1/8" THK
7	56	19	A 193 B7/A 194 2H	CL 150, 8 - 19.05 X 100 STUD BOLTS c/w TWO HEAVY HEX NUTS
8	2	150	GA-10	CL 150, RF, GATE VALVE
9	1	150	BA-31	CL 150, RF, BALL VALVE

No.	DATE	REVISION	PAR / APP.
2	2017/09/21	PROJECT TITLE REVISED	KHV
1	2017/09/11	LINE NUMBERS REVISED	KHV
0	2017/05/15	ISSUED FOR CONSTRUCTION	KHV

CLIENT:

AGNICO EAGLE

NUQSANA PROMEC MINING

ultragen

CONSULTANT PROJECT NO. 591700

SCEAU PROFESSIONNEL

REGISTERED PROFESSIONAL ENGINEER
D. TRUONG
LICENSEE
2017/09/21

CONC.: KHV
DATE: 2017/04/25
DESSINE PAR: KVE
DATE: 2017/04/25
VER. PAR: -
DATE: -
APP.: -
DATE: -
ECHELLE: AUCUNE

PROJET:
AGNICO EAGLE - MELIADINE DIVISION
116 - FUEL TANK FARM

TITRE:
RANKIN INLET
FABRICATION ISOMETRIC
DIESEL FROM 65TNK11601 TO PUMPING STATION

No PROJET	No DESSIN	PAGES	REV.
6515	116-150-PDI-CC10-0011	1/5	2

NO. DE CONDUITE		SPECIFICATION	PRODUIT	SYSTEME REVETEMENT	CODE DE COULEUR	ISOLATION ET TRACAGE	EPAISS. D'ISOLATION		
116-150-PDI-CC10-0011		CC10	PDI		-			65-116-270-200	PIPE SUPPORT DETAILS
PRESSION D'OPERATION	TEMPERATURE D'OPERATION	PRESSION DE CONCEPTION	TEMPERATURE DE CONCEPTION	PRESSION D'ESSAI	CLASSE D'INSPECTION	CODE DE SERVICE	TRAITEMENT THERMIQUE	65-116-205-200	P&ID
PSIG	°F	PSIG	°F	PSIG				No. DESSIN	DESSINS DE REFERENCE

116-MN-01

AMPRIME LE Sep 20, 2017, 2:46pm

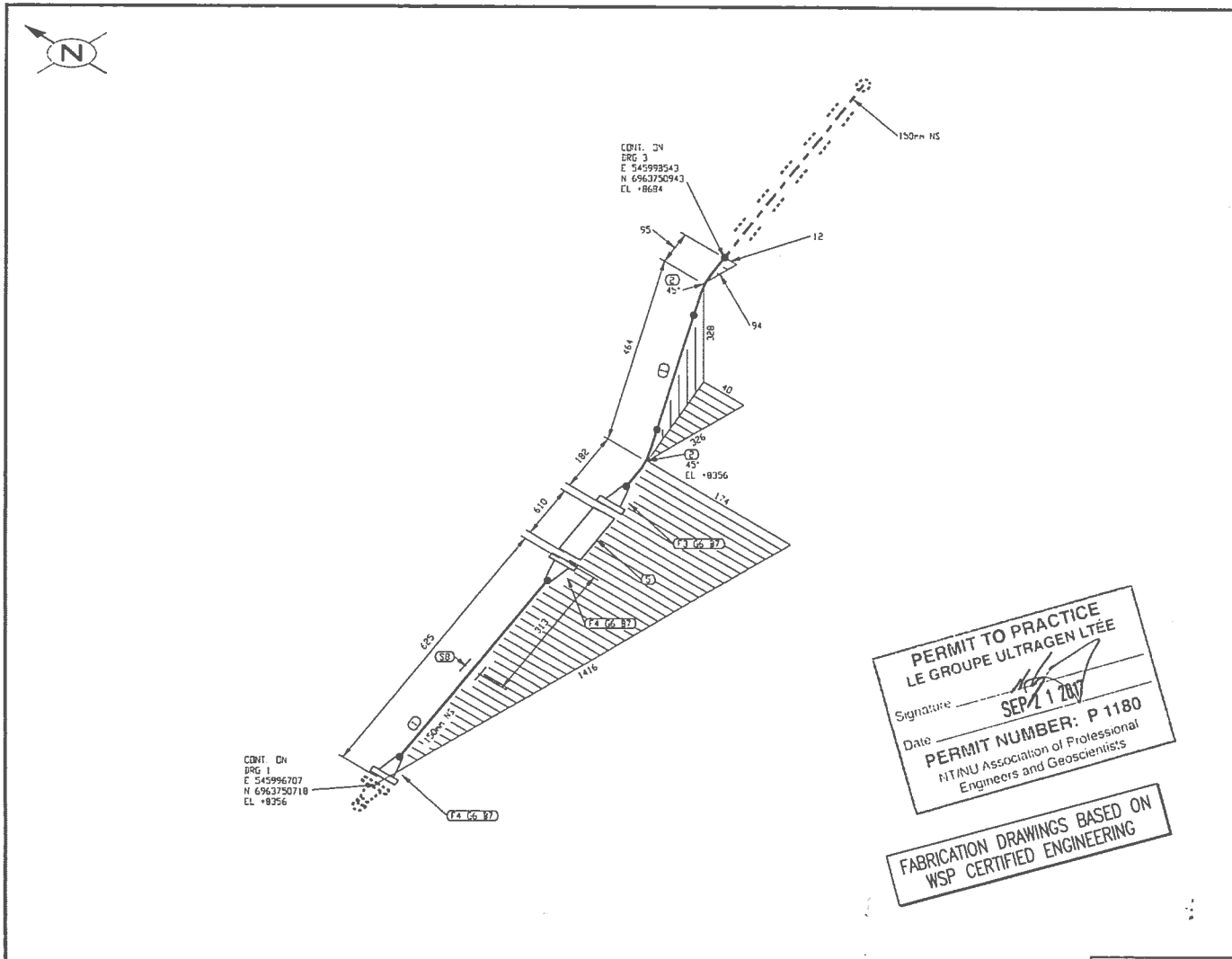

PERMIT TO PRACTICE
LE GROUPE ULTRAGEN LTÉE
Signature
Date SEP 21 2017
PERMIT NUMBER: P 1180
NT/NU Association of Professional Engineers and Geoscientists

FABRICATION DRAWINGS BASED ON WSP CERTIFIED ENGINEERING

LISTE DE MATERIEL

No	QTE	DIA	MATERIEL/CATALOGUE	DESCRIPTION
1	725 MM	150	A 333 Gr. 6	SCH STD, SMLS PIPE
2	2	150	A 420 Gr. WPL6	SCH STD, BW LR 45 DEG ELBOW
3	1	150	A 350 Gr. LF2	CL 150, SCH STD, RF, WN FLANGE
4	2	150	A 350 Gr. LF2	CL 150, SCH STD, RF, WN FLANGE
5	1	150		CL 150, SINGLE BRAIDED HOSE ASSEMBLY
6	3	150	ASME B16.20	CL 150, GARLOCK 5500, RING TYPE GASKET 1/8" THK
7	24	19	A 193 B7/A 194 2H	CL 150, 8 - 19 05 X 100 STUD BOLTS c/w TWO HEAVY HEX NUTS
8	1	150		PIPE SHOE AS PER DETAIL 2, DWG 65-116-270-200

No.	DATE	REVISION	PAR / APP
2	2017/09/21	PROJECT TITLE REVISED	KHV
1	2017/09/11	LINE NUMBERS REVISED	KHV
0	2017/05/15	ISSUED FOR CONSTRUCTION	KHV

CLIENT:

AGNICO EAGLE

NUQSANA PROMEC MINING

ultragen

CONSULTANT PROJECT NO. 591700

SCEAU PROFESSIONNEL
REGISTERED PROFESSIONAL ENGINEER
D TRUONG
LICENSEE
NT/NU
2017/09/21

CONC.: KHV
DATE: 2017/04/25
DESSINÉ PAR: KVE
DATE: 2017/04/25
VER. PAR: -
DATE: -
APP.: -
DATE: -
ECHELLE: AUCUNE

PROJET:
AGNICO EAGLE - MELIADINE DIVISION
116 - FUEL TANK FARM

TITRE:
RANKIN INLET
FABRICATION ISOMETRIC
DIESEL FROM 65TNK11601 TO PUMPING STATION

No PROJET	No DESSIN	PAGES	REV.
6515	116-150-PDI-CC10-0011	2/5	2

NO. DE CONDUITE		SPECIFICATION	PRODUIT	SYSTEME REVETEMENT	CODE DE COULEUR	ISOLATION ET TRACAGE	EPAISS. D'ISOLATION		
116-150-PDI-CC10-0011		CC10	PDI		-			65-116-270-200	PIPE SUPPORT DETAILS
PRESSION D'OPERATION	TEMPERATURE D'OPERATION	PRESSION DE CONCEPTION	TEMPERATURE DE CONCEPTION	PRESSION D'ESSAI	CLASSE D'INSPECTION	CODE DE SERVICE	TRAITEMENT THERMIQUE	65-116-205-200	P&ID
PSIG	°F	PSIG	°F	PSIG				No. DESSIN	DESSINS DE REFERENCE

116-MN-01

FICHIER: N:\Agnico Eagle\Meliadine\591700 (Fuel Distribution)\05. Dessins\02 Tuyauterie\02 Isométriques\01 Parkin Inlet\116-150-PDI-CC10-0011-2.DWG

IMPRIMÉ LE: Sep 20, 2017, 2:46pm

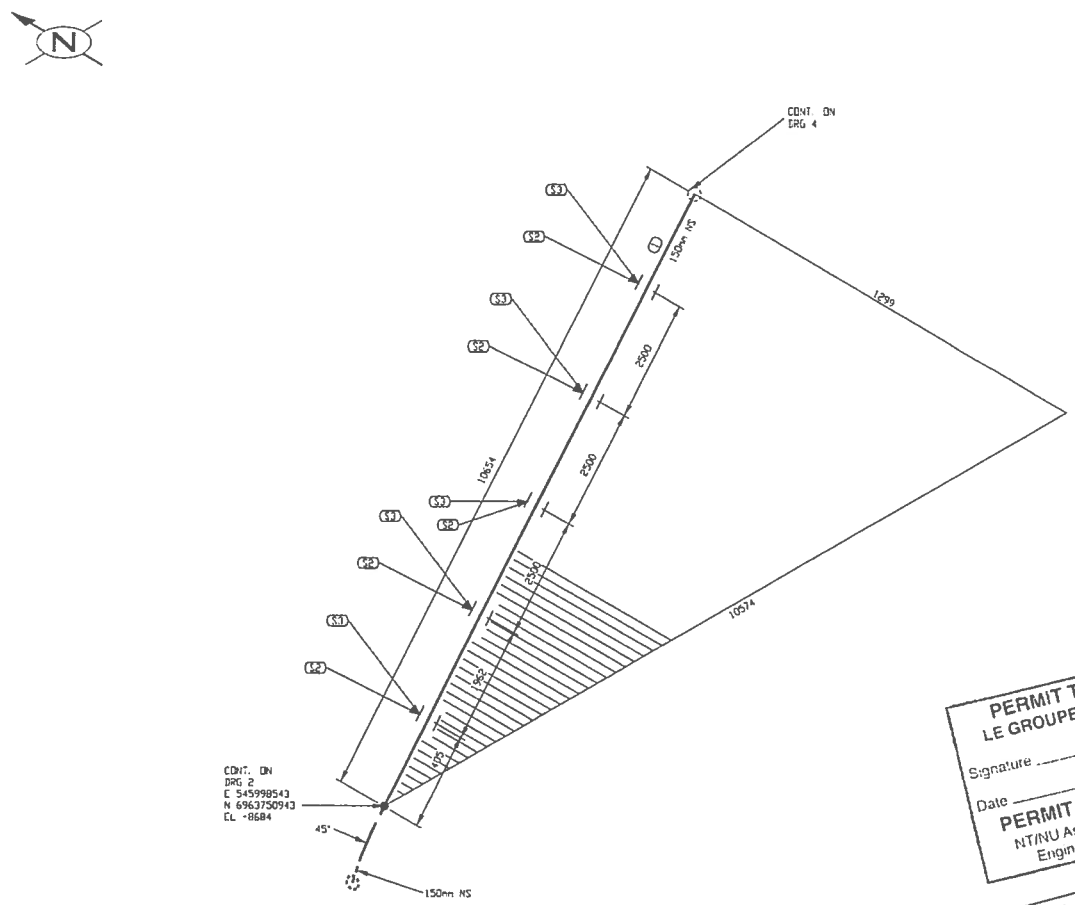

PERMIT TO PRACTICE
LE GROUPE ULTRAGEN LTÉE
Signature
Date SEP 21 2017
PERMIT NUMBER: P 1180
NT/NU Association of Professional Engineers and Geoscientists

FABRICATION DRAWINGS BASED ON WSP CERTIFIED ENGINEERING

LISTE DE MATERIEL

No	CTE	DIA	MATERIEL/CATALOGUE	DESCRIPTION
1	10654 MM	150	A 333 Gr. 6	SCH STD, SMLS PIPE
2	5	150		PIPE SUPPORT AS PER DETAIL 1, DWG 65-116-270-200
3	5	150		PIPE SHOE AS PER DETAIL 2, DWG 65-116-270-200

No.	DATE	REVISION	PAR / APP.
2	2017/09/21	PROJECT TITLE REVISED	KHV
1	2017/09/11	LINE NUMBERS REVISED	KHV
0	2017/05/15	ISSUED FOR CONSTRUCTION	KHV

CLIENT:

AGNICO EAGLE

NUQSANA PROMEC MINING

ultragen

CONSULTANT PROJECT NO. 591700

NO. DE CONDUITE		SPECIFICATION	PRODUIT	SYSTEME REVETEMENT	CODE DE COULEUR	ISOLATION ET TRACAGE	EPAISS. D'ISOLATION		
116-150-PDI-CC10-0011		CC10	PDI		–			65-116-270-200	PIPE SUPPORT DETAILS
PRESSION D'OPERATION	TEMPERATURE D'OPERATION	PRESSION DE CONCEPTION	TEMPERATURE DE CONCEPTION	PRESSION D'ESSAI	CLASSE D'INSPECTION	CODE DE SERVICE	TRAITEMENT THERMIQUE	65-116-205-200	P&ID
PSIG	°F	PSIG	°F	PSIG				No. DESSIN	DESSINS DE REFERENCE

SCEAU PROFESSIONNEL
REGISTERED PROFESSIONAL ENGINEER
D. TRUONG
LICENSEE
2017/09/21

CONC.: KHV
DATE: 2017/04/25
DESSINÉ PAR: KVE
DATE: 2017/04/25
VER. PAR: –
DATE: –
APP.: –
DATE: –
ÉCHELLE: AUCUNE

PROJET:
AGNICO EAGLE - MELIADINE DIVISION
116 - FUEL TANK FARM

TITRE:
RANKIN INLET
FABRICATION ISOMETRIC
DIESEL FROM 65TNK11601 TO PUMPING STATION

No PROJET	No DESSIN	PAGES	REV.
6515	116-150-PDI-CC10-0011	3/5	2

116-MN-01

FICHIER: R:\Agnico Eagle\Meliadine\591700 (Fuel Distribution)\05. Dessins\02. Tuyauterie\02. isométriques\01. Rankin Inlet\116-150-PDI-CC10-0011-3.DWG

AFFIRMÉ LE: Sep 20, 2017 2:46pm

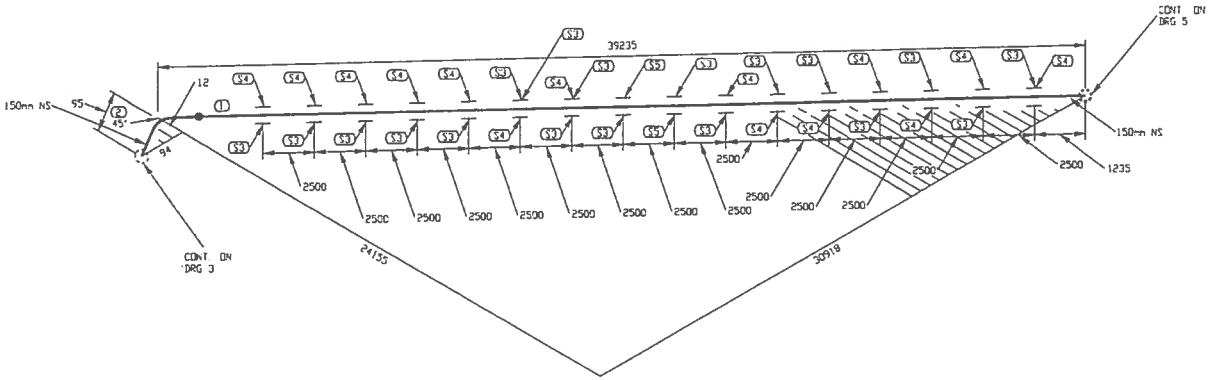

LISTE DE MATERIEL

No	QTE	DIA	MATERIEL/CATALOGUE	DESCRIPTION
1	39140 MM	150	A 333 Gr 6	SCH STD, SMLS PIPE
2	1	150	A 420 Gr WPL6	SCH STD, BV LR 45 DEG ELBOW
3	18	150		PIPE SHOE AS PER DETAIL 2, DWG 65-116-270-200
4	14	150		PIPE SUPPORT AS PER DETAIL 1, DWG 65-116-270-200
5	2	150		PIPE SUPPORT AS PER DETAIL 3, DWG 65-116-270-200

PERMIT TO PRACTICE
LE GROUPE ULTRAGEN LTÉE
Signature
Date SEP 2 1 2017
PERMIT NUMBER: P 1180
NT/NU Association of Professional Engineers and Geoscientists

FABRICATION DRAWINGS BASED ON WSP CERTIFIED ENGINEERING

No.	DATE	REVISION	PAR APP.
2	2017/09/21	PROJECT TITLE REVISED	KHV
1	2017/09/11	LINE NUMBERS REVISED	KHV
0	2017/05/15	ISSUED FOR CONSTRUCTION	KHV

CLIENT: AGNICO EAGLE

NUQSANA-PROMEC MINING

ultragen

CONSULTANT PROJECT NO. 591700

NO. DE CONDUITE		SPECIFICATION	PRODUIT	SYSTEME REVETEMENT	CODE DE COULEUR	ISOLATION ET TRACAGE	EPAISS. D'ISOLATION		
116-150-PDI-CC10-0011		CC10	PDI		-			65-116-270-200	PIPE SUPPORT DETAILS
PRESSION D'OPERATION	TEMPERATURE D'OPERATION	PRESSION DE CONCEPTION	TEMPERATURE DE CONCEPTION	PRESSION D'ESSAI	CLASSE D'INSPECTION	CODE DE SERVICE	TRAITEMENT THERMIQUE	65-116-205-200	P&ID
PSIG	°F	PSIG	°F	PSIG				No. DESSIN	DESSINS DE REFERENCE

SCEAU PROFESSIONNEL
REGISTERED PROFESSIONAL ENGINEER
D. TRUONG
LICENSEE
NT/NU 21

CONC.: KHV
DATE: 2017/04/25
DESSINÉ PAR: KVE
DATE: 2017/04/25
VER. PAR: -
DATE: -
APP.: -
DATE: -
ÉCHELLE: AUCUNE

PROJET: AGNICO EAGLE - MEL IADINE DIVISION
116 - FUEL TANK FARM

TITRE: RANKIN INLET
FABRICATION ISOMETRIC
DIESEL FROM 65TNK11601 TO PUMPING STATION

No PROJET	No DESSIN	PAGES	REV.
6515	116-150-PDI-CC10-0011	4/5	2

116-MN-01

TRACÉ: N:\Agnico Eagle\Meliadine\591700 (Fuel Distribution)\05. Drawings\02. Isométriques\01. Rankin Inlet\116-150-PDI-CC10-0011-1.DWG
IMPRIMÉ LE: Sep 20, 2017, 2:48pm

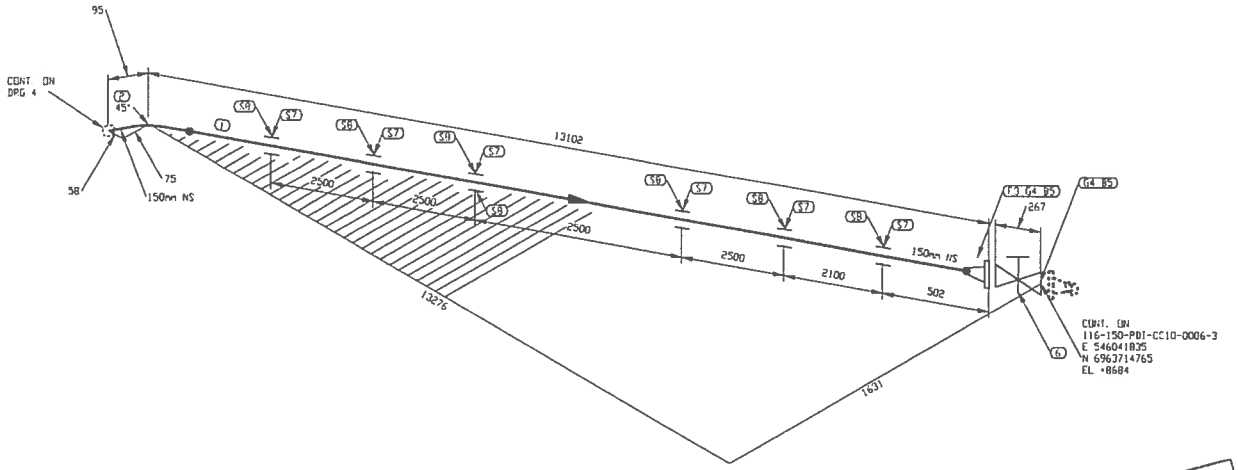

LISTE DE MATERIEL

No	QTE	DIA	MATERIEL/CATALOGUE	DESCRIPTION
1	12919 MM	150	A 333 Gr. 6	SCH STD, SMLS PIPE
2	1	150	A 420 Gr. WPL6	SCH STD, BW LR 45 DEG ELBOW
3	1	150	A 350 Gr. LF2	CL 150, SCH STD, RF, WN FLANGE
4	2	150	ASME B16.20	CL 150, GARLOCK 9500, RING TYPE GASKET 1/8" THK
5	16	19	A 193 B7/A 194 2H	CL 150, Ø - 19.05 X 100 STUD BOLTS C/W TWO HEAVY HEX NUTS
6	1	150	GA-10	CL 150, RF, GATE VALVE
7	6	150		PIPE SUPPORT AS PER DETAIL 1, DWG 65-116-270-200
8	7	150		PIPE SHOE AS PER DETAIL 2, DWG 65-116-270-200

PERMIT TO PRACTICE
LE GROUPE ULTRAGEN LTÉE
Signature
Date SEP 2 1 2017
PERMIT NUMBER: P 1180
NT/NU Association of Professional Engineers and Geoscientists

FABRICATION DRAWINGS BASED ON WSP CERTIFIED ENGINEERING

No.	DATE	REVISION	PAR / APP.
2	2017/09/21	PROJECT TITLE REVISED	KHV
1	2017/09/11	LINE NUMBERS REVISED	KHV
0	2017/05/15	ISSUED FOR CONSTRUCTION	KHV

CLIENT: AGNICO EAGLE

NUQSANA-PROMEC MINING

ultragen

CONSULTANT PROJECT NO. 591700

NO. DE CONDUITE		SPECIFICATION	PRODUIT	SYSTEME REVETEMENT	CODE DE COULEUR	ISOLATION ET TRACAGE	EPAISS. D'ISOLATION		
116-150-PDI-CC10-0011		CC10	PDI		-			65-116-270-200	PIPE SUPPORT DETAILS
PRESSION D'OPERATION	TEMPERATURE D'OPERATION	PRESSION DE CONCEPTION	TEMPERATURE DE CONCEPTION	PRESSION D'ESSAI	CLASSE D'INSPECTION	CODE DE SERVICE	TRAITEMENT THERMIQUE	65-116-205-200	P&ID
PSIG	°F	PSIG	°F	PSIG				No. DESSIN	DESSINS DE REFERENCE

SCEAU PROFESSIONNEL
REGISTERED PROFESSIONAL ENGINEER
D. TRUONG
LICENSEE
2017/09/21

CONC.: KHV DATE: 2017/04/25
DESSINÉ PAR: KVE DATE: 2017/04/25
VER. PAR: - DATE: -
APP.: - DATE: -
ÉCHELLE: AUCUNE

PROJET: AGNICO EAGLE - MELIADINE DIVISION
116 - FUEL TANK FARM

TITRE: RANKIN INLET
FABRICATION ISOMETRIC
DIESEL FROM 65TNK11601 TO PUMPING STATION

No PROJET	No DESSIN	PAGES	REV.
6515	116-150-PDI-CC10-0011	5/5	2

116-MN-01

F:\Projets et Dossiers Engin\Meliadine\591700 (Fuel Storage)\05 Design\02. Isométrie\02. isométriques\01 Revit Imp\116-150-PDI-CC10-0011-2.DWG
APRIVE LE: Sep 20, 2017, 2:46pm

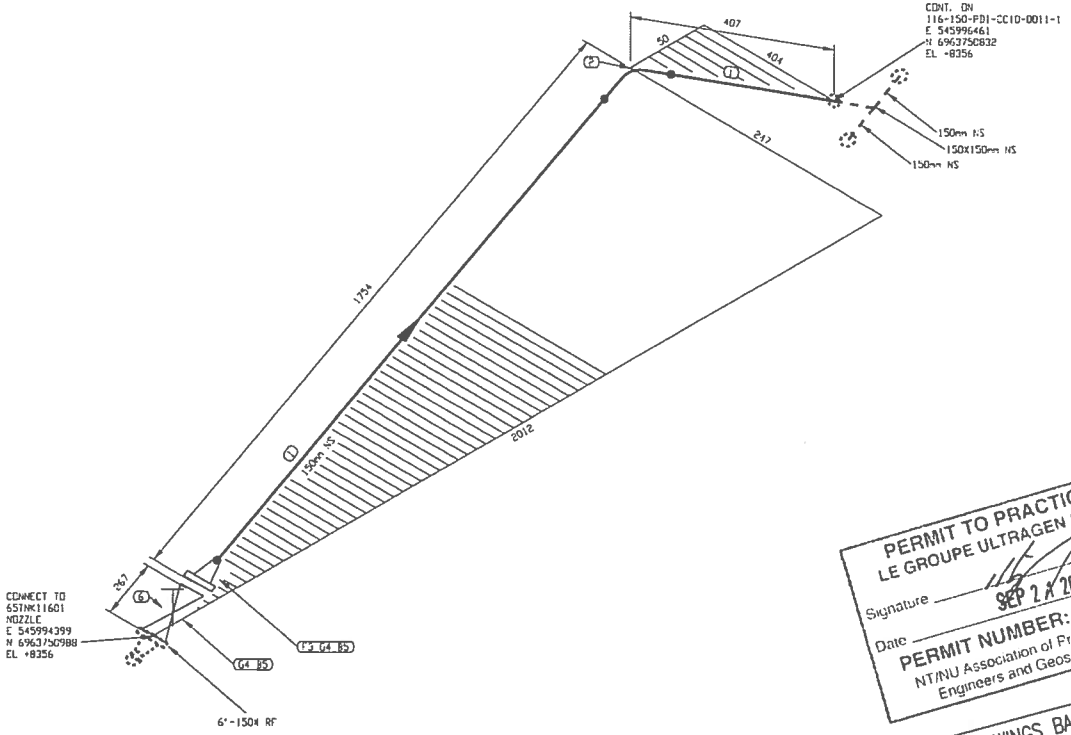

LISTE DE MATERIEL

No	Q'TE	DIA	MATERIEL/CATALOGUE	DESCRIPTION
1	1616 MM	150	A 333 Gr. 6	SCH STD, SMLS PIPE
2	1	150	A 420 Gr. WPL6	SCH STD, BW LR 90 DEG ELBOW
3	1	150	A 350 Gr. LF2	CL 150, SCH STD, RF, WN FLANGE
4	2	150	ASME B16.20	CL 150, GARLOCK 5500, RING TYPE GASKET 1/8" THK
5	16	19	A 193 B7/A 194 2H	CL 150, 8 - 19.05 x 100 STUD BOLTS c/w TWO HEAVY HEX NUTS
6	1	150	GA-10	CL 150, RF, GATE VALVE

PERMIT TO PRACTICE
LE GROUPE ULTRAGEN LTÉE
Signature
Date SEP 2 / 2017
PERMIT NUMBER: P 1180
NT/NU Association of Professional Engineers and Geoscientists

FABRICATION DRAWINGS BASED ON WSP CERTIFIED ENGINEERING

No.	DATE	REVISION	PAR / APP
2	2017/09/21	PROJECT TITLE REVISED	KHV
1	2017/09/11	LINE NUMBERS REVISED	KHV
0	2017/05/15	ISSUED FOR CONSTRUCTION	KHV

CLIENT:
AGNICO EAGLE

NUQSANA-PROMEC MINING
ultragen
CONSULTANT PROJECT NO. 591700

NO. DE CONDUITE		SPECIFICATION	PRODUIT	SYSTEME REVETEMENT	CODE DE COULEUR	ISOLATION ET TRACAGE	EPAISS. D'ISOLATION		
116-150-PDI-CC10-0012		CC10	PDI		-			65-116-270-200	PIPE SUPPORT DETAILS
PRESSION D'OPERATION	TEMPERATURE D'OPERATION	PRESSION DE CONCEPTION	TEMPERATURE DE CONCEPTION	PRESSION D'ESSAI	CLASSE D'INSPECTION	CODE DE SERVICE	TRAITEMENT THERMIQUE	65-116-205-200	P&ID
PSIG	°F	PSIG	°F	PSIG				No. DESSIN	DESSINS DE REFERENCE

SCEAU PROFESSIONNEL
REGISTERED PROFESSIONAL ENGINEER
D TRUONG
LICENSEE

CONC.: KHV DATE: 2017/04/25
DESSINÉ PAR: KVE DATE: 2017/04/25
VER. PAR: - DATE: -
APP.: - DATE: -
ÉCHELLE: AUCUNE

PROJET:
AGNICO EAGLE - MELIADINE DIVISION
116 - FUEL TANK FARM

TITRE:
RANKIN INLET
FABRICATION ISOMETRIC
DIESEL FROM 65TNK11601 TO PUMPING STATION

No PROJET	No DESSIN	PAGES	REV.
6515	116-150-PDI-CC10-0012	1/1	2

116-MN-01

I:\Work in Progress\Eagle Valley\Mines\591700\01 Client Data\Engineering\02. Engineering\02. Mechanical\01 Revit Work\116-150-PDI-CC10-0012-1.DWG
Plotted: Sep 20, 2017, 2:44pm

AGNICO EAGLE

Vendor Document Status

1 ☐ Proceed to next submission and status.

2 ☐ Proceed with exceptions as noted to next submission and status.

3 ☐ Do not proceed.
Revise as noted and resubmit next submission and status.

4 ☑ Complete, no further submission required.

By: Jean-Francois Tremblay Date: 2017-05-02

Review and authorization to fabricate are only for general conformance with the design concept of the Project as expressed in the Contract Documents. Sole responsibility for the accuracy and completeness of this document, including but not limited to dimensions and quantities, remains with the Supplier/Contractor. Agnico Eagle does not warrant the accuracy or completeness of any of the information contained herein, nor does Agnico Eagle authorize or approve any construction means, methods, techniques, sequences or any safety precautions or procedures.

Agnico Eagle No. 6515-C-270-007-141-TES-0014 R: Sub001

DOCUMENT FOR INFORMATION

NUQSANA PROMEC MINING

Agnico-Eagle Mines Ltd.
Non-Conformance Report

ITR Number : AEM-GE-ITR-002
Contract no. : C22466T / C22498E

AGNICO EAGLE

PART 1 – To be completed by Originator			
ITR no. :	Supplier/Vendor/Manufacturer/Contractor :	Originator :	Date:
Equipment Identification:		Equipment Tag No.:	
Disposition Requested: ☐ 48 Hours ☐ Other	NCR Classification: ☐ Supplier ☐ Fabrication ☐ Engineering ☐ Construction ☐		
Current Status: ☐ Work Already Done ☐ Partially Done ☐ Other ____	Potential Impact (Check appropriate box and give estimate): ☐ Cost ☐ Schedule ☐ Other		
Detailed Description of Non-Conformance (attach sketch, pictures, etc) :			
Describe Deviation to Drawings, Specifications, Standard, Code or other Reference:			

PART 2 - Disposition		
* CONTRACTOR Proposed Disposition / Resolution: ☐ Use As Is ☐ Repair ☐ Rework ☐ Reject/Scrap	Concession Request No. (if applicable):	Contractors NCR No. (if applicable):
Details of Contractor Corrective Actions Proposed / Concession Request:		
* Disposition: ☐ Use as Is ☐ Repair ☐ Rework ☐ Reject/Scrap	Dispositioning Party:	Signature:
Recommended Resolution / Actions:		

PART 3 - Confirmation	
Corrective Actions Completed By: Name: Date: Signature:	Corrective Actions Accepted by Dispositioning Party: Name: Date: Signature:
Corrective Actions Accepted by Originator: Name: Date: Signature:	NCR Closed Out By (Area QA Coordinator) Name: Date: Signature:

** Note:* Dispositions are not to be construed as a change to any Contracts which may be affected. Prior to initiating any work which will impact the Contract terms, the Contractors must forward to AMEC written notice of all impacts, including but not limited to cost and schedule. Any work completed without a written instruction to proceed, if required, will be at the Contractor's risk.

6515-C-270-007

Fuel Tanks Piping Supply and Installation

Non-Conformance Log

Document Number : AEM-GE-LOG-002
Contract Number : C22466T / C22498E

Number	Company	Description	Initiator	Date Opened	Date Closed	Progress Status
NCR-001						N/A
NCR-002						N/A
NCR-003						N/A
NCR-004						N/A
NCR-005						N/A
NCR-006						N/A
NCR-007						N/A
NCR-008						N/A
NCR-009						N/A
NCR-010						N/A
NCR-011						N/A
NCR-012						N/A
NCR-013						N/A
NCR-014						N/A
NCR-015						N/A
NCR-016						N/A
NCR-017						N/A
NCR-018						N/A
NCR-019						N/A
NCR-020						N/A
NCR-021						N/A
NCR-022						N/A
NCR-023						N/A
NCR-024						N/A
NCR-025						N/A
NCR-026						N/A
NCR-027						N/A
NCR-028						N/A
NCR-029						N/A
NCR-030						N/A
NCR-031						N/A
NCR-032						N/A
NCR-033						N/A
NCR-034						N/A
NCR-035						N/A
NCR-036						N/A
NCR-037						N/A
NCR-038						N/A
NCR-039						N/A
NCR-040						N/A

Vendor Document Status

AGNICO EAGLE

1 ☐ Proceed to next submission and status.

2 ☐ Proceed with exceptions as noted to next submission and status.

3 ☐ Do not proceed.
Revise as noted and resubmit next submission and status.

4 ☑ Complete, no further submission required.

By: Jean-Francois Tremblay Date: 2017-05-02

Review and authorization to fabricate are only for general conformance with the design concept of the Project as expressed in the Contract Documents. Sole responsibility for the accuracy and completeness of this document, including but not limited to dimensions and quantities, remains with the Supplier/Contractor. Agnico Eagle does not warrant the accuracy or completeness of any of the information contained herein, nor does Agnico Eagle authorize or approve any construction means, methods, techniques, sequences or any safety precautions or procedures.

Agnico Eagle No. 6515-C-270-007-141-TES-0019 R: Sub001

DOCUMENT FOR INFORMATION

AGNICO EAGLE

Vendor Document Status

1 ☐ Proceed to next submission and status.

2 ☐ Proceed with exceptions as noted to next submission and status.

3 ☐ Do not proceed.
Revise as noted and resubmit next submission and status.

4 ☑ Complete, no further submission required.

By: JEAN-FRANCOIS TREMBLAY Date: 2017-05-02

Review and authorization to fabricate are only for general conformance with the design concept of the Project as expressed in the Contract Documents. Sole responsibility for the accuracy and completeness of this document, including but not limited to dimensions and quantities, remains with the Supplier/Contractor. Agnico Eagle does not warrant the accuracy or completeness of any of the information contained herein, nor does Agnico Eagle authorize or approve any construction means, methods, techniques, sequences or any safety precautions or procedures.

Agnico Eagle No. 6515-C-270-007-141-TES-0038 R: Sub001

DOCUMENT FOR INFORMATION

Agnico-Eagle Mines Ltd.

Contract no. 6515-C-270-007

Welding Control Procedure

AEM-WE-PRO-001

Area No.: All

System No.: All

PROMEC Approvals

Prepared by:	Stéphane Doré	**Signature:**		**Date:**	2017-04-26
Verified by:	Jérémy Duval	**Signature:**		**Date:**	2017-04-26
Approved by:	Éric Poulin	**Signature:**		**Date:**	2017-04-26

CLIENT Approvals

Verified by:		**Signature:**		**Date:**	
Approved by:		**Signature:**		**Date:**	

TABLE OF CONTENTS

Page

1. SCOPE 3
2. REFERENCES 3
3. WELDING PROCEDURES 3
4. WELDER PERFORMANCE QUALIFICATION 3
5. WELDING MATERIAL CONTROL 4
6. FIT-UP AND WELDING 4
7. RADIOGRAPHIC INSPECTION 5

APPENDIX A – ALL APPLICABLE ITRs & LOGs

1. Scope

- This procedure describes the system for maintaining control of all production welding to the requirements of the applicable engineering specifications, codes and standards.

2. References

- ASME, Section IX - Welding and Brazing Qualifications
- ANSI, B-31.3 - Petroleum Refinery Piping
- ANSI, B-31.1 - Power Piping
- AWS, American Welding Society

3. Welding Procedures

- All welding performed on site will comply with applicable qualified welding procedures as specified in the Standard S40 05 13.
- Prime contractor's welders will be qualified to weld procedures in accordance with contract specifications. Prime contractor is responsible for certifying their own welders.
- Copies of the qualified welding procedures approved for that project shall be maintained on site by the Welding Foreman and Site Q/C Representative for reference and permanent retention.

4. Welder Performance Qualification

- It is the responsibility of the Site Q/C Representative to conduct or supervise the Welder Performance Qualification tests. At the discretion of the Corporate Quality Control Manager, a Welding Foreman or other qualified site supervisor may conduct these tests.
- Records attesting to the Welder Performance Qualification tests shall be generated and maintained by the Site Q/C Representative and the Welding Foreman.
- The Site Q/C Representative and the Welding Foreman shall maintain a complete listing of welders and welding operators employed. The form, Welder Qualification Log, is to be updated and reissued on a monthly basis and is to be distributed as required.

5. Welding Material Control

- The Site Q/C Representative and Welding Foreman shall make certain that the welding material used conforms to that of the welding procedure. No substitutions for the specified material will be made without written approval from the client.

6. Fit-Up and Welding

- Visual surveillance shall be performed to establish compliance to welding procedures. The inspection parameters listed below are recommended as guidelines
  - ✓ Inspect end preparation and joint configuration as established by applicable weld procedures and engineering specifications.
  - ✓ Inspect internal alignment and root opening prior to welding.
  - ✓ Check tack welds that are to be incorporated into the final weld, and be assured of proper blend grinding and absence of visual defects.
  - ✓ Check for proper welding materials and other essential variables of applicable weld procedures.
  - ✓ Check visually root pass for cracks, porosity, slag, fusion lines and quality workmanship (if required use LP).
  - ✓ Inspect completed welds for proper reinforcement. All welds should blend smoothly into the base metal and be free of cold lap or fusion at the toe.
  - ✓ Inspect weld for surface discontinuities such as undercut. Surface porosity is to be considered as an injurious defect and shall be repaired.
  - ✓ All repairs are to be made in accordance with approved procedures.
  - ✓ Each welder shall be responsible for stamping his assigned symbol immediately after completion of the weld. A smooth, flat spot shall be ground or filed on the reinforcement cap. The welder shall stamp his/hers identifying mark upon this spot.
- For ferrous material less than 1/4" (1/2" for nonferrous), the welder's symbol shall be recorded on the base metal by use of a halogen-free paint marker, or recorded on isometric drawings by the welding supervisor which shall be available to the Quality Control Inspector.

7. Radiographic Inspection

- The Site Q/C Representative or Welding Foreman will schedule radiographic inspections.
- Radiographic requirements shall be determined by the client standard to assure compliance to contract Codes and specifications.
- Welds requiring radiography will be flagged by a suitable means which will be consistent through contract completion.
- The Site Q/C Representative will complete the Radiographic Inspection Status Record, to indicate status of radio graphically-inspected welds. This form will be forwarded to appropriate supervision for distribution.
- In addition to the records generated under this procedure, marked-up isometric and orthographic drawings will be used as weld maps to indicate completion of radiographic inspection. This will allow a progressive record and give system status.

PREMIÈRE PASSE E-6011 , 3/32
SMAW
REMPLISSAGE E-7018 , 1/8-5/32
SMAW
ACIER AU CARBONE
Procédure : P-1 , PR-1

et de la Protection du consommateur
Inspection des installations de tuyauterie
Division des appareils sous pression

DE SOUDAGE (DMS)
ding Procedure Specification (WPS)

lote: les titres désignent également les hommes et les femmes.

Entreprise/*Company*	
Nom	Construction Promec
Adresse/*Address*	369 rue Murdoch
	Rouyn-Noranda (Québec)
(819) 797-3456	Code postal J 9 X 1 G 4

(2) **Enregistrement provincial** / *Provincial Registration* — MS / WP 8814.6

(3) **Désignation de la méthode/*Procedure Identification***

DMS N° / *WPS No.*	P1 — Révision N° / *Revision No.* 0
RMS N° / *PQR No.*	PR1
Section du code / *Code section*	

(4) **Procédé(s) de soudage** / *Welding Process(es)*

1	SMAW	Manuel/*Manual* ☒	Semi-auto. ☐	Auto. ☐
2		Manuel/*Manual* ☐	Semi-auto. ☐	Auto. ☐
3		Manuel/*Manual* ☐	Semi-auto. ☐	Auto. ☐

(5) **Joints/*Joints*** (QW-402)

Genre/*Design*	VW Fillet ~~Chan Frein Simple~~ ~~Chan Frein Double~~
Soutien / *Backing*	Oui/*Yes* ☒ Non/*No* ☒
Matériau de soutien / *Backing material*	P1 ou soudure
Autre / *Other*	

Croquis/*Sketch*

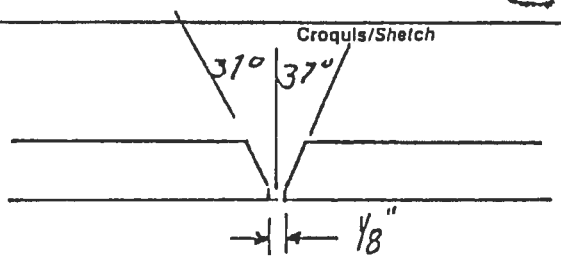

(6) **Métaux de base/*Base Metals*** (QW-403)

P N°/*No.* P1 Gr N°/*No.* ____ à/*to* P N°/*No.* P1 Gr N°/*No.* ____

ou Spécifications type et grade / *or Specifications type and grade* à/*to*

Anal. chimique et prop. méc. / *Chemical Analysis and Mech. Prop.* F3 à/*to* F4

Gamme des épaisseurs qualifiées / *Thickness Range Qualified*: Total 3/16" à 1½" 1 ¼" 2 1¼" 3

Autre / *Other*

(7) **Métaux d'apport/*Filler Metals*** (QW-404)

AWS N°/*No.*	E6011	SFA	5.1	*F-No.*	3	*A-No.*	1	Dia. 3/32-1/8-5/32
AWS N°/*No.*	E7018	SFA	5.1	*F-No.*	4	*A-No.*	1	Dia. 3/32-1/8-5/32
AWS N°/*No.*		SFA		*F-No.*		*A-No.*		Dia.

Marque de commerce du flux / *Flux Tradename* — Classification du flux-électrode / *Electrode-Flux Classification*

Pièce insérée consumable / *Consumable Insert* — Autre / *Other*

(8) **Positions/*Positions*** (QW-405)

Position(s) du chanfrein / *Position(s) of Groove*: Toute position

Progression du soudage / *Welding Progression*: Montant/*Up* ☒ Descendant/*Down* ☒

Position(s) de l'angle / *Position(s) of Fillet*: Toute position

Autre / *Other*

(9) **Préchauffage/*Preheat*** (QW-406)

Température de préchauffage / *Preheat Temperature*: Min. 60°F

Température de l'interpasse / *Interpass Temperature*

Maintien du préchauffage / *Preheat Maintenance*

Autre / *Other*

(10) **Traitement thermique postsoudage/ *Postweld Heat Treatment*** (QW-407)

Gamme de températures / *Temperature Range*: Aucun

Gamme de durée / *Time Range*

Autre / *Other*

(11) **Gaz/*Gas*** (QW-408)

Composition du gaz de protection / *Shielding Gas Composition*

Débit du gaz / *Gas Flow Rate*

Composition du gaz de soutien / *Backing Gas Composition*

Débit du gaz / *Gas Flow Rate*

Composition du gaz de protection traînant / *Trailing Shielding Gas Composition*

Caractéristiques électriques et t[illegible]niques/Electrical Characteristics and Tec[illegible]ue (QW-409) + (QW-410)

[illegible]uche(s) de soudure [illegible]ver(s)	Procédé Process	Métal d'apport Filler Metal: Classification Classification	Diamètre Diameter	Courant Current: Type Type	Polarité Polarity	Gamme d'ampérage Amp Range	Gamme de voltage Volt Range	Gamme de vitesse Travel Speed Range
è	SHAW	E6011	$\frac{1}{8}$" à $\frac{5}{32}$"	DC	Inversé	75 - 85	26-30	--
tres	SHAW	E7018	$\frac{1}{8}$" à $\frac{5}{32}$"	DC	Inversé	105 -110	26-30	--

[illegible]sseur et type d'électrode de tungstène [illegible]gsten Electrode Size and Type	--
[illegible]e de transfert du métal pour GMAW [illegible]e of Metal Transfer for GMAW	--
[illegible]ion droit ou oscillant [illegible]g or Weave Bead	Droit et oscillant
[illegible]édé de gougeage arrière [illegible]od of Back Gouging	Arc Air
[illegible]oyage initial et entre les passes (brossage, meulage, etc.) [illegible] and Interpass Cleaning (Brushing, Grinding, etc.)	Brossage ou meulage
[illegible]ètre de la tuyère à gaz [illegible]e or Gas Cup Size	--
[illegible]llation Largeur [illegible]llation Width	-- Fréquence Frequency
[illegible]nce entre tuyère & pièce [illegible] to Work Distance	--
[illegible] ou multiple (par côté) [illegible] Single Pass (per Side)	--
[illegible]rode unique ou multiple [illegible]ple or Single Electrode	--
[illegible]me de vitesse d'alimentation de l'électrode [illegible]rode Wire feed speed range	--
	Pas de martelage

Autres commentaires/Supplementary Comments

[illegible]gnature du représentant de l'entreprise [illegible]mpany Representative's Signature: Donald Dutil

Date: 15 janv. 88

Réservé au ministère/Department use only

[illegible]ar [illegible] Date: 88 01 20

N°

(16)

QC MINISTÈRE DU TRAVAIL ET DE LA MAIN-D'OEUVRE

APPROUVÉ

SELON LA LOI [illegible] APPAREILS SOUS PRESSION J.I.T.

VÉRIFIÉ PAR .....

DATE 88 01 25

Gouvernement du Québec
Ministère de l'Habitation
et de la Protection du consommateur
Division des appareils sous pression

RÉSULTAT DE LA MÉTHODE DE SOUDAGE (RMS)
Procedure Qualification Record (PQR)

...lires désignent également les hommes et les femmes.

(Référence: ASME Section IX)

1 Entreprise/Company

Nom/Name: Construction Promec

Adresse/Address: 369 rue Murdoch

Rouyn-Noranda (Québec)

819-797-3456 | Code postal: J 9 X 1 G 4

2 Enregistrement provincial / Provincial Registration: MS WP 8814.6

3 Désignation du résultat/Record Identification

RMS N° / PQR No.: PR-1

DMS N° / WPS No.: P -1

4 Procédé(s) de soudage/Welding Process(es)

SMAW — Type: Manuel

Type:

Type:

5

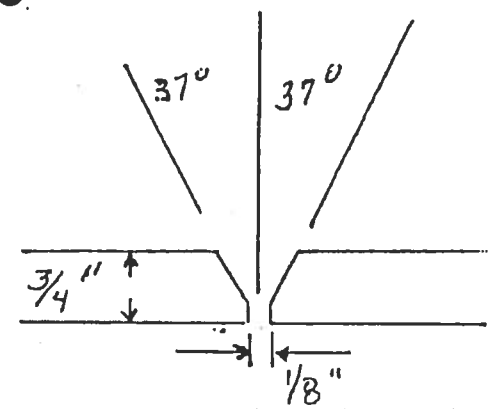

Croquis du joint utilisé/*Groove Design used*

6 Métaux de base/Base Metals (QW-403)

No. 1 Gr No. à/to P No. 1 Gr No.

Spécification/*Specification* — Tension/*Tensile*

SA - 516 - 70 — 70 000

Épaisseur / *Thickness*: 3/4 "

Diamètre/*Diameter*:

Autre / *Other*:

7 Métaux d'apport/Filler Metals (QW-404)

Classification (AWS)	SFA - No.	F - No.	A - No.
E-6011	5.1	3	1
E-7018	5.1	4	1

Autre / *Other*:

8 Positions/Positions (QW-405)

Position(s) du joint / *Position(s) of Groove*: 1 - G

Progression du soudage / *Welding Progression*: Montant / *Up* ☐ Descendant / *Down* ☐

Autre / *Other*:

9 Préchauffage/Preheat (QW-406)

Température de préchauffage / *Preheat Temperature*: 60 °F

Température de l'interpasse / *Interpass Temperature*:

Autre / *Other*:

10 Traitement thermique postsoudage/ Postweld Heat Treatment (QW-407)

Température / *Temperature*: aucun

Durée / *Time*:

Autre / *Other*:

11 Gaz/Gas (QW-408)

Composition du gaz de protection / *Shielding Gas Composition*: --

Débit du gaz / *Gas Flow Rate*:

Composition du gaz de soutien / *Backing Gas Composition*:

Débit du gaz / *Gas Flow Rate*:

Autre / *Other*:

12 Technique/Technique (QW-410)

Cordon droit ou oscillant / *String or Weave Bead*: droit

Oscillation / *Oscillation*:

Passe unique ou multiple (par côté) / *Multipass or Single Pass (Per Side)*: multiple

Électrode unique ou multiple / *Single or Multiple Electrode*: unique

Autre / *Other*:

13 Caractéristiques électriques et techniques/Electrical Characteristics and Technique (QW-409) + (QW-410)

Couche(s) de ...ure / Net ...r(s)	Procédé / *Process*	Métal d'apport / *Filler Metal* — Classification / *Classification*	Métal d'apport — Diamètre / *Diameter*	Courant / *Current* — Type / *Type*	Courant — Polarité / *Polarity*	Courant — Ampérage / *Amp*	Courant — Voltage / *Volt*	Vitesse / *Travel Speed*
...ère	SMAW	E-6011	1/8	DC	Inversé	85	26-30	-
...utres	SMAW	E-7018	1/8	DC	Inversé	105	26-30	-

(14) Essais à la traction/Tensile Tests

Éprouvette Specimen	Dimensions Dimensions Largeur Width	Épaisseur Thickness	Surface Area	Charge limite Ultimate Total Load	Contrainte limite Ultimate Unit Stress	Nature et endroit de la rupture Character and Location of Failure
(i) G-1	.781	.810	.6326	51800	81,884	matériel
G-6	.785	.829	.6508	54300	83,436	matériel

(15) Essais de pliage guidé/Guided Bend Tests — Référence:

Éprouvette Specimen	Face Face	Racine Root	Côté Side	Résultat Result	Éprouvette Specimen	Face Face	Racine Root	Côté Side	Résultat Result
(i) G-2		X		Accepté	(i) G-3	X			Accepté
(i) G-4		X		Accepté	(i) G-5	X			Accepté

(16) Essais de résilience/Toughness Tests — Référence:

Éprouvette Specimen	Endroit de l'entaille Notch Location	Forme de l'entaille Notch Type	Température de l'éprouvette Specimen Temperature	Énergie de rupture Impact Value	Expansion latérale Lateral Expansion % cisaillement/shear	Millièmes Mills	Essai en chute libre Drop Weight Cassé Break	Non cassé No Break

(17) Essai de soudure d'angle/Fillet Weld Test — Référence:

Résultat satisfaisant Result-Satisfactory — Oui Yes ☐ Non No ☐

Pénétration dans métal adjacent Penetration into Parent Metal — Oui Yes ☐ Non No ☐

Résultats Macroscopiques Macro-Results

(18) Autres essais/Other Tests — Référence:

Reviewed and accepted by Construction Promec Inc. QC Manager
Date: March 29, 2007 Signed: [signature]
Jean-Guy Bisson, eng

(19) Nom du soudeur Welder's Name: Serge Gagné — Symbole Stamp No.: G

Essais effectués par Tests conducted by: Mequaltech — Essai de laboratoire No. Laboratory Test No.: 88-078

Nous certifions que les renseignements concernant ce résultat sont exacts et que les essais de soudage ont été préparés, soudés et exécutés conformément aux exigences de la section IX du Code ASME.

We certify that the statements in this record are correct and that the test welds were prepared, welded and tested in accordance with the requirements of section IX of the ASME Code.

(20) Signature du représentant de l'entreprise Company Representative's Signature: [signature] — Date Date: 15 janvier 1988

QC MINISTÈRE DU TRAVAIL ET DE LA MAIN-D'OEUVRE
APPROUVÉ
SELON LA LOI SUR LES APPAREILS SOUS PRESSION D.I.G.T.
VÉRIFIÉ PAR: [signature]
DATE: 01/01/05

Réservé au Ministère/Department Use Only 8814.6

Pièces soudées le Surveillance Welded on: 14 janvier 88 — Inspecteur Inspector: Yvon Viau

Résultats Vérifiés le Record Verified on: 880125 — Inspecteur Inspector: [signature]

Caractéristiques électriques et t[illegible]niques/*Electrical Characteristics and Tec[illegible]ue* (QW-409) + (QW-410)

[illegible]uche(s) de soudure *[illegible]ld Layer(s)*	Procédé *Process*	Métal d'appo[illegible] *Filler Metal* Classification *Classification*	Diamètre *Diameter*	Courant *Current* Type *Type*	Polarité *Polarity*	Gamme d'ampérage *Amp Range*	Gamme de voltage *Volt Range*	Gamme de vitesse *Travel Speed Range*
[illegible]e	SHAW	E6011	$\frac{1}{8}$" à $\frac{5}{32}$"	DC	Inversé	75 - 85	26-30	--
[illegible]tres	SHAW	E7018	$\frac{1}{8}$" à $\frac{5}{32}$"	DC	Inversé	105 -110	26-30	--

[illegible]sseur et type d'électrode de tungstène *[illegible]gsten Electrode Size and Type*	--
[illegible]le de transfert du métal pour GMAW *[illegible]te of Metal Transfer for GMAW*	--
[illegible]don droit ou oscillant *[illegible]g or Weave Bead*	Droit et oscillant
[illegible]édé de gougeage arrière *[illegible]hod of Back Gouging*	Arc Air
[illegible]oyage initial et entre les passes (brossage, meulage, etc.) *[illegible]l and Interpass Cleaning (Brushing, Grinding, etc.)*	Brossage ou meulage
[illegible]mètre de la tuyère à gaz *[illegible]ce or Gas Cup Size*	--
[illegible]illation *[illegible]illation* Largeur *Width*	-- Fréquence *Frequency*
[illegible]ance entre tuyère & pièce *[illegible] to Work Distance*	--
[illegible] ou multiple (par côté) *[illegible]iple [illegible]ingle Pass (per Side)*	--
[illegible]trode unique ou multiple *[illegible]iple or Single Electrode*	--
[illegible]nme de vitesse d'alimentation de l'électrode *[illegible]trode Wire feed speed range*	--
[illegible]e *[illegible]er*	Pas de martelage

Autres commentaires/*Supplementary Comments*

INGÉNIEUR - ENGINEER Jean-Guy Bisson 111343 QUÉBEC

Reviewed and accepted by Construction Promec Inc. QC Manage
Date: March 29, 2007 Signed: [signature]
Jean-Guy Bisson, eng

Signature du représentant de l'entreprise *Company Representative's Signature* [signature] Date *Date* 15 janv. 88

(16)

QC MINISTÈRE DU TRAVAIL ET DE LA MAIN-D'OEUVRE
APPROUVÉ
SELON LA [illegible] [illegible]AOEILS SOUS PRESSION [illegible]
VÉRIFIÉ PAR [signature]
DATE 88 01 25

Réservé au ministère/*Department use only*

[illegible]é par [signature] Date: [illegible]
[illegible]ure N°

Appendix A

ALL APPLICABLE ITRs & LOGs

Date de qualification	Qualification
2017-05-06	Soudage sur appareils sous pression Classe A Tuyaux 50 mm, catégorie 160-P1-6G, F3-F4

Emploi
Québec

Certificat de qualification

Nom de famille
MASSICOTTE-ROY

Prenom
ALEXANDRE

Numéro de dossier
0000000176159

Délivré en vertu de la Loi sur la formation et la qualification professionnelles de la main-d'oeuvre (L.R.Q., chapitre F-5).

Délivré le
2017-05-06

Expire le
2019-05-06

X

Signature

Ministère du Travail, de l'Emploi et de la Solidarité sociale

001386104

1-1016 (04-2015)

ıte de qualification	Qualification
2015-11-18	Soudage sur appareils sous pression Classe A Tuyaux 50 mm, catégorie 160-P1-6G, F3-F4

Emploi Québec

Certificat de qualification

Nom de famille
FAUBERT

Prénom
STEVEN

Numéro de dossier
0000000125746

Délivré en vertu de la Loi sur la formation et la qualification professionnelles de la main-d'oeuvre (L.R.Q., chapitre F-5).

Délivré le
2015-11-18

Expire le
2017-11-18

X
Signature

Ministère du Travail, de l'Emploi et de la Solidarité sociale

001139657

034 (07-2009)

Plier ici

Détacher sur le pointillé

Plier ici

Objet : Délivrance de votre certificat de qualification

Date de qualification	Qualification
2015-05-28	Soudage sur appareils sous pression Classe A Tuyaux 50 mm, catégorie 160-P1-6G, F3-F4

Emploi
Québec

Certificat de qualification

Nom de famille
MARTEL

Prénom
SYLVAIN

Numéro de dossier
0000000046942

Délivré en vertu de la Loi sur la formation et la qualification professionnelles de la main-d'oeuvre (L.R.Q., chapitre F-5).

Délivré le
2015-05-28

Expire le
2017-05-28

X Sylvain Martel
Signature

Ministère de l'Emploi et de la Solidarité sociale

001055843

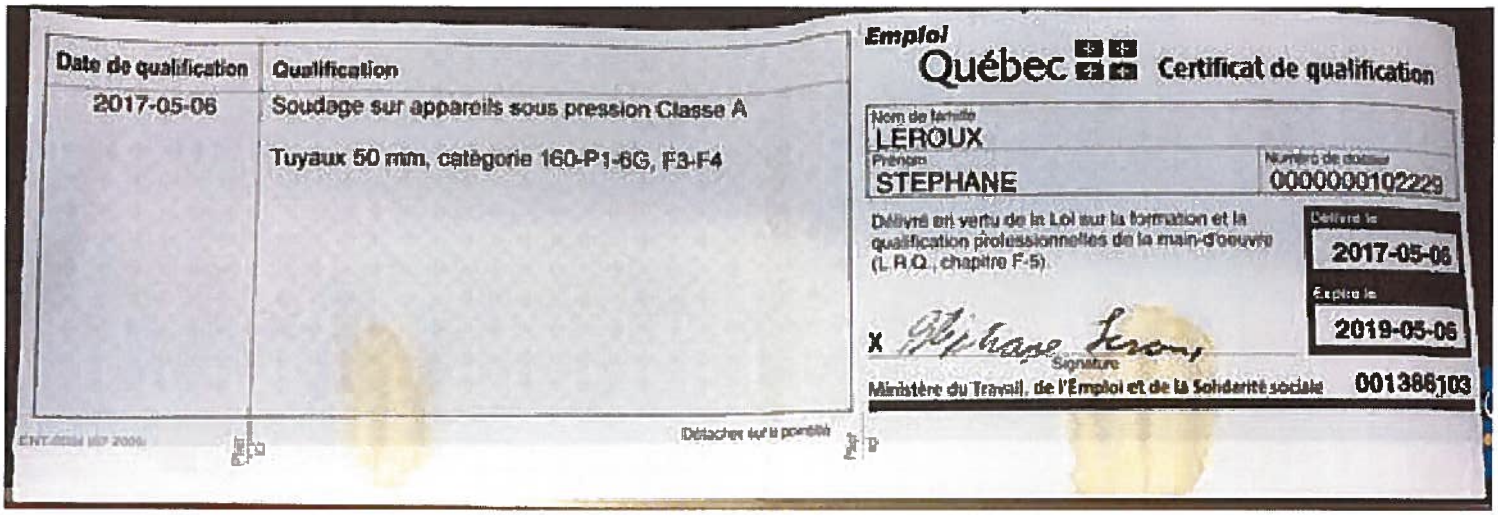

Date de qualification	Qualification
2017-05-06	Soudage sur appareils sous pression Classe A Tuyaux 50 mm, catégorie 160-P1-6G, F3-F4

Détacher sur le pointillé

Emploi Québec

Certificat de qualification

Nom de famille
LEROUX

Prénom
STEPHANE

Numéro de dossier
0000000102229

Délivré en vertu de la Loi sur la formation et la qualification professionnelles de la main-d'oeuvre (L.R.Q., chapitre F-5).

Délivré le
2017-05-06

Expire le
2019-05-06

X Signature

Ministère du Travail, de l'Emploi et de la Solidarité sociale

001386103

Alberta
Municipal Affairs
and Housing

21396

ABSA
the pressure equipment safety authority

Grade "B" Pressure Welder's Certificate of Competency

This is to certify that **Marylene Paul**
having complied with provisions of the Safety Codes Act, is authorized to engage in pressure welding in accordance with the prescribed Regulations.

Dated at Edmonton
October 04, 2007

W-26448
File no.

Chief Inspector and Administrator

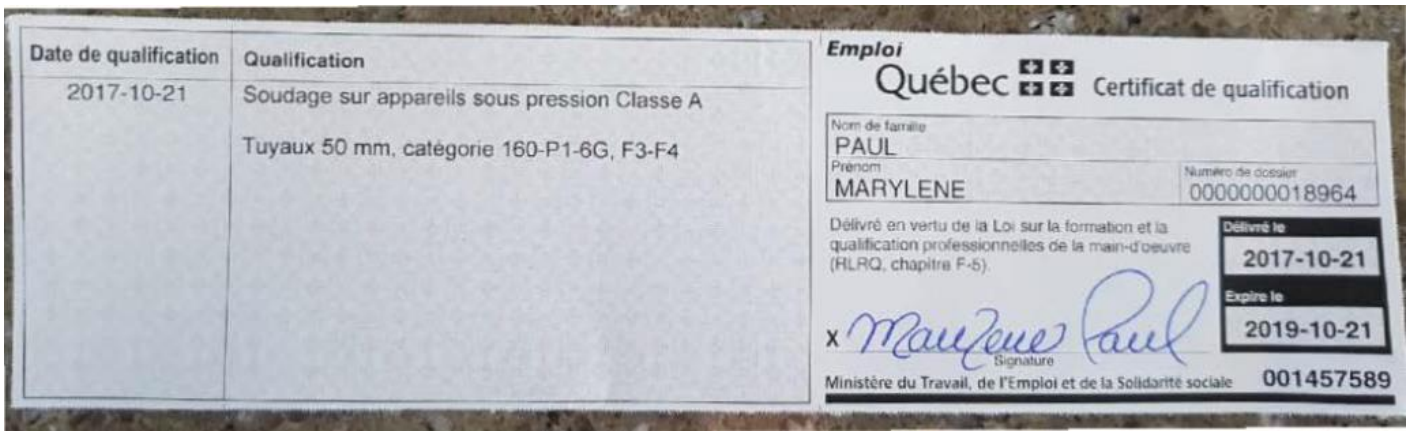

Date de qualification	Qualification
2017-10-21	Soudage sur appareils sous pression Classe A Tuyaux 50 mm, catégorie 160-P1-6G, F3-F4

Emploi Québec — Certificat de qualification

Nom de famille: PAUL

Prénom: MARYLENE

Numéro de dossier: 0000000018964

Délivré en vertu de la Loi sur la formation et la qualification professionnelles de la main-d'oeuvre (RLRQ, chapitre F-5).

Délivré le: 2017-10-21

Expire le: 2019-10-21

x Signature

Ministère du Travail, de l'Emploi et de la Solidarité sociale 001457589

Keyano COLLEGE

Welder Performance Qualification Card

AOQP No. 7121

MARYLENE PAUL — Name

W-26448 — File No.

This card is issued pursuant to the Safety Codes Act and the Pressure Welders Regulation. The performance qualification is in accordance with Section IX of the ASME Code and subject to the limitations on the reverse side.

MARCH 17-2016 — Date of Test

Marylene Paul — Welder's Signature

Louis Boutin — Welding Examiner (Print/type)

CARD No. 8816

Performance Qualification CARD No. 8816

Process(es) SMAW SMAW Materials (P. No.) P1/P15F/P34/P4X

Filler Metal (F. No.) F3 F4 Min. Diameter 25mm OD

Max. Deposited Weld Metal 6mm MAX Position(s) Qualified ALL

Backing OPTIONAL Backing Gas N/A

Progression UPHILL

20 MARCH 17 [signature] E400101

PQ Expiry Date Welding Examiner Signature File No.

Date de qualification	Qualification
2017-02-11	Soudage sur appareils sous pression Classe A Tuyaux 50 mm, catégorie 160-P1-6G, F3-F4

Emploi Québec **Certificat de qualification**

Nom de famille
GAUTHIER TOURIGNY

Prénom
KEVIN

Numéro de dossier
0000000114581

Délivré en vertu de la Loi sur la formation et la qualification professionnelles de la main-d'oeuvre (L.R.Q., chapitre F-5).

Délivré le
2017-02-11

Expire le
2019-02-11

X
Signature

Ministère du Travail, de l'Emploi et de la Solidarité sociale

001336789

AGNICO EAGLE

Vendor Document Status

1 ☐ Proceed to next submission and status.

2 ☐ Proceed with exceptions as noted to next submission and status.

3 ☐ Do not proceed.
Revise as noted and resubmit next submission and status.

4 ☑ Complete, no further submission required.

By: Jean-Francois Tremblay Date: 2017-05-02

Review and authorization to fabricate are only for general conformance with the design concept of the Project as expressed in the Contract Documents. Sole responsibility for the accuracy and completeness of this document, including but not limited to dimensions and quantities, remains with the Supplier/Contractor. Agnico Eagle does not warrant the accuracy or completeness of any of the information contained herein, nor does Agnico Eagle authorize or approve any construction means, methods, techniques, sequences or any safety precautions or procedures.

Agnico Eagle No. 6515-C-270-007-141-TES-0017 R: Sub001

DOCUMENT FOR INFORMATION

NUQSANA PROMEC MINING

Agnico-Eagle Mines Ltd.
Inspection Deficiency Report

ITR Number : AEM-GE-ITR-005
Contract no. : C22466T / C22498E

AGNICO EAGLE

Area:	CWP No:
Equipment Tag No:	Inspection Deficiency Report No:
Date:	Page_____ of _____
Reference Drawings:	
Reference Photos:	
Description of Deficiency:	
Suggested Solution:	
Engineering Contact Made: Yes ☐ No ☐ Name:	
Course of Action:	
Engineering Follow-up Required: Yes ☐ No ☐ Date Required:	

Promec's Representative Print Name		Client's Representative Print Name	
Promec's Representative Signature	Date	Client's Representative Signature	Date

6515-C-270-007

Fuel Tanks Piping Supply and Installation

Inspection Deficiency Log

Document Number : AEM-GE-LOG-004
Contract Number : C22466T / C22984E

Number	Description	Initiator	Dept.	Date	Contract No.		Progress Status
Deficiency-001						N/A	
Deficiency-002						N/A	
Deficiency-003						N/A	
Deficiency-004						N/A	
Deficiency-005						N/A	
Deficiency-006						N/A	
Deficiency-007						N/A	
Deficiency-008						N/A	
Deficiency-009						N/A	
Deficiency-010						N/A	
Deficiency-011						N/A	
Deficiency-012						N/A	
Deficiency-013						N/A	
Deficiency-014						N/A	
Deficiency-015						N/A	
Deficiency-016						N/A	
Deficiency-017						N/A	
Deficiency-018						N/A	
Deficiency-019						N/A	
Deficiency-020						N/A	
Deficiency-021						N/A	
Deficiency-022						N/A	
Deficiency-023						N/A	
Deficiency-024						N/A	
Deficiency-025						N/A	
Deficiency-026						N/A	
Deficiency-027						N/A	
Deficiency-028						N/A	
Deficiency-029						N/A	
Deficiency-030						N/A	
Deficiency-031						N/A	
Deficiency-032						N/A	
Deficiency-033						N/A	
Deficiency-034						N/A	
Deficiency-035						N/A	
Deficiency-036						N/A	
Deficiency-037						N/A	
Deficiency-038						N/A	
Deficiency-039						N/A	
Deficiency-040						N/A	

Vendor Document Status

AGNICO EAGLE

1 ☐ Proceed to next submission and status.

2 ☐ Proceed with exceptions as noted to next submission and status.

3 ☐ Do not proceed.
Revise as noted and resubmit next submission and status.

4 ☑ Complete, no further submission required.

By: JEAN-FRANCOIS TREMBLAY Date: 2017-05-16

Review and authorization to fabricate are only for general conformance with the design concept of the Project as expressed in the Contract Documents. Sole responsibility for the accuracy and completeness of this document, including but not limited to dimensions and quantities, remains with the Supplier/Contractor. Agnico Eagle does not warrant the accuracy or completeness of any of the information contained herein, nor does Agnico Eagle authorize or approve any construction means, methods, techniques, sequences or any safety precautions or procedures.

Agnico Eagle No. 6515-C-270-007-141-TES-0020 R: Sub001

DOCUMENT FOR INFORMATION

AGNICO EAGLE

Vendor Document Status

1 ☐ Proceed to next submission and status.

2 ☐ Proceed with exceptions as noted to next submission and status.

3 ☐ Do not proceed.
Revise as noted and resubmit next submission and status.

4 ☑ Complete, no further submission required.

By: JEAN-FRANCOIS TREMBLAY Date: 2017-06-22

Review and authorization to fabricate are only for general conformance with the design concept of the Project as expressed in the Contract Documents. Sole responsibility for the accuracy and completeness of this document, including but not limited to dimensions and quantities, remains with the Supplier/Contractor. Agnico Eagle does not warrant the accuracy or completeness of any of the information contained herein, nor does Agnico Eagle authorize or approve any construction means, methods, techniques, sequences or any safety precautions or procedures.

Agnico Eagle No. 6515-C-270-007-141-TES-0045 R: Sub002

DOCUMENT FOR INFORMATION

NUQSANA PROMEC MINING

Agnico-Eagle Mines Ltd.
Pressure Test Report

ITR Number : AEM-PI-ITR-001
Contract no. : C22466T

AGNICO EAGLE

Design Code	Design Test Pressure	Test Medium	Medium Temp.	Test Duration

P&ID (Highlight Boundaries)	Rev	Line	Drawing/ISO	Rev	Spool

Pressure Test Specifications

	Contractor	Date (dd-mm-yy)	Client	Date (dd-mm-yy)
Pre-Hydro Inspection				
NDE/PWHT Clearance				
Release for Test				

Test Instruments

	Make/Model	Serial Number	Test Range (psi)	Calibration Date
Upper				
Lower				

Test Data

	Time	Test Pressure	Ambient Temp. (C)	Pipe Temp. (C)	Comments
Start					
Finish					

Comments/Referenced Documents (e.g. applicable field reports):

PRESSURE TEST COMPLETE

Contractor Representative			Client Representative		
Name (Print)	Signature	Date	Name (Print)	Signature	Date

LINE RESTORATION COMPLETE

Contractor Representative			Client Representative		
Name (Print)	Signature	Date	Name (Print)	Signature	Date

ADDITIONAL LINES

P&ID	Rev	Line	Drawing/ISO	Rev	Spool

P&ID	Rev	Line	Drawing/ISO	Rev	Spool

FORM
PRESSURE TEST REPORT

Design Code	Design Test Pressure	Test Medium	Medium Temp.	Test Duration
	100 PSI	Pneumatic	15c	60 min

P&ID (Highlight Boundaries)	Rev	Line	Drawing/ISO	Rev	Spool
See attached			116-150-PDI-CC10-0011	2	Pgs 1-5
			116-150-PDI-CC10-0012	2	1/1

Pressure Test Specifications

	Contractor	Date (dd-mm-yy)	Client	Date (dd-mm-yy)
Pre-Hydro Inspection	Promec	13/07/2018		
NDE/PWHT Clearance				
Release for Test				

Test Instruments

	Make/Model	Serial Number	Test Range (psi)	Calibration Date
Upper	winters	G17-0672	0-300	May 15th 2017
Lower				

Test Data

	Time	Test Pressure	Ambient Temp. (C)	Pipe Temp. (C)	Comments
Start	2h05 P.M.	100PSI	15c	15c	
Finish	3h30 P.M.	100PSI	15c	15c	

Comments/Referenced Documents (e.g. applicable field reports):

PRESSURE TEST COMPLETE

Contractor Representative			Client Representative		
JEAN-SÉBASTIEN LEBLANC FOR Robbie Lamothe	Signature	July 13th 2018	James Cardinal	Signature	July 13th 2018

LINE RESTORATION COMPLETE

Contractor Representative			Client Representative		
JEAN-SÉBASTIEN LEBLANC, FOR Robert Lamothe	Signature	July 13th 2018	James Cardinal	Signature	July 13th 2018

ADDITIONAL LINES

Prepared by : Stéphane Doré

Approved by : Éric Poulin

Date : 18-04-2018

This document might be an out-of-date version/revision. Please refer to ISO site for the latest version/revision.
I:\Site-NOR\Processus Promec 9001-2015\172\F

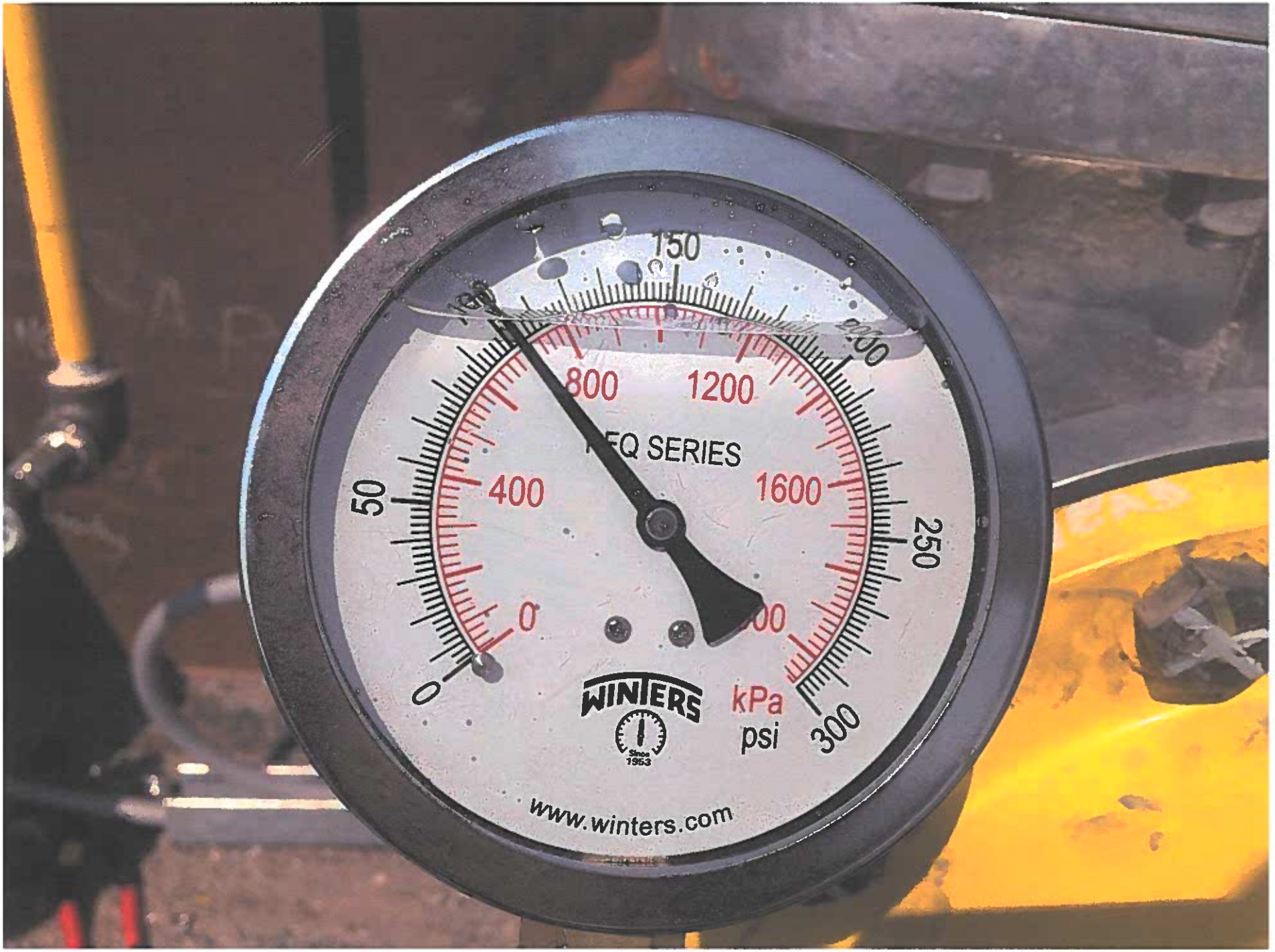
150
800
1200
400
1600
50
250
0
0
300
WINTERS
Since 1953
kPa
psi
www.winters.com

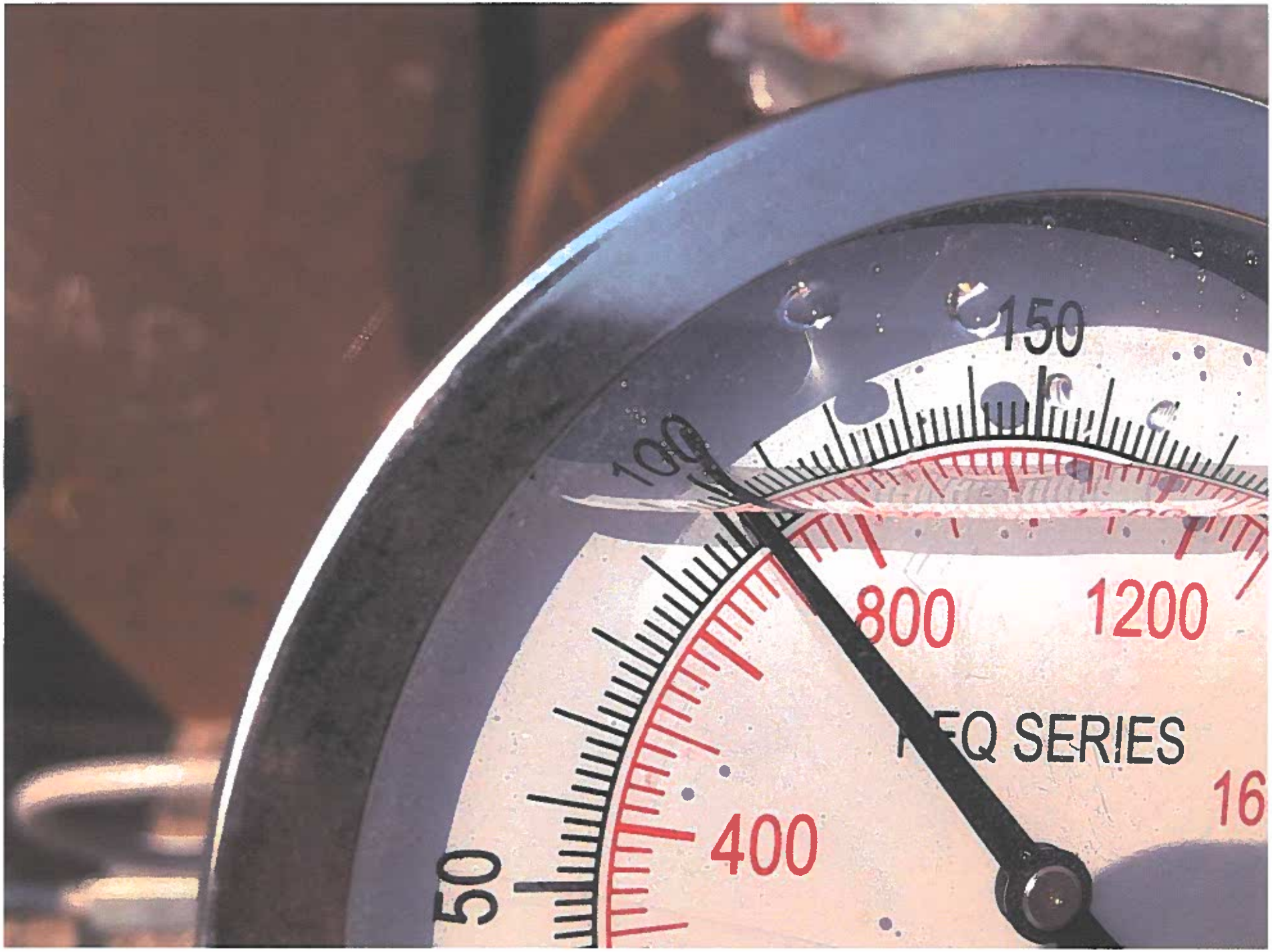
150
100
800
1200
400
50
EQ SERIES
16

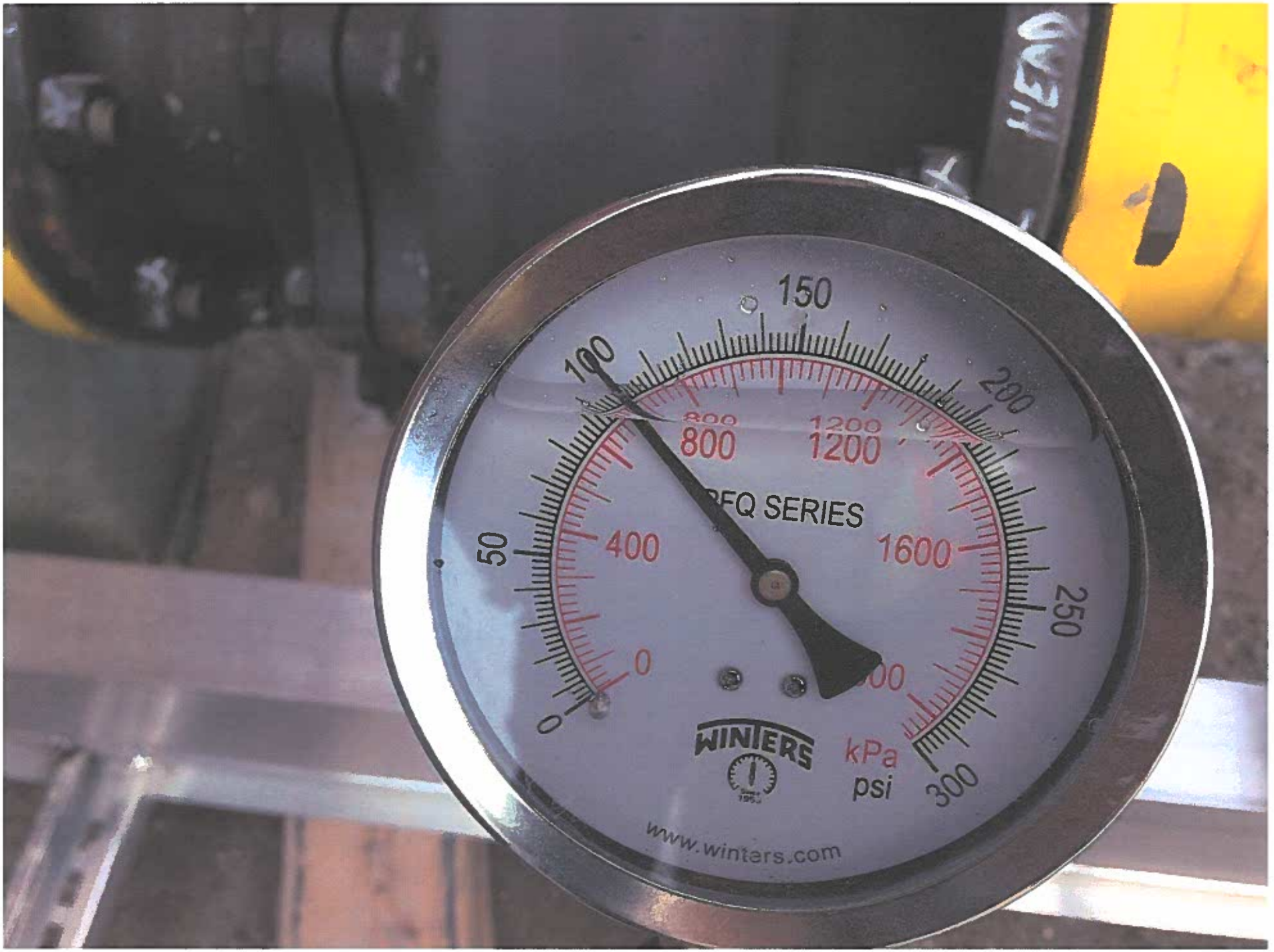
HEAD
150
100
200
800
1200
FQ SERIES
50
400
1600
250
0
0
300
WINTERS
kPa
psi
www.winters.com

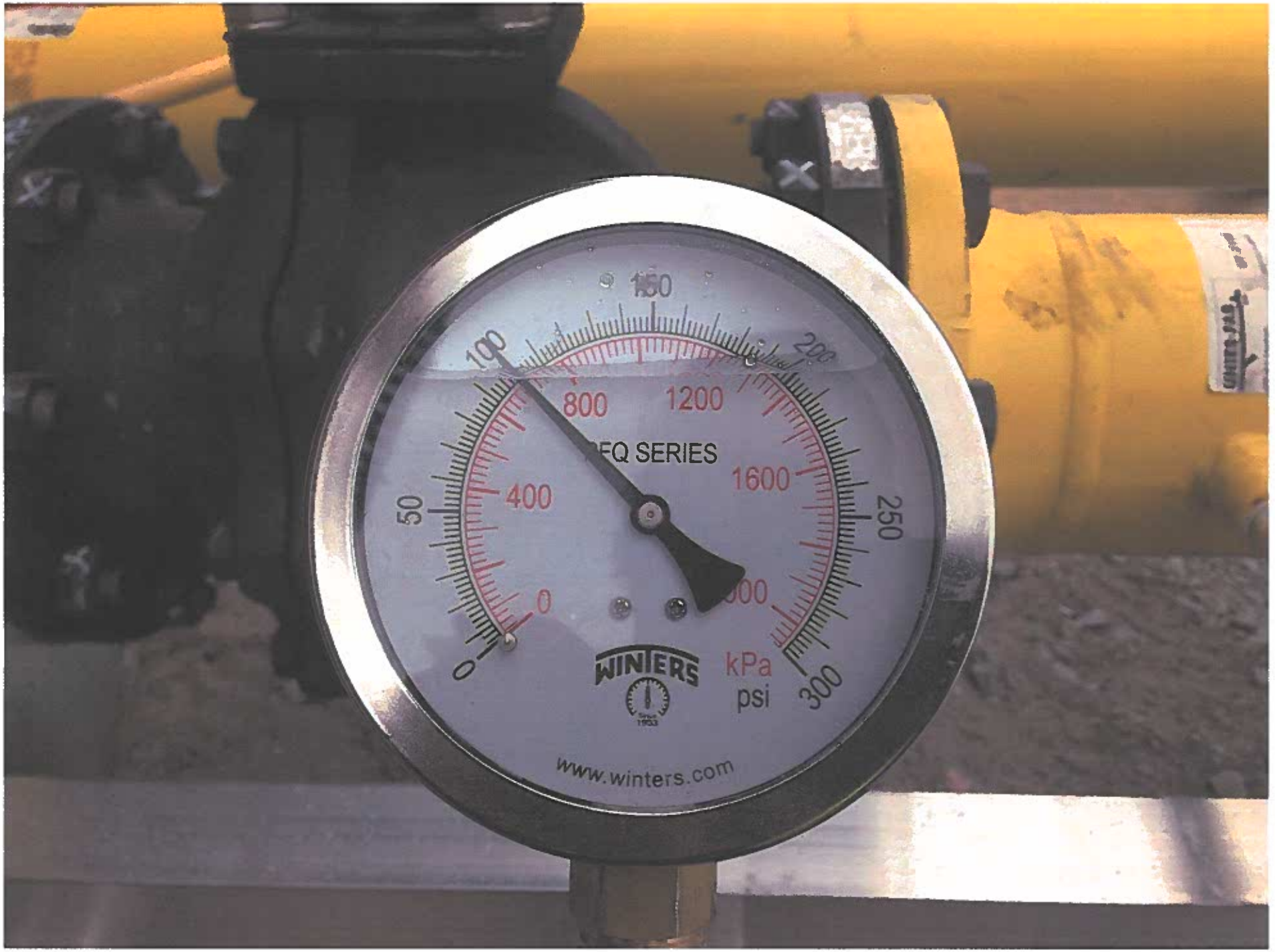
150
100
200
800
1200
EQ SERIES
1600
400
50
250
0
0
300
WINTERS
kPa
psi
www.winters.com

NO. DESSIN DRAWING NO. 65-116-205-200_R3.dwg

FORMAT ARCHD

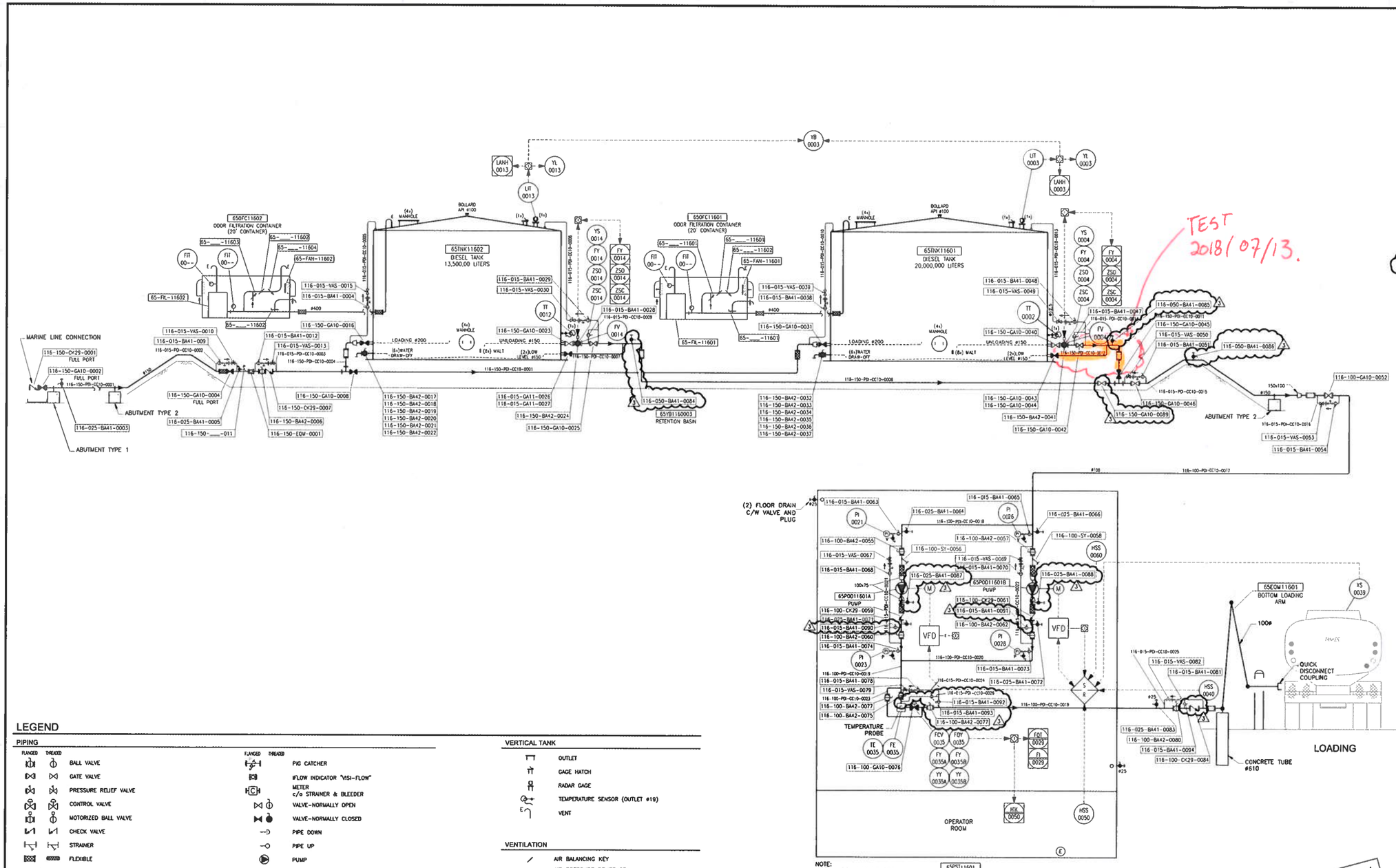

NOTE:
INSTALL DRAIN VALVE #25 WITH PLUG AT LOW POINTS.

LEGEND

PIPING

FLANGED	THREADED		
		BALL VALVE	
		GATE VALVE	
		PRESSURE RELIEF VALVE	
		CONTROL VALVE	
		MOTORIZED BALL VALVE	
		CHECK VALVE	
		STRAINER	
		FLEXIBLE	
		REDUCER	
		UNION	
		FLANGES	
		BLANK FLANGE	
		CAP	
		CONNECTION	

FLANGED	THREADED	
		PIG CATCHER
		"FLOW INDICATOR "VISI-FLOW"
		METER c/o STRAINER & BLEEDER
		VALVE-NORMALLY OPEN
		VALVE-NORMALLY CLOSED
		PIPE DOWN
		PIPE UP
		PUMP
		PRESSURE RELIEF VALVE KIT: PIPING ø12.5 SCH. 80, PRESSURE RELIEF VALVE (AJUSTED TO 5 PSI UNLESS OTHERWISE SPECIFIED), UNION, T WITH PLUG & BALL VALVE
		PRESSURE GAGE TO VACUM OF POMPE (VACUUM)
		PRESSURE GAGE TO DISHARGE OF PUMP (POSITIVE PRESSURE)
		TEMPERATURE PROBE

VERTICAL TANK

- OUTLET
- GAGE HATCH
- RADAR GAGE
- TEMPERATURE SENSOR (OUTLET #19)
- VENT

VENTILATION

- AIR BALANCING KEY
- AIR PRESSURE RELIEF OR BACK-DRAFT DAMPER
- MANUEL FLAP
- AIR FLOW SWITCH

GENERAL

- EXTINGUISHER 20 BC

P&ID

SEE DWG 65-500-205-207

POUR CONSTRUCTION
FOR CONSTRUCTION
AGNICO EAGLE DATE : 2018-04-16

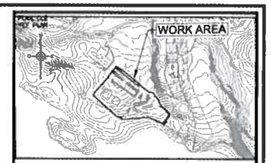

WSP
1075, 3e AVENUE E
VAL-D'OR (QUÉBEC) CANADA J9P 6M1
TÉL. : 1-819-825-4711 | TÉLÉC. : 1-819-825-4715 | WWW.WSPGROUP.COM
Réf. 151-08440-40

NOTES GÉNÉRALES / GENERAL NOTES

1. REPLACE DRAWING : 65-103-205-200
2. EQUIPMENTS NUMBERING AS PER AEM STANDARDS. DOCUMENTS: 0102-000-100-STD-002 & 0102-CDL-02
3. ALL DRAINS TO BE INSTALLED HORIZONTALLY.

CONFIDENTIALITÉ ET DROITS D'AUTEUR © AGNICO EAGLE LTÉE ET WSP CANADA INC. TOUS DROITS RÉSERVÉS. CE DOCUMENT NE PEUT ÊTRE REPRODUIT, MODIFIÉ, PUBLIÉ, TRADUIT OU DISTRIBUÉ, EN TOUT OU EN PARTIE, SANS LE CONSENTEMENT PRÉALABLE ÉCRIT DE AGNICO EAGLE LTÉE ET WSP CANADA INC. CE DOCUMENT EST FOURNI SUR UNE BASE "TEL QUEL" ET "TEL QUE DISPONIBLE". AGNICO EAGLE LTÉE ET WSP CANADA INC. NE FONT AUCUNE DÉCLARATION OU GARANTIE D'AUCUNE SORTE QUANT À L'EXACTITUDE OU À L'EXHAUSTIVITÉ DU CONTENU DE CE DOCUMENT. DE PLUS, AGNICO EAGLE LTÉE ET WSP CANADA INC. DÉCLINENT TOUTE RESPONSABILITÉ QUANT À L'UTILISATION DE CE DOCUMENT À DES FINS AUTRES QUE CELLES POUR LESQUELLES IL A ÉTÉ PRÉPARÉ.
© AGNICO EAGLE LTÉE ET WSP CANADA INC. TOUS DROITS RÉSERVÉS.
CE DOCUMENT EST LA PROPRIÉTÉ DE AGNICO EAGLE LTÉE ET WSP CANADA INC. IL NE PEUT ÊTRE UTILISÉ SANS AUTORISATION ÉCRITE. IL NE DOIT PAS ÊTRE PRÊTÉ OU REMIS À DES FINS AUTRES QUE CELLES POUR LESQUELLES IL A ÉTÉ PRÉPARÉ.

DESSINS EN RÉFÉRENCE / REFERENCE DRAWINGS

TITRE / TITLE	# (NO)

AGNICO EAGLE

REV.	DATE	DESCRIPTION	PAR/BY	APP.	CLIENT
3	2018-04-16	EQUIPMENTS ADDED	J.M.	D.T.	
2	2017-09-05	RENUMBERING OF EQUIPMENTS	J.M.	D.T.	
1	2017-07-20	INSTRUMENTATION ADDED	F.M.G.	L.S.	
0	2017-05-31	ISSUED FOR CONSTRUCTION	J.M.	D.T.	

REVISIONS

2018-04-16

TITRE / TITLE
AGNICO EAGLE – MELIADINE DIVISION
116 – FUEL TANK FARM
205 – P&ID
FUEL DISTRIBUTION
FLOW DIAGRAM

DESSINÉ PAR DRAWN BY	GHISLAINE CORNUT, tech.	DATE 2017-05-26
VÉRIFIÉ PAR CHECKED BY	JOËL MORLIÈRE, tech.	2017-05-26
APPROUVÉ PAR APPROVED BY	DENIS THIBODEAU, P. Eng.	2017-05-26
ÉCHELLE SCALE	NONE	DATE 2017-05-26
NO. DESSIN DRAWING NO.	65-116-205-200	
NO. PROJET PROJECT NO.	6515	REVISION 3 / FEUILLE / SHT 1 / 1

AE-CART-ARCH D

\\CAMTL1DATA01\projets\2015\1\151-08440-40\Genie Nordique\Dao\65-118-205-200_R3.dwg

FILE NO. 65-116-205-200_R3.dwg

AGNICO EAGLE

Vendor Document Status

1 ☐ Proceed to next submission and status.

2 ☐ Proceed with exceptions as noted to next submission and status.

3 ☐ Do not proceed.
Revise as noted and resubmit next submission and status.

4 ☑ Complete, no further submission required.

By: Jean-Francois Tremblay Date: 2017-05-02

Review and authorization to fabricate are only for general conformance with the design concept of the Project as expressed in the Contract Documents. Sole responsibility for the accuracy and completeness of this document, including but not limited to dimensions and quantities, remains with the Supplier/Contractor. Agnico Eagle does not warrant the accuracy or completeness of any of the information contained herein, nor does Agnico Eagle authorize or approve any construction means, methods, techniques, sequences or any safety precautions or procedures.

Agnico Eagle No. 6515-C-270-007-141-TES-0015 R: Sub001

DOCUMENT FOR INFORMATION



Fuel Tanks Piping

Supply and Installation



AGNICO EAGLE

Punchlist

Document Number : AEM-GE-ITR-003

Contract Number : C22466T / C22498E

Equipment/System description:

ITEM No	DESCRIPTION	CAT 1	CAT 2	CAT 3	COMMENTS	COMPLETED
1						
2						
3						
4						
5						
6						
7						
8						
9						
10						
11						
12						
13						
14						
15						
16						
17						
18						
19						
20						

CAT 1 = Effects commissioning
CAT 2 = Effects operation
CAT 3 = Post operation

AGNICO EAGLE

Vendor Document Status

1 ☐ Proceed to next submission and status.

2 ☐ Proceed with exceptions as noted to next submission and status.

3 ☐ Do not proceed.
Revise as noted and resubmit next submission and status.

4 ☑ Complete, no further submission required.

By: Jean-Francois Tremblay Date: 2017-05-02

Review and authorization to fabricate are only for general conformance with the design concept of the Project as expressed in the Contract Documents. Sole responsibility for the accuracy and completeness of this document, including but not limited to dimensions and quantities, remains with the Supplier/Contractor. Agnico Eagle does not warrant the accuracy or completeness of any of the information contained herein, nor does Agnico Eagle authorize or approve any construction means, methods, techniques, sequences or any safety precautions or procedures.

Agnico Eagle No. 6515-C-270-007-141-TES-0016 R: Sub001

DOCUMENT FOR INFORMATION

Date: _____

To: _____

Project No: _____

Contract No: _____

Contract Title: _____

Contractor: _____

We, _____ (Contractor's Name), the Contractor for the above described contract, hereby certify that we have reviewed the Contract Documents pertaining to:

Contract No.: _____

Contract Name: _____

Partial Completion Certificates: _____

and having physically inspected the Work performed, do hereby file claim for a notice of Final Completion.

I do declare that I am, _____ (Responsible's Name), HAVING AUTHORITY FROM MY COMPANY TO PETITION FOR THE ABOVE REFERRED TO FINAL COMPLETION NOTICE.

Signature: _____

Name: _____

Title: _____

AS-BUILT DRAWINGS

NO. DESSIN
DRAWING NO. 65-116-210-200

FORMAT ARCH D

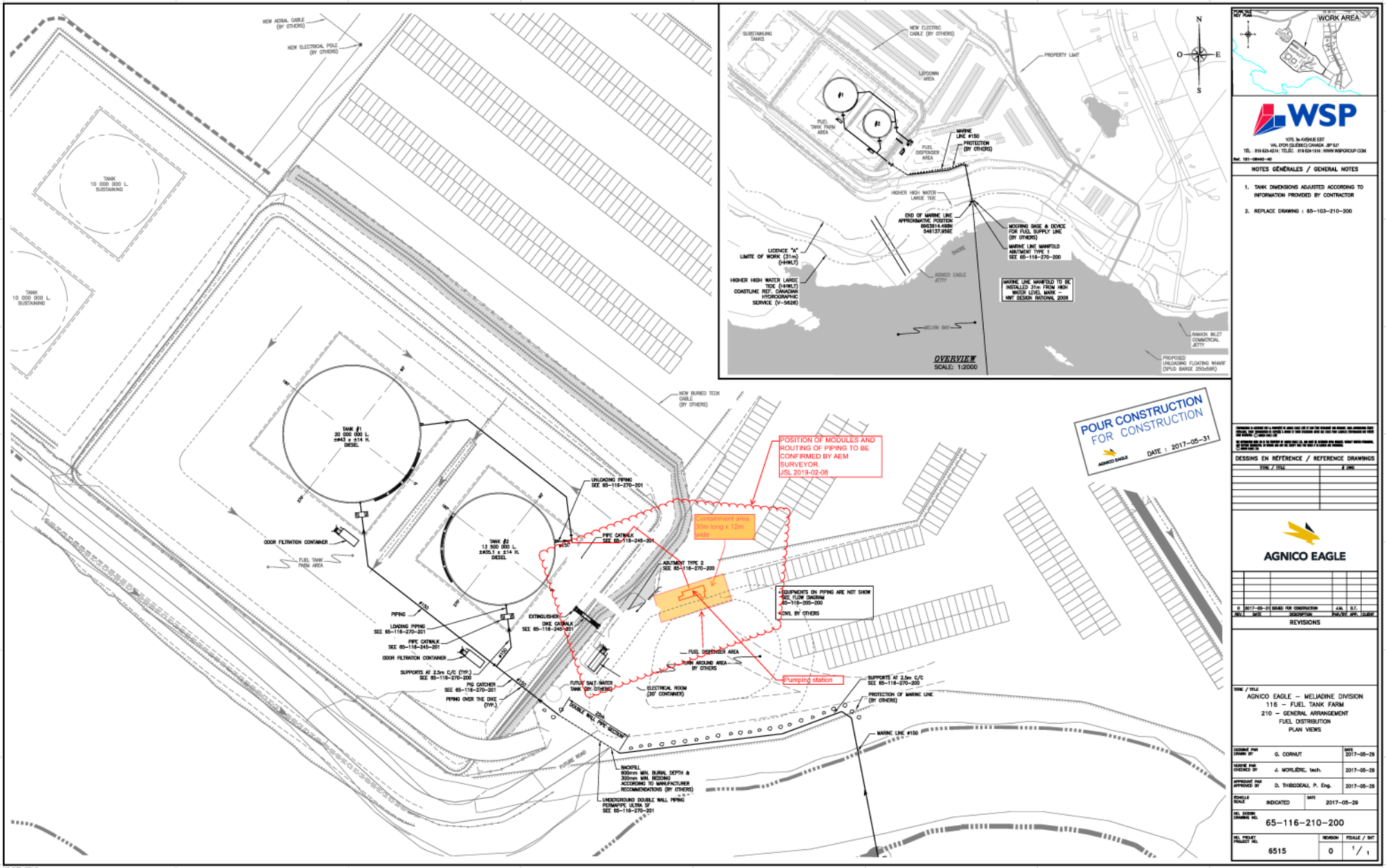

POUR CONSTRUCTION
FOR CONSTRUCTION
AGNICO EAGLE
DATE : 2017-05-31

WSP
1075, 3e AVENUE EST
VAL-D'OR (QUÉBEC) CANADA J9P 0J7
TÉL. : 819 825-6314 TÉLÉC. : 819 824-1314 | WWW.WSPGROUP.COM
Ref. 181-09440-40

NOTES GÉNÉRALES / GENERAL NOTES

1. TANK DIMENSIONS ADJUSTED ACCORDING TO INFORMATION PROVIDED BY CONTRACTOR
2. REPLACE DRAWING : 65-103-210-200

DESSINS EN RÉFÉRENCE / REFERENCE DRAWINGS

TYPE / TITLE	# (NO)

AGNICO EAGLE

REV.	DATE	DESCRIPTION	PAR./VÉ.	APP.	CLIENT
0	2017-05-31	ISSUED FOR CONSTRUCTION	J.M.	D.T.	

REVISIONS

TYPE / TITLE
AGNICO EAGLE – MEL/ADINE DIVISION
116 – FUEL TANK FARM
210 – GENERAL ARRANGEMENT
FUEL DISTRIBUTION
PLAN VIEWS

DESSINÉ PAR DRAWN BY	G. CORNUT	2017-05-29
VÉRIFIÉ PAR CHECKED BY	J. MORLIÈRE, tech.	2017-05-29
APPROUVÉ PAR APPROVED BY	D. THIBODEAU, P. Eng.	2017-05-29

ÉCHELLE SCALE: INDICATED
DATE: 2017-05-29

NO. DESSIN DRAWING NO. 65-116-210-200

NO. PROJET PROJECT NO. 6515
REVISION 0
FEUILLE / SHT 1/1

AC-GMT-ARCH D

\\CIMT1.1QX01\projets\2019\1\181-09440-40\Sante Mondiale\Dwl\65-116-210-200_R0.dwg 2019-02-19 14:03:09

FILE NO. 65-116-210-200_R0.dwg

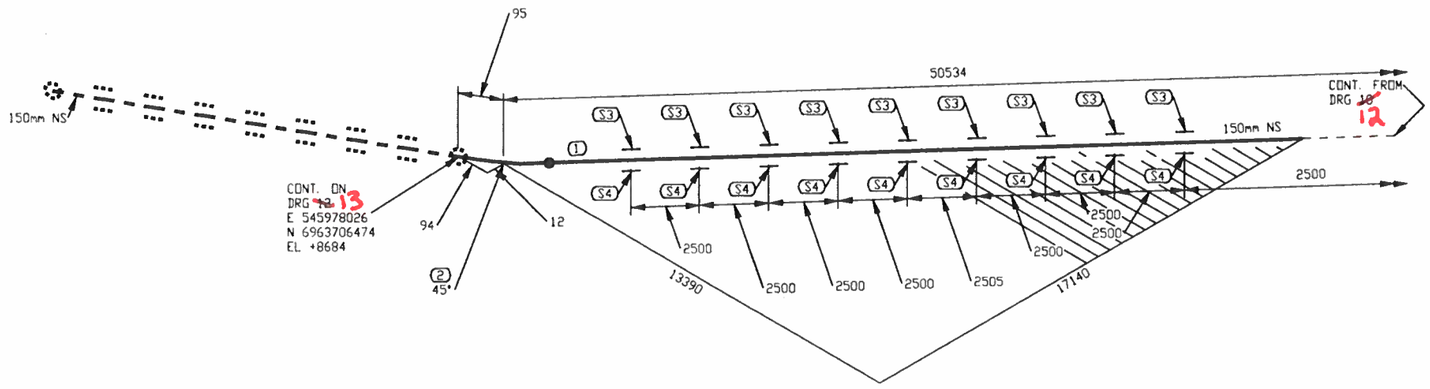

LISTE DE MATERIEL

No	QTE	DIA	MATERIEL/CATALOGUE	DESCRIPTION
1	21655 MM	150	A 333 Gr. 6	SCH STD, SMLS PIPE
2	1	150	A 420 Gr. WPL6	SCH STD, BW LR 45 DEG ELBOW
3	9	150		PIPE SUPPORT AS PER DETAIL 1, DWG: 65-116-270-200
4	9	150		PIPE SHOE AS PER DETAIL 2, DWG: 65-116-270-200

PROMEC AS-BUILT
Signature:
Date: 2019/02/08

PERMIT TO PRACTICE
LE GROUPE ULTRAGEN LTÉE
Signature
Date SEP 21 2017
PERMIT NUMBER: P 1180
NT/NU Association of Professional Engineers and Geoscientists

FABRICATION DRAWINGS BASED ON WSP CERTIFIED ENGINEERING

No.	DATE	REVISION	PAR / APP.
2	2017/09/21	PROJECT TITLE REVISED	KHV
1	2017/09/11	LINE NUMBERS REVISED	KHV
0	2017/05/15	ISSUED FOR CONSTRUCTION	KHV

CLIENT: AGNICO EAGLE

NUQSANA PROMEC MINING

ultragen

CONSULTANT PROJECT NO. 591700

SCEAU PROFESSIONNEL
REGISTERED PROFESSIONAL ENGINEER
D. TRUONG
LICENSEE
NT/NU
2017/09/21

CONC.: KHV
DATE: 2017/04/25
DESSINÉ PAR: KVE
DATE: 2017/04/25
VÉR. PAR: –
DATE: –
APP.: –
DATE: –
ÉCHELLE: AUCUNE

PROJET: AGNICO EAGLE - MELIADINE DIVISION
116 - FUEL TANK FARM

TITRE: RANKIN INLET
FABRICATION ISOMETRIC
MARINE LINE TO 65TNK11601 & 65TNK11602

No PROJET	No DESSIN	PAGES	REV.
6515	116-150-PDI-CC10-0001	11/13	2

NO. DE CONDUITE		SPECIFICATION	PRODUIT	SYSTEME REVETEMENT	CODE DE COULEUR	ISOLATION ET TRACAGE	EPAISS. D'ISOLATION		
116-150-PDI-CC10-0001		CC10	PDI		–			65-116-270-200	PIPE SUPPORT DETAILS
PRESSION D'OPERATION	TEMPERATURE D'OPERATION	PRESSION DE CONCEPTION	TEMPERATURE DE CONCEPTION	PRESSION D'ESSAI	CLASSE D'INSPECTION	CODE DE SERVICE	TRAITEMENT THERMIQUE	65-116-205-200	P&ID
PSIG	°F	PSIG	°F	PSIG				No. DESSIN	DESSINS DE REFERENCE

FICHIER: W:\Agnico Eagle\Meliadine\591700 (Fuel Distribution)\05. Dessins\02. Tuyauterie\02. Isométriques\01. Rankin Inlet\116-150-PDI-CC10-0001-11.DWG

IMPRIMÉ LE: Sep 20, 2017, 2:44pm

116-MN-01

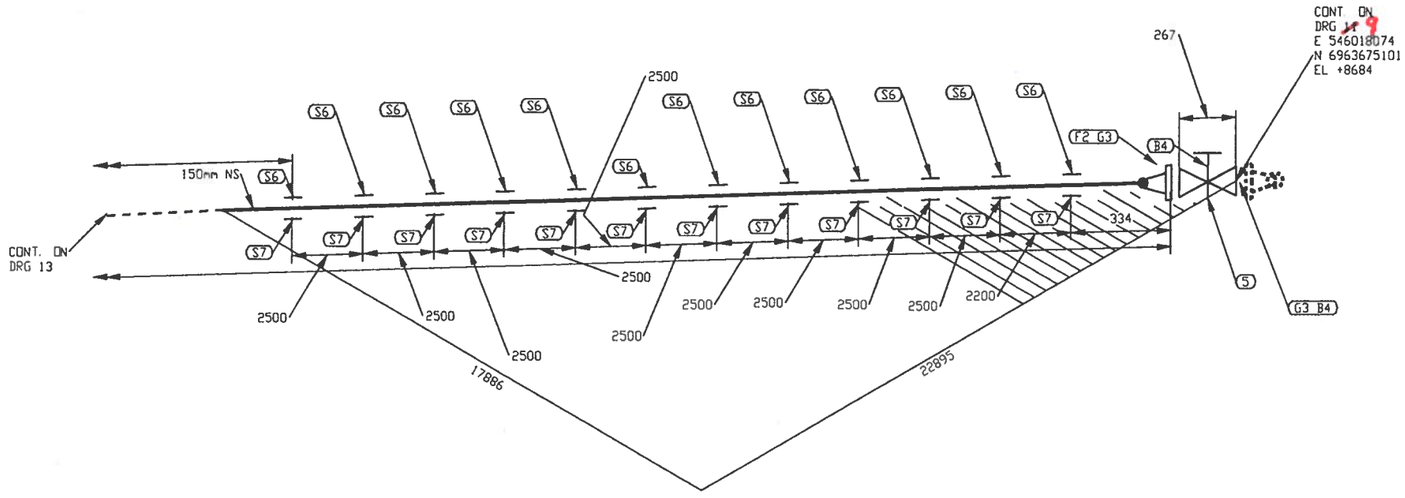

LISTE DE MATERIEL

No	QTE	DIA	MATERIEL/CATALOGUE	DESCRIPTION
1	28696 MM	150	A 333 Gr. 6	SCH STD, SMLS PIPE
2	1	150	A 350 Gr. LF2	CL 150, SCH STD, RF, WN FLANGE
3	2	150	ASME B16.20	CL 150, GARLOCK 5500, RING TYPE GASKET 1/8" THK
4	16	19	A 193 B7/A 194 2H	CL 150, 8 - 19.05 X 100 STUD BOLTS c/w TWO HEAVY HEX NUTS
5	1	150	GA-10	CL 150, RF, CS, GATE VALVE
6	12	150		PIPE SUPPORT AS PER DETAIL 1, DWG: 65-116-270-200
7	12	150		PIPE SHOE AS PER DETAIL 2, DWG: 65-116-270-200

PROMEC AS-BUILT
Signature:
Date: 2019/02/08

PERMIT TO PRACTICE
LE GROUPE ULTRAGEN LTÉE
Signature
Date SEP 21 2017
PERMIT NUMBER: P 1180
NT/NU Association of Professional Engineers and Geoscientists

FABRICATION DRAWINGS BASED ON WSP CERTIFIED ENGINEERING

No.	DATE	REVISION	PAR / APP.
2	2017/09/21	PROJECT TITLE REVISED	KHV
1	2017/09/11	LINE NUMBERS REVISED	KHV
0	2017/05/15	ISSUED FOR CONSTRUCTION	KHV

CLIENT: AGNICO EAGLE

NUQSANA-PROMEC MINING

ultragen

CONSULTANT PROJECT NO. 591700

NO. DE CONDUITE		SPECIFICATION	PRODUIT	SYSTEME REVETEMENT	CODE DE COULEUR	ISOLATION ET TRACAGE	EPAISS. D'ISOLATION		
116-150-PDI-CC10-0001		CC10	PDI		-			65-116-270-200	PIPE SUPPORT DETAILS
PRESSION D'OPERATION	TEMPERATURE D'OPERATION	PRESSION DE CONCEPTION	TEMPERATURE DE CONCEPTION	PRESSION D'ESSAI	CLASSE D'INSPECTION	CODE DE SERVICE	TRAITEMENT THERMIQUE	65-116-205-200	P&ID
PSIG	°F	PSIG	°F	PSIG				No. DESSIN	DESSINS DE REFERENCE

SCEAU PROFESSIONNEL
REGISTERED PROFESSIONAL ENGINEER
D. TRUONG
LICENSEE
NT/NU
2019/02/2(

CONC.: KHV
DATE: 2017/04/25
DESSINÉ PAR: KVE
DATE: 2017/04/25
VÉR. PAR: -
DATE: -
APP.: -
DATE: -
ÉCHELLE: AUCUNE

PROJET: AGNICO EAGLE - MELIADINE DIVISION
116 - FUEL TANK FARM

TITRE: RANKIN INLET
FABRICATION ISOMETRIC
MARINE LINE TO 65TNK11601 & 65TNK11602

No PROJET	No DESSIN	PAGES	REV.
6515	116-150-PDI-CC10-0001	12/13	2

116-MN-01

FICHIER: W:\Agnico Eagle\Meliadine\591700 (Fuel Distribution)\05 Dessins\02 Tuyauterie\02 Isométriques\01 Rankin Inlet\116-150-PDI-CC10-0001-12.DWG

IMPRIMÉ LE: Sep 20, 2017, 2:44pm

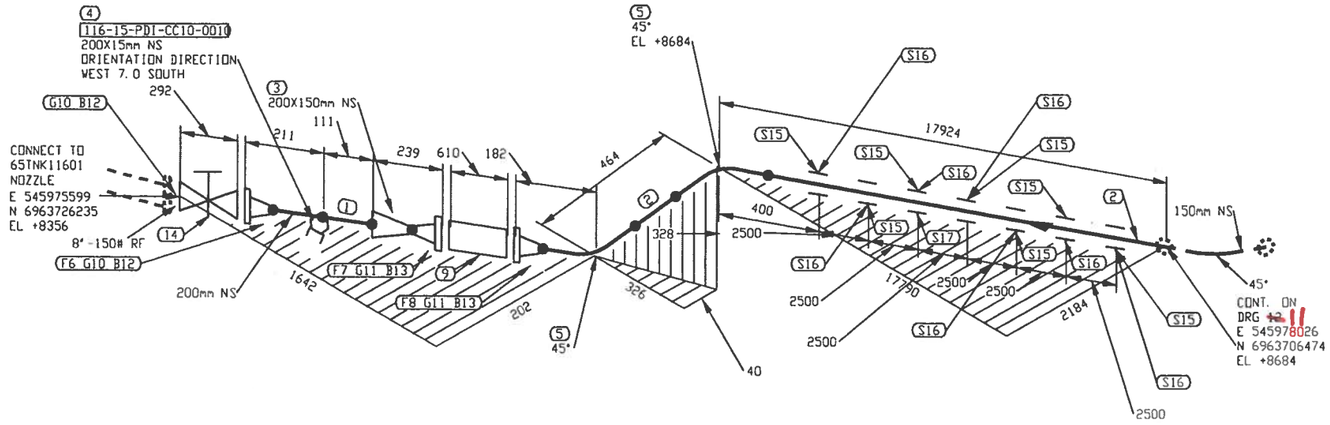

PERMIT TO PRACTICE
LE GROUPE ULTRAGEN LTÉE
Signature
Date SEP 21 2017
PERMIT NUMBER: P 1180
NT/NU Association of Professional Engineers and Geoscientists

FABRICATION DRAWINGS BASED ON WSP CERTIFIED ENGINEERING

LISTE DE MATERIEL

No	QTE	DIA	MATERIEL/CATALOGUE	DESCRIPTION
1	222 MM	200	A 333 Gr. 6	SCH STD, SMLS PIPE
2	18103 MM	150	A 333 Gr. 6	SCH STD, SMLS PIPE
3	1	200X150	A 420 Gr. WPL6	SCH STD, BW CONC RED
4	1	200X15	A 350 Gr. LF2	CL 3000, THREDOLET
5	2	150	A 420 Gr. WPL6	SCH STD, BW LR 45 DEG ELBOW
6	1	200	A 350 Gr. LF2	CL 150, SCH STD, RF, WN FLANGE
7	1	150	A 350 Gr. LF2	CL 150, SCH STD, RF, WN FLANGE
8	1	150	A 350 Gr. LF2	CL 150, SCH STD, RF, WN FLANGE
9	1	150		CL 150, SINGLE BRAIDED HOSE ASSEMBLY
10	2	200	ASME B16.20	CL 150, GARLOCK 5500, RING TYPE GASKET 1/8" THK
11	2	150	ASME B16.20	CL 150, GARLOCK 5500, RING TYPE GASKET 1/8" THK
12	16	19	A 193 B7/A 194 2H	CL 150, 8 - 19.05 X 110 STUD BOLTS c/w TWO HEAVY HEX NUTS
13	16	19	A 193 B7/A 194 2H	CL 150, 8 - 19.05 X 100 STUD BOLTS c/w TWO HEAVY HEX NUTS
14	1	200	GA-10	CL 150, RF, CS, FULL PORT GATE VALVE
15	7	150		PIPE SUPPORT AS PER DETAIL 1, DWG: 65-116-270-200
16	7	150		PIPE SHOE AS PER DETAIL 2, DWG: 65-116-270-200
17	1	150		PIPE SHOE AS PER DETAIL 2, DWG: 65-116-270-200

PROMEC
AS-BUILT
Signature:
Date: 2019/02/08

No.	DATE	REVISION	PAR / APP.
2	2017/09/21	PROJECT TITLE REVISED	KHV
1	2017/09/11	LINE NUMBERS REVISED	KHV
0	2017/05/15	ISSUED FOR CONSTRUCTION	KHV

CLIENT: AGNICO EAGLE

NUQSANA PROMEC MINING

ultragen

CONSULTANT PROJECT NO. 591700

SCEAU PROFESSIONNEL
REGISTERED PROFESSIONAL ENGINEER
D. TRUONG
LICENSEE
NT/NU
2017/04/12

CONC.: KHV
DATE: 2017/04/25
DESSINÉ PAR: KVE
DATE: 2017/04/25
VÉR. PAR: -
DATE: -
APP.: -
DATE: -
ÉCHELLE: AUCUNE

PROJET: AGNICO EAGLE - MELIADINE DIVISION
116 - FUEL TANK FARM

TITRE: RANKIN INLET
FABRICATION ISOMETRIC
MARINE LINE TO 65TNK11601 & 65TNK11602

No PROJET	No DESSIN	PAGES	REV.
6515	116-150-PDI-CC10-0001	13/13	2

NO. DE CONDUITE		SPECIFICATION	PRODUIT	SYSTEME REVETEMENT	CODE DE COULEUR	ISOLATION ET TRACAGE	EPAISS. D'ISOLATION		
116-150-PDI-CC10-0001		CC10	PDI		-			65-116-270-200	PIPE SUPPORT DETAILS
PRESSION D'OPERATION	TEMPERATURE D'OPERATION	PRESSION DE CONCEPTION	TEMPERATURE DE CONCEPTION	PRESSION D'ESSAI	CLASSE D'INSPECTION	CODE DE SERVICE	TRAITEMENT THERMIQUE	65-116-205-200	P&ID
PSIG	°F	PSIG	°F	PSIG				No. DESSIN	DESSINS DE REFERENCE

FICHIER: W:\Agnico Eagle\Meliadine\591700 (Fuel Distribution)\05 Dessins\02 Tuyauterie\02 Isométriques\01 Rankin Inlet\116-150-PDI-CC10-0001-13.DWG

IMPRIMÉ LE: Sep 20, 2017, 2:44pm

116-MN-01

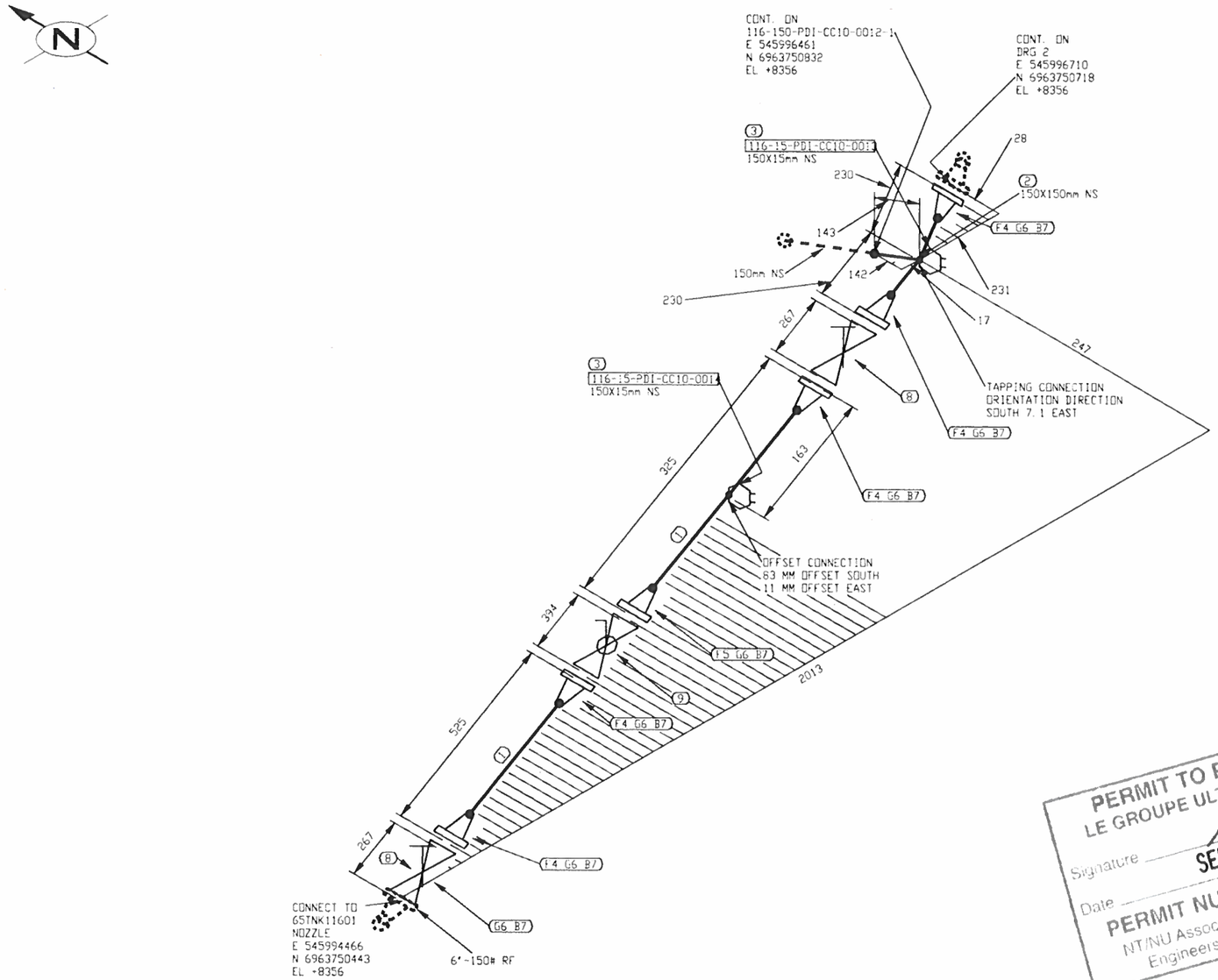

PERMIT TO PRACTICE
LE GROUPE ULTRAGEN LTÉE
Signature _____
Date SEP 21 2017
PERMIT NUMBER: P 1180
NT/NU Association of Professional Engineers and Geoscientists

FABRICATION DRAWINGS BASED ON WSP CERTIFIED ENGINEERING

LISTE DE MATERIEL

No	QTE	DIA	MATERIEL/CATALOGUE	DESCRIPTION
1	502 MM	150	A 333 Gr. 6	SCH STD, SMLS PIPE
2	1	150X150	A 420 Gr. WPL6	SCH STD, BW STRAIGHT TEE
3	2	150X15	A 350 Gr. LF2	CL 3000, THREDOLET
4	5	150	A 350 Gr. LF2	CL 150, SCH STD, RF, WN FLANGE
5	1	150	A 350 Gr. LF2	CL 150, SCH STD, RF, WN FLANGE
6	7	150	ASME B16.20	CL 150, GARLOCK 5500, RING TYPE GASKET 1/8" THK
7	56	19	A 193 B7/A 194 2H	CL 150, 8 - 19.05 X 100 STUD BOLTS c/w TWO HEAVY HEX NUTS
8	2	150	GA-10	CL 150, RF, GATE VALVE
9	1	150	BA-31	CL 150, RF, BALL VALVE

PROMEC
AS-BUILT
Signature: _____
Date: 2019/02/08

No.	DATE	REVISION	APP.
2	2017/09/21	PROJECT TITLE REVISED	KHV
1	2017/09/11	LINE NUMBERS REVISED	KHV
0	2017/05/15	ISSUED FOR CONSTRUCTION	KHV

CLIENT: AGNICO EAGLE

NUQSANA PROMEC MINING

ultragen

CONSULTANT PROJECT NO. 591700

NO. DE CONDUITE		SPECIFICATION	PRODUIT	SYSTEME REVETEMENT	CODE DE COULEUR	ISOLATION ET TRACAGE	EPAISS. D'ISOLATION		
116-150-PDI-CC10-0011		CC10	PDI		-			65-116-270-200	PIPE SUPPORT DETAILS
PRESSION D'OPERATION	TEMPERATURE D'OPERATION	PRESSION DE CONCEPTION	TEMPERATURE DE CONCEPTION	PRESSION D'ESSAI	CLASSE D'INSPECTION	CODE DE SERVICE	TRAITEMENT THERMIQUE	65-116-205-200	P&ID
PSIG	°F	PSIG	°F	PSIG				No. DESSIN	DESSINS DE REFERENCE

SCEAU PROFESSIONNEL
REGISTERED PROFESSIONAL ENGINEER
D. TRUONG
LICENSEE
2017/09/21

CONC.: KHV
DATE: 2017/04/25
DESSINÉ PAR: KVE
DATE: 2017/04/25
VÉR. PAR: -
DATE: -
APP.: -
DATE: -
ÉCHELLE: AUCUNE

PROJET: AGNICO EAGLE - MELIADINE DIVISION
116 - FUEL TANK FARM

TITRE: RANKIN INLET
FABRICATION ISOMETRIC
DIESEL FROM 65TNK11601 TO PUMPING STATION

No PROJET	No DESSIN	PAGES	REV.
6515	116-150-PDI-CC10-0011	1/5	2

116-MN-01

FICHIER: W:\Agnico Eagle\Meliadine\591700 (Fuel Distribution)\05- Dessins\02 Tuyauterie\02 Isométriques\01 Rankin Inlet\116-150-PDI-CC10-0011-1.DWG

IMPRIMÉ LE Sep 20, 2017, 2:46pm

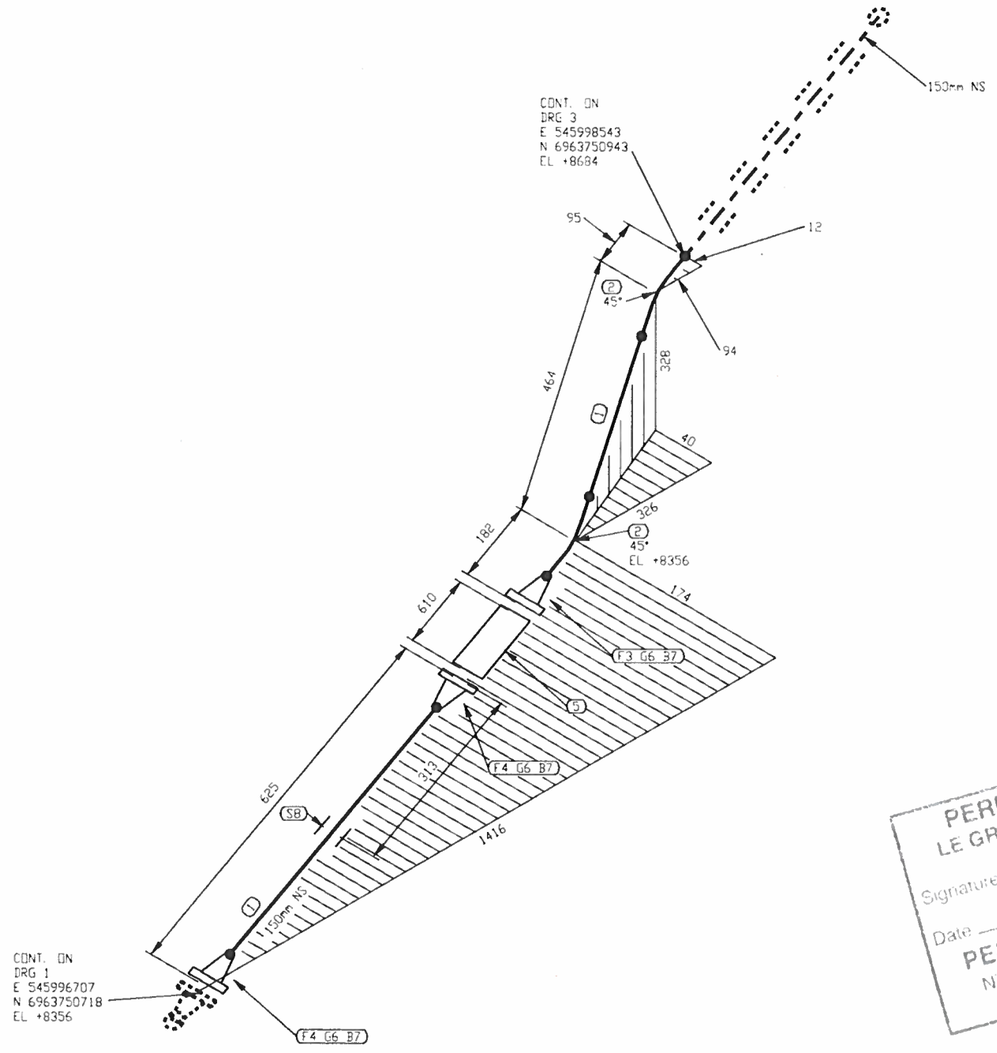

LISTE DE MATERIEL

No	QTE	DIA	MATERIEL/CATALOGUE	DESCRIPTION
1	725 MM	150	A 333 Gr. 6	SCH STD, SMLS PIPE
2	2	150	A 420 Gr. WPL6	SCH STD, BW LR 45 DEG ELBOW
3	1	150	A 350 Gr. LF2	CL 150, SCH STD, RF, WN FLANGE
4	2	150	A 350 Gr. LF2	CL 150, SCH STD, RF, WN FLANGE
5	1	150		CL 150, SINGLE BRAIDED HOSE ASSEMBLY
6	3	150	ASME B16.20	CL 150, GARLOCK 5500, RING TYPE GASKET 1/8" THK
7	24	19	A 193 B7/A 194 2H	CL 150, 8 - 19.05 X 100 STUD BOLTS c/w TWO HEAVY HEX NUTS
8	1	150		PIPE SHOE AS PER DETAIL 2, DWG: 65-116-270-200

PROMEC AS-BUILT
Signature:
Date: 2019/02/08

PERMIT TO PRACTICE
LE GROUPE ULTRAGEN LTÉE
Signature
Date SEP 2 1 2017
PERMIT NUMBER: P 1180
NT/NU Association of Professional Engineers and Geoscientists

FABRICATION DRAWINGS BASED ON WSP CERTIFIED ENGINEERING

No.	DATE	REVISION	PAR / APP.
2	2017/09/21	PROJECT TITLE REVISED	KHV
1	2017/09/11	LINE NUMBERS REVISED	KHV
0	2017/05/15	ISSUED FOR CONSTRUCTION	KHV

CLIENT: AGNICO EAGLE

NUQSANA PROMEC MINING

ultragen

CONSULTANT PROJECT NO. 591700

SCEAU PROFESSIONNEL
REGISTERED PROFESSIONAL ENGINEER
D. TRUONG
LICENSEE
(NT/NU)
2017/09/21

CONC.: KHV DATE: 2017/04/25
DESSINÉ PAR: KVE DATE: 2017/04/25
VÉR. PAR: - DATE: -
APP.: - DATE: -
ÉCHELLE: AUCUNE

PROJET: AGNICO EAGLE - MELIADINE DIVISION
116 - FUEL TANK FARM

TITRE: RANKIN INLET
FABRICATION ISOMETRIC
DIESEL FROM 65TNK11601 TO PUMPING STATION

No PROJET	No DESSIN	PAGES	REV.
6515	116-150-PDI-CC10-0011	2/5	2

NO. DE CONDUITE		SPECIFICATION	PRODUIT	SYSTEME REVETEMENT	CODE DE COULEUR	ISOLATION ET TRACAGE	EPAISS. D'ISOLATION		
116-150-PDI-CC10-0011		CC10	PDI		-			65-116-270-200	PIPE SUPPORT DETAILS
PRESSION D'OPERATION	TEMPERATURE D'OPERATION	PRESSION DE CONCEPTION	TEMPERATURE DE CONCEPTION	PRESSION D'ESSAI	CLASSE D'INSPECTION	CODE DE SERVICE	TRAITEMENT THERMIQUE	65-116-205-200	P&ID
PSIG	°F	PSIG	°F	PSIG				No. DESSIN	DESSINS DE REFERENCE

116-MN-01

FICHIER: M:\Agnico Eagle\Meliadine\591700 (Fuel Distribution)\03 Dessins\02 Tuyauterie\02 Isométriques\01 Rankin Inlet\116-150-PDI-CC10-0011-2.DWG
IMPRIMÉ LE: Sep 20, 2017, 2:46pm

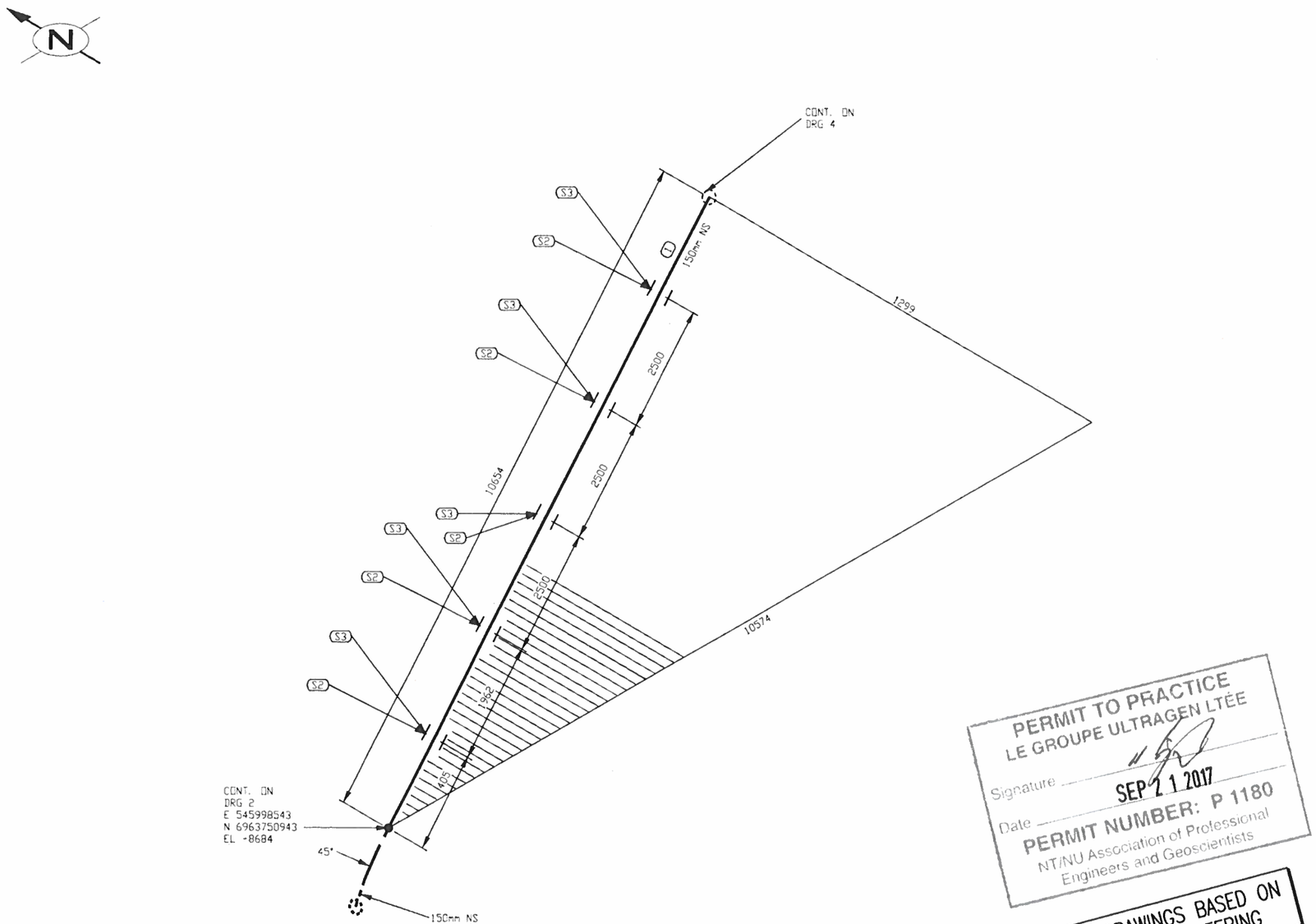

LISTE DE MATERIEL

No.	QTE.	DIA	MATERIEL/CATALOGUE	DESCRIPTION
1	10654 MM	150	A 333 Gr. 6	SCH STD, SMLS PIPE
2	5	150		PIPE SUPPORT AS PER DETAIL 1, DWG: 65-116-270-200
3	5	150		PIPE SHOE AS PER DETAIL 2, DWG: 65-116-270-200

PROMEC AS-BUILT
Signature:
Date: 2019/02/08

PERMIT TO PRACTICE
LE GROUPE ULTRAGEN LTÉE
Signature
Date SEP 2 1 2017
PERMIT NUMBER: P 1180
NT/NU Association of Professional Engineers and Geoscientists

FABRICATION DRAWINGS BASED ON WSP CERTIFIED ENGINEERING

No.	DATE	REVISION	PAR / APP.
2	2017/09/21	PROJECT TITLE REVISED	KHV
1	2017/09/11	LINE NUMBERS REVISED	KHV
0	2017/05/15	ISSUED FOR CONSTRUCTION	KHV

CLIENT: AGNICO EAGLE

NUQSANA PROMEC MINING

ultragen

CONSULTANT PROJECT NO. 591700

NO. DE CONDUITE		SPECIFICATION	PRODUIT	SYSTEME REVETEMENT	CODE DE COULEUR	ISOLATION ET TRACAGE	EPAISS. D'ISOLATION		
116-150-PDI-CC10-0011		CC10	PDI		-			65-116-270-200	PIPE SUPPORT DETAILS
PRESSION D'OPERATION	TEMPERATURE D'OPERATION	PRESSION DE CONCEPTION	TEMPERATURE DE CONCEPTION	PRESSION D'ESSAI	CLASSE D'INSPECTION	CODE DE SERVICE	TRAITEMENT THERMIQUE	65-116-205-200	P&ID
PSIG	°F	PSIG	°F	PSIG				No. DESSIN	DESSINS DE REFERENCE

SCEAU PROFESSIONNEL
REGISTERED PROFESSIONAL ENGINEER
D. TRUONG
LICENSEE
2017/09/21

CONC.: KHV DATE: 2017/04/25
DESSINÉ PAR: KVE DATE: 2017/04/25
VÉR. PAR: - DATE: -
APP.: - DATE: -
ÉCHELLE: AUCUNE

PROJET: AGNICO EAGLE - MELIADINE DIVISION
116 - FUEL TANK FARM

TITRE: RANKIN INLET
FABRICATION ISOMETRIC
DIESEL FROM 65TNK11601 TO PUMPING STATION

No PROJET	No DESSIN	PAGES	REV.
6515	116-150-PDI-CC10-0011	3/5	2

116-MN-01

FICHIER: W:\Agnico Eagle\Meliadine\591700 (Fuel Distribution)\05 Dessins\02 Tuyauterie\02 Isométriques\01 Rankin Inlet\116-150-PDI-CC10-0011-3.DWG

IMPRIMÉ LE: Sep 20, 2017, 2:46pm

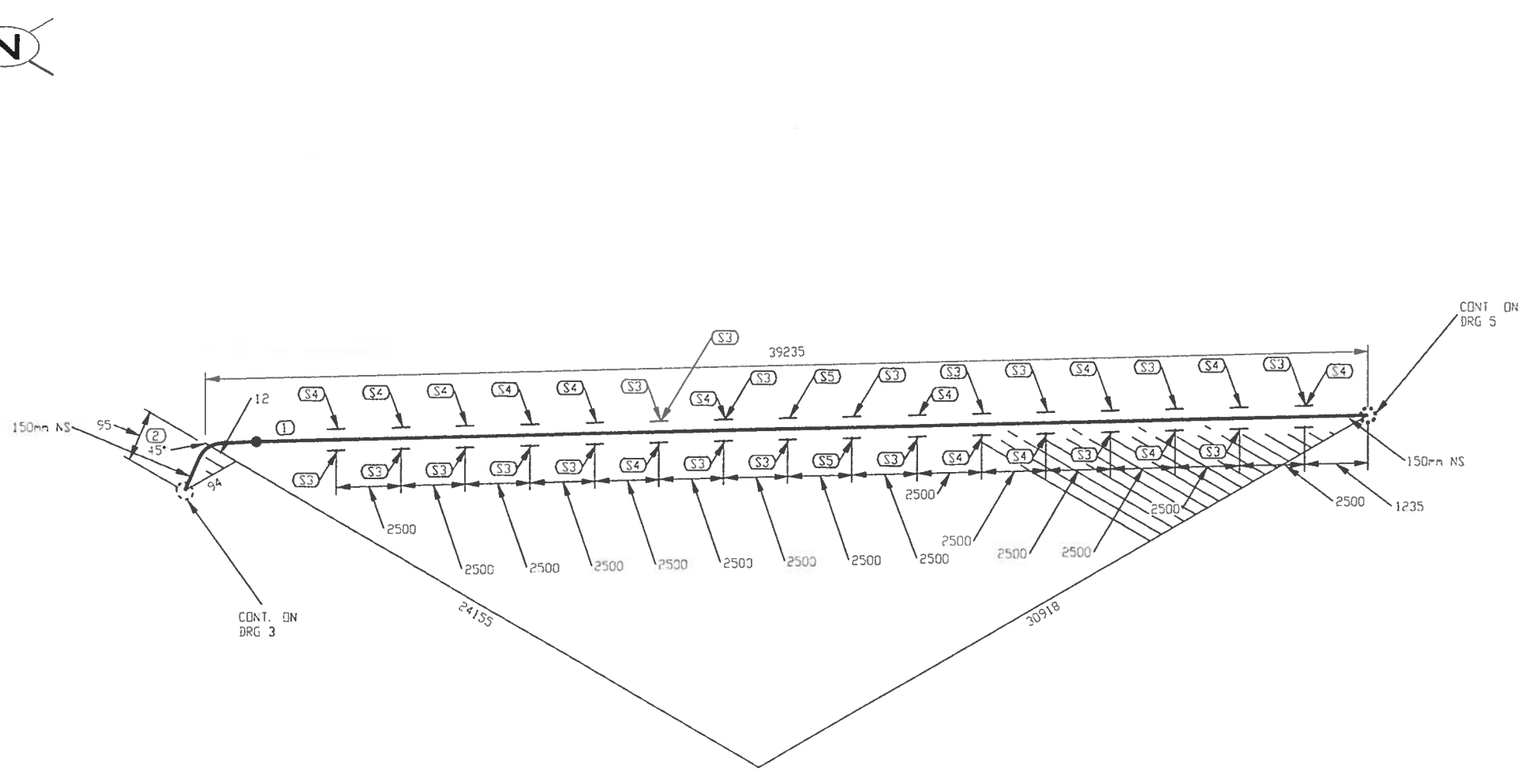

LISTE DE MATERIEL

No.	QTE	DIA	MATERIEL/CATALOGUE	DESCRIPTION
1	39140 MM	150	A 333 Gr. 6	SCH STD, SMLS PIPE
2	1	150	A 420 Gr. WPL6	SCH STD, BW LR 45 DEG ELBOW
3	18	150		PIPE SHOE AS PER DETAIL 2, DWG: 65-116-270-200
4	14	150		PIPE SUPPORT AS PER DETAIL 1, DWG: 65-116-270-200
5	2	150		PIPE SUPPORT AS PER DETAIL 3, DWG: 65-116-270-200

PROMEC AS-BUILT
Signature:
Date: 2019/02/08

PERMIT TO PRACTICE
LE GROUPE ULTRAGEN LTÉE
Signature
Date SEP 2 1 2017
PERMIT NUMBER: P 1180
NT/NU Association of Professional Engineers and Geoscientists

FABRICATION DRAWINGS BASED ON WSP CERTIFIED ENGINEERING

No.	DATE	REVISION	PAR / APP.
2	2017/09/21	PROJECT TITLE REVISED	KHV
1	2017/09/11	LINE NUMBERS REVISED	KHV
0	2017/05/15	ISSUED FOR CONSTRUCTION	KHV

CLIENT: AGNICO EAGLE

NUQSANA PROMEC MINING

ultragen

CONSULTANT PROJECT NO. 591700

SCEAU PROFESSIONNEL
REGISTERED PROFESSIONAL ENGINEER
D TRUONG
LICENSEE
NT/NU
2017/09/21

CONC.: KHV
DATE: 2017/04/25
DESSINÉ PAR: KVE
DATE: 2017/04/25
VÉR. PAR: -
DATE: -
APP.: -
DATE: -
ÉCHELLE: AUCUNE

PROJET: AGNICO EAGLE - MELIADINE DIVISION
116 - FUEL TANK FARM

TITRE: RANKIN INLET
FABRICATION ISOMETRIC
DIESEL FROM 65TNK11601 TO PUMPING STATION

No PROJET	No DESSIN	PAGES	REV.
6515	116-150-PDI-CC10-0011	4/5	2

NO. DE CONDUITE		SPECIFICATION	PRODUIT	SYSTEME REVETEMENT	CODE DE COULEUR	ISOLATION ET TRACAGE	EPAISS. D'ISOLATION		
116-150-PDI-CC10-0011		CC10	PDI		-			65-116-270-200	PIPE SUPPORT DETAILS
PRESSION D'OPERATION	TEMPERATURE D'OPERATION	PRESSION DE CONCEPTION	TEMPERATURE DE CONCEPTION	PRESSION D'ESSAI	CLASSE D'INSPECTION	CODE DE SERVICE	TRAITEMENT THERMIQUE	65-116-205-200	P&ID
PSIG	°F	PSIG	°F	PSIG				No. DESSIN	DESSINS DE REFERENCE

IMPRIMÉ LE: Sep 20, 2017, 2:46pm

FICHIER: W:\Agnico Eagle\Meliadine\591700 (Fuel Distribution)\05. Dessins\07 Tuyauterie\02 Isométriques\01. Rankin Inlet\116-150-PDI-CC10-0011-4.DWG

116-MN-01

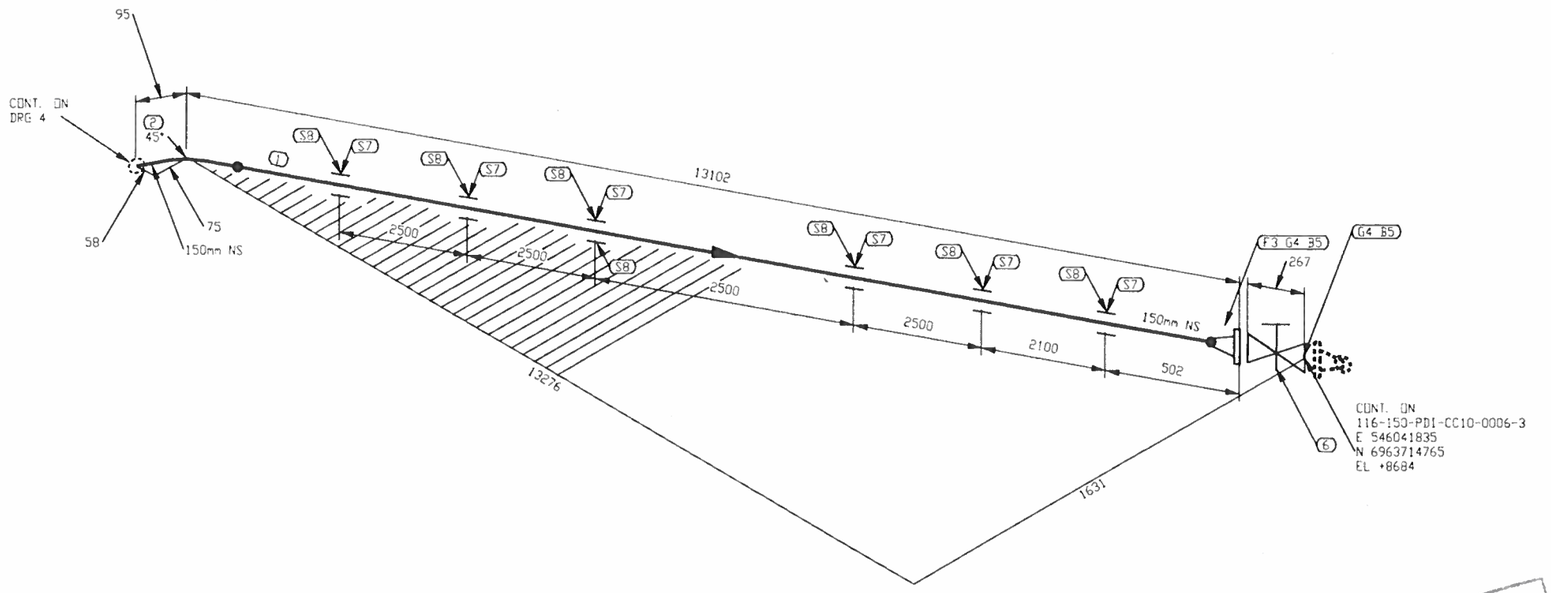

LISTE DE MATERIEL

No	QTE	DIA	MATERIEL/CATALOGUE	DESCRIPTION
1	12919 MM	150	A 333 Gr. 6	SCH STD, SMLS PIPE
2	1	150	A 420 Gr. WPL6	SCH STD, BW LR 45 DEG ELBOW
3	1	150	A 350 Gr. LF2	CL 150, SCH STD, RF, WN FLANGE
4	2	150	ASME B16.20	CL 150, GARLOCK 5500, RING TYPE GASKET 1/8" THK
5	16	19	A 193 B7/A 194 2H	CL 150, B - 19.05 X 100 STUD BOLTS c/w TWO HEAVY HEX NUTS
6	1	150	GA-10	CL 150, RF, GATE VALVE
7	6	150		PIPE SUPPORT AS PER DETAIL 1, DWG: 65-116-270-200
8	7	150		PIPE SHOE AS PER DETAIL 2, DWG: 65-116-270-200

PROMEC AS-BUILT
Signature:
Date: 2019/02/08

PERMIT TO PRACTICE
LE GROUPE ULTRAGEN LTÉE
Signature
Date SEP 2 1 2017
PERMIT NUMBER: P 1180
NT/NU Association of Professional Engineers and Geoscientists

FABRICATION DRAWINGS BASED ON WSP CERTIFIED ENGINEERING

No.	DATE	REVISION	PAR / APP.
2	2017/09/21	PROJECT TITLE REVISED	KHV
1	2017/09/11	LINE NUMBERS REVISED	KHV
0	2017/05/15	ISSUED FOR CONSTRUCTION	KHV

CLIENT: AGNICO EAGLE

NUQSANA PROMEC MINING

ultragen

CONSULTANT PROJECT NO. 591700

SCEAU PROFESSIONNEL
REGISTERED PROFESSIONAL ENGINEER
D. TRUONG
LICENSEE
2017/09/21

CONC.: KHV
DATE: 2017/04/25
DESSINÉ PAR: KVE
DATE: 2017/04/25
VÉR. PAR: -
DATE: -
APP.: -
DATE: -
ÉCHELLE: AUCUNE

PROJET: AGNICO EAGLE - MELIADINE DIVISION
116 - FUEL TANK FARM

TITRE: RANKIN INLET
FABRICATION ISOMETRIC
DIESEL FROM 65TNK11601 TO PUMPING STATION

No PROJET	No DESSIN	PAGES	RÉV.
6515	116-150-PDI-CC10-0011	5/5	2

NO. DE CONDUITE		SPECIFICATION	PRODUIT	SYSTEME REVETEMENT	CODE DE COULEUR	ISOLATION ET TRACAGE	EPAISS. D'ISOLATION		
116-150-PDI-CC10-0011		CC10	PDI		-			65-116-270-200	PIPE SUPPORT DETAILS
PRESSION D'OPERATION	TEMPERATURE D'OPERATION	PRESSION DE CONCEPTION	TEMPERATURE DE CONCEPTION	PRESSION D'ESSAI	CLASSE D'INSPECTION	CODE DE SERVICE	TRAITEMENT THERMIQUE	65-116-205-200	P&ID
PSIG	°F	PSIG	°F	PSIG				No. DESSIN	DESSINS DE REFERENCE

FICHIER W:\Agnico Eagle\Meliadine\591700 (Fuel Distribution)\05. Dessins\07 Tuyauterie\02 Isométriques\01 Rankin Inlet\116-150-PDI-CC10-0011-5.DWG

IMPRIMÉ LE: Sep 20, 2017, 2:46pm

116-MN-01

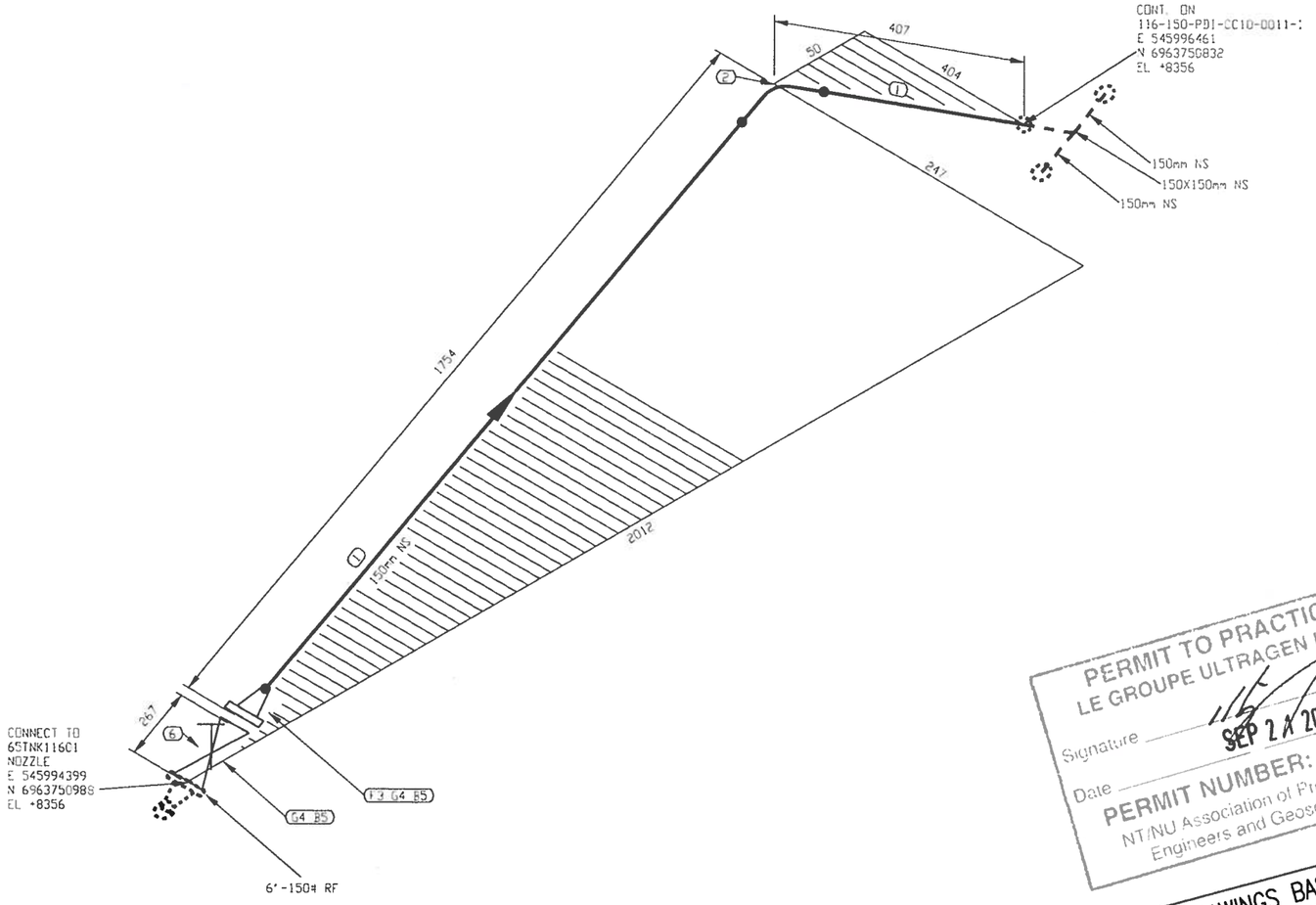

LISTE DE MATERIEL

No	QTE	DIA	MATERIEL/CATALOGUE	DESCRIPTION
1	1616 MM	150	A 333 Gr. 6	SCH STD, SMLS PIPE
2	1	150	A 420 Gr. WPL6	SCH STD, BW LR 90 DEG ELBOW
3	1	150	A 350 Gr. LF2	CL 150, SCH STD, RF, WN FLANGE
4	2	150	ASME B16.20	CL 150, GARLOCK 5500, RING TYPE GASKET 1/8" THK
5	16	19	A 193 B7/A 194 2H	CL 150, 8 - 19.05 X 100 STUD BOLTS c/w TWO HEAVY HEX NUTS
6	1	150	GA-10	CL 150, RF, GATE VALVE

PROMEC AS-BUILT
Signature:
Date: 2019/02/08.

PERMIT TO PRACTICE
LE GROUPE ULTRAGEN LTÉE
Signature
Date SEP 2 1 2017
PERMIT NUMBER: P 1180
NT/NU Association of Professional Engineers and Geoscientists

FABRICATION DRAWINGS BASED ON WSP CERTIFIED ENGINEERING

No.	DATE	REVISION	PAR / APP.
2	2017/09/21	PROJECT TITLE REVISED	KHV
1	2017/09/11	LINE NUMBERS REVISED	KHV
0	2017/05/15	ISSUED FOR CONSTRUCTION	KHV

CLIENT: AGNICO EAGLE

NUQSANA PROMEC MINING

ultragen

CONSULTANT PROJECT NO. 591700

NO. DE CONDUITE		SPECIFICATION	PRODUIT	SYSTEME REVETEMENT	CODE DE COULEUR	ISOLATION ET TRACAGE	EPAISS. D'ISOLATION		
116-150-PDI-CC10-0012		CC10	PDI		–			65-116-270-200	PIPE SUPPORT DETAILS
PRESSION D'OPERATION	TEMPERATURE D'OPERATION	PRESSION DE CONCEPTION	TEMPERATURE DE CONCEPTION	PRESSION D'ESSAI	CLASSE D'INSPECTION	CODE DE SERVICE	TRAITEMENT THERMIQUE	65-116-205-200	P&ID
PSIG	°F	PSIG	°F	PSIG				No. DESSIN	DESSINS DE REFERENCE

SCEAU PROFESSIONNEL
REGISTERED PROFESSIONAL ENGINEER
D. TRUONG
LICENSEE
2017/09/21

CONC.: KHV
DATE: 2017/04/25
DESSINÉ PAR: KVE
DATE: 2017/04/25
VÉR. PAR: –
DATE: –
APP.: –
DATE: –
ÉCHELLE: AUCUNE

PROJET: AGNICO EAGLE - MELIADINE DIVISION
116 - FUEL TANK FARM

TITRE: RANKIN INLET
FABRICATION ISOMETRIC
DIESEL FROM 65TNK11601 TO PUMPING STATION

No PROJET	No DESSIN	PAGES	RÉV.
6515	116-150-PDI-CC10-0012	1/1	2

116-MN-01

F:\CHER\ W:\Agnico Eagle\Meliadine\591700 (Fuel Distribution)\05. Dessins\02. Isométriques\01. Rankin Inlet\116-150-PDI-CC10-0012-1.DWG

IMPRIMÉ LE: Sep 20, 2017, 2:46pm

AGNICO EAGLE

Vendor Document Status

1 ☐ Proceed to next submission and status.

2 ☐ Proceed with exceptions as noted to next submission and status.

3 ☐ Do not proceed.
Revise as noted and resubmit next submission and status.

4 ☐ Complete, no further submission required.

By: Date:

Review and authorization to fabricate are only for general conformance with the design concept of the Project as expressed in the Contract Documents. Sole responsibility for the accuracy and completeness of this document, including but not limited to dimensions and quantities, remains with the Supplier/Contractor. Agnico Eagle does not warrant the accuracy or completeness of any of the information contained herein, nor does Agnico Eagle authorize or approve any construction means, methods, techniques, sequences or any safety precautions or procedures.

Agnico Eagle No. 6515-C-270-007-141-QCR-0008 R: Sub001

DOCUMENT FOR INFORMATION

AGNICO-EAGLE MINES

Contract No. 6515-C-270-007





22466T / 22498E

Rankin Inlet Tank #1

ELECTRICITY AND INSTRUMENTATION

Quality Control Documents

AGNICO EAGLE

Vendor Document Status

1 ☐ Proceed to next submission and status.

2 ☐ Proceed with exceptions as noted to next submission and status.

3 ☐ Do not proceed.
Revise as noted and resubmit next submission and status.

4 ■ Complete, no further submission required.

By: LUC SÉNÉCAL Date: 2017-07-10

Review and authorization to fabricate are only for general conformance with the design concept of the Project as expressed in the Contract Documents. Sole responsibility for the accuracy and completeness of this document, including but not limited to dimensions and quantities, remains with the Supplier/Contractor. Agnico Eagle does not warrant the accuracy or completeness of any of the information contained herein, nor does Agnico Eagle authorize or approve any construction means, methods, techniques, sequences or any safety precautions or procedures.

Agnico Eagle No. 6515-C-270-007-141-TES-0007 R: Sub002

DOCUMENT FOR INFORMATION

Inspection and Testing Plan

NUQSANA PROMEC MINING

AGNICO EAGLE

Contract title:	Meliadine Fuel Tanks Piping Supply and Installation	**ITP #**	**AEM-ITP-003**
Contract number:	6515-C-270-007	**Area**	**rankin inlet**
Promec Ref.:	C22498E	**System**	**ALL**
		Discipline	**Electrical Instrumentation**
Approved on :	_____	**Approval Signature**	
Approved by:	_____		

Updated on: 2017-04-26

Legend

H - Hold
W - Witness
I - Inspect
R - Review

Activity No. and CDRL Code	Activity Description (Per Scope of Work)	Responsibility Contractor and/or Sub	Acceptance Criteria (Specifications, Drawings, Industry Code, Regulatory Authority, Manufacturers O&M manual, Controlling Procedure, Quality/Engineering Bulletins, Other/ Site Quality Plan, Contractor Quality Manuals, etc.)	Verification Point				Verification Document(s) 1. List ONLY the Form(s) applicable to installation. 2. ▲ Commissioning Required Document
				Contractor		Client		
				H W I R	Initials & Date	H W I R	Initials & Date	
1.0	**GENERAL**							
1.1	Inspection and Test Plan	Promec / CLIENT		H/R				Approved ITP
1.2	Document review (Acquire and review all applicable documentation)	Promec / CLIENT	Quality Plan	H/R				
1.3	Procedures Submitted and Approved (Cable Installation, Testing, etc.)	Promec / CLIENT	Quality Plan	H/R				All Applicable Approved Procedures
1.4	Drawing Index (IFC) to Latest Revision	Promec	Quality Plan	I/R				VDRL
2.0	**ITP SPECIFIC**							
2.1	Non-Conformance Report & Log (Both CLIENT & Contractor Issued)	Promec / CLIENT	Quality Plan	H/R				AEM-GE-ITR-002 (Non-Conformance Report) ▲ AEM-GE-LOG-002 (Non-Conformance Log)
2.2	Inspect Material/Equipment for Damages or Deficiencies	Promec	Quality Plan	I/R				AEM-GE-ITR-005 (Inspection Deficiency Report) ▲ AEM-GE-LOG-004 (Inspection Deficiency Log)

Inspection and Testing Plan

NUQSANA PROMEC MINING

AGNICO EAGLE

Contract title:	Meliadine Fuel Tanks Piping Supply and Installation	**ITP #**	**AEM-ITP-003**
Contract number:	6515-C-270-007	**Area**	**rankin inlet**
Promec Ref.:	C22498E	**System**	**ALL**
		Discipline	**Electrical Instrumentation**
Approved on :	_____	**Approval Signature**	
Approved by:	_____		

Updated on: 2017-04-26

Legend

H - Hold
W - Witness
I - Inspect
R - Review

Activity No. and CDRL Code	Activity Description (Per Scope of Work)	Responsibility Contractor and/or Sub	Acceptance Criteria (Specifications, Drawings, Industry Code, Regulatory Authority, Manufacturers O&M manual, Controlling Procedure, Quality/Engineering Bulletins, Other/ Site Quality Plan, Contractor Quality Manuals, etc.)	Verification Point				Verification Document(s) 1. List ONLY the Form(s) applicable to installation. 2. ▲ Commissioning Required Document
				Contractor		Client		
				H W I R	Initials & Date	H W I R	Initials & Date	
3.0	**Electrical & Instrumentation**							
3.1	All Certified Test Records • Fire Alarm Cert's - (Engineer's Stamp; Vendor Test Documents) • CSA Approval Documentation	Promec / CLIENT	AEM-IN-PRO-001 (Instrumentation Installation and Testing Procedure)	I/R				▲Third Party Document
3.2	Electrical Equipment Installation Inspection Record	Promec / CLIENT	AEM-EL-PRO-004 (Electrical Apparatus Equipment and Support Installation Procedure)	W/R				AEM-EL-ITR-001 (General Report)
3.3	Distribution Panel Inspection & Test Record	Promec / CLIENT	AEM-EL-PRO-004 (Electrical Apparatus Equipment and Support Installation Procedure)	W/R				AEM-EL-ITR-001 (General Report)
3.4	Distribution Transformer Field Inspection Test Record	Promec / CLIENT	AEM-EL-PRO-004 (Electrical Apparatus Equipment and Support Installation Procedure)	W/R				AEM-EL-ITR-001 (General Report)
3.5	PCR Installation and Inspection	Promec / CLIENT	AEM-IN-PRO-001 (Instrumentation Installation and Testing Procedure)	W/R				AEM-IN-ITR-005A (PCR Panel Report)
3.6	Heating Device Installation Record	Promec / CLIENT	AEM-EL-PRO-004 (Electrical Apparatus Equipment and Support Installation Procedure)	I/R				AEM-EL-ITR-002 (Heating Unit Report)
3.7	Cable tray Inspection Record	Promec / CLIENT	AEM-EL-PRO-003 (Cable Tray Installation Procedure)	I/R				AEM-GE-ITR-006 (Miscellaneous Field Report)
3.8	Power/Control Cables Installation Test Record	Promec / CLIENT	AEM-EL-PRO-001 (Cable Installation and Testing Procedure)	W/R				AEM-EL-ITR-003 (Megger Cable Report) AEM-EL-ITR-004 (Continuity Test Report)
3.9	Low Voltage Cable Installation Test Record	Promec / CLIENT	AEM-EL-PRO-001 (Cable Installation and Testing Procedure)	W/R				AEM-EL-ITR-003 (Megger Cable Report)

Inspection and Testing Plan

NUQSANA PROMEC MINING

AGNICO EAGLE

Contract title: Meliadine Fuel Tanks Piping Supply and Installation
Contract number: 6515-C-270-007
Promec Ref.: C22498E

Approved on : _____
Approved by: _____

Approval Signature

ITP # AEM-ITP-003
Area rankin inlet
System ALL
Discipline Electrical Instrumentation

Updated on: 2017-04-26

Legend
H - Hold
W - Witness
I - Inspect
R - Review

Activity No. and CDRL Code	Activity Description (Per Scope of Work)	Responsibility Contractor and/or Sub	Acceptance Criteria (Specifications, Drawings, Industry Code, Regulatory Authority, Manufacturers O&M manual, Controlling Procedure, Quality/Engineering Bulletins, Other/ Site Quality Plan, Contractor Quality Manuals, etc.)	Verification Point				Verification Document(s) 1. List ONLY the Form(s) applicable to installation. 2. ▲ Commissioning Required Document
				Contractor		Client		
				H W I R	Initials & Date	H W I R	Initials & Date	
3.10	Instrument Cable Installation Test Record	Promec / CLIENT	AEM-EL-PRO-001 (Cable Installation and Testing Procedure)	I/R				AEM-EL-ITR-004 (Continuity Test Report)
3.11	Grounding System (Grid & Pile Grounds) Installation Inspection and Test Record	Promec / CLIENT	AEM-EL-PRO-002 (Grounding Installation and Testing Procedure)	H/R				AEM-GE-ITR-006 (Miscellaneous Field Report)
3.12	Branch cct Test Record (Lights, Receptacles, Heaters, etc.)	Promec / CLIENT	(Instrumentation Installation and Testing Procedure)	I/R				AEM-EL-ITR-001 (General Report)
3.13	Fire Alarm Panel and Device Installation Record	Promec / CLIENT	(Instrumentation Installation and Testing Procedure)	I/R				AEM-EL-ITR-001 (General Report)
3.14	Instrumentation Installation Test Record (Powered Instruments)	Promec / CLIENT	(Instrumentation Installation and Testing Procedure)	W/I/R				AEM-IN-ITR-003A (Level Transmitter) AEM-IN-ITR-004C (Pressure Switch) AEM-IN-ITR-006A (On/Off Valve) AEM-IN-ITR-001B (Flow Switch) AEM-IN-ITR-001C (Flow Transmitter) AEM-IN-ITR-002A (Push Button Station) AEM-IN-ITR-007 (Miscellaneous Instruments)
3.15	Instrumentation Installation Test Record (Non-powered instruments)	Promec / CLIENT	AEM-IN-PRO-001 (Instrumentation Installation and Testing Procedure)	I/R				AEM-IN-ITR-004A (Pressure Indicator) AEM-IN-ITR-004B (Pressure Safety Valve)

Inspection and Testing Plan

NUQSANA PROMEC MINING

AGNICO EAGLE

Contract title: Meliadine Fuel Tanks Piping Supply and Installation
Contract number: 6515-C-270-007
Promec Ref.: C22498E

Approved on : _____
Approved by: _____

Approval Signature

ITP # AEM-ITP-003
Area rankin inlet
System ALL
Discipline Electrical Instrumentation

Updated on: 2017-04-26

Legend
H - Hold
W - Witness
I - Inspect
R - Review

Activity No. and CDRL Code	Activity Description (Per Scope of Work)	Responsibility Contractor and/or Sub	Acceptance Criteria (Specifications, Drawings, Industry Code, Regulatory Authority, Manufacturers O&M manual, Controlling Procedure, Quality/Engineering Bulletins, Other/ Site Quality Plan, Contractor Quality Manuals, etc.)	Verification Point				Verification Document(s) 1. List ONLY the Form(s) applicable to installation. 2. ▲ Commissioning Required Document
				Contractor		Client		
				H W I R	Initials & Date	H W I R	Initials & Date	
3.16	Motor/Install/Megger/Rotation Test and Polarization Records	Promec / CLIENT	AEM-EL-PRO-004 (Electrical Apparatus Equipment and Support Installation Procedure)	W/R				AEM-EL-ITR-005 (Motor Report)
3.17	Instrument Loop Test (Pre-Commissioning / Commissioning Activity	Promec / CLIENT	(Instrumentation Installation and Testing Procedure)	I/R				AEM-GE-ITR-006 (Miscellaneous Field Report)
4.0	**FINAL TURNOVER**							
4.1	Construction Completion (Contractor Punchlist & Joint Walkdown Punchlist)	Promec / CLIENT	Quality Plan	H/R				▲ AEM-GE-ITR-003 (Punchlist)
4.2	Final Acceptance of Turnover Package	Promec / CLIENT	Quality Plan	H/R				Signed ITP History Docket
4.3	Declaration of Completion	Promec	Quality Plan	H/R				AEM-GE-ITR-004 (Notice of Final Completion)
4.4	As-Built Drawings	Promec	Quality Plan	H/R				All Required As-Built Drawings
END								

PROMEC's Representatives			CLIENT's Representative	
QA/QC	Project Manager			
Name	Name		Name	
Signature	Signature	Date	Signature	Date

AGNICO EAGLE

Vendor Document Status

1 ☐	Proceed to next submission and status.
2 ☐	Proceed with exceptions as noted to next submission and status.
3 ☐	Do not proceed. Revise as noted and resubmit next submission and status.
4 ☒	Complete, no further submission required.

By: LUC SÉNÉCAL Date: 2017-07-10

Review and authorization to fabricate are only for general conformance with the design concept of the Project as expressed in the Contract Documents. Sole responsibility for the accuracy and completeness of this document, including but not limited to dimensions and quantities, remains with the Supplier/Contractor. Agnico Eagle does not warrant the accuracy or completeness of any of the information contained herein, nor does Agnico Eagle authorize or approve any construction means, methods, techniques, sequences or any safety precautions or procedures.

Agnico Eagle No. 6515-C-270-007-141-TES-0001 R: Sub002

DOCUMENT FOR INFORMATION

Agnico-Eagle Mines Ltd.

Contract no. 6515-C-270-007

Cable Installation and Testing Procedure

AEM-EL-PRO-001

Area No.: All

System No.: All

PROMEC Approvals

Prepared by:	Stéphane Doré	**Signature:**		**Date:**	2017-04-25
Verified by:	Jonathan Roy	**Signature:**		**Date:**	2017-04-25
Approved by:	Éric Poulin	**Signature:**		**Date:**	2017-04-25.

CLIENT Approvals

Verified by:		**Signature:**		**Date:**	
Approved by:		**Signature:**		**Date:**	

Table of Contents

Page

1. SCOPE 3
   1.1 Covered Sections 3
2. EXECUTION 3
   2.1 Inspection and Preparation 3
   2.2 Installation Requirements 3
   2.3 Inspection and Test Requirements 4

APPENDIX A – ALL APPLICABLE ITRs & LOG

1. SCOPE

The procedure is to establish the cable installation and testing procedure.

1.1 Covered Sections

- Medium Voltage and 1 000 V Power Cables.
- 600 V Control Cables.
- 300 V Instrumentation Cables.

2. EXECUTION

2.1 Inspection and Preparation

- Installation of raceways and supports shall be completed before installing cables.
- Conduits shall be tested for obstructions by pulling a mandrel or other approved object through the conduit. Obstructions shall be cleared with a cutting mandrel or other approved means.

2.2 Installation Requirements

- Cables shall be handled carefully when unreeling to avoid damage due to kinking or otherwise bending to radius less than the Manufacturer's or Electrical Code minimum recommended bending radius.
- Cables shall not be laid on rough ground or dragged over sharp objects.
- Cable Installation in Raceways:
  - Cable reels to be set as close as practical to the raceway entrance, and train the cable as directly as possible to the entrance with minimal bending.
  - A protector is to be used at the raceway entrance to protect the cable jacket.
  - For installation of multiple cables in a conduit, all cables are to be pulled simultaneously.
  - Cable installation to be performed so that no undue stress is placed upon the insulation and coverings when they are drawn through conduits or otherwise handled.
  - Cables to be neatly installed avoiding crosses as much as practical.
  - Cables to be supported clear of the tray lip where they exit the tray.
  - Cables to be anchored in place vertically at 1.0 m maximum intervals, and at each bend within 0.3 m of the change in direction at both sides of the bend with appropriate fasteners.
  - A barrier shall be provided to separate power and control cables for installations where they share a common cable tray. Fireproof sheeting shall be provided to separate power and control cables at tee or cross junctions.
- Installation Cables in Boxes and Cabinets:
  - Open wiring to be arranged in a neat and orderly manner.

- Groups of cables to be spaced and supported.
- Slack wire will be left in all junction boxes, pull boxes, and other places so that wires are not drawn tight against conduit and bushings or short radius corners and the insulation eventually damaged by being squeezed between conductor and other objects.

- The cable shall not be bended either temporarily during installation or permanently to a radius less than the Manufacturer's recommended minimum bending radius.
  - Cable Termination Instructions:
    - Leave each conductor of a cable long enough to reach the most distant terminal point in the equipment being installed. Loop and tie the conductors in a bundle.
    - Strip cable jackets only as far back as needed to accommodate the termination of the conductors.
    - Slack wire to be left at all terminal connections so that stress is not placed on terminal studs and other connections.
    - Control and Instrumentation Cables:
      - All shields on the shielded cables to be kept floating at the transducer and final control element ends (thermocouples, transmitters, analyzers, etc.) and to be terminated and grounded in DCS cabinets.
      - Motor terminal wiring to be bolted together with the ring tongue type terminals and tin plated bolts of the approximate size.
  - Cable Penetration Sealing: Fire stopping seal penetrations shall be in accordance with Client specifications.
  - Tagging of Cables Installations:
    - Identify all cables in accordance with attached cable tagging procedure.
    - Affix cable identification tags at each termination as close to the termination as possible, and at pull boxes, manholes or other points of access.
    - Individual conductor identification products may be slip-on, or heat shrink. Identification information to be typed or printed with indelible ink.
    - Single conductor cables shall be color coded and comply with the Canadian Electrical Code CSA C22.1-06, Article 4-036.

2.3 Inspection and Test Requirements

Installed power cables shall be inspected and tested, including continuity and insulation (Megger) of all cables, in accordance with applicable codes and standards.

Installed control shall be inspected and tested, including continuity, in accordance with applicable codes and standards.

Appendix A

ALL APPLICABLE ITRs & LOGs

AGNICO EAGLE

Vendor Document Status

1 ☐ Proceed to next submission and status.

2 ☐ Proceed with exceptions as noted to next submission and status.

3 ☐ Do not proceed.
Revise as noted and resubmit next submission and status.

4 ☒ Complete, no further submission required.

By: LUC SÉNÉCAL Date: 2017-07-10

Review and authorization to fabricate are only for general conformance with the design concept of the Project as expressed in the Contract Documents. Sole responsibility for the accuracy and completeness of this document, including but not limited to dimensions and quantities, remains with the Supplier/Contractor. Agnico Eagle does not warrant the accuracy or completeness of any of the information contained herein, nor does Agnico Eagle authorize or approve any construction means, methods, techniques, sequences or any safety precautions or procedures.

Agnico Eagle No. 6515-C-270-007-141-TES-0003 R: Sub002

DOCUMENT FOR INFORMATION

Agnico-Eagle Mines Ltd.

Contract no. 6515-C-270-007

Grounding Installation and Testing Procedure

AEM-EL-PRO-002

Area No.: All

System No.: All

PROMEC Approvals

Prepared by:	Stéphane Doré	**Signature:**		**Date:**	2017-04-25
Verified by:	Jonathan Roy	**Signature:**		**Date:**	2017-04-25
Approved by:	Éric Poulin	**Signature:**		**Date:**	2017-04-25.

CLIENT Approvals

Verified by:		**Signature:**		**Date:**	
Approved by:		**Signature:**		**Date:**	

TABLE OF CONTENTS

1. GENERAL 3
   - 1.1 Introduction 3
   - 1.2 References 3
   - 1.3 Design requirements 4
2. PRODUCTS 4
   - 2.1 Materials 4
3. EXECUTION 4
   - 3.1 Installation 4
   - 3.2 Inspection and tests 7

1. GENERAL

1.1 Introduction

- The purpose of electrical ground testing is to determine the effectiveness of the grounding medium with respect to true ground (earth). Most electrical systems do not rely on the earth to carry load current (this is done by the system conductors) but earth may provide the return path for fault currents, and for safety, all electrical equipment frames are connected to ground.
- During resistance testing, precautions shall be taken to ensure personnel safety. For example the test cable area shall be barricaded and testing personnel shall wear adequate PPE when handling test probes.
- All tests shall be documented and submitted to Owner's representative.
- Weather conditions (e.g. temperature and humidity) can have a considerable effect on resistance readings. Hence, it is important that weather conditions be documented for every resistance test.
- In general, the lower the ground resistance, the safer the system is considered to be. Where the resistance is unsatisfactory, those components of the circuit causing unsatisfactory readings shall be repaired or replaced until the resistance meets the minimum requirements.

1.2 References

- Canadian and National electrical code requirements.
- IEEE Standard IEEE-80 and 81
- IEEE 142, Recommended Practice for grounding of Industrial and Commercial Power Systems.
- International Electrical Testing Association Inc. (NETA).

1.3 Design requirements

- Ground electrical equipment in accordance with ANSI/ IEEE Standard 142, IEEE Standard 80 and the requirements of this Section.
- Design shall be such that acceptable levels of step and touch potential are not exceeded either for exposure to plant personnel or for external exposure via transfer potentials.
- The grounding system consists of a number of above ground interconnected conductors to provide a network to which all equipment and metallic structures are connected, either directly or by interconnecting cables. Bond the ground system to the main plant ground grid system at places designated on the Drawings.

2. PRODUCTS

2.1 Materials

- Bare Cable: Uninsulated, stranded, tinned copper cable of adequate size for station and substation ground grids, for connection of electrical and other equipment to the grounding grid and for running along the top of underground ductbanks.
- Insulated Cable: Soft drawn copper, Class B stranding with green colored insulation (if required).
- All ground connection will be bolted or compress type.
- Furnish all connectors, clamps, anchors, fittings, etc., made of copper or copper-alloy.

3. EXECUTION

3.1 Installation

- Install products in accordance with manufacturer's instructions.
- Equipment Safety Grounding
  a. Clamp the ground conductor running on building steel to the flanges of the steel and provide access for connecting equipment ground taps.
  b. If ground conductor is installed along the cable trays as a continuous conductor, clamp the ground cable to the outside of the trays side rail with

appropriate cable tray clamps. Run the cable on the top power tray wherever possible. The cable may be run along control trays in runs that do not have power trays. Do not run ground cables on any instrument trays.

c. For motors remote from the ground grid, run a bare ground cable with the duct bank or tray connecting the motor frame to the station ground grid.

d. Provide all enclosures of electrical distribution or control equipment with a visible grounding cable connection between the enclosure and the station grounding system.

e. Provide grounding cable taps to electrical equipment not shown on the Drawings sized to meet the requirements of the CSA C.22.1-02.

f. Regardless of any regulatory body, no conductor smaller than 6 is permitted for an exposed ground circuit except for grounding instrument cases and secondary circuits of instrument transformers where 16 will be permitted.

g. For equipment requiring grounding, provide a means for attachment of a ground cable to the enclosure. The grounding means may be a tapped hole in the enclosure with a matching bolt and a appropriate lug for copper cable. Hold-down bolts are not to be used for attaching grounding cables.

h. Provide "packaged" or "skid-mounted" equipment with single-point connection to ground grid.

i. Ground all metallic conduits above ground and underground in accordance with the requirements of the CSA C.22.1-02.

j. Install the cable trays electrically continuous to meet the requirements of Article CSA C.22.1-02.. Install a bonding jumper in the gaps in the tray runs to provide continuity.

- Circuit Grounding
  a. Power circuits to include a circuit ground conductor terminated appropriately at source end ground bus connection and at the load.
  b. Size the circuit ground conductor in accordance with the CSA C.22.1-02.

- Terminal Connections:
  a. Provide connections of ground conductors to cable trays and conduit with copper clamps or straps or by grounding bushings. Remove non-conductive protective coatings such as paint, mill scales, oil, grease, oxides, or enamel

on the conduit fittings from the threads or contact surfaces before attaching grounding connection. After ground connection is attached, cover any remaining exposed bare metal with a coating matching the original coating.

b. Above grade connections to equipment to be made using compression type connectors and bolted terminals.

c. Below grade connections, cable-to-cable or cable-to-ground rods and cable-to-structural steel to be made using compression lug.

d. Ground connections to piping to be generally "U clamp".

e. Connections of ground conductors to columns and similar structures to be welded.

f. Ground all cable shielding in accordance with the manufacturer's recommendations, or as directed by Owner.

g. Provide connections of ground conductors to equipment by means of a lug which shall be compressed on the cable end. Bolt the lug to the equipment frame using holes or terminals provided by the equipment manufacturer for this purpose. Where no such provisions are made, drill suitable holes in locations designated by Owner. Hold-down bolts are not to be used for ground connections. Ground connections to motors to be bolted directly to motor frame, and not to sole plates or supporting structures. At all bolted connections, scrape the joining surfaces clean and coat with NO-OX-ID, or equal compound.

- Control Cabinets Safety Ground

a. Connect all metal control cabinets to the ground buses. Insulate wires for connections between individual devices and the ground bus. Provide individual ground connections for each device; no looping permitted.

b. Do not make ground bus splice points coincident with the bolts which support the copper ground bus. Provide connections to the copper ground bus such that it is not necessary to open neither the ground bus nor any other connection to the bus to remove any ground connection. Separate bolted connections to the ground bus from the support and joint bolts.

- Control Cabinet Instrument Ground System:
  a. Install an instrument ground system, conform to Client standard and engineering drawings
  b. Install the instrument ground system in the following manner
     I. Connect the main and branch insulated ground conductors to instrument ground bus.
     II. Clearly label the instrument ground bus.
     III. Ensure that no loops are in the instrument ground system.
  c. "Reference" Distributed Control System (DCS) dc power "common" terminations and analog I/O field wiring shields to the instrument ground bus provided in each DCS enclosure. Provide all instruments and instrument cables with shields attached to only this instrument ground. Tape or insulate shielded cable with sleeves to prevent accidental grounding or touching of shields. Do not ground field ends.

3.2 Inspection and tests

- Visual and mechanical inspection: Check and inspect the installation to ensure that the grounding system has been built as per the engineering design. Ensure all connections to electrodes and ground cable are tight and secure.
- Ground resistance testing is needed after installation of the grounding system, typically five ohms for commercial and small industrial sites and one ohm for utility & transmission substation grounds and large industrial plant substation grounds.
- Follow the recommended manufacturer or designer grounding resistance levels specified. In general – all efforts shall be targeted toward achievement of minimum grounding resistance.

AGNICO EAGLE

Vendor Document Status

1 ☐ Proceed to next submission and status.

2 ☐ Proceed with exceptions as noted to next submission and status.

3 ☐ Do not proceed.
Revise as noted and resubmit next submission and status.

4 ☒ Complete, no further submission required.

By: LUC SÉNÉCAL Date: 2017-07-10

Review and authorization to fabricate are only for general conformance with the design concept of the Project as expressed in the Contract Documents. Sole responsibility for the accuracy and completeness of this document, including but not limited to dimensions and quantities, remains with the Supplier/Contractor. Agnico Eagle does not warrant the accuracy or completeness of any of the information contained herein, nor does Agnico Eagle authorize or approve any construction means, methods, techniques, sequences or any safety precautions or procedures.

Agnico Eagle No. 6515-C-270-007-141-TES-0005 R: Sub002

DOCUMENT FOR INFORMATION

Agnico-Eagle Mines Ltd.

Contract no. 6515-C-270-007

Electrical Apparatus, Equipment & Supports Installation Procedure

AEM-EL-PRO-004

Area No.: All

System No.: All

PROMEC Approvals

Prepared by:	Stéphane Doré	**Signature:**		**Date:**	2017-04-25
Verified by:	Jonathan Roy	**Signature:**		**Date:**	2017-04-25
Approved by:	Éric Poulin	**Signature:**		**Date:**	2017-04-25.

CLIENT Approvals

Verified by:		**Signature:**		**Date:**	
Approved by:		**Signature:**		**Date:**	

Table of Contents

Page

1. PURPOSE 3
   1.1 Submittals 3
2. EXECUTION 3
   2.1 Installation 3
      2.1.1 GENERAL 3
      2.1.2 EQUIPMENT 4
   2.2 Personnel requirements 5
   2.3 Inspection and test requirements 5
   2.4 Adjustment and Cleaning 5
   2.5 Corrosion Protection/Coatings 5

APPENDIX A – ALL APPLICABLE ITRs & LOG

1. PURPOSE

The procedure is to establish the electrical apparatus, equipment and supports installation procedure.

1.1 Submittals

The following drawings, information and data will be submitted:

- As-built drawings showing final setting dimensions where different from the design drawings.
- As-built drawings of all relative installation drawings.

2. EXECUTION

2.1 Installation

2.1.1 GENERAL

- Install all equipment in a neat manner using qualified trade persons in complete accordance with the Drawings and the equipment manufacturers instructions and recommendations.
- Fabricate and install any necessary temporary steel supports, brackets and anchors required for equipment erection or installation. Design of such supports, brackets, and anchors are subject to engineers' approval. Upon completion, remove all temporary supports, sand smooth, prime and paint welds on permanent plant structures, grout temporary anchor holes left in concrete and return the area to the originally installed condition.
- Prior to setting equipment:
  - Inspect equipment foundations for correctness in location, level, location of center lines, anchor bolt omissions, and height.
  - Uniformly roughen foundation surfaces.
  - Inspect all anchor bolts for straightness and damaged threads.
  - Straighten bent anchor bolts using acceptable methods.
  - Rerun bolts with damaged threads using suitable dies.
  - Clean and oil anchor bolts.
- Install all items shipped loose with equipment.
- Mount items with appropriate hardware.
- Provide additions and modifications to structural steel, grating, or floor steel required to completely install the equipment.
- Fabricate racks and supports for miscellaneous enclosures, boxes, cabinets and housings from rolled steel shapes, bars, rods, etc. of standard section and/or from strut material with accessory members and fittings.

- Use proper and adequate handling equipment and rigging at all times and inspect such equipment frequently. Lift electronic cabinets with the use of slings; do not use lifting eyes. Obtain exact weights and dimensions from approved manufacturers drawings or manufacturers representatives to ensure the use of adequate handling equipment.
- Welding
  - Perform in accordance with welding procedure
- Do not remove protective covers on flanges, pipe, or conduit connections until these connections are to be made.
- Fabrication and placing of shims:
  - Place shims, equipment baseplate, bedplates and soleplates as required for a minimum of 25 mm of grout such that shim pack thickness is no greater than 6 mm and no less than 3 mm for shims between the equipment and the top of the mounting plate.
  - Cut down and refinish where required, the tops of baseplate, soleplates, or rough foundations to allow for grouting.
  - Install shims of the required size, thickness and quality at the appropriate locations so there will be no deflection, deformation, or strain induced into the equipment bedplate or soleplate.
  - When the supporting structural steel frame is not level, taper the bottom shims to provide a level top bearing surface. Use a minimum number of shims at all times.
  - Wherever possible, place shims while the bedplate or equipment is in a jacked-up position using jacking or levelling nuts where provided or other means as necessary. Driving of shims to achieve a level top bearing surface is not permitted.

2.1.2 EQUIPMENT

- General
  - Set stationary equipment such as switchgear, motor control centers, and skid mounted equipment in a true vertical and horizontal plane and set anchor bolts evenly as required.
  - Tighten gasketed joints evenly around the entire gasketed area to insure uniform contact pressure.
  - Install wiring in conformance with connection diagrams, including jumpers where shown on terminal blocks. Install and terminate all wiring in accordance with Promec's procedure No. AEM-EL-PRO-001.
  - Install grounding systems and lightning protection in accordance with Promec's procedure No. AEM-EL-PRO-002.
  - Install cable tray system in accordance with Promec's procedure No. AEM-EL-PRO-003.
  - Install and terminate all cable in accordance with Promec's procedure No. AEM-EL-PRO-001.
- Panel boards and Transformers
  - Mount panel boards and transformers as specified in Client standards.

- Cabinets and Free Standing Panel boards
  - Handle, assemble, and maintain cabinets and free standing panels according to manufacturer's recommended procedures and documentation requirements.
  - Place cabinets and free standing panels immediately in their final positions, as shown on the drawing's temporary storage locations shall not be considered.
  - Wire cabinets and free standing panels in accordance with electrical wiring diagrams including jumpers shown on terminal blocks.

2.2 Personnel requirements

Provide qualified manufacturer's representatives for technical assistance as required.

2.3 Inspection and test requirements

- CEM Cabinets
  - Thoroughly inspect, clean, and remove all foreign matter, dust, debris, dirt, etc. from equipment cubicles, compartments and insulators.
- Transformers
  - Megger all winding terminals (maximum 1 kV) in accordance with manufacturer's requirements and provide results to Client for review.
- Construction Checkout
  - Perform and document all inspections and test activities in accordance with manufacturer's recommendations.

2.4 Adjustment and Cleaning

Remove any protective, non-permanent coatings applied by the equipment manufacturer.

Clean external surfaces of all equipment and materials of dirt, grease, oil, loose rust.

2.5 Corrosion Protection/Coatings

Following installation, touch-up all scratched or marred areas of manufacturer's primed or finished paint. Use the same paint as manufacturer's original finish or prime paint with surface preparation and paint application in accordance with the manufacturer's requirements.

Appendix A

ALL APPLICABLE ITRs & LOGs

AGNICO EAGLE

Vendor Document Status

1 ☐ Proceed to next submission and status.

2 ☐ Proceed with exceptions as noted to next submission and status.

3 ☐ Do not proceed.
Revise as noted and resubmit next submission and status.

4 ☑ Complete, no further submission required.

By: JEAN-FRANCOIS TREMBLAY JG Date: 2017-05-16

Review and authorization to fabricate are only for general conformance with the design concept of the Project as expressed in the Contract Documents. Sole responsibility for the accuracy and completeness of this document, including but not limited to dimensions and quantities, remains with the Supplier/Contractor. Agnico Eagle does not warrant the accuracy or completeness of any of the information contained herein, nor does Agnico Eagle authorize or approve any construction means, methods, techniques, sequences or any safety precautions or procedures.

Agnico Eagle No. 6515-C-270-007-141-TES-0006 R: Sub001

DOCUMENT FOR INFORMATION

Agnico-Eagle Mines Ltd.

Contract no. 6515-C-270-007

Instrumentation Installation and Testing Procedure

AEM-IN-PRO-001

Area No.: All

System No.: All

PROMEC Approvals

Prepared by:	Stéphane Doré	**Signature:**		**Date:**	2017-04-25
Verified by:	Jonathan Roy	**Signature:**		**Date:**	2017-04-25
Approved by:	Éric Poulin	**Signature:**		**Date:**	2017-04-25

CLIENT Approvals

Verified by:		**Signature:**		**Date:**	
Approved by:		**Signature:**		**Date:**	

Table of Contents

Page

1 SCOPE 3

2 PRODUCTS 3

2.1 Materials 3

2.2 Inspection and Test Requirements 3

2.3 Cleaning 4

2.4 Corrosion Protection/Coatings 4

3 EXECUTION 4

3.1 Installation 4

3.1.1 General 4

3.1.2 Installation of Locally Mounted Equipment 4

3.1.3 Installation of Instrument Racks and Stands 5

3.1.4 Connection of Equipment and Devices 5

3.1.5 Flow Meter Tubing 5

3.2 Inspection and Test Requirements 6

3.2.1 General 6

APPENDIX A – ALL APPLICABLE ITRs & LOG

1 SCOPE

This procedure includes:

- Installation of:
  - Field instruments
  - Field instrument racks and stands
- Installation of package equipment loose instruments.
- Installation of package equipment sensing tubing up to local control panel.
- Installation of specialty instruments.

2 PRODUCTS

2.1 Materials

- Instruments: As identified in the Instrument List. The Instrument List is a listing of instruments to be installed after:
  - Promec shall furnish all materials required for complete installation of control and instrumentation devices. Provide all tools and equipment required for the installation.
  - Promec shall furnish instruments, control devices and instrument racks, stands, and enclosures.
  - Promec shall provide all calibration equipment as required in Sections 2.2 of this specification.
  - Promec shall furnish nameplates for all control and instrumentation equipment furnished or installed under these specifications, unless already provided. Nameplates shall be either of laminated phenolic (white background with black letters) or stainless steel. Engrave or stamp the nameplates with the Instrument Tag Numbers per the Instrument List. Attach phenolic type nameplates to control and instrumentation equipment by machine screws or stainless steel wire.

2.2 Inspection and Test Requirements

- Promec shall obtain the instruments from the receiving warehouse which has inspected them for obvious shipping damage and manufacturing defects. Promec will also inspect instruments for obvious shipping damage and manufacturing defects when they receive them. Each instrument will have been calibrated by the manufacturer. Vendor calibration report will be review by Promec for each instrument. The calibration of each instrument will be checked by Promec prior to installation.
- Promec shall use qualified and experienced personnel to perform adjustments and tests. Perform adjustments and tests as many times as necessary to assure proper operation of equipment and systems and quality of materials and workmanship.

2.3 Cleaning

- Promec shall clean and remove any protective non-permanent, coatings applied by manufacturers. Clean equipment and material external surfaces of all dirt, grease, oil, loose rust, and other foreign material.

2.4 Corrosion Protection/Coatings

- Following installation, Promec shall touch-up all scratched or marred areas of Manufacturer's prime or finish painting. Promec shall use paint the same as Manufacturer's original finish or prime paint with surface preparation and paint application in accordance with the Manufacturer's requirements.
- Threads shall not be painted
- Stainless steel and other corrosion-resisting surfaces: do not paint.
- Machined surfaces: do not paint.
- Omit paint at all areas: before field welding.

3 EXECUTION

3.1 Installation

3.1.1 GENERAL

- Install all controls and instrumentation in accordance with the requirements of this Section. Any installation procedures not specified herein shall be done in accordance with the manufacturer's recommendations and good engineering practice.
- Promec shall utilize experienced workers for installation of all controls and instrumentation, tubing, and piping.
- Promec shall furnish all necessary craft personnel, supervision and scheduling required for the completion of instrument installation within the Owner's schedule.

3.1.2 INSTALLATION OF LOCALLY MOUNTED EQUIPMENT

- In addition to the installation requirements indicated on the drawings, the manufacturer's submittals, and the Instrument List, the requirements specified herein apply.
- Install all instruments and associated devices shall be installed in easily accessible locations for maintenance, calibration, and replacement. Take special care to assure that indicator type instruments are easily readable from the nearest accessible floor or platform elevation.
- Solenoid valves and control loop accessories not located in enclosures or mounted on valves shall be mounted in easily accessible protected locations near the components with which they are associated.
- All pressure gages (indicators) shall be installed bear the process connections, unless otherwise on the drawings and locate where easily read.
- Pressure switches not mounted in enclosures shall be installed on a wall or building column, or on pipe stands, near the piping or duct to which they are connected and mount to permit ease of adjustment.

- All brackets, stands, supports, and other miscellaneous hardware shall be provided as required for mounting devices.
- Level transmitters, level controllers, and level switches of the displacer or float type shall be installed on vessel instrument piping columns as indicated on the piping detail drawings for that vessel. Top works of transmitters, controllers, and switches shall be provided as to positions which provide convenient access for operation and maintenance; perform prior to installation of tubing and wiring to the devices.
- Sight flow glasses shall be installed for maximum visibility.

3.1.3 INSTALLATION OF INSTRUMENT RACKS AND STANDS

- Freestanding racks, stands, and enclosures to the floor shall be attached to concrete equipment bases or supporting steel, at locations indicated on the drawings. Shim shall be provided for proper alignment before bolting to the floor or grouting.
- Non-freestanding racks and enclosures shall be mounted in accessible locations on columns and walls. Brackets shall be fabricated as required to install the racks and enclosures in a workmanlike manner.
- Rough edges and welds on all fabricated supports shall be grinded smooth; surfaces shall be finished with coating.
- Racks shall be located to provide the shortest reasonable instrument impulse line lengths for each of the instruments mounted thereupon.

3.1.4 CONNECTION OF EQUIPMENT AND DEVICES

- Design pressure and maximum process temperature shall be limited below manufacturer's specified data for all instruments.
- After flow instrument installation, Promec shall verify the high and low sides of the instrument with respect to the direction of flow.
- When reservoir tees are required, bent pipe shall be used between the root valve and the tee unless there is a space limitation. Fittings may be used if space is limited.
- Reservoir tees to be installed on vertical lines shall be mounted at or above the process line connection. These reservoir tees shall be mounted at the same elevation.
- Reservoir tees shall be provide for each reference leg for differential pressure transmitter used to measure level on the steam drums, deaerator storage tank, or any tank containing both liquid and vapour. Reservoir tees shall be provided on all steam flow and pressure applications to insure complete fill of the sensing line during operation. Reservoir tees must not be insulated. A filling connection shall be provided on the reservoir tees for initial filling of the sensing line.

3.1.5 FLOW METER TUBING

- Process sensing connections shall be provided between flow indicators, transmitters, controllers, or switches and shutoff valves on the main piping in accordance with the Drawings.
- Where tubing is run in open type trays, covers shall be installed wherever the trays pass through an open area where it is possible that the tubes can be damaged from falling objects.

3.2 Inspection and Test Requirements

3.2.1 GENERAL

- Pre-operational adjustments, material and equipment tests shall be made as specified and as required by governing codes, regulations, manufacturers' recommendations, and good construction methods.
- Instrument functional loop checkout shall be made to resolve any discrepancies and correct any field problems which arise in the scope of work.
- Assemble, test, and adjust, as required, for correct and reliable operation the control and instrument equipment (including gages, switches, thermostats, and other devices) which are a part of major equipment.

Appendix A

ALL APPLICABLE ITRs & LOGs

AGNICO EAGLE

Vendor Document Status

1 ☐ Proceed to next submission and status.

2 ☐ Proceed with exceptions as noted to next submission and status.

3 ☐ Do not proceed.
Revise as noted and resubmit next submission and status.

4 ■ Complete, no further submission required.

By: LUC SÉNÉCAL Date: 2017-07-10

Review and authorization to fabricate are only for general conformance with the design concept of the Project as expressed in the Contract Documents. Sole responsibility for the accuracy and completeness of this document, including but not limited to dimensions and quantities, remains with the Supplier/Contractor. Agnico Eagle does not warrant the accuracy or completeness of any of the information contained herein, nor does Agnico Eagle authorize or approve any construction means, methods, techniques, sequences or any safety precautions or procedures.

Agnico Eagle No. 6515-C-270-007-141-TES-0008 R: Sub002

DOCUMENT FOR INFORMATION

NUQSANA PROMEC MINING

AGNICO EAGLE

Agnico-Eagle Mines Ltd.

Contract no. 6515-C-270-007

Cable Tray Installation Procedure

AEM-EL-PRO-003

Area No.: All

System No.: All

PROMEC Approvals

Prepared by:	Stéphane Doré	**Signature:**		**Date:**	2017-04-25
Verified by:	Jonathan Roy	**Signature:**		**Date:**	2017-04-25
Approved by:	Éric Poulin	**Signature:**		**Date:**	2017-04-25

CLIENT Approvals

Verified by:		**Signature:**		**Date:**	
Approved by:		**Signature:**		**Date:**	

Table of Contents

Page

1. GENERAL 3
   1.1 SECTION INCLUDES 3
2. EXECUTION 3
   2.1 INSPECTION AND PREPARATION 3
   2.2 INSTALLATION REQUIREMENTS 3
   2.3 INSPECTION AND TEST REQUIREMENTS 4
   2.4 CORROSION PROTECTION/COATINGS 4

1. GENERAL

1.1 Section Includes

- Cable Tray, Fittings, and Accessories.
- Hangers and Supports.

2. EXECUTION

2.1 Inspection and Preparation

- Before installation, inspect cable trays and fittings and clean off all dirt, cuttings, and other foreign material. Cut ends of the trays to be filed or ground to remove burrs and sharp edges, and coated to prevent rust.

2.2 Installation Requirements

- All Electrical Installations: in accordance with CSA Standard C22.1-06.
- In general, provide a recommended minimum vertical spacing between trays of 250 mm measured from the bottom of the upper tray to the top of the lower tray. Maintain minimum of 230 mm clearance between the top of the tray and beams, pipes, etc. for parallel runs, and 75 mm minimum for crossing runs. (Trays to be installed by others).
- Cut cable tray to size by use of a hack saw, or other approved tool. Do not flame cut trays or their accessories.
- Align cable trays carefully and level plumb and true. Secure the runs with at least two smooth head bolts at each support bracket.
- Supports for cable tray runs to be the cantilever or the trapeze type, fabricated of threaded rod, strut, and/or steel members and accessories. The support member is in contact with the cable tray and shall be approximately 75 mm longer than the width of the cable tray that it supports.
- Support cable trays at all bends, tees, dropouts, crossovers, risers, etc. as recommended by CSA Standard C22.2, No. 126.1-02.
- Fasten supports to building steel by means of beam clamps. Fasten supports to concrete by inserts or drilled-in anchors. Provide supports capable of supporting the ultimate tray loading capacity.

2.3 Inspection and Test Requirements

- Perform inspections and tests normally used either in installation, construction processes or as called for by the applicable codes and standards.
- Upon completion of cable tray installation, inspect the interior surfaces of the tray run for any burrs or rough edges that could result in cable damage during cable installation. Remove burrs and rough edges.

2.4 Corrosion Protection/Coatings

- Where the galvanizing of cable tray supports is damaged, repair by the application of appropriate galvanizing repair paints.

Control System Description

Rankin Inlet Tank Farm – 65PLC11601

AGNICO EAGLE

Vendor Document Status

1 ☐ Proceed to next submission and status.

2 ☐ Proceed with exceptions as noted to next submission and status.

3 ☐ Do not proceed. Revise as noted and resubmit next submission and status.

4 ☑ Complete, no further submission required.

Sébastien Perron Instrumentation Date: 28/09/2017

Review and authorization to fabricate are only for general conformance with the design concept of the Project as expressed in the Contract Documents. Sole responsibility for the accuracy and completeness of this document, including but not limited to dimensions and quantities, remains with the Supplier/Contractor. Agnico Eagle does not warrant the accuracy or completeness of any of the information contained herein, nor does Agnico Eagle authorize or approve any construction means, methods, techniques, sequences or any safety precautions or procedures.

Agnico Eagle No. 6515-C-270-007-280-GNS-0001 R: Sub003

DOCUMENT FOR INFORMATION

AGNICO EAGLE - MELIADINE DIVISION

Rankin Inlet, Nunavut

Project No: 591700

Prepared by: G. Gagnon, Eng.

Approved by: D. Carrier, Eng.

Document No: ULT-591700-CSD-001

Date: Sept 12, 2017

Revision: 1

REGISTERED PROFESSIONAL ENGINEER
13627
D. CARRIER
LICENSEE
NT/NU

Sept 12/2017

PERMIT TO PRACTICE
LE GROUPE ULTRAGEN LTÉE
Signature
Date SEP 12 2017
PERMIT NUMBER: P 1180
NT/NU Association of Professional Engineers and Geoscientists

REVISION INDEX

Rev	Prepared by	Reviewed by	Approved by	Date	Pages Revised / Remarks	Issued for
PA	G. GAGNON	E. LAROUCHE	D. CARRIER	2017/05/18		FOR REVIEW
0	G. GAGNON	E. LAROUCHE	D. CARRIER	2017/06/20		FOR CONSTRCUTION
1	D .CARRIER	E. LAROUCHE	D. CARRIER	2017/09/12		FOR START-UP

D. CARRIER, Eng. OIQ – 40308 / NAPEQ – L3627

Sept 12/2017
Date

INDEX

INDEX 3
1 Overview 4
2 PLC 4
3 I/O cards 4
4 Human-Machine Interface (HMI) 5
5 Flow controller 5
6 Ground proving and overfill prevention device 5
7 Motorized Operated Valve (MOV) 5
8 Communication 6
9 Ethernet switches 6
10 Software 6
10.1 PLC Programming 6
10.2 HMI Programming 6
10.3 PLC – Microload Controller exchange 6
11 Functional Description 7
11.1 Truck Loading 7
11.2 Main tanks loading 11
11.3 Alarms transmission 11

1 Overview

The control system at Rankin Inlet tank farm consists of the following components:

- PLC cabinet located in the operator room with a HMI touchscreen for operation.
- Flow Controller Smith Meter located in the operator room.
- A flow control kit including one flow valve, one flow meter and one temperature probe connected to the Flow Controller to measure the transferred quantity per transaction.
- Two Variable Frequency Drive (VFD), one per transfer pumps (2).
- Scully Module with plug to allow truck ground proving and truck overfill prevention.
- Radar level transmitters and temperature transmitters for monitoring the diesel tanks (2).
- Motorized Operated Valve (MOV) to allow the transfer between tanks and truck.
- E-stops (3) located in the truck area, inside the pumping station and inside the operator room.
- Strobe light on each diesel tank and one common horn on the pumping station to indicate high level tank.

2 PLC

2.1.1 One PLC for the Rankin Inlet tank farm diesel distribution.
Manufacturer: Schneider, Model: BMEP582040

3 I/O cards

3.1.1 PLC Input and outputs cards connected to field devices are as following:

Module	Manufacturer	Model
32 digital inputs module (120 Vac)	Schneider	BMXDDI3202K
32 digital outputs module	Schneider	BMXDDO3202K
8 analog inputs module (4 -20 mA)	Schneider	BMXAMI0810
Ethernet backplane card	Schneider	BMENOC0321

4 Human-Machine Interface (HMI)

4.1.1 One Touch screen HMI mounted in front of the PLC cabinet to monitor and control the transferred quantity from diesel tanks to tanker truck.
Manufacturer: Schneider, Model: HMIDT732 / HMIG3U

5 Flow controller

5.1.1 One Microload Flow controller c/w one flow meter, one digital flow valve and one RTD temperature to control the transferred quantity.

Instrument	Manufacturer	Model
Flow controller	FCM	Smith Meter ML-XP-STD-1, Microload
Flow valve (Digital pre-set valve) with two 120 Vac solenoids	TCS	OCV 115-3
Flow meter (positive displacement type)	TCS	700-40SP4DX
Pulse transmitter for flowmeter	TCS	DMP-100-3
RTD temperature sensor	FMC	TP-W-3C-2.5

6 Ground proving and overfill prevention device

6.1.1 A Scully module located beside the truck loading arm to connect to the tanker truck using a plug assembly. The 10-pins plug assembly allows the monitoring of up to 8 high level sensors and monitors the static ground verification on the tanker truck.
Manufacturer: Scully, Model: Intellitrol IC-OG, plug model: SC-8A

7 Motorized Operated Valve (MOV)

7.1.1 One MOV per vertical tank to control the tanks outlets. These valves are powered at 120 Vac and are controlled through 120 Vac output PLC cards. With one output configuration for the open command, it closes automatically when off. Open position, close position and fault status are monitored by the PLC.
Actuator Manufacturer: Rotork, Model: IQT500

Valve Manufacturer: M.A Stewart, Model: F-150-CSF-SS-FS-N

8 Communication

8.1.1 Ethernet TCP/IP is used for communication between the PLC, the HMI, the flow controller and the VFDs.

9 Ethernet switches

9.1.1 One Ethernet switch inside the PLC cabinet connected to the PLC Ethernet communication card, dedicated for the HMI and the plant Ethernet network.
Manufacturer: Schneider, Model: TCSESM083F2CSO

9.1.2 One Ethernet switch inside the PLC cabinet connected to the PLC CPU Ethernet port, dedicated for Microload controllers and VFDs.
Manufacturer: Schneider, Model: TCSESM083F1CSO

10 Software

10.1 PLC Programming

10.1.1 Schneider Unity Pro software, version 11 is the PLC programming software for the Schneider M580 PLC.

10.2 HMI Programming

10.2.1 Vijeo Designer software, version 6.2 is the HMI touch screen programming software.

10.3 PLC – Microload Controller exchange

10.3.1 The communication protocol used to transfer data between the PLC and the Microload controller is Ethernet Modbus TCP/IP (Accumulated volume, Pre-set volume, Flow rate, etc). The Microload keypad is disabled, all controls are done through the PLC.

11 Functional Description

11.1 Truck Loading

1. At the truck area

    a. Connect the Scully Intellitrol plug to the tanker truck to allow ground proving and truck overfill prevention, then attach the loading arm to the truck.

    b. Green Bar indicator is ON steady on the Scully Intellitrol Module when the plug is properly connected and the ground contact is made. Red Bar indicator ON means Scully not ready or no lights ON means no power. The Intellitrol also monitors the truck compartment levels, if one or many compartments LED are ON that indicates a faulty level sensor.

    c. The Scully Intellitrol switch interlocks the 120 Vac power to the flow control valve. In case of high level in tanker truck or loss of truck grounding contact, the 120 Vac power is removed from the flow control valve and the valve closes. The fault status is wired to PLC through interposing relay to prevent any loading operation. The running sequence is then paused and equipment are stopped and valves closed.

    d. The Scully Intellitrol can be bypassed with a bypass key held against the side of the Intellitrol for 10 to 30 seconds. When in bypassed mode, the Intellitrol Bar indicator will blink green.
        - The maximum bypass time is settable from 15 to 60 minutes.
        - Bypass operation automatically ends when the vehicle is disconnected.
        - A faulty sensor can only be bypassed at initial truck hookup.
        - A sensor wet during loading can never be bypassed.

2. At the pumping station operator room – Logging to the system

    a. Two levels of user security are available at the HMI;

        i. Operator username and PIN number 1111.

        ii. Maintenance username and PIN number 2222.

    b. At the operator security level, the truck loading sequence is fully automatic and there is no bypassed or manual mode available.

c. At the maintenance security level, the Microload controller could be bypassed and manual mode are available for the VFD and the motorized valves.

d. The security level is logout automatically after a predefined time of inactivity, to prevent the unauthorized use of the HMI.

3. Truck loading sequence

a. The HMI contents three main screens;

i. **Loading graphic screen** for visualisation including; tank levels, tank temperatures, Pumps status, MOV status, Scully status and the Microload bypass button.

ii. **Loading sequence screen** for sequence operation; Start, Pause and Stop loading sequence, tank's selection, truck load, sequence status, loading flow and load totalizer.

iii. **Alarm page** with active alarms in red and clear alarms in green. The clear all alarm button is active only with maintenance security level access.

b. To start the truck loading sequence the following actions shall be done:

i. Select one of the two main tanks. There is always one tank selected, make sure this is the right tank before starting the sequence.

ii. Enter the truck load to fill. A predefined load value is set at each transaction and could be modified as required.

iii. Verify the sequence is 'Ready to Start' in the sequence banner status. If not then other alarms texts will show the issues that need to be resolved prior to start the sequence.

iv. Press the START button to start the loading.

c. The sequence status shows 'Ready to start' if all conditions are met for the automatic loading sequence. Otherwise the status will show 'Not Ready' in red with the following alarms messages:

i. **Scully fault:** The Scully unit is faulty, ground contact or truck levels are in fault.

ii. **Equipment fault:** The pumps or the valves are not available; either in fault or in manual mode.

iii. **Tank low level:** The selected tank reached the low level.

d. There are three control buttons for the automatic sequence:

i. **START:** starts the sequence.

ii. **PAUSE:** pauses the sequence, the valves close, the pumps stop and the transaction is on hold, and wait for a restart (START) or a complete stop (STOP). This function allows the truck driver to hold the sequence to do visual checks.

iii. **STOP:** stops the sequence and ends the transaction through the Microload unit.

e. The START button starts the loading sequence and the PLC does an estimated time for the loading based on the truck load and pump flow. It generates an alarm if the time expires before the end of the sequence, meaning there is an issue with the system.

f. The sequence stops automatically once the truck load is reached. If the sequence stops on a fault, the sequence moves to the pause state, allowing the operator to clear the fault and restart or to stop the sequence. If no action is done, the sequence stops after the pause time expired.

g. The sequence starts by opening the selected tank's motorized valve and ramps up one of the VFD.

h. Pumps will run alternatively based on running hours accumulated, if both are available in auto mode before starting the sequence. The pumps have a selector AUTO/MANUAL on their HMI popup, this function is available only with the maintenance security access. If one pump does not start, a fault will be generated on the HMI and the other pump will start automatically. If one pump is in AUTO mode and the other in MAUAL mode, only the pump in AUTO mode will be used. If both pumps are in MANUAL mode, the sequence will not start. If none of the pumps start, the motorized valve closes, and the sequence goes to pause. Alarms are generated on the HMI.

i. The PLC sends a "Remote Start" to the Microload unit with the truck load. The Microload starts the loading control by opening the flow valve and monitoring the accumulated volume.

j. The truck load, the accumulated volume and flow rate are shown on the sequence screen. The data exchange with the Microload controller and the PLC is polled through Modbus link. At the end of transaction, the accumulated value and the truck load stay on the screen until a new transaction. The total of all fuel dispensed is totalized in PLC memory. This value is available and resettable in the PLC only, not on the HMI.

k. The loading sequence stops under the following conditions:

- Tanker truck is full OR;
- The estimated loading time is expired (meaning there is an issued with the truck level) OR;
- The Microload faults OR;
- Scully fault (grounding contact or high level) OR;
- MOV faults on open position OR;
- Fault on VFD pump OR;
- PAUSE or STOP buttons sequence are activated.

When the sequence stops, the pump stops, the MOV closes, the remote stop is set to Microload controller, and the flow valve closes. The status of the loading sequence is shown on the sequence screen.

l. The truck load is a pre-set value in the PLC based on one type of tanker truck. If more than one tanker truck capacity models are used, a pre-set selection could be added to facilitate trucker entries. To be defined on site.

m. The sequence could not start if there is a low low level in the main tank selected. But if the sequence is running when the low low level appears, the sequence will complete the loading. The low low level will be set to support one tanker truck load above the piping intake.

n. On the stop sequence, the pump stops first and then the motorized valve at the selected tank closes.

o. The valves positions and the pumps status are shown on the graphic screen.

p. There are three emergency push buttons, one on the PLC cabinet, one in the pump house and one at the truck area, and they are hardwired to the emergency relay inside the PLC cabinet. The emergency relay contacts stop the VFD pumps through VFD input (DIL and 24V) and remove the power to the flow valve. The emergency relay status is wired back to the PLC, to close the MOVs and set the "remote stop" command to the Microload controller.

q. Pumps interlocks – Starting conditions

- Scully contact through the truck plug (must be connected)
- Minimum level of diesel in the selected main tank (above low low level)

r. Process interlocks – Running conditions that can be bypassed

- Microload Controller ready and running. The bypass confirmation of the controller is available only through the maintenance security level. If the bypass valve is opened, it shall be confirmed on the HMI, to ensure proper functionality.

s. Safety trip conditions

- Emergency stop buttons

4. Maintenance mode

a. The maintenance mode is accessible by logging as maintenance username with the proper password.

b. The user in maintenance mode could access the motors and valves popups. The functionalities in popups allow individual control of the equipment; AUTO/MANUAL mode, START/STOP and feedback status.

c. In MANUAL mode, the user could take control of every equipment to manually operate them without interlock except for the E-Stops. The user is fully responsible of the equipment when running them in manual.

d. A maintenance mode banner is displayed in the graphic and sequence screens to identify that this mode is active.

e. The Microload bypass button is accessible in maintenance mode only.

f. The automatic loading sequence could not run in maintenance mode. Equipment left in manual mode does not return in auto mode automatically, the user is responsible to return them in auto mode to allow the automatic sequence to work properly.

11.2 Main tanks loading

1. Overfill protection of tank during refueling from the marine line
    i. Overfill alarm is composed of one strobe light on each tank and one common horn installed on the pumping container.
    ii. When 90% of a tank capacity is reached, an overfill alarm is activated, turning on the tank strobe light and the horn.
    iii. The horn stops once the alarm is acknowledged.

11.3 Alarms transmission

- At least 4 type of alarms are wired from PLC to Fire Alarm System
- Overfill alarm on tanks
- Emergency stop activated
- Temperature alarm
- Pumps and valves malfunction alarms

NO. DESSIN DRAWING NO. 65-116-205-200_R3.dwg

FORMAT ARCHD

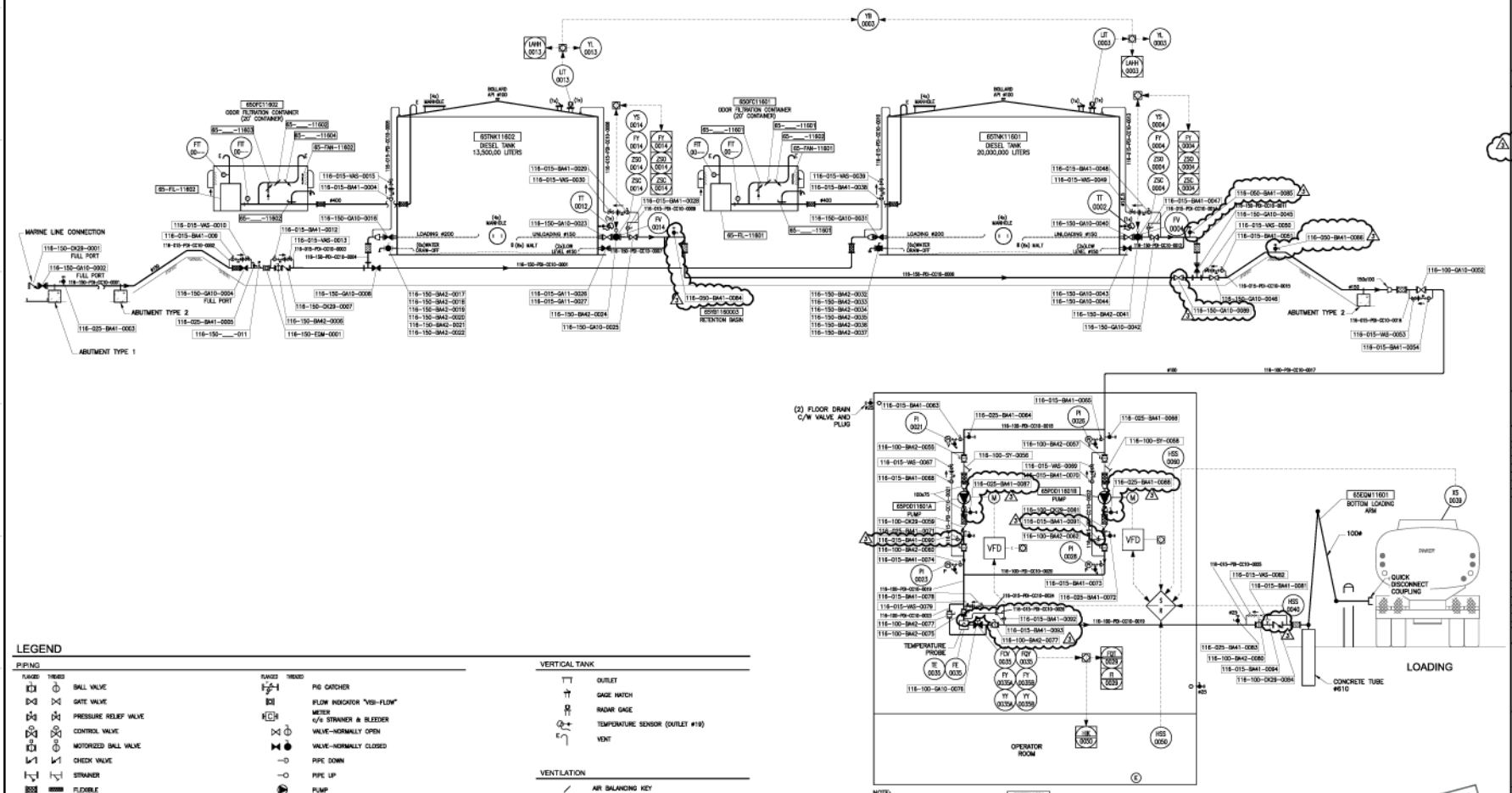

NOTE:
INSTALL DRAIN VALVE #25
WITH PLUG AT LOW POINTS.

LEGEND

PIPING

FLANGED	THREADED		FLANGED	THREADED	
		BALL VALVE			PIG CATCHER
		GATE VALVE			FLOW INDICATOR "VISI-FLOW"
		PRESSURE RELIEF VALVE			METER c/s STRAINER & BLEEDER
		CONTROL VALVE			VALVE-NORMALLY OPEN
		MOTORIZED BALL VALVE			VALVE-NORMALLY CLOSED
		CHECK VALVE			PIPE DOWN
		STRAINER			PIPE UP
		FLEXIBLE			PUMP
		REDUCER			PRESSURE RELIEF VALVE KIT: PIPING #12,5 SCH. 80, PRESSURE RELIEF VALVE (AJUSTED TO 5 PSI UNLESS OTHERWISE SPECIFIED), UNION, T WITH PLUG & BALL VALVE
		UNION			
		FLANGES			
		BLANK FLANGE			PRESSURE GAGE TO VACUUM OF POMPE (VACUUM)
		CAP			PRESSURE GAGE TO DISHARGE OF PUMP (POSITIVE PRESSURE)
		CONNECTION			TEMPERATURE PROBE

VERTICAL TANK

- OUTLET
- GAGE HATCH
- RADAR GAGE
- TEMPERATURE SENSOR (OUTLET #19)
- VENT

VENTILATION

- AIR BALANCING KEY
- AIR PRESSURE RELIEF OR BACK-DRAFT DAMPER
- MANUEL FLAP
- AIR FLOW SWITCH

GENERAL

- EXTINGUISHER 20 BC

P&ID

SEE DWG 65-500-205-207

POUR CONSTRUCTION
FOR CONSTRUCTION
AGNICO EAGLE
DATE : 2018-04-16

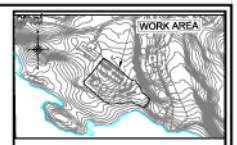

WSP

1075, 3e AVENUE E
VAL-D'OR (QUÉBEC) CANADA J9P 5N1
TÉL : 1-819-825-4711 | TÉLÉC : 1-819-825-4715 | WWW.WSPGROUP.COM
Ref. 181-08440-40

NOTES GÉNÉRALES / GENERAL NOTES

1. REPLACE DRAWING : 65-103-205-200
2. EQUIPMENTS NUMBERING AS PER AEM STANDARDS, DOCUMENTS: 0102-000-100-STD-002 & 0102-CDL-02
3. ALL DRAINS TO BE INSTALLED HORIZONTALLY.

DESSINS EN RÉFÉRENCE / REFERENCE DRAWINGS

TYPE / TITLE	# DWG

AGNICO EAGLE

REV.	DATE	DESCRIPTION	PAR/BY	APP.	CLIENT
3	2018-04-16	EQUIPMENTS ADDED	J.M.	S.T.	
2	2017-06-05	NUMBERING OF EQUIPMENTS	J.M.	S.T.	
1	2017-07-20	INSTRUMENTATION ADDED	F.M.G.	L.S.	
0	2017-05-31	ISSUED FOR CONSTRUCTION	J.M.	S.T.	

REVISIONS

TYPE / TITLE
AGNICO EAGLE – MELIADINE DIVISION
116 – FUEL TANK FARM
205 – P&ID
FUEL DISTRIBUTION
FLOW DIAGRAM

DESSINÉ PAR DRAWN BY	GHISLAINE CORNUT, tech.	DATE 2017-05-26
VÉRIFIÉ PAR CHECKED BY	JÖEL MORLIÈRE, tech.	2017-05-26
APPROUVÉ PAR APPROVED BY	DENIS THIBODEAU, P. Eng.	2017-05-26
ÉCHELLE SCALE	NONE	DATE 2017-05-26
NO. DESSIN DRAWING NO.	65-116-205-200	
NO. PROJET PROJECT NO.	6515	REVISION 3 / FEUILLE / SHT 1/1

AC-CART-ARCH D

\\CAMTL10A0001\projets\2019\1\181-08440-40\Genie Montique\Dwg\65-116-205-200_R3.dwg

FILE NO. 65-116-205-200_R3.dwg

65-116-275-200_R0

FORMAT ARCH D

EQUIPMENT LIST

ARTICLE NUMBER	SYMBOL	DESCRIPTION	MANUFACTURER	TYPE	NOTES
30	XB	CONNECTION – CROSS CONNECTOR COMPRESSION CROSS CONNECTOR FOR TWO HORIZONTAL CONDUCTORS ON THE SAME PLANE. CABLE SIZE: 4/0AWG.	BURNDY	YSI-C	
31	GT	PIPE AND GROUNDING ROD CONNECTOR STEEL ROD COATED WITH COPPER. COMPRESSION CONNECTOR FOR GROUNDING ROD. ROD DIAMETER: 0.625IN, ROD LENGTH: 3M CABLE SIZE: 4/0AWG.	BURNDY	YGLB-C	
32	TA	CONNECTION – TAP COMPRESSION CONNECTION FOR GROUNDING TAP FOR TAP SPLICE. CABLE SIZE: 4/0AWG.	BURNDY	YSHF-C	
33	–	GROUND ROD TAP CONNECTION – INTERNAL FOR CONNECTION TO GROUNDING ROD, HEAVY DUTY. ROD SIZE: 4/0AWG CABLE SIZE: 4/0AWG.	BURNDY	YGHF	
34	–	CONDUCTOR CONNECTION – GROUND PLATES HEAVY DUTY, CONSTRUCTION WITH REMOVABLE CABLE SIZE: 4/0AWG.	BURNDY	YG	
35	PT	CONNECTION – PARALLEL HORIZONTAL CONDUCTORS COMPRESSED CONNECTION FOR TWO PARALLEL HORIZONTAL CONDUCTORS. CABLE SIZE: 4/0AWG TAP CABLE SIZE: 4/0AWG.	BURNDY	YHC	
36	VS	CONNECTION – STRUCTURE CONNECTION USED FOR VERTICAL STEEL SURFACE, BEAM OR STRUCTURAL STEEL (CSA) CABLE SIZE: 4/0AWG.	BURNDY	GSTCD-NY	
37	LA	CONNECTION – HEAVY DUTY TERMINALS HEAVY DUTY TERMINALS DESIGNED TO CARRY SHORT CIRCUIT LOAD AND WITHSTAND HIGH MECHANICAL STRESS. CABLE SIZE: 4/0AWG.	BURNDY	YDHA	
38	VS2	CONNECTION – STRUCTURE CONNECTION USED FOR VERTICAL STEEL SURFACE (STRUCTURAL BEAM) CABLE SIZE: 4/0AWG	BURNDY	YGH	THICKY BURNDY YGH CONNECTION (YGH) MUST BE COMBINED WITH A YGHA HEAVY DUTY EXTENSION (LUG) AND 2 NUTS OF ADEQUATE SIZE FOR THE EXTENSION.
39		GROUNDING PLATE PRE-DRILLED COPPER GROUNDING PLATE WITH ONE PAIRAL WIRE SIZING: 4/0AWG, PLATE SIZE: 610mm×610mm, THICKNESS: 6.35mm	PITTSBURG	CUPLATE610X610X6	
40	CP	CONNECTION – PIPE MECHANICAL GROUNDING CONNECTION CONDUCTOR TO PIPE. CABLE SIZE: 4/0AWG.	BURNDY	CAGRNGCBLU CAGR2N43U CAGR3N53U CAGR6N63U	1" TO 3" (33MM TO 52MM) PIPE 3"¼ TO 3"8 (83MM TO 85MM) PIPE 4" TO 5" (102MM TO 127MM) PIPE 6" (150MM) PIPE
41		CABLE BODY CONNECTOR CABLE BODY GROUNDING CLAMP. FOR CABLE SIZE: 4/0AWG.	ERICO A GRIPS	CRC4P	
42		BONDING JUMPER PREFABRICATED COPPER JUMPER, FOR EXPANSION JOINTS AND ADJACENT JOINTS.	ERICO A GRIPS	FBX13-1	
		COPPER GROUNDING CONDUCTOR 4/0 AWG, BARE, FLEXIBLE, STRANDED, 19 STRANDS (ASTM STANDARD B8 AND B33).	PHILLIPS CABLES		
	SHIELD	COPPER CONDUCTOR ELECTRICAL CHARACTERISTICS FOR FUTURE CONNECTIONS. THE LENGTH TO BE SIZED, IS SPECIFIED ON THE SCHEDULE.	PHILLIPS CABLES		

ELECTRICAL LEGEND

SENSORS AND INDICATORS

- FIXED SAFETY SWITCH
- TRANSFORMER
- SURFACE MOUNTED DISTRIBUTION PANEL, 120/208V
- SURFACE MOUNTED DISTRIBUTION PANEL, 347/600V
- SHIELD WIRE
- CABLE TRAY
- ELECTRIC HEATER
- 15A, 120V DUPLEX RECEPTACLE
- DOUBLE GFCI DUPLEX RECEPTACLE
- JUNCTION BOX

DETECTION & FIRE ALARM

- ADDRESSABLE SMOKE DETECTOR
- MANUAL FIRE PULL STATION
- FIRE ALARM HORN
- END OF LINE RESISTOR
- FAS — MAIN FIRE ALARM PANEL
- WALL MOUNTED HORN, FIRE ALARM AND HORN

ELECTRICAL EQUIPMENT

NO. EQUIP	SHALL EQUIPED	EQUIPE NAMED	MOUNTING	DESCRIPTION
[illegible]	[illegible]	[illegible]	SURF.	[illegible]
[illegible]	[illegible]	[illegible]	SURF.	[illegible]
[illegible]	[illegible]	[illegible]	SURF.	[illegible]
[illegible]	[illegible]	[illegible]	SURF.	[illegible]
[illegible]	[illegible]	[illegible]	SURF.	[illegible]
[illegible]	[illegible]	[illegible]	SURF.	[illegible]
[illegible]	[illegible]	[illegible]	SURF.	[illegible]
[illegible]	[illegible]	[illegible]	SURF.	[illegible]
[illegible]	[illegible]	[illegible]	SURF.	[illegible]
[illegible]	[illegible]	[illegible]	SURF.	[illegible]
[illegible]	[illegible]	[illegible]	SURF.	[illegible]
[illegible]	[illegible]	[illegible]	SURF.	[illegible]
[illegible]	[illegible]	[illegible]	SURF.	[illegible]

FIRE DETECTION EQUIPMENT

TYPE	MANUFACTURER	EQUIPE NAMED	MOUNTING	DESCRIPTION
FAS	[illegible]	[illegible]	SURF.	[illegible]
F	[illegible]	[illegible]	SURF.	[illegible]
[illegible]	[illegible]	[illegible]	[illegible]	[illegible]
[illegible]	[illegible]	[illegible]	SURF.	[illegible]
[illegible]	[illegible]	[illegible]	SURF.	[illegible]

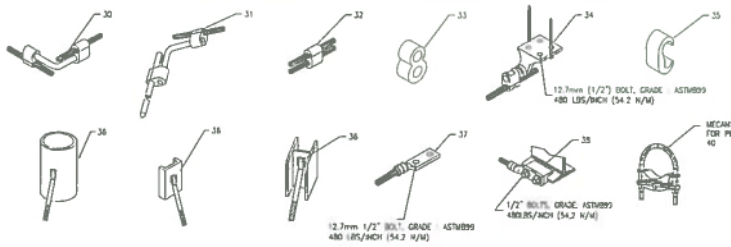

CONNECTOR TYPES – BURNDY

SO. NONE
(GRAY TYPES WHEN THE SYSTEM IS BURIED OR NOT

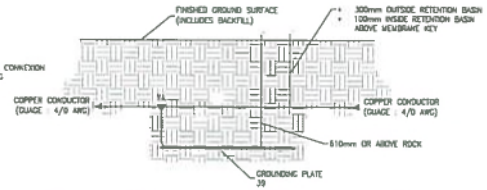

TYPICAL INSTALLATION – GROUNDING PLATE AND GROUNDING CONDUCTOR

NO. 139

POUR CONSTRUCTION
FOR CONSTRUCTION
DATE : 2017-07-11

WSP

NOTES GÉNÉRALES / GENERAL NOTES

DESSINS EN RÉFÉRENCE / REFERENCE DRAWINGS

AGNICO EAGLE

REVISIONS

AGNICO EAGLE – MEADOWBANK DIVISION
116 – FUEL TANK FARM
275 – POWER ELECTRICAL
LEGEND, TABLES & DETAILS

DESIGNED AND DRAWN BY	M-A. FALARDEAU, Jr. Eng.	2018-08-22
VERIFIED AND CHECKED BY	ROB MCHALEY, Tech.	2018-08-22
APPROVED AND APPROVED BY	LUC SÉNÉCAL, P.Eng.	2017-07-11
REVISED SCALE	INDICATED	2018-12-01
NO. DESIGN DRAWING NO.	65-116-275-200	
NO. PROJECT PROJECT NO.	6515	REVISION 0 / SHEET 1 / 1

FILE NO. R-116-05-00.dwg

65-116-275-201_R0

FORMAT ARCH D

POUR CONSTRUCTION
FOR CONSTRUCTION
DATE : 2017-07-11

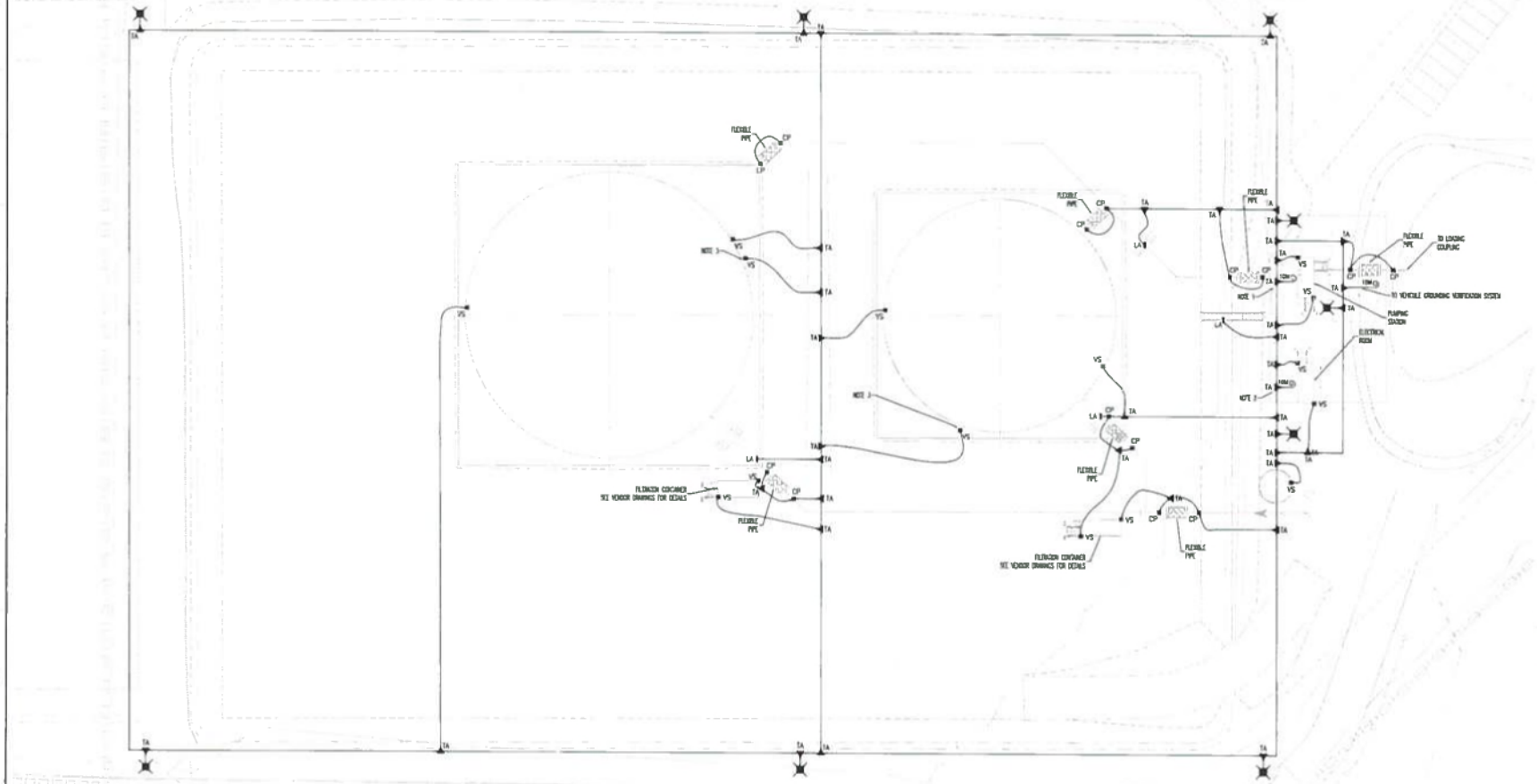
FLEXIBLE PIPE
CP
LP
VS
NOTE 3
TA
LA
FLEXIBLE PIPE
TO LOADING COUPLING
10M
TO VEHICLE GROUNDING VERIFICATION SYSTEM
PUMPING STATION
ELECTRICAL ROOM
FLEXIBLE PIPE
FLEXIBLE PIPE
FLEXIBLE PIPE

65-116-275-202_R0

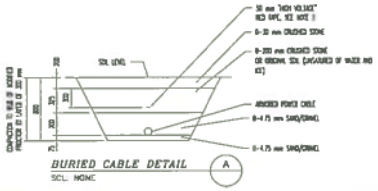

BURIED CABLE DETAIL A
SCL: NONE

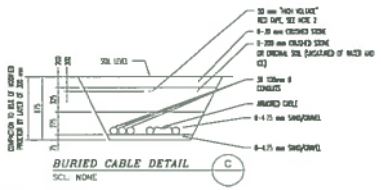

BURIED CABLE DETAIL C
SCL: NONE

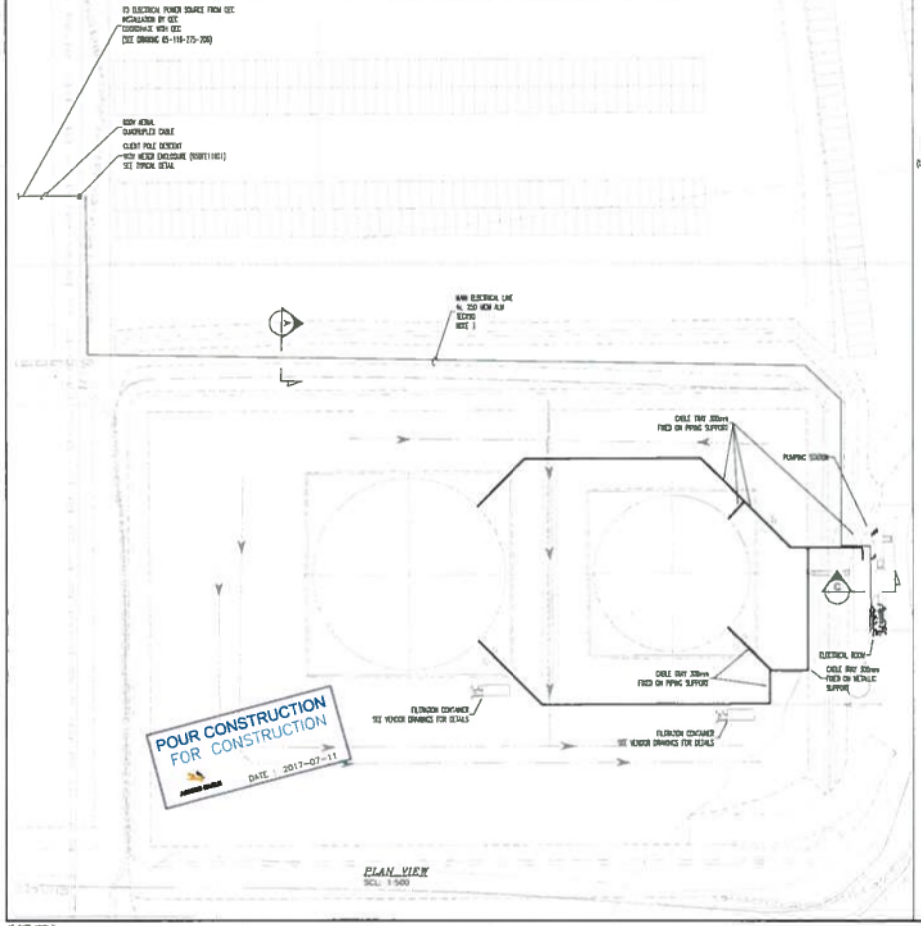

PLAN VIEW
SCL: 1:500



SECTION B
SCL: NONE

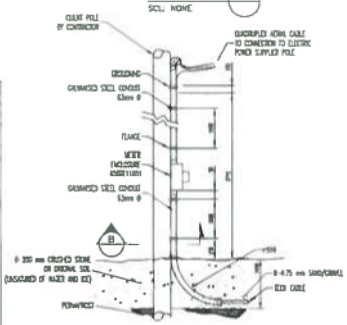

TYPICAL DETAIL – POLE DESCENT
SCL: NONE

PANEL No. : 66DPS11801

Tensions:	120_240 | Volts
Powered by:	TRANSFORMER 30kVA
Installation:	SURFACE
Location:	ELECTRICAL ROOM CONTAINER
Type:	MG44R_BC

Enclosure type:	NEMA 1
Main breaker:	-
No. of circuits:	42 (CCT)
Bars:	225 A
Ampacity:	10 kA

Local and description	CCT	VOLTS	TYPE	BREAKER AMPS	CCT	CCT	BREAKER AMPS	TYPE	VOLTS	CCT	Local and description
LIGHTING FIXTURE TANK #2	L 1	347		15	1	A	3	15		340	2	P OUTLET PUMPING STATION
L CONT CTRL FEEDER	L 1	347		15	3	B	4	15		120	1	P OUTLET ELECTRICAL ROOM
LIGHT / EMER LIGHT PUMP STATION	L 1	27		15	5	C	6	15		340	2	P O ELEC ROOM/IT AREA 102
LIGHT / EMER LIGHT ELEC ROOM	L 1	116		15	7	A	8	15		480	1	O CABINET 65PLC11801
L FILTRATION CONTAINER TANK #1	L 1	120		15	9	B	10	30		1000	1	65HEA11803
LIGHTING FIXTURE TANK #1	L 1	347		15	11	C	12			1000	1	SPARE
	L 1	347		15	13	A	14	15		208	2	MAST OF VALVES FEEDER
L TANKIN / TANK #2 GROUND FLOOR	L 1	120		15	15	B	16	15		208	1	O UTILITY CAB 65PLC11801
	L 1	120		15	17	C	18	15		120	1	O HEATH MAT
L OUT ELEC ROOM/OUT PUMP STA	L 1	347		15	19	A	20	15		120	1	O WEDER
	L 1	347		15	21	B	22	15				SPARE
L FILTRATION CONTAINER TANK #2	L 2	120		15	23	C	24	15				SPARE
65HEA11805 FILTRATION CONTAINER TANK #1	H 1	2500		30	25	A	26	15				SPARE
65HEA11806 FILTRATION CONTAINER TANK #1	H 1	2500		30	27	B	28	15				SPARE
65HEA11806 FILTRATION CONTAINER TANK #1	H 1	2500		30	29	C	30	15				SPARE
65HEA11807 FILTRATION CONTAINER TANK #2	H 1	2500		30	31	A	32	15				SPARE
65HEA11808 FILTRATION CONTAINER TANK #2	H 1	2500		30	33	B	34	15				SPARE
	H 1	2500		30	35	C	36	15				SPARE
	H 1	2500			37	A	38	15				SPARE
	H 1	2500			39	B	40	15				SPARE
	H 1	2500			41	C	42	15				SPARE

TYPE (REF.)	Total(W)/qty	
(L) Lighting	3440	15
(P) Outlet	960	4
(H) Heating	23000	10
(M) Motors	900	3
(W) Water heater	0	0
(O) Others	600	2

TYPE (REF.)	Qty (ref)
(S) Spare	6

	Watts	Amp
Phase A	7986	62.06
Phase B	9770	81.42
Phase C	9401	75.34
Total A	25157	74.24

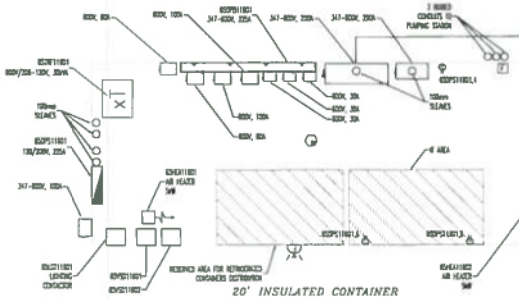

20' INSULATED CONTAINER
ELECTRICAL ROOM
SCL: 1:30

20' INSULATED CONTAINER
PUMPING STATION
SCL: 1:30



WSP

NOTES GENERALES / GENERAL NOTES

1. THE PUMPING STATION CONTAINER COMES PREWIRED WITH THOSE JONCTION BOXES. ELECTRICAL CONTRACTOR SHALL CONNECT THOSE JONCTION BOXES TO THE RIGHT SERVICES IN THE ELECTRICAL CONTAINER. ALL CABLES BETWEEN CONTAINERS SHALL BE TECK TYPE AND INSTALLED BURIED IN TRENCH. INSTALL 3X 100mm Ø CONDUITS FOR FUTURE CABLES.
2. THE RED TAPES SHALL BE INSTALLED ABOVE THE ELECTRICAL CABLES AND FOLLOW ALL THE BURIED PART OF THEM.
3. COORDINATE THE EXACT LOCATION AND DEPTH OF THE MAIN FEEDER CABLE.

* THE LOCATION OF PIPING IS APPROPRIATE AND SHALL BE COORDINATE WITH OTHER MECHANICAL DRAWINGS.

DESSINS EN REFERENCE / REFERENCE DRAWINGS

TITRE / TITLE	# DWG
DISPOSITION LIGNES, DETAILS AND SERVICES PANEL	65-102-275-202
LIGHTING	65-116-295-201
LEGENDS, TABLES & DETAILS	65-116-275-200
SHELL / UNIT DIVISIONS	65-116-275-203

AGNICO EAGLE

NO	DATE	DESCRIPTION	PAR/INIT APP.
0	2017-07-11	ISSUED FOR CONSTRUCTION	P.A.C. L.S.

REVISIONS

AGNICO EAGLE – MEADOWBANK DIVISION
116 – FUEL TANK FARM
275 – POWER ELECTRICAL
EQUIPMENT LAYOUT, DETAILS AND SERVICES PANEL
PLAN VIEW

DESIGNED PAR DESIGNÉ PAR	BRIAN FILDES, Tech.	2016-08-22
REVIEWED PAR VÉRIFIÉ PAR	RENE MENAULT, Tech.	2016-09-22
APPROVED PAR APPROUVÉ PAR	LUC SENECAL, P.Eng.	2017-07-11
SCALE ÉCHELLE	INDICATED	DATE 2016-01-25

NO. DESSIN DRAWING NO. 65-116-275-202

NO. PROJET PROJECT NO.	REVISION	FEUILLE / SHT
6515	0	1 / 1

AC-CAD1-ARCH D

\\Comm-Gis01\Projet__150-0259-01\151-00440-NP\53- RDH_DRAWZ\Dessin_Sand\65-116-275-202_R0.dwg - 2013-08-15 14:53:34

FILE NO. 65-116-275-202_R0.dwg

NO. DESSIN / DRAWING NO. 65-116-275-203_R1

FORMAT ANSI B-11x17

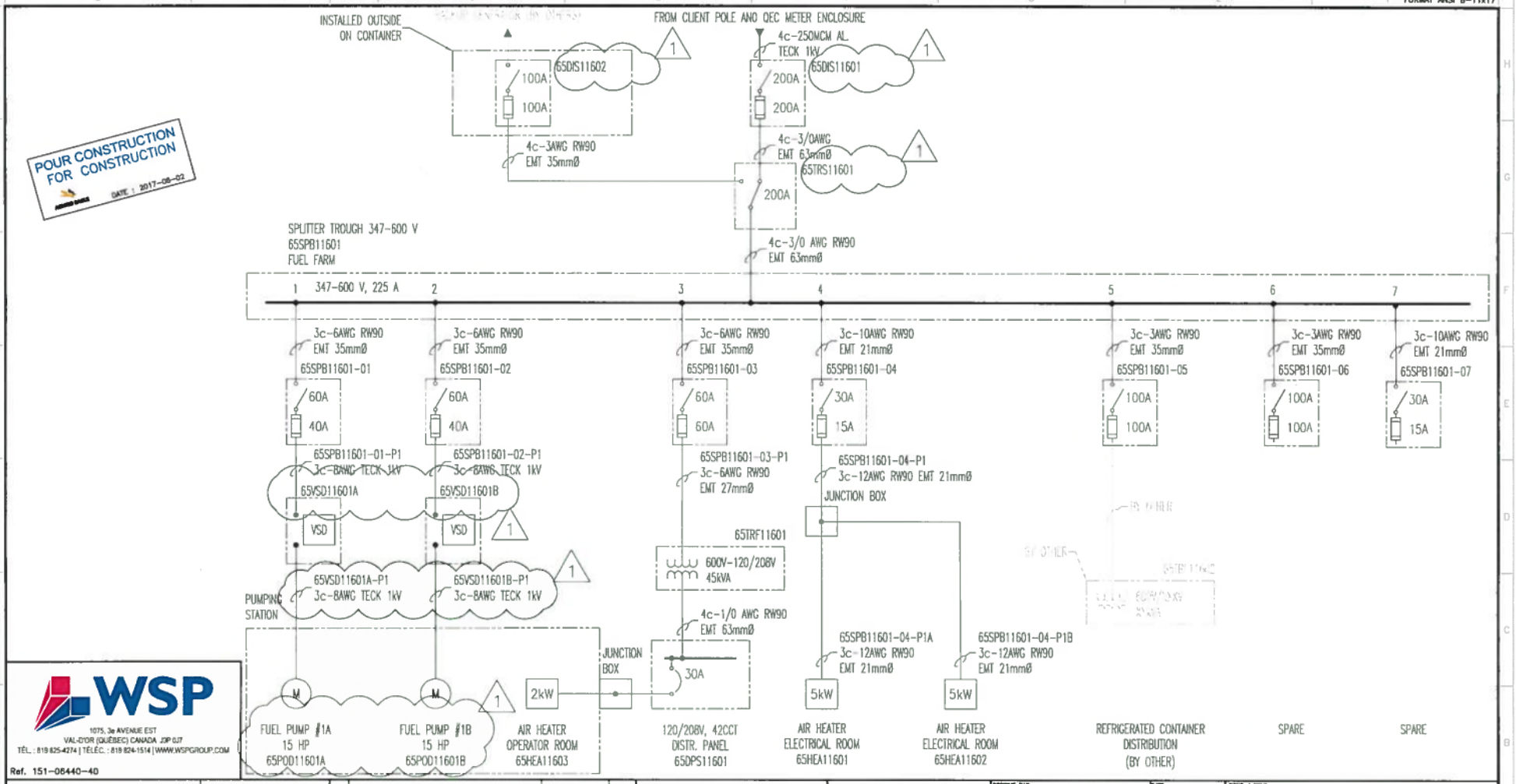

POUR CONSTRUCTION
FOR CONSTRUCTION
DATE : 2017-08-02

WSP
1075, 3e AVENUE EST
VAL-D'OR (QUÉBEC) CANADA J9P 0J7
TÉL. : 819 825-4274 | TÉLÉC. : 819 824-1514 | WWW.WSPGROUP.COM
Ref. 151-06440-40

TITRE / TITLE	# DWG	REV	DESCRIPTION	DATE	PAR BY
–	–				
–	–				
–	–				
–	–	1	ISSUED FOR CONSTRUCTION	2017-08-02	R.H.
600V DISTRIBUTION PANEL SINGLE LINE DIAGRAM	65-103-275-203	0	ISSUED FOR CONSTRUCTION	2017-07-11	F.M.G.

DESSINS EN RÉFÉRENCE / REFERENCE DRAWINGS — REVISIONS

AGNICO EAGLE

REGISTERED PROFESSIONAL ENGINEER L3514 B. POULIN DESSUREAULT LICENSEE NT/NU 2017-08-03

DESSINÉ PAR / DRAWN BY	BRIAN FILDES, Tech.	DATE 2016-06-22
VÉRIFIÉ PAR / CHECKED BY	RÉMI HÉNAULT, Tech.	2016-06-22
APPROUVÉ PAR / APPROVED BY	LUC SÉNÉCAL, P.Eng.	2017-07-11
No. PROJET / PROJECT NO.	6515	
DATE	2015-02-15	

TITRE / TITLE: AGNICO EAGLE – MELIADINE DIVISION
116 – FUEL TANK FARM
275 – POWER ELECTRICAL
600V DISTRIBUTION PANEL
SINGLE LINE DIAGRAM

ÉCHELLE/SCALE: NONE — FICHIER FILE: 65-116-275-203_R1.DWG

No. DESSIN/DRAWING NO.: 65-116-275-203 — REVISION: 1 — FEUILLE/SHT: 1 / 1

AE-CART-ANSI B

\\CaVda1Dat01\Projet_15X-XXXX-XX\151-06440-40\01-COMM\Envoyé_AEM\WSP-AEM-151-06440-40-649 (116 and 416 changing equipment number)\65-116-275-203_R1.dwg-2017-08-03 10:21:21

65-116-275-204_R0

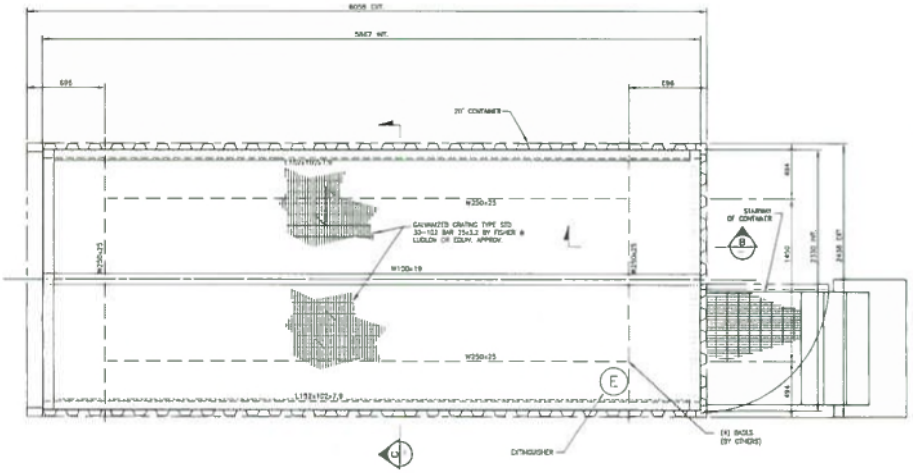

20' CONTAINER
ELECTRICAL ROOM FLOOR (1)
SCL: 1:20

- 20' STANDARD CONTAINER (W300 FLOOR REPLACED BY STEEL BY SUPPLIER)
- GRATING IS BOLTED (WELDING IS NOT PERMITTED)
- LEVELLING SHIMS MUST BE INSTALLED ON L152x102X7.9
- GRATING SECTION 300mm LARGE (INSTALLED ON CIRCULATION AREA)
- CONTAINER FLOOR MUST HAVE A SLIGHT SLOPE TOWARDS ACCESS DOORS

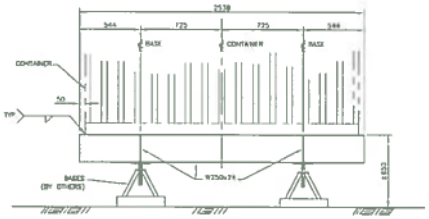

ELEVATION (A)
SCL: 1:20
(1) ARRANGEMENT ELECTRICAL ROOM

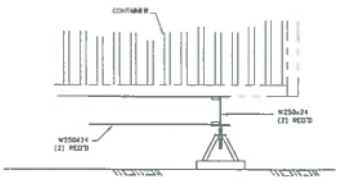

ELEVATION (B)
SCL: 1:20
(1) ARRANGEMENT ELECTRICAL ROOM

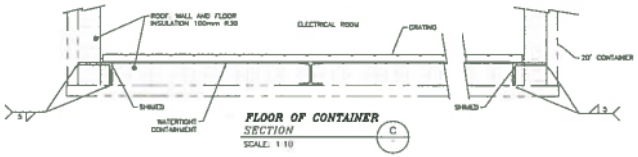

FLOOR OF CONTAINER
SECTION (C)
SCALE: 1:10

POUR CONSTRUCTION
FOR CONSTRUCTION
DATE: 2017-07-11



WSP
1615 3e AVENUE EST
VAL-D'OR (QUEBEC) CANADA J9P 6L7
TEL.: 819 825-4214 | TELEC.: 819 824-1514 | WWW.WSPGROUP.COM

NOTES GENERALES / GENERAL NOTES

DESSINS EN REFERENCE / REFERENCE DRAWINGS

TITRE / TITLE	# DWG
MODIFICATIONS & ADDITIONS AT THE CONTAINERS	65-116-275-204
LIGHTING	65-116-205-201
GROUNDING LAYOUT	65-116-275-201
EQUIPMENT LAYOUT	65-116-275-202

AGNICO EAGLE

REV.	DATE	DESCRIPTION	PROJECT	APP.	CLIENT
0	2017-07-11	ISSUED FOR CONSTRUCTION	F.A.L.	L.S.	

REVISIONS

DATE / TITLE
AGNICO EAGLE – MELIADINE DIVISION
116 – FUEL TANK FARM
275 – POWER ELECTRICAL
ELECTRICAL ROOM
MODIFICATIONS & ADDITIONS AT THE CONTAINERS

DESSINE PAR / DRAWN BY	RÉMI HÉNAULT, Tech.	DATE 2016-06-22
VÉRIFIÉ PAR / CHECKED BY	RÉMI HÉNAULT, Tech.	2016-06-22
APPROUVÉ PAR / APPROVED BY	LUC SENECAL, P.Eng.	2017-07-11
ÉCHELLE / SCALE	INDICATED	DATE 2016-02-02
NO. DESSIN / DRAWING NO.	65-116-275-204	
NO. PROJET / PROJECT NO.	6515	REVISION 0 / FEUILLE / SHT 1/1

FILE NO. 65-116-275-204_R0.dwg

65-116-275-206_R0

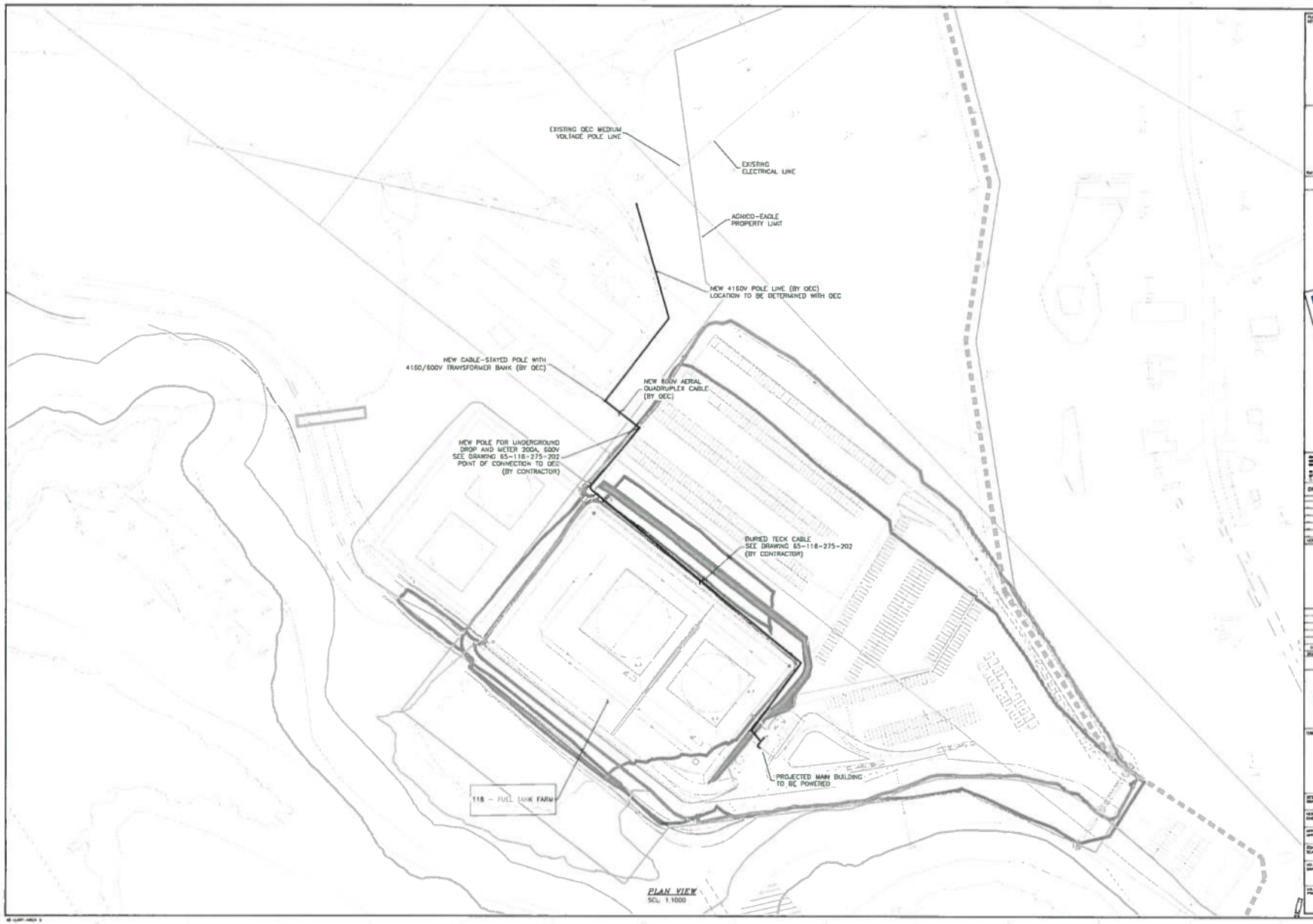

PLAN VIEW
SCL: 1:1000

WSP

NOTES GENERALES / GENERAL NOTES

POUR CONSTRUCTION
FOR CONSTRUCTION
DATE : 2017-07-11

DESSINS EN RÉFÉRENCE / REFERENCE DRAWINGS

AGNICO EAGLE

REVISIONS

AGNICO EAGLE - MELIADINE DIVISION
116 - FUEL TANK FARM
275 - POWER ELECTRICAL
AERIAL LINE CONNECTION
PLAN VIEW

DESSINÉ PAR / DRAWN BY	BRIAN FILDES, Tech.	DATE 2016-08-11
VÉRIFIÉ PAR / CHECKED BY	JONATHAN CLOUTIER, P.Eng.	2016-08-11
APPROUVÉ PAR / APPROVED BY	LUC SENECAL, P.Eng.	2017-07-11
ÉCHELLE / SCALE	INDICATED	DATE 2016-08-09

65-116-275-206

6515 | 0 | 1/1

FILE NO. 65-116-275-206_R0.dwg

65-116-285-200_R0

FORMAT ARCH D

ELECTRICAL LEGEND (DRV. 16)

LIGHTING FIXTURES

- CEILING MOUNTED LUMINAIRE OR IN CANOPY
- WALL MOUNTED LUMINAIRE
- EMERGENCY BUTTON MIN 1 HOURS LOAD
- POLE (P) — (S) MARKED TYPE FOR LIGHTING SCHEDULE; (N) MARKED ELECTRICAL PANEL; c MARKED CIRCUIT NUMBER; a MARKED MOUNTING HEIGHT
- (SP) PHOTOCELL

LIGHTING CONTROL

- SW — SINGLE POLE, DOUBLE THROW
- 3W — 3 WAY MARKED PUSHBUTTON CONTROLLED
- 4W — 4 WAY MARKED 3 WIRE -NW SWITCH
- 4W — 4 WAY MARKED 4 FOUR -WW SWITCH
- (SP) PHOTOCELL

LUMINAIRES

TYPE	MANUFACTURER	CATALOGUE NUMBER	VOLTAGE TYPE	VOLTAGE	LAMP POWER (W)	LAMP	COLOR	VOLTAGE	DESCRIPTION
L1	DIALIGHT	429161X A 429161	120/1P	120	87	LED	5000°K	120	DIALIGHT 429161X MEA LENS C/W ACCESSORIES
L2	LUMACELL	RGS 30W 2 LFI	120/1P	120/277	120	LED	5000°K	120	EMERGENCY BUDGET UNITS COMBINE WITH 2 HOURS LOADS
(SP)	PRECISION HID CONTROLS	TP-1700P	120/1P	347	n.c.s.	-	-	-	ALARMING PHOTOELECTRIC CELL

SWP = SWITCHED — FLUO = FLUORESCENT — HID = HOOKED BY FLUO
REC = RECESSED — LED = LOW ENERGY DIODE — WALL = WORKS REQ BE CHECK ON SITE

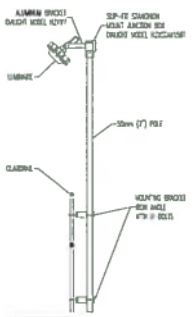

TYPICAL LUMINAIRE INSTALLATION
MOUNTED ON GUARDRAIL
SCL. NONE

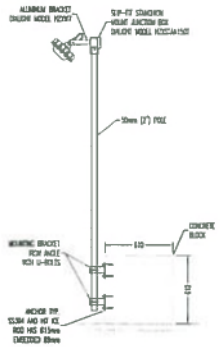

TYPICAL LUMINAIRE INSTALLATION
MOUNTED ON CONCRETE SUPPORT
SCL. NONE

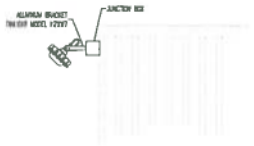

TYPICAL LUMINAIRE INSTALLATION
MOUNTED ON CONTAINER
SCL. NONE

NOTES GENERALES / GENERAL NOTES

POUR CONSTRUCTION
FOR CONSTRUCTION
DATE 2017-07-11

DESSINS DE RÉFÉRENCE / REFERENCE DRAWINGS

TYPE / FILE	# DWG
	-
	-
	-
	-

AGNICO EAGLE

REVISIONS			
0	2017-07-11	ISSUED FOR CONSTRUCTION	F.G.G. L.S.
REV.	DATE	DESCRIPTION	PREPARED APPROVED

TITRE / TITLE
AGNICO EAGLE – MEADOWBANK DIVISION
116 – FUEL TANK FARM
285 – LIGHTING & SERVICES
LIGHTING
LEGEND, TABLE & INSTALLATION DETAILS

DESSINÉ PAR / DRAWN BY	BRIAN FILDES, Tech.	2016-06-22
VÉRIFIÉ PAR / CHECKED BY	REMI MENAULT, Tech.	2016-06-22
APPROUVÉ PAR / APPROVED BY	LUC SENECAL, P.Eng.	2017-07-11
ÉCHELLE / SCALE	INDICATED	DATE 2015-12-01

NO. DESSIN / DRAWING NO. 65-116-285-200

NO. PROJET / PROJECT NO.	REVISION	FEUILLE / SHT
6515	0	1 / 1

FILE NO. 65-116-285-200_R0.dwg

65-116-285-201_R0



20' INSULATED CONTAINER – ELECTRICAL ROOM
SCL. 1:50

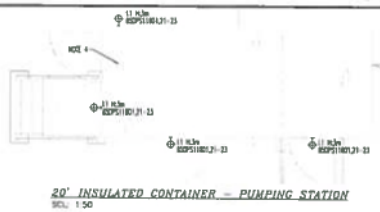

20' INSULATED CONTAINER – PUMPING STATION
SCL. 1:50

POUR CONSTRUCTION
FOR CONSTRUCTION
DATE : 2017-07-11

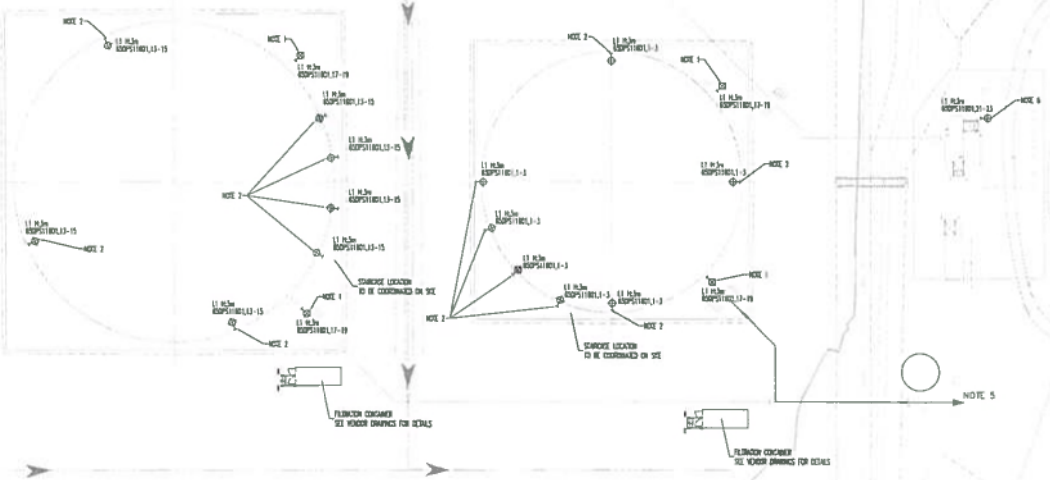

PLAN VIEW
SCL. 1:300



WSP

NOTES GENERALES / GENERAL NOTES

1. INSTALL THIS LUMINAIRE NEAR VALVES AND INSTALL THE LUMINAIRE'S POLE ON CONCRETE SUPPORT. REFER TO TYPICAL INSTALLATION ON PLAN 65-118-285-200.
2. INSTALL THE LUMINAIRE'S POLE ON THE GUARDRAIL. REFER TO TYPICAL INSTALLATION ON PLAN 65-118-285-200.
3. CONNECT THIS PHOTOELECTRIC CELL TO THE LIGHTING CONTACTOR IN ELECTRICAL ROOM. THIS LIGHTING CONTACTOR WILL CONTROL ALL OF THE LIGHTING SHOWN ON THIS DRAWING.
4. THE PUMPING STATION CONTAINER COMES PREWIRED WITH INDOOR LIGHTING AND SERVICES PREINSTALLED. SEE NOTE 1 ON PLAN 65-118-275-202.
5. INSTALL LIGHTING FIXTURE AT THE SUPPLY LINE TERMINAL 3C12AWG TECK TO LIGHTING FIXTURE, L1 TYPE ON POLE (SEE TYPICAL INSTALLATION) AT THE SUPPLY LINE TERMINAL, CIRCUIT : 65DPS11801_3
6. INSTALL LUMINAIRE ON CONCRETE CLOSE TO THE LOADING ARM (50 LUX IS REQUIRED AT THE CONNECTION POINT).

DESSINS DE REFERENCE / REFERENCE DRAWINGS

TITRE / TITLE	# DWG
LIGHTING PLAN VIEW	65-116-285-201
LEGEND, TABLE & INSTALLATION DETAILS	65-118-285-202
EQUIPMENT LAYOUT, DETAILS AND PANEL	65-116-275-202

AGNICO EAGLE

#	DATE	DESCRIPTION	PAR	APP
0	2017-07-11	ISSUED FOR CONSTRUCTION	A.G.	L.S.

REVISIONS

TITRE / TITLE
AGNICO EAGLE – MEADOWBANK DIVISION
116 – FUEL TANK FARM
285 – LIGHTING & SERVICES
LIGHTING
PLAN VIEW

DESSINE PAR / DRAWN BY	BRYAN FILDES, Tech.	2018-06-22
VERIFIE PAR / CHECKED BY	PETER HENAULT, Tech.	2018-06-22
APPROUVE PAR / APPROVED BY	LUC SENECAL, P.Eng.	2017-07-11
ECHELLE / SCALE	INDICATED	DATE 2018-02-11
NO. DESSIN / DRAWING NO.	65-116-285-201	
NO. PROJET / PROJECT NO.	6515	REVISION 0
FEUILLE / SHT	1 / 1	

FILE NO. 65-116-285-201.dwg

65-ULT-116-EL-002

FORMAT ARCH D

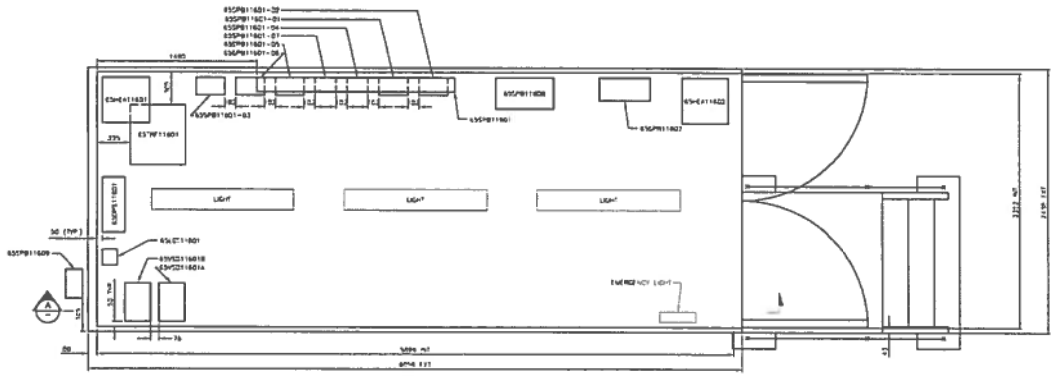

PLAN VIEW (1)
SCALE: 1:20
RANKIN INLET ELECTRICAL ROOM
ELECTRICAL EQUIPMENT LAYOUT

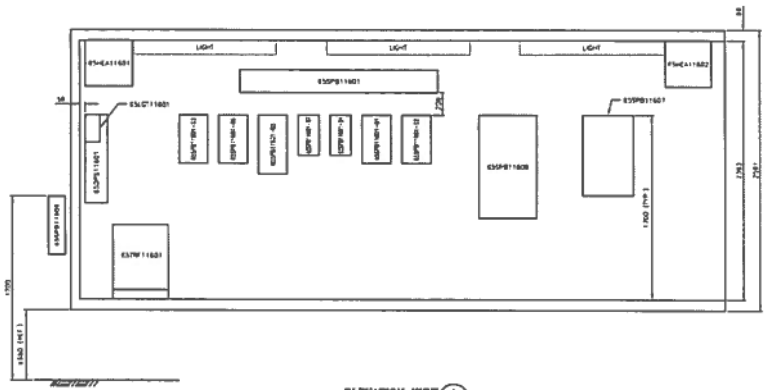

ELEVATION VIEW (A)
SCALE: 1:20
RANKIN INLET ELECTRICAL ROOM
ELECTRICAL EQUIPMENT LAYOUT

PERMIT TO PRACTICE
LE GROUPE ULTRAGEN LTÉE
Signature
Date SEP 2 1 2017
PERMIT NUMBER: P 1180
NT/NU Association of Professional Engineers and Geoscientists

REGISTERED PROFESSIONAL ENGINEER
13677
D CARRIER
LICENSEE
NT/NU
SEP 2 1 2017

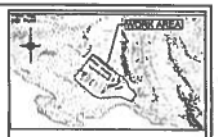

NOTES GENERALES / GENERAL NOTES

1. HEATER UNITS ARE CEILING MOUNTED.
2. FOR EQUIPMENT IDENTIFICATION REFER TO THE MATERIAL LIST.

ISSUED FOR CONSTRUCTION

DESSINS DE RÉFÉRENCE / REFERENCE DRAWINGS

TITRE / TITLE	# DWG
LIGHTING AND HEATING LAYOUT 65-116	65-ULT-116-EL-003
GROUNDING LAYOUT 65-116	65-ULT-116-EL-004
FLOOR OPENING 65-116	65-ULT-116-EL-005
MATERIAL LIST	ULT-65116-EL-EL-001

AGNICO EAGLE

NO.	DATE	DESCRIPTION	DES.	APP.
3	2017-09-20	ISSUED FOR CONSTRUCTION	S.B.	S.G.
2	2017-09-04	UPDATE AFTER 1st REVIEW	N.T.	S.G.
1	2017-08-04	ISSUED FOR CONSTRUCTION	S.B.	S.G.
A2	2017-06-16	ISSUED FOR REVIEW	S.B.	S.G.
A1	2017-05-12	ISSUED FOR REVIEW	N.T.	S.G.
NO.	DATE	DESCRIPTION	DES.	APP.

REVISIONS

Ultragen

NO. PROJET / PROJECT NO. 591700

TITRE / TITLE
AGNICO EAGLE – MEADOWBANK DIVISION
116 – FUEL TANK FARM
FUEL DISTRIBUTION
RANKIN INLET ELECTRICAL ROOM
ELECTRICAL EQUIPMENT LAYOUT

DESSINÉ PAR / DRAWN BY	ROSA SHIKEMA	2017-05-04
VÉRIFIÉ PAR / CHECKED BY	MARC TREMBLAY	2017-05-04
APPROUVÉ PAR / APPROVED BY	DANIEL CARRIER	2017-05-04
ÉCHELLE / SCALE	1:20	DATE 2017-05-04

NO. DESSIN / DRAWING NO. 65-ULT-116-EL-002

NO. PROJET / PROJECT NO. 6515 | FEUILLE / SHEET 2 | DE / OF 1

FILE NO.

65-ULT-116-EL-003

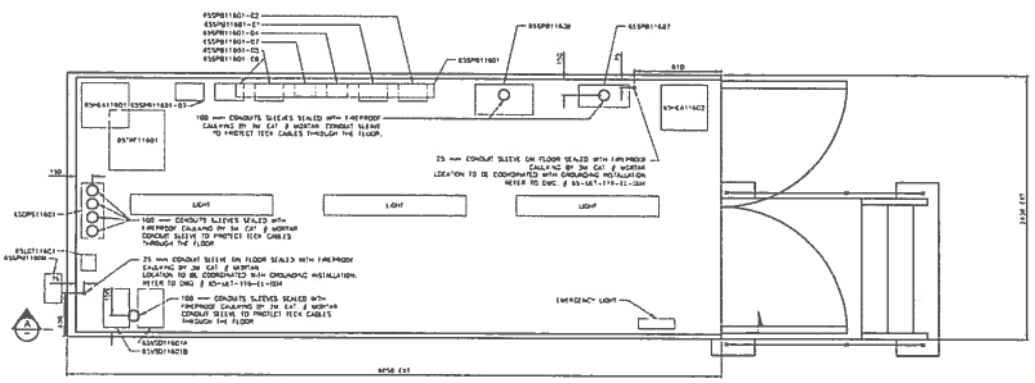

PLAN VIEW 1
SCALE: 1:20
RANGIN INLET ELECTRICAL ROOM
FLOOR OPENING

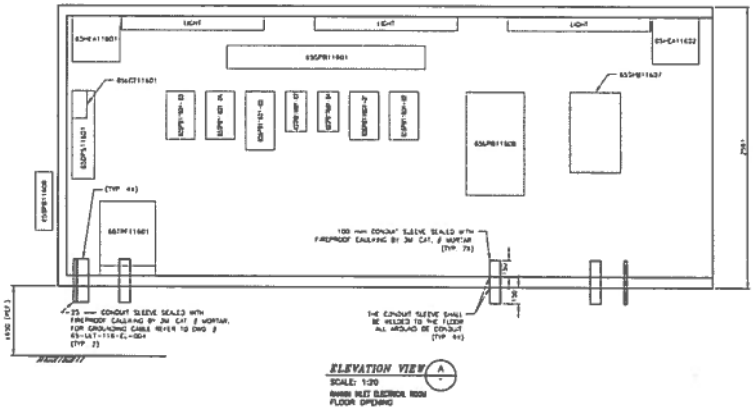

ELEVATION VIEW A
SCALE: 1:20
RANGIN INLET ELECTRICAL ROOM
FLOOR OPENING

PERMIT TO PRACTICE
LE GROUPE ULTRAGEN LTÉE
Signature
Date SEP 21 2017
PERMIT NUMBER: P 1180
NT/NU Association of Professional Engineers and Geoscientists

REGISTERED PROFESSIONAL ENGINEER
13677
D. CARRIER
LICENSEE
SEP 21 2017



NOTES GENERALES / GENERAL NOTES

1. USE TIP AT EACH ENDS OF THE CONDUITS SLEEVES.

ISSUED FOR CONSTRUCTION
Ultragen DATE: SEPT 2017

DESSINS EN REFERENCE / REFERENCE DRAWINGS

AGNICO EAGLE

REVISIONS

Ultragen

AGNICO EAGLE – MELIADINE DIVISION
116 – FUEL TANK FARM
FUEL DISTRIBUTION
RANGIN INLET ELECTRICAL ROOM
FLOOR OPENINGS

65-ULT-116-EL-003

6515 | 2 | 1/1

65-ULT-116-EL-004

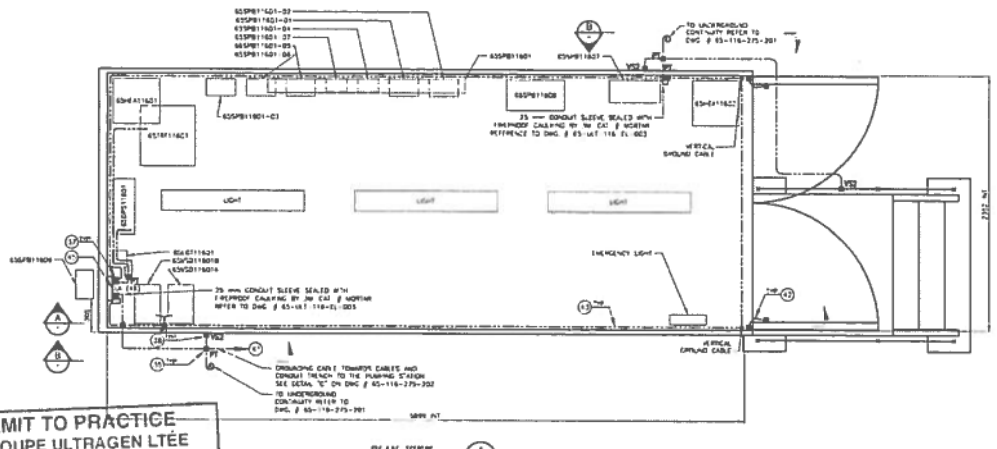

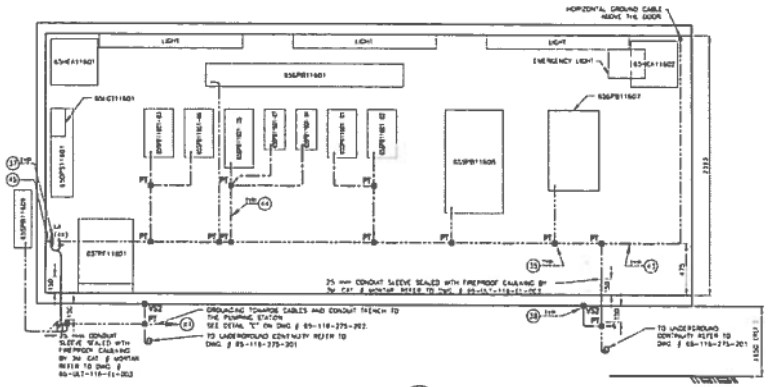

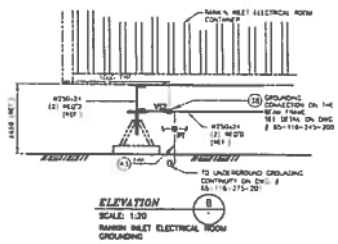

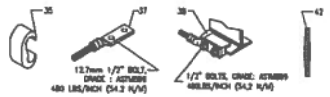

PERMIT TO PRACTICE
LE GROUPE ULTRAGEN LTÉE
Signature
Date SEP 2 1 2017
PERMIT NUMBER: P 1180
NT/NU Association of Professional Engineers and Geoscientists

EQUIPMENT LIST

ITEM NUMBER	SYMBOL	DESCRIPTION	MANUF.	TYPE	NOTE
35	PT	CONNECTION - PARALLEL HORIZONTAL CONDUCTORS COMPRESSED CONNECTOR FOR TWO PARALLEL HORIZONTAL CONDUCTORS. CABLE SIZE: 2/0AWG, TAP CABLE SIZE: 2/0AWG CABLE SIZE: 4/0AWG, TAP CABLE SIZE: 2/0AWG CABLE SIZE: 4/0AWG, TAP CABLE SIZE: 4/0AWG	BURNDY	YGHC26C26 YGHC26C28 YGHC29C29	
37	LA	CONNECTION - HEAVY DUTY TERMINALS HEAVY DUTY TERMINALS DESIGNED TO CARRY SHORT CIRCUIT LOAD AND WITHSTAND HIGH MECHANICAL STRESS. CABLE SIZE: 2/0AWG CABLE SIZE: 4/0 AWG COMPLETE WITH NON-CORROSIVE HARDWARE SUCH AS: BOLT, FLAT WASHER, LOCKWASHERS, NUTS AND INHIBITING COMPOUNDS TO PREVENT OXIDATION OR CORROSION.	BURNDY	YCHA26-2N YCHA28-2N	
39	VS2	CONNECTION - STRUCTURE CONNECTION USED FOR VERTICAL STEEL SURFACE (STRUCTURAL BEAMS) CABLE SIZE 4/0AWG ON CONTAINER BEAM FRAME. CABLE SIZE 4/0AWG ON CHANNEL OF CATWALK. COMPLETE WITH HARDWARE	BURNDY	YGBW28-336-2N YGBS28-400-2N TUHC-42	EVERY BURNDY YGB CONNECTOR (VS2) MUST BE COMBINED WITH A YCHA HEAVY DUTY TERMINAL (LA) AND 2 NUTS OF ADEQUATE SIZE FOR THE TERMINAL.
42		BONDING JUMPER PREFABRICATED COPPER JUMPER, FOR EXPANSION JOINTS AND ADJUSTABLE JOINTS 1 BRAIDS AND 2 BOLTS HOLD BY CONNECTION.	THOMAS & BETTS	FBE12-1	
43		COPPER GROUNDING CONDUCTOR 4/0 AWG, BARE, FLEXIBLE, TINNED, 19 STRANDS (ASTM STANDARDS B8 AND B33).	PHILLIPS CABLES		
44		COPPER GROUNDING CONDUCTOR 2/0 AWG, BARE, FLEXIBLE, TINNED, 19 STRANDS (ASTM STANDARDS B8 AND B33).	PHILLIPS CABLES		
45		COPPER BUS BAR BUS BAR 254(10") X 102(4") X 6(0.25") BRACKETS AND ISOLATORS INCLUDED	BURNDY	BBB-14410C	
		COPPER CONDUCTOR IDENTICAL CHARACTERISTICS FOR FUTURE CONNECTIONS. THE LENGTH TO RESERVE IS SPECIFIED ON THE SYMBOL.	PHILLIPS CABLES		

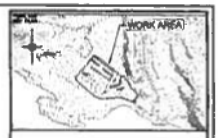

NOTES GENERALES / GENERAL NOTES

REGISTERED PROFESSIONAL ENGINEER
13627
D. CARRIER
LICENSEE
NT/NU
SEP 21 2017

ISSUED FOR CONSTRUCTION
ultragen DATE: SEPT 2017

DESSINS DE RÉFÉRENCE / REFERENCE DRAWINGS

DWG / DESSIN	TITLE
65-116-275-004	
65-116-275-202	
65-116-275-203	
65-116-275-201	
65-116-275-205	

AGNICO EAGLE

NO	DATE	DESCRIPTION	BY	CHK
1	2017-08-04	ISSUED FOR CONSTRUCTION	S.S.	S.S.
2	2017-08-04	ISSUED FOR CONSTRUCTION	S.S.	S.S.
3	2017-08-04	ISSUED FOR CONSTRUCTION	S.S.	S.S.
4	2017-08-04	ISSUED FOR CONSTRUCTION	S.S.	S.S.
5	2017-08-04	ISSUED FOR CONSTRUCTION	S.S.	S.S.
6	2017-08-04	ISSUED FOR CONSTRUCTION	S.S.	S.S.
7	2017-08-04	ISSUED FOR CONSTRUCTION	S.S.	S.S.

REVISIONS

ultragen
5817700

AGNICO EAGLE – MEADOWBANK DIVISION
116 – FUEL TANK FARM
FUEL DISTRIBUTION
RANKIN INLET ELECTRICAL ROOM
GROUNDING

DESIGNED BY	NISHI SHRESTHA	2017-08-04
DRAWN BY	STEPHANIE DENNARD	2017-08-04
APPROVED BY	DANIEL CARRIER	2017-08-04
ORIGINAL SCALE	1:20	DATE 2017-09-04

65-ULT-116-EL-004

8515 | 2 | 1/1

65-ULT-116-EL-005

FORMAT ARCH D

MATERIAL LIST					
TYP.	MANUFACTURER	CATALOGUE NUMBER	WIRE SIZE (AWG)	VOLTAGE	DESCRIPTION
F1	[illegible]	[illegible]	6	120	[illegible]
⊕	[illegible]	[illegible]	10	120	[illegible]
⊕	[illegible]	[illegible]	3	120	[illegible]
$	[illegible]	[illegible]	-	120	[illegible]

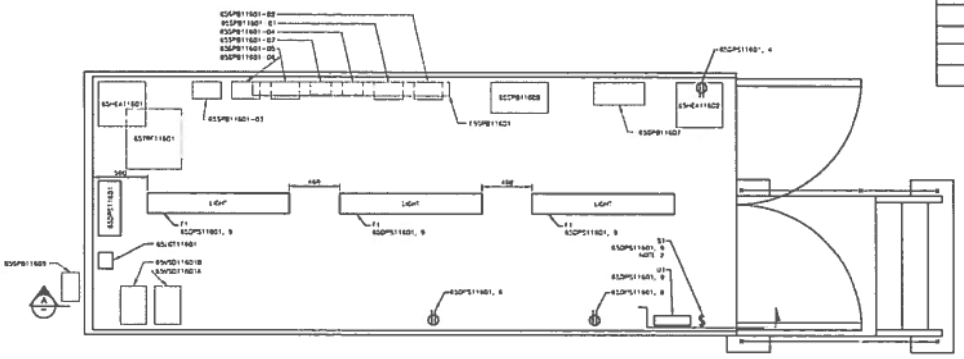

PLAN VIEW (1)
SCALE: 1:30
RANKIN INLET ELECTRICAL ROOM
LIGHTING AND SERVICES

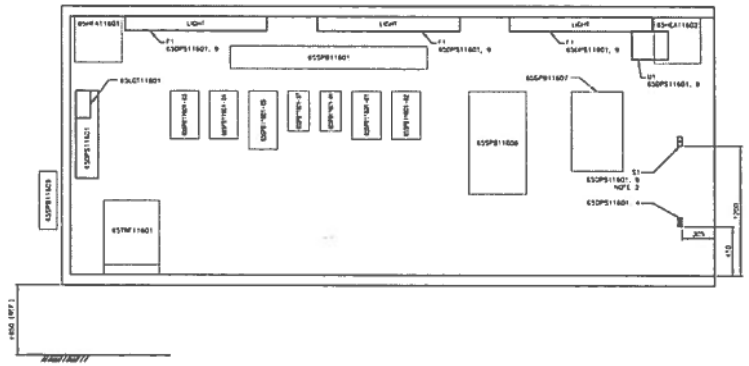

ELEVATION VIEW (A)
SCALE: 1:30
RANKIN INLET ELECTRICAL ROOM
LIGHTING AND SERVICES

PERMIT TO PRACTICE
LE GROUPE ULTRAGEN LTÉE
Signature _____
Date SEP 2 1 2017
PERMIT NUMBER: P 1180
NT/NU Association of Professional Engineers and Geoscientists

REGISTERED PROFESSIONAL ENGINEER
L3627
D. CARRIER
DISCIPLINE
NT/NU
SEP 21 2017



NOTES GENERALES / GENERAL NOTES

1. FOR OUTDOOR LIGHTING AND PHOTOCELL REFER TO WSP DRAWING 065-116-250-201.
2. SWITCH FOR LIGHTING TYPE F1.

ISSUED FOR CONSTRUCTION

DESSINS DE RÉFÉRENCE / REFERENCE DRAWINGS

Issue 2 Rev.	Date	Dwg. No.
65SPS11601 PANEL SCHEDULE	2017-08-04	65-ULT-116-EL-002
ELECTRICAL EQUIPMENT LAYOUT	2017-08-04	65-ULT-116-EL-003
GROUNDING PLAN	2017-08-04	065-ULT-116-EL-004

AGNICO EAGLE

No.	Date	Description	By	Chk'd
2	2017-08-04	ISSUED FOR CONSTRUCTION	S.G.	D.A.
1	2017-07-21	ISSUED FOR REVIEW & THE RANGE	S.G.	D.A.
A	2017-07-07	ISSUED FOR CONSTRUCTION	S.G.	D.A.
P3	2017-06-21	ISSUED FOR REVIEW	S.G.	D.A.
P2	2017-06-16	ISSUED FOR REVIEW	S.G.	D.A.
P1	2017-06-09	ISSUED FOR REVIEW	S.G.	D.A.

REVISIONS

PROFESSIONAL ENGINEER
ENGINEERING FIRM PERMIT
Ultragen
NO. PROJET / PROJECT NO. 091700

AGNICO EAGLE – MEADOWE DIVISION
116 – FUEL TANK FARM
FUEL DISTRIBUTION
RANKIN INLET ELECTRICAL ROOM
LIGHTING AND SERVICES

DESSINÉ PAR / DRAWN BY	MARC TREMBLAY	2017-08-04
VÉRIFIÉ PAR / CHECKED BY	STEPHANE GIRARD	2017-08-04
APPROUVÉ PAR / APPROVED BY	DANIEL CHARRON	2017-08-04
ÉCHELLE / SCALE	1:30	DATE 2017-08-04

NO. DESSIN / DRAWING NO. 65-ULT-116-EL-005

NO. PROJET / PROJECT NO.	ORIGINAL	FEUILLE / SHT
6515	2	1/1

FILE NO.

65-ULT-116-EL-007

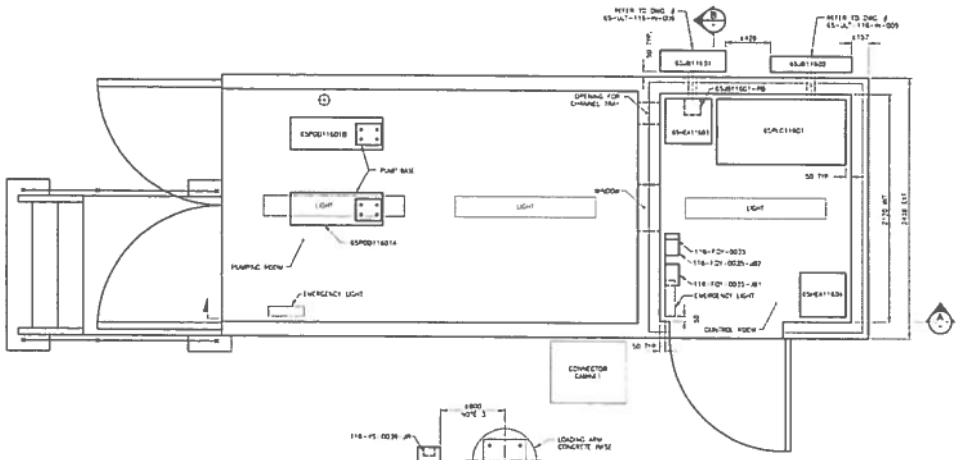

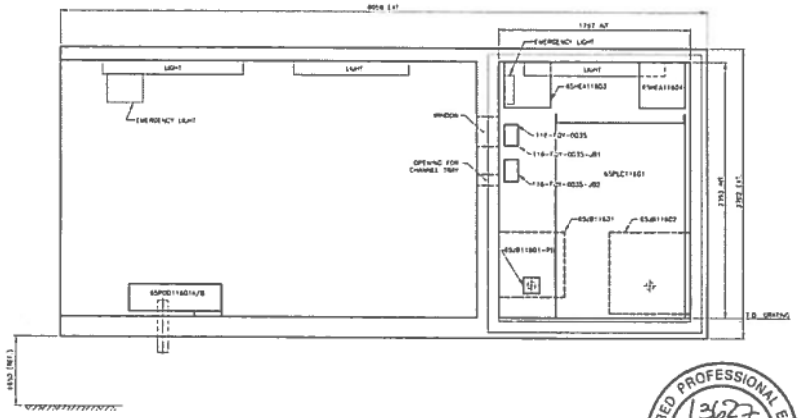

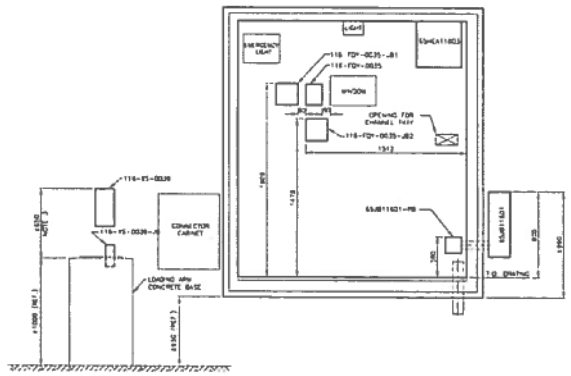

PERMIT TO PRACTICE
LE GROUPE ULTRAGEN LTÉE
Signature
Date AUG 18 2017
PERMIT NUMBER: P 1180
NT/NU Association of Professional Engineers and Geoscientists

REGISTERED PROFESSIONAL ENGINEER
L3627
D. CARRIER
LICENSEE
NT/NU
AUG 18 2017



NOTES GENERALES / GENERAL NOTES

1. HEATER UNITS ARE CEILING MOUNTED.
2. FOR EQUIPMENT IDENTIFICATION REFER TO THE MATERIAL LIST.
3. SUPPORT FOR "SCULLY" UNIT AND ITS JUNCTION BOX WITH PROFILE AT THE LOADING ARM CONCRETE BASE, TO BE "CANSTRUT" TYPE. COORDINATE THE POSITION TO AVOID INTERFERENCE WITH THE LOADING ARM MOVEMENT.

UPDATE AREA & TAG NUMBER
Ultragen

DESSINS EN REFERENCE / REFERENCE DRAWINGS

AGNICO EAGLE

REVISIONS

Ultragen

591700

AGNICO EAGLE – MELIADINE DIVISION
116 – COMBUSTIBLES
FUEL DISTRIBUTION
RANGIN INLET PUMPING STATION
ELECTRICAL EQUIPMENT LAYOUT

DESIGN AND DRAWN BY	RICHI SHRESTHA	2017-05-15
VERIFIED AND CHECKED BY	STÉPHANE GRIMARD	2017-05-15
APPROVED AND APPROVED BY	DANIEL CARRIER	2017-05-15
SCALE	1:20	2017-05-15

65-ULT-116-EL-007

6515	2	1/1

65-ULT-116-EL-007

PERMIT TO PRACTICE
LE GROUPE ULTRAGEN LTÉE
Signature
Date SEP 7 1 2017
PERMIT NUMBER: P 1180
NT/NU Association of Professional Engineers and Geoscientists

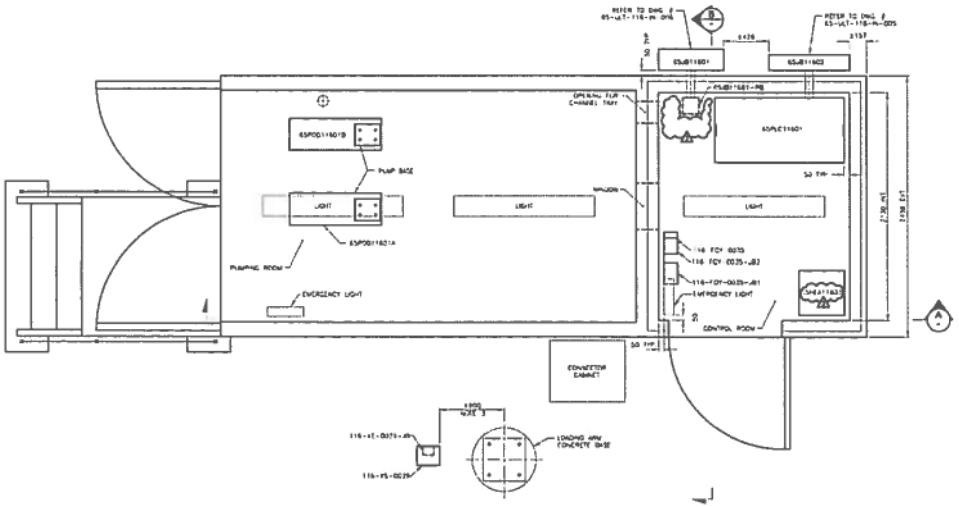

PLAN VIEW
SCALE 1:20
RANKIN INLET PUMPING STATION
ELECTRICAL EQUIPMENT LAYOUT

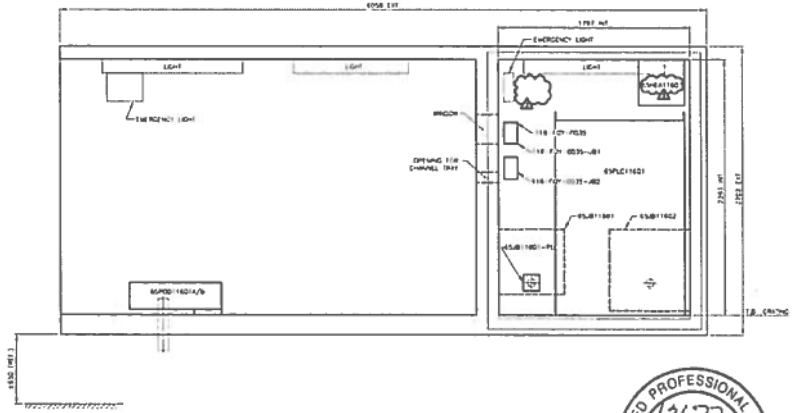

ELEVATION A
SCALE 1:20
RANKIN INLET PUMPING STATION
ELECTRICAL EQUIPMENT LAYOUT

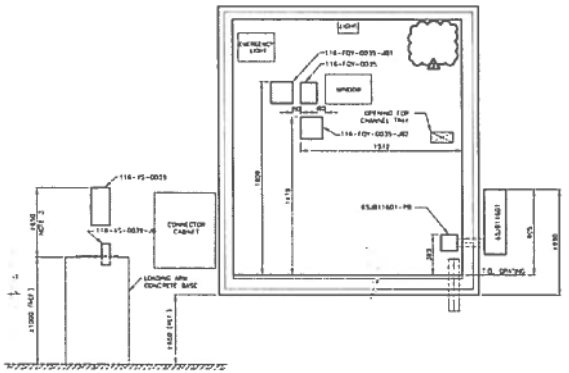

ELEVATION B
SCALE 1:20
RANKIN INLET PUMPING STATION
ELECTRICAL EQUIPMENT LAYOUT

REGISTERED PROFESSIONAL ENGINEER
13627
D. CARRIER
NUNAVUT
SEP 7 1 2017
NT/NU



NOTES GENERALES / GENERAL NOTES

1. HEATER UNITS ARE CEILING MOUNTED.
2. FOR EQUIPMENT IDENTIFICATION REFER TO THE MATERIAL LIST.
3. SUPPORT FOR "SEQUAL" UNIT AND ITS JUNCTION BOX WITH PROFILE AT THE LOADING ARM CONCRETE BASE, TO BE "CHANNEL" TYPE. COORDINATE THE POSITION TO AVOID INTERFERENCE WITH THE LOADING ARM MOVEMENT.

ISSUED FOR CONSTRUCTION
Ultragen SEP 7 2017

DESIGNS OR REFERENCE / REFERENCE DRAWINGS

TITLE / TITRE	# DWG
LIGHTING AND SERVICES LAYOUT	65-ULT-116-EL-010
EQUIPMENT LAYOUT PUMPING STATION	65-ULT-116-EL-005
PLINTH AND WALL OPENINGS	65-ULT-116-EL-002
JUNCTION BOX – LAYOUT	65-ULT-116-EL-003
JUNCTION BOX – LAYOUT	65-ULT-116-EL-004
GROUNDING LAYOUT	65-ULT-116-EL-006

AGNICO EAGLE

No.	DATE	REVISIONS	BY	CHK'D
3	2017-09-06	ISSUED FOR CONSTRUCTION	S.S.	S.S.
2	2017-08-04	UPDATE AREA & TAG NUMBER	S.S.	S.S.
1	2017-06-12	ISSUED FOR CONSTRUCTION	S.S.	S.S.
A	2017-05-12	ISSUED FOR CONSTRUCTION	S.S.	S.S.
No.	2017-04-10	ISSUED FOR REVIEW	S.S.	S.S.

REVISIONS

ENGINEER PROJECT SYSTEMS
Ultragen
JOB / PROJECT NUMBER NO. 201703

TITLE / TITRE
AGNICO EAGLE – MEADOWBANK DIVISION
118 – FUEL TANK FARM
FUEL DISTRIBUTION
RANKIN INLET PUMPING STATION
ELECTRICAL EQUIPMENT LAYOUT

DESIGNED AND DRAWN BY	REMI SHERZENA	2017-05-10
VERIFIED AND CHECKED BY	STEPHANE GIRARD	2017-05-15
APPROVED AND AUTHORIZED BY	DANIEL CARRIER	2017-05-15
SCALE / ÉCHELLE	1:20	DATE 2017-05-15

DWG. NUMBER / NUMÉRO DE DESSIN
65-ULT-116-EL-007

JOB / PROJECT NUMBER NO. 6515 | REVISED / RÉVISÉ 3 | SHEET / FEUILLE 1/1

65-ULT-116-EL-008

FORMAT ARCH D

PERMIT TO PRACTICE
LE GROUPE ULTRAGEN LTÉE
Signature
Date SEP 2 1 2017
PERMIT NUMBER: P 1180
NT/NU Association of Professional Engineers and Geoscientists

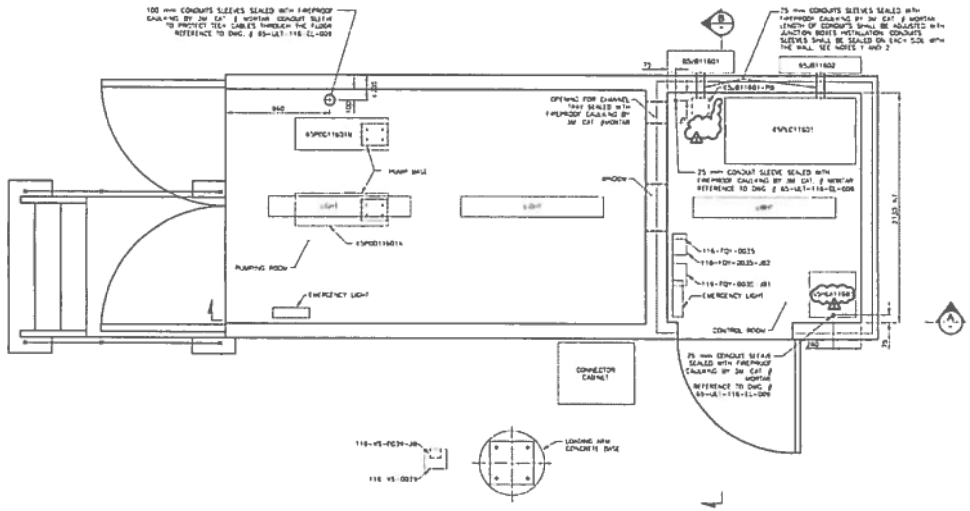

PLAN VIEW (1)
SCALE: 1:20
RANKIN INLET PUMPING STATION
FLOOR AND WALL OPENINGS

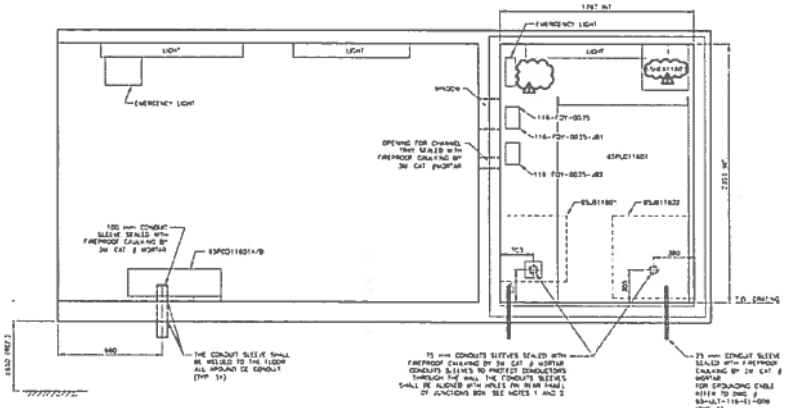

ELEVATION (A)
SCALE: 1:20
RANKIN INLET PUMPING STATION
FLOOR AND WALL OPENINGS

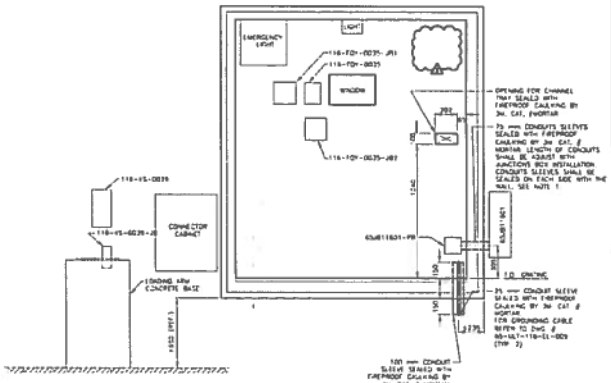

ELEVATION (B)
SCALE: 1:20
RANKIN INLET PUMPING STATION
FLOOR AND WALL OPENINGS

REGISTERED PROFESSIONAL ENGINEER
L3677
D. CARRIER
LICENSEE
NT/NU
SEP 2 1 2017



NOTES GENERALES / GENERAL NOTES

1. PULL BOX 65JB11601-PB LINKED WITH CONDUIT SLEEVE TO JUNCTION BOX 65JB11601. THE CABLES INSIDE CONTROL ROOM END TO THE PULL BOX.
2. CABINET 65PLC11601 LINKED WITH CONDUIT SLEEVE TO JUNCTION BOX 65JB11602.
3. USE TIP AT EACH ENDS OF THE CONDUITS SLEEVES.

ISSUED FOR CONSTRUCTION
Ultragen SEPT 2017

DESSINS DE REFERENCE / REFERENCE DRAWINGS

TITRE / TITLE	No DWG
ELECTRICAL EQUIPMENT LAYOUT	65-ULT-116-EL-007
GROUNDING LAYOUT PUMPING STATION	65-ULT-116-EL-009

AGNICO EAGLE

2	2017-09-15	ISSUED FOR CONSTRUCTION	S.A.	S.A.
1	2017-09-13	UPDATE ADDED & TEE MARKED	S.A.	S.A.
0	2017-08-15	ISSUED FOR CONSTRUCTION	S.A.	S.A.
No	DATE	DESCRIPTION	DESSINÉ PAR / DRAWN BY	VÉRIFIÉ PAR / CHECKED BY

REVISIONS

KIGLIKTAAQ MINE MINING
KIGLIKTAAQ PROJECT
KIGLIKTAAQ PROJET

ultragen
NO. PROJET / PROJECT NO. 591700

TITRE / TITLE
AGNICO EAGLE – MEADOWBANK DIVISION
116 – FUEL TANK FARM
FUEL DISTRIBUTION
RANKIN INLET PUMPING STATION
FLOOR AND WALL OPENINGS

DESSINÉ PAR / DRAWN BY	REMI SHIRETAL	2017-08-15
VÉRIFIÉ PAR / CHECKED BY	STEPHANE GIRARD	2017-08-15
APPROUVÉ PAR / APPROVED BY	DANIEL CARRIER	2017-08-15
ÉCHELLE / SCALE	1:20	DATE 2017-09-15

NO. DESSIN / DRAWING NO. 65-ULT-116-EL-008

NO. PROJET / PROJECT NO. 6515 | INDICE / REVISION 2 | FEUILLE / SHT 1/1

FILE NO.

65-ULT-116-EL-009

FORMAT ARCH D

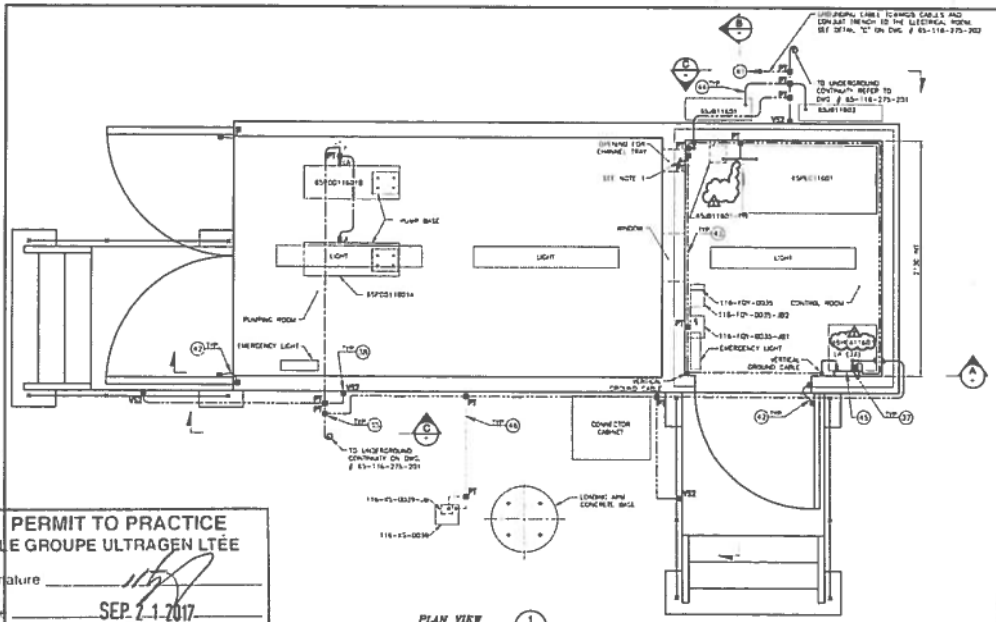

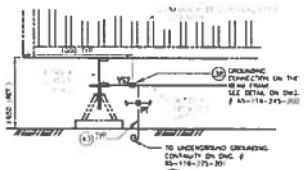

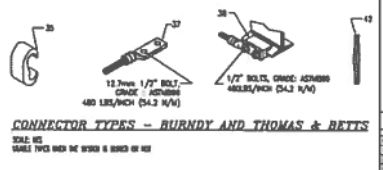

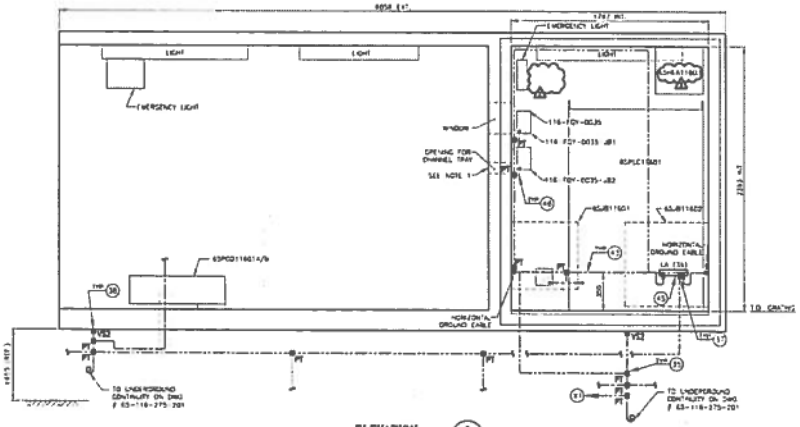

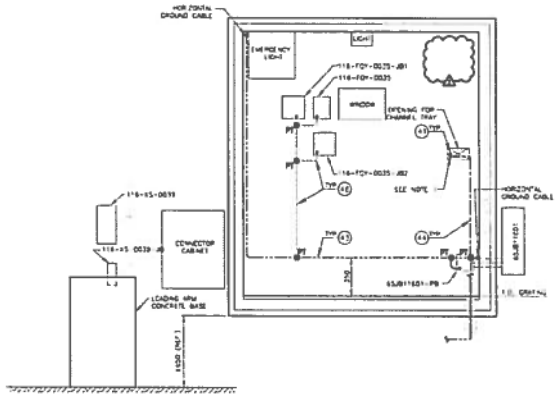

EQUIPMENT LIST

ITEMS NO.	SYMBOL	DESCRIPTION	MAKE	TYPE	NOTE
36	PT	CONNECTION - PARALLEL HORIZONTAL CONDUCTORS COMPRESSION CONNECTOR FOR TWO PARALLEL HORIZONTAL CONDUCTORS. CABLE SIZE: 2/0AWG, TAP CABLE SIZE: 2/0AWG CABLE SIZE: 4/0AWG, TAP CABLE SIZE: 2/0AWG CABLE SIZE: 4/0AWG, TAP CABLE SIZE: 4/0AWG	BURNDY	YSHC28C26 YSHC28C36 YSHC28C28	
37	LA	CONNECTION - HEAVY DUTY TERMINALS HEAVY DUTY TERMINALS DESIGNED TO CARRY SHORT CIRCUIT LOAD AND WITHSTAND HIGH MECHANICAL STRESS. CABLE SIZE: 2/0AWG CABLE SIZE: 4/0 AWG COMPLETE WITH NON-CORROSIVE HARDWARE SUCH AS BOLT, FLAT WASHER, LOCKWASHERS, NUTS AND ANTI-OXIDIZING COMPOUNDS TO PREVENT OXIDATION OR CORROSION.	BURNDY	YGHA28-2H YGHA38-2H	
38	VS2	CONNECTION - STRUCTURE CONNECTION USED FOR VERTICAL STEEL SURFACE (STRUCTURAL BEAMS) CABLE SIZE 4/0AWG OR CONTINUOUS BEAM FRAME. CABLE SIZE 4/0AWG ON CHANNEL OF EXTRUSIK. COMPLETE WITH HARDWARE	BURNDY	YHBM738-336-2H YGHB2C28-H2O-2H YGHC-42	EVERY BURNDY VGS CONNECTION (VGS) MUST BE CRIMPED WITH A YGHA HEAVY DUTY TERMINAL CLAG AND 2 NUTS OF ADEQUATE SIZE FOR THE TERMINAL.
41		CABLE TRAY CONNECTING CABLE TRAY GROUNDING CLAMP. FOR CABLE SIZE 4/0AWG.	THOMAS & BETTS	GTC24P	
42		BONDING JUMPER PREFABRICATED COPPER JUMPER, FOR EXPANSION JOINTS AND ADJUSTABLE JOINTS 1 BRAIDS AND 2 BOLTS HOLD BY CONNECTION.	THOMAS & BETTS	FBE12-1	
43		COPPER GROUNDING CONDUCTOR 4/0 AWG, BARE, FLEXIBLE, TINNED, 19 STRANDS (ASTM STANDARDS B8 AND B33).	PHILLIPS CABLES		
44		COPPER GROUNDING CONDUCTOR 2/0 AWG, BARE, FLEXIBLE, TINNED, 19 STRANDS (ASTM STANDARDS B8 AND B33).	PHILLIPS CABLES		
45		COPPER BUS BAR BUS BAR 254(10") X 102(4") X 6(0.25") BRACKETS AND COLLARS INCLUDED	BURNDY	6006-144198C	
46		COPPER GROUNDING CONDUCTOR 4 AWG, GREEN INSULATION, FLEXIBLE, 7 STRANDS (ASTM STANDARDS B8 AND B33).	PHILLIPS CABLES		
	Emp	COPPER CONDUCTOR IDENTICAL CHARACTERISTICS FOR FUTURE CONNECTIONS. THE LENGTH TO RESERVE IS SPECIFIED ON THE SYMBOL	PHILLIPS CABLES		

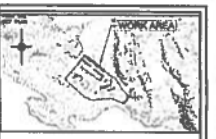

NOTES GENERALES / GENERAL NOTES

1. INSTALL COPPER GROUNDING CABLE 2/0 AWG, MINIMUM, BARE, FLEXIBLE, TINNED, 19 STRANDS IN EACH CHANNEL TRAY, CONNECT CABLE WITH CONNECTION TYPE "YGHC" (ARTICLE NUMBER 36). CONNECT CABLE AT EACH SECTION OF CHANNEL TRAY WITH CONNECTION TYPE "GTC24P" (ARTICLE NUMBER 41). FOR CHANNEL TRAY INSTALLATION REFER TO DRAWING #65-ULT-116-EL-011.

REGISTERED PROFESSIONAL ENGINEER 13677 D CARRIER NT/NU SEP 21 2017

ISSUED FOR CONSTRUCTION ultragen DATE: SEPT 2017

PERMIT TO PRACTICE
LE GROUPE ULTRAGEN LTÉE
Signature
Date SEP 21 2017
PERMIT NUMBER: P 1180
NT/NU Association of Professional Engineers and Geoscientists

DESIGNS OR REFERENCE / REFERENCE DRAWINGS

TITRE / TITLE	# DWG
LEGEND & ABBREVIATIONS OF THE DRAWINGS	65-116-275-000
SINGLE LINE DIAGRAM	65-116-275-001
GROUNDING LAYOUT PLAN VIEW	65-116-275-004
CONDUIT, TRAYS AND DETAILS	65-116-275-005

AGNICO EAGLE

3	2017-09-15	ISSUED FOR CONSTRUCTION	S.S.
2	2017-09-12	UPDATE PER A THE COMMENTS	S.S.
1	2017-08-30	UPDATE PER A THE COMMENTS	S.S.
A	2017-08-15	ISSUED FOR CONSTRUCTION	S.S.
No.	2017-08-10	ISSUED FOR REVIEW	S.S.

REVISIONS

ultragen

NUNAVUT MINE LICENCE	NO. PROJET PROJECT NO. 581700

TITRE / TITLE
AGNICO EAGLE – MEADOWBANK DIVISION
116 – FUEL TANK FARM
FUEL DISTRIBUTION
RANKIN INLET PUMPING STATION
GROUNDING

DESSINÉ PAR DRAWN BY	REENE SHERSTEN	2017-08-15
VÉRIFIÉ PAR CHECKED BY	STEPHANE GIRARD	2017-08-15
APPROUVÉ PAR APPROVED BY	DANIEL CARRIER	2017-08-15
ÉCHELLE SCALE	1:20	DATE 2017-08-15

NO. DESSIN DRAWING NO. 65-ULT-116-EL-009

NO. PROJET PROJECT NO.	DIVISION	FEUILLE / SHT
6515	2	1 / 1

REF NO.

65-ULT-116-EL-010

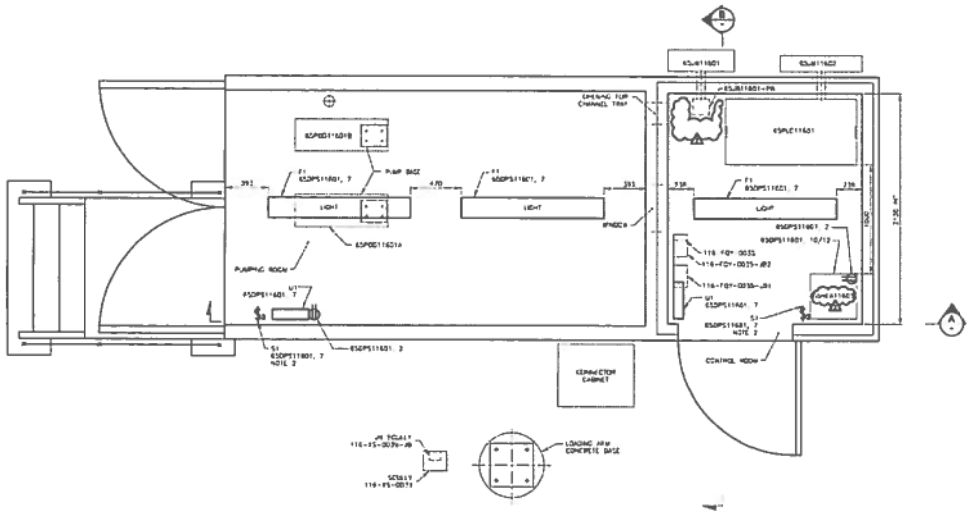

PLAN VIEW
SCALE: 1:20
RANKIN INLET PUMPING STATION
LIGHTING AND SERVICES

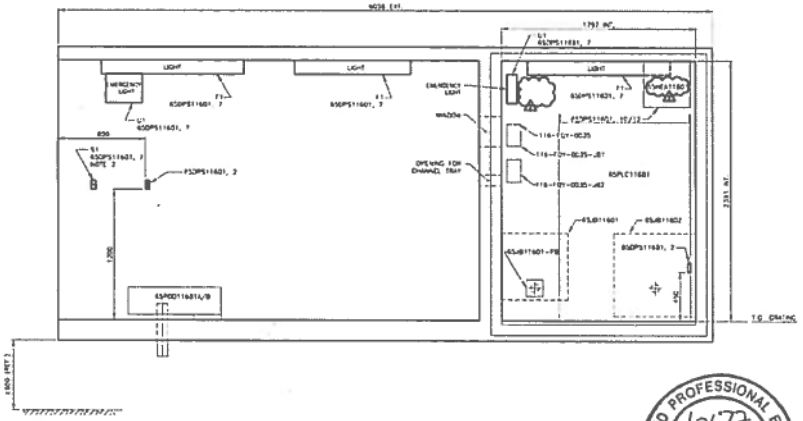

ELEVATION A
SCALE: 1:20
RANKIN INLET PUMPING STATION
ELECTRICAL EQUIPMENT LAYOUT
LIGHTING AND SERVICES

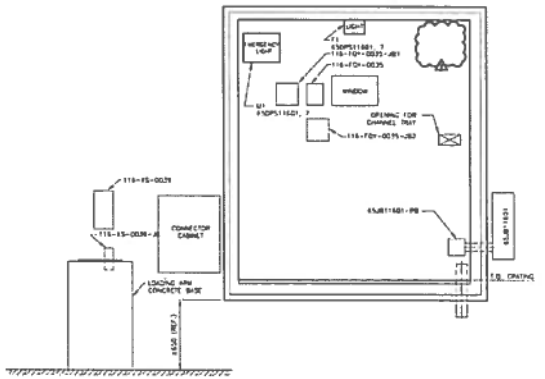

ELEVATION B
SCALE: 1:20
RANKIN INLET PUMPING STATION
LIGHTING AND SERVICES

MATERIAL LIST

TYPE	[illegible]	[illegible]	[illegible]	[illegible]	[illegible]
F1	[illegible]	[illegible]	[illegible]	[illegible]	[illegible]
[illegible]	[illegible]	[illegible]	[illegible]	[illegible]	[illegible]
[illegible]	[illegible]	[illegible]	[illegible]	[illegible]	[illegible]
[illegible]	[illegible]	[illegible]	-	[illegible]	[illegible]

PERMIT TO PRACTICE
LE GROUPE ULTRAGEN LTÉE
Signature
Date SEP 2 1 2017
PERMIT NUMBER: P 1180
NT/NU Association of Professional Engineers and Geoscientists

REGISTERED PROFESSIONAL ENGINEER
13627
D. CARRIER
LICENSEE
NT/NU
SEP 2 1 2017



NOTES GENERALES / GENERAL NOTES

1. FOR OUTDOOR LIGHTING AND PHOTOCELL REFER TO WSP DRAWING #65-116-285-301.
2. SWITCH FOR LIGHTING TYPE F1.

ISSUED FOR CONSTRUCTION
Ultragen DATE: SEPT 2017

DESSINS EN REFERENCE / REFERENCE DRAWINGS

AGNICO EAGLE

REVISIONS

ultragen
NO. PROJET / PROJECT NO. 591700

TITRE / TITLE
AGNICO EAGLE – MELIADINE DIVISION
116 – FUEL TANK FARM
FUEL DISTRIBUTION
RANKIN INLET PUMPING STATION
LIGHTING AND SERVICES

DESSINÉ PAR / DRAWN BY	REBA SHREEPHA	2017-05-15
CONTRÔLÉ PAR / CHECKED BY	STÉPHANE GIRARD	2017-05-15
APPROUVÉ PAR / APPROVED BY	DANIEL CARRIER	2017-05-15
ÉCHELLE / SCALE	1:20	DATE 2017-05-15

NO. DESSIN / DRAWING NO. 65-ULT-116-EL-010

NO. PROJET / PROJECT NO. 6515 | REVISION 2 | FEUILLE / SHT 1/1

FILE NO.

65-ULT-116-EL-011

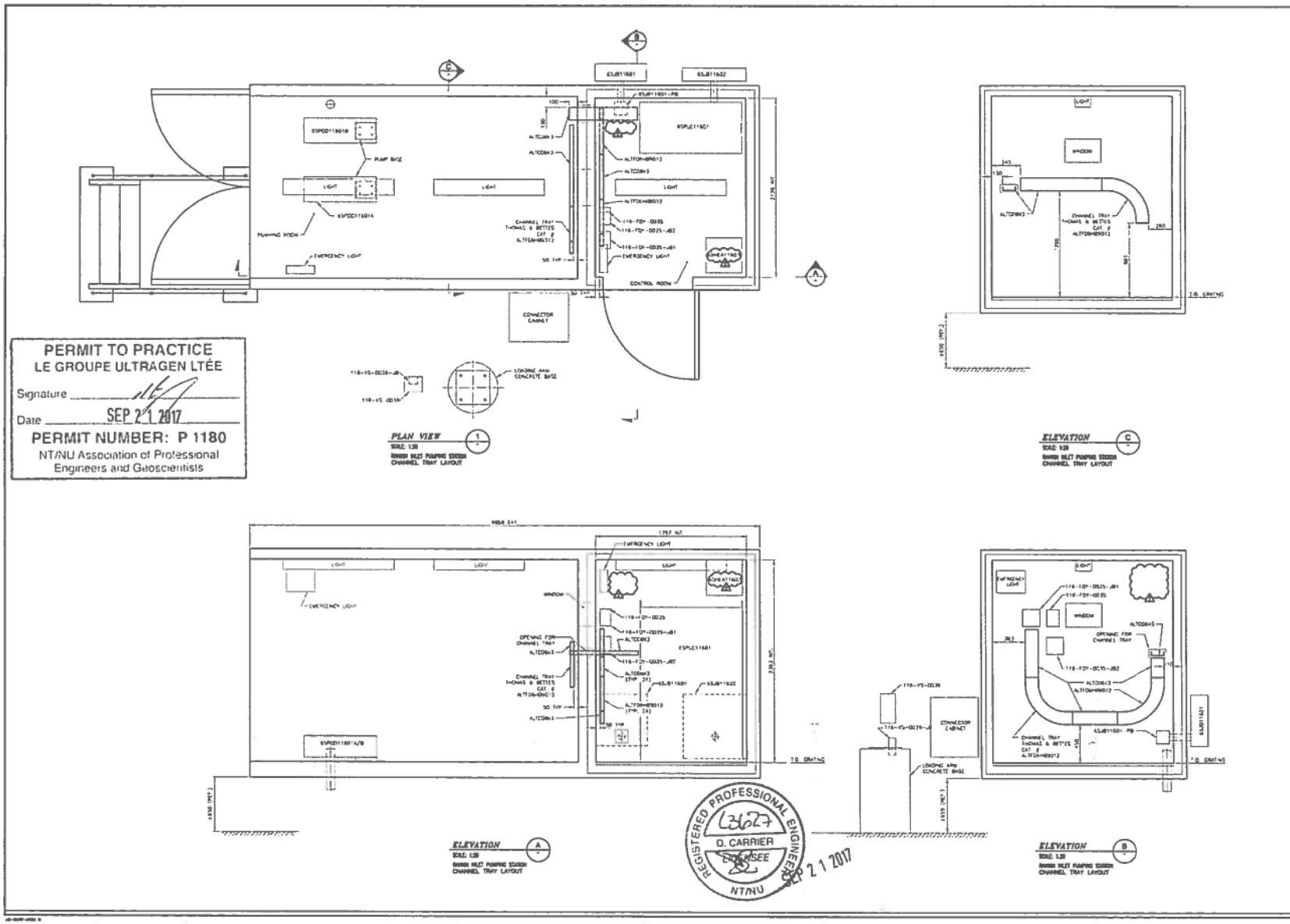

PERMIT TO PRACTICE
LE GROUPE ULTRAGEN LTÉE
Signature
Date SEP 2 1 2017
PERMIT NUMBER: P 1180
NT/NU Association of Professional Engineers and Geoscientists

REGISTERED PROFESSIONAL ENGINEER
D. CARRIER
LICENSEE
NT/NU
SEP 2 1 2017

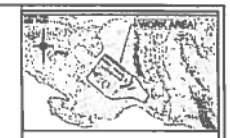

NOTES GENERALES / GENERAL NOTES

1. ALL CHANNEL TRAY ITEMS ARE IDENTIFIED WITH THOMAS & BETTS CATALOG NUMBER.
2. FOR CHANNEL TRAY GROUNDING REFER TO DRAWING #65-ULT-116-EL-009.
3. INSTALL ALL CHANNEL TRAY WITH CHANNEL PROFILE TYPE "CANSTRUT" BY THOMAS & BETTS, CAT. # A1300-AL COMPLETE WITH MISCELLANEOUS HARDWARE.

ISSUED FOR CONSTRUCTION
ultragen DATE: SEPT 2017

DESSINS EN REFERENCE / REFERENCE DRAWINGS

AGNICO EAGLE

REVISIONS

ultragen

AGNICO EAGLE - MELIADINE DIVISION
116 - FUEL TANK FARM
FUEL DISTRIBUTION
RANKIN INLET PUMPING STATION
CHANNEL TRAY LAYOUT

DESIGNED BY	RISHI SHRESTHA	2017-05-15
DRAWN BY	STEPHANE CRAMARD	2017-05-15
APPROVED BY	DANIEL CARRIER	2017-05-15
SCALE	1:20	2017-09-15

65-ULT-116-EL-011

6515 | 2 | 1/1

FILE NO.

PERMIT TO PRACTICE
LE GROUPE ULTRAGEN LTÉE
Signature
Date SEP 2 1 2017
PERMIT NUMBER: P 1180
NT/NU Association of Professional Engineers and Geoscientists

Source:	120	208	Volts
Feeder from / Single line diagram:	65TRF11601 / 65-116-275-203		
Mounting:	SURFACE		
Location:	ELECTRICAL ROOM 116 (RANKIN INLET)		
Manufacturer / Catalog No.:	SQUARE-D (SCHNEIDER) / NQ442L2C		
Breaker type:	QOB		

Enclosure type:	NEMA 1
Main breaker.:	NONE
No. of circuits:	42 CCTs
Bars:	225 A
Short circuit Ampacity:	10 kA
Power:	45 kVA

DESCRIPTION	CABLE AWG	TYPE REF	TYPE QTY	WATTS	BREAK. TYPE	BREAK. AMP	CT #		CT #	BREAK. AMP	BREAK. TYPE	WATTS	TYPE QTE	TYPE REF	CABLE AWG	DESCRIPTION
LIGHTING FIXTURES TANK #2	12	L	7	483		15	1	A	2	15		240	2	O	12	OUTLET PUMPING STATION & OPERATION ROOM 116
							3	B	4	15		120	1	O	12	OUTLET ELECTRICAL ROOM 116
LIGHTING CONTACTOR CONTROL FEEDER	12	L	1	37		15	5	C	6	15		240	2	O	12	OUTLET ELECTRICAL ROOM IT AREA 116
LIGHTING AND EMERGENCY LIGHTING PUMPING STATION & OPERATION ROOM 116	12	L	5	216		15	7	A	8	15		400	1	I	12	PLC/HMI/IO CARDS IN OPERATION ROOM CABINET 65PLC11601
LIGHTING AND EMERGENCY LIGHTING ELECTRICAL ROOM 116	12	L	4	180		15	9	B	10	30		2000	1	H	6	HEATING IN OPERATION ROOM 116 65HEA11603
LIGHTING IN FILTRATION CONTAINER 116 TANK #1	12	L	3	144		15	11	C	12							
LIGHTING FIXTURES TANK #1	12	L	7	483		15	13	A	14	15		888	2	I	8	MOTORIZED OPERATOR VALVES FEEDER 116-MOV-008 & 116-MOV-004 (65-ULT-116-IN-008)
							15	B	16	15		200	1	I	12	PLC CABINET 65PLC11601 OUTLET UTILITY IN OPERATION ROOM 116
LIGHTING FIXTURES TANK #1/TANK #2 GROUND FLOOR	12	L	4	276		15	17	C	18	15		100	1	I	12	INSTRUMENT (65-ULT-116-IN-008)
							19	A	20	15		50	1	M	12	VENTILATION FILTRATION CONTAINER 116 TANK #1 65FAN11601 (1/16 HP, 115V, FLA 1A)
LIGHTING FIXTURES OUTSIDE ELECTRICAL ROOM/OUTSIDE OF PUMPING STATION	10	L	7	483		15	21	B	22	15		50	1	M	12	VENTILATION FILTRATION CONTAINER 116 TANK #2 65FAN11602 (1/16 HP, 115V, FLA 1A)
							23	C	24	15		150	1	H	12	HEATING CONTACTOR CONTROL FEEDER IN FILTRATION CONTAINER TANK #1, 65HTR11601
LIGHTING IN FILTRATION CONTAINER 116 TANK #2	12	L	3	144		15	25	A	26	15		150	1	H	12	HEATING CONTACTOR CONTROL FEEDER IN FILTRATION CONTAINER TANK #2, 65HTR11602 2
HEATING IN FILTRATION CONTAINER 116 TANK #1 65HEA11605	3	H	1	5000		30	27	B	28	15		0	0			
							29	C	30	15		0	0			
HEATING IN FILTRATION CONTAINER 116 TANK #1 65HEA11606	3	H	1	5000		30	31	A	32	15		0	0			
							33	B	34	15		0	0			
HEATING IN FILTRATION CONTAINER 116 TANK #2 65HEA11607	4	H	1	5000		30	35	C	36	15		0	0			
							37	A	38	15		0	0			
HEATING IN FILTRATION CONTAINER 116 TANK #2 65HEA11608	4	H	1	5000		30	39	B	40	15		0	0			
							41	C	42	15		0	0			

TYPE (REF)	(W) total	Qte
(L) Lighting	2446	41
(O) Outlet	600	5
(H) Heating	22300	7
(I) Instrument	1588	5
(M) MOTOR	100	2

BREAKER TYPE	Qte (ref)
(L) SPARE	0
(S) SPACE	0
(G) DDFT BREAKER (30mA)	0

	Watts
Phase A	7709
Phase B	9774,5
Phase C	9550,5
Total	27034

REGISTERED PROFESSIONAL ENGINEER 13677 D. CARRIER LICENSEE NT/NU SEP 2 1 2017

NOTES:
1. SEE LIGHTING DIAGRAM FOR DETAILS OF CABLE SIZE DWG #65-ULT-116-EL-013.

REV	DATE	DESCRIPTION	PAR	VER	APP
2	2017-09-20	ISSUED FOR CONSTRUCTION	S. GRIMARD	D.CARRIER	D.CARRIER
1	2017-08-04	UPDATE AREA & TAG NUMBER	N. SALDAN	D.CARRIER	D.CARRIER
0	2017-07-12	ISSUED FOR CONSTRUCTION	SG 111891	DC 40308	DC 40308
PC	2017-06-13	ISSUED FOR REVIEW	SG 111891	DC 40308	DC 40308
PB	2017-05-11	ISSUED FOR REVIEW	MT 5029941	SG 111891	DC 40308
PA	2017-05-08	ISSUED FOR REVIEW	MT 5029941	SG 111891	DC 40308

AGNICO EAGLE
NUQSANA PROJECT MINING
ultragen
116 - FUEL TANK FARM 2
RANKIN ELECTRICAL ROOM
PANEL SCHEDULE 65DPS11601
UNITE - DATE 2017-05-08 REV 2
DESS MT 5029941
65-ULT-116-EL-012

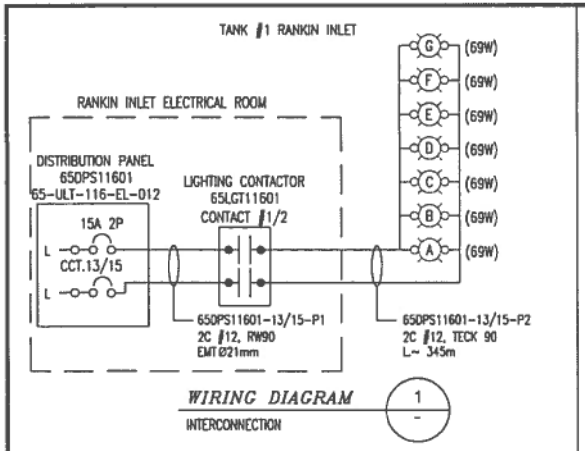

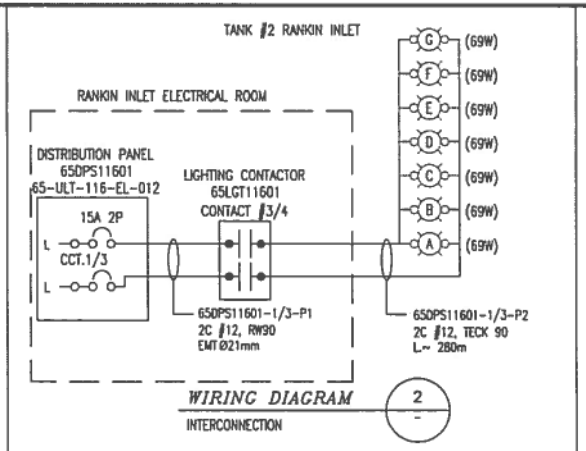

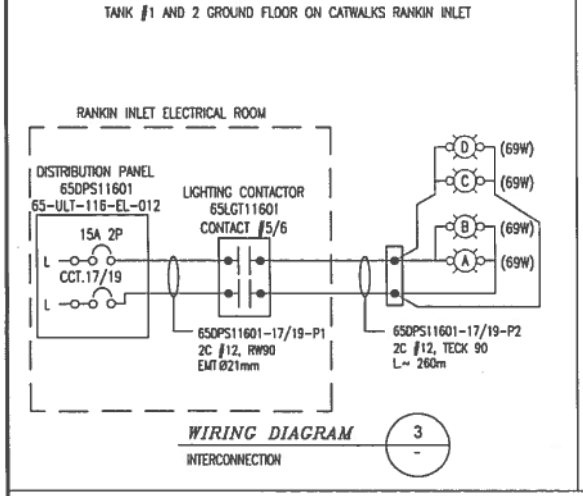

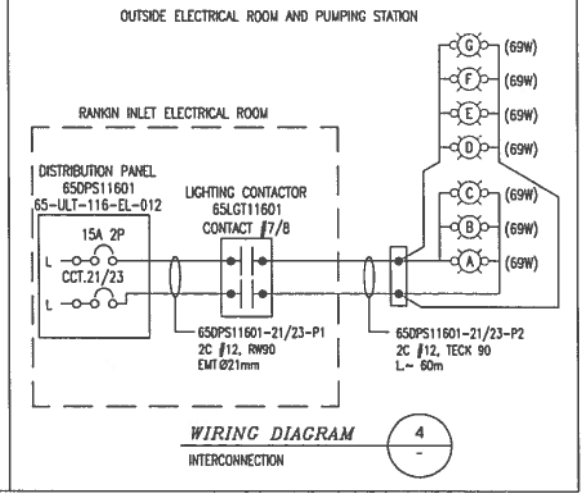

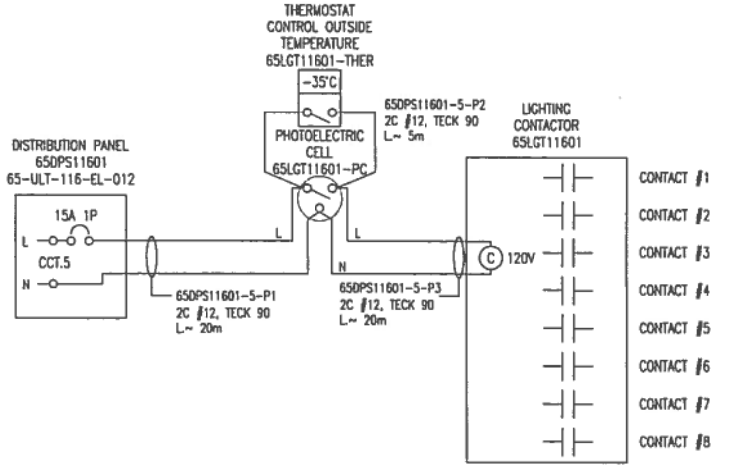

NOTES:

1. REFER TO THE DWG #65-116-285-201 FOR THE LIGHTING LAYOUT OF THE RANKIN INLET.
2. THE LIGHTING IDENTIFICATION AROUND THE TANKS ON THIS DRAWING STARTS FROM THE GROUND TO THE TOP OF THE TANK (A TO G).

No.	DATE	REVISION	BY / APP.
3	2017-09-20	ISSUED FOR CONSTRUCTION	S.G. / D.C.
2	2017-08-04	UPDATE AREA & TAG NUMBER	S.G. / D.C.
1	2017-06-12	ISSUED FOR CONSTRUCTION	S.G. / D.C.
0	2017-05-29	ISSUED FOR CONSTRUCTION	M.T. / D.C.
PB	2017-05-11	ISSUED FOR REVIEW	M.T. / D.C.
PA	2017-05-08	ISSUED FOR REVIEW	M.T. / D.C.

CLIENT: AGNICO EAGLE

NUQSANA PROMEC MINING

ultragen

CONSULTANT PROJECT NO. 591700

DESIGNED BY: MARC TREMBLAY	DATE: 2017-05-08
DRAWN BY: MARC TREMBLAY	DATE: 2017-05-08
CHECKED BY: STEPHANE GRIMARD	DATE: 2017-05-08
APPROVED BY: DANIEL CARRIER	DATE: 2017-05-08
SCALE: NONE	

PROJECT: AGNICO EAGLE – MEADOWBANK DIVISION
116 – FUEL TANK FARM

TITLE: FUEL DISTRIBUTION
RANKIN INLET
LIGHTING DIAGRAM

PROJECT No.	DRAWING NO.	REV.
6515	65-ULT-116-EL-013	3

PERMIT TO PRACTICE
LE GROUPE ULTRAGEN LTÉE
Signature
Date SEP 21 2017
PERMIT NUMBER: P 1180
NT/NU Association of Professional Engineers and Geoscientists

REGISTERED PROFESSIONAL ENGINEER
13627
D. CARRIER
LICENSEE
NT/NU
SEP 21 2017

ISSUED FOR CONSTRUCTION
ultragen DATE: SEPT 2017

65-ULT-116-EL-014

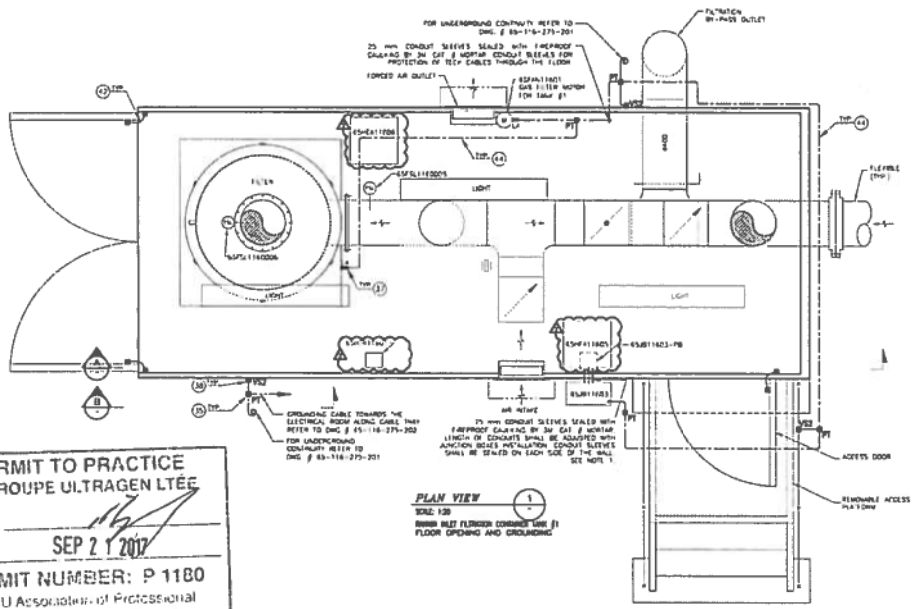

PLAN VIEW
SCALE: 1:20
RANKIN INLET FILTRATION CONTAINER TANK #1
FLOOR OPENING AND GROUNDING

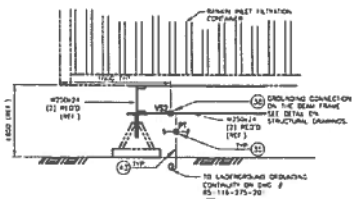

ELEVATION
SCALE: 1:20
RANKIN INLET FILTRATION CONTAINER TANK #1
FLOOR OPENING AND GROUNDING

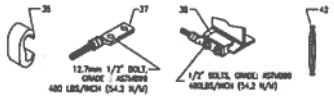

CONNECTOR TYPES - BURNDY AND THOMAS & BETTS
SCALE: NTS
DOUBLE TYPES WHEN THE STRUCK IS SHARED OR NOT

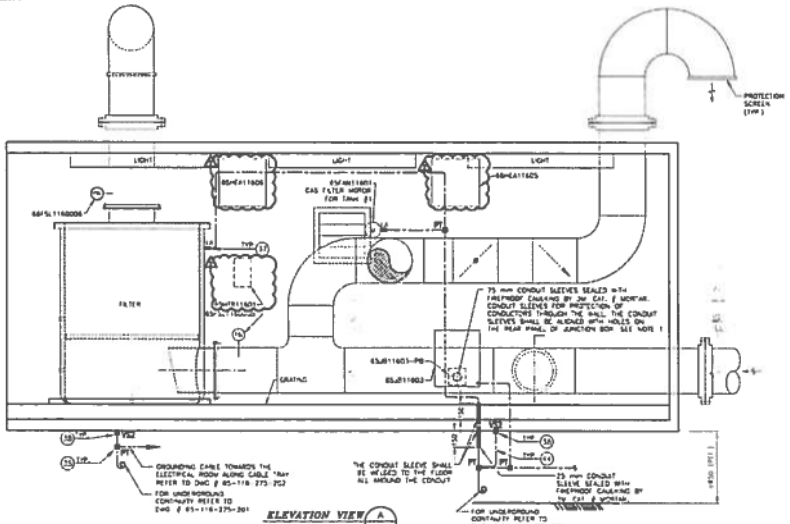

ELEVATION VIEW
SCALE: 1:20
RANKIN INLET FILTRATION CONTAINER TANK #1
FLOOR OPENING AND GROUNDING

EQUIPMENT LIST

ITEM NUMBER	SYMBOL	DESCRIPTION	MANU.	TYPE	NOTE
36	PT	CONNECTION - PARALLEL HORIZONTAL CONDUCTORS COMPRESSED CONNECTOR FOR TWO PARALLEL HORIZONTAL CONDUCTORS. CABLE SIZE: 4/0AWG CABLE SIZE: 2/0AWG, TAP CABLE SIZE: 2/0AWG CABLE SIZE: 4/0AWG, TAP CABLE SIZE: 2/0AWG CABLE SIZE: 4/0AWG, TAP CABLE SIZE: 4/0AWG	BURNDY	YGHC26C28 YGHC28C28 YGHC28C29	
37	LA	CONNECTION - HEAVY DUTY TERMINALS HEAVY DUTY TERMINALS DESIGNED TO CARRY SHORT CIRCUIT LOAD AND WITHSTAND HIGH MECHANICAL STRESS. CABLE SIZE: 2/0AWG CABLE SIZE: 4/0 AWG COMPLETE WITH NON-CORROSIVE HARDWARE SUCH AS: BOLT, FLAT WASHER, LOCKWASHERS, NUTS AND INHIBITING COMPOUNDS TO PREVENT OXIDATION OR CORROSION.	BURNDY	YGHA26-2H YGHA28-2H	
38	VS2	CONNECTION - STRUCTURE CONNECTION USED FOR VERTICAL STEEL SURFACE (STRUCTURAL BEAMS) CABLE SIZE: 4/0AWG COMPLETE WITH HARDWARE	BURNDY	YGBW28-338-2H THHG-42	(EVERY BURNDY VGS CONNECTION (VS2) MUST BE COMBINED WITH A YGHA HEAVY DUTY TERMINAL (LA) AND 2 NUTS OF ADEQUATE SIZE FOR THE TERMINAL.
41		CABLE TRAY CONNECTOR CABLE TRAY GROUNDING CLAMP. FOR CABLE SIZE 4/0AWG.	THOMAS & BETTS	GTC24P	
42		BONDING JUMPER PREFABRICATED COPPER JUMPER, FOR EXPANSION JOINTS AND ADJUSTABLE JOINTS 1 BRAIDS AND 2 BOLTS HOLD BY CONNECTION.	THOMAS & BETTS	FBE12-1	
43		COPPER GROUNDING CONDUCTOR 4/0 AWG, BARE, FLEXIBLE, TINNED, 19 STRANDS (ASTM STANDARDS B8 AND B33).	PHILLIPS CABLES		
44		COPPER GROUNDING CONDUCTOR 2/0 AWG, BARE, FLEXIBLE, TINNED, 19 STRANDS (ASTM STANDARDS B8 AND B33).	PHILLIPS CABLES		
46		COPPER GROUNDING CONDUCTOR 6 AWG, GREEN INSULATION, FLEXIBLE, 7 STRANDS (ASTM STANDARDS B8 AND B33).	PHILLIPS CABLES		
	5mg	COPPER CONDUCTOR IDENTICAL CHARACTERISTICS FOR FUTURE CONNECTIONS. THE LENGTH TO RESERVE IS SPECIFIED ON THE SYMBOL	PHILLIPS CABLES		

PERMIT TO PRACTICE
LE GROUPE ULTRAGEN LTÉE
Signature
Date SEP 2 1 2017
PERMIT NUMBER: P 1180
NT/NU Association of Professional Engineers and Geoscientists



NOTES GENERALES / GENERAL NOTES

1. PULL BOX 65JB11603-PB LINKED WITH CONDUIT SLEEVE TO JUNCTION BOX 65JB11603. THE CABLES INSIDE FILTRATION CONTAINER END AT THE PULL BOX.
2. USE TAP AT EACH END OF THE CONDUIT SLEEVES.
3. INSTALL COPPER GROUNDING CABLE 2/0 AWG MINIMUM, BARE, FLEXIBLE, TINNED, 19 STRANDS IN EACH CHANNEL TRAY, CONNECT CABLE WITH CONNECTION TYPE "YGHC" (ARTICLE NUMBER 35). CONNECT CABLE AT EACH SECTION OF CHANNEL TRAY WITH CONNECTION TYPE "GTC24P" (ARTICLE NUMBER 41).



DESIGNS OR REFERENCE / REFERENCE DRAWINGS

TITLE / TITLE	# NUM
SINGLE LINE DIAGRAM	65-116-275-053
TRAY WITH COVER METAL PIPE SUPPORT	65-116-275-055
GROUNDING LAYOUT PLAN AREA	65-116-275-201
LEGEND, SHEETS AND DETAILS	65-116-275-300
OUTLET GROUP LAYOUT FILTRATION #1	65-ULT-116-EL-013

AGNICO EAGLE

3	2017-08-30	ISSUED FOR CONSTRUCTION	S.S.	S.S.
2	2017-08-12	UPDATE WITH 2 NO NUMBER	S.S.	S.S.
1	2017-07-12	ISSUED FOR CONSTRUCTION	S.S.	S.S.
No.	2017-06-12	ISSUED FOR REVIEW	S.S.	S.S.
ISS.	DATE	DESCRIPTION	DRAWN APP.	DESIGN APP.

REVISIONS

KOOSARAY PROJECT MANAGEMENT SERVICES INC. | ultragen

NO. 501700

AGNICO EAGLE - MEADOWBANK DIVISION
116 - FUEL TANK FARM
FUEL DISTRIBUTION
RANKIN INLET FILTRATION CONTAINER TANK #1
FLOOR OPENING AND GROUNDING

DESIGNED AND DRAWN BY	STEPHANE CRAMPO	2017-08-12
CHECKED AND REVIEWED BY	STEPHANE CRAMPO	2017-08-12
APPROVED AND APPROVED BY	DANIEL CARRIER	2017-08-13
SCALE / SCALE	1:20	DATE / DATE 2017-08-13

NO. DRAWING / DRAWING NO. 65-ULT-116-EL-014

NO. PROJECT / PROJECT NO.	REVISION / REVISION	SHEET / SHT
6515	2	1 / 1

65-ULT-116-EL-015

FORMAT ARCH D

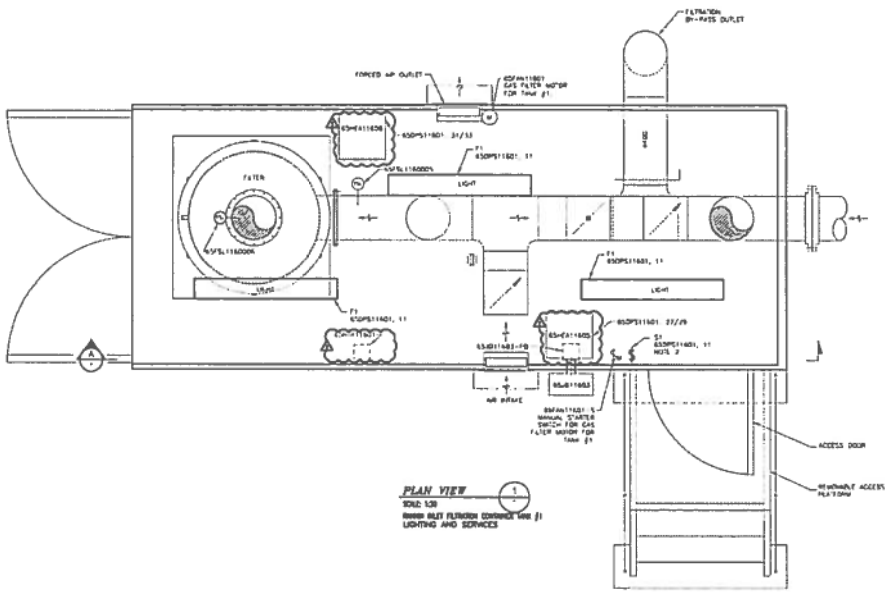

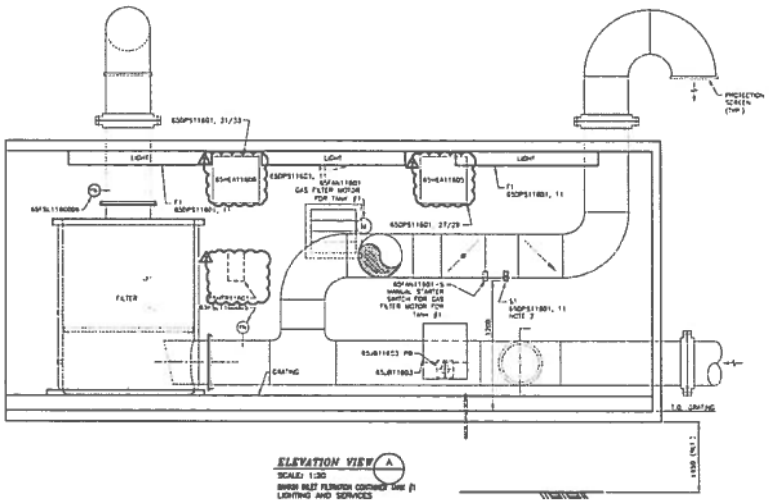

MATERIAL LIST					
TYP.	MANUFACTURER	ORDERING NUMBER	UNIT WEIGHT (kg)	NOTES	DESCRIPTION
F1	TBD	TBD-4-6-LED-30-4-GRY	45	120	LED HIGH EFFICIENCY, END PLATE, HOUSING, LENS POLYCARBONATE MATERIAL, 4000, 60°, 45K, 120-277VAC, END LOADED 4.0' MOUNTING
S	TBD	TBD	-	120	SINGLE POLE SWITCH END MOUNT, 10A, 120-277VAC



NOTES GENERALES / GENERAL NOTES

1. FOR OUTDOOR LIGHTING AND PHOTOCELL REFER TO MSP DRAWING #65-116-ZES-001.
2. SWITCH FOR LIGHTING TYPE F1.

ISSUED FOR CONSTRUCTION
ULTRAGEN DATE: SEPT 2017

DESIGNS ON REFERENCE / REFERENCE DRAWINGS

NUMBER / TITLE	# REV
SINGLE LINE DIAGRAM	65-116-E1L-002
LOCAL SINGLE LINE DIAGRAM AND SCHEDULE	65-116-E1L-003
LOCAL SINGLE AND DETAILS	65-116-E1L-004
GLOBAL GROUP LAYOUT FILTRATION #1	65-ULT-116-EL-013
GROUPS LOCAL PANEL SCHEDULE & SINGLE LINE	65-ULT-116-EL-014
MATERIAL LIST	65-SPTRN-EL-GE-001

PERMIT TO PRACTICE
LE GROUPE ULTRAGEN LTÉE
Signature
Date SEP 2 1 2017
PERMIT NUMBER: P 1130
NT/NU Association of Professional Engineers and Geoscientists

REGISTERED PROFESSIONAL ENGINEER
13627
D. CARRIER
LICENSEE
NT/NU
SEP 2 1 2017

AGNICO EAGLE

REVISIONS				
0	2017-05-26	ISSUED FOR CONSTRUCTION	S.G.	D.C.
1	2017-05-26	UPDATE PER A TQ #1 COMMENT	S.G.	D.C.
2	2017-06-12	ISSUED FOR CONSTRUCTION	S.G.	D.C.
3	2017-08-11	ISSUED FOR REVIEW	S.G.	D.C.
NO.	DATE	DESCRIPTION	DRAWN BY	APP'D BY

NUNAVUT PROFESSIONAL ENGINEERS
ULTRAGEN
NO. PROJET / PROJECT NO. 391700

TITRE / TITLE
AGNICO EAGLE – MEADOWBANK DIVISION
116 – FUEL TANK FARM
FUEL DISTRIBUTION
RANKIN INLET FILTRATION CONTAINER TANK #1
LIGHTING AND SERVICES

DESSINÉ PAR / DRAWN BY	STEPHANE GIRARD	2017-05-12
VÉRIFIÉ PAR / CHECKED BY	STEPHANE GIRARD	2017-05-12
APPROUVÉ PAR / APPROVED BY	DANIEL CARRIER	2017-05-12
ÉCHELLE / SCALE	1:20	2017-05-12

NO. DESSIN / DRAWING NO. 65-ULT-116-EL-015

NO. PROJET / PROJECT NO.	REVISION	FEUILLE / SHT
6515	2	1/1

FILE NO.

65-ULT-116-EL-016

FORMAT ARCH D

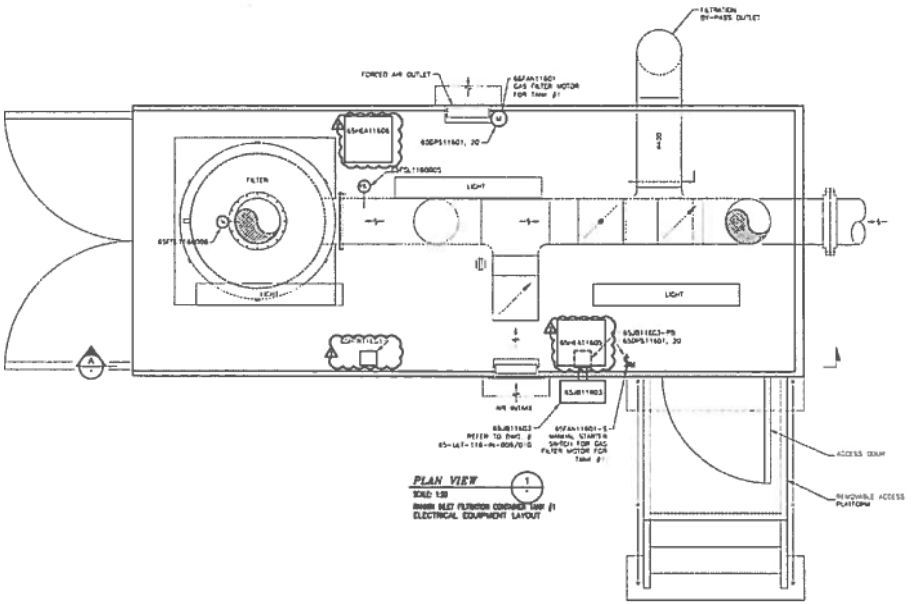

PLAN VIEW (1)
SCALE: 1:20
RANKIN INLET FILTRATION CONTAINER TANK #1
ELECTRICAL EQUIPMENT LAYOUT

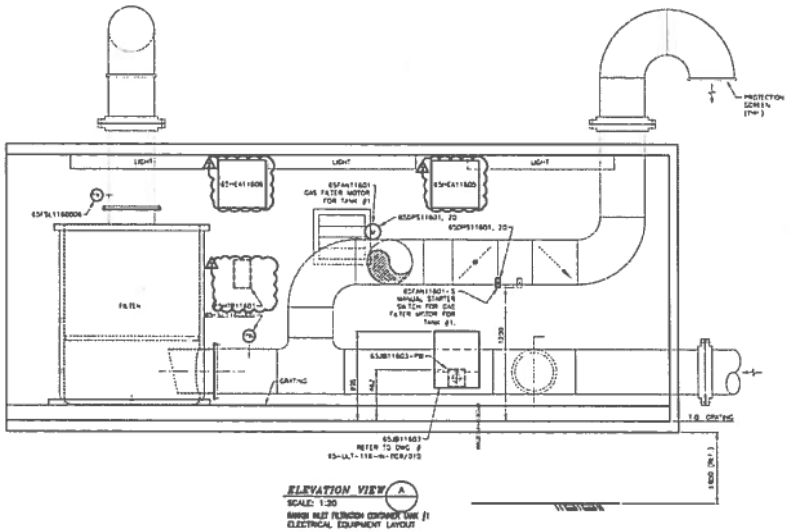

ELEVATION VIEW (A)
SCALE: 1:20
RANKIN INLET FILTRATION CONTAINER TANK #1
ELECTRICAL EQUIPMENT LAYOUT

MATERIAL LIST					
MK	QUANTITY	ORDERING CODE	SPARE PARTS (%)	REMARK	DESCRIPTION
[illegible]	[illegible]	[illegible]	-	CSA	[illegible]

PERMIT TO PRACTICE
LE GROUPE ULTRAGEN LTÉE
Signature
Date SEP 2 1 2017
PERMIT NUMBER: P 1180
NT/NU Association of Professional Engineers and Geoscientists

REGISTERED PROFESSIONAL ENGINEER
13677
D. CARRIER
NT/NU
SEP 2 1 2017

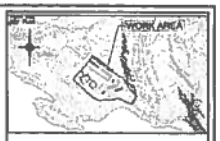

NOTES GENERALES / GENERAL NOTES

1. HEATER UNITS ARE CEILING MOUNTED.
2. FOR EQUIPMENT IDENTIFICATION REFER TO THE MATERIAL LIST.

ISSUED FOR CONSTRUCTION
Ultragen DATE: SEP 2017

DESIGNS EN REFERENCE / REFERENCE DRAWINGS

TITRE / TITLE	# DWG
SINGLE LINE DIAGRAM	65-116-270-300
CONTROL PANEL INTERIOR "PIM" SERVICES	65-116-270-302
GENERAL TABLES AND DETAILS	65-116-270-300
DEMOLITION/LAYOUT FILTRATION #1	65-ULT-116-EL-014/015
EQUIPMENT LIST, REMOVALS & [illegible]	65-EL-116-EL-017
JUNCTION BOX - LAYOUT/ARRANGEMENT	65-ULT-116-M-808/810
MATERIAL LIST	ULT-391700-EL-ML-001

AGNICO EAGLE

#	DATE	DESCRIPTION	BY	CHK
0	2017-05-12	ISSUED FOR CONSTRUCTION	S.G.	D.C.
1	2017-06-13	UPDATED PER I.F.C. COMMENTS	S.G.	D.C.
2	2017-08-13	ISSUED FOR CONSTRUCTION	S.G.	D.C.
Rv.	2017-08-13	ISSUED FOR REVIEW	S.G.	D.C.

REVISIONS

MISSISSAUGA ONTARIO CANADA | Ultragen | NO. PROJET / PROJECT NO. 391700

TITRE / TITLE
AGNICO EAGLE – MEADOWBANK DIVISION
116 – CQG TANK FARM A
FUEL DISTRIBUTION
RANKIN INLET FILTRATION CONTAINER TANK #1
ELECTRICAL EQUIPMENT LAYOUT

DESSINÉ PAR / DRAWN BY	STEPHANE GIRARD	2017-05-12
VÉRIFIÉ PAR / CHECKED BY	STEPHANE GIRARD	2017-05-13
APPROUVÉ PAR / APPROVED BY	DANIEL CARRIER	2017-05-13
ÉCHELLE / SCALE	1:20	DATE 2017-05-13

NO. DESSIN / DRAWING NO. 65-ULT-116-EL-016

NO. PROJET / PROJECT NO.	RÉVISION	FEUILLE / SHT
6515	2	1/1

65-ULT-116-EL-017

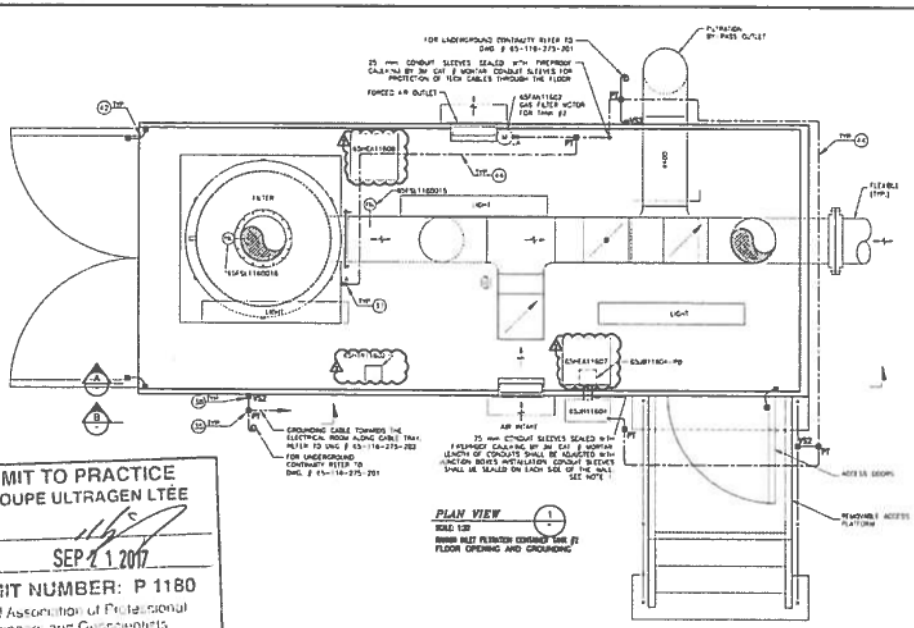

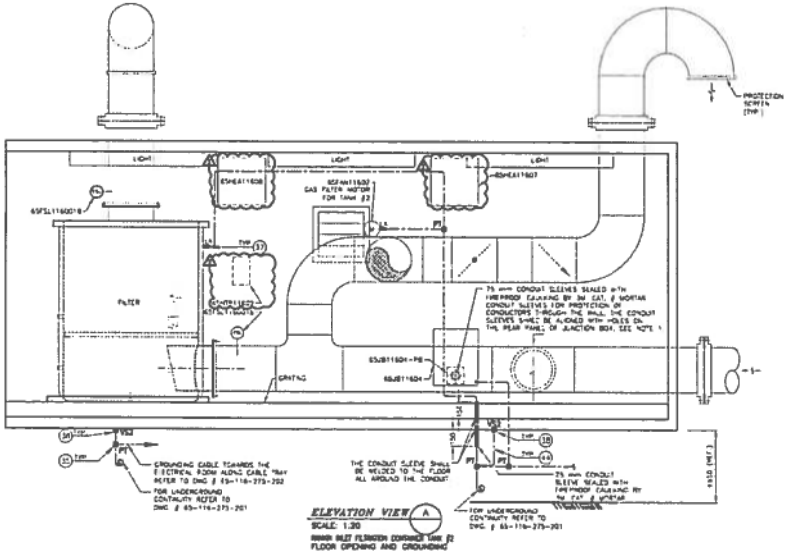

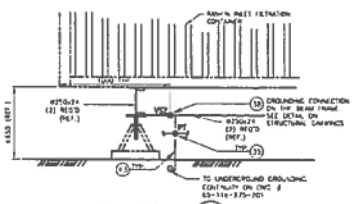

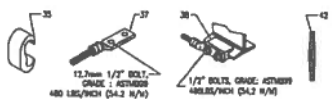

CONNECTOR TYPES – BURNDY AND THOMAS & BETTS

SCALE: NTS

VISABLE TYPES MAY BE SHOWN IN DASHED OR NOT

EQUIPMENT LIST					
ASSEMBLY NUMBER	SYMBOL	DESCRIPTION	MANUF.	TYPE	NOTE
35	PT	CONNECTION – PARALLEL HORIZONTAL CONDUCTORS COMPRESSED CONNECTOR FOR TWO PARALLEL HORIZONTAL CONDUCTIONS. CABLE SIZE: 4/0AWG CABLE SIZE: 2/0AWG, TAP CABLE SIZE: 2/0AWG CABLE SIZE: 4/0AWG, TAP CABLE SIZE: 2/0AWG CABLE SIZE: 4/0AWG, TAP CABLE SIZE: 4/0AWG	BURNDY	YGHC26C26 YGHC28C26 YGHC28C28	
37	LA	CONNECTION – HEAVY DUTY TERMINALS HEAVY DUTY TERMINALS DESIGNED TO CARRY SHORT CIRCUIT LOAD AND WITHSTAND HIGH MECHANICAL STRESS. CABLE SIZE: 2/0AWG CABLE SIZE: 4/0 AWG COMPLETE WITH NON-CORROSIVE HARDWARE SUCH AS: BOLT, FLAT WASHER, LOCKWASHERS, NUTS AND INHIBITING COMPOUNDS TO PREVENT OXIDATION OR CORROSION.	BURNDY	YGHA26-2N YGHA28-2N	
38	VS2	CONNECTION – STRUCTURE CONNECTION USED FOR VERTICAL STEEL SURFACE (STRUCTURAL BEAMS) CABLE SIZE: 4/0AWG COMPLETE WITH HARDWARE	BURNDY	YGBW28-338-2N THMG-42	EVERY BURNDY YGB CONNECTION (VS2) MUST BE COMBINED WITH A YGHA HEAVY DUTY TERMINAL (LA) AND 2 NUTS OF ADEQUATE SIZE FOR THE TERMINAL.
41		CABLE TRAY CONNECTOR CABLE TRAY GROUNDING CLAMP, FOR CABLE SIZE 4/0AWG.	THOMAS & BETTS	GTC24P	
42		BONDING JUMPER PREFABRICATED COPPER JUMPER, FOR EXPANSION JOINTS AND ADJUSTABLE JOINTS 1 BRANDS AND 2 BOLTS HOLD BY CONNECTION.	THOMAS & BETTS	FBC12-1	
43		COPPER GROUNDING CONDUCTOR 4/0 AWG, BARE, FLEXIBLE, TINNED, 19 STRANDS (ASTM STANDARDS B8 AND B33).	PHILLIPS CABLES		
44		COPPER GROUNDING CONDUCTOR 2/0 AWG, BARE, FLEXIBLE, TINNED, 19 STRANDS (ASTM STANDARDS B8 AND B33).	PHILLIPS CABLES		
46		COPPER GROUNDING CONDUCTOR 6 AWG, GREEN INSULATION, FLEXIBLE, 7 STRANDS (ASTM STANDARDS B8 AND B33).	PHILLIPS CABLES		
		COPPER CONDUCTOR IDENTICAL CHARACTERISTICS FOR FUTURE CONNECTIONS. THE LENGTH TO RESERVE IS SPECIFIED ON THE SYMBOL	PHILLIPS CABLES		

PERMIT TO PRACTICE
LE GROUPE ULTRAGEN LTÉE
Signature
Date SEP 2 1 2017
PERMIT NUMBER: P 1180
NT/NU Association of Professional Engineers and Geoscientists



NOTES GENERALES / GENERAL NOTES

1. PULL BOX 65JB11604-PB LINKED WITH CONDUIT SLEEVE TO JUNCTION BOX 65JB11604. THE CABLES INSIDE FILTRATION CONTAINER END AT THE PULL BOX.
2. USE TIP AT EACH END OF THE CONDUIT SLEEVES.
3. INSTALL COPPER GROUNDING CABLE 2/0 AWG MINIMUM, BARE, FLEXIBLE, TINNED, 19 STRANDS IN EACH CHANNEL TRAY, CONNECT CABLE WITH CONNECTION TYPE "YGHC" (ARTICLE NUMBER 35). CONNECT CABLE AT EACH SECTION OF CHANNEL TRAY WITH CONNECTION TYPE "GTC24P" (ARTICLE NUMBER 41).

REGISTERED PROFESSIONAL ENGINEER
D CARRIER
LICENSEE
NT/NU
SEP 2 1 2017

ISSUED FOR CONSTRUCTION
Ultragen DATE: SEP 1 2017

DESSINS DE RÉFÉRENCE / REFERENCE DRAWINGS

DESSIN / DWG	# DWG
SINGLE LINE DIAGRAM	65-116-275-202
TERMINAL BLOCK WIRING DIAGRAMS	65-116-275-203
GROUNDING LAYOUT PLAN VIEW	65-116-275-201
CONTROL PANELS AND DETAILS	65-116-275-205
CLASS 1DIV2P LAYOUT FILTRATION 2D	65-ULT-116-EL-003

AGNICO EAGLE

2	2017-08-30	ISSUED FOR CONSTRUCTION	S.G.	D.C.
1	2017-08-04	WORKS AREA & TAG REVISED	S.G.	D.C.
B	2017-07-14	ISSUED FOR CONSTRUCTION	S.G.	D.C.
No.	2017-06-13	ISSUED FOR ISSUE	S.G.	D.C.
DES.	DATE	REVISIONS	VALIDÉ / APP.	ÉTUDIÉ

REVISIONS

Ultragen

NO. PROJET / PROJECT NO. 391700

TITRE / TITLE
AGNICO EAGLE – MELIADINE DIVISION
116 – FUEL TANK FARM
FUEL DISTRIBUTION
RANKIN INLET FILTRATION CONTAINER TANK #2
FLOOR OPENING AND GROUNDING

DESSINÉ PAR / DRAWN BY	STEPHANE GRANARD	2017-08-13
VÉRIFIÉ PAR / CHECKED BY	STEPHANE GRANARD	2017-08-13
APPROUVÉ PAR / APPROVED BY	DANIEL CARRIER	2017-08-13
ÉCHELLE / SCALE	1:20	DATE 2017-08-13

NO. DESSIN / DRAWING NO. 65-ULT-116-EL-017

NO. PROJET / PROJECT NO.	RÉVISION	FORMAT / SIZE
6515	2	1/1

65-ULT-116-EL-018

FORMAT ARCH D

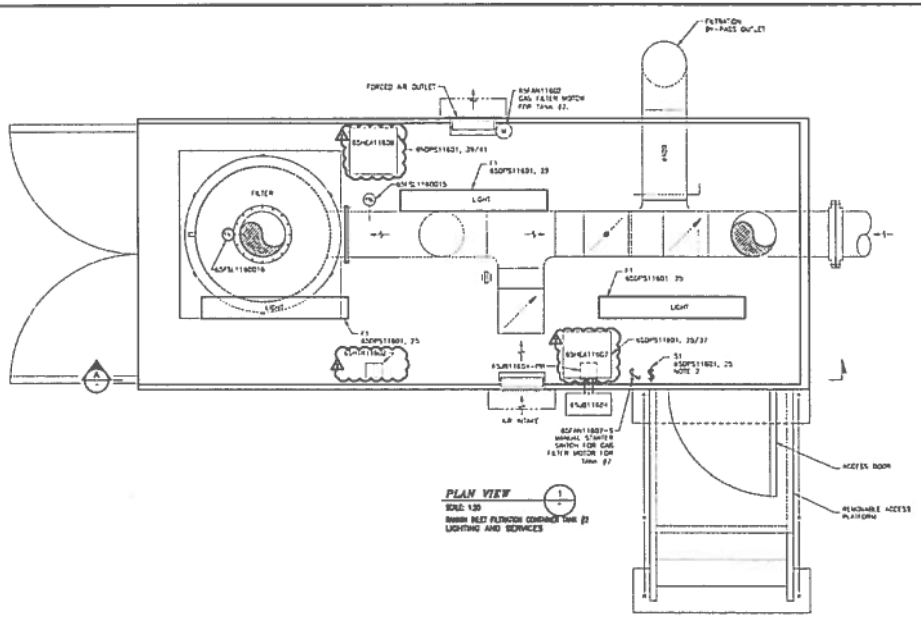

PLAN VIEW
SCALE: 1:20
RANKIN INLET FILTRATION CONTAINER TANK #2
LIGHTING AND SERVICES

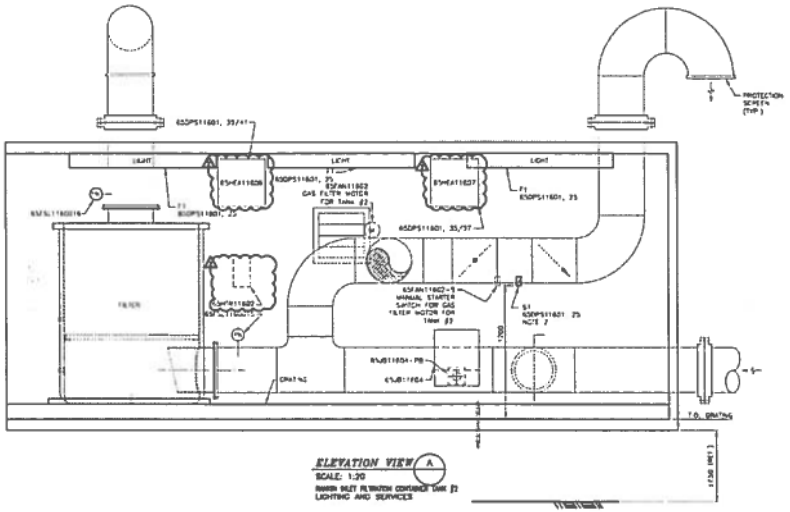

ELEVATION VIEW A
SCALE: 1:20
RANKIN INLET FILTRATION CONTAINER TANK #2
LIGHTING AND SERVICES

MATERIAL LIST					
TYPE	MANUFACTURER	ORDERING NUMBER	SIZE RANGE (A)	VOLTAGE	DESCRIPTION
FI	[illegible]	[illegible]	15	120	[illegible]
$	[illegible]	[illegible]	-	120	[illegible]

PERMIT TO PRACTICE
LE GROUPE ULTRAGEN LTÉE
Signature
Date SEP 2 1 2017
PERMIT NUMBER: P 1180
NT/NU Association of Professional Engineers and Geoscientists

REGISTERED PROFESSIONAL ENGINEER
12677
D CARRIER
LICENSEE
NT/NU
SEP 2 1 2017



NOTES GENERALES / GENERAL NOTES

1. FOR OUTDOOR LIGHTING AND PHOTOCELL REFER TO WSP DRAWING #65-116-283-201.
2. SWITCH FOR LIGHTING TYPE F1.

ISSUED FOR CONSTRUCTION
@ultragen DATE: SEPT 2017

DESIGNS ON REFERENCE / REFERENCE DRAWINGS

TITLE / TITRE	# DWG
SINGLE LINE DIAGRAM	65-116-275-202
[illegible]	65-116-275-200
LIGHTING, TABLES AND DETAILS	65-116-270-200
INLET TANK LAYOUT FILTRATION #2	65-ULT-116-EL-013
[illegible]	65-ULT-116-EL-012
[illegible]	ULT-501705-E-XX-001

AGNICO EAGLE

REVISIONS				
2	2017-09-20	ISSUED FOR CONSTRUCTION	S.S.	S.G.
1	2017-09-13	GROUND AND A SEA HEATER	M.S.	S.S.
0	2017-09-12	ISSUED FOR CONSTRUCTION	S.S.	S.S.
NO.	DATE	DESCRIPTION	DESIGN	CHECK

ULTRAGEN
NO. PROJET / PROJECT NO. 501700

TITRE / TITLE
AGNICO EAGLE – MEADOWBANK DIVISION
116 – FUEL TANK FARM
FUEL DISTRIBUTION
RANKIN INLET FILTRATION CONTAINER TANK #2
LIGHTING AND SERVICES

DESSINÉ PAR / DRAWN BY	STEPHANE GIRARD	2017-09-13
VÉRIFIÉ PAR / CHECKED BY	STEPHANE GIRARD	2017-09-15
APPROUVÉ PAR / APPROVED BY	DANIEL CARRIER	2017-09-13
ÉCHELLE / SCALE	1:20	DATE 2017-09-13

NO. DESSIN / DRAWING NO. 65-ULT-116-EL-018

NO. PROJET / PROJECT NO.	RÉVISION	FEUILLE / SHT
6515	2	1/1

65-ULT-116-EL-019

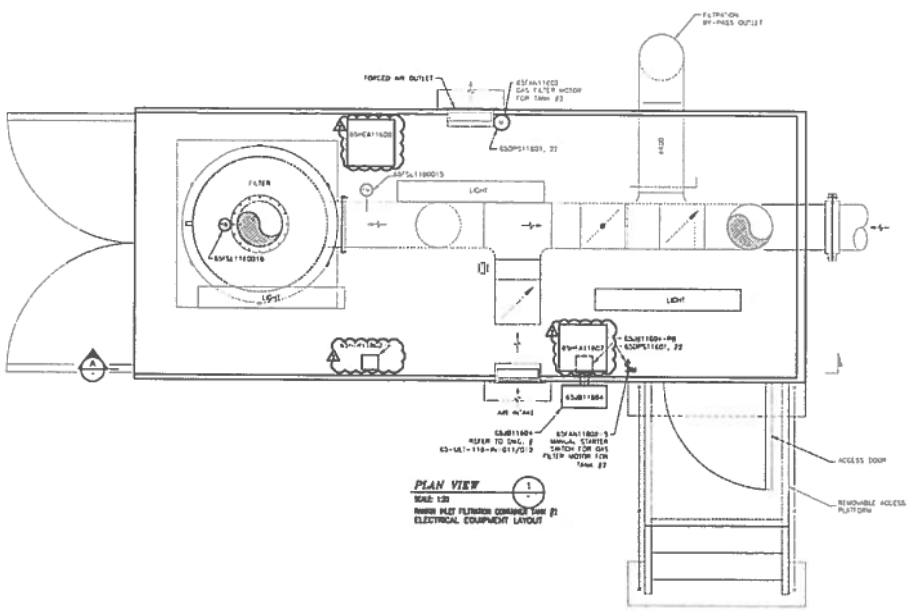

PLAN VIEW (1)
SCALE: 1:20
RANKIN INLET FILTRATION CONTAINER TANK #2
ELECTRICAL EQUIPMENT LAYOUT

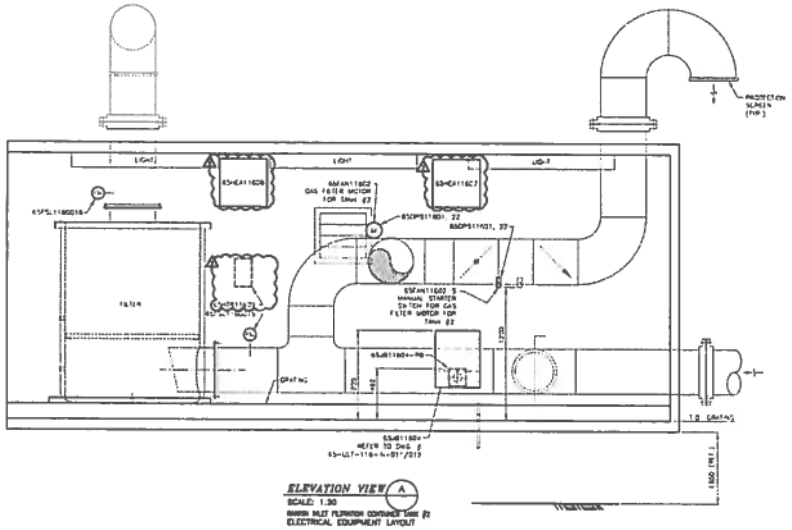

ELEVATION VIEW (A)
SCALE: 1:20
RANKIN INLET FILTRATION CONTAINER TANK #2
ELECTRICAL EQUIPMENT LAYOUT

MATERIAL LIST

TYP.	DIMENSIONS	ENGLISH MARK	WIRE SIZE (#)	VOLTAGE	DESCRIPTION
$\frac{1}{2}$	SEE NOTE 2	FUSE	-	120	FUSE, TIME DELAY, 600 VOLT, 10 KA, CLASS J, DUAL ELEMENT, TIME DELAY, CURRENT LIMITING, TYPICAL FOR FUSES, SEE ALL SINGLE LINE DIAGRAMS

NOTES GENERALES / GENERAL NOTES

1. HEATER UNITS ARE CEILING MOUNTED.
2. FOR EQUIPMENT IDENTIFICATION REFER TO THE MATERIAL LIST.

ISSUED FOR CONSTRUCTION
Ultragen 2017 SEPT 21

DESSINS DE RÉFÉRENCE / REFERENCE DRAWINGS

DWG # / NO.	TITLE
[illegible]	65-116-ELT-002
[illegible]	65-116-ELT-003
[illegible]	65-116-ELT-004
[illegible]	65-ULT-116-EL-001/002
[illegible]	65-ULT-116-EL-003
[illegible]	65-ULT-116-EL-004/005
[illegible]	ULT-201705-E-xls-001

AGNICO EAGLE

NO.	DATE	DESCRIPTION	DESIGNED	APP'D
4	2017-09-13	ISSUED FOR CONSTRUCTION	S.S.	D.C.
3	2017-08-13	UPDATE PER A TQ REVIEW	S.S.	D.C.
2	2017-07-12	ISSUED FOR CONSULTATION	S.S.	D.C.
1	2017-06-14	ISSUED FOR REVIEW	S.S.	D.C.

REVISIONS

PERMIT TO PRACTICE
LE GROUPE ULTRAGEN LTÉE
Signature _____
Date SEP 2 1 2017
PERMIT NUMBER: P 1180
NT/NU Association of Professional Engineers and Geoscientists

REGISTERED PROFESSIONAL ENGINEER
13677
D. CARRIER
NT/NU
SEP 2 1 2017

Ultragen
M.I. PROJECT NUMBER NO. 001700

AGNICO EAGLE – MEADOWBANK DIVISION
116 – FUEL TANK FARM
FUEL DISTRIBUTION
RANKIN INLET FILTRATION CONTAINER TANK #2
ELECTRICAL EQUIPMENT LAYOUT

DESIGNED BY	STEPHANE GIRARD	2017-08-13
DRAWN BY	STEPHANE GIRARD	2017-08-13
APPROVED BY	DANIEL CARRIER	2017-08-13
SCALE	1:20	DATE 2017-08-13

65-ULT-116-EL-019

M.I. PROJECT NUMBER NO. 8515 | REVISION 2 | SHEET / OF 1 / 1

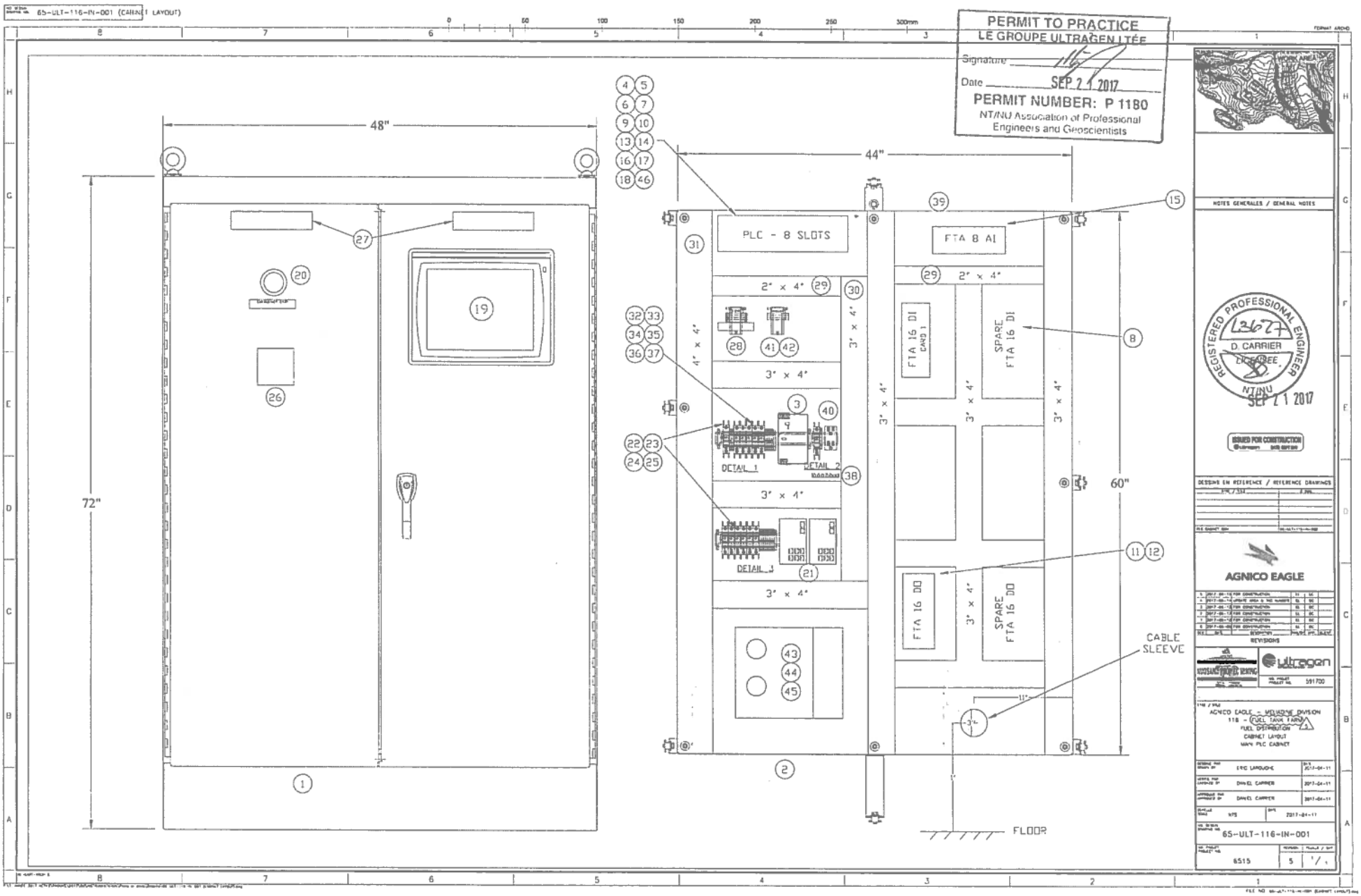
65-ULT-116-IN-001 (CABINET LAYOUT)
PERMIT TO PRACTICE
LE GROUPE ULTRAGEN LTÉE
Signature
Date SEP 2 1 2017
PERMIT NUMBER: P 1180
NT/NU Association of Professional Engineers and Geoscientists
48"
72"
44"
60"
PLC - 8 SLOTS
FTA 8 AI
2" x 4"
3" x 4"
4" x 4"
FTA 16 DI
SPARE FTA 16 DI
FTA 16 DO
SPARE FTA 16 DO
DETAIL 1
DETAIL 2
DETAIL 3
CABLE SLEEVE
FLOOR
NOTES GENERALES / GENERAL NOTES
REGISTERED PROFESSIONAL ENGINEER
12677
D. CARRIER
LICENSEE
NT/NU
SEP 2 1 2017
ISSUED FOR CONSTRUCTION
DESSINS EN REFERENCE / REFERENCE DRAWINGS
AGNICO EAGLE
REVISIONS
ultragen
AGNICO EAGLE - MEADOWBANK DIVISION
118 - FUEL TANK FARM
FUEL DISTRIBUTION
CABINET LAYOUT
MAIN PLC CABINET
ERIC LAROUCHE
DANIEL CARRIER
DANIEL CARRIER
2017-04-11
NTS
65-ULT-116-IN-001
6515
5

65-ULT-116-IN-002 (BOM)

ITEM	QUANTITY	DESCRIPTION	MANUFACTURER	MODEL
1	1	CABINET 72H, 48W, 24D NEMA 12 WITH BASE FREESTANDING	Hammond	1418ZW24
2	1	INNER MOUNTING PANEL FOR CABINET	Hammond	72ZWFW
3	1	POWER SUPPLY 24VDC 5 AMP	Schneider	ABL8RPS24050
4	1	BACKPLANE 8 SLOTS	Schneider	BMEXBP0800
5	1	POWER SUPPLY PLC	Schneider	BMXCPS3500
6	1	PLC PROCESSOR	Schneider	BMEP582040
7	1	32 DIGITAL INPUT PLC CARD	Schneider	BMXDDI3202K
8	1	FTA 16 DIGITAL INPUT	Schneider	ABE7S16E2F0
9	1	CABLE 3 METERS FOR DIGITAL INPUT CARD	Schneider	BMXFCC303
10	1	32 DIGITAL OUTPUT PLC CARD	Schneider	BMXDDO3202K
11	1	FTA 16 DIGITAL OUTPUT	Schneider	ABE7R16T210
12	16	RELAY FOR DIGITAL OUTPUT CARD	Schneider	ABR7S21
13	1	CABLE 3 METERS FOR DIGITAL OUTPUT	Schneider	BMXFCC303
14	1	8 ANALOG INPUT PLC CARD	Schneider	BMXAMI0810
15	1	FTA 8 ANALOG INPUT	Schneider	ABE7CPA31
16	1	CABLE 1.5METERS FOR ANALOG INPUT	Schneider	BMXFTA150
17	0	HIGH SPEED COUNTER MODULE	Schneider	BMXEHC0800
18	0	REMOVABLE CAGE CLAMP	Schneider	BMXFTB2000
19	1	PANEL VIEW HMI 15 INCH 24VDC WITH PREMIUM BOX	Schneider	HMIDT732 / HMIG3U
20	1	PANEL MOUNTED BUTTON	Schneider	XB4BS8444
21	2	ETHERNET TCP/IP SWITCH - 6 COPPER / 1 FIBER	Schneider	TCSESM083F1CS0
22	10	120VAC/24VDC CIRCUIT BREAKER 2A	Schneider	GB2CB07
23	1	120VAC/24VDC CIRCUIT BREAKER 5A	Schneider	GB2CB10
24	1	120VAC/24VDC CIRCUIT BREAKER 15A	Schneider	GB2CB21
25	1	120VAC/24VDC CIRCUIT BREAKER 20A	Schneider	GB2CB22
26	1	RED LAMICOID WITH WHITE LETTERS - 4" x 4"	65-ULT-116-IN-004 FOR DETAIL	-
27	2	WHITE LAMICOID WITH BLACK LETTERS - 2" x 9"	65-ULT-116-IN-004 FOR DETAIL	-
28	1	SAFETY RELAY FOR EMERGENCY STOP 120Vac	Allen-Bradley	440R-N23125
29	1	RACEWAY INSIDE CABINET 2" x 4", 6 FEET LENGTH	Panduit	G2X4LG6
30	2	RACEWAY INSIDE CABINET 3" x 4", 6 FEET LENGTH	Panduit	G3X4LG6
31	3	RACEWAY INSIDE CABINET 4" x 4", 6 FEET LENGTH	Panduit	G4X4LG6
32	1	TS-35 DIN MOUNTING RAIL, 7.5MM, 2 METERS LONG	Weidmuller	514500000
33	12	RAIL SUPPORT 1"	Weidmuller	7924270030
34	12	END COVER FOR TS-35	Weidmuller	38356
35	6	GROUP MARKER CARRIER	Weidmuller	29246
36	25	TERMINAL BLOCK WDU 4	Weidmuller	102010
37	50	MARKER	Weidmuller	051796/150772/051530
38	1	GROUNDING BAR 7 TERMINALS	Schneider	PK7GTA
39	1	120V FLUORESCENT CABINET LIGHT	Schneider	NSYLAMCU
40	1	120V 15A OUTLET DIN RAIL	Allen-Bradley	1492-REC15G
41	0	TERMINAL BLOCK 12VDC RELAY	Weidmuller	112275
42	3	TERMINAL BLOCK 120Vac RELAY	Weidmuller	112283
43	1	FIBER OPTIC PATCH PANEL 24 FIBERS	Panduit	FWME2
44	2	LC DUPLEX SINGLE MODE ADAPTER (12 FIBERS)	Panduit	FAP12WBUDLCZ
45	2	FIBER OPTIC PATCH CORD LC TO SC	Panduit	F92ERLNSNSNM002
46	1	ETHERNET MODULE M580 - 3 SUBNETS	Schneider	BMENOC0321

PERMIT TO PRACTICE
LE GROUPE ULTRAGEN LTÉE
Signature
Date SEP 2 1 2017
PERMIT NUMBER: P 1180
NT/NU Association of Professional Engineers and Geoscientists

REGISTERED PROFESSIONAL ENGINEER
13627
D. CARRIER
LICENSEE
NT/NU
SEP 2 1 2017



NOTES GENERALES / GENERAL NOTES

ISSUED FOR CONSTRUCTION

DESSINS EN REFERENCE / REFERENCE DRAWINGS

AGNICO EAGLE

REVISIONS

ultragen

AGNICO EAGLE – MEADOWE DIVISION
116 – FUEL TANK FARM
FUEL DISTRIBUTION
BILL OF MATERIAL
MAIN PLC CABINET

65-ULT-116-IN-002

6515 | 5 | 1/1

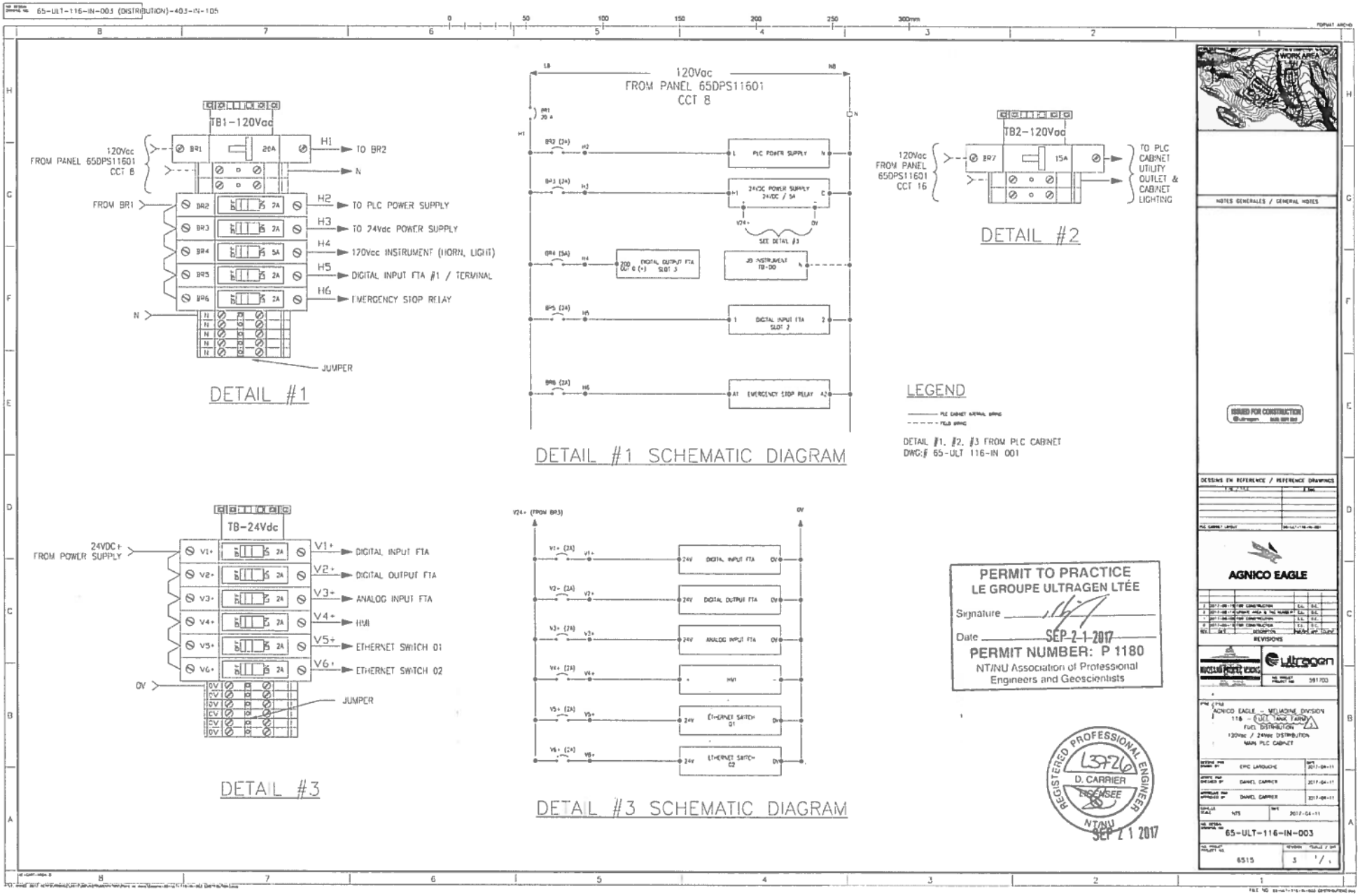

65-ULT-116-IN-003 (DISTRIBUTION)-403-IN-105
TB1-120Vac
120Vac FROM PANEL 65DPS11601 CCT 8
FROM BR1
H1 TO BR2
N
H2 TO PLC POWER SUPPLY
H3 TO 24Vdc POWER SUPPLY
H4 120Vac INSTRUMENT (HORN, LIGHT)
H5 DIGITAL INPUT FTA #1 / TERMINAL
H6 EMERGENCY STOP RELAY
JUMPER
DETAIL #1
120Vac FROM PANEL 65DPS11601 CCT 8
PLC POWER SUPPLY
24VDC POWER SUPPLY 24VDC / 5A
SEE DETAIL #3
DIGITAL OUTPUT FTA SLOT 3
JB INSTRUMENT TB-00
DIGITAL INPUT FTA SLOT 2
EMERGENCY STOP RELAY
DETAIL #1 SCHEMATIC DIAGRAM
TB2-120Vac
120Vac FROM PANEL 65DPS11601 CCT 16
TO PLC CABINET UTILITY OUTLET & CABINET LIGHTING
DETAIL #2
LEGEND
PLC CABINET INTERNAL WIRING
FIELD WIRING
DETAIL #1, #2, #3 FROM PLC CABINET
DWG:# 65-ULT 116-IN 001
TB-24Vdc
24VDC+ FROM POWER SUPPLY
V1+ DIGITAL INPUT FTA
V2+ DIGITAL OUTPUT FTA
V3+ ANALOG INPUT FTA
V4+ HMI
V5+ ETHERNET SWITCH 01
V6+ ETHERNET SWITCH 02
0V
JUMPER
DETAIL #3
V24+ (FROM BR3)
DIGITAL INPUT FTA
DIGITAL OUTPUT FTA
ANALOG INPUT FTA
HMI
ETHERNET SWITCH 01
ETHERNET SWITCH 02
DETAIL #3 SCHEMATIC DIAGRAM
PERMIT TO PRACTICE
LE GROUPE ULTRAGEN LTÉE
Signature
Date SEP 2 1 2017
PERMIT NUMBER: P 1180
NT/NU Association of Professional Engineers and Geoscientists
REGISTERED PROFESSIONAL ENGINEER
D. CARRIER
LICENSEE
NT/NU
SEP 2 1 2017
WORK AREA
NOTES GENERALES / GENERAL NOTES
ISSUED FOR CONSTRUCTION
DESSINS EN REFERENCE / REFERENCE DRAWINGS
AGNICO EAGLE
REVISIONS
ultragen
591700
AGNICO EAGLE - MELIADINE DIVISION
116 - FUEL TANK FARM
FUEL DISTRIBUTION
120Vac / 24Vdc DISTRIBUTION
MAIN PLC CABINET
ERIC LAROUCHE
DANIEL CARRIER
DANIEL CARRIER
NTS
2017-04-11
65-ULT-116-IN-003
6515
3

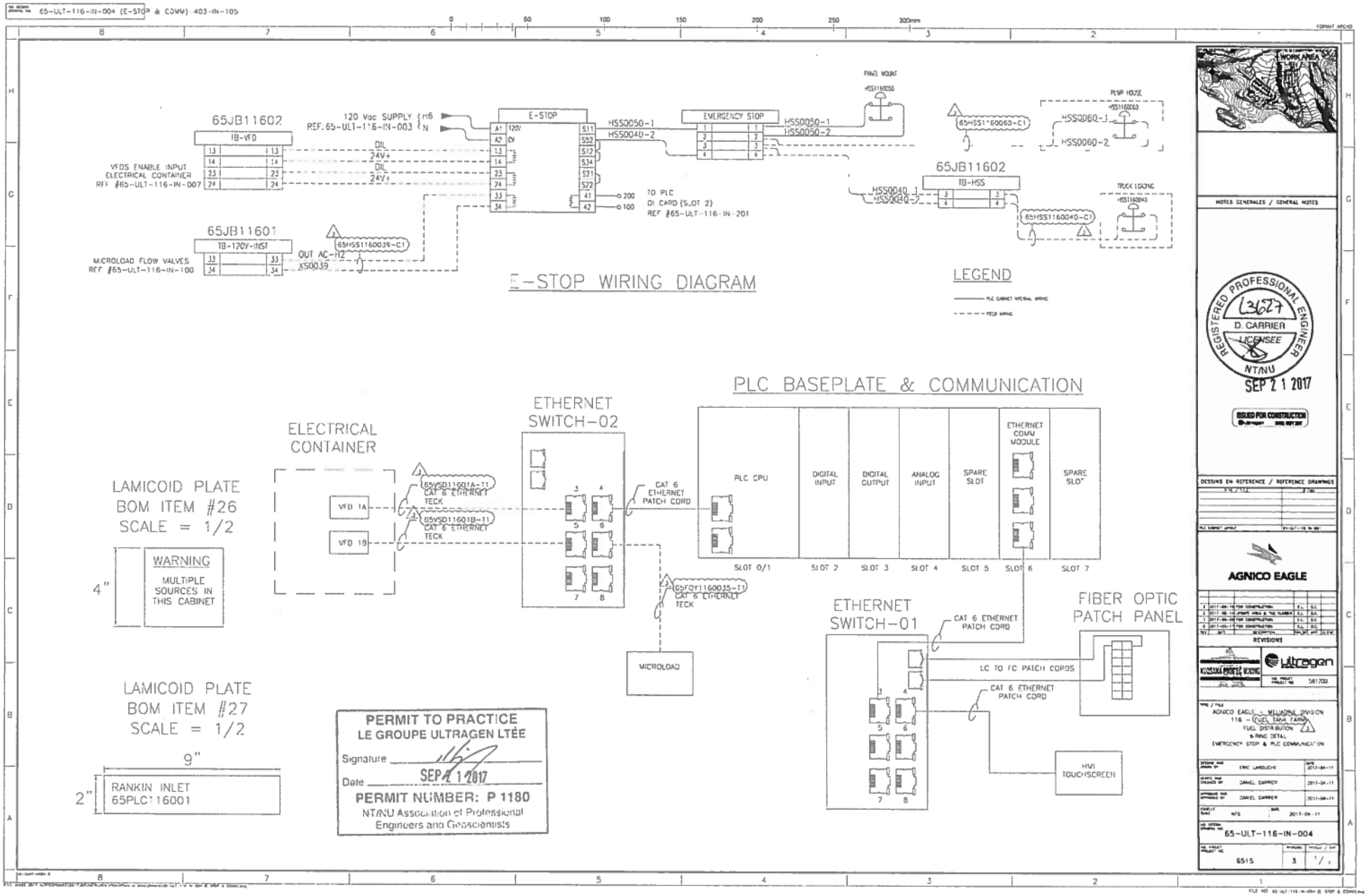
65-ULT-116-IN-004 (E-STOP & COMM) 403-IN-105
65JB11602
TB-VFD
VFDS ENABLE INPUT
ELECTRICAL CONTAINER
REF #65-ULT-116-IN-007
120 Vac SUPPLY
REF. 65-ULT-116-IN-003
E-STOP
HSS0050-1
HSS0040-2
EMERGENCY STOP
HSS0050-1
HSS0050-2
PANEL MOUNT
65HSS1160060-C1
PUMP HOUSE
HSS0060-1
HSS0060-2
65JB11602
TB-HSS
HSS0040-1
HSS0040-2
65HSS1160040-C1
TRUCK LOADING
65JB11601
TB-120V-INST
MICROLOAD FLOW VALVES
REF #65-ULT-116-IN-100
OUT AC-H2
XS0039
65HSS1160039-C1
TO PLC
DI CARD (SLOT 2)
REF #65-ULT-116-IN-201
E-STOP WIRING DIAGRAM
LEGEND
PLC CABINET INTERNAL WIRING
FIELD WIRING
PLC BASEPLATE & COMMUNICATION
ELECTRICAL CONTAINER
VFD 1A
VFD 1B
65VSD11601A-T1
CAT 6 ETHERNET TECK
65VSD11601B-T1
CAT 6 ETHERNET TECK
ETHERNET SWITCH-02
CAT 6 ETHERNET PATCH CORD
65FQY1160035-T1
CAT 6 ETHERNET TECK
MICROLOAD
PLC CPU
DIGITAL INPUT
DIGITAL OUTPUT
ANALOG INPUT
SPARE SLOT
ETHERNET COMM MODULE
SPARE SLOT
SLOT 0/1
SLOT 2
SLOT 3
SLOT 4
SLOT 5
SLOT 6
SLOT 7
ETHERNET SWITCH-01
CAT 6 ETHERNET PATCH CORD
LC TO FC PATCH CORDS
CAT 6 ETHERNET PATCH CORD
FIBER OPTIC PATCH PANEL
HMI TOUCHSCREEN
LAMICOID PLATE
BOM ITEM #26
SCALE = 1/2
WARNING
MULTIPLE SOURCES IN THIS CABINET
4"
LAMICOID PLATE
BOM ITEM #27
SCALE = 1/2
9"
2"
RANKIN INLET
65PLC116001
PERMIT TO PRACTICE
LE GROUPE ULTRAGEN LTÉE
Signature
Date SEP 21 2017
PERMIT NUMBER: P 1180
NT/NU Association of Professional Engineers and Geoscientists
WORK AREA
NOTES GENERALES / GENERAL NOTES
REGISTERED PROFESSIONAL ENGINEER
D. CARRIER
LICENSEE
NT/NU
SEP 21 2017
ISSUED FOR CONSTRUCTION
DESSINS EN REFERENCE / REFERENCE DRAWINGS
AGNICO EAGLE
REVISIONS
Ultragen
AGNICO EAGLE - MELIADINE DIVISION
116 - FUEL TANK FARM
FUEL DISTRIBUTION
WIRING DETAIL
EMERGENCY STOP & PLC COMMUNICATION
ERIC LARDUCHE
DANIEL CARRIER
DANIEL CARRIER
65-ULT-116-IN-004
6515
3
1/1

65-ULT 116 IN 005 (JB INST LAYOUT)

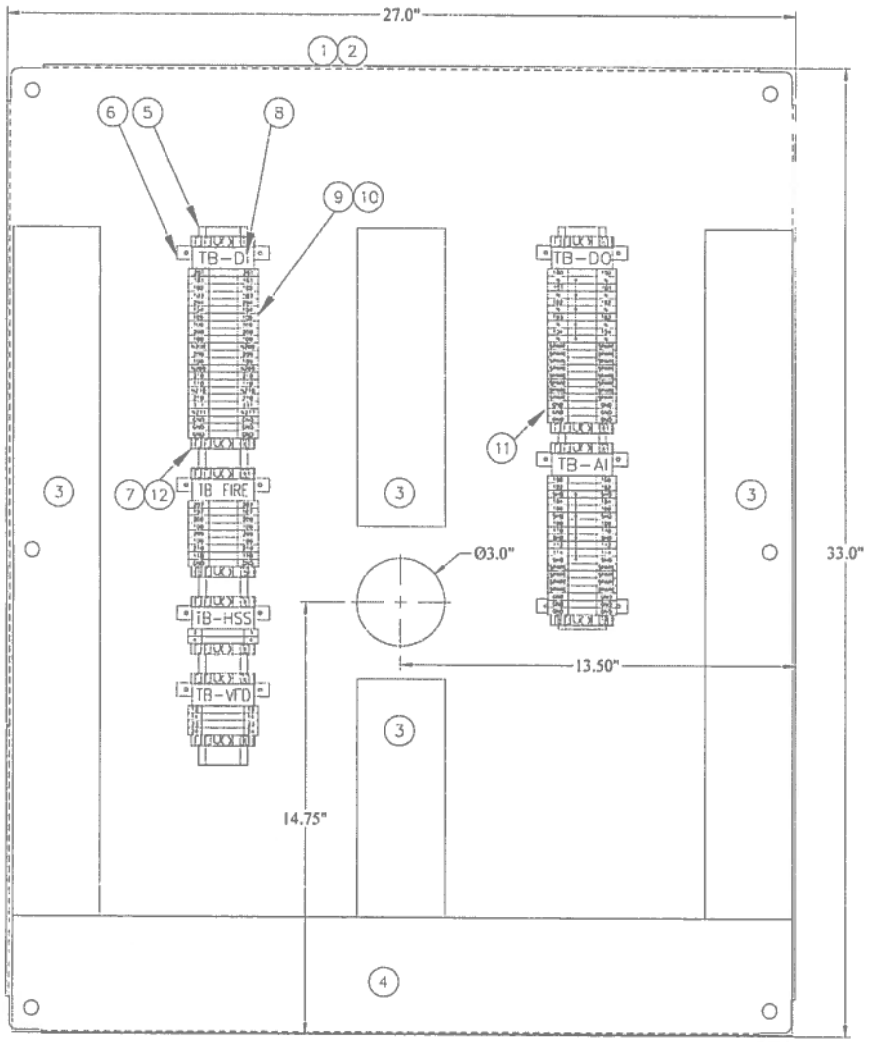

ITEM	QUANTITY PORTAB. #3	DESCRIPTION	MANUFACTURER	MODEL
1	1	WALLMOUNT ENCLOSURE 30H, 30W 8D TYPE 4X ALUMINUM	Hammond	1418N4ALM8
2	1	INNER MOUNTING PANEL FOR ENCLOSURE	Hammond	INCLUDED (ITEM 1)
3	1	RACEWAY INSIDE CABINET 3" x 4" 6 FEET LENGTH	Panduit	G3X4LG6
4	1	RACEWAY INSIDE CABINET 4" x 4" 6 FEET LENGTH	Panduit	G4X4LG6
5	1	TS-35 DIN MOUNTING RAIL, 7.5MM, 2 METERS LONG	Weidmuller	514500000
6	7	RAIL SUPPORT 1"	Weidmuller	7924270030
7	10	END COVER FOR TS-35	Weidmuller	38356
8	6	GROUP MARKER CARRIER	Weidmuller	29246
9	72	TERMINAL BLOCK WDU 4	Weidmuller	102010
10	144	MARKER	Weidmuller	051790/160772/051530
11	10	GROUND TERMINAL YELLOW/GREEN	Weidmuller	10101
12	6	END PLATE	Weidmuller	10500

PERMIT TO PRACTICE
LE GROUPE ULTRAGEN LTÉE
Signature
Date SEP 2 1 2017
PERMIT NUMBER: P 1180
NT/NU Association of Professional Engineers and Geoscientists

REGISTERED PROFESSIONAL ENGINEER
13627
D. CARRIER
LICENSEE
NT/NU
SEP 2 1 2017



NOTES GENERALES / GENERAL NOTES

ISSUED FOR CONSTRUCTION

DESSINS EN REFERENCE / REFERENCE DRAWINGS

TB-DI INTERCONNECTION	65-ULT-116-IN-201
TB-DO INTERCONNECTION	65-ULT-116-IN-200
TB-FIRE INTERCONNECTION	65-ULT-116-IN-200
TB-VFD INTERCONNECTION	65-ULT-116-IN-007
TB-HSS INTERCONNECTION	65-ULT-116-IN-004
TB-AI INTERCONNECTION	65-ULT-116-IN-202

AGNICO EAGLE

NO.	DATE	DESCRIPTION	DRAWN BY	APP.	CLIENT
4	2017-10-16	FOR CONSTRUCTION	GL	DC	
2	2017-09-19	UPDATE AREA & TAG NUMBER	GL	DC	
1	2017-06-06	FOR CONSTRUCTION	GL	DC	
0	2017-05-15	FOR CONSTRUCTION	GL	DC	

REVISIONS

ULTRAGEN

NO. PROJET PROJECT NO. 591700

TITLE / TITLE
AGNICO EAGLE – MELIADINE DIVISION
116 – FUEL TANK FARM
FUEL DISTRIBUTION
JUNCTION BOX INSTRUMENTATION
65J0116C2

DESSINÉ PAR / DRAWN BY	ERIC LAROUCHE	DATE 2017-04-19
DÉCRIT PAR / CHECKED BY	DANIEL CARRIER	2017-04-19
APPROUVÉ PAR / APPROVED BY	DANIEL CARRIER	2017-04-19
ÉCHELLE / SCALE	NTS	DATE 2017-04-19

NO. DESSIN / DRAWING NO. 65-ULT-116-IN-005

NO. PROJET / PROJECT NO.	REVISION	FEUILLE / SHT
6515	3	1/1

65-ULT-116-IN-006 (JB 120V LAYOUT)

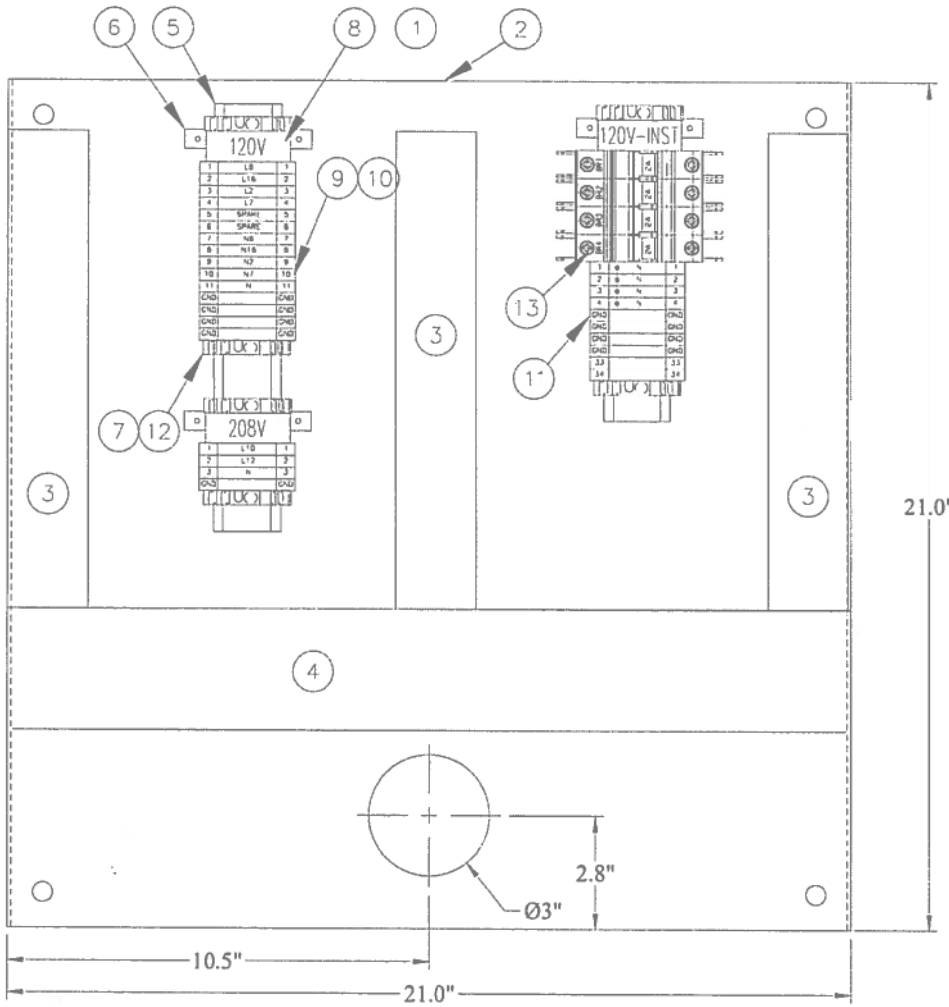

ITEM	QUANTITY	DESCRIPTION	MANUFACTURER	MODEL
1	1	WALLMOUNT ENCLOSURE 24H, 24W, 8D TYPE 4X ALUMINUM	Hammond	1418N4ALJB
2	1	INNER MOUNTING PANEL FOR ENCLOSURE	Hammond	INCLUDED (ITEM 1)
3	1	RACEWAY INSIDE CABINET 2" x 4" 6 FEET LENGTH	Panduit	G2X4LQ6
4	1	RACEWAY INSIDE CABINET 3" x 4" 6 FEET LENGTH	Panduit	G3X4LQ6
5	1	TS-35 DIN MOUNTING RAIL, 7.5MM, 2 METERS LONG	Weidmuller	514500000
6	6	RAIL SUPPORT 1"	Weidmuller	7824270030
7	8	END BRACKET FOR TS-35	Weidmuller	38356
8	3	GROUP MARKER CARRIER	Weidmuller	29246
9	24	TERMINAL BLOCK WDU 6	Weidmuller	10202
10	48	MARKER	Weidmuller	051796/160772/051530
11	9	GROUND TERMINAL YELLOW/GRE N	Weidmuller	10102
12	3	END PLATE	Weidmuller	10500
13	4	120VAC/DVDC CIRCUIT BREAKER 2A	Schneider	GB2CB07

PERMIT TO PRACTICE
LE GROUPE ULTRAGEN LTÉE
Signature
Date SEP 21 2017
PERMIT NUMBER: P 1180
NT/NU Association of Professional Engineers and Geoscientists

REGISTERED PROFESSIONAL ENGINEER
13627
D CARRIER
LICENSEE
NT/NU
SEP 21 2017

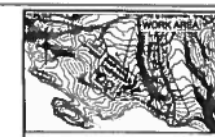

NOTES GENERALES / GENERAL NOTES

ISSUED FOR CONSTRUCTION

DESSINS EN REFERENCE / REFERENCE DRAWINGS

AGNICO EAGLE

REVISIONS

ultragen

NO. PROJET / PROJECT NO. 591700

TITLE / TITLE
AGNICO EAGLE – MELIADINE DIVISION
116 – FUEL TANK FARM
FUEL DISTRIBUTION
JUNCTION BOX 120V
65JN11601

DESSINÉ PAR / DRAWN BY	ERIC LAROUCHE	DATE 2017-04-19
DÉCRIT PAR / CHECKED BY	DANIEL CARRIER	2017-04-19
APPROUVÉ PAR / APPROVED BY	DANIEL CARRIER	2017-04-19
ÉCHELLE / SCALE	NTS	DATE 2017-04-19

NO. DESSIN / DRAWING NO. 65-ULT-116-IN-006

NO. PROJET / PROJECT NO. 6515 — REVISION 3 — FEUILLE / SHEET 1/1

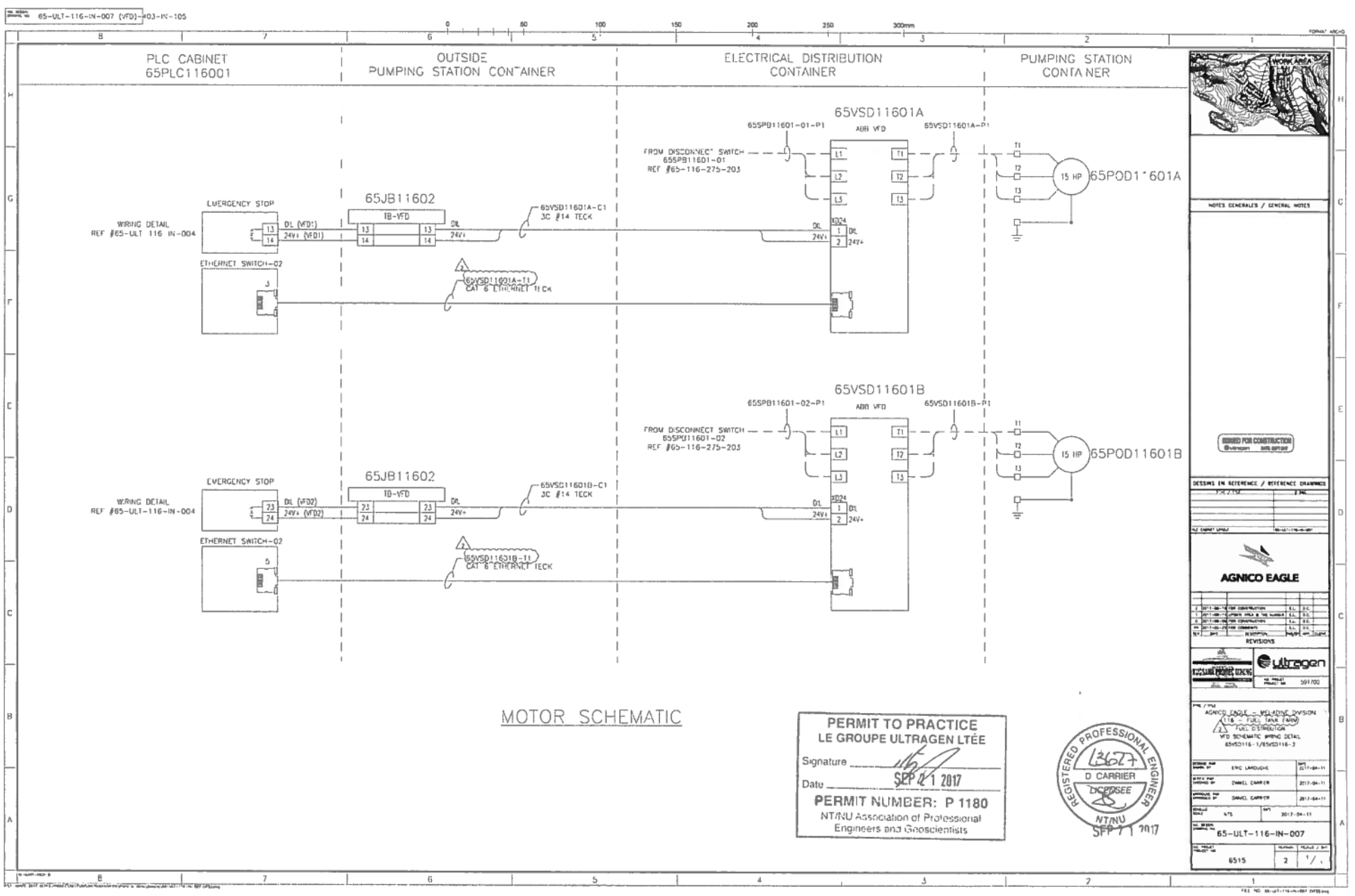

MOTOR SCHEMATIC

PERMIT TO PRACTICE
LE GROUPE ULTRAGEN LTÉE
Signature
Date SEP 21 2017
PERMIT NUMBER: P 1180
NT/NU Association of Professional Engineers and Geoscientists

REGISTERED PROFESSIONAL ENGINEER
13627
D CARRIER
LICENSEE
NT/NU
SEP 21 2017

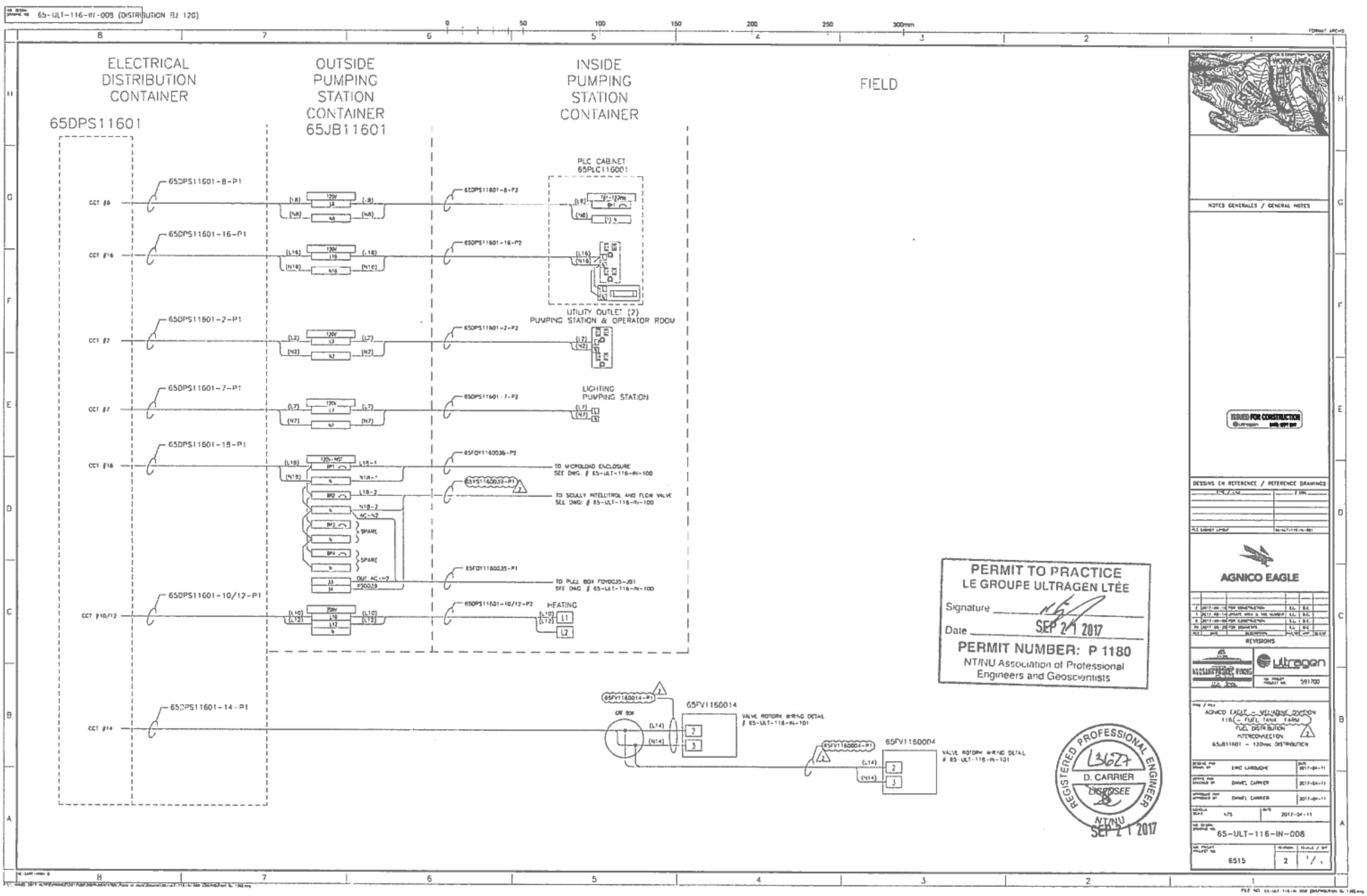

PERMIT TO PRACTICE
LE GROUPE ULTRAGEN LTÉE
Signature
Date SEP 21 2017
PERMIT NUMBER: P 1180
NT/NU Association of Professional Engineers and Geoscientists

REGISTERED PROFESSIONAL ENGINEER
13674
D. CARRIER
DISPOSEE
NT/NU
SEP 21 2017

65-ULT-116-IN-009

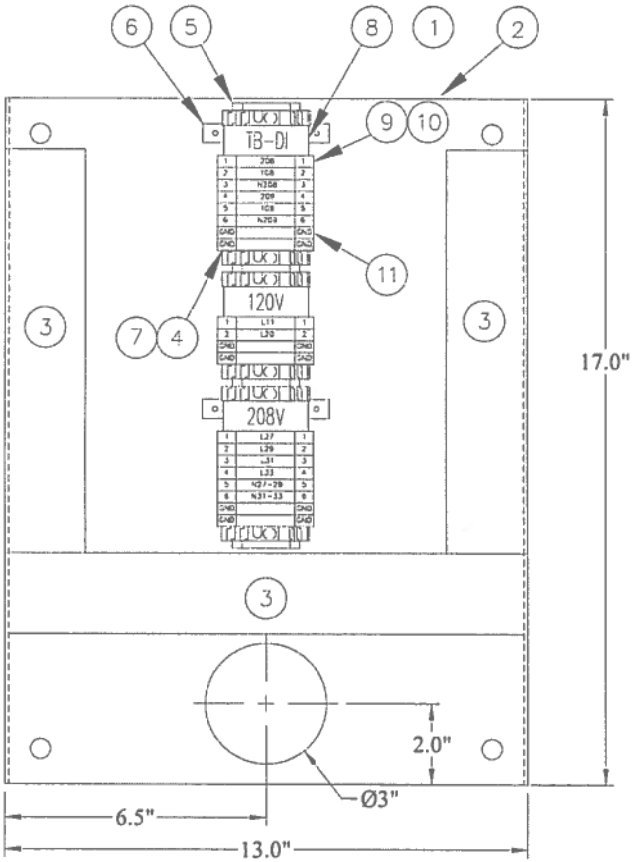

ITEM	QUANTITY	DESCRIPTION	MANUFACTURER	MODEL
1	1	WALL MOUNT ENCLOSURE 30H, 16W, 6D TYPE 4X ALUMINUM	Hammond	1418N4ALJB
2	1	INNER MOUNTING PANEL FOR ENCLOSURE	Hammond	INCLUDED (ITEM 1)
3	1	RACEWAY INSIDE CABINET 2" x 4" 6 FEET LENGTH	Panduit	G2X4LG6
4	3	END PLATE	Weidmuller	12500
5	1	TS-35 DIN MOUNTING RAIL, 7.5MM 2 METERS LONG	Weidmuller	8145000000
6	6	RAIL SUPPORT 1"	Weidmuller	7934270000
7	6	END BRACKET FOR TS-35	Weidmuller	36358
8	3	GROUP MARKER CARRIER	Weidmuller	29046
9	14	TERMINAL BLOCK WDU 6	Weidmuller	10222
10	28	MARKER	0511796/1607732051530	
11	6	GROUND TERMINAL YELLOW/GREEN	Weidmuller	10122



NOTES GENERALES / GENERAL NOTES

ISSUED FOR CONSTRUCTION

DESSINS DE REFERENCE / REFERENCE DRAWINGS

JUNCTION BOX - INTERCONNECTION	65-ULT-116-IN-010
FUEL TANK LEVEL DETECTION BY	65-ULT-116-IN-011

AGNICO EAGLE

NO	DATE	DESCRIPTION	PROJ'D	CHK'D & APP'D
2	2016-08-10	FOR CONSTRUCTION	KT	BE
1	2017-08-10	UPDATE AS-BUILT AS PER SUPPLIER	NS	BE
B	2017-03-10	ISSUED FOR CONSTRUCTION	NS	BE
A	2017-08-11	ISSUED FOR REVIEW	BS	BE

REVISIONS

ultragen

NO. PROJET / PROJECT NO. 561703

MINE / SITE
AGNICO EAGLE – MEADOWBANK DIVISION
116 – FUEL TANK FARM
FUEL DISTRIBUTION
RANKIN INLET FILTRATION CONTAINER TANK #1
JUNCTION BOX 120-208V – LAYOUT
6SJ811603

DESSINE PAR / DRAWN BY	STEPHANE GRENIER	2017-08-13
VERIFIE PAR / CHECKED BY	GERMAIN GAGNON	2017-08-13
APPROUVE PAR / APPROVED BY	DANIEL CARRIER	2017-08-13
ECHELLE / SCALE	N/S	DATE 2017-08-13

NO. DESSIN / DRAWING NO. 65-ULT-116-IN-009

NO. PROJET / PROJECT NO. 6515 | REVISION 2 | FEUILLE / SHT '/.

PERMIT TO PRACTICE
LE GROUPE ULTRAGEN LTÉE
Signature
Date SEP 2 1 2017
PERMIT NUMBER: P 1180
NT/NU Association of Professional Engineers and Geoscientists

REGISTERED PROFESSIONAL ENGINEER
13674
D CARRIER
LICENSEE
NT/NU
SEP 2 1 2017

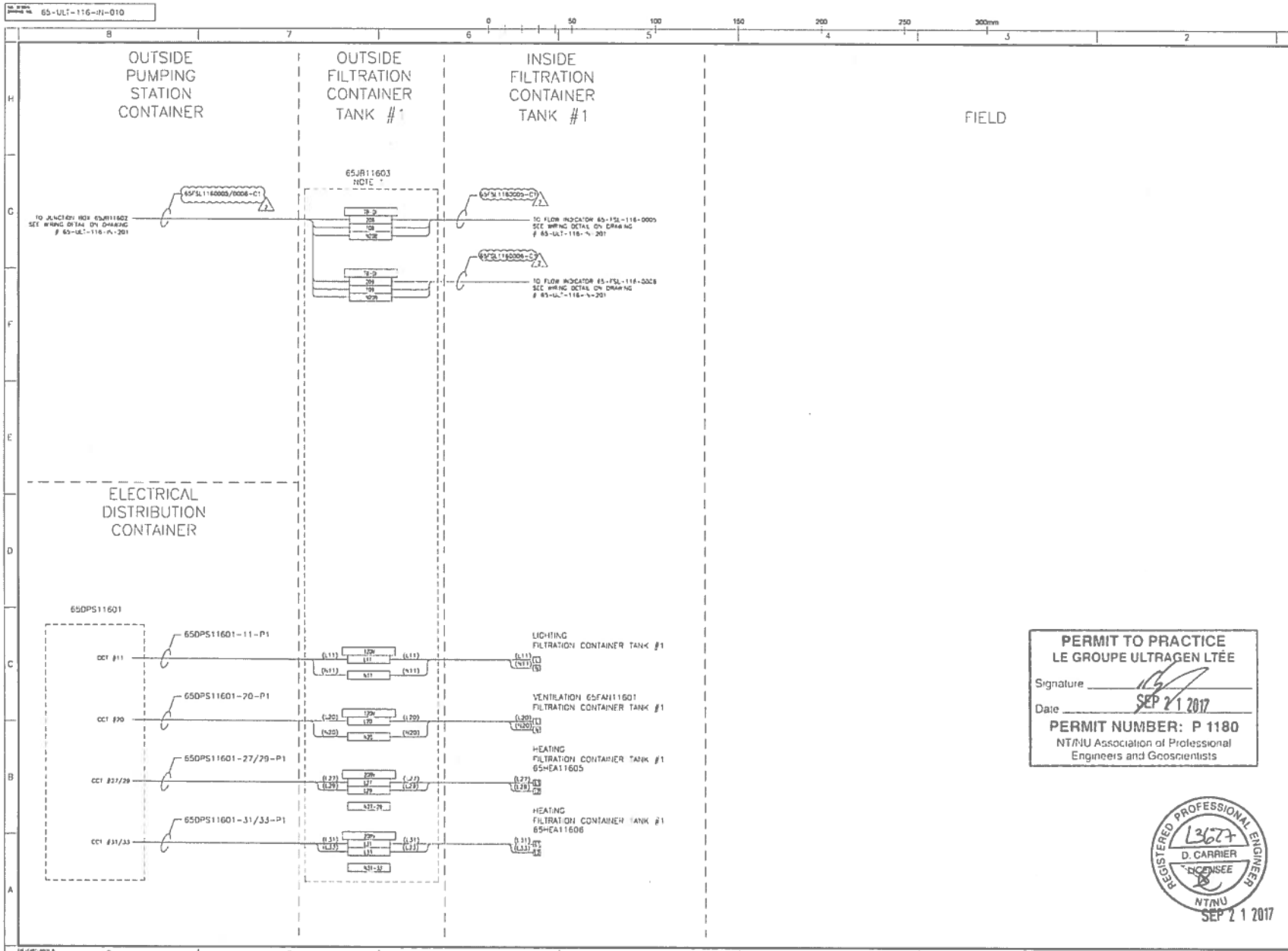

PERMIT TO PRACTICE
LE GROUPE ULTRAGEN LTÉE
Signature
Date SEP 2 1 2017
PERMIT NUMBER: P 1180
NT/NU Association of Professional Engineers and Geoscientists

REGISTERED PROFESSIONAL ENGINEER
L3627
D. CARRIER
LICENSEE
NT/NU
SEP 2 1 2017

NOTES GENERALES / GENERAL NOTES

1 FOR THE TB-01 TERMINAL IN JUNCTION BOX 65JB11603 SEE WIRING DETAIL ON DRAWING # 65-ULT-116-IN-201

ISSUED FOR CONSTRUCTION

DESSINS EN REFERENCE / REFERENCE DRAWINGS

AGNICO EAGLE

REVISIONS

ultragen

591700

AGNICO EAGLE – MELIADINE DIVISION
116 – FUEL TANK FARM
FUEL DISTRIBUTION
RANKIN INLET FILTRATION CONTAINER TANK #1
JUNCTION BOX 120-208V – INTERCONNECTION
65JB11603

DESSINÉ PAR / DRAWN BY	STEPHANE GRIMARD	2017-06-13
VÉRIFIÉ PAR / CHECKED BY	GERMAIN GAGNON	2017-06-13
APPROUVÉ PAR / APPROVED BY	DANIEL CARRIER	2017-06-13
SCHÉMA / SCALE	NTS	2017-06-13

65-ULT-116-IN-010

6515 | 2 | 1/1

65-ULT-116-IN-011

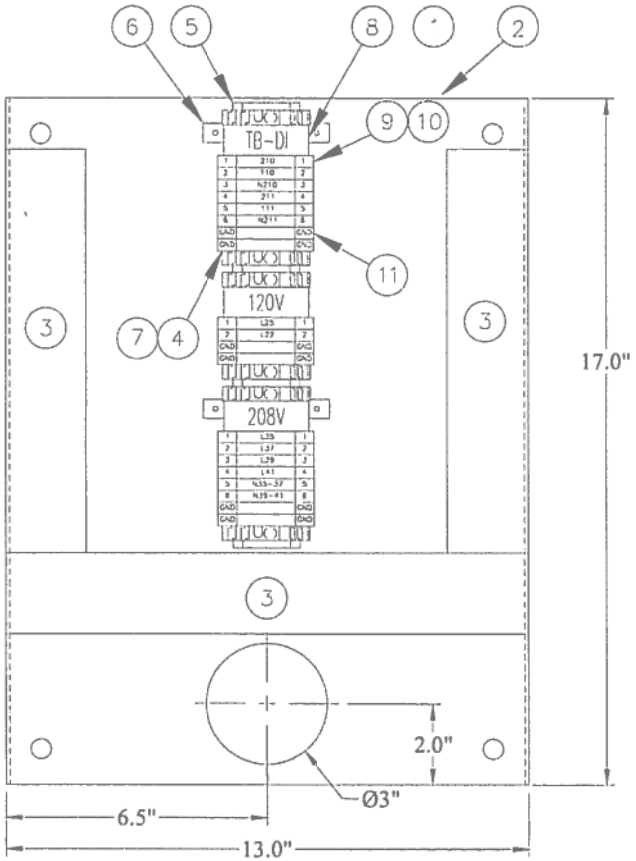

ITEM	QUANTITY	DESCRIPTION	MANUFACTURER	MODEL
1	1	WALLMOUNT ENCLOSURE 20H, 16W 6D TYPE 4X ALUMINUM	Hammond	1418N4ALJB
2	1	INNER MOUNTING PANEL FOR ENCLOSURE	Hammond	INCLUDED (ITEM 1)
3	1	RACEWAY INSIDE CABINET 2" x 4" 6 FEET LENGTH	Panduit	G2X4LG6
4	3	END PLATE	Weidmuller	10500
5	1	TS-35 DIN MOUNTING RAIL, 7.5MM, 2 METERS LONG	Weidmuller	0145000000
6	6	RAIL SUPPORT 1"	Weidmuller	7824270030
7	6	END BRACKET FOR TS-35	Weidmuller	38356
8	3	GROUP MARKER CARRIER	Weidmuller	29346
9	14	TERMINAL BLOCK WDU 6	Weidmuller	10302
10	29	MARKER	0517961607739651530	
11	6	GROUND TERMINAL YELLOWGREEN	Weidmuller	10122

PERMIT TO PRACTICE
LE GROUPE ULTRAGEN LTÉE
Signature
Date SEP 2 1 2017
PERMIT NUMBER: P 1180
NT/NU Association of Professional Engineers and Geoscientists

REGISTERED PROFESSIONAL ENGINEER
L3627
D. CARRIER
LICENSEE
NT/NU
SEP 2 1 2017

NOTES GENERALES / GENERAL NOTES

ISSUED FOR CONSTRUCTION

DESSINS EN RÉFÉRENCE / REFERENCE DRAWINGS

AGNICO EAGLE

REVISIONS

ultragen

AGNICO EAGLE – MEADOWBANK DIVISION
116 – FUEL TANK FARM
FUEL DISTRIBUTION
BANK'N ALET FILTRATION CONTAINER TANK #2
JUNCTION BOX 120-208V – LAYOUT
65J811624

DESSINÉ PAR / DRAWN BY	STEPHANE ORMARO	2017-08-13
VÉRIFIÉ PAR / CHECKED BY	GERMAIN GAGNON	2017-08-13
APPROUVÉ PAR / APPROVED BY	DANIEL CARRIER	2017-08-13
ÉCHELLE / SCALE	NTS	DATE 2017-08-13

65-ULT-116-IN-011

NO. PROJET / PROJECT NO.	RÉVISION	FEUILLE / SHT
6515	2	1 / 1

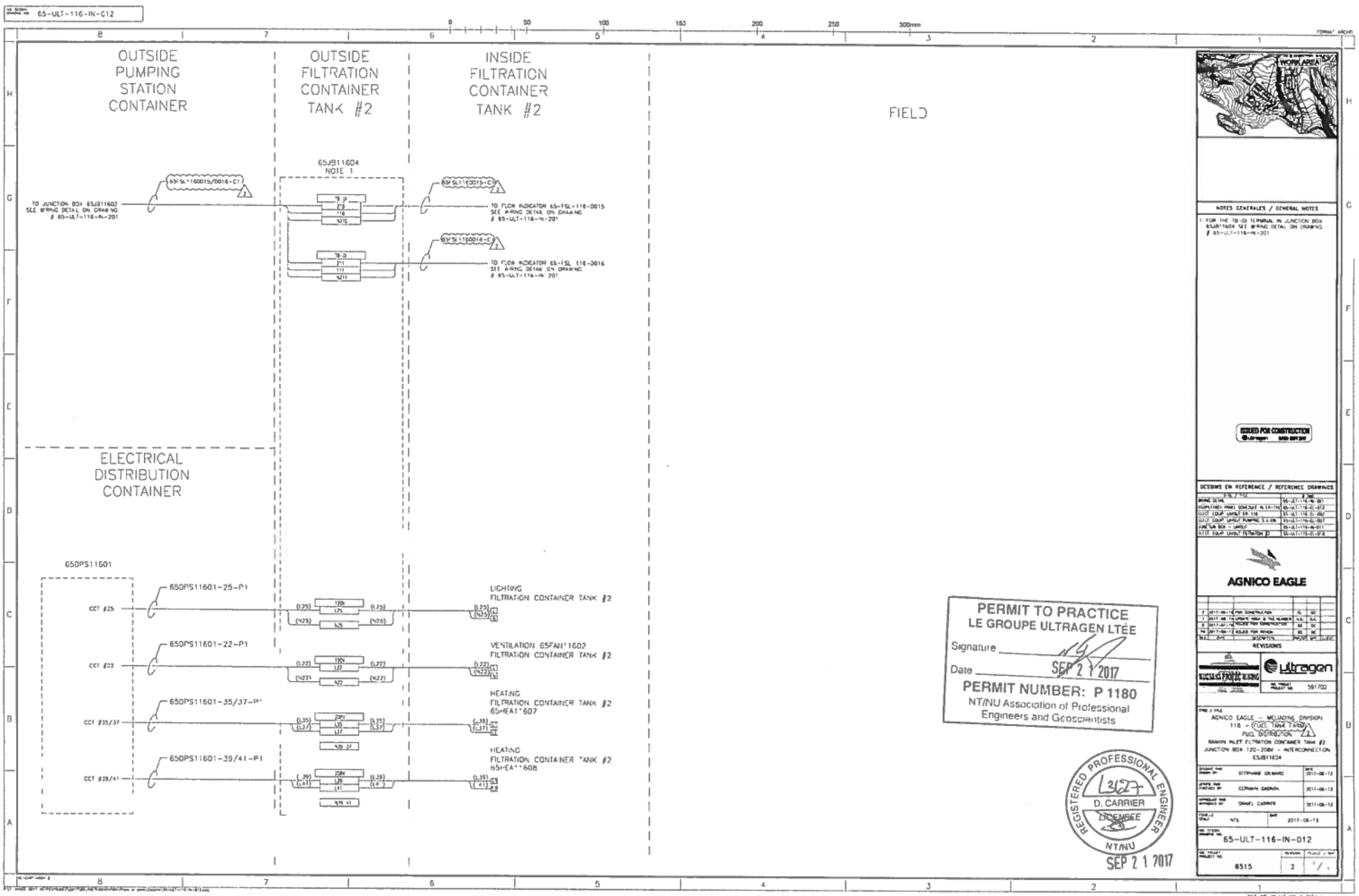
65-ULT-116-IN-C12
OUTSIDE PUMPING STATION CONTAINER
OUTSIDE FILTRATION CONTAINER TANK #2
INSIDE FILTRATION CONTAINER TANK #2
FIELD
65JB11604
NOTE 1
TO JUNCTION BOX 65JB11602
SEE WIRING DETAIL ON DRAWING
65-ULT-116-IN-201
65-SL-116-0015/0016-C1
65-SL-116-0015-C1
TO FLOW INDICATOR 65-FSL-116-0015
SEE WIRING DETAIL ON DRAWING
65-ULT-116-IN-201
65-SL-116-0016-C1
TO FLOW INDICATOR 65-FSL-116-0016
SEE WIRING DETAIL ON DRAWING
65-ULT-116-IN-201
ELECTRICAL DISTRIBUTION CONTAINER
65DPS11601
65DPS11601-25-P1
CCT #25
LIGHTING
FILTRATION CONTAINER TANK #2
65DPS11601-22-P1
CCT #22
VENTILATION 65FAN11602
FILTRATION CONTAINER TANK #2
65DPS11601-35/37-P1
CCT #35/37
HEATING
FILTRATION CONTAINER TANK #2
65HEA11607
65DPS11601-39/41-P1
CCT #39/41
HEATING
FILTRATION CONTAINER TANK #2
65HEA11608
WORK AREA
NOTES GENERALES / GENERAL NOTES
1. FOR THE TB-05 TERMINAL IN JUNCTION BOX 65JB11604 SEE WIRING DETAIL ON DRAWING # 65-ULT-116-IN-201
ISSUED FOR CONSTRUCTION
DESSINS EN REFERENCE / REFERENCE DRAWINGS
AGNICO EAGLE
REVISIONS
PERMIT TO PRACTICE
LE GROUPE ULTRAGEN LTÉE
Signature
Date SEP 2 1 2017
PERMIT NUMBER: P 1180
NT/NU Association of Professional Engineers and Geoscientists
REGISTERED PROFESSIONAL ENGINEER
D. CARRIER
NT/NU
SEP 2 1 2017
Ultragen
AGNICO EAGLE – MEADOWBANK DIVISION
116 – FUEL TANK FARM
FUEL DISTRIBUTION
RANKIN INLET FILTRATION CONTAINER TANK #2
JUNCTION BOX 120-208V – INTERCONNECTION
65JB11604
65-ULT-116-IN-012
6515
2

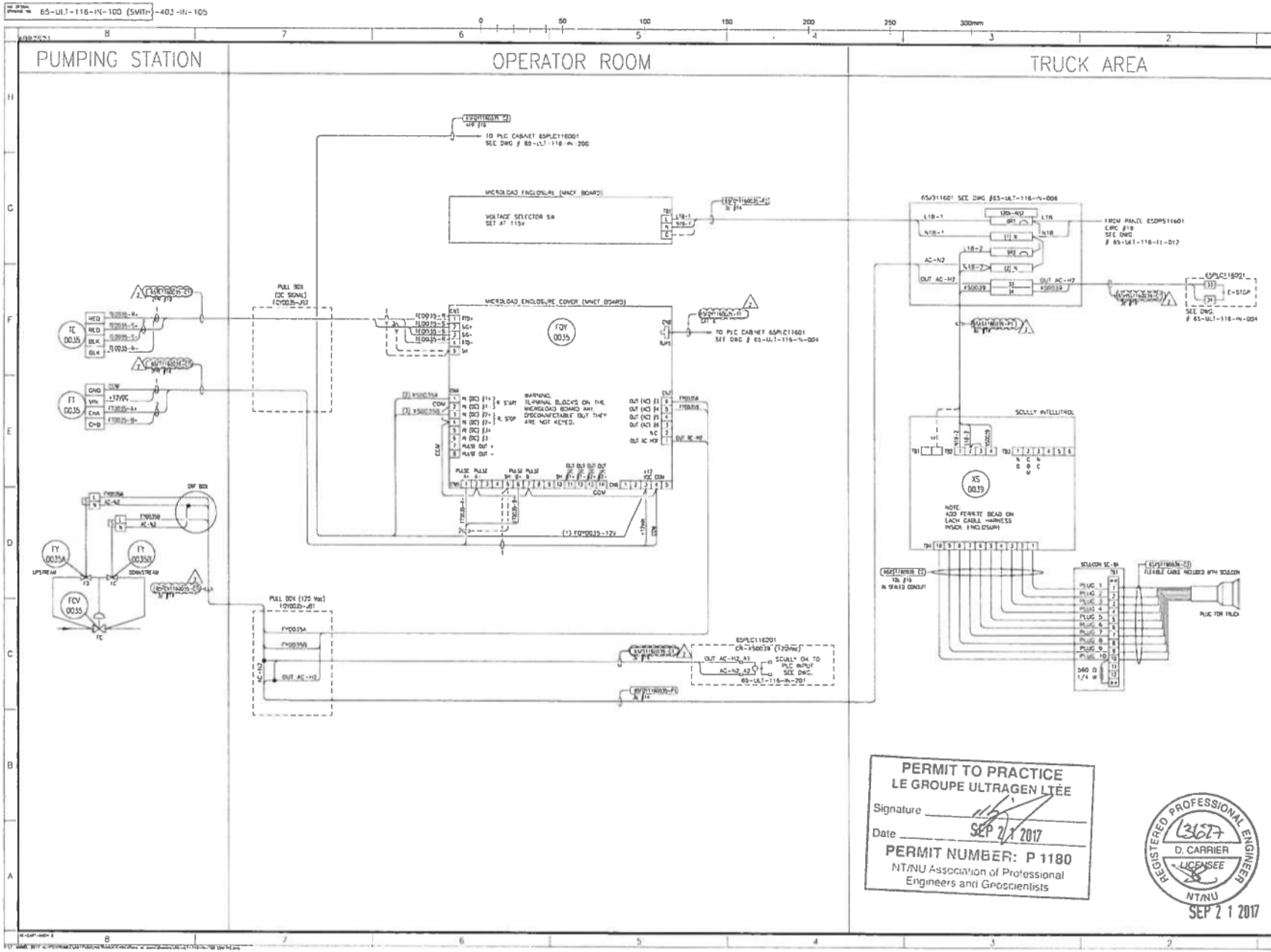

PERMIT TO PRACTICE
LE GROUPE ULTRAGEN LTÉE
Signature
Date SEP 2 1 2017
PERMIT NUMBER: P 1180
NT/NU Association of Professional Engineers and Geoscientists

REGISTERED PROFESSIONAL ENGINEER
13627
D. CARRIER
LICENSEE
NT/NU
SEP 2 1 2017

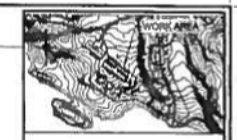

NOTES GENERALES / GENERAL NOTES

NOTES:

1. ALL AC WIRING MUST BE ROUTED INTO MICROLOAD THROUGH THE KNOCK OUT ENTRIES (2) LOCATED ON BOTH SIDE OF THE HOUSING.
2. ALL ETHERNET AND DC WIRING MUST BE ROUTED INTO MICROLOAD THROUGH THE KNOCKOUT ENTRIES (2) LOCATED IN THE BOTTOM OF THE HOUSING.

ISSUED FOR CONSTRUCTION

DESSINS EN REFERENCE / REFERENCE DRAWINGS

AGNICO EAGLE

REVISIONS

ultragen

591700

AGNICO EAGLE – MELIADINE DIVISION
116 – FUEL TANK FARM
FUEL DISTRIBUTION
MICROLOAD INTERCONNECTION
65FQY116003S

DESSINÉ PAR / DRAWN BY	ERIC LAROUCHE	2017-05-18
DESSINÉ PAR / CHECKED BY	DANIEL CARRIER	2017-05-18
APPROUVÉ PAR / APPROVED BY	DANIEL CARRIER	2017-05-18
ÉCHELLE / SCALE		2017-05-18
NO. DESSIN / DRAWING NO.	65-ULT-116-IN-100	
NO. PROJET / PROJECT NO.	6515	2 / 1 / 1

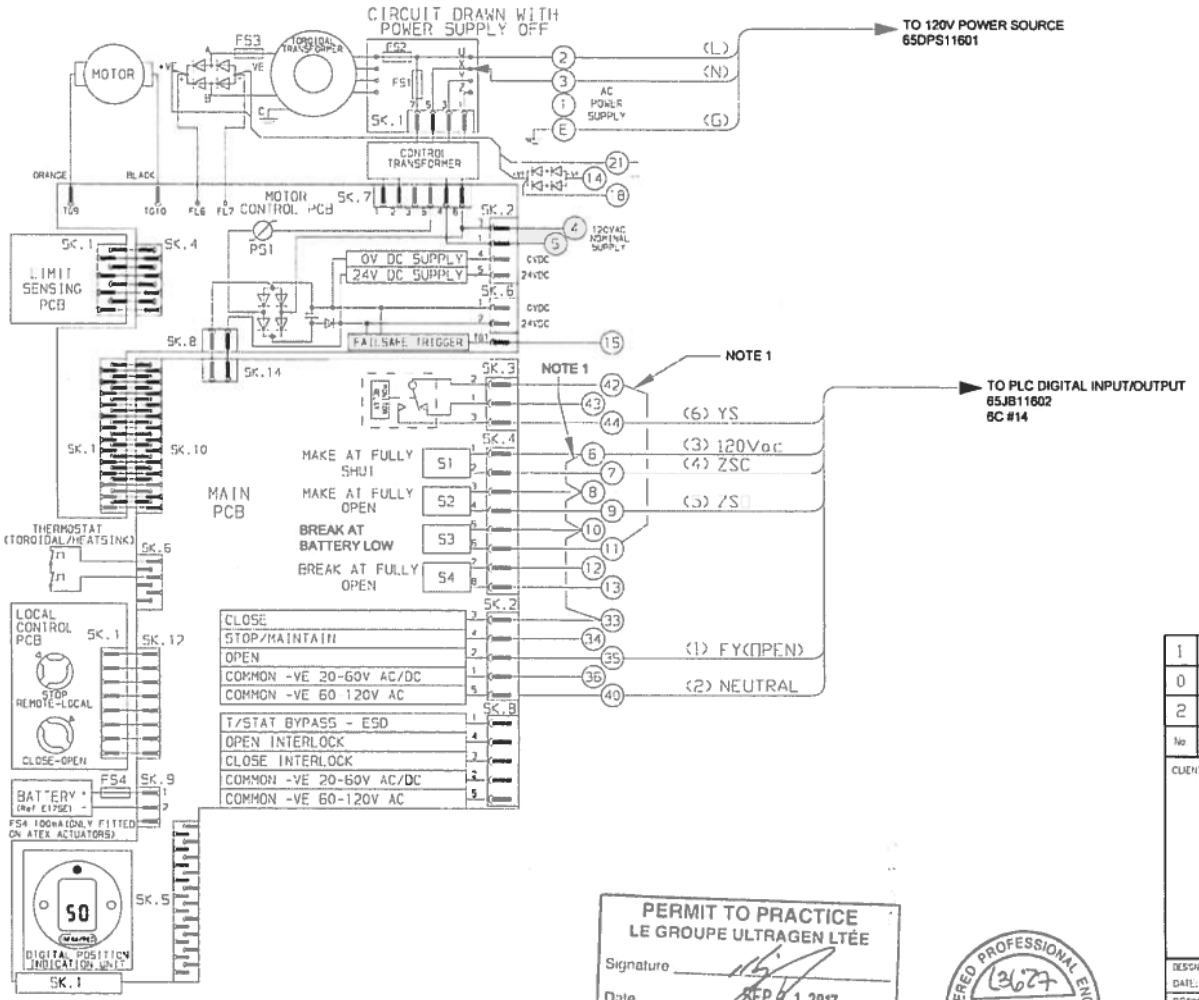

NOTE :
1. CONTRACTOR MUST INSTALL JUMPERS WIRE ON VALVE TERMINAL BLOCK

2. RELAY MONITOR SWITCH AND S3 SWITCH ARE CONNECTED IN SERIAL. THESE SWITCHES MUST BE PROGRAMMED IN FAIL SAFE MODE (CLOSED CONTACT IN NORMAL OPERATION)

3. S3 SWITCH MUST BE PROGRAMMED FOR BATTERY LOW MONITORING

4. VALVE TO BE CONFIGURED IN TWO WIRES CONTROL MODE, ENERGIZE TO OPEN, DE-ENERGIZE TO CLOSE (CONFIGURE FOR OPEN PRIORITY)

ISSUED FOR CONSTRUCTION
ultragen DATE: SEPT 2017

No.	DATE	REVISION	BY / APP.
1	2017-08-14	UPDATE AREA & TAG NUMBER	EL / DC
0	2017-06-09	ISSUED FOR CONSTRUCTION	EL / DC
2	2017-09-19	ISSUED FOR CONSTRUCTION	EL / DC

CLIENT: AGNICO EAGLE

NUQSANA: PROMEC MINING

ultragen
CONSULTANT PROJECT No. 591700

DESIGNED BY: E. LAROUCHE DATE: 2017.05.24
DRAWN BY: R. SHRESTHA DATE: 2017.05.24
CHECKED BY: D. CARRIER DATE: 2017.05.24
APPROVED BY: DATE:
SCALE: NTS

PROJECT: AGNICO EAGLE – MEADOWBANK DIVISION
116 – FUEL TANK FARM 2

TITLE: ROTORK MOTORIZED VALVE WIRING DIAGRAM TYPICAL DRAWING FOR 65FV1160004/65FV1160014

PROJECT No.	DRAWING NO.	REV.
6515	65-ULT-116-IN-101	2

PERMIT TO PRACTICE
LE GROUPE ULTRAGEN LTÉE
Signature
Date SEP 2 1 2017
PERMIT NUMBER: P 1180
NT/NU Association of Professional Engineers and Geoscientists

REGISTERED PROFESSIONAL ENGINEER 13677 D. CARRIER LICENSEE NT/NU
SEP 2 1 2017

65-ULT-116-IN-200 (DO CARD)

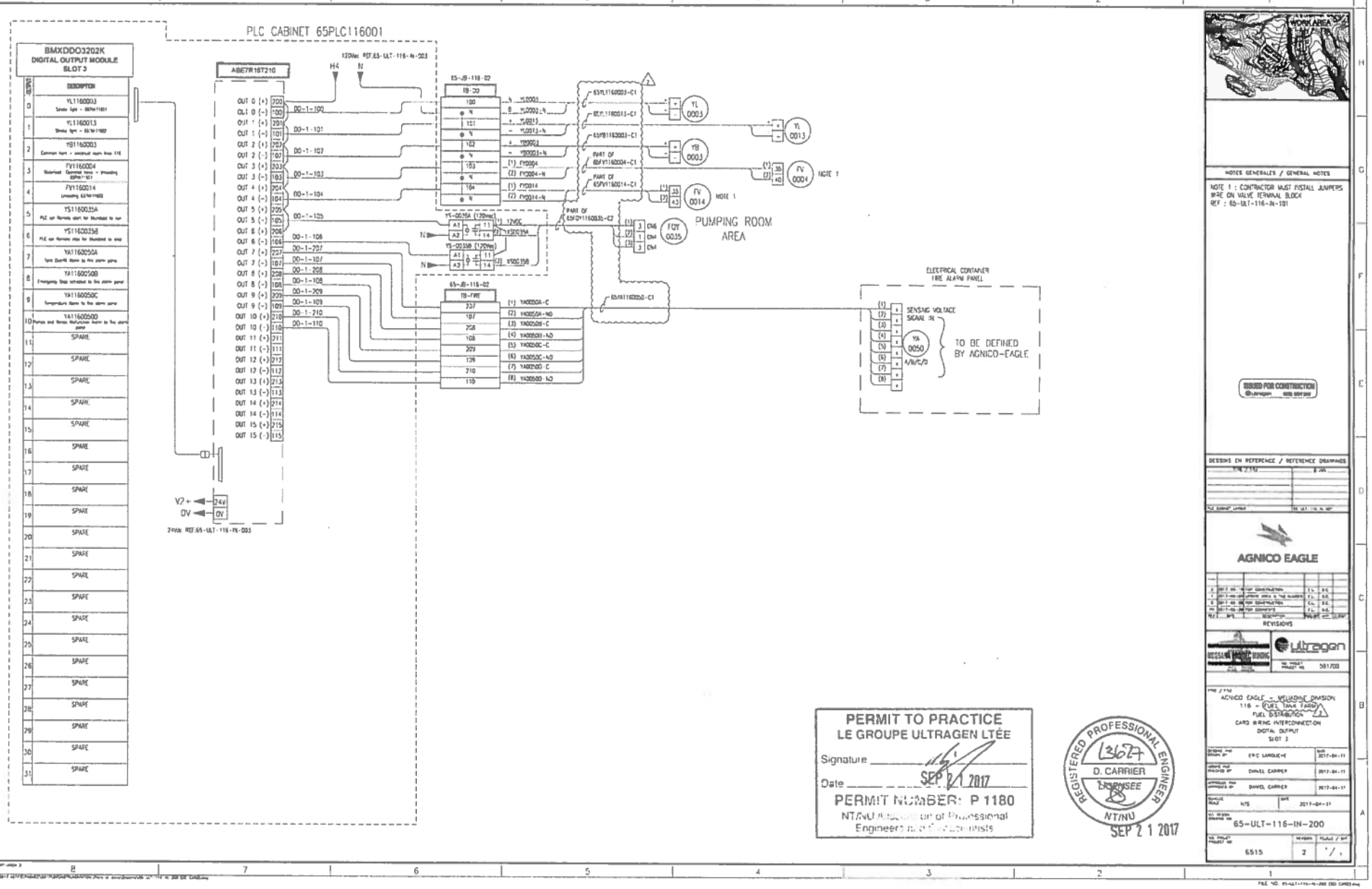

PERMIT TO PRACTICE
LE GROUPE ULTRAGEN LTÉE
Signature
Date SEP 21 2017
PERMIT NUMBER: P 1180
NT/NU Association of Professional Engineers and Geoscientists

REGISTERED PROFESSIONAL ENGINEER
13677
D. CARRIER
NUNAVUT
NT/NU
SEP 21 2017

FILE NO. 65-ULT-116-IN-200 (DO CARD).dwg

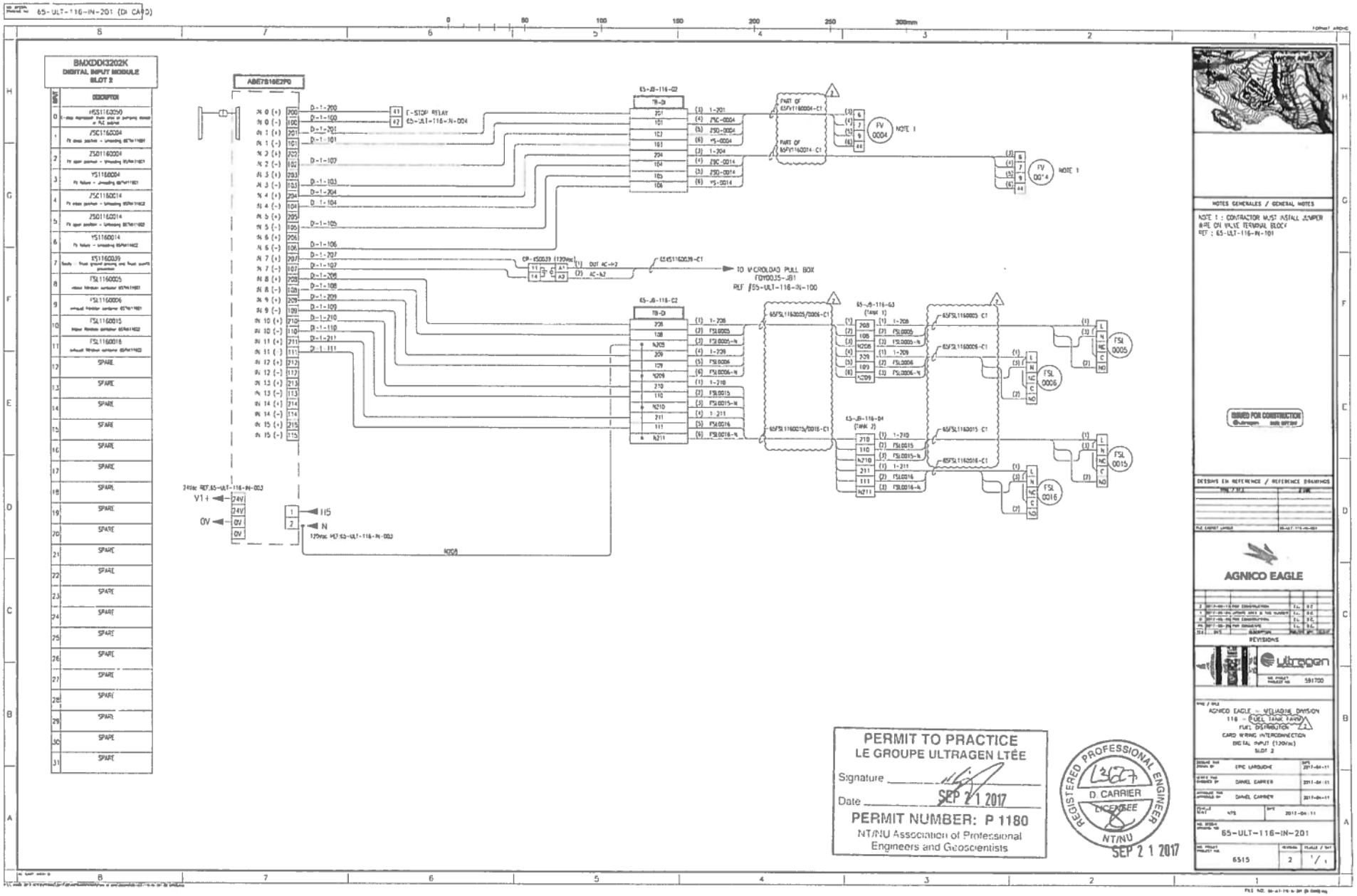
65-ULT-116-IN-201 (DI CARD)
BMXDDI3202K
DIGITAL INPUT MODULE
SLOT 2
DESCRIPTION
SPARE
ABE7B16E2P0
E-STOP RELAY
65-ULT-116-IN-004
65-JB-116-C2
65-JB-116-G3
65-JB-116-D4
FV 0004
NOTE 1
FSL 0005
FSL 0006
FSL 0015
FSL 0016
TO MICROLOAD PULL BOX
FDYD035-JB1
REF 65-ULT-116-IN-100
24Vdc REF.65-ULT-116-IN-003
120Vac REF.65-ULT-116-IN-003
NOTE 1 : CONTRACTOR MUST INSTALL JUMPER
WIRE ON VALVE TERMINAL BLOCK
REF : 65-ULT-116-IN-101
ISSUED FOR CONSTRUCTION
AGNICO EAGLE
REVISIONS
AGNICO EAGLE - MEADOWS DIVISION
116 - FUEL TANK FARM
FUEL DISPENSER
CARD WIRING INTERCONNECTION
DIGITAL INPUT (120VAC)
SLOT 2
65-ULT-116-IN-201
6515
PERMIT TO PRACTICE
LE GROUPE ULTRAGEN LTÉE
Signature
Date SEP 21 2017
PERMIT NUMBER: P 1180
NT/NU Association of Professional
Engineers and Geoscientists
REGISTERED PROFESSIONAL ENGINEER
D. CARRIER
LICENSEE
NT/NU
SEP 21 2017

65-ULT-116-IN-202 (AI CARD)

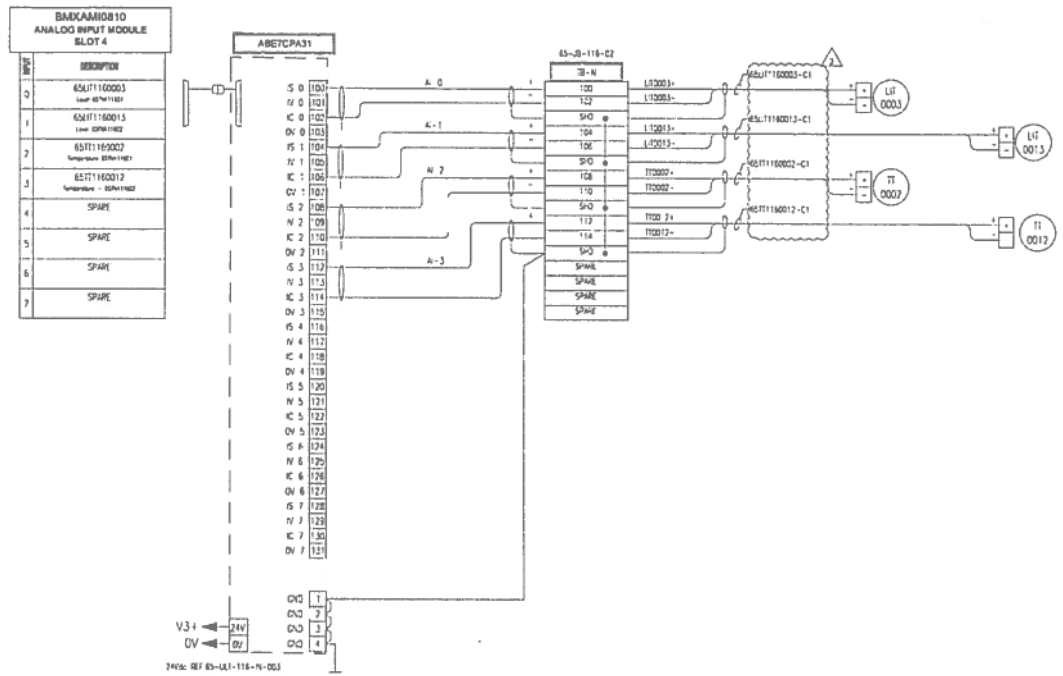

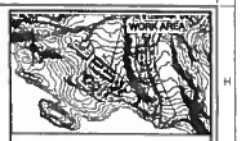

NOTES GENERALES / GENERAL NOTES

ISSUED FOR CONSTRUCTION

DESSINS EN REFERENCE / REFERENCE DRAWINGS

AGNICO EAGLE

REVISIONS

ultragen

AGNICO EAGLE – MEADOWE DIVISION
116 – FUEL TANK FARM
FUEL STATION
CARD WIRING INTERCONNECTION
ANALOG INPUT
SLOT 4

DESIGNED BY	ERIC LAROCHE	2017-04-11
DRAWN BY	ERIC LAROCHE	2017-04-11
CHECKED BY	DANIEL CARRIER	2017-04-11
APPROVED BY	DANIEL CARRIER	2017-04-11
SCALE	N/S	DATE 2017-04-11

65-ULT-116-IN-202

6515 | REVISION 2 | SHEET 1 / 1

PERMIT TO PRACTICE
LE GROUPE ULTRAGEN LTÉE
Signature
Date SEP 21 2017
PERMIT NUMBER: P 1180
NT/NU Association of Professional Engineers and Geoscientists

REGISTERED PROFESSIONAL ENGINEER
13627
D. CARRIER
LICENSEE
NT/NU
SEP 21 2017

AGNICO EAGLE

Vendor Document Status

1 ☐ Proceed to next submission and status.

2 ☐ Proceed with exceptions as noted to next submission and status.

3 ☐ Do not proceed.
Revise as noted and resubmit next submission and status.

4 ☑ Complete, no further submission required.

By: Jean-Francois Tremblay Date: 2017-05-02

Review and authorization to fabricate are only for general conformance with the design concept of the Project as expressed in the Contract Documents. Sole responsibility for the accuracy and completeness of this document, including but not limited to dimensions and quantities, remains with the Supplier/Contractor. Agnico Eagle does not warrant the accuracy or completeness of any of the information contained herein, nor does Agnico Eagle authorize or approve any construction means, methods, techniques, sequences or any safety precautions or procedures.

Agnico Eagle No. 6515-C-270-007-141-TES-0014 R: Sub001

DOCUMENT FOR INFORMATION

NUQSANA-PROMEC MINING

Agnico-Eagle Mines Ltd.
Non-Conformance Report

ITR Number : AEM-GE-ITR-002
Contract no. : C22466T / C22498E

AGNICO EAGLE

PART 1 – To be completed by Originator

ITR no. :	Supplier/Vendor/Manufacturer/Contractor :	Originator :	Date:

Equipment Identification:	Equipment Tag No.:

Disposition Requested:	NCR Classification:
☐ 48 Hours ☐ Other	☐ Supplier ☐ Fabrication ☐ Engineering ☐ Construction ☐

Current Status:	Potential Impact (Check appropriate box and give estimate):
☐ Work Already Done ☐ Partially Done ☐ Other ____	☐ Cost ☐ Schedule ☐ Other

Detailed Description of Non-Conformance (attach sketch, pictures, etc) :

Describe Deviation to Drawings, Specifications, Standard, Code or other Reference:

PART 2 - Disposition

* CONTRACTOR Proposed Disposition / Resolution:	Concession Request No. (if applicable):	Contractors NCR No. (if applicable):
☐ Use As Is ☐ Repair ☐ Rework ☐ Reject/Scrap		

Details of Contractor Corrective Actions Proposed / Concession Request:

* Disposition:	Dispositioning Party:	Signature:
☐ Use as Is ☐ Repair ☐ Rework ☐ Reject/Scrap		

Recommended Resolution / Actions:

PART 3 - Confirmation

Corrective Actions Completed By:	Corrective Actions Accepted by Dispositioning Party:
Name:	Name:
Date:	Date:
Signature:	Signature:
Corrective Actions Accepted by Originator:	**NCR Closed Out By (Area QA Coordinator)**
Name:	Name:
Date:	Date:
Signature:	Signature:

** Note:* Dispositions are not to be construed as a change to any Contracts which may be affected. Prior to initiating any work which will impact the Contract terms, the Contractors must forward to AMEC written notice of all impacts, including but not limited to cost and schedule. Any work completed without a written instruction to proceed, if required, will be at the Contractor's risk.

6515-C-270-007

Fuel Tanks Piping Supply and Installation

Non-Conformance Log

Document Number : AEM-GE-LOG-002
Contract Number : C22466T / C22498E

AGNICO EAGLE

Number	Company	Description	Initiator	Date Opened	Date Closed	Progress Status
NCR-001						N/A
NCR-002						N/A
NCR-003						N/A
NCR-004						N/A
NCR-005						N/A
NCR-006						N/A
NCR-007						N/A
NCR-008						N/A
NCR-009						N/A
NCR-010						N/A
NCR-011						N/A
NCR-012						N/A
NCR-013						N/A
NCR-014						N/A
NCR-015						N/A
NCR-016						N/A
NCR-017						N/A
NCR-018						N/A
NCR-019						N/A
NCR-020						N/A
NCR-021						N/A
NCR-022						N/A
NCR-023						N/A
NCR-024						N/A
NCR-025						N/A
NCR-026						N/A
NCR-027						N/A
NCR-028						N/A
NCR-029						N/A
NCR-030						N/A
NCR-031						N/A
NCR-032						N/A
NCR-033						N/A
NCR-034						N/A
NCR-035						N/A
NCR-036						N/A
NCR-037						N/A
NCR-038						N/A
NCR-039						N/A
NCR-040						N/A

AGNICO EAGLE

Vendor Document Status

1 ☐ Proceed to next submission and status.

2 ☐ Proceed with exceptions as noted to next submission and status.

3 ☐ Do not proceed.
Revise as noted and resubmit next submission and status.

4 ☑ Complete, no further submission required.

By: Jean-Francois Tremblay Date: 2017-05-02

Review and authorization to fabricate are only for general conformance with the design concept of the Project as expressed in the Contract Documents. Sole responsibility for the accuracy and completeness of this document, including but not limited to dimensions and quantities, remains with the Supplier/Contractor. Agnico Eagle does not warrant the accuracy or completeness of any of the information contained herein, nor does Agnico Eagle authorize or approve any construction means, methods, techniques, sequences or any safety precautions or procedures.

Agnico Eagle No. 6515-C-270-007-141-TES-0019 R: Sub001

DOCUMENT FOR INFORMATION

AGNICO EAGLE

Vendor Document Status

1 ☐ Proceed to next submission and status.

2 ☐ Proceed with exceptions as noted to next submission and status.

3 ☐ Do not proceed.
Revise as noted and resubmit next submission and status.

4 ☑ Complete, no further submission required.

By: JEAN-FRANCOIS TREMBLAY Date: 2017-06-22

Review and authorization to fabricate are only for general conformance with the design concept of the Project as expressed in the Contract Documents. Sole responsibility for the accuracy and completeness of this document, including but not limited to dimensions and quantities, remains with the Supplier/Contractor. Agnico Eagle does not warrant the accuracy or completeness of any of the information contained herein, nor does Agnico Eagle authorize or approve any construction means, methods, techniques, sequences or any safety precautions or procedures.

Agnico Eagle No. 6515-C-270-007-141-TES-0030 R: Sub002

DOCUMENT FOR INFORMATION

NUQSANA PROMEC MINING

AGNICO-EAGLE MINES Ltd.
Inspection & Testing Report

ITR Number: AEM-IN-ITR-007
ITR Type: Miscellaneous Instruments
Contract No.: 6515-C-270-007

AGNICO EAGLE

Tag Number:		**Equipment/ Pipe N°:**		**System:**	
Service:		**Function:**		**Purchase Order:**	
Manufacturer:		**Model:**		**Serial Number:**	
Location Dwg :		**Reference Datasheet:**		**Installation Detail Dwg:**	
Reference Datasheet Number:					

Item N°	Inspection Points	C	NC/ NCR #	N/A	Completed By/ Date
1	INSTRUMENT TAG ATTACHED	C	NC #	N/A	Promec: CLIENT:
2	CABLE TAG ATTACHED	C	NC #	N/A	Promec: CLIENT:
3	DEVICE INSTALLED AS PER INSTALLATION DETAILS, LOCATION OR MANUFACTURER'S DRAWING	C	NC #	N/A	Promec: CLIENT:
4	EQUIPMENT ACCESSIBLE AND EASY TO MAINTAIN	C	NC #	N/A	Promec: CLIENT:
5	WIRING CORRECT AND PROPERLY LABELED	C	NC #	N/A	Promec: CLIENT:
6	CALIBRATION CERTIFICATE AVAILABLE	C	NC #	N/A	Promec: CLIENT:
7	ELECTRICAL SUPPLY COMPATIBLE WITH SOURCE	C	NC #	N/A	Promec: CLIENT:
8		C	NC #	N/A	Promec: CLIENT:
9		C	NC #	N/A	Promec: CLIENT:
10		C	NC #	N/A	Promec: CLIENT:
11		C	NC #	N/A	Promec: CLIENT:

Comments

Sign Off			
Promec Signature:		**CLIENT Signature:**	
Date:		**Date:**	

Legend					
C	Conformance	**NC**	Non Conformance	**N/A**	Not Applicable
NCR	Non Conformance Report				

AGNICO EAGLE

Vendor Document Status

1 ☐ Proceed to next submission and status.

2 ☐ Proceed with exceptions as noted to next submission and status.

3 ☐ Do not proceed.
Revise as noted and resubmit next submission and status.

4 ☑ Complete, no further submission required.

By: Jean-Francois Tremblay Date: 2017-05-02

Review and authorization to fabricate are only for general conformance with the design concept of the Project as expressed in the Contract Documents. Sole responsibility for the accuracy and completeness of this document, including but not limited to dimensions and quantities, remains with the Supplier/Contractor. Agnico Eagle does not warrant the accuracy or completeness of any of the information contained herein, nor does Agnico Eagle authorize or approve any construction means, methods, techniques, sequences or any safety precautions or procedures.

Agnico Eagle No. 6515-C-270-007-141-TES-0017 R: Sub001

DOCUMENT FOR INFORMATION

Agnico-Eagle Mines Ltd.
Inspection Deficiency Report

ITR Number : AEM-GE-ITR-005
Contract no. : C22466T / C22498E

Area:	CWP No:
Equipment Tag No:	Inspection Deficiency Report No:
Date:	Page_____ of _____
Reference Drawings:	
Reference Photos:	
Description of Deficiency:	
Suggested Solution:	
Engineering Contact Made: Yes ☐ No ☐ Name:	
Course of Action:	
Engineering Follow-up Required: Yes ☐ No ☐ Date Required:	

Promec's Representative Print Name		Client's Representative Print Name	
Promec's Representative Signature	Date	Client's Representative Signature	Date

6515-C-270-007

Fuel Tanks Piping Supply and Installation

Inspection Deficiency Log

Document Number : AEM-GE-LOG-004
Contract Number : C22466T / C22984E

AGNICO EAGLE

Number	Description	Initiator	Dept.	Date	Contract No.		Progress Status
Deficiency-001						N/A	
Deficiency-002						N/A	
Deficiency-003						N/A	
Deficiency-004						N/A	
Deficiency-005						N/A	
Deficiency-006						N/A	
Deficiency-007						N/A	
Deficiency-008						N/A	
Deficiency-009						N/A	
Deficiency-010						N/A	
Deficiency-011						N/A	
Deficiency-012						N/A	
Deficiency-013						N/A	
Deficiency-014						N/A	
Deficiency-015						N/A	
Deficiency-016						N/A	
Deficiency-017						N/A	
Deficiency-018						N/A	
Deficiency-019						N/A	
Deficiency-020						N/A	
Deficiency-021						N/A	
Deficiency-022						N/A	
Deficiency-023						N/A	
Deficiency-024						N/A	
Deficiency-025						N/A	
Deficiency-026						N/A	
Deficiency-027						N/A	
Deficiency-028						N/A	
Deficiency-029						N/A	
Deficiency-030						N/A	
Deficiency-031						N/A	
Deficiency-032						N/A	
Deficiency-033						N/A	
Deficiency-034						N/A	
Deficiency-035						N/A	
Deficiency-036						N/A	
Deficiency-037						N/A	
Deficiency-038						N/A	
Deficiency-039						N/A	
Deficiency-040						N/A	

Vendor Document Status

AGNICO EAGLE

1 ☐ Proceed to next submission and status.

2 ☐ Proceed with exceptions as noted to next submission and status.

3 ☐ Do not proceed.
Revise as noted and resubmit next submission and status.

4 ☑ Complete, no further submission required.

By: JEAN-FRANCOIS TREMBLAY Date: 2017-05-16

Review and authorization to fabricate are only for general conformance with the design concept of the Project as expressed in the Contract Documents. Sole responsibility for the accuracy and completeness of this document, including but not limited to dimensions and quantities, remains with the Supplier/Contractor. Agnico Eagle does not warrant the accuracy or completeness of any of the information contained herein, nor does Agnico Eagle authorize or approve any construction means, methods, techniques, sequences or any safety precautions or procedures.

Agnico Eagle No. 6515-C-270-007-141-TES-0020 R: Sub001

DOCUMENT FOR INFORMATION

AGNICO EAGLE

Vendor Document Status

1 ☐ Proceed to next submission and status.

2 ☐ Proceed with exceptions as noted to next submission and status.

3 ☐ Do not proceed.
Revise as noted and resubmit next submission and status.

4 ☑ Complete, no further submission required.

By: Joël Morliere Date: 2017-06-12

Review and authorization to fabricate are only for general conformance with the design concept of the Project as expressed in the Contract Documents. Sole responsibility for the accuracy and completeness of this document, including but not limited to dimensions and quantities, remains with the Supplier/Contractor. Agnico Eagle does not warrant the accuracy or completeness of any of the information contained herein, nor does Agnico Eagle authorize or approve any construction means, methods, techniques, sequences or any safety precautions or procedures.

Agnico Eagle No. 6515-C-270-007-265-SPD-0001 R: Sub001

DOCUMENT FOR INFORMATION

wsp

SHOP DRAWING
DATA SHEET

Affixing this stamp confirms that an administrative approval and/or a verification of compliance with shop drawings or specifications was made, but does not entail the liability of the author of the work or its owner with regards to this shop drawing or data sheet, for which the contractor is the sole responsible.

☑ Reviewed ☐ Reviewed as noted

☐ Rejected ☐ Filed for records

The contractor, supplier and/or sub-contractor is responsible for: comfirming and coordinating all quantities and dimensions; selecting fabrication processes and techniques of construction; coordinating his or her work with that of all other trades and performing all work in a safe and satisfactory manner.

By: J. Morliere Date: 2017/06/12

Project # 151-06440-40

Tracé par: "BOURJ26", 2017-05-05 14:46:09 (Lts: 0.25 ; Mas: 1)
P:\300-RN\643812\0000\4-Ingenierie\D-Dessins maitres\43-ST\643812-0000-43DD-0001-0.dwg
Format: Lettre/Légal Ver.: 4.2 2016-01-26

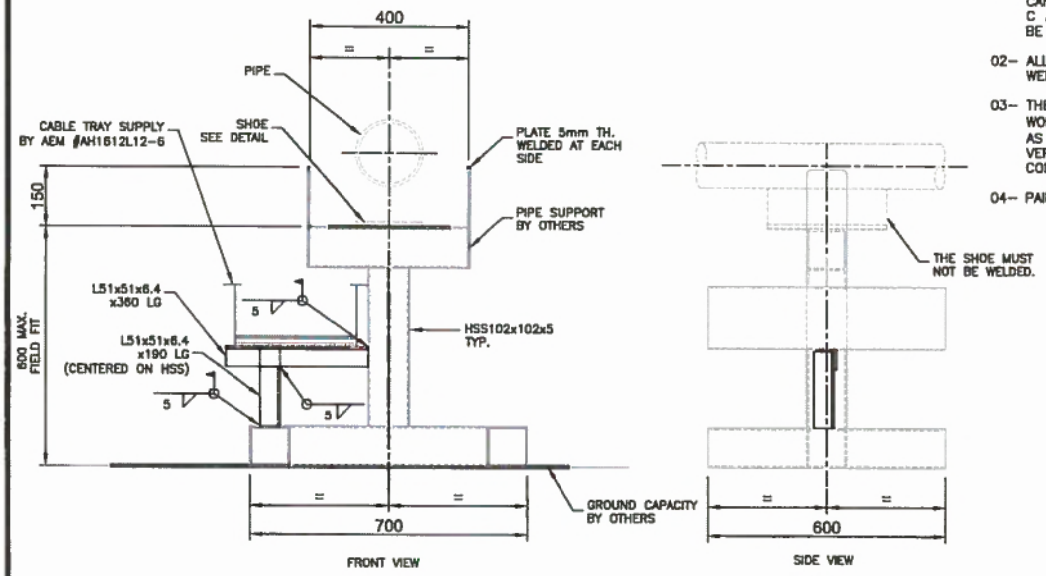

GENERAL NOTES

01– STRUCTURAL STEEL MUST RESPECT CRITERIA LISTED IN CAN/CSA–G40.20 AND CAN/CSA–G40.21, GRADE 350 W WITH EXCEPTION OF C AND L PROFILES WHICH ARE TOBE OF GRADE 300 W. HSS PROFILES TO BE OF ASTM 500 TYPE C GRADE 345 W.

02– ALL STRUCTURAL MEMBERS MUST BE CLEANED BY GRINDING PRIOR TO ALL WELDING WORKS.

03– THE CONTRACTOR OR SUB–CONTRACTOR MUST PROCEED WITH ALL WELDING WORKS IN ACCORDANCE WITH W59–03(R2008). HE MUST ALSO BE CERTIFIED AS PER W47.1–09(R2014). THE ENGINEER/OWNER RESERVES THE RIGHT TO VERIFY THESE CERTIFICATIONS BEFORE AS WELL AS AFTER THE PROJECT COMMENCEMENT.

04– PAINT BY OTHERS

REGISTERED PROFESSIONAL ENGINEER
M.Y DIALLO
LICENSEE
NT/NU
2017-05-05

CABLE TRAY SUPPORT 1

ÉCHELLE : 1 : 15

POUR CONSTRUCTION
FOR CONSTRUCTION
SNC·LAVALIN
2017-05-05

REV.	DATE	ISSUES	BY	CHK	APP.
0	2017-05-05	ISSUED FOR CONSTRUCTION	M.LAN	M.DIA	B.CHA
A	2017-05-04	ISSUED FOR APPROVAL	M.LAN	M.DIA	B.CHA

SNC·LAVALIN
SNC-Lavalin Stavibel Inc.
150, rue Gamble Ouest
Rouyn-Noranda (Québec) J9X 2R7
Tel. : 819 764-5181 Fax : 819 797-0158
www.snclavalin.com

Client / Project : AGNICO EAGLE - MELIADINE DIVISION			
Title : 103 - COMBUSTIBLES SUPPORT SECTION			
Drawn by : Michel Lanthier, tech.	Verified by : Mohamed Diallo, ing.	Project manager : Dany Lambert, ing.	Project # : 643812-0000
Designed by : Mohamed Diallo, ing.	Approved by : Mohamed Diallo, ing.	Org. Date : 2017-05-04	Reference : -
Scale : INDICATED	Drawing # : 643812-0000-43DD-0001	Rev. : 0	

AGNICO EAGLE

Vendor Document Status

1 ☐ Proceed to next submission and status.

2 ☐ Proceed with exceptions as noted to next submission and status.

3 ☐ Do not proceed.
Revise as noted and resubmit next submission and status.

4 ☑ Complete, no further submission required.

By: JEAN-FRANCOIS TREMBLAY Date: 2017-06-29

Review and authorization to fabricate are only for general conformance with the design concept of the Project as expressed in the Contract Documents. Sole responsibility for the accuracy and completeness of this document, including but not limited to dimensions and quantities, remains with the Supplier/Contractor. Agnico Eagle does not warrant the accuracy or completeness of any of the information contained herein, nor does Agnico Eagle authorize or approve any construction means, methods, techniques, sequences or any safety precautions or procedures.

Agnico Eagle No. 6515-C-270-007-141-TES-0002 R: Sub002

DOCUMENT FOR INFORMATION

NUQSANA PROMEC MINING

AGNICO-EAGLE MINES Ltd.
Inspection & Testing Report

ITR Number: AEM-EL-ITR-001
ITR Type: GENERAL
Contract No.: 6515-C-270-007

AGNICO EAGLE

Tag Number:		**Equipment/ Pipe N°:**		**System:**	
Service:		**Function:**		**Purchase Order:**	
Manufacturer:		**Model:**		**Serial Number:**	
Location Dwg :		**Reference Datasheet:**		**Installation Detail Dwg:**	
Reference Datasheet Number:					

Item N°	Inspection Points	C	NC/ NCR #	N/A	Completed By/ Date
1	DEVICE INSTALLED AS PER INSTALLATION DETAILS, LOCATION OR MANUFACTURERS DRAWINGS	C	NC #	N/A	Promec: CLIENT:
2	EQUIPMENT ACESSIBLE AND EASY TO MAINTAIN	C	NC #	N/A	Promec: CLIENT:
3	EQUIPMENT RACK OR CLAMPING DEVICE ADEQUATE (HEIGHT, SOLIDITY ETC.)	C	NC #	N/A	Promec: CLIENT:
4	GROUNDING INSTALLED AND CONNECTED	C	NC #	N/A	Promec: CLIENT:
5	TERMINAL CONNECTION CONNECTED AND TORQUED	C	NC #	N/A	Promec: CLIENT:
6	BREAKER CONNECTIONS CONNECTED AND TORQUED	C	NC #	N/A	Promec: CLIENT:
7	LUG BOLT TORQUE	C	NC #	N/A	Promec: CLIENT:
8	POWER BUS BAR BOLTED AND TORQUED	C	NC #	N/A	Promec: CLIENT:
9	GROUND BUS BAR BOLTED AND TORQUED	C	NC #	N/A	Promec: CLIENT:
10	MEGGER EQUIPMENT	C	NC #	N/A	Promec: CLIENT:
11	MEGGER CABLES	C	NC #	N/A	Promec: CLIENT:
12	HI-POT TEST	C	NC #	N/A	Promec: CLIENT:
13	PANELS IDENTIFIED	C	NC #	N/A	Promec: CLIENT:
14	UNIT DRAWER IDENTIFIED	C	NC #	N/A	Promec: CLIENT:
15	BREAKERS IDENTIFIED	C	NC #	N/A	Promec: CLIENT:
16	CABLES IDENTIFIED	C	NC #	N/A	Promec: CLIENT:
17	SEAL O RING INSTALLED (IF APPLICABLE)	C	NC #	N/A	Promec: CLIENT:
18	FUSES INSTALLED AND OF ADEQUATE SIZE	C	NC #	N/A	Promec: CLIENT:
18	VISUAL INSPECTION	C	NC #	N/A	Promec: CLIENT:
20	CLEAN / VACUUMED	C	NC #	N/A	Promec: CLIENT:

NUQSANA PROMEC MINING

AGNICO-EAGLE MINES Ltd.
Inspection & Testing Report

ITR Number: AEM-EL-ITR-001
ITR Type: GENERAL
Contract No.: 6515-C-270-007

AGNICO EAGLE

Tag Number:		Equipment/ Pipe N°:		System:	
Service:		Function:		Purchase Order:	
Manufacturer:		Model:		Serial Number:	
Location Dwg :		Reference Datasheet:		Installation Detail Dwg:	
Reference Datasheet Number:					

Item N°	Inspection Points	C	NC/ NCR #	N/A	Completed By/ Date
21	PANEL AND DOOR CLOSED AND BOLTED	C	NC #	N/A	Promec: CLIENT:

Comments

Sign Off			
Promec Signature:		CLIENT Signature:	
Date:		Date:	

Legend					
C	Conformance	NC	Non Conformance	N/A	Not Applicable
NCR	Non Conformance Report				

AGNICO EAGLE

Vendor Document Status

1 ☐ Proceed to next submission and status.

2 ☐ Proceed with exceptions as noted to next submission and status.

3 ☐ Do not proceed.
Revise as noted and resubmit next submission and status.

4 ☑ Complete, no further submission required.

By: JEAN-FRANCOIS TREMBLAY Date: 2017-06-29

Review and authorization to fabricate are only for general conformance with the design concept of the Project as expressed in the Contract Documents. Sole responsibility for the accuracy and completeness of this document, including but not limited to dimensions and quantities, remains with the Supplier/Contractor. Agnico Eagle does not warrant the accuracy or completeness of any of the information contained herein, nor does Agnico Eagle authorize or approve any construction means, methods, techniques, sequences or any safety precautions or procedures.

Agnico Eagle No. 6515-C-270-007-141-TES-0002 R: Sub002

DOCUMENT FOR INFORMATION

NUQSANA-PROMEC MINING

AGNICO-EAGLE MINES Ltd.
Inspection & Testing Report

ITR Number: AEM-EL-ITR-001
ITR Type: GENERAL
Contract No.: 6515-C-270-007

AGNICO EAGLE

Tag Number:		**Equipment/ Pipe N°:**		**System:**	
Service:		**Function:**		**Purchase Order:**	
Manufacturer:		**Model:**		**Serial Number:**	
Location Dwg :		**Reference Datasheet:**		**Installation Detail Dwg:**	
Reference Datasheet Number:					

Item N°	Inspection Points	C	NC/ NCR #	N/A	Completed By/ Date
1	DEVICE INSTALLED AS PER INSTALLATION DETAILS, LOCATION OR MANUFACTURERS DRAWINGS	C	NC #	N/A	Promec: CLIENT:
2	EQUIPMENT ACESSIBLE AND EASY TO MAINTAIN	C	NC #	N/A	Promec: CLIENT:
3	EQUIPMENT RACK OR CLAMPING DEVICE ADEQUATE (HEIGHT, SOLIDITY ETC.)	C	NC #	N/A	Promec: CLIENT:
4	GROUNDING INSTALLED AND CONNECTED	C	NC #	N/A	Promec: CLIENT:
5	TERMINAL CONNECTION CONNECTED AND TORQUED	C	NC #	N/A	Promec: CLIENT:
6	BREAKER CONNECTIONS CONNECTED AND TORQUED	C	NC #	N/A	Promec: CLIENT:
7	LUG BOLT TORQUE	C	NC #	N/A	Promec: CLIENT:
8	POWER BUS BAR BOLTED AND TORQUED	C	NC #	N/A	Promec: CLIENT:
9	GROUND BUS BAR BOLTED AND TORQUED	C	NC #	N/A	Promec: CLIENT:
10	MEGGER EQUIPMENT	C	NC #	N/A	Promec: CLIENT:
11	MEGGER CABLES	C	NC #	N/A	Promec: CLIENT:
12	HI-POT TEST	C	NC #	N/A	Promec: CLIENT:
13	PANELS IDENTIFIED	C	NC #	N/A	Promec: CLIENT:
14	UNIT DRAWER IDENTIFIED	C	NC #	N/A	Promec: CLIENT:
15	BREAKERS IDENTIFIED	C	NC #	N/A	Promec: CLIENT:
16	CABLES IDENTIFIED	C	NC #	N/A	Promec: CLIENT:
17	SEAL O RING INSTALLED (IF APPLICABLE)	C	NC #	N/A	Promec: CLIENT:
18	FUSES INSTALLED AND OF ADEQUATE SIZE	C	NC #	N/A	Promec: CLIENT:
18	VISUAL INSPECTION	C	NC #	N/A	Promec: CLIENT:
20	CLEAN / VACUUMED	C	NC #	N/A	Promec: CLIENT:

NUQSANA-PROMEC MINING

AGNICO-EAGLE MINES Ltd.
Inspection & Testing Report

ITR Number: AEM-EL-ITR-001
ITR Type: GENERAL
Contract No.: 6515-C-270-007

AGNICO EAGLE

Tag Number:		**Equipment/ Pipe N°:**		**System:**	
Service:		**Function:**		**Purchase Order:**	
Manufacturer:		**Model:**		**Serial Number:**	
Location Dwg :		**Reference Datasheet:**		**Installation Detail Dwg:**	
Reference Datasheet Number:					

Item N°	Inspection Points	C	NC/ NCR #	N/A	Completed By/ Date
21	PANEL AND DOOR CLOSED AND BOLTED	C	NC #	N/A	Promec: CLIENT:

Comments

Sign Off			
Promec Signature:		**CLIENT Signature:**	
Date:		**Date:**	

Legend					
C	Conformance	NC	Non Conformance	N/A	Not Applicable
NCR	Non Conformance Report				

AGNICO EAGLE

Vendor Document Status

1 ☐ Proceed to next submission and status.

2 ☐ Proceed with exceptions as noted to next submission and status.

3 ☐ Do not proceed.
Revise as noted and resubmit next submission and status.

4 ☑ Complete, no further submission required.

By: Jean-Francois Tremblay Date: 2017-05-02

Review and authorization to fabricate are only for general conformance with the design concept of the Project as expressed in the Contract Documents. Sole responsibility for the accuracy and completeness of this document, including but not limited to dimensions and quantities, remains with the Supplier/Contractor. Agnico Eagle does not warrant the accuracy or completeness of any of the information contained herein, nor does Agnico Eagle authorize or approve any construction means, methods, techniques, sequences or any safety precautions or procedures.

Agnico Eagle No. 6515-C-270-007-141-TES-0013 R: Sub001

DOCUMENT FOR INFORMATION

NUQSANA PROMEC MINING

AGNICO-EAGLE MINES Ltd.
Inspection and Testing Report
(C22498E)

AGNICO EAGLE

Contract Title:	Fuel Tanks Piping Supply and Installation	**Contract No.:**	6515-C-270-007
Subject:	**Equipment Torque**	**ITR No.:**	**AEM-EL-ITR-006**

Torque #: _____ Calibration due Date: _____

Date: _____ By: _____

Equipment #	Power Bus Bar Torque (lbf·ft)	Ground Bus Bar Torque (lbf·ft)	Lug Torque (lbf·ft)	Photos (If applicable)

Promec's Representative Signature _____ Date _____ Client's Representative Signature _____ Date _____

AGNICO EAGLE

Vendor Document Status

1 ☐ Proceed to next submission and status.

2 ☐ Proceed with exceptions as noted to next submission and status.

3 ☐ Do not proceed.
Revise as noted and resubmit next submission and status.

4 ☑ Complete, no further submission required.

By: JEAN-FRANCOIS TREMBLAY Date: 2017-06-22

Review and authorization to fabricate are only for general conformance with the design concept of the Project as expressed in the Contract Documents. Sole responsibility for the accuracy and completeness of this document, including but not limited to dimensions and quantities, remains with the Supplier/Contractor. Agnico Eagle does not warrant the accuracy or completeness of any of the information contained herein, nor does Agnico Eagle authorize or approve any construction means, methods, techniques, sequences or any safety precautions or procedures.

Agnico Eagle No. 6515-C-270-007-141-TES-0028 R: Sub002

DOCUMENT FOR INFORMATION

NUQSANA PROMEC MINING

AGNICO-EAGLE MINES Ltd.
Inspection & Testing Report

ITR Number: AEM-IN-ITR-005A
ITR Type: PCR PANEL
Contract No.: 6515-C-270-007

AGNICO EAGLE

Tag Number:		**Equipment/ Pipe N°:**		**System:**	
Service:		**Function:**		**Purchase Order:**	
Manufacturer:		**Model:**		**Serial Number:**	
Location Dwg :		**Reference Datasheet:**		**Installation Detail Dwg:**	
Reference Datasheet Number:					

Item N°	Inspection Points	C	NC/ NCR #	N/A	Completed By/ Date
1	INSTRUMENT TAG ATTACHED	C	NC #	N/A	Promec: CLIENT:
2	CABLE TAG ATTACHED	C	NC #	N/A	Promec: CLIENT:
3	DEVICE INSTALLED AS PER INSTALLATION DETAILS, LOCATION OR MANUFACTURER'S DRAWING	C	NC #	N/A	Promec: CLIENT:
4	EQUIPMENT ACCESSIBLE AND EASY TO MAINTAIN	C	NC #	N/A	Promec: CLIENT:
5	EQUIPMENT RACK OR CLAMPING DEVICE ADEQUATE (HEIGHT, SOLIDITY ETC.)	C	NC #	N/A	Promec: CLIENT:
6	WIRING CORRECT AND PROPERLY LABELED	C	NC #	N/A	Promec: CLIENT:
7	GROUNDING INSTALLED AND CONNECTED	C	NC #	N/A	Promec: CLIENT:
8	CLEAN OUT ENCLOSURE	C	NC #	N/A	Promec: CLIENT:
9	OPENING DOOR ADEQUATE	C	NC #	N/A	Promec: CLIENT:
10	CALIBRATION CERTIFICATE AVAILABLE	C	NC #	N/A	Promec: CLIENT:
11	ELECTRICAL SUPPLY COMPATIBLE WITH SOURCE	C	NC #	N/A	Promec: CLIENT:

Comments

Sign Off			
Promec Signature:		**CLIENT Signature:**	
Date:		**Date:**	

Legend					
C	Conformance	**NC**	Non Conformance	**N/A**	Not Applicable
NCR	Non Conformance Report				

AGNICO EAGLE

Vendor Document Status

1 ☐ Proceed to next submission and status.

2 ☐ Proceed with exceptions as noted to next submission and status.

3 ☐ Do not proceed.
Revise as noted and resubmit next submission and status.

4 ☒ Complete, no further submission required.

By: LUC SÉNÉCAL Date: 2017-07-10

Review and authorization to fabricate are only for general conformance with the design concept of the Project as expressed in the Contract Documents. Sole responsibility for the accuracy and completeness of this document, including but not limited to dimensions and quantities, remains with the Supplier/Contractor. Agnico Eagle does not warrant the accuracy or completeness of any of the information contained herein, nor does Agnico Eagle authorize or approve any construction means, methods, techniques, sequences or any safety precautions or procedures.

Agnico Eagle No. 6515-C-270-007-141-TES-0009 R: Sub002

DOCUMENT FOR INFORMATION

NUQSANA PROMEC MINING

AGNICO-EAGLE MINES Ltd.
Inspection & Testing Report

ITR Number: AEM-EL-ITR-002
ITR Type: HEATING UNIT
Contract No.: 6515-C-270-007

AGNICO EAGLE

Tag Number:		**Equipment/ Pipe N°:**		**System:**	
Service:		**Function:**		**Purchase Order:**	
Manufacturer:		**Model:**		**Serial Number:**	
Location Dwg :		**Reference Datasheet:**		**Installation Detail Dwg:**	
Reference Datasheet Number:					

Item N°	Inspection Points	C	NC/ NCR #	N/A	Completed By/ Date
1	CHECK FOR PROPER SIZE OF CIRCUIT BREAKERS IN DISTRIBUTION PANEL	C	NC #	N/A	Promec: CLIENT:
2	CHECK FOR PROPER TAGGING AND LABELLING OF ALL PARTS AS SHOWN ON THE DRAWINGS	C	NC #	N/A	Promec: CLIENT:
3	CHECK FOR PROPER OPERATION OF THERMOSTATS AND/OR TEMPERATURE CONTROLLERS	C	NC #	N/A	Promec: CLIENT:
4	FINAL INSPECTION COMPLETE. DEFICIENCY LIST ITEMS CLEARED	C	NC #	N/A	Promec: CLIENT:

Comments

Sign Off			
Promec Signature:		**CLIENT Signature:**	
Date:		**Date:**	

Legend					
C	Conformance	NC	Non Conformance	N/A	Not Applicable
NCR	Non Conformance Report				

AGNICO EAGLE

Vendor Document Status

1 ☐ Proceed to next submission and status.

2 ☐ Proceed with exceptions as noted to next submission and status.

3 ☐ Do not proceed.
Revise as noted and resubmit next submission and status.

4 ☑ Complete, no further submission required.

By: Jean-Francois Tremblay Date: 2017-05-02

Review and authorization to fabricate are only for general conformance with the design concept of the Project as expressed in the Contract Documents. Sole responsibility for the accuracy and completeness of this document, including but not limited to dimensions and quantities, remains with the Supplier/Contractor. Agnico Eagle does not warrant the accuracy or completeness of any of the information contained herein, nor does Agnico Eagle authorize or approve any construction means, methods, techniques, sequences or any safety precautions or procedures.

Agnico Eagle No. 6515-C-270-007-141-TES-0010 R: Sub001

DOCUMENT FOR INFORMATION

NUQSANA-PROMEC MINING

AGNICO-EAGLE MINES Ltd.
Inspection and Testing Report
(C22498E)

AGNICO EAGLE

Contract Title: Fuel Tanks Piping Supply and Installation
Contract No.: 6515-C-270-007
Subject: Cable to Meg
ITR No.: AEM-EL-ITR-003

Tester #: _____
Date: _____
Megger ?/Volts: _____

Calibration due Date: _____
By: _____

Cable ID	Origin / Destination	Phase 1/Phase 2	Phase 2/Phase 3	Phase 1/Phase 3	Phase 1 /GND	Phase 2/GND	Phase 3/GND

Promec's Representative Signature _____ Date _____

Client's Representative Signature _____ Date _____

Contract Title:	Fuel Tanks Piping Supply and Installation	**Contract No.:**	6515-C-270-007
Subject:	**Cable to Meg**	**ITR No.:**	**AEM-EL-ITR-003**

NUQSANA PROMEC MINING

AGNICO-EAGLE MINES Ltd.
Inspection and Testing Report
(C22498E)

AGNICO EAGLE

Contract Title:	Fuel Tanks Piping Supply and Installation	**Contract No.:**	6515-C-270-007
Subject:	Cable to Meg	**ITR No.:**	AEM-EL-ITR-003

Tester #: 170617552
Date: 2018-07-10
Megger ?/Volts: 5000V

Calibration due Date: 2018-07-05
By: TRESCAL

Cable ID	Origin / Destination	Phase 1/Phase 2	Phase 2/Phase 3	Phase 1/Phase 3	Phase 1 /GND	Phase 2/GND	Phase 3/GND
	outside						
65 DPS 11601 - 11 - P1	FILTRATION CONTAINER TANK 1	OL			OL	OL	
65 DPS 11601 - 20 - P1	SAME	OL			OL	OL	
65 DPS 11601 - 27-29 P1	SAME	OL			OL	OL	
65 DPS 11601 - 31-33 P1	SAME	OL			OL	OL	

Promec's Representative Signature — Date: 2018-07-10

Client's Representative Signature — Date

AGNICO EAGLE

Vendor Document Status

1 ☐ Proceed to next submission and status.

2 ☐ Proceed with exceptions as noted to next submission and status.

3 ☐ Do not proceed.
Revise as noted and resubmit next submission and status.

4 ☑ Complete, no further submission required.

By: Jean-Francois Tremblay Date: 2017-05-02

Review and authorization to fabricate are only for general conformance with the design concept of the Project as expressed in the Contract Documents. Sole responsibility for the accuracy and completeness of this document, including but not limited to dimensions and quantities, remains with the Supplier/Contractor. Agnico Eagle does not warrant the accuracy or completeness of any of the information contained herein, nor does Agnico Eagle authorize or approve any construction means, methods, techniques, sequences or any safety precautions or procedures.

Agnico Eagle No. 6515-C-270-007-141-TES-0011 R: Sub001

DOCUMENT FOR INFORMATION

NUQSANA-PROMEC MINING

AGNICO-EAGLE MINES Ltd.
Inspection and Testing Report
(C22498E)

AGNICO EAGLE

Contract Title: Fuel Tanks Piping Supply and Installation
Contract No.: 6515-C-270-007
Subject: Continuity Test
ITR No.: AEM-EL-ITR-004

Cable ID	Description	Continuity	Visual	Ident. Origin	Ident. Destination	Same	Date	By

Promec's Representative Signature | Date | Client's Representative Signature | Date

AGNICO EAGLE

Vendor Document Status

1 ☐ Proceed to next submission and status.

2 ☐ Proceed with exceptions as noted to next submission and status.

3 ☐ Do not proceed.
Revise as noted and resubmit next submission and status.

4 ☑ Complete, no further submission required.

By: Jean-Francois Tremblay Date: 2017-05-02

Review and authorization to fabricate are only for general conformance with the design concept of the Project as expressed in the Contract Documents. Sole responsibility for the accuracy and completeness of this document, including but not limited to dimensions and quantities, remains with the Supplier/Contractor. Agnico Eagle does not warrant the accuracy or completeness of any of the information contained herein, nor does Agnico Eagle authorize or approve any construction means, methods, techniques, sequences or any safety precautions or procedures.

Agnico Eagle No. 6515-C-270-007-141-TES-0018 R: Sub001

DOCUMENT FOR INFORMATION

Agnico-Eagle Mines Ltd.
Miscellaneous Field Report

ITR Number : AEM-GE-ITR-006
Contract no. : C22466T / C22498E

SYSTEM:	TAG NO. :	
LOCATION:	AREA:	UNIT:

DATE	ACTIVITY

PROMEC DESIGNATE - SIGNATURE | TITLE | DATE

CLIENT DESIGNATE - SIGNATURE | TITLE | DATE

AGNICO EAGLE

Vendor Document Status

1 ☐ Proceed to next submission and status.

2 ☐ Proceed with exceptions as noted to next submission and status.

3 ☐ Do not proceed.
Revise as noted and resubmit next submission and status.

4 ☑ Complete, no further submission required.

By: JEAN-FRANCOIS TREMBLAY Date: 2017-06-22

Review and authorization to fabricate are only for general conformance with the design concept of the Project as expressed in the Contract Documents. Sole responsibility for the accuracy and completeness of this document, including but not limited to dimensions and quantities, remains with the Supplier/Contractor. Agnico Eagle does not warrant the accuracy or completeness of any of the information contained herein, nor does Agnico Eagle authorize or approve any construction means, methods, techniques, sequences or any safety precautions or procedures.

Agnico Eagle No. 6515-C-270-007-141-TES-0021 R: Sub002

DOCUMENT FOR INFORMATION

NUQSANA PROMEC MINING

AGNICO-EAGLE MINES Ltd.
Inspection & Testing Report

ITR Number: AEM-IN-ITR-001B
ITR Type: FLOW SWITCH
Contract No.: 6515-C-270-007

AGNICO EAGLE

Tag Number:		**Equipment/ Pipe N°:**		**System:**	
Service:		**Function:**		**Purchase Order:**	
Manufacturer:		**Model:**		**Serial Number:**	
Location Dwg :		**Reference Datasheet:**		**Installation Detail Dwg:**	
Reference Datasheet Number:					

Item N°	Inspection Points	C	NC/ NCR #	N/A	Completed By/ Date
1	INSTRUMENT TAG ATTACHED	C	NC #	N/A	Promec: CLIENT:
2	CABLE TAG ATTACHED	C	NC #	N/A	Promec: CLIENT:
3	DEVICE INSTALLED AS PER INSTALLATION DETAILS, LOCATION OR MANUFACTURER'S DRAWING	C	NC #	N/A	Promec: CLIENT:
4	EQUIPMENT ACCESSIBLE AND EASY TO MAINTAIN	C	NC #	N/A	Promec: CLIENT:
5	WIRING CORRECT AND PROPERLY LABELED	C	NC #	N/A	Promec: CLIENT:
6	FLOW ARROW OR ORIENTATION MATCHES PROCESS FLOW	C	NC #	N/A	Promec: CLIENT:
7	PROCESS CONNECTION ADEQUATE (SCREWED OR FLANGED)	C	NC #	N/A	Promec: CLIENT:
8	CALIBRATION CERTIFICATE AVAILABLE	C	NC #	N/A	Promec: CLIENT:
9	ELECTRICAL SUPPLY COMPATIBLE WITH SOURCE	C	NC #	N/A	Promec: CLIENT:
10		C	NC #	N/A	Promec: CLIENT:
11		C	NC #	N/A	Promec: CLIENT:

Comments

Sign Off			
Promec Signature:		**CLIENT Signature:**	
Date:		**Date:**	

Legend					
C	Conformance	NC	Non Conformance	N/A	Not Applicable
NCR	Non Conformance Report				

AGNICO EAGLE

Vendor Document Status

1 ☐ Proceed to next submission and status.

2 ☐ Proceed with exceptions as noted to next submission and status.

3 ☐ Do not proceed.
Revise as noted and resubmit next submission and status.

4 ☑ Complete, no further submission required.

By: JEAN-FRANCOIS TREMBLAY Date: 2017-06-22

Review and authorization to fabricate are only for general conformance with the design concept of the Project as expressed in the Contract Documents. Sole responsibility for the accuracy and completeness of this document, including but not limited to dimensions and quantities, remains with the Supplier/Contractor. Agnico Eagle does not warrant the accuracy or completeness of any of the information contained herein, nor does Agnico Eagle authorize or approve any construction means, methods, techniques, sequences or any safety precautions or procedures.

Agnico Eagle No. 6515-C-270-007-141-TES-0022 R: Sub002

DOCUMENT FOR INFORMATION

NUQSANA PROMEC MINING

AGNICO-EAGLE MINES Ltd.
Inspection & Testing Report

ITR Number: AEM-IN-ITR-001C
ITR Type: FLOW TRANSMITTER
Contract No.: 6515-C-270-007

AGNICO EAGLE

Tag Number:		**Equipment/ Pipe N°:**		**System:**	
Service:		**Function:**		**Purchase Order:**	
Manufacturer:		**Model:**		**Serial Number:**	
Location Dwg :		**Reference Datasheet:**		**Installation Detail Dwg:**	
Reference Datasheet Number:					

Item N°	Inspection Points	C	NC/ NCR #	N/A	Completed By/ Date
1	INSTRUMENT TAG ATTACHED	C	NC #	N/A	Promec: CLIENT:
2	CABLE TAG ATTACHED	C	NC #	N/A	Promec: CLIENT:
3	DEVICE INSTALLED AS PER INSTALLATION DETAILS, LOCATION OR MANUFACTURER'S DRAWING	C	NC #	N/A	Promec: CLIENT:
4	EQUIPMENT ACESSIBLE AND EASY TO MAINTAIN	C	NC #	N/A	Promec: CLIENT:
5	EQUIPMENT RACK OR CLAMPING DEVICE ADEQUATE (HEIGHT, SOLIDITY ETC.)	C	NC #	N/A	Promec: CLIENT:
6	WIRING CORRECT AND PROPERLY LABELED	C	NC #	N/A	Promec: CLIENT:
7	MINIMUM STRAIGHT PIPE LENGHT UPSTREAM AND DOWNSTREAM REQUIREMENT	C	NC #	N/A	Promec: CLIENT:
8	GROUNDING OF DEVICE	C	NC #	N/A	Promec: CLIENT:
9	FLOW ARROW OR ORIENTATION MATCHES PROCESS FLOW	C	NC #	N/A	Promec: CLIENT:
10	DISPLAY VISIBLE	C	NC #	N/A	Promec: CLIENT:
11	PROCESS CONNECTION ADEQUATE (SCREWED OR FLANGED)	C	NC #	N/A	Promec: CLIENT:
12	CALIBRATION CERTIFICATE AVAILABLE	C	NC #	N/A	Promec: CLIENT:
13	ELECTRICAL SUPPLY COMPATIBLE WITH SOURCE	C	NC #	N/A	Promec: CLIENT:

Comments

Sign Off			
Promec Signature:		**CLIENT Signature:**	
Date:		**Date:**	

Legend					
C	Conformance	**NC**	Non Conformance	**N/A**	Not Applicable
NCR	Non Conformance Report				

NUQSANA PROMEC MINING

AGNICO-EAGLE MINES Ltd.
Inspection & Testing Report

ITR Number: AEM-IN-ITR-002A
ITR Type: PUSH BUTTON STATION
Contract No.: 6515-C-270-007

Vendor Document Status
AGNICO EAGLE
1 ☐ Proceed to next submission and status.
2 ☐ Proceed with exceptions as noted to next submission and status.
3 ☐ Do not proceed, revise noted and resubmit next submission and status.
4 ☑ Complies, no further submission required.
By: JEAN-FRANCOIS TREMBLAY Date: 2017-06-29
Review and authorization by Agnico Eagle only for general conformance with the design concept of the Project and compliance to the Contract Documents but without responsibility for the accuracy and completeness of this document, including but not limited to dimensions and quantities, remains with the Supplier/Contractor. Agnico Eagle does not warrant the accuracy or completeness of any of the information contained herein, nor does Agnico Eagle authorize or approve any construction means, methods, techniques, sequences or any safety precautions or procedures.
Agnico Eagle No: 6515-C-270-007-141-TES-0023 • Sub002
DOCUMENT FOR INFORMATION

AGNICO EAGLE

Tag Number:		**Equipment/ Pipe N°:**		**System:**	
Service:		**Function:**		**Purchase Order:**	
Manufacturer:		**Model:**		**Serial Number:**	
Location Dwg :		**Reference Datasheet:**		**Installation Detail Dwg:**	
Reference Datasheet Number:					

Item N°	Inspection Points	C	NC/ NCR #	N/A	Completed By/ Date
1	INSTRUMENT TAG ATTACHED	C	NC #	N/A	Promec: CLIENT:
2	CABLE TAG ATTACHED	C	NC #	N/A	Promec: CLIENT:
3	DEVICE INSTALLED AS PER INSTALLATION DETAILS, LOCATION OR MANUFACTURER'S DRAWING	C	NC #	N/A	Promec: CLIENT:
4	EQUIPMENT ACCESSIBLE AND EASY TO MAINTAIN / OPERATE	C	NC #	N/A	Promec: CLIENT:
5	EQUIPMENT RACK OR CLAMPING DEVICE ADEQUATE (HEIGHT, SOLIDITY ETC.)	C	NC #	N/A	Promec: CLIENT:
6	WIRING CORRECT AND PROPERLY LABELED	C	NC #	N/A	Promec: CLIENT:
7		C	NC #	N/A	Promec: CLIENT:
8		C	NC #	N/A	Promec: CLIENT:
9		C	NC #	N/A	Promec: CLIENT:
10		C	NC #	N/A	Promec: CLIENT:
11		C	NC #	N/A	Promec: CLIENT:

Comments

Sign Off			
Promec Signature:		**CLIENT Signature:**	
Date:		**Date:**	

Legend					
C	Conformance	NC	Non Conformance	N/A	Not Applicable
NCR	Non Conformance Report				

AGNICO EAGLE

Vendor Document Status

1 ☐ Proceed to next submission and status.

2 ☐ Proceed with exceptions as noted to next submission and status.

3 ☐ Do not proceed.
Revise as noted and resubmit next submission and status.

4 ☑ Complete, no further submission required.

By: JEAN-FRANCOIS TREMBLAY Date: 2017-06-22

Review and authorization to fabricate are only for general conformance with the design concept of the Project as expressed in the Contract Documents. Sole responsibility for the accuracy and completeness of this document, including but not limited to dimensions and quantities, remains with the Supplier/Contractor. Agnico Eagle does not warrant the accuracy or completeness of any of the information contained herein, nor does Agnico Eagle authorize or approve any construction means, methods, techniques, sequences or any safety precautions or procedures.

Agnico Eagle No. 6515-C-270-007-141-TES-0024 R: Sub002

DOCUMENT FOR INFORMATION

NUQSANA PROMEC MINING

AGNICO-EAGLE MINES Ltd.
Inspection & Testing Report

ITR Number: AEM-IN-ITR-003A
ITR Type: LEVEL TRANSMITTER
Contract No.: 6515-C-270-007

AGNICO EAGLE

Tag Number:		**Equipment/ Pipe N°:**		**System:**	
Service:		**Function:**		**Purchase Order:**	
Manufacturer:		**Model:**		**Serial Number:**	
Location Dwg :		**Reference Datasheet:**		**Installation Detail Dwg:**	
Reference Datasheet Number:					

Item N°	Inspection Points	C	NC/ NCR #	N/A	Completed By/ Date
1	INSTRUMENT TAG ATTACHED	C	NC #	N/A	Promec: CLIENT:
2	CABLE TAG ATTACHED	C	NC #	N/A	Promec: CLIENT:
3	DEVICE INSTALLED AS PER INSTALLATION DETAILS, LOCATION OR MANUFACTURER'S DRAWING	C	NC #	N/A	Promec: CLIENT:
4	EQUIPMENT ACCESSIBLE AND EASY TO MAINTAIN	C	NC #	N/A	Promec: CLIENT:
5	EQUIPMENT RACK OR CLAMPING DEVICE ADEQUATE (HEIGHT, SOLIDITY ETC.)	C	NC #	N/A	Promec: CLIENT:
6	WIRING CORRECT AND PROPERLY LABELED	C	NC #	N/A	Promec: CLIENT:
7	NOZZLE IS UNOBSTRUCTED OR ADEQUATE	C	NC #	N/A	Promec: CLIENT:
8	DISPLAY VISIBLE	C	NC #	N/A	Promec: CLIENT:
9	PROCESS CONNECTION ADEQUATE (SCREWED OR FLANGED)	C	NC #	N/A	Promec: CLIENT:
10	CALIBRATION CERTIFICATE AVAILABLE	C	NC #	N/A	Promec: CLIENT:
11	ELECTRICAL SUPPLY COMPATIBLE WITH SOURCE	C	NC #	N/A	Promec: CLIENT:

Comments

Sign Off			
Promec Signature:		**CLIENT Signature:**	
Date:		**Date:**	

Legend					
C	Conformance	**NC**	Non Conformance	**N/A**	Not Applicable
NCR	Non Conformance Report				

AGNICO EAGLE

Vendor Document Status

1 ☐ Proceed to next submission and status.

2 ☐ Proceed with exceptions as noted to next submission and status.

3 ☐ Do not proceed.
Revise as noted and resubmit next submission and status.

4 ☑ Complete, no further submission required.

By: JEAN-FRANCOIS TREMBLAY Date: 2017-06-22

Review and authorization to fabricate are only for general conformance with the design concept of the Project as expressed in the Contract Documents. Sole responsibility for the accuracy and completeness of this document, including but not limited to dimensions and quantities, remains with the Supplier/Contractor. Agnico Eagle does not warrant the accuracy or completeness of any of the information contained herein, nor does Agnico Eagle authorize or approve any construction means, methods, techniques, sequences or any safety precautions or procedures.

Agnico Eagle No. 6515-C-270-007-141-TES-0027 R: Sub002

DOCUMENT FOR INFORMATION

NUQSANA-PROMEC MINING

AGNICO-EAGLE MINES Ltd.
Inspection & Testing Report

ITR Number: AEM-IN-ITR-004C
ITR Type: PRESSURE SWITCH
Contract No.: 6515-C-270-007

AGNICO EAGLE

Tag Number:		**Equipment/ Pipe N°:**		**System:**	
Service:		**Function:**		**Purchase Order:**	
Manufacturer:		**Model:**		**Serial Number:**	
Location Dwg :		**Reference Datasheet:**		**Installation Detail Dwg:**	
Reference Datasheet Number:					

Item N°	Inspection Points	C	NC/ NCR #	N/A	Completed By/ Date
1	INSTRUMENT TAG ATTACHED	C	NC #	N/A	Promec: CLIENT:
2	CABLE TAG ATTACHED	C	NC #	N/A	Promec: CLIENT:
3	DEVICE INSTALLED AS PER INSTALLATION DETAILS, LOCATION OR MANUFACTURER'S DRAWING	C	NC #	N/A	Promec: CLIENT:
4	EQUIPMENT ACCESSIBLE AND EASY TO MAINTAIN	C	NC #	N/A	Promec: CLIENT:
5	WIRING CORRECT AND PROPERLY LABELED	C	NC #	N/A	Promec: CLIENT:
6	BLOCK AND BLEED VALVE	C	NC #	N/A	Promec: CLIENT:
7	PROCESS CONNECTION ADEQUATE (SCREWED OR FLANGED)	C	NC #	N/A	Promec: CLIENT:
8	CALIBRATION CERTIFICATE AVAILABLE	C	NC #	N/A	Promec: CLIENT:
9	ELECTRICAL SUPPLY COMPATIBLE WITH SOURCE	C	NC #	N/A	Promec: CLIENT:
10		C	NC #	N/A	Promec: CLIENT:
11		C	NC #	N/A	Promec: CLIENT:

Comments

Sign Off			
Promec Signature:		**CLIENT Signature:**	
Date:		**Date:**	

Legend					
C	Conformance	**NC**	Non Conformance	**N/A**	Not Applicable
NCR	Non Conformance Report				

AGNICO EAGLE

Vendor Document Status

1 ☐ Proceed to next submission and status.

2 ☐ Proceed with exceptions as noted to next submission and status.

3 ☐ Do not proceed.
Revise as noted and resubmit next submission and status.

4 ☑ Complete, no further submission required.

By: JEAN-FRANCOIS TREMBLAY Date: 2017-06-22

Review and authorization to fabricate are only for general conformance with the design concept of the Project as expressed in the Contract Documents. Sole responsibility for the accuracy and completeness of this document, including but not limited to dimensions and quantities, remains with the Supplier/Contractor. Agnico Eagle does not warrant the accuracy or completeness of any of the information contained herein, nor does Agnico Eagle authorize or approve any construction means, methods, techniques, sequences or any safety precautions or procedures.

Agnico Eagle No. 6515-C-270-007-141-TES-0029 R: Sub002

DOCUMENT FOR INFORMATION

AGNICO-EAGLE MINES Ltd.
Inspection & Testing Report

ITR Number: AEM-IN-ITR-006A
ITR Type: On / OFF VALVE
Contract No.: 6515-C-270-007

NUQSANA PROMEC MINING

AGNICO EAGLE

Tag Number:		**Equipment/ Pipe N°:**		**System:**	
Service:		**Function:**		**Purchase Order:**	
Manufacturer:		**Model:**		**Serial Number:**	
Location Dwg :		**Reference Datasheet:**		**Installation Detail Dwg:**	
Reference Datasheet Number:					

Item N°	Inspection Points	C	NC/ NCR #	N/A	Completed By/ Date
1	INSTRUMENT TAG ATTACHED	C	NC #	N/A	Promec: CLIENT:
2	CABLE TAG ATTACHED	C	NC #	N/A	Promec: CLIENT:
3	DEVICE INSTALLED AS PER INSTALLATION DETAILS, LOCATION OR MANUFACTURER'S DRAWING	C	NC #	N/A	Promec: CLIENT:
4	EQUIPMENT ACCESSIBLE AND EASY TO MAINTAIN	C	NC #	N/A	Promec: CLIENT:
5	WIRING CORRECT AND PROPERLY LABELED	C	NC #	N/A	Promec: CLIENT:
6	SS AIR SUPPLY TUBING MINIMUM 3/8"	C	NC #	N/A	Promec: CLIENT:
7	MINIMUM STRAIGHT PIPE LENGHT UPSTREAM AND DOWNSTREAM REQUIREMENT	C	NC #	N/A	Promec: CLIENT:
8	POSITIONER, SOLENOID OR LIMIT SWITCH IS UNDAMAGED	C	NC #	N/A	Promec: CLIENT:
9	FLOW ARROW OR ORIENTATION MATCHES PROCESS FLOW	C	NC #	N/A	Promec: CLIENT:
10	OPERATION BLOCK IN VALVE	C	NC #	N/A	Promec: CLIENT:
11	PROCESS CONNECTION ADEQUATE (SCREWED OR FLANGED)	C	NC #	N/A	Promec: CLIENT:
12	CALIBRATION CERTIFICATE AVAILABLE	C	NC #	N/A	Promec: CLIENT:
13	ELECTRICAL SUPPLY COMPATIBLE WITH SOURCE	C	NC #	N/A	Promec: CLIENT:

Comments

Sign Off			
Promec Signature:		**CLIENT Signature:**	
Date:		**Date:**	

Legend					
C	Conformance	**NC**	Non Conformance	**N/A**	Not Applicable
NCR	Non Conformance Report				

AGNICO EAGLE

Vendor Document Status

1 ☐ Proceed to next submission and status.

2 ☐ Proceed with exceptions as noted to next submission and status.

3 ☐ Do not proceed.
Revise as noted and resubmit next submission and status.

4 ☑ Complete, no further submission required.

By: JEAN-FRANCOIS TREMBLAY Date: 2017-06-22

Review and authorization to fabricate are only for general conformance with the design concept of the Project as expressed in the Contract Documents. Sole responsibility for the accuracy and completeness of this document, including but not limited to dimensions and quantities, remains with the Supplier/Contractor. Agnico Eagle does not warrant the accuracy or completeness of any of the information contained herein, nor does Agnico Eagle authorize or approve any construction means, methods, techniques, sequences or any safety precautions or procedures.

Agnico Eagle No. 6515-C-270-007-141-TES-0056 R: Sub001

DOCUMENT FOR INFORMATION

NUQSANA PROMEC MINING

AGNICO-EAGLE MINES Ltd.
Inspection & Testing Report

ITR Number: AEM-IN-ITR-001A
ITR Type: FLOW ELEMENT
Contract No.: 6515-C-270-007

AGNICO EAGLE

Tag Number:		**Equipment/ Pipe N°:**		**System:**	
Service:		**Function:**		**Purchase Order:**	
Manufacturer:		**Model:**		**Serial Number:**	
Location Dwg :		**Reference Datasheet:**		**Installation Detail Dwg:**	
Reference Datasheet Number:					

Item N°	Inspection Points	C	NC/ NCR #	N/A	Completed By/ Date
1	INSTRUMENT TAG ATTACHED	C	NC #	N/A	Promec: CLIENT:
2	CABLE TAG ATTACHED	C	NC #	N/A	Promec: CLIENT:
3	DEVICE INSTALLED AS PER INSTALLATION DETAILS, LOCATION OR MANUFACTURER'S DRAWING	C	NC #	N/A	Promec: CLIENT:
4	EQUIPMENT ACCESSIBLE AND EASY TO MAINTAIN	C	NC #	N/A	Promec: CLIENT:
5	EQUIPMENT RACK OR CLAMPING DEVICE ADEQUATE (HEIGHT, SOLIDITY ETC.)	C	NC #	N/A	Promec: CLIENT:
6	WIRING CORRECT AND PROPERLY LABELED	C	NC #	N/A	Promec: CLIENT:
7	MINIMUM STRAIGHT PIPE LENGHT UPSTREAM AND DOWNSTREAM REQUIREMENT	C	NC #	N/A	Promec: CLIENT:
8	GROUNDING OF DEVICE	C	NC #	N/A	Promec: CLIENT:
9	FLOW ARROW OR ORIENTATION MATCHES PROCESS FLOW	C	NC #	N/A	Promec: CLIENT:
10	PROCESS CONNECTION ADEQUATE (SCREWED OR FLANGED)	C	NC #	N/A	Promec: CLIENT:
11	DEFICIENCY LIST ITEMS CLEARED	C	NC #	N/A	Promec: CLIENT:
12	CALIBRATION CERTIFICATE AVAILABLE	C	NC #	N/A	Promec: CLIENT:
13	ELECTRICAL SUPPLY COMPATIBLE WITH SOURCE	C	NC #	N/A	Promec: CLIENT:

Comments

Sign Off			
Promec Signature:		**CLIENT Signature:**	
Date:		**Date:**	

Legend					
C	Conformance	**NC**	Non Conformance	**N/A**	Not Applicable
NCR	Non Conformance Report				

AGNICO EAGLE

Vendor Document Status

1 ☐ Proceed to next submission and status.

2 ☐ Proceed with exceptions as noted to next submission and status.

3 ☐ Do not proceed.
Revise as noted and resubmit next submission and status.

4 ☑ Complete, no further submission required.

By: JEAN-FRANCOIS TREMBLAY Date: 2017-06-22

Review and authorization to fabricate are only for general conformance with the design concept of the Project as expressed in the Contract Documents. Sole responsibility for the accuracy and completeness of this document, including but not limited to dimensions and quantities, remains with the Supplier/Contractor. Agnico Eagle does not warrant the accuracy or completeness of any of the information contained herein, nor does Agnico Eagle authorize or approve any construction means, methods, techniques, sequences or any safety precautions or procedures.

Agnico Eagle No. 6515-C-270-007-141-TES-0025 R: Sub002

DOCUMENT FOR INFORMATION

AGNICO-EAGLE MINES Ltd.
Inspection & Testing Report

ITR Number: AEM-IN-ITR-004A
ITR Type: PRESSURE INDICATOR
Contract No.: 6515-C-270-007

NUQSANA PROMEC MINING

AGNICO EAGLE

Tag Number:		**Equipment/ Pipe N°:**		**System:**	
Service:		**Function:**		**Purchase Order:**	
Manufacturer:		**Model:**		**Serial Number:**	
Location Dwg :		**Reference Datasheet:**		**Installation Detail Dwg:**	
Reference Datasheet Number:					

Item N°	Inspection Points	C	NC/ NCR #	N/A	Completed By/ Date
1	INSTRUMENT TAG ATTACHED	C	NC #	N/A	Promec: CLIENT:
2	DEVICE INSTALLED AS PER INSTALLATION DETAILS, LOCATION OR MANUFACTURER'S DRAWING	C	NC #	N/A	Promec: CLIENT:
3	EQUIPMENT ACCESSIBLE AND EASY TO MAINTAIN	C	NC #	N/A	Promec: CLIENT:
4	PROCESS CONNECTION ADEQUATE (SCREWED OR FLANGED)	C	NC #	N/A	Promec: CLIENT:
5	OPERATION BLOCK IN VALVE	C	NC #	N/A	Promec: CLIENT:
6	READING VISIBLE	C	NC #	N/A	Promec: CLIENT:
7	CALIBRATION CERTIFICATE AVAILABLE	C	NC #	N/A	Promec: CLIENT:
8	ELECTRICAL SUPPLY COMPATIBLE WITH SOURCE	C	NC #	N/A	Promec: CLIENT:
9		C	NC #	N/A	Promec: CLIENT:
10		C	NC #	N/A	Promec: CLIENT:
11		C	NC #	N/A	Promec: CLIENT:

Comments

Sign Off			
Promec Signature:		**CLIENT Signature:**	
Date:		**Date:**	

Legend					
C	Conformance	**NC**	Non Conformance	**N/A**	Not Applicable
NCR	Non Conformance Report				

AGNICO EAGLE

Vendor Document Status

1 ☐ Proceed to next submission and status.

2 ☐ Proceed with exceptions as noted to next submission and status.

3 ☐ Do not proceed.
Revise as noted and resubmit next submission and status.

4 ☑ Complete, no further submission required.

By: JEAN-FRANCOIS TREMBLAY Date: 2017-06-22

Review and authorization to fabricate are only for general conformance with the design concept of the Project as expressed in the Contract Documents. Sole responsibility for the accuracy and completeness of this document, including but not limited to dimensions and quantities, remains with the Supplier/Contractor. Agnico Eagle does not warrant the accuracy or completeness of any of the information contained herein, nor does Agnico Eagle authorize or approve any construction means, methods, techniques, sequences or any safety precautions or procedures.

Agnico Eagle No. 6515-C-270-007-141-TES-0026 R: Sub002

DOCUMENT FOR INFORMATION

NUQSANA PROMEC MINING

AGNICO-EAGLE MINES Ltd.
Inspection & Testing Report

ITR Number: AEM-IN-ITR-004B
ITR Type: PRESSURE SAFETY VALVE
Contract No.: 6515-C-270-007

AGNICO EAGLE

Tag Number:		**Equipment/ Pipe N°:**		**System:**	
Service:		**Function:**		**Purchase Order:**	
Manufacturer:		**Model:**		**Serial Number:**	
Location Dwg :		**Reference Datasheet:**		**Installation Detail Dwg:**	
Reference Datasheet Number:					

Item N°	Inspection Points	C	NC/ NCR #	N/A	Completed By/ Date
1	INSTRUMENT TAG ATTACHED	C	NC #	N/A	Promec: CLIENT:
2	DEVICE INSTALLED AS PER INSTALLATION DETAILS, LOCATION OR MANUFACTURER'S DRAWING	C	NC #	N/A	Promec: CLIENT:
3	EQUIPMENT ACCESSIBLE AND EASY TO MAINTAIN	C	NC #	N/A	Promec: CLIENT:
4	FLOW ARROW ON SENSOR OR ORIENTATION MATCHES PROCESS FLOW	C	NC #	N/A	Promec: CLIENT:
5	PROCESS CONNECTION ADEQUATE (SCREWED OR FLANGED)	C	NC #	N/A	Promec: CLIENT:
6	CALIBRATION CERTIFICATE AVAILABLE	C	NC #	N/A	Promec: CLIENT:
7	ELECTRICAL SUPPLY COMPATIBLE WITH SOURCE	C	NC #	N/A	Promec: CLIENT:
8		C	NC #	N/A	Promec: CLIENT:
9		C	NC #	N/A	Promec: CLIENT:
10		C	NC #	N/A	Promec: CLIENT:
11		C	NC #	N/A	Promec: CLIENT:

Comments

Sign Off			
Promec Signature:		**CLIENT Signature:**	
Date:		**Date:**	

Legend					
C	Conformance	**NC**	Non Conformance	**N/A**	Not Applicable
NCR	Non Conformance Report				

NUQSANA PROMEC MINING

AGNICO-EAGLE MINES Ltd.
Inspection & Testing Report

ITR Number: AEM-IN-ITR-003B
ITR Type: LEVEL GAUGE GLASS
Contract No.: 6515-C-270-007

Vendor Document Status
AGNICO EAGLE
1 ☐ Proceed to next submission and status.
2 ☐ Proceed with exceptions as noted in next submission and status
3 ☐ Do not proceed. Revise as noted and resubmit next submission and status.
4 ☑ Complete, no further submission required.
By: JEAN-FRANCOIS TREMBLAY Date: 2017-06-29
Review and authorization is taken only for general conformance with the design concept of the Project and compliance to the Contract Documents. Sole responsibility for the accuracy and completeness of this document, including but not limited to dimensions and quantities, remains with the Supplier/Contractor. Agnico Eagle does not warrant the accuracy or completeness of any of the information contained herein, nor does Agnico Eagle authorize or approve any construction means, methods, techniques, sequences or any safety precautions or procedures.
Agnico Eagle No. 6515-C-270-007-141-TES-0057 Rev. Sub002
DOCUMENT FOR INFORMATION

AGNICO EAGLE

Tag Number:		**Equipment/ Pipe N°:**		**System:**	
Service:		**Function:**		**Purchase Order:**	
Manufacturer:		**Model:**		**Serial Number:**	
Location Dwg :		**Reference Datasheet:**		**Installation Detail Dwg:**	
Reference Datasheet Number:					

Item N°	Inspection Points	C	NC/ NCR #	N/A	Completed By/ Date
1	INSTRUMENT TAG ATTACHED	C	NC #	N/A	Promec: CLIENT:
2	DEVICE INSTALLED AS PER INSTALLATION DETAILS, LOCATION OR MANUFACTURER'S DRAWING	C	NC #	N/A	Promec: CLIENT:
3	EQUIPMENT ACCESSIBLE AND EASY TO MAINTAIN	C	NC #	N/A	Promec: CLIENT:
4	PROCESS CONNECTION ADEQUATE (SCREWED OR FLANGED)	C	NC #	N/A	Promec: CLIENT:
5	HAVE OPERATION BLOCK IN VALVE	C	NC #	N/A	Promec: CLIENT:
6	READING VISIBLE	C	NC #	N/A	Promec: CLIENT:
7	CALIBRATION CERTIFICATE AVAILABLE	C	NC #	N/A	Promec: CLIENT:
8	ELECTRICAL SUPPLY COMPATIBLE WITH SOURCE	C	NC #	N/A	Promec: CLIENT:
9		C	NC #	N/A	Promec: CLIENT:
10		C	NC #	N/A	Promec: CLIENT:
11		C	NC #	N/A	Promec: CLIENT:

Comments

Sign Off			
Promec Signature:		**CLIENT Signature:**	
Date:		**Date:**	

Legend					
C	Conformance	NC	Non Conformance	N/A	Not Applicable
NCR	Non Conformance Report				

AGNICO EAGLE

Vendor Document Status

1 ☐ Proceed to next submission and status.

2 ☐ Proceed with exceptions as noted to next submission and status.

3 ☐ Do not proceed.
Revise as noted and resubmit next submission and status.

4 ☑ Complete, no further submission required.

By: Jean-Francois Tremblay Date: 2017-05-02

Review and authorization to fabricate are only for general conformance with the design concept of the Project as expressed in the Contract Documents. Sole responsibility for the accuracy and completeness of this document, including but not limited to dimensions and quantities, remains with the Supplier/Contractor. Agnico Eagle does not warrant the accuracy or completeness of any of the information contained herein, nor does Agnico Eagle authorize or approve any construction means, methods, techniques, sequences or any safety precautions or procedures.

Agnico Eagle No. 6515-C-270-007-141-TES-0012 R: Sub001

DOCUMENT FOR INFORMATION

NUQSANA-PROMEC MINING

AGNICO-EAGLE MINES Ltd.
Inspection & Testing Report

ITR Number: AEM-EL-ITR-005
ITR Type: MOTOR
Contract No.: 6515-C-270-007

AGNICO EAGLE

Tag Number:		**Equipment/ Pipe N°:**		**System:**	
Service:		**Function:**		**Purchase Order:**	
Manufacturer:		**Model:**		**Serial Number:**	
Location Dwg :		**Reference Datasheet:**		**Installation Detail Dwg:**	
Reference Datasheet Number:					

Item N°	Inspection Points	C	NC/ NCR #	N/A	Completed By/ Date
1	EQUIPEMENT ACCESSIBLE AND EASY TO MAINTAIN	C	NC #	N/A	Promec: CLIENT:
2	NAME PLATE DATA AGREES WITH MOTOR DATA SHEET	C	NC #	N/A	Promec: CLIENT:
3	MOTOR ENCLOSURE TYPE IS SUITABLE FOR USE IN AREA CLASSIFICATION	C	NC #	N/A	Promec: CLIENT:
4	GROUNDING CONDUCTORS INSTALLED AND CONNECTED (4/ 0 for motor over 100 HP)	C	NC #	N/A	Promec: CLIENT:
5	MOTOR HAS BEEN INSULATION RESISTANCE TESTED (Megger)	C	NC #	N/A	Promec: CLIENT:
6	MOTOR TERMINATIONS HAVE BEEN PROPERLY MADE UP	C	NC #	N/A	Promec: CLIENT:
7	ROTATION CHECKED	C	NC #	N/A	Promec: CLIENT:
8	DEFICIENCY LIST ITEMS CLEARED	C	NC #	N/A	Promec: CLIENT:

Comments

Sign Off			
Promec Signature:		**CLIENT Signature:**	
Date:		**Date:**	

Legend					
C	Conformance	**NC**	Non Conformance	**N/A**	Not Applicable
NCR	Non Conformance Report				

AGNICO EAGLE

Vendor Document Status

1 ☐ Proceed to next submission and status.

2 ☐ Proceed with exceptions as noted to next submission and status.

3 ☐ Do not proceed.
Revise as noted and resubmit next submission and status.

4 ☑ Complete, no further submission required.

By: Jean-Francois Tremblay Date: 2017-05-02

Review and authorization to fabricate are only for general conformance with the design concept of the Project as expressed in the Contract Documents. Sole responsibility for the accuracy and completeness of this document, including but not limited to dimensions and quantities, remains with the Supplier/Contractor. Agnico Eagle does not warrant the accuracy or completeness of any of the information contained herein, nor does Agnico Eagle authorize or approve any construction means, methods, techniques, sequences or any safety precautions or procedures.

Agnico Eagle No. 6515-C-270-007-141-TES-0015 R: Sub001

DOCUMENT FOR INFORMATION

Fuel Tanks Piping

Supply and Installation

Punchlist

Document Number : AEM-GE-ITR-003
Contract Number : C22466T / C22498E

Equipment/System description:

ITEM No	DESCRIPTION	CAT 1	CAT 2	CAT 3	COMMENTS	COMPLETED
1						
2						
3						
4						
5						
6						
7						
8						
9						
10						
11						
12						
13						
14						
15						
16						
17						
18						
19						
20						

CAT 1 = Effects commissioning
CAT 2 = Effects operation
CAT 3 = Post operation

AGNICO EAGLE

Vendor Document Status

1 ☐ Proceed to next submission and status.

2 ☐ Proceed with exceptions as noted to next submission and status.

3 ☐ Do not proceed.
Revise as noted and resubmit next submission and status.

4 ☑ Complete, no further submission required.

By: Jean-Francois Tremblay Date: 2017-05-02

Review and authorization to fabricate are only for general conformance with the design concept of the Project as expressed in the Contract Documents. Sole responsibility for the accuracy and completeness of this document, including but not limited to dimensions and quantities, remains with the Supplier/Contractor. Agnico Eagle does not warrant the accuracy or completeness of any of the information contained herein, nor does Agnico Eagle authorize or approve any construction means, methods, techniques, sequences or any safety precautions or procedures.

Agnico Eagle No. 6515-C-270-007-141-TES-0016 R: Sub001

DOCUMENT FOR INFORMATION

Date: _____

To: _____

Project No: _____

Contract No: _____

Contract Title: _____

Contractor: _____

We, _____ (Contractor's Name), the Contractor for the above described contract, hereby certify that we have reviewed the Contract Documents pertaining to:

Contract No.: _____

Contract Name: _____

Partial Completion Certificates: _____

and having physically inspected the Work performed, do hereby file claim for a notice of Final Completion.

I do declare that I am, _____ (Responsible's Name), HAVING AUTHORITY FROM MY COMPANY TO PETITION FOR THE ABOVE REFERRED TO FINAL COMPLETION NOTICE.

Signature: _____

Name: _____

Title: _____

NO. DESSIN
DRAWING NO. 65-116-210-200

FORMAT ARCH D

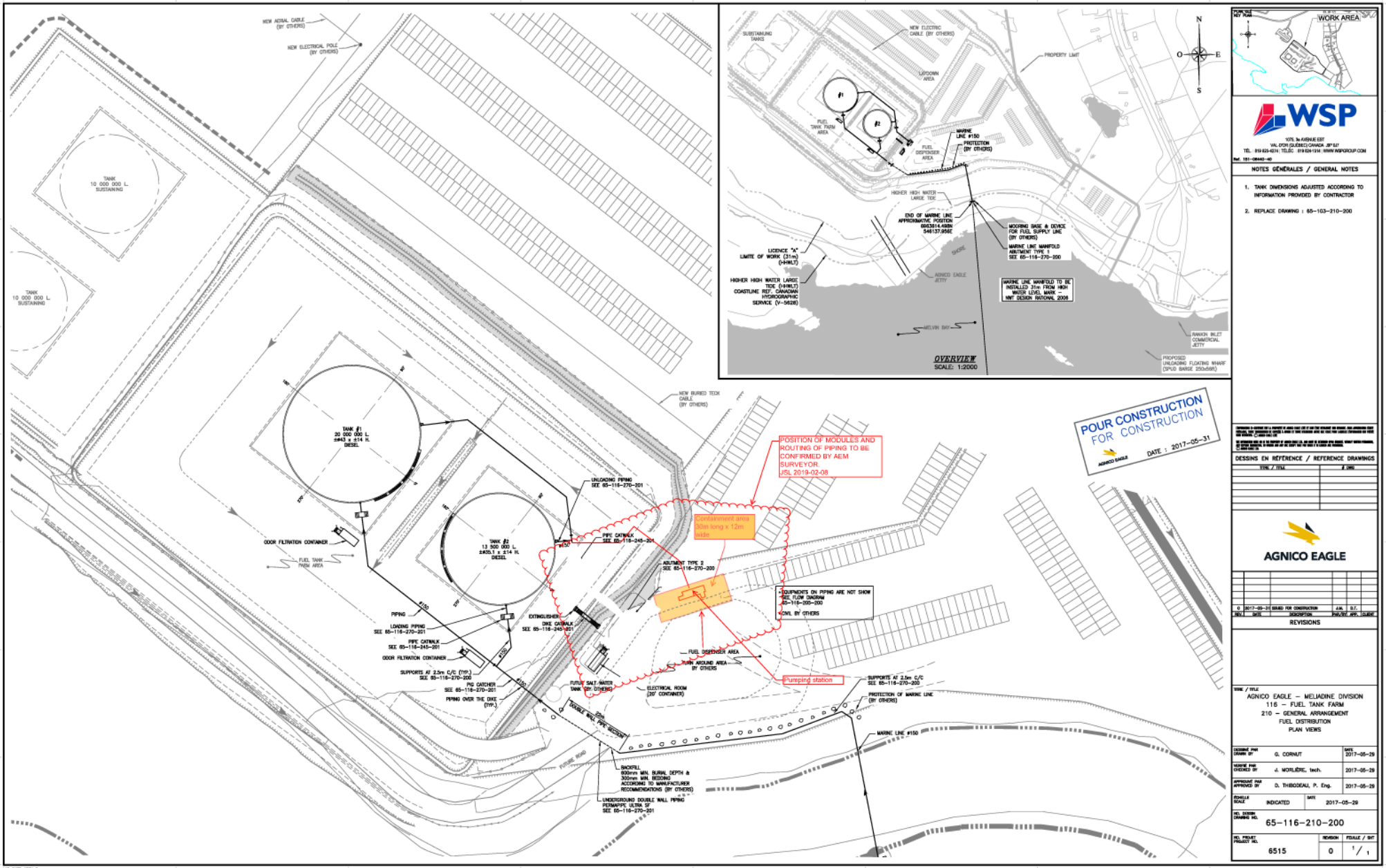

POUR CONSTRUCTION
FOR CONSTRUCTION
AGNICO EAGLE
DATE : 2017-05-31

WSP
1075, 3e AVENUE EST
VAL-D'OR (QUÉBEC) CANADA J9P 0J7
TÉL. : 819 825-6314 TÉLÉC. : 819 824-1314 | WWW.WSPGROUP.COM
Ref. 181-09440-40

NOTES GÉNÉRALES / GENERAL NOTES

1. TANK DIMENSIONS ADJUSTED ACCORDING TO INFORMATION PROVIDED BY CONTRACTOR
2. REPLACE DRAWING : 65-103-210-200

DESSINS EN RÉFÉRENCE / REFERENCE DRAWINGS

TYPE / TITLE	# (NO)

AGNICO EAGLE

REV.	DATE	DESCRIPTION	PAR./VÉ.	APP.	CLIENT
0	2017-05-31	ISSUED FOR CONSTRUCTION	J.M.	D.T.	

REVISIONS

TYPE / TITLE
AGNICO EAGLE – MEL/ADINE DIVISION
116 – FUEL TANK FARM
210 – GENERAL ARRANGEMENT
FUEL DISTRIBUTION
PLAN VIEWS

DESSINÉ PAR DRAWN BY	G. CORNUT	2017-05-29
VÉRIFIÉ PAR CHECKED BY	J. MORLIÈRE, tech.	2017-05-29
APPROUVÉ PAR APPROVED BY	D. THIBODEAU, P. Eng.	2017-05-29

ÉCHELLE SCALE: INDICATED
DATE: 2017-05-29

NO. DESSIN DRAWING NO. 65-116-210-200

NO. PROJET PROJECT NO. 6515
REVISION 0
FEUILLE / SHT 1/1

AC-GMT-ARCH D

\\CIMT1.1QX01\projets\2019\1\181-09440-40\Sante Mondiale\Dwl\65-116-210-200_R0.dwg 2019-02-19 14:03:09

FILE NO. 65-116-210-200_R0.dwg

NO. DESSIN / DRAWING NO. 65-116-275-202_R0

FORMAT ARCH D

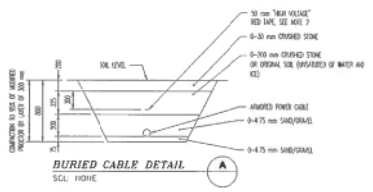

BURIED CABLE DETAIL A
SCL: NONE

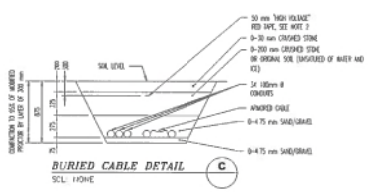

BURIED CABLE DETAIL C
SCL: NONE

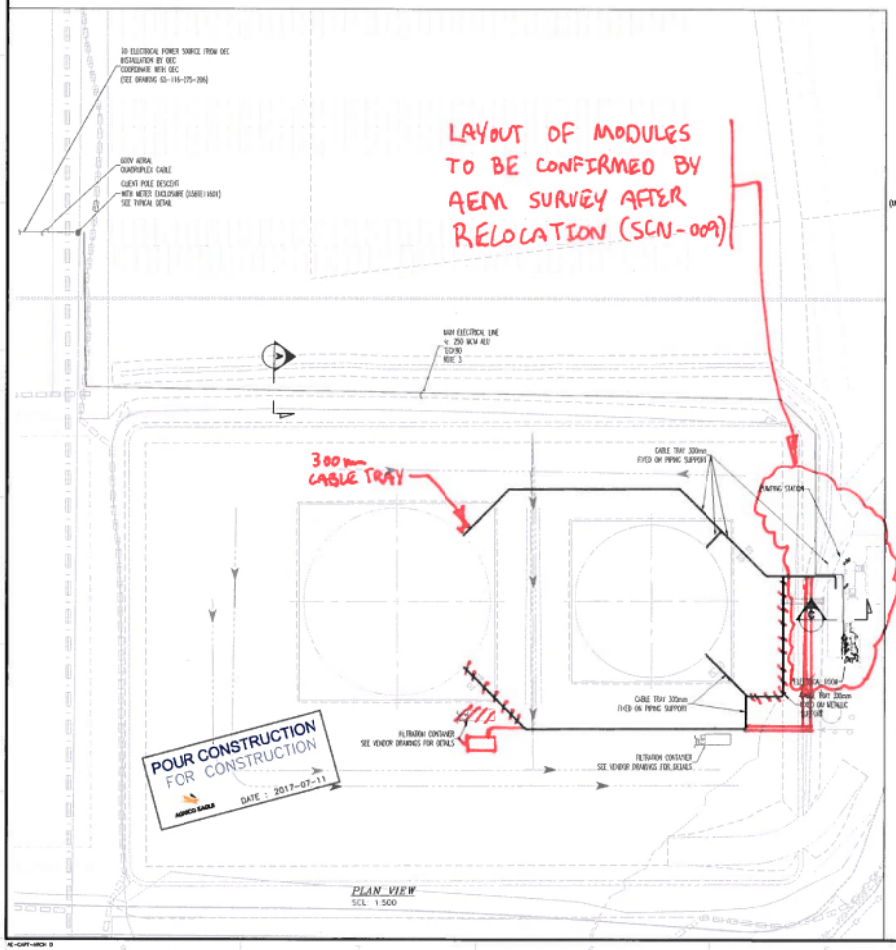

PLAN VIEW
SCL: 1:500



SECTION B
SCL: NONE

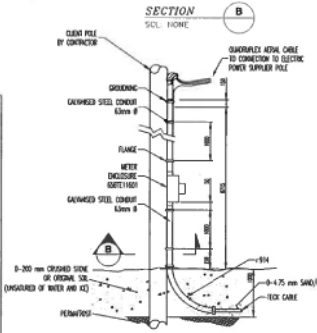

NOTE:
REFER TO CANADIAN ELECTRIC CODE, OEC CODE AND INSTALLATION DETAILS

TYPICAL DETAIL – POLE DESCENT
SCL: NONE

PANEL No. : 65DPS11601

Tension:	120 208 Volts
Powered by:	TRANSFORMER 30kVA
Installation:	SURFACE
Location:	ELECTRICAL ROOM CONTAINER
Type:	NEMA3R,3C

Enclosure type:	NEMA 1
Main breaker:	-
No. of circuits:	42 CCTs
Bars:	225 A
Ampacity:	10 kA

Local and description	TYPE	QTY	WATTS	BREAK TYPE	BREAK AMP	C T #	C T #	BREAK AMP	BREAK TYPE	WATTS	QTY	TYPE	Local and description
LIGHTING FIXTURE TANK #2	L	7	241		15	1	A 2	15		240	2	P	OUTLET PUMPING STATION
L CONT. CTRL FEEDER	L	7	242			3	B 4	15		120	1	P	OUTLET ELECTRICAL ROOM
LIGHT./EMER LIGHT PUMP.STATI	L	5	37		15	5	C 6	15		240	2	P	O ELEC ROOM/IT AREA 103
LIGHT./EMER LIGHT ELEC ROOM	L	5	216		15	7	A 8	15		409	1	Q	CABINET 65PLC11601
L FILTRATION CONTAINER TANK #1	L	4	180		15	9	B 10	15	50	5000	1	M	65HEA11603
	L	3	144		15	11	C 12	15		5000	1	M	
LIGHTING FIXTURE TANK #1	L	7	241		15	13	A 14	15		888	2	M	MOT OP VALVES FEEDER
	L	7	242			15	B 16	15		200	1	P	O UTILITY CAB 65PLC11601
L TANK#1/TANK #2 GROUND FLOO	L	4	138		15	17	C 18	15		100	1	Q	INSTRUMENT
	L	4	138			19	A 20	15		30	1	M	VEN FLT CONTAINER TANK #1
L OUT ELEC ROOM/ OUT PUMP ST	L	7	241		15	21	B 22	15		50	1	M	VEN FLT CONTAINER TANK #2
	L	7	242			23	C 24	15					
L FILTRATION CONTAINER TANK #2	L	3	144		15	25	A 26	15					
65HEA11605 FILTRATION	H	1	2500		30	27	B 28	15					
CONTAINER TANK #1	H	1	2500			29	C 30	15					
65HEA11606 FILTRATION	H	1	2500		30	31	A 32	15					
CONTAINER TANK #1	H	1	2500			33	B 34	15					
65HEA11607 FILTRATION	H	1	2500		30	35	C 36	15					
CONTAINER TANK #2	H	1	2500			37	A 38	15					
65HEA11608 FILTRATION	H	1	2500		30	39	B 40	15					
CONTAINER TANK #2	H	1	2500			41	C 42	15					

TYPE (REF)	Total(W)Qty
(L) Lighting	2448 13
(P) Outlet	800 4
(H) Heating	32000 18
(M) Motors	888 3
(W) Water heater	0 0
(O) Others	800 3

TYPE (REF)	Qty (ref)
(S) Spare	0

	Watts	Amp
Phase A	7566	62.98
Phase B	9715	81.46
Phase C	8401	78.36
Total W	25734	74.25

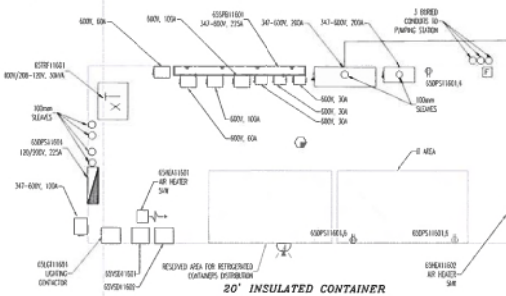

20' INSULATED CONTAINER
ELECTRICAL ROOM
SCL: 1:30

20' INSULATED CONTAINER
PUMPING STATION
SCL: 1:30

PROMEC AS-BUILT
Signature:
Date: 2019/02/21.

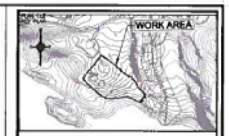

WSP
1075, 3e AVENUE EST
VAL-D'OR (QUÉBEC) CANADA J9P 1J7
TÉL.: 819 825-4271 / TÉLÉC.: 819 824-1514 / WWW.WSPGROUP.COM

NOTES GÉNÉRALES / GENERAL NOTES

1. THE PUMPING STATION CONTAINER COMES PREWIRED WITH THOSE JONCTION BOXES. ELECTRICAL CONTRACTOR SHALL CONNECT THOSE JONCTION BOXES TO THE RIGHT SERVICES IN THE ELECTRICAL CONTAINER. ALL CABLES BETWEEN CONTAINERS SHALL BE TECK TYPE AND INSTALLED BURIED IN TRENCH. INSTALL 3¼ 100mm Ø CONDUITS FOR FUTURE CABLES.
2. THE RED TAPES SHALL BE INSTALLED ABOVE THE ELECTRICAL CABLES AND FOLLOW ALL THE BURIED PART OF THEM.
3. COORDINATE THE EXACT LOCATION AND DEPTH OF THE MAIN FEEDER CABLE.

- THE LOCATION OF PIPING IS APPROXIMATE AND SHALL BE COORDINATE WITH OTHER MECHANICAL DRAWINGS.

DESSINS EN RÉFÉRENCE / REFERENCE DRAWINGS

ITEM / TITLE	# DWG
EQUIPMENT LAYOUT, DETAILS AND SERVICES PANEL	65-116-275-202
LIGHTING	65-116-285-201
LEGEND, TABLES & DETAILS	65-116-275-200
SINGLE LINE DIAGRAM	65-116-275-203

AGNICO EAGLE

REV.	DATE	DESCRIPTION	PAR/INT. APP.	CLIENT
0	2017-07-11	ISSUED FOR CONSTRUCTION	F.W.C.	L.S.

REVISIONS

TYPE / TITLE
AGNICO EAGLE – MEADOWBANK DIVISION
116 – FUEL TANK FARM
275 – POWER ELECTRICAL
EQUIPMENT LAYOUT, DETAILS AND SERVICES PANEL
PLAN VIEW

DESIGNED PAR / DRAWN BY	BRIAN FILDES, Tech.	DATE 2016-06-22
VERIFIED PAR / CHECKED BY	RÉMI HÉNAULT, Tech.	2016-06-22
APPROVED PAR / APPROVED BY	LUC SÉNÉCAL, P.Eng.	2017-07-11
SCALE / ÉCHELLE	INDICATED	DATE 2016-01-25
NO. DESSIN / DRAWING NO.	65-116-275-202	
NO. PROJET / PROJECT NO.	6515	REVISION 0 / FEUILLE / SHT 1 / 1

FORMAT ARCH D

FILE NO. 65-116-275-202_R0.dwg

APPENDIX J

Inspection Report – Handover Package for Tank #2

Handover Package Tank 2 – 13,500CUM

AEM PURCHASE ORDER: OC-568510
AEM PACKAGE NO.: 6515-C-260-002
PACKAGE TITLE: FUEL TANKS (SUPPLY & INSTALL)
TANK LOCATION: RANKIN INLET

ICL Project No.: 295
ICL Document No.: 295-H2
AEM Document No.: 6515-C-260-002-141-QCR-0002_Sub001
Revision: 0

OWNER:

Agnico Eagle Mines Limited
145 King St. East, Suite 400,
Toronto, Ontario M5C 2Y7

GENERAL CONTRACTOR:

Inukshuk Construction Limited
PO Box 654
Rankin Inlet NU
X0C 0G0

Contact: David Mosher

PH: (867) 645-4030
FX: (902) 429-7762

Submitted by: Inukshuk Construction Limited
Submitted: October 30, 2017

AGNICO EAGLE

Vendor Document Status

1 ☐	Proceed to next submission and status.
2 ☐	Proceed with exceptions as noted to next submission and status.
3 ☐	Do not proceed. Revise as noted and resubmit next submission and status.
4 ☑	Complete, no further submission required.

By: Date:

Review and authorization to fabricate are only for general conformance with the design concept of the Project as expressed in the Contract Documents. Sole responsibility for the accuracy and completeness of this document, including but not limited to dimensions and quantities, remains with the Supplier/Contractor. Agnico Eagle does not warrant the accuracy or completeness of any of the information contained herein, nor does Agnico Eagle authorize or approve any construction means, methods, techniques, sequences or any safety precautions or procedures.

Agnico Eagle No. 6515-C-260-002-141-QCR-0002 R: Sub001

DOCUMENT FOR INFORMATION

Preamble:

This package contains all QA/QC documents and drawings for the field erected fuel storage tank. The Inspection and Test Plan (ITP) serves as a Table of Contents for the Handover Package. The contents have been divided into items 1-20, and a table of contents for each item of the ITP can be found at the beginning of each section (item). The As-Built Drawings can be found at the end of this package.

This package was compiled by the General Contractor: **Inukshuk Construction Ltd.** and reviewed by Mechanical Engineer: **Kyle Brown**.

INSPECTION & TEST PLAN

Client:	AGNICO EAGLE	**Tank Tag:**	TK# 2	**Document:**	TK #2 ITP
Project ID:	MELIADINE GOLD MINE	**Work Order:**	2955	**Revision:**	0

Item	Component	Activity	ITP Type	Documentation	Acceptance Criteria	Notes	Witness, Hold, Review Points	
							Client Sign/Date	Q.C. Sign/Date
1	Kick-Off Meeting	Kickoff Meeting	N/A	Meeting Minutes	N/A			H
2	Signature Log	Verify	N/A	Signature Log	N/A			H
3	Welder Qualification	Verify	N/A	Individual Welder Qualifications / Welder Log	API-650 / ASME IX			H
4	Inspector Qualification	Verify	N/A	In house Inspector & 3rd Party Qualifications	API-650			H
5	Weld Procedures	Verify	N/A	Approved Weld Procedures	API-650 / ASME IX, CWB W47.1			H
6	Welding Consumable	Electrode Storage	N/A	N/A	Manufacturer's Instructions			R
7	Foundation	Foundation Survey	DC	Foundation Acceptance Report, Compaction Report & Survey from 3rd Party	API-650 Para 7.5.5			H
8	Floor	Materials	FI	MTR Confirmation to Dwg	Drawing & API-650 Sect. 4	MTR of all plate under shell.		
		Fit up	VE, DC	As Built Drawing	Drawing	per API-650 5.1.5.4 - bottom plates under the shell shall have the outer ends of the joints fitted and lap-welded to form a smooth bearing surface.		R
		Welding	VE	Weld Map, Visual Report	API–650 Para 7.2 & 8.5 & WPS			R
		Vacuum Test	VB	Vacuum Box Test Report	API-650 Para 7.3.3(a) & 8.6			W
9	Shell to Floor Seams	Initial Weld Pass	VE	Weld Map, Visual Report	API-650 Para 8.5, 7.2.4.1			R
		Final Weld Pass	VE	Weld Map, Visual Report	API-650 Para 8.5, 7.2.4.1			R
		Diesel Test	NDT	Leak Test Report	API-650 Para 7.2.4.1 d)			W
10	Shell	Materials	FI	MTR Confirmation to Dwg	Drawing & API-650 Sect. 4	MTR of all plate		H
		Fit up 1st Course	VE, DC	As Built Drawing	Drawing			R
		Roundness	DC	Dimension Report	API-650 Para 7.5.3			H
		Welding	VE	Weld Map, Visual Report	API–650 Para 7.2, 7.5, 8.5 & WPS			R
		Tolerance Check – Plumbness & Local Deviations	DC	Dimension Report	API-650 Para 7.5			H
		Diesel Test Shell Welds	NDT	Leak Test Report	API-650 Para 7.3.6 2)a)i)			W
		UT – All Shell	NDT	UT report / Log / Map	API-650 Para Annex U	Shell less than 3/8" shall be intrepreted as 3/8" as a modification of API-650. All T joint UT.		H
11	Compression Ring	Fit up	VE, DC	As Built Drawing	Drawing			R
		Welding	VE	Weld Map, Visual Report	API–650 Para 7.2 & 8.5 & WPS			R
12	Roof	Fit up	VE, DC	As Built Drawing	Drawing			R
		Welding	VE	Visual Report	API–650 Para 7.2 & 8.5 & WPS			R
13	Roof Structure	Fit up	VE, DC	As Built Drawing	Drawing			R
		Column Plumbness	DC	Dimension Report	API–650 Para 7.5.2 b)			H
		Welding	VE	Visual Report	API–650 Para 7.2 & 8.5 & WPS			R

Item	Component	Activity	ITP Type	Documentation	Acceptance Criteria	Notes	Witness, Hold, Review Points	
							Client Sign/Date	Q.C. Sign/Date
14	Nozzles	Layout	VE, DC	As Built Drawing	Drawing			H
		Fit up	VE, DC	As Built Drawing	Drawing			R
		Welding	VE	Weld Map, Visual Report	API–650 Para 7.2 & 8.5 & WPS			R
		Tolerance Check – Plumbness & Local Deviations	DC	Dimension Report	API-650 Para 7.5			H
		Shell Nozzle Repad Air test	AT	Leak Test Report	API-650 Para 7.3.5			W
		MPI	NDT	MPI Report	API-650 Para 7.2.3.6	All welds of Shell Nozzles		W
15	Manway	Layout	VE, DC	As Built Drawing	Drawing			H
		Fit up	VE, DC	As Built Drawing	Drawing			R
		Welding	VE	Weld Map, Visual Report	API–650 Para 7.2 & 8.5 & WPS			R
		Tolerance Check – Plumbness & Local Deviations	DC	Dimension Report	API-650 Para 7.5			H
		Shell Manway Repad Air test	AT	Leak Test Report	API-650 Para 7.3.5			W
		MPT	NDT	MPI Report	API-650 Para 7.2.3.6	All welds of Shell Manways		R
16	Internals	Layout / Fit up	VE, DC	As Built Drawing	Drawing			R
		Welding	VE	Visual Report	API–650 Para 7.2 & 8.5 & WPS			R
		Stillwell Plumbness	DC	Dimension Report	API–650 Para H.4.5	N/A		R
		MPI or LP	NDT	NDT Report	Sump Welds (if applicable) 7.3.4	MPI all welds		H
17	Externals	Layout / Fit up	VE, DC	As Built Drawing	Drawing			R
	Externals	Welding	VE	Visual Report	API–650 Para 7.2 & 8.5 & WPS			R
18	Stairs & Platforms	Fit up	VE, DC	As Built Drawing	Drawing			R
		Welding	VE	Visual Report	API–650 Para 7.2 & 8.5 & WPS			R
19	Bolts & Nuts	Inspection	VE, DC	As Built Drawing	Drawing	Bolt Torque		W
20	Final	Name Plate Verification	N/A	Scan of Name Plate	Drawings			H
		Final Inspection	FI	As Built Drawings, Data Sheet, Manufacturer's Certification (3rd Party), Punch List	Drawings			H

DEFINITIONS:

W - WITNESS: Specified acti ity to be obser ed by an outlined party C to pro ide the applicable party 24 hours notice of witness point

H - HOLD: Specified component or installation to be inspected by an outlined party No further acti ities specific to the component or installation may proceed until inspection is carried out C to pro ide the applicable party 24 hours notice of hold point

R - REVIEW: Specified documentation and specifications applicable to a particular component and or installation to be examined by an outlined party

AT - AIR TEST: Specified component and or installation to be air tested according to specified documentation and specifications

DC - DIMENSION CHECK: Physical dimensions of component and or installation to be erified according to specified documentation and specifications

FI - FINAL INSPECTION: Specified inspection procedures to be executed prior to release of the component and or installation and erified according to specified documentation and specifications

NDT - NON DESTRUCTIVE TESTING: Specified component and or installation to be inspected using a named non destructi e testing method according to specified documentation and specifications

VE - VISUAL Examination: Specified component and or installation to be examined isually according to specified documentation and specification

VB - VACUUM-BOX TEST: Specified component and or installation to be acuum box tested according to specified documentation and specifications

Item 1 – Kickoff Meeting Minutes

Contents

1. Kickoff Meeting Minutes

KICKOFF MEETING FOR
CONTRACT No.6515-C-260-002
FUEL TANKS

AGNICO EAGLE

Meliadine Project
Agnico Eagle Mines

Date: 27 January, 2017

Location: 842, WSP Office Montreal

Contract No. 6515-C-260-002

Scope of Work: Fuel Tanks

Meeting Notes Number: Kickoff Meeting 001

Issue Date: 31 January, 2017

Distribution:

AEM	*Inukshuk Construction*
* Diane Derome	+ Marc Losier
+ Normand Menard	+ Tony King
+ Joel Morlière	+ Jacob Saunders
++ Pierre Cianni	
++ Jack Dutil	
++ Mathieu Grenier	
++ Denis Duquette	

*Legend: * Author + Attendee ++ Part-time # Teleconference*

Item No.	Discussion / Decision	Action By	Required Date
1,0	**INTRODUCTION** The purpose of this meeting is to kick-off the Engineering and Fabrication portions of Contract No.6515-C-260-002 "Field Erected Fuel Tanks – Supply & Install" with Inukshuk Construction Inc. hereinafter referred to as ICL.	Info	
2.0	**HSE & CONSTRUCTION**		
2.1	**AEM Construction contact** :		

Name	Position	Email	Phone
Jack Dutil	Construction Manager	jack.dutil@agnicoeagle.com	T: 819.759.3555 x 3957 M: 819.354.9081

2.2	**AEM's HSE Contact** : will be determined during the Construction Meeting to come prior to Mobilization.	Info	
2.3	**Workers Inductions** - E-learning: It is a mandatory requirement for all workers to complete the induction prior to working at Site. Induction forms can be obtained by Denis Duquette at denis.duquette@agnicoeagle.com.	Info	
2.4	**Risk Register & Risk Mitigation**: Prior to mobilization at Site the Contractor will need to develop a risk register identifying the major risk associated with the Work. A mitigation plan shall be developed to minimize the identified risks.	Info	Prior to Mob

AGNICO EAGLE

Meliadine Project
Agnico Eagle Mines

Item No.	Discussion / Decision	Action By	Required Date
2.5	**HSE Manual:** Contractor to submit a Work specific HSE Manuel including JSA's for review and Approval by AEM. The HSE Manual must be approved prior to mobilization at Site.	Info	Prior to Mob
2.6	**Working hours** – ICL Working hours are 12hrs/ day on two (2) shifts. ICL will be required to request from the WSCC an extended work hour permit. Instruction provided in the Supplemental Conditions.	ICL	Prior to Mob
2.7	**Workers Rotation** – 6 weeks on 2 weeks off.	Info	
2.8	**Hydro Testing** – The API requests hydrotesting if water is accessible. Therefore, hydro tests can be performed on the tanks in Rankin. ICL suggest that AEM proceed immediately with the water Permit Acquisition since the delay is 6-8 months to obtain permit from the water board.	AEM	URGENT
2.9	**Liquid penetration testing** – Is possible only when water is not accessible.	Info	
2.10	**Workers Accommodations** – Workers accommodations in Rankin are the Contractor's responsibility. Workers accommodations at Meliadine Site are AEM's responsibility	Info	
3.0	**LOGISTICS (MATERIAL AND EQUIPMENT)** AEM Contact shall be:		

Name	Position	Email	Phone
Martin Ouellet	Expediting Coordinator	martin.ouellet@agnicoeagle.com	M:514-703-9569
Mathieu Grenier	Lead Logistics Coordinator	mathieu.grenier@agnicoeagle.com	T: 819.759.3700 x 2924 M: 819.856.3046
Cathrine Carmantrand	Expediting and logistics coordinator	Catherine.Carmantrand@wspgroup.com	T : 514.343.0773 X 6072

3.1	**Package Identification**: All deliveries to Becancour must have the PO number clearly identified.	Info	
3.2	**Packaging and Shipping**: The packaging of material and equipment must be in compliance with AEM Packaging and Shipping Instructions. If packaging is not in accordance to the instructions, AEM will backcharge any costs associated with double handling and repackaging.	Info	
3.3	**Start of Shipping**: ICL can commence shipping as early as	Info	

AGNICO EAGLE

Meliadine Project
Agnico Eagle Mines

Item No.	Discussion / Decision	Action By	Required Date
	April.		
3.4	**Shipping Priorities**: Three (3) vessels are scheduled in July. Shipping priorities will need to be identified by ICL and communicated to AEM including dimensions and weights of bundles, skids and containers. ICL confirms that the priorities will be the floor shell plates and columns.	ICL	
3.5	**Logistic Meeting**: A Logistic meeting will be scheduled at the beginning March to identify shipping priorities.	Diane / Mathieu G.	Early-March
3.6	**Transport of X-ray machine for weld testing**: It will be very complicated for AEM to transport and store an x-ray machine at Site due to the radioactive content within the machine. AEM requests that ICL consider ultra-sonic testing as an alternative method. ICL to confirm this alternative is in compliance with API Standards.	ICL	
3.7	**Material Packing**: ¼" thick shell plate will be delivered in sections of 10' wide x 40' long. Shell plates will be mounted on skids. **POST MEETING NOTE: AEM confirms that these dimensions are acceptable for shipping.**	Info	
3.8	*Material Management and handling at site* AEM Contact shall be: **Name** | **Position** | **Email** | **Phone** Denis Duquette | Site Material & Logistics | denis.duquette@agnicoeagle.com | T: 819-759-3700 x 5616 M: 819.339.8134		
3.9	**Material Requisitions**: Once the Material has arrived at Site, ICL will be responsible for their own Material Requisitions. Additional details on the procedure to come.	Info	
4.0	**ENGINEERING & DELIVERABLES** AEM Contact shall be: **Name** | **Position** | **Email** | **Phone** Joel Morliere | Package Coordinator | Joel.Morliere@wspgroup.com | 438-843-7585 Normand Menard | Lead Mechanical AEM | Normand.menard@agniceagle.com | 418-454-0464 Denis Thibodeau | Lead Package Engineer | Denis.Thibodeau@wspgroup.com | 438-843-7442		
4.1	Issued for Construction drawings : AEM will be releasing the IFC's the week of Feb 1st. Changes include: -Re-numbering of tanks	AEM	Feb 1st

AGNICO EAGLE

Meliadine Project
Agnico Eagle Mines

<table>
<tr><th>Item No.</th><th>Discussion / Decision</th><th>Action By</th><th>Required Date</th></tr>
<tr><td></td><td>-Manhole on roof 600mm dia.
- Revised paint spec (Already considered in pricing)</td><td></td><td></td></tr>
<tr><td>4.2</td><td>Technical documents and shop drawings submittals & approval</td><td></td><td></td></tr>
<tr><td>4.2.1</td><td><u>DOCUMENTS SUBMITTAL</u>
AEM Contact shall be:
<table>
<tr><th>Name</th><th>Position</th><th>Email</th><th>Phone</th></tr>
<tr><td>Giovanni Cianni</td><td>Lead Document Control</td><td>giovanni.cianni@agnicoeagle.com</td><td>M: 438-396-3886</td></tr>
</table></td><td></td><td></td></tr>
<tr><td>4.2.2</td><td>Submittals
All VDT required documents have to be submitted through iPas DM for AEM's review and approval as per AEM's codification and submittal process.</td><td></td><td>info</td></tr>
<tr><td>4.2.3</td><td>Approvals
AEM will review and return the documents within ten (10) working days.</td><td></td><td>Info</td></tr>
<tr><td>4.2.4</td><td>iPasDM training
ICL to coordinate a training session with Giovanni Clanni, (Document Control Lead) on the uploading of documents</td><td></td><td>Info</td></tr>
<tr><td>4.2.5</td><td>Requests For Information (RFIs)
All Engineering and technical questions have to be submitted through RFIs (See attached RFI Template).
RFIs have to include a comprehensive level of detail to allow a quick reply and include potential cost or schedule impacts if any.
Any potential schedule or Cost impact resulting from a RFI reply is to be sent formally to AEM through a CCR.
RFIs to be sent to the Package Engineer, copy the Contract Administrator and Document Control.</td><td></td><td>Info</td></tr>
<tr><td>4.2.6</td><td>Vendor Data Requirements Table (VDT) Review
ICL must refer to the contract VDT for all technical document requirements.</td><td></td><td>Info</td></tr>
<tr><td>4.3</td><td>Tank Dimensions: Inukshuk has issued via e-mail the proposed diameters and height of the tanks. No design calculation were provided.
AEM confirms that the dimensions will be communicated / coordinated with the Civil / foundation contractor.</td><td></td><td>Info</td></tr>
</table>

AGNICO EAGLE

Meliadine Project
Agnico Eagle Mines

Item No.	Discussion / Decision	Action By	Required Date
5.0	**QA/QC** AEM Contact shall be: **Name** | **Position** | **Email** | **Phone** Jean-Francois Tremblay | Lead Quality | Jean.Francois.Tremblay3@wspgroup.com | T: 418-368-6069		
5.1	*Quality Plan* ICL to submit their Project Specific QA/QC Plan through iPas DM.	Info	Prior to Mobilization
5.2	*ITPs* ICL to submit their ITP through iPas DM. One Project specific General ITP for Fabrication and Installation including hold points. Detailed ITPs will be developed during work execution.	Info	Info
5.3	*Working & Welding Procedures* ICL to submit their standard working and welding procedures through iPas DM prior to work start.	Info	Prior to Mobilization
5.4	*Quality Management Requirements Turnover Requirements* ICL to submit their Quality management system through iPas DM for approval by AEM. Turnover will be progressive. ICL to work on the documents and forms all along the project to allow a smooth contract close-out.	Info	Prior to Fabrication start
6.0	**SCHEDULE** AEM Contact shall be: **Name** | **Position** | **Email** | **Phone** Pierre Cianni | Lead Planner | pierre.cianni@agnicoeagle.com | T: 819.825.4711 x 8010 M: 709 899-1711		
8.1	**Foundation Completion Date** : AEM confirms that the foundations shall be completed by mid-July.	Info	
8.2	**Hydro testing of 13.5M L Tank** : 11 days is scheduled for hydro testing the 13.5M Liter tank. API has constraints on the filling and discharge rate (50K liters / hr max)	Info	
8.3	**Completion date for 13.5M L Tanks**: AEM confirms that the 13.5M L tanks must be ready for filling on **September 25th 2017**	Info	
8.4	*Progress and Reporting* ICL will submit their progress reports on a Monthly basis. AEM will be scheduling a Bi-weekly Progress meetings once the	Diane	

AGNICO EAGLE

Meliadine Project
Agnico Eagle Mines

Item No.	Discussion / Decision	Action By	Required Date
	fabrication has started. First meeting to be confirmed.		
9.0	**COMMERCIAL** AEM Contact shall be: **Name** / **Position** / **Email** / **Phone** Diane Derome / Formation CA / diane.derome@agnicoeagle.com / T: 438.843.7585 Steve Tauber / Site CA / steve.tauber@agnicoeagle.com / T: 819.759.3555 x 3964		
9.1	ICL to provide the Insurance certificate and latest WCB Letter of good standing.	ICL	Prior to Mobilization
9.2	*Verbal Instructions* AEM indicated that while day to day coordination instructions are normal practice, verbal instructions will not be tolerated. All instructions are to be in writing should there be any changes to the schedule and/or the Scope of Work.	Info	
9.3	*Contract Site Changes and Change Management* *General: No work can be executed nor paid unless a formal Contract Change Order (CCO) is fully executed by both Parties. All the below are tools and mechanisms used to capture changes but do not constitute a formal change until it is incorporated in a CCO.*	Info	
9.4	*Contract Change Order (CCO)* Is the formal and only modification to the contract signed by both parties, which must be mutually agreed upon to effect a change to the contract. A Contract Change Order describes the scope, price, schedule, method of payment for a change to the contract.	Info	
9.5	*Contract Change Request (CCR)* ICL can initiate a request for a Contract Change Order due to different site conditions, construction change or similar event justifying issuance of a Contract Change Order (See attached CCR Template).	Info	
9.6	*Progress Payment Certificate (PPC)* AEM will create the PPC (Progress Payment Certificate) Template and issue to ICL. ICL to send the PPC for AEM's approval prior to sending the invoice.	Info	
9.7	**Contract Signature**: The contract is in preparation and will be ready for signature during the second week of February.	Diane	Feb, 2017

AGNICO EAGLE

Meliadine Project
Agnico Eagle Mines

Accepted By:

Marc Losier
Dated:

Inukshuk Construction ld.

Diane Derome
Dated:

Agnico Eagle Mines Ltd.

Attachments: Distribution List, CCR Form, RFI Form

Item 2 – Signature Log

Contents

1. Signature Log

Exhibit 20a, Rev 0

SIGNATURE LOG

PRINT	SIGNATURE	COMPANY	DATE
Robert Hoffman		SAS	Sept 30/17.
Keith Breedon		SAS	
Matthew Mackenzie		SAS	
Matthew Turmel		SAS	SEPT 30/17.
Sebastien Ouellet		SAS	SEPT 30/17
Stephane Gionet		AEM	
Clem Bonia		AEM	
Chris Jaques	C Jaques.	SAS	Sept 30/17

Item 3 – Welder Qualification

Contents

1. Individual Welder Qualification
2. Welder's Qualification Record (Log)

ALL CAN INSPECTION SERVICES (2011) INC.

Report # G2339

9323-37 Avenue, NW, Edmonton, Alberta T6E 5N4
SHOP: 780-462-1072 OFFICE: 780-462-9797 FAX: 780-462-4664
EMAIL: shop@allcaninspection.com www.allcaninspection.com

Client: **Sub Arc Systems**
Address: 17 Exploration Way, Devon
Contact: Name: Toby
Phone:
Work Location: All Can Inspection Shop

Client Job # **Welder Coupons**
P.O. # **Toby**
Date: **June 21/17**
Work Description: C.JA

CODES
1. ASME B31.3 N/S
2. ASME B31.3 S/C
3. ASME Sec. VIII Div 1 UW51
4. ASME Sec. VIII Div. 1 UW52
5. CSA Z662
6. CSA Z662 (Sour)
7. API 650
8. Other:

NDE No:	Size & thickness Plus Code Max. reinforcement	Material	Code	IQI	Technique Number	Source Side of Object to Film Distance	Source to Object Distance	Number of Exposures	Welder ID	Discontinuity (LF - Lack of Fusion; IP - Incomplete Penetration; IC - Internal Concavity; BT - Burn Through; TI - Tungsten Inclusion; IU: Internal Undercut; EU: External Undercut; EP - Excessive Penetration; P - Porosity; S - Slag; HL - High-Low; C - Crack; AB - Arc Burn; HB - Hollow Bead; Severity: 1 = Slight, 2 = Medium, 3 = Severe (Reject))	Severity	Accept	Reject
			1 - 8	See Back	See Back	Inches	Inches				1 - 3	√	X
2G SMAW	5/8" SPOT	P1	7	2	RT-2	0.750	25.000	1	C.JA			√	
3G SMAW	5/8" SPOT	P1	7	2	RT-2	0.750	25.000	1	C.JA			√	
4G SMAW	5/8" SPOT	P1	7	2	RT-2	0.750	25.000	1	C.JA	P @ 0" & 7"	1	√	

RT Technician: Gordon Thomas CGSB Level: 2 Reg. #: 6 SNT-TC-1A Level: III SNT-TC-1A No: 6
RT Assistant # 1 Victoria Sarnecki CEDO #: 21927 SNT-TC-1A Level: I SNT-TC-1A No: 21927
RT Assistant # 2 CEDO #: SNT-TC-1A Level: SNT-TC-1A No:

IMPORTANT: See reverse side of this form for All Can Inspection Services (2011) Inc. LIMITED LIABILITY POLICY

Technician Signature — Date: June 21/17

Client Representative Signature — Evaluation Date

The above interpretation is a technical opinion, not a guarantee.
Client signature indicates acceptance of the report and results.

Clock tape marker and start arrow marked on weldment.
It is the customer's responsibility to map welds on drawings.

Film Make / Brand: AGFA Film Class / Type: I-D5
Screens: Lead Front: 0.010" Back: 0.010" One (no.) film per screen
Film Density in H & D: Min. 2.0 Max. 4.0
Penetrometer (IQI hole type) designation: N/A Recommended Max. U.G.: 0.20"
Source Isotope: IRIDIUM-192 (Gamma) Wall Viewing: Single
Effective Focal Spot Size: 0.146 inches Processing: Automatic

RADIOGRAPHIC EXAMINATION REPORT

ALL CAN INSPECTION SERVICES (2011) INC.

Report # G2340

9323-37 Avenue, NW, Edmonton, Alberta T6E 5N4
SHOP: 780-462-1072 OFFICE: 780-462-9797 FAX: 780-462-4664
EMAIL: shop@allcaninspection.com www.allcaninspection.com

Client: **Sub Arc Systems** Client Job # **Welder Coupons**
Address: 17 Exploration Way, Devon P.O. # **Toby**
Contact: Name: Toby Date: **June 21/17**
Phone:
Work Location: All Can Inspection Shop Work Description: J.OV

CODES
1. ASME B31.3 N/S
2. ASME B31.3 S/C
3. ASME Sec. VIII Div 1 UW51
4. ASME Sec. VIII Div. 1 UW52
5. CSA Z662
6. CSA Z662 (Sour)
7. API 650
8. Other:

NDE No:	Size & thickness Plus Code Max. reinforcement	Material	Code	IQI	Technique Number	Source Side of Object to Film Distance	Source to Object Distance	Number of Exposures	Welder ID	LF - Lack of Fusion; IP - Incomplete Penetration; IC - Internal Concavity; BT - Burn Through; TI - Tungsten Inclusion; IU: Internal Undercut; EU: External Undercut; EP - Excessive Penetration; P - Porosity; S - Slag; HL - High-Low; C - Crack; AB - Arc Burn; HB - Hollow Bead. **Severity:** 1 = Slight, 2 = Medium, 3 = Severe (Reject) — Discontinuity	Severity	Accept	Reject
			1 - 8	See Back	See Back	inches	inches				1 - 3	√	X
2G SMAW	5/8" SPOT	P1	7	2	RT-2	0.750	25.000	1	J.OV	S & P @ 0", P @ 1 1/2" & 6"	2	√	
3G SMAW	5/8" SPOT	P1	7	2	RT-2	0.750	25.000	1	J.OV			√	
4G SMAW	5/8" SPOT	P1	7	2	RT-2	0.750	25.000	1	J.OV			√	

RT Technician: Gordon Thomas CGSB Level: 2 Reg. # : 6 SNT-TC-1A Level: III SNT-TC-1A No: 6
RT Assistant # 1 Victoria Sarnecki CEDO #: 21927 SNT-TC-1A Level: I SNT-TC-1A No: 21927
RT Assistant # 2 CEDO #: SNT-TC-1A Level: SNT-TC-1A No:

IMPORTANT: See reverse side of this form for All Can Inspection Services (2011) Inc. LIMITED LIABILITY POLICY

Technician Signature — Date: June 21/17

Client Representative Signature — Evaluation Date

The above interpretation is a technical opinion, not a guarantee.
Client signature indicates acceptance of the report and results.

Clock tape marker and start arrow marked on weldment.
It is the customer's responsibility to map welds on drawings.

Film Make / Brand: AGFA Film Class / Type: 1-D5
Screens Lead: Front 0.010" Back 0.010" One (no.) film per screen
Film Density in H & D: Min. 2.0 Max. 4.0
Penetrometer (IQI hole type) designation: N/A Recommended Max. U.G.: 0.20"
Source Isotope: IRIDIUM-192 (Gamma) Wall Viewing: Single
Effective Focal Spot Size: 0.146 inches Processing: Automatic

RADIOGRAPHIC EXAMINATION REPORT

ALL CAN INSPECTION SERVICES (2011) INC.

Report # G2341

9323-37 Avenue, NW, Edmonton, Alberta T6E 5N4
SHOP: 780-462-1072 OFFICE: 780-462-9797 FAX: 780-462-4664
EMAIL: shop@allcaninspection.com www.allcaninspection.com

Client: **Sub Arc Systems** Client Job # **Welder Coupons**
Address: 17 Exploration Way, Devon P.O. # **Toby**
Contact: Name: Toby Date: **June 21/17**
Phone:
Work Location: All Can Inspection Shop Work Description: M.GO

CODES
1. ASME B31.3 N/S
2. ASME B31.3 S/C
3. ASME Sec. VIII Div 1 UW51
4. ASME Sec. VIII Div. 1 UW52
5. CSA Z662
6. CSA Z662 (Sour)
7. API 650
8. Other:

NDE No:	Size & thickness Plus Code Max. reinforcement	Material	Code	IQI	Technique Number	Source Side of Object to Film Distance	Source to Object Distance	Number of Exposures	Welder ID	Discontinuity (LF - Lack of Fusion; IP - Incomplete Penetration; IC - Internal Concavity; BT - Burn Through; TI - Tungsten Inclusion; IU: Internal Undercut; EU: External Undercut; EP - Excessive Penetration; P - Porosity; S - Slag; HL - High-Low; C - Crack; AB - Arc Burn; HB - Hollow Bead) Severity: 1 = Slight, 2 = Medium, 3 = Severe (Reject)	Severity	Accept	Reject
			1 - 8	See Back	See Back	Inches	Inches				1 - 3	√	X
2G SMAW	5/8" SPOT	P1	7	2	RT-2	0.750	25.000	1	M.GO	IU @ 1", IC @ 2" & 6"	1	√	
3G SMAW	5/8" SPOT	P1	7	2	RT-2	0.750	25.000	1	M.GO	P @ 4"	1	√	
4G SMAW	5/8" SPOT	P1	7	2	RT-2	0.750	25.000	1	M.GO	P @ 0"	1	√	

RT Technician: Gordon Thomas CGSB Level: 2 Reg. # : 6 SNT-TC-1A Level: III SNT-TC-1A No: 6
RT Assistant # 1 Victoria Sarnecki CEDO #: 21927 SNT-TC-1A Level: I SNT-TC-1A No: 21927
RT Assistant # 2 CEDO #: SNT-TC-1A Level: SNT-TC-1A No:

IMPORTANT: See reverse side of this form for All Can Inspection Services (2011) Inc. LIMITED LIABILITY POLICY

Technician Signature — Date: June 21/17

Client Representative Signature — Evaluation Date

The above interpretation is a technical opinion, not a guarantee.
Client signature indicates acceptance of the report and results.

Clock tape marker and start arrow marked on weldment.
It is the customer's responsibility to map welds on drawings.

Film Make / Brand: AGFA Film Class / Type: 1-D5
Screens Lead Front 0.010" Back 0.010" One (no) film per screen
Film Density in H & D: Min. 2.0 Max. 4.0
Penetrometer (IQI hole type) designation: N/A Recommended Max. U.G.: 0.20"
Source Isotope: IRIDIUM-192 (Gamma) Wall Viewing: Single
Effective Focal Spot Size: 0.146 inches Processing: Automatic

RADIOGRAPHIC EXAMINATION REPORT

ALL CAN INSPECTION SERVICES (2011) INC.

Report # G2342

9323-37 Avenue, NW, Edmonton, Alberta T6E 5N4
SHOP: 780-462-1072 OFFICE: 780-462-9797 FAX: 780-462-4664
EMAIL: shop@allcaninspection.com www.allcaninspection.com

Client: **Sub Arc Systems** Client Job # **Welder Coupons**
Address: 17 Exploration Way, Devon P.O. # **Toby**
Contact: Name: Toby Date: **June 21/17**
Phone:
Work Location: All Can Inspection Shop Work Description: M.TU

CODES
1. ASME B31.3 N/S
2. ASME B31.3 S/C
3. ASME Sec. VIII Div 1 UW51
4. ASME Sec. VIII Div. 1 UW52
5. CSA Z662
6. CSA Z662 (Sour)
7. API 650
8. Other:

LF - Lack of Fusion; IP - Incomplete Penetration; IC - Internal Concavity; BT - Burn Through; TI - Tungsten Inclusion; IU: Internal Undercut; EU: External Undercut; EP - Excessive Penetration; P - Porosity; S - Slag; HL - High-Low; C - Crack; AB - Arc Burn; HB - Hollow Bead
Severity: 1 = Slight, 2 = Medium, 3 = Severe (Reject)

NDE No:	Size & thickness Plus Code Max. reinforcement	Material	Code	IQI	Technique Number	Source Side of Object to Film Distance	Source to Object Distance	Number of Exposures	Welder ID	Discontinuity	Severity	Accept	Reject
			1 - 8	See Back	See Back	Inches	Inches				1 - 3	√	X
2G SMAW	5/8" SPOT	P1	7	2	RT-2	0.750	25.000	1	M.TU	P @ 0"	1	√	
3G SMAW	5/8" SPOT	P1	7	2	RT-2	0.750	25.000	1	M.TU			√	
4G SMAW	5/8" SPOT	P1	7	2	RT-2	0.750	25.000	1	M.TU	S @ 1" & 2", P @ 5"	2	√	

RT Technician: Gordon Thomas CGSB Level: 2 Reg. #: 6 SNT-TC-1A Level: III SNT-TC-1A No: 6
RT Assistant # 1 Victoria Sarnecki CEDO #: 21927 SNT-TC-1A Level: I SNT-TC-1A No: 21927
RT Assistant # 2 CEDO #: SNT-TC-1A Level: SNT-TC-1A No:

IMPORTANT: See reverse side of this form for All Can Inspection Services (2011) Inc. LIMITED LIABILITY POLICY

Technician Signature — Date: June 21/17

Client Representative Signature — Evaluation Date

The above interpretation is a technical opinion, not a guarantee.
Client signature indicates acceptance of the report and results.

Clock tape marker and start arrow marked on weldment.
It is the customer's responsibility to map welds on drawings.

Film Make / Brand: AGFA Film Class / Type: 1-D5
Screens Lead Front 0.010" Back 0.010" One (no.) film per screen
Film Density in H & D: Min. 2.0 Max. 4.0
Penetrometer (IQI hole type) designation: N/A Recommended Max. U.G.: 0.20"
Source Isotope: IRIDIUM-192 (Gamma) Wall Viewing: Single
Effective Focal Spot Size: 0.146 inches Processing: Automatic

RADIOGRAPHIC EXAMINATION REPORT

ALL CAN INSPECTION SERVICES (2011) INC.

Report # G2343

9323-37 Avenue, NW, Edmonton, Alberta T6E 5N4
SHOP: 780-462-1072 OFFICE: 780-462-9797 FAX: 780-462-4664
EMAIL: shop@allcaninspection.com www.allcaninspection.com

Client:	Sub Arc Systems	Client Job #	Welder Coupons
Address:	17 Exploration Way, Devon	P.O. #	Toby
Contact: Name:	Toby	Date:	June 21/17
Phone:			
Work Location:	All Can Inspection Shop	Work Description:	M.MA

CODES
1. ASME B31.3 N/S
2. ASME B31.3 S/C
3. ASME Sec. VIII Div 1 UW51
4. ASME Sec. VIII Div. 1 UW52
5. CSA Z662
6. CSA Z662 (Sour)
7. API 650
8. Other:

NDE No:	Size & thickness Plus Code Max. reinforcement	Material	Code	IQI	Technique Number	Source Side of Object to Film Distance	Source to Object Distance	Number of Exposures	Welder ID	Discontinuity (LF - Lack of Fusion, IP - Incomplete Penetration, IC - Internal Concavity, BT - Burn Through, TI - Tungsten Inclusion, IU: Internal Undercut, EU: External Undercut; EP - Excessive Penetration, P - Porosity, S - Slag, HL - High-Low, C - Crack, AB - Arc Burn, HB - Hollow Bead; Severity: 1 = Slight, 2 = Medium, 3 = Severe (Reject))	Severity	Accept	Reject
			1 - 8	See Back	See Back	Inches	Inches				1 - 3	√	X
2G SMAW	5/8" SPOT	P1	7	2	RT-2	0.750	25.000	1	M.MA			√	
3G SMAW	5/8" SPOT	P1	7	2	RT-2	0.750	25.000	1	M.MA			√	
4G SMAW	5/8" SPOT	P1	7	2	RT-2	0.750	25.000	1	M.MA	EU @ 2"	1	√	

RT Technician:	Gordon Thomas	CGSB Level:	2	Reg. # :	6	SNT-TC-1A Level:	III
RT Assistant # 1	Victoria Sarnecki	CEDO #:	21927			SNT-TC-1A Level:	I
RT Assistant # 2		CEDO #:				SNT-TC-1A Level:	

SNT-TC-1A No:	6		
SNT-TC-1A No:	21927		
SNT-TC-1A No:			

IMPORTANT: See reverse side of this form for All Can Inspection Services (2011) Inc. LIMITED LIABILITY POLICY

Technician Signature — Date: June 21/17

Client Representative Signature — Evaluation Date

The above interpretation is a technical opinion, not a guarantee.
Client signature indicates acceptance of the report and results.

Clock tape marker and start arrow marked on weldment.
It is the customer's responsibility to map welds on drawings.

Film Make / Brand	AGFA	Film Class / Type:	D5
Screens Lead	Front 0.010"	Back 0.010"	One (no.) film per screen
Film Density in H & D:	Min. 2.0	Max. 4.0	
Penetrometer (IQI hole type) designation:	N/A	Recommended Max. U.G.:	0.20"
Source Isotope:	IRIDIUM-192 (Gamma)	Wall Viewing:	Single
Effective Focal Spot Size:	0.146 inches	Processing:	Automatic

RADIOGRAPHIC EXAMINATION REPORT

ALL CAN INSPECTION SERVICES (2011) INC.

Report # G2344

9323-37 Avenue, NW, Edmonton, Alberta T6E 5N4
SHOP: 780-462-1072 OFFICE: 780-462-9797 FAX: 780-462-4664
EMAIL: shop@allcaninspection.com www.allcaninspection.com

Client:	Sub Arc Systems	Client Job #	Welder Coupons
Address:	17 Exploration Way, Devon	P.O. #	Toby
Contact: Name:	Toby	Date:	June 21/17
Phone:			
Work Location:	All Can Inspection Shop	Work Description:	Q.PO

CODES
1. ASME B31.3 N/S
2. ASME B31.3 S/C
3. ASME Sec. VIII Div 1 UW51
4. ASME Sec. VIII Div. 1 UW52
5. CSA Z662
6. CSA Z662 (Sour)
7. API 650
8. Other:

NDE No:	Size & thickness Plus Code Max. reinforcement	Material	Code	IQI	Technique Number	Source Side of Object to Film Distance	Source to Object Distance	Number of Exposures	Welder ID	Discontinuity	Severity	Accept	Reject
			1 - 8	See Back	See Back	Inches	Inches				1 - 3	√	X
2G SMAW	5/8" SPOT	P1	7	2	RT-2	0.750	25.000	1	Q.PO	IU @ 1", 2" & 6"	2	√	
3G SMAW	5/8" SPOT	P1	7	2	RT-2	0.750	25.000	1	Q.PO			√	
4G SMAW	5/8" SPOT	P1	7	2	RT-2	0.750	25.000	1	Q.PO			√	

LF - Lack of Fusion; IP - Incomplete Penetration; IC - Internal Concavity; BT - Burn Through; TI - Tungsten Inclusion; IU: Internal Undercut; EU: External Undercut; EP - Excessive Penetration; P - Porosity; S - Slag; HL - High-Low; C - Crack; AB - Arc Burn; HB - Hollow Bead

Severity: 1 = Slight, 2 = Medium, 3 = Severe (Reject)

RT Technician:	Gordon Thomas	CGSB Level:	2	Reg. # :	6	SNT-TC-1A Level:	III	SNT-TC-1A No:	6
RT Assistant # 1	Victoria Sarnecki	CEDO #:	21927			SNT-TC-1A Level:	I	SNT-TC-1A No:	21927
RT Assistant # 2		CEDO #:				SNT-TC-1A Level:		SNT-TC-1A No:	

IMPORTANT: See reverse side of this form for All Can Inspection Services (2011) Inc. LIMITED LIABILITY POLICY

Technician Signature — Date: June 21/17

Client Representative Signature — Evaluation Date

The above interpretation is a technical opinion, not a guarantee.
Client signature indicates acceptance of the report and results.

Clock tape marker and start arrow marked on weldment.
It is the customer's responsibility to map welds on drawings.

Film Make / Brand	AGFA	Film Class / Type:	1-D5
Screens Lead	Front 0.010"	Back 0.010"	One (no.) film per screen
Film Density in H & D:	Min. 2.0	Max. 4.0	
Penetrometer (IQI hole type) designation:	N/A	Recommended Max. U.G.:	0.20"
Source Isotope:	IRIDIUM-192 (Gamma)	Wall Viewing:	Single
Effective Focal Spot Size:	0.146 inches	Processing:	Automatic

RADIOGRAPHIC EXAMINATION REPORT

ALL CAN INSPECTION SERVICES (2011) INC.

Report # G2345

9323-37 Avenue, NW, Edmonton, Alberta T6E 5N4
SHOP: 780-462-1072 OFFICE: 780-462-9797 FAX: 780-462-4664
EMAIL: shop@allcaninspection.com www.allcaninspection.com

Client: **Sub Arc Systems** Client Job # **Welder Coupons**

Address: 17 Exploration Way, Devon P.O. # **Toby**

Contact: Name: Toby Date: **June 21/17**

Phone:

Work Location: All Can Inspection Shop Work Description: D.ZU

CODES
1. ASME B31.3 N/S
2. ASME B31.3 S/C
3. ASME Sec. VIII Div 1 UW51
4. ASME Sec. VIII Div. 1 UW52
5. CSA Z662
6. CSA Z662 (Sour)
7. API 650
8. Other:

NDE No:	Size & thickness Plus Code Max. reinforcement	Material	Code	IQI	Technique Number	Source Side of Object to Film Distance	Source to Object Distance	Number of Exposures	Welder ID	Discontinuity (LF - Lack of Fusion; IP - Incomplete Penetration; IC - Internal Concavity; BT - Burn Through; TI - Tungsten Inclusion; IU: Internal Undercut; EU: External Undercut; EP - Excessive Penetration; P - Porosity; S - Slag; HL - High-Low; C - Crack; AB - Arc Burn; HB - Hollow Bead) Severity: 1 = Slight, 2 = Medium, 3 = Severe (Reject)	Severity	Accept	Reject
			1 - 8	See Back	See Back	Inches	Inches				1 - 3	√	x
2G SMAW	5/8" SPOT	P1	7	2	RT-2	0.750	25.000	1	D.ZU			√	
3G SMAW	5/8" SPOT	P1	7	2	RT-2	0.750	25.000	1	D.ZU			√	
4G SMAW	5/8" SPOT	P1	7	2	RT-2	0.750	25.000	1	D.ZU			√	

RT Technician: Gordon Thomas CGSB Level: 2 Reg. # : 6 SNT-TC-1A Level: III SNT-TC-1A No: 6

RT Assistant # 1 Victoria Sarnecki CEDO #: 21927 SNT-TC-1A Level: I SNT-TC-1A No: 21927

RT Assistant # 2 CEDO #: SNT-TC-1A Level: SNT-TC-1A No:

IMPORTANT: See reverse side of this form for All Can Inspection Services (2011) Inc. LIMITED LIABILITY POLICY

Technician Signature — Date: June 21/17

Client Representative Signature — Evaluation Date

The above interpretation is a technical opinion, not a guarantee.
Client signature indicates acceptance of the report and results.

Clock tape marker and start arrow marked on weldment.
It is the customer's responsibility to map welds on drawings.

Film Make / Brand: AGFA Film Class / Type: 1-D5

Screens: Lead Front: 0.010" Back: 0.010" One (no.) film per screen

Film Density in H & D: Min. 2.0 Max. 4.0

Penetrometer (IQI hole type) designation: N/A Recommended Max. U.G.: 0.20"

Source Isotope: IRIDIUM-192 (Gamma) Wall Viewing: Single

Effective Focal Spot Size: 0.146 inches Processing: Automatic

RADIOGRAPHIC EXAMINATION REPORT

ALL CAN INSPECTION SERVICES (2011) INC.

Report # G2346

9323-37 Avenue, NW, Edmonton, Alberta T6E 5N4
SHOP: 780-462-1072 OFFICE: 780-462-9797 FAX: 780-462-4664
EMAIL: shop@allcaninspection.com www.allcaninspection.com

Client:	**Sub Arc Systems**	Client Job #	**Welder Coupons**
Address:	17 Exploration Way, Devon	P.O. #	**Toby**
Contact: Name:	Toby	Date:	**June 21/17**
Phone:			
Work Location:	All Can Inspection Shop	Work Description:	D.ZE

CODES
1. ASME B31.3 N/S
2. ASME B31.3 S/C
3. ASME Sec. VIII Div 1 UW51
4. ASME Sec. VIII Div. 1 UW52
5. CSA Z662
6. CSA Z662 (Sour)
7. API 650
8. Other:

LF - Lack of Fusion; IP - Incomplete Penetration; IC - Internal Concavity; BT - Burn Through; TI - Tungsten Inclusion; IU: Internal Undercut; EU: External Undercut; EP - Excessive Penetration; P - Porosity; S - Slag; HL - High-Low; C - Crack; AB - Arc Burn; HB - Hollow Bead

Severity: 1 = Slight, 2 = Medium, 3 = Severe (Reject)

NDE No:	Size & thickness Plus Code Max. reinforcement	Material	Code	IQI	Technique Number	Source Side of Object to Film Distance	Source to Object Distance	Number of Exposures	Welder ID	Discontinuity	Severity	Accept	Reject
			1 - 8	See Back	See Back	inches	inches				1 - 3	√	X
2G SMAW	5/8" SPOT	P1	7	2	RT-2	0.750	25.000	1	D.ZE	P @ 0"	1	√	
3G SMAW	5/8" SPOT	P1	7	2	RT-2	0.750	25.000	1	D.ZE			√	
4G SMAW	5/8" SPOT	P1	7	2	RT-2	0.750	25.000	1	D.ZE			√	

RT Technician:	Gordon Thomas	CGSB Level:	2	Reg. #:	6	SNT-TC-1A Level:	III
SNT-TC-1A No:	6						
RT Assistant # 1	Victoria Sarnecki	CEDO #:	21927	SNT-TC-1A Level:	I	SNT-TC-1A No:	21927
RT Assistant # 2		CEDO #:		SNT-TC-1A Level:		SNT-TC-1A No:	

IMPORTANT: See reverse side of this form for All Can Inspection Services (2011) Inc. LIMITED LIABILITY POLICY

Technician Signature — Date: June 21/17

Client Representative Signature — Evaluation Date

The above interpretation is a technical opinion, not a guarantee.
Client signature indicates acceptance of the report and results.

Clock tape marker and start arrow marked on weldment.
It is the customer's responsibility to map welds on drawings.

Film Make / Brand	AGFA	Film Class / Type:	1-D5
Screens Lead	Front 0.010"	Back 0.010"	One (no.) film per screen
Film Density in H & D:	Min. 2.0	Max. 4.0	
Penetrometer (IQI hole type) designation:	N/A	Recommended Max. U.C.:	0.20"
Source Isotope:	IRIDIUM-192 (Gamma)	Wall Viewing:	Single
Effective Focal Spot Size:	0.146 inches	Processing:	Automatic

RADIOGRAPHIC EXAMINATION REPORT

RADIOGRAPHIC EXAMINATION TECHNIQUE REFERENCE SHEET

ALL CAN INSPECTION SERVICES (2011) INC. RT TECHNIQUES
ALL CAN **INSPECTION SERVICES (2011) INC. GENERAL RT PROCEDURE**
Important Note: Always check the QA/Procedures Manual for the most current Procedure Revision status.

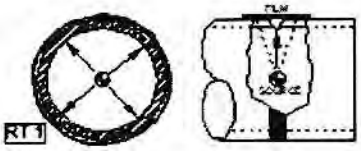

Tech #RT-1: Vessel Circumferential Weld
1 Exposure: QA Subsection 15.12.1

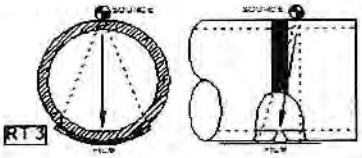

Tech #RT-3: Circ. Weld – Contact – Light Wall
3 Exposures@120° Spacing: QA Subsection 15.12.6

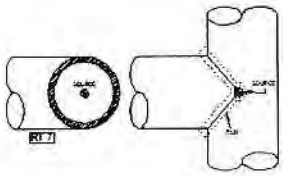

Tech #RT-7: Mitered "T" Joint - Single Wall - Source centered Exposures as required: *QA Subsection 15.12.11*

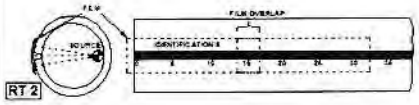

Tech #RT-2: Long. Weld - Light Wall – Source Inside
1 Exposure/15 inches: *QA Subsection 15.12.2*

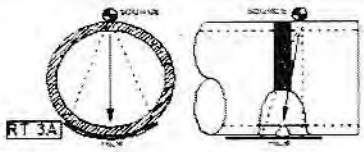

Tech #RT-3A: Circ. Weld – Contact – Heavy Wall
4 Exposures@90° Spacing: *QA Subsection 15.12.7*

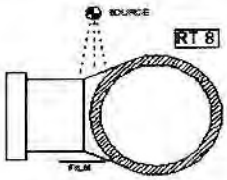

Tech #RT-8:Category "D" Weld
Exposures as required: *QA Subsection 15.12.12*

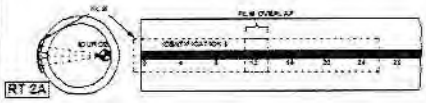

Tech #RT-2A: Long. Weld - Heavy Wall – Source Inside
1 Exposure/12 inches: *QA Subsection 15.12.3*

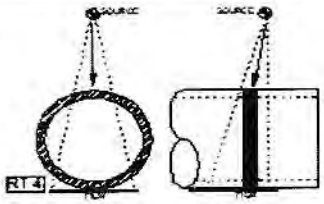

Tech #RT-4: Circ. Weld – Dbl Wall – Elipse
2 Exposures@90° Spacing: QA Subsection 15.12.8

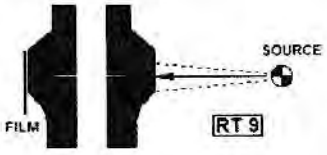

Tech #RT-9: Gap Check
1 Exposure: *QA Subsection 15.12.13*



Tech #RT-2B: Long. Weld – Light Wall – Source Outside
1 Exposure/15 inches: *QA Subsection 15.12.4*

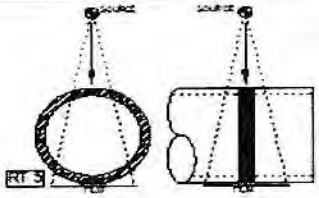

Tech #RT-5: Circ. Weld – Double Wall – Superimposed
3 Exposures@60° Spacing: QA Subsection 15.12.9

Penetrameter (IQI) Reference

1. ASTM A
2. ASTM B
3. ASTM C
4. FEEN/EN-462

5. DIN/EN-462 Set/Size 1 (Wire range 1 - 7)
6. DIN/EN 462 Set/Size 6 (Wire range 6 - 12)
7. DIN/EN-462 Set/Size 10 (Wire range 10 - 16)
8. DIN/EN-462 Set/Size 13 (Wire range 13 - 19)

9. Hole Type: Indicate IQI Designation Number



Tech #RT-2C: Long. Weld – Heavy Wall – Source Outside
1 Exposure/12 inches: *QA Subsection 15.12.5*

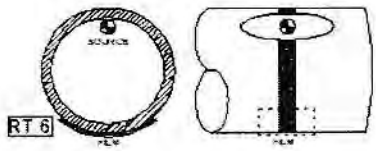

Tech #RT-6: Circumferential Weld - Source not Centered
Exposures as required: *QA Subsection 15.12.10*

IMPORTANT INFORMATION:

Scope of Services & Limits of Liability:

All Can Inspection Services (2011) Inc. does not warranty or imply warranty of services stated herein and shall not be held liable for services rendered as per established service agreements. At no time shall liability be placed upon All Can Inspection Services (2011) Inc. of which exceeds the amount paid for said services.

All Can Inspection Services shall utilize appropriate quality assurance measures, technical training, and safety parameters to assure services are provided to meet or exceed established NDE procedures, Practices and industry expectations and at no time shall warranty excess NDE services except those established in writing beyond those established prior to the services provided herein.

ALL CAN INSPECTION SERVICES (2011) INC.

Report # G2616

9323-37 Avenue, NW, Edmonton, Alberta T6E 5N4
SHOP: 780-462-1072 OFFICE: 780-462-9797 FAX: 780-462-4564
EMAIL: shop@allcaninspection.com www.allcaninspection.com

Client:	Sub Arc Systems	Client Job #	Coupon
Address:	17 Exploration Way, Devon	P.O. #	Toby
Contact: Name:	Toby	Date:	Aug 1/17
Phone:			
Work Location:	All Can Inspection Shop	Work Description:	Joe Niederhoff

CODES
1. ASME B31.3 N/S
2. ASME B31.3 S/C
3. ASME Sec. VIII Div 1 UW51
4. ASME Sec. VIII Div. 1 UW52
5. CSA Z662
6. CSA Z662 (Sour)
7. API 650
8. ASME IX (QW-191.2)

LF - Lack of Fusion; IP - Incomplete Penetration; IC - Internal Concavity; BT - Burn Through; TI - Tungsten Inclusion; IU: Internal Undercut; EU: External Undercut; EP - Excessive Penetration; P - Porosity; S - Slag; HL - High-Low; C - Crack; AB - Arc Burn; HB - Hollow Bead

Severity: 1 = Slight, 2 = Medium, 3 = Severe (Reject)

NDE No:	Size & thickness Plus Code Max. reinforcement	Material	Code (1-8)	IQI (See Back)	Technique Number (See Back)	Source Side of Object to Film Distance (inches)	Source to Object Distance (inches)	Number of Exposures	Welder ID	Discontinuity	Severity (1-3)	Accept (√)	Reject (X)
SAW 2G - Retest	5/8" Spot	P1	8	2	RT-2	0.750	25.000	1	J.NI			√	

RT Technician: Gordon Thomas CGSB Level: 2 Reg. #: 6 SNT-TC-1A Level: III SNT-TC-1A No: 6
RT Assistant # 1: CEDO #: SNT-TC-1A Level: SNT-TC-1A No:
RT Assistant # 2: CEDO #: SNT-TC-1A Level: SNT-TC-1A No:

IMPORTANT: See reverse side of this form for All Can Inspection Services (2011) Inc. LIMITED LIABILITY POLICY

Technician Signature — Date: Aug 1/17

Client Representative Signature — Evaluation Date

The above interpretation is a technical opinion, not a guarantee.
Client signature indicates acceptance of the report and results.

Clock tape marker and start arrow marked on weldment.
It is the customer's responsibility to map welds on drawings.

Film Make / Brand	AGFA	Film Class / Type:	I-D5
Screens Lead	Front: 0.010"	Back: 0.010"	One (no.) film per screen
Film Density in H & D:	Min. 2.0	Max. 4.0	
Penetrometer (IQI hole type) designation:	N/A	Recommended Max. U.G.:	0.30"
Source Isotope:	IRIDIUM-192 (Gamma)	Wall Viewing:	Single
Effective Focal Spot Size:	0.146 inches	Processing:	Automatic

RADIOGRAPHIC EXAMINATION REPORT

ALL CAN INSPECTION SERVICES (2011) INC.

Report # G2615

9323-37 Avenue, NW, Edmonton, Alberta T6E 5N4
SHOP: 780-462-1072 OFFICE: 780-462-9797 FAX: 780-462-4664
EMAIL: shop@allcaninspection.com www.allcaninspection.com

Client:	Sub Arc Systems	Client Job #	Coupon
Address:	17 Exploration Way, Devon	P.O. #	Toby
Contact: Name:	Toby	Date:	Aug 1/17
Phone:			
Work Location:	All Can Inspection Shop	Work Description:	Matt Mackenzie

CODES
1. ASME B31.3 N/S
2. ASME B31.3 S/C
3. ASME Sec. VIII Div 1 UW51
4. ASME Sec. VIII Div. 1 UW52
5. CSA Z662
6. CSA Z662 (Sour)
7. API 650
8. ASME IX (QW-191.2)

LF - Lack of Fusion; IP - Incomplete Penetration; IC - Internal Concavity; BT - Burn Through; TI - Tungsten Inclusion; IU: Internal Undercut; EU: External Undercut; EP - Excessive Penetration; P - Porosity; S - Slag; HL - High-Low; C - Crack; AB - Arc Burn; HB - Hollow Bead
Severity: 1 = Slight, 2 = Medium, 3 = Severe (Reject)

NDE No:	Size & thickness Plus Code Max. reinforcement	Material	Code	IQI	Technique Number	Source Side of Object to Film Distance	Source to Object Distance	Number of Exposures	Welder ID	Discontinuity	Severity	Accept	Reject
			1 - 8	See Back	See Back	Inches	Inches				1 - 3	v	x
SAW 2G	5/8" Spot	P1	8	2	RT-2	0.750	25.000	1	M.MA			V	

RT Technician: Gordon Thomas CGSB Level: 2 Reg. #: 6 SNT-TC-1A Level: III SNT-TC-1A No: 6
RT Assistant # 1 CEDO #: SNT-TC-1A Level: SNT-TC-1A No:
RT Assistant # 2 CEDO #: SNT-TC-1A Level: SNT-TC-1A No:

IMPORTANT: See reverse side of this form for All Can Inspection Services (2011) Inc. LIMITED LIABILITY POLICY

Technician Signature — Date: Aug 1/17

Client Representative Signature — Evaluation Date

The above interpretation is a technical opinion, not a guarantee.
Client signature indicates acceptance of the report and results.
Clock tape marker and start arrow marked on weldment.
It is the customer's responsibility to map welds on drawings.

Film Make / Brand:	AGFA	Film Class / Type:	I-D5
Screens: Lead	Front: 0.010"	Back: 0.010"	One (no.) film per screen
Film Density in H & D:	Min. 2.0	Max. 4.0	
Penetrometer (IQI hole type) designation:	N/A	Recommended Max. U.G.:	0.20"
Source Isotope:	IRIDIUM-192 (Gamma)	Wall Viewing:	Single
Effective Focal Spot Size:	0.146 Inches	Processing:	Automatic

RADIOGRAPHIC EXAMINATION REPORT

ALL CAN INSPECTION SERVICES (2011) INC.

Report # G2614

9323-37 Avenue, NW, Edmonton, Alberta T6E 5N4
SHOP: 780-462-1072 OFFICE: 780-462-9797 FAX: 780-462-4664
EMAIL: shop@allcaninspection.com www.allcaninspection.com

Client:	Sub Arc Systems	Client Job #	Coupon
Address:	17 Exploration Way, Devon	P.O. #	Toby
Contact: Name:	Toby	Date:	Aug 1/17
Phone:			
Work Location:	All Can Inspection Shop	Work Description:	Mitch Gouligier

CODES
1. ASME B31.3 N/S
2. ASME B31.3 S/C
3. ASME Sec. VIII Div 1 UW51
4. ASME Sec. VIII Div. 1 UW52
5. CSA Z662
6. CSA Z662 (Sour)
7. API 650
8. ASME IX (QW-191.2)

LF - Lack of Fusion; IP - Incomplete Penetration; IC - Internal Concavity; BT - Burn Through; TI - Tungsten Inclusion; IU: Internal Undercut; EU: External Undercut; EP - Excessive Penetration; P - Porosity; S - Slag; HL - High-Low; C - Crack; AB - Arc Burn; HB - Hollow Bead

Severity: 1 = Slight, 2 = Medium, 3 = Severe (Reject)

NDE No:	Size & thickness Plus Code Max. reinforcement	Material	Code (1 - 8)	IQI (See Back)	Technique Number (See Back)	Source Side of Object to Film Distance (Inches)	Source to Object Distance (Inches)	Number of Exposures	Welder ID	Discontinuity	Severity (1 - 3)	Accept (√)	Reject (X)
SAW 2G	5/8" Spot	P1	8	2	RT-2	0.750	25.000	1	M.GO			√	

RT Technician: Gordon Thomas CGSB Level: 2 Reg. #: 6 SNT-TC-1A Level: III SNT-TC-1A No: 6
RT Assistant # 1 CEDO #: SNT-TC-1A Level: SNT-TC-1A No:
RT Assistant # 2 CEDO #: SNT-TC-1A Level: SNT-TC-1A No:

IMPORTANT: See reverse side of this form for All Can Inspection Services (2011) Inc. LIMITED LIABILITY POLICY

Technician Signature — Date: Aug 1/17

Client Representative Signature — Evaluation Date

The above interpretation is a technical opinion, not a guarantee.
Client signature indicates acceptance of the report and results.

Clock tape marker and start arrow marked on weldment.
It is the customer's responsibility to map welds on drawings.

Film Make / Brand	AGFA	Film Class / Type	1-D5
Screens: Lead	Front 0.010"	Back 0.010"	One (no.) film per screen
Film Density in H & D:	Min 2.0	Max. 4.0	
Penetrameter (IQI hole type) designation:	N/A	Recommended Max. U.G.	0.20"
Source Isotope:	IRIDIUM-192 (Gamma)	Wall Viewing:	Single
Effective Focal Spot Size:	0.146 inches	Processing:	Automatic

RADIOGRAPHIC EXAMINATION REPORT

ALL CAN INSPECTION SERVICES (2011) INC.

Report # G2613

9323-37 Avenue, NW, Edmonton, Alberta T6E 5N4
SHOP: 780-462-1072 OFFICE: 780-462-9797 FAX: 780-462-4664
EMAIL: shop@allcaninspection.com www.allcaninspection.com

Client:	Sub Arc Systems	Client Job #	Coupon
Address:	17 Exploration Way, Devon	P.O. #	Toby
Contact: Name:	Toby	Date:	Aug 1/17
Phone:			
Work Location:	All Can Inspection Shop	Work Description:	Chris Jaques

CODES
1. ASME B31.3 N/S
2. ASME B31.3 S/C
3. ASME Sec. VIII Div 1 UW51
4. ASME Sec. VIII Div. 1 UW52
5. CSA Z662
6. CSA Z662 (Sour)
7. API 650
8. ASME IX (QW-191.2)

NDE No:	Size & thickness Plus Code Max. reinforcement	Material	Code (1 - 8)	IQI (See Back)	Technique Number (See Back)	Source Side of Object to Film Distance (inches)	Source to Object Distance (inches)	Number of Exposures	Welder ID	Severity (1 - 3)	Accept (Y)	Reject (R)
SAW 2G	5/8" Spot	P1	8	2	RT-2	0.750	25.000	1	CJA		V	

LF - Lack of Fusion; IP - Incomplete Penetration; IC - Internal Concavity; BT - Burn Through; TI - Tungsten Inclusion; IU: Internal Undercut; EU: External Undercut; EP - Excessive Penetration; P - Porosity; S - Slag; HL - High-Low; C - Crack; AB - Arc Burn; HB - Hollow Bead

Severity: 1 = Slight, 2 = Medium, 3 = Severe (Reject)

Discontinuity

RT Technician: Gordon Thomas CGSB Level: 2 Reg. #: 6 SNT-TC-1A Level: III SNT-TC-1A No: 6

RT Assistant # 1 CEDO #: SNT-TC-1A Level: SNT-TC-1A No:

RT Assistant # 2 CEDO #: SNT-TC-1A Level: SNT-TC-1A No:

IMPORTANT: See reverse side of this form for All Can Inspection Services (2011) Inc. LIMITED LIABILITY POLICY

Technician Signature

Aug 1/17
Date

Client Representative Signature

Evaluation Date

The above interpretation is a technical opinion, not a guarantee.
Client signature indicates acceptance of the report and results.

Clock tape marker and start arrow marked on weldment.
It is the customer's responsibility to map welds on drawings.

Film Make / Brand: AGFA Film Class / Type: 1-D5

Screens: Lead Front: 0.010" Back: 0.010" One (no.) film per screen

Film Density in H & D: Min: 2.0 Max: 4.0

Penetrameter (IQI hole type) designation: N/A Recommended Max. U.G.: 0.20"

Source Isotope: IRIDIUM-192 (Gamma) Wall Viewing: Single

Effective Focal Spot Size: 0.146 inches Processing: Automatic

RADIOGRAPHIC EXAMINATION REPORT

ALL CAN INSPECTION SERVICES (2011) INC.

Report # G2575

9323-37 Avenue, NW, Edmonton, Alberta T6E 5N4
SHOP: 780-462-1072 OFFICE: 780-462-9797 FAX: 780-462-4664
EMAIL: shop@allcaninspection.com www.allcaninspection.com

Client:	Sub Arc Systems	Client Job #	Welder Coupons
Address:	17 Exploration Way, Devon	P.O. #	Toby
Contact: Name:	Toby	Date:	July 26/17
Phone:			
Work Location:	All Can Inspection Shop	Work Description:	M.TV

CODES
1. ASME B31.3 N/S
2. ASME B31.3 S/C
3. ASME Sec. VIII Div.1 UW51
4. ASME Sec. VIII Div. 1 UW52
5. CSA Z662
6. CSA Z662 (Sour)
7. API 650
8. ASME IX (QW-191.2)

LF - Lack of Fusion; IP - Incomplete Penetration; IC - Internal Concavity; BT - Burn Through; TI - Tungsten Inclusion; IU: Internal Undercut; EU: External Undercut; EP - Excessive Penetration; P - Porosity; S - Slag; HL - High-Low; C - Crack; AB - Arc Burn; HB - Hollow Bead

Severity: 1 = Slight, 2 = Medium, 3 = Severe (Reject)

NDE No:	Size & thickness Plus Code Max. reinforcement	Material	Code	IQI	Technique Number	Source Side of Object to Film Distance	Source to Object Distance	Number of Exposures	Welder ID	Discontinuity	Severity	Accept	Reject
			1 - 8	See Back	See Back	Inches	Inches				1 - 3	√	X
2G SAW SAS 1	5/8" SPOT	P1	8	2	RT-2	0.750	25.000	1	M.TU			√	

RT Technician: Gordon Thomas — CGSB Level: 2 — Reg. #: 6 — SNT-TC-1A Level: III — SNT-TC-1A No: 6

RT Assistant # 1: Adele Kezama — CEDO #: 18988 — SNT-TC-1A Level: II — SNT-TC-1A No: 18988

RT Assistant # 2: — CEDO #: — SNT-TC-1A Level: — SNT-TC-1A No:

IMPORTANT: See reverse side of this form for All Can Inspection Services (2011) Inc. LIMITED LIABILITY POLICY

Technician Signature — Date: July 26/17

Client Representative Signature — Evaluation Date

The above interpretation is a technical opinion, not a guarantee.
Client signature indicates acceptance of the report and results.

Clock tape marker and start arrow marked on weldment.
It is the customer's responsibility to map welds on drawings.

Film Make / Brand	AGFA	Film Class / Type:	1-D5
Screens: Lead	Front: 0.010"	Back: 0.010"	One (no.) film per screen
Film Density in H & D:	Min. 2.0	Max. 4.0	
Penetrometer (IQI hole type) designation:	N/A	Recommended Max. U.G.	0.20"
Source Isotope:	IRIDIUM-192 (Gamma)	Wall Viewing:	Single
Effective Focal Spot Size:	0.146 inches	Processing:	Automatic

RADIOGRAPHIC EXAMINATION REPORT

ALL CAN INSPECTION SERVICES (2011) INC.

Report # G2574

9323-37 Avenue, NW, Edmonton, Alberta T6E 5N4
SHOP: 780-462-1072 OFFICE: 780-462-9797 FAX: 780-462-4664
EMAIL: shop@allcaninspection.com www.allcaninspection.com

Client:	Sub Arc Systems	Client Job #	Welder Coupons
Address:	17 Exploration Way, Devon	P.O. #	Toby
Contact: Name:	Toby	Date:	July 26/17
Phone:			
Work Location:	All Can Inspection Shop	Work Description:	J.OV

CODES
1. ASME B31.3 N/S
2. ASME B31.3 S/C
3. ASME Sec. VIII Div 1 UW51
4. ASME Sec. VIII Div. 1 UW52
5. CSA Z662
6. CSA Z662 (Sour)
7. API 650
8. ASME IX (QW-191.2)

UF - Lack of Fusion; IP - Incomplete Penetration; IC - Internal Concavity; BT - Burn Through; TI - Tungsten Inclusion; IU: Internal Undercut; EU: External Undercut; EP - Excessive Penetration; P - Porosity; S - Slag; HL - High-Low; C - Crack; AB - Arc Burn; HB - Hollow Bead

Severity: 1 = Slight, 2 = Medium, 3 = Severe (Reject)

NDE No:	Size & thickness Plus Code Max. reinforcement	Material	Code (1 - 8)	IQI (See Back)	Technique Number (See Back)	Source Side of Object to Film Distance (Inches)	Source to Object Distance (Inches)	Number of Exposures	Welder ID	Discontinuity	Severity (1-3)	Accept (√)	Reject (X)
2G SAW SAS 1	5/8" SPOT	P1	8	2	RT-2	0.750	25.000	1	J.OV			√	

RT Technician: Gordon Thomas — CGSB Level: 2 — Reg. #: 6 — SNT-TC-1A Level: III — SNT-TC-1A No: 6
RT Assistant # 1: Adele Kezama — CEDO #: 18988 — SNT-TC-1A Level: II — SNT-TC-1A No: 18988
RT Assistant # 2: — CEDO #: — SNT-TC-1A Level: — SNT-TC-1A No:

IMPORTANT: See reverse side of this form for All Can Inspection Services (2011) Inc. LIMITED LIABILITY POLICY

Technician Signature — Date: July 26/17

Client Representative Signature — Evaluation Date

The above interpretation is a technical opinion, not a guarantee.
Client signature indicates acceptance of the report and results.

Clock tape marker and start arrow marked on weldment.
It is the customer's responsibility to map welds on drawings.

Film Make / Brand:	AGFA	Film Class / Type:	1-DS
Screens: Lead	Front: 0.010"	Back: 0.010"	One (no.) film per screen
Film Density in H & D:	Min: 2.0	Max: 4.0	
Penetrometer (IQI hole type) designation:	N/A	Recommended Max. U.G.:	0.20"
Source Isotope:	IRIDIUM-192 (Gamma)	Wall Viewing:	Single
Effective Focal Spot Size:	0.146 inches	Processing:	Automatic

RADIOGRAPHIC EXAMINATION REPORT

ALL CAN INSPECTION SERVICES (2011) INC.

Report # G2573

9323-37 Avenue, NW, Edmonton, Alberta T6E 5N4
SHOP: 780-462-1072 OFFICE: 780-462-9797 FAX: 780-462-4664
EMAIL: shop@allcaninspection.com www.allcaninspection.com

Client:	Sub Arc Systems	Client Job #	Welder Coupons
Address:	17 Exploration Way, Devon	P.O. #	Toby
Contact: Name:	Toby	Date:	July 26/17
Phone:			
Work Location:	All Can Inspection Shop	Work Description:	J.Ni

CODES
1. ASME B31.3 N/S
2. ASME B31.3 S/C
3. ASME Sec. VIII Div 1 UW51
4. ASME Sec. VIII Div. 1 UW52
5. CSA Z662
6. CSA Z662 (Sour)
7. API 650
8. ASME IX (QW-191.2)

NDE No:	Size & thickness Plus Code Max. reinforcement	Material	Code	IQI	Technique Number	Source Side of Object to Film Distance	Source to Object Distance	Number of Exposures	Welder ID	Discontinuity	Severity	Accept	Reject
			1 - 8	See Back	See Back	Inches	Inches			Severity: 1 = Slight, 2 = Medium, 3 = Severe (Reject)	1 - 3	√	X
2G SMAW-SAS 1	5/8" SPOT	P1	8	2	RT-2	0.750	25.000	1	J.Ni	(P @ 2" & 6"(ok)) S @ 0"-1"	3		X
3G SMAW-SAS 1	5/8" SPOT	P1	8	2	RT-2	0.750	25.000	1	J.Ni			√	
4G SMAW-SAS 1	5/8" SPOT	P1	8	2	RT-2	0.750	25.000	1	J.Ni	P @ 0"	1	√	

LF - Lack of Fusion; IP - Incomplete Penetration; IC - Internal Concavity; BT - Burn Through; TI - Tungsten Inclusion; IU: Internal Undercut; EU: External Undercut; EP - Excessive Penetration; P - Porosity; S - Slag; HL - High-Low; C - Crack; AB - Arc Burn; HB - Hollow Bead

RT Technician:	Gordon Thomas	CGSB Level:	2	Reg. # :	6	SNT-TC-1A Level:	III
RT Assistant # 1	Adele Kezama	CEDO #:	18988			SNT-TC-1A Level:	II
RT Assistant # 2		CEDO #:				SNT-TC-1A Level:	

SNT-TC-1A No:	6		
SNT-TC-1A No:	18988		
SNT-TC-1A No:			

IMPORTANT: See reverse side of this form for All Can Inspection Services (2011) Inc. LIMITED LIABILITY POLICY

Technician Signature

July 26/17
Date

Client Representative Signature

Evaluation Date

The above interpretation is a technical opinion, not a guarantee.
Client signature indicates acceptance of the report and results.
Clock tape marker and start arrow marked on weldment.
It is the customer's responsibility to map welds on drawings.

Film Make / Brand:	AGFA	Film Class / Type:	I-D5
Screens: Lead	Front 0.010"	Back 0.010"	One (no.) film per screen
Film Density in H & D:	Min. 2.0	Max. 4.0	
Penetrometer (IQI) hole type) designation:	N/A	Recommended Max. U.G.:	0.20"
Source Isotope:	IRIDIUM-192 (Gamma)	Wall Viewing:	Single
Effective Focal Spot Size:	0.146 inches	Processing:	Automatic

RADIOGRAPHIC EXAMINATION REPORT

ALL CAN INSPECTION SERVICES (2011) INC.

Report # G2572

9323-37 Avenue, NW, Edmonton, Alberta T6E 5N4
SHOP: 780-462-1072 OFFICE: 780-462-9797 FAX: 780-462-4664
EMAIL: shop@allcaninspection.com www.allcaninspection.com

Client:	Sub Arc Systems	Client Job #	Welder Coupons
Address:	17 Exploration Way, Devon	P.O. #	Toby
Contact: Name:	Toby	Date:	July 26/17
Phone:			
Work Location:	All Can Inspection Shop	Work Description:	K.WR

CODES
1. ASME B31.3 N/S
2. ASME B31.3 S/C
3. ASME Sec. VIII Div 1 UW51
4. ASME Sec. VIII Div. 1 UW52
5. CSA Z662
6. CSA Z662 (Sour)
7. API 650
8. ASME IX (QW-191.2)

LF - Lack of Fusion; IP - Incomplete Penetration; IC - Internal Concavity; BT - Burn Through; TI - Tungsten Inclusion; IU: Internal Undercut; EU: External Undercut; EP - Excessive Penetration; P - Porosity; S - Slag; HL - High-Low; C - Crack; AB - Arc Burn; HB - Hollow Bead

Severity: 1 = Slight, 2 = Medium, 3 = Severe (Reject)

NDE No:	Size & thickness Plus Code Max. reinforcement	Material	Code (1-8)	IQI (See Back)	Technique Number (See Back)	Source Side of Object to Film Distance (Inches)	Source to Object Distance (Inches)	Number of Exposures	Welder ID	Discontinuity	Severity (1-3)	Accept (Y)	Reject (N)
2G SMAW-SAS 1	5/8" SPOT	P1	8	2	RT-2	0.750	25.000	1	K.WR			√	
3G SMAW-SAS 1	5/8" SPOT	P1	8	2	RT-2	0.750	25.000	1	K.WR			√	
4G SMAW-SAS 1	5/8" SPOT	P1	8	2	RT-2	0.750	25.000	1	K.WR			√	
2G SAW	5/8" SPOT	P1	8	2	RT-2	0.750	25.000	1	K.WR			√	

RT Technician: Gordon Thomas — CGSB Level: 2 — Reg. #: 6 — SNT-TC-1A Level: III — SNT-TC-1A No: 6
RT Assistant # 1: Adele Kezama — CEDO #: 18988 — SNT-TC-1A Level: II — SNT-TC-1A No: 18988
RT Assistant # 2: — CEDO #: — SNT-TC-1A Level: — SNT-TC-1A No:

IMPORTANT: See reverse side of this form for All Can Inspection Services (2011) Inc. LIMITED LIABILITY POLICY

Technician Signature — Date: July 26/17

Client Representative Signature — Evaluation Date

The above interpretation is a technical opinion, not a guarantee.
Client signature indicates acceptance of the report and results.

Clock tape marker and start arrow marked on weldment.
It is the customer's responsibility to map welds on drawings.

Film Make / Brand:	AGFA	Film Class / Type:	I-D5
Screens: Lead	Front: 0.010"	Back: 0.010"	One (no.) film per screen
Film Density (H & D):	Min.: 2.0	Max.: 4.0	
Penetrometer (IQI hole type) designation:	N/A	Recommended Max. U.G.:	0.20"
Source Isotope:	IRIDIUM-192 (Gamma)	Wall Viewing:	Single
Effective Focal Spot Size:	0.146 inches	Processing:	Automatic

RADIOGRAPHIC EXAMINATION REPORT

ALL CAN INSPECTION SERVICES (2011) INC.

Report # G2571

9323-37 Avenue, NW, Edmonton, Alberta T6E 5N4
SHOP: 780-462-1072 OFFICE: 780-452-9797 FAX: 780-462-4664
EMAIL: shop@allcaninspection.com www.allcaninspection.com

Client:	Sub Arc Systems	Client Job #	Welder Coupons
Address:	17 Exploration Way, Devon	P.O. #	Toby
Contact: Name:	Toby	Date:	July 26/17
Phone:			
Work Location:	All Can Inspection Shop	Work Description:	T.MO

CODES
1. ASME B31.3 N/S
2. ASME B31.3 S/C
3. ASME Sec. VIII Div 1 UW51
4. ASME Sec. VIII Div. 1 UW52
5. CSA Z662
6. CSA Z662 (Sour)
7. API 650
8. ASME IX (QW-191.2)

NDE No:	Size & thickness Plus Code Max. reinforcement	Material	Code (1 - 8)	IQI (See Back)	Technique Number (See Back)	Source Side of Object to Film Distance (Inches)	Source to Object Distance (Inches)	Number of Exposures	Welder ID	Severity: 1 = Slight, 2 = Medium, 3 = Severe (Reject) Discontinuity	Severity (1 - 3)	Accept (√)	Reject (X)
2G SMAW-SAS 1	5/8" SPOT	P1	8	2	RT-2	0.750	25.000	1	T.MO			√	
3G SMAW-SAS 1	5/8" SPOT	P1	8	2	RT-2	0.750	25.000	1	T.MO			√	
4G SMAW-SAS 1	5/8" SPOT	P1	8	2	RT-2	0.750	25.000	1	T.MO			√	

LF - Lack of Fusion
IP - Incomplete Penetration
IC - Internal Concavity
BT - Burn Through
TI - Tungsten Inclusion
IU: Internal Undercut
EU: External Undercut
EP - Excessive Penetration
P - Porosity
S - Slag
HL - High-Low
C - Crack
AB - Arc Burn
HB - Hollow Bead

RT Technician:	Gordon Thomas	CGSB Level:	2	Reg. #:	6	SNT-TC-1A Level:	III
RT Assistant # 1	Adele Kezama	CEDQ #:	18988			SNT-TC-1A Level:	II
RT Assistant # 2		CEDQ #:				SNT-TC-1A Level:	

SNT-TC-1A No:	6		
SNT-TC-1A No:	18988		
SNT-TC-1A No:			

IMPORTANT: See reverse side of this form for All Can Inspection Services (2011) Inc. LIMITED LIABILITY POLICY

Technician Signature — Date: July 26/17

Client Representative Signature — Evaluation Date:

The above interpretation is a technical opinion, not a guarantee.
Client signature indicates acceptance of the report and results.
Clock tape marker and start arrow marked on weldment.
It is the customer's responsibility to map welds on drawings.

Film Make / Brand:	AGFA	Film Class / Type:	I-D5
Screens: Lead	Front: 0.010"	Back: 0.010"	One (no.) film per screen
Film Density in H & D:	Min.: 2.0	Max.: 4.0	
Penetrameter (IQI hole type) designation:	N/A	Recommended Max. U.G.:	0.20"
Source Isotope:	IRIDIUM-192 (Gamma)	Wall Viewing:	Single
Effective Focal Spot Size:	0.146 inches	Processing:	Automatic

RADIOGRAPHIC EXAMINATION REPORT

ALL CAN INSPECTION SERVICES (2011) INC.

Report # G2570

9323-37 Avenue, NW, Edmonton, Alberta T6E 5N4
SHOP: 780-462-1072 OFFICE: 780-462-9797 FAX: 780-462-4664
EMAIL: shop@allcaninspection.com www.allcaninspection.com

Client:	Sub Arc Systems	Client Job #	Welder Coupons
Address:	17 Exploration Way, Devon	P.O. #	Toby
Contact: Name:	Toby	Date:	July 26/17
Phone:			
Work Location:	All Can Inspection Shop	Work Description:	J.Hi

CODES
1. ASME B31.3 N/S
2. ASME B31.3 S/C
3. ASME Sec. VIII Div 1 UW51
4. ASME Sec. VIII Div. 1 UW52
5. CSA Z662
6. CSA Z662 (Sour)
7. API 650
8. ASME IX (QW-191.2)

NDE No:	Size & thickness Plus Code Max. reinforcement	Material	Code (1 - 8)	IQI (See Back)	Technique Number (See Back)	Source Side of Object to Film Distance (Inches)	Source to Object Distance (Inches)	Number of Exposures	Welder ID	Discontinuity	Severity (1 - 3)	Accept (√)	Reject (x)
2G SMAW-SAS 1	5/8" SPOT	P1	8	2	RT-2	0.750	25.000	1	J.Hi			√	
3G SMAW-SAS 1	5/8" SPOT	P1	8	2	RT-2	0.750	25.000	1	J.Hi			√	
4G SMAW-SAS 1	5/8" SPOT	P1	8	2	RT-2	0.750	25.000	1	J.Hi			√	

LF - Lack of Fusion; IP - Incomplete Penetration; IC - Internal Concavity; BT - Burn Through; TI - Tungsten Inclusion; IU - Internal Undercut; EU - External Undercut; EP - Excessive Penetration; P - Porosity; S - Slag; HL - High-Low; C - Crack; AB - Arc Burn; HB - Hollow Bead

Severity: 1 = Slight, 2 = Medium, 3 = Severe (Reject)

RT Technician:	Gordon Thomas	CGSB Level:	2	Reg. #:	6	SNT-TC-1A Level:	III
RT Assistant # 1	Adele Kezama	CEDO #:	18988			SNT-TC-1A Level:	II
RT Assistant # 2		CEDO #:				SNT-TC-1A Level:	

SNT-TC-1A No:	6
SNT-TC-1A No:	18988
SNT-TC-1A No:	

IMPORTANT: See reverse side of this form for All Can Inspection Services (2011) Inc. LIMITED LIABILITY POLICY

Technician Signature — Date: July 26/17

Client Representative Signature — Evaluation Date

The above interpretation is a technical opinion, not a guarantee.
Client signature indicates acceptance of the report and results.

Clock tape marker and start arrow marked on weldment.
It is the customer's responsibility to map welds on drawings.

Film Make / Brand	AGFA	Film Class / Type:	T-D5
Screens: Lead	Front: 0.010"	Back: 0.010"	One (no.) film per screen
Film Density in H & D:	Min.: 2.0	Max.: 4.0	
Penetrameter (IQI hole type) designation:	N/A	Recommended Max. U.G.:	0.20"
Source Isotope:	IRIDIUM-192 (Gamma)	Wall Viewing:	Single
Effective Focal Spot Size:	0.146 inches	Processing:	Automatic

RADIOGRAPHIC EXAMINATION REPORT

Sub-Arc Systems Inc.	**WELDERS' QUALIFICATION RECORD** **API 650**	**Exhibit 8, Rev A**

WELDER NAME	WELDER SYMBOL	DATE QUALIF.	QUALIFICATION PROCEDURE	LIMITATIONS					REMARKS
				PROCESS	ELECTRODE	POSITION	THICKNESS RANGE	DIAMETER RANGE	
MATT MACKENZIE	M.MA	06,21,17	SAS 1	SMAW	F3, F4	2G	1 1/4"		X-RAY G2343
	M.MA	06,21,17	SAS 1	SMAW	F3, F4	3G	1 1/4"		X-RAY G2343
	M.MA.	06,21,17	SAS 1	SMAW	F3, F4	4G	1 1/4"		X-RAY G2343
	M.MA.	08,01,17	SAS 2	SAW	F7A6	2G	1 1/4"		X-RAY G 2615.

QC (PRINT) **SIGN:**	**DATE** (yyyy-MM-dd):
QA (PRINT) ROBERT HOFFMAN **SIGN:**	**DATE** (yyyy-MM-dd): 2017,08,01

Sub-Arc Systems Inc.	**WELDERS' QUALIFICATION RECORD** **API 650**	**Exhibit 8, Rev A**

WELDER NAME	WELDER SYMBOL	DATE QUALIF.	QUALIFICATION PROCEDURE	LIMITATIONS					REMARKS
				PROCESS	ELECTRODE	POSITION	THICKNESS RANGE	DIAMETER RANGE	
MITCH GOULIGER	M.GO	06,21,17	SAS 1	SMAW	F3, F4	2G	1 1/4"		X-Ray G2341
	M.GO	06,21,17	SAS 1	SMAW	F3, F4	3G	1 1/4"		X-Ray G2341
	M.GO	06,21,17	SAS 1	SMAW	F3, F4	4G	1 1/4"		X-Ray G2341
	M.GO	08,01,17	SAS 2	SAW	F7A6	2G	1 1/4"		X-Ray G 2614.

QC (PRINT) **SIGN:**	**DATE** (yyyy-MM-dd):
QA (PRINT) ROBERT HOFFMAN **SIGN:**	**DATE** (yyyy-MM-dd): 2017, 08, 01

Sub-Arc Systems Inc.	WELDERS' QUALIFICATION RECORD API 650	Exhibit 8, Rev A

WELDER NAME	WELDER SYMBOL	DATE QUALIF.	QUALIFICATION PROCEDURE	LIMITATIONS					REMARKS
				PROCESS	ELECTRODE	POSITION	THICKNESS RANGE	DIAMETER RANGE	
CHRIS JAQUES	C.JA	06,21,17	SAS 1	SMAW	F3, F4	2G	1 1/4"		X-Ray G2339
	C.JA.	06,21,17	SAS 1	SMAW	F3, F4	3G	1 1/4"		X-Ray G2339
	C.JA.	06,21,17	SAS 1	SMAW	F3, F4	4G	1 1/4"		X-Ray G2339
	C.JA	08,01,17	SAS2	SAW	F7A6	2G	1 1/4"		X-Ray G2613

QC (PRINT) SIGN:	DATE (yyyy-MM-dd):
QA (PRINT) ROBERT HOFFMAN SIGN:	DATE (yyyy-MM-dd): 2017,08,01

Sub-Arc Systems Inc.	WELDERS' QUALIFICATION RECORD API 650	Exhibit 8, Rev A

WELDER NAME	WELDER SYMBOL	DATE QUALIF.	QUALIFICATION PROCEDURE	LIMITATIONS					REMARKS
				PROCESS	ELECTRODE	POSITION	THICKNESS RANGE	DIAMETER RANGE	
MATT TURMEL	M.TU	06,21,17	SAS 1	SMAW	F3, F4	2G	1 1/4"		X-RAY G2342
	M.TU	06,21,17	SAS 1	SMAW	F3, F4	3G	1 1/4"		X-RAY G2342
	M.TU	06,21,17	SAS 1	SMAW	F3, F4	4G	1 1/4"		X-RAY G2342
	M.TU	07,26,17	SAS 2	SAW	F7A6	2F	1 1/4"		X-RAY G2575

QC (PRINT) SIGN:	DATE (yyyy-MM-dd):
QA (PRINT) ROBERT HOFFMAN SIGN:	DATE (yyyy-MM-dd): 2017,07,26

Sub-Arc Systems Inc.	WELDERS' QUALIFICATION RECORD API 650	Exhibit 8, Rev A

WELDER NAME	WELDER SYMBOL	DATE QUALIF.	QUALIFICATION PROCEDURE	LIMITATIONS					REMARKS
				PROCESS	ELECTRODE	POSITION	THICKNESS RANGE	DIAMETER RANGE	
Joel Overgaard	J.OV	06,21,17	SAS 1	SMAW	F3. F4	2G.	1 1/4"		X-Ray G2340
	J.OV	06,21,17	SAS 1	SMAW	F3. F4	3G	1 1/4"		X-Ray G2340
	J.OV	06,21,17	SAS 1	SMAW	F3. F4	4G	1 1/4"		X-Ray G2340
	J.OV	07,26,17	SAS 2	SAW	F7A6	2G	1 1/4"		X-Ray G2574

QC (PRINT) SIGN:	DATE (yyyy-MM-dd):
QA (PRINT) Robert Hoffman SIGN:	DATE (yyyy-MM-dd): 2017, 07, 26.

Sub-Arc Systems Inc.	**WELDERS' QUALIFICATION RECORD** **API 650**	**Exhibit 8, Rev A**

WELDER NAME	WELDER SYMBOL	DATE QUALIF.	QUALIFICATION PROCEDURE	LIMITATIONS					REMARKS
				PROCESS	ELECTRODE	POSITION	THICKNESS RANGE	DIAMETER RANGE	
KEVIN WRIGHT	K.W.R	07,26,17	SAS 1	SMAW	F3. F4	2G	1 1/4"		X-Ray G2572
	K.W.R	07,26,17	SAS 1	SMAW	F3. F4	3G	1 1/4"		X-Ray G2572
	K.W.R.	07,26,17	SAS 1	SMAW	F3 F4	4G	1 1/4"		X-Ray G 2572
	K.W.R	07,26,17	SAS 2	SAW	F7 A6	2G	1 1/4"		X-Ray G 2572

QC (PRINT) **SIGN:**	**DATE** (yyyy-MM-dd):
QA (PRINT) ROBERT HOFFMAN **SIGN:**	**DATE** (yyyy-MM-dd): 2017, 07, 28

Sub-Arc Systems Inc.	**WELDERS' QUALIFICATION RECORD** **API 650**	**Exhibit 8, Rev A**

WELDER NAME	WELDER SYMBOL	DATE QUALIF.	QUALIFICATION PROCEDURE	LIMITATIONS					REMARKS
				PROCESS	ELECTRODE	POSITION	THICKNESS RANGE	DIAMETER RANGE	
JOEL OVERGAARD	J.OV	07,26,17	SAS 2	SAW	F7A6	2G	1 1/4"		X Ray * G2574

QC (PRINT) **SIGN:**	**DATE** (yyyy-MM-dd):
QA (PRINT) ROBERT HOFFMAN **SIGN:**	**DATE** (yyyy-MM-dd): 2017, 07, 28

Sub-Arc Systems Inc.	**WELDERS' QUALIFICATION RECORD** **API 650**	**Exhibit 8, Rev A**

WELDER NAME	WELDER SYMBOL	DATE QUALIF.	QUALIFICATION PROCEDURE	LIMITATIONS					REMARKS
				PROCESS	ELECTRODE	POSITION	THICKNESS RANGE	DIAMETER RANGE	
JOE NIEDERHOFF	J.NI	07,26,17	SAS 1	SMAW	F3, F4	3G	1 1/4"		X RAY # G2573
	J.NI	07,26,17	SAS 1	SMAW	F3, F4	4G	1 1/4"		X RAY # G2573
	J.NI	08,01,17	SAS 1	SMAW	F3, F4	2G	1 1/4"		X RAY G 2616.

QC (PRINT) **SIGN:**	**DATE** (yyyy-MM-dd):
QA (PRINT) ROBERT HOFFMAN **SIGN:** Robert Hoffman	**DATE** (yyyy-MM-dd): 2017, 08, 01

Sub-Arc Systems Inc.	**WELDERS' QUALIFICATION RECORD** **API 650**	**Exhibit 8, Rev A**

WELDER NAME	WELDER SYMBOL	DATE QUALIF.	QUALIFICATION PROCEDURE	LIMITATIONS					REMARKS
				PROCESS	ELECTRODE	POSITION	THICKNESS RANGE	DIAMETER RANGE	
JUSTIN HILL	J.HI	07,26,17	SAS 1	SMAW	F3, F4	2G	1 1/4"		X-RAY G2570
	J.HI	07,26,17	SAS 1	SMAW	F3, F4	3G	1 1/4"		X-RAY G2570
	J.HI	07,26,17	SAS 1	SMAW	F3 F4	4G	1 1/4"		X-RAY G2570

QC (PRINT) **SIGN:**	**DATE** (yyyy-MM-dd):
QA (PRINT) ROBERT HOFFMAN **SIGN:**	**DATE** (yyyy-MM-dd): 2017, 07, 28

Sub-Arc Systems Inc.	**WELDERS' QUALIFICATION RECORD** **API 650**	**Exhibit 8, Rev A**

WELDER NAME	WELDER SYMBOL	DATE QUALIF.	QUALIFICATION PROCEDURE	LIMITATIONS					REMARKS
				PROCESS	ELECTRODE	POSITION	THICKNESS RANGE	DIAMETER RANGE	
JOE NIEDERHOFF	J.NI	07,26,17	SAS 1	SMAW	F3, F4	3G	1 1/4"		X RAY # E2573
	J.NI	07,26,17	SAS 1	SMAW	F3, F4	4G	1 1/4"		X RAY # E2573

QC (PRINT) **SIGN:**	**DATE** (yyyy-MM-dd):
QA (PRINT) ROBERT HOFFMAN **SIGN:** Robert Hoffman	**DATE** (yyyy-MM-dd): 2017, 07, 28

Sub-Arc Systems Inc.	**WELDERS' QUALIFICATION RECORD** **API 650**	**Exhibit 8, Rev A**

WELDER NAME	WELDER SYMBOL	DATE QUALIF.	QUALIFICATION PROCEDURE	LIMITATIONS					REMARKS
				PROCESS	ELECTRODE	POSITION	THICKNESS RANGE	DIAMETER RANGE	
MATT TURNER	M.TU.	07,26,17		SAW	F7A6	2F	1¼"		XRAY # G2575

QC (PRINT) **SIGN:**	**DATE** (yyyy-MM-dd):
QA (PRINT) ROBERT HOFFMAN **SIGN:**	**DATE** (yyyy-MM-dd): 2017, 07, 28

4605-47 Street
Vermillion, AB. T9X 1L6
780-608-9589

QUALITY CONTROL MANUAL

Sub-Arc Systems Inc.	**WELDERS' QUALIFICATION RECORD** **API 650**	**Exhibit 8, Rev A**

WELDER NAME	WELDER SYMBOL	DATE QUALIF.	QUALIFICATION PROCEDURE	LIMITATIONS					REMARKS
				PROCESS	ELECTRODE	POSITION	THICKNESS RANGE	DIAMETER RANGE	
JOEL OVERGAARD	J.OV	07,26,17		SAW	F7A6	2G	1 1/4"		X RAY # G2574

QC (PRINT) **SIGN:**	**DATE** (yyyy-MM-dd):
QA (PRINT) ROBERT HOFFMAN **SIGN:**	**DATE** (yyyy-MM-dd): 2017, 07, 28

Sub-Arc Systems Inc.	**WELDERS' QUALIFICATION RECORD** **API 650**	**Exhibit 8, Rev A**

WELDER NAME	WELDER SYMBOL	DATE QUALIF.	QUALIFICATION PROCEDURE	LIMITATIONS					REMARKS
				PROCESS	ELECTRODE	POSITION	THICKNESS RANGE	DIAMETER RANGE	
KEVIN WRIGHT	K.W.R	07,26,17	SAS 1	SMAW	F3, F4	2G	1 1/4"		X-Ray G2572
	K.W.R	07,26,17	SAS 1	SMAW	F3, F4	3G	1 1/4"		X-Ray G2572
	K.W.R.	07,26,17	SAS 1	SMAW	F3 F4	4G	1 1/4"		X-Ray G2572
	K.W.R	07,26,17		SAW	F7 A6	2G	1 1/4"		X-Ray G2572

QC (PRINT) **SIGN:**	**DATE** (yyyy-MM-dd):
QA (PRINT) ROBERT HOFFMAN **SIGN:**	**DATE** (yyyy-MM-dd): 2017, 07, 28

Sub-Arc Systems Inc.	WELDERS' QUALIFICATION RECORD API 650	Exhibit 8, Rev A

WELDER NAME	WELDER SYMBOL	DATE QUALIF.	QUALIFICATION PROCEDURE	LIMITATIONS					REMARKS
				PROCESS	ELECTRODE	POSITION	THICKNESS RANGE	DIAMETER RANGE	
TYLER MONCRIEF	T. MO	07.26.17	SAS 1	SMAW	F3, F4	2G	1 1/4"		XRAY # G2571
	T. MO	07.26.17	SAS 1	SMAW	F3, F4	3G	1 1/4"		XRAY # G2571
	T. MO	07.26.17	SAS 1	SMAW	F3 F4	4G	1 1/4"		XRAY # G2571.

QC (PRINT) SIGN:	DATE (yyyy-MM-dd):
QA (PRINT) ROBERT HOFFMAN SIGN: [signature]	DATE (yyyy-MM-dd): 2017, 07, 28

4605-47 Street
Vermillion, AB, T9X 1L6
780-608-9589

QUALITY CONTROL MANUAL

Sub-Arc Systems Inc.	**WELDERS' QUALIFICATION RECORD** **API 650**	**Exhibit 8, Rev A**

WELDER NAME	WELDER SYMBOL	DATE QUALIF.	QUALIFICATION PROCEDURE	LIMITATIONS					REMARKS
				PROCESS	ELECTRODE	POSITION	THICKNESS RANGE	DIAMETER RANGE	
CHRIS JAQUES	C.JA	06,21,17	SAS 1	SMAW	F3, F4	2G	1 1/4"		X-RAY G2339
	C.JA.	06,21,17	SAS 1	SMAW	F3, F4	3G	1 1/4"		X-RAY G2339
	C.JA.	06,21,17	SAS 1	SMAW	F3, F4	4G	1 1/4"		X-RAY G2339

QC (PRINT) **SIGN:**	**DATE** (yyyy-MM-dd):
QA (PRINT) ROBERT HOFFMAN **SIGN:**	**DATE** (yyyy-MM-dd): 2017, 06, 23

Sub-Arc Systems Inc.	**WELDERS' QUALIFICATION RECORD** **API 650**	**Exhibit 8, Rev A**

WELDER NAME	WELDER SYMBOL	DATE QUALIF.	QUALIFICATION PROCEDURE	LIMITATIONS					REMARKS
				PROCESS	ELECTRODE	POSITION	THICKNESS RANGE	DIAMETER RANGE	
JOEL OVEREARD	J.OV	06,21,17	SAS 1	SMAW	F3, F4	2G	1 1/4"		X-RAY G2340
	J.OV	06,21,17	SAS 1	SMAW	F3, F4	3G	1 1/4"		X-RAY G2340
	J.OV	06,21,17	SAS 1	SMAW	F3, F4	4G	1 1/4"		X-RAY G2340

QC (PRINT) **SIGN:**	**DATE** (yyyy-MM-dd):
QA (PRINT) ROBERT HOFFMAN **SIGN:**	**DATE** (yyyy-MM-dd): 2017, 06, 23.

Sub-Arc Systems Inc.	WELDERS' QUALIFICATION RECORD API 650	Exhibit 8, Rev A

WELDER NAME	WELDER SYMBOL	DATE QUALIF.	QUALIFICATION PROCEDURE	LIMITATIONS					REMARKS
				PROCESS	ELECTRODE	POSITION	THICKNESS RANGE	DIAMETER RANGE	
MITCH GOULIGER	M.GO	06,21,17	SAS 1	SMAW	F3, F4	2G	1 1/4"		X-RAY G2341
	M.GO	06,21,17	SAS 1	SMAW	F3, F4	3G	1 1/4"		X-RAY G2341
	M.GO	06,21,17	SAS 1	SMAW	F3, F4	4G	1 1/4"		X-RAY G2341

QC (PRINT) SIGN:	DATE (yyyy-MM-dd):
QA (PRINT) ROBERT HOFFMAN SIGN:	DATE (yyyy-MM-dd): 2017, 06, 23

Sub-Arc Systems Inc.	WELDERS' QUALIFICATION RECORD API 650	Exhibit 8, Rev A

WELDER NAME	WELDER SYMBOL	DATE QUALIF.	QUALIFICATION PROCEDURE	LIMITATIONS					REMARKS
				PROCESS	ELECTRODE	POSITION	THICKNESS RANGE	DIAMETER RANGE	
MATT TURMEL	M.TU	06,21,17	SAS 1	SMAW	F3, F4	2G	1 1/4"		X-RAY G2342
	M.TU	06,21,17	SAS 1	SMAW	F3, F4	3G	1 1/4"		X-RAY G2342
	M.TU	06,21,17	SAS 1	SMAW	F3, F4	4G	1 1/4"		X-RAY G2342

QC (PRINT) SIGN:	DATE (yyyy-MM-dd):
QA (PRINT) ROBERT HOFFMAN SIGN:	DATE (yyyy-MM-dd): 2017, 06, 23

Sub-Arc Systems Inc.	**WELDERS' QUALIFICATION RECORD** **API 650**	**Exhibit 8, Rev A**

WELDER NAME	WELDER SYMBOL	DATE QUALIF.	QUALIFICATION PROCEDURE	LIMITATIONS					REMARKS
				PROCESS	ELECTRODE	POSITION	THICKNESS RANGE	DIAMETER RANGE	
MATT MACKENZIE	M.MA	06,21,17	SAS 1	SMAW	F3, F4	2G	1 1/4"		X-RAY G2343
	M.MA	06,21,17	SAS 1	SMAW	F3, F4	3G	1 1/4"		X-RAY G2343
	M.MA.	06.21.17	SAS 1	SMAW	F3, F4	4G	1 1/4"		X-RAY G2343

QC (PRINT) **SIGN:**	**DATE** (yyyy-MM-dd):
QA (PRINT) ROBERT HOFFMAN **SIGN:**	**DATE** (yyyy-MM-dd): 2017, 06, 23

QUALITY CONTROL MANUAL

Sub-Arc Systems Inc.	**WELDERS' QUALIFICATION RECORD** **API 650**	**Exhibit 8, Rev A**

WELDER NAME	WELDER SYMBOL	DATE QUALIF.	QUALIFICATION PROCEDURE	LIMITATIONS					REMARKS
				PROCESS	ELECTRODE	POSITION	THICKNESS RANGE	DIAMETER RANGE	
QUITON POTTS	Q.PO	06,21,17	SAS 1	SMAW	F3, F4	2G	1 1/4"		X-Ray E2344
	Q.PO	06,21,17	SAS 1	SMAW	F3, F4	3G	1 1/4"		X-Ray E2344
	Q.PO	06,21,17	SAS 1	SMAW	F3, F4	4G	1 1/4"		X-Ray E2344

QC (PRINT) **SIGN:**	**DATE** (yyyy-MM-dd):
QA (PRINT) ROBERT HOFFMAN **SIGN:**	**DATE** (yyyy-MM-dd): 2017, 06, 23

Sub-Arc Systems Inc.	**WELDERS' QUALIFICATION RECORD** **API 650**	**Exhibit 8, Rev A**

WELDER NAME	WELDER SYMBOL	DATE QUALIF.	QUALIFICATION PROCEDURE	LIMITATIONS					REMARKS
				PROCESS	ELECTRODE	POSITION	THICKNESS RANGE	DIAMETER RANGE	
Dustin ZuBach	D.ZU	06.21.17	SAS 1	SMAW	F3. F4	2G.	1 1/4"		X-Ray G2345
	D.ZU	06.21.17	SAS 1	SMAW	F3. F4	3G	1 1/4"		X-Ray G2345
	D.ZU	06.21.17	SAS 1	SMAW	F3, F4	4G	1 1/4"		X-Ray G2345

QC (PRINT) **SIGN:**	**DATE** (yyyy-MM-dd):
QA (PRINT) Robert Hoffman **SIGN:**	**DATE** (yyyy-MM-dd): 2017, 06, 23

Item 4 – Inspector Qualification

Contents

1. CWB Inspector Qualifications for NDE Testing

CWB Inspector Certification - Pierre Dostie

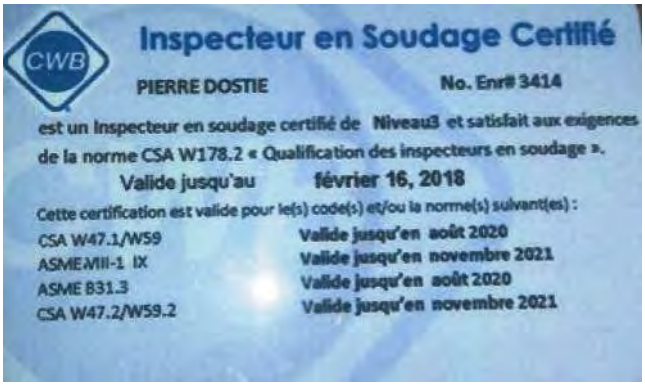

Inspecteur en Soudage Certifié

PIERRE DOSTIE **No. Enr# 3414**

est un Inspecteur en soudage certifié de **Niveau3** et satisfait aux exigences de la norme CSA W178.2 « Qualification des inspecteurs en soudage ».

Valide jusqu'au **février 16, 2018**

Cette certification est valide pour le(s) code(s) et/ou la norme(s) suivant(es) :

CSA W47.1/W59	**Valide jusqu'en août 2020**
ASME-MII-1 IX	**Valide jusqu'en novembre 2021**
ASME B31.3	**Valide jusqu'en août 2020**
CSA W47.2/W59.2	**Valide jusqu'en novembre 2021**

Conditions

1. La possession de cette carte ne signifie nullement que son détenteur représente un organisme d'inspection certifiée en vertu de la norme CSA W178.1 et ayant du personnel et des procédures approuvées par le Bureau canadien de soudage.
2. Cette carte demeure la propriété du Bureau et peut être rappelée en tout temps.
3. L'usage de la présente carte à des fins frauduleuses peut entraîner son annulation.

Pour toute question concernant cette qualification, veuillez communiquer avec :

1-800-844-6790 | www.cwbgroup.org

CWB Inspector Certification - Sylvain Germain



Inspecteur en Soudage Certifié

SYLVAIN GERMAIN **No. Enr# 4935**

est un Inspecteur en soudage certifié de **Niveau3** et satisfait aux exigences de la norme CSA W178.2 « Qualification des inspecteurs en soudage ».

Valide jusqu'au **avril 30, 2020**

Cette certification est valide pour le(s) code(s) et/ou la norme(s) suivant(es) :

CSA W47.1-09/W59-13

Expiration de recertification après 6 ans **avril 30, 2020**



Conditions

1. La possession de cette carte ne signifie nullement que son détenteur représente un organisme d'inspection certifié en vertu de la norme CSA W178.1 et ayant du personnel et des procédures approuvées par le Bureau canadien de soudage.
2. Cette carte demeure la propriété du Bureau et peut être rappelée en tout temps.
3. L'usage de la présente carte à des fins frauduleuses peut entraîner son annulation.

Pour toute question concernant cette qualification, veuillez communiquer avec :

1-800-844-6790 | www.cwbgroup.org

Item 5 – Weld Procedures

Contents

1. Approved Weld Procedures

SUB-ARC SYSTEMS INC.

Welding Procedure Specification

in accordance with

ASME Section IX

Welding Procedure Specification No.: **SAS-1 Revision 1[1]**

Supporting PQR No. (s): **SAS-1-1, SAS-1-2, SAS-1-3 Revision 1, SAS-1-4**

Qualified for

Process(es):	SMAW / SMAW / SAW	**Position(s):**	All / All / Flat or Horizontal[2]
Filler Metal F-No.:	F-3 / F-4 / F-6	**A-No.:**	A-1 / A-1 / A-1
AWS Classification:	E6010 / E7018-1 / F7A6-EM12K	**Weld Type(s):**	Groove, Fillet, Weld buildup
Base Metal:	P-1 Group 1 or 2	To:	P-1 Group 1 or 2
Typical Materials:	This procedure is qualified for all P-1 materials as specified in Table QW-422 of ASME Section IX for applications where proven notch toughness properties are not required, and P-1 Group 1 or 2 materials only for applications where proven notch toughness properties are required.		
Diameter Range:	All diameters	**Condition(s):**	As welded

Thickness Range:	**Normal Service**	**Impact Tested to -50°F**
ASME Section IX	0.062” to 1.500”	0.125” to 1.500”
ASME Section VIII	0.062” to 1.500”	0.125” to 1.500”
ASME B31.1	0.062” to 0.750”	0.125” to 0.750”
ASME B31.3	0.062” to 0.750”	0.125” to 0.750”

[1]Revision 1: Revision to accommodate revision of PQR SAS-1-3 as well as the addition PQR SAS-1-4 to expand the base metal thickness range where proven notch toughness properties are required at -50°F.

[2]SAW position limited by process usability.

Provincial Registration

ABSA

SAFETY CODES ACT - PROVINCE OF ALBERTA
WELDING PROCEDURE

Reg. No. WP 2389.2
Spec No. SAS-1 (Rev 1)
Weld Process SMAW / SMAW / SAW
Matl. Gr. P No. 1 Gr 1+2 to P No. 1 Gr 1+2
Elect Gr. F No. 3+4+6 A No. 1
Th. Qual For 38.1mm P.W.H.T. NO
MIN TH QUAL 3.2mm, CVN -46°C

Yr. 14 Mo. 11 Day 5 Signed
JASON REINHART, P.ENG.
WELDING SPECIALIST

Provincial Registration

WELDING PROCEDURE SPECIFICATION (WPS) QW-482

(Section IX, ASME Boiler and Pressure Vessel Code)

Company Name:	Sub-Arc Systems Inc.	**By:**	Gary Kohlman
WPS No.:	SAS-1	**Date:**	January 4, 2002
Revision No.:	1[1]	**Revision Date:**	July 15, 2014
Supporting PQR's:	SAS-1-1, SAS-1-2, SAS-1-3 Revision 1, SAS-1-4		
Welding Process(es):	SMAW / SMAW / SAW	**Type(s):**	Manual / Manual / Machine

JOINTS QW-402		**Joint Details**
Joint Design:	Butt, Tee, Lap, Corner, etc.	**All ASME joint designs.** Reference construction
Backing:	F-3 SMAW with or without backing.	drawings for joint details. Where joint details are not
	F-4 SMAW with backing only.	specified, refer to typical joint detail sheet provided.
	SAW with backing only.	-----
Backing Material (Type):	Similar base or weld metal or backwelding as required. No Retainers.	

BASE METALS QW-403

P-No.:	P-1	**Group No.:**	*1 or 2	**to P-No.:**	P-1
Group No.:	*1 or 2				
OR					
Spec. type & grade:	Not Applicable	**to Spec. type & grade:**	Not Applicable		
OR					
Chem. Analysis & Mech. Prop.:	Not Applicable	**to Chem. Analysis & Mech. Prop.:**	Not Applicable		

Thickness Range

		Normal Service	**Impact Tested to -50°F**		
Base Metal: Groove:	Section IX	0.062" to 1.500"	0.125" to 1.500"	**Fillet:**	All
	Section VIII	0.062" to 1.500"	0.125" to 1.500"	**Fillet:**	All
	B31.1	0.062" to 0.750"	0.125" to 0.750"	**Fillet:**	All
	B31.3	0.062" to 0.750"	0.125" to 0.750"	**Fillet:**	All
Pipe Dia Range: Groove:	All diameters			**Fillet:**	All

Other: Maximum thickness of any weld layer shall not exceed 0.500"

*Limited to P-1 Group 1 or 2 only when proven notch toughness properties are required.

FILLER METALS QW-404

Process:	**SMAW**	**SMAW**	**SAW**
Specification No. (SFA):	5.1	5.1	5.17
AWS Classification No.:	E6010	E7018-1	EM12K
F-No.:	F-3	F-4	F-6
A-No.:	A-1	A-1	A-1
Size of Filler Metals:	3/32", 1/8", 5/32"	3/32", 1/8", 5/32, 3/16", 1/4"	3/32", 1/8", 5/32", 3/16"
Weld Metal Thickness - Groove:	0.250" max.	1.500" max.	1.500" max.
- Fillet:	Unlimited	Unlimited	Unlimited
Electrode-Flux (Class):	Not Applicable	Not Applicable	F7A6-EM12K-H8
Manufacturer:	Not Applicable	Not Applicable	Lincoln Electric
Tradename:	Not Applicable	Not Applicable	LA-61
Flux Trade Name:	Not Applicable	Not Applicable	Lincoln 882 Flux
Alloy Flux:	Not Applicable	Not Applicable	Neutral
Consumable Insert:	Not Applicable	Not Applicable	Not Applicable
Supplemental Filler Metals:	Not Applicable	Not Applicable	Not Applicable
Product Form:	Covered Electrode	Covered Electrode	Coiled Solid Wire
Other:	E6010 limited to root pass only when proven notch toughness properties are required.		

[1]Revision 1: Revision to accommodate revision of PQR SAS-1-3 as well as the addition PQR SAS-1-4 to expand the base metal thickness range where proven notch toughness properties are required at -50°F.

WELDING PROCEDURE SPECIFICATION (WPS) QW-482

(Section IX, ASME Boiler and Pressure Vessel Code)

WPS # SAS-1 Rev.1

POSITIONS QW-405		POSTWELD HEAT TREATMENT QW-407	
Position(s) of Groove:	All	**Temp. Range:**	
Welding Progression:	F-3 SMAW Vertical Up or Down	**Time Range:**	
	F-4 SMAW Vertical Up or Down	**Heating:**	***(None – As Welded)***
	F-6 SAW Flat or Horizontal[1]		
Position(s) of Fillet:	All	**Cooling:**	
PREHEAT QW-406		**GAS QW-408**	
Temperature Min.:		**Shielding Gas(es):**	
Interpass Temp. Max.:	(***See Next Page***)	**Composition:**	
Interpass Min.:		**Flow Rate:**	***(Not Applicable)***
Preheat Maintenance:	Monitor using tempilstiks, pyrometer or other suitable methods.	**Gas Backing:**	
		Other:	

ELECTRICAL CHARACTERISTICS QW-409

Current:	**F-3 SMAW:**	Direct - DC	**F-4 SMAW:**	Direct - DC	**F-6 SAW:**	Direct - DC
Polarity:	**F-3 SMAW:**	Reverse - EP	**F-4 SMAW:**	Reverse - EP	**F-6 SAW:**	Reverse - EP
Amps (Range):	**F-3 SMAW:**	50 - 180	**F-4 SMAW:**	50 - 360	**F-6 SAW:**	250 - 750
Volts (Range):	**F-3 SMAW:**	18 - 34	**F-4 SMAW:**	18 - 34	**F-6 SAW:**	22 - 38
Travel Speed (Range):	**F-3 SMAW:**	1 - 16	**F-4 SMAW:**	1 - 20	**F-6 SAW:**	4 - 35
Maximum Heat Input: 0.125" to 0.625":	**F-3 SMAW:**	25 200 J/in	**F-4 SMAW:**	29 640 J/in	**F-6 SAW:**	36 428 J/in
0.625" to 1.500":	**F-3 SMAW:**	69 300 J/in	**F-4 SMAW:**	63 000 J/in	**F-6 SAW:**	73 636 J/in
Electrode Wire feed speed range:	50 - 550 ipm					
Tungsten Electrode Size & Type:	Not Applicable					
Mode of Metal Transfer for GMAW:	Not Applicable					
Other:	Maximum heat input mandatory only when proven notch toughness is required.					

TECHNIQUE QW-410

String or Weave Bead:	String and weave. Weave size shall be controlled to prevent exceeding maximum heat inputs.
Orifice or Gas Cup Size:	Not Applicable
Initial Cleaning:	Base material must be thoroughly cleaned of all foreign material (scale, rust, oil, grease, paint, tar, etc.) at least 1" back on each side of the joint prior to welding. All surfaces to be welded shall be smooth, uniform and free from notches, slag, fins and burrs.
Interpass Cleaning:	Perform by wire brush, chipping hammer, power brushing, grinding, etc. after each weld layer.
Method of Back Gouging:	Arc air, gouge, grind, etc., grind to clean metal where thermal processes are used if required.
Oscillation:	Not Applicable
Contact Tube to Work Distance:	1/4" to 1 1/4"
Multiple or Single Pass (per side):	Single or multiple passes per side, multiple only when proven notch toughness properties are required.
Multiple or Single Electrodes & Spacing:	Single or Multiple, multiple only when proven notch toughness properties are required.
Peening:	Peening is not allowed

TYPICAL WELDING PARAMETERS

	Filler Metal		Current			
Process	**AWS Classification**	**Diameter (in)**	**Type & Polarity**	**Amp. Range**	**Volt Range**	**Travel Speed (IPM)**
SMAW	E6010	3/32	DC EP	50 - 100	18 - 30	1 - 12
SMAW	E6010	1/8	DC EP	50 - 150	20 - 32	2 - 14
SMAW	E6010	5/32	DC EP	60 - 180	22 - 34	4 - 16
SMAW	E7018-1	3/32	DC EP	50 - 130	18 - 28	1 - 14
SMAW	E7018-1	1/8	DC EP	70 - 180	19 - 30	2 - 16
SMAW	E7018-1	5/32	DC EP	90 - 230	20 - 32	3 - 18
SMAW	E7018-1	3/16	DC-EP	130 - 290	20 - 34	4 - 19
SMAW	E7018-1	1/4	DC-EP	180 - 360	22 - 34	4 - 20
SAW	F7A6-EM12K	3/32	DC EP	250 - 750	22 - 38	4 - 35
SAW	F7A6-EM12K	1/8				
SAW	F7A6-EM12K	5/32				
SAW	F7A6-EM12K	3/16				

Notes: Number of weld layers and size of filler metal may vary with thickness of base material and position of weld.

[1]SAW position limited by process usability.

WELDING PROCEDURE SPECIFICATION (WPS) QW-482

(Section IX, ASME Boiler and Pressure Vessel Code)

WPS # SAS-1 Rev.1

PREHEAT & INTERPASS TEMPERATURE MINIMUM AND MAXIMUM	
Section VIII :	50°F minimum for all P-1 materials except as listed below :
	175°F if the joint thickness exceeds 1.000" and the specified carbon content exceeds 0.30%
	200°F if the joint thickness is 1.250" to 1.500"
B31.1 :	50°F minimum for all P-1 materials
B31.3 :	50°F for all P-1 materials except as listed below:
	175°F if the specified minimum tensile strength of the base material exceeds 71 ksi
Max. Interpass Temp.:	650°F for normal service, 550°F for applications where proven notch toughness is required

Reference to relevant construction codes is mandatory prior to production welding to determine any supplementary restrictions.

Typical Joint Details QW-482

Prepared by: Qualimet

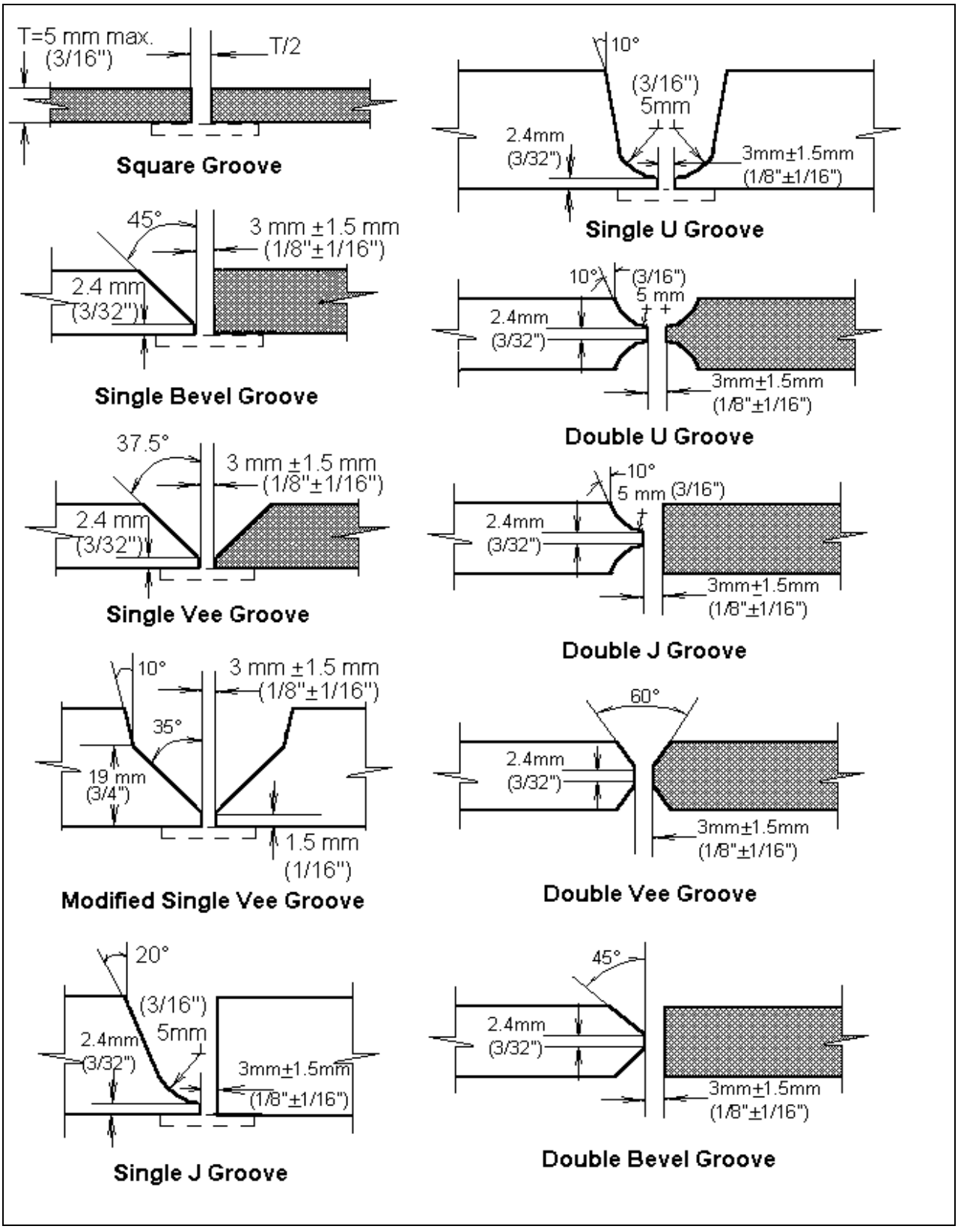

PROCEDURE QUALIFICATION RECORD (PQR) QW-483
(Section IX, ASME Boiler and Pressure Vessel Code)

Company Name:	Sub Arc Systems		
PQR No:	SAS-1-1	**Date:**	January 4, 2002
Revision No.:	-----	**Revision Date:**	-----
WPS No:	SAS-1		
Welding Process(es):	SMAW/ SMAW/ SAW		
Types:	Manual/ Manual/ Machine		

JOINTS QW-402

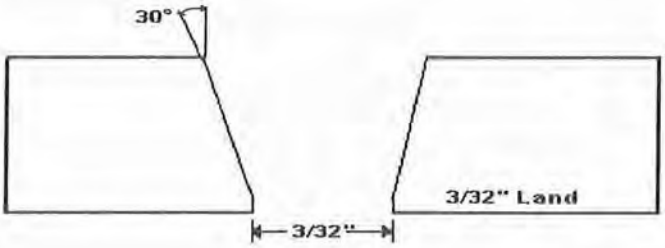

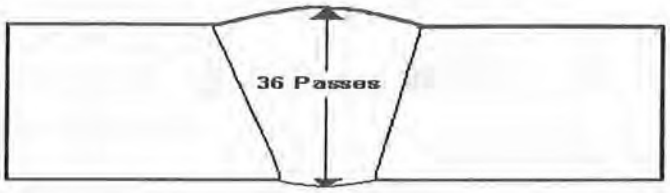

BASE METALS QW-403

Material Spec.:	SA-516	to	SA-516
Type or Grade:	Grade 60		Grade 70
P-No.:	P-1 Group 1		P-1 Group 2
Thickness of Test Coupon:	1.75" wt.		
Diameter of Test Coupon:	Plate		
Other:	Carbon Equivalent (C.E) : 0.40		

POSTWELD HEAT TREATMENT QW-407

Temperature:	
Time:	
Other:	*Not Applicable*

PREHEAT QW-406

Preheat & Interpass Min.:	175 °F
Interpass Max.:	600°F
	Temperature monitored using Tempilstick

SHIELDING GAS QW-408

Shielding Gas:	N/A
Composition:	N/A
Flow Rate:	N/A

FILLER METALS QW-404

Process	SMAW	SMAW	SAW
SFA Spec No:	5.1	5.1	5.17
AWS Class. No:	E6010	E7018-1	EM12K
F-No:	F-3	F-4	F-6
A-No:	A-1	A-1	A-1
Size of Filler Metal:	1/8"	1/8"	3/32"
Deposited Metal:	0.250"	0.750"	0.750"
Flux Class:	N/A	N/A	F7A6 (Neutral)
Other:	Covered Electrode	Covered Electrode	Coiled Solid Wire
			(Lincoln L61/882)

ELECTRICAL CHARACTERISTICS QW-409

Process:	SMAW	SMAW	SAW
Current:	Direct (DC)	Direct (DC)	Direct (DC)
Polarity:	Reverse (EP)	Reverse (EP)	Reverse (EP)
Volts:	21	21	31
Amps:	110	125	450
Heat Input (J/in):	69 300	63 000	73 636

TECHNIQUE QW-410

Process:	SMAW	SMAW	SAW
Position:	3G	3G	2G
Progression:	Vertical Up	Vertical Up	Horizontal
Travel Speed (ipm):	2.5	2.25	16
String or Weave:	String	String and Weave	String
Oscillation:	N/A	N/A	N/A
Single / Multi Pass:	Multiple	Multiple	Multiple
Single / Multi Electrodes:	Single	Single	Single
Wire Feed Rate:	N/A	N/A	80 ipm

PROCEDURE QUALIFICATION RECORD (PQR) QW-483
(Section IX, ASME Boiler and Pressure Vessel Code)

PQR # SAS-1-1

Tensile Test
QW-462

Specimen No.	Width In	Thickness In	Area in^2	Ultimate Total Load Lb	Ultimate Unit Stress psi	Type of Failure & Location
		See Attached Report				

Guided Bend Tests
QW-462

Type and Figure No.	Result
See Attached Report	

Toughness Tests
QW-170

Specimen No.	Notch Location	Notch Type	Test Temp	Impact Values	Lateral Exp		Drop Weight	
					% Shear	Mils	Break	No Brk
			See Attached Report					

Fillet-Weld Tests
Not Applicable

Result-Satisfactory: Yes ____ No ____ Pen. Into Parent Material: Yes ____ No ____
Macro-Results:

Other Tests

Type of Test: Vickers Hardness Test to NACE MR01
Deposit Analysis: N/A

Welder's Name: Gary Kolman Clock No.: W-2638 Stamp ID: CC
Tests Conducted By: Qualimet Inc. Lab. Test No.: 636 – 01001

We certify that the statements in this record are correct and that the test welds were prepared, welded, and tested in accordance with the requirements of Section IX of the ASME Code.

Manufacturer: Sub Arc Systems

Date: January 4, 2002 By: Gary Kolman

• 7817 CORONET ROAD, EDMONTON, AB T6E 4N7 • (780) 469-5670 • FAX (780) 465-5829
• CALGARY (403) 278-9852 • 1-800-621-8979 • www.qualimetinc.com

"Your source of Quality Materials Engineering"

MECHANICAL TEST REPORT

for Procedure Qualification Record # SAS-1-1

Client:	Sub Arc Systems	**Job Number:**	636-01001
Address:	4605-47 Steet Vermillion, AB	**Date:**	January 4, 2002
Materials:	SA-516 Grade 60 to 70		
Size:	1.750" wt plate	**Condition:**	As Welded
Test Specification:	ASME Section IX		

Tensile Tests QW - 462.1(a)

Sample Identification:	CCT1	CCT2
Sample Size – inch:(W x T)	1.723 x 0.753	1.717 x 0.759
Least X-Sect. Area - in^2:	1.30	1.30
Ultimate Load - lbs:	102 526	104 116
Ult. Ten. Strength - ksi:	72.3	71.6
Character of Failure:	Ductile	Ductile
Location of Failure:	Base Metal 516 Gr.60 Side	Base Metal 516 Gr.60 Side
Req'd Tensile Strength - ksi:	60.0	60.0
Pass or Fail:	Passed	Passed
Remarks:		

*Bend Test QW - 462.2

Sample Identification:	CCB1	CCB2	CCB3	CCB4
Type of Bend Test:	TSB	TSB	TSB	TSB
Pass or Fail:	Pass	Pass	Pass	Pass
Remarks:				

*Types of Bend Tests

TSB, TFB, TRB = transverse side, face or root bend

LSB, LFB, LRB = longitudinal side, face or root bend

We certify that the statements in this record are acceptable, in accordance with the requirements of ASME Section IX.

TEST RESULTS CERTIFIED BY: QUALIMET INC.

• 7817 CORONET ROAD, EDMONTON, AB T6E 4N7 • (780) 469-5870 • FAX (780) 465-5829
• CALGARY (403) 278-9862 • 1-800-621-8979 • www.qualimetinc.com

"Your source of Quality Materials Engineering"

HARDNESS TEST REPORT

for Procedure Qualification Record # SAS-1-1

Client:	Sub Arc Systems	**Job Number:**	636-01001
Address:	4605-47 Steet Vermillion, Alberta T9X-1L6	**Date:**	January 4, 2002
Materials:	SA-516 Grade 60 to 70		
Size:	1.750" wt plate	**Condition:**	As Welded
Test Method:	Hardness testing performed in accordance with ASTM E-92 using a Vickers Hardness Tester with a 10 kg load. (HV10)		
Equipment:	Matsuzawa Seiki Co. Ltd. Vickers Hardness Tester S/N: 7193M		
Calibration:	**Test Block :** 197 ± 6 DPH	**Act. Reading:**	197 DPH

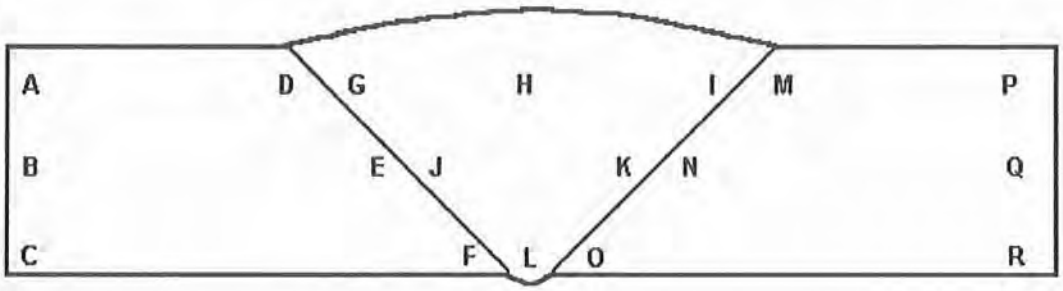

Hardness Values

A	177	D	198	G	205	J	210	M	189	P	178
B	182	E	205	H	103	K	207	N	196	Q	181
C	173	F	201	I	208	L	202	O	194	R	179

These hardness values do not exceed 248 HV10 (HRC 22).

We certify that the statements in this record are acceptable, in accordance with the requirements of ASME Section IX and NACE MR01

Test Results Certified by: MSKamu **QUALIMET INC.**

• 7917 CORONET ROAD, EDMONTON, AB T6E 4N7 • (780) 468-5870 • FAX (780) 465-5829
• CALGARY (403) 278-9862 • 1-800-621-8979 • www.qualimetinc.com

"Your source of Quality Materials Engineering"

CHARPY V-NOTCH IMPACT TEST RESULTS

For Procedure Qualification Report # SAS-1

Client:	Sub Arc Systems	**Job Number:**	636-01001
Address:	4605-47 Steet Vermillion, AB	**Date:**	January 4, 2002
Materials:	SA-516 Grade 60 to 70		
Size:	1.750" wt plate	**Condition:**	As Welded
Specimen Type:	10.0 mm Charpy V Notch impact specimens		
Specification:	ASTM A-370, ASME Section VIII UG-84		
Qualification Temp.:	-46°C (-50°F)		

Sample Set	Sample Number	Impact Energy Ft-lb	(Joule)	Converted Full Size Impact Energy (J)	% Shear
Weld Zone – Root	1	14	19	24	20
Includes Both	2	48	65	81	20
SMAW Processes	3	38	51	64	20
	Average:	33	45	57	20
Weld Zone – Fill	1	58	79	79	10
	2	45	61	61	20
	3	88	119	119	40
	Average:	64	86	86	23
Heat Affected Zone	1	18	24	24	20
SA-516 Gr. 70	2	122	165	165	60
	3	101	137	137	70
	Average:	80	109	109	50
Heat Affected Zone	1	98	133	133	40
SA-516 Gr. 70	2	132	179	179	100
	3	86	117	117	40
	Average:	105	143	143	60

Remarks: These Charpy v-notch impact test results exceed the minimum requirements of ASME Section VIII and B31.3 Codes for –46°C; or CSA Z662-99 Codes for -46°C.

We certify that the statements in this record are acceptable, in accordance with the requirements of ASME Section IX.

Test Results Certified By: M Flynn **QUALIMET INC.**

PROCEDURE QUALIFICATION RECORD (PQR) QW-483
(Section IX, ASME Boiler and Pressure Vessel Code)

Company Name:	Sub Arc Systems		
PQR No:	SAS-1-2	**Date:**	January 4, 2002
Revision No.:	-----	**Revision Date:**	-----
WPS No:	SAS-1		
Welding Process(es):	SMAW/ SMAW/ SAW		
Types:	Manual/ Manual/ Machine		

JOINTS QW-402

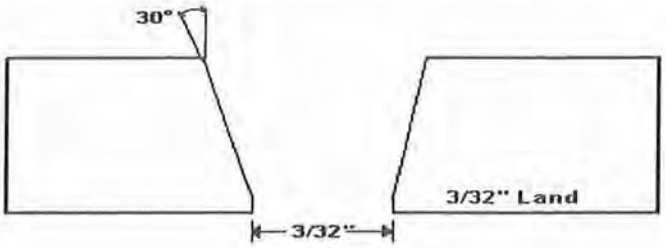

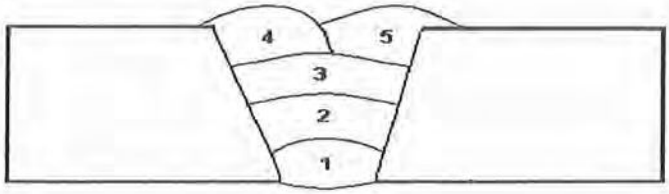

BASE METALS QW-403

Material Spec.:	SA-516	To	SA-516
Type or Grade:	Grade 60		Grade 70
P-No.:	P-1 Group 1		P-1 Group 2
Thickness of Test Coupon:	0.375" wt.		
Diameter of Test Coupon:	Plate		
Other:	Carbon Equivalent (C.E) : 0.38		

POSTWELD HEAT TREATMENT QW-407

Temperature:	
Time:	
Other:	*Not Applicable*

PREHEAT QW-406

Preheat & Interpass Min.:	50 °F
Interpass Max.:	600°F
	Temperature monitored using Tempilstick

SHIELDING GAS QW-408

Shielding Gas:	N/A
Composition:	N/A
Flow Rate:	N/A

FILLER METALS QW-404

Process	SMAW	SMAW	SAW
SFA Spec No:	5.1	5.1	5.17
AWS Class. No:	E6010	E7018-1	EM12K
F-No:	F-3	F-4	F-6
A-No:	A-1	A-1	A-1
Size of Filler Metal:	1/8"	3/32"	3/32"
Deposited Metal:	0.100"	0.125"	0.150"
Flux Class:	N/A	N/A	F7A6 (Neutral)
Other:	Covered Electrode	Covered Electrode	Coiled Solid Wire
			(Lincoln L61/882)

ELECTRICAL CHARACTERISTICS QW-409

Process:	SMAW	SMAW	SAW
Current:	Direct (DC)	Direct (DC)	Direct (DC)
Polarity:	Reverse (EP)	Reverse (EP)	Reverse (EP)
Volts:	21	21	30
Amps:	110	110	425
Heat Input (J/in):	39 610	55 428	36 428

TECHNIQUE QW-410

Process:	SMAW	SMAW	SAW
Position:	3G	3G	2G
Progression:	Vertical Up	Vertical Up	Horizontal
Travel Speed (ipm):	3.5	2.5	21
String or Weave:	String	String and Weave	String
Oscillation:	N/A	N/A	N/A
Single / Multi Pass:	Multiple	Multiple	Multiple
Single / Multi Electrodes:	Single	Single	Single
Wire Feed Rate:	N/A	N/A	83 ipm

PROCEDURE QUALIFICATION RECORD (PQR) QW-483
(Section IX, ASME Boiler and Pressure Vessel Code)

PQR # SAS-1-2

Tensile Test
QW-462

Specimen No.	Width In	Thickness In	Area In^2	Ultimate Total Load Lb	Ultimate Unit Stress psi	Type of Failure & Location
		See Attached Report				

Guided Bend Tests
QW-462

Type and Figure No.	Result
See Attached Report	

Toughness Tests
QW-170

Specimen No.	Notch Location	Notch Type	Test Temp	Impact Values	Lateral Exp % Shear	Lateral Exp Mils	Drop Weight Break	Drop Weight No Brk
			See Attached Report					

Fillet-Weld Tests
Not Applicable

Result-Satisfactory: Yes ____ No ____ Pen. Into Parent Material: Yes ____ No ____
Macro-Results:

Other Tests

Type of Test: Vickers Hardness Test to NACE MR01
Deposit Analysis: N/A

Welder's Name: Gary Kolman **Clock No.:** W-2368 **Stamp ID:** CD
Tests Conducted By: Qualimet Inc. **Lab. Test No.:** 636 – 01001

We certify that the statements in this record are correct and that the test welds were prepared, welded, and tested in accordance with the requirements of Section IX of the ASME Code.

Manufacturer: Sub Arc Systems

Date: January 4, 2002 **By:** Gary Kolman Gary Kolman

• 7817 CORONET ROAD, EDMONTON, AB T6E 4N7 • (780) 469-5870 • FAX (780) 465-5829
• CALGARY (403) 278-9862 • 1-800-621-8979 • www.qualimetinc.com

"Your source of Quality Materials Engineering"

MECHANICAL TEST REPORT

for Procedure Qualification Record # SAS-1-2

Client:	Sub Arc Systems	Job Number:	636-01001
Address:	4605-47 Steet Vermillion, AB	Date:	January 4, 2002
Materials:	SA-516 Grade 60 to 70		
Size:	0.375" wt plate	Condition:	As Welded
Test Specification:	ASME Section IX		

Tensile Tests QW - 462.1(a)

Sample Identification:	CDT1	CDT2
Sample Size - inch:(W x T)	0.7300 x 0.3600	0.7200 x 0.380
Least X-Sect. Area – in^2:	0.263	0.360
Ultimate Load – lbs:	22 340	22 408
Ult. Ten. Strength – ksi:	85.0	86.4
Character of Failure:	Ductile	Ductile
Location of Failure:	Base Metal SA-516 Gr.60 Side	Base Metal SA-516 Gr.60 Side
Req'd Tensile Strength – ksi:	60.0	60.0
Pass or Fail:	Passed	Passed
Remarks:		

*Bend Test QW - 462.2

Sample Identification:	CDB1	CDB2	CDB3	CDB4
Type of Bend Test:	TSB	TSB	TSB	TSB
Pass or Fail:	Pass	Pass	Pass	Pass
Remarks:				

*Types of Bend Tests
TSB, TFB, TRB = transverse side, face or root bend
LSB, LFB, LRB = longitudinal side, face or root bend

We certify that the statements in this record are acceptable, in accordance with the requirements of ASME Section IX.

TEST RESULTS CERTIFIED BY: [signature] QUALIMET INC.

• 7817 CORONET ROAD, EDMONTON, AB T6E 4N7 • (780) 469-5870 • FAX (780) 465-5829
• CALGARY (403) 278-9862 • 1-800-621-8979 • www.qualimetinc.com

"Your source of Quality Materials Engineering"

HARDNESS TEST REPORT

for Procedure Qualification Record # SAS-1-2

Client:	Sub Arc Systems	**Job Number:**	636-01001
Address:	4605-47 Steet Vermillion, AB	**Date:**	January 4, 2002
Materials:	SA-516 Grade 60 to 70		
Size:	0.375" wt plate	**Condition:**	As Welded
Test Method:	Hardness testing performed in accordance with ASTM E-92 using a Vickers Hardness Tester with a 10 kg load. (HV10)		
Equipment:	Matsuzawa Seiki Co. Ltd. Vickers Hardness Tester S/N: 7193M		
Calibration:	**Test Block :** 197 ± 6 DPH	**Act. Reading:**	197 DPH

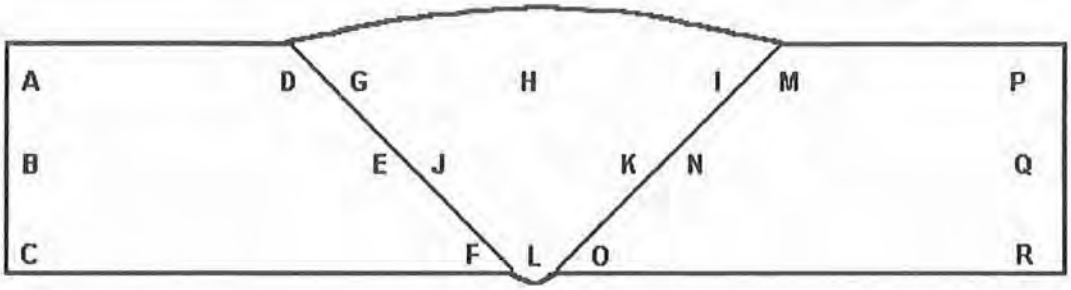

Hardness Values

A	198	D	208	G	215	J	212	M	204	P	193
B	195	E	203	H	211	K	215	N	202	Q	189
C	196	F	206	I	210	L	209	O	207	R	195

These hardness values do not exceed 248 HV10 (22 HRC).

We certify that the statements in this record are acceptable, in accordance with the requirements of ASME Section IX and NACE MR01

Test Results Certified by: M Kamm **QUALIMET INC.**

• 7817 CORONET ROAD, EDMONTON, AB T6E 4N7 • (780) 469-5870 • FAX (780) 465-5829
• CALGARY (403) 278-9862 • 1-800-621-8979 • www.qualimetinc.com

"Your source of Quality Materials Engineering"

CHARPY V-NOTCH IMPACT TEST RESULTS

For Procedure Qualification Report # SAS-1-2

Client:	Sub Arc Systems	**Job Number:**	636-01001
Address:	4605-47 Steet Vermillion, AB	**Date:**	January 4, 2002
Materials:	SA-516 Grade 60 to 70		
Size:	0.375" wt plate	**Condition:**	As Welded
Specimen Type:	8.5 mm Charpy V Notch impact specimens		
Specification:	ASTM A-370, ASME Section VIII UG-84		
Qualification Temp.:	-46°C (-50°F)		

Sample Set	Sample Number	Impact Energy Ft-lb	(Joule)	Converted Full Size Impact Energy (J)	% Shear
	1	10	14	16	20
Weld	2	12	16	19	20
	3	24	33	38	20
	Average:	15	21	24	20
Heat Affected Zone	1	82	111	131	70
SA516 Gr. 60	2	106	144	169	80
	3	146	198	233	100
	Average:	111	151	178	83
Heat Affected Zone	1	98	133	166	40
SA516 Gr. 70	2	132	179	224	100
	3	86	117	146	40
	Average:	105	143	179	60

Remarks: These Charpy v-notch impact test results exceed the minimum requirements of ASME Section VIII and B31.3 Codes for -46°C; or CSA Z662-99 Codes for -46°C.

We certify that the statements in this record are acceptable, in accordance with the requirements of ASME Section IX.

Test Results Certified By: **QUALIMET INC.**

PROCEDURE QUALIFICATION RECORD (PQR) QW-483

(Section IX, ASME Boiler and Pressure Vessel Code)

Company Name:	Sub Arc Systems	**By:**	Gary Kohlman
PQR No.:	SAS-1-3	**Date:**	January 4, 2002
Revision No.:	1[1]	**Revision Date:**	July 15, 2014
Welding Process(es):	SMAW / SMAW / SAW	**Types:**	Manual / Manual / Machine

JOINTS QW-402

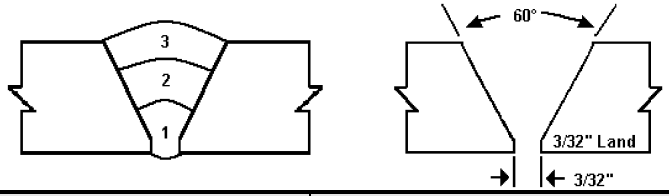

BASE METALS QW-403

Material Spec.:	SA-516		SA-516
Grade/Type/Class:	Gr. 60		Gr. 70
P-No. Group No.:	P-1 Group 1	**to**	P-1 Group 2
Heat No.:	Not Recorded		Not Recorded
ASME C.E.:	Not Recorded		Not Recorded
CSA C.E.:	Not Recorded		Not Recorded
Thickness & Diameter:	0.249" thick plate (machined)		
Max Weld Deposit:	<0.500" per pass		

POSTWELD HEAT TREATMENT QW-407

Temperature:	
Time:	
Heating:	
	(Not Applicable)
Cooling:	
Other:	

PREHEAT QW-406

Preheat Temp. Min.:	50°F
Interpass Temp. Max.:	600°F
Interpass Temp. Min.:	50°F
Other:	Temperature monitored by tempilstiks

POSITIONS QW-405

Process:	F-3 SMAW	F-4 SMAW	SAW
Position:	3-G	3-G	2-G
Progression:	Vertical Up	Vertical Up	Horizontal
Other:	Not Applicable	Not Applicable	Not Applicable

FILLER METALS QW-404

Process:	**SMAW**	**SMAW**	**SAW**
SFA Specification No.:	5.1	5.1	5.17
AWS Classification No.:	E6010	E7018-1	EM12K
F-No.:	F-3	F-4	F-6
A-No.:	A-1	A-1	A-1
Size of Filler Metal:	1/8"	3/32"	3/32"
Deposited Weld Metal:	0.050"	0.075"	0.125"
Electrode-Flux (Class):	Not Applicable	Not Applicable	F7A6
Flux Trade Name:	Not Applicable	Not Applicable	Lincolnweld 882
Alloy Element/Flux:	Not Applicable	Not Applicable	None
Manufacturer:	Not Recorded	Not Recorded	Lincoln Electric
Trade Name:	Not Recorded	Not Recorded	L-61
Heat Number:	Not Recorded	Not Recorded	Not Recorded
Product Form:	Covered Electrode	Covered Electrode	Coiled Metal Cored Wire

SHIELDING GAS QW-408

Shielding Gas:			
Composition:			
Flow Rate:	***(Not Applicable)***	***(Not Applicable)***	***(Not Applicable)***
Trailing / Backing Gas:			
Flow Rate:			

ELECTRICAL CHARACTERISTICS QW-409

Current:	Direct (DC)	Direct (DC)	Direct (DC)
Polarity:	Reverse (EP)	Reverse (EP)	Reverse (EP)
Volts:	21	20	30
Amps:	110	105	425
Travel Speed (ipm):	5.5	4.3	24
Maximum Heat Input (J/in):	25 200	29 640	36 428
Wire Feed Speed (ipm):	Not Applicable	Not Applicable	82
Mode of Metal Transfer:	Not Applicable	Not Applicable	Not Applicable

TECHNIQUE QW-410

String or Weave:	String	String & Weave	String
Oscillation:	Not Applicable	Not Applicable	Not Applicable
Single / Multi Pass:	Single Pass from one side	Single Pass from one side	Single Pass from one side
Single / Multi Electrodes:	Single	Single	Single
Thermal Processes	Not Applicable	Not Applicable	Not Applicable
Wire Stick Out:	Not Applicable	Not Applicable	Not Recorded
Nozzle / Cup Size:	Not Applicable	Not Applicable	Not Applicable

[1] **Revision 1: Revision to correct editorial error.**

PROCEDURE QUALIFICATION RECORD (PQR) QW-483
(Section IX, ASME Boiler and Pressure Vessel Code)

PQR # SAS-1-3 Revision 1

Tensile Test
QW-462

Specimen No.	Width in	Thickness in	Area in^2	Ultimate Total Load Lb	Ultimate Unit Stress ksi	Type of Failure & Location
		(Not Applicable)				

Guided Bend Tests
QW-462

Specimen No.	Type	Figure	Result
	(Not Applicable)		

Toughness Tests
QW-170

Specimen No.	Notch Location	Notch Type	Test Temp	Full Size Values (ft-lbs)	% Shear	Lateral Exp Inches	Drop Weight Break	Drop Weight No Brk
CE-1	Weld	V-Notch	-50°F	76	80	Not Recorded	N/A	N/A
CE-2	Weld	V-Notch	-50°F	92	80	Not Recorded	N/A	N/A
CE-3	Weld	V-Notch	-50°F	100	100	Not Recorded	N/A	N/A
CE-4	HAZ (Grade 60)	V-Notch	-50°F	56	40	Not Recorded	N/A	N/A
CE-5	HAZ (Grade 60)	V-Notch	-50°F	72	40	Not Recorded	N/A	N/A
CE-6	HAZ (Grade 60)	V-Notch	-50°F	52	30	Not Recorded	N/A	N/A
CE-7	HAZ (Grade 70)	V-Notch	-50°F	82	40	Not Recorded	N/A	N/A
CE-8	HAZ (Grade 70)	V-Notch	-50°F	74	40	Not Recorded	N/A	N/A
CE-9	HAZ (Grade 70)	V-Notch	-50°F	72	40	Not Recorded	N/A	N/A

Fillet-Weld Tests
Not Applicable

Result-Satisfactory: **Yes** _____ **No** _____ Pen. into Parent Material: **Yes** _____ **No** _____
Macro-Results:

Other Tests
Not Applicable

Type of Test:
Other:

Welder's Name: Gary Kohlman **Reg. No.:** W-2368 **Stamp ID:** CE
Tests Conducted By: Qualimet **Lab. Test No.:** 100-14010
Revisions By: Qualimet

We hereby recertify that the statements in this record have been revised in accordance with paragraph QW-200.2 are correct and that the test welds were prepared, welded, and tested in accordance with the requirements of Section IX of the ASME Code.

Manufacturer: Sub Arc Systems

Original Cert. Date: January 4, 2002 **Certified By:** Gary Kohlman

Recertification Date: July 16, 14 **Certified By:**

• 8055 CORONET ROAD, EDMONTON, AB T6E 4N7 • (780) 469-5870 • FAX (780) 465-5829
• CALGARY (403) 278-9862 • 1-800-621-8979 • www.qualimet.ca

"Your source of Quality Materials Engineering"

REVISED CHARPY IMPACT TEST REPORT**

for Procedure Qualification Record # SAS-1-3

Client:	Sub-Arc Systems Inc.	**Job Number:**	636-01001
Address:	4605-47 Street, Vermillion AB, T9X 1L6	**Date:**	January 4, 2002
Materials:	SA-516 Grade 60/70 to SA-516 Grade 60/70	**Revision Date:**	July 15, 2014
Size:	0.249" w.t. Plate (machined)	**Condition:**	As Welded
Test Specification:	ASME Section VIII UG-84, ASTM A-370		
Test Equipment:	Satec Model S1-10, S/N: 1164		

Specimen Type:	Charpy V-Notch		
Qualification Temperature:	-50.0°F	**Test Temperature:**	-50.0°F

Specimen Size (mm): 5

Sample Set	Sample Number	Actual Impact Energy (ft-lb)	Full Size (ft-lb)	Shear (%)	Lat. Exp. (in.)
Weld (Includes all processes)	1	38	76	80	Not Recorded
	2	46	92	80	Not Recorded
	3	50	100	100	Not Recorded
	Average:	**45**	**89**	**87**	**Not Recorded**

We certify that the statements in this record are acceptable and that the specimen(s) were prepared and tested in accordance with the requirements of the current edition of ASTM A370, ASTM E23 and their latest editions.

**Revision of test report to correct editorial error.

TEST RESULTS CERTIFIED BY: Qualimet

Hanibal Ghile, E.I.T.

• 8055 CORONET ROAD, EDMONTON, AB T6E 4N7 • (780) 469-5870 • FAX (780) 465-5829
• CALGARY (403) 278-9862 • 1-800-621-8979 • www.qualimet.ca

"Your source of Quality Materials Engineering"

REVISED CHARPY IMPACT TEST REPORT**

for Procedure Qualification Record # SAS-1-3

Client:	Sub-Arc Systems Inc.	**Job Number:**	636-01001
Address:	4605-47 Street, Vermillion AB, T9X 1L6	**Date:**	January 4, 2002
Materials:	SA-516 Grade 60/70 to SA-516 Grade 60/70	**Revision Date:**	July 15, 2014
Size:	0.249" w.t. Plate (machined)	**Condition:**	As Welded
Test Specification:	ASME Section VIII UG-84, ASTM A-370		
Test Equipment:	Satec Model S1-10, S/N: 1164		

Specimen Type:	Charpy V-Notch		
Qualification Temperature:	-50.0°F	**Test Temperature:**	-50.0°F

Sample Set	Sample Number	Actual Impact Energy (ft-lb)	Full Size (ft-lb)	Shear (%)	Lat. Exp. (in.)
HAZ (Grade 60)	1	28	56	40	Not Recorded
	2	36	72	40	Not Recorded
	3	26	52	30	Not Recorded
	Average:	**30**	**60**	**37**	**Not Recorded**

We certify that the statements in this record are acceptable and that the specimen(s) were prepared and tested in accordance with the requirements of the current edition of ASTM A370, ASTM E23 and their latest editions.

**Revision of test report to correct editorial error.

TEST RESULTS CERTIFIED BY: Qualimet

Hanibal Ghile, E.I.T.

• 8055 CORONET ROAD, EDMONTON, AB T6E 4N7 • (780) 469-5870 • FAX (780) 465-5829
• CALGARY (403) 278-9862 • 1-800-621-8979 • www.qualimet.ca

"Your source of Quality Materials Engineering"

REVISED CHARPY IMPACT TEST REPORT**

for Procedure Qualification Record # SAS-1-3

Client:	Sub-Arc Systems Inc.	**Job Number:**	636-01001
Address:	4605-47 Street, Vermillion AB, T9X 1L6	**Date:**	January 4, 2002
Materials:	SA-516 Grade 60/70 to SA-516 Grade 60/70	**Revision Date:**	July 15, 2014
Size:	0.249" w.t. Plate (machined)	**Condition:**	As Welded
Test Specification:	ASME Section VIII UG-84, ASTM A-370		
Test Equipment:	Satec Model S1-10, S/N: 1164		

Specimen Type:	Charpy V-Notch		
Qualification Temperature:	-50.0°F	**Test Temperature:**	-50.0°F

Specimen Size (mm): 5

Sample Set	Sample Number	Actual Impact Energy (ft-lb)	Full Size (ft-lb)	Shear (%)	Lat. Exp. (in.)
HAZ (Grade 70)	1	41	82	40	Not Recorded
	2	37	74	40	Not Recorded
	3	36	72	40	Not Recorded
	Average:	**38**	**76**	**40**	**Not Recorded**

We certify that the statements in this record are acceptable and that the specimen(s) were prepared and tested in accordance with the requirements of the current edition of ASTM A370, ASTM E23 and their latest editions.

**Revision of test report to correct editorial error.

TEST RESULTS CERTIFIED BY: Qualimet

Hanibal Ghile, E.I.T.

PROCEDURE QUALIFICATION RECORD (PQR) QW-483

(Section IX, ASME Boiler and Pressure Vessel Code)

Company Name:	Sub-Arc Systems Inc.	**By:**	Gary Kohlman
PQR No.:	SAS-1-4	**Date:**	July 15, 2014
Revision No.:	0	**Revision Date:**	------
Welding Process(es):	SMAW / SMAW /SAW	**Type(s):**	Manual / Manual / Machine

JOINTS QW-402

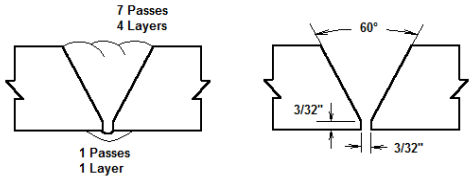

BASE METALS QW-403

Material Spec.:	SA-516		SA-516
Grade/Type/Class:	Grade 60/70		Grade 60/70
P-No. Group No.:	P-1 Group 1/2	**to**	P-1 Group 1/2
Heat No.:	E3D260		E3D260
Carbon Equivalent (ASME):	0.42		0.42
Carbon Equivalent (CSA):	0.42		0.42
Thickness & Diameter:	0.500" w.t. Plate		
Max Weld Deposit:	<0.500" per pass		

POSTWELD HEAT TREATMENT QW-407

Temperature:	
Time:	
Heating:	***(None – As Welded)***
Cooling:	
Other:	

PREHEAT QW-406

Preheat Temp. Min.:	50°F
Interpass Temp. Max.:	600°F
Interpass Temp. Min.:	50°F
Other:	Temperature monitored using tempilstiks

POSITIONS QW-405

Process:	F-3 SMAW	F-4 SMAW	SAW
Position:	3-G	3-G	2-G
Progression:	Vertical Up	Vertical Up	Horizontal
Other:	N/A	N/A	N/A

FILLER METALS QW-404

Process:	**SMAW**	**SMAW**	**SAW**
SFA Specification No.:	5.1	5.1	5.17
AWS Classification No.:	E6010	E7018-1	EM12K-H8
F-No.:	F-3	F-4	F-6
A-No.:	A-1	A-1	A-1
Size of Filler Metal:	1/8"	3/32"	3/32"
Deposited Weld Metal:	0.125"	0.125"	0.250"
Manufacturer:	Lincoln Electric	ESAB	Lincoln Electric
Trade Name:	Fleetweld 5P+	OK55	LA-61
Heat / Lot Number:	ED511111	SB248224	500344
Electrode-Flux (Class):	Not Applicable	Not Applicable	F7A6-EM12K-H8
Flux Tradename:	Not Applicable	Not Applicable	Lincolnweld 882 Flux
Flux Heat / Lot Number.:	Not Applicable	Not Applicable	12R13
Product Form:	Covered Electrode	Covered Electrode	Coiled Solid Wire

SHIELDING GAS QW-408

Shielding Gas:			
Composition:	***(Not Applicable)***	***(Not Applicable)***	***(Not Applicable)***
Flow Rate:			
Backing Gas:			

ELECTRICAL CHARACTERISTICS QW-409

Current:	Direct (DC)	Direct (DC)	Direct (DC)
Polarity:	Reverse (EP)	Reverse (EP)	Reverse (EP)
Volts:	22	22	30
Amps:	80	80 - 90	420
Travel Speed (ipm):	5.9	4.9 - 5.7	21.8
Maximum Heat Input (J/in):	18 040	23 704	34 650
Tungsten Electrode:	Not Applicable	Not Applicable	Not Applicable
STT Program Settings:	Not Applicable	Not Applicable	Not Applicable

TECHNIQUE QW-410

String or Weave:	String	String	String
Oscillation:	Not Applicable	Not Applicable	Not Applicable
Single / Multi Pass:	Single Pass from one side	Multiple Passes from one side	Multiple Passes from one side
Single / Multi Electrodes:	Single	Single	Single
Wire Stick Out:	Not Applicable	Not Applicable	1/4" to 1 1/4"
Nozzle / Cup Size:	Not Applicable	Not Applicable	Not Applicable

PROCEDURE QUALIFICATION RECORD (PQR) QW-483
(Section IX, ASME Boiler and Pressure Vessel Code)

PQR # SAS-1-4 Rev.0

Tensile Test
QW-462

Specimen No.	Width (in)	Thickness (in)	Area (in^2)	Ultimate Total Load (lbs)	Ultimate Unit Stress (ksi)	Type of Failure & Location
			(Not Applicable)			

Guided Bend Tests
QW-462

Specimen No.	Type	Figure	Result
		(Not Applicable)	

Toughness Tests
QW-170

Specimen No.	Notch Location	Notch Type	Qual. Temp	Full Size Values (ft-lbs)	% Shear	Lateral Exp Inches	Drop Weight Break	Drop Weight No Brk
DG-1	Weld	V-Notch	-50°F	56	30	0.040	-----	-----
DG-2	Weld	V-Notch	-50°F	58	40	0.041	-----	-----
DG-3	Weld	V-Notch	-50°F	66	40	0.044	-----	-----
DG-4	HAZ	V-Notch	-50°F	56	-----**	-----**	-----	-----
DG-5	HAZ	V-Notch	-50°F	28	30	0.019	-----	-----
DG-6	HAZ	V-Notch	-50°F	89	-----**	-----**	-----	-----

**Shear and Lateral Expansion not recorded – specimen did not break

Fillet-Weld Tests
Not Applicable

Result-Satisfactory: **Yes** _____ **No** _____ Pen. into Parent Material: **Yes** ___ **No** _____
Macro-Results:

Other Tests

Type of Test: Not Applicable
Other: Not Applicable

Welder's Name: Keith Breedon **Reg. No.:** W-11618 **Stamp ID:** DG
Tests Conducted By: Qualimet **Lab. Test No.:** 100-14010

We certify that the statements in this record are correct and that the test welds were prepared, welded, and tested in accordance with the requirements of Section IX of the ASME code.

Manufacturer: Sub-Arc Systems Inc.
Date: July 15, 2014 **Certified By:** Gary Kohlman

• 8055 CORONET ROAD, EDMONTON, AB T6E 4N7 • (780) 469-5870 • FAX (780) 465-5829
• CALGARY (403) 278-9862 • 1-800-621-8979 • www.qualimet.ca

"Your source of Quality Materials Engineering"

CHARPY IMPACT TEST REPORT

for Procedure Qualification Record # SAS-1-4

Client:	Sub-Arc Systems Inc.	**Job Number:**	100-14010
Address:	4605-47 Street, Vermillion AB, T9X 1L6	**Date:**	July 15, 2014
Materials:	SA-516 Grade 60/70 to SA-516 Grade 60/70		
Size:	0.500" w.t. Plate	**Condition:**	As Welded
Test Specification:	ASME Section VIII UG-84, ASTM A-370		
Test Equipment:	Satec Model S1-10, S/N: 1164		

Specimen Type:	Charpy V-Notch		
Qualification Temperature:	-50.0°F	**Test Temperature:**	-50.0°F

Specimen Size (mm): 10

Sample Set	Sample Number	Actual Impact Energy (ft-lb)	Full Size (ft-lb)	Shear (%)	Lateral Expansion Inches
Weld (includes all processes)	DG-1	56	56	30	0.040
	DG-2	58	58	40	0.041
	DG-3	66	66	40	0.044
	Average:	**60**	**60**	**37**	**0.042**

We certify that the statements in this record are acceptable and that the specimen(s) were prepared and tested in accordance with the requirements of the current edition of ASTM A370, ASTM E23 and their latest editions.

TEST RESULTS CERTIFIED BY: Qualimet

Hanibal Ghile, E.I.T.

• 8055 CORONET ROAD, EDMONTON, AB T6E 4N7 • (780) 469-5870 • FAX (780) 465-5829
• CALGARY (403) 278-9862 • 1-800-621-8979 • www.qualimet.ca

"Your source of Quality Materials Engineering"

CHARPY IMPACT TEST REPORT

for Procedure Qualification Record # SAS-1-4

Client:	Sub-Arc Systems Inc.	**Job Number:**	100-14010
Address:	4605-47 Street, Vermillion AB, T9X 1L6	**Date:**	July 15, 2014
Materials:	SA-516 Grade 60/70 to SA-516 Grade 60/70		
Size:	0.500" w.t. Plate	**Condition:**	As Welded
Test Specification:	ASME Section VIII UG-84, ASTM A-370		
Test Equipment:	Satec Model S1-10, S/N: 1164		

Specimen Type:	Charpy V-Notch		
Qualification Temperature:	-50.0°F	**Test Temperature:**	-50.0°F

Specimen Size (mm): 10

Sample Set	Sample Number	Actual Impact Energy (ft-lb)	Full Size (ft-lb)	Shear (%)	Lateral Expansion Inches
HAZ	DG-4	56	56	-----**	-----**
	DG-5	28	28	30	0.019
	DG-6	89	89	-----**	-----**
	Average:	**58**	**58**	-----**	-----**

**Shear and Lateral Expansion not recorded – specimen did not break

We certify that the statements in this record are acceptable and that the specimen(s) were prepared and tested in accordance with the requirements of the current edition of ASTM A370, ASTM E23 and their latest editions.

TEST RESULTS CERTIFIED BY: Qualimet

Hanibal Ghile, E.I.T.

SUB-ARC SYSTEMS INC.

Welding Procedure Specification

in accordance with

ASME Section IX

Welding Procedure Specification No.: SAS-2 Revision 2[1]

Supporting PQR No. (s): SAS-2-1 Revision 1, SAS-2-2 Revision 1, SAS-2-3 Revision 1, SAS-2-4 Revision 1

Qualified for

Process(es):	SAW (Leading) / SAW (Trailing)	**Position(s):**	Flat, Horizontal
Filler Metal F-No.:	F7A6-EM12K -H8 / F7A6-EM12K-H8	**A-No.:**	A-1 / A-1
AWS Classification:	F-6 / F-6	**Weld Type(s):**	Groove, Fillet, Weld buildup
Base Metal:	P-1 Group 1 or 2	To:	P-1 Group 1 or 2
Typical Materials:	This procedure is qualified for all P-1 materials as specified in Table QW-422 of ASME Section IX for applications where proven notch toughness properties are not required, and P-1 Group 1 or 2 materials only for applications where proven notch toughness properties are required.		
Diameter Range:	All diameters	**Condition(s):**	As Welded

Thickness Range:

	Normal Service	Impact Tested to -50°F
ASME Section IX	0.062" to 1.500"	0.125" to 1.500"
ASME Section VIII	0.062" to 1.500"	0.125" to 1.500"
ASME B31.1	0.062" to 0.750"	0.125" to 0.750"
ASME B31.3	0.062" to 0.750"	0.125" to 0.750"

[1]**Revision 2:** Review and update to the current edition of the ASME code.

Provincial Registration

ABSA

SAFETY CODES ACT - PROVINCE OF ALBERTA
WELDING PROCEDURE

Reg. No. WP 2389.2
Spec No. SAS-2 (Rev 2)
Weld Process SAW
Matl. Gr. P No. 1 Gr 1+2 to P No. 1 Gr 1+2
Elect Gr. F No. 6 A No. 1
Th. Qual For 38.1mm P.W.H.T. No
MIN TH QUAL 3.2mm, CVN -46°C

Yr. 14 Mo. 11 Day 5 Signed
JASON REINHART, P.ENG.
WELDING SPECIALIST

Provincial Registration

WELDING PROCEDURE SPECIFICATION (WPS) QW-482

(Section IX, ASME Boiler and Pressure Vessel Code)

Company Name:	Sub-Arc Systems Inc.	**By:**	Gary Kohlman
WPS No.:	SAS-2	**Date:**	June 4, 2010
Revision No.:	2[1]	**Revision Date:**	October 3, 2014
Supporting PQR's:	SAS-2-1 Revision 1, SAS-2-2 Revision 1, SAS-2-3 Revision 1, SAS-2-4 Revision 1		
Welding Process(es):	SAW / SAW	**Type(s):**	Machine / Machine

JOINTS QW-402		**Joint Details**
Joint Design:	Butt, Tee, Lap, Corner, etc.	**All ASME joint designs.** Reference construction
Backing:	F-6 SAW (Leading) with or without backing	drawings for joint details. Where joint details are not
	F-6 SAW (Trailing) with backing only	specified, refer to typical joint detail sheet provided.
Backing Material (Type):	Similar base or weld metal or backwelding as required. No Retainers.	

BASE METALS QW-403

P-No.: P-1 **Group No.:** *1 or 2 **to P-No.:** P-1 **Group No.:** *1 or 2

OR

Spec. type & grade: Not Applicable **to Spec. type & grade:** Not Applicable

OR

Chem. Analysis & Mech. Prop.: Not Applicable **to Chem. Analysis & Mech. Prop.:** Not Applicable

Thickness Range

		Normal Service	Impact Tested to -50°F		
Base Metal: Groove:	Section IX	0.062" to 1.500"	0.125" to 1.500"	**Fillet:**	All
	Section VIII	0.062" to 1.500"	0.125" to 1.500"	**Fillet:**	All
	B31.1	0.062" to 0.750"	0.125" to 0.750"	**Fillet:**	All
	B31.3	0.062" to 0.750"	0.125" to 0.750"	**Fillet:**	All
Pipe Dia Range: Groove:	All diameters			**Fillet:**	All

Other: *Limited to P-1 Group 1 or 2 only when proven notch toughness properties are required.

Maximum thickness of any weld layer shall not exceed .500"

FILLER METALS QW-404

	SAW (Leading)	SAW (Trailing)
Process:		
Specification No. (SFA):	5.17	5.17
AWS Classification No.:	F7A6-EM12K	F7A6-EM12K
F-No.:	F-6	F-6
A-No.:	A-1	A-1
Size of Filler Metals:	3/32", 1/8", 5/32", 3/16"	3/32", 1/8", 5/32", 3/16"
Weld Metal Thickness - Groove:	1.000"	1.000"
- Fillet:	Unlimited	Unlimited
Electrode-Flux (Class):	F7A6-EM12K-H8	F7A6-EM12K-H8
Manufacturer:	Lincoln Electric	Lincoln Electric
Tradename:	LA-61	LA-61
Flux Trade Name:	Lincoln 882 Flux	Lincoln 882 Flux
Alloy Flux:	Neutral	Neutral
Consumable Insert:	Not Applicable	Not Applicable
Supplemental Filler Metals:	Not Applicable	Not Applicable
Product Form:	Coiled Solid Wire	Coiled Solid Wire

[1]**Revision 2:** Review and update to the current edition of the ASME code.

WELDING PROCEDURE SPECIFICATION (WPS) QW-482

(Section IX, ASME Boiler and Pressure Vessel Code)

WPS # SAS-2 Rev.2

POSITIONS QW-405		POSTWELD HEAT TREATMENT QW-407	
Position(s) of Groove:	All	**Temp. Range:**	
Welding Progression:	F-6 SAW (Leading) Flat or Horizontal only.	**Time Range:**	***(None – As Welded)***
	F-6 SAW (Trailing) Flat or Horizontal only.	**Heating:**	
Position(s) of Fillet:	All	**Cooling:**	
PREHEAT QW-406		**GAS QW-408**	
Temperature Min.:		**Shielding Gas(es):**	
Interpass Temp. Max.:	***(See Next Page)***	**Composition:**	
Interpass Min.:		**Flow Rate:**	***(Not Applicable)***
Preheat Maintenance:	Monitor using tempilstiks, pyrometer or other suitable methods.	**Gas Backing:**	
		Other:	

ELECTRICAL CHARACTERISTICS QW-409				
Current:	**F-6 SAW (Leading):**	Direct - DC	**F-6 SAW (Trailing):**	Direct - DC
Polarity:	**F-6 SAW (Leading):**	Reverse - EP	**F-6 SAW (Trailing):**	Reverse - EP
Amps (Range):	**F-6 SAW (Leading):**	250 - 750	**F-6 SAW (Trailing):**	250 - 750
Volts (Range):	**F-6 SAW (Leading):**	22 - 38	**F-6 SAW (Trailing):**	22 - 38
Travel Speed (Range):	**F-6 SAW (Leading):**	4 - 35	**F-6 SAW (Trailing):**	4 - 35
Maximum Heat Input: 0.125" to 0.625":	**F-6 SAW (Leading):**	30 240 J/in	**F-6 SAW (Trailing):**	30 240 J/in
0.625" to 1.500":	**F-6 SAW (Leading):**	30 240 J/in	**F-6 SAW (Trailing):**	30 240 J/in
Electrode Wire feed speed range:	50 - 550 ipm			
Tungsten Electrode Size & Type:	Not Applicable			
Mode of Metal Transfer for GMAW:	Not Applicable			
Other:	Maximum heat input mandatory only when proven notch toughness is required			

TECHNIQUE QW-410	
String or Weave Bead:	String and weave. Weave size shall be controlled to prevent exceeding maximum heat inputs.
Orifice or Gas Cup Size:	1/4" to 1"
Initial Cleaning:	Base material must be thoroughly cleaned of all foreign material (scale, rust, oil, grease, paint, tar, etc.) at least 1" back on each side of the joint prior to welding. All surfaces to be welded shall be smooth, uniform and free from notches, slag, fins and burrs.
Interpass Cleaning:	Perform by wire brush, chipping hammer, power brushing, grinding, etc. after each weld layer.
Method of Back Gouging:	Arc air, gouge, grind, etc., grind to clean metal where thermal processes are used if required.
Oscillation:	Not Applicable
Contact Tube to Work Distance:	1/4" to 1 1/4"
Electrode Spacing:	1" to 6"
Multiple or Single Pass (per side):	Single or multiple passes per side, multiple only when proven notch toughness properties are required.
Multiple or Single Electrodes & Spacing:	Single or Multiple, multiple only when proven notch toughness properties are required.
Peening:	Peening is not allowed

TYPICAL WELDING PARAMETERS

	Filler Metal		Current			
Process	**AWS Classification**	**Diameter (in)**	**Type & Polarity**	**Amp. Range**	**Volt Range**	**Travel Speed (IPM)**
SAW	F7A6-EM12K	3/32	DC EP	250 - 750	22 - 38	4 - 35
SAW	F7A6-EM12K	1/8				
SAW	F7A6-EM12K	5/32				
SAW	F7A6-EM12K	3/16				

Notes: Number of weld layers and size of filler metal may vary with thickness of base material and position of weld.

WELDING PROCEDURE SPECIFICATION (WPS) QW-482
(Section IX, ASME Boiler and Pressure Vessel Code)

WPS # SAS-2 Rev.2

PREHEAT & INTERPASS TEMPERATURE MINIMUM AND MAXIMUM	
Section VIII :	50°F minimum for all P-1 materials except as listed below :
	175°F if the joint thickness exceeds 1.000" and the specified carbon content exceeds 0.30%
	200°F if the joint thickness is 1.250" to 1.500"
B31.1 :	50°F minimum for all P-1 materials except as listed below :
	175°F if the joint thickness exceeds 1.00" and the specified carbon content exceeds 0.30%
B31.3 :	50°F for all P-1 materials except as listed below:
	175°F if the specified minimum tensile strength of the base material exceeds 71 ksi
	175°F if the nominal wall thickness exceeds 1"
Max. Interpass Temp.:	650°F for normal service, 550°F for applications where proven notch toughness is required

Reference to relevant construction codes is mandatory prior to production welding to determine any supplementary restrictions.

Typical Joint Details QW-482

Prepared by: Qualimet

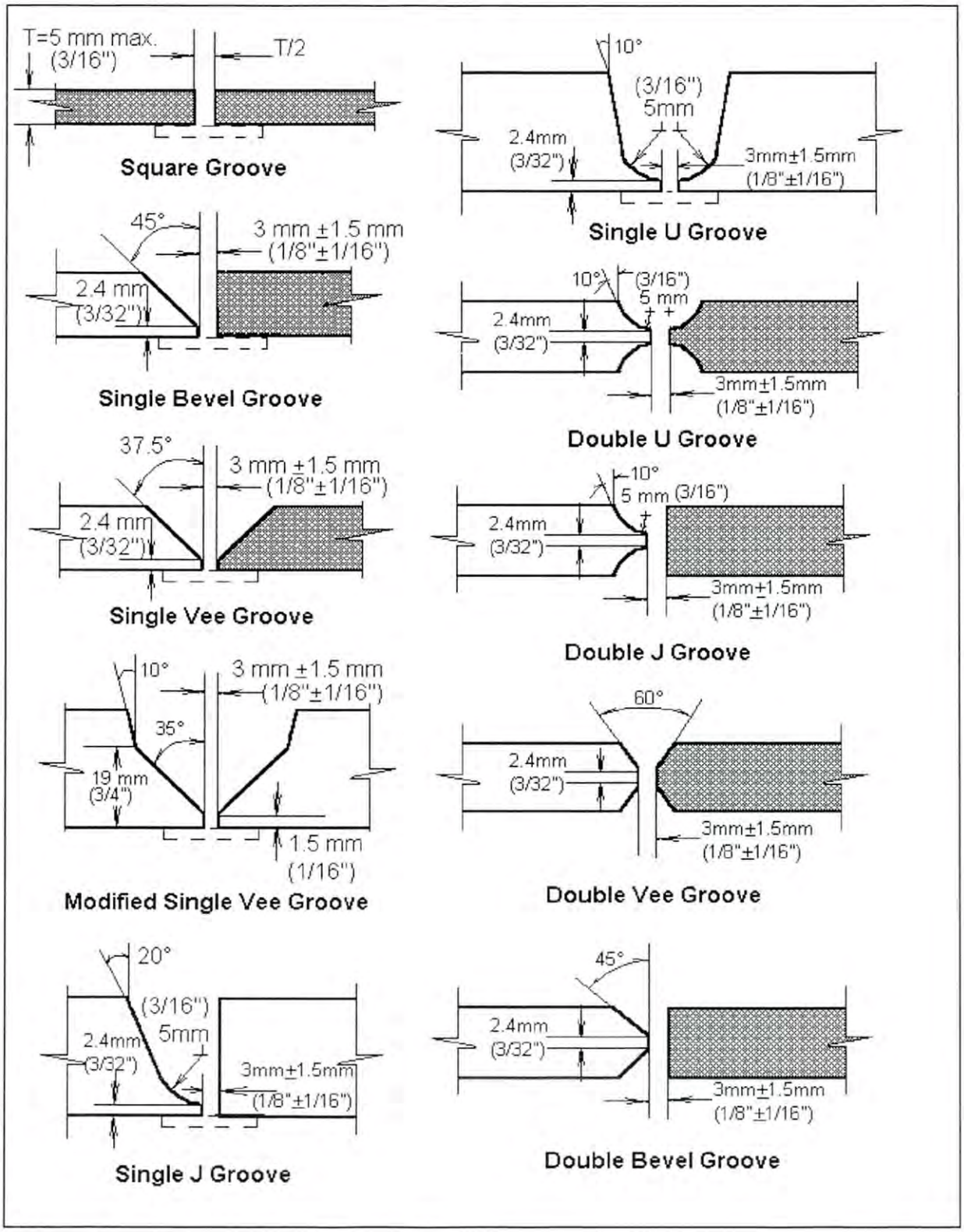

PROCEDURE QUALIFICATION RECORD (PQR) QW-483

(Section IX, ASME Boiler and Pressure Vessel Code)

Company Name:	Sub-Arc Systems Inc.	**By:**	Gary Kohlman
PQR No.:	SAS-2-1	**Date:**	June 4, 2010
Revision No.:	1[1]	**Revision Date:**	October 3, 2014
Welding Process(es):	SAW / SAW	**Types:**	Machine / Machine

JOINTS QW-402

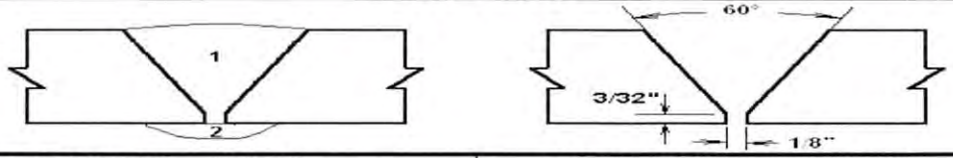

BASE METALS QW-403			POSTWELD HEAT TREATMENT QW-407	
Material Spec.:	SA-516	SA-516	**Temperature:**	
Grade/Type/Class:	Grade 70	Grade 70	**Time:**	
P-No. Group No.:	P-1 Group 2 to	P-1 Group 2	**Heating:**	*(Not Applicable)*
Heat No.:	0934K-54	0934K-54	**Cooling:**	
Carbon Equivalent (CE):	0.39	0.39	**Other:**	
Thickness & Diameter:	0.249" Plate (machined)			
Max Weld Deposit:	<0.500" per pass			

PREHEAT QW-406		POSITIONS QW-405		
Preheat Temp. Min.:	50°F	**Process:**	**SAW (Leading)**	**SAW (Trailing)**
Interpass Temp. Max.:	550°F	**Position:**	2-G	2-G
Interpass Temp. Min.:	50°F	**Progression:**	Horizontal	Horizontal
Other:	Temperature monitored by tempilsticks	**Other:**	Not Applicable	Not Applicable

FILLER METALS QW-404

Process:	**SAW (Leading)**	**SAW (Trailing)**
SFA Specification No.:	5.17	5.17
AWS Classification No.:	EM12K-H8	EM12K-H8
F-No.:	F-6	F-6
A-No.:	A-1	A-1
Size of Filler Metal:	3/32"	3/32"
Deposited Weld Metal:	0.125"	0.125"
Manufacturer:	Lincoln Electric Co.	Lincoln Electric Co.
Trade Name:	LA-61	LA-61
Heat / Lot Number:	Not Recorded	Not Recorded
Electrode-Flux (Class):	F7A6-EM12K-H8	F7A6-EM12K-H8
Flux Tradename:	Lincolnweld 882 Flux	Lincolnweld 882 Flux
Flux Heat / Lot Number.:	Not Recorded	Not Recorded
Product Form:	Coiled Solid Wire	Coiled Solid Wire
Other:	Recrushed Slag Not Permitted	Recrushed Slag Not Permitted

ELECTRICAL CHARACTERISTICS QW-409

Process:	**SAW (Leading)**	**SAW (Trailing)**
Current:	Direct - DC	Direct - DC
Polarity:	Reverse - EP	Reverse - EP
Volts:	27	27
Amps:	400	300
Travel Speed (ipm):	20.0 - 26.0	20.0 - 24.0
Maximum Heat Input (J/in):	32 400	24 300
Tungsten Electrode:	Not Applicable	Not Applicable
STT Program Settings:	Not Appilcable	Not Appilcable
Other:	Not Applicable	Not Applicable

TECHNIQUE QW-410

String or Weave:	String	String
Oscillation:	Not Applicable	Not Applicable
Single / Multi Pass:	Single Pass Per Side	
Single / Multi Electrodes:	Multiple Electrodes	
Wire Stick Out:	1/4" to 1 1/4"	1/4" to 1 1/4"
Electrode Spacing:	Not Recorded	Not Recorded
Nozzle / Cup Size:	Not Recorded	Not Recorded

[1]**Revision 1:** Review and update to the current edition of the ASME code.

PROCEDURE QUALIFICATION RECORD (PQR) QW-483
(Section IX, ASME Boiler and Pressure Vessel Code)

PQR # SAS-2-1 Revision 1

Tensile Test
QW-462

Specimen No.	Width in	Thickness in	Area in^2	Ultimate Total Load Lb	Ultimate Unit Stress ksi	Type of Failure & Location
ZB-T1	0.742	0.244	0.181	15 054	83.0	Ductile - Base
ZB-T2	0.746	0.241	0.180	14 656	81.5	Ductile - Base

Guided Bend Tests
QW-462

Specimen No.	Type	Figure	Result
ZB-B1	TFB	QW-462.3(a)	Pass
ZB-B2	TFB	QW-462.3(a)	Pass
ZB-B3	TRB	QW-462.3(a)	Pass
ZB-B4	TRB	QW-462.3(a)	Pass

Toughness Tests
QW-170

Specimen No.	Notch Location	Notch Type	Test Temp	Impact Values (ft-lbs)	% Shear	Lateral Exp Inches	Drop Weight Break	Drop Weight No Brk
ZB-1	Weld	V-Notch	-50°F	49	50	0.040	N/A	N/A
ZB-2	Weld	V-Notch	-50°F	30	40	0.026	N/A	N/A
ZB-3	Weld	V-Notch	-50°F	67	60	0.053	N/A	N/A
ZB-4	HAZ	V-Notch	-50°F	67	60	0.054	N/A	N/A
ZB-5	HAZ	V-Notch	-50°F	75	70	0.056	N/A	N/A
ZB-6	HAZ	V-Notch	-50°F	123	100	0.065	N/A	N/A

Fillet-Weld Tests
Not Applicable

Result-Satisfactory: Yes _____ No _____ Pen. into Parent Material: Yes _____ No _____
Macro-Results:

Other Tests

Type of Test: Hardness Testing - See Attached Report
Other:

Welder's Name: Matt MacKenzie **Reg. No.:** Not Applicable
Welder's Name: Joel Overguard **Reg. No.:** Not Applicable **Stamp ID:** ZB
Tests Conducted By: Qualimet **Lab. Test No.:** 636-10004
Revised By: Qualimet

We hereby recertify that the statements in this record have been revised in accordance with paragraph QW-200.2 are correct and that the test welds were prepared, welded, and tested in accordance with the requirements of Section IX of the ASME Code.

Manufacturer: Sub-Arc Systems Inc.
Original Cert. Date: June 4, 2010 **By:** Gary Kohlman
Recertification Date: October 3, 2014 **By:** Gary Kohlman

MECHANICAL TEST REPORT

for Procedure Qualification Record # SAS-2-1

Client:	Sub-Arc Systems Inc.	**Job Number:**	636-10004
Address:	4605-47 Street Vermillion AB T9X 1L6	**Date:**	June 4, 2010
Materials:	SA-516 Grade 70		
Size:	0.249" Plate (machined)	**Condition:**	As Welded
Test Specification:	**ASME Section IX**		

Tensile Tests QW-462.1(a)

Sample Identification:	ZB-T1	ZB-T2
Sample Size - inch:(W x T)	0.742 x 0.244	0.746 x 0.241
Least X-Sect. Area - in2:	0.181	0.180
Ultimate Load - lbs:	15 054	14 656
Ult. Ten. Strength - ksi:	83.0	81.5
Character of Failure:	Ductile	Ductile
Location of Failure:	Base Metal	Base Metal
Req'd Tensile Strength - ksi:	70.0	70.0
Pass or Fail:	Pass	Pass
Remarks:	-----	-----

Bend Tests QW-462.3 (a)

Sample Identification:	ZB-B1	ZB-B2	ZB-B3	ZB-B4
***Type of Bend Test:**	TFB	TFB	TRB	TRB
Pass or Fail:	Pass	Pass	Pass	Pass
Remarks:	-----	-----	-----	-----

*Types of Bend Tests **TSB, TFB, TRB = transverse side, face or root bend** **LSB, LFB, LRB = longitudinal side, face or root bend**

We certify that the statements in this record are acceptable, in accordance with the requirements of ASME Section IX.

TEST RESULTS CERTIFIED BY:

Qualimet

Sean Lepine, E.I.T.

CHARPY IMPACT TEST REPORT

for Procedure Qualification Record # SAS-2-1

Client:	Sub-Arc Systems Inc.	**Job Number:**	636-10004
Address:	4605-47 Street Vermillion AB T9X 1L6	**Date:**	June 4, 2010
Materials:	SA-516 Grade 70		
Size:	0.249" Plate (machined)	**Condition:**	As Welded
Test Specification:	ASME Section IX, ASME Section VIII UG-84, ASTM A-370		

Specimen Type:	Charpy V-Notch
Qualification Temperature:	-50°F
Test Temperature:	-50°F

Specimen Size (mm): 5.35

Sample Set	Sample Number	Actual Impact Energy (ft-lb)	Full Size (ft-lb)	Shear (%)	Lateral Expansion Inches
Weld Zone	ZB-1	26	49	50	0.040
	ZB-2	16	30	40	0.026
	ZB-3	36	67	60	0.053
	Average:	**26**	**49**	**50**	**0.040**

We certify that the statements in this record are acceptable and that the specimen(s) were prepared and tested in accordance with the requirements of the current edition of ASME Section IX and the latest addenda.

TEST RESULTS CERTIFIED BY:

Qualimet

Sean Lepine, E.I.T.

CHARPY IMPACT TEST REPORT

for Procedure Qualification Record # SAS-2-1

Client:	Sub-Arc Systems Inc.	**Job Number:**	636-10004
Address:	4605-47 Street Vermillion AB T9X 1L6	**Date:**	June 4, 2010
Materials:	SA-516 Grade 70		
Size:	0.249" Plate (machined)	**Condition:**	As Welded
Test Specification:	ASME Section IX, ASME Section VIII UG-84, ASTM A-370		

Specimen Type:	Charpy V-Notch
Qualification Temperature:	-50°F
Test Temperature:	-50°F

Specimen Size (mm): 5.35

Sample Set	Sample Number	Actual Impact Energy (ft-lb)	Full Size (ft-lb)	Shear (%)	Lateral Expansion Inches
HAZ	ZB-4	36	67	60	0.054
	ZB-5	40	75	70	0.056
	ZB-6	66	123	100	0.065
	Average:	**47**	**88**	**77**	**0.058**

We certify that the statements in this record are acceptable and that the specimen(s) were prepared and tested in accordance with the requirements of the current edition of ASME Section IX and the latest addenda.

TEST RESULTS CERTIFIED BY:

Qualimet

Sean Lepine, E.I.T.

HARDNESS TEST REPORT

for Procedure Qualification Record # SAS-2-1

Client:	Sub-Arc Systems Inc.	**Job Number:**	636-10004
Address:	4605-47 Street Vermillion AB T9X 1L6	**Date:**	June 4, 2010
Materials:	SA-516 Grade 70		
Size:	0.249" Plate (machined)	**Condition:**	As Welded
Test Specification:	NACE RP0472		

Test Method:	Hardness testing performed in accordance with ASTM E-92 (Vickers Hardness of Metallic Materials) using a Vickers tester with a 1kg load.

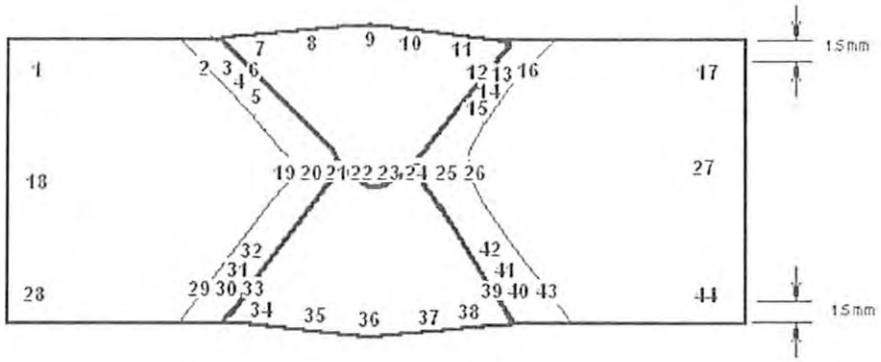

Vickers Hardness Values

1	153	**10**	190	**19**	165	**28**	172	**37**	193
2	156	**11**	192	**20**	171	**29**	158	**38**	192
3	169	**12**	183	**21**	191	**30**	189	**39**	195
4	167	**13**	183	**22**	186	**31**	182	**40**	176
5	169	**14**	179	**23**	204	**32**	181	**41**	175
6	182	**15**	185	**24**	195	**33**	206	**42**	178
7	182	**16**	163	**25**	180	**34**	189	**43**	172
8	198	**17**	159	**26**	169	**35**	203	**44**	167
9	179	**18**	160	**27**	165	**36**	203		

We certify that the statements in this record are acceptable, in accordance with the requirements of NACE RP 0472. RP 0472-2005 paragraph 5.3 states "The maximum allowable HAZ hardness shall be 248 HV the maximum weld deposit hardness should be 248 HV and the average weld deposit hardness should not exceed 210 HV"

TEST RESULTS CERTIFIED BY:

Qualimet

Sean Lepine, E.I.T.

PROCEDURE QUALIFICATION RECORD (PQR) QW-483

(Section IX, ASME Boiler and Pressure Vessel Code)

Company Name:	Sub-Arc Systems Inc.	**By:**	Gary Kohlman
PQR No.:	SAS-2-2	**Date:**	June 4, 2010
Revision No.:	1[1]	**Revision Date:**	October 3, 2014
Welding Process(es):	SAW / SAW	**Types:**	Machine / Machine

JOINTS QW-402

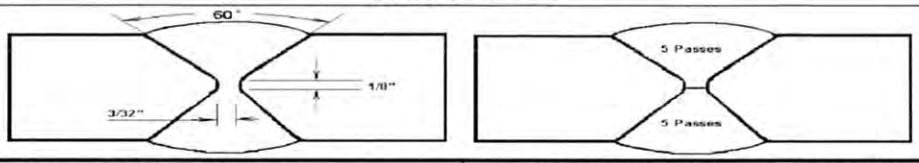

BASE METALS QW-403

Material Spec.:	SA-516		SA-516
Grade/Type/Class:	Grade 70		Grade 70
P-No. Group No.:	P-1 Group 2	**to**	P-1 Group 2
Heat No.:	8277J		8277J
Carbon Equivalent (CE):	0.40		0.40
Thickness & Diameter:	1.000" Plate		
Max Weld Deposit:	<0.500" per pass		

POSTWELD HEAT TREATMENT QW-407

Temperature:	
Time:	
Heating:	***(Not Applicable)***
Cooling:	
Other:	

PREHEAT QW-406

Preheat Temp. Min.:	50°F
Interpass Temp. Max.:	550°F
Interpass Temp. Min.:	50°F
Other:	Temperature monitored by tempilsticks

POSITIONS QW-405

Process:	**SAW (Leading)**	**SAW (Trailing)**
Position:	2-G	2-G
Progression:	Horizontal	Horizontal
Other:	Not Applicable	Not Applicable

FILLER METALS QW-404

Process:	**SAW (Leading)**	**SAW (Trailing)**
SFA Specification No.:	5.17	5.17
AWS Classification No.:	EM12K-H8	EM12K-H8
F-No.:	F-6	F-6
A-No.:	A-1	A-1
Size of Filler Metal:	3/32"	3/32"
Deposited Weld Metal:	0.500"	0.500"
Manufacturer:	Lincoln Electric Co.	Lincoln Electric Co.
Trade Name:	LA-61	LA-61
Heat / Lot Number:	Not Recorded	Not Recorded
Electrode-Flux (Class):	F7A6-EM12K-H8	F7A6-EM12K-H8
Flux Tradename:	Lincolnweld 882 Flux	Lincolnweld 882 Flux
Flux Heat / Lot Number.:	Not Recorded	Not Recorded
Product Form:	Coiled Solid Wire	Coiled Solid Wire
Other:	Recrushed Slag Not Permitted	Recrushed Slag Not Permitted

ELECTRICAL CHARACTERISTICS QW-409

Process:	**SAW (Leading)**	**SAW (Trailing)**
Current:	Direct - DC	Direct - DC
Polarity:	Reverse - EP	Reverse - EP
Volts:	27	27 - 29
Amps:	400 - 420	320 - 415
Travel Speed (ipm):	18.0 - 25.0	18.0 - 25.0
Maximum Heat Input (J/in):	35 998	33 615
Wirefeed Speed (ipm):	410	400
STT Program Settings:	Not Appilcable	Not Appilcable
Other:	Not Applicable	Not Applicable

TECHNIQUE QW-410

String or Weave:	String	String
Oscillation:	Not Applicable	Not Applicable
Single / Multi Pass:	Multiple Passes Per Side	
Single / Multi Electrodes:	Multiple Electrodes	
Wire Stick Out:	1/4" to 1 1/4"	1/4" to 1 1/4"
Electrode Spacing:	Not Recorded	Not Recorded
Nozzle / Cup Size:	Not Recorded	Not Recorded

[1]**Revision 1:** Review and update to the current edition of the ASME code.

PROCEDURE QUALIFICATION RECORD (PQR) QW-483
(Section IX, ASME Boiler and Pressure Vessel Code)

PQR # SAS-2-2 Revision 1

Tensile Test
QW-462

Specimen No.	Width in	Thickness in	Area in^2	Ultimate Total Load Lb	Ultimate Unit Stress ksi	Type of Failure & Location
YE-T1	0.741	0.983	0.728	58 240	80.0	Ductile - Base
YE-T2	0.735	0.994	0.731	57 482	79.0	Ductile - Base

Guided Bend Tests
QW-462

Specimen No.	Type	Figure	Result
YE-B1	TSB	QW-462.2	Pass
YE-B2	TSB	QW-462.2	Pass
YE-B3	TSB	QW-462.2	Pass
YE-B4	TSB	QW-462.2	Pass

Toughness Tests
QW-170

Specimen No.	Notch Location	Notch Type	Test Temp	Impact Values (ft-lbs)	% Shear	Lateral Exp Inches	Drop Weight Break	Drop Weight No Brk
YE-1	Weld	V-Notch	-50°F	24	40	0.038	N/A	N/A
YE-2	Weld	V-Notch	-50°F	16	30	0.019	N/A	N/A
YE-3	Weld	V-Notch	-50°F	50	50	0.015	N/A	N/A
YE-4	HAZ	V-Notch	-50°F	58	60	0.044	N/A	N/A
YE-5	HAZ	V-Notch	-50°F	16	30	0.013	N/A	N/A
YE-6	HAZ	V-Notch	-50°F	53	60	0.078	N/A	N/A

Fillet-Weld Tests
Not Applicable

Result-Satisfactory: Yes _____ No _____ Pen. into Parent Material: Yes _____ No _____
Macro-Results:

Other Tests

Type of Test: Hardness Testing - See Attached Report
Other:

Welder's Name: Matt MacKenzie **Reg. No.:** Not Applicable
Welder's Name: Joel Overguard **Reg. No.:** Not Applicable **Stamp ID:** YE
Tests Conducted By: Qualimet **Lab. Test No.:** 636-10004
Revised By: Qualimet

We hereby recertify that the statements in this record have been revised in accordance with paragraph QW-200.2 are correct and that the test welds were prepared, welded, and tested in accordance with the requirements of Section IX of the ASME Code.

Manufacturer: Sub-Arc Systems Inc.
Original Cert. Date: June 4, 2010 **By:** Gary Kohlman
Recertification Date: October 3, 2014 **By:** Gary Kohlman

MECHANICAL TEST REPORT

for Procedure Qualification Record # SAS-2-2

Client:	Sub-Arc Systems Inc.	**Job Number:**	636-10004
Address:	4605-47 Street Vermillion AB T9X 1L6	**Date:**	June 4, 2010
Materials:	SA-516 Grade 70		
Size:	1.000" Plate	**Condition:**	As Welded
Test Specification:	ASME Section IX		

Tensile Tests QW-462.1(a)

Sample Identification:	YE-T1	YE-T2
Sample Size - inch:(W x T)	0.741 x 0.983	0.735 x 0.994
Least X-Sect. Area - in2:	0.728	0.731
Ultimate Load - lbs:	58 240	57 482
Ult. Ten. Strength - ksi:	80.0	79.0
Character of Failure:	Ductile	Ductile
Location of Failure:	Base Metal	Base Metal
Req'd Tensile Strength - ksi:	70.0	70.0
Pass or Fail:	Pass	Pass
Remarks:	-----	-----

Bend Tests QW-462.2

Sample Identification:	YE-B1	YE-B2	YE-B3	YE-B4
***Type of Bend Test:**	TSB	TSB	TSB	TSB
Pass or Fail:	Pass	Pass	Pass	Pass
Remarks:	-----	-----	-----	-----

*Types of Bend Tests **TSB, TFB, TRB = transverse side, face or root bend** **LSB, LFB, LRB = longitudinal side, face or root bend**

We certify that the statements in this record are acceptable, in accordance with the requirements of ASME Section IX.

TEST RESULTS CERTIFIED BY: Qualimet

Sean Lepine, E.I.T.

CHARPY IMPACT TEST REPORT

for Procedure Qualification Record # SAS-2-2

Client:	Sub-Arc Systems Inc.	**Job Number:**	636-10004
Address:	4605-47 Street Vermillion AB T9X 1L6	**Date:**	June 4, 2010
Materials:	SA-516 Grade 70		
Size:	1.000" Plate	**Condition:**	As Welded
Test Specification:	ASME Section IX, ASME Section VIII UG-84, ASTM A-370		

Specimen Type:	Charpy V-Notch
Qualification Temperature:	-50°F
Test Temperature:	-50°F

Specimen Size (mm): 10

Sample Set	Sample Number	Actual Impact Energy (ft-lb)	Full Size (ft-lb)	Shear (%)	Lateral Expansion Inches
Weld	YE-1	24	24	40	0.038
	YE-2	16	16	30	0.019
	YE-3	50	50	50	0.015
	Average:	**30**	**30**	**40**	**0.024**

We certify that the statements in this record are acceptable and that the specimen(s) were prepared and tested in accordance with the requirements of the current edition of ASME Section IX and the latest addenda.

TEST RESULTS CERTIFIED BY:

Qualimet

Sean Lepine, E.I.T.

CHARPY IMPACT TEST REPORT

for Procedure Qualification Record # SAS-2-2

Client:	Sub-Arc Systems Inc.	**Job Number:**	636-10004
Address:	4605-47 Street Vermillion AB T9X 1L6	**Date:**	June 4, 2010
Materials:	SA-516 Grade 70		
Size:	1.000" Plate	**Condition:**	As Welded
Test Specification:	ASME Section IX, ASME Section VIII UG-84, ASTM A-370		

Specimen Type:	Charpy V-Notch
Qualification Temperature:	-50°F
Test Temperature:	-50°F

Specimen Size (mm): 10

Sample Set	Sample Number	Actual Impact Energy (ft-lb)	Full Size (ft-lb)	Shear (%)	Lateral Expansion Inches
HAZ	YE-4	58	58	60	0.044
	YE-5	16	16	30	0.013
	YE-6	53	53	60	0.078
	Average:	**42**	**42**	**50**	**0.045**

We certify that the statements in this record are acceptable and that the specimen(s) were prepared and tested in accordance with the requirements of the current edition of ASME Section IX and the latest addenda.

TEST RESULTS CERTIFIED BY:

Qualimet

Sean Lepine, E.I.T.

HARDNESS TEST REPORT

for Procedure Qualification Record # SAS-2-2

Client:	Sub-Arc Systems Inc.	**Job Number:**	636-10004
Address:	4605-47 Street Vermillion AB T9X 1L6	**Date:**	June 4, 2010
Materials:	SA-516 Grade 70		
Size:	1.000" Plate	**Condition:**	As Welded
Test Specification:	NACE RP0472		

Test Method:	Hardness testing performed in accordance with ASTM E-92 (Vickers Hardness of Metallic Materials) using a Vickers tester with a 1kg load.

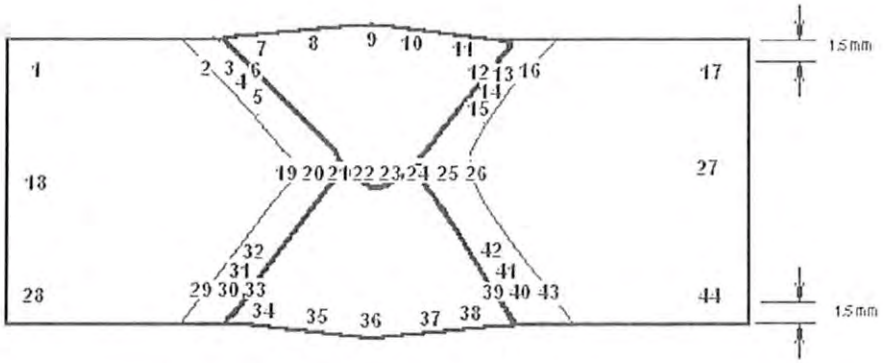

Vickers Hardness Values

1	165	**10**	231	**19**	195	**28**	173	**37**	212
2	191	**11**	212	**20**	183	**29**	191	**38**	224
3	234	**12**	220	**21**	180	**30**	206	**39**	214
4	216	**13**	245	**22**	179	**31**	193	**40**	206
5	219	**14**	246	**23**	184	**32**	187	**41**	197
6	235	**15**	232	**24**	184	**33**	199	**42**	207
7	208	**16**	187	**25**	173	**34**	209	**43**	174
8	194	**17**	164	**26**	170	**35**	208	**44**	161
9	181	**18**	158	**27**	152	**36**	202		

We certify that the statements in this record are acceptable, in accordance with the requirements of NACE RP 0472. RP 0472-2005 paragraph 5.3 states "The maximum allowable HAZ hardness shall be 248 HV the maximum weld deposit hardness should be 248 HV and the average weld deposit hardness should not exceed 210 HV"

TEST RESULTS CERTIFIED BY:

Qualimet

Sean Lepine, E.I.T.

PROCEDURE QUALIFICATION RECORD (PQR) QW-483

(Section IX, ASME Boiler and Pressure Vessel Code)

Company Name:	Sub-Arc Systems Inc.	**By:**	Gary Kohlman
PQR No.:	SAS-2-3	**Date:**	January 20, 2014
Revision No.:	1[1]	**Revision Date:**	October 3, 2014
Welding Process(es):	SAW / SAW	**Type(s):**	Machine / Machine

JOINTS QW-402

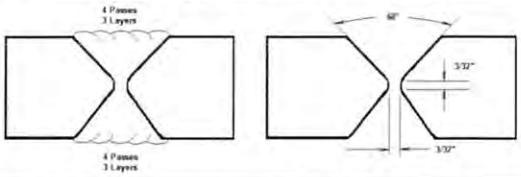

BASE METALS QW-403				POSTWELD HEAT TREATMENT QW-407	
Material Spec.:	SA-516		SA-516	**Temperature:**	
Grade/Type/Class:	Grade 60/70		Grade 60/70	**Time:**	
P-No. Group No.:	P-1 Group 1/2	**to**	P-1 Group 1/2	**Heating:**	***(None – As Welded)***
Heat No.:	H6/5888		H6/5888	**Cooling:**	
Carbon Equivalent (ASME):	0.41		0.41	**Other:**	
Carbon Equivalent (CSA):	0.41		0.41		
Thickness & Diameter:	1.000" w.t. Plate				
Max Weld Deposit:	<0.500" per pass				

PREHEAT QW-406		POSITIONS QW-405		
Preheat Temp. Min.:	50°F	**Process:**	**SAW (Leading)**	**SAW (Trailing)**
Interpass Temp. Max.:	550°F	**Position:**	2-G	2-G
Interpass Temp. Min.:	50°F	**Progression:**	Horizontal	Horizontal
Other:	Temperature monitored using tempilstiks	**Other:**	Not Applicable	Not Applicable

FILLER METALS QW-404		
Process:	**SAW (Leading)**	**SAW (Trailing)**
SFA Specification No.:	5.17	5.17
AWS Classification No.:	EM12K-H8	EM12K-H8
F-No.:	F-6	F-6
A-No.:	A-1	A-1
Size of Filler Metal:	3/32"	3/32"
Deposited Weld Metal:	0.500"	0.500"
Manufacturer:	Lincoln Electric	Lincoln Electric
Trade Name:	LA-61	LA-61
Heat / Lot Number:	Not Recorded	Not Recorded
Electrode-Flux (Class):	F7A6-EM12K-H8	F7A6-EM12K-H8
Flux Tradename:	Lincolnweld 882 Flux	Lincolnweld 882 Flux
Flux Heat / Lot Number.:	Not Recorded	Not Recorded
Product Form:	Coiled Solid Wire	Coiled Solid Wire

SHIELDING GAS QW-408		
Shielding Gas:		
Composition:	***(Not Applicable)***	***(Not Applicable)***
Flow Rate:		
Backing Gas:		

ELECTRICAL CHARACTERISTICS QW-409		
Current:	Direct (DC)	Direct (DC)
Polarity:	Reverse (EP)	Reverse (EP)
Volts:	28 - 30	28 - 30
Amps:	380 - 420	380 - 420
Travel Speed (ipm):	25.0	25.0
Maximum Heat Input (J/in):	30 240	30 240

TECHNIQUE QW-410		
String or Weave:	String	String
Oscillation:	Not Applicable	Not Applicable
Single / Multi Pass:	Multiple Passes from both sides	
Single / Multi Electrodes:	Multi	Multi
Wire Stick Out:	1/4" to 1 1/4"	1/4" to 1 1/4"
Electrode Spacing:	Not Recorded	Not Recorded
Nozzle / Cup Size:	Not Recorded	Not Recorded

[1]**Revision 1:** Review and update to the current edition of the ASME code.

PROCEDURE QUALIFICATION RECORD (PQR) QW-483
(Section IX, ASME Boiler and Pressure Vessel Code)

PQR # SAS-2-3 Revision 1

Tensile Test
QW-462

Specimen No.	Width (in)	Thickness (in)	Area (in^2)	Ultimate Total Load (lbs)	Ultimate Unit Stress (ksi)	Type of Failure & Location
			(Not Applicable)			

Guided Bend Tests
QW-462

Specimen No.	Type	Figure	Result
		(Not Applicable)	

Toughness Tests
QW-170

Specimen No.	Notch Location	Notch Type	Qual. Temp	Full Size Values (ft-lbs)	% Shear	Lateral Exp Inches	Drop Weight Break	Drop Weight No Brk
BH-1	Weld	V-Notch	-50°F	94	60	0.064	-----	-----
BH-2	Weld	V-Notch	-50°F	105	70	0.063	-----	-----
BH-3	Weld	V-Notch	-50°F	115	80	0.072	-----	-----
BH-4	HAZ	V-Notch	-50°F	74	40	0.046	-----	-----
BH-5	HAZ	V-Notch	-50°F	68	30	0.044	-----	-----
BH-6	HAZ	V-Notch	-50°F	83	----**	----**	-----	-----

**Shear and Lateral Expansion not recorded – specimen did not break

Fillet-Weld Tests
Not Applicable

Result-Satisfactory: **Yes** _____ **No** _____ Pen. into Parent Material: **Yes** ___ **No** _____
Macro-Results:

Other Tests

Type of Test: Not Applicable
Other: Not Applicable

Welder's Name: Keith Breedon **Reg. No.:** W-11618 **Stamp ID:** BH
Tests Conducted By: Qualimet **Lab. Test No.:** 636-13001
Revised By: Qualimet

We hereby recertify that the statements in this record have been revised in accordance with paragraph QW-200.2 are correct and that the test welds were prepared, welded, and tested in accordance with the requirements of Section IX of the ASME Code.

Manufacturer: Sub-Arc Systems Inc.
Original Cert. Date: January 20, 2014 **By:** Gary Kohlman
Recertification Date: October 3, 2014 **By:** Gary Kohlman

Qualimet

• 8055 CORONET ROAD, EDMONTON, AB T6E 4N7 • (780) 469-5870 • FAX (780) 465-5829
• CALGARY (403) 278-9862 • 1-800-621-8979 • www.qualimet.ca

"Your source of Quality Materials Engineering"

CHARPY IMPACT TEST REPORT

for Procedure Qualification Record # SAS-2-3

Client:	Sub-Arc Systems Inc.	**Job Number:**	636-13001
Address:	4605-47 Street Vermillion AB T9X 1L6	**Date:**	January 20, 2014
Materials:	SA-516 Grade 60/70 to SA-516 Grade 60/70		
Size:	1.000" w.t. Plate	**Condition:**	As Welded
Test Specification:	ASME Section IX, ASME Section VIII UG-84, ASTM A-370		
Test Equipment:	Satec Model S1-10, S/N: 1164		

Specimen Type:	Charpy V-Notch
Qualification Temperature:	-50.0°F
Test Temperature:	-50.0°F

Specimen Size (mm): 10

Sample Set	Sample Number	Actual Impact Energy (ft-lb)	Full Size (ft-lb)	Shear (%)	Lateral Expansion Inches
Weld (includes all processes)	BH-1	94	94	60	0.064
	BH-2	105	105	70	0.063
	BH-3	115	115	80	0.072
	Average:	**105**	**105**	**70**	**0.066**

We certify that the statements in this record are acceptable and that the specimen(s) were prepared and tested in accordance with the requirements of the current edition of ASTM A370, ASTM E23 and their latest editions.

TEST RESULTS CERTIFIED BY: Qualimet

Hanibal Ghile, E.I.T.

Qualimet

• 8055 CORONET ROAD, EDMONTON, AB T6E 4N7 • (780) 469-5870 • FAX (780) 465-5829
• CALGARY (403) 278-9862 • 1-800-621-8979 • www.qualimet.ca

"Your source of Quality Materials Engineering"

CHARPY IMPACT TEST REPORT

for Procedure Qualification Record # SAS-2-3

Client:	Sub-Arc Systems Inc.	**Job Number:**	636-13001
Address:	4605-47 Street Vermillion AB T9X 1L6	**Date:**	January 20, 2014
Materials:	SA-516 Grade 60/70 to SA-516 Grade 60/70		
Size:	1.000" w.t. Plate	**Condition:**	As Welded
Test Specification:	ASME Section IX, ASME Section VIII UG-84, ASTM A-370		
Test Equipment:	Satec Model S1-10, S/N: 1164		

Specimen Type:	Charpy V-Notch
Qualification Temperature:	-50.0°F
Test Temperature:	-50.0°F

Specimen Size (mm): 10

Sample Set	Sample Number	Actual Impact Energy (ft-lb)	Full Size (ft-lb)	Shear (%)	Lateral Expansion Inches
HAZ	BH-4	74	74	40	0.046
	BH-5	68	68	30	0.044
	BH-6	83	83	-----**	-----**
	Average:	**75**	**75**	-----**	-----**

**Shear and Lateral Expansion not recorded – specimen did not break

We certify that the statements in this record are acceptable and that the specimen(s) were prepared and tested in accordance with the requirements of the current edition of ASTM A370, ASTM E23 and their latest editions.

TEST RESULTS CERTIFIED BY: Qualimet

Hanibal Ghile, E.I.T.

PROCEDURE QUALIFICATION RECORD (PQR) QW-483

(Section IX, ASME Boiler and Pressure Vessel Code)

Company Name:	Sub-Arc Systems Inc.	**By:**	Gary Kohlman
PQR No.:	SAS-2-4	**Date:**	January 20, 2014
Revision No.:	1[1]	**Revision Date:**	October 3, 2014
Welding Process(es):	SAW / SAW	**Type(s):**	Machine / Machine

JOINTS QW-402

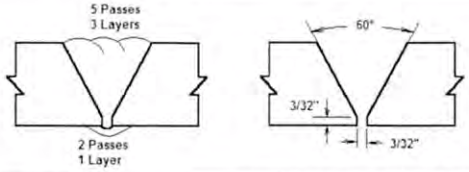

BASE METALS QW-403				POSTWELD HEAT TREATMENT QW-407	
Material Spec.:	SA-516		SA-516	**Temperature:**	
Grade/Type/Class:	Grade 60/70		Grade 60/70	**Time:**	
P-No. Group No.:	P-1 Group 1/2	**to**	P-1 Group 1/2	**Heating:**	***(None – As Welded)***
Heat No.:	53293		53293	**Cooling:**	
Carbon Equivalent (ASME):	0.39		0.39	**Other:**	
Carbon Equivalent (CSA):	0.39		0.39		
Thickness & Diameter:	0.249" w.t. Plate (machined)				
Max Weld Deposit:	<0.500" per pass				

PREHEAT QW-406		POSITIONS QW-405		
Preheat Temp. Min.:	50°F	**Process:**	**SAW (Leading)**	**SAW (Trailing)**
Interpass Temp. Max.:	550°F	**Position:**	2-G	2-G
Interpass Temp. Min.:	50°F	**Progression:**	Horizontal	Horizontal
Other:	Temperature monitored using tempilstiks	**Other:**	Not Applicable	Not Applicable

FILLER METALS QW-404		
Process:	**SAW (Leading)**	**SAW (Trailing)**
SFA Specification No.:	5.17	5.17
AWS Classification No.:	EM12K-H8	EM12K-H8
F-No.:	F-6	F-6
A-No.:	A-1	A-1
Size of Filler Metal:	3/32"	3/32"
Deposited Weld Metal:	0.125"	0.125"
Manufacturer:	Lincoln Electric	Lincoln Electric
Trade Name:	LA-61	LA-61
Heat / Lot Number:	Not Recorded	Not Recorded
Electrode-Flux (Class):	F7A6-EM12K-H8	F7A6-EM12K-H8
Flux Tradename:	Lincolnweld 882 Flux	Lincolnweld 882 Flux
Flux Heat / Lot Number.:	Not Recorded	Not Recorded
Product Form:	Coiled Solid Wire	Coiled Solid Wire

SHIELDING GAS QW-408		
Shielding Gas:		
Composition:	***(Not Applicable)***	***(Not Applicable)***
Flow Rate:		
Backing Gas:		

ELECTRICAL CHARACTERISTICS QW-409		
Current:	Direct (DC)	Direct (DC)
Polarity:	Reverse (EP)	Reverse (EP)
Volts:	30	30
Amps:	420	420
Travel Speed (ipm):	25.0	25.0
Maximum Heat Input (J/in):	30 240	30 240

TECHNIQUE QW-410		
String or Weave:	String	String
Oscillation:	Not Applicable	Not Applicable
Single / Multi Pass:	Multiple Passes from both sides	
Single / Multi Electrodes:	Multi	Multi
Wire Stick Out:	1/4" to 1 1/4"	1/4" to 1 1/4"
Electrode Spacing:	Not Recorded	Not Recorded
Nozzle / Cup Size:	Not Recorded	Not Recorded

[1]**Revision 1:** Review and update to the current edition of the ASME code.

PROCEDURE QUALIFICATION RECORD (PQR) QW-483

(Section IX, ASME Boiler and Pressure Vessel Code)

PQR # SAS-2-4 Revision 1

Tensile Test

QW-462

Specimen No.	Width (in)	Thickness (in)	Area (in^2)	Ultimate Total Load (lbs)	Ultimate Unit Stress (ksi)	Type of Failure & Location
			(Not Applicable)			

Guided Bend Tests

QW-462

Specimen No.	Type	Figure	Result
		(Not Applicable)	

Toughness Tests

QW-170

Specimen No.	Notch Location	Notch Type	Qual. Temp	Full Size Values (ft-lbs)	% Shear	Lateral Exp Inches	Drop Weight Break	Drop Weight No Brk
BG-1	Weld	V-Notch	-50°F	104	80	0.078	----	----
BG-2	Weld	V-Notch	-50°F	81	70	0.060	----	----
BG-3	Weld	V-Notch	-50°F	77	70	0.058	----	----
BG-4	HAZ	V-Notch	-50°F	40	30	0.027	----	----
BG-5	HAZ	V-Notch	-50°F	35	30	0.024	----	----
BG-6	HAZ	V-Notch	-50°F	46	40	0.033	----	----

Fillet-Weld Tests

Not Applicable

Result-Satisfactory: **Yes** _____ **No** _____ Pen. into Parent Material: **Yes** ___ **No** _____

Macro-Results:

Other Tests

Type of Test: Not Applicable

Other: Not Applicable

Welder's Name: Keith Breedon **Reg. No.:** W-11618 **Stamp ID:** BG

Tests Conducted By: Qualimet **Lab. Test No.:** 636-13001

Revised By: Qualimet

We hereby recertify that the statements in this record have been revised in accordance with paragraph QW-200.2 are correct and that the test welds were prepared, welded, and tested in accordance with the requirements of Section IX of the ASME Code.

Manufacturer: Sub-Arc Systems Inc.

Original Cert. Date: January 20, 2014 **By:** Gary Kohlman

Recertification Date: October 3, 2014 **By:** Gary Kohlman

Qualimet

• 8055 CORONET ROAD, EDMONTON, AB T6E 4N7 • (780) 469-5870 • FAX (780) 465-5829
• CALGARY (403) 278-9862 • 1-800-621-8979 • www.qualimet.ca
"Your source of Quality Materials Engineering"



CHARPY IMPACT TEST REPORT

for Procedure Qualification Record # SAS-2-4

Client:	Sub-Arc Systems Inc.	**Job Number:**	636-13001
Address:	4605-47 Street Vermillion AB T9X 1L6	**Date:**	January 20, 2014
Materials:	SA-516 Grade 60/70 to SA-516 Grade 60/70		
Size:	0.249" w.t. Plate (machined)	**Condition:**	As Welded
Test Specification:	ASME Section IX, ASME Section VIII UG-84, ASTM A-370		
Test Equipment:	Satec Model S1-10, S/N: 1164		

Specimen Type:	Charpy V-Notch
Qualification Temperature:	-50.0°F
Test Temperature:	-50.0°F

Specimen Size (mm): 5.2

Sample Set	Sample Number	Actual Impact Energy (ft-lb)	Full Size (ft-lb)	Shear (%)	Lateral Expansion Inches
Weld (includes all processes)	BG-1	54	104	80	0.078
	BG-2	42	81	70	0.060
	BG-3	40	77	70	0.058
	Average:	**45**	**87**	**73**	**0.065**

We certify that the statements in this record are acceptable and that the specimen(s) were prepared and tested in accordance with the requirements of the current edition of ASTM A370, ASTM E23 and their latest editions.

TEST RESULTS CERTIFIED BY: Qualimet

Hanibal Ghile, E.I.T.

Qualimet

• 8055 CORONET ROAD, EDMONTON, AB T6E 4N7 • (780) 469-5870 • FAX (780) 465-5829
• CALGARY (403) 278-9862 • 1-800-621-8979 • www.qualimet.ca

"Your source of Quality Materials Engineering"



CHARPY IMPACT TEST REPORT

for Procedure Qualification Record # SAS-2-4

Client:	Sub-Arc Systems Inc.	**Job Number:**	636-13001
Address:	4605-47 Street Vermillion AB T9X 1L6	**Date:**	January 20, 2014
Materials:	SA-516 Grade 60/70 to SA-516 Grade 60/70		
Size:	0.249" w.t. Plate (machined)	**Condition:**	As Welded
Test Specification:	ASME Section IX, ASME Section VIII UG-84, ASTM A-370		
Test Equipment:	Satec Model S1-10, S/N: 1164		

Specimen Type:	Charpy V-Notch
Qualification Temperature:	-50.0°F
Test Temperature:	-50.0°F

Specimen Size (mm): 5.2

Sample Set	Sample Number	Actual Impact Energy (ft-lb)	Full Size (ft-lb)	Shear (%)	Lateral Expansion Inches
HAZ	BG-4	21	40	30	0.027
	BG-5	18	35	30	0.024
	BG-6	24	46	40	0.033
	Average:	**21**	**40**	**33**	**0.028**

We certify that the statements in this record are acceptable and that the specimen(s) were prepared and tested in accordance with the requirements of the current edition of ASTM A370, ASTM E23 and their latest editions.

TEST RESULTS CERTIFIED BY: Qualimet

Hanibal Ghile, E.I.T.

Item 6 – Welding Consumable

Contents

1. N/A

Item 7 – Foundation

Contents

1. Foundation Acceptance Report

Inukshuk Construction Limited
Industrial Contracting Project Management

PO Box 654
Rankin Inlet, NU X0C 0G0
T 867.645.4030 F 867.645.4064

Item 7 - Foundation Acceptance Report

PROJECT #:	AEM Tank #2 Pad Sand Grade
PROJECT TITLE:	AEM Tank Farm
SITE:	Rankin Inlet , NU
Date:	July 28, 2017

No.	Northing	Easting	Elevation	Description
1	6963697.448	546007.935	0.000	270
3	6963726.036	546030.269	0.000	90
4	6963722.909	546004.808	0.000	180
2	6963700.575	546033.396	0.000	0
5	6963711.742	546019.102	0.000	center
11	6963648.504	546002.922	7.816	BM1
12	6963667.273	546022.542	7.956	BM2
20	6963662.458	546016.328	6.718	nail
100	6963711.698	546019.037	8.233	PAD
101	6963715.178	546021.045	8.198	PAD
102	6963713.312	546022.745	8.196	PAD
103	6963711.476	546023.032	8.194	PAD
104	6963709.701	546022.557	8.188	PAD
105	6963708.140	546020.837	8.186	PAD
106	6963707.859	546017.903	8.193	PAD
107	6963709.297	546015.856	8.194	PAD
108	6963711.861	546015.038	8.188	PAD
109	6963714.849	546016.565	8.188	PAD
110	6963718.123	546014.307	8.164	PAD
111	6963719.743	546019.425	8.167	PAD
112	6963717.700	546024.421	8.164	PAD
113	6963714.725	546026.494	8.158	PAD
114	6963709.295	546026.704	8.164	PAD

Inukshuk Construction Limited
Industrial Contracting Project Management

PO Box 654
Rankin Inlet, NU X0C 0G0
T 867.645.4030 F 867.645.4064

Item 7 - Foundation Acceptance Report

115	6963705.182	546023.754	8.164	PAD
116	6963703.695	546019.525	8.166	PAD
117	6963704.779	546015.018	8.170	PAD
118	6963708.409	546011.772	8.164	PAD
119	6963706.886	546008.105	8.134	PAD
120	6963712.083	546007.038	8.128	PAD
121	6963717.635	546008.628	8.128	PAD
122	6963721.388	546011.970	8.128	PAD
123	6963723.540	546017.010	8.133	PAD
124	6963723.302	546022.515	8.134	PAD
125	6963720.466	546027.280	8.131	PAD
126	6963716.145	546030.254	8.124	PAD
127	6963710.646	546031.041	8.126	PAD
128	6963705.524	546029.362	8.128	PAD
129	6963701.923	546026.064	8.134	PAD
130	6963700.029	546021.916	8.130	PAD
131	6963699.785	546017.655	8.136	PAD
132	6963701.338	546013.053	8.131	PAD
133	6963704.648	546009.354	8.126	PAD
134	6963701.326	546004.827	8.084	PAD → outter
135	6963698.560	546007.256	8.080	PAD
136	6963696.498	546010.177	8.075	PAD
137	6963694.887	546013.707	8.082	PAD
138	6963694.193	546017.025	8.079	PAD
139	6963694.063	546020.096	8.084	PAD
140	6963694.529	546023.186	8.087	PAD
141	6963695.624	546026.381	8.087	PAD
142	6963697.302	546029.256	8.083	PAD
143	6963699.509	546031.814	8.086	PAD

Inukshuk Construction Limited
Industrial Contracting Project Management

PO Box 654
Rankin Inlet, NU X0C 0G0
T 867.645.4030 F 867.645.4064

Item 7 - Foundation Acceptance Report

144	6963702.622	546034.180	8.086	PAD
145	6963706.256	546035.852	8.082	PAD
146	6963710.155	546036.642	8.083	PAD
147	6963714.305	546036.546	8.087	PAD
148	6963718.009	546035.606	8.082	PAD
149	6963721.614	546033.677	8.077	PAD
150	6963724.642	546031.096	8.073	PAD
151	6963727.047	546027.824	8.079	PAD
152	6963728.664	546024.091	8.078	PAD
153	6963729.355	546020.065	8.080	PAD
154	6963729.081	546015.944	8.078	PAD
155	6963727.801	546011.792	8.075	PAD
156	6963725.881	546008.572	8.080	PAD
157	6963723.215	546005.675	8.078	PAD
158	6963720.263	546003.644	8.078	PAD
159	6963716.126	546001.962	8.080	PAD
160	6963712.384	546001.478	8.075	PAD
161	6963708.257	546001.727	8.079	PAD
162	6963704.537	546002.941	8.085	PAD
163	6963701.310	546004.821	8.088	PAD

Tank Pad #2 Sand Top Elevations

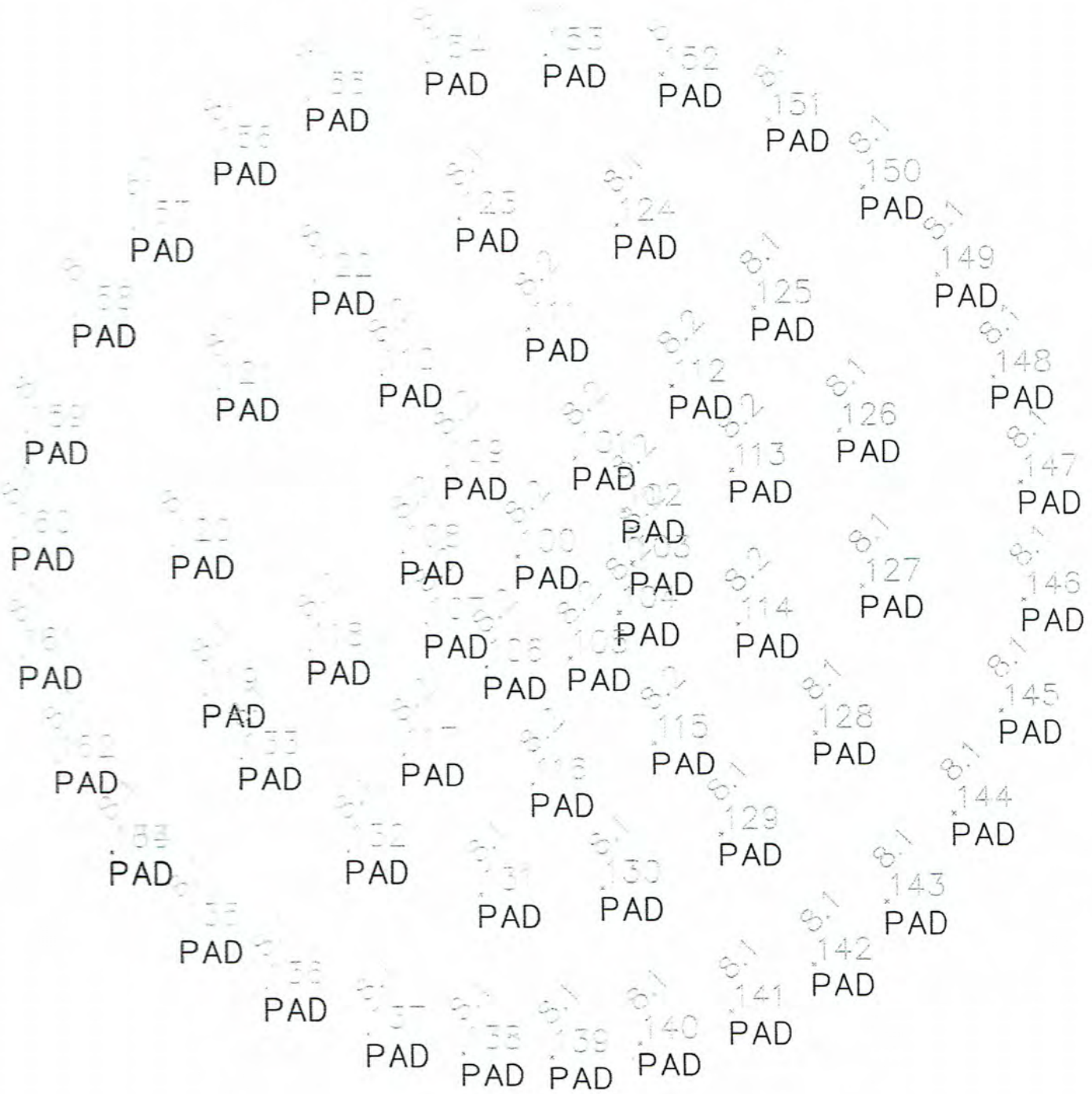

Item 8 – Floor

Contents

1. MTR
2. Weld Map
3. Visual Report
4. Vacuum Box Test Report

SSAB

12400 Highway 43 North, Axis, Alabama 36505, US

Test Certificate

Item 8 - Floor - MTR

Form TC1: Revision 2: Date 23 Apr 2014

Customer:
SAMUEL, SON & CO. LTD
1250 APPLEBY LINE

BURLINGTON
ON L7L5G6

Customer P.O.No.: C41966 & 41-490196 | **Mill Order No.** 41-491119-13 | **Shipping Manifest:** AR240131

Product Description: CSA G40.21(2013) 38WT/260WT - CAT 5;LCVN 15FT.LBS,TCVN13FT.LBS@-45F/A673-P ALLOYS API650(12TH ED) TABLE 4-1 GR.IIIA NORMALIZED

Ship Date: 21 Feb 17
Cert Date: 21 Feb 17

Cert No: 081597448
(Page 1 of 2)

Size: 0.250 X 120.0 X 480.0 (IN)

Tested Pieces:				Tensiles:					Hardness	Charpy Impact Tests									
Heat Id	Piece Id	Tested Thickness	Tst Loc	YS (KSI)	UTS (KSI)	%RA	Elong % 2in 8in	Tst Dir		Abs. Energy(FTLB) 1	2	3	Avg	% Shear 1	2	3	Avg	Tst Tmp	Tst Dir	Tst Siz (mm)	BDWTT Tmp %Shr
E7B102	E11	0.256 (DISCRT)	C							33	44	37	38					-50F	L	5.0	
			C							35	27	34	32					-50F	T	5.0	
E7B102	E12	0.256 (DISCRT)	C							39	40	36	38					-50F	L	5.0	
			C							27	25	22	25					-50F	T	5.0	
E7B102	E13	0.255 (DISCRT)	C	55	76		26	T		35	34	30	33					-50F	L	5.0	
			C							27	44	41	37					-50F	T	5.0	
E7B102	E14	0.256 (DISCRT)	C	55	75		24	T		56	41	58	52					-50F	L	5.0	
			C							27	32	30	30					-50F	T	5.0	
W7B598	E06	0.256 (DISCRT)	C							30	30	30	30					-50F	L	5.0	
			C							37	27	23	29					-50F	T	5.0	
W7B598	E07	0.256 (DISCRT)	C	52	72		25	T													
W7B598	E08	0.256 (DISCRT)	C	51	71		25	T													
W7B598	E10	0.256 (DISCRT)	C							32	40	31	34					-50F	L	5.0	
			C							28	34	28	30					-50F	T	5.0	

Chemical Analysis

Heat Id	C	Mn	P	S	Si	Tot Al	Sol Al	Cu	Ni	Cr	Mo	Cb	V	Ti	B	N	ORGN
E7B102	.18	.94	.009	.001	.25	.027	.025	.26	.12	.11	.05	.002	.005	.011	.0002	.0076	USA
W7B598	.18	.92	.009	.001	.24	.028	.022	.26	.13	.08	.05	.001	.004	.011	.0002	.0078	USA

KILLED STEEL
MERCURY IS NOT A METALLURGICAL COMPONENT OF THE STEEL AND NO MERCURY WAS INTENTIONALLY ADDED DURING THE MANUFACTURE OF THIS PRODUCT.
KILLED STEEL, PRODUCED TO A FINE GRAIN PRACTICE
MTR EN 10204:2004 INSPECTION CERTIFICATE 3.1 COMPLIANT
CHARPY FULL SIZE EQUIVALENT = ABSORBED ENERGY AVG X 10 / TEST SIZE IN MM
NORMALIZED PLATES. HEATED AT 1665F FOR 14 MINUTES.
TEST COUPONS TAKEN FROM HEAT TREATED PLATE.
PRODUCTS SHIPPED:

W7B598 E06	6705201	PCES:	1,	LBS:	4084	W7B598 E06	6705200	PCES:	1,	LBS:	4084
E7B102 E14	6705250	PCES:	1,	LBS:	4084	E7B102 E14	6705249	PCES:	1,	LBS:	4084
E7B102 E13	6705243	PCES:	1,	LBS:	4084	E7B102 E12	6705236	PCES:	1,	LBS:	4084
E7B102 E13	6705244	PCES:	1,	LBS:	4084	W7B598 E06	6705199	PCES:	1,	LBS:	4084
E7B102 E12	6705235	PCES:	1,	LBS:	4084	E7B102 E13	6705234	PCES:	1,	LBS:	4084
E7B102 E11	6705193	PCES:	1,	LBS:	4084	E7B102 E11	6705190	PCES:	1,	LBS:	4084

(P) Cust Part #:

WE HEREBY CERTIFY THAT THIS MATERIAL WAS TESTED IN ACCORDANCE WITH, AND MEETS THE REQUIREMENTS OF, THE APPROPRIATE SPECIFICATION

Justin Ward +1 251 662 4400
SENIOR METALLURGIST - PRODUCT

SSAB

Test Certificate

12400 Highway 43 North, Axis, Alabama 36505, US

Item 8 - Floor - MTR

Form TC1: Revision 2: Date 23 Apr 2014

Customer:
SAMUEL, SON & CO. LTD
1250 APPLEBY LINE

BURLINGTON
ON L7L5G6

Customer P.O.No.: C41966 & 41-490196 | **Mill Order No.** 41-491119-13 | **Shipping Manifest:** AR240131

Product Description: CSA G40.21(2013) 38WT/260WT - CAT 5;LCVN 15FT.LBS,TCVN13FT.LBS@-45F/A673-P ALLOYS API650(12TH ED) TABLE 4-1 GR.IIIA NORMALIZED

Ship Date: 21 Feb 17
Cert Date: 21 Feb 17

Cert No: 081597448
(Page 2 of 2)

Size: 0.250 X 120.0 X 480.0 (IN)

Tested Pieces:				Tensiles:						Charpy Impact Tests							
Heat Id	Piece Id	Tested Thickness	Tst Loc	YS (KSI)	UTS (KSI)	%RA	Elong % 2in 8in	Tst Dir	Hardness	Abs. Energy(FTLB) 1 2 3 Avg	% Shear 1 2 3 Avg	Tst Tmp	Tst Dir	Tst Siz (mm)	BDWTT Tmp %Shr
W7B598 E10	6705178	PCES:	1, LBS:	4084					E7B102 E11	6705183	PCES:	1, LBS:	4084				
W7B598 E10	6705177	PCES:	1, LBS:	4084					W7B598 E10	6705181	PCES:	1, LBS:	4084				
W7B598 E10	6705179	PCES:	1, LBS:	4084					W7B598 E10	6705189	PCES:	1, LBS:	4084				
W7B598 E10	6705186	PCES:	1, LBS:	4084					E7B102 E11	6705172	PCES:	1, LBS:	4084				
E7B102 E11	6705176	PCES:	1, LBS:	4084					W7B598 E10	6705180	PCES:	1, LBS:	4084				
E7B102 E11	6705192	PCES:	1, LBS:	4084					E7B102 E11	6705194	PCES:	1, LBS:	4084				
E7B102 E11	6705184	PCES:	1, LBS:	4084					E7B102 E11	6705185	PCES:	1, LBS:	4084				
W7B598 E06	6705207	PCES:	1, LBS:	4084					W7B598 E06	6705206	PCES:	1, LBS:	4084				
E7B102 E12	6705239	PCES:	1, LBS:	4084					E7B102 E12	6705231	PCES:	1, LBS:	4084				
E7B102 E14	6705247	PCES:	1, LBS:	4084					E7B102 E13	6705242	PCES:	1, LBS:	4084				
E7B102 E14	6705248	PCES:	1, LBS:	4084					E7B102 E12	6705237	PCES:	1, LBS:	4084				
W7B598 E06	6705209	PCES:	1, LBS:	4084					E7B102 E13	6705240	PCES:	1, LBS:	4084				
E7B102 E12	6705238	PCES:	1, LBS:	4084					W7B598 E06	6705198	PCES:	1, LBS:	4084				
E7B102 E14	6705251	PCES:	1, LBS:	4084					W7B598 E06	6705197	PCES:	1, LBS:	4084				
E7B102 E13	6705241	PCES:	1, LBS:	4084					E7B102 E12	6705230	PCES:	1, LBS:	4084				

(P) Cust Part #:

WE HEREBY CERTIFY THAT THIS MATERIAL WAS TESTED IN ACCORDANCE WITH, AND MEETS THE REQUIREMENTS OF, THE APPROPRIATE SPECIFICATION

Justin Ward +1 251 662 4400
SENIOR METALLURGIST - PRODUCT

Item 8 - Floor - Weld Map

PARTS LIST			
ITEM	QTY	DESCRIPTION	MATERIAL
F2A	37	PL 6.35 X 3048 X 6096	G40.21M-260WT
F2B	2	PL 6.35 X 3048 X 2514	G40.21M-260WT
F2C	4	PL 6.35 X 3048 X 5480	G40.21M-260WT
F2D	4	PL 6.35 X 3048 X 1931	G40.21M-260WT
F2E	4	PL 6.35 X 3048 X3866	G40.21M-260WT
F2F	4	PL 6.35 X 3048 X 5094	G40.21M-260WT
F2G	4	PL 6.35 X 3048 X 5895	G40.21M-260WT
F2H	4	PL 6.35 X 3048 X 5485	G40.21M-260WT
F2I	4	PL 6.35 X 3131 X 845	G40.21M-260WT
F2J	2	PL 6.35 X 838 X 6096	G40.21M-260WT

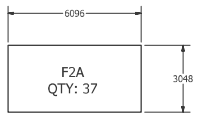

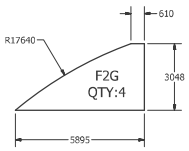

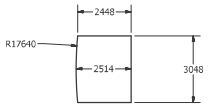

F2B
QTY: 2

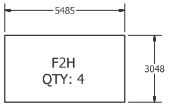

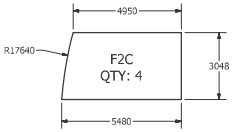

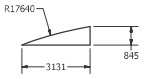

F2I
QTY: 4

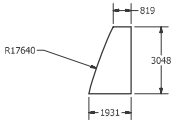

F2D
QTY: 4

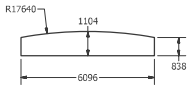

F2J
QTY: 2

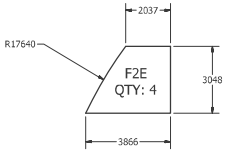

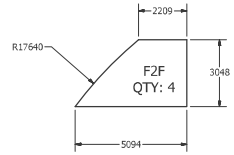

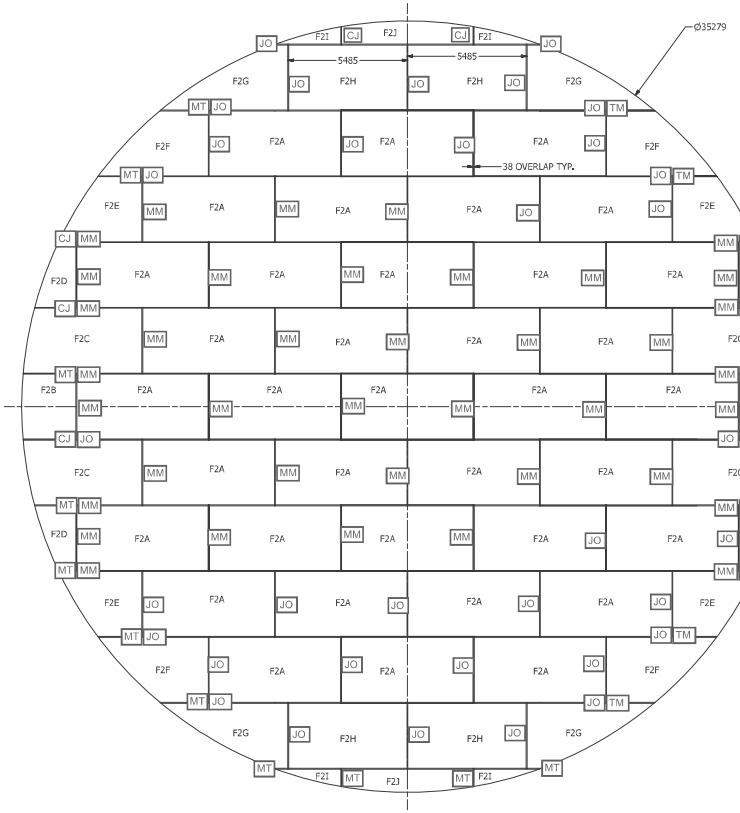

TANK 2 (13.5ML) FLOOR LAYOUT
SCALE 1 / 100

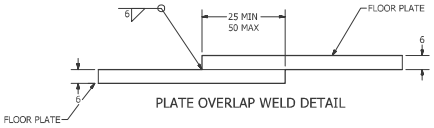

PLATE OVERLAP WELD DETAIL

NOTE - PER API-650 5.1.5.4 - BOTTOM PLATES UNDER THE SHELL SHALL HAVE THE OUTER ENDS OF THE JOINTS FITTED AND LAP-WELDED TO FORM A SMOOTH BEARING SURFACE.

19-Jul-2017
Permit Number: P471

DRAWN	JACOB SAUNDERS	1/10/2017	TK #2 (13.5ML) - FLOOR LAYOUT
CHECKED	MARC LOSIER	3/14/2017	
QA			TITLE: MELIADINE FIELD ERECTED TANKS - TANK #2 (13.5ML) FLOOR AND ROOF LAYOUT
MFG			
APPROVED			

SIZE A1 | DWG NO 295-M2 | REV 1
SCALE 1 / 100 | SHEET 1 OF 2

Sub-Arc Systems Inc.

4605-47 Street
Vermillion, AB, T9X 1L6
780-608-9589

Exhibit 15c, Rev 1

QUALITY CONTROL MANUAL

VISUAL TEST REPORT

Customer: Agnico Eagle

Location: Rankin Inlet

Code Requiring Test: API 650 (section 8.5.2) Reason for Test: New Construction

A weld shall be acceptable by visual examination if the inspection shows the following.

a) There are no crater cracks, other surface cracks or arc strikes in or adjacent to the welded joints.
b) Maximum permissible undercut is 0.4 mm (1/64 in.) in depth for vertical butt joints, vertically oriented permanent attachments, attachment welds for nozzles, manholes, flush-type openings, and the inside shell-to-bottom welds. For horizontal butt joints, horizontally oriented permanent attachments, and annular-ring butt joints, the maximum permissible undercut is 0.8 mm (1/32 in.) in depth.
c) The frequency of surface porosity in the weld does not exceed one cluster (one or more pores) in any 100 mm (4 in.) of length, and the diameter of each cluster does not exceed 2.5 mm (3/32 in.).
d) The reinforcement of the welds on all thicknesses:

Plate Thickness mm (in.)	Maximum Reinforcement Thickness mm (in.)	
	Vertical Joints	Horizontal Joints
≤ 13 (1/2)	2.5 (3/32)	3 (1/8)
> 13 (1/2) to 25 (1)	3 (1/8)	5 (3/16)
> 25 (1)	5 (3/16)	6 (1/4)

Surface Condition (As Welded)

Test Solution: N/A Test Date(s):

Tested by: Ambient Conditions:

Items Tested:

FLOOR WELDS.

Results:

ALL FLOOR WELD VISUALY TESTED. ALL WELDS ACCEPTABLE.

Sub-Arc Representative Signature: _____ Date: Aug 31/17

Client Representative Signature: Glen Boivin Date: Sept 04/17

Client Signature: _____ Date: _____

Sub-Arc Systems Inc.

4605-47 Street
Vermillion, AB, T9X 1L6
780-608-9589

QUALITY CONTROL MANUAL

Exhibit 14, Rev 1

VACUUM BOX TEST REPORT – FLOOR PLATE WELDS

Customer: AGNICO EAGLE

Location: RANKIN INLET TANK #2

Equipment Tag No.: N/A

Equipment Description: N/A

Code Requiring Test: API 650 Reason for Test: New Construction

(A vacuum box/soap solution test for floor plate weld seams is required for new construction or major alterations, no visible leaks should be observed)

Test Solution: Water / Snoop Ambient Conditions: 10°

Test Date(s): AUG 7/17 Surface Condition: CLEAN

Tested by: MATT MACKENZIE Surface Test Temperature: 10°

Pressure Gauge:

Items Tested:

FLOOR WELDS.

Results:

ALL FLOOR WELDS WERE VACUMM BOX TESTED
ONE LEAK WAS DETECTED. AREA WAS FIXED, THEN RE-TESTED.
NO FURTHER LEAKS WERE FOUND.

Sub-Arc Representative Signature: _____ Date: Aug 7/17

Client Representative Signature: _____ Date: _____

Client Signature: Clem Bonin CLEM BONIN Date: aug 23/17

Item 9 – Shell to Floor Seams

Contents

1. Initial and Final Pass Weld Map
2. Visual Report
3. Diesel Test – Leak Test Report

Item 9 - Shell to Floor Seams - Initial and Final Pass Weld Map

Inside shell to floor first pass MM
Inside shell to floor final pass JO

PARTS LIST			
ITEM	QTY	DESCRIPTION	MATERIAL
F2A	37	PL 6.35 X 3048 X 6096	G40.21M-260WT
F2B	2	PL 6.35 X 3048 X 2514	G40.21M-260WT
F2C	4	PL 6.35 X 3048 X 5480	G40.21M-260WT
F2D	4	PL 6.35 X 3048 X 1931	G40.21M-260WT
F2E	4	PL 6.35 X 3048 X3866	G40.21M-260WT
F2F	4	PL 6.35 X 3048 X 5094	G40.21M-260WT
F2G	4	PL 6.35 X 3048 X 5895	G40.21M-260WT
F2H	4	PL 6.35 X 3048 X 5485	G40.21M-260WT
F2I	4	PL 6.35 X 3131 X 845	G40.21M-260WT
F2J	2	PL 6.35 X 838 X 6096	G40.21M-260WT

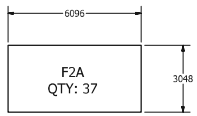

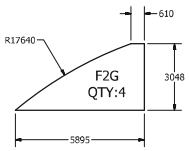

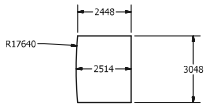

F2B
QTY: 2

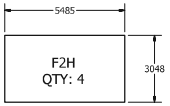

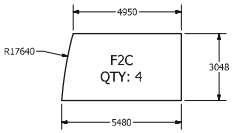

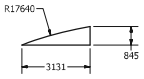

F2I
QTY: 4

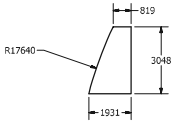

F2D
QTY: 4

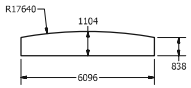

F2J
QTY: 2

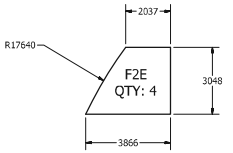

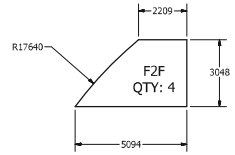

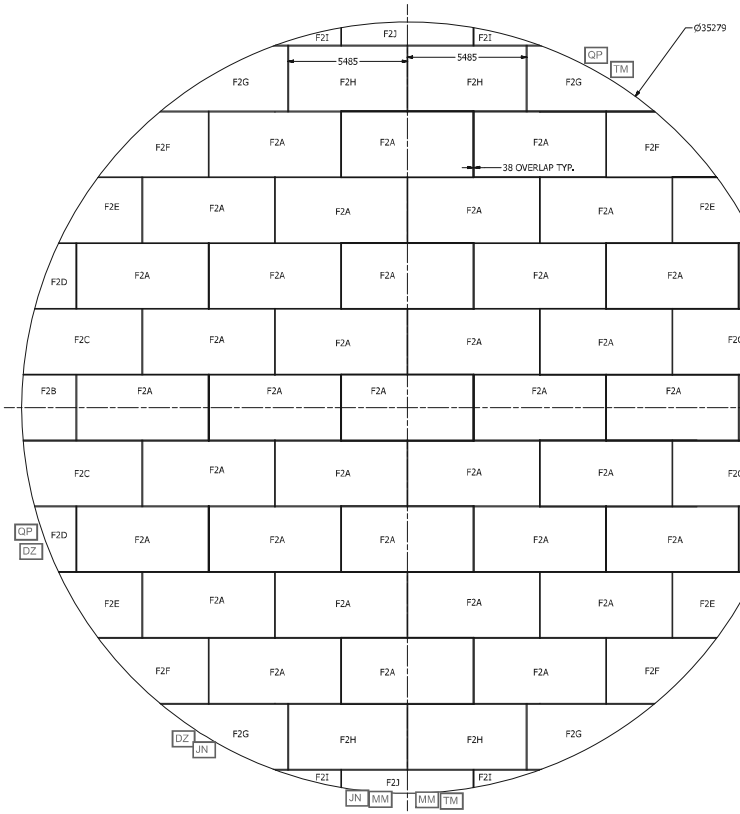

TANK 2 (13.5ML) FLOOR LAYOUT
SCALE 1 / 100

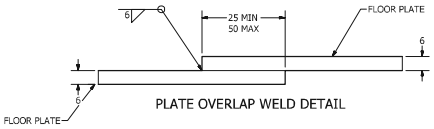

PLATE OVERLAP WELD DETAIL

NOTE - PER API-650 5.1.5.4 - BOTTOM PLATES UNDER THE SHELL SHALL HAVE THE OUTER ENDS OF THE JOINTS FITTED AND LAP-WELDED TO FORM A SMOOTH BEARING SURFACE.

19-Jul-2017
Permit Number: P471

DRAWN	JACOB SAUNDERS	1/10/2017	TK #2 (13.5ML) - FLOOR LAYOUT
CHECKED	MARC LOSIER	3/14/2017	
QA			TITLE: MELIADINE FIELD ERECTED TANKS - TANK #2 (13.5ML) FLOOR AND ROOF LAYOUT
MFG			
APPROVED			

SIZE A1 | DWG NO 295-M2 | REV 1
SCALE 1 / 100 | SHEET 1 OF 2

Sub-Arc Systems Inc.

4605-47 Street
Vermillion, AB, T9X 1L6
780-608-9589

QUALITY CONTROL MANUAL

Exhibit 15c, Rev 1

VISUAL TEST REPORT

Customer: Agnico Eagle

Location: Rankin Inlet

Code Requiring Test: API 650 (section 8.5.2) Reason for Test: New Construction

A weld shall be acceptable by visual examination if the inspection shows the following.

a) There are no crater cracks, other surface cracks or arc strikes in or adjacent to the welded joints.
b) Maximum permissible undercut is 0.4 mm (1/64 in.) in depth for vertical butt joints, vertically oriented permanent attachments, attachment welds for nozzles, manholes, flush-type openings, and the inside shell-to-bottom welds. For horizontal butt joints, horizontally oriented permanent attachments, and annular-ring butt joints, the maximum permissible undercut is 0.8 mm (1/32 in.) in depth.
c) The frequency of surface porosity in the weld does not exceed one cluster (one or more pores) in any 100 mm (4 in.) of length, and the diameter of each cluster does not exceed 2.5 mm (3/32 in.).
d) The reinforcement of the welds on all thicknesses:

Plate Thickness mm (in.)	Maximum Reinforcement Thickness mm (in.)	
	Vertical Joints	Horizontal Joints
≤ 13 (1/2)	2.5 (3/32)	3 (1/8)
> 13 (1/2) to 25 (1)	3 (1/8)	5 (3/16)
> 25 (1)	5 (3/16)	6 (1/4)

Surface Condition (As Welded)

Test Solution: N/A Test Date(s): Aug 18/17

Tested by: MATT MACKENZIE. Ambient Conditions: 9°

Items Tested:

SHELL TO FLOOR WELD.

Results:

SHELL TO FLOOR WELD VISUALLY INSPECTED.
NO DEFECTS WERE FOUND ALL WELDS ACCEPTABLE.

Sub-Arc Representative Signature: [signature] Date: Aug 18/17.

Client Representative Signature: _____ Date: _____

Client Signature: [signature] CLEM BONITA Date: Aug 23/17

Sub-Arc Systems Inc.

4605-47 Street
Vermillion, AB, T9X 1L6
780-608-9589

QUALITY CONTROL MANUAL

Exhibit 15a, Rev 1

DIESEL TEST REPORT (SHELL TO BOTTOM WELD)

Customer: Agnico Eagle

Location: Rankin Inlet Tank #2

Equipment Tag No.: N/A

Equipment Type: N/A

Equipment Description: N/A

Code Requiring Test: API 650 (section 7.2.4) Reason for Test: New Construction

(The initial weld pass inside the shell shall have all slag and non-metals removed from the surface of the weld and then examined for its entire circumference both visually and applying a high Flash-point penetrating oil such as light diesel to the gap between the shell and the bottom, letting stand for at least four hours, and examining the weld for evidence of wicking.)

Surface Condition (As Welded)

Test Solution: Diesel Test Date(s): Aug 4/17

Tested by: Matt MacKenzie Ambient Conditions: 12° C

Items Tested:

Shell to bottom Weld.

Results:

No leaks were found at time of inspection.

Sub-Arc Representative Signature: [signature] Date: Aug 4/17

Client Representative Signature: _____ Date: _____

Client Signature: Clem Bonin [signature] Date: Aug 23/17

Item 10 - Shell

Contents

1. MTR
2. Roundness Dimension Report (SAS)
3. Roundness Dimension Report (AmSpec)
4. Weld Map and MTR Traceability, Visual Report
5. Dimension Reports – Banding
6. Dimension Reports – Peaking
7. Dimension Reports – Plumbness
8. Diesel Test Reports
9. UT Report (3rd Party)

SSAB

Test Certificate

Form TC1: Revision 2: Date 23 Apr 2014

12400 Highway 43 North, Axis, Alabama 36505, US

Customer:
SAMUEL, SON & CO. LTD
1250 APPLEBY LINE

BURLINGTON
ON L7L5G6

Customer P.O.No.: C41966 & 41-490196 | **Mill Order No.** 41-491119-06 | **Shipping Manifest:** AR239887

Product Description: CSA G40.21(2013) 38WT/260WT - CAT 5;LCVN 15FT.LBS,TCVN13FT.LBS@-45F/A673-P ALLOYS API650(12TH ED) TABLE 4-1 GR.IIIA NORMALIZED

Size: 0.562 X 113.0 X 365.0 (IN)

Ship Date: 16 Feb 17 | **Cert No:** 081596751
Cert Date: 16 Feb 17 | (Page 1 of 1)

Tested Pieces:				Tensiles:						Charpy Impact Tests							
Heat Id	Piece Id	Tested Thickness	Tst Loc	YS (KSI)	UTS (KSI)	%RA	Elong % 2in 8in	Tst Dir	Hardness	Abs. Energy(FTLB) 1 2 3 Avg	% Shear 1 2 3 Avg	Tst Tmp	Tst Dir	Tst Siz (mm)	BDWTT Tmp %Shr
E7B111	B15	0.568 (DISCRT)	C	51	72		26	T		114 106 131 117		-45F	L	10.	
			C							76 81 74 77		-45F	T	10.	

Chemical Analysis

Heat Id	C	Mn	P	S	Si	Tot Al	Sol Al	Cu	Ni	Cr	Mo	Cb	V	Ti	B	N	ORGN
E7B111	.18	.92	.010	<.001	.24	.027	.026	.26	.14	.11	.04	.002	.005	.011	.0002	.0074	USA

KILLED STEEL
MERCURY IS NOT A METALLURGICAL COMPONENT OF THE STEEL AND NO MERCURY WAS INTENTIONALLY ADDED DURING THE MANUFACTURE OF THIS PRODUCT.
KILLED STEEL, PRODUCED TO A FINE GRAIN PRACTICE
MTR EN 10204:2004 INSPECTION CERTIFICATE 3.1 COMPLIANT
NORMALIZED PLATES. HEATED AT 1665F FOR 26 MINUTES.
TEST COUPONS TAKEN FROM HEAT TREATED PLATE.
PRODUCTS SHIPPED:

E7B111	B15	6704705	PCES:	1,	LBS:	6574	E7B111	B15	6704706	PCES:	1,	LBS: 6574
E7B111	B15	6704704	PCES:	1,	LBS:	6574	E7B111	B15	6704707	PCES:	1,	LBS: 6574

(P) Cust Part #:

WE HEREBY CERTIFY THAT THIS MATERIAL WAS TESTED IN ACCORDANCE WITH, AND MEETS THE REQUIREMENTS OF, THE APPROPRIATE SPECIFICATION

Justin Ward +1 251 662 4400
SENIOR METALLURGIST - PRODUCT

SSAB

Test Certificate

Form TC1: Revision 2: Date 23 Apr 2014

12400 Highway 43 North, Axis, Alabama 36505, US

Customer:
SAMUEL, SON & CO. LTD
1250 APPLEBY LINE

BURLINGTON
ON L7L5G6

Customer P.O.No.: C41966 & 41-490196 | **Mill Order No.** 41-491119-06 | **Shipping Manifest:** AR239891

Product Description: CSA G40.21(2013) 38WT/260WT - CAT 5;LCVN 15FT.LBS,TCVN13FT.LBS@-45F/A673-P ALLOYS API650(12TH ED) TABLE 4-1 GR.IIIA NORMALIZED

Size: 0.562 X 113.0 X 365.0 (IN)

Ship Date: 16 Feb 17
Cert Date: 16 Feb 17
Cert No: 081596775
(Page 1 of 1)

Tested Pieces:				Tensiles:						Charpy Impact Tests							
Heat Id	Piece Id	Tested Thickness	Tst Loc	YS (KSI)	UTS (KSI)	%RA	Elong % 2in 8in	Tst Dir	Hardness	Abs. Energy(FTLB) 1 2 3 Avg	% Shear 1 2 3 Avg	Tst Tmp	Tst Dir	Tst Siz (mm)	BDWTT Tmp %Shr
E7B111	B15	0.568 (DISCRT)	C	51	72		26	T		114 106 131 117		-45F	L	10.	
			C							76 81 74 77		-45F	T	10.	
E7B111	B16	0.568 (DISCRT)	C	50	72		27	T		135 123 122 127		-45F	L	10.	
			C							112 84 96 97		-45F	T	10.	

Heat Id	Chemical Analysis C	Mn	P	S	Si	Tot Al	Sol Al	Cu	Ni	Cr	Mo	Cb	V	Ti	B	N	ORGN
E7B111	.18	.92	.010	<.001	.24	.027	.026	.26	.14	.11	.04	.002	.005	.011	.0002	.0074	USA

KILLED STEEL
MERCURY IS NOT A METALLURGICAL COMPONENT OF THE STEEL AND NO MERCURY WAS INTENTIONALLY ADDED DURING THE MANUFACTURE OF THIS PRODUCT.
KILLED STEEL, PRODUCED TO A FINE GRAIN PRACTICE
MTR EN 10204:2004 INSPECTION CERTIFICATE 3.1 COMPLIANT
NORMALIZED PLATES. HEATED AT 1665F FOR 26 MINUTES.
TEST COUPONS TAKEN FROM HEAT TREATED PLATE.
PRODUCTS SHIPPED:

E7B111 B16	6704877	PCES:	1,	LBS:	6574	E7B111 B15	6704876	PCES:	1,	LBS:	6574
E7B111 B15	6704866	PCES:	1,	LBS:	6574	E7B111 B15	6704867	PCES:	1,	LBS:	6574
E7B111 B15	6704865	PCES:	1,	LBS:	6574	E7B111 B15	6704864	PCES:	1,	LBS:	6574
E7B111 B15	6704708	PCES:	1,	LBS:	6574	E7B111 B16	6704878	PCES:	1,	LBS:	6574

(P) Cust Part #:

WE HEREBY CERTIFY THAT THIS MATERIAL WAS TESTED IN ACCORDANCE WITH, AND MEETS THE REQUIREMENTS OF, THE APPROPRIATE SPECIFICATION

Justin Ward +1 251 662 4400
SENIOR METALLURGIST - PRODUCT

SSAB

Test Certificate

Form TC1: Revision 2: Date 23 Apr 2014

12400 Highway 43 North, Axis, Alabama 36505, US

Customer:
SAMUEL, SON & CO. LTD
1250 APPLEBY LINE

BURLINGTON
ON L7L5G6

Customer P.O.No.: C41966 & 41-490196 | **Mill Order No.** 41-491119-08 | **Shipping Manifest:** AR239887

Product Description: CSA G40.21(2013) 38WT/260WT - CAT 5;LCVN 15FT.LBS,TCVN13FT.LBS@-45F/A673-P ALLOYS API650(12TH ED) TABLE 4-1 GR.IIIA NORMALIZED

Ship Date: 16 Feb 17 | **Cert No:** 081596752
Cert Date: 16 Feb 17 | (Page 1 of 1)

Size: 0.437 X 113.0 X 365.0 (IN)

Tested Pieces:				Tensiles:						Charpy Impact Tests						
Heat Id	Piece Id	Tested Thickness	Tst Loc	YS (KSI)	UTS (KSI)	%RA	Elong % 2in 8in	Tst Dir	Hardness	Abs. Energy(FTLB) 1 2 3 Avg	% Shear 1 2 3 Avg	Tst Tmp	Tst Dir	Tst Siz (mm)	BDWTT Tmp %Shr
E7B111	B14	0.443 (DISCRT)	C	53	74		27	T		143 155 114 137		-45F	L	10.	
			C							90 102 80 91		-45F	T	10.	
W7B608	B11	0.442 (DISCRT)	C	53	75		26	T		121 122 118 120		-50F	L	10.	
			C							104 93 51 83		-50F	T	10.	

Chemical Analysis

Heat Id	C	Mn	P	S	Si	Tot Al	Sol Al	Cu	Ni	Cr	Mo	Cb	V	Ti	B	N	ORGN
E7B111	.18	.92	.010	<.001	.24	.027	.026	.26	.14	.11	.04	.002	.005	.011	.0002	.0074	USA
W7B608	.18	.92	.008	.001	.24	.027	.026	.26	.18	.10	.05	.001	.005	.011	.0002	.0079	USA

KILLED STEEL
MERCURY IS NOT A METALLURGICAL COMPONENT OF THE STEEL AND NO MERCURY WAS INTENTIONALLY ADDED DURING THE MANUFACTURE OF THIS PRODUCT.
KILLED STEEL, PRODUCED TO A FINE GRAIN PRACTICE
MTR EN 10204:2004 INSPECTION CERTIFICATE 3.1 COMPLIANT
NORMALIZED PLATES. HEATED AT 1665F FOR 21 MINUTES.
TEST COUPONS TAKEN FROM HEAT TREATED PLATE.
PRODUCTS SHIPPED:
W7B608 B11 6704648 PCES: 1, LBS: 5112 W7B608 B11 6704649 PCES: 1, LBS: 5112
E7B111 B14 6704652 PCES: 1, LBS: 5112

(P) Cust Part #:

WE HEREBY CERTIFY THAT THIS MATERIAL WAS TESTED IN ACCORDANCE WITH, AND MEETS THE REQUIREMENTS OF, THE APPROPRIATE SPECIFICATION

Justin Ward +1 251 662 4400
SENIOR METALLURGIST - PRODUCT

SSAB

Test Certificate

Form TC1: Revision 2: Date 23 Apr 2014

12400 Highway 43 North, Axis, Alabama 36505, US

Customer:
SAMUEL, SON & CO. LTD
1250 APPLEBY LINE

BURLINGTON
ON L7L5G6

Customer P.O.No.: C41966 & 41-490196 | **Mill Order No.** 41-491119-08 | **Shipping Manifest:** AR239886

Product Description: CSA G40.21(2013) 38WT/260WT - CAT 5;LCVN 15FT.LBS,TCVN13FT.LBS@-45F/A673-P ALLOYS API650(12TH ED) TABLE 4-1 GR.IIIA NORMALIZED

Ship Date: 16 Feb 17 | **Cert No:** 081596745
Cert Date: 16 Feb 17 | (Page 1 of 1)

Size: 0.437 X 113.0 X 365.0 (IN)

Tested Pieces:				Tensiles:						Charpy Impact Tests						
Heat Id	Piece Id	Tested Thickness	Tst Loc	YS (KSI)	UTS (KSI)	%RA	Elong % 2in 8in	Tst Dir	Hardness	Abs. Energy(FTLB) 1 2 3 Avg	% Shear 1 2 3 Avg	Tst Tmp	Tst Dir	Tst Siz (mm)	BDWTT Tmp %Shr
E7B111	B14	0.443 (DISCRT)	C	53	74		27	T		143 155 114 137		-45F	L	10.	
			C							90 102 80 91		-45F	T	10.	
W7B608	B11	0.442 (DISCRT)	C	53	75		26	T		121 122 118 120		-50F	L	10.	
			C							104 93 51 83		-50F	T	10.	

Chemical Analysis

Heat Id	C	Mn	P	S	Si	Tot Al	Sol Al	Cu	Ni	Cr	Mo	Cb	V	Ti	B	N	ORGN
E7B111	.18	.92	.010	<.001	.24	.027	.026	.26	.14	.11	.04	.002	.005	.011	.0002	.0074	USA
W7B608	.18	.92	.008	.001	.24	.027	.026	.26	.18	.10	.05	.001	.005	.011	.0002	.0079	USA

KILLED STEEL
MERCURY IS NOT A METALLURGICAL COMPONENT OF THE STEEL AND NO MERCURY WAS INTENTIONALLY ADDED DURING THE MANUFACTURE OF THIS PRODUCT.
KILLED STEEL, PRODUCED TO A FINE GRAIN PRACTICE
MTR EN 10204:2004 INSPECTION CERTIFICATE 3.1 COMPLIANT
NORMALIZED PLATES. HEATED AT 1665F FOR 21 MINUTES.
TEST COUPONS TAKEN FROM HEAT TREATED PLATE.
PRODUCTS SHIPPED:

E7B111	B14	6704428	PCES:	1,	LBS:	5112	W7B608	B11	6704660	PCES:	1, LBS: 5112
W7B608	B11	6704659	PCES:	1,	LBS:	5112	W7B608	B11	6704657	PCES:	1, LBS: 5112
W7B608	B11	6704658	PCES:	1,	LBS:	5112	W7B608	B11	6704656	PCES:	1, LBS: 5112

(P) Cust Part #:

WE HEREBY CERTIFY THAT THIS MATERIAL WAS TESTED IN ACCORDANCE WITH, AND MEETS THE REQUIREMENTS OF, THE APPROPRIATE SPECIFICATION

Justin Ward +1 251 662 4400
SENIOR METALLURGIST - PRODUCT

SSAB

Test Certificate

Form TC1: Revision 2: Date 23 Apr 2014

12400 Highway 43 North, Axis, Alabama 36505, US

Customer:
SAMUEL, SON & CO. LTD
1250 APPLEBY LINE

BURLINGTON
ON L7L5G6

Customer P.O.No.: C41966 & 41-490196 | **Mill Order No.** 41-491119-08 | **Shipping Manifest:** AR239888

Product Description: CSA G40.21(2013) 38WT/260WT - CAT 5;LCVN 15FT.LBS,TCVN13FT.LBS@-45F/A673-P ALLOYS API650(12TH ED) TABLE 4-1 GR.IIIA NORMALIZED

Size: 0.437 X 113.0 X 365.0 (IN)

Ship Date: 16 Feb 17 | **Cert No:** 081596755
Cert Date: 16 Feb 17 | (Page 1 of 1)

Tested Pieces:				Tensiles:						Charpy Impact Tests							
Heat Id	Piece Id	Tested Thickness	Tst Loc	YS (KSI)	UTS (KSI)	%RA	Elong % 2in 8in	Tst Dir	Hardness	Abs. Energy(FTLB) 1 2 3 Avg	% Shear 1 2 3 Avg	Tst Tmp	Tst Dir	Tst Siz (mm)	BDWTT Tmp %Shr
E7B111	B14	0.443 (DISCRT)	C	53	74		27	T		143 155 114 137		-45F	L	10.	
			C							90 102 80 91		-45F	T	10.	
W7B608	B11	0.442 (DISCRT)	C	53	75		26	T		121 122 118 120		-50F	L	10.	
			C							104 93 51 83		-50F	T	10.	

Heat Id	Chemical Analysis C	Mn	P	S	Si	Tot Al	Sol Al	Cu	Ni	Cr	Mo	Cb	V	Ti	B	N	ORGN
E7B111	.18	.92	.010	<.001	.24	.027	.026	.26	.14	.11	.04	.002	.005	.011	.0002	.0074	USA
W7B608	.18	.92	.008	.001	.24	.027	.026	.26	.18	.10	.05	.001	.005	.011	.0002	.0079	USA

KILLED STEEL
MERCURY IS NOT A METALLURGICAL COMPONENT OF THE STEEL AND NO MERCURY WAS INTENTIONALLY ADDED DURING THE MANUFACTURE OF THIS PRODUCT.
KILLED STEEL, PRODUCED TO A FINE GRAIN PRACTICE
MTR EN 10204:2004 INSPECTION CERTIFICATE 3.1 COMPLIANT
NORMALIZED PLATES. HEATED AT 1665F FOR 21 MINUTES.
TEST COUPONS TAKEN FROM HEAT TREATED PLATE.
PRODUCTS SHIPPED:
E7B111 B14 6704427 PCES: 1, LBS: 5112 W7B608 B11 6704442 PCES: 1, LBS: 5112

(P) Cust Part #:

WE HEREBY CERTIFY THAT THIS MATERIAL WAS TESTED IN ACCORDANCE WITH, AND MEETS THE REQUIREMENTS OF, THE APPROPRIATE SPECIFICATION

Justin Ward +1 251 662 4400
SENIOR METALLURGIST - PRODUCT

SSAB

Test Certificate

Form TC1: Revision 2: Date 23 Apr 2014

12400 Highway 43 North, Axis, Alabama 36505, US

Customer:
SAMUEL, SON & CO. LTD
1250 APPLEBY LINE

BURLINGTON
ON L7L5G6

Customer P.O.No.: C41966 & 41-490196 | **Mill Order No.** 41-491119-08 | **Shipping Manifest:** AR239887

Product Description: CSA G40.21(2013) 38WT/260WT - CAT 5;LCVN 15FT.LBS,TCVN13FT.LBS@-45F/A673-P ALLOYS API650(12TH ED) TABLE 4-1 GR.IIIA NORMALIZED

Ship Date: 16 Feb 17 | **Cert No:** 081596752
Cert Date: 16 Feb 17 | (Page 1 of 1)

Size: 0.437 X 113.0 X 365.0 (IN)

Tested Pieces:				Tensiles:						Charpy Impact Tests						
Heat Id	Piece Id	Tested Thickness	Tst Loc	YS (KSI)	UTS (KSI)	%RA	Elong % 2in 8in	Tst Dir	Hardness	Abs. Energy(FTLB) 1 2 3 Avg	% Shear 1 2 3 Avg	Tst Tmp	Tst Dir	Tst Siz (mm)	BDWTT Tmp %Shr
E7B111	B14	0.443 (DISCRT)	C	53	74		27	T		143 155 114 137		-45F	L	10.	
			C							90 102 80 91		-45F	T	10.	
W7B608	B11	0.442 (DISCRT)	C	53	75		26	T		121 122 118 120		-50F	L	10.	
			C							104 93 51 83		-50F	T	10.	

Chemical Analysis

Heat Id	C	Mn	P	S	Si	Tot Al	Sol Al	Cu	Ni	Cr	Mo	Cb	V	Ti	B	N	ORGN
E7B111	.18	.92	.010	<.001	.24	.027	.026	.26	.14	.11	.04	.002	.005	.011	.0002	.0074	USA
W7B608	.18	.92	.008	.001	.24	.027	.026	.26	.18	.10	.05	.001	.005	.011	.0002	.0079	USA

KILLED STEEL
MERCURY IS NOT A METALLURGICAL COMPONENT OF THE STEEL AND NO MERCURY WAS INTENTIONALLY ADDED DURING THE MANUFACTURE OF THIS PRODUCT.
KILLED STEEL, PRODUCED TO A FINE GRAIN PRACTICE
MTR EN 10204:2004 INSPECTION CERTIFICATE 3.1 COMPLIANT
NORMALIZED PLATES. HEATED AT 1665F FOR 21 MINUTES.
TEST COUPONS TAKEN FROM HEAT TREATED PLATE.
PRODUCTS SHIPPED:
W7B608 B11 6704648 PCES: 1, LBS: 5112 W7B608 B11 6704649 PCES: 1, LBS: 5112
E7B111 B14 6704652 PCES: 1, LBS: 5112

(P) Cust Part #:

WE HEREBY CERTIFY THAT THIS MATERIAL WAS TESTED IN ACCORDANCE WITH, AND MEETS THE REQUIREMENTS OF, THE APPROPRIATE SPECIFICATION

Justin Ward +1 251 662 4400
SENIOR METALLURGIST - PRODUCT

SSAB

Test Certificate

Form TC1: Revision 2: Date 23 Apr 2014

12400 Highway 43 North, Axis, Alabama 36505, US

Customer:
SAMUEL, SON & CO. LTD
1250 APPLEBY LINE

BURLINGTON
ON L7L5G6

Customer P.O.No.: C41966 & 41-490196 | **Mill Order No.** 41-491119-08 | **Shipping Manifest:** AR239891

Product Description: CSA G40.21(2013) 38WT/260WT - CAT 5;LCVN 15FT.LBS,TCVN13FT.LBS@-45F/A673-P ALLOYS API650(12TH ED) TABLE 4-1 GR.IIIA NORMALIZED

Ship Date: 16 Feb 17 | **Cert No:** 081596776
Cert Date: 16 Feb 17 | (Page 1 of 1)

Size: 0.437 X 113.0 X 365.0 (IN)

Tested Pieces:				Tensiles:						Charpy Impact Tests						
Heat Id	Piece Id	Tested Thickness	Tst Loc	YS (KSI)	UTS (KSI)	%RA	Elong % 2in 8in	Tst Dir	Hardness	Abs. Energy(FTLB) 1 2 3 Avg	% Shear 1 2 3 Avg	Tst Tmp	Tst Dir	Tst Siz (mm)	BDWTT Tmp %Shr
W7B608	B11	0.442 (DISCRT)	C	53	75		26	T		121 122 118 120		-50F	L	10.	
			C							104 93 51 83		-50F	T	10.	

Chemical Analysis

Heat Id	C	Mn	P	S	Si	Tot Al	Sol Al	Cu	Ni	Cr	Mo	Cb	V	Ti	B	N	ORGN
W7B608	.18	.92	.008	.001	.24	.027	.026	.26	.18	.10	.05	.001	.005	.011	.0002	.0079	USA

KILLED STEEL
MERCURY IS NOT A METALLURGICAL COMPONENT OF THE STEEL AND NO MERCURY WAS INTENTIONALLY ADDED DURING THE MANUFACTURE OF THIS PRODUCT.
KILLED STEEL, PRODUCED TO A FINE GRAIN PRACTICE
MTR EN 10204:2004 INSPECTION CERTIFICATE 3.1 COMPLIANT
NORMALIZED PLATES. HEATED AT 1665F FOR 21 MINUTES.
TEST COUPONS TAKEN FROM HEAT TREATED PLATE.
PRODUCTS SHIPPED:
W7B608 B11 6704647 PCES: 1, LBS: 5112

(P) Cust Part #:

WE HEREBY CERTIFY THAT THIS MATERIAL WAS TESTED IN ACCORDANCE WITH, AND MEETS THE REQUIREMENTS OF, THE APPROPRIATE SPECIFICATION

Justin Ward +1 251 662 4400
SENIOR METALLURGIST - PRODUCT

SSAB

Test Certificate

Form TC1: Revision 2: Date 23 Apr 2014

12400 Highway 43 North, Axis, Alabama 36505, US

Customer:
SAMUEL, SON & CO. LTD
1250 APPLEBY LINE

BURLINGTON
ON L7L5G6

Customer P.O.No.: C41966 & 41-490196 | **Mill Order No.** 41-491119-09 | **Shipping Manifest:** AR239886

Product Description: CSA G40.21(2013) 38WT/260WT - CAT 5;LCVN 15FT.LBS,TCVN13FT.LBS@-45F/A673-P ALLOYS API650(12TH ED) TABLE 4-1 GR.IIIA NORMALIZED

Ship Date: 16 Feb 17
Cert Date: 16 Feb 17

Cert No: 081596746
(Page 1 of 1)

Size: 0.375 X 113.0 X 365.0 (IN)

Tested Pieces:				Tensiles:						Charpy Impact Tests							
Heat Id	Piece Id	Tested Thickness	Tst Loc	YS (KSI)	UTS (KSI)	%RA	Elong % 2in 8in	Tst Dir	Hardness	Abs. Energy(FTLB) 1 2 3 Avg	% Shear 1 2 3 Avg	Tst Tmp	Tst Dir	Tst Siz (mm)	BDWTT Tmp %Shr
W7B608	B06	0.381 (DISCRT)	C	53	75		27	T		77 78 103 86		-50F	L	7.5	
			C							46 31 49 42		-50F	T	7.5	
W7B608	B07	0.380 (DISCRT)	C	52	75		27	T		88 103 87 93		-45F	L	7.5	
			C							54 52 48 51		-45F	T	7.5	
W7B608	B08	0.381 (DISCRT)	C	53	74		26	T		100 122 119 114		-45F	L	7.5	
			C							40 57 79 59		-45F	T	7.5	

Chemical Analysis

Heat Id	C	Mn	P	S	Si	Tot Al	Sol Al	Cu	Ni	Cr	Mo	Cb	V	Ti	B	N	ORGN
W7B608	.18	.92	.008	.001	.24	.027	.026	.26	.18	.10	.05	.001	.005	.011	.0002	.0079	USA

KILLED STEEL
MERCURY IS NOT A METALLURGICAL COMPONENT OF THE STEEL AND NO MERCURY WAS INTENTIONALLY ADDED DURING THE MANUFACTURE OF THIS PRODUCT.
KILLED STEEL, PRODUCED TO A FINE GRAIN PRACTICE
MTR EN 10204:2004 INSPECTION CERTIFICATE 3.1 COMPLIANT
CHARPY FULL SIZE EQUIVALENT = ABSORBED ENERGY AVG X 10 / TEST SIZE IN MM
NORMALIZED PLATES. HEATED AT 1665F FOR 19 MINUTES.
TEST COUPONS TAKEN FROM HEAT TREATED PLATE.
PRODUCTS SHIPPED:

W7B608 B08	6704576	PCES:	1,	LBS:	4386	W7B608 B07	6704580	PCES:	1,	LBS:	4386
W7B608 B07	6704579	PCES:	1,	LBS:	4386	W7B608 B08	6704577	PCES:	1,	LBS:	4386
W7B608 B08	6704583	PCES:	1,	LBS:	4386	W7B608 B07	6704582	PCES:	1,	LBS:	4386
W7B608 B07	6704578	PCES:	1,	LBS:	4386	W7B608 B08	6704589	PCES:	1,	LBS:	4386
W7B608 B08	6704585	PCES:	1,	LBS:	4386	W7B608 B08	6704586	PCES:	1,	LBS:	4386
W7B608 B08	6704588	PCES:	1,	LBS:	4386	W7B608 B07	6704581	PCES:	1,	LBS:	4386
W7B608 B08	6704590	PCES:	1,	LBS:	4386	W7B608 B08	6704587	PCES:	1,	LBS:	4386
W7B608 B06	6704488	PCES:	1,	LBS:	4386	W7B608 B07	6704499	PCES:	1,	LBS:	4386
W7B608 B06	6704485	PCES:	1,	LBS:	4386	W7B608 B08	6704574	PCES:	1,	LBS:	4386
W7B608 B08	6704575	PCES:	1,	LBS:	4386	W7B608 B07	6704498	PCES:	1,	LBS:	4386

(P) Cust Part #:

WE HEREBY CERTIFY THAT THIS MATERIAL WAS TESTED IN ACCORDANCE WITH, AND MEETS THE REQUIREMENTS OF, THE APPROPRIATE SPECIFICATION

Justin Ward +1 251 662 4400
SENIOR METALLURGIST - PRODUCT

SSAB

Test Certificate

Form TC1: Revision 2: Date 23 Apr 2014

12400 Highway 43 North, Axis, Alabama 36505, US

Customer:
SAMUEL, SON & CO. LTD
1250 APPLEBY LINE

BURLINGTON
ON L7L5G6

Customer P.O.No.: C41966 & 41-490196 | **Mill Order No.** 41-491119-09 | **Shipping Manifest:** AR239888

Product Description: CSA G40.21(2013) 38WT/260WT - CAT 5;LCVN 15FT.LBS,TCVN13FT.LBS@-45F/A673-P ALLOYS API650(12TH ED) TABLE 4-1 GR.IIIA NORMALIZED

Ship Date: 16 Feb 17 | **Cert No:** 081596756
Cert Date: 16 Feb 17 | (Page 1 of 1)

Size: 0.375 X 113.0 X 365.0 (IN)

Tested Pieces:				Tensiles:						Charpy Impact Tests							
Heat Id	Piece Id	Tested Thickness	Tst Loc	YS (KSI)	UTS (KSI)	%RA	Elong % 2in 8in	Tst Dir	Hardness	Abs. Energy(FTLB) 1 2 3 Avg	% Shear 1 2 3 Avg	Tst Tmp	Tst Dir	Tst Siz (mm)	BDWTT Tmp %Shr
W7B608	B06	0.381 (DISCRT)	C	53	75		27	T		77 78 103 86		-50F	L	7.5	
			C							46 31 49 42		-50F	T	7.5	
W7B608	B07	0.380 (DISCRT)	C	52	75		27	T		88 103 87 93		-45F	L	7.5	
			C							54 52 48 51		-45F	T	7.5	

Chemical Analysis

Heat Id	C	Mn	P	S	Si	Tot Al	Sol Al	Cu	Ni	Cr	Mo	Cb	V	Ti	B	N	ORGN
W7B608	.18	.92	.008	.001	.24	.027	.026	.26	.18	.10	.05	.001	.005	.011	.0002	.0079	USA

KILLED STEEL
MERCURY IS NOT A METALLURGICAL COMPONENT OF THE STEEL AND NO MERCURY WAS INTENTIONALLY ADDED DURING THE MANUFACTURE OF THIS PRODUCT.
KILLED STEEL, PRODUCED TO A FINE GRAIN PRACTICE
MTR EN 10204:2004 INSPECTION CERTIFICATE 3.1 COMPLIANT
CHARPY FULL SIZE EQUIVALENT = ABSORBED ENERGY AVG X 10 / TEST SIZE IN MM
NORMALIZED PLATES. HEATED AT 1665F FOR 19 MINUTES.
TEST COUPONS TAKEN FROM HEAT TREATED PLATE.
PRODUCTS SHIPPED:

W7B608	B06	6704489	PCES:	1,	LBS:	4386	W7B608	B07	6704497	PCES:	1, LBS: 4386
W7B608	B07	6704495	PCES:	1,	LBS:	4386	W7B608	B06	6704480	PCES:	1, LBS: 4386
W7B608	B06	6704492	PCES:	1,	LBS:	4386	W7B608	B06	6704491	PCES:	1, LBS: 4386
W7B608	B06	6704490	PCES:	1,	LBS:	4386	W7B608	B07	6704496	PCES:	1, LBS: 4386
W7B608	B06	6704484	PCES:	1,	LBS:	4386	W7B608	B06	6704481	PCES:	1, LBS: 4386
W7B608	B06	6704486	PCES:	1,	LBS:	4386	W7B608	B06	6704487	PCES:	1, LBS: 4386
W7B608	B07	6704500	PCES:	1,	LBS:	4386					

(P) Cust Part #:

WE HEREBY CERTIFY THAT THIS MATERIAL WAS TESTED IN ACCORDANCE WITH, AND MEETS THE REQUIREMENTS OF, THE APPROPRIATE SPECIFICATION

Justin Ward +1 251 662 4400
SENIOR METALLURGIST - PRODUCT

SSAB

Test Certificate

Form TC1: Revision 2: Date 23 Apr 2014

12400 Highway 43 North, Axis, Alabama 36505, US

Customer:
SAMUEL, SON & CO. LTD
1250 APPLEBY LINE

BURLINGTON
ON L7L5G6

Customer P.O.No.: C41966 & 41-490196 | **Mill Order No.** 41-491119-09 | **Shipping Manifest:** AR239891

Product Description: CSA G40.21(2013) 38WT/260WT - CAT 5;LCVN 15FT.LBS,TCVN13FT.LBS@-45F/A673-P ALLOYS API650(12TH ED) TABLE 4-1 GR.IIIA NORMALIZED

Size: 0.375 X 113.0 X 365.0 (IN)

Ship Date: 16 Feb 17
Cert Date: 16 Feb 17
Cert No: 081596777
(Page 1 of 1)

Tested Pieces:				Tensiles:						Charpy Impact Tests									
Heat Id	Piece Id	Tested Thickness	Tst Loc	YS (KSI)	UTS (KSI)	%RA	Elong % 2in 8in	Tst Dir	Hardness	Abs. Energy(FTLB) 1	2	3	Avg	% Shear 1	2	3	Avg	Tst Tmp	Tst Dir	Tst Siz (mm)	BDWTT Tmp %Shr
W7B608	B09	0.381 (DISCRT)	C	52	73		26	T		97	83	96	92					-45F	L	7.5	
			C							50	58	48	52					-45F	T	7.5	
W7B608	B10	0.380 (DISCRT)	C	52	74		23	T		120	92	86	99					-45F	L	7.5	
			C							53	51	57	54					-45F	T	7.5	

Heat Id	Chemical Analysis C	Mn	P	S	Si	Tot Al	Sol Al	Cu	Ni	Cr	Mo	Cb	V	Ti	B	N	ORGN
W7B608	.18	.92	.008	.001	.24	.027	.026	.26	.18	.10	.05	.001	.005	.011	.0002	.0079	USA

KILLED STEEL
MERCURY IS NOT A METALLURGICAL COMPONENT OF THE STEEL AND NO MERCURY WAS INTENTIONALLY ADDED DURING THE MANUFACTURE OF THIS PRODUCT.
KILLED STEEL, PRODUCED TO A FINE GRAIN PRACTICE
MTR EN 10204:2004 INSPECTION CERTIFICATE 3.1 COMPLIANT
CHARPY FULL SIZE EQUIVALENT = ABSORBED ENERGY AVG X 10 / TEST SIZE IN MM
NORMALIZED PLATES. HEATED AT 1665F FOR 19 MINUTES.
TEST COUPONS TAKEN FROM HEAT TREATED PLATE.
PRODUCTS SHIPPED:

W7B608 B09	6704857	PCES:	1,	LBS:	4386	W7B608 B09	6704863	PCES:	1,	LBS:	4386
W7B608 B09	6704858	PCES:	1,	LBS:	4386	W7B608 B09	6704856	PCES:	1,	LBS:	4386
W7B608 B09	6704848	PCES:	1,	LBS:	4386	W7B608 B09	6704846	PCES:	1,	LBS:	4386
W7B608 B10	6704849	PCES:	1,	LBS:	4386	W7B608 B09	6704853	PCES:	1,	LBS:	4386
W7B608 B09	6704855	PCES:	1,	LBS:	4386	W7B608 B09	6704854	PCES:	1,	LBS:	4386
W7B608 B10	6704850	PCES:	1,	LBS:	4386	W7B608 B09	6704847	PCES:	1,	LBS:	4386

(P) Cust Part #:

WE HEREBY CERTIFY THAT THIS MATERIAL WAS TESTED IN ACCORDANCE WITH, AND MEETS THE REQUIREMENTS OF, THE APPROPRIATE SPECIFICATION

Justin Ward +1 251 662 4400
SENIOR METALLURGIST - PRODUCT

Sub-Arc Systems Inc.

4605-47 Street
Vermillion, AB, T9X 1L6
780-608-9589

QUALITY CONTROL MANUAL

Exhibit 18, Rev A

DIMENSIONAL CHECK REPORT – ROUNDNESS

Customer: AGNICO EAGLE

Location: RANKIN INLET. TANK #2.

Equipment Tag No.: N/A

Equipment Type: N/A

Equipment Description: N/A.

Code Requiring Test: API 650 Reason for Test: New Construction

(The tank shell will be checked for roundness at 12" above the tank floor. Roundness will be checked at 45 degree intervals or less, max. 20' spacing)

Test Date(s): Aug 8/17.

Tested by:

Seam Test Results:

Roundness checks were made every 20' around the tank. All Areas were found acceptable.

Sub-Arc Representative Signature: _____ Date: Aug 8/17.

Client Representative Signature: _____ Date: _____

Client Signature: Stephany Gionet Date: Aug 21/17

Item 10 - Shell Roundness Dimension Report - AmSpec Data (3rd party)

AmSpec

LASER DIAMETERS

Dia	Beam	Hyp	
14.000		14.000	0.000

Enter Diameters (or Radii) in decimal Ft. Ex: 45.90

	Diameters left	Right	of center beam
1	114.92	114.81	
2	114.93	115.05	
3	115.15	115.14	
4	115.09	115.13	
5	115.09	115.11	
6	115.11	114.99	
7	115.08	115.07	
8	115.07	115.90	
9	115.05	115.11	
10	115.07	115.07	
11	115.05	115.07	
12	115.12	115.13	
13	115.12	115.15	
14	114.97	115.11	
15	114.94	114.86	
16	115.12	115.13	
17	115.08	115.12	
18	115.04	115.02	
19	115.04	115.06	
20	115.13	115.11	
21	115.08	115.08	
22	115.06	115.01	
23	115.08	115.07	
24	115.12	115.15	
25	115.14	115.18	
26	114.88	114.95	
27			
28			
29			
30			
31			
32			
33			
34			
Average=	115.059	115.099	

TAKE LASER DIAMETERS ABOUT EVERY 3 to 5 FEET AROUND THE INSIDE PERIMETER OF THE TANK FOR 180 DEGREES (HALF WAY ROUND). TAKING READINGS BOTH (ALTERNATE) SIDES OF THE CENTER POST/COLUMN.

IF DIAMETER DISTANCE IS TOO GREAT FOR LASER, THEN TAKE RADII FROM CENTER PIPE (NOT FROM A COLUMN) ABOUT EVERY 5 FEET AROUND THE INSIDE PERIMETER OF THE TANK FOR 360 DEGREES

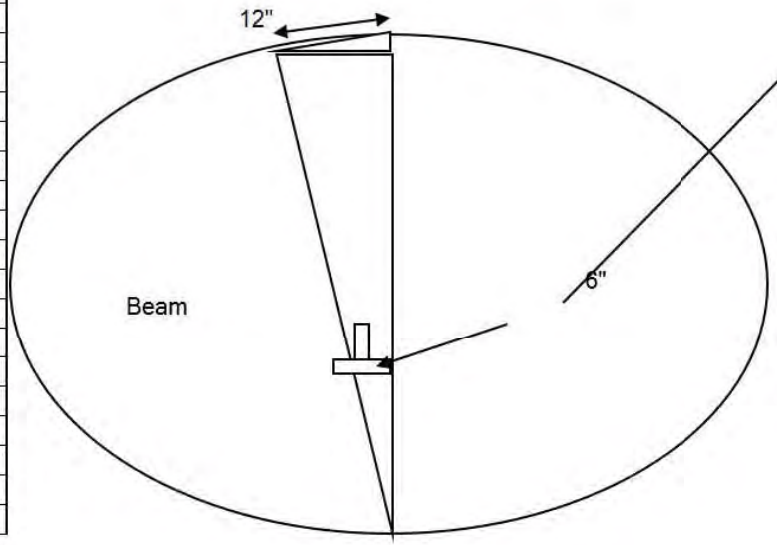

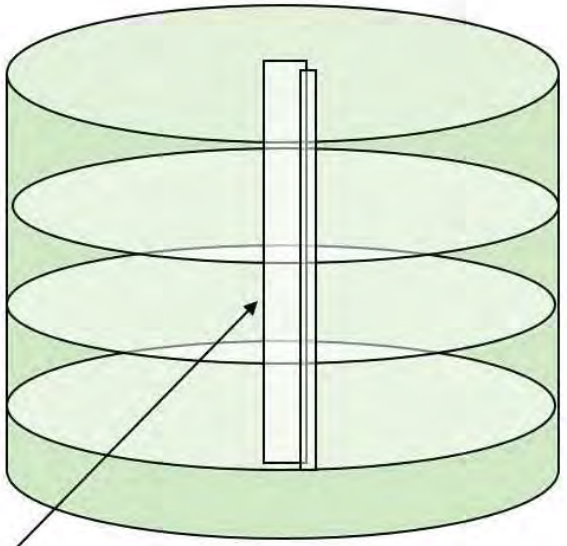

Tank #2 Rankin Inlet (AEM)

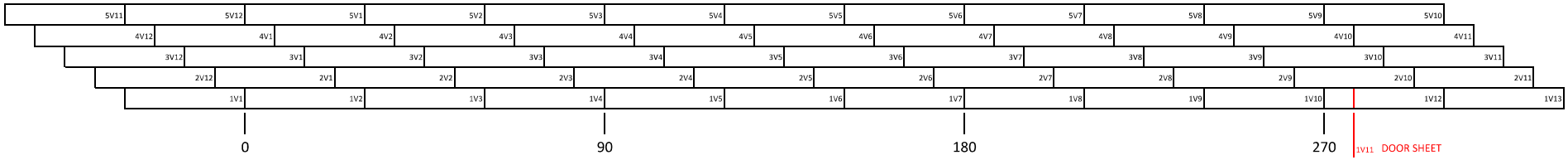

VERTS (Welder ID)

	IN	OUT
1V1	MG	MG
1V2	MG	KW
1V3	KW	KW
1V4	KW	KW
1V5	DZ	DZ
1V6	DZ	DZ
1V7	DZ	MT
1V8	DZ	MT
1V9	DZ	MT
1V10	MT	MT
1V11 (DOOR SHEET)	MM	MM
1V12	KW	MT
1V13	MG	KW

	IN	OUT
2V1	MT	DZ
2V2	MT	DZ
2V3	DZ	DZ
2V4	DZ	MT
2V5	DZ	MT
2V6	MG	MT
2V7	MG	MG
2V8	KW	MG
2V9	KW	MG
2V10	KW	KW
2V11	KW	KW
2V12	KW	MT

	IN	OUT
3V1	JH	JN
3V2	JH	JN
3V3	JH	JH
3V4	JH	JH
3V5	JN	JH
3V6	JN	DZ
3V7	MG	DZ
3V8	DZ	MG
3V9	DZ	MG
3V10	DZ	MG
3V11	MG	DZ
3V12	JN	DZ

	IN	OUT
4V1	MT	MT
4V2	JO	KW
4V3	JO	JO
4V4	JH	JH
4V5	JN	JH
4V6	JH	JH
4V7	JH	JH
4V8	CJ	DZ
4V9	DZ	DZ
4V10	DZ	DZ
4V11	DZ	DZ
4V12	MT	DZ

	IN	OUT
5V1	DZ	MT
5V2	DZ	MT
5V3	KW	JH
5V4	KW	JO
5V5	JO	JO
5V6	JH	JO
5V7	JH	JN
5V8	JN	JN
5V9	JN	JH
5V10	DZ	DZ
5V11	KW	DZ
5V12	MT	DZ

HORIZONTAL (Welder ID)

	IN	OUT
H1	JO	MG
DOOR SHEET	MM/MT	MM/MT

	IN	OUT
H2	JO/MM	MG/KW

	IN	OUT
H3	JO/MM	MG/KW

	IN	OUT
H4	JO/MM	MG/KW

PLATES IDENTIFICATION (heat numbers)

	Heat Number
1V1	E7B111 B15
1V2	E7B111 B15
1V3	E7B111 B16
1V4	E7B111 B15
1V5	E7B111 B15
1V6	E7B111 B15
1V7	E7B111 B16
1V8	E7B111 B15
1V9	E7B111 B15
1V10	E7B111 B15
1V11	E7B111 B15
1V12	E7B111 B15
1V13	E7B111 B15

	Heat Number
2V1	W7B608 B11
2V2	E7B111 B14
2V3	W7B608 B11
2V4	E7B111 B14
2V5	E7B111 B14
2V6	W7B608 B11
2V7	W7B608 B11
2V8	W7B608 B11
2V9	W7B608 B11
2V10	W7B608 B11
2V11	W7B608 B11
2V12	W7B608 B11

	Heat Number
3V1	W7B608 B09
3V2	W7B608 B06
3V3	W7B608 B07
3V4	W7B608 B06
3V5	W7B608 B08
3V6	W7B608 B06
3V7	W7B608 B09
3V8	W7B608 B07
3V9	W7B608 B06
3V10	W7B608 B07
3V11	W7B608 B06
3V12	W7B608 B06

	Heat Number
4V1	W7B608 B07
4V2	W7B608 B08
4V3	W7B608 B07
4V4	W7B608 B07
4V5	W7B608 B09
4V6	W7B608 B06
4V7	W7B608 B08
4V8	W7B608 B09
4V9	W7B608 B07
4V10	W7B608 B08
4V11	W7B608 B09
4V12	W7B608 B08

	Heat Number
5V1	W7B608 B06
5V2	W7B608 B07
5V3	W7B608 B06
5V4	W7B608 B08
5V5	W7B608 B08
5V6	W7B608 B09
5V7	W7B608 B07
5V8	W7B608 B06
5V9	W7B608 B06
5V10	W7B608 B09
5V11	W7B608 B07
5V12	W7B608 B08

Sub-Arc Systems Inc.

4605-47 Street
Vermillion, AB, T9X 1L6
780-608-9589

QUALITY CONTROL MANUAL

Exhibit 17, Rev A

DIMENSIONAL CHECK REPORT – BANDING

Customer: AGNICO EAGLE

Location: RANKIN INLET TANK #2

Equipment Tag No.: N/A

Equipment Type: N/A

Equipment Description: N/A

Code Requiring Test: API 650 Reason for Test: New Construction

(Each circumferential seam will be checked for banding and max. banding dimension recorded for that seam. Circumferential seams will be checked at 45 degree intervals or less, max. 20' spacing)

Test Date(s): AUG 18/17

Tested by: MATT TURMEL

Seam Test Results:

1ST HORIZONTAL BANDING CHECKS DONE EVERY 20FT
MAX BANDING WAS 1/4" ON A 4FT LEVEL.

ALL CHECKS ACCEPTABLE

Sub-Arc Representative Signature: [signature] Date: AUG 18/17

Client Representative Signature: _____ Date: _____

Client Signature: [signature] CLEM BONIN Date: Aug 23/17

Sub-Arc Systems Inc.

4605-47 Street
Vermillion, AB, T9X 1L6
780-608-9589

QUALITY CONTROL MANUAL

Exhibit 17, Rev A

DIMENSIONAL CHECK REPORT – BANDING

Customer: AGNICO EAGLE

Location: RANKIN INLET TANK #2.

Equipment Tag No.: N/A

Equipment Type: N/A

Equipment Description: N/A

Code Requiring Test: API 650 Reason for Test: New Construction

(Each circumferential seam will be checked for banding and max. banding dimension recorded for that seam. Circumferential seams will be checked at 45 degree intervals or less, max. 20' spacing)

Test Date(s): AUG 19/17

Tested by: MATT TURMEL

Seam Test Results:

2ND HORIZONTAL BANDING CHECKS DONE EVERY 20FT

MAX BANDING WAS 5/16" ON A 4 FT LEVEL

ALL CHECKS ACCEPTABLE

Sub-Arc Representative Signature: _____ Date: AUG 19/17

Client Representative Signature: _____ Date: _____

Client Signature: C Bonin CLEM BONIN Date: Aug 23/17

Sub-Arc Systems Inc.

4605-47 Street
Vermillion, AB, T9X 1L6
780-608-9589

QUALITY CONTROL MANUAL

Exhibit 17, Rev A

DIMENSIONAL CHECK REPORT – BANDING

Customer: AGNICO EAGLE

Location: RANKIN INLET TANK #2.

Equipment Tag No.: N/A

Equipment Type: N/A

Equipment Description: N/A

Code Requiring Test: API 650 Reason for Test: New Construction

(Each circumferential seam will be checked for banding and max. banding dimension recorded for that seam. Circumferential seams will be checked at 45 degree intervals or less, max. 20' spacing)

Test Date(s): AUG 19/17.

Tested by: MATT TURMEL

Seam Test Results:

3RD HORIZONTAL BANDING CHECKS DONE EVERY 20FT
MAX BANDING WAS 1/4" ON A 4FT LEVEL

ALL CHECKS ACCEPTABLE

Sub-Arc Representative Signature: M Turmel Date: AUG 19/17

Client Representative Signature: _____ Date: _____

Client Signature: C Bonia CLEM BONIA Date: Aug 23/17

Sub-Arc Systems Inc.

4605-47 Street
Vermillion, AB, T9X 1L6
780-608-9589

QUALITY CONTROL MANUAL

Exhibit 17, Rev A

DIMENSIONAL CHECK REPORT – BANDING

Customer: AGNICO EAGLE

Location: RANKIN INLET TANK #2.

Equipment Tag No.: N/A

Equipment Type: N/A

Equipment Description: N/A

Code Requiring Test: API 650 Reason for Test: New Construction

(Each circumferential seam will be checked for banding and max. banding dimension recorded for that seam. Circumferential seams will be checked at 45 degree intervals or less, max. 20' spacing)

Test Date(s): AUG 19/17.

Tested by: MATT TURMEL.

Seam Test Results:

4TH HORIZONTAL BANDING CHECKS DONE EVERY 20FT
MAX BANDING WAS 5/16" ON A 4FT LEVEL

ALL CHECKS ACCEPTABLE

Sub-Arc Representative Signature: M Turmel Date: AUG 19/17.

Client Representative Signature: _____ Date: _____

Client Signature: CLEAN BORIN Date: aug 23/17

Sub-Arc Systems Inc.

4605-47 Street
Vermillion, AB, T9X 1L6
780-608-9589

QUALITY CONTROL MANUAL

Exhibit 16, Rev A

DIMENSIONAL CHECK REPORT – PEAKING

Customer: AGNICO EAGLE

Location: RANKIN INLET TANK #2

Equipment Tag No.: N/A

Equipment Type: N/A

Equipment Description: N/A

Code Requiring Test: API 650 Reason for Test: New Construction

(Each vertical seam will be checked for peaking and max. peak dimension recorded for that seam.)

Test Date(s): AUG 18/17

Tested by: MATT TURMEL

Seam Test Results:

SR1 - 1V1 1/8", 1V2 1/8", 1V3 1/4", 1V4 Ø, 1V5 1/16", 1V6 1/8",
1V7 Ø, 1V8 1/16", 1V9 1/16", 1V10 (DOORSHEET), 1V11 (DOORSHEET),
1V12 Ø, 1V13 1/8" ↓1/8" ↓1/4"
ALL SR1 VERTS ACCEPTABLE (1V10 + 1V11 WILL BE DONE WHEN DOORSHEET COMPLETE) MM.

Sub-Arc Representative Signature: MTurmel Date: AUG 18/17

Client Representative Signature: _____ Date: _____

Client: CLEM BONIN Date: Aug. 23/17

Sub-Arc Systems Inc.

4605-47 Street
Vermillion, AB, T9X 1L6
780-608-9589

QUALITY CONTROL MANUAL

Exhibit 16, Rev A

DIMENSIONAL CHECK REPORT – PEAKING

Customer: AGNICO EAGLE

Location: RANKIN INLET TANK #2.

Equipment Tag No.: N/A

Equipment Type: N/A

Equipment Description: N/A

Code Requiring Test: API 650 Reason for Test: New Construction

(Each vertical seam will be checked for peaking and max. peak dimension recorded for that seam.)

Test Date(s): AUG 18/17

Tested by: MATT TURMEL

Seam Test Results:

SR2 - 2V1 1/16", 2V2 Ø, 2V3 1/16", 2V4 Ø, 2V5 Ø, 2V6 1/8",
2V7 1/8", 2V8 3/16", 2V9 1/16", 2V10 Ø, 2V11 1/8", 2V12 1/16"

ALL SR2 VERTS ACCEPTABLE

Sub-Arc Representative Signature: MTurmel Date: AUG 18/17

Client Representative Signature: _____ Date: _____

Client: Glenn Bonin Date: Sept 04/17

Sub-Arc Systems Inc.

4605-47 Street
Vermillion, AB, T9X 1L6
780-608-9589

QUALITY CONTROL MANUAL

Exhibit 16, Rev A

DIMENSIONAL CHECK REPORT – PEAKING

Customer: AGNICO EAGLE

Location: RANKIN INLET TANK #2

Equipment Tag No.: N/A

Equipment Type: N/A

Equipment Description: N/A

Code Requiring Test: API 650 Reason for Test: New Construction

(Each vertical seam will be checked for peaking and max. peak dimension recorded for that seam.)

Test Date(s): AUG 18/17

Tested by: MATT TURMEL

Seam Test Results:

SR3 - 3V1 3/16", 3V2 1/8", 3V3 Ø, 3V4 1/8", 3V5 1/16", 3V6 3/16", 3V7 1/8, 3V8 Ø, 3V9 1/16, 3V10 1/4", 3V11 1/8", 3V12 Ø

ALL SR3 VERTS ACCEPTABLE

Sub-Arc Representative Signature: MTurmel Date: Aug 18/17.

Client Representative Signature: _____ Date: _____

Client: CBonin CLEM BONIN Date: Aug 23/17

Sub-Arc Systems Inc.

4605-47 Street
Vermillion, AB, T9X 1L6
780-608-9589

QUALITY CONTROL MANUAL

Exhibit 16, Rev A

DIMENSIONAL CHECK REPORT – PEAKING

Customer: AGNICO EAGLE

Location: RANKIN INLET TANK #2

Equipment Tag No.: N/A

Equipment Type: N/A

Equipment Description: N/A

Code Requiring Test: API 650 Reason for Test: New Construction

(Each vertical seam will be checked for peaking and max. peak dimension recorded for that seam.)

Test Date(s): AUG 18/17

Tested by: MATT TURMEL

Seam Test Results:

SR4 - 4V1 Ø, 4V2 1/16", 4V3 1/4", 4V4 3/16", 4V5 1/8",
4V6 1/8, 4V7 Ø, 4V8 3/16", 4V9 1/16", 4V10 Ø, 4V11 1/16",
4V12 Ø
ALL SR4 VERTS ACCEPTABLE

Sub-Arc Representative Signature: _____ Date: AUG 18/17.

Client Representative Signature: _____ Date: _____

Client: _____ CLINT BONIA Date: Aug 23/17

Sub-Arc Systems Inc.

4605-47 Street
Vermillion, AB, T9X 1L6
780-608-9589

QUALITY CONTROL MANUAL

Exhibit 16, Rev A

DIMENSIONAL CHECK REPORT – PEAKING

Customer: AGNICO EAGLE

Location: RANKIN INLET TANK # 2

Equipment Tag No.: N/A

Equipment Type: N/A

Equipment Description: N/A

Code Requiring Test: API 650 Reason for Test: New Construction

(Each vertical seam will be checked for peaking and max. peak dimension recorded for that seam.)

Test Date(s): AUG 18/17

Tested by: MATT TURMEL

Seam Test Results:

SR5- 5V1 1/16", 5V2 Ø, 5V3 1/16", 5V4 1/8", 5V5 1/8",
5V6 3/16", 5V7 1/8, 5V8 Ø, 5V9 1/16, 5V10 1/8, 5V11 Ø,
5V12 3/16"
ALL SR5 VERTS ACCEPTABLE

Sub-Arc Representative Signature: M Turmel Date: AUG 18/17.

Client Representative Signature: _____ Date: _____

Client: C Bonin CLEON BONIN Date: Aug 23/17

Sub-Arc Systems Inc.

4605-47 Street
Vermillion, AB, T9X 1L6
780-608-9589

QUALITY CONTROL MANUAL

Exhibit 19, Rev A

DIMENSIONAL CHECK REPORT – PLUMBNESS

Customer: AGNICO EAGLE

Location: RANKIN INLET TANK #2

Equipment Tag No.: N/A

Equipment Type: N/A

Equipment Description: N/A

Code Requiring Test: API 650 Reason for Test: New Construction

(The tank shell will be checked for plumb at 12" below the tank roof. Plumb measurements will be checked at 45 degree intervals or less, max. 20' spacing)

Test Date(s): AUG 17/17

Tested by: MATT MACKENZIE

Seam Test Results:

Plumbness measurements were taken every 20'. All measurements were acceptable.

Sub-Arc Representative Signature: _____ Date: Aug 17/17

Client Representative Signature: _____ Date: _____

Client Signature: Stephanie Girard Date 21/08/17

Sub-Arc Systems Inc.

4605-47 Street
Vermillion, AB, T9X 1L6
780-608-9589

QUALITY CONTROL MANUAL

Exhibit 15b, Rev 1

DIESEL TEST REPORT (SHELL)

Customer: Agnico Eagle

Location: Rankin Inlet Tank #2

Equipment Tag No.: N/A

Equipment Type: N/A

Equipment Description: N/A

Code Requiring Test: API 650 (section 7.3.5) Reason for Test: New Construction

(The shell shall be tested by painting all of the joints on the inside with a highly penetrating oil and carefully examining the outside of the joints for leakage.)

Surface Condition (As Welded)

Test Solution: Diesel Test Date(s): Aug 11/17

Tested by: Chris Jagues. Ambient Conditions: 9°C

Items Tested:

2nd horizontal + 2nd Course Verts.

Results:

No leaks were found at time of inspection.

Sub-Arc Representative Signature: _____ Date: Aug 11/17

Client Representative Signature: _____ Date: _____

Client Signature: Stephane Giancl Date: Aug 11/17

Sub-Arc Systems Inc.

4605-47 Street
Vermillion, AB. T9X 1L6
780-608-9589

QUALITY CONTROL MANUAL

Exhibit 15b, Rev 1

DIESEL TEST REPORT (SHELL)

Customer: Agnico Eagle

Location: Rankin Inlet TANK #2.

Equipment Tag No.: N/A

Equipment Type: N/A

Equipment Description: N/A

Code Requiring Test: API 650 (section 7.3.5) Reason for Test: New Construction

(The shell shall be tested by painting all of the joints on the inside with a highly penetrating oil and carefully examining the outside of the joints for leakage.)

Surface Condition (As Welded)

Test Solution: Diesel Test Date(s): Aug 13/17

Tested by: MATT TURNER. Ambient Conditions: 10°C

Items Tested:

3rd Horizontal + 3rd Course Verts.

Results:

No leaks were found at time of inspection.

Sub-Arc Representative Signature: _____ Date: Aug. 14/17.

Client Representative Signature: _____ Date: _____

Client Signature: _____ Date: August 14/17

Stephane Gionet

Sub-Arc Systems Inc.

4605-47 Street
Vermillion. AB. T9X 1L6
780-608-9589

QUALITY CONTROL MANUAL

Exhibit 15b, Rev 1

DIESEL TEST REPORT (SHELL)

Customer: Agnico Eagle

Location: Rankin Inlet TANK #2

Equipment Tag No.: N/A

Equipment Type: N/A

Equipment Description: N/A

Code Requiring Test: API 650 (section 7.3.5) Reason for Test: New Construction

(The shell shall be tested by painting all of the joints on the inside with a highly penetrating oil and carefully examining the outside of the joints for leakage.)

Surface Condition (As Welded)

Test Solution: Diesel Test Date(s): Aug 15/17

Tested by: MATT TURNER Ambient Conditions: 10°C

Items Tested:

4th HORIZONTAL + 4th Course Verts. + 5th Course Verts.

Results:

No leaks were found at time of inspection.

Sub-Arc Representative Signature: [signature] Date: Aug 15/17

Client Representative Signature: _____ Date: _____

Client Signature: Stephane Giard Date: Aug 15/17

Sub-Arc Systems Inc.

4605-47 Street
Vermilion, AB, T9X 1L6
780-608-9589

QUALITY CONTROL MANUAL

Exhibit 15b, Rev 1

DIESEL TEST REPORT (SHELL)

Customer: Agnico Eagle

Location: Rankin Inlet

Equipment Tag No.: N/A

Equipment Type: N/A

Equipment Description: N/A

Code Requiring Test: API 650 (section 7.3.5) Reason for Test: New Construction

(The shell shall be tested by painting all of the joints on the inside with a highly penetrating oil and carefully examining the outside of the joints for leakage.)

Surface Condition (As Welded)

Test Solution: Diesel Test Date(s): Aug 6/17.

Tested by: Matt MacKenzie Ambient Conditions: 10° C

Items Tested:

1st horizontal & 1st Course Vert's.

Results:

No leaks were found at time of inspection.

Sub-Arc Representative Signature: _____ Date: Aug 6/17

Client Representative Signature: _____ Date: _____

Client Signature: Clem Bonin Date: Aug 23/17

Client :	**Inukshuk Construction Ltd,**	**Date d'intervention :** **Intervention date :**	2017-08-30
Adresse/Address :	PO Box 654 Rankin Inlet, Nunavut X0C 0G0	**Date du rapport :** **Report date :**	2017-09-08
Contact :	Marc Losier		
Entrepreneur : **Contractor :**	N/A	**N° dossier :** **File no :**	INS-117107-01_R01
Endroit du travail : **Job location :**	Rankin Inlet , Nunavut	**Commande :** **Order :**	295-1046

INSP. VISUELLE / VISUAL INSP. ☐ **MAGNÉTOSCOPIE / MAGNETIC PARTICLES** ☒ **RESSUAGE / LIQUID PENETRANT** ☐ **ULTRASONS / ULTRASONIC** ☒

DESCRIPTION :

Magnetic particles inspection and Ultrasonic inspection on tank 2

The client is opting to use an ultrasonic testing, instead of radiographic testing

Remark : Visual testing was performed by client
I

INSP. VISUELLE / VISUAL INSP.

NORME : **SPECIFICATION :**

N° équip. : **Equip. no :** N/A

MAGNÉTOSCOPIE / MAGNETIC PARTICLES

NORME : **SPECIFICATION :** API 650

N° équip. : **Equip. no :** MP-Q-27

Ampérage : **Amperage :**	Culasse/Yoke	**Continue** **Continuous**	☒	**Résiduelle** **Residual**	☐	**Humide** **Wet**	☐	**Sèche** **Dry**	☒
Longitudinale **Longitudinal**	☐	**Circulaire** **Circular**	☐	**C.A.** **A.C.**	☒	**C.C.** **D.C.**	☐	**Démagnétisée** **Demagnetized**	☐

RESSUAGE / LIQUID PENETRANT

NORME : **SPECIFICATION :**

N° équip. : **Equip. no :**

Pénétrant/Penetrant : **Émulsifiant/Emulsifier :** **Révélateur/Developer :**

Temps/Time : **Temps/Time :** **Temps/Time :**

ULTRASONS / ULTRASONIC

NORME : **SPECIFICATION :** API 650

ÉTALONNAGE/CALIBRATION :

Bloc/Block : IIW Type 2 **Trou/Hole :** N/A **C.A.D. /D.A.C. :** X☐

APPAREIL/EQUIPMENT :

Instrument : USM GO+ **Couplant :** Echogel **Échelle/Sweep length :**

N° équip./Equip. no : UT-Q-34 **Palpeur/Transducer :** 0º degré and 70º degré

RÉSULTATS/RESULTS :

For ultrasonic results: **All spots are acceptable. See attached tables for locations.**

Magnetic particles inspection was performed on angle joint between the shell and nozzle, inside and outside the tank:

- *-Inside tank, weld between shell/nozzle, with a 100%: magnetic particles inspection, is acceptable*
- *-Outside tank, weld between shell/pad & weld between pad/nozzle, with 100% (note 1): magnetic particles inspection, is acceptable.*

Note 1: Fourteen (14) nozzles including four (4) manholes and one nozzle outside, does not have pad . Please refer to drawing 295-M10; part section K-K item #10. This nozzle corresponds to a ¾" coupling for a water temperature gauge in the shell and the client has advised that no repad is needed for this specific coupling.

Techniciens : **Technicians :**	Sylvain Germain CSA W178.2 level 2	**Assistants:**		**Approuvé par :** **Approved by :**	Pierre Dostie Technical Supervisor CSA W178.2, niveau 3

Ce rapport ne doit pas être reproduit, sinon en entier, sans l'autorisation écrite de SGS CANADA inc.
Le présent rapport est émis par la Société conformément à ses Conditions Générales de Service accessibles sur http://www.sgs.ca/fr-FR/Terms-and-Conditions.aspx
This report is confidential and shall not be reproduced without the written approval of SGS CANADA Inc
This document is issued by the Company under its General Conditions of Service accessible at http://www.sgs.ca/en/Terms-and-Conditions.aspx

Client :	**Inukshuk Construction Ltd,**	**Date d'intervention :** **Intervention date :**	2017-08-30
Adresse/Address :	PO Box 654 Rankin Inlet, Nunavut X0C 0G0	**Date du rapport :** **Report date :**	2017-09-08
Contact :	Marc Losier		
Entrepreneur : **Contractor :**	N/A	**N° dossier :** **File no :**	INS-117107-01_R01
Endroit du travail : **Job location :**	Rankin Inlet , Nunavut	**Commande :** **Order :**	295-1046

Picture : 1



View of some nozzles

Picture : 2



View of tank 2

Techniciens : **Technicians :**	Sylvain Germain CSA W178.2 level 2	**Assistants:**		**Approuvé par :** **Approved by :**	Pierre Dostie Technical Supervisor CSA W178.2, niveau 3

Ce rapport ne doit pas être reproduit, sinon en entier, sans l'autorisation écrite de SGS CANADA inc.
Le présent rapport est émis par la Société conformément à ses Conditions Générales de Service accessibles sur http://www.sgs.ca/fr-FR/Terms-and-Conditions.aspx
This report is confidential and shall not be reproduced without the written approval of SGS CANADA Inc
This document is issued by the Company under its General Conditions of Service accessible at http://www.sgs.ca/en/Terms-and-Conditions.aspx

Client :	**Inukshuk Construction Ltd,**	**Date d'intervention :** **Intervention date :**	2017-08-30
Adresse/Address :	PO Box 654 Rankin Inlet, Nunavut X0C 0G0	**Date du rapport :** **Report date :**	2017-09-08
Contact :	Marc Losier		
Entrepreneur : **Contractor :**	N/A	**N° dossier :** **File no :**	INS-117107-01_R01
Endroit du travail : **Job location :**	Rankin Inlet , Nunavut	**Commande :** **Order :**	295-1046

Picture :3

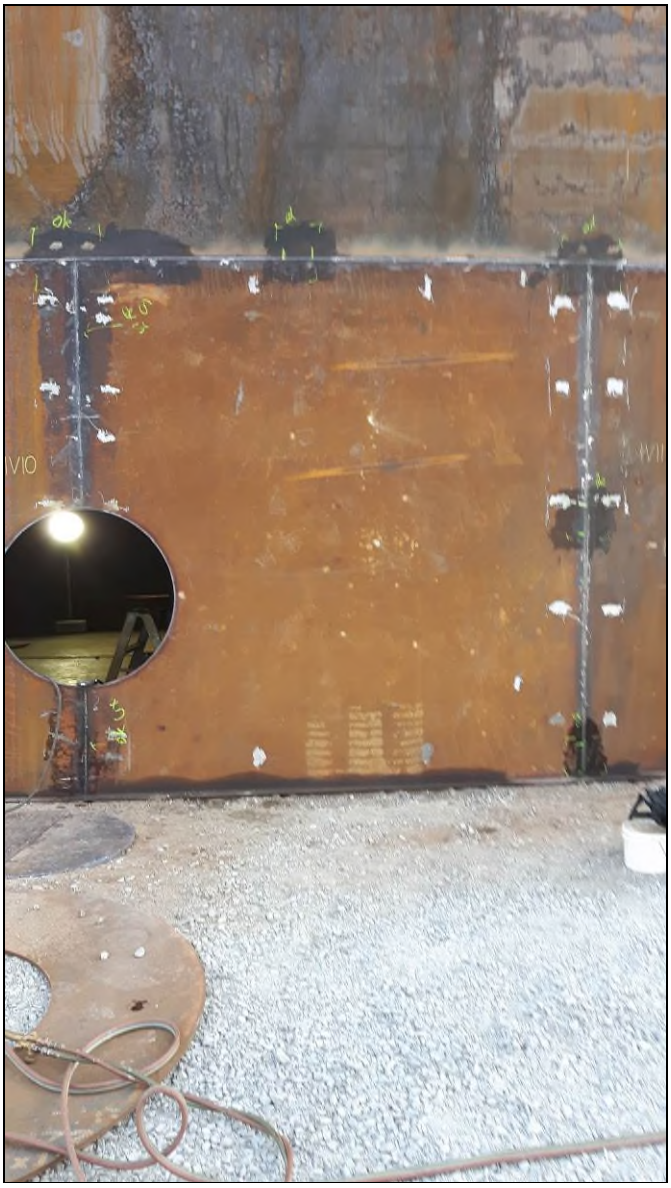

View of manhole before padding

Techniciens : **Technicians :**	Sylvain Germain CSA W178.2 level 2	**Assistants:**		**Approuvé par :** **Approved by :**	Pierre Dostie Technical Supervisor CSA W178.2, niveau 3

Ce rapport ne doit pas être reproduit, sinon en entier, sans l'autorisation écrite de SGS CANADA inc.
Le présent rapport est émis par la Société conformément à ses Conditions Générales de Service accessibles sur http://www.sgs.ca/fr-FR/Terms-and-Conditions.aspx
This report is confidential and shall not be reproduced without the written approval of SGS CANADA Inc
This document is issued by the Company under its General Conditions of Service accessible at http://www.sgs.ca/en/Terms-and-Conditions.aspx

Tank #2 Rankin Inlet (AEM)

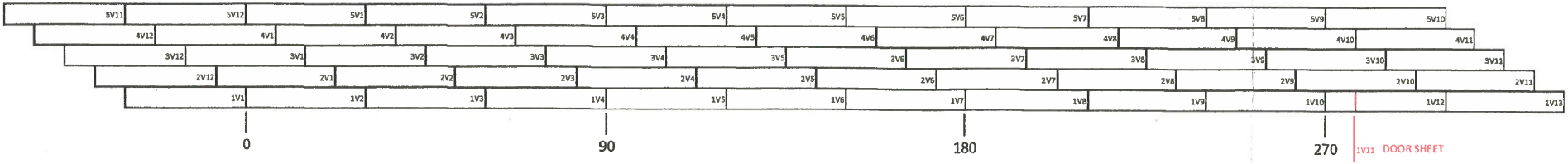

NDT TECHNICIAN WILL INITIAL EACH BOX WHEN WELD IS ACCEPTABLE

B ----> BOTTOM OF THE VERT (0-6")	M ----> MIDDLE OF THE VERT (53"-59")	T ----> TOP OF THE VERT (104 3/16" - 110 3/16")

VERTICAL SEAMS MAPPING UT

	B	M	T	FULL
1V1	UT FULL BECAUSE NOZZLE INTO VERT			
1V2				
1V3				
1V4	UT FULL BECAUSE NOZZLE INTO VERT			
1V5				
1V6				
1V7	UT FULL BECAUSE NOZZLE INTO VERT			
1V8				
1V9				
1V10	UT FULL BECAUSE NOZZLE INTO VERT			
1V11 (DOOR SHEET)				
1V12				
1V13				

	B	M	T
2V1			
2V2			
2V3			
2V4			
2V5			
2V6			
2V7			
2V8			
2V9			
2V10			
2V11			
2V12			

	B	T
3V1		
3V2		
3V3		
3V4		
3V5		
3V6		
3V7		
3V8		
3V9		
3V10		
3V11		
3V12		

	B	T
4V1		
4V2		
4V3		
4V4		
4V5		
4V6		
4V7		
4V8		
4V9		
4V10		
4V11		
4V12		

	B	T
5V1		
5V2		
5V3		
5V4		
5V5		
5V6		
5V7		
5V8		
5V9		
5V10		
5V11		
5V12		

HORIZONTAL SEAMS MAPPING UT

H1V2	48"-54"	
H1V8	60"-66"	
H1V10	42"-48"	

H2V3	48"-54"	
H2V9	72"-78"	

H3V1	60"-66"	
H3V7	42"-48"	

H4V5	30"-36"	
H4V11	72"-78"	

Sub-Arc Representative Signature: _____ Date: Aug 26/17

Client Representative Signature: _____ Date: _____

NDT Representative Signature: _____ Date: august 26 2017

Item 11 – Compression Ring

Contents

1. Weld Maps
2. Visual Report

Item 11 - Compression Ring - Rim Angle to Roof Weld Map

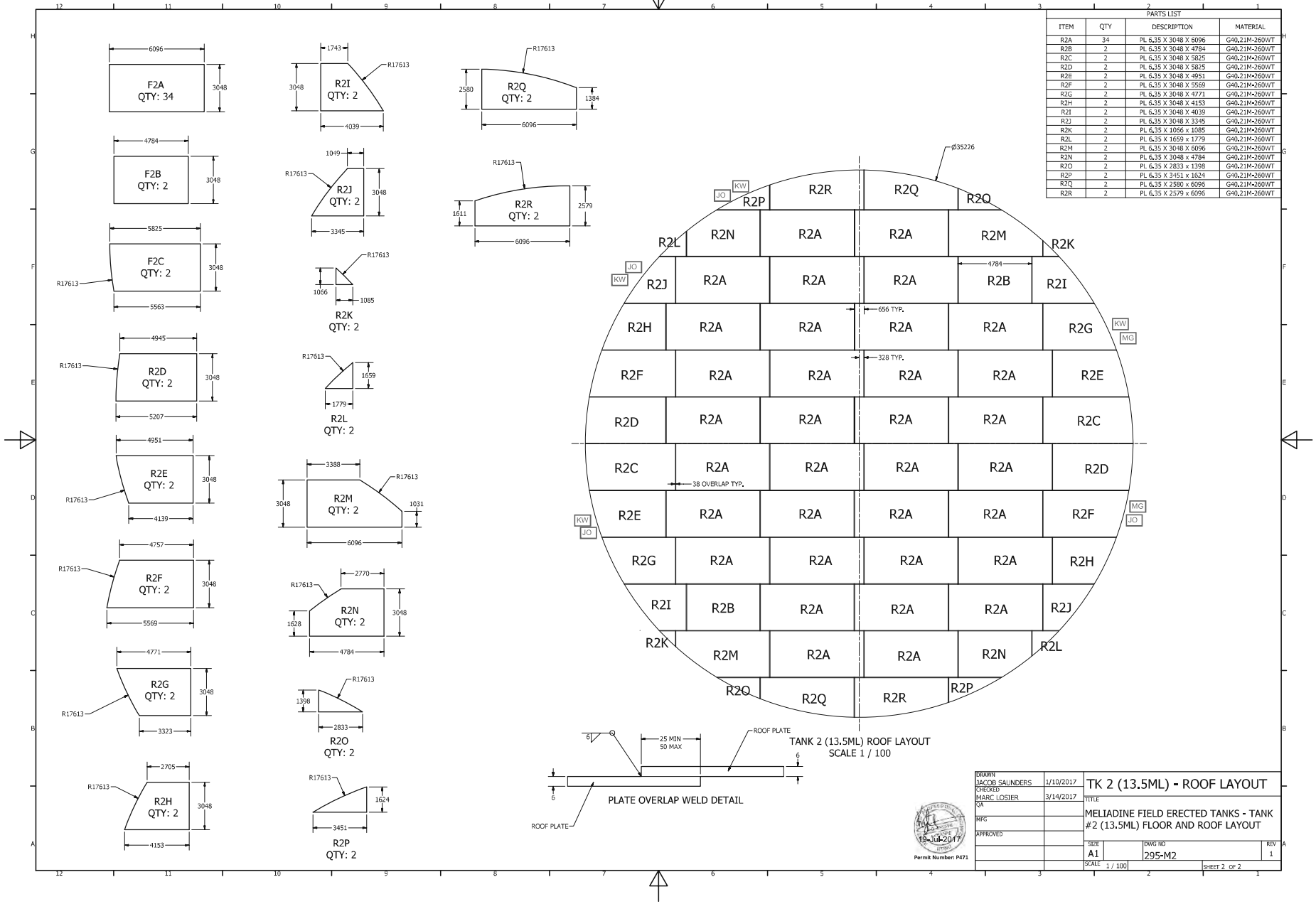

PARTS LIST			
ITEM	QTY	DESCRIPTION	MATERIAL
R2A	34	PL 6.35 X 3048 X 6096	G40.21M-260WT
R2B	2	PL 6.35 X 3048 X 4784	G40.21M-260WT
R2C	2	PL 6.35 X 3048 X 5825	G40.21M-260WT
R2D	2	PL 6.35 X 3048 X 5825	G40.21M-260WT
R2E	2	PL 6.35 X 3048 X 4951	G40.21M-260WT
R2F	2	PL 6.35 X 3048 X 5569	G40.21M-260WT
R2G	2	PL 6.35 X 3048 X 4771	G40.21M-260WT
R2H	2	PL 6.35 X 3048 X 4153	G40.21M-260WT
R2I	2	PL 6.35 X 3048 X 4039	G40.21M-260WT
R2J	2	PL 6.35 X 3048 X 3345	G40.21M-260WT
R2K	2	PL 6.35 X 1066 x 1085	G40.21M-260WT
R2L	2	PL 6.35 X 1659 x 1779	G40.21M-260WT
R2M	2	PL 6.35 X 3048 X 6096	G40.21M-260WT
R2N	2	PL 6.35 X 3048 X 4784	G40.21M-260WT
R2O	2	PL 6.35 X 2833 x 1398	G40.21M-260WT
R2P	2	PL 6.35 X 3451 x 1624	G40.21M-260WT
R2Q	2	PL 6.35 X 2580 x 6096	G40.21M-260WT
R2R	2	PL 6.35 X 2579 x 6096	G40.21M-260WT

DRAWN	JACOB SAUNDERS	1/10/2017
CHECKED	MARC LOSIER	3/14/2017
QA		
MFG		
APPROVED		

TK 2 (13.5ML) - ROOF LAYOUT

TITLE: MELIADINE FIELD ERECTED TANKS - TANK #2 (13.5ML) FLOOR AND ROOF LAYOUT

SIZE A1 | DWG NO 295-M2 | REV 1 | SCALE 1 / 100 | SHEET 2 OF 2

19-Jul-2017
Permit Number: P471

Item 11 - Compression Ring - Rim Angle to Shell Weld Map

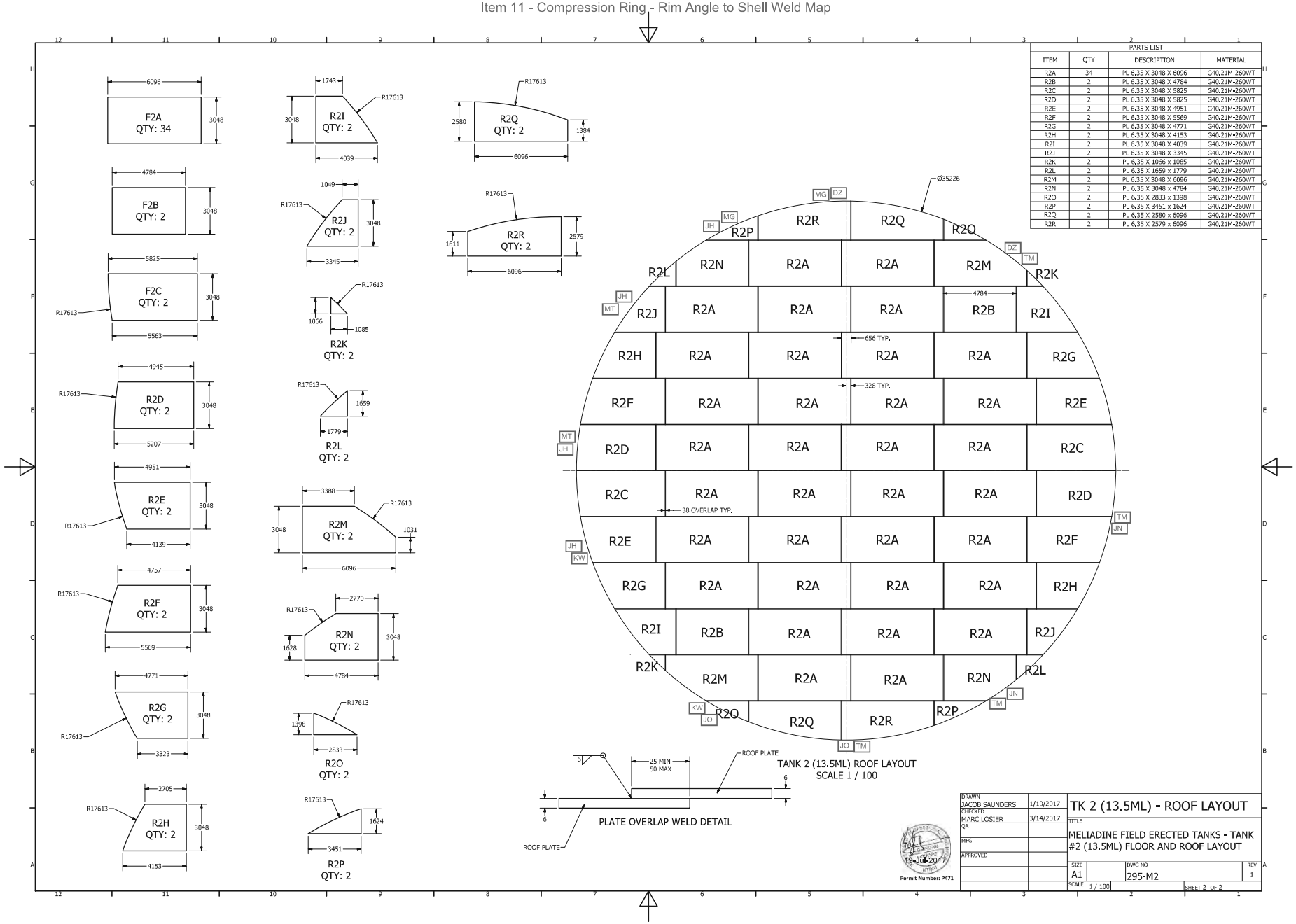

PARTS LIST			
ITEM	QTY	DESCRIPTION	MATERIAL
R2A	34	PL 6.35 X 3048 X 6096	G40.21M-260WT
R2B	2	PL 6.35 X 3048 X 4784	G40.21M-260WT
R2C	2	PL 6.35 X 3048 X 5825	G40.21M-260WT
R2D	2	PL 6.35 X 3048 X 5825	G40.21M-260WT
R2E	2	PL 6.35 X 3048 X 4951	G40.21M-260WT
R2F	2	PL 6.35 X 3048 X 5569	G40.21M-260WT
R2G	2	PL 6.35 X 3048 X 4771	G40.21M-260WT
R2H	2	PL 6.35 X 3048 X 4153	G40.21M-260WT
R2I	2	PL 6.35 X 3048 X 4039	G40.21M-260WT
R2J	2	PL 6.35 X 3048 X 3345	G40.21M-260WT
R2K	2	PL 6.35 X 1066 x 1085	G40.21M-260WT
R2L	2	PL 6.35 X 1659 x 1779	G40.21M-260WT
R2M	2	PL 6.35 X 3048 X 6096	G40.21M-260WT
R2N	2	PL 6.35 X 3048 X 4784	G40.21M-260WT
R2O	2	PL 6.35 X 2833 x 1398	G40.21M-260WT
R2P	2	PL 6.35 X 3451 x 1624	G40.21M-260WT
R2Q	2	PL 6.35 X 2580 x 6096	G40.21M-260WT
R2R	2	PL 6.35 X 2579 x 6096	G40.21M-260WT

DRAWN	JACOB SAUNDERS	1/10/2017
CHECKED	MARC LOSIER	3/14/2017
QA		
MFG		
APPROVED		

TK 2 (13.5ML) - ROOF LAYOUT

TITLE: MELIADINE FIELD ERECTED TANKS - TANK #2 (13.5ML) FLOOR AND ROOF LAYOUT

SIZE A1 | DWG NO 295-M2 | REV 1 | SCALE 1 / 100 | SHEET 2 OF 2

19-Jul-2017
Permit Number: P471

Sub-Arc Systems Inc.

4605-47 Street
Vermillion, AB, T9X 1L6
780-608-9589

QUALITY CONTROL MANUAL

Exhibit 15c, Rev 1

VISUAL TEST REPORT

Customer: Agnico Eagle

Location: Rankin Inlet

Code Requiring Test: API 650 (section 8.5.2) Reason for Test: New Construction

A weld shall be acceptable by visual examination if the inspection shows the following.

a) There are no crater cracks, other surface cracks or arc strikes in or adjacent to the welded joints.
b) Maximum permissible undercut is 0.4 mm (1/64 in.) in depth for vertical butt joints, vertically oriented permanent attachments, attachment welds for nozzles, manholes, flush-type openings, and the inside shell-to-bottom welds. For horizontal butt joints, horizontally oriented permanent attachments, and annular-ring butt joints, the maximum permissible undercut is 0.8 mm (1/32 in.) in depth.
c) The frequency of surface porosity in the weld does not exceed one cluster (one or more pores) in any 100 mm (4 in.) of length, and the diameter of each cluster does not exceed 2.5 mm (3/32 in.).
d) The reinforcement of the welds on all thicknesses:

Plate Thickness mm (in.)	Maximum Reinforcement Thickness mm (in.)	
	Vertical Joints	Horizontal Joints
≤ 13 (1/2)	2.5 (3/32)	3 (1/8)
> 13 (1/2) to 25 (1)	3 (1/8)	5 (3/16)
> 25 (1)	5 (3/16)	6 (1/4)

Surface Condition (As Welded)

Test Solution: N/A Test Date(s): Aug 20/17

Tested by: MATT MACKENZIE Ambient Conditions:

Items Tested:

COMPRESSION RING

Results:

NO DEFECTS WERE FOUND. ALL WELDING ACCEPTABLE.

Sub-Arc Representative Signature: _____ Date: Aug 20/17.

Client Representative Signature: _____ Date: _____

Client Signature: CHARLIE CLEM BONIFACE Date: Aug 23/17

Item 12 – Roof

Contents

1. Visual Report
2. MTR

Sub-Arc Systems Inc.

4605-47 Street
Vermillion, AB, T9X 1L6
780-608-9589

QUALITY CONTROL MANUAL

Exhibit 15c, Rev 1

VISUAL TEST REPORT

Customer: Agnico Eagle

Location: Rankin Inlet

Code Requiring Test: API 650 (section 8.5.2) Reason for Test: New Construction

A weld shall be acceptable by visual examination if the inspection shows the following.

a) There are no crater cracks, other surface cracks or arc strikes in or adjacent to the welded joints.
b) Maximum permissible undercut is 0.4 mm (1/64 in.) in depth for vertical butt joints, vertically oriented permanent attachments, attachment welds for nozzles, manholes, flush-type openings, and the inside shell-to-bottom welds. For horizontal butt joints, horizontally oriented permanent attachments, and annular-ring butt joints, the maximum permissible undercut is 0.8 mm (1/32 in.) in depth.
c) The frequency of surface porosity in the weld does not exceed one cluster (one or more pores) in any 100 mm (4 in.) of length, and the diameter of each cluster does not exceed 2.5 mm (3/32 in.).
d) The reinforcement of the welds on all thicknesses:

Plate Thickness mm (in.)	Maximum Reinforcement Thickness mm (in.)	
	Vertical Joints	Horizontal Joints
≤ 13 (1/2)	2.5 (3/32)	3 (1/8)
> 13 (1/2) to 25 (1)	3 (1/8)	5 (3/16)
> 25 (1)	5 (3/16)	6 (1/4)

Surface Condition (As Welded)

Test Solution: N/A Test Date(s): Aug 23/17

Tested by: MATT MACKENZIE Ambient Conditions: 17°

Items Tested:

TK-2 ROOF

Results:

VISUAL COMPLETED ON TK-2 ROOF. NO DEFECTS WERE FOUND. ARC WELDING ACCEPTABLE.

Sub-Arc Representative Signature: _____ Date: Aug 23/17.

Client Representative Signature: _____ Date: _____

Client Signature: Chris Clerk BOMIA Date: Aug 23/17

SSAB

Test Certificate

12400 Highway 43 North, Axis, Alabama 36505, US

Item 12 - Roof - MTR

Form TC1: Revision 2: Date 23 Apr 2014

Customer:
SAMUEL, SON & CO. LTD
1250 APPLEBY LINE

BURLINGTON
ON L7L5G6

Customer P.O.No.: C41966 & 41-490196 | **Mill Order No.** 41-491119-13 | **Shipping Manifest:** AR240131

Product Description: CSA G40.21(2013) 38WT/260WT - CAT 5;LCVN 15FT.LBS,TCVN13FT.LBS@-45F/A673-P ALLOYS API650(12TH ED) TABLE 4-1 GR.IIIA NORMALIZED

Ship Date: 21 Feb 17
Cert Date: 21 Feb 17

Cert No: 081597448
(Page 1 of 2)

Size: 0.250 X 120.0 X 480.0 (IN)

Tested Pieces:				Tensiles:						Charpy Impact Tests									
Heat Id	Piece Id	Tested Thickness	Tst Loc	YS (KSI)	UTS (KSI)	%RA	Elong % 2in 8in	Tst Dir	Hardness	Abs. Energy(FTLB) 1	2	3	Avg	% Shear 1	2	3	Avg	Tst Tmp	Tst Dir	Tst Siz (mm)	BDWTT Tmp %Shr
E7B102	E11	0.256 (DISCRT)	C							33	44	37	38					-50F	L	5.0	
			C							35	27	34	32					-50F	T	5.0	
E7B102	E12	0.256 (DISCRT)	C							39	40	36	38					-50F	L	5.0	
			C							27	25	22	25					-50F	T	5.0	
E7B102	E13	0.255 (DISCRT)	C	55	76		26	T		35	34	30	33					-50F	L	5.0	
			C							27	44	41	37					-50F	T	5.0	
E7B102	E14	0.256 (DISCRT)	C	55	75		24	T		56	41	58	52					-50F	L	5.0	
			C							27	32	30	30					-50F	T	5.0	
W7B598	E06	0.256 (DISCRT)	C							30	30	30	30					-50F	L	5.0	
			C							37	27	23	29					-50F	T	5.0	
W7B598	E07	0.256 (DISCRT)	C	52	72		25	T													
W7B598	E08	0.256 (DISCRT)	C	51	71		25	T													
W7B598	E10	0.256 (DISCRT)	C							32	40	31	34					-50F	L	5.0	
			C							28	34	28	30					-50F	T	5.0	

Chemical Analysis

Heat Id	C	Mn	P	S	Si	Tot Al	Sol Al	Cu	Ni	Cr	Mo	Cb	V	Ti	B	N	ORGN
E7B102	.18	.94	.009	.001	.25	.027	.025	.26	.12	.11	.05	.002	.005	.011	.0002	.0076	USA
W7B598	.18	.92	.009	.001	.24	.028	.022	.26	.13	.08	.05	.001	.004	.011	.0002	.0078	USA

KILLED STEEL
MERCURY IS NOT A METALLURGICAL COMPONENT OF THE STEEL AND NO MERCURY WAS INTENTIONALLY ADDED DURING THE MANUFACTURE OF THIS PRODUCT.
KILLED STEEL, PRODUCED TO A FINE GRAIN PRACTICE
MTR EN 10204:2004 INSPECTION CERTIFICATE 3.1 COMPLIANT
CHARPY FULL SIZE EQUIVALENT = ABSORBED ENERGY AVG X 10 / TEST SIZE IN MM
NORMALIZED PLATES. HEATED AT 1665F FOR 14 MINUTES.
TEST COUPONS TAKEN FROM HEAT TREATED PLATE.
PRODUCTS SHIPPED:

W7B598 E06	6705201	PCES:	1,	LBS:	4084	W7B598 E06	6705200	PCES:	1,	LBS:	4084
E7B102 E14	6705250	PCES:	1,	LBS:	4084	E7B102 E14	6705249	PCES:	1,	LBS:	4084
E7B102 E13	6705243	PCES:	1,	LBS:	4084	E7B102 E12	6705236	PCES:	1,	LBS:	4084
E7B102 E13	6705244	PCES:	1,	LBS:	4084	W7B598 E06	6705199	PCES:	1,	LBS:	4084
E7B102 E12	6705235	PCES:	1,	LBS:	4084	E7B102 E13	6705234	PCES:	1,	LBS:	4084
E7B102 E11	6705193	PCES:	1,	LBS:	4084	E7B102 E11	6705190	PCES:	1,	LBS:	4084

(P) Cust Part #:

WE HEREBY CERTIFY THAT THIS MATERIAL WAS TESTED IN ACCORDANCE WITH, AND MEETS THE REQUIREMENTS OF, THE APPROPRIATE SPECIFICATION

Justin Ward +1 251 662 4400
SENIOR METALLURGIST - PRODUCT

SSAB

12400 Highway 43 North, Axis, Alabama 36505, US

Test Certificate

Item 12 - Roof - MTR

Form TC1: Revision 2: Date 23 Apr 2014

Customer:
SAMUEL, SON & CO. LTD
1250 APPLEBY LINE

BURLINGTON
ON L7L5G6

Customer P.O.No.: C41966 & 41-490196 | **Mill Order No.** 41-491119-13 | **Shipping Manifest:** AR240131

Product Description: CSA G40.21(2013) 38WT/260WT - CAT 5;LCVN 15FT.LBS,TCVN13FT.LBS@-45F/A673-P ALLOYS API650(12TH ED) TABLE 4-1 GR.IIIA NORMALIZED

Size: 0.250 X 120.0 X 480.0 (IN)

Ship Date: 21 Feb 17
Cert Date: 21 Feb 17

Cert No: 081597448

Tested Pieces:				Tensiles:						Charpy Impact Tests							
Heat Id	Piece Id	Tested Thickness	Tst Loc	YS (KSI)	UTS (KSI)	%RA	Elong % 2in 8in	Tst Dir	Hardness	Abs. Energy(FTLB) 1 2 3 Avg	% Shear 1 2 3 Avg	Tst Tmp	Tst Dir	Tst Siz (mm)	BDWTT Tmp %Shr
W7B598 E10	6705178	PCES: 1, LBS: 4084							E7B102 E11	6705183	PCES: 1, LBS: 4084						
W7B598 E10	6705177	PCES: 1, LBS: 4084							W7B598 E10	6705181	PCES: 1, LBS: 4084						
W7B598 E10	6705179	PCES: 1, LBS: 4084							W7B598 E10	6705189	PCES: 1, LBS: 4084						
W7B598 E10	6705186	PCES: 1, LBS: 4084							E7B102 E11	6705172	PCES: 1, LBS: 4084						
E7B102 E11	6705176	PCES: 1, LBS: 4084							W7B598 E10	6705180	PCES: 1, LBS: 4084						
E7B102 E11	6705192	PCES: 1, LBS: 4084							E7B102 E11	6705194	PCES: 1, LBS: 4084						
E7B102 E11	6705184	PCES: 1, LBS: 4084							E7B102 E11	6705185	PCES: 1, LBS: 4084						
W7B598 E06	6705207	PCES: 1, LBS: 4084							W7B598 E06	6705206	PCES: 1, LBS: 4084						
E7B102 E12	6705239	PCES: 1, LBS: 4084							E7B102 E12	6705231	PCES: 1, LBS: 4084						
E7B102 E14	6705247	PCES: 1, LBS: 4084							E7B102 E13	6705242	PCES: 1, LBS: 4084						
E7B102 E14	6705248	PCES: 1, LBS: 4084							E7B102 E12	6705237	PCES: 1, LBS: 4084						
W7B598 E06	6705209	PCES: 1, LBS: 4084							E7B102 E13	6705240	PCES: 1, LBS: 4084						
E7B102 E12	6705238	PCES: 1, LBS: 4084							W7B598 E06	6705198	PCES: 1, LBS: 4084						
E7B102 E14	6705251	PCES: 1, LBS: 4084							W7B598 E06	6705197	PCES: 1, LBS: 4084						
E7B102 E13	6705241	PCES: 1, LBS: 4084							E7B102 E12	6705230	PCES: 1, LBS: 4084						

(P) Cust Part #:

WE HEREBY CERTIFY THAT THIS MATERIAL WAS TESTED IN ACCORDANCE WITH, AND MEETS THE REQUIREMENTS OF, THE APPROPRIATE SPECIFICATION

Justin Ward +1 251 662 4400
SENIOR METALLURGIST - PRODUCT

SSAB

Test Certificate

12400 Highway 43 North, Axis, Alabama 36505, US

Item 12 - Roof - MTR

Form TC1: Revision 2: Date 23 Apr 2014

Customer:
SAMUEL, SON & CO. LTD
1250 APPLEBY LINE

BURLINGTON
ON L7L5G6

Customer P.O.No.: C41965 & 41-490195 | **Mill Order No.** 41-491117-01 | **Shipping Manifest:** AR240135

Product Description: CSA G40.21(2013) 38WT/260WT - CAT 5;LCVN 15FT.LBS,TCVN13FT.LBS@-45F/A673-P ALLOYS API650(12TH ED) TABLE 4-1 GR.IIIA NORMALIZED

Ship Date: 21 Feb 17
Cert Date: 21 Feb 17

Cert No: 081597458
(Page 1 of 2)

Size: 0.250 X 120.0 X 480.0 (IN)

Tested Pieces:				Tensiles:						Charpy Impact Tests									
Heat Id	Piece Id	Tested Thickness	Tst Loc	YS (KSI)	UTS (KSI)	%RA	Elong % 2in 8in	Tst Dir	Hardness	Abs. Energy(FTLB) 1	2	3	Avg	% Shear 1	2	3	Avg	Tst Tmp	Tst Dir	Tst Siz (mm)	BDWTT Tmp %Shr
E7B101	E01	0.256 (DISCRT)	C	53	75		25	T													
E7B101	E02	0.256 (DISCRT)	C							37	27	59	41					-50F	L	5.0	
			C							24	36	28	29					-50F	T	5.0	
E7B101	E03	0.256 (DISCRT)	C	54	75		27	T		51	62	61	58					-50F	L	5.0	
			C							37	30	27	31					-50F	T	5.0	
E7B101	E04	0.256 (DISCRT)	C							22	33	38	31					-50F	L	5.0	
			C							42	37	48	42					-50F	T	5.0	
E7B101	E05	0.256 (DISCRT)	C							61	49	61	57					-50F	L	5.0	
			C							32	41	32	35					-50F	T	5.0	
W7B598	E07	0.256 (DISCRT)	C	52	72		25	T													
W7B598	E08	0.256 (DISCRT)	C	51	71		25	T		33	31	37	34					-45F	L	5.0	
			C							30	28	31	30					-45F	T	5.0	
W7B598	E09	0.256 (DISCRT)	C							43	31	55	43					-50F	L	5.0	
			C							33	30	31	31					-50F	T	5.0	

Chemical Analysis

Heat Id	C	Mn	P	S	Si	Tot Al	Sol Al	Cu	Ni	Cr	Mo	Cb	V	Ti	B	N	ORGN
E7B101	.19	.92	.010	<.001	.24	.022	.020	.24	.13	.10	.04	.002	.005	.010	.0002	.0069	USA
W7B598	.18	.92	.009	.001	.24	.028	.022	.26	.13	.08	.05	.001	.004	.011	.0002	.0078	USA

KILLED STEEL
MERCURY IS NOT A METALLURGICAL COMPONENT OF THE STEEL AND NO MERCURY WAS INTENTIONALLY ADDED DURING THE MANUFACTURE OF THIS PRODUCT.
KILLED STEEL, PRODUCED TO A FINE GRAIN PRACTICE
MTR EN 10204:2004 INSPECTION CERTIFICATE 3.1 COMPLIANT
CHARPY FULL SIZE EQUIVALENT = ABSORBED ENERGY AVG X 10 / TEST SIZE IN MM
NORMALIZED PLATES. HEATED AT 1665F FOR 14 MINUTES.
TEST COUPONS TAKEN FROM HEAT TREATED PLATE.
PRODUCTS SHIPPED:

E7B101 E05	6705084	PCES:	1,	LBS:	4084	E7B101 E02	6705125	PCES:	1,	LBS:	4084
E7B101 E02	6705123	PCES:	1,	LBS:	4084	E7B101 E05	6705086	PCES:	1,	LBS:	4084
E7B101 E03	6705100	PCES:	1,	LBS:	4084	E7B101 E05	6705085	PCES:	1,	LBS:	4084
E7B101 E02	6705124	PCES:	1,	LBS:	4084	W7B598 E08	6705042	PCES:	1,	LBS:	4084
W7B598 E08	6705041	PCES:	1,	LBS:	4084	W7B598 E08	6705040	PCES:	1,	LBS:	4084
W7B598 E09	6705038	PCES:	1,	LBS:	4084	W7B598 E08	6705043	PCES:	1,	LBS:	4084

(P) Cust Part #:

WE HEREBY CERTIFY THAT THIS MATERIAL WAS TESTED IN ACCORDANCE WITH, AND MEETS THE REQUIREMENTS OF, THE APPROPRIATE SPECIFICATION

Justin Ward +1 251 662 4400
SENIOR METALLURGIST - PRODUCT

SSAB

12400 Highway 43 North, Axis, Alabama 36505, US

Test Certificate

Item 12 - Roof - MTR

Form TC1: Revision 2: Date 23 Apr 2014

Customer:
SAMUEL, SON & CO. LTD
1250 APPLEBY LINE

BURLINGTON
ON L7L5G6

Customer P.O.No.: C41965 & 41-490195 | **Mill Order No.** 41-491117-01 | **Shipping Manifest:** AR240135

Product Description: CSA G40.21(2013) 38WT/260WT - CAT 5;LCVN 15FT.LBS,TCVN13FT.LBS@-45F/A673-P ALLOYS API650(12TH ED) TABLE 4-1 GR.IIIA NORMALIZED

Ship Date: 21 Feb 17
Cert Date: 21 Feb 17

Cert No: 081597458
(Page 2 of 2)

Size: 0.250 X 120.0 X 480.0 (IN)

Tested Pieces:				Tensiles:						Charpy Impact Tests							
Heat Id	Piece Id	Tested Thickness	Tst Loc	YS (KSI)	UTS (KSI)	%RA	Elong % 2in 8in	Tst Dir	Hardness	Abs. Energy(FTLB) 1 2 3 Avg	% Shear 1 2 3 Avg	Tst Tmp	Tst Dir	Tst Siz (mm)	BDWTT Tmp %Shr
W7B598 E08	6705039	PCES: 1, LBS: 4084							E7B101 E05	6705087	PCES: 1, LBS: 4084						
W7B598 E08	6705052	PCES: 1, LBS: 4084							W7B598 E08	6705050	PCES: 1, LBS: 4084						
W7B598 E08	6705049	PCES: 1, LBS: 4084							W7B598 E08	6705044	PCES: 1, LBS: 4084						
W7B598 E08	6705045	PCES: 1, LBS: 4084							E7B101 E04	6705126	PCES: 1, LBS: 4084						
E7B101 E02	6705151	PCES: 1, LBS: 4084							E7B101 E02	6705152	PCES: 1, LBS: 4084						
E7B101 E02	6705150	PCES: 1, LBS: 4084							E7B101 E05	6705162	PCES: 1, LBS: 4084						
E7B101 E05	6705160	PCES: 1, LBS: 4084							E7B101 E05	6705153	PCES: 1, LBS: 4084						
E7B101 E05	6705161	PCES: 1, LBS: 4084							E7B101 E04	6705129	PCES: 1, LBS: 4084						
E7B101 E04	6705127	PCES: 1, LBS: 4084							E7B101 E04	6705130	PCES: 1, LBS: 4084						
E7B101 E04	6705128	PCES: 1, LBS: 4084							E7B101 E05	6705163	PCES: 1, LBS: 4084						
E7B101 E02	6705149	PCES: 1, LBS: 4084							E7B101 E04	6705102	PCES: 1, LBS: 4084						
W7B598 E08	6705046	PCES: 1, LBS: 4084															

(P) Cust Part #:

WE HEREBY CERTIFY THAT THIS MATERIAL WAS TESTED IN ACCORDANCE WITH, AND MEETS THE REQUIREMENTS OF, THE APPROPRIATE SPECIFICATION

Justin Ward +1 251 662 4400
SENIOR METALLURGIST - PRODUCT

SSAB

12400 Highway 43 North, Axis, Alabama 36505, US

Test Certificate

Item 12 - Roof - MTR

Form TC1: Revision 2: Date 23 Apr 2014

Customer:
SAMUEL, SON & CO. LTD
1250 APPLEBY LINE

BURLINGTON
ON L7L5G6

Customer P.O.No.: C41965 & 41-496189 | **Mill Order No.** 41-496191-01 | **Shipping Manifest:** AR240215

Product Description: CSA G40.21(2013) 38WT/260WT - CAT 5;LCVN 15FT-LBS,LCVN 13FT-LBS@-45F/A673-P ALLOYS API650(12TH ED) TABLE 4-1 GR.IIIA NORMALIZED

Item 12 - Roof - MTR

Ship Date: 22 Feb 17
Cert Date: 22 Feb 17

Cert No: 081597726

Size: 0.250 X 120.0 X 480.0 (IN)

Tested Pieces:				Tensiles:					Hardness	Charpy Impact Tests									
Heat Id	Piece Id	Tested Thickness	Tst Loc	YS (KSI)	UTS (KSI)	%RA	Elong % 2in 8in	Tst Dir		Abs. Energy(FTLB) 1	2	3	Avg	% Shear 1	2	3	Avg	Tst Tmp	Tst Dir	Tst Siz (mm)	BDWTT Tmp %Shr
E7B102	E13	0.255 (DISCRT)	C	55	76		26	T		35	34	30	33					-50F	L	5.0	
			C							27	44	41	37					-50F	T	5.0	
W7B598	E07	0.256 (DISCRT)	C	52	72		25	T		36	34	32	34					-45F	L	5.0	
			C							30	29	27	29					-45F	T	5.0	
W7B598	E08	0.256 (DISCRT)	C	51	71		25	T													
W7B598	E09	0.256 (DISCRT)	C							43	31	55	43					-50F	L	5.0	
			C							33	30	31	31					-50F	T	5.0	
W7B598	E10	0.256 (DISCRT)	C							32	40	31	34					-50F	L	5.0	
			C							28	34	28	30					-50F	T	5.0	

Heat Id	Chemical Analysis C	Mn	P	S	Si	Tot Al	Sol Al	Cu	Ni	Cr	Mo	Cb	V	Ti	B	N	ORGN
E7B102	.18	.94	.009	.001	.25	.027	.025	.26	.12	.11	.05	.002	.005	.011	.0002	.0076	USA
W7B598	.18	.92	.009	.001	.24	.028	.022	.26	.13	.08	.05	.001	.004	.011	.0002	.0078	USA

KILLED STEEL
MERCURY IS NOT A METALLURGICAL COMPONENT OF THE STEEL AND NO MERCURY WAS INTENTIONALLY ADDED DURING THE MANUFACTURE OF THIS PRODUCT.
KILLED STEEL, PRODUCED TO A FINE GRAIN PRACTICE
MTR EN 10204:2004 INSPECTION CERTIFICATE 3.1 COMPLIANT
CHARPY FULL SIZE EQUIVALENT = ABSORBED ENERGY AVG X 10 / TEST SIZE IN MM
NORMALIZED PLATES. HEATED AT 1665F FOR 15 MINUTES.
TEST COUPONS TAKEN FROM HEAT TREATED PLATE.
PRODUCTS SHIPPED:

W7B598 E10	6705182	PCES:	1,	LBS:	4084	W7B598 E07	6705202	PCES:	1,	LBS:	4084
W7B598 E07	6705203	PCES:	1,	LBS:	4084	W7B598 E07	6705204	PCES:	1,	LBS:	4084
W7B598 E07	6705205	PCES:	1,	LBS:	4084	W7B598 E09	6705210	PCES:	1,	LBS:	4084
W7B598 E07	6705211	PCES:	1,	LBS:	4084	W7B598 E07	6705212	PCES:	1,	LBS:	4084
W7B598 E07	6705213	PCES:	1,	LBS:	4084	W7B598 E07	6705214	PCES:	1,	LBS:	4084
W7B598 E07	6705215	PCES:	1,	LBS:	4084	W7B598 E10	6705216	PCES:	1,	LBS:	4084
W7B598 E10	6705217	PCES:	1,	LBS:	4084	W7B598 E10	6705218	PCES:	1,	LBS:	4084
W7B598 E10	6705219	PCES:	1,	LBS:	4084	W7B598 E09	6705220	PCES:	1,	LBS:	4084
W7B598 E09	6705221	PCES:	1,	LBS:	4084	W7B598 E09	6705222	PCES:	1,	LBS:	4084
W7B598 E09	6705223	PCES:	1,	LBS:	4084	E7B102 E13	6705232	PCES:	1,	LBS:	4084
E7B102 E13	6705233	PCES:	1,	LBS:	4084	E7B102 E13	6705245	PCES:	1,	LBS:	4084

(P) Cust Part #:

WE HEREBY CERTIFY THAT THIS MATERIAL WAS TESTED IN ACCORDANCE WITH, AND MEETS THE REQUIREMENTS OF, THE APPROPRIATE SPECIFICATION

Justin Ward +1 251 662 4400
SENIOR METALLURGIST - PRODUCT

Item 13 – Roof Structure

Contents

1. Column Plumbness Dimension Report
2. Visual Report

Sub-Arc Systems Inc.

4605-47 Street
Vermillion, AB, T9X 1L6
780-608-9589

QUALITY CONTROL MANUAL

Exhibit 19, Rev A

DIMENSIONAL CHECK REPORT – PLUMBNESS

Customer: AGNICO EAGLE

Location: RANKIN INLET. TK.02

Equipment Tag No.:

Equipment Type:

Equipment Description:

Code Requiring Test: API 650 Reason for Test: New Construction

(The tank shell will be checked for plumb at 12" below the tank roof. Plumb measurements will be checked at 45 degree intervals or less, max. 20' spacing)

Test Date(s): AUG 31/17

Tested by: MATT MACKENZIE.

Seam Test Results:

ALL ROOF STRUCTURE COLUMNS ARE PLUMB. & ACCEPTABLE AT TIME OF INSPECTION.

Sub-Arc Representative Signature: _____ Date: Aug 31/17.

Client Representative Signature: _____ Date: _____

Client Signature: _____ Date: Sept 04/17

Sub-Arc Systems Inc.

4605-47 Street
Vermillion, AB, T9X 1L6
780-608-9589

QUALITY CONTROL MANUAL

Exhibit 15c, Rev 1

VISUAL TEST REPORT

Customer: Agnico Eagle

Location: Rankin Inlet

Code Requiring Test: API 650 (section 8.5.2) Reason for Test: New Construction

A weld shall be acceptable by visual examination if the inspection shows the following.

a) There are no crater cracks, other surface cracks or arc strikes in or adjacent to the welded joints.
b) Maximum permissible undercut is 0.4 mm (1/64 in.) in depth for vertical butt joints, vertically oriented permanent attachments, attachment welds for nozzles, manholes, flush-type openings, and the inside shell-to-bottom welds. For horizontal butt joints, horizontally oriented permanent attachments, and annular-ring butt joints, the maximum permissible undercut is 0.8 mm (1/32 in.) in depth.
c) The frequency of surface porosity in the weld does not exceed one cluster (one or more pores) in any 100 mm (4 in.) of length, and the diameter of each cluster does not exceed 2.5 mm (3/32 in.).
d) The reinforcement of the welds on all thicknesses:

Plate Thickness mm (in.)	Maximum Reinforcement Thickness mm (in.)	
	Vertical Joints	Horizontal Joints
≤ 13 (1/2)	2.5 (3/32)	3 (1/8)
> 13 (1/2) to 25 (1)	3 (1/8)	5 (3/16)
> 25 (1)	5 (3/16)	6 (1/4)

Surface Condition (As Welded)

Test Solution: N/A Test Date(s): Aug 23/17

Tested by: MATT MACKENZIE Ambient Conditions: 17°

Items Tested:

ROOF STRUCTURE

Results:

ALL ROOF STRUCTURE WELDING + BOLT UP ACCEPTABLE.

Sub-Arc Representative Signature: _____ Date: Aug 23/17

Client Representative Signature: _____ Date: _____

Client Signature: _____ GLEN BONIN Date: Aug. 23/17

Item 14 - Nozzles

Contents

1. Weld Map
2. Plumbness Dimension Report
3. Visual Report
4. Air Test – Leak Test Report
5. MPI Report
6. PVRV Test Reports

Item 14 - Nozzles - Weld Map

PARTS LIST		
ITEM	ITEM QTY	PART NUMBER
1	55	SHELL PLATE 2798 X 9203 THICKNESS
2	5	SHELL PLATE LAST ON COURSE 2798 X 9127 (TRIM AT SITE)
3	4	900ns SHELL MANHOLE
5	8	Grounding Lug
6	3	150NS SHELL NOZZLE
8	6	75NS WATER DRAWOFF
10	1	20NS THERMOMETER CONNECTION
11	1	AISC - L 4 x 4 x 1/4 - 15.748031 TEMPERATURE CONNECTION PROTECTION
12	1	400NS VENT
13	4	PLATFORM
14	119	STEPS
18	14	AISC - L 3 x 3 x 1/4 - 15.748031 PRV PIPE SUPPORT
19	1	200NS SHELL NOZZLE - FIX LOADING PIPE

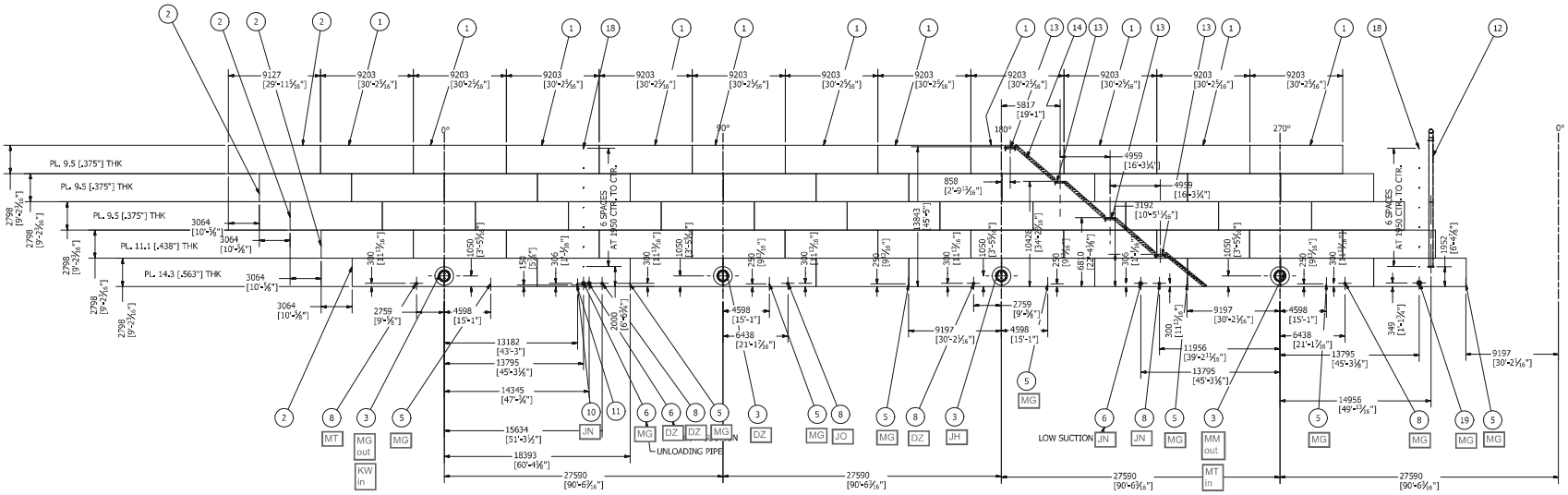

SHELL DEVELOPED VIEW
SCALE 1/200

REVISION HISTORY		
REV	DESCRIPTION	DATE
6	THIS SHEET ADDED	7/12/2017

DRAWN	MARC LOSIER	3/9/2017
CHECKED		
QA		
MFG		
APPROVED		

DEVELOP VIEW

TITLE: AGNICO EAGLE - MELIADINE GOLD MINE - TK #2 - 13,500CUM 35,1M DIA X 14M H

SIZE	DWG NO	REV
A1	295-M10	6

SCALE | SHEET 7 OF 7

16-Jul-2017
Permit Number: P471

Sub-Arc Systems Inc.

4605-47 Street
Vermillion, AB, T9X 1L6
780-608-9589

QUALITY CONTROL MANUAL

Exhibit 19, Rev A

DIMENSIONAL CHECK REPORT – PLUMBNESS

Customer: AGNICO EAGLE

Location: RANKIN INLET TK-02.

Equipment Tag No.:

Equipment Type:

Equipment Description:

Code Requiring Test: API 650 Reason for Test: New Construction

(The tank shell will be checked for plumb at 12" below the tank roof. Plumb measurements will be checked at 45 degree intervals or less, max. 20' spacing)

Test Date(s):

Tested by:

Seam Test Results:

TANK SHELL IS PLUMB IN ALL AREAS THAT HAVE NOZZLES.

Sub-Arc Representative Signature: [signature] Date: Aug 31/17

Client Representative Signature: _____ Date: _____

Client Signature: [signature] Date: Sept 04/17

External Nozzle Dimension Report

Submit sketch for unusual deadwood

External

Quantity	Description	MW = Manway Hatch = Hatch	Code	Diameter	Length	Height	Height From Bottom	To	Office Use Bbls/8th	Gls/8th
4	Manway		MW	34	7 3/4	59	25	59	0.0107	
6	Pipe		F	3	6 3/4	13 1/2	10 1/2	13 1/2	0.0002	
1	Valve		V	8	14	18 1/2	10 1/2	18 1/2	0.0002	
2	Valve		V	6	14	15 1/2	9	15 1/2	0.0004	
1	Valve		V	6	8	15 1/2	9 1/2	15 1/2	0.0001	

It is very important to note if tubular roof supports (pipes) are open (fills with product) or closed.

PAGE 6



DEADWOOD

TANK No.: 2

ALL MEASUREMENTS TO BE SHOWN AS INCHES

Enter SUMP details in this first row ONLY

Use Proper Codes and Enter all data

op = Open Pipe ch = Channel
cp = Closed Pipe

Quantity	Description		Code	Diameter	Length	Height	Height From Bottom	Height From To	Office Use Bbls/8th	Gls/8th
6	Pipe		OP	3	52	13	10	13	-0.0047	-0.1988995
6	Pipe		OP	8	460	18	10	18	-0.0419	-1.7594959
2	Pipe		OP	6	466	15	9	15	-0.0141	-0.5941486
1	Pipe		OP	6	35	15	9	15	-0.0005	-0.0223124
2	Pipe		OP	6	36	15	9	15	-0.0011	-0.0458999
8	Beam		OP	14	47				-0.0057	-0.2396994
1	Center Beam		OP	14	576				-0.0087	-0.3671991

Sub-Arc Systems Inc.

4605-47 Street
Vermillion, AB, T9X 1L6
780-608-9589

QUALITY CONTROL MANUAL

Exhibit 15c, Rev 1

VISUAL TEST REPORT

Customer: Agnico Eagle

Location: Rankin Inlet

Code Requiring Test: API 650 (section 8.5.2) Reason for Test: New Construction

A weld shall be acceptable by visual examination if the inspection shows the following.

a) There are no crater cracks, other surface cracks or arc strikes in or adjacent to the welded joints.
b) Maximum permissible undercut is 0.4 mm (1/64 in.) in depth for vertical butt joints, vertically oriented permanent attachments, attachment welds for nozzles, manholes, flush-type openings, and the inside shell-to-bottom welds. For horizontal butt joints, horizontally oriented permanent attachments, and annular-ring butt joints, the maximum permissible undercut is 0.8 mm (1/32 in.) in depth.
c) The frequency of surface porosity in the weld does not exceed one cluster (one or more pores) in any 100 mm (4 in.) of length, and the diameter of each cluster does not exceed 2.5 mm (3/32 in.).
d) The reinforcement of the welds on all thicknesses:

Plate Thickness mm (in.)	Maximum Reinforcement Thickness mm (in.)	
	Vertical Joints	Horizontal Joints
≤ 13 (1/2)	2.5 (3/32)	3 (1/8)
> 13 (1/2) to 25 (1)	3 (1/8)	5 (3/16)
> 25 (1)	5 (3/16)	6 (1/4)

Surface Condition (As Welded)

Test Solution: N/A Test Date(s): AUG 31/17

Tested by: MATT MACKENZIE Ambient Conditions: 10°

Items Tested:

SHELL NOZZLES.

Results:

ALL WELDING ACCEPTABLE ON SHELL NOZZLES.

Sub-Arc Representative Signature: Matt MacKenzie. Date: AUG 31/17.

Client Representative Signature: _____ Date: _____

Client Signature: Glen Bonica Date: Sept 04/17

Sub-Arc Systems Inc.

4605-47 Street
Vermillion, AB, T9X 1L6
780-608-9589

QUALITY CONTROL MANUAL

Exhibit 12, Rev 1

AIR TEST REPORT – NOZZLE REINFORCEMENT PLATE WELDS

Customer: AGNICO EAGLE

Location: RANKIN INLET TK-02

Equipment Tag No.:

Equipment Type:

Equipment Description:

Code Requiring Test: API 650 Reason for Test: New Construction

(An air pressure/soap solution test for nozzle reinforcement plate weld seams is required for new construction or major alterations, no visible leaks should be observed)

Test Pressure: 100 kPa (15 psi) Surface Condition (As Welded, Painted, Blasted)

Test Solution: Water / Snoop: Test Date(s): Aug 31/17

Tested by: MATT TURMEL Pressure Gauge: 15 Ambient Conditions: 10°

Items Tested:

NOZZLE REPADS.

Results:

ALL NOZZLE REPADS WERE AIR TESTED.
NO LEAKS WERE FOUND AT TIME OF INSPECTION.

Sub-Arc Representative Signature: _____ Date: Aug 31/17.

Client Representative Signature: _____ Date: _____

Client Signature: _____ Date: Sept 04/17

Client :	**Inukshuk Construction Ltd,**	**Date d'intervention :** **Intervention date :**	2017-08-30
Adresse/Address :	PO Box 654 Rankin Inlet, Nunavut X0C 0G0	**Date du rapport :** **Report date :**	2017-09-08
Contact :	Marc Losier		
Entrepreneur : **Contractor :**	N/A	**N° dossier :** **File no :**	INS-117107-01_R01
Endroit du travail : **Job location :**	Rankin Inlet , Nunavut	**Commande :** **Order :**	295-1046

INSP. VISUELLE / VISUAL INSP. ☐ **MAGNÉTOSCOPIE / MAGNETIC PARTICLES** ☒ **RESSUAGE / LIQUID PENETRANT** ☐ **ULTRASONS / ULTRASONIC** ☒

DESCRIPTION :

Magnetic particles inspection and Ultrasonic inspection on tank 2

The client is opting to use an ultrasonic testing, instead of radiographic testing

Remark : Visual testing was performed by client
I

INSP. VISUELLE / VISUAL INSP.

NORME : **SPECIFICATION :**

N° équip. : **Equip. no :** N/A

MAGNÉTOSCOPIE / MAGNETIC PARTICLES

NORME : **SPECIFICATION :** API 650

N° équip. : **Equip. no :** MP-Q-27

Ampérage : **Amperage :**	Culasse/Yoke	**Continue** **Continuous**	☒	**Résiduelle** **Residual**	☐	**Humide** **Wet**	☐	**Sèche** **Dry**	☒
Longitudinale **Longitudinal**	☐	**Circulaire** **Circular**	☐	**C.A.** **A.C.**	☒	**C.C.** **D.C.**	☐	**Démagnétisée** **Demagnetized**	☐

RESSUAGE / LIQUID PENETRANT

NORME : **SPECIFICATION :**

N° équip. : **Equip. no :**

Pénétrant/Penetrant : **Émulsifiant/Emulsifier :** **Révélateur/Developer :**

Temps/Time : **Temps/Time :** **Temps/Time :**

ULTRASONS / ULTRASONIC

NORME : **SPECIFICATION :** API 650

ÉTALONNAGE/CALIBRATION :

Bloc/Block : IIW Type 2 **Trou/Hole :** N/A **C.A.D. /D.A.C. :** X☐

APPAREIL/EQUIPMENT :

Instrument : USM GO+ **Couplant :** Echogel **Échelle/Sweep length :**

N° équip./Equip. no : UT-Q-34 **Palpeur/Transducer :** 0º degré and 70º degré

RÉSULTATS/RESULTS :

For ultrasonic results: **All spots are acceptable. See attached tables for locations.**

Magnetic particles inspection was performed on angle joint between the shell and nozzle, inside and outside the tank:

- *-Inside tank, weld between shell/nozzle, with a 100%: magnetic particles inspection, is acceptable*
- *-Outside tank, weld between shell/pad & weld between pad/nozzle, with 100% (note 1): magnetic particles inspection, is acceptable.*

Note 1: Fourteen (14) nozzles including four (4) manholes and one nozzle outside, does not have pad . Please refer to drawing 295-M10; part section K-K item #10. This nozzle corresponds to a ¾" coupling for a water temperature gauge in the shell and the client has advised that no repad is needed for this specific coupling.

Techniciens : **Technicians :**	Sylvain Germain CSA W178.2 level 2	**Assistants:**		**Approuvé par :** **Approved by :**	Pierre Dostie Technical Supervisor CSA W178.2, niveau 3

Ce rapport ne doit pas être reproduit, sinon en entier, sans l'autorisation écrite de SGS CANADA inc.
Le présent rapport est émis par la Société conformément à ses Conditions Générales de Service accessibles sur http://www.sgs.ca/fr-FR/Terms-and-Conditions.aspx
This report is confidential and shall not be reproduced without the written approval of SGS CANADA Inc
This document is issued by the Company under its General Conditions of Service accessible at http://www.sgs.ca/en/Terms-and-Conditions.aspx

Client :	**Inukshuk Construction Ltd,**	**Date d'intervention :** **Intervention date :**	2017-08-30
Adresse/Address :	PO Box 654 Rankin Inlet, Nunavut X0C 0G0	**Date du rapport :** **Report date :**	2017-09-08
Contact :	Marc Losier		
Entrepreneur : **Contractor :**	N/A	**N° dossier :** **File no :**	INS-117107-01_R01
Endroit du travail : **Job location :**	Rankin Inlet , Nunavut	**Commande :** **Order :**	295-1046

Picture : 1



View of some nozzles

Picture : 2



View of tank 2

Techniciens : **Technicians :**	Sylvain Germain CSA W178.2 level 2	**Assistants:**		**Approuvé par :** **Approved by :**	Pierre Dostie Technical Supervisor CSA W178.2, niveau 3

Ce rapport ne doit pas être reproduit, sinon en entier, sans l'autorisation écrite de SGS CANADA inc.
Le présent rapport est émis par la Société conformément à ses Conditions Générales de Service accessibles sur http://www.sgs.ca/fr-FR/Terms-and-Conditions.aspx
This report is confidential and shall not be reproduced without the written approval of SGS CANADA Inc
This document is issued by the Company under its General Conditions of Service accessible at http://www.sgs.ca/en/Terms-and-Conditions.aspx

Client :	**Inukshuk Construction Ltd,**	**Date d'intervention :** **Intervention date :**	2017-08-30
Adresse/Address :	PO Box 654 Rankin Inlet, Nunavut X0C 0G0	**Date du rapport :** **Report date :**	2017-09-08
Contact :	Marc Losier		
Entrepreneur : **Contractor :**	N/A	**N° dossier :** **File no :**	INS-117107-01_R01
Endroit du travail : **Job location :**	Rankin Inlet , Nunavut	**Commande :** **Order :**	295-1046

Picture :3

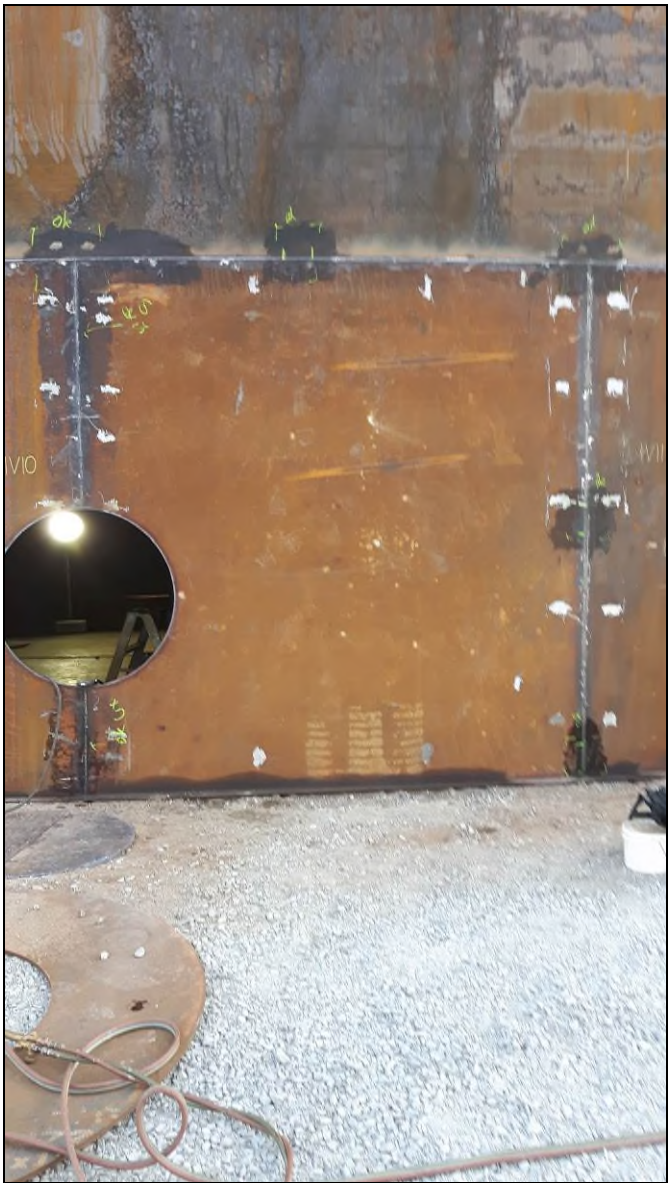

View of manhole before padding

Techniciens : **Technicians :**	Sylvain Germain CSA W178.2 level 2	**Assistants:**		**Approuvé par :** **Approved by :**	Pierre Dostie Technical Supervisor CSA W178.2, niveau 3

Ce rapport ne doit pas être reproduit, sinon en entier, sans l'autorisation écrite de SGS CANADA inc.
Le présent rapport est émis par la Société conformément à ses Conditions Générales de Service accessibles sur http://www.sgs.ca/fr-FR/Terms-and-Conditions.aspx
This report is confidential and shall not be reproduced without the written approval of SGS CANADA Inc
This document is issued by the Company under its General Conditions of Service accessible at http://www.sgs.ca/en/Terms-and-Conditions.aspx

Tank #2 Rankin Inlet (AEM)

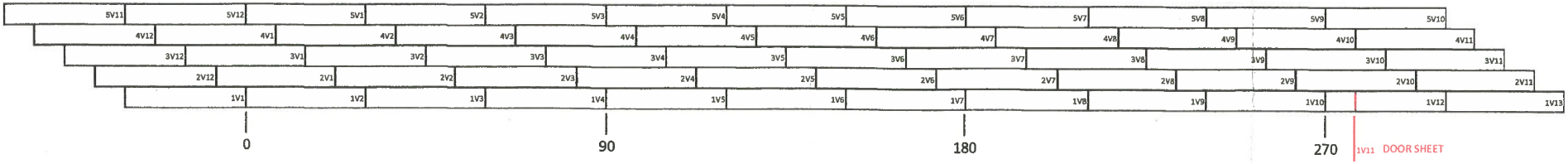

NDT TECHNICIAN WILL INITIAL EACH BOX WHEN WELD IS ACCEPTABLE

B ----> BOTTOM OF THE VERT (0-6")	M ----> MIDDLE OF THE VERT (53"-59")	T ----> TOP OF THE VERT (104 3/16" - 110 3/16")

VERTICAL SEAMS MAPPING UT

	B	M	T	FULL
1V1	UT FULL BECAUSE NOZZLE INTO VERT			
1V2				
1V3				
1V4	UT FULL BECAUSE NOZZLE INTO VERT			
1V5				
1V6				
1V7	UT FULL BECAUSE NOZZLE INTO VERT			
1V8				
1V9				
1V10	UT FULL BECAUSE NOZZLE INTO VERT			
1V11 (DOOR SHEET)				
1V12				
1V13				

	B	M	T
2V1			
2V2			
2V3			
2V4			
2V5			
2V6			
2V7			
2V8			
2V9			
2V10			
2V11			
2V12			

	B	T
3V1		
3V2		
3V3		
3V4		
3V5		
3V6		
3V7		
3V8		
3V9		
3V10		
3V11		
3V12		

	B	T
4V1		
4V2		
4V3		
4V4		
4V5		
4V6		
4V7		
4V8		
4V9		
4V10		
4V11		
4V12		

	B	T
5V1		
5V2		
5V3		
5V4		
5V5		
5V6		
5V7		
5V8		
5V9		
5V10		
5V11		
5V12		

HORIZONTAL SEAMS MAPPING UT

H1V2	48"-54"	
H1V8	60"-66"	
H1V10	42"-48"	

H2V3	48"-54"	
H2V9	72"-78"	

H3V1	60"-66"	
H3V7	42"-48"	

H4V5	30"-36"	
H4V11	72"-78"	

Sub-Arc Representative Signature: _____ Date: Aug 26/17

Client Representative Signature: _____ Date: _____

NDT Representative Signature: _____ Date: august 26 2017

Pressure/Vacuum Relief Valve (PVRV) Test Report

Emerson Process Management Regulator Technologies Tulsa, LLC
9932 East 56th Street
Tulsa, OK 74146-6411
918-622-6161

Customer Name	SPARTAN CONTROLS LTD	Customer P.O.		Project Name	
Sales Order No.		Factory Order No.	O0067397	Project No.	
Item / Line		Tag No.		Serial No.	A 30933

Work Order Number	Model Number	Part Number
74739373	950-12-111	E8552537

Test Stand ID# 2

Pressure / Vacuum Settings

Pressure Setting z1.0

Part No.	Qty.	Description	Equivalent Setting	
			Unit	Total
E8559902	1	Pallet Assy	0.5	0.5
E8550917	1	Weight	0.5	0.5

Vacuum Setting z0.5

Part No.	Qty.	Description	Equivalent Setting	
			Unit	Total
E8559901	1	Pallet Assy	0.5	0.5

Weights have been removed for shipping purposes. **Weights must be installed prior to placing the PVRV into service**; if PVRV is Spring loaded, settings will be adjusted at the factory and no installation is required. See operating manual for additional information.

Emerson certifies that the referenced product has been successfully pressure tested in accordance with our quality system procedures and exhibits a leakage rate not exceeding 1.0 SCFH at 90% of pressure and/or vacuum setting.

Test Date 9/7/2017 Tested By SW

Providing Responsive Solutions with Safety and Environmental Vapor Control Products

Declaration of Conformity

ATEX Directive 14/34/EU

EMERSON. Process Management

Manufacturer: Emerson Process Management Regulator Technologies Tulsa, LLC
Address: 9932 East 58th Street, Tulsa, OK 74143-6411

Product: Emergency Pressure Vacuum Relief Vent & Pressure Vacuum Relief Vent

Model/Type: 450 & 850 (pipe-away) Combination pressure/vacuum relief valve
550 & 950 (vent-to-atmosphere) Combination pressure/vacuum relief valve
850 & 950 with Wireless Option

Conformity: This document certifies that the above equipment complies with the requirements of ATEX Directive 14/34/EU.

Standards Compliance: EN 60079-0:2012, EN 60079-11:2012, EN 13463-1:2009 AND EN13463-5:2011

Based on EC-Type Examination Certificate:
DNV-08-ATEX-19407

Quality System Audited by and EC-Type Examination Certificate Issued by Notified Body **0575**:
DET NORSKE VERITAS AS
Veritasveien 1, 1322 HOVIK
Norway, www.dnvcert.com

The product described in this Declaration of Conformity complies with the Applicable European Directives and relevant sections of the Applicable International Standards. The Signature on this document authorizes the distinctive European mark to be applied to the equipment described. A Technical Construction File is available for inspection by designated bodies.

CE 0575 Ex II 1 G c T6 Ex II 1 G c T5, Ex ia IIC T5 Ga Ex II 2 G c T6 Ex II 2 G c T5, Ex ia IIC T5 Gb	John Cockerham Authorized Signature

DOC NO.	6300047	REV.	G	DATE:	04/20/2016

ENARDO

Pressure/Vacuum Relief Valve (PVRV) Test Report

Emerson Process Management Regulator Technologies Tulsa, LLC
9932 East 56th Street
Tulsa, OK 74146-6411
918-622-6161

Customer Name	SPARTAN CONTROLS LTD	Customer P.O.		Project Name	
Sales Order No.		Factory Order No.	O0067397	Project No.	
Item / Line		Tag No.		Serial No.	A 30934

Work Order Number	Model Number	Part Number
74739370	950-12-111	E8552537

Test Stand ID# 2

Pressure / Vacuum Settings

Pressure Setting z1.35

Part No.	Qty.	Description	Equivalent Setting	
			Unit	Total
E8559953	1	Pallet Assy	0.5	0.5
E8550917	1	Weight	0.5	0.5
E8550987	1	Weight	0.35	0.35

Vacuum Setting z0.5

Part No.	Qty.	Description	Equivalent Setting	
			Unit	Total
E8559901	1	Pallet Assy	0.5	0.5

Weights have been removed for shipping purposes. **Weights must be installed prior to placing the PVRV into service**; if PVRV is Spring loaded, settings will be adjusted at the factory and no installation is required. See operating manual for additional information.

Emerson certifies that the referenced product has been successfully pressure tested in accordance with our quality system procedures and exhibits a leakage rate not exceeding 1.0 SCFH at 90% of pressure and/or vacuum setting.

Test Date 9/7/2017 Tested By SW

Providing Responsive Solutions with Safety and Environmental Vapor Control Products

Declaration of Conformity

ATEX Directive 14/34/EU

EMERSON
Process Management

Manufacturer: Emerson Process Management Regulator Technologies Tulsa, LLC
Address: 9932 East 58th Street, Tulsa, OK 74143-6411

Product: Emergency Pressure Vacuum Relief Vent & Pressure Vacuum Relief Vent

Model/Type: 450 & 850 (pipe-away) Combination pressure/vacuum relief valve
550 & 950 (vent-to-atmosphere) Combination pressure/vacuum relief valve
850 & 950 with Wireless Option

Conformity: This document certifies that the above equipment complies with the requirements of ATEX Directive 14/34/EU.

Standards Compliance: EN 60079-0:2012, EN 60079-11:2012, EN 13463-1:2009 AND EN13463-5:2011

Based on EC-Type Examination Certificate:
DNV-08-ATEX-19407

Quality System Audited by and EC-Type Examination Certificate Issued by Notified Body **0575**:
DET NORSKE VERITAS AS
Veritasveien 1, 1322 HOVIK
Norway, www.dnvcert.com

The product described in this Declaration of Conformity complies with the Applicable European Directives and relevant sections of the Applicable International Standards. The Signature on this document authorizes the distinctive European mark to be applied to the equipment described. A Technical Construction File is available for inspection by designated bodies.

CE 0575 Ex II 1 G c T6 Ex II 1 G c T5, Ex ia IIC T5 Ga Ex II 2 G c T6 Ex II 2 G c T5, Ex ia IIC T5 Gb	John Cockerham Authorized Signature

DOC NO.	6300047	REV.	G	DATE:	04/20/2016

ENARDO

Item 15 – Manways

Contents

1. Weld Map
2. Visual Report
3. Dimension Report – Plumbness
4. Air Test Report
5. Bolting Pattern and Torque Wrench Photos
6. Torque Wrench Specs
7. MPI Report

Item 15 - Manways - Weld Map

PARTS LIST		
ITEM	ITEM QTY	PART NUMBER
1	55	SHELL PLATE 2798 X 9203 THICKNESS
2	5	SHELL PLATE LAST ON COURSE 2798 X 9127 (TRIM AT SITE)
3	4	900ns SHELL MANHOLE
5	8	Grounding Lug
6	3	150NS SHELL NOZZLE
8	6	75NS WATER DRAWOFF
10	1	20NS THERMOMETER CONNECTION
11	1	AISC - L 4 x 4 x 1/4 - 15.748031 TEMPERATURE CONNECTION PROTECTION
12	1	400NS VENT
13	4	PLATFORM
14	119	STEPS
18	14	AISC - L 3 x 3 x 1/4 - 15.748031 PRV PIPE SUPPORT
19	1	200NS SHELL NOZZLE - FIX LOADING PIPE

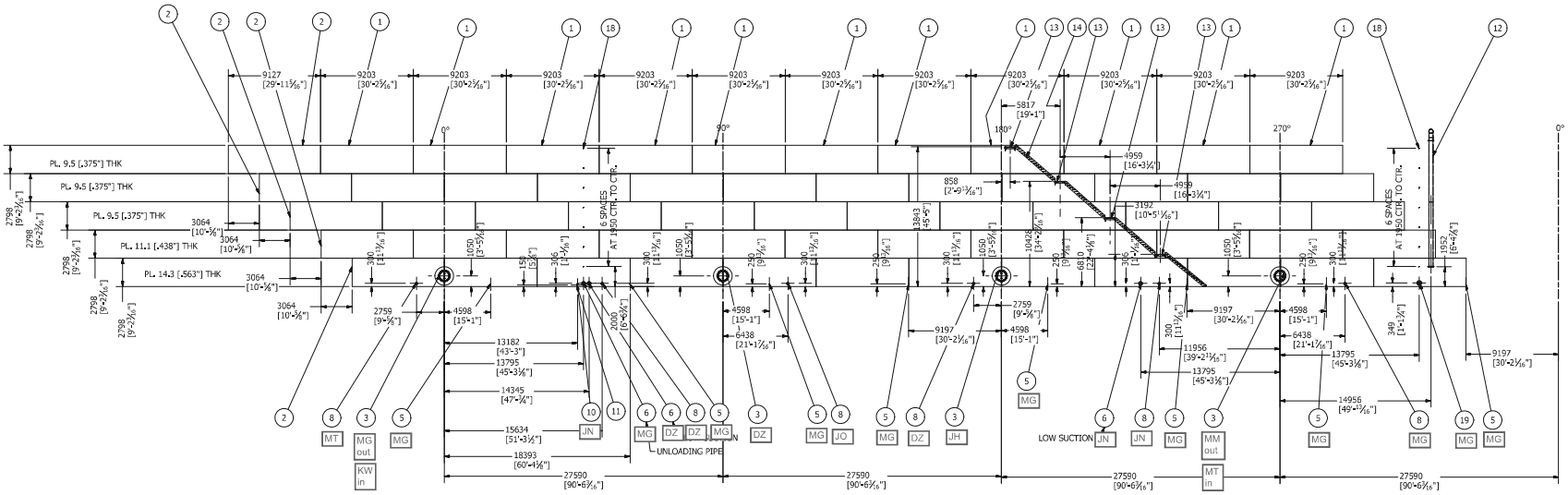

SHELL DEVELOPED VIEW
SCALE 1/200

REVISION HISTORY		
REV	DESCRIPTION	DATE
6	THIS SHEET ADDED	7/12/2017

DRAWN	MARC LOSIER	3/9/2017
CHECKED		
QA		
MFG		
APPROVED		

DEVELOP VIEW

TITLE: AGNICO EAGLE - MELIADINE GOLD MINE - TK #2 - 13,500CUM 35.1M DIA X 14M H

SIZE	DWG NO	REV
A1	295-M10	6

SCALE | SHEET 7 OF 7

18-Jul-2017
Permit Number: P471

Sub-Arc Systems Inc.

4605-47 Street
Vermillion, AB, T9X 1L6
780-608-9589

QUALITY CONTROL MANUAL

Exhibit 15c, Rev 1

VISUAL TEST REPORT

Customer: Agnico Eagle

Location: Rankin Inlet

Code Requiring Test: API 650 (section 8.5.2) Reason for Test: New Construction

A weld shall be acceptable by visual examination if the inspection shows the following.

a) There are no crater cracks, other surface cracks or arc strikes in or adjacent to the welded joints.
b) Maximum permissible undercut is 0.4 mm (1/64 in.) in depth for vertical butt joints, vertically oriented permanent attachments, attachment welds for nozzles, manholes, flush-type openings, and the inside shell-to-bottom welds. For horizontal butt joints, horizontally oriented permanent attachments, and annular-ring butt joints, the maximum permissible undercut is 0.8 mm (1/32 in.) in depth.
c) The frequency of surface porosity in the weld does not exceed one cluster (one or more pores) in any 100 mm (4 in.) of length, and the diameter of each cluster does not exceed 2.5 mm (3/32 in.).
d) The reinforcement of the welds on all thicknesses:

Plate Thickness mm (in.)	Maximum Reinforcement Thickness mm (in.)	
	Vertical Joints	Horizontal Joints
≤ 13 (1/2)	2.5 (3/32)	3 (1/8)
> 13 (1/2) to 25 (1)	3 (1/8)	5 (3/16)
> 25 (1)	5 (3/16)	6 (1/4)

Surface Condition (As Welded)

Test Solution: N/A Test Date(s):

Tested by: Ambient Conditions:

Items Tested:

SHELL MANWAYS.

Results:

ALL WELDING ON SHELL MANWAYS ACCEPTABLE.

Sub-Arc Representative Signature: _____ Date: Aug 31/17

Client Representative Signature: _____ Date: _____

Client Signature: _____ Date: Sept 04/17

Sub-Arc Systems Inc.

4605-47 Street
Vermillion, AB, T9X 1L6
780-608-9589

QUALITY CONTROL MANUAL

Exhibit 19, Rev A

DIMENSIONAL CHECK REPORT – PLUMBNESS

Customer: AGNICO EAGLE

Location: RANKIN INLET TK-02

Equipment Tag No.:

Equipment Type:

Equipment Description:

Code Requiring Test: API 650 Reason for Test: New Construction

(The tank shell will be checked for plumb at 12" below the tank roof. Plumb measurements will be checked at 45 degree intervals or less, max. 20' spacing)

Test Date(s): AUG 31/17

Tested by: MATT MACKENZIE

Seam Test Results:

ALL SHELL IS PLUMB IN AREAS THAT HAVE MANWAYS.

Sub-Arc Representative Signature: _____ Date: AUG 31/17

Client Representative Signature: _____ Date: _____

Client Signature: _____ Date: Sept 04/17

Sub-Arc Systems Inc.

4605-47 Street
Vermillion, AB, T9X 1L6
780-608-9589

QUALITY CONTROL MANUAL

Exhibit 12, Rev 1

AIR TEST REPORT – NOZZLE REINFORCEMENT PLATE WELDS

Customer: AGNICO EAGLE

Location: RANKIN INLET TK-2

Equipment Tag No.:

Equipment Type:

Equipment Description:

Code Requiring Test: API 650 Reason for Test: New Construction

(An air pressure/soap solution test for nozzle reinforcement plate weld seams is required for new construction or major alterations, no visible leaks should be observed)

Test Pressure: 100 kPa (15 psi) Surface Condition (As Welded, Painted, Blasted)

Test Solution: Water / Snoop: Test Date(s): AUG 31/17.

Tested by: Pressure Gauge: 15 Ambient Conditions: 10°

Items Tested:

MANWAYS.

Results:

ALL MANWAYS WERE AIR TESTED. NO LEAKS WERE FOUND AT TIME OF INSPECTION.

Sub-Arc Representative Signature: _____ Date: AUG 31/17.

Client Representative Signature: _____ Date: _____

Client Signature: _____ Date: SEPT 04/17

Item 15 - Manways Bolting Pattern and Torque Wrench Photos





Item 15 - Manways - Torque Wrench Specs

Certification of calibration					
Model : 8229239			Serial No : E20140301		
Calibrator :			Date : 2014-10-21		
Set Torque	Min	Max	Actual Readings		
100FT	96.0	104.0	101.2	101.6	101.9
400FT	384.0	416.0	400	407.1	407.9
700FT	672.0	728.0	713.1	713.7	713.5

Client :	**Inukshuk Construction Ltd,**	**Date d'intervention :** **Intervention date :**	2017-08-30
Adresse/Address :	PO Box 654 Rankin Inlet, Nunavut X0C 0G0	**Date du rapport :** **Report date :**	2017-09-08
Contact :	Marc Losier		
Entrepreneur : **Contractor :**	N/A	**N° dossier :** **File no :**	INS-117107-01_R01
Endroit du travail : **Job location :**	Rankin Inlet , Nunavut	**Commande :** **Order :**	295-1046

INSP. VISUELLE / VISUAL INSP. ☐ **MAGNÉTOSCOPIE / MAGNETIC PARTICLES** ☒ **RESSUAGE / LIQUID PENETRANT** ☐ **ULTRASONS / ULTRASONIC** ☒

DESCRIPTION :

Magnetic particles inspection and Ultrasonic inspection on tank 2

The client is opting to use an ultrasonic testing, instead of radiographic testing

Remark : Visual testing was performed by client
I

INSP. VISUELLE / VISUAL INSP.

NORME : **SPECIFICATION :**

N° équip. : **Equip. no :** N/A

MAGNÉTOSCOPIE / MAGNETIC PARTICLES

NORME : **SPECIFICATION :** API 650

N° équip. : **Equip. no :** MP-Q-27

Ampérage : **Amperage :**	Culasse/Yoke	**Continue** **Continuous**	☒	**Résiduelle** **Residual**	☐	**Humide** **Wet**	☐	**Sèche** **Dry**	☒
Longitudinale **Longitudinal**	☐	**Circulaire** **Circular**	☐	**C.A.** **A.C.**	☒	**C.C.** **D.C.**	☐	**Démagnétisée** **Demagnetized**	☐

RESSUAGE / LIQUID PENETRANT

NORME : **SPECIFICATION :**

N° équip. : **Equip. no :**

Pénétrant/Penetrant : **Émulsifiant/Emulsifier :** **Révélateur/Developer :**

Temps/Time : **Temps/Time :** **Temps/Time :**

ULTRASONS / ULTRASONIC

NORME : **SPECIFICATION :** API 650

ÉTALONNAGE/CALIBRATION :

Bloc/Block : IIW Type 2 **Trou/Hole :** N/A **C.A.D. /D.A.C. :** X☐

APPAREIL/EQUIPMENT :

Instrument : USM GO+ **Couplant :** Echogel **Échelle/Sweep length :**

N° équip./Equip. no : UT-Q-34 **Palpeur/Transducer :** 0º degré and 70º degré

RÉSULTATS/RESULTS :

For ultrasonic results: **All spots are acceptable. See attached tables for locations.**

Magnetic particles inspection was performed on angle joint between the shell and nozzle, inside and outside the tank:

- *-Inside tank, weld between shell/nozzle, with a 100%: magnetic particles inspection, is acceptable*
- *-Outside tank, weld between shell/pad & weld between pad/nozzle, with 100% (note 1): magnetic particles inspection, is acceptable.*

Note 1: Fourteen (14) nozzles including four (4) manholes and one nozzle outside, does not have pad . Please refer to drawing 295-M10; part section K-K item #10. This nozzle corresponds to a ¾" coupling for a water temperature gauge in the shell and the client has advised that no repad is needed for this specific coupling.

Techniciens : **Technicians :**	Sylvain Germain CSA W178.2 level 2	**Assistants:**		**Approuvé par :** **Approved by :**	Pierre Dostie Technical Supervisor CSA W178.2, niveau 3

Ce rapport ne doit pas être reproduit, sinon en entier, sans l'autorisation écrite de SGS CANADA inc.
Le présent rapport est émis par la Société conformément à ses Conditions Générales de Service accessibles sur http://www.sgs.ca/fr-FR/Terms-and-Conditions.aspx
This report is confidential and shall not be reproduced without the written approval of SGS CANADA Inc
This document is issued by the Company under its General Conditions of Service accessible at http://www.sgs.ca/en/Terms-and-Conditions.aspx

Client :	**Inukshuk Construction Ltd,**	**Date d'intervention :** **Intervention date :**	2017-08-30
Adresse/Address :	PO Box 654 Rankin Inlet, Nunavut X0C 0G0	**Date du rapport :** **Report date :**	2017-09-08
Contact :	Marc Losier		
Entrepreneur : **Contractor :**	N/A	**N° dossier :** **File no :**	INS-117107-01_R01
Endroit du travail : **Job location :**	Rankin Inlet , Nunavut	**Commande :** **Order :**	295-1046

Picture : 1



View of some nozzles

Picture : 2



View of tank 2

Techniciens : **Technicians :**	Sylvain Germain CSA W178.2 level 2	**Assistants:**		**Approuvé par :** **Approved by :**	Pierre Dostie Technical Supervisor CSA W178.2, niveau 3

Ce rapport ne doit pas être reproduit, sinon en entier, sans l'autorisation écrite de SGS CANADA inc.
Le présent rapport est émis par la Société conformément à ses Conditions Générales de Service accessibles sur http://www.sgs.ca/fr-FR/Terms-and-Conditions.aspx
This report is confidential and shall not be reproduced without the written approval of SGS CANADA Inc
This document is issued by the Company under its General Conditions of Service accessible at http://www.sgs.ca/en/Terms-and-Conditions.aspx

Client :	**Inukshuk Construction Ltd,**	**Date d'intervention :** **Intervention date :**	2017-08-30
Adresse/Address :	PO Box 654 Rankin Inlet, Nunavut X0C 0G0	**Date du rapport :** **Report date :**	2017-09-08
Contact :	Marc Losier		
Entrepreneur : **Contractor :**	N/A	**N° dossier :** **File no :**	INS-117107-01_R01
Endroit du travail : **Job location :**	Rankin Inlet , Nunavut	**Commande :** **Order :**	295-1046

Picture :3

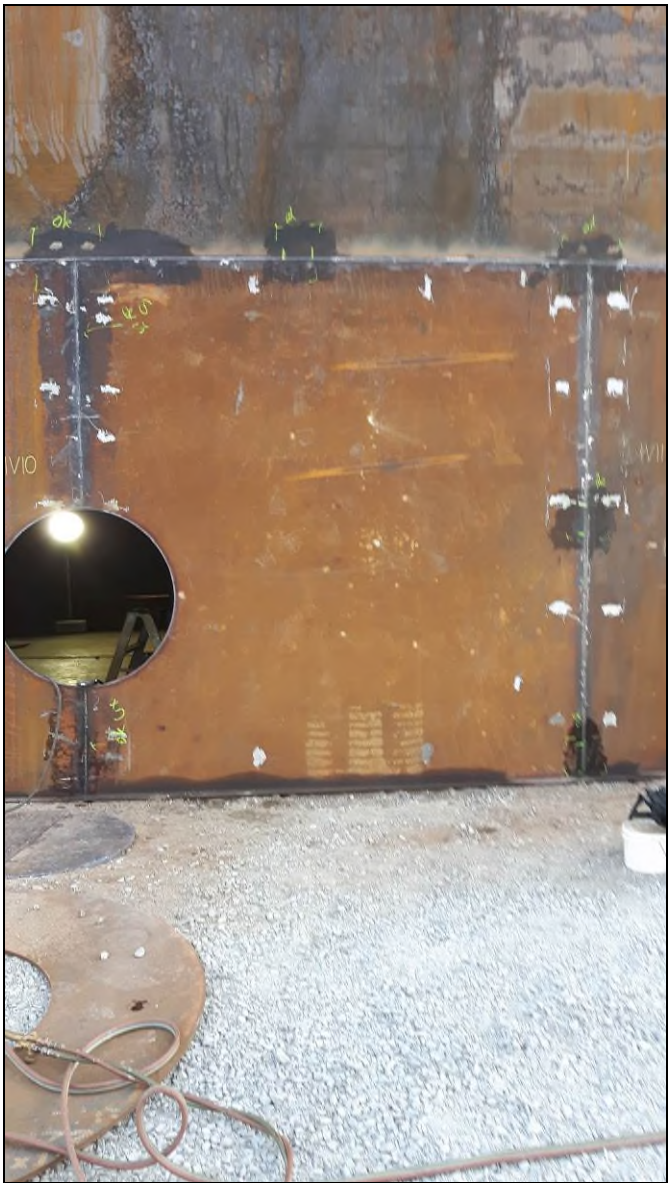

View of manhole before padding

Techniciens : **Technicians :**	Sylvain Germain CSA W178.2 level 2	**Assistants:**		**Approuvé par :** **Approved by :**	Pierre Dostie Technical Supervisor CSA W178.2, niveau 3

Ce rapport ne doit pas être reproduit, sinon en entier, sans l'autorisation écrite de SGS CANADA inc.
Le présent rapport est émis par la Société conformément à ses Conditions Générales de Service accessibles sur http://www.sgs.ca/fr-FR/Terms-and-Conditions.aspx
This report is confidential and shall not be reproduced without the written approval of SGS CANADA Inc
This document is issued by the Company under its General Conditions of Service accessible at http://www.sgs.ca/en/Terms-and-Conditions.aspx

Tank #2 Rankin Inlet (AEM)

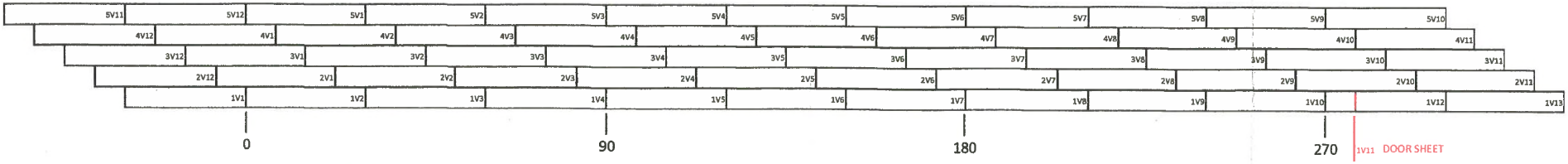

NDT TECHNICIAN WILL INITIAL EACH BOX WHEN WELD IS ACCEPTABLE

B ----> BOTTOM OF THE VERT (0-6")	M ----> MIDDLE OF THE VERT (53"-59")	T ----> TOP OF THE VERT (104 3/16" - 110 3/16")

VERTICAL SEAMS MAPPING UT

	B	M	T	FULL
1V1	UT FULL BECAUSE NOZZLE INTO VERT			
1V2				
1V3				
1V4	UT FULL BECAUSE NOZZLE INTO VERT			
1V5				
1V6				
1V7	UT FULL BECAUSE NOZZLE INTO VERT			
1V8				
1V9				
1V10	UT FULL BECAUSE NOZZLE INTO VERT			
1V11 (DOOR SHEET)				
1V12				
1V13				

	B	M	T
2V1			
2V2			
2V3			
2V4			
2V5			
2V6			
2V7			
2V8			
2V9			
2V10			
2V11			
2V12			

	B	T
3V1		
3V2		
3V3		
3V4		
3V5		
3V6		
3V7		
3V8		
3V9		
3V10		
3V11		
3V12		

	B	T
4V1		
4V2		
4V3		
4V4		
4V5		
4V6		
4V7		
4V8		
4V9		
4V10		
4V11		
4V12		

	B	T
5V1		
5V2		
5V3		
5V4		
5V5		
5V6		
5V7		
5V8		
5V9		
5V10		
5V11		
5V12		

HORIZONTAL SEAMS MAPPING UT

H1V2	48"-54"	
H1V8	60"-66"	
H1V10	42"-48"	

H2V3	48"-54"	
H2V9	72"-78"	

H3V1	60"-66"	
H3V7	42"-48"	

H4V5	30"-36"	
H4V11	72"-78"	

Sub-Arc Representative Signature: _____ Date: Aug 26/17

Client Representative Signature: _____ Date: _____

NDT Representative Signature: _____ Date: august 26 2017

Item 16 – Internals

Contents

1. Visual Report (SAS)
2. Visual Report of Water Draw off Extension (ICL)
3. Internal Dimensional Report (AmSpec)

QUALITY CONTROL MANUAL

Exhibit 15c, Rev 1

VISUAL TEST REPORT

Customer: Agnico Eagle

Location: Rankin Inlet TK-02

Code Requiring Test: API 650 (section 8.5.2) Reason for Test: New Construction

A weld shall be acceptable by visual examination if the inspection shows the following.

a) There are no crater cracks, other surface cracks or arc strikes in or adjacent to the welded joints.
b) Maximum permissible undercut is 0.4 mm (1/64 in.) in depth for vertical butt joints, vertically oriented permanent attachments, attachment welds for nozzles, manholes, flush-type openings, and the inside shell-to-bottom welds. For horizontal butt joints, horizontally oriented permanent attachments, and annular-ring butt joints, the maximum permissible undercut is 0.8 mm (1/32 in.) in depth.
c) The frequency of surface porosity in the weld does not exceed one cluster (one or more pores) in any 100 mm (4 in.) of length, and the diameter of each cluster does not exceed 2.5 mm (3/32 in.).
d) The reinforcement of the welds on all thicknesses:

Plate Thickness, mm [in]	Maximum reinforcement, mm [in]	
	Vertical Joints	Horizontal Joints
≤ 13 [½]	3 [⅛]	3 [⅛]
> 13 [½] to 25 [1]	3 [⅛]	5 [3/16]
> 25 [1]	5 [3/16]	6 [¼]

Surface Condition (As Welded)

Test Solution: N/A Test Date(s): Sept 3/17

Tested by: Matt MacKenzie Ambient Conditions: 5

Items Tested:

Internal Column Repads + Pipe Supports.

Results:

Visual Inspection completed on Column Repads + Internal Pipe Supports. All welds acceptable at time of inspection.

Sub-Arc Representative Signature: _____ Date: Sept 3/17.

Client Representative Signature: _____ Date: _____

Client Signature: _____ Date: _____

Item 16 - Internals - Visual Report

All internal piping and structure was visually inspected and found to be acceptable.

6" pipe extensions were added to the water draw off valves as per ECN-001.

ICL Supervisor (Water Draw Off Extension)

Sign: Sheldon Berry

Print Name: Sheldon Berry

TK # 2



Photo of Water Draw Off Valve with 6" Extension

It is very important to note if tubular roof supports (pipes) are open (fills with product) or closed.



DEADWOOD

PAGE 6

TANK No.: 2

ALL MEASUREMENTS TO BE SHOWN AS INCHES

Enter SUMP details in this first row ONLY

Use Proper Codes and Enter all data

op = Open Pipe ch = Channel
cp = Closed Pipe

Quantity	Description		Code	Diameter	Length	Height	Height From Bottom	To	Office Use Bbls/8th	Gls/8th
6	Pipe		OP	3	52	13	10	13	-0.0047	-0.1988995
6	Pipe		OP	8	460	18	10	18	-0.0419	-1.7594959
2	Pipe		OP	6	466	15	9	15	-0.0141	-0.5941486
1	Pipe		OP	6	35	15	9	15	-0.0005	-0.0223124
2	Pipe		OP	6	36	15	9	15	-0.0011	-0.0458999
8	Beam		OP	14	47				-0.0057	-0.2396994
1	Center Beam		OP	14	576				-0.0087	-0.3671991

Item 17 - Externals

Contents

1. Visual Report (SAS)
2. External Nozzle Dimensional Report (AmSpec)

QUALITY CONTROL MANUAL

Exhibit 18c, Rev 1

VISUAL TEST REPORT

Customer: Agnico Eagle

Location: Rankin Inlet TK-02

Code Requiring Test: API 650 (section 8.5.2) Reason for Test: New Construction

A weld shall be acceptable by visual examination if the inspection shows the following:

a) There are no crater cracks, other surface cracks or arc strikes in or adjacent to the welded joints.
b) Maximum permissible undercut is 0.4 mm (1/64 in.) in depth for vertical butt joints, vertically oriented permanent attachments, attachment welds for nozzles, manholes, flush-type openings, and the inside shell-to-bottom welds. For horizontal butt joints, horizontally oriented permanent attachments, and annular-ring butt joints, the maximum permissible undercut is 0.8 mm (1/32 in.) in depth.
c) The frequency of surface porosity in the weld does not exceed one cluster (one or more pores) in any 100 mm (4 in.) of length, and the diameter of each cluster does not exceed 2.5 mm (3/32 in.).
d) The reinforcement of the welds on all thicknesses:

Surface Condition (As Welded)

Test Solution: N/A Test Date(s): SEPT 9/17.

Tested by: CHRIS HAINES. Ambient Conditions: 7°

Items Tested:

EXTERNAL BRACKETS/CABLE TRAY.

Results:

VISUAL INSPECTION COMPLETED. ON CABLE TRAY SUPPORTS + BRACKETS FOR 16" PIPE. ALL WELDS ACCEPTABLE AT TIME OF INSPECTION.

Sub-Arc Representative Signature: _____ Date: Sept 9, 17

Client Representative Signature: _____ Date: _____

Client Signature: _____ Date: _____

QUALITY CONTROL MANUAL

Exhibit 15c, Rev 1

VISUAL TEST REPORT

Customer: Agrico Eagle

Location: Rankin Inlet TK-02

Code Requiring Test: API 650 (section 8.5.2) Reason for Test: New Construction

A weld shall be acceptable by visual examination if the inspection shows the following.

a) There are no crater cracks, other surface cracks or arc strikes in or adjacent to the welded joints.

b) Maximum permissible undercut is 0.4 mm (1/64 in.) in depth for vertical butt joints, vertically oriented permanent attachments, attachment welds for nozzles, manholes, flush-type openings, and the inside shell-to-bottom welds. For horizontal butt joints, horizontally oriented permanent attachments, and annular-ring butt joints, the maximum permissible undercut is 0.8 mm (1/32 in.) in depth.

c) The frequency of surface porosity in the weld does not exceed one cluster (one or more pores) in any 100 mm (4 in.) of length, and the diameter of each cluster does not exceed 2.5 mm (3/32 in.).

d) The reinforcement of the welds on all thicknesses

Plate Thickness mm (in.)	Maximum reinforcement thickness mm (in.)	
	Vertical Joints	Horizontal Joints
≤ 13 (1/2)	3.0 (1/8)	3.0 (1/8)
> 13 (1/2) to 25 (1)	4.0 (5/32)	4.5 (3/16)
> 25 (1)	5.0 (3/16)	6.0 (1/4)

Surface Condition (As Welded)

Test Solution: N/A Test Date(s): Sept 3/17

Tested by: Matt Mackenzie Ambient Conditions: See S

Items Tested:

Painters Boot.

Results:

Visual Inspection Completed on Roof Painter Boot.
All welds acceptable at time of inspection.

Sub-Arc Representative Signature: [signature] Date: Sept 3/17.

Client Representative Signature: _____ Date: _____

Client Signature: _____ Date: _____

Item 17 - External Nozzle Dimension Report (AmSpec 3rd Party)

Submit sketch for unusual deadwood

External

Quantity	Description	MW = Manway Hatch = Hatch	Code	Diameter	Length	Height	Height From Bottom	To	Office Use Bbls/8th	Gls/8th
4	Manway		MW	34	7 3/4	59	25	59	0.0107	
6	Pipe		F	3	6 3/4	13 1/2	10 1/2	13 1/2	0.0002	
1	Valve		V	8	14	18 1/2	10 1/2	18 1/2	0.0002	
2	Valve		V	6	14	15 1/2	9	15 1/2	0.0004	
1	Valve		V	6	8	15 1/2	9 1/2	15 1/2	0.0001	

Item 18 – Stairs and Platforms

Contents

1. Visual Reports
2. Visual Report of Changes Made (ICL)

QUALITY CONTROL MANUAL

Exhibit 15c, Rev 1

VISUAL TEST REPORT

Customer: Agnico Eagle

Location: Rankin Inlet TK - 02

Code Requiring Test: API 650 (section 9.5.2) Reason for Test: New Construction

A weld shall be acceptable by visual examination if the inspection shows the following.

a) There are no crater cracks, other surface cracks or arc strikes in or adjacent to the welded joints.
b) Maximum permissible undercut is 0.4 mm (1/64 in.) in depth for vertical butt joints, vertically oriented permanent attachments, attachment welds for nozzles, manholes, flush-type openings, and the inside shell-to-bottom welds. For horizontal butt joints, horizontally oriented permanent attachments, and annular-ring butt joints, the maximum permissible undercut is 0.8 mm (1/32 in.) in depth
c) The frequency of surface porosity in the weld does not exceed one cluster (one or more pores) in any 100 mm (4 in.) of length, and the diameter of each cluster does not exceed 2.5 mm (3/32 in.).
d) The reinforcement of the welds on all thicknesses.

Plate Thickness mm (in.)	Maximum reinforcement / Tolerance mm (in.)	
	Vertical Joints	Horizontal Joints
≤ 13 (1/2)	3.5 (5/32)	5 (3/16)
> 13 (1/2) to 25 (1)	4 (5/32)	6 (1/4)
> 25 (1)	5 (3/16)	6 (1/4)

Surface Condition (As Welded)

Test Solution: N/A Test Date(s): SEPT 5/17

Tested by: MATT MACKENZIE. Ambient Conditions: S

Items Tested:

STAIRCASE SUPPORT BRACKETS / RAMPS

Results:

VISUAL INSPECTION COMPLETED ON STAIRCASE BRACKETS / RAMPS.
ALL WELDS ACCEPTABLE. AT TIME OF INSPECTION.

Sub-Arc Representative Signature: _____ Date: Sept 5/17.

Client Representative Signature: _____ Date: _____

Client Signature: _____ Date: _____

Sub-Arc Systems Inc.

4605-47 Street
Vermillion, AB, T9X 1L6
780-608-9589

QUALITY CONTROL MANUAL

Exhibit 15c, Rev 1

VISUAL TEST REPORT

Customer: Agnico Eagle

Location: Rankin Inlet

Code Requiring Test: API 650 (section 8.5.2) Reason for Test: New Construction

A weld shall be acceptable by visual examination if the inspection shows the following.

a) There are no crater cracks, other surface cracks or arc strikes in or adjacent to the welded joints.
b) Maximum permissible undercut is 0.4 mm (1/64 in.) in depth for vertical butt joints, vertically oriented permanent attachments, attachment welds for nozzles, manholes, flush-type openings, and the inside shell-to-bottom welds. For horizontal butt joints, horizontally oriented permanent attachments, and annular-ring butt joints, the maximum permissible undercut is 0.8 mm (1/32 in.) in depth.
c) The frequency of surface porosity in the weld does not exceed one cluster (one or more pores) in any 100 mm (4 in.) of length, and the diameter of each cluster does not exceed 2.5 mm (3/32 in.).
d) The reinforcement of the welds on all thicknesses:

Plate Thickness mm (in.)	Maximum Reinforcement Thickness mm (in.)	
	Vertical Joints	Horizontal Joints
≤ 13 (1/2)	2.5 (3/32)	3 (1/8)
> 13 (1/2) to 25 (1)	3 (1/8)	5 (3/16)
> 25 (1)	5 (3/16)	6 (1/4)

Surface Condition (As Welded)

Test Solution: N/A Test Date(s): AUG 31/17

Tested by: MATT MACKENZIE Ambient Conditions: 10°

Items Tested:

STAIRS + PLATFORMS.

Results:

ALL WELDING ACCEPTABLE ON STAIRS + PLATFORMS.

Sub-Arc Representative Signature: Matt MacKenzie Date: Aug 31/17.

Client Representative Signature: _____ Date: _____

Client Signature: Glen Bonin Date: Sept 04/17

Item 18 - Stairs and Platforms Modifications - Visual Report

Visual Inspection of Stairway and Platforms was performed:

- Bottom step found to be too close to ground, potential issue with freeze/thaw expansion of the foundation
- Solution: Remove bottom step, this was completed by ICL (see below photo)

- Handrails were not connected making for potential pinch points at each platform
- Solution: Welded together handrails at each point where stairway handrail met platform handrails. This was completed by ICL and approved by Stephane Dubois (AEM).

ICL Supervisor

Sign: Sheldon Burry

Print Name: Sheldon Burry

TK # 2



Photo of stairway after bottom step removed

Item 19 – Bolts and Nuts

Contents

1. Fastener List
2. Torque Wrench Specs

Item 19 - Bolts and Nuts - Fastener List

Tank #	qty	Qty of Component	Connection	Description	Lght (in)
2	128.00	64	Shell to Rafter Connection	Bolt, Structural A325, 3/4"	2
2	64.00	32	Rafter to Center Column	Bolt, Structural A325, 3/4"	3.5
2	14.00	96	Rafter to intermediate beam	Bolt, Structural A325, 3/4"	2.25
2	112.00	7	Beam to top plate and intermediate colur	Bolt, Structural A325, 3/4"	2.5
2	318.00			Nut, Structural heavy hex 3/4"	
2	636.00			Washer, type A, 3/4"	
2	168.00	4	36"Shell Manhole	Stud, L7, 3/4"	3 3/4
2	16.00	2	8" in/out Nozzle	Stud, L7, 3/4"	4 1/4
2	48.00	6	6" in/out Nozzle	Stud, L7, 3/4"	4
2	-	6	3" Water Drawoff	Stud, L7, 5/8"	3 1/2
2	60.00	3	24" Roof manhole	Stud, L7, 5/8"	2 1/4
2	20.00	1	24" Roof manhole emergency vent	Stud, L7, 5/8"	9.5
2	16.00	1	16" Vent	Stud, L7, 1"	5 1/4
2	8.00	1	8" Roof Nozzle	Stud, L7, 3/4"	4 1/4
2	8.00	1	6" Gauge Hatch	Stud, L7, 3/4"	4
2	8.00	1	4" Roof Nozzle	Stud, L7, 5/8"	3.5
2	32.00			Nut, A194, Gr. 4, 1"	
2	496.00			Nut, A194, Gr. 4, 3/4"	
2	176.00			Nut, A194, Gr. 4, 5/8"	
2	4.00	4	36"Shell Manhole	Gasket, Ring, Durlon 8500, 1/8", 1051 o.d.x 914 i.d.	
2	2.00	2	8" in/out Nozzle	Gasket, Ring, Durlon 8500,1/8" x 8" x 150#	
2	6.00	6	6" in/out Nozzle	Gasket, Ring, Durlon 8500,1/8" x 6" x 150#	
2	-	6	3" Water Drawoff	Gasket, Ring, Durlon 8500,1/8" x 3" x 150#	
2	4.00	4	24" Roof manhole	Gasket, Ring, Durlon 8500, 1/16" x 762 x 610	
2	1.00	1	8" High Level	Gasket, Ring, Durlon 8500, 1/16" x 150#, 8"	
2	1.00	1	6" Gauge Hatch	Gasket, Full Face, Durlon 8500, 1/16" x 150#, 6"	

Item 19 - Bolts and Nuts - Torque Wrench Specs

Certification of Calibration
For Torque Wrench Used to Seal Shell Manholes

Certification of calibration					
Model : 8229239			Serial No : E20140321		
Calibrator :			Date : 2014-10-21		
Set Torque	Min	Max	Actual Readings		
100FT	96.0	104.0	101.3	101.6	101.9
400FT	384.0	416.0	400	407.1	407.9
700FT	672.0	728.0	712.1	712.7	712.5

Item 20 - Final

Contents

1. Name Plate Scan
2. Punch List
3. Manufacturer's Certification (3rd Party)
4. Data Sheet (Innage)

Item 20 - Final - Name Plate Scan

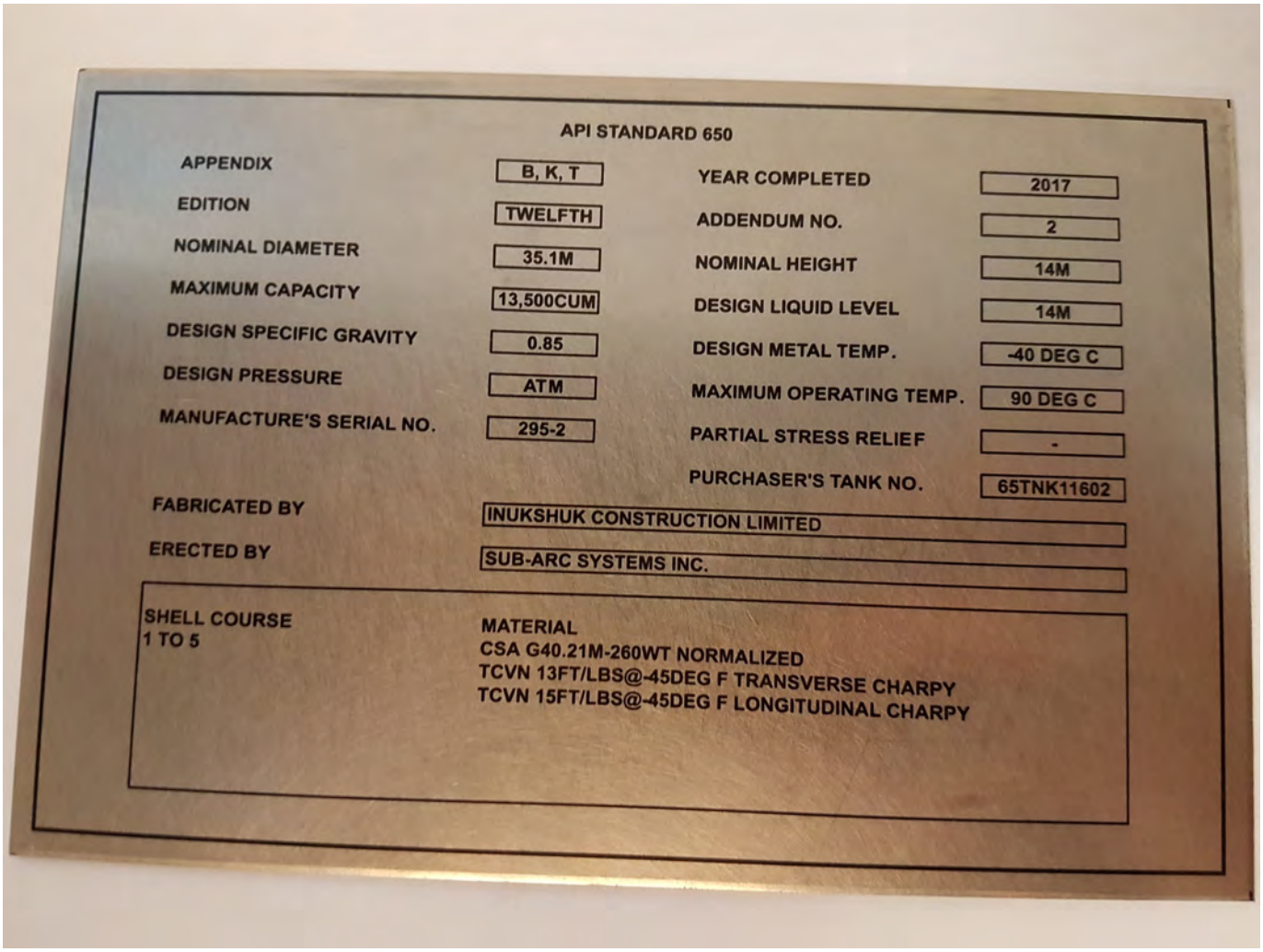

Inukshuk Construction Limited
Industrial Contracting Project Management

PO Box 654
Rankin Inlet, NU X0C 0G0
T 867.645.4030 F 867.645.4064

Item 20 – Final – Punch List

ICL Project No.: 295 Tank No.: 2 Client: AEM Site: Rankin Inlet

Punch List

Initial When Complete

Description	To be Completed By	ICL	Client
Install 12" Emergency P/V Vent when it arrives on site	ICL	SB	
Weld stairway and platform handrails together to eliminate pinch points	ICL	SB	

MANUFACTURER'S CERTIFICATION FOR A TANK BUILT TO API STANDARD 650

To **AGNICO EAGLE MINES LIMITED**

(name and address of Purchaser)

145 KING STREET EAST, SUITE 400, TORONTO, ONTARIO M5C 2Y7

We hereby certify that the tank constructed for you at

(location)

RANKIN INLET, NUNAVUT - MELIADINE FIELD ERECTED TANKS PROJECT

and described as follows: **TANK NO. 2, 35.1 M DIA X 14M HIGH, 13,500 M3, FIXED CONE ROOF**

(serial or contract number, diameter, height, capacity, floating or fixed roof)

AEM PO: OC-568510

meets all applicable requirements of API Standard 650, **12th** Edition, **Addendum 2** Revision, Appendix

_____ dated **JAN 2016** including the requirements for design, materials, fabrication, and erection.



Permit Number: P471

INUKSHUK CONSTRUCTION LIMITED

Manufacturer

Kyle Brown

Design Engineer

29-Oct-17

Date

Meliadine
Rankin Inlet
Item 20 - Final - Data Sheet (Innage)

Tank No. 2
INNAGE TABLE

Calibration@AmSpecGroup.com

CAPACITIES GIVEN IN CUBIC METERS

GAUGE HEIGHT: 14.269 M

mm	0 M	mm	0 M	mm	0 M	mm	0 M	mm	0 M	mm	0 M	mm	0 M	mm	0 M	mm	0 M	mm	0 M	mm	0 M
0.000	CROWN BOTTOM 0.609	0.100	CROWN BOTTOM 48.414	0.200	142.249	0.300	238.665	0.400	335.078	0.500	431.640	0.600	528.277	0.700	624.959	0.800	721.650	0.900	818.340
0.001	0.787	0.101	49.291	0.201	143.215	0.301	239.649	0.401	336.042	0.501	432.606	0.601	529.243	0.701	625.926	0.801	722.617	0.901	819.307
0.002	0.966	0.102	50.169	0.202	144.181	0.302	240.612	0.402	337.006	0.502	433.572	0.602	530.209	0.702	626.893	0.802	723.584	0.902	820.274
0.003	1.144	0.103	51.046	0.203	145.147	0.303	241.576	0.403	337.971	0.503	434.539	0.603	531.176	0.703	627.860	0.803	724.551	0.903	821.241
0.004	1.322	0.104	51.924	0.204	146.113	0.304	242.539	0.404	338.935	0.504	435.505	0.604	532.143	0.704	628.827	0.804	725.518	0.904	822.208
0.005	1.500	0.105	52.802	0.205	147.079	0.305	243.503	0.405	339.899	0.505	436.471	0.605	533.109	0.705	629.794	0.805	726.484	0.905	823.175
0.006	1.679	0.106	53.679	0.206	148.045	0.306	244.467	0.406	340.864	0.506	437.438	0.606	534.076	0.706	630.761	0.806	727.451	0.906	824.142
0.007	1.857	0.107	54.557	0.207	149.011	0.307	245.430	0.407	341.828	0.507	438.404	0.607	535.043	0.707	631.728	0.807	728.418	0.907	825.109
0.008	2.035	0.108	55.434	0.208	149.977	0.308	246.394	0.408	342.792	0.508	439.371	0.608	536.009	0.708	632.695	0.808	729.385	0.908	826.076
0.009	2.213	0.109	56.312	0.209	150.944	0.309	247.357	0.409	343.757	0.509	440.337	0.609	536.976	0.709	633.662	0.809	730.352	0.909	827.043
0.010	2.392	0.110	57.190	0.210	151.910	0.310	248.321	0.410	344.721	0.510	441.303	0.610	537.943	0.710	634.628	0.810	731.319	0.910	828.009
0.011	2.570	0.111	58.067	0.211	152.876	0.311	249.285	0.411	345.685	0.511	442.270	0.611	538.909	0.711	635.595	0.811	732.286	0.911	828.976
0.012	2.748	0.112	58.945	0.212	153.842	0.312	250.248	0.412	346.650	0.512	443.236	0.612	539.876	0.712	636.562	0.812	733.253	0.912	829.943
0.013	2.926	0.113	59.822	0.213	154.808	0.313	251.212	0.413	347.614	0.513	444.202	0.613	540.842	0.713	637.529	0.813	734.220	0.913	830.910
0.014	3.105	0.114	60.700	0.214	155.774	0.314	252.175	0.414	348.578	0.514	445.169	0.614	541.809	0.714	638.496	0.814	735.187	0.914	831.877
0.015	3.283	0.115	61.577	0.215	156.740	0.315	253.139	0.415	349.543	0.515	446.135	0.615	542.776	0.715	639.463	0.815	736.153	0.915	832.844
0.016	3.461	0.116	62.455	0.216	157.706	0.316	254.103	0.416	350.507	0.516	447.102	0.616	543.742	0.716	640.430	0.816	737.120	0.916	833.811
0.017	3.639	0.117	63.333	0.217	158.672	0.317	255.066	0.417	351.471	0.517	448.068	0.617	544.709	0.717	641.397	0.817	738.087	0.917	834.778
0.018	3.818	0.118	64.210	0.218	159.638	0.318	256.030	0.418	352.436	0.518	449.034	0.618	545.676	0.718	642.364	0.818	739.054	0.918	835.745
0.019	3.996	0.119	65.088	0.219	160.604	0.319	256.993	0.419	353.400	0.519	450.001	0.619	546.642	0.719	643.331	0.819	740.021	0.919	836.712
0.020	4.174	0.120	65.965	0.220	161.570	0.320	257.957	0.420	354.364	0.520	450.967	0.620	547.609	0.720	644.297	0.820	740.988	0.920	837.678
0.021	4.352	0.121	66.843	0.221	162.536	0.321	258.921	0.421	355.329	0.521	451.933	0.621	548.576	0.721	645.264	0.821	741.955	0.921	838.645
0.022	4.531	0.122	67.721	0.222	163.502	0.322	259.884	0.422	356.293	0.522	452.900	0.622	549.542	0.722	646.231	0.822	742.922	0.922	839.612
0.023	4.709	0.123	68.598	0.223	164.468	0.323	260.848	0.423	357.257	0.523	453.866	0.623	550.509	0.723	647.198	0.823	743.889	0.923	840.579
0.024	4.887	0.124	69.476	0.224	165.434	0.324	261.811	0.424	358.222	0.524	454.832	0.624	551.475	0.724	648.165	0.824	744.856	0.924	841.546
0.025	5.065	0.125	70.353	0.225	166.400	0.325	262.775	0.425	359.186	0.525	455.799	0.625	552.442	0.725	649.132	0.825	745.823	0.925	842.513
0.026	5.467	0.126	71.298	0.226	167.364	0.326	263.739	0.426	360.151	0.526	456.765	0.626	553.409	0.726	650.099	0.826	746.789	0.926	843.480
0.027	5.868	0.127	72.243	0.227	168.329	0.327	264.702	0.427	361.117	0.527	457.732	0.627	554.375	0.727	651.066	0.827	747.756	0.927	844.447
0.028	6.269	0.128	73.188	0.228	169.293	0.328	265.666	0.428	362.082	0.528	458.698	0.628	555.342	0.728	652.033	0.828	748.723	0.928	845.414
0.029	6.670	0.129	74.133	0.229	170.258	0.329	266.630	0.429	363.047	0.529	459.664	0.629	556.309	0.729	653.000	0.829	749.690	0.929	846.381
0.030	7.072	0.130	75.078	0.230	171.222	0.330	267.593	0.430	364.013	0.530	460.631	0.630	557.276	0.730	653.967	0.830	750.657	0.930	847.348
0.031	7.473	0.131	76.023	0.231	172.187	0.331	268.557	0.431	364.978	0.531	461.597	0.631	558.243	0.731	654.933	0.831	751.624	0.931	848.314
0.032	7.874	0.132	76.968	0.232	173.151	0.332	269.521	0.432	365.944	0.532	462.563	0.632	559.210	0.732	655.900	0.832	752.591	0.932	849.281
0.033	8.275	0.133	77.912	0.233	174.116	0.333	270.484	0.433	366.909	0.533	463.530	0.633	560.177	0.733	656.867	0.833	753.558	0.933	850.248
0.034	8.677	0.134	78.857	0.234	175.081	0.334	271.448	0.434	367.874	0.534	464.496	0.634	561.144	0.734	657.834	0.834	754.525	0.934	851.215
0.035	9.078	0.135	79.802	0.235	176.045	0.335	272.412	0.435	368.840	0.535	465.463	0.635	562.111	0.735	658.801	0.835	755.492	0.935	852.182
0.036	9.479	0.136	80.747	0.236	177.010	0.336	273.375	0.436	369.805	0.536	466.429	0.636	563.077	0.736	659.768	0.836	756.458	0.936	853.149
0.037	9.880	0.137	81.692	0.237	177.974	0.337	274.339	0.437	370.770	0.537	467.395	0.637	564.044	0.737	660.735	0.837	757.425	0.937	854.116
0.038	10.281	0.138	82.637	0.238	178.939	0.338	275.303	0.438	371.736	0.538	468.362	0.638	565.011	0.738	661.702	0.838	758.392	0.938	855.083
0.039	10.683	0.139	83.582	0.239	179.903	0.339	276.266	0.439	372.701	0.539	469.328	0.639	565.978	0.739	662.669	0.839	759.359	0.939	856.050
0.040	11.084	0.140	84.527	0.240	180.868	0.340	277.230	0.440	373.667	0.540	470.294	0.640	566.945	0.740	663.636	0.840	760.326	0.940	857.017
0.041	11.485	0.141	85.472	0.241	181.832	0.341	278.194	0.441	374.632	0.541	471.261	0.641	567.912	0.741	664.603	0.841	761.293	0.941	857.983
0.042	11.886	0.142	86.416	0.242	182.797	0.342	279.157	0.442	375.597	0.542	472.227	0.642	568.879	0.742	665.569	0.842	762.260	0.942	858.950
0.043	12.288	0.143	87.361	0.243	183.761	0.343	280.121	0.443	376.563	0.543	473.194	0.643	569.846	0.743	666.536	0.843	763.227	0.943	859.917
0.044	12.689	0.144	88.306	0.244	184.726	0.344	281.085	0.444	377.528	0.544	474.160	0.644	570.813	0.744	667.503	0.844	764.194	0.944	860.884
0.045	13.090	0.145	89.251	0.245	185.690	0.345	282.049	0.445	378.493	0.545	475.126	0.645	571.780	0.745	668.470	0.845	765.161	0.945	861.851
0.046	13.491	0.146	90.196	0.246	186.655	0.346	283.012	0.446	379.459	0.546	476.093	0.646	572.747	0.746	669.437	0.846	766.128	0.946	862.818
0.047	13.893	0.147	91.141	0.247	187.619	0.347	283.976	0.447	380.424	0.547	477.059	0.647	573.713	0.747	670.404	0.847	767.094	0.947	863.785
0.048	14.294	0.148	92.086	0.248	188.584	0.348	284.940	0.448	381.390	0.548	478.025	0.648	574.680	0.748	671.371	0.848	768.061	0.948	864.752
0.049	14.695	0.149	93.031	0.249	189.548	0.349	285.903	0.449	382.355	0.549	478.992	0.649	575.647	0.749	672.338	0.849	769.028	0.949	865.719
0.050	15.096	0.150	93.975	0.250	190.513	0.350	286.867	0.450	383.320	0.550	479.958	0.650	576.614	0.750	673.305	0.850	769.995	0.950	866.686
0.051	15.679	0.151	94.940	0.251	191.476	0.351	287.831	0.451	384.287	0.551	480.924	0.651	577.581	0.751	674.272	0.851	770.962	0.951	867.653
0.052	16.261	0.152	95.905	0.252	192.440	0.352	288.795	0.452	385.253	0.552	481.891	0.652	578.548	0.752	675.238	0.852	771.929	0.952	868.619
0.053	16.843	0.153	96.870	0.253	193.403	0.353	289.759	0.453	386.220	0.553	482.857	0.653	579.515	0.753	676.205	0.853	772.896	0.953	869.586
0.054	17.426	0.154	97.835	0.254	194.367	0.354	290.723	0.454	387.186	0.554	483.824	0.654	580.482	0.754	677.172	0.854	773.863	0.954	870.553
0.055	18.008	0.155	98.800	0.255	195.330	0.355	291.687	0.455	388.152	0.555	484.790	0.655	581.449	0.755	678.139	0.855	774.830	0.955	871.520
0.056	18.590	0.156	99.764	0.256	196.293	0.356	292.651	0.456	389.119	0.556	485.756	0.656	582.416	0.756	679.106	0.856	775.797	0.956	872.487
0.057	19.173	0.157	100.729	0.257	197.257	0.357	293.615	0.457	390.085	0.557	486.723	0.657	583.382	0.757	680.073	0.857	776.763	0.957	873.454
0.058	19.755	0.158	101.694	0.258	198.220	0.358	294.579	0.458	391.052	0.558	487.689	0.658	584.349	0.758	681.040	0.858	777.730	0.958	874.421
0.059	20.337	0.159	102.659	0.259	199.184	0.359	295.543	0.459	392.018	0.559	488.655	0.659	585.316	0.759	682.007	0.859	778.697	0.959	875.388
0.060	20.920	0.160	103.624	0.260	200.147	0.360	296.507	0.460	392.984	0.560	489.622	0.660	586.283	0.760	682.974	0.860	779.664	0.960	876.355
0.061	21.502	0.161	104.589	0.261	201.110	0.361	297.471	0.461	393.951	0.561	490.588	0.661	587.250	0.761	683.941	0.861	780.631	0.961	877.322
0.062	22.085	0.162	105.553	0.262	202.074	0.362	298.435	0.462	394.917	0.562	491.555	0.662	588.217	0.762	684.908	0.862	781.598	0.962	878.288
0.063	22.667	0.163	106.518	0.263	203.037	0.363	299.399	0.463	395.884	0.563	492.521	0.663	589.184	0.763	685.874	0.863	782.565	0.963	879.255
0.064	23.249	0.164	107.483	0.264	204.001	0.364	300.364	0.464	396.850	0.564	493.487	0.664	590.151	0.764	686.841	0.864	783.532	0.964	880.222
0.065	23.832	0.165	108.448	0.265	204.964	0.365	301.328	0.465	397.816	0.565	494.454	0.665	591.118	0.765	687.808	0.865	784.499	0.965	881.189
0.066	24.414	0.166	109.413	0.266	205.928	0.366	302.292	0.466	398.783	0.566	495.420	0.666	592.085	0.766	688.775	0.866	785.466	0.966	882.156
0.067	24.996	0.167	110.378	0.267	206.891	0.367	303.256	0.467	399.749	0.567	496.386	0.667	593.052	0.767	689.742	0.867	786.433	0.967	883.123
0.068	25.579	0.168	111.342	0.268	207.854	0.368	304.220	0.468	400.716	0.568	497.353	0.668	594.018	0.768	690.709	0.868	787.399	0.968	884.090
0.069	26.161	0.169	112.307	0.269	208.818	0.369	305.184	0.469	401.682	0.569	498.319	0.669	594.985	0.769	691.676	0.869	788.366	0.969	885.057
0.070	26.743	0.170	113.272	0.270	209.781	0.370	306.148	0.470	402.648	0.570	499.286	0.670	595.952	0.770	692.643	0.870	789.333	0.970	886.024
0.071	27.326	0.171	114.237	0.271	210.745	0.371	307.112	0.471	403.615	0.571	500.252	0.671	596.919	0.771	693.610	0.871	790.300	0.971	886.991
0.072	27.908	0.172	115.202	0.272	211.708	0.372	308.076	0.472	404.581	0.572	501.218	0.672	597.886	0.772	694.577	0.872	791.267	0.972	887.958
0.073	28.491	0.173	116.167	0.273	212.671	0.373	309.040	0.473	405.548	0.573	502.185	0.673	598.853	0.773	695.543	0.873	792.234	0.973	888.924
0.074	29.073	0.174	117.131	0.274	213.635	0.374	310.004	0.474	406.514	0.574	503.151	0.674	599.820	0.774	696.510	0.874	793.201	0.974	889.891
0.075	29.655	0.175	118.096	0.275	214.598	0.375	310.968	0.475	407.480	0.575	504.117	0.675	600.787	0.775	697.477	0.875	794.168	0.975	890.858
0.076	30.406	0.176	119.062	0.276	215.562	0.376	311.932	0.476	408.447	0.576	505.084	0.676	601.754	0.776	698.444	0.876	795.135	0.976	891.825
0.077	31.156	0.177	120.029	0.277	216.525	0.377	312.897	0.477	409.413	0.577	506.050	0.677	602.721	0.777	699.411	0.877	796.102	0.977	892.792
0.078	31.906	0.178	120.995	0.278	217.489	0.378	313.861	0.478	410.379	0.578	507.017	0.678	603.687	0.778	700.378	0.878	797.068	0.978	893.759
0.079	32.657	0.179	121.961	0.279	218.452	0.379	314.826	0.479	411.346	0.579	507.983	0.679	604.654	0.779	701.345	0.879	798.035	0.979	894.726
0.080	33.407	0.180	122.927	0.280	219.416	0.380	315.790	0.480	412.312	0.580	508.949	0.680	605.621	0.780	702.312	0.880	799.002	0.980	895.693
0.081	34.157	0.181	123.893	0.281	220.379	0.381	316.754	0.481	413.279	0.581	509.916	0.681	606.588	0.781	703.279	0.881	799.969	0.981	896.660
0.082	34.908	0.182	124.859	0.282	221.343	0.382	317.719	0.482	414.245	0.582	510.882	0.682	607.555	0.782	704.246	0.882	800.936	0.982	897.627
0.083	35.658	0.183	125.825	0.283	222.306	0.383	318.683	0.483	415.211	0.583	511.848	0.683	608.522	0.783	705.213	0.883	801.903	0.983	898.593
0.084	36.408	0.184	126.791	0.284	223.270	0.384	319.647	0.484	416.178	0.584	512.815	0.684	609.489	0.784	706.179	0.884	802.870	0.984	899.560
0.085	37.159	0.185	127.758	0.285	224.233	0.385	320.612	0.485	417.144	0.585	513.781	0.685	610.456	0.785	707.146	0.885	803.837	0.985	900.527
0.086	37.909	0.186	128.724	0.286	225.196	0.386	321.576	0.486	418.110	0.586	514.747	0.686	611.423	0.786	708.113	0.886	804.804	0.986	901.494
0.087	38.659	0.187	129.690	0.287	226.160	0.387	322.541	0.487	419.077	0.587	515.714	0.687	612.390	0.787	709.080	0.887	805.771	0.987	902.461
0.088	39.410	0.188	130.656	0.288	227.123	0.388	323.505	0.488	420.043	0.588	516.680	0.688	613.357	0.788	710.047	0.888	806.738	0.988	903.428
0.089	40.160	0.189	131.622	0.289	228.087	0.389	324.469	0.489	421.010	0.589	517.647	0.689	614.323	0.789	711.014	0.889	807.704	0.989	904.395
0.090	40.910	0.190	132.588	0.290	229.050	0.390	325.434	0.490	421.976	0.590	518.613	0.690	615.290	0.790	711.981	0.890	808.671	0.990	905.362
0.091	41.661	0.191	133.554	0.291	230.014	0.391	326.398	0.491	422.942	0.591	519.579	0.691	616.257	0.791	712.948	0.891	809.638	0.991	906.329
0.092	42.411	0.192	134.520	0.292	230.977	0.392	327.363	0.492	423.909	0.592	520.546	0.692	617.224	0.792	713.915	0.892	810.605	0.992	907.296
0.093	43.161	0.193	135.486	0.293	231.941	0.393	328.327	0.493	424.875	0.593	521.512	0.693	618.191	0.793	714.882	0.893	811.572	0.993	908.263
0.094	43.912	0.194	136.453	0.294	232.904	0.394	329.291	0.494	425.841	0.594	522.478	0.694	619.158	0.794	715.848	0.894	812.539	0.994	909.229
0.095	44.662	0.195	137.419	0.295	233.868	0.395	330.256	0.495	426.808	0.595	523.445	0.695	620.125	0.795	716.815	0.895	813.506	0.995	910.196
0.096	45.412	0.196	138.385	0.296	234.831	0.396	331.220	0.496	427.774	0.596	524.411	0.696	621.092	0.796	717.782	0.896	814.473	0.996	911.163
0.097	46.163	0.197	139.351	0.297	235.795	0.397	332.184	0.497	428.740	0.597	525.378	0.697	622.059	0.797	718.749	0.897	815.440	0.997	912.130
0.098	46.913	0.198	140.317	0.298	236.758	0.398	333.149	0.498	429.707	0.598	526.344	0.698	623.026	0.798	719.716	0.898	816.407	0.998	913.097
0.099	47.663	0.199	141.283	0.299	237.722	0.399	334.113	0.499	430.673	0.599	527.310	0.699	623.992	0.799	720.683	0.899	817.373	0.999	914.064

NOTE: TANK STRAPPED AND COMPUTED IN ACCORDANCE WITH API STANDARD MPMS CHAPTER 2.2C.

NOTE: CAPACITY TABLE REFLECTS AN OPERATING TEMPERATURE OF 60 DEGREES F.

NOTE: LIQUID HEAD STRESS HAS BEEN APPLIED TO CAPACITY TABLE AT SPECIFIC GRAVITY 0.8500.

NOTE: A 19 CM CONE BOTTOM HAS BEEN APPLIED BELOW 18 CM

NOTE: NOMINAL TANK DIAMETER = 35.08 M SHELL HEIGHT = 13.97 M

DATE STRAPPED: 09/19/17 BY: RJ

DATE COMPUTED: 09/26/17 BY: WLH

DATE ISSUED: 09/26/17

AMSPEC

AmSpec

Calibration@AmSpecGroup.com

Meliadine
Rankin Inlet

Tank No. 2
INNAGE TABLE

Item 20 - Final - Data Sheet (Innage)

CAPACITIES GIVEN IN CUBIC METERS

GAUGE HEIGHT: 14.269 M

mm	1 M	mm	1 M	mm	1 M	mm	1 M	mm	1 M	mm	1 M	mm	1 M	mm	1 M	mm	1 M	mm	1 M
0.000	915.031	0.100	1,011.721	0.200	1,108.412	0.300	1,205.102	0.400	1,301.793	0.500	1,398.471	0.600	1,495.108	0.700	1,591.745	0.800	1,688.382	0.900	1,785.020
0.001	915.998	0.101	1,012.688	0.201	1,109.379	0.301	1,206.069	0.401	1,302.760	0.501	1,399.438	0.601	1,496.075	0.701	1,592.712	0.801	1,689.349	0.901	1,785.986
0.002	916.965	0.102	1,013.655	0.202	1,110.346	0.302	1,207.036	0.402	1,303.727	0.502	1,400.404	0.602	1,497.041	0.702	1,593.678	0.802	1,690.315	0.902	1,786.952
0.003	917.932	0.103	1,014.622	0.203	1,111.313	0.303	1,208.003	0.403	1,304.694	0.503	1,401.370	0.603	1,498.007	0.703	1,594.645	0.803	1,691.282	0.903	1,787.919
0.004	918.898	0.104	1,015.589	0.204	1,112.279	0.304	1,208.970	0.404	1,305.660	0.504	1,402.337	0.604	1,498.974	0.704	1,595.611	0.804	1,692.248	0.904	1,788.885
0.005	919.865	0.105	1,016.556	0.205	1,113.246	0.305	1,209.937	0.405	1,306.627	0.505	1,403.303	0.605	1,499.940	0.705	1,596.577	0.805	1,693.214	0.905	1,789.851
0.006	920.832	0.106	1,017.523	0.206	1,114.213	0.306	1,210.904	0.406	1,307.594	0.506	1,404.269	0.606	1,500.907	0.706	1,597.544	0.806	1,694.181	0.906	1,790.818
0.007	921.799	0.107	1,018.490	0.207	1,115.180	0.307	1,211.871	0.407	1,308.561	0.507	1,405.236	0.607	1,501.873	0.707	1,598.510	0.807	1,695.147	0.907	1,791.784
0.008	922.766	0.108	1,019.457	0.208	1,116.147	0.308	1,212.838	0.408	1,309.528	0.508	1,406.202	0.608	1,502.839	0.708	1,599.476	0.808	1,696.113	0.908	1,792.751
0.009	923.733	0.109	1,020.423	0.209	1,117.114	0.309	1,213.804	0.409	1,310.495	0.509	1,407.169	0.609	1,503.806	0.709	1,600.443	0.809	1,697.080	0.909	1,793.717
0.010	924.700	0.110	1,021.390	0.210	1,118.081	0.310	1,214.771	0.410	1,311.462	0.510	1,408.135	0.610	1,504.772	0.710	1,601.409	0.810	1,698.046	0.910	1,794.683
0.011	925.667	0.111	1,022.357	0.211	1,119.048	0.311	1,215.738	0.411	1,312.429	0.511	1,409.101	0.611	1,505.738	0.711	1,602.375	0.811	1,699.013	0.911	1,795.650
0.012	926.634	0.112	1,023.324	0.212	1,120.015	0.312	1,216.705	0.412	1,313.396	0.512	1,410.068	0.612	1,506.705	0.712	1,603.342	0.812	1,699.979	0.912	1,796.616
0.013	927.601	0.113	1,024.291	0.213	1,120.982	0.313	1,217.672	0.413	1,314.363	0.513	1,411.034	0.613	1,507.671	0.713	1,604.308	0.813	1,700.945	0.913	1,797.582
0.014	928.568	0.114	1,025.258	0.214	1,121.948	0.314	1,218.639	0.414	1,315.329	0.514	1,412.000	0.614	1,508.638	0.714	1,605.275	0.814	1,701.912	0.914	1,798.549
0.015	929.534	0.115	1,026.225	0.215	1,122.915	0.315	1,219.606	0.415	1,316.296	0.515	1,412.967	0.615	1,509.604	0.715	1,606.241	0.815	1,702.878	0.915	1,799.515
0.016	930.501	0.116	1,027.192	0.216	1,123.882	0.316	1,220.573	0.416	1,317.263	0.516	1,413.933	0.616	1,510.570	0.716	1,607.207	0.816	1,703.844	0.916	1,800.481
0.017	931.468	0.117	1,028.159	0.217	1,124.849	0.317	1,221.540	0.417	1,318.230	0.517	1,414.900	0.617	1,511.537	0.717	1,608.174	0.817	1,704.811	0.917	1,801.448
0.018	932.435	0.118	1,029.126	0.218	1,125.816	0.318	1,222.507	0.418	1,319.197	0.518	1,415.866	0.618	1,512.503	0.718	1,609.140	0.818	1,705.777	0.918	1,802.414
0.019	933.402	0.119	1,030.093	0.219	1,126.783	0.319	1,223.473	0.419	1,320.164	0.519	1,416.832	0.619	1,513.469	0.719	1,610.106	0.819	1,706.744	0.919	1,803.381
0.020	934.369	0.120	1,031.059	0.220	1,127.750	0.320	1,224.440	0.420	1,321.131	0.520	1,417.799	0.620	1,514.436	0.720	1,611.073	0.820	1,707.710	0.920	1,804.347
0.021	935.336	0.121	1,032.026	0.221	1,128.717	0.321	1,225.407	0.421	1,322.098	0.521	1,418.765	0.621	1,515.402	0.721	1,612.039	0.821	1,708.676	0.921	1,805.313
0.022	936.303	0.122	1,032.993	0.222	1,129.684	0.322	1,226.374	0.422	1,323.065	0.522	1,419.731	0.622	1,516.368	0.722	1,613.006	0.822	1,709.643	0.922	1,806.280
0.023	937.270	0.123	1,033.960	0.223	1,130.651	0.323	1,227.341	0.423	1,324.032	0.523	1,420.698	0.623	1,517.335	0.723	1,613.972	0.823	1,710.609	0.923	1,807.246
0.024	938.237	0.124	1,034.927	0.224	1,131.618	0.324	1,228.308	0.424	1,324.999	0.524	1,421.664	0.624	1,518.301	0.724	1,614.938	0.824	1,711.575	0.924	1,808.212
0.025	939.203	0.125	1,035.894	0.225	1,132.584	0.325	1,229.275	0.425	1,325.965	0.525	1,422.631	0.625	1,519.268	0.725	1,615.905	0.825	1,712.542	0.925	1,809.179
0.026	940.170	0.126	1,036.861	0.226	1,133.551	0.326	1,230.242	0.426	1,326.932	0.526	1,423.597	0.626	1,520.234	0.726	1,616.871	0.826	1,713.508	0.926	1,810.145
0.027	941.137	0.127	1,037.828	0.227	1,134.518	0.327	1,231.209	0.427	1,327.899	0.527	1,424.563	0.627	1,521.200	0.727	1,617.837	0.827	1,714.474	0.927	1,811.112
0.028	942.104	0.128	1,038.795	0.228	1,135.485	0.328	1,232.176	0.428	1,328.866	0.528	1,425.530	0.628	1,522.167	0.728	1,618.804	0.828	1,715.441	0.928	1,812.078
0.029	943.071	0.129	1,039.762	0.229	1,136.452	0.329	1,233.143	0.429	1,329.833	0.529	1,426.496	0.629	1,523.133	0.729	1,619.770	0.829	1,716.407	0.929	1,813.044
0.030	944.038	0.130	1,040.728	0.230	1,137.419	0.330	1,234.109	0.430	1,330.800	0.530	1,427.462	0.630	1,524.099	0.730	1,620.737	0.830	1,717.374	0.930	1,814.011
0.031	945.005	0.131	1,041.695	0.231	1,138.386	0.331	1,235.076	0.431	1,331.767	0.531	1,428.429	0.631	1,525.066	0.731	1,621.703	0.831	1,718.340	0.931	1,814.977
0.032	945.972	0.132	1,042.662	0.232	1,139.353	0.332	1,236.043	0.432	1,332.734	0.532	1,429.395	0.632	1,526.032	0.732	1,622.669	0.832	1,719.306	0.932	1,815.943
0.033	946.939	0.133	1,043.629	0.233	1,140.320	0.333	1,237.010	0.433	1,333.701	0.533	1,430.361	0.633	1,526.999	0.733	1,623.636	0.833	1,720.273	0.933	1,816.910
0.034	947.906	0.134	1,044.596	0.234	1,141.287	0.334	1,237.977	0.434	1,334.668	0.534	1,431.328	0.634	1,527.965	0.734	1,624.602	0.834	1,721.239	0.934	1,817.876
0.035	948.873	0.135	1,045.563	0.235	1,142.253	0.335	1,238.944	0.435	1,335.634	0.535	1,432.294	0.635	1,528.931	0.735	1,625.568	0.835	1,722.205	0.935	1,818.843
0.036	949.839	0.136	1,046.530	0.236	1,143.220	0.336	1,239.911	0.436	1,336.601	0.536	1,433.261	0.636	1,529.898	0.736	1,626.535	0.836	1,723.172	0.936	1,819.809
0.037	950.806	0.137	1,047.497	0.237	1,144.187	0.337	1,240.878	0.437	1,337.568	0.537	1,434.227	0.637	1,530.864	0.737	1,627.501	0.837	1,724.138	0.937	1,820.775
0.038	951.773	0.138	1,048.464	0.238	1,145.154	0.338	1,241.845	0.438	1,338.535	0.538	1,435.193	0.638	1,531.830	0.738	1,628.467	0.838	1,725.105	0.938	1,821.742
0.039	952.740	0.139	1,049.431	0.239	1,146.121	0.339	1,242.812	0.439	1,339.502	0.539	1,436.160	0.639	1,532.797	0.739	1,629.434	0.839	1,726.071	0.939	1,822.708
0.040	953.707	0.140	1,050.398	0.240	1,147.088	0.340	1,243.778	0.440	1,340.469	0.540	1,437.126	0.640	1,533.763	0.740	1,630.400	0.840	1,727.037	0.940	1,823.674
0.041	954.674	0.141	1,051.364	0.241	1,148.055	0.341	1,244.745	0.441	1,341.436	0.541	1,438.092	0.641	1,534.730	0.741	1,631.367	0.841	1,728.004	0.941	1,824.641
0.042	955.641	0.142	1,052.331	0.242	1,149.022	0.342	1,245.712	0.442	1,342.403	0.542	1,439.059	0.642	1,535.696	0.742	1,632.333	0.842	1,728.970	0.942	1,825.607
0.043	956.608	0.143	1,053.298	0.243	1,149.989	0.343	1,246.679	0.443	1,343.370	0.543	1,440.025	0.643	1,536.662	0.743	1,633.299	0.843	1,729.936	0.943	1,826.573
0.044	957.575	0.144	1,054.265	0.244	1,150.956	0.344	1,247.646	0.444	1,344.337	0.544	1,440.992	0.644	1,537.629	0.744	1,634.266	0.844	1,730.903	0.944	1,827.540
0.045	958.542	0.145	1,055.232	0.245	1,151.923	0.345	1,248.613	0.445	1,345.304	0.545	1,441.958	0.645	1,538.595	0.745	1,635.232	0.845	1,731.869	0.945	1,828.506
0.046	959.508	0.146	1,056.199	0.246	1,152.889	0.346	1,249.580	0.446	1,346.270	0.546	1,442.924	0.646	1,539.561	0.746	1,636.198	0.846	1,732.836	0.946	1,829.473
0.047	960.475	0.147	1,057.166	0.247	1,153.856	0.347	1,250.547	0.447	1,347.237	0.547	1,443.891	0.647	1,540.528	0.747	1,637.165	0.847	1,733.802	0.947	1,830.439
0.048	961.442	0.148	1,058.133	0.248	1,154.823	0.348	1,251.514	0.448	1,348.204	0.548	1,444.857	0.648	1,541.494	0.748	1,638.131	0.848	1,734.768	0.948	1,831.405
0.049	962.409	0.149	1,059.100	0.249	1,155.790	0.349	1,252.481	0.449	1,349.171	0.549	1,445.823	0.649	1,542.460	0.749	1,639.098	0.849	1,735.735	0.949	1,832.372
0.050	963.376	0.150	1,060.067	0.250	1,156.757	0.350	1,253.448	0.450	1,350.138	0.550	1,446.790	0.650	1,543.427	0.750	1,640.064	0.850	1,736.701	0.950	1,833.338
0.051	964.343	0.151	1,061.033	0.251	1,157.724	0.351	1,254.414	0.451	1,351.105	0.551	1,447.756	0.651	1,544.393	0.751	1,641.030	0.851	1,737.667	0.951	1,834.304
0.052	965.310	0.152	1,062.000	0.252	1,158.691	0.352	1,255.381	0.452	1,352.072	0.552	1,448.723	0.652	1,545.360	0.752	1,641.997	0.852	1,738.634	0.952	1,835.271
0.053	966.277	0.153	1,062.967	0.253	1,159.658	0.353	1,256.348	0.453	1,353.039	0.553	1,449.689	0.653	1,546.326	0.753	1,642.963	0.853	1,739.600	0.953	1,836.237
0.054	967.244	0.154	1,063.934	0.254	1,160.625	0.354	1,257.315	0.454	1,354.006	0.554	1,450.655	0.654	1,547.292	0.754	1,643.929	0.854	1,740.567	0.954	1,837.204
0.055	968.211	0.155	1,064.901	0.255	1,161.592	0.355	1,258.282	0.455	1,354.973	0.555	1,451.622	0.655	1,548.259	0.755	1,644.896	0.855	1,741.533	0.955	1,838.170
0.056	969.178	0.156	1,065.868	0.256	1,162.558	0.356	1,259.249	0.456	1,355.939	0.556	1,452.588	0.656	1,549.225	0.756	1,645.862	0.856	1,742.499	0.956	1,839.136
0.057	970.144	0.157	1,066.835	0.257	1,163.525	0.357	1,260.216	0.457	1,356.906	0.557	1,453.554	0.657	1,550.191	0.757	1,646.829	0.857	1,743.466	0.957	1,840.103
0.058	971.111	0.158	1,067.802	0.258	1,164.492	0.358	1,261.183	0.458	1,357.873	0.558	1,454.521	0.658	1,551.158	0.758	1,647.795	0.858	1,744.432	0.958	1,841.069
0.059	972.078	0.159	1,068.769	0.259	1,165.459	0.359	1,262.150	0.459	1,358.840	0.559	1,455.487	0.659	1,552.124	0.759	1,648.761	0.859	1,745.398	0.959	1,842.035
0.060	973.045	0.160	1,069.736	0.260	1,166.426	0.360	1,263.117	0.460	1,359.807	0.560	1,456.453	0.660	1,553.091	0.760	1,649.728	0.860	1,746.365	0.960	1,843.002
0.061	974.012	0.161	1,070.703	0.261	1,167.393	0.361	1,264.083	0.461	1,360.774	0.561	1,457.420	0.661	1,554.057	0.761	1,650.694	0.861	1,747.331	0.961	1,843.968
0.062	974.979	0.162	1,071.669	0.262	1,168.360	0.362	1,265.050	0.462	1,361.741	0.562	1,458.386	0.662	1,555.023	0.762	1,651.660	0.862	1,748.297	0.962	1,844.935
0.063	975.946	0.163	1,072.636	0.263	1,169.327	0.363	1,266.017	0.463	1,362.708	0.563	1,459.353	0.663	1,555.990	0.763	1,652.627	0.863	1,749.264	0.963	1,845.901
0.064	976.913	0.164	1,073.603	0.264	1,170.294	0.364	1,266.984	0.464	1,363.675	0.564	1,460.319	0.664	1,556.956	0.764	1,653.593	0.864	1,750.230	0.964	1,846.867
0.065	977.880	0.165	1,074.570	0.265	1,171.261	0.365	1,267.951	0.465	1,364.642	0.565	1,461.285	0.665	1,557.922	0.765	1,654.560	0.865	1,751.197	0.965	1,847.834
0.066	978.847	0.166	1,075.537	0.266	1,172.228	0.366	1,268.918	0.466	1,365.608	0.566	1,462.252	0.666	1,558.889	0.766	1,655.526	0.866	1,752.163	0.966	1,848.800
0.067	979.813	0.167	1,076.504	0.267	1,173.194	0.367	1,269.885	0.467	1,366.575	0.567	1,463.218	0.667	1,559.855	0.767	1,656.492	0.867	1,753.129	0.967	1,849.766
0.068	980.780	0.168	1,077.471	0.268	1,174.161	0.368	1,270.852	0.468	1,367.542	0.568	1,464.184	0.668	1,560.822	0.768	1,657.459	0.868	1,754.096	0.968	1,850.733
0.069	981.747	0.169	1,078.438	0.269	1,175.128	0.369	1,271.819	0.469	1,368.508	0.569	1,465.151	0.669	1,561.788	0.769	1,658.425	0.869	1,755.062	0.969	1,851.699
0.070	982.714	0.170	1,079.405	0.270	1,176.095	0.370	1,272.786	0.470	1,369.475	0.570	1,466.117	0.670	1,562.754	0.770	1,659.391	0.870	1,756.028	0.970	1,852.666
0.071	983.681	0.171	1,080.372	0.271	1,177.062	0.371	1,273.753	0.471	1,370.441	0.571	1,467.084	0.671	1,563.721	0.771	1,660.358	0.871	1,756.995	0.971	1,853.632
0.072	984.648	0.172	1,081.338	0.272	1,178.029	0.372	1,274.719	0.472	1,371.408	0.572	1,468.050	0.672	1,564.687	0.772	1,661.324	0.872	1,757.961	0.972	1,854.598
0.073	985.615	0.173	1,082.305	0.273	1,178.996	0.373	1,275.686	0.473	1,372.375	0.573	1,469.016	0.673	1,565.653	0.773	1,662.290	0.873	1,758.928	0.973	1,855.565
0.074	986.582	0.174	1,083.272	0.274	1,179.963	0.374	1,276.653	0.474	1,373.341	0.574	1,469.983	0.674	1,566.620	0.774	1,663.257	0.874	1,759.894	0.974	1,856.531
0.075	987.549	0.175	1,084.239	0.275	1,180.930	0.375	1,277.620	0.475	1,374.308	0.575	1,470.949	0.675	1,567.586	0.775	1,664.223	0.875	1,760.860	0.975	1,857.497
0.076	988.516	0.176	1,085.206	0.276	1,181.897	0.376	1,278.587	0.476	1,375.275	0.576	1,471.915	0.676	1,568.553	0.776	1,665.190	0.876	1,761.827	0.976	1,858.464
0.077	989.483	0.177	1,086.173	0.277	1,182.863	0.377	1,279.554	0.477	1,376.241	0.577	1,472.882	0.677	1,569.519	0.777	1,666.156	0.877	1,762.793	0.977	1,859.430
0.078	990.449	0.178	1,087.140	0.278	1,183.830	0.378	1,280.521	0.478	1,377.208	0.578	1,473.848	0.678	1,570.485	0.778	1,667.122	0.878	1,763.759	0.978	1,860.396
0.079	991.416	0.179	1,088.107	0.279	1,184.797	0.379	1,281.488	0.479	1,378.175	0.579	1,474.815	0.679	1,571.452	0.779	1,668.089	0.879	1,764.726	0.979	1,861.363
0.080	992.383	0.180	1,089.074	0.280	1,185.764	0.380	1,282.455	0.480	1,379.141	0.580	1,475.781	0.680	1,572.418	0.780	1,669.055	0.880	1,765.692	0.980	1,862.329
0.081	993.350	0.181	1,090.041	0.281	1,186.731	0.381	1,283.422	0.481	1,380.108	0.581	1,476.747	0.681	1,573.384	0.781	1,670.021	0.881	1,766.659	0.981	1,863.296
0.082	994.317	0.182	1,091.008	0.282	1,187.698	0.382	1,284.388	0.482	1,381.074	0.582	1,477.714	0.682	1,574.351	0.782	1,670.988	0.882	1,767.625	0.982	1,864.262
0.083	995.284	0.183	1,091.974	0.283	1,188.665	0.383	1,285.355	0.483	1,382.041	0.583	1,478.680	0.683	1,575.317	0.783	1,671.954	0.883	1,768.591	0.983	1,865.228
0.084	996.251	0.184	1,092.941	0.284	1,189.632	0.384	1,286.322	0.484	1,383.008	0.584	1,479.646	0.684	1,576.283	0.784	1,672.921	0.884	1,769.558	0.984	1,866.195
0.085	997.218	0.185	1,093.908	0.285	1,190.599	0.385	1,287.289	0.485	1,383.974	0.585	1,480.613	0.685	1,577.250	0.785	1,673.887	0.885	1,770.524	0.985	1,867.161
0.086	998.185	0.186	1,094.875	0.286	1,191.566	0.386	1,288.256	0.486	1,384.941	0.586	1,481.579	0.686	1,578.216	0.786	1,674.853	0.886	1,771.490	0.986	1,868.127
0.087	999.152	0.187	1,095.842	0.287	1,192.533	0.387	1,289.223	0.487	1,385.908	0.587	1,482.546	0.687	1,579.183	0.787	1,675.820	0.887	1,772.457	0.987	1,869.094
0.088	1,000.118	0.188	1,096.809	0.288	1,193.499	0.388	1,290.190	0.488	1,386.874	0.588	1,483.512	0.688	1,580.149	0.788	1,676.786	0.888	1,773.423	0.988	1,870.060
0.089	1,001.085	0.189	1,097.776	0.289	1,194.466	0.389	1,291.157	0.489	1,387.841	0.589	1,484.478	0.689	1,581.115	0.789	1,677.752	0.889	1,774.389	0.989	1,871.027
0.090	1,002.052	0.190	1,098.743	0.290	1,195.433	0.390	1,292.124	0.490	1,388.808	0.590	1,485.445	0.690	1,582.082	0.790	1,678.719	0.890	1,775.356	0.990	1,871.993
0.091	1,003.019	0.191	1,099.710	0.291	1,196.400	0.391	1,293.091	0.491	1,389.774	0.591	1,486.411	0.691	1,583.048	0.791	1,679.685	0.891	1,776.322	0.991	1,872.959
0.092	1,003.986	0.192	1,100.677	0.292	1,197.367	0.392	1,294.058	0.492	1,390.740	0.592	1,487.377	0.692	1,584.014	0.792	1,680.652	0.892	1,777.289	0.992	1,873.926
0.093	1,004.953	0.193	1,101.643	0.293	1,198.334	0.393	1,295.024	0.493	1,391.707	0.593	1,488.344	0.693	1,584.981	0.793	1,681.618	0.893	1,778.255	0.993	1,874.892
0.094	1,005.920	0.194	1,102.610	0.294	1,199.301	0.394	1,295.991	0.494	1,392.673	0.594	1,489.310	0.694	1,585.947	0.794	1,682.584	0.894	1,779.221	0.994	1,875.858
0.095	1,006.887	0.195	1,103.577	0.295	1,200.268	0.395	1,296.958	0.495	1,393.639	0.595	1,490.276	0.695	1,586.914	0.795	1,683.551	0.895	1,780.188	0.995	1,876.825
0.096	1,007.854	0.196	1,104.544	0.296	1,201.235	0.396	1,297.925	0.496	1,394.606	0.596	1,491.243	0.696	1,587.880	0.796	1,684.517	0.896	1,781.154	0.996	1,877.791
0.097	1,008.821	0.197	1,105.511	0.297	1,202.202	0.397	1,298.892	0.497	1,395.572	0.597	1,492.209	0.697	1,588.846	0.797	1,685.483	0.897	1,782.120	0.997	1,878.758
0.098	1,009.788	0.198	1,106.478	0.298	1,203.168	0.398	1,299.859	0.498	1,396.539	0.598	1,493.176	0.698	1,589.813	0.798	1,686.450	0.898	1,783.087	0.998	1,879.724
0.099	1,010.754	0.199	1,107.445	0.299	1,204.135	0.399	1,300.826	0.499	1,397.505	0.599	1,494.142	0.699	1,590.779	0.799	1,687.416	0.899	1,784.053	0.999	1,880.690

DATE STRAPPED: 09/19/17 BY: RJ
DATE COMPUTED: 09/26/17 BY: WLH
DATE ISSUED: 09/26/17

AMSPEC

Meliadine
Rankin Inlet
Item 20 - Final - Data Sheet (Innage)

Tank No. 2
INNAGE TABLE

Calibration@AmSpecGroup.com

CAPACITIES GIVEN IN CUBIC METERS — **GAUGE HEIGHT: 14.269 M**

mm	2 M	mm	2 M	mm	2 M	mm	2 M	mm	2 M	mm	2 M	mm	2 M	mm	2 M	mm	2 M	mm	2 M
0.000	1,881.657	0.100	1,978.294	0.200	2,074.931	0.300	2,171.568	0.400	2,268.205	0.500	2,364.842	0.600	2,461.479	0.700	2,558.116	0.800	2,654.750	0.900	2,751.374
0.001	1,882.623	0.101	1,979.260	0.201	2,075.897	0.301	2,172.534	0.401	2,269.171	0.501	2,365.808	0.601	2,462.445	0.701	2,559.083	0.801	2,655.716	0.901	2,752.341
0.002	1,883.589	0.102	1,980.226	0.202	2,076.864	0.302	2,173.501	0.402	2,270.138	0.502	2,366.775	0.602	2,463.412	0.702	2,560.049	0.802	2,656.682	0.902	2,753.307
0.003	1,884.556	0.103	1,981.193	0.203	2,077.830	0.303	2,174.467	0.403	2,271.104	0.503	2,367.741	0.603	2,464.378	0.703	2,561.015	0.803	2,657.649	0.903	2,754.273
0.004	1,885.522	0.104	1,982.159	0.204	2,078.796	0.304	2,175.433	0.404	2,272.070	0.504	2,368.707	0.604	2,465.345	0.704	2,561.982	0.804	2,658.615	0.904	2,755.239
0.005	1,886.488	0.105	1,983.126	0.205	2,079.763	0.305	2,176.400	0.405	2,273.037	0.505	2,369.674	0.605	2,466.311	0.705	2,562.948	0.805	2,659.581	0.905	2,756.206
0.006	1,887.455	0.106	1,984.092	0.206	2,080.729	0.306	2,177.366	0.406	2,274.003	0.506	2,370.640	0.606	2,467.277	0.706	2,563.914	0.806	2,660.547	0.906	2,757.172
0.007	1,888.421	0.107	1,985.058	0.207	2,081.695	0.307	2,178.332	0.407	2,274.970	0.507	2,371.607	0.607	2,468.244	0.707	2,564.881	0.807	2,661.514	0.907	2,758.138
0.008	1,889.388	0.108	1,986.025	0.208	2,082.662	0.308	2,179.299	0.408	2,275.936	0.508	2,372.573	0.608	2,469.210	0.708	2,565.847	0.808	2,662.480	0.908	2,759.104
0.009	1,890.354	0.109	1,986.991	0.209	2,083.628	0.309	2,180.265	0.409	2,276.902	0.509	2,373.539	0.609	2,470.176	0.709	2,566.814	0.809	2,663.446	0.909	2,760.071
0.010	1,891.320	0.110	1,987.957	0.210	2,084.594	0.310	2,181.232	0.410	2,277.869	0.510	2,374.506	0.610	2,471.143	0.710	2,567.780	0.810	2,664.412	0.910	2,761.037
0.011	1,892.287	0.111	1,988.924	0.211	2,085.561	0.311	2,182.198	0.411	2,278.835	0.511	2,375.472	0.611	2,472.109	0.711	2,568.746	0.811	2,665.379	0.911	2,762.003
0.012	1,893.253	0.112	1,989.890	0.212	2,086.527	0.312	2,183.164	0.412	2,279.801	0.512	2,376.438	0.612	2,473.076	0.712	2,569.713	0.812	2,666.345	0.912	2,762.969
0.013	1,894.219	0.113	1,990.857	0.213	2,087.494	0.313	2,184.131	0.413	2,280.768	0.513	2,377.405	0.613	2,474.042	0.713	2,570.679	0.813	2,667.311	0.913	2,763.936
0.014	1,895.186	0.114	1,991.823	0.214	2,088.460	0.314	2,185.097	0.414	2,281.734	0.514	2,378.371	0.614	2,475.008	0.714	2,571.645	0.814	2,668.277	0.914	2,764.902
0.015	1,896.152	0.115	1,992.789	0.215	2,089.426	0.315	2,186.063	0.415	2,282.700	0.515	2,379.338	0.615	2,475.975	0.715	2,572.612	0.815	2,669.243	0.915	2,765.868
0.016	1,897.119	0.116	1,993.756	0.216	2,090.393	0.316	2,187.030	0.416	2,283.667	0.516	2,380.304	0.616	2,476.941	0.716	2,573.578	0.816	2,670.210	0.916	2,766.834
0.017	1,898.085	0.117	1,994.722	0.217	2,091.359	0.317	2,187.996	0.417	2,284.633	0.517	2,381.270	0.617	2,477.907	0.717	2,574.544	0.817	2,671.176	0.917	2,767.801
0.018	1,899.051	0.118	1,995.688	0.218	2,092.325	0.318	2,188.963	0.418	2,285.600	0.518	2,382.237	0.618	2,478.874	0.718	2,575.511	0.818	2,672.142	0.918	2,768.767
0.019	1,900.018	0.119	1,996.655	0.219	2,093.292	0.319	2,189.929	0.419	2,286.566	0.519	2,383.203	0.619	2,479.840	0.719	2,576.477	0.819	2,673.108	0.919	2,769.733
0.020	1,900.984	0.120	1,997.621	0.220	2,094.258	0.320	2,190.895	0.420	2,287.532	0.520	2,384.169	0.620	2,480.807	0.720	2,577.444	0.820	2,674.075	0.920	2,770.699
0.021	1,901.950	0.121	1,998.587	0.221	2,095.225	0.321	2,191.862	0.421	2,288.499	0.521	2,385.136	0.621	2,481.773	0.721	2,578.410	0.821	2,675.041	0.921	2,771.666
0.022	1,902.917	0.122	1,999.554	0.222	2,096.191	0.322	2,192.828	0.422	2,289.465	0.522	2,386.102	0.622	2,482.739	0.722	2,579.376	0.822	2,676.007	0.922	2,772.632
0.023	1,903.883	0.123	2,000.520	0.223	2,097.157	0.323	2,193.794	0.423	2,290.431	0.523	2,387.069	0.623	2,483.706	0.723	2,580.343	0.823	2,676.973	0.923	2,773.598
0.024	1,904.850	0.124	2,001.487	0.224	2,098.124	0.324	2,194.761	0.424	2,291.398	0.524	2,388.035	0.624	2,484.672	0.724	2,581.309	0.824	2,677.940	0.924	2,774.564
0.025	1,905.816	0.125	2,002.453	0.225	2,099.090	0.325	2,195.727	0.425	2,292.364	0.525	2,389.001	0.625	2,485.638	0.725	2,582.275	0.825	2,678.906	0.925	2,775.530
0.026	1,906.782	0.126	2,003.419	0.226	2,100.056	0.326	2,196.694	0.426	2,293.331	0.526	2,389.968	0.626	2,486.605	0.726	2,583.242	0.826	2,679.872	0.926	2,776.497
0.027	1,907.749	0.127	2,004.386	0.227	2,101.023	0.327	2,197.660	0.427	2,294.297	0.527	2,390.934	0.627	2,487.571	0.727	2,584.208	0.827	2,680.838	0.927	2,777.463
0.028	1,908.715	0.128	2,005.352	0.228	2,101.989	0.328	2,198.626	0.428	2,295.263	0.528	2,391.900	0.628	2,488.537	0.728	2,585.175	0.828	2,681.805	0.928	2,778.429
0.029	1,909.681	0.129	2,006.318	0.229	2,102.956	0.329	2,199.593	0.429	2,296.230	0.529	2,392.867	0.629	2,489.504	0.729	2,586.141	0.829	2,682.771	0.929	2,779.395
0.030	1,910.648	0.130	2,007.285	0.230	2,103.922	0.330	2,200.559	0.430	2,297.196	0.530	2,393.833	0.630	2,490.470	0.730	2,587.107	0.830	2,683.737	0.930	2,780.362
0.031	1,911.614	0.131	2,008.251	0.231	2,104.888	0.331	2,201.525	0.431	2,298.162	0.531	2,394.800	0.631	2,491.437	0.731	2,588.074	0.831	2,684.703	0.931	2,781.328
0.032	1,912.580	0.132	2,009.218	0.232	2,105.855	0.332	2,202.492	0.432	2,299.129	0.532	2,395.766	0.632	2,492.403	0.732	2,589.040	0.832	2,685.670	0.932	2,782.294
0.033	1,913.547	0.133	2,010.184	0.233	2,106.821	0.333	2,203.458	0.433	2,300.095	0.533	2,396.732	0.633	2,493.369	0.733	2,590.006	0.833	2,686.636	0.933	2,783.260
0.034	1,914.513	0.134	2,011.150	0.234	2,107.787	0.334	2,204.424	0.434	2,301.062	0.534	2,397.699	0.634	2,494.336	0.734	2,590.973	0.834	2,687.602	0.934	2,784.227
0.035	1,915.480	0.135	2,012.117	0.235	2,108.754	0.335	2,205.391	0.435	2,302.028	0.535	2,398.665	0.635	2,495.302	0.735	2,591.939	0.835	2,688.568	0.935	2,785.193
0.036	1,916.446	0.136	2,013.083	0.236	2,109.720	0.336	2,206.357	0.436	2,302.994	0.536	2,399.631	0.636	2,496.268	0.736	2,592.906	0.836	2,689.535	0.936	2,786.159
0.037	1,917.412	0.137	2,014.049	0.237	2,110.687	0.337	2,207.324	0.437	2,303.961	0.537	2,400.598	0.637	2,497.235	0.737	2,593.872	0.837	2,690.501	0.937	2,787.125
0.038	1,918.379	0.138	2,015.016	0.238	2,111.653	0.338	2,208.290	0.438	2,304.927	0.538	2,401.564	0.638	2,498.201	0.738	2,594.838	0.838	2,691.467	0.938	2,788.092
0.039	1,919.345	0.139	2,015.982	0.239	2,112.619	0.339	2,209.256	0.439	2,305.893	0.539	2,402.530	0.639	2,499.168	0.739	2,595.805	0.839	2,692.433	0.939	2,789.058
0.040	1,920.311	0.140	2,016.949	0.240	2,113.586	0.340	2,210.223	0.440	2,306.860	0.540	2,403.497	0.640	2,500.134	0.740	2,596.771	0.840	2,693.400	0.940	2,790.024
0.041	1,921.278	0.141	2,017.915	0.241	2,114.552	0.341	2,211.189	0.441	2,307.826	0.541	2,404.463	0.641	2,501.100	0.741	2,597.737	0.841	2,694.366	0.941	2,790.990
0.042	1,922.244	0.142	2,018.881	0.242	2,115.518	0.342	2,212.155	0.442	2,308.793	0.542	2,405.430	0.642	2,502.067	0.742	2,598.704	0.842	2,695.332	0.942	2,791.957
0.043	1,923.211	0.143	2,019.848	0.243	2,116.485	0.343	2,213.122	0.443	2,309.759	0.543	2,406.396	0.643	2,503.033	0.743	2,599.670	0.843	2,696.298	0.943	2,792.923
0.044	1,924.177	0.144	2,020.814	0.244	2,117.451	0.344	2,214.088	0.444	2,310.725	0.544	2,407.362	0.644	2,503.999	0.744	2,600.636	0.844	2,697.265	0.944	2,793.889
0.045	1,925.143	0.145	2,021.780	0.245	2,118.417	0.345	2,215.055	0.445	2,311.692	0.545	2,408.329	0.645	2,504.966	0.745	2,601.603	0.845	2,698.231	0.945	2,794.855
0.046	1,926.110	0.146	2,022.747	0.246	2,119.384	0.346	2,216.021	0.446	2,312.658	0.546	2,409.295	0.646	2,505.932	0.746	2,602.569	0.846	2,699.197	0.946	2,795.822
0.047	1,927.076	0.147	2,023.713	0.247	2,120.350	0.347	2,216.987	0.447	2,313.624	0.547	2,410.261	0.647	2,506.899	0.747	2,603.536	0.847	2,700.163	0.947	2,796.788
0.048	1,928.042	0.148	2,024.680	0.248	2,121.317	0.348	2,217.954	0.448	2,314.591	0.548	2,411.228	0.648	2,507.865	0.748	2,604.502	0.848	2,701.130	0.948	2,797.754
0.049	1,929.009	0.149	2,025.646	0.249	2,122.283	0.349	2,218.920	0.449	2,315.557	0.549	2,412.194	0.649	2,508.831	0.749	2,605.468	0.849	2,702.096	0.949	2,798.720
0.050	1,929.975	0.150	2,026.612	0.250	2,123.249	0.350	2,219.886	0.450	2,316.523	0.550	2,413.161	0.650	2,509.798	0.750	2,606.435	0.850	2,703.062	0.950	2,799.687
0.051	1,930.942	0.151	2,027.579	0.251	2,124.216	0.351	2,220.853	0.451	2,317.490	0.551	2,414.127	0.651	2,510.764	0.751	2,607.401	0.851	2,704.028	0.951	2,800.653
0.052	1,931.908	0.152	2,028.545	0.252	2,125.182	0.352	2,221.819	0.452	2,318.456	0.552	2,415.093	0.652	2,511.730	0.752	2,608.367	0.852	2,704.995	0.952	2,801.619
0.053	1,932.874	0.153	2,029.511	0.253	2,126.148	0.353	2,222.786	0.453	2,319.423	0.553	2,416.060	0.653	2,512.697	0.753	2,609.334	0.853	2,705.961	0.953	2,802.585
0.054	1,933.841	0.154	2,030.478	0.254	2,127.115	0.354	2,223.752	0.454	2,320.389	0.554	2,417.026	0.654	2,513.663	0.754	2,610.300	0.854	2,706.927	0.954	2,803.552
0.055	1,934.807	0.155	2,031.444	0.255	2,128.081	0.355	2,224.718	0.455	2,321.355	0.555	2,417.992	0.655	2,514.629	0.755	2,611.267	0.855	2,707.893	0.955	2,804.518
0.056	1,935.773	0.156	2,032.410	0.256	2,129.048	0.356	2,225.685	0.456	2,322.322	0.556	2,418.959	0.656	2,515.596	0.756	2,612.233	0.856	2,708.860	0.956	2,805.484
0.057	1,936.740	0.157	2,033.377	0.257	2,130.014	0.357	2,226.651	0.457	2,323.288	0.557	2,419.925	0.657	2,516.562	0.757	2,613.199	0.857	2,709.826	0.957	2,806.450
0.058	1,937.706	0.158	2,034.343	0.258	2,130.980	0.358	2,227.617	0.458	2,324.254	0.558	2,420.892	0.658	2,517.529	0.758	2,614.166	0.858	2,710.792	0.958	2,807.417
0.059	1,938.673	0.159	2,035.310	0.259	2,131.947	0.359	2,228.584	0.459	2,325.221	0.559	2,421.858	0.659	2,518.495	0.759	2,615.132	0.859	2,711.758	0.959	2,808.383
0.060	1,939.639	0.160	2,036.276	0.260	2,132.913	0.360	2,229.550	0.460	2,326.187	0.560	2,422.824	0.660	2,519.461	0.760	2,616.098	0.860	2,712.725	0.960	2,809.349
0.061	1,940.605	0.161	2,037.242	0.261	2,133.879	0.361	2,230.516	0.461	2,327.154	0.561	2,423.791	0.661	2,520.428	0.761	2,617.065	0.861	2,713.691	0.961	2,810.315
0.062	1,941.572	0.162	2,038.209	0.262	2,134.846	0.362	2,231.483	0.462	2,328.120	0.562	2,424.757	0.662	2,521.394	0.762	2,618.031	0.862	2,714.657	0.962	2,811.282
0.063	1,942.538	0.163	2,039.175	0.263	2,135.812	0.363	2,232.449	0.463	2,329.086	0.563	2,425.723	0.663	2,522.360	0.763	2,618.997	0.863	2,715.623	0.963	2,812.248
0.064	1,943.504	0.164	2,040.141	0.264	2,136.779	0.364	2,233.416	0.464	2,330.053	0.564	2,426.690	0.664	2,523.327	0.764	2,619.964	0.864	2,716.590	0.964	2,813.214
0.065	1,944.471	0.165	2,041.108	0.265	2,137.745	0.365	2,234.382	0.465	2,331.019	0.565	2,427.656	0.665	2,524.293	0.765	2,620.930	0.865	2,717.556	0.965	2,814.180
0.066	1,945.437	0.166	2,042.074	0.266	2,138.711	0.366	2,235.348	0.466	2,331.985	0.566	2,428.622	0.666	2,525.260	0.766	2,621.896	0.866	2,718.522	0.966	2,815.147
0.067	1,946.403	0.167	2,043.041	0.267	2,139.678	0.367	2,236.315	0.467	2,332.952	0.567	2,429.589	0.667	2,526.226	0.767	2,622.863	0.867	2,719.488	0.967	2,816.113
0.068	1,947.370	0.168	2,044.007	0.268	2,140.644	0.368	2,237.281	0.468	2,333.918	0.568	2,430.555	0.668	2,527.192	0.768	2,623.829	0.868	2,720.454	0.968	2,817.079
0.069	1,948.336	0.169	2,044.973	0.269	2,141.610	0.369	2,238.247	0.469	2,334.885	0.569	2,431.522	0.669	2,528.159	0.769	2,624.795	0.869	2,721.421	0.969	2,818.045
0.070	1,949.303	0.170	2,045.940	0.270	2,142.577	0.370	2,239.214	0.470	2,335.851	0.570	2,432.488	0.670	2,529.125	0.770	2,625.761	0.870	2,722.387	0.970	2,819.012
0.071	1,950.269	0.171	2,046.906	0.271	2,143.543	0.371	2,240.180	0.471	2,336.817	0.571	2,433.454	0.671	2,530.091	0.771	2,626.728	0.871	2,723.353	0.971	2,819.978
0.072	1,951.235	0.172	2,047.872	0.272	2,144.509	0.372	2,241.147	0.472	2,337.784	0.572	2,434.421	0.672	2,531.058	0.772	2,627.694	0.872	2,724.319	0.972	2,820.944
0.073	1,952.202	0.173	2,048.839	0.273	2,145.476	0.373	2,242.113	0.473	2,338.750	0.573	2,435.387	0.673	2,532.024	0.773	2,628.660	0.873	2,725.286	0.973	2,821.910
0.074	1,953.168	0.174	2,049.805	0.274	2,146.442	0.374	2,243.079	0.474	2,339.716	0.574	2,436.353	0.674	2,532.991	0.774	2,629.627	0.874	2,726.252	0.974	2,822.877
0.075	1,954.134	0.175	2,050.772	0.275	2,147.409	0.375	2,244.046	0.475	2,340.683	0.575	2,437.320	0.675	2,533.957	0.775	2,630.593	0.875	2,727.218	0.975	2,823.843
0.076	1,955.101	0.176	2,051.738	0.276	2,148.375	0.376	2,245.012	0.476	2,341.649	0.576	2,438.286	0.676	2,534.923	0.776	2,631.559	0.876	2,728.184	0.976	2,824.809
0.077	1,956.067	0.177	2,052.704	0.277	2,149.341	0.377	2,245.978	0.477	2,342.615	0.577	2,439.253	0.677	2,535.890	0.777	2,632.526	0.877	2,729.151	0.977	2,825.775
0.078	1,957.034	0.178	2,053.671	0.278	2,150.308	0.378	2,246.945	0.478	2,343.582	0.578	2,440.219	0.678	2,536.856	0.778	2,633.492	0.878	2,730.117	0.978	2,826.742
0.079	1,958.000	0.179	2,054.637	0.279	2,151.274	0.379	2,247.911	0.479	2,344.548	0.579	2,441.185	0.679	2,537.822	0.779	2,634.458	0.879	2,731.083	0.979	2,827.708
0.080	1,958.966	0.180	2,055.603	0.280	2,152.240	0.380	2,248.878	0.480	2,345.515	0.580	2,442.152	0.680	2,538.789	0.780	2,635.425	0.880	2,732.049	0.980	2,828.674
0.081	1,959.933	0.181	2,056.570	0.281	2,153.207	0.381	2,249.844	0.481	2,346.481	0.581	2,443.118	0.681	2,539.755	0.781	2,636.391	0.881	2,733.016	0.981	2,829.640
0.082	1,960.899	0.182	2,057.536	0.282	2,154.173	0.382	2,250.810	0.482	2,347.447	0.582	2,444.084	0.682	2,540.721	0.782	2,637.357	0.882	2,733.982	0.982	2,830.606
0.083	1,961.865	0.183	2,058.502	0.283	2,155.140	0.383	2,251.777	0.483	2,348.414	0.583	2,445.051	0.683	2,541.688	0.783	2,638.323	0.883	2,734.948	0.983	2,831.573
0.084	1,962.832	0.184	2,059.469	0.284	2,156.106	0.384	2,252.743	0.484	2,349.380	0.584	2,446.017	0.684	2,542.654	0.784	2,639.290	0.884	2,735.914	0.984	2,832.539
0.085	1,963.798	0.185	2,060.435	0.285	2,157.072	0.385	2,253.709	0.485	2,350.346	0.585	2,446.984	0.685	2,543.621	0.785	2,640.256	0.885	2,736.881	0.985	2,833.505
0.086	1,964.765	0.186	2,061.402	0.286	2,158.039	0.386	2,254.676	0.486	2,351.313	0.586	2,447.950	0.686	2,544.587	0.786	2,641.222	0.886	2,737.847	0.986	2,834.471
0.087	1,965.731	0.187	2,062.368	0.287	2,159.005	0.387	2,255.642	0.487	2,352.279	0.587	2,448.916	0.687	2,545.553	0.787	2,642.189	0.887	2,738.813	0.987	2,835.438
0.088	1,966.697	0.188	2,063.334	0.288	2,159.971	0.388	2,256.608	0.488	2,353.246	0.588	2,449.883	0.688	2,546.520	0.788	2,643.155	0.888	2,739.779	0.988	2,836.404
0.089	1,967.664	0.189	2,064.301	0.289	2,160.938	0.389	2,257.575	0.489	2,354.212	0.589	2,450.849	0.689	2,547.486	0.789	2,644.121	0.889	2,740.746	0.989	2,837.370
0.090	1,968.630	0.190	2,065.267	0.290	2,161.904	0.390	2,258.541	0.490	2,355.178	0.590	2,451.815	0.690	2,548.452	0.790	2,645.087	0.890	2,741.712	0.990	2,838.336
0.091	1,969.596	0.191	2,066.233	0.291	2,162.871	0.391	2,259.508	0.491	2,356.145	0.591	2,452.782	0.691	2,549.419	0.791	2,646.054	0.891	2,742.678	0.991	2,839.303
0.092	1,970.563	0.192	2,067.200	0.292	2,163.837	0.392	2,260.474	0.492	2,357.111	0.592	2,453.748	0.692	2,550.385	0.792	2,647.020	0.892	2,743.644	0.992	2,840.269
0.093	1,971.529	0.193	2,068.166	0.293	2,164.803	0.393	2,261.440	0.493	2,358.077	0.593	2,454.714	0.693	2,551.352	0.793	2,647.986	0.893	2,744.611	0.993	2,841.235
0.094	1,972.495	0.194	2,069.133	0.294	2,165.770	0.394	2,262.407	0.494	2,359.044	0.594	2,455.681	0.694	2,552.318	0.794	2,648.952	0.894	2,745.577	0.994	2,842.201
0.095	1,973.462	0.195	2,070.099	0.295	2,166.736	0.395	2,263.373	0.495	2,360.010	0.595	2,456.647	0.695	2,553.284	0.795	2,649.919	0.895	2,746.543	0.995	2,843.168
0.096	1,974.428	0.196	2,071.065	0.296	2,167.702	0.396	2,264.339	0.496	2,360.977	0.596	2,457.614	0.696	2,554.251	0.796	2,650.885	0.896	2,747.509	0.996	2,844.134
0.097	1,975.395	0.197	2,072.032	0.297	2,168.669	0.397	2,265.306	0.497	2,361.943	0.597	2,458.580	0.697	2,555.217	0.797	2,651.851	0.897	2,748.476	0.997	2,845.100
0.098	1,976.361	0.198	2,072.998	0.298	2,169.635	0.398	2,266.272	0.498	2,362.909	0.598	2,459.546	0.698	2,556.183	0.798	2,652.817	0.898	2,749.442	0.998	2,846.066
0.099	1,977.327	0.199	2,073.964	0.299	2,170.601	0.399	2,267.239	0.499	2,363.876	0.599	2,460.513	0.699	2,557.150	0.799	2,653.784	0.899	2,750.408	0.999	2,847.033

NOTE: 42.0 GALLONS EQUAL 1.0 BARRELS
NOTE: 1 KILOLITER EQUALS 1 CUBIC METER

DATE STRAPPED: 09/19/17 BY: RJ
DATE COMPUTED: 09/26/17 BY: WLH
DATE ISSUED: 09/26/17

AMSPEC

Meliadine

Rankin Inlet

Item 20 - Final - Data Sheet (Innage)

Tank No. 2

INNAGE TABLE

Calibration@AmSpecGroup.com

CAPACITIES GIVEN IN CUBIC METERS

GAUGE HEIGHT: 14.269 M

mm	3 M	mm	3 M	mm	3 M	mm	3 M	mm	3 M	mm	3 M	mm	3 M	mm	3 M	mm	3 M	mm	3 M
0.000	2,847.999	0.100	2,944.623	0.200	3,041.248	0.300	3,137.873	0.400	3,234.497	0.500	3,331.122	0.600	3,427.746	0.700	3,524.371	0.800	3,620.995	0.900	3,717.620
0.001	2,848.965	0.101	2,945.590	0.201	3,042.214	0.301	3,138.839	0.401	3,235.463	0.501	3,332.088	0.601	3,428.713	0.701	3,525.337	0.801	3,621.962	0.901	3,718.586
0.002	2,849.931	0.102	2,946.556	0.202	3,043.181	0.302	3,139.805	0.402	3,236.430	0.502	3,333.054	0.602	3,429.679	0.702	3,526.303	0.802	3,622.928	0.902	3,719.552
0.003	2,850.898	0.103	2,947.522	0.203	3,044.147	0.303	3,140.771	0.403	3,237.396	0.503	3,334.020	0.603	3,430.645	0.703	3,527.270	0.803	3,623.894	0.903	3,720.519
0.004	2,851.864	0.104	2,948.488	0.204	3,045.113	0.304	3,141.738	0.404	3,238.362	0.504	3,334.987	0.604	3,431.611	0.704	3,528.236	0.804	3,624.860	0.904	3,721.485
0.005	2,852.830	0.105	2,949.455	0.205	3,046.079	0.305	3,142.704	0.405	3,239.328	0.505	3,335.953	0.605	3,432.577	0.705	3,529.202	0.805	3,625.827	0.905	3,722.451
0.006	2,853.796	0.106	2,950.421	0.206	3,047.046	0.306	3,143.670	0.406	3,240.295	0.506	3,336.919	0.606	3,433.544	0.706	3,530.168	0.806	3,626.793	0.906	3,723.417
0.007	2,854.763	0.107	2,951.387	0.207	3,048.012	0.307	3,144.636	0.407	3,241.261	0.507	3,337.885	0.607	3,434.510	0.707	3,531.135	0.807	3,627.759	0.907	3,724.384
0.008	2,855.729	0.108	2,952.353	0.208	3,048.978	0.308	3,145.603	0.408	3,242.227	0.508	3,338.852	0.608	3,435.476	0.708	3,532.101	0.808	3,628.725	0.908	3,725.350
0.009	2,856.695	0.109	2,953.320	0.209	3,049.944	0.309	3,146.569	0.409	3,243.193	0.509	3,339.818	0.609	3,436.442	0.709	3,533.067	0.809	3,629.692	0.909	3,726.316
0.010	2,857.661	0.110	2,954.286	0.210	3,050.910	0.310	3,147.535	0.410	3,244.160	0.510	3,340.784	0.610	3,437.409	0.710	3,534.033	0.810	3,630.658	0.910	3,727.282
0.011	2,858.628	0.111	2,955.252	0.211	3,051.877	0.311	3,148.501	0.411	3,245.126	0.511	3,341.750	0.611	3,438.375	0.711	3,535.000	0.811	3,631.624	0.911	3,728.249
0.012	2,859.594	0.112	2,956.218	0.212	3,052.843	0.312	3,149.468	0.412	3,246.092	0.512	3,342.717	0.612	3,439.341	0.712	3,535.966	0.812	3,632.590	0.912	3,729.215
0.013	2,860.560	0.113	2,957.185	0.213	3,053.809	0.313	3,150.434	0.413	3,247.058	0.513	3,343.683	0.613	3,440.307	0.713	3,536.932	0.813	3,633.557	0.913	3,730.181
0.014	2,861.526	0.114	2,958.151	0.214	3,054.775	0.314	3,151.400	0.414	3,248.025	0.514	3,344.649	0.614	3,441.274	0.714	3,537.898	0.814	3,634.523	0.914	3,731.147
0.015	2,862.493	0.115	2,959.117	0.215	3,055.742	0.315	3,152.366	0.415	3,248.991	0.515	3,345.615	0.615	3,442.240	0.715	3,538.865	0.815	3,635.489	0.915	3,732.114
0.016	2,863.459	0.116	2,960.083	0.216	3,056.708	0.316	3,153.333	0.416	3,249.957	0.516	3,346.582	0.616	3,443.206	0.716	3,539.831	0.816	3,636.455	0.916	3,733.080
0.017	2,864.425	0.117	2,961.050	0.217	3,057.674	0.317	3,154.299	0.417	3,250.923	0.517	3,347.548	0.617	3,444.172	0.717	3,540.797	0.817	3,637.422	0.917	3,734.046
0.018	2,865.391	0.118	2,962.016	0.218	3,058.640	0.318	3,155.265	0.418	3,251.890	0.518	3,348.514	0.618	3,445.139	0.718	3,541.763	0.818	3,638.388	0.918	3,735.012
0.019	2,866.358	0.119	2,962.982	0.219	3,059.607	0.319	3,156.231	0.419	3,252.856	0.519	3,349.480	0.619	3,446.105	0.719	3,542.729	0.819	3,639.354	0.919	3,735.979
0.020	2,867.324	0.120	2,963.948	0.220	3,060.573	0.320	3,157.197	0.420	3,253.822	0.520	3,350.447	0.620	3,447.071	0.720	3,543.696	0.820	3,640.320	0.920	3,736.945
0.021	2,868.290	0.121	2,964.915	0.221	3,061.539	0.321	3,158.164	0.421	3,254.788	0.521	3,351.413	0.621	3,448.037	0.721	3,544.662	0.821	3,641.287	0.921	3,737.911
0.022	2,869.256	0.122	2,965.881	0.222	3,062.505	0.322	3,159.130	0.422	3,255.755	0.522	3,352.379	0.622	3,449.004	0.722	3,545.628	0.822	3,642.253	0.922	3,738.877
0.023	2,870.223	0.123	2,966.847	0.223	3,063.472	0.323	3,160.096	0.423	3,256.721	0.523	3,353.345	0.623	3,449.970	0.723	3,546.594	0.823	3,643.219	0.923	3,739.844
0.024	2,871.189	0.124	2,967.813	0.224	3,064.438	0.324	3,161.062	0.424	3,257.687	0.524	3,354.312	0.624	3,450.936	0.724	3,547.561	0.824	3,644.185	0.924	3,740.810
0.025	2,872.155	0.125	2,968.780	0.225	3,065.404	0.325	3,162.029	0.425	3,258.653	0.525	3,355.278	0.625	3,451.902	0.725	3,548.527	0.825	3,645.152	0.925	3,741.776
0.026	2,873.121	0.126	2,969.746	0.226	3,066.370	0.326	3,162.995	0.426	3,259.620	0.526	3,356.244	0.626	3,452.869	0.726	3,549.493	0.826	3,646.118	0.926	3,742.742
0.027	2,874.088	0.127	2,970.712	0.227	3,067.337	0.327	3,163.961	0.427	3,260.586	0.527	3,357.210	0.627	3,453.835	0.727	3,550.459	0.827	3,647.084	0.927	3,743.709
0.028	2,875.054	0.128	2,971.678	0.228	3,068.303	0.328	3,164.927	0.428	3,261.552	0.528	3,358.177	0.628	3,454.801	0.728	3,551.426	0.828	3,648.050	0.928	3,744.675
0.029	2,876.020	0.129	2,972.645	0.229	3,069.269	0.329	3,165.894	0.429	3,262.518	0.529	3,359.143	0.629	3,455.767	0.729	3,552.392	0.829	3,649.016	0.929	3,745.641
0.030	2,876.986	0.130	2,973.611	0.230	3,070.235	0.330	3,166.860	0.430	3,263.485	0.530	3,360.109	0.630	3,456.734	0.730	3,553.358	0.830	3,649.983	0.930	3,746.607
0.031	2,877.953	0.131	2,974.577	0.231	3,071.202	0.331	3,167.826	0.431	3,264.451	0.531	3,361.075	0.631	3,457.700	0.731	3,554.324	0.831	3,650.949	0.931	3,747.574
0.032	2,878.919	0.132	2,975.543	0.232	3,072.168	0.332	3,168.792	0.432	3,265.417	0.532	3,362.042	0.632	3,458.666	0.732	3,555.291	0.832	3,651.915	0.932	3,748.540
0.033	2,879.885	0.133	2,976.510	0.233	3,073.134	0.333	3,169.759	0.433	3,266.383	0.533	3,363.008	0.633	3,459.632	0.733	3,556.257	0.833	3,652.881	0.933	3,749.506
0.034	2,880.851	0.134	2,977.476	0.234	3,074.100	0.334	3,170.725	0.434	3,267.349	0.534	3,363.974	0.634	3,460.599	0.734	3,557.223	0.834	3,653.848	0.934	3,750.472
0.035	2,881.818	0.135	2,978.442	0.235	3,075.067	0.335	3,171.691	0.435	3,268.316	0.535	3,364.940	0.635	3,461.565	0.735	3,558.189	0.835	3,654.814	0.935	3,751.439
0.036	2,882.784	0.136	2,979.408	0.236	3,076.033	0.336	3,172.657	0.436	3,269.282	0.536	3,365.907	0.636	3,462.531	0.736	3,559.156	0.836	3,655.780	0.936	3,752.405
0.037	2,883.750	0.137	2,980.375	0.237	3,076.999	0.337	3,173.624	0.437	3,270.248	0.537	3,366.873	0.637	3,463.497	0.737	3,560.122	0.837	3,656.746	0.937	3,753.371
0.038	2,884.716	0.138	2,981.341	0.238	3,077.965	0.338	3,174.590	0.438	3,271.214	0.538	3,367.839	0.638	3,464.464	0.738	3,561.088	0.838	3,657.713	0.938	3,754.337
0.039	2,885.682	0.139	2,982.307	0.239	3,078.932	0.339	3,175.556	0.439	3,272.181	0.539	3,368.805	0.639	3,465.430	0.739	3,562.054	0.839	3,658.679	0.939	3,755.304
0.040	2,886.649	0.140	2,983.273	0.240	3,079.898	0.340	3,176.522	0.440	3,273.147	0.540	3,369.772	0.640	3,466.396	0.740	3,563.021	0.840	3,659.645	0.940	3,756.270
0.041	2,887.615	0.141	2,984.240	0.241	3,080.864	0.341	3,177.489	0.441	3,274.113	0.541	3,370.738	0.641	3,467.362	0.741	3,563.987	0.841	3,660.611	0.941	3,757.236
0.042	2,888.581	0.142	2,985.206	0.242	3,081.830	0.342	3,178.455	0.442	3,275.079	0.542	3,371.704	0.642	3,468.329	0.742	3,564.953	0.842	3,661.578	0.942	3,758.202
0.043	2,889.547	0.143	2,986.172	0.243	3,082.797	0.343	3,179.421	0.443	3,276.046	0.543	3,372.670	0.643	3,469.295	0.743	3,565.919	0.843	3,662.544	0.943	3,759.168
0.044	2,890.514	0.144	2,987.138	0.244	3,083.763	0.344	3,180.387	0.444	3,277.012	0.544	3,373.637	0.644	3,470.261	0.744	3,566.886	0.844	3,663.510	0.944	3,760.135
0.045	2,891.480	0.145	2,988.105	0.245	3,084.729	0.345	3,181.354	0.445	3,277.978	0.545	3,374.603	0.645	3,471.227	0.745	3,567.852	0.845	3,664.476	0.945	3,761.101
0.046	2,892.446	0.146	2,989.071	0.246	3,085.695	0.346	3,182.320	0.446	3,278.944	0.546	3,375.569	0.646	3,472.194	0.746	3,568.818	0.846	3,665.443	0.946	3,762.067
0.047	2,893.412	0.147	2,990.037	0.247	3,086.662	0.347	3,183.286	0.447	3,279.911	0.547	3,376.535	0.647	3,473.160	0.747	3,569.784	0.847	3,666.409	0.947	3,763.033
0.048	2,894.379	0.148	2,991.003	0.248	3,087.628	0.348	3,184.252	0.448	3,280.877	0.548	3,377.501	0.648	3,474.126	0.748	3,570.751	0.848	3,667.375	0.948	3,764.000
0.049	2,895.345	0.149	2,991.970	0.249	3,088.594	0.349	3,185.219	0.449	3,281.843	0.549	3,378.468	0.649	3,475.092	0.749	3,571.717	0.849	3,668.341	0.949	3,764.966
0.050	2,896.311	0.150	2,992.936	0.250	3,089.560	0.350	3,186.185	0.450	3,282.809	0.550	3,379.434	0.650	3,476.059	0.750	3,572.683	0.850	3,669.308	0.950	3,765.932
0.051	2,897.277	0.151	2,993.902	0.251	3,090.527	0.351	3,187.151	0.451	3,283.776	0.551	3,380.400	0.651	3,477.025	0.751	3,573.649	0.851	3,670.274	0.951	3,766.898
0.052	2,898.244	0.152	2,994.868	0.252	3,091.493	0.352	3,188.117	0.452	3,284.742	0.552	3,381.366	0.652	3,477.991	0.752	3,574.616	0.852	3,671.240	0.952	3,767.865
0.053	2,899.210	0.153	2,995.834	0.253	3,092.459	0.353	3,189.084	0.453	3,285.708	0.553	3,382.333	0.653	3,478.957	0.753	3,575.582	0.853	3,672.206	0.953	3,768.831
0.054	2,900.176	0.154	2,996.801	0.254	3,093.425	0.354	3,190.050	0.454	3,286.674	0.554	3,383.299	0.654	3,479.924	0.754	3,576.548	0.854	3,673.173	0.954	3,769.797
0.055	2,901.142	0.155	2,997.767	0.255	3,094.392	0.355	3,191.016	0.455	3,287.641	0.555	3,384.265	0.655	3,480.890	0.755	3,577.514	0.855	3,674.139	0.955	3,770.763
0.056	2,902.109	0.156	2,998.733	0.256	3,095.358	0.356	3,191.982	0.456	3,288.607	0.556	3,385.231	0.656	3,481.856	0.756	3,578.481	0.856	3,675.105	0.956	3,771.730
0.057	2,903.075	0.157	2,999.699	0.257	3,096.324	0.357	3,192.949	0.457	3,289.573	0.557	3,386.198	0.657	3,482.822	0.757	3,579.447	0.857	3,676.071	0.957	3,772.696
0.058	2,904.041	0.158	3,000.666	0.258	3,097.290	0.358	3,193.915	0.458	3,290.539	0.558	3,387.164	0.658	3,483.789	0.758	3,580.413	0.858	3,677.038	0.958	3,773.662
0.059	2,905.007	0.159	3,001.632	0.259	3,098.257	0.359	3,194.881	0.459	3,291.506	0.559	3,388.130	0.659	3,484.755	0.759	3,581.379	0.859	3,678.004	0.959	3,774.628
0.060	2,905.974	0.160	3,002.598	0.260	3,099.223	0.360	3,195.847	0.460	3,292.472	0.560	3,389.096	0.660	3,485.721	0.760	3,582.346	0.860	3,678.970	0.960	3,775.595
0.061	2,906.940	0.161	3,003.564	0.261	3,100.189	0.361	3,196.814	0.461	3,293.438	0.561	3,390.063	0.661	3,486.687	0.761	3,583.312	0.861	3,679.936	0.961	3,776.561
0.062	2,907.906	0.162	3,004.531	0.262	3,101.155	0.362	3,197.780	0.462	3,294.404	0.562	3,391.029	0.662	3,487.653	0.762	3,584.278	0.862	3,680.903	0.962	3,777.527
0.063	2,908.872	0.163	3,005.497	0.263	3,102.122	0.363	3,198.746	0.463	3,295.371	0.563	3,391.995	0.663	3,488.620	0.763	3,585.244	0.863	3,681.869	0.963	3,778.493
0.064	2,909.839	0.164	3,006.463	0.264	3,103.088	0.364	3,199.712	0.464	3,296.337	0.564	3,392.961	0.664	3,489.586	0.764	3,586.211	0.864	3,682.835	0.964	3,779.460
0.065	2,910.805	0.165	3,007.429	0.265	3,104.054	0.365	3,200.679	0.465	3,297.303	0.565	3,393.928	0.665	3,490.552	0.765	3,587.177	0.865	3,683.801	0.965	3,780.426
0.066	2,911.771	0.166	3,008.396	0.266	3,105.020	0.366	3,201.645	0.466	3,298.269	0.566	3,394.894	0.666	3,491.518	0.766	3,588.143	0.866	3,684.768	0.966	3,781.392
0.067	2,912.737	0.167	3,009.362	0.267	3,105.986	0.367	3,202.611	0.467	3,299.236	0.567	3,395.860	0.667	3,492.485	0.767	3,589.109	0.867	3,685.734	0.967	3,782.358
0.068	2,913.704	0.168	3,010.328	0.268	3,106.953	0.368	3,203.577	0.468	3,300.202	0.568	3,396.826	0.668	3,493.451	0.768	3,590.076	0.868	3,686.700	0.968	3,783.325
0.069	2,914.670	0.169	3,011.294	0.269	3,107.919	0.369	3,204.544	0.469	3,301.168	0.569	3,397.793	0.669	3,494.417	0.769	3,591.042	0.869	3,687.666	0.969	3,784.291
0.070	2,915.636	0.170	3,012.261	0.270	3,108.885	0.370	3,205.510	0.470	3,302.134	0.570	3,398.759	0.670	3,495.383	0.770	3,592.008	0.870	3,688.633	0.970	3,785.257
0.071	2,916.602	0.171	3,013.227	0.271	3,109.851	0.371	3,206.476	0.471	3,303.101	0.571	3,399.725	0.671	3,496.350	0.771	3,592.974	0.871	3,689.599	0.971	3,786.223
0.072	2,917.569	0.172	3,014.193	0.272	3,110.818	0.372	3,207.442	0.472	3,304.067	0.572	3,400.691	0.672	3,497.316	0.772	3,593.940	0.872	3,690.565	0.972	3,787.190
0.073	2,918.535	0.173	3,015.159	0.273	3,111.784	0.373	3,208.409	0.473	3,305.033	0.573	3,401.658	0.673	3,498.282	0.773	3,594.907	0.873	3,691.531	0.973	3,788.156
0.074	2,919.501	0.174	3,016.126	0.274	3,112.750	0.374	3,209.375	0.474	3,305.999	0.574	3,402.624	0.674	3,499.248	0.774	3,595.873	0.874	3,692.498	0.974	3,789.122
0.075	2,920.467	0.175	3,017.092	0.275	3,113.716	0.375	3,210.341	0.475	3,306.966	0.575	3,403.590	0.675	3,500.215	0.775	3,596.839	0.875	3,693.464	0.975	3,790.088
0.076	2,921.434	0.176	3,018.058	0.276	3,114.683	0.376	3,211.307	0.476	3,307.932	0.576	3,404.556	0.676	3,501.181	0.776	3,597.805	0.876	3,694.430	0.976	3,791.055
0.077	2,922.400	0.177	3,019.024	0.277	3,115.649	0.377	3,212.273	0.477	3,308.898	0.577	3,405.523	0.677	3,502.147	0.777	3,598.772	0.877	3,695.396	0.977	3,792.021
0.078	2,923.366	0.178	3,019.991	0.278	3,116.615	0.378	3,213.240	0.478	3,309.864	0.578	3,406.489	0.678	3,503.113	0.778	3,599.738	0.878	3,696.363	0.978	3,792.987
0.079	2,924.332	0.179	3,020.957	0.279	3,117.581	0.379	3,214.206	0.479	3,310.831	0.579	3,407.455	0.679	3,504.080	0.779	3,600.704	0.879	3,697.329	0.979	3,793.953
0.080	2,925.299	0.180	3,021.923	0.280	3,118.548	0.380	3,215.172	0.480	3,311.797	0.580	3,408.421	0.680	3,505.046	0.780	3,601.670	0.880	3,698.295	0.980	3,794.920
0.081	2,926.265	0.181	3,022.889	0.281	3,119.514	0.381	3,216.138	0.481	3,312.763	0.581	3,409.388	0.681	3,506.012	0.781	3,602.637	0.881	3,699.261	0.981	3,795.886
0.082	2,927.231	0.182	3,023.856	0.282	3,120.480	0.382	3,217.105	0.482	3,313.729	0.582	3,410.354	0.682	3,506.978	0.782	3,603.603	0.882	3,700.228	0.982	3,796.852
0.083	2,928.197	0.183	3,024.822	0.283	3,121.446	0.383	3,218.071	0.483	3,314.696	0.583	3,411.320	0.683	3,507.945	0.783	3,604.569	0.883	3,701.194	0.983	3,797.818
0.084	2,929.164	0.184	3,025.788	0.284	3,122.413	0.384	3,219.037	0.484	3,315.662	0.584	3,412.286	0.684	3,508.911	0.784	3,605.535	0.884	3,702.160	0.984	3,798.785
0.085	2,930.130	0.185	3,026.754	0.285	3,123.379	0.385	3,220.003	0.485	3,316.628	0.585	3,413.253	0.685	3,509.877	0.785	3,606.502	0.885	3,703.126	0.985	3,799.751
0.086	2,931.096	0.186	3,027.721	0.286	3,124.345	0.386	3,220.970	0.486	3,317.594	0.586	3,414.219	0.686	3,510.843	0.786	3,607.468	0.886	3,704.092	0.986	3,800.717
0.087	2,932.062	0.187	3,028.687	0.287	3,125.311	0.387	3,221.936	0.487	3,318.561	0.587	3,415.185	0.687	3,511.810	0.787	3,608.434	0.887	3,705.059	0.987	3,801.683
0.088	2,933.029	0.188	3,029.653	0.288	3,126.278	0.388	3,222.902	0.488	3,319.527	0.588	3,416.151	0.688	3,512.776	0.788	3,609.400	0.888	3,706.025	0.988	3,802.650
0.089	2,933.995	0.189	3,030.619	0.289	3,127.244	0.389	3,223.868	0.489	3,320.493	0.589	3,417.118	0.689	3,513.742	0.789	3,610.367	0.889	3,706.991	0.989	3,803.616
0.090	2,934.961	0.190	3,031.586	0.290	3,128.210	0.390	3,224.835	0.490	3,321.459	0.590	3,418.084	0.690	3,514.708	0.790	3,611.333	0.890	3,707.957	0.990	3,804.582
0.091	2,935.927	0.191	3,032.552	0.291	3,129.176	0.391	3,225.801	0.491	3,322.425	0.591	3,419.050	0.691	3,515.675	0.791	3,612.299	0.891	3,708.924	0.991	3,805.548
0.092	2,936.894	0.192	3,033.518	0.292	3,130.143	0.392	3,226.767	0.492	3,323.392	0.592	3,420.016	0.692	3,516.641	0.792	3,613.265	0.892	3,709.890	0.992	3,806.515
0.093	2,937.860	0.193	3,034.484	0.293	3,131.109	0.393	3,227.733	0.493	3,324.358	0.593	3,420.983	0.693	3,517.607	0.793	3,614.232	0.893	3,710.856	0.993	3,807.481
0.094	2,938.826	0.194	3,035.451	0.294	3,132.075	0.394	3,228.700	0.494	3,325.324	0.594	3,421.949	0.694	3,518.573	0.794	3,615.198	0.894	3,711.822	0.994	3,808.447
0.095	2,939.792	0.195	3,036.417	0.295	3,133.041	0.395	3,229.666	0.495	3,326.290	0.595	3,422.915	0.695	3,519.540	0.795	3,616.164	0.895	3,712.789	0.995	3,809.413
0.096	2,940.758	0.196	3,037.383	0.296	3,134.008	0.396	3,230.632	0.496	3,327.257	0.596	3,423.881	0.696	3,520.506	0.796	3,617.130	0.896	3,713.755	0.996	3,810.380
0.097	2,941.725	0.197	3,038.349	0.297	3,134.974	0.397	3,231.598	0.497	3,328.223	0.597	3,424.848	0.697	3,521.472	0.797	3,618.097	0.897	3,714.721	0.997	3,811.346
0.098	2,942.691	0.198	3,039.316	0.298	3,135.940	0.398	3,232.565	0.498	3,329.189	0.598	3,425.814	0.698	3,522.438	0.798	3,619.063	0.898	3,715.687	0.998	3,812.312
0.099	2,943.657	0.199	3,040.282	0.299	3,136.906	0.399	3,233.531	0.499	3,330.155	0.599	3,426.780	0.699	3,523.405	0.799	3,620.029	0.899	3,716.654	0.999	3,813.278

DATE STRAPPED: 09/19/17 BY: RJ
DATE COMPUTED: 09/26/17 BY: WLH
DATE ISSUED: 09/26/17

AMSPEC

Meliadine

Rankin Inlet

Item 20 - Final - Data Sheet (Innage)

Tank No. 2

INNAGE TABLE

Calibration@AmSpecGroup.com

CAPACITIES GIVEN IN CUBIC METERS

GAUGE HEIGHT: 14.269 M

mm	4 M	mm	4 M	mm	4 M	mm	4 M	mm	4 M	mm	4 M	mm	4 M	mm	4 M	mm	4 M	mm	4 M
0.000	3,814.244	0.100	3,910.869	0.200	4,007.494	0.300	4,104.118	0.400	4,200.743	0.500	4,297.367	0.600	4,393.992	0.700	4,490.616	0.800	4,587.241	0.900	4,683.866
0.001	3,815.211	0.101	3,911.835	0.201	4,008.460	0.301	4,105.084	0.401	4,201.709	0.501	4,298.334	0.601	4,394.958	0.701	4,491.583	0.801	4,588.207	0.901	4,684.832
0.002	3,816.177	0.102	3,912.802	0.202	4,009.426	0.302	4,106.051	0.402	4,202.675	0.502	4,299.300	0.602	4,395.924	0.702	4,492.549	0.802	4,589.173	0.902	4,685.798
0.003	3,817.143	0.103	3,913.768	0.203	4,010.392	0.303	4,107.017	0.403	4,203.641	0.503	4,300.266	0.603	4,396.891	0.703	4,493.515	0.803	4,590.140	0.903	4,686.764
0.004	3,818.109	0.104	3,914.734	0.204	4,011.359	0.304	4,107.983	0.404	4,204.608	0.504	4,301.232	0.604	4,397.857	0.704	4,494.481	0.804	4,591.106	0.904	4,687.730
0.005	3,819.076	0.105	3,915.700	0.205	4,012.325	0.305	4,108.949	0.405	4,205.574	0.505	4,302.199	0.605	4,398.823	0.705	4,495.448	0.805	4,592.072	0.905	4,688.697
0.006	3,820.042	0.106	3,916.667	0.206	4,013.291	0.306	4,109.916	0.406	4,206.540	0.506	4,303.165	0.606	4,399.789	0.706	4,496.414	0.806	4,593.038	0.906	4,689.663
0.007	3,821.008	0.107	3,917.633	0.207	4,014.257	0.307	4,110.882	0.407	4,207.506	0.507	4,304.131	0.607	4,400.756	0.707	4,497.380	0.807	4,594.005	0.907	4,690.629
0.008	3,821.974	0.108	3,918.599	0.208	4,015.224	0.308	4,111.848	0.408	4,208.473	0.508	4,305.097	0.608	4,401.722	0.708	4,498.346	0.808	4,594.971	0.908	4,691.595
0.009	3,822.941	0.109	3,919.565	0.209	4,016.190	0.309	4,112.814	0.409	4,209.439	0.509	4,306.063	0.609	4,402.688	0.709	4,499.313	0.809	4,595.937	0.909	4,692.562
0.010	3,823.907	0.110	3,920.532	0.210	4,017.156	0.310	4,113.781	0.410	4,210.405	0.510	4,307.030	0.610	4,403.654	0.710	4,500.279	0.810	4,596.903	0.910	4,693.528
0.011	3,824.873	0.111	3,921.498	0.211	4,018.122	0.311	4,114.747	0.411	4,211.371	0.511	4,307.996	0.611	4,404.621	0.711	4,501.245	0.811	4,597.870	0.911	4,694.494
0.012	3,825.839	0.112	3,922.464	0.212	4,019.089	0.312	4,115.713	0.412	4,212.338	0.512	4,308.962	0.612	4,405.587	0.712	4,502.211	0.812	4,598.836	0.912	4,695.460
0.013	3,826.806	0.113	3,923.430	0.213	4,020.055	0.313	4,116.679	0.413	4,213.304	0.513	4,309.928	0.613	4,406.553	0.713	4,503.178	0.813	4,599.802	0.913	4,696.427
0.014	3,827.772	0.114	3,924.396	0.214	4,021.021	0.314	4,117.646	0.414	4,214.270	0.514	4,310.895	0.614	4,407.519	0.714	4,504.144	0.814	4,600.768	0.914	4,697.393
0.015	3,828.738	0.115	3,925.363	0.215	4,021.987	0.315	4,118.612	0.415	4,215.236	0.515	4,311.861	0.615	4,408.486	0.715	4,505.110	0.815	4,601.735	0.915	4,698.359
0.016	3,829.704	0.116	3,926.329	0.216	4,022.954	0.316	4,119.578	0.416	4,216.203	0.516	4,312.827	0.616	4,409.452	0.716	4,506.076	0.816	4,602.701	0.916	4,699.325
0.017	3,830.671	0.117	3,927.295	0.217	4,023.920	0.317	4,120.544	0.417	4,217.169	0.517	4,313.793	0.617	4,410.418	0.717	4,507.043	0.817	4,603.667	0.917	4,700.292
0.018	3,831.637	0.118	3,928.261	0.218	4,024.886	0.318	4,121.511	0.418	4,218.135	0.518	4,314.760	0.618	4,411.384	0.718	4,508.009	0.818	4,604.633	0.918	4,701.258
0.019	3,832.603	0.119	3,929.228	0.219	4,025.852	0.319	4,122.477	0.419	4,219.101	0.519	4,315.726	0.619	4,412.351	0.719	4,508.975	0.819	4,605.600	0.919	4,702.224
0.020	3,833.569	0.120	3,930.194	0.220	4,026.819	0.320	4,123.443	0.420	4,220.068	0.520	4,316.692	0.620	4,413.317	0.720	4,509.941	0.820	4,606.566	0.920	4,703.190
0.021	3,834.536	0.121	3,931.160	0.221	4,027.785	0.321	4,124.409	0.421	4,221.034	0.521	4,317.658	0.621	4,414.283	0.721	4,510.908	0.821	4,607.532	0.921	4,704.157
0.022	3,835.502	0.122	3,932.126	0.222	4,028.751	0.322	4,125.376	0.422	4,222.000	0.522	4,318.625	0.622	4,415.249	0.722	4,511.874	0.822	4,608.498	0.922	4,705.123
0.023	3,836.468	0.123	3,933.093	0.223	4,029.717	0.323	4,126.342	0.423	4,222.966	0.523	4,319.591	0.623	4,416.215	0.723	4,512.840	0.823	4,609.465	0.923	4,706.089
0.024	3,837.434	0.124	3,934.059	0.224	4,030.683	0.324	4,127.308	0.424	4,223.933	0.524	4,320.557	0.624	4,417.182	0.724	4,513.806	0.824	4,610.431	0.924	4,707.055
0.025	3,838.401	0.125	3,935.025	0.225	4,031.650	0.325	4,128.274	0.425	4,224.899	0.525	4,321.523	0.625	4,418.148	0.725	4,514.773	0.825	4,611.397	0.925	4,708.022
0.026	3,839.367	0.126	3,935.991	0.226	4,032.616	0.326	4,129.241	0.426	4,225.865	0.526	4,322.490	0.626	4,419.114	0.726	4,515.739	0.826	4,612.363	0.926	4,708.988
0.027	3,840.333	0.127	3,936.958	0.227	4,033.582	0.327	4,130.207	0.427	4,226.831	0.527	4,323.456	0.627	4,420.080	0.727	4,516.705	0.827	4,613.330	0.927	4,709.954
0.028	3,841.299	0.128	3,937.924	0.228	4,034.548	0.328	4,131.173	0.428	4,227.798	0.528	4,324.422	0.628	4,421.047	0.728	4,517.671	0.828	4,614.296	0.928	4,710.920
0.029	3,842.266	0.129	3,938.890	0.229	4,035.515	0.329	4,132.139	0.429	4,228.764	0.529	4,325.388	0.629	4,422.013	0.729	4,518.638	0.829	4,615.262	0.929	4,711.887
0.030	3,843.232	0.130	3,939.856	0.230	4,036.481	0.330	4,133.106	0.430	4,229.730	0.530	4,326.355	0.630	4,422.979	0.730	4,519.604	0.830	4,616.228	0.930	4,712.853
0.031	3,844.198	0.131	3,940.823	0.231	4,037.447	0.331	4,134.072	0.431	4,230.696	0.531	4,327.321	0.631	4,423.945	0.731	4,520.570	0.831	4,617.195	0.931	4,713.819
0.032	3,845.164	0.132	3,941.789	0.232	4,038.413	0.332	4,135.038	0.432	4,231.663	0.532	4,328.287	0.632	4,424.912	0.732	4,521.536	0.832	4,618.161	0.932	4,714.785
0.033	3,846.131	0.133	3,942.755	0.233	4,039.380	0.333	4,136.004	0.433	4,232.629	0.533	4,329.253	0.633	4,425.878	0.733	4,522.502	0.833	4,619.127	0.933	4,715.752
0.034	3,847.097	0.134	3,943.721	0.234	4,040.346	0.334	4,136.971	0.434	4,233.595	0.534	4,330.220	0.634	4,426.844	0.734	4,523.469	0.834	4,620.093	0.934	4,716.718
0.035	3,848.063	0.135	3,944.688	0.235	4,041.312	0.335	4,137.937	0.435	4,234.561	0.535	4,331.186	0.635	4,427.810	0.735	4,524.435	0.835	4,621.060	0.935	4,717.684
0.036	3,849.029	0.136	3,945.654	0.236	4,042.278	0.336	4,138.903	0.436	4,235.528	0.536	4,332.152	0.636	4,428.777	0.736	4,525.401	0.836	4,622.026	0.936	4,718.650
0.037	3,849.996	0.137	3,946.620	0.237	4,043.245	0.337	4,139.869	0.437	4,236.494	0.537	4,333.118	0.637	4,429.743	0.737	4,526.367	0.837	4,622.992	0.937	4,719.617
0.038	3,850.962	0.138	3,947.586	0.238	4,044.211	0.338	4,140.835	0.438	4,237.460	0.538	4,334.085	0.638	4,430.709	0.738	4,527.334	0.838	4,623.958	0.938	4,720.583
0.039	3,851.928	0.139	3,948.553	0.239	4,045.177	0.339	4,141.802	0.439	4,238.426	0.539	4,335.051	0.639	4,431.675	0.739	4,528.300	0.839	4,624.925	0.939	4,721.549
0.040	3,852.894	0.140	3,949.519	0.240	4,046.143	0.340	4,142.768	0.440	4,239.393	0.540	4,336.017	0.640	4,432.642	0.740	4,529.266	0.840	4,625.891	0.940	4,722.515
0.041	3,853.861	0.141	3,950.485	0.241	4,047.110	0.341	4,143.734	0.441	4,240.359	0.541	4,336.983	0.641	4,433.608	0.741	4,530.232	0.841	4,626.857	0.941	4,723.482
0.042	3,854.827	0.142	3,951.451	0.242	4,048.076	0.342	4,144.700	0.442	4,241.325	0.542	4,337.950	0.642	4,434.574	0.742	4,531.199	0.842	4,627.823	0.942	4,724.448
0.043	3,855.793	0.143	3,952.418	0.243	4,049.042	0.343	4,145.667	0.443	4,242.291	0.543	4,338.916	0.643	4,435.540	0.743	4,532.165	0.843	4,628.790	0.943	4,725.414
0.044	3,856.759	0.144	3,953.384	0.244	4,050.008	0.344	4,146.633	0.444	4,243.258	0.544	4,339.882	0.644	4,436.507	0.744	4,533.131	0.844	4,629.756	0.944	4,726.380
0.045	3,857.726	0.145	3,954.350	0.245	4,050.975	0.345	4,147.599	0.445	4,244.224	0.545	4,340.848	0.645	4,437.473	0.745	4,534.097	0.845	4,630.722	0.945	4,727.347
0.046	3,858.692	0.146	3,955.316	0.246	4,051.941	0.346	4,148.565	0.446	4,245.190	0.546	4,341.815	0.646	4,438.439	0.746	4,535.064	0.846	4,631.688	0.946	4,728.313
0.047	3,859.658	0.147	3,956.283	0.247	4,052.907	0.347	4,149.532	0.447	4,246.156	0.547	4,342.781	0.647	4,439.405	0.747	4,536.030	0.847	4,632.654	0.947	4,729.279
0.048	3,860.624	0.148	3,957.249	0.248	4,053.873	0.348	4,150.498	0.448	4,247.123	0.548	4,343.747	0.648	4,440.372	0.748	4,536.996	0.848	4,633.621	0.948	4,730.245
0.049	3,861.591	0.149	3,958.215	0.249	4,054.840	0.349	4,151.464	0.449	4,248.089	0.549	4,344.713	0.649	4,441.338	0.749	4,537.962	0.849	4,634.587	0.949	4,731.212
0.050	3,862.557	0.150	3,959.181	0.250	4,055.806	0.350	4,152.430	0.450	4,249.055	0.550	4,345.680	0.650	4,442.304	0.750	4,538.929	0.850	4,635.553	0.950	4,732.178
0.051	3,863.523	0.151	3,960.148	0.251	4,056.772	0.351	4,153.397	0.451	4,250.021	0.551	4,346.646	0.651	4,443.270	0.751	4,539.895	0.851	4,636.519	0.951	4,733.144
0.052	3,864.489	0.152	3,961.114	0.252	4,057.738	0.352	4,154.363	0.452	4,250.987	0.552	4,347.612	0.652	4,444.237	0.752	4,540.861	0.852	4,637.486	0.952	4,734.110
0.053	3,865.456	0.153	3,962.080	0.253	4,058.705	0.353	4,155.329	0.453	4,251.954	0.553	4,348.578	0.653	4,445.203	0.753	4,541.827	0.853	4,638.452	0.953	4,735.077
0.054	3,866.422	0.154	3,963.046	0.254	4,059.671	0.354	4,156.295	0.454	4,252.920	0.554	4,349.545	0.654	4,446.169	0.754	4,542.794	0.854	4,639.418	0.954	4,736.043
0.055	3,867.388	0.155	3,964.013	0.255	4,060.637	0.355	4,157.262	0.455	4,253.886	0.555	4,350.511	0.655	4,447.135	0.755	4,543.760	0.855	4,640.384	0.955	4,737.009
0.056	3,868.354	0.156	3,964.979	0.256	4,061.603	0.356	4,158.228	0.456	4,254.852	0.556	4,351.477	0.656	4,448.102	0.756	4,544.726	0.856	4,641.351	0.956	4,737.975
0.057	3,869.320	0.157	3,965.945	0.257	4,062.570	0.357	4,159.194	0.457	4,255.819	0.557	4,352.443	0.657	4,449.068	0.757	4,545.692	0.857	4,642.317	0.957	4,738.942
0.058	3,870.287	0.158	3,966.911	0.258	4,063.536	0.358	4,160.160	0.458	4,256.785	0.558	4,353.410	0.658	4,450.034	0.758	4,546.659	0.858	4,643.283	0.958	4,739.908
0.059	3,871.253	0.159	3,967.878	0.259	4,064.502	0.359	4,161.127	0.459	4,257.751	0.559	4,354.376	0.659	4,451.000	0.759	4,547.625	0.859	4,644.249	0.959	4,740.874
0.060	3,872.219	0.160	3,968.844	0.260	4,065.468	0.360	4,162.093	0.460	4,258.717	0.560	4,355.342	0.660	4,451.967	0.760	4,548.591	0.860	4,645.216	0.960	4,741.840
0.061	3,873.185	0.161	3,969.810	0.261	4,066.435	0.361	4,163.059	0.461	4,259.684	0.561	4,356.308	0.661	4,452.933	0.761	4,549.557	0.861	4,646.182	0.961	4,742.806
0.062	3,874.152	0.162	3,970.776	0.262	4,067.401	0.362	4,164.025	0.462	4,260.650	0.562	4,357.275	0.662	4,453.899	0.762	4,550.524	0.862	4,647.148	0.962	4,743.773
0.063	3,875.118	0.163	3,971.743	0.263	4,068.367	0.363	4,164.992	0.463	4,261.616	0.563	4,358.241	0.663	4,454.865	0.763	4,551.490	0.863	4,648.114	0.963	4,744.739
0.064	3,876.084	0.164	3,972.709	0.264	4,069.333	0.364	4,165.958	0.464	4,262.582	0.564	4,359.207	0.664	4,455.832	0.764	4,552.456	0.864	4,649.081	0.964	4,745.705
0.065	3,877.050	0.165	3,973.675	0.265	4,070.300	0.365	4,166.924	0.465	4,263.549	0.565	4,360.173	0.665	4,456.798	0.765	4,553.422	0.865	4,650.047	0.965	4,746.671
0.066	3,878.017	0.166	3,974.641	0.266	4,071.266	0.366	4,167.890	0.466	4,264.515	0.566	4,361.139	0.666	4,457.764	0.766	4,554.389	0.866	4,651.013	0.966	4,747.638
0.067	3,878.983	0.167	3,975.608	0.267	4,072.232	0.367	4,168.857	0.467	4,265.481	0.567	4,362.106	0.667	4,458.730	0.767	4,555.355	0.867	4,651.979	0.967	4,748.604
0.068	3,879.949	0.168	3,976.574	0.268	4,073.198	0.368	4,169.823	0.468	4,266.447	0.568	4,363.072	0.668	4,459.697	0.768	4,556.321	0.868	4,652.946	0.968	4,749.570
0.069	3,880.915	0.169	3,977.540	0.269	4,074.165	0.369	4,170.789	0.469	4,267.414	0.569	4,364.038	0.669	4,460.663	0.769	4,557.287	0.869	4,653.912	0.969	4,750.536
0.070	3,881.882	0.170	3,978.506	0.270	4,075.131	0.370	4,171.755	0.470	4,268.380	0.570	4,365.004	0.670	4,461.629	0.770	4,558.254	0.870	4,654.878	0.970	4,751.503
0.071	3,882.848	0.171	3,979.472	0.271	4,076.097	0.371	4,172.722	0.471	4,269.346	0.571	4,365.971	0.671	4,462.595	0.771	4,559.220	0.871	4,655.844	0.971	4,752.469
0.072	3,883.814	0.172	3,980.439	0.272	4,077.063	0.372	4,173.688	0.472	4,270.312	0.572	4,366.937	0.672	4,463.562	0.772	4,560.186	0.872	4,656.811	0.972	4,753.435
0.073	3,884.780	0.173	3,981.405	0.273	4,078.030	0.373	4,174.654	0.473	4,271.279	0.573	4,367.903	0.673	4,464.528	0.773	4,561.152	0.873	4,657.777	0.973	4,754.401
0.074	3,885.747	0.174	3,982.371	0.274	4,078.996	0.374	4,175.620	0.474	4,272.245	0.574	4,368.869	0.674	4,465.494	0.774	4,562.119	0.874	4,658.743	0.974	4,755.368
0.075	3,886.713	0.175	3,983.337	0.275	4,079.962	0.375	4,176.587	0.475	4,273.211	0.575	4,369.836	0.675	4,466.460	0.775	4,563.085	0.875	4,659.709	0.975	4,756.334
0.076	3,887.679	0.176	3,984.304	0.276	4,080.928	0.376	4,177.553	0.476	4,274.177	0.576	4,370.802	0.676	4,467.426	0.776	4,564.051	0.876	4,660.676	0.976	4,757.300
0.077	3,888.645	0.177	3,985.270	0.277	4,081.895	0.377	4,178.519	0.477	4,275.144	0.577	4,371.768	0.677	4,468.393	0.777	4,565.017	0.877	4,661.642	0.977	4,758.266
0.078	3,889.612	0.178	3,986.236	0.278	4,082.861	0.378	4,179.485	0.478	4,276.110	0.578	4,372.734	0.678	4,469.359	0.778	4,565.984	0.878	4,662.608	0.978	4,759.233
0.079	3,890.578	0.179	3,987.202	0.279	4,083.827	0.379	4,180.452	0.479	4,277.076	0.579	4,373.701	0.679	4,470.325	0.779	4,566.950	0.879	4,663.574	0.979	4,760.199
0.080	3,891.544	0.180	3,988.169	0.280	4,084.793	0.380	4,181.418	0.480	4,278.042	0.580	4,374.667	0.680	4,471.291	0.780	4,567.916	0.880	4,664.541	0.980	4,761.165
0.081	3,892.510	0.181	3,989.135	0.281	4,085.759	0.381	4,182.384	0.481	4,279.009	0.581	4,375.633	0.681	4,472.258	0.781	4,568.882	0.881	4,665.507	0.981	4,762.131
0.082	3,893.477	0.182	3,990.101	0.282	4,086.726	0.382	4,183.350	0.482	4,279.975	0.582	4,376.599	0.682	4,473.224	0.782	4,569.849	0.882	4,666.473	0.982	4,763.098
0.083	3,894.443	0.183	3,991.067	0.283	4,087.692	0.383	4,184.317	0.483	4,280.941	0.583	4,377.566	0.683	4,474.190	0.783	4,570.815	0.883	4,667.439	0.983	4,764.064
0.084	3,895.409	0.184	3,992.034	0.284	4,088.658	0.384	4,185.283	0.484	4,281.907	0.584	4,378.532	0.684	4,475.156	0.784	4,571.781	0.884	4,668.406	0.984	4,765.030
0.085	3,896.375	0.185	3,993.000	0.285	4,089.624	0.385	4,186.249	0.485	4,282.874	0.585	4,379.498	0.685	4,476.123	0.785	4,572.747	0.885	4,669.372	0.985	4,765.996
0.086	3,897.342	0.186	3,993.966	0.286	4,090.591	0.386	4,187.215	0.486	4,283.840	0.586	4,380.464	0.686	4,477.089	0.786	4,573.714	0.886	4,670.338	0.986	4,766.963
0.087	3,898.308	0.187	3,994.932	0.287	4,091.557	0.387	4,188.182	0.487	4,284.806	0.587	4,381.431	0.687	4,478.055	0.787	4,574.680	0.887	4,671.304	0.987	4,767.929
0.088	3,899.274	0.188	3,995.899	0.288	4,092.523	0.388	4,189.148	0.488	4,285.772	0.588	4,382.397	0.688	4,479.021	0.788	4,575.646	0.888	4,672.271	0.988	4,768.895
0.089	3,900.240	0.189	3,996.865	0.289	4,093.489	0.389	4,190.114	0.489	4,286.739	0.589	4,383.363	0.689	4,479.988	0.789	4,576.612	0.889	4,673.237	0.989	4,769.861
0.090	3,901.207	0.190	3,997.831	0.290	4,094.456	0.390	4,191.080	0.490	4,287.705	0.590	4,384.329	0.690	4,480.954	0.790	4,577.578	0.890	4,674.203	0.990	4,770.828
0.091	3,902.173	0.191	3,998.797	0.291	4,095.422	0.391	4,192.047	0.491	4,288.671	0.591	4,385.296	0.691	4,481.920	0.791	4,578.545	0.891	4,675.169	0.991	4,771.794
0.092	3,903.139	0.192	3,999.764	0.292	4,096.388	0.392	4,193.013	0.492	4,289.637	0.592	4,386.262	0.692	4,482.886	0.792	4,579.511	0.892	4,676.136	0.992	4,772.760
0.093	3,904.105	0.193	4,000.730	0.293	4,097.354	0.393	4,193.979	0.493	4,290.604	0.593	4,387.228	0.693	4,483.853	0.793	4,580.477	0.893	4,677.102	0.993	4,773.726
0.094	3,905.072	0.194	4,001.696	0.294	4,098.321	0.394	4,194.945	0.494	4,291.570	0.594	4,388.194	0.694	4,484.819	0.794	4,581.443	0.894	4,678.068	0.994	4,774.693
0.095	3,906.038	0.195	4,002.662	0.295	4,099.287	0.395	4,195.911	0.495	4,292.536	0.595	4,389.161	0.695	4,485.785	0.795	4,582.410	0.895	4,679.034	0.995	4,775.659
0.096	3,907.004	0.196	4,003.629	0.296	4,100.253	0.396	4,196.878	0.496	4,293.502	0.596	4,390.127	0.696	4,486.751	0.796	4,583.376	0.896	4,680.001	0.996	4,776.625
0.097	3,907.970	0.197	4,004.595	0.297	4,101.219	0.397	4,197.844	0.497	4,294.469	0.597	4,391.093	0.697	4,487.718	0.797	4,584.342	0.897	4,680.967	0.997	4,777.591
0.098	3,908.937	0.198	4,005.561	0.298	4,102.186	0.398	4,198.810	0.498	4,295.435	0.598	4,392.059	0.698	4,488.684	0.798	4,585.308	0.898	4,681.933	0.998	4,778.558
0.099	3,909.903	0.199	4,006.527	0.299	4,103.152	0.399	4,199.776	0.499	4,296.401	0.599	4,393.026	0.699	4,489.650	0.799	4,586.275	0.899	4,682.899	0.999	4,779.524

DATE STRAPPED: 09/19/17 BY: RJ
DATE COMPUTED: 09/26/17 BY: WLH
DATE ISSUED: 09/26/17

AMSPEC

Meliadine
Rankin Inlet
Item 20 - Final - Data Sheet (Innage)

Tank No. 2
INNAGE TABLE

Calibration@AmSpecGroup.com

CAPACITIES GIVEN IN CUBIC METERS

GAUGE HEIGHT: 14.269 M

mm	5 M	mm	5 M	mm	5 M	mm	5 M	mm	5 M	mm	5 M	mm	5 M	mm	5 M	mm	5 M	mm	5 M
0.000	4,780.490	0.100	4,877.115	0.200	4,973.739	0.300	5,070.364	0.400	5,166.988	0.500	5,263.613	0.600	5,360.240	0.700	5,456.873	0.800	5,553.505	0.900	5,650.138
0.001	4,781.456	0.101	4,878.081	0.201	4,974.705	0.301	5,071.330	0.401	5,167.955	0.501	5,264.579	0.601	5,361.206	0.701	5,457.839	0.801	5,554.472	0.901	5,651.104
0.002	4,782.423	0.102	4,879.047	0.202	4,975.672	0.302	5,072.296	0.402	5,168.921	0.502	5,265.545	0.602	5,362.173	0.702	5,458.805	0.802	5,555.438	0.902	5,652.070
0.003	4,783.389	0.103	4,880.013	0.203	4,976.638	0.303	5,073.262	0.403	5,169.887	0.503	5,266.512	0.603	5,363.139	0.703	5,459.772	0.803	5,556.404	0.903	5,653.037
0.004	4,784.355	0.104	4,880.980	0.204	4,977.604	0.304	5,074.229	0.404	5,170.853	0.504	5,267.478	0.604	5,364.105	0.704	5,460.738	0.804	5,557.371	0.904	5,654.003
0.005	4,785.321	0.105	4,881.946	0.205	4,978.570	0.305	5,075.195	0.405	5,171.820	0.505	5,268.444	0.605	5,365.072	0.705	5,461.704	0.805	5,558.337	0.905	5,654.969
0.006	4,786.288	0.106	4,882.912	0.206	4,979.537	0.306	5,076.161	0.406	5,172.786	0.506	5,269.410	0.606	5,366.038	0.706	5,462.671	0.806	5,559.303	0.906	5,655.936
0.007	4,787.254	0.107	4,883.878	0.207	4,980.503	0.307	5,077.127	0.407	5,173.752	0.507	5,270.377	0.607	5,367.004	0.707	5,463.637	0.807	5,560.270	0.907	5,656.902
0.008	4,788.220	0.108	4,884.845	0.208	4,981.469	0.308	5,078.094	0.408	5,174.718	0.508	5,271.343	0.608	5,367.971	0.708	5,464.603	0.808	5,561.236	0.908	5,657.868
0.009	4,789.186	0.109	4,885.811	0.209	4,982.435	0.309	5,079.060	0.409	5,175.685	0.509	5,272.309	0.609	5,368.937	0.709	5,465.570	0.809	5,562.202	0.909	5,658.835
0.010	4,790.153	0.110	4,886.777	0.210	4,983.402	0.310	5,080.026	0.410	5,176.651	0.510	5,273.275	0.610	5,369.903	0.710	5,466.536	0.810	5,563.168	0.910	5,659.801
0.011	4,791.119	0.111	4,887.743	0.211	4,984.368	0.311	5,080.992	0.411	5,177.617	0.511	5,274.242	0.611	5,370.870	0.711	5,467.502	0.811	5,564.135	0.911	5,660.767
0.012	4,792.085	0.112	4,888.710	0.212	4,985.334	0.312	5,081.959	0.412	5,178.583	0.512	5,275.208	0.612	5,371.836	0.712	5,468.469	0.812	5,565.101	0.912	5,661.734
0.013	4,793.051	0.113	4,889.676	0.213	4,986.300	0.313	5,082.925	0.413	5,179.549	0.513	5,276.174	0.613	5,372.802	0.713	5,469.435	0.813	5,566.067	0.913	5,662.700
0.014	4,794.018	0.114	4,890.642	0.214	4,987.267	0.314	5,083.891	0.414	5,180.516	0.514	5,277.140	0.614	5,373.769	0.714	5,470.401	0.814	5,567.034	0.914	5,663.666
0.015	4,794.984	0.115	4,891.608	0.215	4,988.233	0.315	5,084.857	0.415	5,181.482	0.515	5,278.107	0.615	5,374.735	0.715	5,471.368	0.815	5,568.000	0.915	5,664.633
0.016	4,795.950	0.116	4,892.575	0.216	4,989.199	0.316	5,085.824	0.416	5,182.448	0.516	5,279.073	0.616	5,375.701	0.716	5,472.334	0.816	5,568.966	0.916	5,665.599
0.017	4,796.916	0.117	4,893.541	0.217	4,990.165	0.317	5,086.790	0.417	5,183.414	0.517	5,280.039	0.617	5,376.668	0.717	5,473.300	0.817	5,569.933	0.917	5,666.565
0.018	4,797.882	0.118	4,894.507	0.218	4,991.132	0.318	5,087.756	0.418	5,184.381	0.518	5,281.005	0.618	5,377.634	0.718	5,474.267	0.818	5,570.899	0.918	5,667.532
0.019	4,798.849	0.119	4,895.473	0.219	4,992.098	0.319	5,088.722	0.419	5,185.347	0.519	5,281.972	0.619	5,378.600	0.719	5,475.233	0.819	5,571.865	0.919	5,668.498
0.020	4,799.815	0.120	4,896.440	0.220	4,993.064	0.320	5,089.689	0.420	5,186.313	0.520	5,282.938	0.620	5,379.567	0.720	5,476.199	0.820	5,572.832	0.920	5,669.464
0.021	4,800.781	0.121	4,897.406	0.221	4,994.030	0.321	5,090.655	0.421	5,187.279	0.521	5,283.904	0.621	5,380.533	0.721	5,477.166	0.821	5,573.798	0.921	5,670.431
0.022	4,801.747	0.122	4,898.372	0.222	4,994.997	0.322	5,091.621	0.422	5,188.246	0.522	5,284.870	0.622	5,381.499	0.722	5,478.132	0.822	5,574.764	0.922	5,671.397
0.023	4,802.714	0.123	4,899.338	0.223	4,995.963	0.323	5,092.587	0.423	5,189.212	0.523	5,285.836	0.623	5,382.466	0.723	5,479.098	0.823	5,575.731	0.923	5,672.363
0.024	4,803.680	0.124	4,900.305	0.224	4,996.929	0.324	5,093.554	0.424	5,190.178	0.524	5,286.803	0.624	5,383.432	0.724	5,480.064	0.824	5,576.697	0.924	5,673.330
0.025	4,804.646	0.125	4,901.271	0.225	4,997.895	0.325	5,094.520	0.425	5,191.144	0.525	5,287.769	0.625	5,384.398	0.725	5,481.031	0.825	5,577.663	0.925	5,674.296
0.026	4,805.612	0.126	4,902.237	0.226	4,998.862	0.326	5,095.486	0.426	5,192.111	0.526	5,288.735	0.626	5,385.365	0.726	5,481.997	0.826	5,578.630	0.926	5,675.262
0.027	4,806.579	0.127	4,903.203	0.227	4,999.828	0.327	5,096.452	0.427	5,193.077	0.527	5,289.701	0.627	5,386.331	0.727	5,482.963	0.827	5,579.596	0.927	5,676.229
0.028	4,807.545	0.128	4,904.169	0.228	5,000.794	0.328	5,097.419	0.428	5,194.043	0.528	5,290.668	0.628	5,387.297	0.728	5,483.930	0.828	5,580.562	0.928	5,677.195
0.029	4,808.511	0.129	4,905.136	0.229	5,001.760	0.329	5,098.385	0.429	5,195.009	0.529	5,291.634	0.629	5,388.264	0.729	5,484.896	0.829	5,581.529	0.929	5,678.161
0.030	4,809.477	0.130	4,906.102	0.230	5,002.727	0.330	5,099.351	0.430	5,195.976	0.530	5,292.600	0.630	5,389.230	0.730	5,485.862	0.830	5,582.495	0.930	5,679.128
0.031	4,810.444	0.131	4,907.068	0.231	5,003.693	0.331	5,100.317	0.431	5,196.942	0.531	5,293.566	0.631	5,390.196	0.731	5,486.829	0.831	5,583.461	0.931	5,680.094
0.032	4,811.410	0.132	4,908.034	0.232	5,004.659	0.332	5,101.284	0.432	5,197.908	0.532	5,294.533	0.632	5,391.163	0.732	5,487.795	0.832	5,584.428	0.932	5,681.060
0.033	4,812.376	0.133	4,909.001	0.233	5,005.625	0.333	5,102.250	0.433	5,198.874	0.533	5,295.499	0.633	5,392.129	0.733	5,488.761	0.833	5,585.394	0.933	5,682.027
0.034	4,813.342	0.134	4,909.967	0.234	5,006.592	0.334	5,103.216	0.434	5,199.841	0.534	5,296.465	0.634	5,393.095	0.734	5,489.728	0.834	5,586.360	0.934	5,682.993
0.035	4,814.309	0.135	4,910.933	0.235	5,007.558	0.335	5,104.182	0.435	5,200.807	0.535	5,297.431	0.635	5,394.061	0.735	5,490.694	0.835	5,587.327	0.935	5,683.959
0.036	4,815.275	0.136	4,911.899	0.236	5,008.524	0.336	5,105.149	0.436	5,201.773	0.536	5,298.398	0.636	5,395.028	0.736	5,491.660	0.836	5,588.293	0.936	5,684.926
0.037	4,816.241	0.137	4,912.866	0.237	5,009.490	0.337	5,106.115	0.437	5,202.739	0.537	5,299.364	0.637	5,395.994	0.737	5,492.627	0.837	5,589.259	0.937	5,685.892
0.038	4,817.207	0.138	4,913.832	0.238	5,010.457	0.338	5,107.081	0.438	5,203.706	0.538	5,300.330	0.638	5,396.960	0.738	5,493.593	0.838	5,590.226	0.938	5,686.858
0.039	4,818.174	0.139	4,914.798	0.239	5,011.423	0.339	5,108.047	0.439	5,204.672	0.539	5,301.296	0.639	5,397.927	0.739	5,494.559	0.839	5,591.192	0.939	5,687.825
0.040	4,819.140	0.140	4,915.764	0.240	5,012.389	0.340	5,109.014	0.440	5,205.638	0.540	5,302.263	0.640	5,398.893	0.740	5,495.526	0.840	5,592.158	0.940	5,688.791
0.041	4,820.106	0.141	4,916.731	0.241	5,013.355	0.341	5,109.980	0.441	5,206.604	0.541	5,303.229	0.641	5,399.859	0.741	5,496.492	0.841	5,593.125	0.941	5,689.757
0.042	4,821.072	0.142	4,917.697	0.242	5,014.321	0.342	5,110.946	0.442	5,207.571	0.542	5,304.195	0.642	5,400.826	0.742	5,497.458	0.842	5,594.091	0.942	5,690.723
0.043	4,822.039	0.143	4,918.663	0.243	5,015.288	0.343	5,111.912	0.443	5,208.537	0.543	5,305.161	0.643	5,401.792	0.743	5,498.425	0.843	5,595.057	0.943	5,691.690
0.044	4,823.005	0.144	4,919.629	0.244	5,016.254	0.344	5,112.879	0.444	5,209.503	0.544	5,306.128	0.644	5,402.758	0.744	5,499.391	0.844	5,596.024	0.944	5,692.656
0.045	4,823.971	0.145	4,920.596	0.245	5,017.220	0.345	5,113.845	0.445	5,210.469	0.545	5,307.094	0.645	5,403.725	0.745	5,500.357	0.845	5,596.990	0.945	5,693.622
0.046	4,824.937	0.146	4,921.562	0.246	5,018.186	0.346	5,114.811	0.446	5,211.436	0.546	5,308.060	0.646	5,404.691	0.746	5,501.324	0.846	5,597.956	0.946	5,694.589
0.047	4,825.904	0.147	4,922.528	0.247	5,019.153	0.347	5,115.777	0.447	5,212.402	0.547	5,309.026	0.647	5,405.657	0.747	5,502.290	0.847	5,598.923	0.947	5,695.555
0.048	4,826.870	0.148	4,923.494	0.248	5,020.119	0.348	5,116.744	0.448	5,213.368	0.548	5,309.993	0.648	5,406.624	0.748	5,503.256	0.848	5,599.889	0.948	5,696.521
0.049	4,827.836	0.149	4,924.461	0.249	5,021.085	0.349	5,117.710	0.449	5,214.334	0.549	5,310.959	0.649	5,407.590	0.749	5,504.223	0.849	5,600.855	0.949	5,697.488
0.050	4,828.802	0.150	4,925.427	0.250	5,022.051	0.350	5,118.676	0.450	5,215.301	0.550	5,311.925	0.650	5,408.556	0.750	5,505.189	0.850	5,601.822	0.950	5,698.454
0.051	4,829.769	0.151	4,926.393	0.251	5,023.018	0.351	5,119.642	0.451	5,216.267	0.551	5,312.891	0.651	5,409.523	0.751	5,506.155	0.851	5,602.788	0.951	5,699.420
0.052	4,830.735	0.152	4,927.359	0.252	5,023.984	0.352	5,120.609	0.452	5,217.233	0.552	5,313.858	0.652	5,410.489	0.752	5,507.122	0.852	5,603.754	0.952	5,700.387
0.053	4,831.701	0.153	4,928.326	0.253	5,024.950	0.353	5,121.575	0.453	5,218.199	0.553	5,314.824	0.653	5,411.455	0.753	5,508.088	0.853	5,604.720	0.953	5,701.353
0.054	4,832.667	0.154	4,929.292	0.254	5,025.916	0.354	5,122.541	0.454	5,219.166	0.554	5,315.790	0.654	5,412.422	0.754	5,509.054	0.854	5,605.687	0.954	5,702.319
0.055	4,833.634	0.155	4,930.258	0.255	5,026.883	0.355	5,123.507	0.455	5,220.132	0.555	5,316.756	0.655	5,413.388	0.755	5,510.021	0.855	5,606.653	0.955	5,703.286
0.056	4,834.600	0.156	4,931.224	0.256	5,027.849	0.356	5,124.473	0.456	5,221.098	0.556	5,317.723	0.656	5,414.354	0.756	5,510.987	0.856	5,607.619	0.956	5,704.252
0.057	4,835.566	0.157	4,932.191	0.257	5,028.815	0.357	5,125.440	0.457	5,222.064	0.557	5,318.689	0.657	5,415.321	0.757	5,511.953	0.857	5,608.586	0.957	5,705.218
0.058	4,836.532	0.158	4,933.157	0.258	5,029.781	0.358	5,126.406	0.458	5,223.031	0.558	5,319.655	0.658	5,416.287	0.758	5,512.920	0.858	5,609.552	0.958	5,706.185
0.059	4,837.499	0.159	4,934.123	0.259	5,030.748	0.359	5,127.372	0.459	5,223.997	0.559	5,320.622	0.659	5,417.253	0.759	5,513.886	0.859	5,610.518	0.959	5,707.151
0.060	4,838.465	0.160	4,935.089	0.260	5,031.714	0.360	5,128.338	0.460	5,224.963	0.560	5,321.588	0.660	5,418.220	0.760	5,514.852	0.860	5,611.485	0.960	5,708.117
0.061	4,839.431	0.161	4,936.056	0.261	5,032.680	0.361	5,129.305	0.461	5,225.929	0.561	5,322.554	0.661	5,419.186	0.761	5,515.819	0.861	5,612.451	0.961	5,709.084
0.062	4,840.397	0.162	4,937.022	0.262	5,033.646	0.362	5,130.271	0.462	5,226.896	0.562	5,323.520	0.662	5,420.152	0.762	5,516.785	0.862	5,613.417	0.962	5,710.050
0.063	4,841.364	0.163	4,937.988	0.263	5,034.613	0.363	5,131.237	0.463	5,227.862	0.563	5,324.487	0.663	5,421.119	0.763	5,517.751	0.863	5,614.384	0.963	5,711.016
0.064	4,842.330	0.164	4,938.954	0.264	5,035.579	0.364	5,132.203	0.464	5,228.828	0.564	5,325.453	0.664	5,422.085	0.764	5,518.718	0.864	5,615.350	0.964	5,711.983
0.065	4,843.296	0.165	4,939.921	0.265	5,036.545	0.365	5,133.170	0.465	5,229.794	0.565	5,326.419	0.665	5,423.051	0.765	5,519.684	0.865	5,616.316	0.965	5,712.949
0.066	4,844.262	0.166	4,940.887	0.266	5,037.511	0.366	5,134.136	0.466	5,230.761	0.566	5,327.386	0.666	5,424.018	0.766	5,520.650	0.866	5,617.283	0.966	5,713.915
0.067	4,845.229	0.167	4,941.853	0.267	5,038.478	0.367	5,135.102	0.467	5,231.727	0.567	5,328.352	0.667	5,424.984	0.767	5,521.616	0.867	5,618.249	0.967	5,714.882
0.068	4,846.195	0.168	4,942.819	0.268	5,039.444	0.368	5,136.068	0.468	5,232.693	0.568	5,329.318	0.668	5,425.950	0.768	5,522.583	0.868	5,619.215	0.968	5,715.848
0.069	4,847.161	0.169	4,943.786	0.269	5,040.410	0.369	5,137.035	0.469	5,233.659	0.569	5,330.284	0.669	5,426.917	0.769	5,523.549	0.869	5,620.182	0.969	5,716.814
0.070	4,848.127	0.170	4,944.752	0.270	5,041.376	0.370	5,138.001	0.470	5,234.625	0.570	5,331.251	0.670	5,427.883	0.770	5,524.515	0.870	5,621.148	0.970	5,717.781
0.071	4,849.093	0.171	4,945.718	0.271	5,042.343	0.371	5,138.967	0.471	5,235.592	0.571	5,332.217	0.671	5,428.849	0.771	5,525.482	0.871	5,622.114	0.971	5,718.747
0.072	4,850.060	0.172	4,946.684	0.272	5,043.309	0.372	5,139.933	0.472	5,236.558	0.572	5,333.183	0.672	5,429.816	0.772	5,526.448	0.872	5,623.081	0.972	5,719.713
0.073	4,851.026	0.173	4,947.651	0.273	5,044.275	0.373	5,140.900	0.473	5,237.524	0.573	5,334.150	0.673	5,430.782	0.773	5,527.414	0.873	5,624.047	0.973	5,720.680
0.074	4,851.992	0.174	4,948.617	0.274	5,045.241	0.374	5,141.866	0.474	5,238.490	0.574	5,335.116	0.674	5,431.748	0.774	5,528.381	0.874	5,625.013	0.974	5,721.646
0.075	4,852.958	0.175	4,949.583	0.275	5,046.208	0.375	5,142.832	0.475	5,239.457	0.575	5,336.082	0.675	5,432.715	0.775	5,529.347	0.875	5,625.980	0.975	5,722.612
0.076	4,853.925	0.176	4,950.549	0.276	5,047.174	0.376	5,143.798	0.476	5,240.423	0.576	5,337.048	0.676	5,433.681	0.776	5,530.313	0.876	5,626.946	0.976	5,723.579
0.077	4,854.891	0.177	4,951.516	0.277	5,048.140	0.377	5,144.765	0.477	5,241.389	0.577	5,338.015	0.677	5,434.647	0.777	5,531.280	0.877	5,627.912	0.977	5,724.545
0.078	4,855.857	0.178	4,952.482	0.278	5,049.106	0.378	5,145.731	0.478	5,242.355	0.578	5,338.981	0.678	5,435.613	0.778	5,532.246	0.878	5,628.879	0.978	5,725.511
0.079	4,856.823	0.179	4,953.448	0.279	5,050.073	0.379	5,146.697	0.479	5,243.322	0.579	5,339.947	0.679	5,436.580	0.779	5,533.212	0.879	5,629.845	0.979	5,726.478
0.080	4,857.790	0.180	4,954.414	0.280	5,051.039	0.380	5,147.663	0.480	5,244.288	0.580	5,340.914	0.680	5,437.546	0.780	5,534.179	0.880	5,630.811	0.980	5,727.444
0.081	4,858.756	0.181	4,955.381	0.281	5,052.005	0.381	5,148.630	0.481	5,245.254	0.581	5,341.880	0.681	5,438.512	0.781	5,535.145	0.881	5,631.778	0.981	5,728.410
0.082	4,859.722	0.182	4,956.347	0.282	5,052.971	0.382	5,149.596	0.482	5,246.220	0.582	5,342.846	0.682	5,439.479	0.782	5,536.111	0.882	5,632.744	0.982	5,729.377
0.083	4,860.688	0.183	4,957.313	0.283	5,053.938	0.383	5,150.562	0.483	5,247.187	0.583	5,343.813	0.683	5,440.445	0.783	5,537.078	0.883	5,633.710	0.983	5,730.343
0.084	4,861.655	0.184	4,958.279	0.284	5,054.904	0.384	5,151.528	0.484	5,248.153	0.584	5,344.779	0.684	5,441.411	0.784	5,538.044	0.884	5,634.677	0.984	5,731.309
0.085	4,862.621	0.185	4,959.245	0.285	5,055.870	0.385	5,152.495	0.485	5,249.119	0.585	5,345.745	0.685	5,442.378	0.785	5,539.010	0.885	5,635.643	0.985	5,732.275
0.086	4,863.587	0.186	4,960.212	0.286	5,056.836	0.386	5,153.461	0.486	5,250.085	0.586	5,346.712	0.686	5,443.344	0.786	5,539.977	0.886	5,636.609	0.986	5,733.242
0.087	4,864.553	0.187	4,961.178	0.287	5,057.803	0.387	5,154.427	0.487	5,251.052	0.587	5,347.678	0.687	5,444.310	0.787	5,540.943	0.887	5,637.576	0.987	5,734.208
0.088	4,865.520	0.188	4,962.144	0.288	5,058.769	0.388	5,155.393	0.488	5,252.018	0.588	5,348.644	0.688	5,445.277	0.788	5,541.909	0.888	5,638.542	0.988	5,735.174
0.089	4,866.486	0.189	4,963.110	0.289	5,059.735	0.389	5,156.360	0.489	5,252.984	0.589	5,349.611	0.689	5,446.243	0.789	5,542.876	0.889	5,639.508	0.989	5,736.141
0.090	4,867.452	0.190	4,964.077	0.290	5,060.701	0.390	5,157.326	0.490	5,253.950	0.590	5,350.577	0.690	5,447.209	0.790	5,543.842	0.890	5,640.475	0.990	5,737.107
0.091	4,868.418	0.191	4,965.043	0.291	5,061.668	0.391	5,158.292	0.491	5,254.917	0.591	5,351.543	0.691	5,448.176	0.791	5,544.808	0.891	5,641.441	0.991	5,738.073
0.092	4,869.385	0.192	4,966.009	0.292	5,062.634	0.392	5,159.258	0.492	5,255.883	0.592	5,352.509	0.692	5,449.142	0.792	5,545.775	0.892	5,642.407	0.992	5,739.040
0.093	4,870.351	0.193	4,966.975	0.293	5,063.600	0.393	5,160.225	0.493	5,256.849	0.593	5,353.476	0.693	5,450.108	0.793	5,546.741	0.893	5,643.374	0.993	5,740.006
0.094	4,871.317	0.194	4,967.942	0.294	5,064.566	0.394	5,161.191	0.494	5,257.815	0.594	5,354.442	0.694	5,451.075	0.794	5,547.707	0.894	5,644.340	0.994	5,740.972
0.095	4,872.283	0.195	4,968.908	0.295	5,065.533	0.395	5,162.157	0.495	5,258.782	0.595	5,355.408	0.695	5,452.041	0.795	5,548.674	0.895	5,645.306	0.995	5,741.939
0.096	4,873.250	0.196	4,969.874	0.296	5,066.499	0.396	5,163.123	0.496	5,259.748	0.596	5,356.375	0.696	5,453.007	0.796	5,549.640	0.896	5,646.272	0.996	5,742.905
0.097	4,874.216	0.197	4,970.840	0.297	5,067.465	0.397	5,164.090	0.497	5,260.714	0.597	5,357.341	0.697	5,453.974	0.797	5,550.606	0.897	5,647.239	0.997	5,743.871
0.098	4,875.182	0.198	4,971.807	0.298	5,068.431	0.398	5,165.056	0.498	5,261.680	0.598	5,358.307	0.698	5,454.940	0.798	5,551.573	0.898	5,648.205	0.998	5,744.838
0.099	4,876.148	0.199	4,972.773	0.299	5,069.397	0.399	5,166.022	0.499	5,262.647	0.599	5,359.274	0.699	5,455.906	0.799	5,552.539	0.899	5,649.171	0.999	5,745.804

DATE STRAPPED: 09/19/17 BY: RJ
DATE COMPUTED: 09/26/17 BY: WLH
DATE ISSUED: 09/26/17

AMSPEC

Meliadine
Rankin Inlet
Item 20 - Final - Data Sheet (Innage)

Tank No. 2
INNAGE TABLE

Calibration@AmSpecGroup.com

CAPACITIES GIVEN IN CUBIC METERS

GAUGE HEIGHT: 14.269 M

mm	6 M	mm	6 M	mm	6 M	mm	6 M	mm	6 M	mm	6 M	mm	6 M	mm	6 M	mm	6 M	mm	6 M
0.000	5,746.770	0.100	5,843.403	0.200	5,940.036	0.300	6,036.668	0.400	6,133.301	0.500	6,229.933	0.600	6,326.566	0.700	6,423.198	0.800	6,519.831	0.900	6,616.463
0.001	5,747.737	0.101	5,844.369	0.201	5,941.002	0.301	6,037.634	0.401	6,134.267	0.501	6,230.900	0.601	6,327.532	0.701	6,424.165	0.801	6,520.797	0.901	6,617.430
0.002	5,748.703	0.102	5,845.336	0.202	5,941.968	0.302	6,038.601	0.402	6,135.233	0.502	6,231.866	0.602	6,328.498	0.702	6,425.131	0.802	6,521.764	0.902	6,618.396
0.003	5,749.669	0.103	5,846.302	0.203	5,942.934	0.303	6,039.567	0.403	6,136.200	0.503	6,232.832	0.603	6,329.465	0.703	6,426.097	0.803	6,522.730	0.903	6,619.362
0.004	5,750.636	0.104	5,847.268	0.204	5,943.901	0.304	6,040.533	0.404	6,137.166	0.504	6,233.799	0.604	6,330.431	0.704	6,427.064	0.804	6,523.696	0.904	6,620.329
0.005	5,751.602	0.105	5,848.235	0.205	5,944.867	0.305	6,041.500	0.405	6,138.132	0.505	6,234.765	0.605	6,331.397	0.705	6,428.030	0.805	6,524.663	0.905	6,621.295
0.006	5,752.568	0.106	5,849.201	0.206	5,945.833	0.306	6,042.466	0.406	6,139.099	0.506	6,235.731	0.606	6,332.364	0.706	6,428.996	0.806	6,525.629	0.906	6,622.261
0.007	5,753.535	0.107	5,850.167	0.207	5,946.800	0.307	6,043.432	0.407	6,140.065	0.507	6,236.697	0.607	6,333.330	0.707	6,429.963	0.807	6,526.595	0.907	6,623.228
0.008	5,754.501	0.108	5,851.134	0.208	5,947.766	0.308	6,044.399	0.408	6,141.031	0.508	6,237.664	0.608	6,334.296	0.708	6,430.929	0.808	6,527.562	0.908	6,624.194
0.009	5,755.467	0.109	5,852.100	0.209	5,948.732	0.309	6,045.365	0.409	6,141.998	0.509	6,238.630	0.609	6,335.263	0.709	6,431.895	0.809	6,528.528	0.909	6,625.160
0.010	5,756.434	0.110	5,853.066	0.210	5,949.699	0.310	6,046.331	0.410	6,142.964	0.510	6,239.596	0.610	6,336.229	0.710	6,432.862	0.810	6,529.494	0.910	6,626.127
0.011	5,757.400	0.111	5,854.033	0.211	5,950.665	0.311	6,047.298	0.411	6,143.930	0.511	6,240.563	0.611	6,337.195	0.711	6,433.828	0.811	6,530.461	0.911	6,627.093
0.012	5,758.366	0.112	5,854.999	0.212	5,951.631	0.312	6,048.264	0.412	6,144.897	0.512	6,241.529	0.612	6,338.162	0.712	6,434.794	0.812	6,531.427	0.912	6,628.059
0.013	5,759.333	0.113	5,855.965	0.213	5,952.598	0.313	6,049.230	0.413	6,145.863	0.513	6,242.495	0.613	6,339.128	0.713	6,435.761	0.813	6,532.393	0.913	6,629.026
0.014	5,760.299	0.114	5,856.931	0.214	5,953.564	0.314	6,050.197	0.414	6,146.829	0.514	6,243.462	0.614	6,340.094	0.714	6,436.727	0.814	6,533.359	0.914	6,629.992
0.015	5,761.265	0.115	5,857.898	0.215	5,954.530	0.315	6,051.163	0.415	6,147.796	0.515	6,244.428	0.615	6,341.061	0.715	6,437.693	0.815	6,534.326	0.915	6,630.958
0.016	5,762.232	0.116	5,858.864	0.216	5,955.497	0.316	6,052.129	0.416	6,148.762	0.516	6,245.394	0.616	6,342.027	0.716	6,438.660	0.816	6,535.292	0.916	6,631.925
0.017	5,763.198	0.117	5,859.830	0.217	5,956.463	0.317	6,053.096	0.417	6,149.728	0.517	6,246.361	0.617	6,342.993	0.717	6,439.626	0.817	6,536.258	0.917	6,632.891
0.018	5,764.164	0.118	5,860.797	0.218	5,957.429	0.318	6,054.062	0.418	6,150.695	0.518	6,247.327	0.618	6,343.960	0.718	6,440.592	0.818	6,537.225	0.918	6,633.857
0.019	5,765.131	0.119	5,861.763	0.219	5,958.396	0.319	6,055.028	0.419	6,151.661	0.519	6,248.293	0.619	6,344.926	0.719	6,441.559	0.819	6,538.191	0.919	6,634.824
0.020	5,766.097	0.120	5,862.729	0.220	5,959.362	0.320	6,055.995	0.420	6,152.627	0.520	6,249.260	0.620	6,345.892	0.720	6,442.525	0.820	6,539.157	0.920	6,635.790
0.021	5,767.063	0.121	5,863.696	0.221	5,960.328	0.321	6,056.961	0.421	6,153.593	0.521	6,250.226	0.621	6,346.859	0.721	6,443.491	0.821	6,540.124	0.921	6,636.756
0.022	5,768.030	0.122	5,864.662	0.222	5,961.295	0.322	6,057.927	0.422	6,154.560	0.522	6,251.192	0.622	6,347.825	0.722	6,444.458	0.822	6,541.090	0.922	6,637.723
0.023	5,768.996	0.123	5,865.628	0.223	5,962.261	0.323	6,058.894	0.423	6,155.526	0.523	6,252.159	0.623	6,348.791	0.723	6,445.424	0.823	6,542.056	0.923	6,638.689
0.024	5,769.962	0.124	5,866.595	0.224	5,963.227	0.324	6,059.860	0.424	6,156.492	0.524	6,253.125	0.624	6,349.758	0.724	6,446.390	0.824	6,543.023	0.924	6,639.655
0.025	5,770.929	0.125	5,867.561	0.225	5,964.194	0.325	6,060.826	0.425	6,157.459	0.525	6,254.091	0.625	6,350.724	0.725	6,447.356	0.825	6,543.989	0.925	6,640.622
0.026	5,771.895	0.126	5,868.527	0.226	5,965.160	0.326	6,061.793	0.426	6,158.425	0.526	6,255.058	0.626	6,351.690	0.726	6,448.323	0.826	6,544.955	0.926	6,641.588
0.027	5,772.861	0.127	5,869.494	0.227	5,966.126	0.327	6,062.759	0.427	6,159.391	0.527	6,256.024	0.627	6,352.657	0.727	6,449.289	0.827	6,545.922	0.927	6,642.554
0.028	5,773.827	0.128	5,870.460	0.228	5,967.093	0.328	6,063.725	0.428	6,160.358	0.528	6,256.990	0.628	6,353.623	0.728	6,450.255	0.828	6,546.888	0.928	6,643.521
0.029	5,774.794	0.129	5,871.426	0.229	5,968.059	0.329	6,064.692	0.429	6,161.324	0.529	6,257.957	0.629	6,354.589	0.729	6,451.222	0.829	6,547.854	0.929	6,644.487
0.030	5,775.760	0.130	5,872.393	0.230	5,969.025	0.330	6,065.658	0.430	6,162.290	0.530	6,258.923	0.630	6,355.556	0.730	6,452.188	0.830	6,548.821	0.930	6,645.453
0.031	5,776.726	0.131	5,873.359	0.231	5,969.992	0.331	6,066.624	0.431	6,163.257	0.531	6,259.889	0.631	6,356.522	0.731	6,453.154	0.831	6,549.787	0.931	6,646.420
0.032	5,777.693	0.132	5,874.325	0.232	5,970.958	0.332	6,067.591	0.432	6,164.223	0.532	6,260.856	0.632	6,357.488	0.732	6,454.121	0.832	6,550.753	0.932	6,647.386
0.033	5,778.659	0.133	5,875.292	0.233	5,971.924	0.333	6,068.557	0.433	6,165.189	0.533	6,261.822	0.633	6,358.455	0.733	6,455.087	0.833	6,551.720	0.933	6,648.352
0.034	5,779.625	0.134	5,876.258	0.234	5,972.891	0.334	6,069.523	0.434	6,166.156	0.534	6,262.788	0.634	6,359.421	0.734	6,456.053	0.834	6,552.686	0.934	6,649.319
0.035	5,780.592	0.135	5,877.224	0.235	5,973.857	0.335	6,070.489	0.435	6,167.122	0.535	6,263.755	0.635	6,360.387	0.735	6,457.020	0.835	6,553.652	0.935	6,650.285
0.036	5,781.558	0.136	5,878.191	0.236	5,974.823	0.336	6,071.456	0.436	6,168.088	0.536	6,264.721	0.636	6,361.354	0.736	6,457.986	0.836	6,554.619	0.936	6,651.251
0.037	5,782.524	0.137	5,879.157	0.237	5,975.790	0.337	6,072.422	0.437	6,169.055	0.537	6,265.687	0.637	6,362.320	0.737	6,458.952	0.837	6,555.585	0.937	6,652.218
0.038	5,783.491	0.138	5,880.123	0.238	5,976.756	0.338	6,073.388	0.438	6,170.021	0.538	6,266.654	0.638	6,363.286	0.738	6,459.919	0.838	6,556.551	0.938	6,653.184
0.039	5,784.457	0.139	5,881.090	0.239	5,977.722	0.339	6,074.355	0.439	6,170.987	0.539	6,267.620	0.639	6,364.252	0.739	6,460.885	0.839	6,557.518	0.939	6,654.150
0.040	5,785.423	0.140	5,882.056	0.240	5,978.689	0.340	6,075.321	0.440	6,171.954	0.540	6,268.586	0.640	6,365.219	0.740	6,461.851	0.840	6,558.484	0.940	6,655.117
0.041	5,786.390	0.141	5,883.022	0.241	5,979.655	0.341	6,076.287	0.441	6,172.920	0.541	6,269.553	0.641	6,366.185	0.741	6,462.818	0.841	6,559.450	0.941	6,656.083
0.042	5,787.356	0.142	5,883.989	0.242	5,980.621	0.342	6,077.254	0.442	6,173.886	0.542	6,270.519	0.642	6,367.151	0.742	6,463.784	0.842	6,560.417	0.942	6,657.049
0.043	5,788.322	0.143	5,884.955	0.243	5,981.588	0.343	6,078.220	0.443	6,174.853	0.543	6,271.485	0.643	6,368.118	0.743	6,464.750	0.843	6,561.383	0.943	6,658.016
0.044	5,789.289	0.144	5,885.921	0.244	5,982.554	0.344	6,079.186	0.444	6,175.819	0.544	6,272.452	0.644	6,369.084	0.744	6,465.717	0.844	6,562.349	0.944	6,658.982
0.045	5,790.255	0.145	5,886.888	0.245	5,983.520	0.345	6,080.153	0.445	6,176.785	0.545	6,273.418	0.645	6,370.050	0.745	6,466.683	0.845	6,563.316	0.945	6,659.948
0.046	5,791.221	0.146	5,887.854	0.246	5,984.486	0.346	6,081.119	0.446	6,177.752	0.546	6,274.384	0.646	6,371.017	0.746	6,467.649	0.846	6,564.282	0.946	6,660.914
0.047	5,792.188	0.147	5,888.820	0.247	5,985.453	0.347	6,082.085	0.447	6,178.718	0.547	6,275.351	0.647	6,371.983	0.747	6,468.616	0.847	6,565.248	0.947	6,661.881
0.048	5,793.154	0.148	5,889.787	0.248	5,986.419	0.348	6,083.052	0.448	6,179.684	0.548	6,276.317	0.648	6,372.949	0.748	6,469.582	0.848	6,566.215	0.948	6,662.847
0.049	5,794.120	0.149	5,890.753	0.249	5,987.385	0.349	6,084.018	0.449	6,180.651	0.549	6,277.283	0.649	6,373.916	0.749	6,470.548	0.849	6,567.181	0.949	6,663.813
0.050	5,795.087	0.150	5,891.719	0.250	5,988.352	0.350	6,084.984	0.450	6,181.617	0.550	6,278.250	0.650	6,374.882	0.750	6,471.515	0.850	6,568.147	0.950	6,664.780
0.051	5,796.053	0.151	5,892.686	0.251	5,989.318	0.351	6,085.951	0.451	6,182.583	0.551	6,279.216	0.651	6,375.848	0.751	6,472.481	0.851	6,569.114	0.951	6,665.746
0.052	5,797.019	0.152	5,893.652	0.252	5,990.284	0.352	6,086.917	0.452	6,183.550	0.552	6,280.182	0.652	6,376.815	0.752	6,473.447	0.852	6,570.080	0.952	6,666.712
0.053	5,797.986	0.153	5,894.618	0.253	5,991.251	0.353	6,087.883	0.453	6,184.516	0.553	6,281.148	0.653	6,377.781	0.753	6,474.414	0.853	6,571.046	0.953	6,667.679
0.054	5,798.952	0.154	5,895.585	0.254	5,992.217	0.354	6,088.850	0.454	6,185.482	0.554	6,282.115	0.654	6,378.747	0.754	6,475.380	0.854	6,572.013	0.954	6,668.645
0.055	5,799.918	0.155	5,896.551	0.255	5,993.183	0.355	6,089.816	0.455	6,186.449	0.555	6,283.081	0.655	6,379.714	0.755	6,476.346	0.855	6,572.979	0.955	6,669.611
0.056	5,800.885	0.156	5,897.517	0.256	5,994.150	0.356	6,090.782	0.456	6,187.415	0.556	6,284.047	0.656	6,380.680	0.756	6,477.313	0.856	6,573.945	0.956	6,670.578
0.057	5,801.851	0.157	5,898.484	0.257	5,995.116	0.357	6,091.749	0.457	6,188.381	0.557	6,285.014	0.657	6,381.646	0.757	6,478.279	0.857	6,574.911	0.957	6,671.544
0.058	5,802.817	0.158	5,899.450	0.258	5,996.082	0.358	6,092.715	0.458	6,189.348	0.558	6,285.980	0.658	6,382.613	0.758	6,479.245	0.858	6,575.878	0.958	6,672.510
0.059	5,803.784	0.159	5,900.416	0.259	5,997.049	0.359	6,093.681	0.459	6,190.314	0.559	6,286.946	0.659	6,383.579	0.759	6,480.212	0.859	6,576.844	0.959	6,673.477
0.060	5,804.750	0.160	5,901.382	0.260	5,998.015	0.360	6,094.648	0.460	6,191.280	0.560	6,287.913	0.660	6,384.545	0.760	6,481.178	0.860	6,577.810	0.960	6,674.443
0.061	5,805.716	0.161	5,902.349	0.261	5,998.981	0.361	6,095.614	0.461	6,192.247	0.561	6,288.879	0.661	6,385.512	0.761	6,482.144	0.861	6,578.777	0.961	6,675.409
0.062	5,806.683	0.162	5,903.315	0.262	5,999.948	0.362	6,096.580	0.462	6,193.213	0.562	6,289.845	0.662	6,386.478	0.762	6,483.111	0.862	6,579.743	0.962	6,676.376
0.063	5,807.649	0.163	5,904.281	0.263	6,000.914	0.363	6,097.547	0.463	6,194.179	0.563	6,290.812	0.663	6,387.444	0.763	6,484.077	0.863	6,580.709	0.963	6,677.342
0.064	5,808.615	0.164	5,905.248	0.264	6,001.880	0.364	6,098.513	0.464	6,195.145	0.564	6,291.778	0.664	6,388.411	0.764	6,485.043	0.864	6,581.676	0.964	6,678.308
0.065	5,809.582	0.165	5,906.214	0.265	6,002.847	0.365	6,099.479	0.465	6,196.112	0.565	6,292.744	0.665	6,389.377	0.765	6,486.010	0.865	6,582.642	0.965	6,679.275
0.066	5,810.548	0.166	5,907.180	0.266	6,003.813	0.366	6,100.446	0.466	6,197.078	0.566	6,293.711	0.666	6,390.343	0.766	6,486.976	0.866	6,583.608	0.966	6,680.241
0.067	5,811.514	0.167	5,908.147	0.267	6,004.779	0.367	6,101.412	0.467	6,198.044	0.567	6,294.677	0.667	6,391.310	0.767	6,487.942	0.867	6,584.575	0.967	6,681.207
0.068	5,812.481	0.168	5,909.113	0.268	6,005.746	0.368	6,102.378	0.468	6,199.011	0.568	6,295.643	0.668	6,392.276	0.768	6,488.909	0.868	6,585.541	0.968	6,682.174
0.069	5,813.447	0.169	5,910.079	0.269	6,006.712	0.369	6,103.345	0.469	6,199.977	0.569	6,296.610	0.669	6,393.242	0.769	6,489.875	0.869	6,586.507	0.969	6,683.140
0.070	5,814.413	0.170	5,911.046	0.270	6,007.678	0.370	6,104.311	0.470	6,200.943	0.570	6,297.576	0.670	6,394.209	0.770	6,490.841	0.870	6,587.474	0.970	6,684.106
0.071	5,815.379	0.171	5,912.012	0.271	6,008.645	0.371	6,105.277	0.471	6,201.910	0.571	6,298.542	0.671	6,395.175	0.771	6,491.807	0.871	6,588.440	0.971	6,685.073
0.072	5,816.346	0.172	5,912.978	0.272	6,009.611	0.372	6,106.244	0.472	6,202.876	0.572	6,299.509	0.672	6,396.141	0.772	6,492.774	0.872	6,589.406	0.972	6,686.039
0.073	5,817.312	0.173	5,913.945	0.273	6,010.577	0.373	6,107.210	0.473	6,203.842	0.573	6,300.475	0.673	6,397.108	0.773	6,493.740	0.873	6,590.373	0.973	6,687.005
0.074	5,818.278	0.174	5,914.911	0.274	6,011.544	0.374	6,108.176	0.474	6,204.809	0.574	6,301.441	0.674	6,398.074	0.774	6,494.706	0.874	6,591.339	0.974	6,687.972
0.075	5,819.245	0.175	5,915.877	0.275	6,012.510	0.375	6,109.143	0.475	6,205.775	0.575	6,302.408	0.675	6,399.040	0.775	6,495.673	0.875	6,592.305	0.975	6,688.938
0.076	5,820.211	0.176	5,916.844	0.276	6,013.476	0.376	6,110.109	0.476	6,206.741	0.576	6,303.374	0.676	6,400.007	0.776	6,496.639	0.876	6,593.272	0.976	6,689.904
0.077	5,821.177	0.177	5,917.810	0.277	6,014.443	0.377	6,111.075	0.477	6,207.708	0.577	6,304.340	0.677	6,400.973	0.777	6,497.605	0.877	6,594.238	0.977	6,690.871
0.078	5,822.144	0.178	5,918.776	0.278	6,015.409	0.378	6,112.041	0.478	6,208.674	0.578	6,305.307	0.678	6,401.939	0.778	6,498.572	0.878	6,595.204	0.978	6,691.837
0.079	5,823.110	0.179	5,919.743	0.279	6,016.375	0.379	6,113.008	0.479	6,209.640	0.579	6,306.273	0.679	6,402.906	0.779	6,499.538	0.879	6,596.171	0.979	6,692.803
0.080	5,824.076	0.180	5,920.709	0.280	6,017.342	0.380	6,113.974	0.480	6,210.607	0.580	6,307.239	0.680	6,403.872	0.780	6,500.504	0.880	6,597.137	0.980	6,693.770
0.081	5,825.043	0.181	5,921.675	0.281	6,018.308	0.381	6,114.940	0.481	6,211.573	0.581	6,308.206	0.681	6,404.838	0.781	6,501.471	0.881	6,598.103	0.981	6,694.736
0.082	5,826.009	0.182	5,922.642	0.282	6,019.274	0.382	6,115.907	0.482	6,212.539	0.582	6,309.172	0.682	6,405.804	0.782	6,502.437	0.882	6,599.070	0.982	6,695.702
0.083	5,826.975	0.183	5,923.608	0.283	6,020.241	0.383	6,116.873	0.483	6,213.506	0.583	6,310.138	0.683	6,406.771	0.783	6,503.403	0.883	6,600.036	0.983	6,696.669
0.084	5,827.942	0.184	5,924.574	0.284	6,021.207	0.384	6,117.839	0.484	6,214.472	0.584	6,311.105	0.684	6,407.737	0.784	6,504.370	0.884	6,601.002	0.984	6,697.635
0.085	5,828.908	0.185	5,925.541	0.285	6,022.173	0.385	6,118.806	0.485	6,215.438	0.585	6,312.071	0.685	6,408.703	0.785	6,505.336	0.885	6,601.969	0.985	6,698.601
0.086	5,829.874	0.186	5,926.507	0.286	6,023.140	0.386	6,119.772	0.486	6,216.405	0.586	6,313.037	0.686	6,409.670	0.786	6,506.302	0.886	6,602.935	0.986	6,699.568
0.087	5,830.841	0.187	5,927.473	0.287	6,024.106	0.387	6,120.738	0.487	6,217.371	0.587	6,314.004	0.687	6,410.636	0.787	6,507.269	0.887	6,603.901	0.987	6,700.534
0.088	5,831.807	0.188	5,928.440	0.288	6,025.072	0.388	6,121.705	0.488	6,218.337	0.588	6,314.970	0.688	6,411.602	0.788	6,508.235	0.888	6,604.868	0.988	6,701.500
0.089	5,832.773	0.189	5,929.406	0.289	6,026.038	0.389	6,122.671	0.489	6,219.304	0.589	6,315.936	0.689	6,412.569	0.789	6,509.201	0.889	6,605.834	0.989	6,702.466
0.090	5,833.740	0.190	5,930.372	0.290	6,027.005	0.390	6,123.637	0.490	6,220.270	0.590	6,316.903	0.690	6,413.535	0.790	6,510.168	0.890	6,606.800	0.990	6,703.433
0.091	5,834.706	0.191	5,931.339	0.291	6,027.971	0.391	6,124.604	0.491	6,221.236	0.591	6,317.869	0.691	6,414.501	0.791	6,511.134	0.891	6,607.767	0.991	6,704.399
0.092	5,835.672	0.192	5,932.305	0.292	6,028.937	0.392	6,125.570	0.492	6,222.203	0.592	6,318.835	0.692	6,415.468	0.792	6,512.100	0.892	6,608.733	0.992	6,705.365
0.093	5,836.639	0.193	5,933.271	0.293	6,029.904	0.393	6,126.536	0.493	6,223.169	0.593	6,319.802	0.693	6,416.434	0.793	6,513.067	0.893	6,609.699	0.993	6,706.332
0.094	5,837.605	0.194	5,934.238	0.294	6,030.870	0.394	6,127.503	0.494	6,224.135	0.594	6,320.768	0.694	6,417.400	0.794	6,514.033	0.894	6,610.666	0.994	6,707.298
0.095	5,838.571	0.195	5,935.204	0.295	6,031.836	0.395	6,128.469	0.495	6,225.102	0.595	6,321.734	0.695	6,418.367	0.795	6,514.999	0.895	6,611.632	0.995	6,708.264
0.096	5,839.538	0.196	5,936.170	0.296	6,032.803	0.396	6,129.435	0.496	6,226.068	0.596	6,322.700	0.696	6,419.333	0.796	6,515.966	0.896	6,612.598	0.996	6,709.231
0.097	5,840.504	0.197	5,937.137	0.297	6,033.769	0.397	6,130.402	0.497	6,227.034	0.597	6,323.667	0.697	6,420.299	0.797	6,516.932	0.897	6,613.565	0.997	6,710.197
0.098	5,841.470	0.198	5,938.103	0.298	6,034.735	0.398	6,131.368	0.498	6,228.001	0.598	6,324.633	0.698	6,421.266	0.798	6,517.898	0.898	6,614.531	0.998	6,711.163
0.099	5,842.437	0.199	5,939.069	0.299	6,035.702	0.399	6,132.334	0.499	6,228.967	0.599	6,325.599	0.699	6,422.232	0.799	6,518.865	0.899	6,615.497	0.999	6,712.130

DATE STRAPPED: 09/19/17 BY: RJ
DATE COMPUTED: 09/26/17 BY: WLH
DATE ISSUED: 09/26/17

AMSPEC

Meliadine
Rankin Inlet
Item 20 - Final - Data Sheet (Innage)

Tank No. 2
INNAGE TABLE

Calibration@AmSpecGroup.com

CAPACITIES GIVEN IN CUBIC METERS

GAUGE HEIGHT: 14.269 M

mm	7 M	mm	7 M	mm	7 M	mm	7 M	mm	7 M	mm	7 M	mm	7 M	mm	7 M	mm	7 M	mm	7 M
0.000	6,713.096	0.100	6,809.729	0.200	6,906.361	0.300	7,002.994	0.400	7,099.626	0.500	7,196.259	0.600	7,292.891	0.700	7,389.524	0.800	7,486.157	0.900	7,582.789
0.001	6,714.062	0.101	6,810.695	0.201	6,907.328	0.301	7,003.960	0.401	7,100.593	0.501	7,197.225	0.601	7,293.858	0.701	7,390.490	0.801	7,487.123	0.901	7,583.756
0.002	6,715.029	0.102	6,811.661	0.202	6,908.294	0.302	7,004.926	0.402	7,101.559	0.502	7,198.192	0.602	7,294.824	0.702	7,391.457	0.802	7,488.089	0.902	7,584.722
0.003	6,715.995	0.103	6,812.628	0.203	6,909.260	0.303	7,005.893	0.403	7,102.525	0.503	7,199.158	0.603	7,295.790	0.703	7,392.423	0.803	7,489.056	0.903	7,585.688
0.004	6,716.961	0.104	6,813.594	0.204	6,910.227	0.304	7,006.859	0.404	7,103.492	0.504	7,200.124	0.604	7,296.757	0.704	7,393.389	0.804	7,490.022	0.904	7,586.654
0.005	6,717.928	0.105	6,814.560	0.205	6,911.193	0.305	7,007.825	0.405	7,104.458	0.505	7,201.091	0.605	7,297.723	0.705	7,394.356	0.805	7,490.988	0.905	7,587.621
0.006	6,718.894	0.106	6,815.527	0.206	6,912.159	0.306	7,008.792	0.406	7,105.424	0.506	7,202.057	0.606	7,298.689	0.706	7,395.322	0.806	7,491.955	0.906	7,588.587
0.007	6,719.860	0.107	6,816.493	0.207	6,913.125	0.307	7,009.758	0.407	7,106.391	0.507	7,203.023	0.607	7,299.656	0.707	7,396.288	0.807	7,492.921	0.907	7,589.553
0.008	6,720.827	0.108	6,817.459	0.208	6,914.092	0.308	7,010.724	0.408	7,107.357	0.508	7,203.990	0.608	7,300.622	0.708	7,397.255	0.808	7,493.887	0.908	7,590.520
0.009	6,721.793	0.109	6,818.426	0.209	6,915.058	0.309	7,011.691	0.409	7,108.323	0.509	7,204.956	0.609	7,301.588	0.709	7,398.221	0.809	7,494.854	0.909	7,591.486
0.010	6,722.759	0.110	6,819.392	0.210	6,916.024	0.310	7,012.657	0.410	7,109.290	0.510	7,205.922	0.610	7,302.555	0.710	7,399.187	0.810	7,495.820	0.910	7,592.452
0.011	6,723.726	0.111	6,820.358	0.211	6,916.991	0.311	7,013.623	0.411	7,110.256	0.511	7,206.888	0.611	7,303.521	0.711	7,400.154	0.811	7,496.786	0.911	7,593.419
0.012	6,724.692	0.112	6,821.325	0.212	6,917.957	0.312	7,014.590	0.412	7,111.222	0.512	7,207.855	0.612	7,304.487	0.712	7,401.120	0.812	7,497.753	0.912	7,594.385
0.013	6,725.658	0.113	6,822.291	0.213	6,918.923	0.313	7,015.556	0.413	7,112.189	0.513	7,208.821	0.613	7,305.454	0.713	7,402.086	0.813	7,498.719	0.913	7,595.351
0.014	6,726.625	0.114	6,823.257	0.214	6,919.890	0.314	7,016.522	0.414	7,113.155	0.514	7,209.787	0.614	7,306.420	0.714	7,403.053	0.814	7,499.685	0.914	7,596.318
0.015	6,727.591	0.115	6,824.224	0.215	6,920.856	0.315	7,017.489	0.415	7,114.121	0.515	7,210.754	0.615	7,307.386	0.715	7,404.019	0.815	7,500.652	0.915	7,597.284
0.016	6,728.557	0.116	6,825.190	0.216	6,921.822	0.316	7,018.455	0.416	7,115.088	0.516	7,211.720	0.616	7,308.353	0.716	7,404.985	0.816	7,501.618	0.916	7,598.250
0.017	6,729.524	0.117	6,826.156	0.217	6,922.789	0.317	7,019.421	0.417	7,116.054	0.517	7,212.686	0.617	7,309.319	0.717	7,405.952	0.817	7,502.584	0.917	7,599.217
0.018	6,730.490	0.118	6,827.122	0.218	6,923.755	0.318	7,020.388	0.418	7,117.020	0.518	7,213.653	0.618	7,310.285	0.718	7,406.918	0.818	7,503.550	0.918	7,600.183
0.019	6,731.456	0.119	6,828.089	0.219	6,924.721	0.319	7,021.354	0.419	7,117.987	0.519	7,214.619	0.619	7,311.252	0.719	7,407.884	0.819	7,504.517	0.919	7,601.149
0.020	6,732.423	0.120	6,829.055	0.220	6,925.688	0.320	7,022.320	0.420	7,118.953	0.520	7,215.585	0.620	7,312.218	0.720	7,408.851	0.820	7,505.483	0.920	7,602.116
0.021	6,733.389	0.121	6,830.021	0.221	6,926.654	0.321	7,023.287	0.421	7,119.919	0.521	7,216.552	0.621	7,313.184	0.721	7,409.817	0.821	7,506.449	0.921	7,603.082
0.022	6,734.355	0.122	6,830.988	0.222	6,927.620	0.322	7,024.253	0.422	7,120.886	0.522	7,217.518	0.622	7,314.151	0.722	7,410.783	0.822	7,507.416	0.922	7,604.048
0.023	6,735.322	0.123	6,831.954	0.223	6,928.587	0.323	7,025.219	0.423	7,121.852	0.523	7,218.484	0.623	7,315.117	0.723	7,411.750	0.823	7,508.382	0.923	7,605.015
0.024	6,736.288	0.124	6,832.920	0.224	6,929.553	0.324	7,026.186	0.424	7,122.818	0.524	7,219.451	0.624	7,316.083	0.724	7,412.716	0.824	7,509.348	0.924	7,605.981
0.025	6,737.254	0.125	6,833.887	0.225	6,930.519	0.325	7,027.152	0.425	7,123.784	0.525	7,220.417	0.625	7,317.050	0.725	7,413.682	0.825	7,510.315	0.925	7,606.947
0.026	6,738.221	0.126	6,834.853	0.226	6,931.486	0.326	7,028.118	0.426	7,124.751	0.526	7,221.383	0.626	7,318.016	0.726	7,414.649	0.826	7,511.281	0.926	7,607.914
0.027	6,739.187	0.127	6,835.819	0.227	6,932.452	0.327	7,029.085	0.427	7,125.717	0.527	7,222.350	0.627	7,318.982	0.727	7,415.615	0.827	7,512.247	0.927	7,608.880
0.028	6,740.153	0.128	6,836.786	0.228	6,933.418	0.328	7,030.051	0.428	7,126.683	0.528	7,223.316	0.628	7,319.949	0.728	7,416.581	0.828	7,513.214	0.928	7,609.846
0.029	6,741.120	0.129	6,837.752	0.229	6,934.385	0.329	7,031.017	0.429	7,127.650	0.529	7,224.282	0.629	7,320.915	0.729	7,417.547	0.829	7,514.180	0.929	7,610.813
0.030	6,742.086	0.130	6,838.718	0.230	6,935.351	0.330	7,031.984	0.430	7,128.616	0.530	7,225.249	0.630	7,321.881	0.730	7,418.514	0.830	7,515.146	0.930	7,611.779
0.031	6,743.052	0.131	6,839.685	0.231	6,936.317	0.331	7,032.950	0.431	7,129.582	0.531	7,226.215	0.631	7,322.848	0.731	7,419.480	0.831	7,516.113	0.931	7,612.745
0.032	6,744.018	0.132	6,840.651	0.232	6,937.284	0.332	7,033.916	0.432	7,130.549	0.532	7,227.181	0.632	7,323.814	0.732	7,420.446	0.832	7,517.079	0.932	7,613.712
0.033	6,744.985	0.133	6,841.617	0.233	6,938.250	0.333	7,034.883	0.433	7,131.515	0.533	7,228.148	0.633	7,324.780	0.733	7,421.413	0.833	7,518.045	0.933	7,614.678
0.034	6,745.951	0.134	6,842.584	0.234	6,939.216	0.334	7,035.849	0.434	7,132.481	0.534	7,229.114	0.634	7,325.747	0.734	7,422.379	0.834	7,519.012	0.934	7,615.644
0.035	6,746.917	0.135	6,843.550	0.235	6,940.183	0.335	7,036.815	0.435	7,133.448	0.535	7,230.080	0.635	7,326.713	0.735	7,423.345	0.835	7,519.978	0.935	7,616.611
0.036	6,747.884	0.136	6,844.516	0.236	6,941.149	0.336	7,037.781	0.436	7,134.414	0.536	7,231.047	0.636	7,327.679	0.736	7,424.312	0.836	7,520.944	0.936	7,617.577
0.037	6,748.850	0.137	6,845.483	0.237	6,942.115	0.337	7,038.748	0.437	7,135.380	0.537	7,232.013	0.637	7,328.646	0.737	7,425.278	0.837	7,521.911	0.937	7,618.543
0.038	6,749.816	0.138	6,846.449	0.238	6,943.082	0.338	7,039.714	0.438	7,136.347	0.538	7,232.979	0.638	7,329.612	0.738	7,426.244	0.838	7,522.877	0.938	7,619.510
0.039	6,750.783	0.139	6,847.415	0.239	6,944.048	0.339	7,040.680	0.439	7,137.313	0.539	7,233.946	0.639	7,330.578	0.739	7,427.211	0.839	7,523.843	0.939	7,620.476
0.040	6,751.749	0.140	6,848.382	0.240	6,945.014	0.340	7,041.647	0.440	7,138.279	0.540	7,234.912	0.640	7,331.545	0.740	7,428.177	0.840	7,524.810	0.940	7,621.442
0.041	6,752.715	0.141	6,849.348	0.241	6,945.981	0.341	7,042.613	0.441	7,139.246	0.541	7,235.878	0.641	7,332.511	0.741	7,429.143	0.841	7,525.776	0.941	7,622.409
0.042	6,753.682	0.142	6,850.314	0.242	6,946.947	0.342	7,043.579	0.442	7,140.212	0.542	7,236.845	0.642	7,333.477	0.742	7,430.110	0.842	7,526.742	0.942	7,623.375
0.043	6,754.648	0.143	6,851.281	0.243	6,947.913	0.343	7,044.546	0.443	7,141.178	0.543	7,237.811	0.643	7,334.443	0.743	7,431.076	0.843	7,527.709	0.943	7,624.341
0.044	6,755.614	0.144	6,852.247	0.244	6,948.880	0.344	7,045.512	0.444	7,142.145	0.544	7,238.777	0.644	7,335.410	0.744	7,432.042	0.844	7,528.675	0.944	7,625.308
0.045	6,756.581	0.145	6,853.213	0.245	6,949.846	0.345	7,046.478	0.445	7,143.111	0.545	7,239.744	0.645	7,336.376	0.745	7,433.009	0.845	7,529.641	0.945	7,626.274
0.046	6,757.547	0.146	6,854.180	0.246	6,950.812	0.346	7,047.445	0.446	7,144.077	0.546	7,240.710	0.646	7,337.342	0.746	7,433.975	0.846	7,530.608	0.946	7,627.240
0.047	6,758.513	0.147	6,855.146	0.247	6,951.779	0.347	7,048.411	0.447	7,145.044	0.547	7,241.676	0.647	7,338.309	0.747	7,434.941	0.847	7,531.574	0.947	7,628.206
0.048	6,759.480	0.148	6,856.112	0.248	6,952.745	0.348	7,049.377	0.448	7,146.010	0.548	7,242.643	0.648	7,339.275	0.748	7,435.908	0.848	7,532.540	0.948	7,629.173
0.049	6,760.446	0.149	6,857.079	0.249	6,953.711	0.349	7,050.344	0.449	7,146.976	0.549	7,243.609	0.649	7,340.241	0.749	7,436.874	0.849	7,533.507	0.949	7,630.139
0.050	6,761.412	0.150	6,858.045	0.250	6,954.677	0.350	7,051.310	0.450	7,147.943	0.550	7,244.575	0.650	7,341.208	0.750	7,437.840	0.850	7,534.473	0.950	7,631.105
0.051	6,762.379	0.151	6,859.011	0.251	6,955.644	0.351	7,052.276	0.451	7,148.909	0.551	7,245.542	0.651	7,342.174	0.751	7,438.807	0.851	7,535.439	0.951	7,632.072
0.052	6,763.345	0.152	6,859.978	0.252	6,956.610	0.352	7,053.243	0.452	7,149.875	0.552	7,246.508	0.652	7,343.140	0.752	7,439.773	0.852	7,536.406	0.952	7,633.038
0.053	6,764.311	0.153	6,860.944	0.253	6,957.576	0.353	7,054.209	0.453	7,150.842	0.553	7,247.474	0.653	7,344.107	0.753	7,440.739	0.853	7,537.372	0.953	7,634.004
0.054	6,765.278	0.154	6,861.910	0.254	6,958.543	0.354	7,055.175	0.454	7,151.808	0.554	7,248.440	0.654	7,345.073	0.754	7,441.706	0.854	7,538.338	0.954	7,634.971
0.055	6,766.244	0.155	6,862.877	0.255	6,959.509	0.355	7,056.142	0.455	7,152.774	0.555	7,249.407	0.655	7,346.039	0.755	7,442.672	0.855	7,539.305	0.955	7,635.937
0.056	6,767.210	0.156	6,863.843	0.256	6,960.475	0.356	7,057.108	0.456	7,153.741	0.556	7,250.373	0.656	7,347.006	0.756	7,443.638	0.856	7,540.271	0.956	7,636.903
0.057	6,768.177	0.157	6,864.809	0.257	6,961.442	0.357	7,058.074	0.457	7,154.707	0.557	7,251.339	0.657	7,347.972	0.757	7,444.605	0.857	7,541.237	0.957	7,637.870
0.058	6,769.143	0.158	6,865.776	0.258	6,962.408	0.358	7,059.041	0.458	7,155.673	0.558	7,252.306	0.658	7,348.938	0.758	7,445.571	0.858	7,542.204	0.958	7,638.836
0.059	6,770.109	0.159	6,866.742	0.259	6,963.374	0.359	7,060.007	0.459	7,156.640	0.559	7,253.272	0.659	7,349.905	0.759	7,446.537	0.859	7,543.170	0.959	7,639.802
0.060	6,771.076	0.160	6,867.708	0.260	6,964.341	0.360	7,060.973	0.460	7,157.606	0.560	7,254.238	0.660	7,350.871	0.760	7,447.504	0.860	7,544.136	0.960	7,640.769
0.061	6,772.042	0.161	6,868.675	0.261	6,965.307	0.361	7,061.940	0.461	7,158.572	0.561	7,255.205	0.661	7,351.837	0.761	7,448.470	0.861	7,545.102	0.961	7,641.735
0.062	6,773.008	0.162	6,869.641	0.262	6,966.273	0.362	7,062.906	0.462	7,159.539	0.562	7,256.171	0.662	7,352.804	0.762	7,449.436	0.862	7,546.069	0.962	7,642.701
0.063	6,773.975	0.163	6,870.607	0.263	6,967.240	0.363	7,063.872	0.463	7,160.505	0.563	7,257.137	0.663	7,353.770	0.763	7,450.403	0.863	7,547.035	0.963	7,643.668
0.064	6,774.941	0.164	6,871.573	0.264	6,968.206	0.364	7,064.839	0.464	7,161.471	0.564	7,258.104	0.664	7,354.736	0.764	7,451.369	0.864	7,548.001	0.964	7,644.634
0.065	6,775.907	0.165	6,872.540	0.265	6,969.172	0.365	7,065.805	0.465	7,162.438	0.565	7,259.070	0.665	7,355.703	0.765	7,452.335	0.865	7,548.968	0.965	7,645.600
0.066	6,776.874	0.166	6,873.506	0.266	6,970.139	0.366	7,066.771	0.466	7,163.404	0.566	7,260.036	0.666	7,356.669	0.766	7,453.302	0.866	7,549.934	0.966	7,646.567
0.067	6,777.840	0.167	6,874.472	0.267	6,971.105	0.367	7,067.738	0.467	7,164.370	0.567	7,261.003	0.667	7,357.635	0.767	7,454.268	0.867	7,550.900	0.967	7,647.533
0.068	6,778.806	0.168	6,875.439	0.268	6,972.071	0.368	7,068.704	0.468	7,165.336	0.568	7,261.969	0.668	7,358.602	0.768	7,455.234	0.868	7,551.867	0.968	7,648.499
0.069	6,779.773	0.169	6,876.405	0.269	6,973.038	0.369	7,069.670	0.469	7,166.303	0.569	7,262.935	0.669	7,359.568	0.769	7,456.201	0.869	7,552.833	0.969	7,649.466
0.070	6,780.739	0.170	6,877.371	0.270	6,974.004	0.370	7,070.637	0.470	7,167.269	0.570	7,263.902	0.670	7,360.534	0.770	7,457.167	0.870	7,553.799	0.970	7,650.432
0.071	6,781.705	0.171	6,878.338	0.271	6,974.970	0.371	7,071.603	0.471	7,168.235	0.571	7,264.868	0.671	7,361.501	0.771	7,458.133	0.871	7,554.766	0.971	7,651.398
0.072	6,782.672	0.172	6,879.304	0.272	6,975.937	0.372	7,072.569	0.472	7,169.202	0.572	7,265.834	0.672	7,362.467	0.772	7,459.100	0.872	7,555.732	0.972	7,652.365
0.073	6,783.638	0.173	6,880.270	0.273	6,976.903	0.373	7,073.536	0.473	7,170.168	0.573	7,266.801	0.673	7,363.433	0.773	7,460.066	0.873	7,556.698	0.973	7,653.331
0.074	6,784.604	0.174	6,881.237	0.274	6,977.869	0.374	7,074.502	0.474	7,171.134	0.574	7,267.767	0.674	7,364.400	0.774	7,461.032	0.874	7,557.665	0.974	7,654.297
0.075	6,785.570	0.175	6,882.203	0.275	6,978.836	0.375	7,075.468	0.475	7,172.101	0.575	7,268.733	0.675	7,365.366	0.775	7,461.998	0.875	7,558.631	0.975	7,655.264
0.076	6,786.537	0.176	6,883.169	0.276	6,979.802	0.376	7,076.435	0.476	7,173.067	0.576	7,269.700	0.676	7,366.332	0.776	7,462.965	0.876	7,559.597	0.976	7,656.230
0.077	6,787.503	0.177	6,884.136	0.277	6,980.768	0.377	7,077.401	0.477	7,174.033	0.577	7,270.666	0.677	7,367.299	0.777	7,463.931	0.877	7,560.564	0.977	7,657.196
0.078	6,788.469	0.178	6,885.102	0.278	6,981.735	0.378	7,078.367	0.478	7,175.000	0.578	7,271.632	0.678	7,368.265	0.778	7,464.897	0.878	7,561.530	0.978	7,658.163
0.079	6,789.436	0.179	6,886.068	0.279	6,982.701	0.379	7,079.334	0.479	7,175.966	0.579	7,272.599	0.679	7,369.231	0.779	7,465.864	0.879	7,562.496	0.979	7,659.129
0.080	6,790.402	0.180	6,887.035	0.280	6,983.667	0.380	7,080.300	0.480	7,176.932	0.580	7,273.565	0.680	7,370.198	0.780	7,466.830	0.880	7,563.463	0.980	7,660.095
0.081	6,791.368	0.181	6,888.001	0.281	6,984.634	0.381	7,081.266	0.481	7,177.899	0.581	7,274.531	0.681	7,371.164	0.781	7,467.796	0.881	7,564.429	0.981	7,661.062
0.082	6,792.335	0.182	6,888.967	0.282	6,985.600	0.382	7,082.232	0.482	7,178.865	0.582	7,275.498	0.682	7,372.130	0.782	7,468.763	0.882	7,565.395	0.982	7,662.028
0.083	6,793.301	0.183	6,889.934	0.283	6,986.566	0.383	7,083.199	0.483	7,179.831	0.583	7,276.464	0.683	7,373.097	0.783	7,469.729	0.883	7,566.362	0.983	7,662.994
0.084	6,794.267	0.184	6,890.900	0.284	6,987.533	0.384	7,084.165	0.484	7,180.798	0.584	7,277.430	0.684	7,374.063	0.784	7,470.695	0.884	7,567.328	0.984	7,663.961
0.085	6,795.234	0.185	6,891.866	0.285	6,988.499	0.385	7,085.131	0.485	7,181.764	0.585	7,278.397	0.685	7,375.029	0.785	7,471.662	0.885	7,568.294	0.985	7,664.927
0.086	6,796.200	0.186	6,892.833	0.286	6,989.465	0.386	7,086.098	0.486	7,182.730	0.586	7,279.363	0.686	7,375.995	0.786	7,472.628	0.886	7,569.261	0.986	7,665.893
0.087	6,797.166	0.187	6,893.799	0.287	6,990.432	0.387	7,087.064	0.487	7,183.697	0.587	7,280.329	0.687	7,376.962	0.787	7,473.594	0.887	7,570.227	0.987	7,666.860
0.088	6,798.133	0.188	6,894.765	0.288	6,991.398	0.388	7,088.030	0.488	7,184.663	0.588	7,281.296	0.688	7,377.928	0.788	7,474.561	0.888	7,571.193	0.988	7,667.826
0.089	6,799.099	0.189	6,895.732	0.289	6,992.364	0.389	7,088.997	0.489	7,185.629	0.589	7,282.262	0.689	7,378.894	0.789	7,475.527	0.889	7,572.160	0.989	7,668.792
0.090	6,800.065	0.190	6,896.698	0.290	6,993.331	0.390	7,089.963	0.490	7,186.596	0.590	7,283.228	0.690	7,379.861	0.790	7,476.493	0.890	7,573.126	0.990	7,669.759
0.091	6,801.032	0.191	6,897.664	0.291	6,994.297	0.391	7,090.929	0.491	7,187.562	0.591	7,284.195	0.691	7,380.827	0.791	7,477.460	0.891	7,574.092	0.991	7,670.725
0.092	6,801.998	0.192	6,898.631	0.292	6,995.263	0.392	7,091.896	0.492	7,188.528	0.592	7,285.161	0.692	7,381.793	0.792	7,478.426	0.892	7,575.059	0.992	7,671.691
0.093	6,802.964	0.193	6,899.597	0.293	6,996.229	0.393	7,092.862	0.493	7,189.495	0.593	7,286.127	0.693	7,382.760	0.793	7,479.392	0.893	7,576.025	0.993	7,672.657
0.094	6,803.931	0.194	6,900.563	0.294	6,997.196	0.394	7,093.828	0.494	7,190.461	0.594	7,287.094	0.694	7,383.726	0.794	7,480.359	0.894	7,576.991	0.994	7,673.624
0.095	6,804.897	0.195	6,901.530	0.295	6,998.162	0.395	7,094.795	0.495	7,191.427	0.595	7,288.060	0.695	7,384.692	0.795	7,481.325	0.895	7,577.958	0.995	7,674.590
0.096	6,805.863	0.196	6,902.496	0.296	6,999.128	0.396	7,095.761	0.496	7,192.394	0.596	7,289.026	0.696	7,385.659	0.796	7,482.291	0.896	7,578.924	0.996	7,675.556
0.097	6,806.830	0.197	6,903.462	0.297	7,000.095	0.397	7,096.727	0.497	7,193.360	0.597	7,289.993	0.697	7,386.625	0.797	7,483.258	0.897	7,579.890	0.997	7,676.523
0.098	6,807.796	0.198	6,904.429	0.298	7,001.061	0.398	7,097.694	0.498	7,194.326	0.598	7,290.959	0.698	7,387.591	0.798	7,484.224	0.898	7,580.857	0.998	7,677.489
0.099	6,808.762	0.199	6,905.395	0.299	7,002.027	0.399	7,098.660	0.499	7,195.293	0.599	7,291.925	0.699	7,388.558	0.799	7,485.190	0.899	7,581.823	0.999	7,678.455

DATE STRAPPED: 09/19/17 BY: RJ
DATE COMPUTED: 09/26/17 BY: WLH
DATE ISSUED: 09/26/17

AMSPEC

Meliadine
Rankin Inlet
Item 20 - Final - Data Sheet (Innage)

Tank No. 2
INNAGE TABLE

Calibration@AmSpecGroup.com

CAPACITIES GIVEN IN CUBIC METERS

GAUGE HEIGHT: 14.269 M

mm	8 M	mm	8 M	mm	8 M	mm	8 M	mm	8 M	mm	8 M	mm	8 M	mm	8 M	mm	8 M	mm	8 M
0.000	7,679.422	0.100	7,776.054	0.200	7,872.687	0.300	7,969.319	0.400	8,065.973	0.500	8,162.657	0.600	8,259.342	0.700	8,356.027	0.800	8,452.711	0.900	8,549.396
0.001	7,680.388	0.101	7,777.021	0.201	7,873.653	0.301	7,970.286	0.401	8,066.939	0.501	8,163.624	0.601	8,260.309	0.701	8,356.993	0.801	8,453.678	0.901	8,550.363
0.002	7,681.354	0.102	7,777.987	0.202	7,874.620	0.302	7,971.252	0.402	8,067.906	0.502	8,164.591	0.602	8,261.276	0.702	8,357.960	0.802	8,454.645	0.902	8,551.330
0.003	7,682.321	0.103	7,778.953	0.203	7,875.586	0.303	7,972.218	0.403	8,068.873	0.503	8,165.558	0.603	8,262.242	0.703	8,358.927	0.803	8,455.612	0.903	8,552.296
0.004	7,683.287	0.104	7,779.920	0.204	7,876.552	0.304	7,973.185	0.404	8,069.840	0.504	8,166.525	0.604	8,263.209	0.704	8,359.894	0.804	8,456.579	0.904	8,553.263
0.005	7,684.253	0.105	7,780.886	0.205	7,877.519	0.305	7,974.151	0.405	8,070.807	0.505	8,167.491	0.605	8,264.176	0.705	8,360.861	0.805	8,457.545	0.905	8,554.230
0.006	7,685.220	0.106	7,781.852	0.206	7,878.485	0.306	7,975.117	0.406	8,071.774	0.506	8,168.458	0.606	8,265.143	0.706	8,361.828	0.806	8,458.512	0.906	8,555.197
0.007	7,686.186	0.107	7,782.819	0.207	7,879.451	0.307	7,976.084	0.407	8,072.741	0.507	8,169.425	0.607	8,266.110	0.707	8,362.794	0.807	8,459.479	0.907	8,556.164
0.008	7,687.152	0.108	7,783.785	0.208	7,880.418	0.308	7,977.050	0.408	8,073.707	0.508	8,170.392	0.608	8,267.077	0.708	8,363.761	0.808	8,460.446	0.908	8,557.131
0.009	7,688.119	0.109	7,784.751	0.209	7,881.384	0.309	7,978.016	0.409	8,074.674	0.509	8,171.359	0.609	8,268.044	0.709	8,364.728	0.809	8,461.413	0.909	8,558.097
0.010	7,689.085	0.110	7,785.718	0.210	7,882.350	0.310	7,978.983	0.410	8,075.641	0.510	8,172.326	0.610	8,269.010	0.710	8,365.695	0.810	8,462.380	0.910	8,559.064
0.011	7,690.051	0.111	7,786.684	0.211	7,883.316	0.311	7,979.949	0.411	8,076.608	0.511	8,173.293	0.611	8,269.977	0.711	8,366.662	0.811	8,463.347	0.911	8,560.031
0.012	7,691.018	0.112	7,787.650	0.212	7,884.283	0.312	7,980.915	0.412	8,077.575	0.512	8,174.259	0.612	8,270.944	0.712	8,367.629	0.812	8,464.313	0.912	8,560.998
0.013	7,691.984	0.113	7,788.617	0.213	7,885.249	0.313	7,981.882	0.413	8,078.542	0.513	8,175.226	0.613	8,271.911	0.713	8,368.596	0.813	8,465.280	0.913	8,561.965
0.014	7,692.950	0.114	7,789.583	0.214	7,886.215	0.314	7,982.848	0.414	8,079.508	0.514	8,176.193	0.614	8,272.878	0.714	8,369.562	0.814	8,466.247	0.914	8,562.932
0.015	7,693.917	0.115	7,790.549	0.215	7,887.182	0.315	7,983.814	0.415	8,080.475	0.515	8,177.160	0.615	8,273.845	0.715	8,370.529	0.815	8,467.214	0.915	8,563.899
0.016	7,694.883	0.116	7,791.516	0.216	7,888.148	0.316	7,984.781	0.416	8,081.442	0.516	8,178.127	0.616	8,274.811	0.716	8,371.496	0.816	8,468.181	0.916	8,564.865
0.017	7,695.849	0.117	7,792.482	0.217	7,889.114	0.317	7,985.747	0.417	8,082.409	0.517	8,179.094	0.617	8,275.778	0.717	8,372.463	0.817	8,469.148	0.917	8,565.832
0.018	7,696.816	0.118	7,793.448	0.218	7,890.081	0.318	7,986.713	0.418	8,083.376	0.518	8,180.060	0.618	8,276.745	0.718	8,373.430	0.818	8,470.114	0.918	8,566.799
0.019	7,697.782	0.119	7,794.415	0.219	7,891.047	0.319	7,987.680	0.419	8,084.343	0.519	8,181.027	0.619	8,277.712	0.719	8,374.397	0.819	8,471.081	0.919	8,567.766
0.020	7,698.748	0.120	7,795.381	0.220	7,892.013	0.320	7,988.646	0.420	8,085.310	0.520	8,181.994	0.620	8,278.679	0.720	8,375.363	0.820	8,472.048	0.920	8,568.733
0.021	7,699.715	0.121	7,796.347	0.221	7,892.980	0.321	7,989.612	0.421	8,086.276	0.521	8,182.961	0.621	8,279.646	0.721	8,376.330	0.821	8,473.015	0.921	8,569.700
0.022	7,700.681	0.122	7,797.313	0.222	7,893.946	0.322	7,990.579	0.422	8,087.243	0.522	8,183.928	0.622	8,280.613	0.722	8,377.297	0.822	8,473.982	0.922	8,570.666
0.023	7,701.647	0.123	7,798.280	0.223	7,894.912	0.323	7,991.545	0.423	8,088.210	0.523	8,184.895	0.623	8,281.579	0.723	8,378.264	0.823	8,474.949	0.923	8,571.633
0.024	7,702.614	0.124	7,799.246	0.224	7,895.879	0.324	7,992.511	0.424	8,089.177	0.524	8,185.862	0.624	8,282.546	0.724	8,379.231	0.824	8,475.916	0.924	8,572.600
0.025	7,703.580	0.125	7,800.212	0.225	7,896.845	0.325	7,993.478	0.425	8,090.144	0.525	8,186.828	0.625	8,283.513	0.725	8,380.198	0.825	8,476.882	0.925	8,573.567
0.026	7,704.546	0.126	7,801.179	0.226	7,897.811	0.326	7,994.444	0.426	8,091.111	0.526	8,187.795	0.626	8,284.480	0.726	8,381.165	0.826	8,477.849	0.926	8,574.534
0.027	7,705.513	0.127	7,802.145	0.227	7,898.778	0.327	7,995.410	0.427	8,092.077	0.527	8,188.762	0.627	8,285.447	0.727	8,382.131	0.827	8,478.816	0.927	8,575.501
0.028	7,706.479	0.128	7,803.111	0.228	7,899.744	0.328	7,996.377	0.428	8,093.044	0.528	8,189.729	0.628	8,286.414	0.728	8,383.098	0.828	8,479.783	0.928	8,576.468
0.029	7,707.445	0.129	7,804.078	0.229	7,900.710	0.329	7,997.343	0.429	8,094.011	0.529	8,190.696	0.629	8,287.380	0.729	8,384.065	0.829	8,480.750	0.929	8,577.434
0.030	7,708.412	0.130	7,805.044	0.230	7,901.677	0.330	7,998.309	0.430	8,094.978	0.530	8,191.663	0.630	8,288.347	0.730	8,385.032	0.830	8,481.717	0.930	8,578.401
0.031	7,709.378	0.131	7,806.010	0.231	7,902.643	0.331	7,999.276	0.431	8,095.945	0.531	8,192.629	0.631	8,289.314	0.731	8,385.999	0.831	8,482.683	0.931	8,579.368
0.032	7,710.344	0.132	7,806.977	0.232	7,903.609	0.332	8,000.242	0.432	8,096.912	0.532	8,193.596	0.632	8,290.281	0.732	8,386.966	0.832	8,483.650	0.932	8,580.335
0.033	7,711.311	0.133	7,807.943	0.233	7,904.576	0.333	8,001.208	0.433	8,097.879	0.533	8,194.563	0.633	8,291.248	0.733	8,387.932	0.833	8,484.617	0.933	8,581.302
0.034	7,712.277	0.134	7,808.909	0.234	7,905.542	0.334	8,002.175	0.434	8,098.845	0.534	8,195.530	0.634	8,292.215	0.734	8,388.899	0.834	8,485.584	0.934	8,582.269
0.035	7,713.243	0.135	7,809.876	0.235	7,906.508	0.335	8,003.141	0.435	8,099.812	0.535	8,196.497	0.635	8,293.182	0.735	8,389.866	0.835	8,486.551	0.935	8,583.235
0.036	7,714.209	0.136	7,810.842	0.236	7,907.475	0.336	8,004.107	0.436	8,100.779	0.536	8,197.464	0.636	8,294.148	0.736	8,390.833	0.836	8,487.518	0.936	8,584.202
0.037	7,715.176	0.137	7,811.808	0.237	7,908.441	0.337	8,005.074	0.437	8,101.746	0.537	8,198.431	0.637	8,295.115	0.737	8,391.800	0.837	8,488.485	0.937	8,585.169
0.038	7,716.142	0.138	7,812.775	0.238	7,909.407	0.338	8,006.040	0.438	8,102.713	0.538	8,199.397	0.638	8,296.082	0.738	8,392.767	0.838	8,489.451	0.938	8,586.136
0.039	7,717.108	0.139	7,813.741	0.239	7,910.374	0.339	8,007.006	0.439	8,103.680	0.539	8,200.364	0.639	8,297.049	0.739	8,393.734	0.839	8,490.418	0.939	8,587.103
0.040	7,718.075	0.140	7,814.707	0.240	7,911.340	0.340	8,007.972	0.440	8,104.646	0.540	8,201.331	0.640	8,298.016	0.740	8,394.700	0.840	8,491.385	0.940	8,588.070
0.041	7,719.041	0.141	7,815.674	0.241	7,912.306	0.341	8,008.939	0.441	8,105.613	0.541	8,202.298	0.641	8,298.983	0.741	8,395.667	0.841	8,492.352	0.941	8,589.037
0.042	7,720.007	0.142	7,816.640	0.242	7,913.273	0.342	8,009.905	0.442	8,106.580	0.542	8,203.265	0.642	8,299.949	0.742	8,396.634	0.842	8,493.319	0.942	8,590.003
0.043	7,720.974	0.143	7,817.606	0.243	7,914.239	0.343	8,010.871	0.443	8,107.547	0.543	8,204.232	0.643	8,300.916	0.743	8,397.601	0.843	8,494.286	0.943	8,590.970
0.044	7,721.940	0.144	7,818.573	0.244	7,915.205	0.344	8,011.838	0.444	8,108.514	0.544	8,205.198	0.644	8,301.883	0.744	8,398.568	0.844	8,495.252	0.944	8,591.937
0.045	7,722.906	0.145	7,819.539	0.245	7,916.172	0.345	8,012.804	0.445	8,109.481	0.545	8,206.165	0.645	8,302.850	0.745	8,399.535	0.845	8,496.219	0.945	8,592.904
0.046	7,723.873	0.146	7,820.505	0.246	7,917.138	0.346	8,013.770	0.446	8,110.448	0.546	8,207.132	0.646	8,303.817	0.746	8,400.501	0.846	8,497.186	0.946	8,593.871
0.047	7,724.839	0.147	7,821.472	0.247	7,918.104	0.347	8,014.737	0.447	8,111.414	0.547	8,208.099	0.647	8,304.784	0.747	8,401.468	0.847	8,498.153	0.947	8,594.838
0.048	7,725.805	0.148	7,822.438	0.248	7,919.071	0.348	8,015.703	0.448	8,112.381	0.548	8,209.066	0.648	8,305.751	0.748	8,402.435	0.848	8,499.120	0.948	8,595.804
0.049	7,726.772	0.149	7,823.404	0.249	7,920.037	0.349	8,016.670	0.449	8,113.348	0.549	8,210.033	0.649	8,306.717	0.749	8,403.402	0.849	8,500.087	0.949	8,596.771
0.050	7,727.738	0.150	7,824.371	0.250	7,921.003	0.350	8,017.636	0.450	8,114.315	0.550	8,211.000	0.650	8,307.684	0.750	8,404.369	0.850	8,501.054	0.950	8,597.738
0.051	7,728.704	0.151	7,825.337	0.251	7,921.970	0.351	8,018.603	0.451	8,115.282	0.551	8,211.966	0.651	8,308.651	0.751	8,405.336	0.851	8,502.020	0.951	8,598.705
0.052	7,729.671	0.152	7,826.303	0.252	7,922.936	0.352	8,019.569	0.452	8,116.249	0.552	8,212.933	0.652	8,309.618	0.752	8,406.303	0.852	8,502.987	0.952	8,599.672
0.053	7,730.637	0.153	7,827.270	0.253	7,923.902	0.353	8,020.536	0.453	8,117.215	0.553	8,213.900	0.653	8,310.585	0.753	8,407.269	0.853	8,503.954	0.953	8,600.639
0.054	7,731.603	0.154	7,828.236	0.254	7,924.868	0.354	8,021.503	0.454	8,118.182	0.554	8,214.867	0.654	8,311.552	0.754	8,408.236	0.854	8,504.921	0.954	8,601.606
0.055	7,732.570	0.155	7,829.202	0.255	7,925.835	0.355	8,022.469	0.455	8,119.149	0.555	8,215.834	0.655	8,312.518	0.755	8,409.203	0.855	8,505.888	0.955	8,602.572
0.056	7,733.536	0.156	7,830.169	0.256	7,926.801	0.356	8,023.436	0.456	8,120.116	0.556	8,216.801	0.656	8,313.485	0.756	8,410.170	0.856	8,506.855	0.956	8,603.539
0.057	7,734.502	0.157	7,831.135	0.257	7,927.767	0.357	8,024.402	0.457	8,121.083	0.557	8,217.768	0.657	8,314.452	0.757	8,411.137	0.857	8,507.821	0.957	8,604.506
0.058	7,735.469	0.158	7,832.101	0.258	7,928.734	0.358	8,025.369	0.458	8,122.050	0.558	8,218.734	0.658	8,315.419	0.758	8,412.104	0.858	8,508.788	0.958	8,605.473
0.059	7,736.435	0.159	7,833.068	0.259	7,929.700	0.359	8,026.336	0.459	8,123.017	0.559	8,219.701	0.659	8,316.386	0.759	8,413.070	0.859	8,509.755	0.959	8,606.440
0.060	7,737.401	0.160	7,834.034	0.260	7,930.666	0.360	8,027.302	0.460	8,123.983	0.560	8,220.668	0.660	8,317.353	0.760	8,414.037	0.860	8,510.722	0.960	8,607.407
0.061	7,738.368	0.161	7,835.000	0.261	7,931.633	0.361	8,028.269	0.461	8,124.950	0.561	8,221.635	0.661	8,318.320	0.761	8,415.004	0.861	8,511.689	0.961	8,608.373
0.062	7,739.334	0.162	7,835.967	0.262	7,932.599	0.362	8,029.235	0.462	8,125.917	0.562	8,222.602	0.662	8,319.286	0.762	8,415.971	0.862	8,512.656	0.962	8,609.340
0.063	7,740.300	0.163	7,836.933	0.263	7,933.565	0.363	8,030.202	0.463	8,126.884	0.563	8,223.569	0.663	8,320.253	0.763	8,416.938	0.863	8,513.623	0.963	8,610.307
0.064	7,741.267	0.164	7,837.899	0.264	7,934.532	0.364	8,031.168	0.464	8,127.851	0.564	8,224.535	0.664	8,321.220	0.764	8,417.905	0.864	8,514.589	0.964	8,611.274
0.065	7,742.233	0.165	7,838.865	0.265	7,935.498	0.365	8,032.135	0.465	8,128.818	0.565	8,225.502	0.665	8,322.187	0.765	8,418.872	0.865	8,515.556	0.965	8,612.241
0.066	7,743.199	0.166	7,839.832	0.266	7,936.464	0.366	8,033.102	0.466	8,129.784	0.566	8,226.469	0.666	8,323.154	0.766	8,419.838	0.866	8,516.523	0.966	8,613.208
0.067	7,744.166	0.167	7,840.798	0.267	7,937.431	0.367	8,034.068	0.467	8,130.751	0.567	8,227.436	0.667	8,324.121	0.767	8,420.805	0.867	8,517.490	0.967	8,614.175
0.068	7,745.132	0.168	7,841.764	0.268	7,938.397	0.368	8,035.035	0.468	8,131.718	0.568	8,228.403	0.668	8,325.087	0.768	8,421.772	0.868	8,518.457	0.968	8,615.141
0.069	7,746.098	0.169	7,842.731	0.269	7,939.363	0.369	8,036.001	0.469	8,132.685	0.569	8,229.370	0.669	8,326.054	0.769	8,422.739	0.869	8,519.424	0.969	8,616.108
0.070	7,747.065	0.170	7,843.697	0.270	7,940.330	0.370	8,036.968	0.470	8,133.652	0.570	8,230.337	0.670	8,327.021	0.770	8,423.706	0.870	8,520.390	0.970	8,617.075
0.071	7,748.031	0.171	7,844.663	0.271	7,941.296	0.371	8,037.935	0.471	8,134.619	0.571	8,231.303	0.671	8,327.988	0.771	8,424.673	0.871	8,521.357	0.971	8,618.042
0.072	7,748.997	0.172	7,845.630	0.272	7,942.262	0.372	8,038.901	0.472	8,135.586	0.572	8,232.270	0.672	8,328.955	0.772	8,425.639	0.872	8,522.324	0.972	8,619.009
0.073	7,749.964	0.173	7,846.596	0.273	7,943.229	0.373	8,039.868	0.473	8,136.552	0.573	8,233.237	0.673	8,329.922	0.773	8,426.606	0.873	8,523.291	0.973	8,619.976
0.074	7,750.930	0.174	7,847.562	0.274	7,944.195	0.374	8,040.835	0.474	8,137.519	0.574	8,234.204	0.674	8,330.889	0.774	8,427.573	0.874	8,524.258	0.974	8,620.942
0.075	7,751.896	0.175	7,848.529	0.275	7,945.161	0.375	8,041.801	0.475	8,138.486	0.575	8,235.171	0.675	8,331.855	0.775	8,428.540	0.875	8,525.225	0.975	8,621.909
0.076	7,752.863	0.176	7,849.495	0.276	7,946.128	0.376	8,042.768	0.476	8,139.453	0.576	8,236.138	0.676	8,332.822	0.776	8,429.507	0.876	8,526.192	0.976	8,622.876
0.077	7,753.829	0.177	7,850.461	0.277	7,947.094	0.377	8,043.735	0.477	8,140.420	0.577	8,237.104	0.677	8,333.789	0.777	8,430.474	0.877	8,527.158	0.977	8,623.843
0.078	7,754.795	0.178	7,851.428	0.278	7,948.060	0.378	8,044.702	0.478	8,141.387	0.578	8,238.071	0.678	8,334.756	0.778	8,431.441	0.878	8,528.125	0.978	8,624.810
0.079	7,755.761	0.179	7,852.394	0.279	7,949.027	0.379	8,045.669	0.479	8,142.353	0.579	8,239.038	0.679	8,335.723	0.779	8,432.407	0.879	8,529.092	0.979	8,625.777
0.080	7,756.728	0.180	7,853.360	0.280	7,949.993	0.380	8,046.636	0.480	8,143.320	0.580	8,240.005	0.680	8,336.690	0.780	8,433.374	0.880	8,530.059	0.980	8,626.744
0.081	7,757.694	0.181	7,854.327	0.281	7,950.959	0.381	8,047.603	0.481	8,144.287	0.581	8,240.972	0.681	8,337.656	0.781	8,434.341	0.881	8,531.026	0.981	8,627.710
0.082	7,758.660	0.182	7,855.293	0.282	7,951.926	0.382	8,048.569	0.482	8,145.254	0.582	8,241.939	0.682	8,338.623	0.782	8,435.308	0.882	8,531.993	0.982	8,628.677
0.083	7,759.627	0.183	7,856.259	0.283	7,952.892	0.383	8,049.536	0.483	8,146.221	0.583	8,242.906	0.683	8,339.590	0.783	8,436.275	0.883	8,532.959	0.983	8,629.644
0.084	7,760.593	0.184	7,857.226	0.284	7,953.858	0.384	8,050.503	0.484	8,147.188	0.584	8,243.872	0.684	8,340.557	0.784	8,437.242	0.884	8,533.926	0.984	8,630.611
0.085	7,761.559	0.185	7,858.192	0.285	7,954.825	0.385	8,051.470	0.485	8,148.155	0.585	8,244.839	0.685	8,341.524	0.785	8,438.208	0.885	8,534.893	0.985	8,631.578
0.086	7,762.526	0.186	7,859.158	0.286	7,955.791	0.386	8,052.437	0.486	8,149.121	0.586	8,245.806	0.686	8,342.491	0.786	8,439.175	0.886	8,535.860	0.986	8,632.545
0.087	7,763.492	0.187	7,860.125	0.287	7,956.757	0.387	8,053.404	0.487	8,150.088	0.587	8,246.773	0.687	8,343.458	0.787	8,440.142	0.887	8,536.827	0.987	8,633.511
0.088	7,764.458	0.188	7,861.091	0.288	7,957.724	0.388	8,054.370	0.488	8,151.055	0.588	8,247.740	0.688	8,344.424	0.788	8,441.109	0.888	8,537.794	0.988	8,634.478
0.089	7,765.425	0.189	7,862.057	0.289	7,958.690	0.389	8,055.337	0.489	8,152.022	0.589	8,248.707	0.689	8,345.391	0.789	8,442.076	0.889	8,538.761	0.989	8,635.445
0.090	7,766.391	0.190	7,863.024	0.290	7,959.656	0.390	8,056.304	0.490	8,152.989	0.590	8,249.673	0.690	8,346.358	0.790	8,443.043	0.890	8,539.727	0.990	8,636.412
0.091	7,767.357	0.191	7,863.990	0.291	7,960.623	0.391	8,057.271	0.491	8,153.956	0.591	8,250.640	0.691	8,347.325	0.791	8,444.010	0.891	8,540.694	0.991	8,637.379
0.092	7,768.324	0.192	7,864.956	0.292	7,961.589	0.392	8,058.238	0.492	8,154.922	0.592	8,251.607	0.692	8,348.292	0.792	8,444.976	0.892	8,541.661	0.992	8,638.346
0.093	7,769.290	0.193	7,865.923	0.293	7,962.555	0.393	8,059.205	0.493	8,155.889	0.593	8,252.574	0.693	8,349.259	0.793	8,445.943	0.893	8,542.628	0.993	8,639.313
0.094	7,770.256	0.194	7,866.889	0.294	7,963.522	0.394	8,060.172	0.494	8,156.856	0.594	8,253.541	0.694	8,350.225	0.794	8,446.910	0.894	8,543.595	0.994	8,640.279
0.095	7,771.223	0.195	7,867.855	0.295	7,964.488	0.395	8,061.138	0.495	8,157.823	0.595	8,254.508	0.695	8,351.192	0.795	8,447.877	0.895	8,544.562	0.995	8,641.246
0.096	7,772.189	0.196	7,868.822	0.296	7,965.454	0.396	8,062.105	0.496	8,158.790	0.596	8,255.475	0.696	8,352.159	0.796	8,448.844	0.896	8,545.528	0.996	8,642.213
0.097	7,773.155	0.197	7,869.788	0.297	7,966.420	0.397	8,063.072	0.497	8,159.757	0.597	8,256.441	0.697	8,353.126	0.797	8,449.811	0.897	8,546.495	0.997	8,643.180
0.098	7,774.122	0.198	7,870.754	0.298	7,967.387	0.398	8,064.039	0.498	8,160.724	0.598	8,257.408	0.698	8,354.093	0.798	8,450.778	0.898	8,547.462	0.998	8,644.147
0.099	7,775.088	0.199	7,871.721	0.299	7,968.353	0.399	8,065.006	0.499	8,161.690	0.599	8,258.375	0.699	8,355.060	0.799	8,451.744	0.899	8,548.429	0.999	8,645.114

DATE STRAPPED: 09/19/17 BY: RJ
DATE COMPUTED: 09/26/17 BY: WLH
DATE ISSUED: 09/26/17

AMSPEC

Meliadine
Rankin Inlet

Tank No. 2
INNAGE TABLE

Calibration@AmSpecGroup.com

Item 20 - Final - Data Sheet (Innage)

CAPACITIES GIVEN IN CUBIC METERS

GAUGE HEIGHT: 14.269 M

mm	9 M	mm	9 M	mm	9 M	mm	9 M	mm	9 M	mm	9 M	mm	9 M	mm	9 M	mm	9 M	mm	9 M
0.000	8,646.080	0.100	8,742.765	0.200	8,839.450	0.300	8,936.134	0.400	9,032.819	0.500	9,129.504	0.600	9,226.188	0.700	9,322.873	0.800	9,419.558	0.900	9,516.242
0.001	8,647.047	0.101	8,743.732	0.201	8,840.417	0.301	8,937.101	0.401	9,033.786	0.501	9,130.471	0.601	9,227.155	0.701	9,323.840	0.801	9,420.525	0.901	9,517.209
0.002	8,648.014	0.102	8,744.699	0.202	8,841.383	0.302	8,938.068	0.402	9,034.753	0.502	9,131.437	0.602	9,228.122	0.702	9,324.807	0.802	9,421.491	0.902	9,518.176
0.003	8,648.981	0.103	8,745.666	0.203	8,842.350	0.303	8,939.035	0.403	9,035.720	0.503	9,132.404	0.603	9,229.089	0.703	9,325.774	0.803	9,422.458	0.903	9,519.143
0.004	8,649.948	0.104	8,746.633	0.204	8,843.317	0.304	8,940.002	0.404	9,036.686	0.504	9,133.371	0.604	9,230.056	0.704	9,326.740	0.804	9,423.425	0.904	9,520.110
0.005	8,650.915	0.105	8,747.599	0.205	8,844.284	0.305	8,940.969	0.405	9,037.653	0.505	9,134.338	0.605	9,231.023	0.705	9,327.707	0.805	9,424.392	0.905	9,521.077
0.006	8,651.882	0.106	8,748.566	0.206	8,845.251	0.306	8,941.936	0.406	9,038.620	0.506	9,135.305	0.606	9,231.989	0.706	9,328.674	0.806	9,425.359	0.906	9,522.043
0.007	8,652.848	0.107	8,749.533	0.207	8,846.218	0.307	8,942.902	0.407	9,039.587	0.507	9,136.272	0.607	9,232.956	0.707	9,329.641	0.807	9,426.326	0.907	9,523.010
0.008	8,653.815	0.108	8,750.500	0.208	8,847.185	0.308	8,943.869	0.408	9,040.554	0.508	9,137.238	0.608	9,233.923	0.708	9,330.608	0.808	9,427.292	0.908	9,523.977
0.009	8,654.782	0.109	8,751.467	0.209	8,848.151	0.309	8,944.836	0.409	9,041.521	0.509	9,138.205	0.609	9,234.890	0.709	9,331.575	0.809	9,428.259	0.909	9,524.944
0.010	8,655.749	0.110	8,752.434	0.210	8,849.118	0.310	8,945.803	0.410	9,042.488	0.510	9,139.172	0.610	9,235.857	0.710	9,332.541	0.810	9,429.226	0.910	9,525.911
0.011	8,656.716	0.111	8,753.400	0.211	8,850.085	0.311	8,946.770	0.411	9,043.454	0.511	9,140.139	0.611	9,236.824	0.711	9,333.508	0.811	9,430.193	0.911	9,526.878
0.012	8,657.683	0.112	8,754.367	0.212	8,851.052	0.312	8,947.737	0.412	9,044.421	0.512	9,141.106	0.612	9,237.791	0.712	9,334.475	0.812	9,431.160	0.912	9,527.844
0.013	8,658.649	0.113	8,755.334	0.213	8,852.019	0.313	8,948.703	0.413	9,045.388	0.513	9,142.073	0.613	9,238.757	0.713	9,335.442	0.813	9,432.127	0.913	9,528.811
0.014	8,659.616	0.114	8,756.301	0.214	8,852.986	0.314	8,949.670	0.414	9,046.355	0.514	9,143.040	0.614	9,239.724	0.714	9,336.409	0.814	9,433.094	0.914	9,529.778
0.015	8,660.583	0.115	8,757.268	0.215	8,853.952	0.315	8,950.637	0.415	9,047.322	0.515	9,144.006	0.615	9,240.691	0.715	9,337.376	0.815	9,434.060	0.915	9,530.745
0.016	8,661.550	0.116	8,758.235	0.216	8,854.919	0.316	8,951.604	0.416	9,048.289	0.516	9,144.973	0.616	9,241.658	0.716	9,338.343	0.816	9,435.027	0.916	9,531.712
0.017	8,662.517	0.117	8,759.202	0.217	8,855.886	0.317	8,952.571	0.417	9,049.255	0.517	9,145.940	0.617	9,242.625	0.717	9,339.309	0.817	9,435.994	0.917	9,532.679
0.018	8,663.484	0.118	8,760.168	0.218	8,856.853	0.318	8,953.538	0.418	9,050.222	0.518	9,146.907	0.618	9,243.592	0.718	9,340.276	0.818	9,436.961	0.918	9,533.646
0.019	8,664.451	0.119	8,761.135	0.219	8,857.820	0.319	8,954.505	0.419	9,051.189	0.519	9,147.874	0.619	9,244.558	0.719	9,341.243	0.819	9,437.928	0.919	9,534.612
0.020	8,665.417	0.120	8,762.102	0.220	8,858.787	0.320	8,955.471	0.420	9,052.156	0.520	9,148.841	0.620	9,245.525	0.720	9,342.210	0.820	9,438.895	0.920	9,535.579
0.021	8,666.384	0.121	8,763.069	0.221	8,859.754	0.321	8,956.438	0.421	9,053.123	0.521	9,149.808	0.621	9,246.492	0.721	9,343.177	0.821	9,439.861	0.921	9,536.546
0.022	8,667.351	0.122	8,764.036	0.222	8,860.720	0.322	8,957.405	0.422	9,054.090	0.522	9,150.774	0.622	9,247.459	0.722	9,344.144	0.822	9,440.828	0.922	9,537.513
0.023	8,668.318	0.123	8,765.003	0.223	8,861.687	0.323	8,958.372	0.423	9,055.057	0.523	9,151.741	0.623	9,248.426	0.723	9,345.110	0.823	9,441.795	0.923	9,538.480
0.024	8,669.285	0.124	8,765.969	0.224	8,862.654	0.324	8,959.339	0.424	9,056.023	0.524	9,152.708	0.624	9,249.393	0.724	9,346.077	0.824	9,442.762	0.924	9,539.447
0.025	8,670.252	0.125	8,766.936	0.225	8,863.621	0.325	8,960.306	0.425	9,056.990	0.525	9,153.675	0.625	9,250.360	0.725	9,347.044	0.825	9,443.729	0.925	9,540.413
0.026	8,671.218	0.126	8,767.903	0.226	8,864.588	0.326	8,961.272	0.426	9,057.957	0.526	9,154.642	0.626	9,251.326	0.726	9,348.011	0.826	9,444.696	0.926	9,541.380
0.027	8,672.185	0.127	8,768.870	0.227	8,865.555	0.327	8,962.239	0.427	9,058.924	0.527	9,155.609	0.627	9,252.293	0.727	9,348.978	0.827	9,445.663	0.927	9,542.347
0.028	8,673.152	0.128	8,769.837	0.228	8,866.521	0.328	8,963.206	0.428	9,059.891	0.528	9,156.575	0.628	9,253.260	0.728	9,349.945	0.828	9,446.629	0.928	9,543.314
0.029	8,674.119	0.129	8,770.804	0.229	8,867.488	0.329	8,964.173	0.429	9,060.858	0.529	9,157.542	0.629	9,254.227	0.729	9,350.912	0.829	9,447.596	0.929	9,544.281
0.030	8,675.086	0.130	8,771.771	0.230	8,868.455	0.330	8,965.140	0.430	9,061.824	0.530	9,158.509	0.630	9,255.194	0.730	9,351.878	0.830	9,448.563	0.930	9,545.248
0.031	8,676.053	0.131	8,772.737	0.231	8,869.422	0.331	8,966.107	0.431	9,062.791	0.531	9,159.476	0.631	9,256.161	0.731	9,352.845	0.831	9,449.530	0.931	9,546.215
0.032	8,677.020	0.132	8,773.704	0.232	8,870.389	0.332	8,967.074	0.432	9,063.758	0.532	9,160.443	0.632	9,257.127	0.732	9,353.812	0.832	9,450.497	0.932	9,547.181
0.033	8,677.986	0.133	8,774.671	0.233	8,871.356	0.333	8,968.040	0.433	9,064.725	0.533	9,161.410	0.633	9,258.094	0.733	9,354.779	0.833	9,451.464	0.933	9,548.148
0.034	8,678.953	0.134	8,775.638	0.234	8,872.323	0.334	8,969.007	0.434	9,065.692	0.534	9,162.377	0.634	9,259.061	0.734	9,355.746	0.834	9,452.430	0.934	9,549.115
0.035	8,679.920	0.135	8,776.605	0.235	8,873.289	0.335	8,969.974	0.435	9,066.659	0.535	9,163.343	0.635	9,260.028	0.735	9,356.713	0.835	9,453.397	0.935	9,550.082
0.036	8,680.887	0.136	8,777.572	0.236	8,874.256	0.336	8,970.941	0.436	9,067.626	0.536	9,164.310	0.636	9,260.995	0.736	9,357.679	0.836	9,454.364	0.936	9,551.049
0.037	8,681.854	0.137	8,778.538	0.237	8,875.223	0.337	8,971.908	0.437	9,068.592	0.537	9,165.277	0.637	9,261.962	0.737	9,358.646	0.837	9,455.331	0.937	9,552.016
0.038	8,682.821	0.138	8,779.505	0.238	8,876.190	0.338	8,972.875	0.438	9,069.559	0.538	9,166.244	0.638	9,262.929	0.738	9,359.613	0.838	9,456.298	0.938	9,552.982
0.039	8,683.788	0.139	8,780.472	0.239	8,877.157	0.339	8,973.841	0.439	9,070.526	0.539	9,167.211	0.639	9,263.895	0.739	9,360.580	0.839	9,457.265	0.939	9,553.949
0.040	8,684.754	0.140	8,781.439	0.240	8,878.124	0.340	8,974.808	0.440	9,071.493	0.540	9,168.178	0.640	9,264.862	0.740	9,361.547	0.840	9,458.232	0.940	9,554.916
0.041	8,685.721	0.141	8,782.406	0.241	8,879.090	0.341	8,975.775	0.441	9,072.460	0.541	9,169.144	0.641	9,265.829	0.741	9,362.514	0.841	9,459.198	0.941	9,555.883
0.042	8,686.688	0.142	8,783.373	0.242	8,880.057	0.342	8,976.742	0.442	9,073.427	0.542	9,170.111	0.642	9,266.796	0.742	9,363.481	0.842	9,460.165	0.942	9,556.850
0.043	8,687.655	0.143	8,784.340	0.243	8,881.024	0.343	8,977.709	0.443	9,074.393	0.543	9,171.078	0.643	9,267.763	0.743	9,364.447	0.843	9,461.132	0.943	9,557.817
0.044	8,688.622	0.144	8,785.306	0.244	8,881.991	0.344	8,978.676	0.444	9,075.360	0.544	9,172.045	0.644	9,268.730	0.744	9,365.414	0.844	9,462.099	0.944	9,558.784
0.045	8,689.589	0.145	8,786.273	0.245	8,882.958	0.345	8,979.643	0.445	9,076.327	0.545	9,173.012	0.645	9,269.696	0.745	9,366.381	0.845	9,463.066	0.945	9,559.750
0.046	8,690.555	0.146	8,787.240	0.246	8,883.925	0.346	8,980.609	0.446	9,077.294	0.546	9,173.979	0.646	9,270.663	0.746	9,367.348	0.846	9,464.033	0.946	9,560.717
0.047	8,691.522	0.147	8,788.207	0.247	8,884.892	0.347	8,981.576	0.447	9,078.261	0.547	9,174.946	0.647	9,271.630	0.747	9,368.315	0.847	9,464.999	0.947	9,561.684
0.048	8,692.489	0.148	8,789.174	0.248	8,885.858	0.348	8,982.543	0.448	9,079.228	0.548	9,175.912	0.648	9,272.597	0.748	9,369.282	0.848	9,465.966	0.948	9,562.651
0.049	8,693.456	0.149	8,790.141	0.249	8,886.825	0.349	8,983.510	0.449	9,080.195	0.549	9,176.879	0.649	9,273.564	0.749	9,370.248	0.849	9,466.933	0.949	9,563.618
0.050	8,694.423	0.150	8,791.107	0.250	8,887.792	0.350	8,984.477	0.450	9,081.161	0.550	9,177.846	0.650	9,274.531	0.750	9,371.215	0.850	9,467.900	0.950	9,564.585
0.051	8,695.390	0.151	8,792.074	0.251	8,888.759	0.351	8,985.444	0.451	9,082.128	0.551	9,178.813	0.651	9,275.498	0.751	9,372.182	0.851	9,468.867	0.951	9,565.551
0.052	8,696.357	0.152	8,793.041	0.252	8,889.726	0.352	8,986.410	0.452	9,083.095	0.552	9,179.780	0.652	9,276.464	0.752	9,373.149	0.852	9,469.834	0.952	9,566.518
0.053	8,697.323	0.153	8,794.008	0.253	8,890.693	0.353	8,987.377	0.453	9,084.062	0.553	9,180.747	0.653	9,277.431	0.753	9,374.116	0.853	9,470.801	0.953	9,567.485
0.054	8,698.290	0.154	8,794.975	0.254	8,891.659	0.354	8,988.344	0.454	9,085.029	0.554	9,181.713	0.654	9,278.398	0.754	9,375.083	0.854	9,471.767	0.954	9,568.452
0.055	8,699.257	0.155	8,795.942	0.255	8,892.626	0.355	8,989.311	0.455	9,085.996	0.555	9,182.680	0.655	9,279.365	0.755	9,376.050	0.855	9,472.734	0.955	9,569.419
0.056	8,700.224	0.156	8,796.909	0.256	8,893.593	0.356	8,990.278	0.456	9,086.962	0.556	9,183.647	0.656	9,280.332	0.756	9,377.016	0.856	9,473.701	0.956	9,570.386
0.057	8,701.191	0.157	8,797.875	0.257	8,894.560	0.357	8,991.245	0.457	9,087.929	0.557	9,184.614	0.657	9,281.299	0.757	9,377.983	0.857	9,474.668	0.957	9,571.353
0.058	8,702.158	0.158	8,798.842	0.258	8,895.527	0.358	8,992.212	0.458	9,088.896	0.558	9,185.581	0.658	9,282.265	0.758	9,378.950	0.858	9,475.635	0.958	9,572.319
0.059	8,703.124	0.159	8,799.809	0.259	8,896.494	0.359	8,993.178	0.459	9,089.863	0.559	9,186.548	0.659	9,283.232	0.759	9,379.917	0.859	9,476.602	0.959	9,573.286
0.060	8,704.091	0.160	8,800.776	0.260	8,897.461	0.360	8,994.145	0.460	9,090.830	0.560	9,187.515	0.660	9,284.199	0.760	9,380.884	0.860	9,477.568	0.960	9,574.253
0.061	8,705.058	0.161	8,801.743	0.261	8,898.427	0.361	8,995.112	0.461	9,091.797	0.561	9,188.481	0.661	9,285.166	0.761	9,381.851	0.861	9,478.535	0.961	9,575.220
0.062	8,706.025	0.162	8,802.710	0.262	8,899.394	0.362	8,996.079	0.462	9,092.764	0.562	9,189.448	0.662	9,286.133	0.762	9,382.818	0.862	9,479.502	0.962	9,576.187
0.063	8,706.992	0.163	8,803.676	0.263	8,900.361	0.363	8,997.046	0.463	9,093.730	0.563	9,190.415	0.663	9,287.100	0.763	9,383.784	0.863	9,480.469	0.963	9,577.154
0.064	8,707.959	0.164	8,804.643	0.264	8,901.328	0.364	8,998.013	0.464	9,094.697	0.564	9,191.382	0.664	9,288.067	0.764	9,384.751	0.864	9,481.436	0.964	9,578.120
0.065	8,708.926	0.165	8,805.610	0.265	8,902.295	0.365	8,998.979	0.465	9,095.664	0.565	9,192.349	0.665	9,289.033	0.765	9,385.718	0.865	9,482.403	0.965	9,579.087
0.066	8,709.892	0.166	8,806.577	0.266	8,903.262	0.366	8,999.946	0.466	9,096.631	0.566	9,193.316	0.666	9,290.000	0.766	9,386.685	0.866	9,483.370	0.966	9,580.054
0.067	8,710.859	0.167	8,807.544	0.267	8,904.228	0.367	9,000.913	0.467	9,097.598	0.567	9,194.282	0.667	9,290.967	0.767	9,387.652	0.867	9,484.336	0.967	9,581.021
0.068	8,711.826	0.168	8,808.511	0.268	8,905.195	0.368	9,001.880	0.468	9,098.565	0.568	9,195.249	0.668	9,291.934	0.768	9,388.619	0.868	9,485.303	0.968	9,581.988
0.069	8,712.793	0.169	8,809.478	0.269	8,906.162	0.369	9,002.847	0.469	9,099.531	0.569	9,196.216	0.669	9,292.901	0.769	9,389.585	0.869	9,486.270	0.969	9,582.955
0.070	8,713.760	0.170	8,810.444	0.270	8,907.129	0.370	9,003.814	0.470	9,100.498	0.570	9,197.183	0.670	9,293.868	0.770	9,390.552	0.870	9,487.237	0.970	9,583.922
0.071	8,714.727	0.171	8,811.411	0.271	8,908.096	0.371	9,004.781	0.471	9,101.465	0.571	9,198.150	0.671	9,294.834	0.771	9,391.519	0.871	9,488.204	0.971	9,584.888
0.072	8,715.693	0.172	8,812.378	0.272	8,909.063	0.372	9,005.747	0.472	9,102.432	0.572	9,199.117	0.672	9,295.801	0.772	9,392.486	0.872	9,489.171	0.972	9,585.855
0.073	8,716.660	0.173	8,813.345	0.273	8,910.030	0.373	9,006.714	0.473	9,103.399	0.573	9,200.084	0.673	9,296.768	0.773	9,393.453	0.873	9,490.137	0.973	9,586.822
0.074	8,717.627	0.174	8,814.312	0.274	8,910.996	0.374	9,007.681	0.474	9,104.366	0.574	9,201.050	0.674	9,297.735	0.774	9,394.420	0.874	9,491.104	0.974	9,587.789
0.075	8,718.594	0.175	8,815.279	0.275	8,911.963	0.375	9,008.648	0.475	9,105.333	0.575	9,202.017	0.675	9,298.702	0.775	9,395.387	0.875	9,492.071	0.975	9,588.756
0.076	8,719.561	0.176	8,816.245	0.276	8,912.930	0.376	9,009.615	0.476	9,106.299	0.576	9,202.984	0.676	9,299.669	0.776	9,396.353	0.876	9,493.038	0.976	9,589.723
0.077	8,720.528	0.177	8,817.212	0.277	8,913.897	0.377	9,010.582	0.477	9,107.266	0.577	9,203.951	0.677	9,300.636	0.777	9,397.320	0.877	9,494.005	0.977	9,590.689
0.078	8,721.495	0.178	8,818.179	0.278	8,914.864	0.378	9,011.548	0.478	9,108.233	0.578	9,204.918	0.678	9,301.602	0.778	9,398.287	0.878	9,494.972	0.978	9,591.656
0.079	8,722.461	0.179	8,819.146	0.279	8,915.831	0.379	9,012.515	0.479	9,109.200	0.579	9,205.885	0.679	9,302.569	0.779	9,399.254	0.879	9,495.939	0.979	9,592.623
0.080	8,723.428	0.180	8,820.113	0.280	8,916.798	0.380	9,013.482	0.480	9,110.167	0.580	9,206.851	0.680	9,303.536	0.780	9,400.221	0.880	9,496.905	0.980	9,593.590
0.081	8,724.395	0.181	8,821.080	0.281	8,917.764	0.381	9,014.449	0.481	9,111.134	0.581	9,207.818	0.681	9,304.503	0.781	9,401.188	0.881	9,497.872	0.981	9,594.557
0.082	8,725.362	0.182	8,822.047	0.282	8,918.731	0.382	9,015.416	0.482	9,112.100	0.582	9,208.785	0.682	9,305.470	0.782	9,402.154	0.882	9,498.839	0.982	9,595.524
0.083	8,726.329	0.183	8,823.013	0.283	8,919.698	0.383	9,016.383	0.483	9,113.067	0.583	9,209.752	0.683	9,306.437	0.783	9,403.121	0.883	9,499.806	0.983	9,596.491
0.084	8,727.296	0.184	8,823.980	0.284	8,920.665	0.384	9,017.350	0.484	9,114.034	0.584	9,210.719	0.684	9,307.403	0.784	9,404.088	0.884	9,500.773	0.984	9,597.457
0.085	8,728.262	0.185	8,824.947	0.285	8,921.632	0.385	9,018.316	0.485	9,115.001	0.585	9,211.686	0.685	9,308.370	0.785	9,405.055	0.885	9,501.740	0.985	9,598.424
0.086	8,729.229	0.186	8,825.914	0.286	8,922.599	0.386	9,019.283	0.486	9,115.968	0.586	9,212.653	0.686	9,309.337	0.786	9,406.022	0.886	9,502.706	0.986	9,599.391
0.087	8,730.196	0.187	8,826.881	0.287	8,923.565	0.387	9,020.250	0.487	9,116.935	0.587	9,213.619	0.687	9,310.304	0.787	9,406.989	0.887	9,503.673	0.987	9,600.358
0.088	8,731.163	0.188	8,827.848	0.288	8,924.532	0.388	9,021.217	0.488	9,117.902	0.588	9,214.586	0.688	9,311.271	0.788	9,407.956	0.888	9,504.640	0.988	9,601.325
0.089	8,732.130	0.189	8,828.814	0.289	8,925.499	0.389	9,022.184	0.489	9,118.868	0.589	9,215.553	0.689	9,312.238	0.789	9,408.922	0.889	9,505.607	0.989	9,602.292
0.090	8,733.097	0.190	8,829.781	0.290	8,926.466	0.390	9,023.151	0.490	9,119.835	0.590	9,216.520	0.690	9,313.205	0.790	9,409.889	0.890	9,506.574	0.990	9,603.258
0.091	8,734.064	0.191	8,830.748	0.291	8,927.433	0.391	9,024.117	0.491	9,120.802	0.591	9,217.487	0.691	9,314.171	0.791	9,410.856	0.891	9,507.541	0.991	9,604.225
0.092	8,735.030	0.192	8,831.715	0.292	8,928.400	0.392	9,025.084	0.492	9,121.769	0.592	9,218.454	0.692	9,315.138	0.792	9,411.823	0.892	9,508.508	0.992	9,605.192
0.093	8,735.997	0.193	8,832.682	0.293	8,929.367	0.393	9,026.051	0.493	9,122.736	0.593	9,219.420	0.693	9,316.105	0.793	9,412.790	0.893	9,509.474	0.993	9,606.159
0.094	8,736.964	0.194	8,833.649	0.294	8,930.333	0.394	9,027.018	0.494	9,123.703	0.594	9,220.387	0.694	9,317.072	0.794	9,413.757	0.894	9,510.441	0.994	9,607.126
0.095	8,737.931	0.195	8,834.616	0.295	8,931.300	0.395	9,027.985	0.495	9,124.669	0.595	9,221.354	0.695	9,318.039	0.795	9,414.723	0.895	9,511.408	0.995	9,608.093
0.096	8,738.898	0.196	8,835.582	0.296	8,932.267	0.396	9,028.952	0.496	9,125.636	0.596	9,222.321	0.696	9,319.006	0.796	9,415.690	0.896	9,512.375	0.996	9,609.060
0.097	8,739.865	0.197	8,836.549	0.297	8,933.234	0.397	9,029.919	0.497	9,126.603	0.597	9,223.288	0.697	9,319.972	0.797	9,416.657	0.897	9,513.342	0.997	9,610.026
0.098	8,740.831	0.198	8,837.516	0.298	8,934.201	0.398	9,030.885	0.498	9,127.570	0.598	9,224.255	0.698	9,320.939	0.798	9,417.624	0.898	9,514.309	0.998	9,610.993
0.099	8,741.798	0.199	8,838.483	0.299	8,935.168	0.399	9,031.852	0.499	9,128.537	0.599	9,225.222	0.699	9,321.906	0.799	9,418.591	0.899	9,515.275	0.999	9,611.960

DATE STRAPPED: 09/19/17 BY: RJ
DATE COMPUTED: 09/26/17 BY: WLH
DATE ISSUED: 09/26/17

AMSPEC

Meliadine
Rankin Inlet

Tank No. 2
INNAGE TABLE

Calibration@AmSpecGroup.com

Item 20 - Final - Data Sheet (Innage)

CAPACITIES GIVEN IN CUBIC METERS

GAUGE HEIGHT: 14.269 M

mm	10 M	mm	10 M	mm	10 M	mm	10 M	mm	10 M	mm	10 M	mm	10 M	mm	10 M	mm	10 M	mm	10 M
0.000	9,612.927	0.100	9,709.612	0.200	9,806.296	0.300	9,902.981	0.400	9,999.666	0.500	10,096.350	0.600	10,193.035	0.700	10,289.719	0.800	10,386.404	0.900	10,483.089
0.001	9,613.894	0.101	9,710.578	0.201	9,807.263	0.301	9,903.948	0.401	10,000.632	0.501	10,097.317	0.601	10,194.002	0.701	10,290.686	0.801	10,387.371	0.901	10,484.056
0.002	9,614.861	0.102	9,711.545	0.202	9,808.230	0.302	9,904.915	0.402	10,001.599	0.502	10,098.284	0.602	10,194.969	0.702	10,291.653	0.802	10,388.338	0.902	10,485.022
0.003	9,615.828	0.103	9,712.512	0.203	9,809.197	0.303	9,905.881	0.403	10,002.566	0.503	10,099.251	0.603	10,195.935	0.703	10,292.620	0.803	10,389.305	0.903	10,485.989
0.004	9,616.794	0.104	9,713.479	0.204	9,810.164	0.304	9,906.848	0.404	10,003.533	0.504	10,100.218	0.604	10,196.902	0.704	10,293.587	0.804	10,390.272	0.904	10,486.956
0.005	9,617.761	0.105	9,714.446	0.205	9,811.130	0.305	9,907.815	0.405	10,004.500	0.505	10,101.184	0.605	10,197.869	0.705	10,294.554	0.805	10,391.238	0.905	10,487.923
0.006	9,618.728	0.106	9,715.413	0.206	9,812.097	0.306	9,908.782	0.406	10,005.467	0.506	10,102.151	0.606	10,198.836	0.706	10,295.521	0.806	10,392.205	0.906	10,488.890
0.007	9,619.695	0.107	9,716.380	0.207	9,813.064	0.307	9,909.749	0.407	10,006.433	0.507	10,103.118	0.607	10,199.803	0.707	10,296.487	0.807	10,393.172	0.907	10,489.857
0.008	9,620.662	0.108	9,717.346	0.208	9,814.031	0.308	9,910.716	0.408	10,007.400	0.508	10,104.085	0.608	10,200.770	0.708	10,297.454	0.808	10,394.139	0.908	10,490.824
0.009	9,621.629	0.109	9,718.313	0.209	9,814.998	0.309	9,911.683	0.409	10,008.367	0.509	10,105.052	0.609	10,201.736	0.709	10,298.421	0.809	10,395.106	0.909	10,491.790
0.010	9,622.595	0.110	9,719.280	0.210	9,815.965	0.310	9,912.649	0.410	10,009.334	0.510	10,106.019	0.610	10,202.703	0.710	10,299.388	0.810	10,396.073	0.910	10,492.757
0.011	9,623.562	0.111	9,720.247	0.211	9,816.932	0.311	9,913.616	0.411	10,010.301	0.511	10,106.986	0.611	10,203.670	0.711	10,300.355	0.811	10,397.039	0.911	10,493.724
0.012	9,624.529	0.112	9,721.214	0.212	9,817.898	0.312	9,914.583	0.412	10,011.268	0.512	10,107.952	0.612	10,204.637	0.712	10,301.322	0.812	10,398.006	0.912	10,494.691
0.013	9,625.496	0.113	9,722.181	0.213	9,818.865	0.313	9,915.550	0.413	10,012.235	0.513	10,108.919	0.613	10,205.604	0.713	10,302.288	0.813	10,398.973	0.913	10,495.658
0.014	9,626.463	0.114	9,723.147	0.214	9,819.832	0.314	9,916.517	0.414	10,013.201	0.514	10,109.886	0.614	10,206.571	0.714	10,303.255	0.814	10,399.940	0.914	10,496.625
0.015	9,627.430	0.115	9,724.114	0.215	9,820.799	0.315	9,917.484	0.415	10,014.168	0.515	10,110.853	0.615	10,207.538	0.715	10,304.222	0.815	10,400.907	0.915	10,497.591
0.016	9,628.397	0.116	9,725.081	0.216	9,821.766	0.316	9,918.450	0.416	10,015.135	0.516	10,111.820	0.616	10,208.504	0.716	10,305.189	0.816	10,401.874	0.916	10,498.558
0.017	9,629.363	0.117	9,726.048	0.217	9,822.733	0.317	9,919.417	0.417	10,016.102	0.517	10,112.787	0.617	10,209.471	0.717	10,306.156	0.817	10,402.841	0.917	10,499.525
0.018	9,630.330	0.118	9,727.015	0.218	9,823.699	0.318	9,920.384	0.418	10,017.069	0.518	10,113.753	0.618	10,210.438	0.718	10,307.123	0.818	10,403.807	0.918	10,500.492
0.019	9,631.297	0.119	9,727.982	0.219	9,824.666	0.319	9,921.351	0.419	10,018.036	0.519	10,114.720	0.619	10,211.405	0.719	10,308.090	0.819	10,404.774	0.919	10,501.459
0.020	9,632.264	0.120	9,728.949	0.220	9,825.633	0.320	9,922.318	0.420	10,019.002	0.520	10,115.687	0.620	10,212.372	0.720	10,309.056	0.820	10,405.741	0.920	10,502.426
0.021	9,633.231	0.121	9,729.915	0.221	9,826.600	0.321	9,923.285	0.421	10,019.969	0.521	10,116.654	0.621	10,213.339	0.721	10,310.023	0.821	10,406.708	0.921	10,503.393
0.022	9,634.198	0.122	9,730.882	0.222	9,827.567	0.322	9,924.252	0.422	10,020.936	0.522	10,117.621	0.622	10,214.305	0.722	10,310.990	0.822	10,407.675	0.922	10,504.359
0.023	9,635.164	0.123	9,731.849	0.223	9,828.534	0.323	9,925.218	0.423	10,021.903	0.523	10,118.588	0.623	10,215.272	0.723	10,311.957	0.823	10,408.642	0.923	10,505.326
0.024	9,636.131	0.124	9,732.816	0.224	9,829.501	0.324	9,926.185	0.424	10,022.870	0.524	10,119.555	0.624	10,216.239	0.724	10,312.924	0.824	10,409.608	0.924	10,506.293
0.025	9,637.098	0.125	9,733.783	0.225	9,830.467	0.325	9,927.152	0.425	10,023.837	0.525	10,120.521	0.625	10,217.206	0.725	10,313.891	0.825	10,410.575	0.925	10,507.260
0.026	9,638.065	0.126	9,734.750	0.226	9,831.434	0.326	9,928.119	0.426	10,024.804	0.526	10,121.488	0.626	10,218.173	0.726	10,314.857	0.826	10,411.542	0.926	10,508.227
0.027	9,639.032	0.127	9,735.716	0.227	9,832.401	0.327	9,929.086	0.427	10,025.770	0.527	10,122.455	0.627	10,219.140	0.727	10,315.824	0.827	10,412.509	0.927	10,509.194
0.028	9,639.999	0.128	9,736.683	0.228	9,833.368	0.328	9,930.053	0.428	10,026.737	0.528	10,123.422	0.628	10,220.107	0.728	10,316.791	0.828	10,413.476	0.928	10,510.160
0.029	9,640.966	0.129	9,737.650	0.229	9,834.335	0.329	9,931.019	0.429	10,027.704	0.529	10,124.389	0.629	10,221.073	0.729	10,317.758	0.829	10,414.443	0.929	10,511.127
0.030	9,641.932	0.130	9,738.617	0.230	9,835.302	0.330	9,931.986	0.430	10,028.671	0.530	10,125.356	0.630	10,222.040	0.730	10,318.725	0.830	10,415.410	0.930	10,512.094
0.031	9,642.899	0.131	9,739.584	0.231	9,836.268	0.331	9,932.953	0.431	10,029.638	0.531	10,126.322	0.631	10,223.007	0.731	10,319.692	0.831	10,416.376	0.931	10,513.061
0.032	9,643.866	0.132	9,740.551	0.232	9,837.235	0.332	9,933.920	0.432	10,030.605	0.532	10,127.289	0.632	10,223.974	0.732	10,320.659	0.832	10,417.343	0.932	10,514.028
0.033	9,644.833	0.133	9,741.518	0.233	9,838.202	0.333	9,934.887	0.433	10,031.571	0.533	10,128.256	0.633	10,224.941	0.733	10,321.625	0.833	10,418.310	0.933	10,514.995
0.034	9,645.800	0.134	9,742.484	0.234	9,839.169	0.334	9,935.854	0.434	10,032.538	0.534	10,129.223	0.634	10,225.908	0.734	10,322.592	0.834	10,419.277	0.934	10,515.962
0.035	9,646.767	0.135	9,743.451	0.235	9,840.136	0.335	9,936.821	0.435	10,033.505	0.535	10,130.190	0.635	10,226.874	0.735	10,323.559	0.835	10,420.244	0.935	10,516.928
0.036	9,647.733	0.136	9,744.418	0.236	9,841.103	0.336	9,937.787	0.436	10,034.472	0.536	10,131.157	0.636	10,227.841	0.736	10,324.526	0.836	10,421.211	0.936	10,517.895
0.037	9,648.700	0.137	9,745.385	0.237	9,842.070	0.337	9,938.754	0.437	10,035.439	0.537	10,132.124	0.637	10,228.808	0.737	10,325.493	0.837	10,422.177	0.937	10,518.862
0.038	9,649.667	0.138	9,746.352	0.238	9,843.036	0.338	9,939.721	0.438	10,036.406	0.538	10,133.090	0.638	10,229.775	0.738	10,326.460	0.838	10,423.144	0.938	10,519.829
0.039	9,650.634	0.139	9,747.319	0.239	9,844.003	0.339	9,940.688	0.439	10,037.373	0.539	10,134.057	0.639	10,230.742	0.739	10,327.427	0.839	10,424.111	0.939	10,520.796
0.040	9,651.601	0.140	9,748.285	0.240	9,844.970	0.340	9,941.655	0.440	10,038.339	0.540	10,135.024	0.640	10,231.709	0.740	10,328.393	0.840	10,425.078	0.940	10,521.763
0.041	9,652.568	0.141	9,749.252	0.241	9,845.937	0.341	9,942.622	0.441	10,039.306	0.541	10,135.991	0.641	10,232.676	0.741	10,329.360	0.841	10,426.045	0.941	10,522.729
0.042	9,653.535	0.142	9,750.219	0.242	9,846.904	0.342	9,943.588	0.442	10,040.273	0.542	10,136.958	0.642	10,233.642	0.742	10,330.327	0.842	10,427.012	0.942	10,523.696
0.043	9,654.501	0.143	9,751.186	0.243	9,847.871	0.343	9,944.555	0.443	10,041.240	0.543	10,137.925	0.643	10,234.609	0.743	10,331.294	0.843	10,427.979	0.943	10,524.663
0.044	9,655.468	0.144	9,752.153	0.244	9,848.838	0.344	9,945.522	0.444	10,042.207	0.544	10,138.891	0.644	10,235.576	0.744	10,332.261	0.844	10,428.945	0.944	10,525.630
0.045	9,656.435	0.145	9,753.120	0.245	9,849.804	0.345	9,946.489	0.445	10,043.174	0.545	10,139.858	0.645	10,236.543	0.745	10,333.228	0.845	10,429.912	0.945	10,526.597
0.046	9,657.402	0.146	9,754.087	0.246	9,850.771	0.346	9,947.456	0.446	10,044.140	0.546	10,140.825	0.646	10,237.510	0.746	10,334.194	0.846	10,430.879	0.946	10,527.564
0.047	9,658.369	0.147	9,755.053	0.247	9,851.738	0.347	9,948.423	0.447	10,045.107	0.547	10,141.792	0.647	10,238.477	0.747	10,335.161	0.847	10,431.846	0.947	10,528.531
0.048	9,659.336	0.148	9,756.020	0.248	9,852.705	0.348	9,949.390	0.448	10,046.074	0.548	10,142.759	0.648	10,239.443	0.748	10,336.128	0.848	10,432.813	0.948	10,529.497
0.049	9,660.302	0.149	9,756.987	0.249	9,853.672	0.349	9,950.356	0.449	10,047.041	0.549	10,143.726	0.649	10,240.410	0.749	10,337.095	0.849	10,433.780	0.949	10,530.464
0.050	9,661.269	0.150	9,757.954	0.250	9,854.639	0.350	9,951.323	0.450	10,048.008	0.550	10,144.693	0.650	10,241.377	0.750	10,338.062	0.850	10,434.746	0.950	10,531.431
0.051	9,662.236	0.151	9,758.921	0.251	9,855.605	0.351	9,952.290	0.451	10,048.975	0.551	10,145.659	0.651	10,242.344	0.751	10,339.029	0.851	10,435.713	0.951	10,532.398
0.052	9,663.203	0.152	9,759.888	0.252	9,856.572	0.352	9,953.257	0.452	10,049.942	0.552	10,146.626	0.652	10,243.311	0.752	10,339.996	0.852	10,436.680	0.952	10,533.365
0.053	9,664.170	0.153	9,760.854	0.253	9,857.539	0.353	9,954.224	0.453	10,050.908	0.553	10,147.593	0.653	10,244.278	0.753	10,340.962	0.853	10,437.647	0.953	10,534.332
0.054	9,665.137	0.154	9,761.821	0.254	9,858.506	0.354	9,955.191	0.454	10,051.875	0.554	10,148.560	0.654	10,245.245	0.754	10,341.929	0.854	10,438.614	0.954	10,535.298
0.055	9,666.104	0.155	9,762.788	0.255	9,859.473	0.355	9,956.157	0.455	10,052.842	0.555	10,149.527	0.655	10,246.211	0.755	10,342.896	0.855	10,439.581	0.955	10,536.265
0.056	9,667.070	0.156	9,763.755	0.256	9,860.440	0.356	9,957.124	0.456	10,053.809	0.556	10,150.494	0.656	10,247.178	0.756	10,343.863	0.856	10,440.548	0.956	10,537.232
0.057	9,668.037	0.157	9,764.722	0.257	9,861.407	0.357	9,958.091	0.457	10,054.776	0.557	10,151.460	0.657	10,248.145	0.757	10,344.830	0.857	10,441.514	0.957	10,538.199
0.058	9,669.004	0.158	9,765.689	0.258	9,862.373	0.358	9,959.058	0.458	10,055.743	0.558	10,152.427	0.658	10,249.112	0.758	10,345.797	0.858	10,442.481	0.958	10,539.166
0.059	9,669.971	0.159	9,766.656	0.259	9,863.340	0.359	9,960.025	0.459	10,056.709	0.559	10,153.394	0.659	10,250.079	0.759	10,346.763	0.859	10,443.448	0.959	10,540.133
0.060	9,670.938	0.160	9,767.622	0.260	9,864.307	0.360	9,960.992	0.460	10,057.676	0.560	10,154.361	0.660	10,251.046	0.760	10,347.730	0.860	10,444.415	0.960	10,541.100
0.061	9,671.905	0.161	9,768.589	0.261	9,865.274	0.361	9,961.959	0.461	10,058.643	0.561	10,155.328	0.661	10,252.012	0.761	10,348.697	0.861	10,445.382	0.961	10,542.066
0.062	9,672.871	0.162	9,769.556	0.262	9,866.241	0.362	9,962.925	0.462	10,059.610	0.562	10,156.295	0.662	10,252.979	0.762	10,349.664	0.862	10,446.349	0.962	10,543.033
0.063	9,673.838	0.163	9,770.523	0.263	9,867.208	0.363	9,963.892	0.463	10,060.577	0.563	10,157.262	0.663	10,253.946	0.763	10,350.631	0.863	10,447.315	0.963	10,544.000
0.064	9,674.805	0.164	9,771.490	0.264	9,868.174	0.364	9,964.859	0.464	10,061.544	0.564	10,158.228	0.664	10,254.913	0.764	10,351.598	0.864	10,448.282	0.964	10,544.967
0.065	9,675.772	0.165	9,772.457	0.265	9,869.141	0.365	9,965.826	0.465	10,062.511	0.565	10,159.195	0.665	10,255.880	0.765	10,352.565	0.865	10,449.249	0.965	10,545.934
0.066	9,676.739	0.166	9,773.423	0.266	9,870.108	0.366	9,966.793	0.466	10,063.477	0.566	10,160.162	0.666	10,256.847	0.766	10,353.531	0.866	10,450.216	0.966	10,546.901
0.067	9,677.706	0.167	9,774.390	0.267	9,871.075	0.367	9,967.760	0.467	10,064.444	0.567	10,161.129	0.667	10,257.814	0.767	10,354.498	0.867	10,451.183	0.967	10,547.867
0.068	9,678.673	0.168	9,775.357	0.268	9,872.042	0.368	9,968.726	0.468	10,065.411	0.568	10,162.096	0.668	10,258.780	0.768	10,355.465	0.868	10,452.150	0.968	10,548.834
0.069	9,679.639	0.169	9,776.324	0.269	9,873.009	0.369	9,969.693	0.469	10,066.378	0.569	10,163.063	0.669	10,259.747	0.769	10,356.432	0.869	10,453.117	0.969	10,549.801
0.070	9,680.606	0.170	9,777.291	0.270	9,873.976	0.370	9,970.660	0.470	10,067.345	0.570	10,164.029	0.670	10,260.714	0.770	10,357.399	0.870	10,454.083	0.970	10,550.768
0.071	9,681.573	0.171	9,778.258	0.271	9,874.942	0.371	9,971.627	0.471	10,068.312	0.571	10,164.996	0.671	10,261.681	0.771	10,358.366	0.871	10,455.050	0.971	10,551.735
0.072	9,682.540	0.172	9,779.225	0.272	9,875.909	0.372	9,972.594	0.472	10,069.278	0.572	10,165.963	0.672	10,262.648	0.772	10,359.332	0.872	10,456.017	0.972	10,552.702
0.073	9,683.507	0.173	9,780.191	0.273	9,876.876	0.373	9,973.561	0.473	10,070.245	0.573	10,166.930	0.673	10,263.615	0.773	10,360.299	0.873	10,456.984	0.973	10,553.669
0.074	9,684.474	0.174	9,781.158	0.274	9,877.843	0.374	9,974.528	0.474	10,071.212	0.574	10,167.897	0.674	10,264.581	0.774	10,361.266	0.874	10,457.951	0.974	10,554.635
0.075	9,685.440	0.175	9,782.125	0.275	9,878.810	0.375	9,975.494	0.475	10,072.179	0.575	10,168.864	0.675	10,265.548	0.775	10,362.233	0.875	10,458.918	0.975	10,555.602
0.076	9,686.407	0.176	9,783.092	0.276	9,879.777	0.376	9,976.461	0.476	10,073.146	0.576	10,169.831	0.676	10,266.515	0.776	10,363.200	0.876	10,459.884	0.976	10,556.569
0.077	9,687.374	0.177	9,784.059	0.277	9,880.743	0.377	9,977.428	0.477	10,074.113	0.577	10,170.797	0.677	10,267.482	0.777	10,364.167	0.877	10,460.851	0.977	10,557.536
0.078	9,688.341	0.178	9,785.026	0.278	9,881.710	0.378	9,978.395	0.478	10,075.080	0.578	10,171.764	0.678	10,268.449	0.778	10,365.134	0.878	10,461.818	0.978	10,558.503
0.079	9,689.308	0.179	9,785.992	0.279	9,882.677	0.379	9,979.362	0.479	10,076.046	0.579	10,172.731	0.679	10,269.416	0.779	10,366.100	0.879	10,462.785	0.979	10,559.470
0.080	9,690.275	0.180	9,786.959	0.280	9,883.644	0.380	9,980.329	0.480	10,077.013	0.580	10,173.698	0.680	10,270.383	0.780	10,367.067	0.880	10,463.752	0.980	10,560.437
0.081	9,691.242	0.181	9,787.926	0.281	9,884.611	0.381	9,981.295	0.481	10,077.980	0.581	10,174.665	0.681	10,271.349	0.781	10,368.034	0.881	10,464.719	0.981	10,561.403
0.082	9,692.208	0.182	9,788.893	0.282	9,885.578	0.382	9,982.262	0.482	10,078.947	0.582	10,175.632	0.682	10,272.316	0.782	10,369.001	0.882	10,465.686	0.982	10,562.370
0.083	9,693.175	0.183	9,789.860	0.283	9,886.545	0.383	9,983.229	0.483	10,079.914	0.583	10,176.598	0.683	10,273.283	0.783	10,369.968	0.883	10,466.652	0.983	10,563.337
0.084	9,694.142	0.184	9,790.827	0.284	9,887.511	0.384	9,984.196	0.484	10,080.881	0.584	10,177.565	0.684	10,274.250	0.784	10,370.935	0.884	10,467.619	0.984	10,564.304
0.085	9,695.109	0.185	9,791.794	0.285	9,888.478	0.385	9,985.163	0.485	10,081.848	0.585	10,178.532	0.685	10,275.217	0.785	10,371.901	0.885	10,468.586	0.985	10,565.271
0.086	9,696.076	0.186	9,792.760	0.286	9,889.445	0.386	9,986.130	0.486	10,082.814	0.586	10,179.499	0.686	10,276.184	0.786	10,372.868	0.886	10,469.553	0.986	10,566.238
0.087	9,697.043	0.187	9,793.727	0.287	9,890.412	0.387	9,987.097	0.487	10,083.781	0.587	10,180.466	0.687	10,277.150	0.787	10,373.835	0.887	10,470.520	0.987	10,567.204
0.088	9,698.009	0.188	9,794.694	0.288	9,891.379	0.388	9,988.063	0.488	10,084.748	0.588	10,181.433	0.688	10,278.117	0.788	10,374.802	0.888	10,471.487	0.988	10,568.171
0.089	9,698.976	0.189	9,795.661	0.289	9,892.346	0.389	9,989.030	0.489	10,085.715	0.589	10,182.400	0.689	10,279.084	0.789	10,375.769	0.889	10,472.453	0.989	10,569.138
0.090	9,699.943	0.190	9,796.628	0.290	9,893.312	0.390	9,989.997	0.490	10,086.682	0.590	10,183.366	0.690	10,280.051	0.790	10,376.736	0.890	10,473.420	0.990	10,570.105
0.091	9,700.910	0.191	9,797.595	0.291	9,894.279	0.391	9,990.964	0.491	10,087.649	0.591	10,184.333	0.691	10,281.018	0.791	10,377.703	0.891	10,474.387	0.991	10,571.072
0.092	9,701.877	0.192	9,798.561	0.292	9,895.246	0.392	9,991.931	0.492	10,088.615	0.592	10,185.300	0.692	10,281.985	0.792	10,378.669	0.892	10,475.354	0.992	10,572.039
0.093	9,702.844	0.193	9,799.528	0.293	9,896.213	0.393	9,992.898	0.493	10,089.582	0.593	10,186.267	0.693	10,282.952	0.793	10,379.636	0.893	10,476.321	0.993	10,573.006
0.094	9,703.811	0.194	9,800.495	0.294	9,897.180	0.394	9,993.864	0.494	10,090.549	0.594	10,187.234	0.694	10,283.918	0.794	10,380.603	0.894	10,477.288	0.994	10,573.972
0.095	9,704.777	0.195	9,801.462	0.295	9,898.147	0.395	9,994.831	0.495	10,091.516	0.595	10,188.201	0.695	10,284.885	0.795	10,381.570	0.895	10,478.255	0.995	10,574.939
0.096	9,705.744	0.196	9,802.429	0.296	9,899.114	0.396	9,995.798	0.496	10,092.483	0.596	10,189.167	0.696	10,285.852	0.796	10,382.537	0.896	10,479.221	0.996	10,575.906
0.097	9,706.711	0.197	9,803.396	0.297	9,900.080	0.397	9,996.765	0.497	10,093.450	0.597	10,190.134	0.697	10,286.819	0.797	10,383.504	0.897	10,480.188	0.997	10,576.873
0.098	9,707.678	0.198	9,804.363	0.298	9,901.047	0.398	9,997.732	0.498	10,094.417	0.598	10,191.101	0.698	10,287.786	0.798	10,384.470	0.898	10,481.155	0.998	10,577.840
0.099	9,708.645	0.199	9,805.329	0.299	9,902.014	0.399	9,998.699	0.499	10,095.383	0.599	10,192.068	0.699	10,288.753	0.799	10,385.437	0.899	10,482.122	0.999	10,578.807

DATE STRAPPED: 09/19/17 BY: RJ
DATE COMPUTED: 09/26/17 BY: WLH
DATE ISSUED: 09/26/17

AMSPEC

Meliadine
Rankin Inlet

Tank No. 2
INNAGE TABLE

Calibration@AmSpecGroup.com

Item 20 - Final - Data Sheet (Innage)

CAPACITIES GIVEN IN CUBIC METERS

GAUGE HEIGHT: 14.269 M

mm	11 M	mm	11 M	mm	11 M	mm	11 M	mm	11 M	mm	11 M	mm	11 M	mm	11 M	mm	11 M	mm	11 M
0.000	10,579.773	0.100	10,676.458	0.200	10,773.158	0.300	10,869.878	0.400	10,966.597	0.500	11,063.316	0.600	11,160.035	0.700	11,256.754	0.800	11,353.474	0.900	11,450.193
0.001	10,580.740	0.101	10,677.425	0.201	10,774.126	0.301	10,870.845	0.401	10,967.564	0.501	11,064.283	0.601	11,161.002	0.701	11,257.722	0.801	11,354.441	0.901	11,451.160
0.002	10,581.707	0.102	10,678.392	0.202	10,775.093	0.302	10,871.812	0.402	10,968.531	0.502	11,065.250	0.602	11,161.970	0.702	11,258.689	0.802	11,355.408	0.902	11,452.127
0.003	10,582.674	0.103	10,679.359	0.203	10,776.060	0.303	10,872.779	0.403	10,969.498	0.503	11,066.218	0.603	11,162.937	0.703	11,259.656	0.803	11,356.375	0.903	11,453.094
0.004	10,583.641	0.104	10,680.325	0.204	10,777.027	0.304	10,873.746	0.404	10,970.466	0.504	11,067.185	0.604	11,163.904	0.704	11,260.623	0.804	11,357.342	0.904	11,454.062
0.005	10,584.608	0.105	10,681.292	0.205	10,777.994	0.305	10,874.714	0.405	10,971.433	0.505	11,068.152	0.605	11,164.871	0.705	11,261.590	0.805	11,358.310	0.905	11,455.029
0.006	10,585.575	0.106	10,682.259	0.206	10,778.962	0.306	10,875.681	0.406	10,972.400	0.506	11,069.119	0.606	11,165.838	0.706	11,262.558	0.806	11,359.277	0.906	11,455.996
0.007	10,586.541	0.107	10,683.226	0.207	10,779.929	0.307	10,876.648	0.407	10,973.367	0.507	11,070.086	0.607	11,166.806	0.707	11,263.525	0.807	11,360.244	0.907	11,456.963
0.008	10,587.508	0.108	10,684.193	0.208	10,780.896	0.308	10,877.615	0.408	10,974.334	0.508	11,071.054	0.608	11,167.773	0.708	11,264.492	0.808	11,361.211	0.908	11,457.930
0.009	10,588.475	0.109	10,685.160	0.209	10,781.863	0.309	10,878.582	0.409	10,975.302	0.509	11,072.021	0.609	11,168.740	0.709	11,265.459	0.809	11,362.178	0.909	11,458.898
0.010	10,589.442	0.110	10,686.127	0.210	10,782.830	0.310	10,879.550	0.410	10,976.269	0.510	11,072.988	0.610	11,169.707	0.710	11,266.426	0.810	11,363.146	0.910	11,459.865
0.011	10,590.409	0.111	10,687.093	0.211	10,783.798	0.311	10,880.517	0.411	10,977.236	0.511	11,073.955	0.611	11,170.674	0.711	11,267.394	0.811	11,364.113	0.911	11,460.832
0.012	10,591.376	0.112	10,688.060	0.212	10,784.765	0.312	10,881.484	0.412	10,978.203	0.512	11,074.922	0.612	11,171.642	0.712	11,268.361	0.812	11,365.080	0.912	11,461.799
0.013	10,592.342	0.113	10,689.027	0.213	10,785.732	0.313	10,882.451	0.413	10,979.170	0.513	11,075.890	0.613	11,172.609	0.713	11,269.328	0.813	11,366.047	0.913	11,462.766
0.014	10,593.309	0.114	10,689.994	0.214	10,786.699	0.314	10,883.418	0.414	10,980.138	0.514	11,076.857	0.614	11,173.576	0.714	11,270.295	0.814	11,367.014	0.914	11,463.734
0.015	10,594.276	0.115	10,690.961	0.215	10,787.666	0.315	10,884.386	0.415	10,981.105	0.515	11,077.824	0.615	11,174.543	0.715	11,271.262	0.815	11,367.982	0.915	11,464.701
0.016	10,595.243	0.116	10,691.928	0.216	10,788.634	0.316	10,885.353	0.416	10,982.072	0.516	11,078.791	0.616	11,175.510	0.716	11,272.230	0.816	11,368.949	0.916	11,465.668
0.017	10,596.210	0.117	10,692.894	0.217	10,789.601	0.317	10,886.320	0.417	10,983.039	0.517	11,079.758	0.617	11,176.478	0.717	11,273.197	0.817	11,369.916	0.917	11,466.635
0.018	10,597.177	0.118	10,693.861	0.218	10,790.568	0.318	10,887.287	0.418	10,984.006	0.518	11,080.725	0.618	11,177.445	0.718	11,274.164	0.818	11,370.883	0.918	11,467.602
0.019	10,598.144	0.119	10,694.828	0.219	10,791.535	0.319	10,888.254	0.419	10,984.973	0.519	11,081.693	0.619	11,178.412	0.719	11,275.131	0.819	11,371.850	0.919	11,468.569
0.020	10,599.110	0.120	10,695.795	0.220	10,792.502	0.320	10,889.221	0.420	10,985.941	0.520	11,082.660	0.620	11,179.379	0.720	11,276.098	0.820	11,372.817	0.920	11,469.537
0.021	10,600.077	0.121	10,696.762	0.221	10,793.469	0.321	10,890.189	0.421	10,986.908	0.521	11,083.627	0.621	11,180.346	0.721	11,277.065	0.821	11,373.785	0.921	11,470.504
0.022	10,601.044	0.122	10,697.729	0.222	10,794.437	0.322	10,891.156	0.422	10,987.875	0.522	11,084.594	0.622	11,181.313	0.722	11,278.033	0.822	11,374.752	0.922	11,471.471
0.023	10,602.011	0.123	10,698.696	0.223	10,795.404	0.323	10,892.123	0.423	10,988.842	0.523	11,085.561	0.623	11,182.281	0.723	11,279.000	0.823	11,375.719	0.923	11,472.438
0.024	10,602.978	0.124	10,699.662	0.224	10,796.371	0.324	10,893.090	0.424	10,989.809	0.524	11,086.529	0.624	11,183.248	0.724	11,279.967	0.824	11,376.686	0.924	11,473.405
0.025	10,603.945	0.125	10,700.629	0.225	10,797.338	0.325	10,894.057	0.425	10,990.777	0.525	11,087.496	0.625	11,184.215	0.725	11,280.934	0.825	11,377.653	0.925	11,474.373
0.026	10,604.911	0.126	10,701.596	0.226	10,798.305	0.326	10,895.025	0.426	10,991.744	0.526	11,088.463	0.626	11,185.182	0.726	11,281.901	0.826	11,378.621	0.926	11,475.340
0.027	10,605.878	0.127	10,702.563	0.227	10,799.273	0.327	10,895.992	0.427	10,992.711	0.527	11,089.430	0.627	11,186.149	0.727	11,282.869	0.827	11,379.588	0.927	11,476.307
0.028	10,606.845	0.128	10,703.530	0.228	10,800.240	0.328	10,896.959	0.428	10,993.678	0.528	11,090.397	0.628	11,187.117	0.728	11,283.836	0.828	11,380.555	0.928	11,477.274
0.029	10,607.812	0.129	10,704.497	0.229	10,801.207	0.329	10,897.926	0.429	10,994.645	0.529	11,091.365	0.629	11,188.084	0.729	11,284.803	0.829	11,381.522	0.929	11,478.241
0.030	10,608.779	0.130	10,705.463	0.230	10,802.174	0.330	10,898.893	0.430	10,995.613	0.530	11,092.332	0.630	11,189.051	0.730	11,285.770	0.830	11,382.489	0.930	11,479.209
0.031	10,609.746	0.131	10,706.430	0.231	10,803.141	0.331	10,899.861	0.431	10,996.580	0.531	11,093.299	0.631	11,190.018	0.731	11,286.737	0.831	11,383.457	0.931	11,480.176
0.032	10,610.713	0.132	10,707.397	0.232	10,804.109	0.332	10,900.828	0.432	10,997.547	0.532	11,094.266	0.632	11,190.985	0.732	11,287.705	0.832	11,384.424	0.932	11,481.143
0.033	10,611.679	0.133	10,708.364	0.233	10,805.076	0.333	10,901.795	0.433	10,998.514	0.533	11,095.233	0.633	11,191.953	0.733	11,288.672	0.833	11,385.391	0.933	11,482.110
0.034	10,612.646	0.134	10,709.331	0.234	10,806.043	0.334	10,902.762	0.434	10,999.481	0.534	11,096.201	0.634	11,192.920	0.734	11,289.639	0.834	11,386.358	0.934	11,483.077
0.035	10,613.613	0.135	10,710.298	0.235	10,807.010	0.335	10,903.729	0.435	11,000.449	0.535	11,097.168	0.635	11,193.887	0.735	11,290.606	0.835	11,387.325	0.935	11,484.045
0.036	10,614.580	0.136	10,711.265	0.236	10,807.977	0.336	10,904.697	0.436	11,001.416	0.536	11,098.135	0.636	11,194.854	0.736	11,291.573	0.836	11,388.293	0.936	11,485.012
0.037	10,615.547	0.137	10,712.231	0.237	10,808.945	0.337	10,905.664	0.437	11,002.383	0.537	11,099.102	0.637	11,195.821	0.737	11,292.541	0.837	11,389.260	0.937	11,485.979
0.038	10,616.514	0.1380	10,713.198	0.238	10,809.912	0.338	10,906.631	0.438	11,003.350	0.538	11,100.069	0.638	11,196.789	0.738	11,293.508	0.838	11,390.227	0.938	11,486.946
0.039	10,617.480	0.139	10,714.165	0.239	10,810.879	0.339	10,907.598	0.439	11,004.317	0.539	11,101.037	0.639	11,197.756	0.739	11,294.475	0.839	11,391.194	0.939	11,487.913
0.040	10,618.447	0.140	10,715.132	0.240	10,811.846	0.340	10,908.565	0.440	11,005.285	0.540	11,102.004	0.640	11,198.723	0.740	11,295.442	0.840	11,392.161	0.940	11,488.881
0.041	10,619.414	0.141	10,716.099	0.241	10,812.813	0.341	10,909.533	0.441	11,006.252	0.541	11,102.971	0.641	11,199.690	0.741	11,296.409	0.841	11,393.129	0.941	11,489.848
0.042	10,620.381	0.142	10,717.066	0.242	10,813.781	0.342	10,910.500	0.442	11,007.219	0.542	11,103.938	0.642	11,200.657	0.742	11,297.377	0.842	11,394.096	0.942	11,490.815
0.043	10,621.348	0.143	10,718.033	0.243	10,814.748	0.343	10,911.467	0.443	11,008.186	0.543	11,104.905	0.643	11,201.624	0.743	11,298.344	0.843	11,395.063	0.943	11,491.782
0.044	10,622.315	0.144	10,719.000	0.244	10,815.715	0.344	10,912.434	0.444	11,009.153	0.544	11,105.872	0.644	11,202.592	0.744	11,299.311	0.844	11,396.030	0.944	11,492.749
0.045	10,623.282	0.145	10,719.967	0.245	10,816.682	0.345	10,913.401	0.445	11,010.120	0.545	11,106.840	0.645	11,203.559	0.745	11,300.278	0.845	11,396.997	0.945	11,493.716
0.046	10,624.248	0.146	10,720.934	0.246	10,817.649	0.346	10,914.368	0.446	11,011.088	0.546	11,107.807	0.646	11,204.526	0.746	11,301.245	0.846	11,397.964	0.946	11,494.684
0.047	10,625.215	0.147	10,721.901	0.247	10,818.616	0.347	10,915.336	0.447	11,012.055	0.547	11,108.774	0.647	11,205.493	0.747	11,302.212	0.847	11,398.932	0.947	11,495.651
0.048	10,626.182	0.148	10,722.868	0.248	10,819.584	0.348	10,916.303	0.448	11,013.022	0.548	11,109.741	0.648	11,206.460	0.748	11,303.180	0.848	11,399.899	0.948	11,496.618
0.049	10,627.149	0.149	10,723.835	0.249	10,820.551	0.349	10,917.270	0.449	11,013.989	0.549	11,110.708	0.649	11,207.428	0.749	11,304.147	0.849	11,400.866	0.949	11,497.585
0.050	10,628.116	0.150	10,724.802	0.250	10,821.518	0.350	10,918.237	0.450	11,014.956	0.550	11,111.676	0.650	11,208.395	0.750	11,305.114	0.850	11,401.833	0.950	11,498.552
0.051	10,629.083	0.151	10,725.769	0.251	10,822.485	0.351	10,919.204	0.451	11,015.924	0.551	11,112.643	0.651	11,209.362	0.751	11,306.081	0.851	11,402.800	0.951	11,499.520
0.052	10,630.049	0.152	10,726.736	0.252	10,823.452	0.352	10,920.172	0.452	11,016.891	0.552	11,113.610	0.652	11,210.329	0.752	11,307.048	0.852	11,403.768	0.952	11,500.487
0.053	10,631.016	0.153	10,727.703	0.253	10,824.420	0.353	10,921.139	0.453	11,017.858	0.553	11,114.577	0.653	11,211.296	0.753	11,308.016	0.853	11,404.735	0.953	11,501.454
0.054	10,631.983	0.154	10,728.670	0.254	10,825.387	0.354	10,922.106	0.454	11,018.825	0.554	11,115.544	0.654	11,212.264	0.754	11,308.983	0.854	11,405.702	0.954	11,502.421
0.055	10,632.950	0.155	10,729.637	0.255	10,826.354	0.355	10,923.073	0.455	11,019.792	0.555	11,116.512	0.655	11,213.231	0.755	11,309.950	0.855	11,406.669	0.955	11,503.388
0.056	10,633.917	0.156	10,730.604	0.256	10,827.321	0.356	10,924.040	0.456	11,020.760	0.556	11,117.479	0.656	11,214.198	0.756	11,310.917	0.856	11,407.636	0.956	11,504.356
0.057	10,634.884	0.157	10,731.571	0.257	10,828.288	0.357	10,925.008	0.457	11,021.727	0.557	11,118.446	0.657	11,215.165	0.757	11,311.884	0.857	11,408.604	0.957	11,505.323
0.058	10,635.851	0.158	10,732.538	0.258	10,829.256	0.358	10,925.975	0.458	11,022.694	0.558	11,119.413	0.658	11,216.132	0.758	11,312.852	0.858	11,409.571	0.958	11,506.290
0.059	10,636.817	0.159	10,733.505	0.259	10,830.223	0.359	10,926.942	0.459	11,023.661	0.559	11,120.380	0.659	11,217.100	0.759	11,313.819	0.859	11,410.538	0.959	11,507.257
0.060	10,637.784	0.160	10,734.472	0.260	10,831.190	0.360	10,927.909	0.460	11,024.628	0.560	11,121.348	0.660	11,218.067	0.760	11,314.786	0.860	11,411.505	0.960	11,508.224
0.061	10,638.751	0.161	10,735.439	0.261	10,832.157	0.361	10,928.876	0.461	11,025.596	0.561	11,122.315	0.661	11,219.034	0.761	11,315.753	0.861	11,412.472	0.961	11,509.192
0.062	10,639.718	0.162	10,736.406	0.262	10,833.124	0.362	10,929.844	0.462	11,026.563	0.562	11,123.282	0.662	11,220.001	0.762	11,316.720	0.862	11,413.440	0.962	11,510.159
0.063	10,640.685	0.163	10,737.373	0.263	10,834.092	0.363	10,930.811	0.463	11,027.530	0.563	11,124.249	0.663	11,220.968	0.763	11,317.688	0.863	11,414.407	0.963	11,511.126
0.064	10,641.652	0.164	10,738.340	0.264	10,835.059	0.364	10,931.778	0.464	11,028.497	0.564	11,125.216	0.664	11,221.936	0.764	11,318.655	0.864	11,415.374	0.964	11,512.093
0.065	10,642.618	0.165	10,739.307	0.265	10,836.026	0.365	10,932.745	0.465	11,029.464	0.565	11,126.184	0.665	11,222.903	0.765	11,319.622	0.865	11,416.341	0.965	11,513.060
0.066	10,643.585	0.166	10,740.274	0.266	10,836.993	0.366	10,933.712	0.466	11,030.432	0.566	11,127.151	0.666	11,223.870	0.766	11,320.589	0.866	11,417.308	0.966	11,514.028
0.067	10,644.552	0.167	10,741.241	0.267	10,837.960	0.367	10,934.680	0.467	11,031.399	0.567	11,128.118	0.667	11,224.837	0.767	11,321.556	0.867	11,418.276	0.967	11,514.995
0.068	10,645.519	0.168	10,742.208	0.268	10,838.928	0.368	10,935.647	0.468	11,032.366	0.568	11,129.085	0.668	11,225.804	0.768	11,322.523	0.868	11,419.243	0.968	11,515.962
0.069	10,646.486	0.169	10,743.175	0.269	10,839.895	0.369	10,936.614	0.469	11,033.333	0.569	11,130.052	0.669	11,226.771	0.769	11,323.491	0.869	11,420.210	0.969	11,516.929
0.070	10,647.453	0.170	10,744.143	0.270	10,840.862	0.370	10,937.581	0.470	11,034.300	0.570	11,131.019	0.670	11,227.739	0.770	11,324.458	0.870	11,421.177	0.970	11,517.896
0.071	10,648.420	0.171	10,745.110	0.271	10,841.829	0.371	10,938.548	0.471	11,035.267	0.571	11,131.987	0.671	11,228.706	0.771	11,325.425	0.871	11,422.144	0.971	11,518.863
0.072	10,649.386	0.172	10,746.077	0.272	10,842.796	0.372	10,939.515	0.472	11,036.235	0.572	11,132.954	0.672	11,229.673	0.772	11,326.392	0.872	11,423.111	0.972	11,519.831
0.073	10,650.353	0.173	10,747.044	0.273	10,843.763	0.373	10,940.483	0.473	11,037.202	0.573	11,133.921	0.673	11,230.640	0.773	11,327.359	0.873	11,424.079	0.973	11,520.798
0.074	10,651.320	0.174	10,748.011	0.274	10,844.731	0.374	10,941.450	0.474	11,038.169	0.574	11,134.888	0.674	11,231.607	0.774	11,328.327	0.874	11,425.046	0.974	11,521.765
0.075	10,652.287	0.175	10,748.979	0.275	10,845.698	0.375	10,942.417	0.475	11,039.136	0.575	11,135.855	0.675	11,232.575	0.775	11,329.294	0.875	11,426.013	0.975	11,522.732
0.076	10,653.254	0.176	10,749.946	0.276	10,846.665	0.376	10,943.384	0.476	11,040.103	0.576	11,136.823	0.676	11,233.542	0.776	11,330.261	0.876	11,426.980	0.976	11,523.699
0.077	10,654.221	0.177	10,750.913	0.277	10,847.632	0.377	10,944.351	0.477	11,041.071	0.577	11,137.790	0.677	11,234.509	0.777	11,331.228	0.877	11,427.947	0.977	11,524.667
0.078	10,655.187	0.178	10,751.880	0.278	10,848.599	0.378	10,945.319	0.478	11,042.038	0.578	11,138.757	0.678	11,235.476	0.778	11,332.195	0.878	11,428.915	0.978	11,525.634
0.079	10,656.154	0.179	10,752.847	0.279	10,849.567	0.379	10,946.286	0.479	11,043.005	0.579	11,139.724	0.679	11,236.443	0.779	11,333.163	0.879	11,429.882	0.979	11,526.601
0.080	10,657.121	0.180	10,753.815	0.280	10,850.534	0.380	10,947.253	0.480	11,043.972	0.580	11,140.691	0.680	11,237.411	0.780	11,334.130	0.880	11,430.849	0.980	11,527.568
0.081	10,658.088	0.181	10,754.782	0.281	10,851.501	0.381	10,948.220	0.481	11,044.939	0.581	11,141.659	0.681	11,238.378	0.781	11,335.097	0.881	11,431.816	0.981	11,528.535
0.082	10,659.055	0.182	10,755.749	0.282	10,852.468	0.382	10,949.187	0.482	11,045.907	0.582	11,142.626	0.682	11,239.345	0.782	11,336.064	0.882	11,432.783	0.982	11,529.503
0.083	10,660.022	0.183	10,756.716	0.283	10,853.435	0.383	10,950.155	0.483	11,046.874	0.583	11,143.593	0.683	11,240.312	0.783	11,337.031	0.883	11,433.751	0.983	11,530.470
0.084	10,660.989	0.184	10,757.683	0.284	10,854.403	0.384	10,951.122	0.484	11,047.841	0.584	11,144.560	0.684	11,241.279	0.784	11,337.999	0.884	11,434.718	0.984	11,531.437
0.085	10,661.955	0.185	10,758.651	0.285	10,855.370	0.385	10,952.089	0.485	11,048.808	0.585	11,145.527	0.685	11,242.247	0.785	11,338.966	0.885	11,435.685	0.985	11,532.404
0.086	10,662.922	0.186	10,759.618	0.286	10,856.337	0.386	10,953.056	0.486	11,049.775	0.586	11,146.495	0.686	11,243.214	0.786	11,339.933	0.886	11,436.652	0.986	11,533.371
0.087	10,663.889	0.187	10,760.585	0.287	10,857.304	0.387	10,954.023	0.487	11,050.743	0.587	11,147.462	0.687	11,244.181	0.787	11,340.900	0.887	11,437.619	0.987	11,534.339
0.088	10,664.856	0.188	10,761.552	0.288	10,858.271	0.388	10,954.991	0.488	11,051.710	0.588	11,148.429	0.688	11,245.148	0.788	11,341.867	0.888	11,438.587	0.988	11,535.306
0.089	10,665.823	0.189	10,762.519	0.289	10,859.239	0.389	10,955.958	0.489	11,052.677	0.589	11,149.396	0.689	11,246.115	0.789	11,342.835	0.889	11,439.554	0.989	11,536.273
0.090	10,666.790	0.190	10,763.487	0.290	10,860.206	0.390	10,956.925	0.490	11,053.644	0.590	11,150.363	0.690	11,247.083	0.790	11,343.802	0.890	11,440.521	0.990	11,537.240
0.091	10,667.756	0.191	10,764.454	0.291	10,861.173	0.391	10,957.892	0.491	11,054.611	0.591	11,151.331	0.691	11,248.050	0.791	11,344.769	0.891	11,441.488	0.991	11,538.207
0.092	10,668.723	0.192	10,765.421	0.292	10,862.140	0.392	10,958.859	0.492	11,055.579	0.592	11,152.298	0.692	11,249.017	0.792	11,345.736	0.892	11,442.455	0.992	11,539.175
0.093	10,669.690	0.193	10,766.388	0.293	10,863.107	0.393	10,959.827	0.493	11,056.546	0.593	11,153.265	0.693	11,249.984	0.793	11,346.703	0.893	11,443.422	0.993	11,540.142
0.094	10,670.657	0.194	10,767.355	0.294	10,864.074	0.394	10,960.794	0.494	11,057.513	0.594	11,154.232	0.694	11,250.951	0.794	11,347.670	0.894	11,444.390	0.994	11,541.109
0.095	10,671.624	0.195	10,768.322	0.295	10,865.042	0.395	10,961.761	0.495	11,058.480	0.595	11,155.199	0.695	11,251.918	0.795	11,348.638	0.895	11,445.357	0.995	11,542.076
0.096	10,672.591	0.196	10,769.290	0.296	10,866.009	0.396	10,962.728	0.496	11,059.447	0.596	11,156.166	0.696	11,252.886	0.796	11,349.605	0.896	11,446.324	0.996	11,543.043
0.097	10,673.558	0.197	10,770.257	0.297	10,866.976	0.397	10,963.695	0.497	11,060.414	0.597	11,157.134	0.697	11,253.853	0.797	11,350.572	0.897	11,447.291	0.997	11,544.010
0.098	10,674.524	0.198	10,771.224	0.298	10,867.943	0.398	10,964.662	0.498	11,061.382	0.598	11,158.101	0.698	11,254.820	0.798	11,351.539	0.898	11,448.258	0.998	11,544.978
0.099	10,675.491	0.199	10,772.191	0.299	10,868.910	0.399	10,965.630	0.499	11,062.349	0.599	11,159.068	0.699	11,255.787	0.799	11,352.506	0.899	11,449.226	0.999	11,545.945

DATE STRAPPED: 09/19/17 BY: RJ
DATE COMPUTED: 09/26/17 BY: WLH
DATE ISSUED: 09/26/17

AMSPEC

Meliadine

Rankin Inlet

Tank No. 2

INNAGE TABLE

Calibration@AmSpecGroup.com

Item 20 - Final - Data Sheet (Innage)

CAPACITIES GIVEN IN CUBIC METERS

GAUGE HEIGHT: 14.269 M

mm	12 M	mm	12 M	mm	12 M	mm	12 M	mm	12 M	mm	12 M	mm	12 M	mm	12 M	mm	12 M	mm	12 M
0.000	11,546.912	0.100	11,643.631	0.200	11,740.350	0.300	11,837.070	0.400	11,933.789	0.500	12,030.508	0.600	12,127.227	0.700	12,223.946	0.800	12,320.666	0.900	12,417.385
0.001	11,547.879	0.101	11,644.598	0.201	11,741.318	0.301	11,838.037	0.401	11,934.756	0.501	12,031.475	0.601	12,128.194	0.701	12,224.914	0.801	12,321.633	0.901	12,418.352
0.002	11,548.846	0.102	11,645.566	0.202	11,742.285	0.302	11,839.004	0.402	11,935.723	0.502	12,032.442	0.602	12,129.162	0.702	12,225.881	0.802	12,322.600	0.902	12,419.319
0.003	11,549.814	0.103	11,646.533	0.203	11,743.252	0.303	11,839.971	0.403	11,936.690	0.503	12,033.410	0.603	12,130.129	0.703	12,226.848	0.803	12,323.567	0.903	12,420.286
0.004	11,550.781	0.104	11,647.500	0.204	11,744.219	0.304	11,840.938	0.404	11,937.658	0.504	12,034.377	0.604	12,131.096	0.704	12,227.815	0.804	12,324.534	0.904	12,421.254
0.005	11,551.748	0.105	11,648.467	0.205	11,745.186	0.305	11,841.906	0.405	11,938.625	0.505	12,035.344	0.605	12,132.063	0.705	12,228.782	0.805	12,325.502	0.905	12,422.221
0.006	11,552.715	0.106	11,649.434	0.206	11,746.154	0.306	11,842.873	0.406	11,939.592	0.506	12,036.311	0.606	12,133.030	0.706	12,229.750	0.806	12,326.469	0.906	12,423.188
0.007	11,553.682	0.107	11,650.402	0.207	11,747.121	0.307	11,843.840	0.407	11,940.559	0.507	12,037.278	0.607	12,133.998	0.707	12,230.717	0.807	12,327.436	0.907	12,424.155
0.008	11,554.650	0.108	11,651.369	0.208	11,748.088	0.308	11,844.807	0.408	11,941.526	0.508	12,038.246	0.608	12,134.965	0.708	12,231.684	0.808	12,328.403	0.908	12,425.122
0.009	11,555.617	0.109	11,652.336	0.209	11,749.055	0.309	11,845.774	0.409	11,942.494	0.509	12,039.213	0.609	12,135.932	0.709	12,232.651	0.809	12,329.370	0.909	12,426.090
0.010	11,556.584	0.110	11,653.303	0.210	11,750.022	0.310	11,846.742	0.410	11,943.461	0.510	12,040.180	0.610	12,136.899	0.710	12,233.618	0.810	12,330.338	0.910	12,427.057
0.011	11,557.551	0.111	11,654.270	0.211	11,750.990	0.311	11,847.709	0.411	11,944.428	0.511	12,041.147	0.611	12,137.866	0.711	12,234.586	0.811	12,331.305	0.911	12,428.024
0.012	11,558.518	0.112	11,655.238	0.212	11,751.957	0.312	11,848.676	0.412	11,945.395	0.512	12,042.114	0.612	12,138.834	0.712	12,235.553	0.812	12,332.272	0.912	12,428.991
0.013	11,559.486	0.113	11,656.205	0.213	11,752.924	0.313	11,849.643	0.413	11,946.362	0.513	12,043.082	0.613	12,139.801	0.713	12,236.520	0.813	12,333.239	0.913	12,429.958
0.014	11,560.453	0.114	11,657.172	0.214	11,753.891	0.314	11,850.610	0.414	11,947.330	0.514	12,044.049	0.614	12,140.768	0.714	12,237.487	0.814	12,334.206	0.914	12,430.926
0.015	11,561.420	0.115	11,658.139	0.215	11,754.858	0.315	11,851.578	0.415	11,948.297	0.515	12,045.016	0.615	12,141.735	0.715	12,238.454	0.815	12,335.174	0.915	12,431.893
0.016	11,562.387	0.116	11,659.106	0.216	11,755.826	0.316	11,852.545	0.416	11,949.264	0.516	12,045.983	0.616	12,142.702	0.716	12,239.422	0.816	12,336.141	0.916	12,432.860
0.017	11,563.354	0.117	11,660.074	0.217	11,756.793	0.317	11,853.512	0.417	11,950.231	0.517	12,046.950	0.617	12,143.669	0.717	12,240.389	0.817	12,337.108	0.917	12,433.827
0.018	11,564.321	0.118	11,661.041	0.218	11,757.760	0.318	11,854.479	0.418	11,951.198	0.518	12,047.917	0.618	12,144.637	0.718	12,241.356	0.818	12,338.075	0.918	12,434.794
0.019	11,565.289	0.119	11,662.008	0.219	11,758.727	0.319	11,855.446	0.419	11,952.165	0.519	12,048.885	0.619	12,145.604	0.719	12,242.323	0.819	12,339.042	0.919	12,435.761
0.020	11,566.256	0.120	11,662.975	0.220	11,759.694	0.320	11,856.413	0.420	11,953.133	0.520	12,049.852	0.620	12,146.571	0.720	12,243.290	0.820	12,340.009	0.920	12,436.729
0.021	11,567.223	0.121	11,663.942	0.221	11,760.661	0.321	11,857.381	0.421	11,954.100	0.521	12,050.819	0.621	12,147.538	0.721	12,244.257	0.821	12,340.977	0.921	12,437.696
0.022	11,568.190	0.122	11,664.909	0.222	11,761.629	0.322	11,858.348	0.422	11,955.067	0.522	12,051.786	0.622	12,148.505	0.722	12,245.225	0.822	12,341.944	0.922	12,438.663
0.023	11,569.157	0.123	11,665.877	0.223	11,762.596	0.323	11,859.315	0.423	11,956.034	0.523	12,052.753	0.623	12,149.473	0.723	12,246.192	0.823	12,342.911	0.923	12,439.630
0.024	11,570.125	0.124	11,666.844	0.224	11,763.563	0.324	11,860.282	0.424	11,957.001	0.524	12,053.721	0.624	12,150.440	0.724	12,247.159	0.824	12,343.878	0.924	12,440.597
0.025	11,571.092	0.125	11,667.811	0.225	11,764.530	0.325	11,861.249	0.425	11,957.969	0.525	12,054.688	0.625	12,151.407	0.725	12,248.126	0.825	12,344.845	0.925	12,441.565
0.026	11,572.059	0.126	11,668.778	0.226	11,765.497	0.326	11,862.217	0.426	11,958.936	0.526	12,055.655	0.626	12,152.374	0.726	12,249.093	0.826	12,345.813	0.926	12,442.532
0.027	11,573.026	0.127	11,669.745	0.227	11,766.465	0.327	11,863.184	0.427	11,959.903	0.527	12,056.622	0.627	12,153.341	0.727	12,250.061	0.827	12,346.780	0.927	12,443.499
0.028	11,573.993	0.128	11,670.713	0.228	11,767.432	0.328	11,864.151	0.428	11,960.870	0.528	12,057.589	0.628	12,154.309	0.728	12,251.028	0.828	12,347.747	0.928	12,444.466
0.029	11,574.961	0.129	11,671.680	0.229	11,768.399	0.329	11,865.118	0.429	11,961.837	0.529	12,058.557	0.629	12,155.276	0.729	12,251.995	0.829	12,348.714	0.929	12,445.433
0.030	11,575.928	0.130	11,672.647	0.230	11,769.366	0.330	11,866.085	0.430	11,962.805	0.530	12,059.524	0.630	12,156.243	0.730	12,252.962	0.830	12,349.681	0.930	12,446.401
0.031	11,576.895	0.131	11,673.614	0.231	11,770.333	0.331	11,867.053	0.431	11,963.772	0.531	12,060.491	0.631	12,157.210	0.731	12,253.929	0.831	12,350.649	0.931	12,447.368
0.032	11,577.862	0.132	11,674.581	0.232	11,771.301	0.332	11,868.020	0.432	11,964.739	0.532	12,061.458	0.632	12,158.177	0.732	12,254.897	0.832	12,351.616	0.932	12,448.335
0.033	11,578.829	0.133	11,675.549	0.233	11,772.268	0.333	11,868.987	0.433	11,965.706	0.533	12,062.425	0.633	12,159.145	0.733	12,255.864	0.833	12,352.583	0.933	12,449.302
0.034	11,579.797	0.134	11,676.516	0.234	11,773.235	0.334	11,869.954	0.434	11,966.673	0.534	12,063.393	0.634	12,160.112	0.734	12,256.831	0.834	12,353.550	0.934	12,450.269
0.035	11,580.764	0.135	11,677.483	0.235	11,774.202	0.335	11,870.921	0.435	11,967.641	0.535	12,064.360	0.635	12,161.079	0.735	12,257.798	0.835	12,354.517	0.935	12,451.237
0.036	11,581.731	0.136	11,678.450	0.236	11,775.169	0.336	11,871.889	0.436	11,968.608	0.536	12,065.327	0.636	12,162.046	0.736	12,258.765	0.836	12,355.485	0.936	12,452.204
0.037	11,582.698	0.137	11,679.417	0.237	11,776.137	0.337	11,872.856	0.437	11,969.575	0.537	12,066.294	0.637	12,163.013	0.737	12,259.733	0.837	12,356.452	0.937	12,453.171
0.038	11,583.665	0.1380	11,680.385	0.238	11,777.104	0.338	11,873.823	0.438	11,970.542	0.538	12,067.261	0.638	12,163.981	0.738	12,260.700	0.838	12,357.419	0.938	12,454.138
0.039	11,584.633	0.139	11,681.352	0.239	11,778.071	0.339	11,874.790	0.439	11,971.509	0.539	12,068.229	0.639	12,164.948	0.739	12,261.667	0.839	12,358.386	0.939	12,455.105
0.040	11,585.600	0.140	11,682.319	0.240	11,779.038	0.340	11,875.757	0.440	11,972.477	0.540	12,069.196	0.640	12,165.915	0.740	12,262.634	0.840	12,359.353	0.940	12,456.073
0.041	11,586.567	0.141	11,683.286	0.241	11,780.005	0.341	11,876.725	0.441	11,973.444	0.541	12,070.163	0.641	12,166.882	0.741	12,263.601	0.841	12,360.320	0.941	12,457.040
0.042	11,587.534	0.142	11,684.253	0.242	11,780.972	0.342	11,877.692	0.442	11,974.411	0.542	12,071.130	0.642	12,167.849	0.742	12,264.568	0.842	12,361.288	0.942	12,458.007
0.043	11,588.501	0.143	11,685.220	0.243	11,781.940	0.343	11,878.659	0.443	11,975.378	0.543	12,072.097	0.643	12,168.816	0.743	12,265.536	0.843	12,362.255	0.943	12,458.974
0.044	11,589.468	0.144	11,686.188	0.244	11,782.907	0.344	11,879.626	0.444	11,976.345	0.544	12,073.064	0.644	12,169.784	0.744	12,266.503	0.844	12,363.222	0.944	12,459.941
0.045	11,590.436	0.145	11,687.155	0.245	11,783.874	0.345	11,880.593	0.445	11,977.312	0.545	12,074.032	0.645	12,170.751	0.745	12,267.470	0.845	12,364.189	0.945	12,460.908
0.046	11,591.403	0.146	11,688.122	0.246	11,784.841	0.346	11,881.560	0.446	11,978.280	0.546	12,074.999	0.646	12,171.718	0.746	12,268.437	0.846	12,365.156	0.946	12,461.876
0.047	11,592.370	0.147	11,689.089	0.247	11,785.808	0.347	11,882.528	0.447	11,979.247	0.547	12,075.966	0.647	12,172.685	0.747	12,269.404	0.847	12,366.124	0.947	12,462.843
0.048	11,593.337	0.148	11,690.056	0.248	11,786.776	0.348	11,883.495	0.448	11,980.214	0.548	12,076.933	0.648	12,173.652	0.748	12,270.372	0.848	12,367.091	0.948	12,463.810
0.049	11,594.304	0.149	11,691.024	0.249	11,787.743	0.349	11,884.462	0.449	11,981.181	0.549	12,077.900	0.649	12,174.620	0.749	12,271.339	0.849	12,368.058	0.949	12,464.777
0.050	11,595.272	0.150	11,691.991	0.250	11,788.710	0.350	11,885.429	0.450	11,982.148	0.550	12,078.868	0.650	12,175.587	0.750	12,272.306	0.850	12,369.025	0.950	12,465.744
0.051	11,596.239	0.151	11,692.958	0.251	11,789.677	0.351	11,886.396	0.451	11,983.116	0.551	12,079.835	0.651	12,176.554	0.751	12,273.273	0.851	12,369.992	0.951	12,466.712
0.052	11,597.206	0.152	11,693.925	0.252	11,790.644	0.352	11,887.364	0.452	11,984.083	0.552	12,080.802	0.652	12,177.521	0.752	12,274.240	0.852	12,370.960	0.952	12,467.679
0.053	11,598.173	0.153	11,694.892	0.253	11,791.612	0.353	11,888.331	0.453	11,985.050	0.553	12,081.769	0.653	12,178.488	0.753	12,275.208	0.853	12,371.927	0.953	12,468.646
0.054	11,599.140	0.154	11,695.860	0.254	11,792.579	0.354	11,889.298	0.454	11,986.017	0.554	12,082.736	0.654	12,179.456	0.754	12,276.175	0.854	12,372.894	0.954	12,469.613
0.055	11,600.108	0.155	11,696.827	0.255	11,793.546	0.355	11,890.265	0.455	11,986.984	0.555	12,083.704	0.655	12,180.423	0.755	12,277.142	0.855	12,373.861	0.955	12,470.580
0.056	11,601.075	0.156	11,697.794	0.256	11,794.513	0.356	11,891.232	0.456	11,987.952	0.556	12,084.671	0.656	12,181.390	0.756	12,278.109	0.856	12,374.828	0.956	12,471.548
0.057	11,602.042	0.157	11,698.761	0.257	11,795.480	0.357	11,892.200	0.457	11,988.919	0.557	12,085.638	0.657	12,182.357	0.757	12,279.076	0.857	12,375.796	0.957	12,472.515
0.058	11,603.009	0.158	11,699.728	0.258	11,796.448	0.358	11,893.167	0.458	11,989.886	0.558	12,086.605	0.658	12,183.324	0.758	12,280.044	0.858	12,376.763	0.958	12,473.482
0.059	11,603.976	0.159	11,700.696	0.259	11,797.415	0.359	11,894.134	0.459	11,990.853	0.559	12,087.572	0.659	12,184.292	0.759	12,281.011	0.859	12,377.730	0.959	12,474.449
0.060	11,604.944	0.160	11,701.663	0.260	11,798.382	0.360	11,895.101	0.460	11,991.820	0.560	12,088.540	0.660	12,185.259	0.760	12,281.978	0.860	12,378.697	0.960	12,475.416
0.061	11,605.911	0.161	11,702.630	0.261	11,799.349	0.361	11,896.068	0.461	11,992.788	0.561	12,089.507	0.661	12,186.226	0.761	12,282.945	0.861	12,379.664	0.961	12,476.384
0.062	11,606.878	0.162	11,703.597	0.262	11,800.316	0.362	11,897.036	0.462	11,993.755	0.562	12,090.474	0.662	12,187.193	0.762	12,283.912	0.862	12,380.632	0.962	12,477.351
0.063	11,607.845	0.163	11,704.564	0.263	11,801.284	0.363	11,898.003	0.463	11,994.722	0.563	12,091.441	0.663	12,188.160	0.763	12,284.880	0.863	12,381.599	0.963	12,478.318
0.064	11,608.812	0.164	11,705.532	0.264	11,802.251	0.364	11,898.970	0.464	11,995.689	0.564	12,092.408	0.664	12,189.128	0.764	12,285.847	0.864	12,382.566	0.964	12,479.285
0.065	11,609.780	0.165	11,706.499	0.265	11,803.218	0.365	11,899.937	0.465	11,996.656	0.565	12,093.376	0.665	12,190.095	0.765	12,286.814	0.865	12,383.533	0.965	12,480.252
0.066	11,610.747	0.166	11,707.466	0.266	11,804.185	0.366	11,900.904	0.466	11,997.624	0.566	12,094.343	0.666	12,191.062	0.766	12,287.781	0.866	12,384.500	0.966	12,481.219
0.067	11,611.714	0.167	11,708.433	0.267	11,805.152	0.367	11,901.871	0.467	11,998.591	0.567	12,095.310	0.667	12,192.029	0.767	12,288.748	0.867	12,385.467	0.967	12,482.187
0.068	11,612.681	0.168	11,709.400	0.268	11,806.119	0.368	11,902.839	0.468	11,999.558	0.568	12,096.277	0.668	12,192.996	0.768	12,289.715	0.868	12,386.435	0.968	12,483.154
0.069	11,613.648	0.169	11,710.367	0.269	11,807.087	0.369	11,903.806	0.469	12,000.525	0.569	12,097.244	0.669	12,193.963	0.769	12,290.683	0.869	12,387.402	0.969	12,484.121
0.070	11,614.615	0.170	11,711.335	0.270	11,808.054	0.370	11,904.773	0.470	12,001.492	0.570	12,098.211	0.670	12,194.931	0.770	12,291.650	0.870	12,388.369	0.970	12,485.088
0.071	11,615.583	0.171	11,712.302	0.271	11,809.021	0.371	11,905.740	0.471	12,002.459	0.571	12,099.179	0.671	12,195.898	0.771	12,292.617	0.871	12,389.336	0.971	12,486.055
0.072	11,616.550	0.172	11,713.269	0.272	11,809.988	0.372	11,906.707	0.472	12,003.427	0.572	12,100.146	0.672	12,196.865	0.772	12,293.584	0.872	12,390.303	0.972	12,487.023
0.073	11,617.517	0.173	11,714.236	0.273	11,810.955	0.373	11,907.675	0.473	12,004.394	0.573	12,101.113	0.673	12,197.832	0.773	12,294.551	0.873	12,391.271	0.973	12,487.990
0.074	11,618.484	0.174	11,715.203	0.274	11,811.923	0.374	11,908.642	0.474	12,005.361	0.574	12,102.080	0.674	12,198.799	0.774	12,295.519	0.874	12,392.238	0.974	12,488.957
0.075	11,619.451	0.175	11,716.171	0.275	11,812.890	0.375	11,909.609	0.475	12,006.328	0.575	12,103.047	0.675	12,199.767	0.775	12,296.486	0.875	12,393.205	0.975	12,489.924
0.076	11,620.419	0.176	11,717.138	0.276	11,813.857	0.376	11,910.576	0.476	12,007.295	0.576	12,104.015	0.676	12,200.734	0.776	12,297.453	0.876	12,394.172	0.976	12,490.891
0.077	11,621.386	0.177	11,718.105	0.277	11,814.824	0.377	11,911.543	0.477	12,008.263	0.577	12,104.982	0.677	12,201.701	0.777	12,298.420	0.877	12,395.139	0.977	12,491.859
0.078	11,622.353	0.178	11,719.072	0.278	11,815.791	0.378	11,912.511	0.478	12,009.230	0.578	12,105.949	0.678	12,202.668	0.778	12,299.387	0.878	12,396.107	0.978	12,492.826
0.079	11,623.320	0.179	11,720.039	0.279	11,816.759	0.379	11,913.478	0.479	12,010.197	0.579	12,106.916	0.679	12,203.635	0.779	12,300.355	0.879	12,397.074	0.979	12,493.793
0.080	11,624.287	0.180	11,721.007	0.280	11,817.726	0.380	11,914.445	0.480	12,011.164	0.580	12,107.883	0.680	12,204.603	0.780	12,301.322	0.880	12,398.041	0.980	12,494.760
0.081	11,625.255	0.181	11,721.974	0.281	11,818.693	0.381	11,915.412	0.481	12,012.131	0.581	12,108.851	0.681	12,205.570	0.781	12,302.289	0.881	12,399.008	0.981	12,495.727
0.082	11,626.222	0.182	11,722.941	0.282	11,819.660	0.382	11,916.379	0.482	12,013.099	0.582	12,109.818	0.682	12,206.537	0.782	12,303.256	0.882	12,399.975	0.982	12,496.695
0.083	11,627.189	0.183	11,723.908	0.283	11,820.627	0.383	11,917.347	0.483	12,014.066	0.583	12,110.785	0.683	12,207.504	0.783	12,304.223	0.883	12,400.943	0.983	12,497.662
0.084	11,628.156	0.184	11,724.875	0.284	11,821.595	0.384	11,918.314	0.484	12,015.033	0.584	12,111.752	0.684	12,208.471	0.784	12,305.191	0.884	12,401.910	0.984	12,498.629
0.085	11,629.123	0.185	11,725.843	0.285	11,822.562	0.385	11,919.281	0.485	12,016.000	0.585	12,112.719	0.685	12,209.439	0.785	12,306.158	0.885	12,402.877	0.985	12,499.596
0.086	11,630.091	0.186	11,726.810	0.286	11,823.529	0.386	11,920.248	0.486	12,016.967	0.586	12,113.687	0.686	12,210.406	0.786	12,307.125	0.886	12,403.844	0.986	12,500.563
0.087	11,631.058	0.187	11,727.777	0.287	11,824.496	0.387	11,921.215	0.487	12,017.935	0.587	12,114.654	0.687	12,211.373	0.787	12,308.092	0.887	12,404.811	0.987	12,501.531
0.088	11,632.025	0.188	11,728.744	0.288	11,825.463	0.388	11,922.183	0.488	12,018.902	0.588	12,115.621	0.688	12,212.340	0.788	12,309.059	0.888	12,405.779	0.988	12,502.498
0.089	11,632.992	0.189	11,729.711	0.289	11,826.431	0.389	11,923.150	0.489	12,019.869	0.589	12,116.588	0.689	12,213.307	0.789	12,310.027	0.889	12,406.746	0.989	12,503.465
0.090	11,633.959	0.190	11,730.679	0.290	11,827.398	0.390	11,924.117	0.490	12,020.836	0.590	12,117.555	0.690	12,214.275	0.790	12,310.994	0.890	12,407.713	0.990	12,504.432
0.091	11,634.927	0.191	11,731.646	0.291	11,828.365	0.391	11,925.084	0.491	12,021.803	0.591	12,118.523	0.691	12,215.242	0.791	12,311.961	0.891	12,408.680	0.991	12,505.399
0.092	11,635.894	0.192	11,732.613	0.292	11,829.332	0.392	11,926.051	0.492	12,022.770	0.592	12,119.490	0.692	12,216.209	0.792	12,312.928	0.892	12,409.647	0.992	12,506.366
0.093	11,636.861	0.193	11,733.580	0.293	11,830.299	0.393	11,927.018	0.493	12,023.738	0.593	12,120.457	0.693	12,217.176	0.793	12,313.895	0.893	12,410.614	0.993	12,507.334
0.094	11,637.828	0.194	11,734.547	0.294	11,831.266	0.394	11,927.986	0.494	12,024.705	0.594	12,121.424	0.694	12,218.143	0.794	12,314.862	0.894	12,411.582	0.994	12,508.301
0.095	11,638.795	0.195	11,735.514	0.295	11,832.234	0.395	11,928.953	0.495	12,025.672	0.595	12,122.391	0.695	12,219.110	0.795	12,315.830	0.895	12,412.549	0.995	12,509.268
0.096	11,639.762	0.196	11,736.482	0.296	11,833.201	0.396	11,929.920	0.496	12,026.639	0.596	12,123.358	0.696	12,220.078	0.796	12,316.797	0.896	12,413.516	0.996	12,510.235
0.097	11,640.730	0.197	11,737.449	0.297	11,834.168	0.397	11,930.887	0.497	12,027.606	0.597	12,124.326	0.697	12,221.045	0.797	12,317.764	0.897	12,414.483	0.997	12,511.202
0.098	11,641.697	0.198	11,738.416	0.298	11,835.135	0.398	11,931.854	0.498	12,028.574	0.598	12,125.293	0.698	12,222.012	0.798	12,318.731	0.898	12,415.450	0.998	12,512.170
0.099	11,642.664	0.199	11,739.383	0.299	11,836.102	0.399	11,932.822	0.499	12,029.541	0.599	12,126.260	0.699	12,222.979	0.799	12,319.698	0.899	12,416.418	0.999	12,513.137

DATE STRAPPED: 09/19/17 BY: RJ

DATE COMPUTED: 09/26/17 BY: WLH

DATE ISSUED: 09/26/17

AMSPEC

Meliadine
Rankin Inlet
Item 20 - Final - Data Sheet (Innage)

Tank No. 2
INNAGE TABLE

Calibration@AmSpecGroup.com

CAPACITIES GIVEN IN CUBIC METERS

GAUGE HEIGHT: 14.269 M

mm	13 M	mm	13 M	mm	13 M	mm	13 M	mm	13 M	mm	13 M	mm	13 M	mm	13 M	mm	13 M	mm	13 M
0.000	12,514.104	0.100	12,610.823	0.200	12,707.542	0.300	12,804.262	0.400	12,900.981	0.500	12,997.700	0.600	13,094.419	0.700	13,191.138	0.800	13,287.858	0.900	13,384.577
0.001	12,515.071	0.101	12,611.790	0.201	12,708.510	0.301	12,805.229	0.401	12,901.948	0.501	12,998.667	0.601	13,095.386	0.701	13,192.106	0.801	13,288.825	0.901	13,385.544
0.002	12,516.038	0.102	12,612.758	0.202	12,709.477	0.302	12,806.196	0.402	12,902.915	0.502	12,999.634	0.602	13,096.354	0.702	13,193.073	0.802	13,289.792	0.902	13,386.511
0.003	12,517.006	0.103	12,613.725	0.203	12,710.444	0.303	12,807.163	0.403	12,903.882	0.503	13,000.602	0.603	13,097.321	0.703	13,194.040	0.803	13,290.759	0.903	13,387.478
0.004	12,517.973	0.104	12,614.692	0.204	12,711.411	0.304	12,808.130	0.404	12,904.850	0.504	13,001.569	0.604	13,098.288	0.704	13,195.007	0.804	13,291.726	0.904	13,388.446
0.005	12,518.940	0.105	12,615.659	0.205	12,712.378	0.305	12,809.098	0.405	12,905.817	0.505	13,002.536	0.605	13,099.255	0.705	13,195.974	0.805	13,292.694	0.905	13,389.413
0.006	12,519.907	0.106	12,616.626	0.206	12,713.346	0.306	12,810.065	0.406	12,906.784	0.506	13,003.503	0.606	13,100.222	0.706	13,196.942	0.806	13,293.661	0.906	13,390.380
0.007	12,520.874	0.107	12,617.594	0.207	12,714.313	0.307	12,811.032	0.407	12,907.751	0.507	13,004.470	0.607	13,101.190	0.707	13,197.909	0.807	13,294.628	0.907	13,391.347
0.008	12,521.842	0.108	12,618.561	0.208	12,715.280	0.308	12,811.999	0.408	12,908.718	0.508	13,005.438	0.608	13,102.157	0.708	13,198.876	0.808	13,295.595	0.908	13,392.314
0.009	12,522.809	0.109	12,619.528	0.209	12,716.247	0.309	12,812.966	0.409	12,909.686	0.509	13,006.405	0.609	13,103.124	0.709	13,199.843	0.809	13,296.562	0.909	13,393.282
0.010	12,523.776	0.110	12,620.495	0.210	12,717.214	0.310	12,813.934	0.410	12,910.653	0.510	13,007.372	0.610	13,104.091	0.710	13,200.810	0.810	13,297.530	0.910	13,394.249
0.011	12,524.743	0.111	12,621.462	0.211	12,718.182	0.311	12,814.901	0.411	12,911.620	0.511	13,008.339	0.611	13,105.058	0.711	13,201.778	0.811	13,298.497	0.911	13,395.216
0.012	12,525.710	0.112	12,622.430	0.212	12,719.149	0.312	12,815.868	0.412	12,912.587	0.512	13,009.306	0.612	13,106.026	0.712	13,202.745	0.812	13,299.464	0.912	13,396.183
0.013	12,526.678	0.113	12,623.397	0.213	12,720.116	0.313	12,816.835	0.413	12,913.554	0.513	13,010.274	0.613	13,106.993	0.713	13,203.712	0.813	13,300.431	0.913	13,397.150
0.014	12,527.645	0.114	12,624.364	0.214	12,721.083	0.314	12,817.802	0.414	12,914.522	0.514	13,011.241	0.614	13,107.960	0.714	13,204.679	0.814	13,301.398	0.914	13,398.118
0.015	12,528.612	0.115	12,625.331	0.215	12,722.050	0.315	12,818.770	0.415	12,915.489	0.515	13,012.208	0.615	13,108.927	0.715	13,205.646	0.815	13,302.365	0.915	13,399.085
0.016	12,529.579	0.116	12,626.298	0.216	12,723.017	0.316	12,819.737	0.416	12,916.456	0.516	13,013.175	0.616	13,109.894	0.716	13,206.613	0.816	13,303.333	0.916	13,400.052
0.017	12,530.546	0.117	12,627.265	0.217	12,723.985	0.317	12,820.704	0.417	12,917.423	0.517	13,014.142	0.617	13,110.861	0.717	13,207.581	0.817	13,304.300	0.917	13,401.019
0.018	12,531.513	0.118	12,628.233	0.218	12,724.952	0.318	12,821.671	0.418	12,918.390	0.518	13,015.109	0.618	13,111.829	0.718	13,208.548	0.818	13,305.267	0.918	13,401.986
0.019	12,532.481	0.119	12,629.200	0.219	12,725.919	0.319	12,822.638	0.419	12,919.357	0.519	13,016.077	0.619	13,112.796	0.719	13,209.515	0.819	13,306.234	0.919	13,402.953
0.020	12,533.448	0.120	12,630.167	0.220	12,726.886	0.320	12,823.605	0.420	12,920.325	0.520	13,017.044	0.620	13,113.763	0.720	13,210.482	0.820	13,307.201	0.920	13,403.921
0.021	12,534.415	0.121	12,631.134	0.221	12,727.853	0.321	12,824.573	0.421	12,921.292	0.521	13,018.011	0.621	13,114.730	0.721	13,211.449	0.821	13,308.169	0.921	13,404.888
0.022	12,535.382	0.122	12,632.101	0.222	12,728.821	0.322	12,825.540	0.422	12,922.259	0.522	13,018.978	0.622	13,115.697	0.722	13,212.417	0.822	13,309.136	0.922	13,405.855
0.023	12,536.349	0.123	12,633.069	0.223	12,729.788	0.323	12,826.507	0.423	12,923.226	0.523	13,019.945	0.623	13,116.665	0.723	13,213.384	0.823	13,310.103	0.923	13,406.822
0.024	12,537.317	0.124	12,634.036	0.224	12,730.755	0.324	12,827.474	0.424	12,924.193	0.524	13,020.913	0.624	13,117.632	0.724	13,214.351	0.824	13,311.070	0.924	13,407.789
0.025	12,538.284	0.125	12,635.003	0.225	12,731.722	0.325	12,828.441	0.425	12,925.161	0.525	13,021.880	0.625	13,118.599	0.725	13,215.318	0.825	13,312.037	0.925	13,408.757
0.026	12,539.251	0.126	12,635.970	0.226	12,732.689	0.326	12,829.409	0.426	12,926.128	0.526	13,022.847	0.626	13,119.566	0.726	13,216.285	0.826	13,313.005	0.926	13,409.724
0.027	12,540.218	0.127	12,636.937	0.227	12,733.657	0.327	12,830.376	0.427	12,927.095	0.527	13,023.814	0.627	13,120.533	0.727	13,217.253	0.827	13,313.972	0.927	13,410.691
0.028	12,541.185	0.128	12,637.905	0.228	12,734.624	0.328	12,831.343	0.428	12,928.062	0.528	13,024.781	0.628	13,121.501	0.728	13,218.220	0.828	13,314.939	0.928	13,411.658
0.029	12,542.153	0.129	12,638.872	0.229	12,735.591	0.329	12,832.310	0.429	12,929.029	0.529	13,025.749	0.629	13,122.468	0.729	13,219.187	0.829	13,315.906	0.929	13,412.625
0.030	12,543.120	0.130	12,639.839	0.230	12,736.558	0.330	12,833.277	0.430	12,929.997	0.530	13,026.716	0.630	13,123.435	0.730	13,220.154	0.830	13,316.873	0.930	13,413.593
0.031	12,544.087	0.131	12,640.806	0.231	12,737.525	0.331	12,834.245	0.431	12,930.964	0.531	13,027.683	0.631	13,124.402	0.731	13,221.121	0.831	13,317.841	0.931	13,414.560
0.032	12,545.054	0.132	12,641.773	0.232	12,738.493	0.332	12,835.212	0.432	12,931.931	0.532	13,028.650	0.632	13,125.369	0.732	13,222.089	0.832	13,318.808	0.932	13,415.527
0.033	12,546.021	0.133	12,642.741	0.233	12,739.460	0.333	12,836.179	0.433	12,932.898	0.533	13,029.617	0.633	13,126.337	0.733	13,223.056	0.833	13,319.775	0.933	13,416.494
0.034	12,546.989	0.134	12,643.708	0.234	12,740.427	0.334	12,837.146	0.434	12,933.865	0.534	13,030.585	0.634	13,127.304	0.734	13,224.023	0.834	13,320.742	0.934	13,417.461
0.035	12,547.956	0.135	12,644.675	0.235	12,741.394	0.335	12,838.113	0.435	12,934.833	0.535	13,031.552	0.635	13,128.271	0.735	13,224.990	0.835	13,321.709	0.935	13,418.429
0.036	12,548.923	0.136	12,645.642	0.236	12,742.361	0.336	12,839.081	0.436	12,935.800	0.536	13,032.519	0.636	13,129.238	0.736	13,225.957	0.836	13,322.677	0.936	13,419.396
0.037	12,549.890	0.137	12,646.609	0.237	12,743.329	0.337	12,840.048	0.437	12,936.767	0.537	13,033.486	0.637	13,130.205	0.737	13,226.925	0.837	13,323.644	0.937	13,420.363
0.038	12,550.857	0.1380	12,647.577	0.238	12,744.296	0.338	12,841.015	0.438	12,937.734	0.538	13,034.453	0.638	13,131.173	0.738	13,227.892	0.838	13,324.611	0.938	13,421.330
0.039	12,551.825	0.139	12,648.544	0.239	12,745.263	0.339	12,841.982	0.439	12,938.701	0.539	13,035.421	0.639	13,132.140	0.739	13,228.859	0.839	13,325.578	0.939	13,422.297
0.040	12,552.792	0.140	12,649.511	0.240	12,746.230	0.340	12,842.949	0.440	12,939.668	0.540	13,036.388	0.640	13,133.107	0.740	13,229.826	0.840	13,326.545	0.940	13,423.264
0.041	12,553.759	0.141	12,650.478	0.241	12,747.197	0.341	12,843.916	0.441	12,940.636	0.541	13,037.355	0.641	13,134.074	0.741	13,230.793	0.841	13,327.512	0.941	13,424.232
0.042	12,554.726	0.142	12,651.445	0.242	12,748.164	0.342	12,844.884	0.442	12,941.603	0.542	13,038.322	0.642	13,135.041	0.742	13,231.760	0.842	13,328.480	0.942	13,425.199
0.043	12,555.693	0.143	12,652.412	0.243	12,749.132	0.343	12,845.851	0.443	12,942.570	0.543	13,039.289	0.643	13,136.008	0.743	13,232.728	0.843	13,329.447	0.943	13,426.166
0.044	12,556.660	0.144	12,653.380	0.244	12,750.099	0.344	12,846.818	0.444	12,943.537	0.544	13,040.256	0.644	13,136.976	0.744	13,233.695	0.844	13,330.414	0.944	13,427.133
0.045	12,557.628	0.145	12,654.347	0.245	12,751.066	0.345	12,847.785	0.445	12,944.504	0.545	13,041.224	0.645	13,137.943	0.745	13,234.662	0.845	13,331.381	0.945	13,428.100
0.046	12,558.595	0.146	12,655.314	0.246	12,752.033	0.346	12,848.752	0.446	12,945.472	0.546	13,042.191	0.646	13,138.910	0.746	13,235.629	0.846	13,332.348	0.946	13,429.068
0.047	12,559.562	0.147	12,656.281	0.247	12,753.000	0.347	12,849.720	0.447	12,946.439	0.547	13,043.158	0.647	13,139.877	0.747	13,236.596	0.847	13,333.316	0.947	13,430.035
0.048	12,560.529	0.148	12,657.248	0.248	12,753.968	0.348	12,850.687	0.448	12,947.406	0.548	13,044.125	0.648	13,140.844	0.748	13,237.564	0.848	13,334.283	0.948	13,431.002
0.049	12,561.496	0.149	12,658.216	0.249	12,754.935	0.349	12,851.654	0.449	12,948.373	0.549	13,045.092	0.649	13,141.812	0.749	13,238.531	0.849	13,335.250	0.949	13,431.969
0.050	12,562.464	0.150	12,659.183	0.250	12,755.902	0.350	12,852.621	0.450	12,949.340	0.550	13,046.060	0.650	13,142.779	0.750	13,239.498	0.850	13,336.217	0.950	13,432.936
0.051	12,563.431	0.151	12,660.150	0.251	12,756.869	0.351	12,853.588	0.451	12,950.308	0.551	13,047.027	0.651	13,143.746	0.751	13,240.465	0.851	13,337.184	0.951	13,433.904
0.052	12,564.398	0.152	12,661.117	0.252	12,757.836	0.352	12,854.556	0.452	12,951.275	0.552	13,047.994	0.652	13,144.713	0.752	13,241.432	0.852	13,338.152	0.952	13,434.871
0.053	12,565.365	0.153	12,662.084	0.253	12,758.804	0.353	12,855.523	0.453	12,952.242	0.553	13,048.961	0.653	13,145.680	0.753	13,242.400	0.853	13,339.119	0.953	13,435.838
0.054	12,566.332	0.154	12,663.052	0.254	12,759.771	0.354	12,856.490	0.454	12,953.209	0.554	13,049.928	0.654	13,146.648	0.754	13,243.367	0.854	13,340.086	0.954	13,436.805
0.055	12,567.300	0.155	12,664.019	0.255	12,760.738	0.355	12,857.457	0.455	12,954.176	0.555	13,050.896	0.655	13,147.615	0.755	13,244.334	0.855	13,341.053	0.955	13,437.772
0.056	12,568.267	0.156	12,664.986	0.256	12,761.705	0.356	12,858.424	0.456	12,955.144	0.556	13,051.863	0.656	13,148.582	0.756	13,245.301	0.856	13,342.020	0.956	13,438.740
0.057	12,569.234	0.157	12,665.953	0.257	12,762.672	0.357	12,859.392	0.457	12,956.111	0.557	13,052.830	0.657	13,149.549	0.757	13,246.268	0.857	13,342.988	0.957	13,439.156
0.058	12,570.201	0.158	12,666.920	0.258	12,763.640	0.358	12,860.359	0.458	12,957.078	0.558	13,053.797	0.658	13,150.516	0.758	13,247.236	0.858	13,343.955	0.958	
0.059	12,571.168	0.159	12,667.888	0.259	12,764.607	0.359	12,861.326	0.459	12,958.045	0.559	13,054.764	0.659	13,151.484	0.759	13,248.203	0.859	13,344.922	0.959	
0.060	12,572.136	0.160	12,668.855	0.260	12,765.574	0.360	12,862.293	0.460	12,959.012	0.560	13,055.732	0.660	13,152.451	0.760	13,249.170	0.860	13,345.889	0.960	
0.061	12,573.103	0.161	12,669.822	0.261	12,766.541	0.361	12,863.260	0.461	12,959.980	0.561	13,056.699	0.661	13,153.418	0.761	13,250.137	0.861	13,346.856	0.961	
0.062	12,574.070	0.162	12,670.789	0.262	12,767.508	0.362	12,864.228	0.462	12,960.947	0.562	13,057.666	0.662	13,154.385	0.762	13,251.104	0.862	13,347.824	0.962	
0.063	12,575.037	0.163	12,671.756	0.263	12,768.476	0.363	12,865.195	0.463	12,961.914	0.563	13,058.633	0.663	13,155.352	0.763	13,252.072	0.863	13,348.791	0.963	
0.064	12,576.004	0.164	12,672.724	0.264	12,769.443	0.364	12,866.162	0.464	12,962.881	0.564	13,059.600	0.664	13,156.320	0.764	13,253.039	0.864	13,349.758	0.964	
0.065	12,576.972	0.165	12,673.691	0.265	12,770.410	0.365	12,867.129	0.465	12,963.848	0.565	13,060.567	0.665	13,157.287	0.765	13,254.006	0.865	13,350.725	0.965	
0.066	12,577.939	0.166	12,674.658	0.266	12,771.377	0.366	12,868.096	0.466	12,964.815	0.566	13,061.535	0.666	13,158.254	0.766	13,254.973	0.866	13,351.692	0.966	
0.067	12,578.906	0.167	12,675.625	0.267	12,772.344	0.367	12,869.063	0.467	12,965.783	0.567	13,062.502	0.667	13,159.221	0.767	13,255.940	0.867	13,352.659	0.967	
0.068	12,579.873	0.168	12,676.592	0.268	12,773.311	0.368	12,870.031	0.468	12,966.750	0.568	13,063.469	0.668	13,160.188	0.768	13,256.907	0.868	13,353.627	0.968	
0.069	12,580.840	0.169	12,677.559	0.269	12,774.279	0.369	12,870.998	0.469	12,967.717	0.569	13,064.436	0.669	13,161.155	0.769	13,257.875	0.869	13,354.594	0.969	
0.070	12,581.807	0.170	12,678.527	0.270	12,775.246	0.370	12,871.965	0.470	12,968.684	0.570	13,065.403	0.670	13,162.123	0.770	13,258.842	0.870	13,355.561	0.970	
0.071	12,582.775	0.171	12,679.494	0.271	12,776.213	0.371	12,872.932	0.471	12,969.651	0.571	13,066.371	0.671	13,163.090	0.771	13,259.809	0.871	13,356.528	0.971	
0.072	12,583.742	0.172	12,680.461	0.272	12,777.180	0.372	12,873.899	0.472	12,970.619	0.572	13,067.338	0.672	13,164.057	0.772	13,260.776	0.872	13,357.495	0.972	
0.073	12,584.709	0.173	12,681.428	0.273	12,778.147	0.373	12,874.867	0.473	12,971.586	0.573	13,068.305	0.673	13,165.024	0.773	13,261.743	0.873	13,358.463	0.973	
0.074	12,585.676	0.174	12,682.395	0.274	12,779.115	0.374	12,875.834	0.474	12,972.553	0.574	13,069.272	0.674	13,165.991	0.774	13,262.711	0.874	13,359.430	0.974	
0.075	12,586.643	0.175	12,683.363	0.275	12,780.082	0.375	12,876.801	0.475	12,973.520	0.575	13,070.239	0.675	13,166.959	0.775	13,263.678	0.875	13,360.397	0.975	
0.076	12,587.611	0.176	12,684.330	0.276	12,781.049	0.376	12,877.768	0.476	12,974.487	0.576	13,071.207	0.676	13,167.926	0.776	13,264.645	0.876	13,361.364	0.976	
0.077	12,588.578	0.177	12,685.297	0.277	12,782.016	0.377	12,878.735	0.477	12,975.455	0.577	13,072.174	0.677	13,168.893	0.777	13,265.612	0.877	13,362.331	0.977	
0.078	12,589.545	0.178	12,686.264	0.278	12,782.983	0.378	12,879.703	0.478	12,976.422	0.578	13,073.141	0.678	13,169.860	0.778	13,266.579	0.878	13,363.299	0.978	
0.079	12,590.512	0.179	12,687.231	0.279	12,783.951	0.379	12,880.670	0.479	12,977.389	0.579	13,074.108	0.679	13,170.827	0.779	13,267.547	0.879	13,364.266	0.979	
0.080	12,591.479	0.180	12,688.199	0.280	12,784.918	0.380	12,881.637	0.480	12,978.356	0.580	13,075.075	0.680	13,171.795	0.780	13,268.514	0.880	13,365.233	0.980	
0.081	12,592.447	0.181	12,689.166	0.281	12,785.885	0.381	12,882.604	0.481	12,979.323	0.581	13,076.043	0.681	13,172.762	0.781	13,269.481	0.881	13,366.200	0.981	
0.082	12,593.414	0.182	12,690.133	0.282	12,786.852	0.382	12,883.571	0.482	12,980.291	0.582	13,077.010	0.682	13,173.729	0.782	13,270.448	0.882	13,367.167	0.982	
0.083	12,594.381	0.183	12,691.100	0.283	12,787.819	0.383	12,884.539	0.483	12,981.258	0.583	13,077.977	0.683	13,174.696	0.783	13,271.415	0.883	13,368.135	0.983	
0.084	12,595.348	0.184	12,692.067	0.284	12,788.787	0.384	12,885.506	0.484	12,982.225	0.584	13,078.944	0.684	13,175.663	0.784	13,272.383	0.884	13,369.102	0.984	
0.085	12,596.315	0.185	12,693.035	0.285	12,789.754	0.385	12,886.473	0.485	12,983.192	0.585	13,079.911	0.685	13,176.631	0.785	13,273.350	0.885	13,370.069	0.985	
0.086	12,597.283	0.186	12,694.002	0.286	12,790.721	0.386	12,887.440	0.486	12,984.159	0.586	13,080.879	0.686	13,177.598	0.786	13,274.317	0.886	13,371.036	0.986	
0.087	12,598.250	0.187	12,694.969	0.287	12,791.688	0.387	12,888.407	0.487	12,985.127	0.587	13,081.846	0.687	13,178.565	0.787	13,275.284	0.887	13,372.003	0.987	
0.088	12,599.217	0.188	12,695.936	0.288	12,792.655	0.388	12,889.375	0.488	12,986.094	0.588	13,082.813	0.688	13,179.532	0.788	13,276.251	0.888	13,372.971	0.988	
0.089	12,600.184	0.189	12,696.903	0.289	12,793.623	0.389	12,890.342	0.489	12,987.061	0.589	13,083.780	0.689	13,180.499	0.789	13,277.219	0.889	13,373.938	0.989	
0.090	12,601.151	0.190	12,697.871	0.290	12,794.590	0.390	12,891.309	0.490	12,988.028	0.590	13,084.747	0.690	13,181.466	0.790	13,278.186	0.890	13,374.905	0.990	
0.091	12,602.118	0.191	12,698.838	0.291	12,795.557	0.391	12,892.276	0.491	12,988.995	0.591	13,085.714	0.691	13,182.434	0.791	13,279.153	0.891	13,375.872	0.991	
0.092	12,603.086	0.192	12,699.805	0.292	12,796.524	0.392	12,893.243	0.492	12,989.962	0.592	13,086.682	0.692	13,183.401	0.792	13,280.120	0.892	13,376.839	0.992	
0.093	12,604.053	0.193	12,700.772	0.293	12,797.491	0.393	12,894.210	0.493	12,990.930	0.593	13,087.649	0.693	13,184.368	0.793	13,281.087	0.893	13,377.806	0.993	
0.094	12,605.020	0.194	12,701.739	0.294	12,798.458	0.394	12,895.178	0.494	12,991.897	0.594	13,088.616	0.694	13,185.335	0.794	13,282.054	0.894	13,378.774	0.994	
0.095	12,605.987	0.195	12,702.706	0.295	12,799.426	0.395	12,896.145	0.495	12,992.864	0.595	13,089.583	0.695	13,186.302	0.795	13,283.022	0.895	13,379.741	0.995	
0.096	12,606.954	0.196	12,703.674	0.296	12,800.393	0.396	12,897.112	0.496	12,993.831	0.596	13,090.550	0.696	13,187.270	0.796	13,283.989	0.896	13,380.708	0.996	
0.097	12,607.922	0.197	12,704.641	0.297	12,801.360	0.397	12,898.079	0.497	12,994.798	0.597	13,091.518	0.697	13,188.237	0.797	13,284.956	0.897	13,381.675	0.997	
0.098	12,608.889	0.198	12,705.608	0.298	12,802.327	0.398	12,899.046	0.498	12,995.766	0.598	13,092.485	0.698	13,189.204	0.798	13,285.923	0.898	13,382.642	0.998	
0.099	12,609.856	0.199	12,706.575	0.299	12,803.294	0.399	12,900.014	0.499	12,996.733	0.599	13,093.452	0.699	13,190.171	0.799	13,286.890	0.899	13,383.610	0.999	

DATE STRAPPED: 09/19/17 BY: RJ
DATE COMPUTED: 09/26/17 BY: WLH
DATE ISSUED: 09/26/17

AMSPEC

APPENDIX K

Inspection Report – Rankin Inlet Offsite and Onsite Fabrication Quality Control Documents

AGNICO EAGLE

Vendor Document Status

1 ☐ **Proceed to next submission and status.**

2 ☐ **Proceed with exceptions as noted to next submission and status.**

3 ☐ **Do not proceed.**
Revise as noted and resubmit next submission and status.

4 ☐ **Complete, no further submission required.**

By: **Date:**

Review and authorization to fabricate are only for general conformance with the design concept of the Project as expressed in the Contract Documents. Sole responsibility for the accuracy and completeness of this document, including but not limited to dimensions and quantities, remains with the Supplier/Contractor. Agnico Eagle does not warrant the accuracy or completeness of any of the information contained herein, nor does Agnico Eagle authorize or approve any construction means, methods, techniques, sequences or any safety precautions or procedures.

Agnico Eagle No. 6515-C-270-007-141-QCR-0001 **R:** Sub003

DOCUMENT FOR INFORMATION

AGNICO EAGLE MINE

Contract No. 6515-C-270-007

NUQSANA PROMEC MINING SERVICES INC.

AGNICO EAGLE

C-22466T

Rankin Inlet

OffSite and OnSite Fabrication

Quality Control Documents

TABLE OF CONTENT

SECTION 1 – INSPECTION AND TEST PLAN

SECTION 1.1 – ITP-001- PUMPING STATION & ITP-002 - FUEL FARM – RANKIN INLET #
SECTION 1.2 – PROCEDURES SUBMITTED AND APPROVED #
SECTION 1.3 – DRAWINGS INDEX (IFC) LATEST REVISION #

SECTION 2 – ITP-001 & ITP-002 SPECIFIC

SECTION 2.1 – NON-CONFORMANCE REPORT & LOG – AEM-GE-ITR-002 / AEM-GE-LOG-002 #
SECTION 2.2 – WELD PROCEDURES SUBMITTED AND APPROVED SPECIFICATION/PROCEDURE #
SECTION 2.3 – WELDERS QUALIFICATION APPROVED #
SECTION 2.4 – INSPECTION DEFICIENCY REPORT & LOG – AEM-GE-ITR-005 / AEM-GE-LOG-004 #

SECTION 3 – ITP-001 PREPARATION ELECTRICAL & PUMPIPNG STATION (OFFSITE)

SECTION 3.1 – DIMENSION OF THE CONTAINER VERIFICATION – AIRMP REPORT #
SECTION 3.2 – INSULATION AND CLADDING VERIFICATION – AIRMP REPORT #
SECTION 3.3 – DOORS VERIFICATION – AIRMP REPORT #
SECTION 3.4 – EXTERIOR PAINT VERIFICATION – AIRMP REPORT #

SECTION 4 – ITP-002 FABRICATION (OFFSITE)

SECTION 4.1 – CATWALK #

SECTION 5 – ITP-001 & ITP-002 MECHANICAL & PIPING (OFFSITE)

SECTION 5.1 – FABRICATION OF PIPING SPOOLS – AEM-WE-ITR-001 / AEM-GE-LOG-005 #
SECTION 5.2 – PAINTING OF PIPING SPOOLS – AEM-PI-ITR-002 / UNIES-FAB REPORT #
SECTION 5.3 – PUMP INSTALLATION – AEM-ME-ITR-001 #
SECTION 5.4 – PIPING INSTALLATION – AEM-PI-ITR-002 #
SECTION 5.5 – SUPPORT FABRICATION AND INSTALLATION – AEM-PI-ITR-002 #
SECTION 5.6 – PERFORM ALL NON DESTRUCTIVE EXAMINATION – AEM-GE-LOG-005 / MISTRAS #
SECTION 5.7 – INSPECTION RELEASE PRIOR TO SHIPMENT #

SECTION 6 – ITP-001 & ITP-002 MECHANICAL & PIPING (ONSITE)

SECTION 6.1 – PIPING INSTALLATION – AEM-PI-ITR-002 #
SECTION 6.2 – PERFORM ALL NON DESTRUCTIVE EXAMINATION – AEM-GE-LOG-005 / MISTRAS #
SECTION 6.3 – PIPING TESTING AND CLEANING – AEM-PI-ITR-001 #
SECTION 6.4 – IDENTIFICATION OF PIPING – AEM-PI-ITR-002 #
SECTION 6.5 – INSTALL CONNECTING PIPING – AEM-PI-ITR-002 #
SECTION 6.6 – FIRE PROTECTION - VIKING #

SECTION 7 – ITP-001 & ITP-002 FINAL TURNOVER

SECTION 7.1 – CONSTRUCTION COMPLETION – AEM-GE-ITR-003 #
SECTION 7.2 – FINAL ACCEPTANCE OF TURNOVER PACKAGE #
SECTION 7.3 – DECLARATION OF COMPLETION – AEM-GE-ITR-004 #
SECTION 7.4 – AS-BUILT DRAWINGS #
SECTION 7.5 – WELD MAP #

AGNICO EAGLE

Vendor Document Status

1 ☐ Proceed to next submission and status.

2 ☐ Proceed with exceptions as noted to next submission and status.

3 ☐ Do not proceed.
Revise as noted and resubmit next submission and status.

4 ☑ Complete, no further submission required.

By: JEAN-FRANCOIS TREMBLAY Date: 2017-06-09

Review and authorization to fabricate are only for general conformance with the design concept of the Project as expressed in the Contract Documents. Sole responsibility for the accuracy and completeness of this document, including but not limited to dimensions and quantities, remains with the Supplier/Contractor. Agnico Eagle does not warrant the accuracy or completeness of any of the information contained herein, nor does Agnico Eagle authorize or approve any construction means, methods, techniques, sequences or any safety precautions or procedures.

Agnico Eagle No. 6515-C-270-007-141-TES-0031 R: Sub002

DOCUMENT FOR INFORMATION

Inspection and Testing Plan

NUQSANA PROMEC MINING

AGNICO EAGLE

Contract title:	Meliadine Fuel Tanks Piping Supply and Installation	ITP #	AEM-ITP-001
Contract number:	6515-C-270-007	Area	Rankin Inlet
Promec Ref.:	C22466T	System	Pumping container
		Discipline	Mechanical Piping Structure
Approved on :		Approval Signature	
Approved by:			

Updated on: 2017-06-06

Legend

H - Hold
W - Witness
I - Inspect
R - Review

Activity No. and CDRL Code	Activity Description (Per Scope of Work)	Responsibility Contractor and/or Sub	Acceptance Criteria (Specifications, Drawings, Industry Code, Regulatory Authority, Manufacturers O&M manual, Controlling Procedure, Quality/Engineering Bulletins, Other/ Site Quality Plan, Contractor Quality Manuals, etc.)	Verification Point				Verification Document(s) 1. List ONLY the Form(s) applicable to installation. 2. ▲ Commissioning Required Document
				Contractor		Client		
				H W I R	Initials & Date	H W I R	Initials & Date	
1.0	**GENERAL**							
1.1	Inspection and Test Plan	Promec / CLIENT		H/R		R		Approved ITP
1.2	Document review (Acquire and review all applicable documentation)	Promec / CLIENT	Quality Plan	H/R		R		
1.3	Procedures Submitted and Approved (Hydrostatic/Pneumatic Testing, Pre-Commissioning, etc.)	Promec / CLIENT	Quality Plan	H/R		R		All Applicable Approved Procedures
1.4	Drawing Index (IFC) to Latest Revision	Promec	Quality Plan	I/R				
2.0	**ITP SPECIFIC**							
2.1	Non-Conformance Report & Log (Both CLIENT & Contractor Issued)	Promec / CLIENT	Quality Plan	H/R		R		AEM-GE-ITR-002 (Non-Conformance Report) ▲ AEM-GE-LOG-002 (Non-Conformance Log)
2.2	Weld Procedures Submitted and Approved Specification/Procedure (WPS)	Promec / CLIENT	Quality Plan	H/R		R		Approved Procedure
2.3	Welders Qualification Approved	Promec / CLIENT	Quality Plan	H/R		R		Welders qualifications records
2.4	Inspect Material/Equipment for Damages or Deficiencies	Promec	Quality Plan	I/R		R		AEM-GE-ITR-005 (Inspection Deficiency Report) ▲ AEM-GE-LOG-004 (Inspection Deficiency Log)

Inspection and Testing Plan

NUQSANA PROMEC MINING

AGNICO EAGLE

Contract title: Melladine Fuel Tanks Piping Supply and Installation
Contract number: 6515-C-270-007
Promec Ref.: C22466T

Approved on : _____
Approved by: _____

Approval Signature

ITP # AEM-ITP-001
Area Rankin Inlet
System Pumping container

Discipline: Mechanical, Piping, Structure

Updated on: 2017-06-06

Legend
H - Hold
W - Witness
I - Inspect
R - Review

Activity No. and CDRL Code	Activity Description (Per Scope of Work)	Responsibility Contractor and/or Sub	Acceptance Criteria (Specifications, Drawings, Industry Code, Regulatory Authority, Manufacturers O&M manual, Controlling Procedure, Quality/Engineering Bulletins, Other/ Site Quality Plan, Contractor Quality Manuals, etc.)	Verification Point				Verification Document(s) 1. List ONLY the Form(s) applicable to installation. 2. ▲ Commissioning Required Document
				Contractor		Client		
				H W I R	Initials & Date	H W I R	Initials & Date	
3.0	**Preparation of the electrical and pumping station containers (Offsite)**							
3.1	Dimensions of the container verification	Promec / CLIENT / Third-Party	IFC Drawings	I/R		I		AirMP Report
3.2	Insulation and cladding verification	Promec / CLIENT / Third-Party	IFC Drawings	I/R		I		AirMP Report
3.3	Doors verification	Promec / CLIENT / Third-Party	6515-C-270-007-SPT-001_R3 (Technical Specifications)	I/R		I		AirMP Report
3.4	Exterior paint verification	Promec / CLIENT / Third-Party	AirMP specifications	I/R		I		AirMP Report
4.0	**Preparation of the DEF containers (Offsite)**							
4,1	Fabrication of the DEF containers	Promec / CLIENT / Third-Party	P.D.McLaren specifications	I/R		I		P.D.McLaren Report

Inspection and Testing Plan

NUQSANA PROMEC MINING

AGNICO EAGLE

Contract title: Meliadine Fuel Tanks Piping Supply and Installation
Contract number: 6515-C-270-007
Promec Ref.: C22466T

Approved on : _____
Approved by: _____

Approval Signature

ITP # AEM-ITP-001
Area Rankin Inlet
System Pumping container

Discipline Mechanical / Piping / Structure

Updated on: 2017-06-06

Legend
H - Hold
W - Witness
I - Inspect
R - Review

Activity No. and CDRL Code	Activity Description (Per Scope of Work)	Responsibility Contractor and/or Sub	Acceptance Criteria (Specifications, Drawings, Industry Code, Regulatory Authority, Manufacturers O&M manual, Controlling Procedure, Quality/Engineering Bulletins, Other/ Site Quality Plan, Contractor Quality Manuals, etc.)	Verification Point				Verification Document(s) 1. List ONLY the Form(s) applicable to installation. 2. ▲ Commissioning Required Document
				Contractor		Client		
				H W I R	Initials & Date	H W I R	Initials & Date	
5.0	**Mechanical & Piping (Offsite)**							
5,1	Fabrication of piping spools	Promec / CLIENT	AEM-PI-PRO-003 (Piping Erection Procedure) AEM-WE-PRO-001 (Welding Control Procedure)	W/R		W/R		AEM-WE-ITR-001 (Daily Weld Report) AEM-GE-LOG-005 (Weld Log)
5,2	Painting of the piping spools (Safety Orange)	Promec / CLIENT / Third-Party	6515-GGD-022_R0 (Project Standard paint specifications) AEM-PI-PRO-003 (Piping Erection Procedure)	I/R		I/R		Third-Party Report AEM-PI-ITR-002 (Check List for Pipe Systems)
5,3	Pump Installation	Promec / CLIENT	AEM-ME-PRO-001 (Pump Installation Procedure)	H/R		H/R		AEM-ME-ITR-001 (Pump Alignment Report)
5,4	Piping installation	Promec / CLIENT	AEM-PI-PRO-003 (Piping Erection Procedure) AEM-WE-PRO-001 (Welding Control Procedure) CODES / STANDARDS B31,3	I/R		I/R		AEM-PI-ITR-002 (Check List for Pipe Systems)
5,5	Support fabrication and installation	Promec / CLIENT / Third-Party	IFC Drawings AEM-PI-PRO-003 (Piping Erection Procedure)	W/R		W/R		Third-Party Report AEM-PI-ITR-002 (Check List for Pipe Systems)
5,6	Perform all non-destructive examination required (NDE)	Promec / CLIENT / Third-Party	AEM-WE-PRO-002 (Non-Destructive Exam. Procedure) 5%, by ultrasound or penetrating liquid	W/R		W/R		Third-Party Report AEM-GE-LOG-005 (Weld Log)
5,7	Inspection Release prior to shipment	Promec / CLIENT	7.01_R0_Packing_Shipping_Instruct (Shipping requirements for AEM)	H/R				Partial History Docket

Inspection and Testing Plan

NUQSANA PROMEC MINING

AGNICO EAGLE

Contract title: Meliadine Fuel Tanks Piping Supply and Installation
Contract number: 6515-C-270-007
Promec Ref.: C22466T

Approved on : _____
Approved by: _____

Approval Signature

ITP # AEM-ITP-001
Area Rankin Inlet
System Pumping container

Discipline Mechanical / Piping / Structure

Updated on: 2017-06-06

Legend
H - Hold
W - Witness
I - Inspect
R - Review

Activity No. and CDRL Code	Activity Description (Per Scope of Work)	Responsibility Contractor and/or Sub	Acceptance Criteria (Specifications, Drawings, Industry Code, Regulatory Authority, Manufacturers O&M manual, Controlling Procedure, Quality/Engineering Bulletins, Other/ Site Quality Plan, Contractor Quality Manuals, etc.)	Verification Point				Verification Document(s) 1. List ONLY the Form(s) applicable to Installation. 2. ▲ Commissioning Required Document
				Contractor		Client		
				H W I R	Initials & Date	H W I R	Initials & Date	
6.0	Mechanical & Piping (Onsite)							
6,1	Piping installation	Promec / CLIENT	AEM-PI-PRO-003 (Piping Erection Procedure) AEM-WE-PRO-001 (Welding Control Procedure) CODES / STANDARDS B31,3	I/R		I/R		AEM-PI-ITR-002 (Check List for Pipe Systems)
6,2	Perform all non-destructive examination required (NDE)	Promec / CLIENT / Third-Party	AEM-WE-PRO-002 (Non-Destructive Exam. Procedure) 5%, by ultrasound or penetrating liquid	W/R		W/R		Third-Party Report AEM-GE-LOG-005 (Weld Log)
6,3	Piping Testing & Cleaning	Promec / CLIENT	AEM-PI-PRO-001 (Hydrostatic/Pneumatic Test Procedure)	H/R		H/R		▲ AEM-PI-ITR-001 (Pressure Test Report)
6,4	Identification of piping (tagging)	Promec / CLIENT	6515-C-270-007-SPT-001_R3 (Technical Specifications)	I/R		I/R		AEM-PI-ITR-002 (Check List for Pipe Systems)
6,5	Install connecting piping	Promec / CLIENT	AEM-PI-PRO-003 (Piping Erection Procedure) AEM-WE-PRO-001 (Welding Control Procedure)	W/R		W/R		AEM-PI-ITR-002 (Check List for Pipe Systems)

Inspection and Testing Plan

NUQSANA PROMEC MINING

AGNICO EAGLE

Contract title:	Meliadine Fuel Tanks Piping Supply and Installation	**ITP #**	**AEM-ITP-001**
Contract number:	6515-C-270-007	**Area**	**Rankin Inlet**
Promec Ref.:	C22466T	**System**	**Pumping container**
		Discipline	**Mechanical**
			Piping
			Structure

Approval Signature

Approved on : _____

Approved by: _____

Updated on: 2017-06-06

Legend

H - Hold
W - Witness
I - Inspect
R - Review

Activity No. and CDRL Code	Activity Description (Per Scope of Work)	Responsibility Contractor and/or Sub	Acceptance Criteria (Specifications, Drawings, Industry Code, Regulatory Authority, Manufacturers O&M manual, Controlling Procedure, Quality/Engineering Bulletins, Other/ Site Quality Plan, Contractor Quality Manuals, etc.)	Verification Point – Contractor (H W I R)	Contractor Initials & Date	Verification Point – Client (H W I R)	Client Initials & Date	Verification Document(s) 1. List ONLY the Form(s) applicable to installation. 2. ▲ Commissioning Required Document
7.0	**FINAL TURNOVER**							
7,1	Construction Completion (Contractor Punchlist & Joint Walkdown Punchlist)	Promec / CLIENT	Quality Plan AEM-PI-PRO-002 (Pre-Commissioning Piping Procedure)	H/R		H/R		▲ AEM-GE-ITR-003 (Punchlist)
7,2	Final Acceptance of Turnover Package	Promec / CLIENT	Quality Plan	H/R		H/R		Signed ITP History Docket
7,3	Declaration of Completion	Promec	Quality Plan	H/R		H/R		AEM-GE-ITR-004 (Notice of Final Completion)
7,4	As-Built Drawings	Promec	Quality Plan	H/R		H/R		All Required As-Built Drawings
7,5	Weld Map	Promec	Quality Plan	H/R		H/R		All Required Weld Maps

PROMEC's Representatives			CLIENT's Representative	
QA/QC	Project Manager			
Name	Name		Name	
Signature	Signature	Date	Signature	Date

AGNICO EAGLE

Vendor Document Status

1 ☐ Proceed to next submission and status.

2 ☐ Proceed with exceptions as noted to next submission and status.

3 ☐ Do not proceed.
Revise as noted and resubmit next submission and status.

4 ☑ Complete, no further submission required.

By: JEAN-FRANCOIS TREMBLAY Date: 2017-06-09

Review and authorization to fabricate are only for general conformance with the design concept of the Project as expressed in the Contract Documents. Sole responsibility for the accuracy and completeness of this document, including but not limited to dimensions and quantities, remains with the Supplier/Contractor. Agnico Eagle does not warrant the accuracy or completeness of any of the information contained herein, nor does Agnico Eagle authorize or approve any construction means, methods, techniques, sequences or any safety precautions or procedures.

Agnico Eagle No. 6515-C-270-007-141-TES-0032 R: Sub002

DOCUMENT FOR INFORMATION

Inspection and Testing Plan

NUQSANA PROMEC MINING

AGNICO EAGLE

Contract title:	Meliadine Fuel Tanks Piping Supply and Installation	**ITP #**	**AEM-ITP-002**
Contract number:	6515-C-270-007	**Area**	**Rankin Inlet**
Promec Ref.:	C22466T	**System**	**Fuel farm**
Approved on :		**Discipline**	**Mechanical**
Approved by:			**Piping**
Approval Signature			**Structure**

Updated on: 2017-06-06

Legend

H - Hold
W - Witness
I - Inspect
R - Review

Activity No. and CDRL Code	Activity Description (Per Scope of Work)	Responsibility Contractor and/or Sub	Acceptance Criteria (Specifications, Drawings, Industry Code, Regulatory Authority, Manufacturers O&M manual, Controlling Procedure, Quality/Engineering Bulletins, Other/ Site Quality Plan, Contractor Quality Manuals, etc.)	Verification Point				Verification Document(s) 1. List ONLY the Form(s) applicable to Installation. 2. ▲ Commissioning Required Document
				Contractor		Client		
				H W I R	Initials & Date	H W I R	Initials & Date	
1.0	**GENERAL**							
1.1	Inspection and Test Plan	Promec / CLIENT		H/R		R		Approved ITP
1.2	Document review (Acquire and review all applicable documentation)	Promec / CLIENT	Quality Plan	H/R		R		
1.3	Procedures Submitted and Approved (Hydrostatic/Pneumatic Testing, Pre-Commissioning, etc.)	Promec / CLIENT	Quality Plan	H/R		R		All Applicable Approved Procedures
1.4	Drawing Index (IFC) to Latest Revision	Promec	Quality Plan	I/R		R		VDRL
2.0	**ITP SPECIFIC**							
2.1	Non-Conformance Report & Log (Both CLIENT & Contractor Issued)	Promec / CLIENT	Quality Plan	H/R		H/R		AEM-GE-ITR-002 (Non-Conformance Report) ▲ AEM-GE-LOG-002 (Non-Conformance Log)
2.2	Weld Procedures Submitted and Approved Specification/Procedure (WPS)	Promec / CLIENT	Quality Plan	H/R		R		Approved Procedure
2.3	Welders Qualification Approved	Promec / CLIENT	Quality Plan	H/R		R		Welders Qualifications Records
2.4	Inspect Material/Equipment for Damages or Deficiencies	Promec	Quality Plan	I/R		R		AEM-GE-ITR-005 (Inspection Deficiency Report) ▲ AEM-GE-LOG-004 (Inspection Deficiency Log)
3.0	**Fabrication (Offsite)**							
3.1	Catwalks	Promec / CLIENT / Third-Party	IFC Drawings	W/R		W/R		Third-party-report
3.2	Steel fuel tanks	Promec / CLIENT / Third-Party	6515-C-270-007-SPT-001_R3 (Technical Specifications)	W/R		W/R		Third-party-report

Inspection and Testing Plan

NUQSANA PROMEC MINING

AGNICO EAGLE

Contract title:	Meliadine Fuel Tanks Piping Supply and Installation	**ITP #**	**AEM-ITP-002**	**Updated on:** 2017-06-06
Contract number:	6515-C-270-007	**Area**	**Rankin Inlet**	
Promec Ref.:	C22466T	**System**	**Fuel farm**	
Approved on :	_____	**Discipline**	**Mechanical**	
Approved by:	_____		**Piping**	
Approval Signature			**Structure**	

Legend
H - Hold
W - Witness
I - Inspect
R - Review

Activity No. and CDRL Code	Activity Description (Per Scope of Work)	Responsibility Contractor and/or Sub	Acceptance Criteria (Specifications, Drawings, Industry Code, Regulatory Authority, Manufacturers O&M manual, Controlling Procedure, Quality/Engineering Bulletins, Other/ Site Quality Plan, Contractor Quality Manuals, etc.)	Verification Point				Verification Document(s) 1. List ONLY the Form(s) applicable to installation. 2. ▲ Commissioning Required Document
				Contractor		Client		
				H W I R	Initials & Date	H W I R	Initials & Date	
4.0	**Mechanical & Piping (Offsite)**							
4,1	Fabrication of piping spools	Promec / CLIENT	AEM-PI-PRO-003 (Piping Erection Procedure) AEM-WE-PRO-001 (Welding Control Procedure) CODES / STANDARDS B31,3	W/R		W/R		AEM-WE-ITR-001 (Daily Weld Report) AEM-GE-LOG-005 (Weld Log)
4,2	Painting of the piping spools (Safety Orange)	Promec / CLIENT / Third-Party	6515-GGD-022_R0 (Project Standard paint specifications) AEM-PI-PRO-003 (Piping Erection Procedure)	I/R		H/R		Third-Party Report AEM-PI-ITR-002 (Check List for Pipe Systems)
4,3	Support fabrication	Promec / CLIENT / Third-Party	IFC Drawings AEM-PI-PRO-003 (Piping Erection Procedure)	W/R		W/R		Third-Party Report AEM-PI-ITR-002 (Check List for Pipe Systems)
4,4	Perform all non-destructive examination required (NDE)	Promec / CLIENT / Third-Party	AEM-WE-PRO-002 (Non-Destructive Exam. Procedure) 5%, by ultrasound or penetrating liquid	W/R		W/R		Third-Party Report AEM-GE-LOG-005 (Weld Log)
4,5	Inspection Release prior to shipment	Promec / CLIENT	7.01_R0_Packing_Shipping_Instruct (Shipping requirements for AEM)	H/R		H/R		Partial History Docket

Inspection and Testing Plan

NUQSANA PROMEC MINING

AGNICO EAGLE

Contract title: Meliadine Fuel Tanks Piping Supply and Installation
Contract number: 6515-C-270-007
Promec Ref.: C22466T

Approved on : _____
Approved by: _____

Approval Signature

ITP # AEM-ITP-002
Area Rankin Inlet
System Fuel farm
Discipline Mechanical / Piping / Structure

Updated on: 2017-06-06

Legend
H - Hold
W - Witness
I - Inspect
R - Review

Activity No. and CDRL Code	Activity Description (Per Scope of Work)	Responsibility Contractor and/or Sub	Acceptance Criteria (Specifications, Drawings, Industry Code, Regulatory Authority, Manufacturers O&M manual, Controlling Procedure, Quality/Engineering Bulletins, Other/ Site Quality Plan, Contractor Quality Manuals, etc.)	Verification Point				Verification Document(s) 1. List ONLY the Form(s) applicable to installation. 2. ▲ Commissioning Required Document
				Contractor		Client		
				H W I R	Initials & Date	H W I R	Initials & Date	
5.0	Mechanical & Piping (Onsite)							
5.1	Installation of the tanks	Promec / CLIENT	AEM-ME-PRO-002 (Fuel Tank Installation Procedure)	W/R		W/R		AEM-ME-ITR-003 (Fuel Tank Checklist)
5.2	Installation of the catwalks	Promec / CLIENT	AEM-PI-PRO-003 (Piping Erection Procedure)	I/R		I/R		AEM-ME-ITR-004 Catwalks & Stairways Checklist
5.3	Support fabrication and installation	Promec / CLIENT	AEM-PI-PRO-003 (Piping Erection Procedure)	W/R		I		AEM-PI-ITR-002 (Check List for Pipe Systems)
5.4	Piping installation	Promec / CLIENT	AEM-PI-PRO-003 (Piping Erection Procedure) AEM-WE-PRO-001 (Welding Control Procedure) CODES / STANDARDS B31,3	I/R		I/R		AEM-PI-ITR-002 (Check List for Pipe Systems)
5.5	Perform all non-destructive examination required (NDE)	Promec / CLIENT / Third-Party	AEM-WE-PRO-002 (Non-Destructive Exam. Procedure) 5%, by ultrasound or penetrating liquid	W/R		W/R		Third-Party Report AEM-GE-LOG-005 (Weld Log)
5.6	Piping Testing & Cleaning	Promec / CLIENT	AEM-PI-PRO-001 (Hydrostatic/Pneumatic Test Procedure)	H/R		H/R		▲ AEM-PI-ITR-001 (Pressure Test Report)
5.7	Identification of piping (tagging)	Promec / CLIENT	6515-C-270-007-SPT-001_R3 (Technical Specifications)	I/R		I		AEM-PI-ITR-002 (Check List for Pipe Systems)

Inspection and Testing Plan

NUQSANA PROMEC MINING

AGNICO EAGLE

Contract title:	Meliadine Fuel Tanks Piping Supply and Installation	ITP #	AEM-ITP-002	Updated on: 2017-06-06
Contract number:	6515-C-270-007	Area	Rankin Inlet	
Promec Ref.:	C22466T	System	Fuel farm	
Approved on :		Discipline	Mechanical Piping Structure	
Approved by:		Approval Signature		

Legend
H - Hold
W - Witness
I - Inspect
R - Review

Activity No. and CDRL Code	Activity Description (Per Scope of Work)	Responsibility Contractor and/or Sub	Acceptance Criteria (Specifications, Drawings, Industry Code, Regulatory Authority, Manufacturers O&M manual, Controlling Procedure, Quality/Engineering Bulletins, Other/ Site Quality Plan, Contractor Quality Manuals, etc.)	Verification Point				Verification Document(s) 1. List ONLY the Form(s) applicable to installation. 2. ▲ Commissioning Required Document
				Contractor		Client		
				H W I R	Initials & Date	H W I R	Initials & Date	
6.0	FINAL TURNOVER							
6.1	Construction Completion (Contractor Punchlist & Joint Walkdown Punchlist)	Promec / CLIENT	Quality Plan AEM-PI-PRO-002 (Pre-Commissioning Piping Procedure)	H/R		H/R		▲ AEM-GE-ITR-003 (Punchlist)
6.2	Final Acceptance of Turnover Package	Promec / CLIENT	Quality Plan	H/R		H/R		Signed ITP History Docket
6.3	Declaration of Completion	Promec	Quality Plan	H/R		H/R		AEM-GE-ITR-004 (Notice of Final Completion)
6.4	As-Built Drawings	Promec	Quality Plan	H/R		H/R		All Required As-Built Drawings
6.5	Weld Map	Promec	Quality Plan	H/R		H/R		All Required Weld Maps

PROMEC's Representatives			CLIENT's Representative	
QA/QC	Project Manager			
Name	Name		Name	
Signature	Signature	Date	Signature	Date

AGNICO EAGLE

Vendor Document Status

1 ☐ Proceed to next submission and status.

2 ☐ Proceed with exceptions as noted to next submission and status.

3 ☐ Do not proceed.
Revise as noted and resubmit next submission and status.

4 ☑ Complete, no further submission required.

By: JEAN-FRANCOIS TREMBLAY Date: 2017-05-08

Review and authorization to fabricate are only for general conformance with the design concept of the Project as expressed in the Contract Documents. Sole responsibility for the accuracy and completeness of this document, including but not limited to dimensions and quantities, remains with the Supplier/Contractor. Agnico Eagle does not warrant the accuracy or completeness of any of the information contained herein, nor does Agnico Eagle authorize or approve any construction means, methods, techniques, sequences or any safety precautions or procedures.

Agnico Eagle No. 6515-C-270-007-141-TES-0035 R: Sub001

DOCUMENT FOR INFORMATION

Agnico-Eagle Mines Ltd.

Contract no. 6515-C-270-007

Hydrostatic / Pneumatic Test Procedure for Piping

AEM-PI-PRO-001

Area No.: All

System No.: All

PROMEC Approvals

Prepared by:	Stéphane Doré	**Signature:**		**Date:**	2017-04-26
Verified by:	Jérémy Duval	**Signature:**		**Date:**	2017-04-26
Approved by:	Éric Poulin	**Signature:**		**Date:**	2017-04-26

CLIENT Approvals

Verified by:	Rene Fillion	**Signature:**		**Date:**	2017-05-07
Approved by:		**Signature:**		**Date:**	

Table of Contents

Page

1. PURPOSE 3
2. CODES AND STANDARDS 3
3. SAFETY AND ENVIRONMENT MEASURES 3
   - 3.1 Safety Measures during the Preparation of the Test 3
   - 3.2 Disposal of Test Medium 3
   - *3.2.1 Glycols Diluted with Water* 4
   - *3.2.2 Test Water Release Authorization* 4
   - *3.2.3 Liquid Disposal Documents* 4
4. GENERAL 5
   - 4.1 Introduction 5
   - 4.2 Applied Regulations and Standards 6
   - 4.3 Hydrostatic/Pneumatic Test Package 6
5. PREPARATION FOR THE PRESSURE TEST 6
   - 5.1 Spring Supports 6
   - 5.2 Wireless Communication 6
6. HYDROSTATIC/PNEUMATIC TEST PROCEDURE 6
   - 6.1 System Inspection 6
   - 6.2 System Water Filling, Air Venting, Draining and Flushing 7
   - 6.3 Water Requirements 7
   - 6.4 Inspection of the Pressurized System 7
   - 6.5 Acceptability Standard 7
   - 6.6 Hydrostatic/Pneumatic Test Procedure Completion 8
7. WATER RELEASE COMPLETION 8
8. RESPONSIBILITIES 8
   - 8.1 Responsibilities and Duties of Contractors 8
   - 8.2 Supervisor of the Hydrostatic Test Procedure (CLIENT) 8
9. PNEUMATIC TEST 9

APPENDIX C – STATUS OF INSTRUMENTS DURING PRESSURE TEST

APPENDIX D – ALL APPLICABLE ITRs & LOGs

1. PURPOSE

This procedure provides the requirements for hydrostatic & Pneumatic pressing testing of piping system.

2. CODES AND STANDARDS

- ASME B31.1
- ASME B31.3 (CSA B 51-03)

3. SAFETY AND ENVIRONMENT MEASURES

Promec will set the organisation and implement the safety measures with the help of CLIENT's staff.

Moving proper containments, for the disposal of spilled hydrostatic fluids and any contaminated soil that results hydrostatic fluids.

All activities must be fully documented and provided to R&E.

3.1 Safety Measures during the Preparation of the Test

- Define a specific area for each pressure test.
- Make a list of authorized personnel that will have access to the area during the test.
- Advise other sub-contractors of the terms of tests and the forbidden works to be performed in the area of the test.
- Inspect temporary installations and equipment before conducting the tests to comply with current safety measures.
- Inspect and check temporary scaffolding and lights for inspection, if required.
- List all equipment that will be handled during filling, pressurizing and drainage of the system.
- Check gauge calibration list for measurement and control equipment. (Pressure test gauges shall be calibrated once every six months).
- Ensure that all the test fluids shall be stored and/or disposed of in a safe and acceptable manner.

3.2 Disposal of Test Medium

The release of hydrostatic test water in an amount of 1,000 m^3, or more, requires a registration number from AENV as proof of authorization to release hydrostatic test water. Contact R&E at least one month prior to beginning testing so applications can be completed and a registration number received the following information is required for applications:

- Name, address, fax and phone numbers of the person responsible for the testing.
- Type of pipeline, storage tank or vessel.
- Legal land descriptions for the beginning and end of the pipeline section(s), storage tank or vessel to be tested.

- Total length of pipeline to be tested.
- Inside diameter of the pipeline (mm) to be tested.
- Total volume of hydrostatic test water to be used (m^3).
- Source of the hydrostatic test water: groundwater, surface water, municipal, or other.
- Origin or name of source water.
- Anticipated date of withdrawal of source water.
- Location of release of test water (legal land description).
- Start and end dates for release.
- Volume of release (m^3).
- Approximate rate of release(s) (m^3/hr).
- Name and location of receptor: land, surface water, injection well, other.
- Additives used (MSDS sheet(s) must be included).
- A description of the treatment and mitigative methods used prior to and during release.
- A map, diagram, or air photo of the release area showing release location, receiving land, direction of receiving water flow (if applicable) and sampling locations (soil and water).

If there are any changes to the registration information after submission, R&E must be notified immediately. The application must be signed by the person responsible for the pipeline/ storage tank indicating that the testing will be done in accordance with AENV's Code of Practice.

3.2.1 Glycols Diluted with Water

Glycols diluted with water may be used for hydrostatic testing, but must be properly managed so as not to spill, contaminate soils, or contaminate ground or surface waters and must be disposed off site in an environmentally safe manner. All activities must be fully documented.

3.2.2 Test Water Release Authorization

Upon completion of testing and prior to release, a representative grab sample of the hydrostatic test water must be obtained from the testing pipes and analyzed as specified in Appendix A – "Monitoring Requirements and Limits for Release to Land" and Appendix B – "Monitoring Requirements and Limits for Release to Receiving Water". Hydrostatic test water must not be released before to obtain R&E approval.

3.2.3 Liquid Disposal Documents

The testing crew supervisor must compile the following information for each hydrostatic test:

- A schematic diagram and details of the monitoring and release operations, including monitoring points, holding system, conveyance system, hydrostatic test water release flow rate and area of receiving water.

- Where the release is to receiving water, the name of the receiving water, the estimated rate of flow of the receiving water at the time of the release and photographs taken before, during and after release at the point of release and downstream of a distance of at least 100 meters from the point of release for flowing water.
- Photographs of the sampling points, holding system and conveyance system.
- Where released to land, photographs of the land taken 7 days after the release is complete.
- All analytical results obtained for the hydrostatic testing.
- All information must be retained for a minimum of 5 years after completion of the hydrostatic testing.

4. GENERAL

4.1 Introduction

As the line designation total this procedure describes the pressure tests that have to be achieved on the following systems:

CH: Chemicals
CRW: Cold Recycle Waters
CWR: Cooling water return
CWS: Cooling water supply
DW: Drinking water
FW: Fire water
IWR: Inhibited water return
HC: High pressure condensate
HRW: Hot recycle water
HS: High pressure steam
IWS: Inhibited water supply
LC: Low pressure condensate
LS: Low pressure steam
IA: Instrument Air
LLS: Low low pressure steam
MS: Medium pressure steam
UA: Utility air
UW: Utility water
WRW: Warn recycle water
DR: Drain
EQT: Equipment trim
PA: Plant air

4.2 Applied Regulations and Standards

The pressure tests will be conducted according to standard ASME B 31.1, Article 137, and ASME B 31.3 (CSA B 51-03) - Pressure Test.

4.3 Hydrostatic/Pneumatic Test Package

The Pressure Test Package consists of:

- Piping Pressure Test Record.
- Copy of the Line Designation Table.
- A copy of the P & ID showing the lines involved.
- Isometrics drawings.
- Copy of the drawings gauges calibration sheet.
- All NDE approved.

The Pressure Test Package will be submitted to CLIENT's for review and approval to proceed prior to testing.

5. PREPARATION FOR THE PRESSURE TEST

5.1 Spring Supports

If necessary, the spring supports must be blocked before filling.

Promec will check that all pipe supports are entirely installed according to the drawings.

5.2 Wireless Communication

To ensure at all times that communications are constant between the operator of the pressurizing pump and the workers monitoring the control gauge on the highest location of the piping system installation, two ways radio communication shall be used.

6. HYDROSTATIC/PNEUMATIC TEST PROCEDURE

6.1 System Inspection

- Promec shall check pipe loop with all approved documentation:
  - NDT/PWHT.
  - Check that all specified bolts and gaskets are installed.
  - Check that all vents and drains are installed.
  - Check that all pressure connections are installed correctly.
  - Check for direction of flow through filters and strainers, traps, check valve, etc.
  - Check that all temporary pipe supports have been removed.
  - Check that all in-one valves installed are completely open and protected (secured against unauthorized closing.
  - Check that temporary spools have been installed.
  - Check test medium for conformity to requirement
  - Check pressure gauge calibration.

6.2 System Water Filling, Air Venting, Draining and Flushing

Considering that the water filling for the pressure test is done for the first time, it is necessary to flush the piping system by filling and draining. For this purpose, water from the fire hydrant will be used. If fire hydrants are not available, water shall be trucked in and pumped into the system.

Promec shall ensure that the water that flows out in the period of drainage does not contain any hazardous contaminant for the environment so it can be directly poured into the sewer. One complete fillings and flushes should be enough.

Air venting is accomplished with valves installed for this purpose on the highest locations of the tested systems.

Air venting is completed when water is flowing from the air venting valves in a continuous flow free of air bubbles.

Speckable, blind, blinds flanges, temporary pipe plug or caps will be installed at locations indicated on isometrics and/ or P &ID's drawings.

Place of nozzles for connection on pressurised pump, gauges and air venting valve are shown on schematics, which will be attached for each hydrostatic testing system. The form to be used will be developed with CLIENT.

6.3 Water Requirements

For hydrostatic test, the test fluid shall be clean filtered water that will not corrode or damage the system being tested.

Approval must be obtained from CLIENT if the test fluid is anything other than clean water.

6.4 Inspection of the Pressurized System

The hydrostatic test must be performed during at least 10 minutes.

Visual inspection is mandatory. In the case of a leakage, the inspector will visibly mark the area with paint marker.

6.5 Acceptability Standard

The pressure test procedure is considered successfully conducted when:

- The test pressure is reached and kept constant.
- No trace of cracks, leaks and changes in the shape of parts of the system have been observed during inspection.
- The verification of the written report is noted and approved by all participants witnessing the pressure test.

6.6 Hydrostatic/Pneumatic Test Procedure Completion

A test record shall be prepared for each piping system tested and shall include the following:

- Date of test
- Identification of piping system tested
- Test fluid
- Test pressure
- Duration of test
- Test fluid temperature
- Ambiant temperature
- Pressure gauge number
- Certification of results by examiner with name and signature.
- Approval by CLIENT

N.B.: For testing an austenitic stainless steel piping, checked that the chlorine is under than 50 ppm.

7. WATER RELEASE COMPLETION

When the hydrostatic test is completed, the water stay in the pipe or in a holding vessel until Promec obtains the authorization for releasing the testing fluid. After, we use a truck to transport the water to the release area or, if possible, a water disposal ditch is used.

8. RESPONSIBILITIES

8.1 Responsibilities and Duties of Contractors

Promec's working team shall be responsible for the quality of work and for the compliance of the test procedure. Complete activities shall be registered in the hydrostatic test procedures log book. During the hydrostatic test, Promec shall provide a working team to cover the following activities:

- Water filling and air venting of system under test.
- Pressurizing of system.
- Control of pressure at highest point of system.
- Drainage of system after testing.

8.2 Supervisor of the Hydrostatic Test Procedure (CLIENT)

The hydrostatic test supervisor shall be nominated by CLIENT and coordinate the work with all other participants.

9. PNEUMATIC TEST

Wherever a hydrostatic test cannot be performed, a pneumatic test should be carried out upon CLIENT's approval.

Appendix C

STATUS OF INSTRUMENTS DURING PRESSURE TEST

STATUS OF INSTRUMENTS DURING PRESSURE TEST

Remove:

- Control Valves
- FlowInstruments-Rotameters (Do not force reverse flow)
- Flow Meters-positive displacement type
- Flow Switches-van type
- Orifice Plates (Install after hydrotesting and line flushing)
- Pressure Regulators
- PSV's, TSV's- 3/4" & 1 " screwed

Block and Vents:

- Analyzers
- Flow Instruments-D/P cell & bellow types
- FlowMeters – turbine type
- Flow Indicating Switches-bellows type
- Level Instruments-C/P cell & bellows type
- Pressure Gauges
- Pressure Instruments-all types
- Pressure Switches

Blind Off:

- PSV's (Test gauge may be used if one is furnished; Blinds not required on PSV outlets discharging into a system being tested at 103kPa (15 PSI) or less.)

Include in Test:

- Gauge glasses
- Level Instruments-displacer type (Do not overpressure. If in doubt, block and drain instead.)
- Level Switches-float type (Do not overpressure. If in doubt, block and drain instead.)

To avoid damage due to freezing, all instruments shall be protected. As a good practice it is recommended that instruments be drained and process lead lines blown out with air or nitrogen in preparation for cold weather and during cold weather.

Appendix D

ALL APPLICABLE ITRs & LOGs

AGNICO EAGLE

Vendor Document Status

1 ☐ Proceed to next submission and status.

2 ☐ Proceed with exceptions as noted to next submission and status.

3 ☐ Do not proceed.
Revise as noted and resubmit next submission and status.

4 ☑ Complete, no further submission required.

By: JEAN-FRANCOIS TREMBLAY JG Date: 2017-05-16

Review and authorization to fabricate are only for general conformance with the design concept of the Project as expressed in the Contract Documents. Sole responsibility for the accuracy and completeness of this document, including but not limited to dimensions and quantities, remains with the Supplier/Contractor. Agnico Eagle does not warrant the accuracy or completeness of any of the information contained herein, nor does Agnico Eagle authorize or approve any construction means, methods, techniques, sequences or any safety precautions or procedures.

Agnico Eagle No. 6515-C-270-007-141-TES-0036 R: Sub001

DOCUMENT FOR INFORMATION

Agnico-Eagle Mines Ltd.

Contract no. 6515-C-270-007

Pre-Commissioning Piping Procedure

AEM-PI-PRO-002

Area No.: All

System No.: All

PROMEC Approvals

Prepared by:	Stéphane Doré	**Signature:**		**Date:**	2017-04-26
Verified by:	Jérémy Duval	**Signature:**		**Date:**	2017-04-26
Approved by:	Éric Poulin	**Signature:**		**Date:**	2017-04-26

CLIENT Approvals

Verified by:		**Signature:**		**Date:**	
Approved by:		**Signature:**		**Date:**	

Table of Contents

Page

1. **SCOPE** 3
2. **"SYSTEMS" METHODOLOGY** 3
   - 2.1 SYSTEM DEFINITION 3
3. **PRE-COMMISSIONING** 3
   - 3.1 MECHANICAL COMPLETION (MC) 3
     - *3.1.1 Conformity Check* 3
     - *3.1.2 Energized tests* 3
     - *3.1.3 Flushing and cleaning* 4
4. **PUNCH LIST** 4
5. **RESPONSIBILITY MATRIX** 4

APPENDIX A – RESPONSIBILITY MATRIX

1. SCOPE

This procedure summarizes Promec activities to achieve a "Ready for Pre-commissioning" status.

2. "SYSTEMS" METHODOLOGY

The basic principle of the plant completion scheduling will be to define, prepare, carry out and report all pre-commissioning by system.

2.1 System Definition

The partition of the plant into systems is a key preparation activity that has a major impact on all aspects of completion operation: the system must be defined so as to be independent as possible, not too small, but of the manageable size and exactly adapted to the start-up sequence.

The partition takes place as early as possible in accordance with precise system boundaries, system sequences and system numbering defined by the client and reported on marked-up P & ID's Single Line Diagrams as support documents.

3. PRE-COMMISSIONING

3.1 Mechanical Completion (MC)

A walk-down and punch list will be completed by the client and Promec on each system as early as practical before the end of the MC.

If both parties are satisfied that the system is mechanically completed enough to go into the commissioning phase, all outstanding deficiencies are noted on the punch list, and handover documents are completed and signed.

3.1.1 CONFORMITY CHECK

Carried out on each item of equipment or component, such as pressure gauges, valves, vents and drains, safety vales, etc. to verify the condition of the equipment, the quality of the installation, the compliance with project drawings and specifications, manufacturer's instruction, safety rules, codes, standards and good practice. These activities are generally carried out in an "un-energized" state, like no pressure in the pipe.

3.1.2 ENERGIZED TESTS

These "energized" tests concern the pressure testing of piping. This pressure testing will need to be done using the approved Promec's Procedure.

3.1.3 FLUSHING AND CLEANING

Piping systems must be flushed or air blown to remove construction debris. Under special circumstances, the client's approval is required to combine the hydrostatic/pneumatic test with the flushing activities.

4. PUNCH LIST

While the construction checks and tests are being performed, all discrepancies, damaged or missing equipment, malfunctions, missing documents, etc. are recorded in the punch list, if the situation was not able to be corrected immediately.

5. RESPONSIBILITY MATRIX

The Completion Activities are now further defined in the following Appendix A - "Responsibility Matrix".

This matrix provides a useful list of the piping completion activities and it establishes to which category they belong pre-commissioning (de-energized) and pre-commissioning (under-pres).

Appendix A

RESPONSIBILITY MATRIX

Responsibility Matrix	Contractor Responsibility	CLIENT Responsibility
LEGEND X = Contractor responsibility	X	
O = CLIENT responsibility		O
A = CLIENT approval hold point		A
W = CLIENT witness notification		W
R = CLIENT documentation review		R

CLIENT's APPROVAL HOLD POINT (A)

When Promec is ready to pre-commission any part of any system, which is identified as requiring CLIENT's approval, Promec shall duly notify CLIENT's representative, with 4 days written notification. Timely Review Meetings shall also be conducted between Promec's Pre-commissioning Manager and CLIENT's Commissioning Representative for the purpose of advising CLIENT on the specific Status/ Timing of all Pre-Commissioning Activities Requiring CLIENT's approval.

CLIENT WITNESS POINT (W)

When Promec is ready to pre-commission any part of any system, which is identified as requiring CLIENT witness, Promec shall duly notify CLIENT's Representative, with two days written notification. Timely review meetings shall also be conducted between Promec's QA/QC and CLIENT's Commissioning Representative for the purpose of advising CLIENT on the specific status/ timing of all pre-commissioning activities requiring CLIENT witness.

CLIENT DOCUMENTATION REVIEW (R)

When Promec has drafted the pre-commissioning procedures, descriptive and operating manuals, maintenance manuals, system schedules, and/or related final documentation etc. pertaining to pre-commissioning of any system, Promec shall formally issue via transmittal to CLIENT's Representative, for review & comment purposes. These documents must be received by CLIENT 14 days in advance of final issue.

NOTES:

CLIENT Signatures on Pre-commissioning Documentation

CLIENT's Representative in attendance will personally sign only for the relevant Pre-commissioning Documentation for which he/she approves, witnesses or reviews.

Functional Test Certificates & CLIENT Signatures

Upon completion of a functional test and proven that it has been successful when referring to the Contract requirements, CLIENT and Promec representatives will sign the test certificate.

Ready for Commissioning Standard					
	PIPING	Pre-Com De-energized	Pre-Com Energized	Comm.	Start-Up
1)	Issue Piping Flushing & Cleaning Procedures	XR			
2)	Complete Vendor Package Piping Punch Lists	XA			
3)	Maintain As-Built/ Red Line Mark-Ups of P&IDS	XA			
4)	Remove all In-Line Instruments prior to Hydro-Testing/Flushing & Cleaning including CA/s, Check & Safety Valves	X			
5)	Remove all temporary supports, protections, bracings, sea fastening stops that were installed to prevent equipment damage during shipping, storage and erection	X			
6)	Install temporary spool pieces	X			
7)	Check conditions of equipment, quality of installation, compliance with Project Drawings, Manufacturers instructions, safety rules, specifications, structural supports, and good practice prior to hydrotest	XA			
8)	Hydrostatic test / Pneumatic test		X		
9)	Set or check pipe anchors, guides, spring hangers and supports after hydrotest. Provide cold and hot setting data	XR			
10)	Define, provide, install and remove all temporary blanks and flushing connections.	X			
11)	Execute & Perform Piping Flushing & Cleaning/ Pickling/ Air Blows and Draining as per the Approved Procedures (Except Steam Blows)		XA		
12)	Execute & Perform Critical Body & Seat Testing TSO Valves at Site of All ESD, BDV		XA		
13)	Carry out piping water or air flushing operations		XA		
14)	Drain all lines including low points	XA			
15)	Provide and Install all Permanent Blinds, Spacers, & Spades as per P&ID's in open/closed position as specified by CLIENT	XW			
16)	Disposal of Test Medium following Hydro-Testing/ Flushing & Cleaning	XW			
17)	Remove as necessary and transport all safety valves to and from test facilities	XW			

Ready for Commissioning Standard				
PIPING	Pre-Com De-energized	Pre-Com Energized	Comm.	Start-Up
18) Test, set and tag all safety valves, then carry out safety valves final installation		XW		
19) Perform all Gross Leak Tests Tightness & Service Tests (above & under ground)		X		
20) Remove all Temporary Blinds	X			
21) Supply/ Install & Issue As-Installed Blind List	XR			
22) Compile & Issue RFC Handover Package per System	XR			
23) Alleviate any excess piping stresses that may be imposed on pipes, compressors or pump flanges	XA			
24) Check packing and packing materials and lubrication of valves; repack and lubricate if necessary	XW			
25) Install corrosion probes	XA			
26) Prepare Punch List	XR			

AGNICO EAGLE

Vendor Document Status

1 ☐ Proceed to next submission and status.

2 ☐ Proceed with exceptions as noted to next submission and status.

3 ☐ Do not proceed.
Revise as noted and resubmit next submission and status.

4 ☑ Complete, no further submission required.

By: JEAN-FRANCOIS TREMBLAY Date: 2017-06-09

Review and authorization to fabricate are only for general conformance with the design concept of the Project as expressed in the Contract Documents. Sole responsibility for the accuracy and completeness of this document, including but not limited to dimensions and quantities, remains with the Supplier/Contractor. Agnico Eagle does not warrant the accuracy or completeness of any of the information contained herein, nor does Agnico Eagle authorize or approve any construction means, methods, techniques, sequences or any safety precautions or procedures.

Agnico Eagle No. 6515-C-270-007-141-TES-0037 R: Sub002

DOCUMENT FOR INFORMATION

Agnico-Eagle Mines Ltd.

Contract no. 6515-C-270-007

Piping Erection Procedure

AEM-PI-PRO-003

Area No.: All

System No.: All

PROMEC Approvals

Prepared by:	Stéphane Doré	**Signature:**		**Date:**	2017-04-26
Verified by:	Jérémy Duval	**Signature:**		**Date:**	2017-04-26
Approved by:	Éric Poulin	**Signature:**		**Date:**	2017-04-26

CLIENT Approvals

Verified by:		**Signature:**		**Date:**	
Approved by:		**Signature:**		**Date:**	

Table of Contents

Page

1. **PURPOSE** 3
2. **PREREQUISITE** 3
3. **CODES AND STANDARDS** 3
4. **FIELD FABRICATION** 3
   - 4.1 PIPING 3
   - 4.2 INTERNAL MISALIGNMENT 4
   - 4.3 FLANGES AND FITTINGS 4
   - 4.4 REINFORCING PADS 4
   - 4.5 PIPING VERIFIED AGAINST THE ISOMETRIC DRAWINGS 5
   - 4.6 FABRICATION TOLERANCES 5
5. **ERECTION AND INSTALLATION** 5
   - 5.1 ERECTION 5
   - 5.2 INSTALLATION 5
     - *5.2.1 General* 5
     - *5.2.2 Flange Bolting* 5
     - *5.2.3 Supports* 6
     - *5.2.4 Branch Connections* 6
     - *5.2.5 Cleanliness of Piping* 6
     - *5.2.6 Field Pressure Testing* 6

APPENDIX A – ALL APPLICABLE ITRs & LOGs

1. PURPOSE

The purpose of this procedure is to specify the requirements for erection, joining and installation of shop fabricated spools. It will ensure that the right piece of pipe is installed at the right location and complies with the codes, standards, and isometric drawings.

2. PREREQUISITE

The following measures shall be taken before starting works:

- All technical documents are available (latest version):
  - Isometric drawings.
  - Line lists.
  - General Arrangement drawings.
- No other work is achieved on the same place of work.
- Piping spools and piping equipment have been identified and inspected.
- Transportation equipment and lifting equipment are available.
- Tools, lifting equipment, levelling equipment, etc. are available and have been inspected.

3. CODES AND STANDARDS

n/a

4. FIELD FABRICATION

4.1 Piping

Fabricator shall shape or bevel the joints to be field welded.

Adjacent sections of longitudinal welded pipe that are joined by butt welding shall have the longitudinal weld seams positioned so that they are at least 30 degrees apart and above the horizontal centerline.

Wherever possible, Promec shall not position the longitudinal weld seam on the top or bottom of the line so that branch connections such as couplings and stub-ons are located on the seam.

4.2 Internal Misalignment

Internal misalignment criteria shall be governed by the following:

- Pipe-to-pipe or pipe-to-fitting NPS (Nominal Pipe Size) 24 and smaller: ±1/16 of an inch deviation.
- Pipe-to-pipe or pipe-to-fitting NPS 26 and larger: ±1/8 of an inch deviation.
- If the deviation factors are exceeded, one of the following procedures shall be used:
  - Rotate the pipe or fittings to reduce misalignment to the acceptable tolerances (before attempting any of the following methods).
  - Use spreaders or internal or external lineup clamps to correct moderate out-of round condition.
  - Backweld the root pass.
  - Taper the wall of the component internally, after obtaining approval from the client, to ensure wall thickness is not reduced below the minimum required by the code.

4.3 Flanges and Fittings

Flange bolt holes are to be oriented as follows, unless otherwise indicated on the piping drawings:

- Flange face vertical: bolt holes to straddle vertical centerline.
- Flange face horizontal: bolt holes to straddle north-south centerline.
- Orifice flanges shall be fabricated with the taps in the exact orientation shown on the piping drawings. The up and down stream sections of pipe to which the orifice flanges are attached may be standard mill run pipe, but each piece shall be a choice hand-selected piece, and the interior of the pipe shall be round, smooth, and free from blisters and scale; welds shall be grounded flush. Field welds shall be kept at a maximum distance from the face of the orifice.
- Where line taps and 'olets are required, first attach the connection fitting then, the hole for each line tap shall be drilled square to the axial centerline, clean, sharp, and free from burrs, wire edges, or other irregularities.
- Slip-on flanges shall be welded inside and outside. Refer to Figure 328.5.2B of ASME B31.3. The weld shall be applied so that the flange face shall be free of weld spatter and does not require refacing.

4.4 Reinforcing Pads

Reinforcing pads shall be installed only where called for on the piping drawing. Pad material shall be the same as the pipe material, unless otherwise authorized by the client. Drawing will specify size and pad thickness.

4.5 Piping verified against the isometric drawings

Check that the position of the piping satisfied the isometric drawings informations: level, horizontal and vertical measurement, etc.

4.6 Fabrication Tolerances

The fabrication tolerances for fabricated piping shall be in accordance with client's specifications and standards.

5. ERECTION AND INSTALLATION

5.1 Erection

The following equipment will be used at different steps during pipe erection works: slings, shackles, mechanical or hydraulic jacks, come-along, measuring tapes, laser tool, temporary supports, boom trucks, etc.

5.2 Installation

5.2.1 GENERAL

Except where shown otherwise on the drawings, piping shall conform to the following:

- Be run level and plumb.
- Be run on North-South and East-West axis.

Evaluation of piping installation works sequence:

- Preparation of pipe to be welded: bevels, cleanliness, etc.
- Mounting of spools at ground level.
- Evaluation of how to handle the spools.
- Lifting of spools to their final location.
- Welding or assembling of spools.
- Identification of the welds.
- Installation of temporary supports.
- Etc.

Interior cleaning of piping:

- Marine Line, cleaning will be perform by pigging.
- Diesel Line (fuel farm and pumping station), cleaning will be perform by air blowing.

5.2.2 FLANGE BOLTING

Use a logical sequence of bolt tightening to ensure even gasket compression, as indicated in ASME B16.5

Unless specified otherwise, provide a bolt stress of 30,000 psi minimum or 45,000 psi maximum using a lubricant on the bolt threads (Refer to AEM-PI-PRO-004 Flanges Bolting Procedure).

Prior to bolt-up, examine flange faces. Flange faces shall be in as-new condition, and shall be wiped clean of any debris, excess oil, grease, and dirt. Restore damaged flange faces to as-new condition. Do not perform weld repairs on flange faces or flanges.

Do not use washers or spacers to make up bolt length. Bolt lengths are specified to prevent oversizing.

5.2.3 SUPPORTS

Install supports as indicated on the drawings.

Install spring supports in compliance with Manufacturer's instructions; keep them blocked until after line closure and hydrotest. Adjust them in the installed position and check them when operating conditions are reached.

Install all required temporary supports for hydrostatic testing.

Welding of supports shall be as indicated on the drawings.

5.2.4 BRANCH CONNECTIONS

Take care in shaping the ends of branch nozzles, as well as holes burned into the pipe for branch connections, to ensure fit with suitable provision for weld metal and so that the branch connections do not project inside the pipes.

5.2.5 CLEANLINESS OF PIPING

Open-end and flange protection shall be used throughout installation. Protect open pipes at times when work on them is not actually taking place.

Inspect individual pipe sections, prefabricated spools, and pipeline items internally during installation, and remove any foreign matter before final welding or bolting.

Piping contiguous with special equipment, which requires cleaning to the equipment Manufacturer's procedure, shall be inspected by and have cleaning supervised by the Manufacturer's representative.

5.2.6 FIELD PRESSURE TESTING

Testing of installed piping systems shall be in accordance with the previously referenced standards. (Refer to AEM-PI-PRO-001 Hydrostatic-Pneumatic Test Procedure for Piping).

Appendix A

ALL APPLICABLE ITRs & LOGs

AGNICO EAGLE

Vendor Document Status

1 ☐ Proceed to next submission and status.

2 ☐ Proceed with exceptions as noted to next submission and status.

3 ☐ Do not proceed.
Revise as noted and resubmit next submission and status.

4 ☑ Complete, no further submission required.

By: JEAN-FRANCOIS TREMBLAY Date: 2017-06-22

Review and authorization to fabricate are only for general conformance with the design concept of the Project as expressed in the Contract Documents. Sole responsibility for the accuracy and completeness of this document, including but not limited to dimensions and quantities, remains with the Supplier/Contractor. Agnico Eagle does not warrant the accuracy or completeness of any of the information contained herein, nor does Agnico Eagle authorize or approve any construction means, methods, techniques, sequences or any safety precautions or procedures.

Agnico Eagle No. 6515-C-270-007-141-TES-0033 R: Sub002

DOCUMENT FOR INFORMATION

Agnico-Eagle Mines Ltd.

Contract no. 6515-C-270-007

Pump Installation Procedure

AEM-ME-PRO-001

Area No.: All

System No.: All

PROMEC Approvals

Prepared by:	Stéphane Doré	**Signature:**		**Date:**	2017-04-26
Verified by:	Jérémy Duval	**Signature:**		**Date:**	2017-04-26
Approved by:	Éric Poulin	**Signature:**		**Date:**	2017-04-26

CLIENT Approvals

Verified by:		**Signature:**		**Date:**	
Approved by:		**Signature:**		**Date:**	

Table of Contents

Page

1. SCOPE 3
2. PREREQUISITE 3
3. VISUAL INSPECTION AND PREPARATION 3
4. LEVELLING AND FIXING 3
5. PUMP AUXILIARIES INSTALLATION 4
6. PIPING INSTALLATION 4
7. PRE-COMMISSIONING 4
8. FINAL ACCEPTANCE 4

APPENDIX A – ALL APPLICABLE ITRs & LOG

1. SCOPE

This procedure provides primary inspection and installation requirements pertaining to the pumps installation.

2. PREREQUISITE

- Relevant isometric drawings are up-to-date.
- Shop drawings, vendor manuals and technical specs up-to-date.
- Preservation and storage plan in place.
- Relevant team mobilized and ready.
- Pump Installation Procedure prepared and approved.
- Materials and tools available with calibration certificates and calibration log entries.

3. VISUAL INSPECTION AND PREPARATION

- Check equipment skid for any sign of damage prior to installation.
- Begin preservation program.
- Verify elevation and centerlines are correct and are clearly marked on foundation.
- Pump installation includes foundation preparation, confirmation of center lines and elevations, preliminary alignment, machinery distortion to be checked at piping bolt up, soft foot check, final alignment, flushing and recharging of lubricants (pump, gear-box, drivers and lube oil tanks) in accordance with the manufacturer's recommendations.
- Mark appropriately on the foundation the jacking screw pads and anchor bolts locations.
- Jack-up equipment skid with external jacks to allow jacking screws pads installation and secure it with temporary supports.
- Circular jackscrew leveling plate shall be made of 2-inche diameter, 12 mm thick, CSA grade 300 Structural Steel Plate, or equivalent type round stock material. The plate shall be clean and free of all scale and oil will be readjusted.

4. LEVELLING AND FIXING

- Install the jacking bolts in their respective screw location. Use the installed jacking bolts to bring the skid to the designed elevation. Ensure that pump nozzles are in proper orientation on the centerlines.
- Level the skid properly with an accurate leveling instrument using the equipment base machined faces. Align and adjust the pumps inlet and outlet flanges with the relevant pipe centerlines.
- After base plate leveling first alignment shall be performed. Soft-foot tolerance and coupling gaps shall be checked while the alignment is being confirmed. Coupling gap to be confirmed.

5. PUMP AUXILIARIES INSTALLATION

- Lube oil console is brought to design elevation and centerlines by the use of stainless steel shims and external lifting.
- Lube oil piping is loosely installed to verify best position.
- Electrical and instrumentation will be done by those disciplines using the relevant ITP's and procedures.

6. PIPING INSTALLATION

- Piping will be cleaned and installed by the piping discipline.
- Interconnecting lube oil piping, cooling water, suction / discharge and steam piping will be subject to fit up measurements. Pipe strain measurements and adjustment shall be carried out.
- Seal flushing lines to be cleaned and connected.
- Distortion due to piping stress: If distortion exceeds allowances, piping alignment shall be re-worked and re-checked.
- All piping that is attached to the equipment for the purpose of field welding will be electrically isolated from the equipment by use of isolating kits.
- A final pipe strain check will be performed and recorded.

7. PRE-COMMISSIONING, (AEM STD TO APPLY, TO BE DETAILED BY AEM)

- If applicable, vendor presence requirements shall be requested prior to final work.
- Lube oil pipe strain to witnessed
- Lube oil system to be flushed.
- Steam pipe blowing to be done by piping discipline.
- Running oil to be installed in lube oil console and pump bearing sumps.
- Motor bump test (uncoupled) to verify rotation will be performed on electric motor drive units.
- Final alignments with cold offsets to be witnessed.
- Pipe strain checks of steam lines and pump suction / discharge lines to be witnessed.
- All couplings and guards to be in place.
- Touch up painting will be completed.
- Mark in red on isometric drawing copy all final dimensions for as-built drawing preparation.

8. FINAL ACCEPTANCE, (AEM STD TO APPLY, TO BE DETAILED BY AEM)

- All inspection test records along with preservation records will be verified for handover to the turnover coordinator, along with relevant RFI's, NCR's and field trouble reports.
- A final punchlist will be cleared with no outstanding NCR's.
- Upon completion of work, final acceptance shall be obtained from CLIENT.

Appendix A

ALL APPLICABLE ITRs & LOGs

AGNICO EAGLE

Vendor Document Status

1 ☐ Proceed to next submission and status.

2 ☐ Proceed with exceptions as noted to next submission and status.

3 ☐ Do not proceed.
Revise as noted and resubmit next submission and status.

4 ☑ Complete, no further submission required.

By: JEAN-FRANCOIS TREMBLAY Date: 2017-05-02

Review and authorization to fabricate are only for general conformance with the design concept of the Project as expressed in the Contract Documents. Sole responsibility for the accuracy and completeness of this document, including but not limited to dimensions and quantities, remains with the Supplier/Contractor. Agnico Eagle does not warrant the accuracy or completeness of any of the information contained herein, nor does Agnico Eagle authorize or approve any construction means, methods, techniques, sequences or any safety precautions or procedures.

Agnico Eagle No. 6515-C-270-007-141-TES-0034 R: Sub001

DOCUMENT FOR INFORMATION

Agnico-Eagle Mines Ltd.

Contract no. 6515-C-270-007

Fuel Tank Installation Procedure

AEM-ME-PRO-002

Area No.: All

System No.: All

PROMEC Approvals

Prepared by:	Stéphane Doré	**Signature:**		**Date:**	2017-04-26
Verified by:	Jérémy Duval	**Signature:**		**Date:**	2017-04-26
Approved by:	Éric Poulin	**Signature:**		**Date:**	2017-04-26

CLIENT Approvals

Verified by:		**Signature:**		**Date:**	
Approved by:		**Signature:**		**Date:**	

Table of Contents

Page

1. SCOPE 3
2. PREREQUISITE 3
3. VISUAL INSPECTION AND PREPARATION 3
4. LEVELING AND FIXING 3
5. AUXILIARIES INSTALLATIONS & INSPECTION 3
6. PRE-COMMISSIONING 3
7. TOUCH-UP PAINTING 4
8. FINAL ACCEPTANCE 4

APPENDIX A – ALL APPLICABLE ITRs & LOGs

1. SCOPE

- This procedure provides inspection steps and requirements pertaining to a fuel tank.
- Each package is composed of a single unit.

2. PREREQUISITE

- Relevant isometric drawings are up-to-date.
- Shop drawings, vendor's manual and technical specs up-to-date.
- Relevant team mobilized and ready.
- Pertaining material and tools are prepared and ready.

3. VISUAL INSPECTION AND PREPARATION

- Check equipment for any sign of damage prior to installation.
- Mark on the foundation center lines and elevation references.
- If required, clean the foundation and skid exposed surfaces using compressed air.

4. LEVELING AND FIXING

- Jack up the equipment skid using external jacks keeping the skid level up to design elevation and center lines.
- Level the skid properly with an accurate leveling instrument. Align and adjust vessels inlet and outlet flanges with the relevant pipe axes (see relevant isometric drawing).
- Leveling shims shall to be installed on both sides of each anchor bolt. Wherever the distance between adjacent anchor bolts exceed 800 mm, additional leveling pads shall be installed midway between the anchor bolts.

5. AUXILIARIES INSTALLATIONS & INSPECTION

- External-Interconnecting pipes to be installed. Promec piping ITP to be followed for piping gaskets, studs and flange bolt-up.
- Internal inspection and cleaning to be performed if required.
- Instrumentation installation and verification to be performed by Promec instrumentation team.
- Complete equipment closing record form.

6. PRE-COMMISSIONING

- Follow vendor's operation manual procedure.

7. TOUCH-UP PAINTING

- Touch up painting shall be carried out on surfaces that have scratches or scrapes or other damages that have occurred during transportation and installation (paint is supplied by equipment vendor).

8. FINAL ACCEPTANCE

- All inspection and test records to be reviewed for completeness and securely filed for hand-over to turnover coordinator.
- Upon completion of works, final acceptance shall be obtained from the client.

Appendix A

ALL APPLICABLE ITRs & LOGs

AGNICO EAGLE

Vendor Document Status

1 ☐ Proceed to next submission and status.

2 ☐ Proceed with exceptions as noted to next submission and status.

3 ☐ Do not proceed.
Revise as noted and resubmit next submission and status.

4 ☑ Complete, no further submission required.

By: JEAN-FRANCOIS TREMBLAY Date: 2017-05-02

Review and authorization to ~~fabricate~~ are only for general conformance with the design concept of the Project as expressed in the Contract Documents. Sole responsibility for the accuracy and completeness of this document, including but not limited to dimensions and quantities, remains with the Supplier/Contractor. Agnico Eagle does not warrant the accuracy or completeness of any of the information contained herein, nor does Agnico Eagle authorize or approve any construction means, methods, techniques, sequences or any safety precautions or procedures.

Agnico Eagle No. 6515-C-270-007-141-TES-0038 R: Sub001

DOCUMENT FOR INFORMATION

Agnico-Eagle Mines Ltd.

Contract no. 6515-C-270-007

Welding Control Procedure

AEM-WE-PRO-001

Area No.: All

System No.: All

PROMEC Approvals

Prepared by:	Stéphane Doré	**Signature:**		**Date:**	2017-04-26
Verified by:	Jérémy Duval	**Signature:**		**Date:**	2017-04-26
Approved by:	Éric Poulin	**Signature:**		**Date:**	2017-04-26

CLIENT Approvals

Verified by:		**Signature:**		**Date:**	
Approved by:		**Signature:**		**Date:**	

TABLE OF CONTENTS

Page

1. SCOPE 3
2. REFERENCES 3
3. WELDING PROCEDURES 3
4. WELDER PERFORMANCE QUALIFICATION 3
5. WELDING MATERIAL CONTROL 4
6. FIT-UP AND WELDING 4
7. RADIOGRAPHIC INSPECTION 5

APPENDIX A – ALL APPLICABLE ITRs & LOGs

1. Scope

- This procedure describes the system for maintaining control of all production welding to the requirements of the applicable engineering specifications, codes and standards.

2. References

- ASME, Section IX - Welding and Brazing Qualifications
- ANSI, B-31.3 - Petroleum Refinery Piping
- ANSI, B-31.1 - Power Piping
- AWS, American Welding Society

3. Welding Procedures

- All welding performed on site will comply with applicable qualified welding procedures as specified in the Standard S40 05 13.
- Prime contractor's welders will be qualified to weld procedures in accordance with contract specifications. Prime contractor is responsible for certifying their own welders.
- Copies of the qualified welding procedures approved for that project shall be maintained on site by the Welding Foreman and Site Q/C Representative for reference and permanent retention.

4. Welder Performance Qualification

- It is the responsibility of the Site Q/C Representative to conduct or supervise the Welder Performance Qualification tests. At the discretion of the Corporate Quality Control Manager, a Welding Foreman or other qualified site supervisor may conduct these tests.
- Records attesting to the Welder Performance Qualification tests shall be generated and maintained by the Site Q/C Representative and the Welding Foreman.
- The Site Q/C Representative and the Welding Foreman shall maintain a complete listing of welders and welding operators employed. The form, Welder Qualification Log, is to be updated and reissued on a monthly basis and is to be distributed as required.

5. Welding Material Control

- The Site Q/C Representative and Welding Foreman shall make certain that the welding material used conforms to that of the welding procedure. No substitutions for the specified material will be made without written approval from the client.

6. Fit-Up and Welding

- Visual surveillance shall be performed to establish compliance to welding procedures. The inspection parameters listed below are recommended as guidelines
  - ✓ Inspect end preparation and joint configuration as established by applicable weld procedures and engineering specifications.
  - ✓ Inspect internal alignment and root opening prior to welding.
  - ✓ Check tack welds that are to be incorporated into the final weld, and be assured of proper blend grinding and absence of visual defects.
  - ✓ Check for proper welding materials and other essential variables of applicable weld procedures.
  - ✓ Check visually root pass for cracks, porosity, slag, fusion lines and quality workmanship (if required use LP).
  - ✓ Inspect completed welds for proper reinforcement. All welds should blend smoothly into the base metal and be free of cold lap or fusion at the toe.
  - ✓ Inspect weld for surface discontinuities such as undercut. Surface porosity is to be considered as an injurious defect and shall be repaired.
  - ✓ All repairs are to be made in accordance with approved procedures.
  - ✓ Each welder shall be responsible for stamping his assigned symbol immediately after completion of the weld. A smooth, flat spot shall be ground or filed on the reinforcement cap. The welder shall stamp his/hers identifying mark upon this spot.
- For ferrous material less than 1/4" (1/2" for nonferrous), the welder's symbol shall be recorded on the base metal by use of a halogen-free paint marker, or recorded on isometric drawings by the welding supervisor which shall be available to the Quality Control Inspector.

7. Radiographic Inspection

- The Site Q/C Representative or Welding Foreman will schedule radiographic inspections.
- Radiographic requirements shall be determined by the client standard to assure compliance to contract Codes and specifications.
- Welds requiring radiography will be flagged by a suitable means which will be consistent through contract completion.
- The Site Q/C Representative will complete the Radiographic Inspection Status Record, to indicate status of radio graphically-inspected welds. This form will be forwarded to appropriate supervision for distribution.
- In addition to the records generated under this procedure, marked-up isometric and orthographic drawings will be used as weld maps to indicate completion of radiographic inspection. This will allow a progressive record and give system status.

Appendix A

ALL APPLICABLE ITRs & LOGs

AGNICO EAGLE

Vendor Document Status

1 ☐ Proceed to next submission and status.

2 ☐ Proceed with exceptions as noted to next submission and status.

3 ☐ Do not proceed.
Revise as noted and resubmit next submission and status.

4 ☑ Complete, no further submission required.

By: JEAN-FRANCOIS TREMBLAY Date: 2017-05-02

Review and authorization to fabricate are only for general conformance with the design concept of the Project as expressed in the Contract Documents. Sole responsibility for the accuracy and completeness of this document, including but not limited to dimensions and quantities, remains with the Supplier/Contractor. Agnico Eagle does not warrant the accuracy or completeness of any of the information contained herein, nor does Agnico Eagle authorize or approve any construction means, methods, techniques, sequences or any safety precautions or procedures.

Agnico Eagle No. 6515-C-270-007-141-TES-0039 R: Sub001

DOCUMENT FOR INFORMATION

Agnico-Eagle Mines Ltd.

Contract no. 6515-C-270-007

Non-Destructive Examination Procedure

AEM-WE-PRO-002

Area No.: All

System No.: All

PROMEC Approvals

Prepared by:	Stéphane Doré	**Signature:**		**Date:**	2017-04-26
Verified by:	Jérémy Duval	**Signature:**		**Date:**	2017-04-26
Approved by:	Éric Poulin	**Signature:**		**Date:**	2017-04-26

CLIENT Approvals

Verified by:		**Signature:**		**Date:**	
Approved by:		**Signature:**		**Date:**	

TABLE OF CONTENTS

Page

1. Qualified Individual 3
2. Qualified Firm 3
3. NDE Purchasing Language 4

The Authorized Company for carrying out NDT and its personnel engaged in non-destructive examinations should be familiar with Promec's examination methods and the methods prescribed by the applicable drawings, specifications, codes and standards. The following list outlines the most commonly used examination methods on a Promec project:

- VT - Visual Testing
- LT - Leak Testing
- PT - Liquid Penetrant Testing
- RT - Radiographic Testing (X-ray)
- MT - Magnetic Particle Testing
- UT - Ultrasonic Testing

These methods as well as other methods may or may not, in whole or in part be sub-contracted to "qualified individuals" or firms to perform. The size and scope of the project dictates these conditions as well as the contract.

1. Qualified Individual

- The term "qualified individual" refers to the assigned person responsible for performing or reviewing the nondestructive examinations. All conflicts between the "qualified individual" and any other party will be resolved through the Project Manager and/or the Site Q/C Representative.

2. Qualified Firm

- The term "qualified firm" refers to a licensed NDE organization that performs NDE testing by subcontract for Promec. The qualified firms' contract must be governed by the contract between Promec and its client.
  - ✓ The selection of the NDE firm will be confirmed by the Corporate Quality Control Manager prior to awarding a contract.
  - ✓ The NDE firm will conduct its work in support of Promec.
  - ✓ All work performed by the NDE firm will meet the codes and specifications, quality and integrity.
  - ✓ The productivity and efficiency of the NDE firm shall be monitored to ensure that GSI and its client are receiving maximum value.

3. NDE Purchasing Language

- The following NDE Language shall be added to all Field PO's or subcontracts issued to a NDE firm. The following notes are to be used as a guide and the particular methods, codes and standards shall be verified prior to insertion into the P.O.

  - ✓ All work will be performed in accordance with ASME Section 5, Article 2 Radiographic Standards or ASME requirements.
  - ✓ All radiographic personnel shall be certified in accordance with CAN/CGSB-48.9712-2005 Latest Adopted Edition.
  - ✓ Prior to commencing any radiographic services, one copy of the following must be submitted to the Promec Quality Control Manager.
    - a) Liability Insurance Certificate. Retain copy and forward the original to the Site Project Manager.
    - b) State, Provincial and Federal Radiation Licenses (If Applicable).
    - c) All anticipated personnel certifications (For methods outlined in the contract).
    - d) Each radiographic technique procedure to be used (within the scope of the project).
  - ✓ Each crew shall have one (1) certified Level II Technician on site when working.
  - ✓ All subcontractor radiography shall be interpreted by the subcontractor for film quality and defects prior to surrendering the film and record sheets to the Promec Representative.
  - ✓ All record sheets shall be filled out completely, listing all weldment defects seen on film, whether the defects are acceptable or rejectable to codes or specifications, and shall be signed by the Subcontractor's Level II Technician.

DRAWINGS INDEX (IFC) LATEST REVISION

DWG No.	Rev. No.	TITLE
65-116-205-200	2	116 - Fuel Tank Farm - 205 P&ID - Fuel Distribution - Flow Diagram
65-116-210-200	0	116 - Fuel Tank Farm - 210 General Arrangement - Fuel Distribution - Plan View
65-116-245-200	0	116 - Fuel Tank Farm - 245 - Structural Steel - Fuel Distribution - Modification & Additions at the Containers
65-116-245-201	0	116 - Fuel Tank Farm - 245 - Structural Steel - Fuel Distribution - Dike, Pipe & Containers Catwalks
65-116-260-200	0	116 - Fuel Tank Farm - 260 - Platework - Tank #1 - 20 000 000 liters Ø43m x 14m H - General Arrangement
65-116-260-201	0	116 - Fuel Tank Farm - 260 - Platework - Tank #2 - 13 500 000 liters Ø35.1m x 14m H - General Arrangement
65-116-260-202	0	116 - Fuel Tank Farm - 260 - Platework - Tank #1 @ #6 - Details
65-116-270-200	0	116 - Fuel Tank Farm - 270 - Piping - Fuel Distribution - Details
65-116-270-201	0	116 - Fuel Tank Farm - 270 - Piping - Fuel Distribution - Details
65-ULT-116-MP-001	2	116 - Fuel Tank Farm - Fuel Distribution - General Arrangement - Plan View
65-ULT-116-MP-002	2	116 - Fuel Tank Farm - Fuel Distribution - General Arrangement - Plan View
65-ULT-116-MP-003	2	116 - Fuel Tank Farm - Fuel Distribution - General Arrangement - Plan View
116-100-PDI-CC10-0020_1 de 2	3	116 - Fuel Tank Farm - Ranklin Inlet - Fabrication Isometric - Diesel from POD11601B to bottom Loading Arm 65EQM11601
116-100-PDI-CC10-0020_2 de 2	2	116 - Fuel Tank Farm - Ranklin Inlet - Fabrication Isometric - Diesel from POD11601B to bottom Loading Arm 65EQM11601
116-100-PDI-CC10-0023_1 de 4	2	116 - Fuel Tank Farm - Ranklin Inlet - Fabrication Isometric - Diesel from POD11601A to bottom Loading Arm 65EQM11601
116-100-PDI-CC10-0023_2 de 4	3	116 - Fuel Tank Farm - Ranklin Inlet - Fabrication Isometric - Diesel from POD11601A to bottom Loading Arm 65EQM11601
116-100-PDI-CC10-0023_3 de 4	2	116 - Fuel Tank Farm - Ranklin Inlet - Fabrication Isometric - Diesel from POD11601A to bottom Loading Arm 65EQM11601
116-100-PDI-CC10-0023_4 de 4	3	116 - Fuel Tank Farm - Ranklin Inlet - Fabrication Isometric - Diesel from POD11601A to bottom Loading Arm 65EQM11601
116-150-PDI-CC10-0001_1 de 13	3	116 - Fuel Tank Farm - Ranklin Inlet - Fabrication Isometric - Marine Line to 65TNK11601 & 65TNK11602
116-150-PDI-CC10-0001_2 de 13	2	116 - Fuel Tank Farm - Ranklin Inlet - Fabrication Isometric - Marine Line to 65TNK11601 & 65TNK11602
116-150-PDI-CC10-0001_3 de 13	2	116 - Fuel Tank Farm - Ranklin Inlet - Fabrication Isometric - Marine Line to 65TNK11601 & 65TNK11602
116-150-PDI-CC10-0001_4 de 13	2	116 - Fuel Tank Farm - Ranklin Inlet - Fabrication Isometric - Marine Line to 65TNK11601 & 65TNK11602
116-150-PDI-CC10-0001_5 de 13	2	116 - Fuel Tank Farm - Ranklin Inlet - Fabrication Isometric - Marine Line to 65TNK11601 & 65TNK11602
116-150-PDI-CC10-0001_6 de 13	2	116 - Fuel Tank Farm - Ranklin Inlet - Fabrication Isometric - Marine Line to 65TNK11601 & 65TNK11602
116-150-PDI-CC10-0001_7 de 13	2	116 - Fuel Tank Farm - Ranklin Inlet - Fabrication Isometric - Marine Line to 65TNK11601 & 65TNK11602
116-150-PDI-CC10-0001_8 de 13	2	116 - Fuel Tank Farm - Ranklin Inlet - Fabrication Isometric - Marine Line to 65TNK11601 & 65TNK11602
116-150-PDI-CC10-0001_9 de 13	2	116 - Fuel Tank Farm - Ranklin Inlet - Fabrication Isometric - Marine Line to 65TNK11601 & 65TNK11602
116-150-PDI-CC10-0001_10 de 13	2	116 - Fuel Tank Farm - Ranklin Inlet - Fabrication Isometric - Marine Line to 65TNK11601 & 65TNK11602
116-150-PDI-CC10-0001_11 de 13	2	116 - Fuel Tank Farm - Ranklin Inlet - Fabrication Isometric - Marine Line to 65TNK11601 & 65TNK11602
116-150-PDI-CC10-0001_12 de 13	2	116 - Fuel Tank Farm - Ranklin Inlet - Fabrication Isometric - Marine Line to 65TNK11601 & 65TNK11602
116-150-PDI-CC10-0001_13 de 13	2	116 - Fuel Tank Farm - Ranklin Inlet - Fabrication Isometric - Marine Line to 65TNK11601 & 65TNK11602
116-150-PDI-CC10-0004_1 de 3	2	116 - Fuel Tank Farm - Ranklin Inlet - Fabrication Isometric - Marine Line to 65TNK11602
116-150-PDI-CC10-0004_2 de 3	2	116 - Fuel Tank Farm - Ranklin Inlet - Fabrication Isometric - Marine Line to 65TNK11602
116-150-PDI-CC10-0004_3 de 3	2	116 - Fuel Tank Farm - Ranklin Inlet - Fabrication Isometric - Marine Line to 65TNK11602
116-150-PDI-CC10-0006_1 de 12	2	116 - Fuel Tank Farm - Ranklin Inlet - Fabrication Isometric - Diesel from 65TNK11601 & 65TNK11602 to Pumping Station
116-150-PDI-CC10-0006_2 de 12	2	116 - Fuel Tank Farm - Ranklin Inlet - Fabrication Isometric - Diesel from 65TNK11601 & 65TNK11602 to Pumping Station
116-150-PDI-CC10-0006_3 de 12	2	116 - Fuel Tank Farm - Ranklin Inlet - Fabrication Isometric - Diesel from 65TNK11601 & 65TNK11602 to Pumping Station

DRAWINGS INDEX (IFC) LATEST REVISION

DWG No.	Rev. No.	TITLE
116-150-PDI-CC10-0006_4 de 12	2	116 - Fuel Tank Farm - Ranklin Inlet - Fabrication Isometric - Diesel from 65TNK11601 & 65TNK11602 to Pumping Station
116-150-PDI-CC10-0006_5 de 12	2	116 - Fuel Tank Farm - Ranklin Inlet - Fabrication Isometric - Diesel from 65TNK11601 & 65TNK11602 to Pumping Station
116-150-PDI-CC10-0006_6 de 12	2	116 - Fuel Tank Farm - Ranklin Inlet - Fabrication Isometric - Diesel from 65TNK11601 & 65TNK11602 to Pumping Station
116-150-PDI-CC10-0006_7 de 12	2	116 - Fuel Tank Farm - Ranklin Inlet - Fabrication Isometric - Diesel from 65TNK11601 & 65TNK11602 to Pumping Station
116-150-PDI-CC10-0006_8 de 12	2	116 - Fuel Tank Farm - Ranklin Inlet - Fabrication Isometric - Diesel from 65TNK11601 & 65TNK11602 to Pumping Station
116-150-PDI-CC10-0006_9de 12	2	116 - Fuel Tank Farm - Ranklin Inlet - Fabrication Isometric - Diesel from 65TNK11601 & 65TNK11602 to Pumping Station
116-150-PDI-CC10-0006_10 de12	2	116 - Fuel Tank Farm - Ranklin Inlet - Fabrication Isometric - Diesel from 65TNK11601 & 65TNK11602 to Pumping Station
116-150-PDI-CC10-0006_11 de 12	2	116 - Fuel Tank Farm - Ranklin Inlet - Fabrication Isometric - Diesel from 65TNK11601 & 65TNK11602 to Pumping Station
116-150-PDI-CC10-0006_12 de 12	2	116 - Fuel Tank Farm - Ranklin Inlet - Fabrication Isometric - Diesel from 65TNK11601 & 65TNK11602 to Pumping Station
116-150-PDI-CC10-0007	2	116 - Fuel Tank Farm - Ranklin Inlet - Fabrication Isometric - Diesel from 65TNK11602 to Pumping Station
116-150-PDI-CC10-0011_1 de 5	2	116 - Fuel Tank Farm - Ranklin Inlet - Fabrication Isometric - Diesel from 65TNK11601 to Pumping Station
116-150-PDI-CC10-0011_2 de 5	2	116 - Fuel Tank Farm - Ranklin Inlet - Fabrication Isometric - Diesel from 65TNK11601 to Pumping Station
116-150-PDI-CC10-0011_3 de 5	2	116 - Fuel Tank Farm - Ranklin Inlet - Fabrication Isometric - Diesel from 65TNK11601 to Pumping Station
116-150-PDI-CC10-0011_4 de 5	2	116 - Fuel Tank Farm - Ranklin Inlet - Fabrication Isometric - Diesel from 65TNK11601 to Pumping Station
116-150-PDI-CC10-0011_5 de 5	2	116 - Fuel Tank Farm - Ranklin Inlet - Fabrication Isometric - Diesel from 65TNK11601 to Pumping Station
116-150-PDI-CC10-0012	2	116 - Fuel Tank Farm - Ranklin Inlet - Fabrication Isometric - Diesel from 65TNK11601 to Pumping Station
116-150-PDI-CC10-0018_1 de 2	3	116 - Fuel Tank Farm - Ranklin Inlet - Fabrication Isometric - Diesel from 65TNK11601 & 65TNK11602 to 65POD11601A
116-150-PDI-CC10-0018_2 de 2	2	116 - Fuel Tank Farm - Ranklin Inlet - Fabrication Isometric - Diesel from 65TNK11601 & 65TNK11602 to 65POD11601A

65-116-205-200_R2.dwg

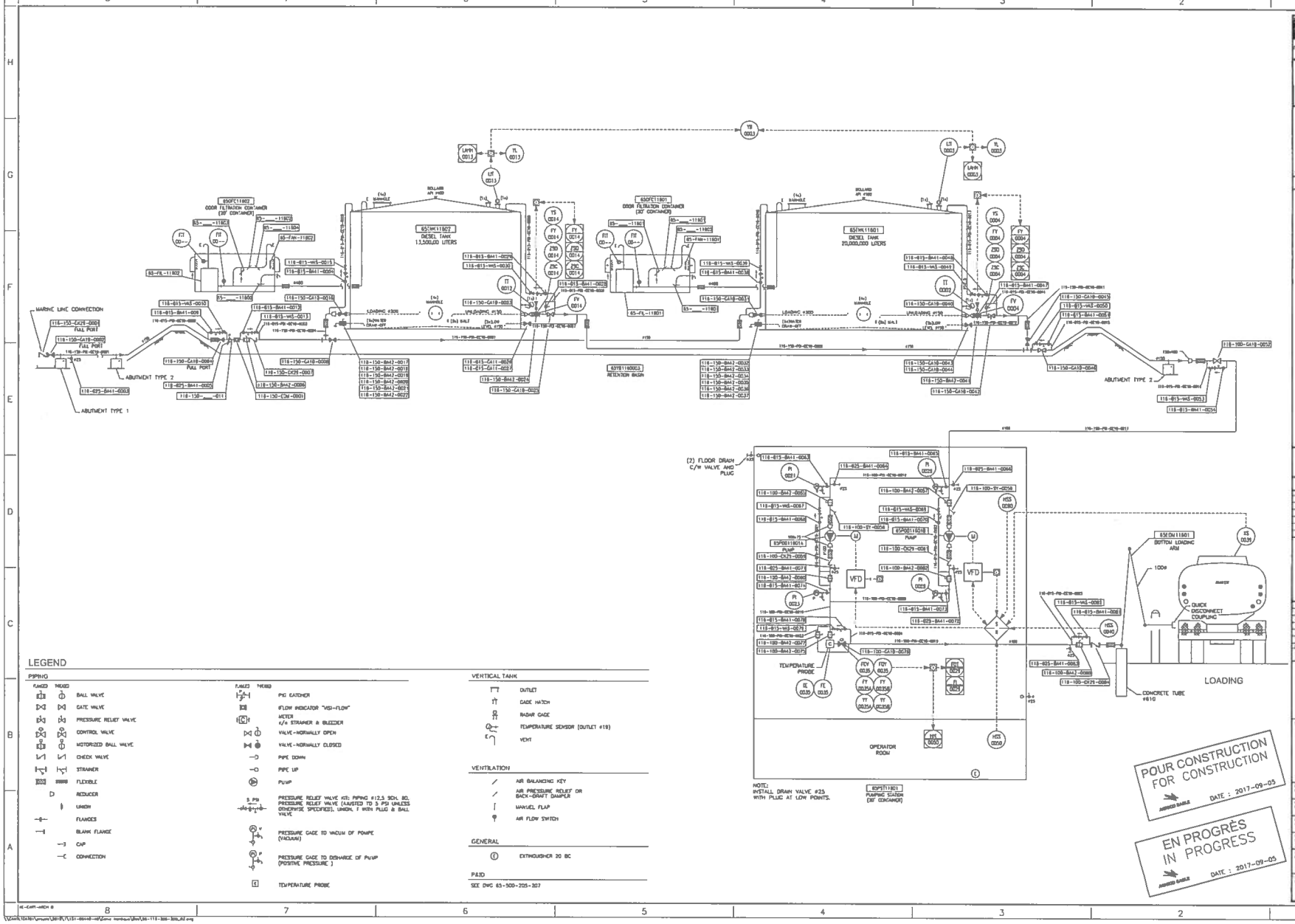

POUR CONSTRUCTION
FOR CONSTRUCTION
AGNICO EAGLE DATE : 2017-09-05

EN PROGRÈS
IN PROGRESS
AGNICO EAGLE DATE : 2017-09-05

WSP

NOTES GÉNÉRALES / GENERAL NOTES

1. REPLACE DRAWING : 65-103-205-200

DESSINS EN RÉFÉRENCE / REFERENCE DRAWINGS

AGNICO EAGLE

REVISIONS

TITRE / TITLE
AGNICO EAGLE - MELIADINE DIVISION
116 - FUEL TANK FARM
205 - P&ID
FUEL DISTRIBUTION
FLOW DIAGRAM

DESSINÉ PAR / DRAWN BY	CHISLAINE CORNUT, tech.	DATE 2017-05-26
VÉRIFIÉ PAR / CHECKED BY	JOËL MORLIÈRE, tech.	2017-05-26
APPROUVÉ PAR / APPROVED BY	DENIS THIBODEAU, P. Eng.	2017-05-26
ÉCHELLE / SCALE	NONE	DATE 2017-05-26
NO. DESSIN / DRAWING NO.	65-116-205-200	
NO. PROJET / PROJECT NO.	6515	REVISION 2 / FEUILLE / SHT 1/1

FILE NO.

NO. DESSIN
DRAWING NO. 65-116-210-200

FORMAT ARCH D

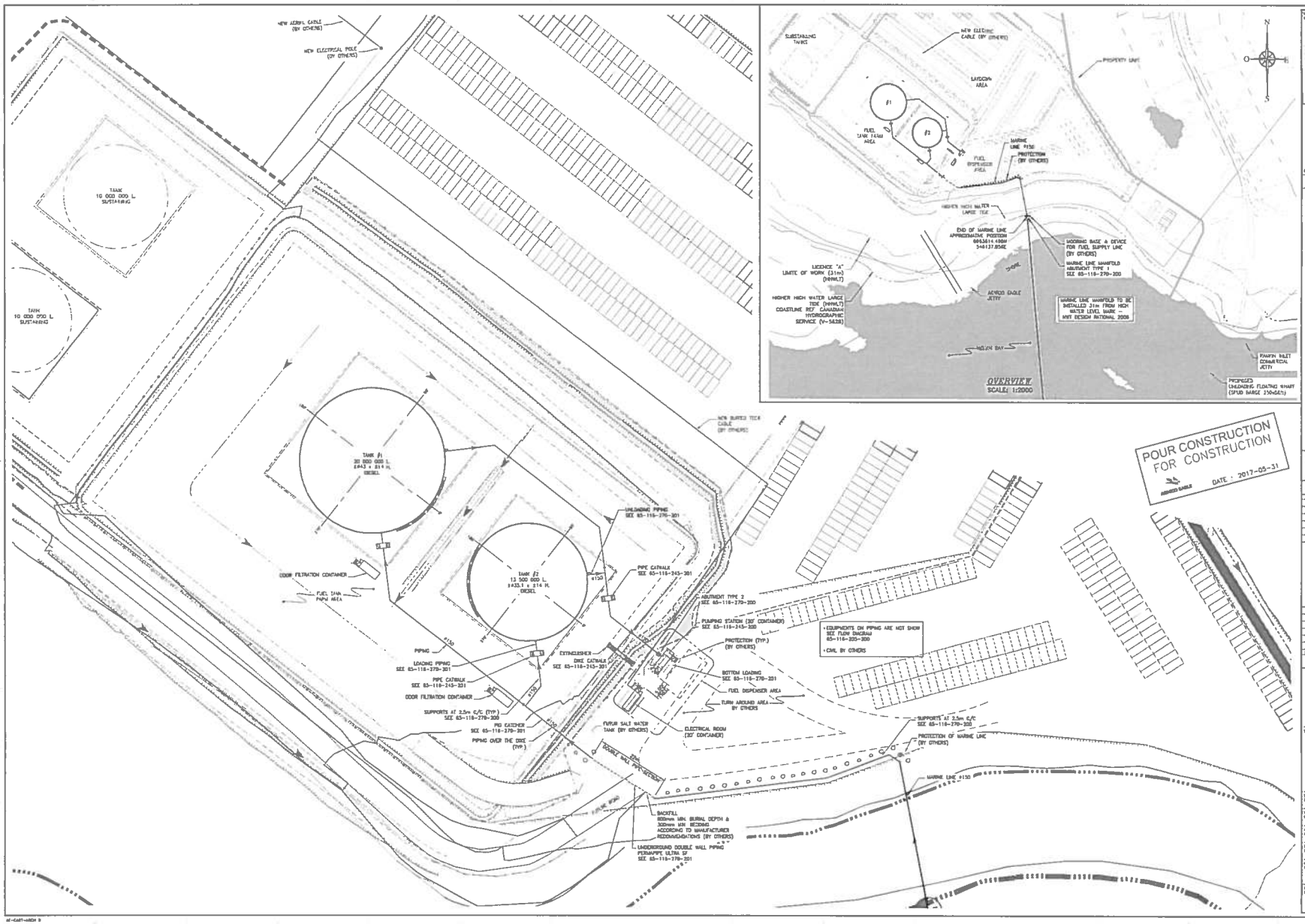

WSP
1075, 3e AVENUE EST
VAL-D'OR (QUÉBEC) CANADA J9P 0J7
TEL.: +1 819 825-0274 | TÉLÉC.: +1 819 824-1514 | WWW.WSPGROUP.COM
Ref. 151-00440-00

NOTES GÉNÉRALES / GENERAL NOTES

1. TANK DIMENSIONS ADJUSTED ACCORDING TO INFORMATION PROVIDED BY CONTRACTOR
2. REPLACE DRAWING : 65-103-210-200

DESSINS EN RÉFÉRENCE / REFERENCE DRAWINGS

ÉTAT / FILE	# DWG

AGNICO EAGLE

REV.	DATE	DESCRIPTION	INIT/INI	APP.	CLIENT
0	2017-05-31	ISSUED FOR CONSTRUCTION	J.M.	B.T.	

REVISIONS

TITRE / TITLE
AGNICO EAGLE – MEADOWBANK DIVISION
116 – FUEL TANK FARM
210 – GENERAL ARRANGEMENT
FUEL DISTRIBUTION
PLAN VIEWS

DESSINÉ PAR DRAWN BY	G. CORNUT	DATE 2017-05-29
VÉRIFIÉ PAR CHECKED BY	J. MORLIERE, tech.	2017-05-29
APPROUVÉ PAR APPROVED BY	G. THIBODEAU, P. Eng.	2017-05-29
ÉCHELLE SCALE	INDICATED	DATE 2017-05-29

NO. DESSIN DRAWING NO.
65-116-210-200

NO. PROJET PROJECT NO.	REVISION	FEUILLE / SHT
6515	0	1 / 1

ad-CadT-addin 9

\\Cad\ti\6515\Synapse\2017\P\151-00440-00\Autre Ingénieur\Dwg\65-116-210-200_00.dwg- 2017-05-19 14:03:38

FILE NO. 65-116-210-200_00.dwg

NO. DESSIN
DRAWING NO. 65-116-245-200

FORMAT ARCH D

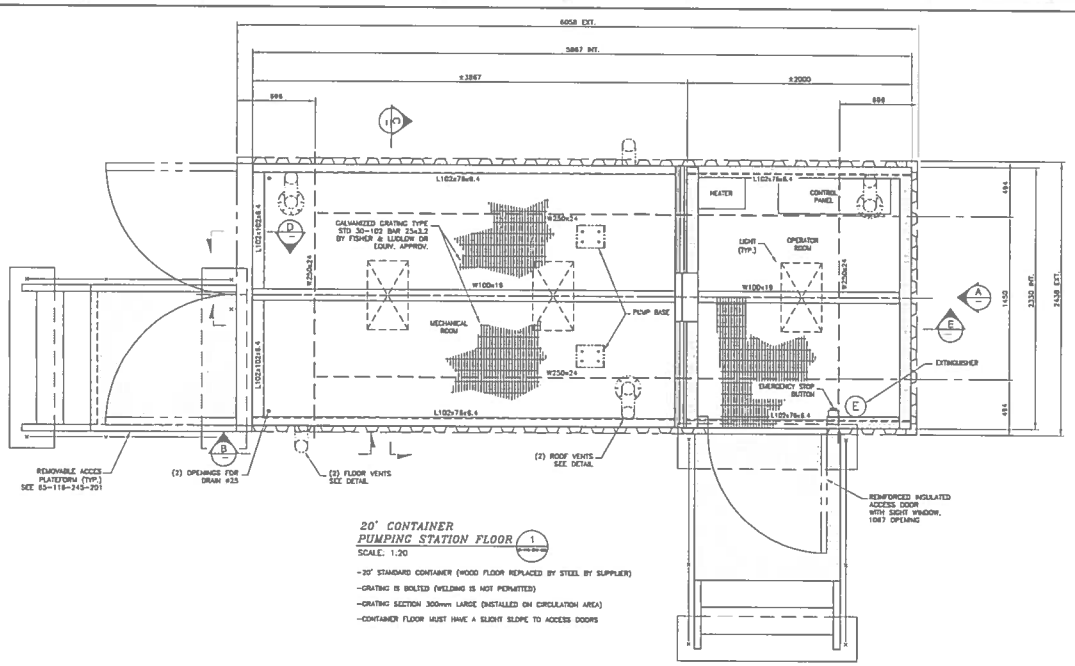

20' CONTAINER PUMPING STATION FLOOR (1)

SCALE: 1:20

- 20' STANDARD CONTAINER (WOOD FLOOR REPLACED BY STEEL BY SUPPLIER)
- GRATING IS BOLTED (WELDING IS NOT PERMITTED)
- GRATING SECTION 300mm LARGE (INSTALLED ON CIRCULATION AREA)
- CONTAINER FLOOR MUST HAVE A SLIGHT SLOPE TO ACCESS DOORS

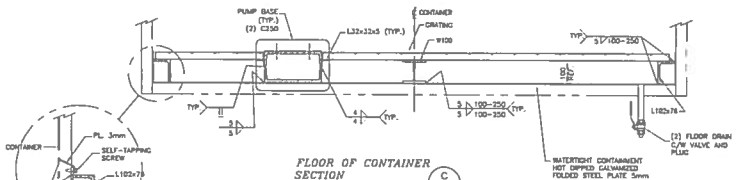

FLOOR OF CONTAINER SECTION (C)

SCALE: 1:10
PUMPING STATION ONLY

WATERTIGHT CONTAINMENT

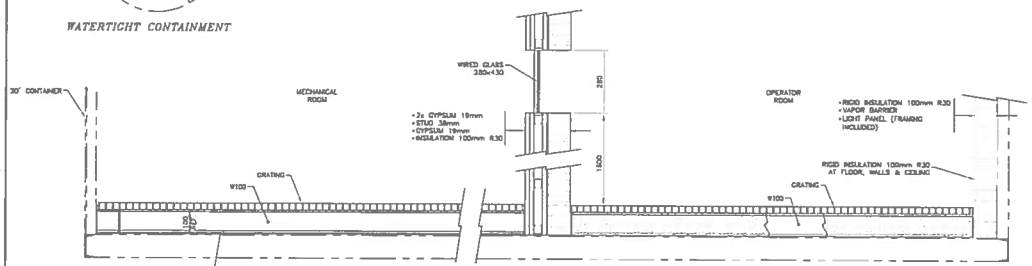

FLOOR OF CONTAINER SECTION (E)

SCALE: 1:10
PUMPING STATION ONLY

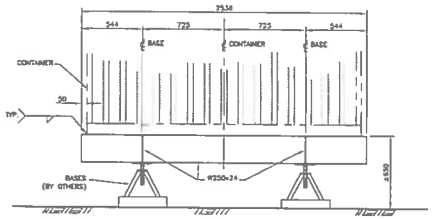

ELEVATION (A)

SCALE: 1:20
(1) ARRANGEMENT PUMPING STATION

POUR CONSTRUCTION FOR CONSTRUCTION
AGNICO EAGLE
DATE : 2017-05-31

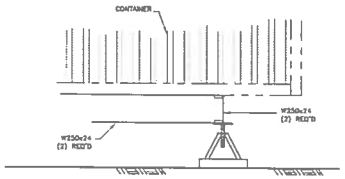

ELEVATION (B)

SCALE: 1:20
(1) ARRANGEMENT PUMPING STATION

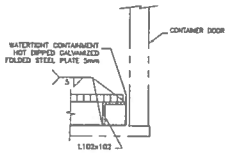

SECTION (D)

SCALE: 1:10
PUMPING STATION ONLY

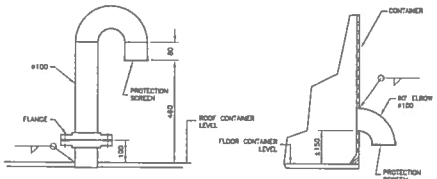

ROOF VENT (2) FOR PUMPING STATION

FLOOR VENT (2) FOR PUMPING STATION

VENT FOR CONTAINER (3)

SCALE: 1:10
PUMPING STATION ONLY



WSP

WSP Inc. 3e AVENUE EST
VAL-D'OR (QUÉBEC) CANADA J9P 0J3
TEL.: 819 825-4274 | TELEC.: 819 824-1544 | WWW.WSPGROUP.COM
Ref. 151-05045-00

NOTES GENERALES / GENERAL NOTES

1. REPLACE DRAWING : 65-103-245-200

DESSINS EN REFERENCE / REFERENCE DRAWINGS

TYPE / TITLE	# DWG

AGNICO EAGLE

NO.	DATE	DESCRIPTION	DES.	VÉR.	APP.
0	2017-05-31	ISSUED FOR CONSTRUCTION	J.M.	B.T.	

REVISIONS

AGNICO EAGLE – MEADOWE DIVISION
116 – FUEL TANK FARM
245 – STRUCTURAL STEEL
FUEL DISTRIBUTION
MODIFICATIONS & ADDITIONS AT THE CONTAINERS

DESSINÉ PAR DRAWN BY	D. CORMIER	2017-05-29
VÉRIFIÉ PAR CHECKED BY	J. MORLIERE, tech.	2017-05-29
APPROUVÉ PAR APPROVED BY	D. THIBODEAU, P. Eng.	2017-05-29
ÉCHELLE SCALE	INDICATED	DATE 2017-05-29
NO. DESSIN DRAWING NO.	65-116-245-200	
NO. PROJET PROJECT NO.	6515	REVISION 0 — FEUILLE / SHT 1 / 1

SIZE =CART=ARCH D

\\CARTE_TERRE1\projets\1811\P\151-05045-00\Dessin Gardiner\Dwg\65-116-245-200_REV.dwg

FILE NO. 65-116-245-200_REV.dwg

NO. SECTION DRAWING NO. 65-116-245-201

FORMAT ARCH D

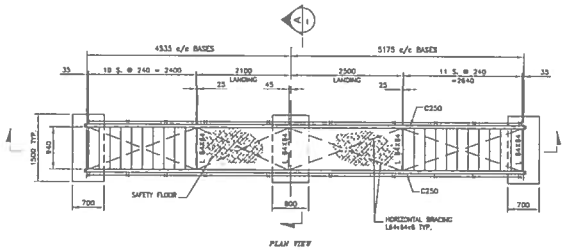

PLAN VIEW

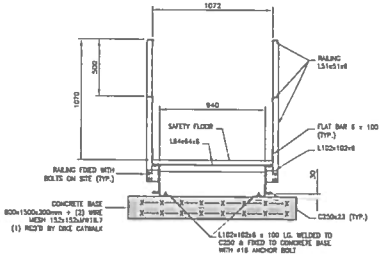

SECTION

SCALE: 1:20 — A

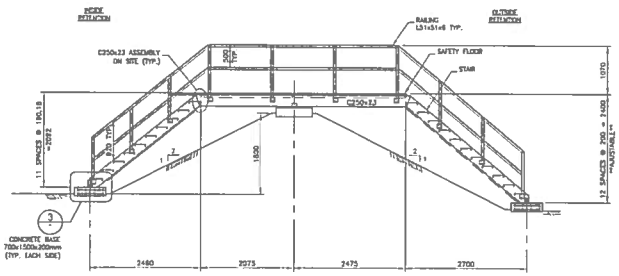

SECTION

DIKE CATWALK

SCALE: 1:50

QTY: 1 — 1

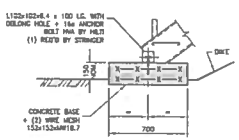

DETAIL

SCALE: 1:20 — 3

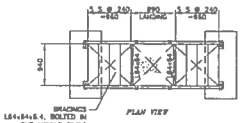

PLAN VIEW

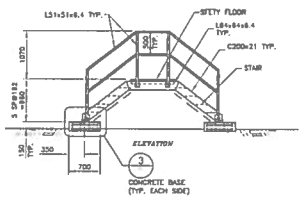

PIPE CATWALK

SCALE: 1:50

QTY: 3 — 2

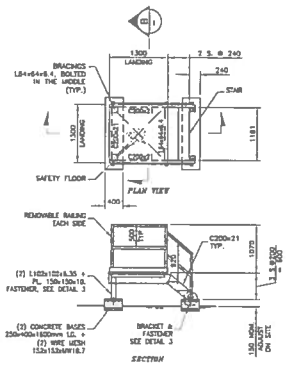

CONTAINER CATWALK

SCALE: 1:50

(2) PUMPING STATION — 2

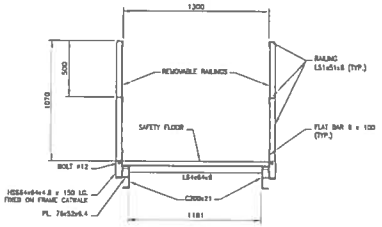

SECTION

SCALE: 1.20 — B

NOTES:

CATWALK, RAILINGS AND STAIRS ARE ASSEMBLED AND BOLTED ON SITE.

DEAD LOAD = 0.5 Kpa
LIVE LOAD = 4.8 Kpa
MAXIMUM ARROW = L/300

MATERIAL

GRATING OF LANDING

GRIP SPAN SAFETY GRATING, GALVANIZED STEEL, (D-31215-G, 5 DIAMONDS, Ge 2.7mm, 38.1mm DEEP) BY FISHER LUDLOW OR APPROVED EQUIVALENT, MAX. 3000mm WIDTH EXCEPT WHEN INDICATED DIFFERENTLY.

STAIR

GRIP SPAN SAFETY GRATING, GALVANIZED STEEL, (D-41215-G, 4 DIAMONDS, Ge 2.7mm, 38.1mm DEEP) BY FISHER LUDLOW OR APPROVED EQUIVALENT, MAX. 241mm WIDTH EXCEPT WHEN INDICATED DIFFERENTLY.

POUR CONSTRUCTION FOR CONSTRUCTION
AGNICO EAGLE
DATE : 2017-05-31



WSP
1075, 3e AVENUE EST
VAL-D'OR (QUÉBEC) CANADA J9P 1J7
TEL.: 819 825-4774 | TELEC.: 819 824-1544 | www.wspgroup.com

NOTES GENERALES / GENERAL NOTES

SEE SPECIFICATIONS

1. REPLACE DRAWING 65-103-245-201

DESIGNS EN REFERENCE / REFERENCE DRAWINGS

NO. / DWG	# DWG

AGNICO EAGLE

NO.	DATE	DESCRIPTION	PAR. BY	APP.	ISSUE
2	2017-05-31	ISSUED FOR CONSTRUCTION	J.G.	B.T.	

REVISIONS



DWG / TITLE

AGNICO EAGLE – MEADOWBANK DIVISION
116 – FUEL TANK FARM
245 – STRUCTURAL STEEL
FUEL DISTRIBUTION
DIKE, PIPE & CONTAINERS CATWALKS

DESIGNED PAR DESSINÉ PAR	G. CORMIER	DATE 2017-05-29
VERIFIED PAR CONTRÔLÉ PAR	J. MORLIERE, Tech.	2017-05-29
APPROVED PAR APPROUVÉ PAR	B. THEBODEAU, P. Eng.	2017-05-29
SCALE ÉCHELLE	INDICATED	DATE 2017-05-29
NO. SECTION DRAWING NO.	65-116-245-201	
NO. PROJECT PROJECT NO.	6515	REVISION 0
		SHEET / FEUILLE 1 / 1

\\CAMT2\DATA\Projets\2016\P\151-06440-00\Dwg Sauvegarde\Dwg\65-116-245-201_RD.dwg

FILE NO. 65-116-245-201_RD.dwg

65-116-260-200

FORMAT ARCH D

NEW TANK #1 - DIESEL

SPECIFICATIONS:
NOMINAL DIAMETER (METERS): ±43m
ORIGINAL NOMINALE HEIGHT (METERS): ±14m
NOMINAL CAPACITY: 20,000,000 liters

No.	QTY	DESCRIPTION	REMARKS
1	4	ø600 ROOF MANHOLE	TO API 650 STANDARDS
2	4	ø600 SHELL MANHOLE	TO API 650 STANDARDS
3	1	ø100 PAINTER SCAFFOLD CABLE SUPPORT	TO API 650 STANDARDS
4	4	SHELL NOZZLE – INLET/OUTLET	TO API 650 STANDARDS
5	–	VENT OPENING	TO API 2000 & 650 STANDARDS, DIAMETER & QTY TO BE DETERMINE BY THE MANUFACTURER, SEE DETAIL
6	8	WATER DRAW-OFF	TO API 650 STANDARDS, SEE DETAIL
7	2	ROOF PRESSURE RELIEF LINE CONNECTION, HALF COUPLING ø25 (THREADED)	TO API 650 STANDARDS & MSC
8	1	ROOF ø150 GAUGE HATCH	TO API 650 STANDARDS, SEE DETAIL
9	1	FIXED PIPE – TANK LOADING ø200 x 14.3m LG.	TO API 650 STANDARDS
10			
11			
12	2	SHELL BRACKET FOR PIPING & CONDUIT	SEE DETAIL
13			
14	1	ROOF INSPECTION FRAME	TO API 650 STANDARDS
15	1	ROOF GUARDRAIL	TO API 650 STANDARDS & MSC
16	1	SPIRAL STAIRWAY, GUARDRAIL & HANDRAIL	TO API 650 STANDARDS & MSC
17	1	FIXED PIPE – TANK UNLOADING ø150 x 14.3m LG.	TO API 650 STANDARDS
18	2	PUMPING LOW LEVEL ø150	TO API 650 STANDARDS, SEE DETAIL
19	8	GROUNDING LUG	TO API 650 STANDARDS, SEE DETAIL
20	1	ROOF NOZZLE ø200 FOR OVERFILL PROTECTION	TO API 650 STANDARDS, SEE DETAIL

NOTE:

1. APPROXIMATIVE STAIRWAY LOCATION: CONTRACTOR HAVE TO ENSURE A MINIMUM CLEARANCE OF 1000mm IN ELEVATION BETWEEN STAIRS AND ANY SHELL CONNECTION

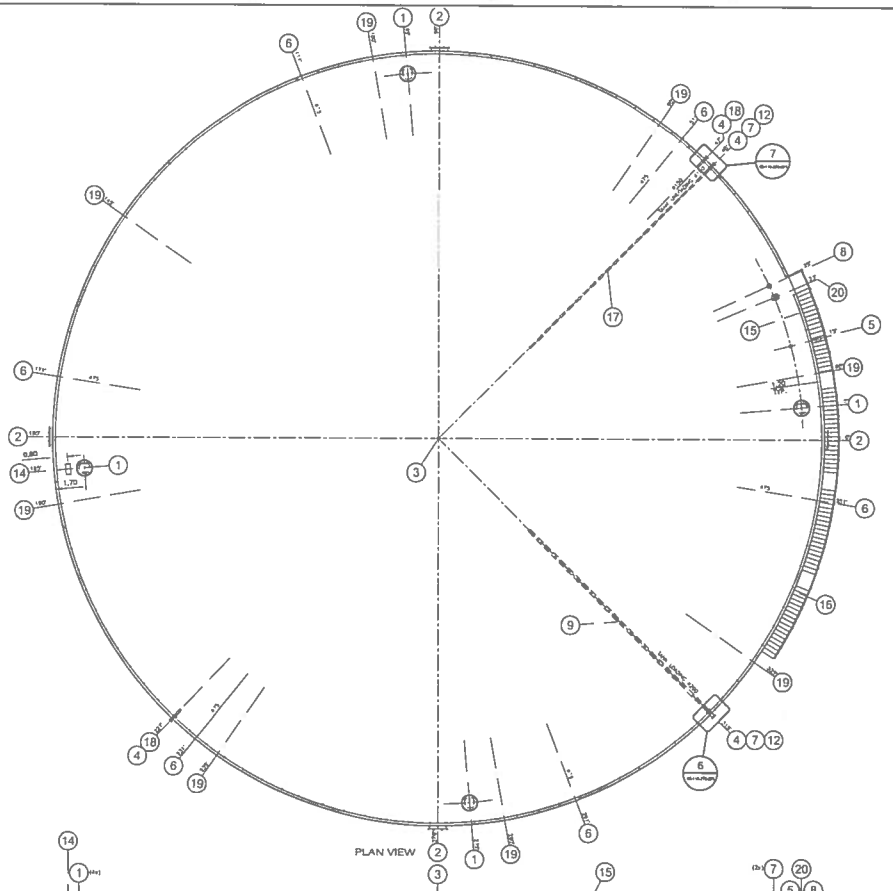

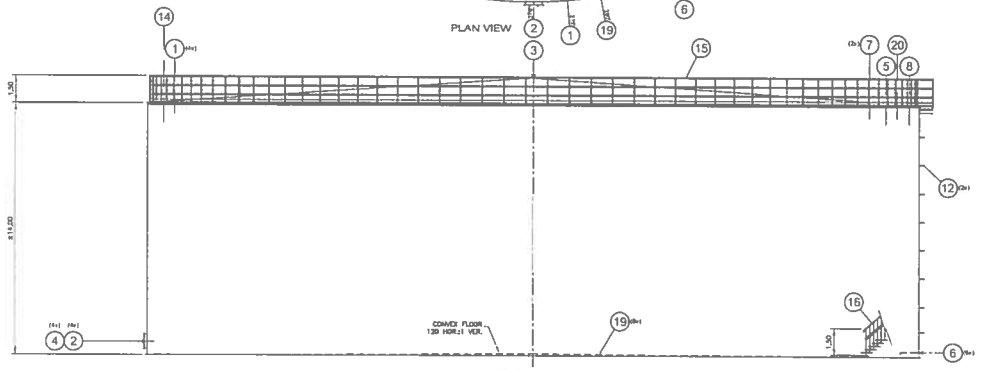

POUR CONSTRUCTION
FOR CONSTRUCTION
AGNICO EAGLE
DATE : 2017-05-31



WSP
1075 3e AVENUE EST
VAL-D'OR (QUÉBEC) CANADA J9P 0J7
TEL.: 819 825-4211 | TÉLÉC.: 1 855 834-1141 | WWW.WSPGROUP.COM
Ref. 191-05440-00

NOTES GÉNÉRALES / GENERAL NOTES

1. TANK DIMENSIONS ADJUSTED ACCORDING TO INFORMATION PROVIDED BY CONTRACTOR
2. REPLACE DRAWING : 65-103-260-200

DESSINS DE RÉFÉRENCE / REFERENCE DRAWINGS

TYPE / TITLE	# (REV.)

AGNICO EAGLE

REV.	DATE	DESCRIPTION	PREP.	VÉR.	APP.
0	2017-05-31	ISSUED FOR CONSTRUCTION	J.G.	S.T.	

REVISIONS

TITRE / TITLE
AGNICO EAGLE – MEADOWBANK DIVISION
116 – FUEL TANK FARM
260 – PLATEWORK
TANK #1 – 20,000,000 liters
ø43m x 14m H.
GENERAL ARRANGEMENT

DESSINÉ PAR / Drawn BY	GHISLAINE CORMIER	DATE 2017-05-29
VÉRIFIÉ PAR / CHECKED BY	JOEL MORLIERE, tech.	2017-05-29
APPROUVÉ PAR / APPROVED BY	DENIS THIBODEAU, Ing.	2017-05-29
ÉCHELLE / SCALE	1:125	DATE 2017-05-29
NO. DESSIN / Drawing NO.	65-116-260-200	
NO. PROJET / PROJECT NO.	6515	RÉVISION 0
FEUILLE / SHT	1 / 1	

M:\CAM\+ARCH D

\\Cad\Eldorado\projets\191\P\11-05440-00\Divers Montreal\Dwg\65-116-260-200-00.dwg - 2017-05-19 14:03:38

FILE NO. 65-116-260-200-00.dwg

NO. DESIGN DRAWING NO. 65-116-260-201

FORMAT ARCHD

NEW TANK #2 - DIESEL

SPECIFICATIONS: NOMINAL DIAMETER (METERS) ±35.1m
ORIGINAL NOMINALE HEIGHT (METERS): ±14m
NOMINAL CAPACITY: 13,500,000 liters

No.	QTY	DESCRIPTION	REMARKS
1	4	ø600 ROOF MANHOLE	TO API 650 STANDARDS
2	4	ø900 SHELL MANHOLE	TO API 650 STANDARDS
3	1	ø100 PAINTER SCAFFOLD CABLE SUPPORT	TO API 650 STANDARDS
4	4	SHELL NOZZLE – INLET/OUTLET	TO API 650 STANDARDS
5		VENT OPENING	TO API 2000 & 650 STANDARDS. DIAMETER & QTY TO BE DETERMINE BY THE MANUFACTURER, SEE DETAIL
6	6	WATER DRAW-OFF	TO API 650 STANDARDS, SEE DETAIL
7	2	ROOF PRESSURE RELIEF LINE CONNECTION, HALF COUPLING ø25 (THREADED)	TO API 650 STANDARDS & NBC
8	1	ROOF ø150 GAUGE HATCH	TO API 650 STANDARDS, SEE DETAIL
9	1	FIXED PIPE – TANK LOADING ø200 x 11.7m LG.	TO API 650 STANDARDS
10			
11			
12	2	SHELL BRACKET FOR PIPING & CONDUIT	SEE DETAIL
13			
14	1	ROOF INSPECTION FRAME	TO API 650 STANDARDS
15	1	ROOF GUARDRAIL	TO API 650 STANDARDS & NBC
16	1	SPIRAL STAIRWAY, GUARDRAIL & HANDRAIL	TO API 650 STANDARDS & NBC
17	1	FIXED PIPE – TANK UNLOADING ø150 x 11.7m LG.	TO API 650 STANDARDS
18	2	PUMPING LOW LEVEL ø150	TO API 650 STANDARDS, SEE DETAIL
19	8	GROUNDING LUG	TO API 650 STANDARDS, SEE DETAIL
20	1	ROOF NOZZLE ø200 FOR OVERFILL PROTECTION	TO API 650 STANDARDS, SEE DETAIL

NOTE:

1. APPROXIMATIVE STAIRWAY LOCATION: CONTRACTOR HAVE TO ENSURE A MINIMUM CLEARANCE OF 1000mm IN ELEVATION BETWEEN STAIRS AND ANY SHELL CONNECTION

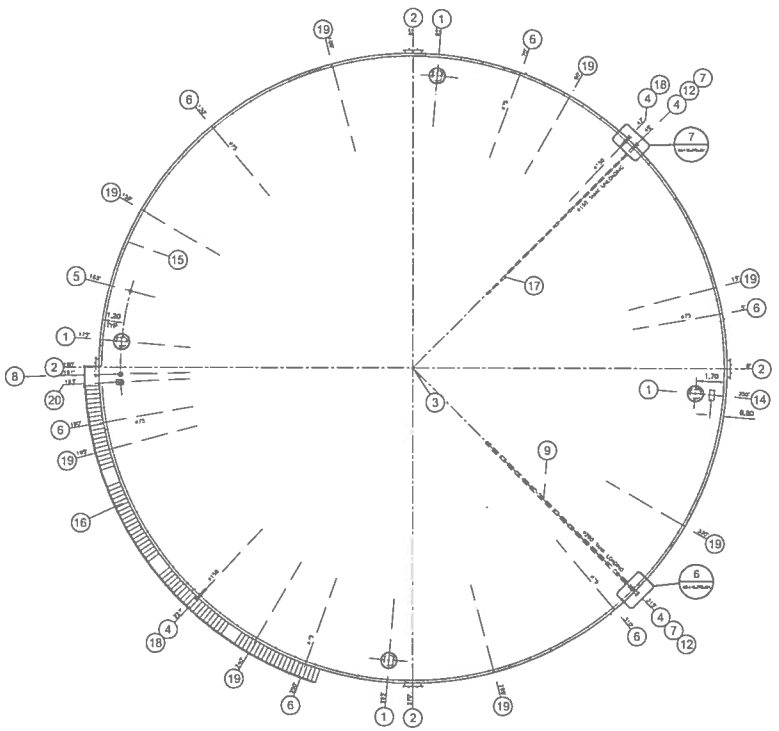

PLAN VIEW

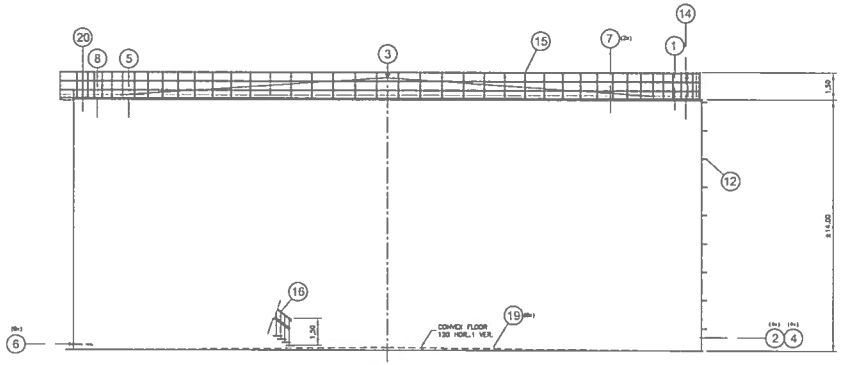

ELEVATION

POUR CONSTRUCTION
FOR CONSTRUCTION
AGNICO EAGLE
DATE : 2017-05-31



WSP

1075, 3e AVENUE EST
VAL-D'OR (QUÉBEC) CANADA J9P 0J7
TÉL.: 819 825-4274 | TÉLÉC.: 819 824-1544 | WWW.WSPGROUP.COM

NOTES GÉNÉRALES / GENERAL NOTES

1. TANK DIMENSIONS ADJUSTED ACCORDING TO INFORMATION PROVIDED BY CONTRACTOR
2. REPLACE DRAWING : 65-163-260-201

DESSINS EN RÉFÉRENCE / REFERENCE DRAWINGS

TITRE / TITLE	# DWG.

AGNICO EAGLE

REV.	DATE	DESCRIPTION	PRÉ./DR.	APP.	CLIENT
0	2017-05-31	ISSUED FOR CONSTRUCTION	AB	BT.	

REVISIONS

TITRE / TITLE
AGNICO EAGLE – MELIADINE DIVISION
116 – FUEL TANK FARM
260 – PLATEWORK
TANK #2 – 13 500 000 liters
ø35.1m x 14m H.
GENERAL ARRANGEMENT

DESSINÉ PAR / DRAWN BY	CHISLAINE CORNUT	DATE 2017-05-29
VÉRIFIÉ PAR / CHECKED BY	JOËL MORLIÈRE, Inch.	2017-05-29
APPROUVÉ PAR / APPROVED BY	DENIS THIBODEAU, Ing.	2017-05-29
ÉCHELLE / SCALE	INDICATED	DATE 2017-05-29

NO. DESSIN / DRAWING NO. 65-116-260-201

NO. PROJET / PROJECT NO.	REVISION	FEUILLE / SHT
6515	0	1/1

AE-CART-ARCH D

FILE NO. 65-116-260-201-RO.dwg

NO. DESSIN
Drawing NO. 65-116-260-202

FORMAT ARCH D

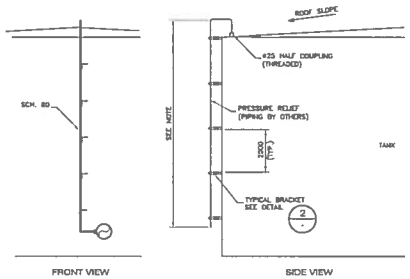

NOTE:
WELDED JOINTS & TESTED ON THIS SECTION (NOT THREADED JOINTS)

1 - PRESSURE RELIEF LINE
Detail NTS

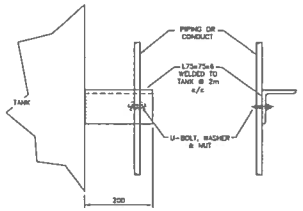

NOTE: FOR ITEMS 8 & 13

2 - BRACKET FOR PIPING OR ELECTRICAL CONDUIT TO THE SHELL TANK
Detail scale 1:5

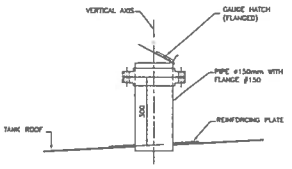

3 - GAUGE HATCH
Detail scale 1:10

POUR CONSTRUCTION
FOR CONSTRUCTION
DATE : 2017-05-31
AGNICO EAGLE

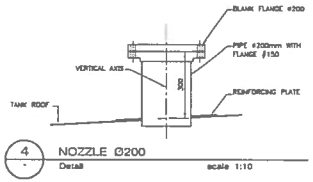

4 - NOZZLE Ø200
Detail scale 1:10

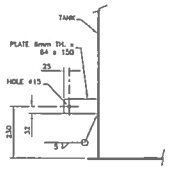

6 - GROUNDING LUG
Detail scale 1:10

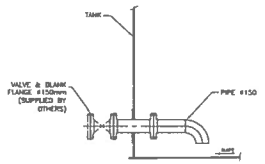

7 - PUMPING LOW LEVEL
Detail scale 1:20

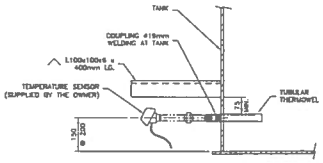

8 - TEMPERATURE SENSOR ON SHELL TANK
Detail scale 1:10

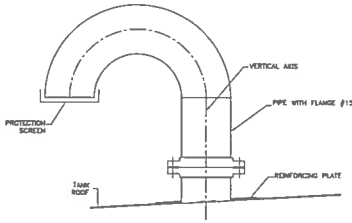

5 - VENT
Typical detail scale 1:10

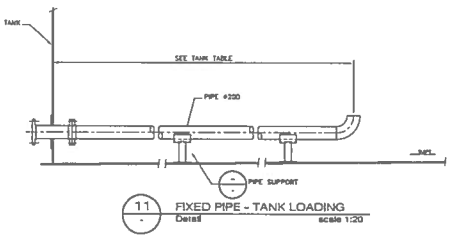

11 - FIXED PIPE - TANK LOADING
Detail scale 1:20

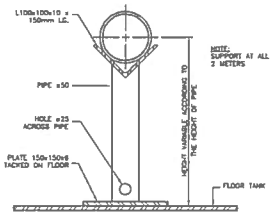

9 - PIPE SUPPORT
Detail scale 1:5

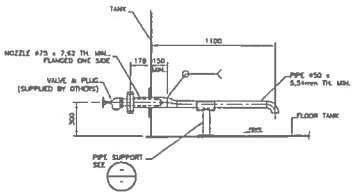

10 - WATER DRAW-OFF
Detail scale 1:20

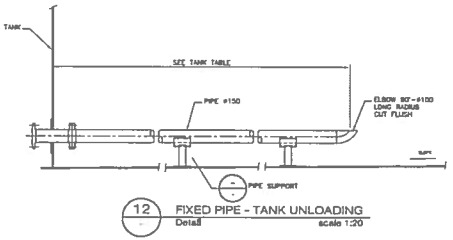

12 - FIXED PIPE - TANK UNLOADING
Detail scale 1:20



WSP
1CTL 3e AVENUE EST
VAL-D'OR (QUÉBEC) CANADA J9P 0L7
TEL.: 819 825-0171 | TÉLÉC.: 819 824-1544 | WWW.WSPGROUP.COM

NOTES GÉNÉRALES / GENERAL NOTES

1. REPLACE DRAWING : 65-103-260-202

DESSINS EN RÉFÉRENCE / REFERENCE DRAWINGS

TYPE / TITLE	# DWG

AGNICO EAGLE

NO.	DATE	DESCRIPTION	PREPARED	APPROVED
B	2017-05-31	ISSUED FOR CONSTRUCTION	J.M.	B.F.

REVISIONS

TYPE / TITLE
AGNICO EAGLE – MEADOWBANK DIVISION
116 – FUEL TANK FARM
260 – PLATEWORK
TANK #1 & #6
DETAILS

DESIGNED PAR DESSINÉ PAR	GHISLAINE CORMIER	DATE 2017-05-29
VERIFIED PAR CHECKED BY	JOEL MORLIERE, tech.	2017-05-29
APPROVED PAR APPROUVÉ PAR	DENIS THIBODEAU, Ing.	2017-05-29
SCALE ÉCHELLE	INDICATED	DATE 2017-05-29

NO. DESSIN Drawing NO. 65-116-260-202

NO. PROJET PROJECT NO.	REVISION	FEUILLE / SHT
6515	0	1 / 1

A1 - CARP - ARCH D

\\Cnafl.1bs30\projets\6515\1\11-05400-48\Autocad\dwg\65-116-260-202-REL.dwg - 2017-05-19 14:58:38

FILE NO. 65-116-260-202-REL.dwg

65-116-270-200

FORMAT ARCH D

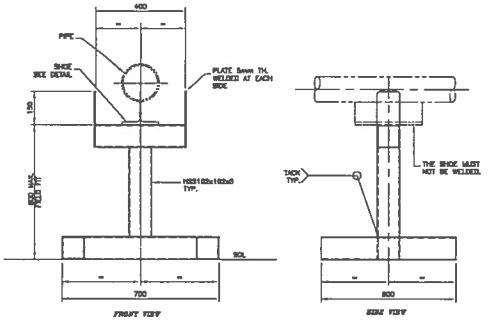

NOTE:
1. GROUND FOR THE SUPPORT TO BE FLAT AND STABLE. PAD WITH NATURAL GRANULAR BACKFILL IF NEEDED.

PIPING SUPPORT 1
SCALE: 1:10

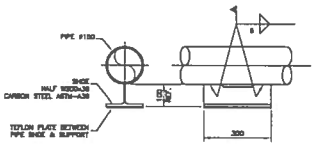

PIPE SHOE 2
SCALE: 1:10

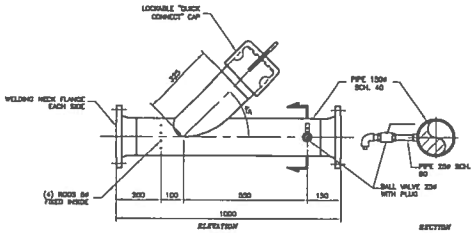

PIC CATCHER 8
SCALE: 1:10

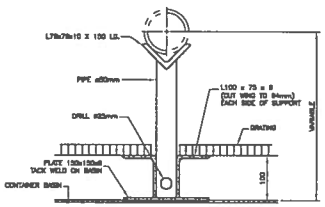

NOTE:
GRADING CUT ON SITE AROUND SUPPORT

SUPPORT INSIDE PUMPING STATION 9
SCALE: 1:5

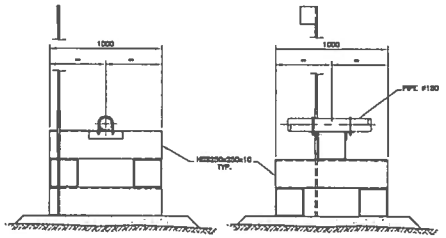

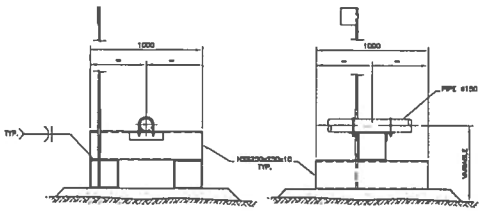

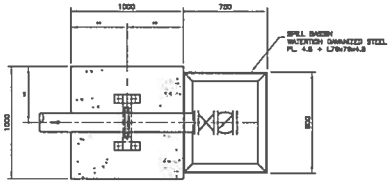

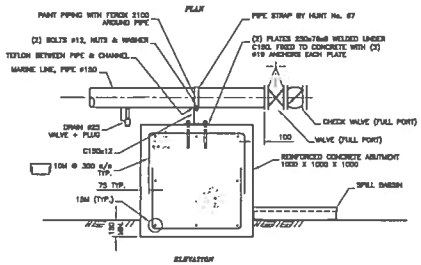

MARINE LINE MANIFOLD ABUTMENT-TYPE 1 4
SCALE: 1:20
QTY: 1

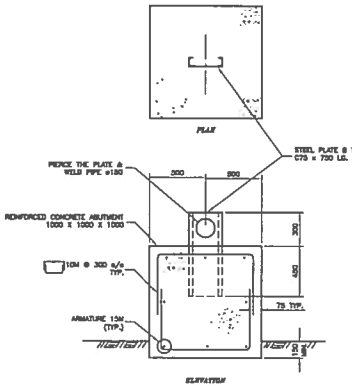

ABUTMENT-TYPE 2 5
SCALE: 1:20
QTY: 1

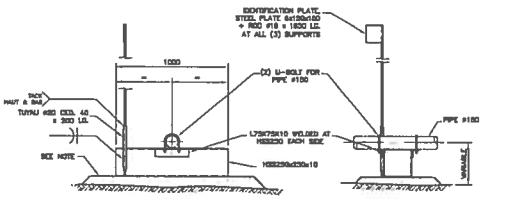

NOTE:
1. GROUND FOR THE SUPPORT TO BE FLAT AND STABLE. PAD WITH NATURAL GRANULAR BACKFILL IF NEEDED.

MARINE LINE SUPPORT 3
SCALE: 1:20

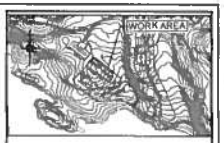

WSP
1611 3e AVENUE EST
VAL-D'OR (QUÉBEC) CANADA J9P 0J7
TEL.: 819 824-2174 | TÉLÉC.: 819 824-1514 | www.wspgroup.com

NOTES GÉNÉRALES / GENERAL NOTES

1. REPLACE DRAWING : 65-103-270-300

POUR CONSTRUCTION
FOR CONSTRUCTION
DATE : 2017-05-31

DESSINS DE RÉFÉRENCE / REFERENCE DRAWINGS

Issue / Issue	Description

AGNICO EAGLE

No.	Date	Description	Init.
0	2017-05-29	ISSUED FOR CONSTRUCTION	GL

REVISIONS

Titre / Title
AGNICO EAGLE – MEADOWBANK DIVISION
116 – FUEL TANK FARM
270 – PIPING
FUEL DISTRIBUTION
DETAILS

Dessiné par / Designed by	G. CORNUT	2017-05-29
Vérifié par / Checked by	J. MORISSEAU, tech.	2017-05-29
Approuvé par / Approved by	D. THIBODEAU P. Eng.	2017-05-29
Échelle / Scale	INDICATED	2017-05-29

No. dessin / Drawing no.
65-116-270-200

No. projet / Project no.	Révision / Revision	Feuille / Sht
8515	0	1/1

FILE NO. 65-116-270-200_R0.dwg

NO. DESSIN
DRAWING NO. 65-116-270-201

FORMAT ARCH D

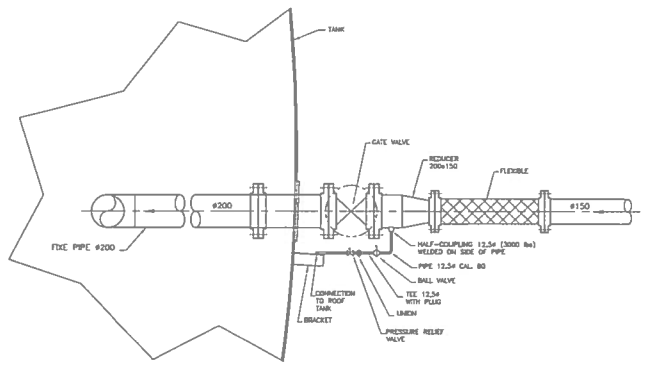

LOADING TANK PIPING 6
SCALE: 1:15

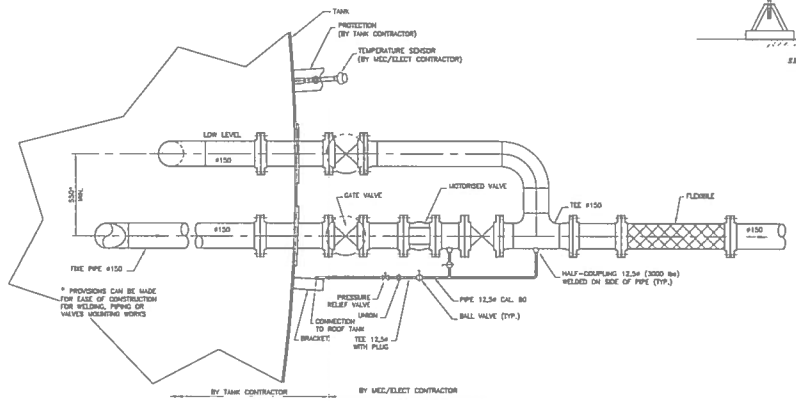

UNLOADING TANK PIPING 7
SCALE: 1:15

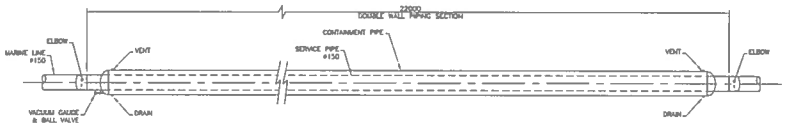

UNDERGROUND PIPING 13
SCALE: 1:25

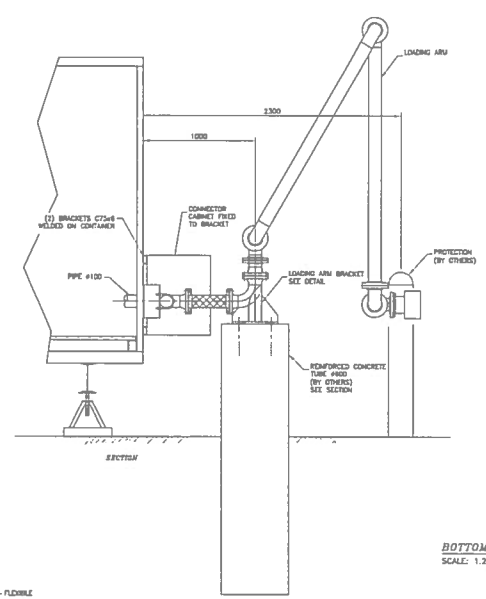

BOTTOM LOADING 10
SCALE: 1:20

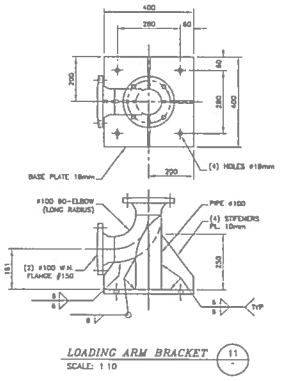

LOADING ARM BRACKET 11
SCALE: 1:10

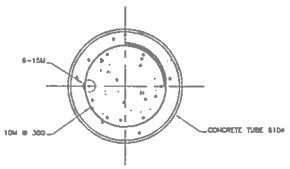

CONCRETE TUBE SECTION 12
SCALE: 1:10



WSP
1075, 3e AVENUE EST
VAL-D'OR (QUEBEC) CANADA J9P 0J2
TEL.: 819 825-4274 | TELEC.: 819 824-1314 | WWW.WSPGROUP.COM
Ref. 151-00440-40

NOTES GENERALES / GENERAL NOTES

1. REPLACE DRAWING : 65-103-270-201

POUR CONSTRUCTION
FOR CONSTRUCTION
DATE : 2017-05-31

DESSINS EN REFERENCE / REFERENCE DRAWINGS

TYPE / TITLE	# dwg

AGNICO EAGLE

NO	DATE	DESCRIPTION	DES/DR	APP.	CLIENT
0	2017-05-31	ISSUED FOR CONSTRUCTION	J.M	G.C.	

REVISIONS

TYPE / TITLE
AGNICO EAGLE – MEADOWBANK DIVISION
116 – FUEL TANK FARM
270 – PIPING
FUEL DISTRIBUTION
DETAILS

DESSINE PAR DRAWN BY	C. CORMIER	2017-05-25
VERIFIE PAR CHECKED BY	J. MORIJERE, tech.	2017-05-25
APPROUVE PAR APPROVED BY	D. THIBODEAU, P. Eng.	2017-05-25
ECHELLE SCALE	INDICATED	DATE 2017-05-25
NO. DESSIN DRAWING NO.	65-116-270-201	
NO. PROJET PROJECT NO.	6515	REVISION 0
		FEUILLE / SHT 1 / 1

AT-CADT-ARCH D

\\CANTL1045201\projets\151\P\151-00440-40\Dessins techniques\Dwg\65-116-270-201_RD.dwg

FILE NO. 65-116-270-201_RD.dwg

65-ULT-116-MP-001

FORMAT ARCH D

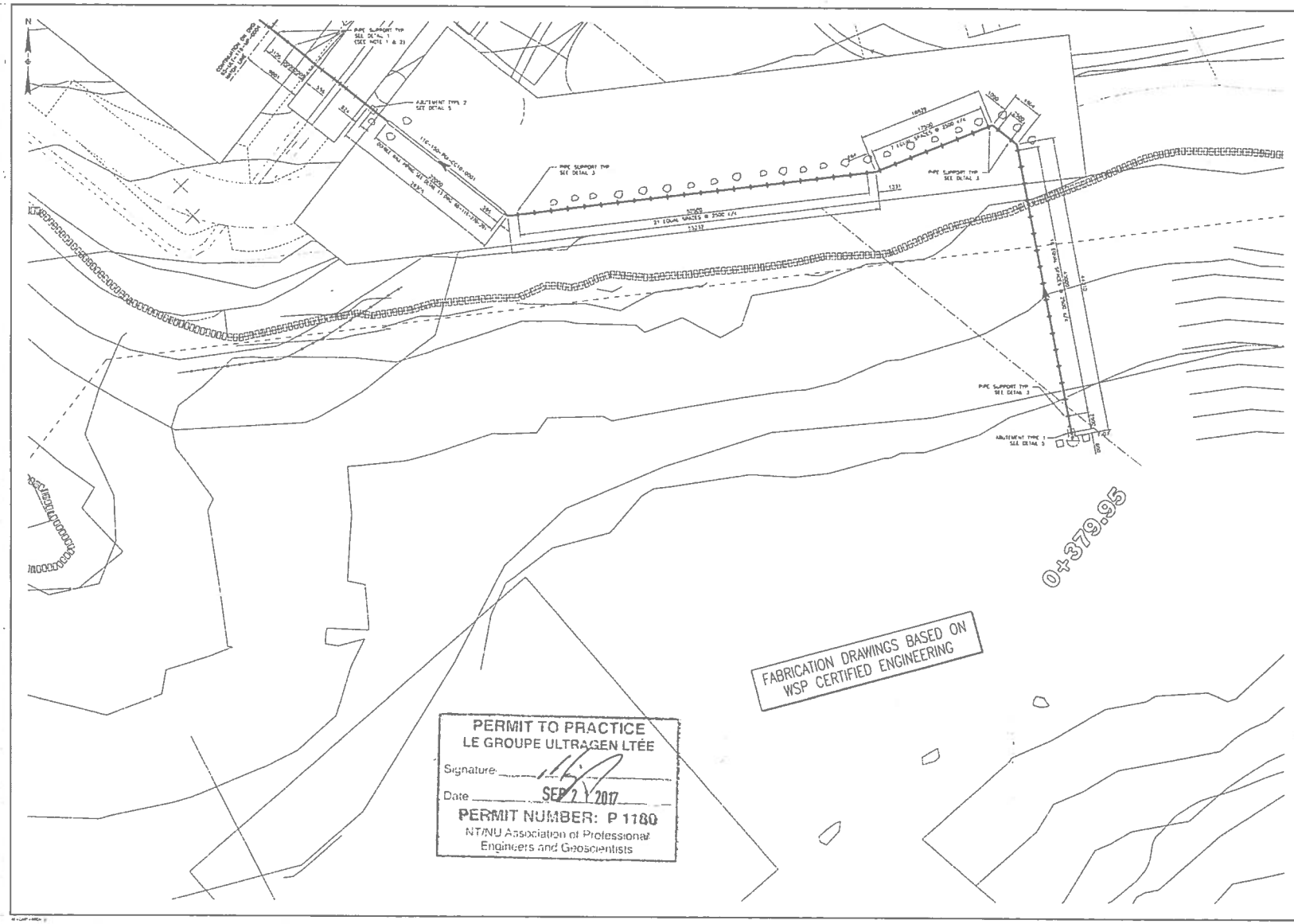

PERMIT TO PRACTICE
LE GROUPE ULTRAGEN LTÉE
Signature
Date SEP 2 1 2017
PERMIT NUMBER: P 1180
NT/NU Association of Professional Engineers and Geoscientists



NOTES GÉNÉRALES / GENERAL NOTES

1. Guides shall be placed at least 4D to 8D pipe diameters away from pipe expansion joints or changes in direction.
2. In general, guides are to be spaced 12D to 14D and supports are to be spaced 24D to 30D, where D is the pipe diameter and 2D shall be the minimum length of each pipe support.



DESSINS EN RÉFÉRENCE / REFERENCE DRAWINGS

TITRE / TITLE	No. DWG
GENERAL ARRANGEMENT PLAN VIEW	65-ULT-116-MP-001
FUEL DISTRIBUTION - PLAN ENLARGE	65-116-350-300
PIPING & PIPE SUPPORT DETAILS	65-116-3750-250
PIPING DETAILS	65-116-3750-251

AGNICO EAGLE

2	2017-09-21	ANGLES T&G REVISED	MW
1	2017-09-19	LINE NUMBERS REVISED	TMG
0	2017-09-19	ISSUED FOR CONSTRUCTION	A.M.
No.	DATE	DESCRIPTION	PROJET APPROUVÉ

REVISIONS

HUDSON PACIFIC MINING | ultragen | No. PROJET PROJECT No. 591700

TITRE / TITLE
AGNICO EAGLE – MEADOWBANK DIVISION
116 – FUEL TANK FARM
FUEL DISTRIBUTION
GENERAL ARRANGEMENT
PLAN VIEW

DESSINÉ PAR DRAWN BY	A. MINERY	DATE 2017-03-10
VÉRIFIÉ PAR CHECKED BY	-	-
APPROUVÉ PAR APPROVED BY	-	-
ÉCHELLE SCALE	1 = 200	DATE 2017-04-26

No. DESSIN DRAWING No. 65-ULT-116-MP-001

No. PROJET PROJECT No. 6515 | REVISION 1 of 1 / 1 | 2

FILE NO 65-ULT-116-MP-001.dwg

65-ULT-116-MP-002

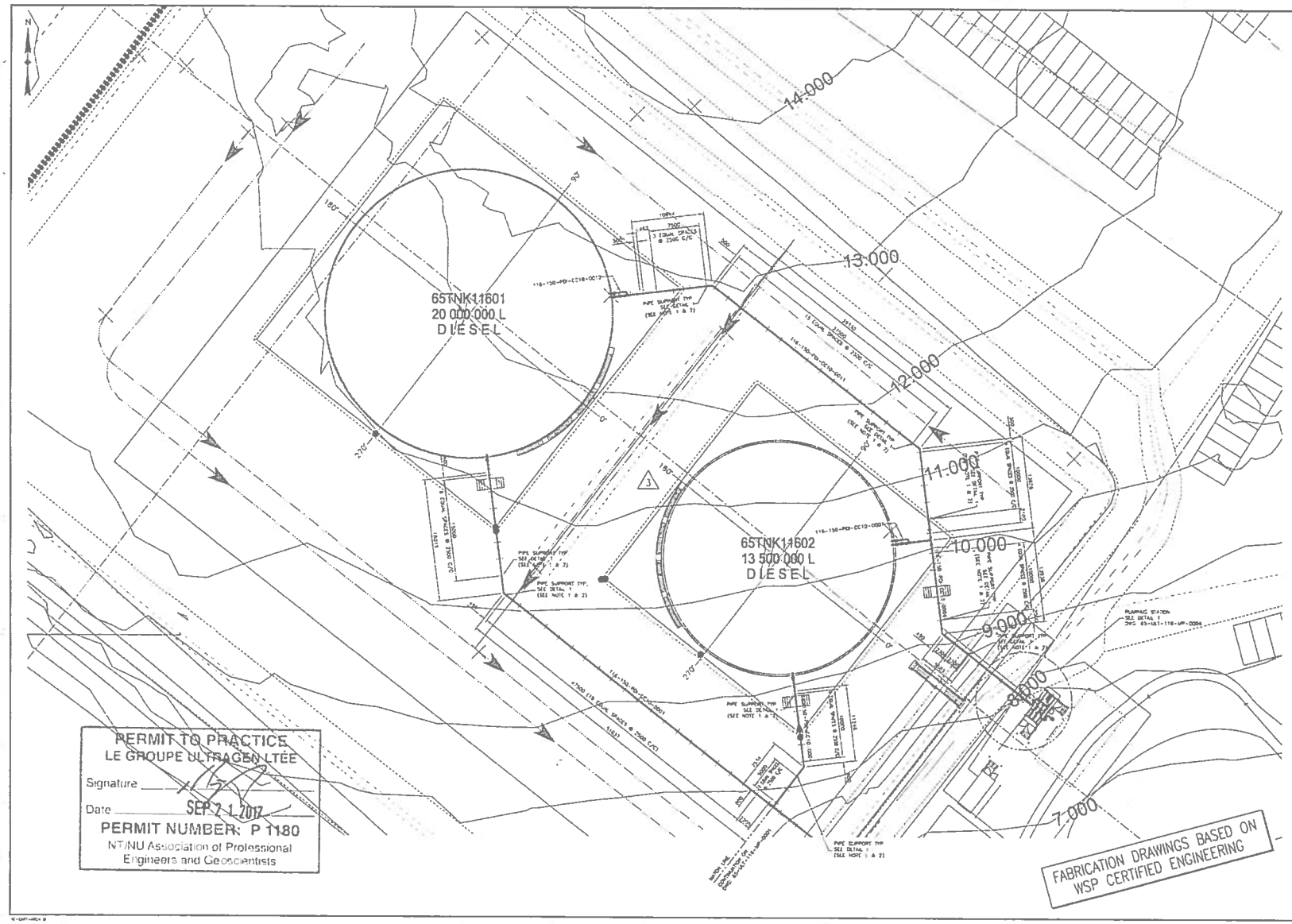

PERMIT TO PRACTICE
LE GROUPE ULTRAGEN LTÉE
Signature
Date SEP 21 2017
PERMIT NUMBER: P 1180
NT/NU Association of Professional Engineers and Geoscientists

FABRICATION DRAWINGS BASED ON WSP CERTIFIED ENGINEERING



NOTES GENERALES / GENERAL NOTES

REGISTERED PROFESSIONAL ENGINEER
D TRUONG
LICENSEE
NT/NU
2017/09/21

DESSINS EN REFERENCE / REFERENCE DRAWINGS

AGNICO EAGLE

REVISIONS

ultragen

NUNAVUT PROJECT TRACKING

NO. PROJET / PROJECT NO. 591700

TITRE / TITLE
AGNICO EAGLE - MELIADINE DIVISION
116 - FUEL TANK FARM
FUEL DISTRIBUTION
GENERAL ARRANGEMENT
PLAN VIEW

DESSINÉ PAR / DRAWN BY A. HEBERT
DATE 2017-09-18
VÉRIFIÉ PAR / CHECKED BY -
APPROUVÉ PAR / APPROVED BY -
ÉCHELLE / SCALE 1 = 250
DATE 2017-04-28
NO. DE DESSIN / DRAWING NO. 65-ULT-116-MP-002
NO. PROJET / PROJECT NO. 6515
REVISION 2
FEUILLE / SHT 1 / 1

65-ULT-116-MP-003

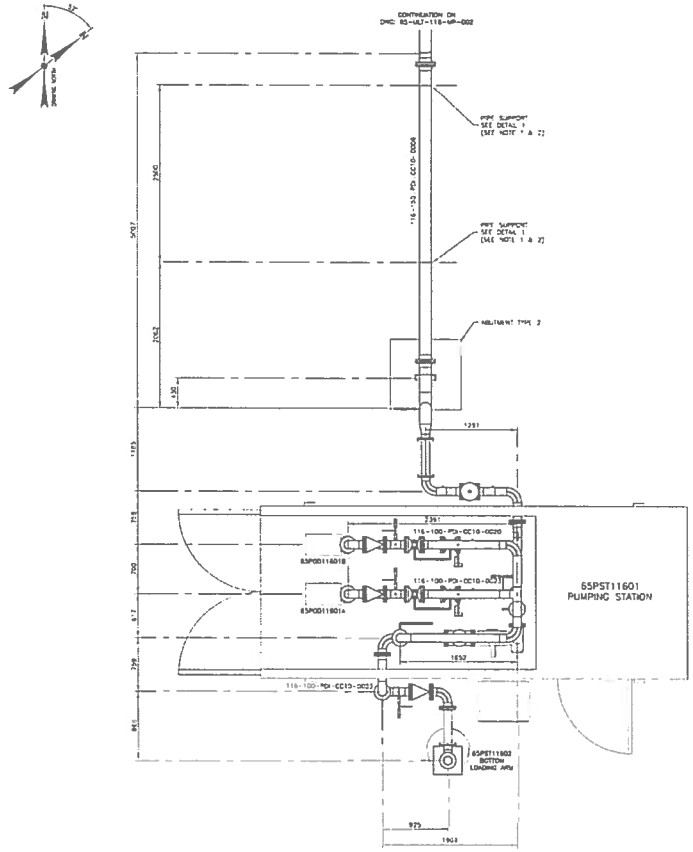

PUMPING STATION – DETAIL 1
SCALE 1=30



NOTES GENERALES / GENERAL NOTES

1. GUIDES SHALL BE PLACED AT LEAST 45 TO 50 PIPE DIAMETERS AWAY FROM PIPE EXPANSION LOOPS OR CHANGES IN DIRECTION.
2. IN GENERAL, GUIDES SHALL BE USED ON LINES ON THE AND SHALLER AND LOCATED AT EVERY SPACE PIPE SUPPORT AND ON LINES ON THE AND LARGER AT EVERY THIRD SUPPORT.

REGISTERED PROFESSIONAL ENGINEER
D. TRUONG
LICENSEE
NT/NU
2017/09/21

DESSINS EN REFERENCE / REFERENCE DRAWINGS

GENERAL ARRANGEMENT – PLAN VIEWS	65-ULT-116-MP-001
GENERAL ARRANGEMENT – PLAN VIEWS	65-ULT-116-MP-002
FUEL DISTRIBUTION – DIV DRAWING	65-116-205-200
PIPING & PIPE SUPPORT DETAILS	65-116-270-200
PIPING DETAILS	65-116-270-201
HOSE & ATTACHMENT OF THE CONTAINERS	65-116-315-200

AGNICO EAGLE

2	2017-09-21	PROJECT TITLE REVISED		
1	2017-09-11	LINE NUMBERS REVISED		
0	2017-05-2017	ISSUED FOR CONSTRUCTION		
REV	DATE	DESCRIPTION		

REVISIONS

BUCHAN, ROBERT, KUNING

ultragen

NO. PROJET / PROJECT NO. 591700

TITLE / TITLE
AGNICO EAGLE – MEJADINE DIVISION
116 – FUEL TANK FARM
FUEL DISTRIBUTION
GENERAL ARRANGEMENT
DETAILS

DESSINÉ PAR / DRAWN BY	A. HILBERT	DATE 2017-05-10
DESSINÉ PAR / CHECKED BY	–	
APPROUVÉ PAR / APPROVED BY	–	–
ÉCHELLE / SCALE	1 = 30	DATE 2017-05-10

NO. DESSIN / DRAWING NO. 65-ULT-116-MP-003

NO. PROJET / PROJECT NO. 6515 | REVISION 2 | FEUILLE / SHT 1 / 1

PERMIT TO PRACTICE
LE GROUPE ULTRAGEN LTÉE
Signature
Date SEP 21 2017
PERMIT NUMBER: P 1180
NT/NU Association of Professional Engineers and Geoscientists

FABRICATION DRAWINGS BASED ON WSP CERTIFIED ENGINEERING

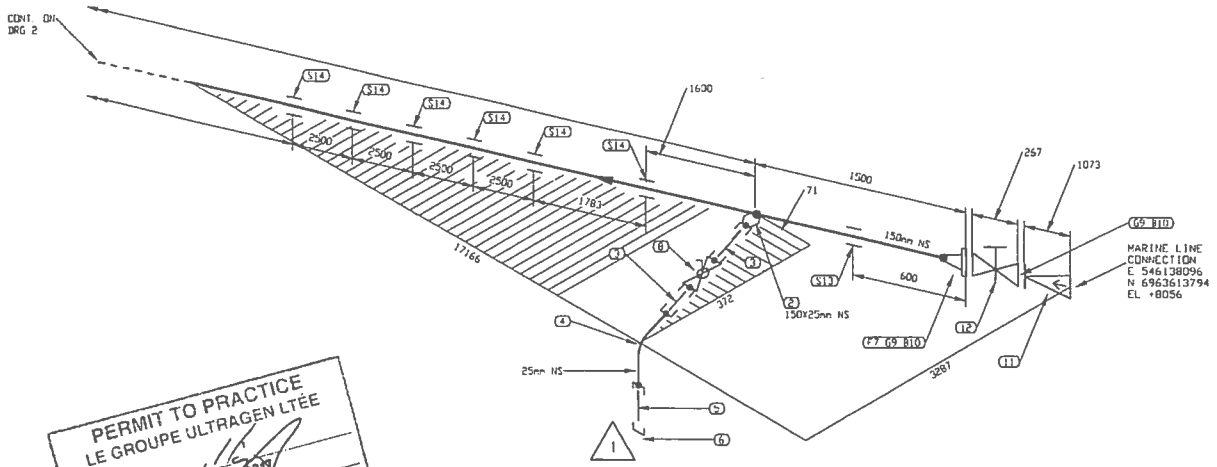

LISTE DE MATERIEL

No	QTE	DIA	MATERIEL/CATALOGUE	DESCRIPTION
1	16045 MM	150	A 333 Gr. 6	SCH STD, SMLS PIPE
2	1	150x25	A 350 Gr. LF2	CL 3000, SOCKOLET
3	2	25	A 333 Gr. 6	SCH 80, NIPPLE x 75mm LG PBE
4	1	25	A 350 Gr. LF2	CL 3000, SW 90 DEG ELBOW
5	1	25	A 333 Gr. 6	SCH 80, NIPPLE x 75mm LG POExTOE
6	1	25	A 350 Gr. LF2	CL 3000, THRD CAP
7	1	150	A 350 Gr. LF2	CL 150, SCH STD, RF, WN FLANGE
8	1	25	BA-29	CL 600, SW, BALL VALVE
9	2	150	ASME B16.20	CL 150, GARLOCK 9500, RING TYPE GASKET 1/8" THK
10	16	19	A 193 B7/A 194 2H	CL 150, 8 - 19.05 X 100 STUD BOLTS c/w TWO HEAVY HEX NUTS
11	1	150	CK-29	CL 150, RF, SWING CHECK VALVE
12	1	150	GA-10	CL 150, RF, GATE VALVE
13		150		PIPE GUIDE AS PER DETAIL 4, DWG: 65-116-270-200
14	6	150		PIPE SUPPORT AS PER DETAIL 3, DWG: 65-116-270-200

No.	DATE	REVISION	APP.
3	2017/09/21	PROJECT TITLE REVISED	KHV
2	2017/09/11	LINE NUMBERS REVISED	OVN
1	2017/06/30	DRAIN REVISED AS PER CLIENT COMMENTS	OVN
0	2017/05/15	ISSUED FOR CONSTRUCTION	KHV

PERMIT TO PRACTICE
LE GROUPE ULTRAGEN LTÉE
Signature
Date SEP 21 2017
PERMIT NUMBER: P 1180
NT/NU Association of Professional Engineers and Geoscientists

FABRICATION DRAWINGS BASED ON WSP CERTIFIED ENGINEERING

REGISTERED PROFESSIONAL ENGINEER
D. TRUONG
LICENSEE
NT/NU
2017/09/21

CLIENT: AGNICO EAGLE

NUNAVUT SANAQ PROMEC MINING

ultragen

CONSULTANT PROJECT NO. 591700

CONC.: KHV	DATE: 2017/04/25
DESSINÉ PAR: KVC	DATE: 2017/04/25
VER. PAR: -	DATE: -
APP.: -	DATE: -
ÉCHELLE: AUCUNE	

PROJET: AGNICO EAGLE - MELIADINE DIVISION
116 - FUEL TANK FARM

TITRE: RANKIN INLET
FABRICATION ISOMETRIC
MARINE LINE TO 65TNK11601 & 65TNK11602

No PROJET	No DESSIN	PAGES	REV.
6515	116-150-PDI-CC10-0001	1/13	3

NO. DE CONDUITE		SPECIFICATION	PRODUIT	SYSTEME REVETEMENT	CODE DE COULEUR	ISOLATION ET TRACAGE	EPAISS. D'ISOLATION		
116-150-PDI-CC10-0001		CC10	PDI					65-116-270-200	PIPE SUPPORT DETAILS
PRESSION D'OPERATION	TEMPERATURE D'OPERATION	PRESSION DE CONCEPTION	TEMPERATURE DE CONCEPTION	PRESSION D'ESSAI	CLASSE D'INSPECTION	CODE DE SERVICE	TRAITEMENT THERMIQUE	65-116-205-200	P&ID
PSIG	°F	PSIG	°F	PSIG				No. DESSIN	DESSINS DE REFERENCE

ICHEM: N:\Agnico Eagle\Meliadine\65TNK\Fuel Farm\Autocad\Dwg\02. Generate\02. Isometrique\01 Piping Isos\116 150-PDI-CC10-0001.DWG

116-MM-01, TEMP-01

MARINE LE. Sep 20, 2017, 2:43pm

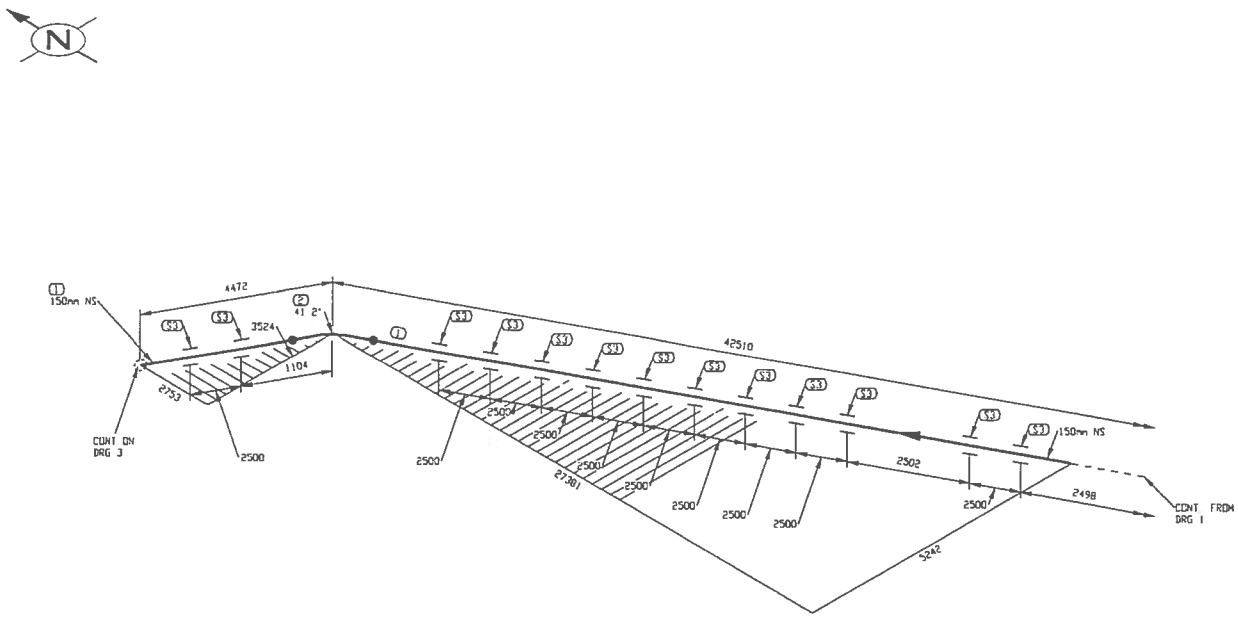

PERMIT TO PRACTICE
LE GROUPE ULTRAGEN LTÉE
Signature
Date SEP 2 1 2017
PERMIT NUMBER: P 1180
NT/NU Association of Professional Engineers and Geoscientists

FABRICATION DRAWINGS BASED ON WSP CERTIFIED ENGINEERING

LISTE DE MATERIEL

No	QTE	DIA	MATERIEL/CATALOGUE	DESCRIPTION
1	32178 MM	150	A 333 Gr. 6	SCH STD, SMLS PIPE
2	1	150	A 420 Gr. WPL6	SCH STD, BW LR 45 DEG ELBOW TRIM TO 41.16
3	13	150		PIPE SUPPORT AS PER DETAIL 3, DWG: 65-116-270-200

No.	DATE	REVISION	PAR / APP.
2	2017/09/21	PROJECT TITLE REVISED	KHV
1	2017/09/11	LINE NUMBERS REVISED	KHV
0	2017/05/15	ISSUED FOR CONSTRUCTION	KHV

CLIENT: AGNICO EAGLE

NUQSANA PROMEC MINING

ultragen

CONSULTANT PROJECT NO. 591700

NO. DE CONDUITE		SPECIFICATION	PRODUIT	SYSTEME REVETEMENT	CODE DE COULEUR	ISOLATION ET TRACAGE	EPAISS. D'ISOLATION		
116-150-PDI-CC10-0001		CC10	PDI		-			65-116-270-200	PIPE SUPPORT DETAILS
PRESSION D'OPERATION	TEMPERATURE D'OPERATION	PRESSION DE CONCEPTION	TEMPERATURE DE CONCEPTION	PRESSION D'ESSAI	CLASSE D'INSPECTION	CODE DE SERVICE	TRAITEMENT THERMIQUE	65-116-205-200	P&ID
PSIG	°F	PSIG	°F	PSIG				No. DESSIN	DESSINS DE REFERENCE

REGISTERED PROFESSIONAL ENGINEER
D. TRUONG
LICENSEE
NT/NU
2017/09/21

CONC.: KHV
DATE: 2017/04/25
DESSINÉ PAR: KVE
DATE: 2017/04/25
VER. PAR: -
DATE: -
APP.: -
DATE: -
ÉCHELLE: AUCUNE

PROJET: AGNICO EAGLE - MELIADINE DIVISION
116 - FUEL TANK FARM

TITRE: RANKIN INLET
FABRICATION ISOMETRIC
MARINE LINE TO 65TNK11601 & 65TNK11602

No PROJET	No DESSIN	PAGES	REV.
6515	116-150-PDI-CC10-0001	2/13	2

116-MN-01

APPRME LE: Sep 23, 2017, 2:43pm

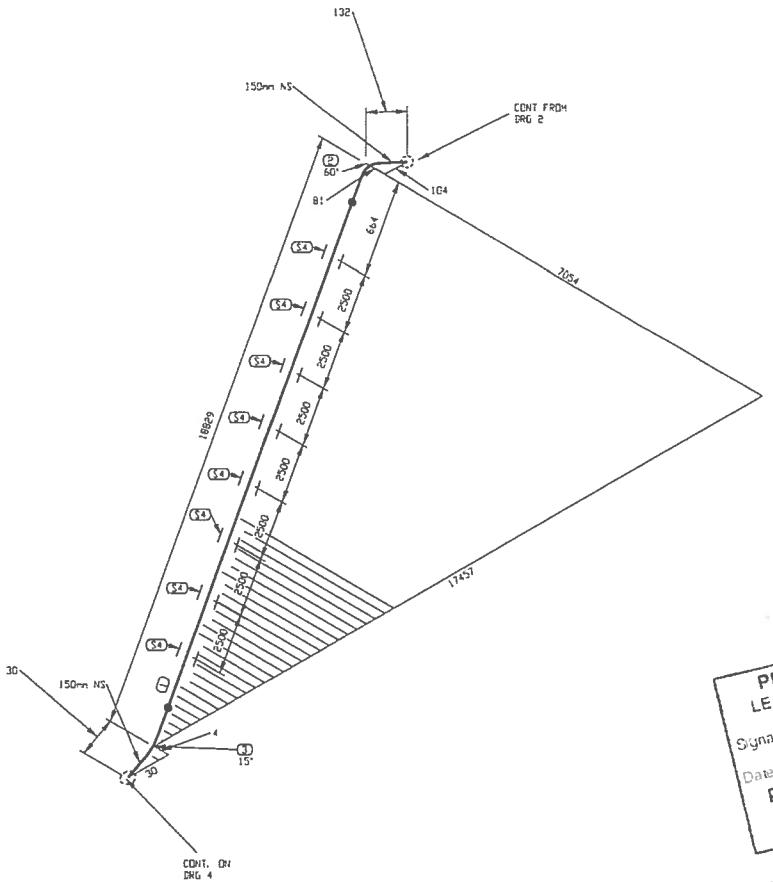

PERMIT TO PRACTICE
LE GROUPE ULTRAGEN LTÉE
Signature
Date SEP 21 2017
PERMIT NUMBER: P 1180
NT/NU Association of Professional Engineers and Geoscientists

FABRICATION DRAWINGS BASED ON WSP CERTIFIED ENGINEERING

LISTE DE MATERIEL

No	QTE	DIA	MATERIEL/CATALOGUE	DESCRIPTION
1	18667 MM	150	A 333 Gr 6	SCH STD, SMLS PIPE
2	1	150	A 420 Gr WPL6	SCH STD, BW LR 90 DEG ELBOW TRIM TO 60.00
3	1	150	A 420 Gr WPL6	SCH STD, BW LR 90 DEG ELBOW TRIM TO 15.00
4	8	150		PIPE SUPPORT AS PER DETAIL 3, DWG: 65-116-270-200

No.	DATE	REVISION	PAR / APP
2	2017/09/21	PROJECT TITLE REVISED	KHV
1	2017/09/11	LINE NUMBERS REVISED	KHV
0	2017/05/15	ISSUED FOR CONSTRUCTION	KHV

CLIENT: AGNICO EAGLE

NUQSANA-PROMEC MINING

ultragen

CONSULTANT PROJECT NO. 591700

NO. DE CONDUITE		SPECIFICATION	PRODUIT	SYSTEME REVETEMENT	CODE DE COULEUR	ISOLATION ET TRACAGE	EPAISS. D'ISOLATION		
116-150-PDI-CC10-0001		CC10	PDI		-			65-116-270-200	PIPE SUPPORT DETAILS
PRESSION D'OPERATION	TEMPERATURE D'OPERATION	PRESSION DE CONCEPTION	TEMPERATURE DE CONCEPTION	PRESSION D'ESSAI	CLASSE D'INSPECTION	CODE DE SERVICE	TRAITEMENT THERMIQUE	65-116-205-200	P&ID
PSIG	°F	PSIG	°F	PSIG				No. DESSIN	DESSINS DE REFERENCE

IMPRIME LE: Sep 20, 2017, 2:44pm

REGISTERED PROFESSIONAL ENGINEER
D TRUONG
LICENSEE
NT/NU
2017/09/21

CONC.: KHV
DATE: 2017/04/25
DESSINE PAR: KVE
DATE: 2017/04/25
VER. PAR: -
DATE: -
APP.: -
DATE: -
ÉCHELLE: AUCUNE

PROJET: AGNICO EAGLE - MELIADINE DIVISION
116 - FUEL TANK FARM

TITRE: RANKIN INLET
FABRICATION ISOMETRIC
MARINE LINE TO 65TNK11601 & 65TNK11602

No PROJET	No DESSIN	PAGES	REV.
6515	116-150-PDI-CC10-0001	3/13	2

116-MN-01

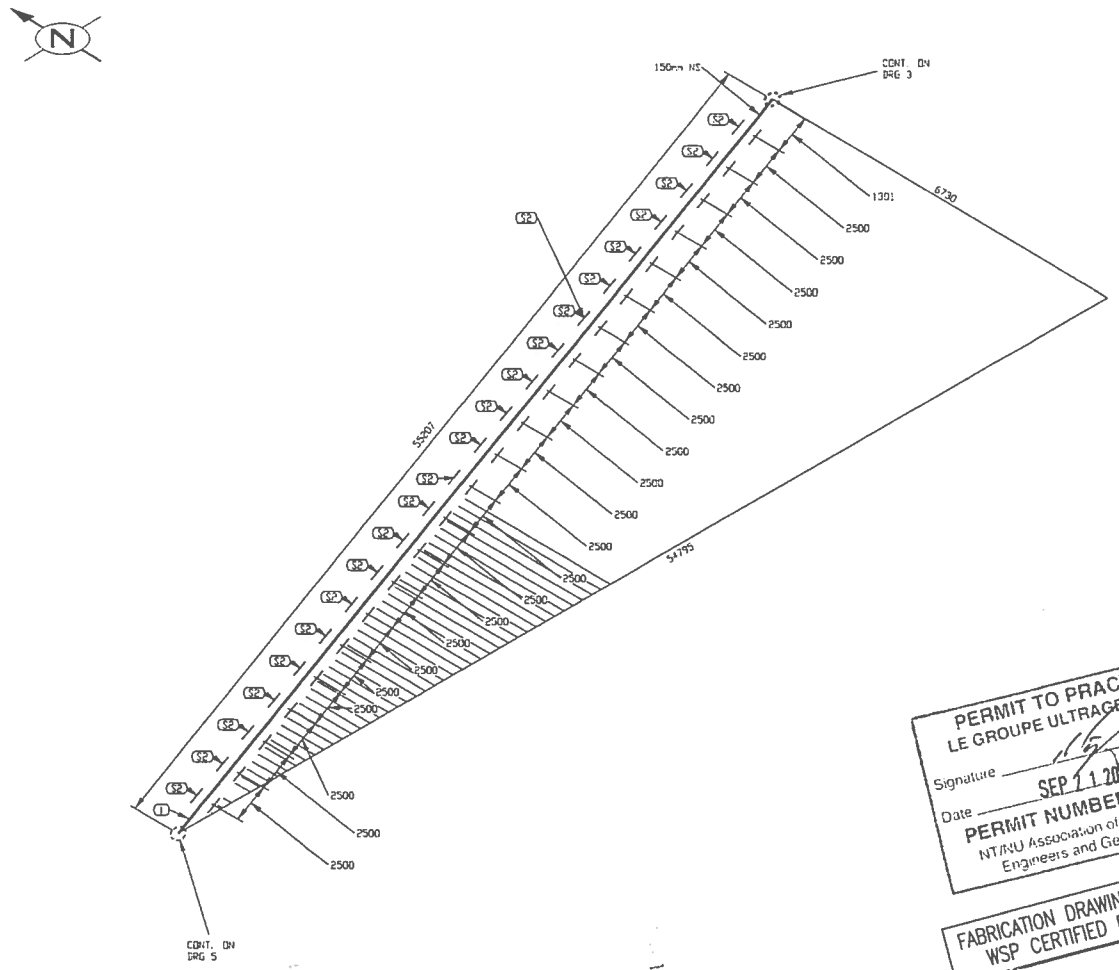

LISTE DE MATERIEL

No	QTE	DIA	MATERIEL/CATALOGUE	DESCRIPTION
1	55207 MM	150	A 333 Gr. 6	SCH STD, SMLS PIPE
2	23	150		PIPE SUPPORT AS PER DETAIL 3, DWG 65-116-270-200

PERMIT TO PRACTICE
LE GROUPE ULTRAGEN LTÉE
Signature
Date SEP 21 2017
PERMIT NUMBER: P 1180
NT/NU Association of Professional Engineers and Geoscientists

FABRICATION DRAWINGS BASED ON WSP CERTIFIED ENGINEERING

No.	DATE	REVISION	PAR / APP.
2	2017/09/21	PROJECT TITLE REVISED	KHV
1	2017/09/11	LINE NUMBERS REVISED	KHV
0	2017/05/15	ISSUED FOR CONSTRUCTION	KHV

CLIENT:
AGNICO EAGLE

NUQSANA-PROMEC MINING
ultragen
CONSULTANT PROJECT NO. 591700

NO. DE CONDUITE		SPECIFICATION	PRODUIT	SYSTEME REVETEMENT	CODE DE COULEUR	ISOLATION ET TRACAGE	EPAISS. D'ISOLATION		
116-150-PDI-CC10-0001		CC10	PDI		-			65-116-270-200	PIPE SUPPORT DETAILS
PRESSION D'OPERATION	TEMPERATURE D'OPERATION	PRESSION DE CONCEPTION	TEMPERATURE DE CONCEPTION	PRESSION D'ESSAI	CLASSE D'INSPECTION	CODE DE SERVICE	TRAITEMENT THERMIQUE	65-116-205-200	P&ID
PSIG	°F	PSIG	°F	PSIG				No. DESSIN	DESSINS DE REFERENCE

SCEAU PROFESSIONNEL
REGISTERED PROFESSIONAL ENGINEER
D TRUONG
LICENSEE
NT/NU
2017/09/21

CONC.: KHV DATE: 2017/04/25
DESSINE PAR: KVE DATE: 2017/04/25
VER. PAR: - DATE: -
APP.: - DATE: -
ECHELLE: AUCUNE

PROJET: AGNICO EAGLE - MELIADINE DIVISION
116 - FUEL TANK FARM

TITRE: RANKIN INLET
FABRICATION ISOMETRIC
MARINE LINE TO 65TNK11601 & 65TNK11602

No PROJET	No DESSIN	PAGES	REV.
6515	116-150-PDI-CC10-0001	4/13	2

116-MAN-01

FICHIER: N:\Projets Copy\6404\eng\dft\100 (Fuel Distribution)\SS. Design\00. Isométriques\01. Marine Line\116-150-PDI-CC10-0001-1.Dwg
TRACÉ LE: Sep 20, 2017, 2:44pm

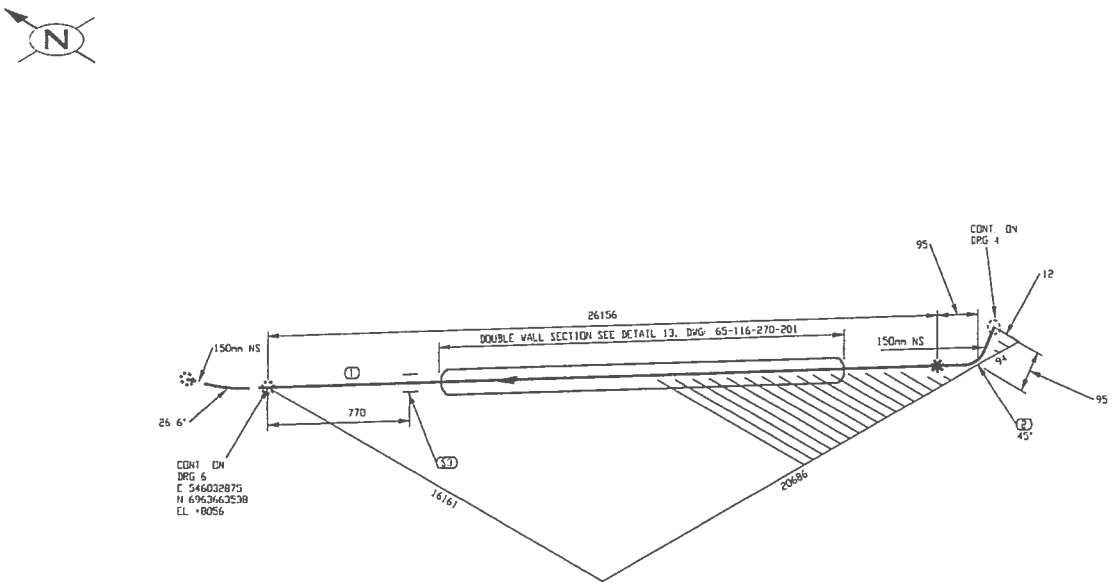

PERMIT TO PRACTICE
LE GROUPE ULTRAGEN LTÉE
Signature
Date SEP 7 1 2017
PERMIT NUMBER: P 1180
NT/NU Association of Professional Engineers and Geoscientists

FABRICATION DRAWINGS BASED ON WSP CERTIFIED ENGINEERING

LISTE DE MATERIEL

No	QTE	DIA	MATERIEL/CATALOGUE	DESCRIPTION
1	26156 MM	150	A 333 Gr. 6	SCH STD, SMLS PIPE
2	1	150	A 420 Gr. WPL6	SCH STD, BW LR 45 DEG ELBOW
3	1	150		ABUTEMENT TYPE 2 AS PER DETAIL 5, DWG: 65-116-270-200

No.	DATE	REVISION	PAR / APP.
2	2017/09/21	PROJECT TITLE REVISED	KHV
1	2017/09/11	LINE NUMBERS REVISED	KHV
0	2017/05/15	ISSUED FOR CONSTRUCTION	KHV

CLIENT:

AGNICO EAGLE

NUQSANA-PROMEC MINING

ultragen

CONSULTANT PROJECT NO. 591700

NO. DE CONDUITE		SPECIFICATION	PRODUIT	SYSTEME REVETEMENT	CODE DE COULEUR	ISOLATION ET TRACAGE	EPAISS. D'ISOLATION		
116-150-PDI-CC10-0001		CC10	PDI		-			65-116-270-200	PIPE SUPPORT DETAILS
PRESSION D'OPERATION	TEMPERATURE D'OPERATION	PRESSION DE CONCEPTION	TEMPERATURE DE CONCEPTION	PRESSION D'ESSAI	CLASSE D'INSPECTION	CODE DE SERVICE	TRAITEMENT THERMIQUE	65-116-205-200	P&ID
PSIG	°F	PSIG	°F	PSIG				No. DESSIN	DESSINS DE REFERENCE

SCEAU PROFESSIONNEL
REGISTERED PROFESSIONAL ENGINEER
D TRUONG
LICENSEE
NT/NU
2017/09/21

CONC.: KHV
DATE: 2017/04/25
DESSINE PAR: KVE
DATE: 2017/04/25
VER. PAR: -
DATE: -
APP.: -
DATE: -
ECHELLE: AUCUNE

PROJET:
AGNICO EAGLE - MELIADINE DIVISION
116 - FUEL TANK FARM

TITRE:
RANKIN INLET
FABRICATION ISOMETRIC
MARINE LINE TO 65TNK11601 & 65TNK11602

No PROJET	No DESSIN	PAGES	REV.
6515	116-150-PDI-CC10-0001	5/13	2

116-MN-01

IMPRIME LE: Sep 20, 2017, 2:44pm

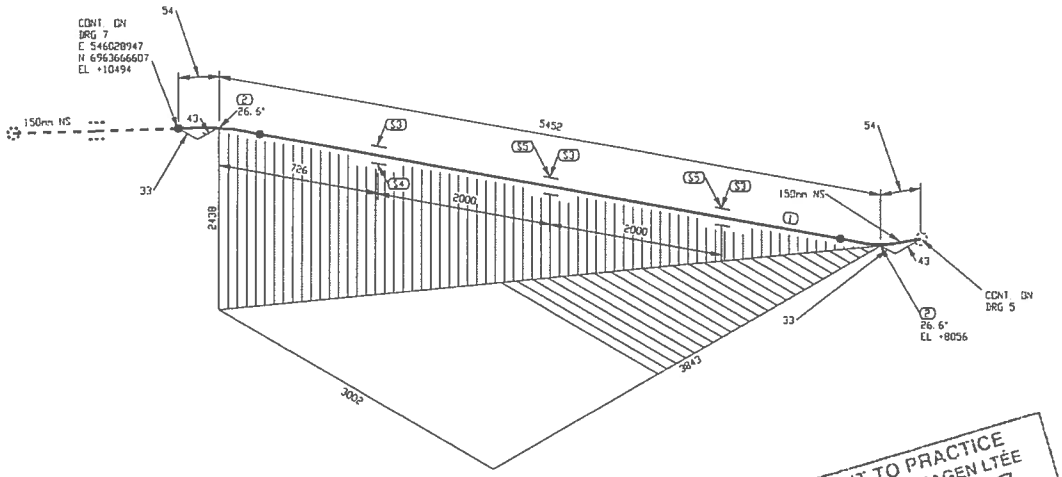

LISTE DE MATERIEL

No	QTE	DIA	MATERIEL/CATALOGUE	DESCRIPTION
1	5344 MM	150	A 333 Gr. 6	SCH STD, SMLS PIPE
2	2	150	A 420 Gr. WPL6	SCH STD, BV LR 45 DEG ELBOW TRIM TO 26.57
3	0	150		PIPE SUPPORT AS DETAIL 1, DWG 65-116-270-200
4	1	150		PIPE SHOE AS PER DETAIL 2, DWG 65-116-270-200
5	2	150		PIPE SHOE AS PER DETAIL 2, DWG 65-116-270-200

PERMIT TO PRACTICE
LE GROUPE ULTRAGEN LTÉE
Signature
Date SEP 2 1 2017
PERMIT NUMBER: P 1180
NT/NU Association of Professional Engineers and Geoscientists

FABRICATION DRAWINGS BASED ON WSP CERTIFIED ENGINEERING

No.	DATE	REVISION	PAR / APP
2	2017/09/21	PROJECT TITLE REVISED	KHV
1	2017/09/11	LINE NUMBERS REVISED	KHV
0	2017/05/15	ISSUED FOR CONSTRUCTION	KHV

CLIENT: AGNICO EAGLE

NUQSANA-PROMEC MINING

ultragen

CONSULTANT PROJECT NO. 591700

SCEAU PROFESSIONNEL
REGISTERED PROFESSIONAL ENGINEER
D. TRUONG
LICENSEE
NT/NU
2017/09/21

CONC.: KHV DATE: 2017/04/25
DESSINÉ PAR: KVE DATE: 2017/04/25
VER. PAR: - DATE: -
APP.: - DATE: -
ÉCHELLE: AUCUNE

PROJET: AGNICO EAGLE - MELIADINE DIVISION
116 - FUEL TANK FARM

TITRE: RANKIN INLET
FABRICATION ISOMETRIC
MARINE LINE TO 65TNK11601 & 65TNK11602

No PROJET	No DESSIN	PAGES	REV.
6515	116-150-PDI-CC10-0001	6/13	2

NO. DE CONDUITE		SPÉCIFICATION	PRODUIT	SYSTÈME REVÊTEMENT	CODE DE COULEUR	ISOLATION ET TRAÇAGE	ÉPAISS. D'ISOLATION		
116-150-PDI-CC10-0001		CC10	PDI		-			65-116-270-200	PIPE SUPPORT DETAILS
PRESSION D'OPÉRATION	TEMPÉRATURE D'OPÉRATION	PRESSION DE CONCEPTION	TEMPÉRATURE DE CONCEPTION	PRESSION D'ESSAI	CLASSE D'INSPECTION	CODE DE SERVICE	TRAITEMENT THERMIQUE	65-116-205-200	P&ID
PSIG	°F	PSIG	°F	PSIG				No. DESSIN	DESSINS DE RÉFÉRENCE

116-HNN-01

ICAD: #\Vgnan Eng\Vkdata\591700 (Eve Dombowsky)\05 Design\02 Isométriques\01 Tank Farm\116-150-PDI-CC10-0001-6.DWG

Mardi 26, Sep 2017, 2:44pm

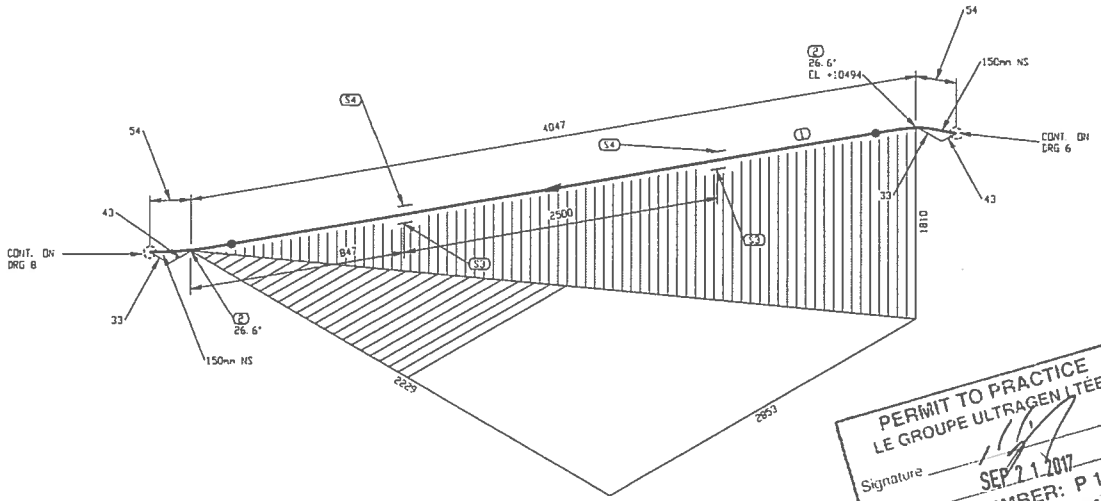

PERMIT TO PRACTICE
LE GROUPE ULTRAGEN LTÉE
Signature
Date SEP 21 2017
PERMIT NUMBER: P 1180
NT/NU Association of Professional Engineers and Geoscientists

FABRICATION DRAWINGS BASED ON WSP CERTIFIED ENGINEERING

LISTE DE MATERIEL

No	QTE	DIA	MATERIEL/CATALOGUE	DESCRIPTION
1	3939 MM	150	A 333 Gr. 6	SCH STD, SMLS PIPE
2	2	150	A 420 Gr WPL6	SCH STD, BW LR 45 DEG ELBOW TRIM TO 26.57
3	2	150		PIPE SUPPORT AS PER DETAIL 1, DWG 65-116-270-200
4	2	150		PIPE SHOE AS PER DETAIL 2, DWG 65-116-270-200

No.	DATE	REVISION	PAR APP.
2	2017/09/21	PROJECT TITLE REVISED	KHV
1	2017/09/11	LINE NUMBERS REVISED	KHV
0	2017/05/15	ISSUED FOR CONSTRUCTION	KHV

CLIENT: AGNICO EAGLE

NUQSANA-PROMEC MINING

ultragen

CONSULTANT PROJECT NO. 591700

NO. DE CONDUITE		SPECIFICATION	PRODUIT	SYSTEME REVETEMENT	CODE DE COULEUR	ISOLATION ET TRACAGE	EPAISS. D'ISOLATION		
116-150-PDI-CC10-0001		CC10	PDI		-			65-116-270-200	PIPE SUPPORT DETAILS
PRESSION D'OPERATION	TEMPERATURE D'OPERATION	PRESSION DE CONCEPTION	TEMPERATURE DE CONCEPTION	PRESSION D'ESSAI	CLASSE D'INSPECTION	CODE DE SERVICE	TRAITEMENT THERMIQUE	65-116-205-200	P&ID
PSIG	°F	PSIG	°F	PSIG				No. DESSIN	DESSINS DE REFERENCE

REGISTERED PROFESSIONAL ENGINEER
D TRUONG
LICENSEE
NT/NU
2017/09/21

CONC.: KHV
DATE: 2017/04/25
DESSINÉ PAR: KVC
DATE: 2017/04/25
VER. PAR: -
DATE: -
APP.: -
DATE: -
ECHELLE: AUCUNE

PROJET: AGNICO EAGLE - MELIADINE DIVISION
116 - FUEL TANK FARM

TITRE: RANKIN INLET
FABRICATION ISOMETRIC
MARINE LINE TO 65TNK11601 & 65TNK11602

No PROJET	No DESSIN	PAGES	REV.
6515	116-150-PDI-CC10-0001	7/13	2

116-MN-01

FORM # Agnico Eagle Version 1.1 (1).DWG (For Distribution) V3. Revised 2. Template 2. Handlebars 1. Path: H:\LIVE-153-PROJECTS-2001-1.DWG

MARIEVE LC. Sep 20, 2017, 2:44pm

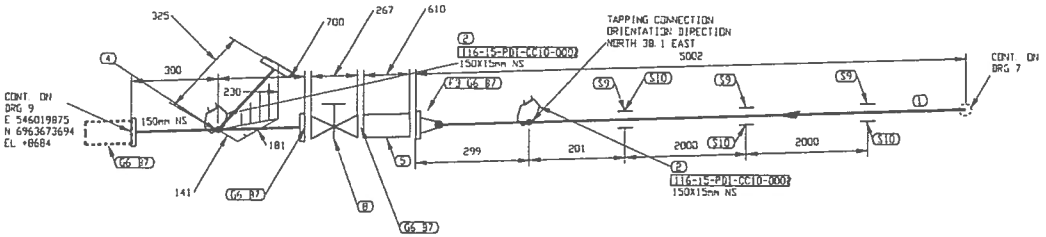

PERMIT TO PRACTICE
LE GROUPE ULTRAGEN LTÉE
Signature
Date SEP 21 2017
PERMIT NUMBER: P 1180
NT/NU Association of Professional Engineers and Geoscientists

FABRICATION DRAWINGS BASED ON WSP CERTIFIED ENGINEERING

LISTE DE MATERIEL

No	QTE	DIA	MATERIEL/CATALOGUE	DESCRIPTION
1	4914 MM	150	A 333 Gr. 6	SCH STD, SMLS PIPE
2	2	150X15	A 350 Gr. LF2	CL 3000, THREDOLET
3	1	150	A 350 Gr. LF2	CL 150, SCH STD, RF, WN FLANGE
4	1	150X150		CL 150, PIG CATCHER AS PER DETAIL 8, DWG: 65-116-270-200
5	1	150		CL 150, SINGLE BRAIDED HOSE ASSEMBLY
6	4	150	ASME B16 20	CL 150, GARLOCK 5500, RING TYPE GASKET 1/8" THK
7	32	19	A 193 B7/A 194 2H	CL 150, 8 - 19 05 X 100 STUD BOLTS c/w TWO HEAVY HEX NUTS
8	1	150	GA-10	CL 150, RF, CS, FULL PORT GATE VALVE
9	3	150		PIPE SUPPORT AS PER DETAIL 1, DWG: 65-116-270-200
10	3	150		PIPE SHOE AS PER DETAIL 2, DWG: 65-116-270-200

No.	DATE	REVISION	PAR / APP
2	2017/09/21	PROJECT TITLE REVISED	KHV
1	2017/09/11	LINE NUMBERS REVISED	KHV
0	2017/05/15	ISSUED FOR CONSTRUCTION	KHV

CLIENT:

AGNICO EAGLE

NUQSANA-PROMEC MINING

ultragen

CONSULTANT PROJECT NO. 591700

NO. DE CONDUITE		SPECIFICATION	PRODUIT	SYSTEME REVETEMENT	CODE DE COULEUR	ISOLATION ET TRACAGE	EPAISS. D'ISOLATION		
116-150-PDI-CC10-0001		CC10	PDI		-			65-116-270-200	PIPE SUPPORT DETAILS
PRESSION D'OPERATION	TEMPERATURE D'OPERATION	PRESSION DE CONCEPTION	TEMPERATURE DE CONCEPTION	PRESSION D'ESSAI	CLASSE D'INSPECTION	CODE DE SERVICE	TRAITEMENT THERMIQUE	65-116-205-200	P&ID
		PSIG	°F	PSIG				No. DESSIN	DESSINS DE REFERENCE

SCEAU PROFESSIONNEL
REGISTERED PROFESSIONAL ENGINEER
D TRUONG
LICENSEE
NT/NU
2017/09/21

CONC.: KHV
DATE: 2017/04/25
DESSINÉ PAR: KVE
DATE: 2017/04/25
VER. PAR: -
DATE: -
APP.: -
DATE: -
ECHELLE: AUCUNE

PROJET: AGNICO EAGLE - MELIADINE DIVISION
116 - FUEL TANK FARM

TITRE: RANKIN INLET
FABRICATION ISOMETRIC
MARINE LINE TO 65TNK11601 & 65TNK11602

No PROJET	No DESSIN	PAGES	REV.
6515	116-150-PDI-CC10-0001	8/13	2

116-MN-01

IMPRIME LE: Sep 20, 2017, 2:44pm

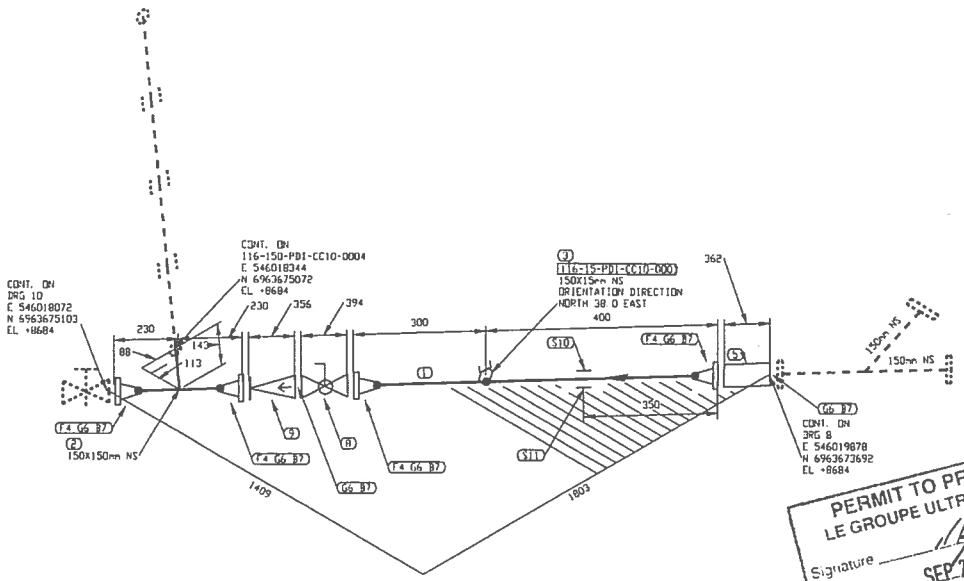

PERMIT TO PRACTICE
LE GROUPE ULTRAGEN LTEE
Signature
Date SEP 21 2017
PERMIT NUMBER: P 1180
NT/NU Association of Professional Engineers and Geoscientists

FABRICATION DRAWINGS BASED ON WSP CERTIFIED ENGINEERING

LISTE DE MATERIEL

No	QTE	DIA	MATERIEL/CATALOGUE	DESCRIPTION
1	525 MM	150	A 333 Gr. 6	SCH STD, SMLS PIPE
2	1	150X150	A 420 Gr. WPL6	SCH STD, BW STRAIGHT TEE
3	1	150X15	A 350 Gr. LF2	CL 3000, THREDOLET
4	4	150	A 350 Gr. LF2	CL 150, SCH STD, RF, WN FLANGE
5	1	150		CL 150, IFLOW INDICATOR 'VISI-FLO'
6	6	150	ASME B16.20	CL 150, GARLOCK 3500, RING TYPE GASKET 1/8" THK
7	48	19	A 193 B7/A 194 2H	CL 150, 8 - 19.05 x 100 STUD BOLTS c/w TWO HEAVY HEX NUTS
8	1	150	BA-31	CL 150, RF, BALL VALVE
9	1	150	CK-29	CL 150, RF, SWING CHECK VALVE
10	1	150		PIPE SUPPORT AS PER DETAIL 1, DWG 65-116-270-200
11	1	150		PIPE SHOE AS PER DETAIL 2, DWG 65-116-270-200

No.	DATE	REVISION	PAR / APP
2	2017/09/21	PROJECT TITLE REVISED	KHV
1	2017/09/11	LINE NUMBERS REVISED	KHV
0	2017/05/15	ISSUED FOR CONSTRUCTION	KHV

CLIENT: AGNICO EAGLE

NUQSANA-PROMEC MINING

ultragen

CONSULTANT PROJECT NO. 591700

NO. DE CONDUITE		SPECIFICATION	PRODUIT	SYSTEME REVETEMENT	CODE DE COULEUR	ISOLATION ET TRACAGE	EPAISS. D'ISOLATION		
116-150-PDI-CC10-0001		CC10	PDI		-			65-116-270-200	PIPE SUPPORT DETAILS
PRESSION D'OPERATION	TEMPERATURE D'OPERATION	PRESSION DE CONCEPTION	TEMPERATURE DE CONCEPTION	PRESSION D'ESSAI	CLASSE D'INSPECTION	CODE DE SERVICE	TRAITEMENT THERMIQUE	65-116-205-200	P&ID
PSIG	°F	PSIG	°F	PSIG				No. DESSIN	DESSINS DE REFERENCE

SCEAU PROFESSIONNEL — REGISTERED PROFESSIONAL ENGINEER — D. TRUONG — LICENSEE — 2017/09/21

CONC.: KHV DATE: 2017/04/25
DESSINE PAR: KVC DATE: 2017/04/25
VER. PAR: - DATE: -
APP.: - DATE: -
ECHELLE: AUCUNE

PROJET: AGNICO EAGLE - MELIADINE DIVISION
116 - FUEL TANK FARM

TITRE: RANKIN INLET
FABRICATION ISOMETRIC
MARINE LINE TO 65TNK11601 & 65TNK11602

No PROJET	No DESSIN	PAGES	REV.
6515	116-150-PDI-CC10-0001	9/13	2

116-MN-01

IMPRIME LE: Sep 20, 2017, 2:46pm

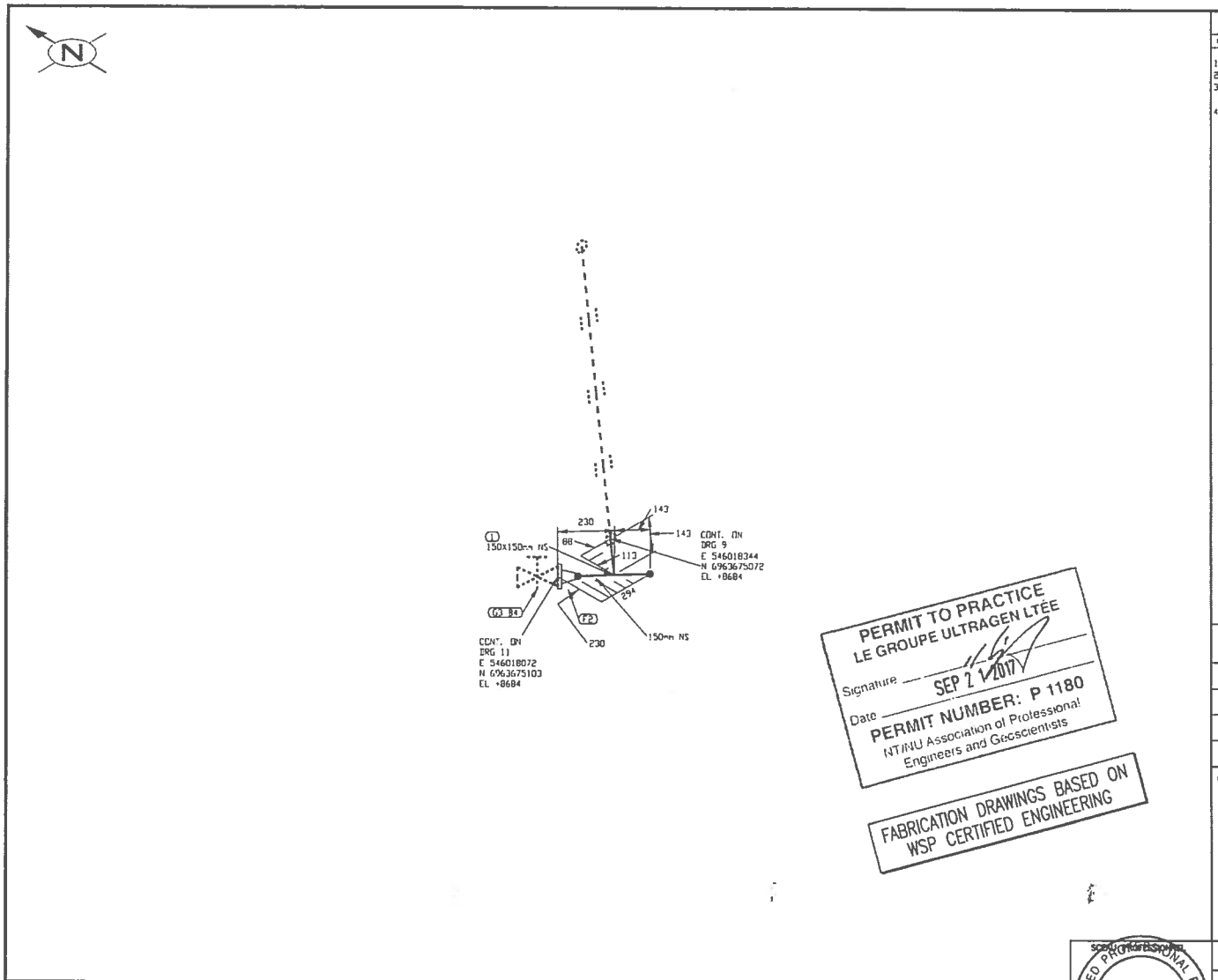

LISTE DE MATERIEL

No	QTE	DIA	MATERIEL/CATALOGUE	DESCRIPTION
1	1	150X150	A 420 Gr. WPL6	SCH STD, BW STRAIGHT TEE
2	1	150	A 350 Gr LF2	CL 150, SCH STD, RF, WN FLANGE
3	1	150	ASME B16.20	CL 150, GARLOCK 5500, RING TYPE GASKET 1/8" THK
4	8	19	A 193 B7/A 194 2H	CL 150, 8 - 19.05 X 100 STUD BOLTS c/w TWO HEAVY HEX NUTS

No.	DATE	REVISION	PAR / APP
2	2017/09/21	PROJECT TITLE REVISED	KHV
1	2017/09/11	LINE NUMBERS REVISED	KHV
0	2017/05/15	ISSUED FOR CONSTRUCTION	KHV

CLIENT:

AGNICO EAGLE

NUQSANA-PROMEC MINING

ultragen

CONSULTANT PROJECT NO. 591700

NO. DE CONDUITE		SPECIFICATION	PRODUIT	SYSTEME REVETEMENT	CODE DE COULEUR	ISOLATION ET TRACAGE	EPAISS. D'ISOLATION		
116-150-PDI-CC10-0001		CC10	PDI		-			65-116-270-200	PIPE SUPPORT DETAILS
PRESSION D'OPERATION	TEMPERATURE D'OPERATION	PRESSION DE CONCEPTION	TEMPERATURE DE CONCEPTION	PRESSION D'ESSAI	CLASSE D'INSPECTION	CODE DE SERVICE	TRAITEMENT THERMIQUE	65-116-205-200	P&ID
PSIG	°F	PSIG	°F	PSIG				No. DESSIN	DESSINS DE REFERENCE

SCEAU PROFESSIONNEL

REGISTERED PROFESSIONAL ENGINEER
D TRUONG
LICENSEE
NT/NU
2017/09/21

CONC.: KHV
DATE: 2017/04/25
DESSINE PAR: KVE
DATE: 2017/04/25
VER. PAR: -
DATE: -
APP.: -
DATE: -
ECHELLE: AUCUNE

PROJET: AGNICO EAGLE - MELIADINE DIVISION
116 - FUEL TANK FARM

TITRE: RANKIN INLET
FABRICATION ISOMETRIC
MARINE LINE TO 65TNK11601 & 65TNK11602

No PROJET	No DESSIN	PAGES	REV.
6515	116-150-PDI-CC10-0001	10/13	2

116-MN-01

FICHIER: N:\Agnico Eagle\Meliadine\591700 (Fuel Distribution)\05. Dessins\02 Tuyauterie\02 Isometriques\01 Rankin inlet\116-150-PDI-CC10-0001-10.DWG

APPROVE LE Sep 20, 2017 2:44pm

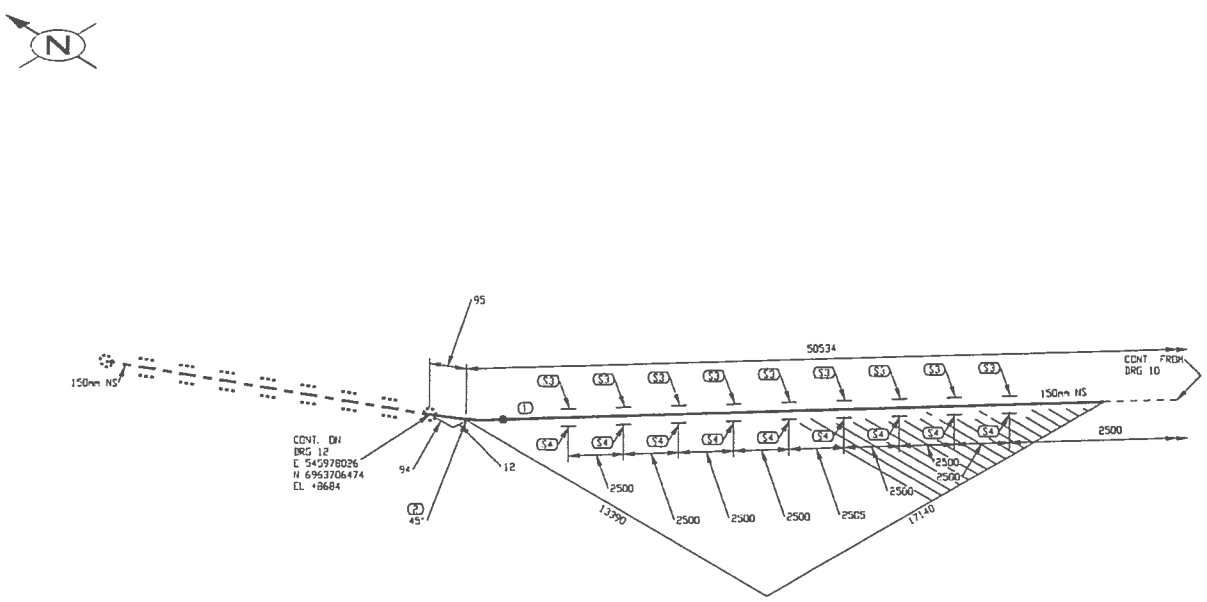

PERMIT TO PRACTICE
LE GROUPE ULTRAGEN LTÉE
Signature
Date SEP 21 2017
PERMIT NUMBER: P 1180
NT/NU Association of Professional Engineers and Geoscientists

FABRICATION DRAWINGS BASED ON WSP CERTIFIED ENGINEERING

LISTE DE MATERIEL

No	QTE	DIA	MATERIEL/CATALOGUE	DESCRIPTION
1	21655 MM	150	A 333 Gr. 6	SCH STD, SMLS PIPE
2	1	150	A 420 Gr. WPL6	SCH STD, BW LR 45 DEG ELBOW
3	9	150		PIPE SUPPORT AS PER DETAIL 1, DWG 65-116-270-200
4	9	150		PIPE SHOE AS PER DETAIL 2, DWG 65-116-270-200

No.	DATE	REVISION	PAR / APP.
2	2017/09/21	PROJECT TITLE REVISED	KHV
1	2017/09/11	LINE NUMBERS REVISED	KHV
0	2017/05/15	ISSUED FOR CONSTRUCTION	KHV

CLIENT:

AGNICO EAGLE

NUQSANA PROMEC MINING

ultragen

CONSULTANT PROJECT NO. 591700

NO. DE CONDUITE		SPECIFICATION	PRODUIT	SYSTEME REVETEMENT	CODE DE COULEUR	ISOLATION ET TRACAGE	EPAISS. D'ISOLATION		
116-150-PDI-CC10-0001		CC10	PDI		-			65-116-270-200	PIPE SUPPORT DETAILS
PRESSION D'OPERATION	TEMPERATURE D'OPERATION	PRESSION DE CONCEPTION	TEMPERATURE DE CONCEPTION	PRESSION D'ESSAI	CLASSE D'INSPECTION	CODE DE SERVICE	TRAITEMENT THERMIQUE	65-116-205-200	P&ID
PSIG	°F	PSIG	°F	PSIG				No. DESSIN	DESSINS DE REFERENCE

SCEAU PROFESSIONNEL
REGISTERED PROFESSIONAL ENGINEER
D. TRUONG
LICENSEE
NT/NU
2017/09/21

CONC.: KHV
DATE: 2017/04/25
DESSINÉ PAR: KVE
DATE: 2017/04/25
VER. PAR: -
DATE: -
APP.: -
DATE: -
ECHELLE: AUCUNE

PROJET: AGNICO EAGLE - MELIADINE DIVISION
116 - FUEL TANK FARM

TITRE: RANKIN INLET
FABRICATION ISOMETRIC
MARINE LINE TO 65TNK11601 & 65TNK11602

No PROJET	No DESSIN	PAGES	REV.
6515	116-150-PDI-CC10-0001	11/13	2

116-MN-01

FICHIER: W:\Agnico Eagle\Meliadine\591700 (Fuel Distribution)\05 Dessins\02 Tuyauterie\02 Isométriques\01 Rankin Inlet\116-150-PDI-CC10-0001-11.DWG

IMPRIMÉ LE Sep 20, 2017 2:44pm

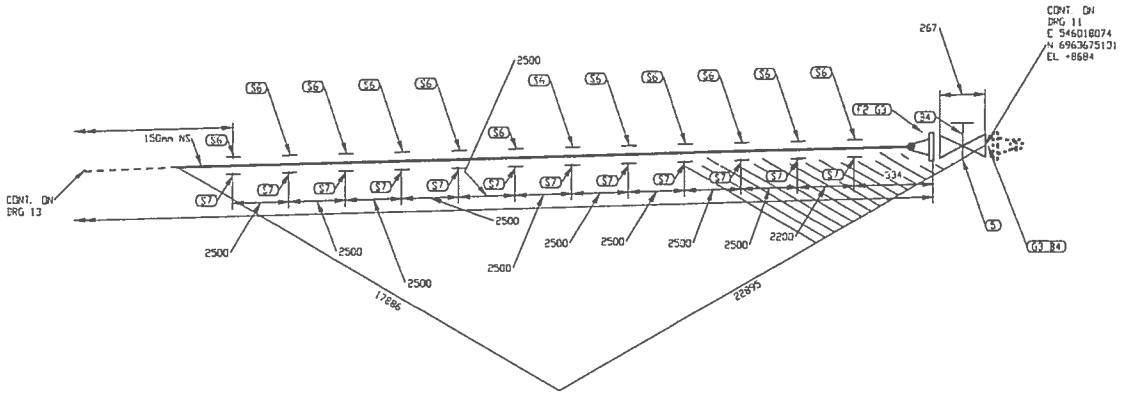

LISTE DE MATERIEL

No	QTE	DIA	MATERIEL/CATALOGUE	DESCRIPTION
1	28696 MM	150	A 333 Gr 6	SCH STD, SMLS PIPE
2	1	150	A 350 Gr LF2	CL 150, SCH STD, RF, WN FLANGE
3	2	150	ASME B16.20	CL 150, GARLOCK 5500, RING TYPE GASKET 1/8" THK
4	16	19	A 193 B7/A 194 2H	CL 150, 0 - 19.05 X 100 STUD BOLTS c/w TWO HEAVY HEX NUTS
5	1	150	GA-10	CL 150, RF, CS, GATE VALVE
6	12	150		PIPE SUPPORT AS PER DETAIL 1, DWG 65-116-270-200
7	12	150		PIPE SHOE AS PER DETAIL 2, DWG 65-116-270-200

PERMIT TO PRACTICE
LE GROUPE ULTRAGEN LTÉE
Signature
Date SEP 2 1 2017
PERMIT NUMBER: P 1180
NT/NU Association of Professional Engineers and Geoscientists

FABRICATION DRAWINGS BASED ON WSP CERTIFIED ENGINEERING

No.	DATE	REVISION	PAR APP.
2	2017/09/21	PROJECT TITLE REVISED	KHV
1	2017/09/11	LINE NUMBERS REVISED	KHV
0	2017/05/15	ISSUED FOR CONSTRUCTION	KHV

CLIENT: AGNICO EAGLE

NUQSANA-PROMEC MINING

Ultragen

CONSULTANT PROJECT NO. 591700

NO. DE CONDUITE		SPECIFICATION	PRODUIT	SYSTEME REVETEMENT	CODE DE COULEUR	ISOLATION ET TRACAGE	EPAISS. D'ISOLATION		
116-150-PDI-CC10-0001		CC10	PDI		-			65-116-270-200	PIPE SUPPORT DETAILS
PRESSION D'OPERATION	TEMPERATURE D'OPERATION	PRESSION DE CONCEPTION	TEMPERATURE DE CONCEPTION	PRESSION D'ESSAI	CLASSE D'INSPECTION	CODE DE SERVICE	TRAITEMENT THERMIQUE	65-116-205-200	P&ID
PSIG	°F	PSIG	°F	PSIG				No. DESSIN	DESSINS DE REFERENCE

REGISTERED PROFESSIONAL ENGINEER
D. TRUONG
LICENSEE
NT/NU
2017/09/21

CONC.: KHV DATE: 2017/04/25
DESSINÉ PAR: KVE DATE: 2017/04/25
VER. PAR: - DATE: -
APP.: - DATE: -
ÉCHELLE: AUCUNE

PROJET: AGNICO EAGLE - MELIADINE DIVISION
116 - FUEL TANK FARM

TITRE: RANKIN INLET
FABRICATION ISOMETRIC
MARINE LINE TO 65TNK11601 & 65TNK11602

No PROJET	No DESSIN	PAGES	REV.
6515	116-150-PDI-CC10-0001	12/13	2

116-MN-01

POWER: \\ Vancouver\projects\6515\700 (Fuel Distribution)\05 Design\02 Engineering\01 Revit\116-150-PDI-CC10-0001-12.rvt
APPROVED Sep 20, 2017 2:44pm

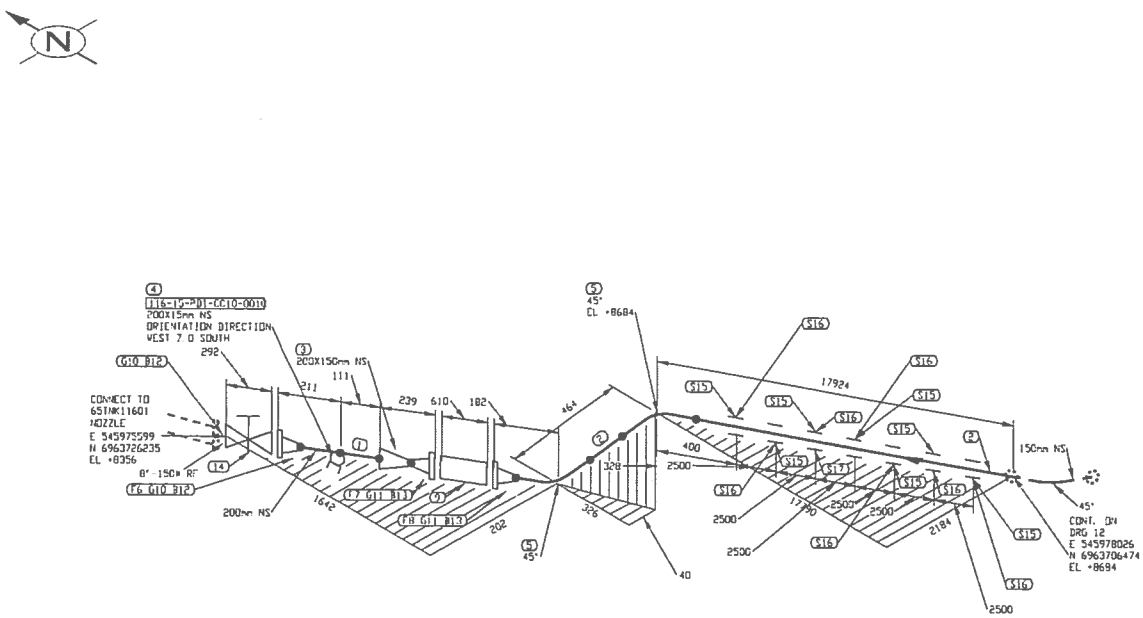

LISTE DE MATERIEL

No	QTE	DIA	MATERIEL/CATALOGUE	DESCRIPTION
1	222 MM	200	A 333 Gr. 6	SCH STD, SMLS PIPE
2	18103 MM	150	A 333 Gr. 6	SCH STD, SMLS PIPE
3	1	200X150	A 420 Gr. WPL6	SCH STD, BW CONC RED
4	1	200X15	A 350 Gr. LF2	CL 3000, THREDOLET
5	2	150	A 420 Gr. WPL6	SCH STD, BW LR 45 DEG ELBOW
6	1	200	A 350 Gr. LF2	CL 150, SCH STD, RF, WN FLANGE
7	1	150	A 350 Gr. LF2	CL 150, SCH STD, RF, WN FLANGE
8	1	150	A 350 Gr. LF2	CL 150, SCH STD, RF, WN FLANGE
9	1	150		CL 150, SINGLE BRAIDED HOSE ASSEMBLY
10	2	200	ASME B16.20	CL 150, GARLOCK 5500, RING TYPE GASKET 1/8" THK
11	2	150	ASME B16.20	CL 150, GARLOCK 5500, RING TYPE GASKET 1/8" THK
12	16	19	A 193 B7/A 194 2H	CL 150, 8 - 19.05 X 110 STUD BOLTS c/w TWO HEAVY HEX NUTS
13	16	19	A 193 B7/A 194 2H	CL 150, 8 - 19.05 X 100 STUD BOLTS c/w TWO HEAVY HEX NUTS
14	1	200	GA-10	CL 150, RF, CS, FULL PORT GATE VALVE
15	7	150		PIPE SUPPORT AS PER DETAIL 1, DWG: 65-116-270-200
16	7	150		PIPE SHOE AS PER DETAIL 2, DWG: 65-116-270-200
17	1	150		PIPE SHOE AS PER DETAIL 2, DWG: 65-116-270-200

PERMIT TO PRACTICE
LE GROUPE ULTRAGEN LTÉE
Signature
Date SEP 21 2017
PERMIT NUMBER: P 1180
NT/NU Association of Professional Engineers and Geoscientists

FABRICATION DRAWINGS BASED ON WSP CERTIFIED ENGINEERING

No.	DATE	REVISION	PAR / APP.
2	2017/09/21	PROJECT TITLE REVISED	KHV
1	2017/09/11	LINE NUMBERS REVISED	KHV
0	2017/05/15	ISSUED FOR CONSTRUCTION	KHV

CLIENT:

AGNICO EAGLE

NUQSANA PROMEC MINING

ultragen

CONSULTANT PROJECT NO. 591700

SCEAU PROFESSIONNEL
REGISTERED PROFESSIONAL ENGINEER
D TRUONG
LICENSEE
NT/NU
2017/09/21

CONC.: KHV
DATE: 2017/04/25
DESSINÉ PAR: KVE
DATE: 2017/04/25
VER. PAR: -
DATE: -
APP.: -
DATE: -
ECHELLE: AUCUNE

PROJET: AGNICO EAGLE - MELIADINE DIVISION
116 - FUEL TANK FARM

TITRE: RANKIN INLET
FABRICATION ISOMETRIC
MARINE LINE TO 65TNK11601 & 65TNK11602

No PROJET	No DESSIN	PAGES	REV.
6515	116-150-PDI-CC10-0001	13/13	2

NO. DE CONDUITE		SPECIFICATION	PRODUIT	SYSTEME REVETEMENT	CODE DE COULEUR	ISOLATION ET TRACAGE	EPAISS. D'ISOLATION		
116-150-PDI-CC10-0001		CC10	PDI		-			65-116-270-200	PIPE SUPPORT DETAILS
PRESSION D'OPERATION	TEMPERATURE D'OPERATION	PRESSION DE CONCEPTION	TEMPERATURE DE CONCEPTION	PRESSION D'ESSAI	CLASSE D'INSPECTION	CODE DE SERVICE	TRAITEMENT THERMIQUE	65-116-205-200	P&ID
PSIG	°F	PSIG	°F	PSIG				No. DESSIN	DESSINS DE REFERENCE

116-MN-01

IMPRIME LE Sep 20, 2017, 2:44pm

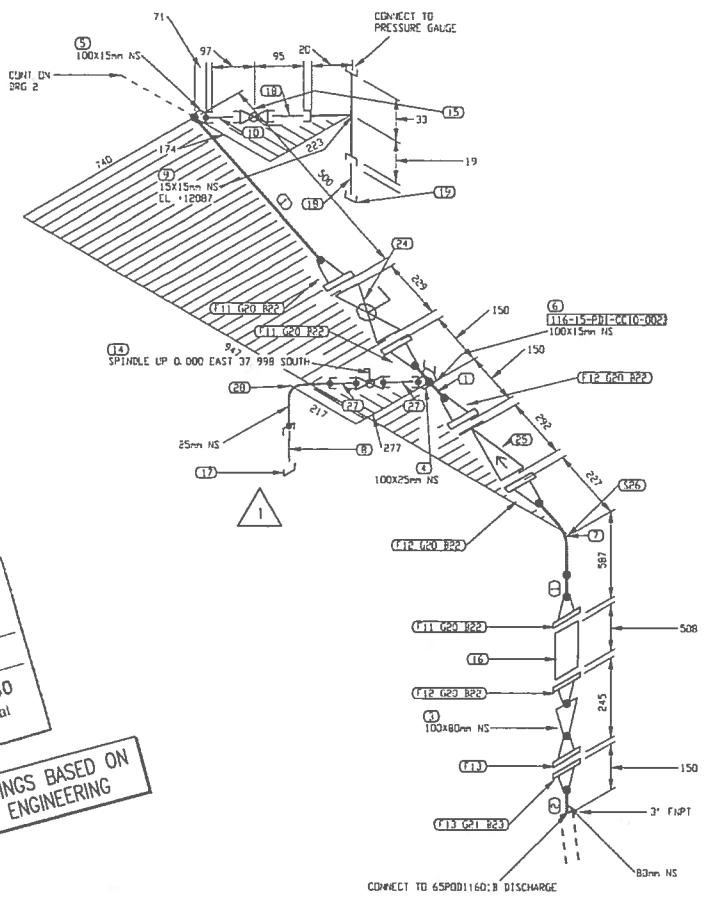

PERMIT TO PRACTICE
LE GROUPE ULTRAGEN LTÉE
Signature _____
Date SEP 21 2017
PERMIT NUMBER: P 1180
NT/NU Association of Professional Engineers and Geoscientists

FABRICATION DRAWINGS BASED ON WSP CERTIFIED ENGINEERING

LISTE DE MATERIEL

No	QTE	DIA	MATERIEL/CATALOGUE	DESCRIPTION
1	577 MM	100	A 333 Gr 6	SCH STD, SMLS PIPE
2	82 MM	80	A 333 Gr 6	SCH STD, SMLS PIPE PBE×TOE
3	1	100X80	A 420 Gr WPL6	SCH STD, BW CONC RED
4	1	100X25	A 350 Gr LF2	CL 3000, SOCKOLET
5	1	100X15	A 350 Gr LF2	CL 3000, SOCKOLET
6	1	100X15	A 350 Gr LF2	CL 3000, THREDOLET
7	1	100	A 420 Gr WPL6	SCH STD, BW LR 90 DEG ELBOW
8	1	25	A 333 Gr 6	SCH 80, NIPPLE x 75mm LG PBE×TOE
9	1	15X15	A 350 Gr LF2	CL 3000, THRD STRAIGHT TEE
10	1	15	A 333 Gr 6	SCH 80, NIPPLE x 75mm LG PBE×TOE
11	3	100	A 350 Gr LF2	CL 150, SCH STD, RF, WN FLANGE
12	3	100	A 350 Gr LF2	CL 150, SCH STD, RF, WN FLANGE
13	2	80	A 350 Gr LF2	CL 150, SCH STD, RF, WN FLANGE
14	1	25	BA-29	CL 600,WS BALL VALVE
15	1	15	BA-32	CL 600, THRD, BALL VALVE
16	1	100		CL 150, SINGLE BRAIDED HOSE ASSEMBLY
17	1	25	A 350 Gr LF2	CL 3000, THRD CAP
18	2	15	A 333 Gr 6	SCH 80, NIPPLE x 75mm LG TBE
19	1	15	A 350 Gr LF2	CL 150, GARLOCK 3500, RING TYPE GASKET 1/8"
20	6	100	ASME B16.20	CUK150, GARLOCK 3500, RING TYPE GASKET 1/8"
21	1	80	ASME B16.20	CUK150, 8 - 15.875 x 90 STUD BOLTS c/w TWO
22	48	16	A 193 B7/A 194 2H	BEAMSONER NUTS 875 x 90 STUD BOLTS c/w TWO
23	4	16	A 193 B7/A 194 2H	HEAVY HEX NUTS
24	1	100	BA 31	CL 150, RF, BALL VALVE
25	1	100	CK-29	CL 150, RF, SWING CHECK VALVE
26	1	100		PIPE SUPPORT BY CONTRACTOR
27	2	25	A 333 Gr 6	SCH 80, NIPPLE x 75mm LG PBE
28	1	25	A 350 Gr LF2	CL 3000, SW 90 DEG ELBOW

No.	DATE	REVISION	PAR / APP
3	2017/09/21	PROJECT TITLE REVISED	TNg
2	2017/09/11	LINE NUMBERS REVISED	KHV
1	2017/06/30	DRAIN REVISED AS PER CLIENT COMMENTS	OVN
0	2017/05/15	ISSUED FOR CONSTRUCTION	KHV

CLIENT: AGNICO EAGLE

NUQSANA-PROMEC MINING

ultragen

CONSULTANT PROJECT NO. 591700

NO. DE CONDUITE		SPECIFICATION	PRODUIT	SYSTEME REVETEMENT	CODE DE COULEUR	ISOLATION ET TRACAGE	EPAISS. D'ISOLATION		
116-100-PDI-CC10-0020		CC10	PDI					65-116-270-200	PIPE SUPPORT DETAILS
PRESSION D'OPERATION	TEMPERATURE D'OPERATION	PRESSION DE CONCEPTION	TEMPERATURE DE CONCEPTION	PRESSION D'ESSAI	CLASSE D'INSPECTION	CODE DE SERVICE	TRAITEMENT THERMIQUE	65-116-205-200	P&ID
PSIG	°F	PSIG	°F	PSIG				No. DESSIN	DESSINS DE REFERENCE

SCEAU PROFESSIONNEL
REGISTERED PROFESSIONAL ENGINEER
D TRUONG
LICENSEE
2017/09/21

CONC.: KHV
DATE: 2017/04/25
DESSINÉ PAR: KVE
DATE: 2017/04/25
VER. PAR: -
DATE: -
APP.: -
DATE: -
ÉCHELLE: AUCUNE

PROJET: AGNICO EAGLE - MELIADINE DIVISION
116 - FUEL TANK FARM

TITRE: RANKIN INLET
FABRICATION ISOMETRIC
DIESEL FROM 65PDD11601B TO BOTTOM LOADING ARM 65EQM11601

No PROJET	No DESSIN	PAGES	REV.
6515	116-100-PDI-CC10-0020	1/2	3

116-MN-01

I:\CAD\...\116-100-PDI-CC10-0020-1.DWG

IMPRIMÉ LE: Sep 22, 2017, 2:43pm

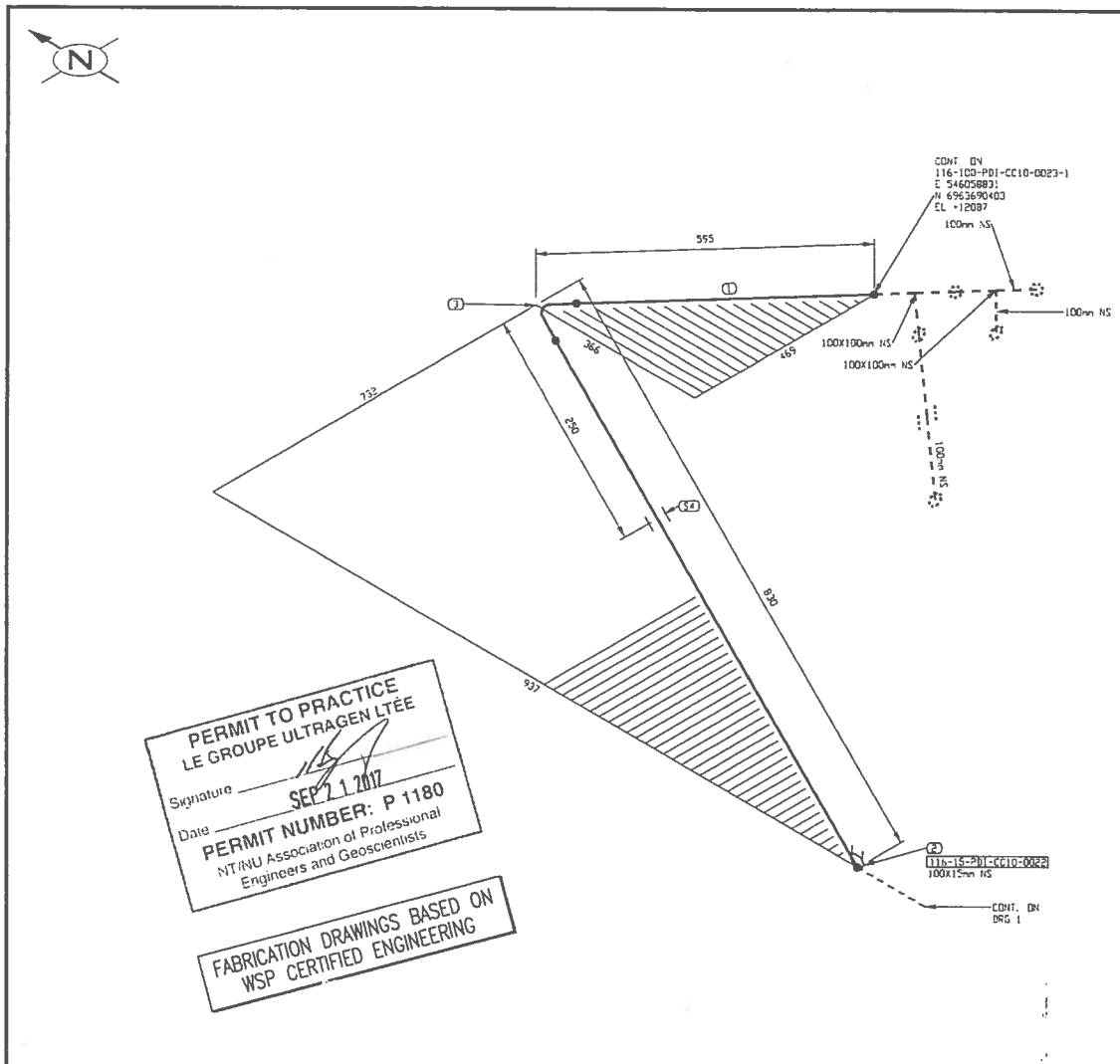

PERMIT TO PRACTICE
LE GROUPE ULTRAGEN LTÉE
Signature
Date SEP 2 1 2017
PERMIT NUMBER: P 1180
NT/NU Association of Professional Engineers and Geoscientists

FABRICATION DRAWINGS BASED ON WSP CERTIFIED ENGINEERING

LISTE DE MATERIEL

No	QTE	DIA	MATERIEL/CATALOGUE	DESCRIPTION
1	1480 MM	100	A 333 Gr 6	SCH STD, SMLS PIPE
2	1	100X15	A 350 Gr LF2	CL 3000, THREDOLET
3	1	100	A 420 Gr WPL6	SCH STD, BW LR 90 DEG ELBOW
4	1	100		PIPE SUPPORT BY CONTRACTOR

No.	DATE	REVISION	PAR / APP.
2	2017/09/21	PROJECT TITLE REVISED	KHV
1	2017/09/11	LINE NUMBERS REVISED	KHV
0	2017/05/15	ISSUED FOR CONSTRUCTION	KHV

CLIENT: AGNICO EAGLE

NUQSANA PROMEC MINING

ultragen

CONSULTANT PROJECT NO. 591700

NO. DE CONDUITE		SPECIFICATION	PRODUIT	SYSTEME REVETEMENT	CODE DE COULEUR	ISOLATION ET TRACAGE	EPAISS. D'ISOLATION		
116-100-PDI-CC10-0020		CC10	PDI		-			65-116-270-200	PIPE SUPPORT DETAILS
PRESSION D'OPERATION	TEMPERATURE D'OPERATION	PRESSION DE CONCEPTION	TEMPERATURE DE CONCEPTION	PRESSION D'ESSAI	CLASSE D'INSPECTION	CODE DE SERVICE	TRAITEMENT THERMIQUE	65-116-205-200	P&ID
PSIG	°F	PSIG	°F	PSIG				No. DESSIN	DESSINS DE REFERENCE

SCEAU PROFESSIONNEL
REGISTERED PROFESSIONAL ENGINEER
D TRUONG
LICENSEE
2017/09/21

CONC.: KHV
DATE: 2017/04/25
DESSINÉ PAR: KVE
DATE: 2017/04/25
VER. PAR: -
DATE: -
APP.: -
DATE: -
ECHELLE: AUCUNE

PROJET: AGNICO EAGLE - MELIADINE DIVISION
116 - FUEL TANK FARM

TITRE: RANKIN INLET
FABRICATION ISOMETRIC
DIESEL FROM 65PDD11601B TO BOTTOM LOADING ARM 65EQM11601

No PROJET	No DESSIN	PAGES	REV.
6515	116-100-PDI-CC10-0020	2/2	2

116-MN-01

IMPRIME LE: Sep 20, 2017, 2:43pm

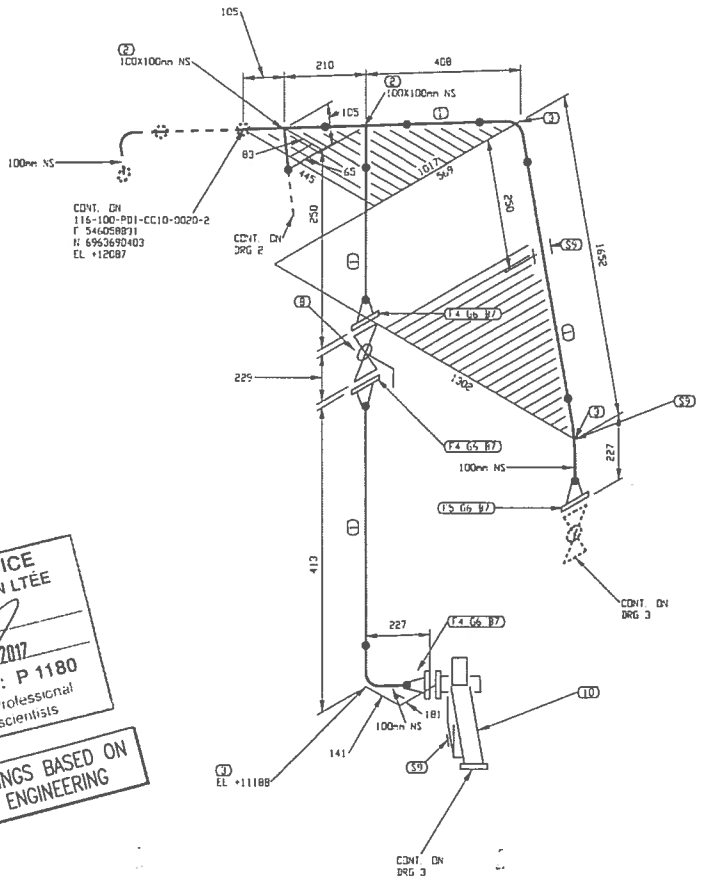

LISTE DE MATERIEL

No	QTE	DIA	MATERIEL/CATALOGUE	DESCRIPTION
1	1755 MM	100	A 333 Gr. 6	SCH STD, SMLS PIPE
2	2	100x100	A 420 Gr. WPL6	SCH STD, BW STRAIGHT TEE
3	3	100	A 420 Gr. WPL6	SCH STD, BW LR 90 DEG ELBOW
4	3	100	A 350 Gr. LF2	CL 150, SCH STD, RF, WN FLANGE
5	1	100	A 350 Gr. LF2	CL 150, SCH STD, RF, WN FLANGE
6	4	100	ASME B16.20	CL 150, GARLOCK 5500, RING TYPE GASKET 1/8" THK
7	32	16	A 193 B7/A 194 2H	CL 150, 8 - 15.875 x 90 STUD BOLTS c/w TWO HEAVY HEX NUTS
8	1	100	BA-31	CL 150, RF, BALL VALVE
9	3	100		PIPE SUPPORT BY CONTRACTOR
10	1	100		TCS METER UNIT

PERMIT TO PRACTICE
LE GROUPE ULTRAGEN LTÉE
Signature
Date SEP 2 9 2017
PERMIT NUMBER: P 1180
NT/NU Association of Professional Engineers and Geoscientists

FABRICATION DRAWINGS BASED ON WSP CERTIFIED ENGINEERING

No.	DATE	REVISION	
2	2017/09/21	PROJECT TITLE REVISED	KHV
1	2017/09/11	LINE NUMBERS REVISED	KHV
0	2017/05/15	ISSUED FOR CONSTRUCTION	KHV

CLIENT: AGNICO EAGLE

NUQSANAQ PROMEC MINING

ultragen

CONSULTANT PROJECT NO. 591700

NO. DE CONDUITE		SPECIFICATION	PRODUIT	SYSTEME REVETEMENT	CODE DE COULEUR	ISOLATION ET TRACAGE	EPAISS. D'ISOLATION		
116-100-PDI-CC10-0023		CC10	PDI		–			65-116-270-200	PIPE SUPPORT DETAILS
PRESSION D'OPERATION	TEMPERATURE D'OPERATION	PRESSION DE CONCEPTION	TEMPERATURE DE CONCEPTION	PRESSION D'ESSAI	CLASSE D'INSPECTION	CODE DE SERVICE	TRAITEMENT THERMIQUE	65-116-205-200	P&ID
PSIG	°F	PSIG	°F	PSIG				No. DESSIN	DESSINS DE REFERENCE

SCEAU PROFESSIONNEL
REGISTERED PROFESSIONAL ENGINEER
D. TRUONG
LICENSEE
2017/09/21

CONC.: KHV
DATE: 2017/04/25
DESSINE PAR: KVE
DATE: 2017/04/25
VER. PAR: –
DATE: –
APP.: –
DATE: –
ECHELLE: AUCUNE

PROJET: AGNICO EAGLE – MELIADINE DIVISION
116 – FUEL TANK FARM

TITRE: RANKIN INLET
FABRICATION ISOMETRIC
DIESEL FROM 6SPOD11601A TO BOTTOM LOADING ARM 6SEQM11601

No PROJET	No DESSIN	PAGES	REV.
6515	116-100-PDI-CC10-0023	1/4	2

116-MN-01

ICHIER: R:\Projets Eng\Meadow\03\700 (Fuel Distribution)\05. Controls\02 Logic\Revit\02 Isométriques\Rev Iso\116-100-PDI-CC10-0023-1.DWG

IMPRIMÉ LE: Sep 20, 2017, 2:43pm

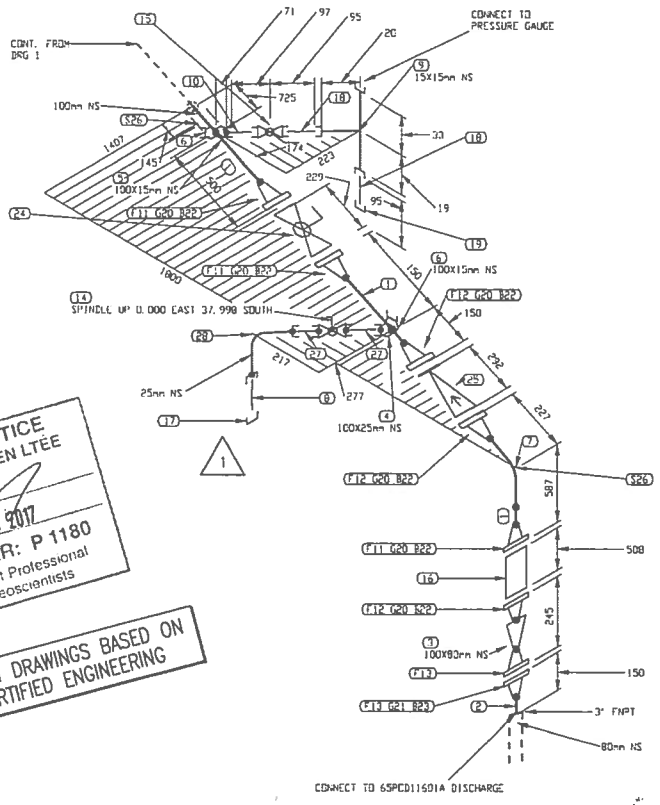

PERMIT TO PRACTICE
LE GROUPE ULTRAGEN LTÉE
Signature
Date SEP 2 1 2017
PERMIT NUMBER: P 1180
NT/NU Association of Professional Engineers and Geoscientists

FABRICATION DRAWINGS BASED ON WSP CERTIFIED ENGINEERING

LISTE DE MATERIEL

No	QTE	DIA	MATERIEL/CATALOGUE	DESCRIPTION
1	1660 MM	100	A 333 Gr. 6	SCH STD, SMLS PIPE
2	82 MM	80	A 333 Gr. 6	SCH STD, SMLS PIPE PDE×TDE
3	1	100X80	A 420 Gr. WPL6	SCH STD, BW CONC RED
4	1	100X25	A 350 Gr. LF2	CL 3000, SOCKOLET
5	1	100X15	A 350 Gr. LF2	CL 3000, SOCKOLET
6	2	100X15	A 350 Gr. LF2	CL 3000, THREDOLET
7	1	100	A 420 Gr. WPL6	SCH STD, BW LR 90 DEG ELBOW
8	1	25	A 333 Gr. 6	SCH 80, NIPPLE x 75mm LG PDE×TDE
9	1	15X15	A 350 Gr. LF2	CL 3000, THRD STRAIGHT TEE
10	1	15	A 333 Gr. 6	SCH 80, NIPPLE x 75mm LG PDE×TDE
11	3	100	A 350 Gr. LF2	CL 150, SCH STD, RF, WN FLANGE
12	3	100	A 350 Gr. LF2	CL 150, SCH STD, RF, WN FLANGE
13	2	80	A 350 Gr. LF2	CL 150, SCH STD, RF, WN FLANGE
14	1	25	BA 29	CL 600, SW BALL VALVE
15	1	15	BA-32	CL 600, THRD, BALL VALVE
16	1	100		CL 150, SINGLE BRAIDED HOSE ASSEMBLY
17	1	25	A 350 Gr. LF2	CL 3000, THRD CAP
18	2	15	A 333 Gr. 6	SCH 80, NIPPLE x 75mm LG TBE
19	1	15	A 350 Gr. LF2	CL 150, GARLOCK 5500, RING TYPE GASKET 1/8"
20	6	100	ASME B16.20	CL150, GARLOCK 5500, RING TYPE GASKET 1/8"
21	1	80	ASME B16.20	CL150, Ø - 15.875 X 90 STUD BOLTS c/w TWO HEAVY HEX NUTS
22	48	16	A 193 B7/A 194 2H	Ø15.875 X 90 STUD BOLTS c/w TWO HEAVY HEX NUTS
23	4	16	A 193 B7/A 194 2H	
24	1	100	BA-31	CL 150, RF, BALL VALVE
25	1	100	CK-29	CL 150, RF, SWING CHECK VALVE
26	2	100		PIPE SUPPORT BY CONTRACTOR
27	2	25	A 333 Gr. 6	SCH 80, NIPPLE x 75mm LG PBE
28	1	25	A 350 Gr. LF2	CL 3000, SW 90 DEG ELBOW

No.	DATE	REVISION	APP.
3	2017/09/21	PROJECT TITLE REVISED	KHV
2	2017/09/11	LINE NUMBERS REVISED	KHV
1	2017/06/30	DRAIN REVISED AS PER CLIENT COMMENTS	OVN
0	2017/05/15	ISSUED FOR CONSTRUCTION	KHV

CLIENT: AGNICO EAGLE

NUQSANA-PROMEC MINING

ultragen

CONSULTANT PROJECT NO. 591700

SCEAU PROFESSIONNEL
REGISTERED PROFESSIONAL ENGINEER
D. TRUONG
LICENSEE
2017/09/21

CONC.: KHV
DATE: 2017/04/25
DESSINE PAR: KVE
DATE: 2017/04/25
VER. PAR: -
DATE: -
APP.: -
DATE: -
ECHELLE: AUCUNE

PROJET: AGNICO EAGLE - MEADIADINE DIVISION
116 - FUEL TANK FARM

TITRE: RANKIN INLET
FABRICATION ISOMETRIC
DIESEL FROM 65PCD11601A TO BOTTOM LOADING ARM 65EQM11601

No PROJET	No DESSIN	PAGES	REV.
6515	116-100-PDI-CC10-0023	2/4	3

NO. DE CONDUITE		SPECIFICATION	PRODUIT	SYSTEME REVETEMENT	CODE DE COULEUR	ISOLATION ET TRACAGE	EPAISS. D'ISOLATION		
116-100-PDI-CC10-0023		CC10	PDI					65-116-270-200	PIPE SUPPORT DETAILS
PRESSION D'OPERATION	TEMPERATURE D'OPERATION	PRESSION DE CONCEPTION	TEMPERATURE DE CONCEPTION	PRESSION D'ESSAI	CLASSE D'INSPECTION	CODE DE SERVICE	TRAITEMENT THERMIQUE	65-116-205-200	P&ID
PSIG	°F	PSIG	°F	PSIG				No. DESSIN	DESSINS DE REFERENCE

116-MN-01

IMPRIMÉ LE: Sep 20, 2017, 2:43pm

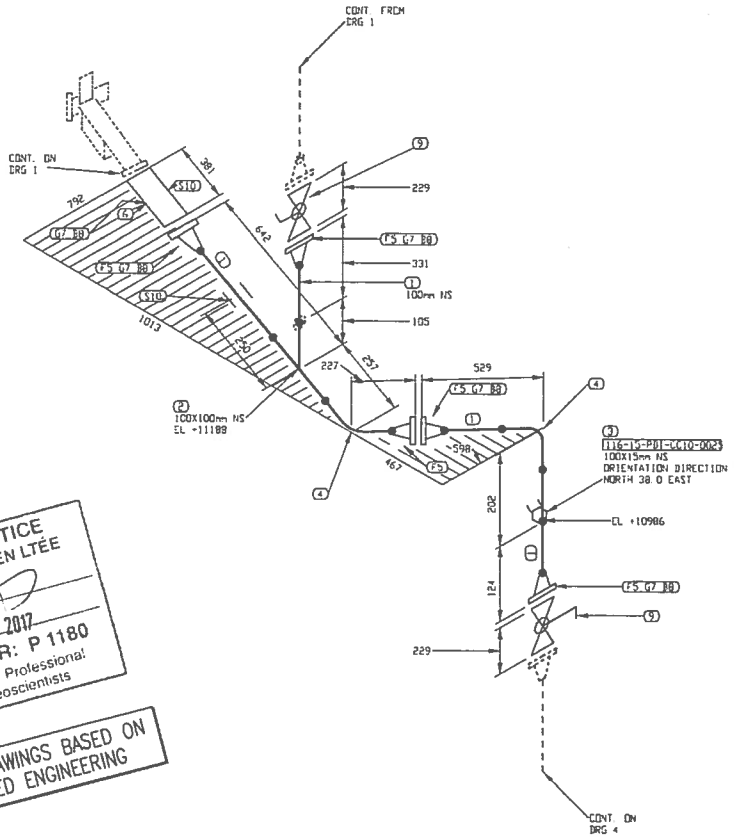

PERMIT TO PRACTICE
LE GROUPE ULTRAGEN LTÉE
Signature
Date SEP 2 1 2017
PERMIT NUMBER: P 1180
NT/NU Association of Professional Engineers and Geoscientists

FABRICATION DRAWINGS BASED ON WSP CERTIFIED ENGINEERING

LISTE DE MATERIEL

No	QTY	DIA	MATERIEL/CATALOGUE	DESCRIPTION
1	1120 MM	100	A 333 Gr 6	SCH STD, SMLS PIPE
2	1	100X100	A 420 Gr WPL6	SCH STD, BW STRAIGHT TEE
3	1	100X15	A 350 Gr LF2	CL 3000, THREDOLET
4	2	100	A 420 Gr WPL6	SCH STD, BW LR 90 DEG ELBOW
5	5	100	A 350 Gr LF2	CL 150, SCH STD, RF, WN FLANGE
6	1	100	DCV 4115-3	CL 150, FLOW CONTROL VALVE
7	5	100	ASME B16.20	CL 150, GARLOCK 5500, RING TYPE GASKET 1/8" THK
8	40	16	A 193 B7/A 194 2H	CL 150, 8 - 15.875 X 90 STUD BOLTS c/w TWO HEAVY HEX NUTS
9	2	100	BA-31	CL 150, RF, BALL VALVE
10	2	100		PIPE SUPPORT AS PER DETAIL 9, DWG: 65-116-270-200

No.	DATE	REVISION	APP.
2	2017/09/21	PROJECT TITLE REVISED	KHV
1	2017/09/11	LINE NUMBERS REVISED	KHV
0	2017/05/15	ISSUED FOR CONSTRUCTION	KHV

CLIENT: AGNICO EAGLE

NUNAVUT PROMEC MINING

ultragen

CONSULTANT PROJECT NO. 591700

NO. DE CONDUITE		SPECIFICATION	PRODUIT	SYSTEME REVETEMENT	CODE DE COULEUR	ISOLATION ET TRACAGE	EPAISS. D'ISOLATION		
116-100-PDI-CC10-0023		CC10	PDI					65-116-270-200	PIPE SUPPORT DETAILS
PRESSION D'OPERATION	TEMPERATURE D'OPERATION	PRESSION DE CONCEPTION	TEMPERATURE DE CONCEPTION	PRESSION D'ESSAI	CLASSE D'INSPECTION	CODE DE SERVICE	TRAITEMENT THERMIQUE	65-116-205-200	P&ID
PSIG	°F	PSIG	°F	PSIG				No. DESSIN	DESSINS DE REFERENCE

SCEAU PROFESSIONNEL
REGISTERED PROFESSIONAL ENGINEER
D TRUONG
LICENSEE
NT/NU
2017/09/21

CONC.: KHV
DATE: 2017/04/25
DESSINE PAR: KVE
DATE: 2017/04/25
VER. PAR: -
DATE: -
APP.: -
DATE: -
ÉCHELLE: AUCUNE

PROJET: AGNICO EAGLE - MELIADINE DIVISION
116 - FUEL TANK FARM

TITRE: RANKIN INLET
FABRICATION ISOMETRIC
DIESEL FROM 65PDD11601A TO BOTTOM LOADING ARM 65EQM11601

No PROJET	No DESSIN	PAGES	REV.
6515	116-100-PDI-CC10-0023	3/4	2

116-MN-01

IMPRIMÉ LE: Sep 20, 2017, 2:43pm

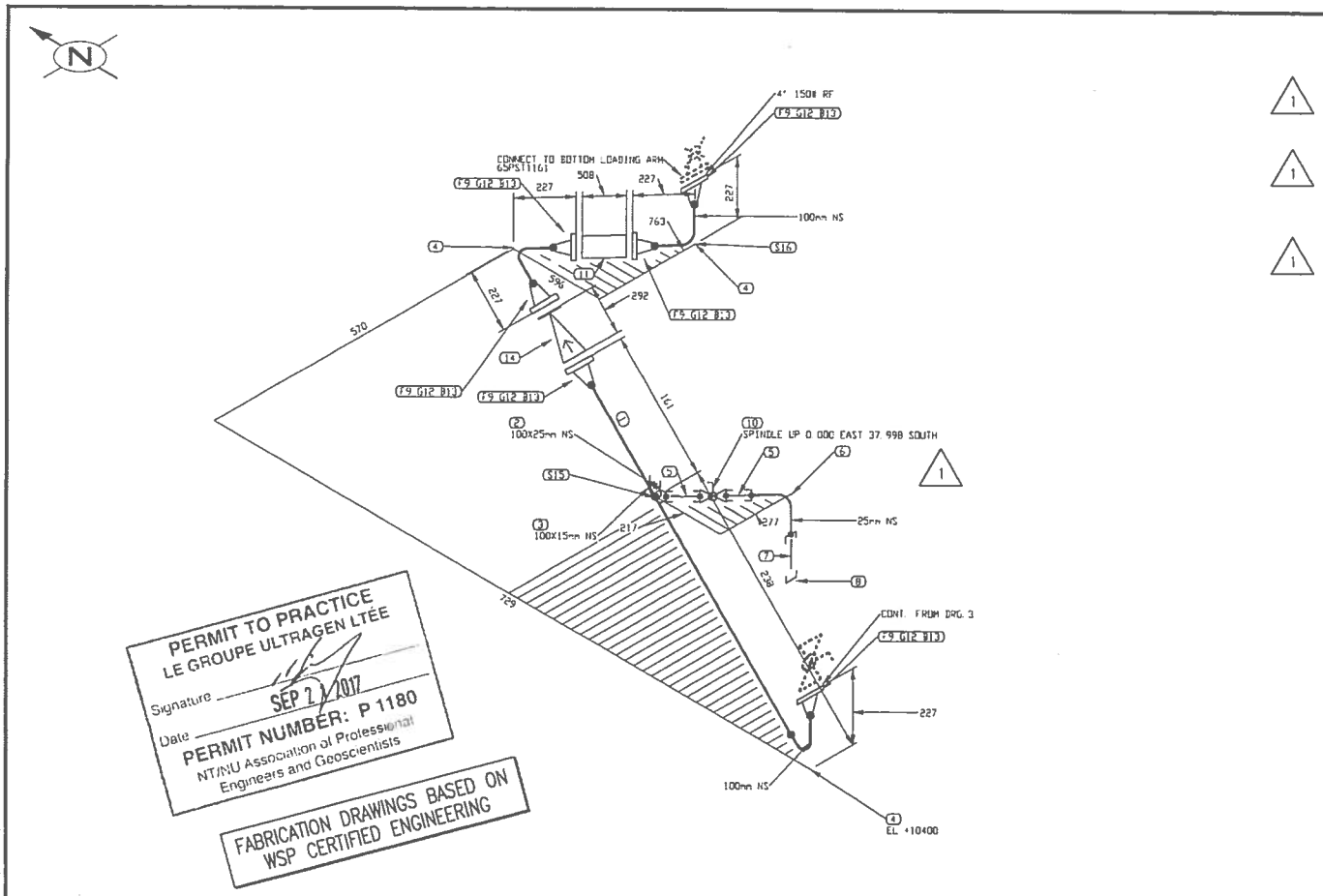

LISTE DE MATERIEL

No	QTE	DIA	MATERIEL/CATALOGUE	DESCRIPTION
1	172 MM	100	A 333 Gr. 6	SCH STD, SMLS PIPE
2	1	100X25	A 350 Gr. LF2	CL 3000, SOCKOLET
3	1	100X15	A 350 Gr. LF2	CL 3000, SOCKOLET
4	3	100	A 420 Gr. WPL6	SCH STD, BW LR 90 DEG ELBOW
5	2	25	A 333 Gr. 6	SCH 80, NIPPLE x 75mm LG PBE
6	1	25	A 350 Gr. LF2	CL 3000, SW 90 DEG ELBOW
7	1	25	A 333 Gr. 6	SCH 80, NIPPLE x 75mm LG POExTCE
8	1	25	A 350 Gr. LF2	CL 3000, THRD CAP
9	6	100	A 350 Gr. LF2	CL 150, SCH STD, RF, WN FLANGE
10	1	25	3A-29	CL 600, SW, BALL VALVE
11	1	100		CL 150, FLEXIBLE (FLEXONICS)
12	6	100	ASME B16.20	CL 150, GARLOCK 5500, RING TYPE GASKET 1/8" THK
13	48	16	A 193 B7/A 194 2H	CL 150, 8 - 15.875 X 90 STUD BOLTS c/w TWO HEAVY HEX NUTS
14	1	100	CK-29	CL 150, RF, SWING CHECK VALVE
15	1	100		PIPE BRACKET C150x12x300 WELDED TO CONTAINER C/W U-BOLT
16	1	100		LOADING ARM BRACKET AS PER DETAIL 11, DWG 65-116-270-201

No.	DATE	REVISION	PAR / APP.
3	2017/09/21	PROJECT TITLE REVISED	KHV
2	2017/09/11	LINE NUMBERS REVISED	KHV
1	2017/06/30	DRAIN REVISED AS PER CLIENT COMMENTS	QVN
0	2017/05/15	ISSUED FOR CONSTRUCTION	KHV

CLIENT: AGNICO EAGLE

NUQSANA-PROMEC MINING

ultragen

CONSULTANT PROJECT NO. 591700

NO. DE CONDUITE		SPECIFICATION	PRODUIT	SYSTEME REVETEMENT	CODE DE COULEUR	ISOLATION ET TRACAGE	EPAISS. D'ISOLATION		
116-100-PDI-CC10-0023		CC10	PDI					65-116-270-200	PIPE SUPPORT DETAILS
PRESSION D'OPERATION	TEMPERATURE D'OPERATION	PRESSION DE CONCEPTION	TEMPERATURE DE CONCEPTION	PRESSION D'ESSAI	CLASSE D'INSPECTION	CODE DE SERVICE	TRAITEMENT THERMIQUE	65-116-205-200	P&ID
PSIG	°F	PSIG	°F	PSIG				No. DESSIN	DESSINS DE REFERENCE

SCEAU PROFESSIONNEL
REGISTERED PROFESSIONAL ENGINEER
D. TRUONG
LICENSEE
NT/NU
2017/09/21

CONC.: KHV DATE: 2017/04/25
DESSINE PAR: KVE DATE: 2017/04/25
VER. PAR: - DATE: -
APP.: - DATE: -
ECHELLE: AUCUNE

PROJET: AGNICO EAGLE - MELIADINE DIVISION
116 - FUEL TANK FARM

TITRE: RANKIN INLET
FABRICATION ISOMETRIC
DIESEL FROM 65PDD11601A TO BOTTOM LOADING ARM 65EQM11601

No PROJET	No DESSIN	PAGES	REV.
6515	116-100-PDI-CC10-0023	4/4	3

116-MN-01

IMPRIMÉ LE: Sep 13, 2017, 2:43pm

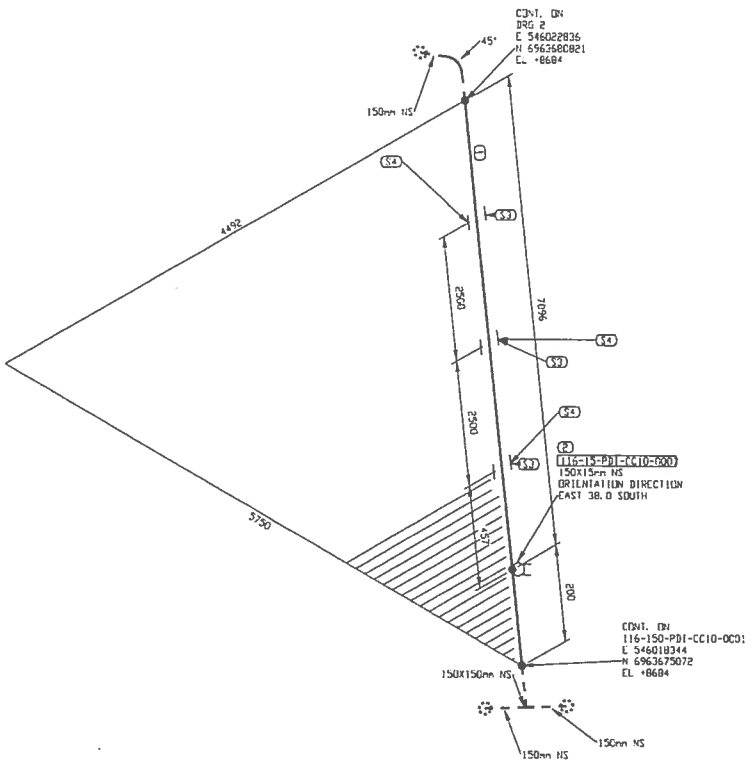

PERMIT TO PRACTICE
LE GROUPE ULTRAGEN LTÉE
Signature
Date SEP 21 2017
PERMIT NUMBER: P 1180
NT/NU Association of Professional Engineers and Geoscientists

FABRICATION DRAWINGS BASED ON WSP CERTIFIED ENGINEERING

LISTE DE MATERIEL

No	QTE	DIA	MATERIEL/CATALOGUE	DESCRIPTION
1	7296 MM	150	A 333 Gr. 6	SCH STD, SMLS PIPE
2	1	150X15	A 350 Gr. LF2	CL 3000, THREDOLET
3	3	150		PIPE SUPPORT AS PER DETAIL 1, DWG 65-116-270-200
4	3	150		PIPE SHOE AS PER DETAIL 2, DWG 65-116-270-200

No.	DATE	REVISION	PAR / APP.
2	2017/09/21	PROJECT TITLE REVISED	KHV
1	2017/09/11	LINE NUMBERS REVISED	KHV
0	2017/05/15	ISSUED FOR CONSTRUCTION	KHV

CLIENT: AGNICO EAGLE

NUQSANA/PROMEC MINING

ultragen

CONSULTANT PROJECT NO. 591700

NO. DE CONDUITE		SPECIFICATION	PRODUIT	SYSTEME REVETEMENT	CODE DE COULEUR	ISOLATION ET TRACAGE	EPAISS. D'ISOLATION		
116-150-PDI-CC10-0004		CC10	PDI		-			65-116-270-200	PIPE SUPPORT DETAILS
PRESSION D'OPERATION	TEMPERATURE D'OPERATION	PRESSION DE CONCEPTION	TEMPERATURE DE CONCEPTION	PRESSION D'ESSAI	CLASSE D'INSPECTION	CODE DE SERVICE	TRAITEMENT THERMIQUE	65-116-205-200	P&ID
		PSIG	°F	PSIG				No. DESSIN	DESSINS DE REFERENCE

SCEAU PROFESSIONNEL
REGISTERED PROFESSIONAL ENGINEER
D TRUONG
LICENSEE
2017/09/21

CONC.: KHV DATE: 2017/04/25
DESSINE PAR: KVE DATE: 2017/04/25
VER. PAR: - DATE: -
APP.: - DATE: -
ÉCHELLE: AUCUNE

PROJET: AGNICO EAGLE - MELIADINE DIVISION
116 - FUEL TANK FARM

TITRE: RANKIN INLET
FABRICATION ISOMETRIC
MARINE LINE TO 65TNK11602

No PROJET	No DESSIN	PAGES	REV.
6515	116-150-PDI-CC10-0004	1/3	2

116-MN-01

ICHIER: n:\Agnico Eagle\Meliadine\Utility\20 Design\02 Isométriques\01 Rankin Inlet\116-150-PDI-CC10-0004-1.DWG
SAVED LE: Sep 20, 2017, 2:44pm

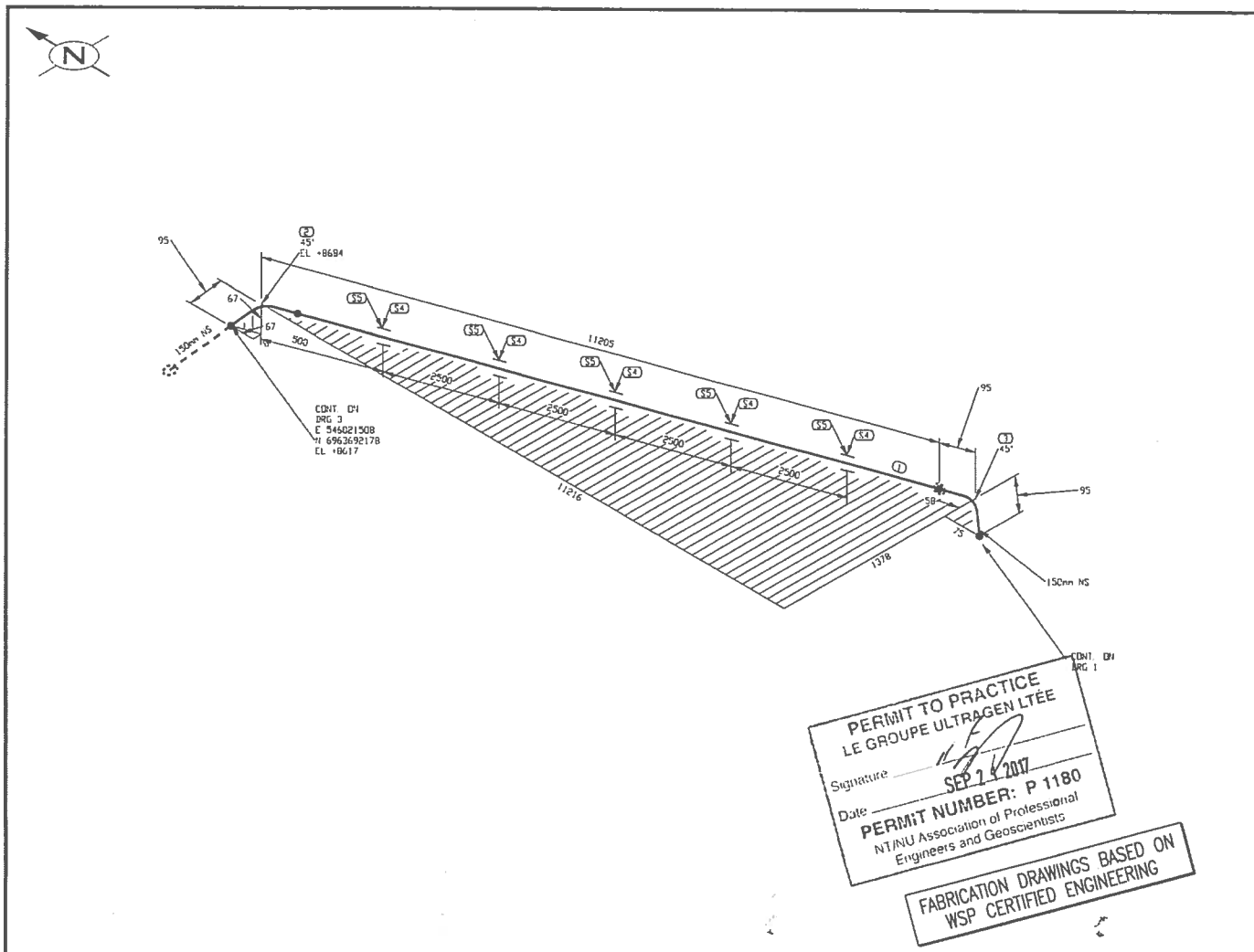

LISTE DE MATERIEL

No	QTE	DIA	MATERIEL/CATALOGUE	DESCRIPTION
1	11110 MM	150	A 333 Gr. 6	SCH STD, SMLS PIPE
2	1	150	A 420 Gr. VPL6	SCH STD, BW LR 45 DEG ELBOW
3	1	150	A 420 Gr. VPL6	SCH STD, BW LR 90 DEG ELBOW TRIM TO 45.00
4	5	150		PIPE SUPPORT AS PER DETAIL 1, DWG 65-116-270-200
5	5	150		PIPE SHOE AS PER DETAIL 2, DWG 65-116-270-200

No.	DATE	REVISION	PAR / APP.
2	2017/09/21	PROJECT TITLE REVISED	KHV
1	2017/09/11	LINE NUMBERS REVISED	KHV
0	2017/05/15	ISSUED FOR CONSTRUCTION	KHV

CLIENT:

AGNICO EAGLE

NUQSANA PROMEC MINING

ultragen

CONSULTANT PROJECT NO. 591700

NO. DE CONDUITE		SPECIFICATION	PRODUIT	SYSTEME REVETEMENT	CODE DE COULEUR	ISOLATION ET TRACAGE	EPAISS. D'ISOLATION		
116-150-PDI-CC10-0004		CC10	PDI		-			65-116-270-200	PIPE SUPPORT DETAILS
PRESSION D'OPERATION	TEMPERATURE D'OPERATION	PRESSION DE CONCEPTION	TEMPERATURE DE CONCEPTION	PRESSION D'ESSAI	CLASSE D'INSPECTION	CODE DE SERVICE	TRAITEMENT THERMIQUE	65-116-205-200	P&ID
PSIG	°F	PSIG	°F	PSIG				No. DESSIN	DESSINS DE REFERENCE

SCEAU PROFESSIONNEL

REGISTERED PROFESSIONAL ENGINEER
D. TRUONG
LICENSEE
NT/NU
2017/09/21

CONC.: KHV
DATE: 2017/04/25
DESSINÉ PAR: KVE
DATE: 2017/04/25
VER. PAR: -
DATE: -
APP.: -
DATE: -
ÉCHELLE: AUCUNE

PROJET: AGNICO EAGLE - MELIADINE DIVISION
116 - FUEL TANK FARM

TITRE: RANKIN INLET
FABRICATION ISOMETRIC
MARINE LINE TO 65TNK11602

No PROJET	No DESSIN	PAGES	REV.
6515	116-150-PDI-CC10-0004	2/3	2

116-MN-01

IMPRIME LE: Sep 20, 2017, 2:45pm

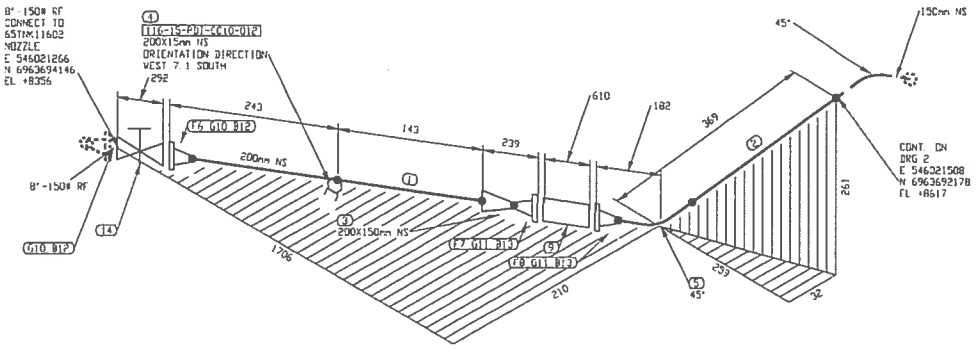

PERMIT TO PRACTICE
LE GROUPE ULTRAGEN LTEE
Signature
Date SEP 2 X 2017
PERMIT NUMBER: P 1180
NT/NU Association of Professional Engineers and Geoscientists

FABRICATION DRAWINGS BASED ON WSP CERTIFIED ENGINEERING

LISTE DE MATERIEL

No	QTE	DIA	MATERIEL/CATALOGUE	DESCRIPTION
1	286 MM	200	A 333 Gr. 6	SCH STD, SMLS PIPE
2	274 MM	150	A 333 Gr 6	SCH STD, SMLS PIPE
3	1	200x150	A 420 Gr WPL6	SCH STD, BW CONC RED
4	1	200x15	A 350 Gr LF2	CL 3000, THREDOLET
5	1	150	A 420 Gr WPL6	SCH STD, BW LR 45 DEG ELBOW
6	1	200	A 350 Gr LF2	CL 150, SCH STD, RF, WN FLANGE
7	1	150	A 350 Gr LF2	CL 150, SCH STD, RF, WN FLANGE
8	1	150	A 350 Gr LF2	CL 150, SCH STD, RF, WN FLANGE
9	1	150		CL 150, SINGLE BRAIDED HOSE ASSEMBLY
10	2	200	ASME B16.20	CL 150, GARLOCK 5500, RING TYPE GASKET 1/8" THK
11	2	150	ASME B16.20	CL 150, GARLOCK 5500, RING TYPE GASKET 1/8" THK
12	16	19	A 193 B7/A 194 2H	CL 150, 8 - 19.05 X 110 STUD BOLTS c/w TWO HEAVY HEX NUTS
13	16	19	A 193 B7/A 194 2H	CL 150, 8 - 19.05 X 100 STUD BOLTS c/w TWO HEAVY HEX NUTS
14	1	200	GA-10	CL 150, RF, GATE VALVE

No.	DATE	REVISION	PAR / APP.
2	2017/09/21	PROJECT TITLE REVISED	KHV
1	2017/09/11	LINE NUMBERS REVISED	KHV
0	2017/05/15	ISSUED FOR CONSTRUCTION	KHV

CLIENT: AGNICO EAGLE

NUQSANA-PROJET MINING

ultragen

CONSULTANT PROJECT NO. 591700

NO. DE CONDUITE		SPECIFICATION	PRODUIT	SYSTEME REVETEMENT	CODE DE COULEUR	ISOLATION ET TRACAGE	EPAISS. D'ISOLATION		
116-150-PDI-CC10-0004		CC10	PDI		-			65-116-270-200	PIPE SUPPORT DETAILS
PRESSION D'OPERATION	TEMPERATURE D'OPERATION	PRESSION DE CONCEPTION	TEMPERATURE DE CONCEPTION	PRESSION D'ESSAI	CLASSE D'INSPECTION	CODE DE SERVICE	TRAITEMENT THERMIQUE	65-116-205-200	P&ID
PSIG	°F	PSIG	°F	PSIG				No. DESSIN	DESSINS DE REFERENCE

SCEAU PROFESSIONNEL
REGISTERED PROFESSIONAL ENGINEER
D TRUONG
LICENSEE
2017/09/21

CONC.: KHV DATE: 2017/04/25
DESSINE PAR: KVE DATE: 2017/04/25
VER. PAR: - DATE: -
APP.: - DATE: -
ECHELLE: AUCUNE

PROJET: AGNICO EAGLE - MELIADINE DIVISION
116 - FUEL TANK FARM

TITRE: RANKIN INLET
FABRICATION ISOMETRIC
MARINE LINE TO 65TNK11602

No PROJET	No DESSIN	PAGES	REV.
6515	116-150-PDI-CC10-0004	3/3	2

116-MN-01

ICMDE N:\Agnico Eagle\Meliadine\Utility\700 (Fuel Distribution)\05 Design\07 Isométriques\01 Revit Model\116-150-PDI-CC10-0004-3.dwg
MARRAY LE. Sep 20, 2017, 2:45pm

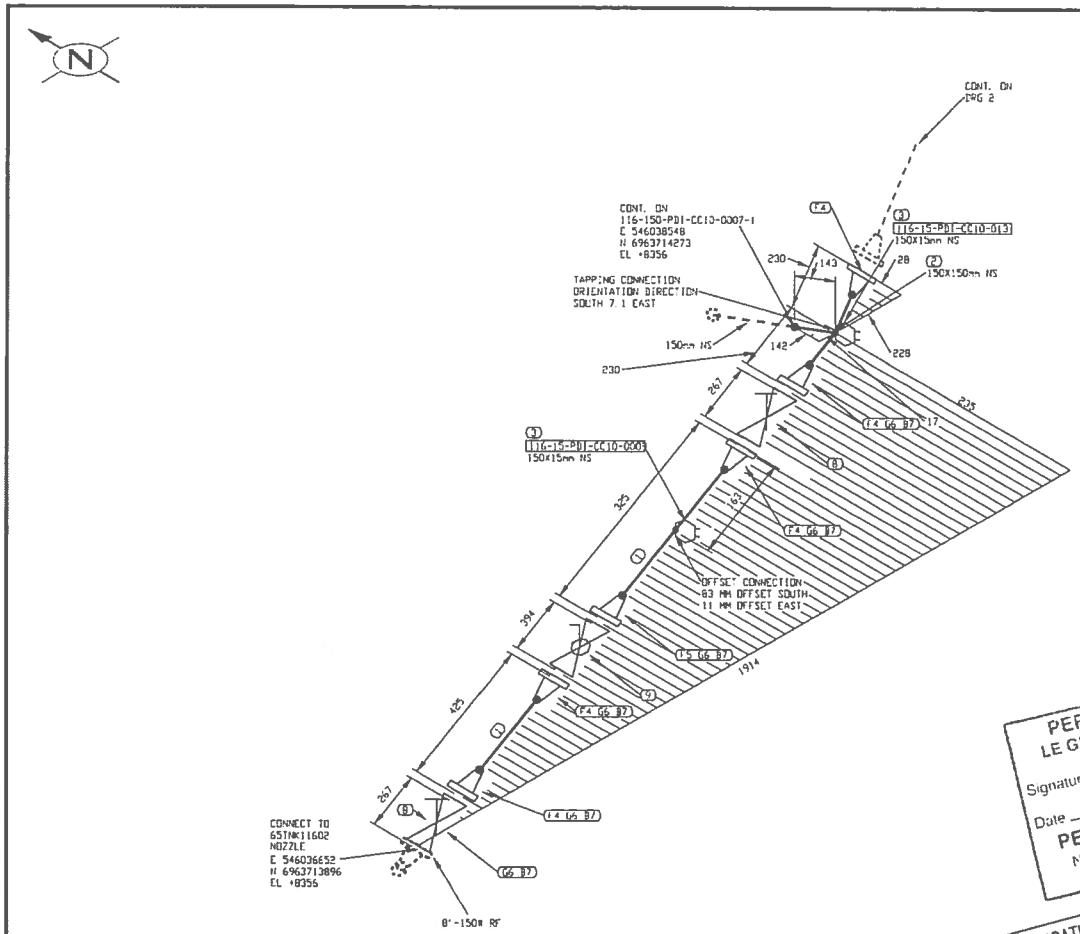

PERMIT TO PRACTICE
LE GROUPE ULTRAGEN LTÉE
Signature
Date SEP 21 2017
PERMIT NUMBER: P 1180
NT/NU Association of Professional Engineers and Geoscientists

FABRICATION DRAWINGS BASED ON WSP CERTIFIED ENGINEERING

LISTE DE MATERIEL

No	Q'TE	D/A	MATERIEL/CATALOGUE	DESCRIPTION
1	402 MM	150	A 333 Gr. 6	SCH STD, SMLS PIPE
2	1	150X150	A 420 Gr. WPL6	SCH STD, BW STRAIGHT TEE
3	2	150X15	A 350 Gr. LF2	CL 3000, THREDOLET
4	5	150	A 350 Gr. LF2	CL 150, SCH STD, RF, WN FLANGE
5	1	150	A 350 Gr. LF2	CL 150, SCH STD, RF, WN FLANGE
6	6	150	ASME B16.20	CL 150, GARLOCK 5500, RING TYPE GASKET 1/8" THK
7	48	19	A 193 B7/A 194 2H	CL 150, 8 - 19.05 X 100 STUD BOLTS c/w TWO HEAVY HEX NUTS
8	2	150	GA-10	CL 150, RF, GATE VALVE
9	1	150	BA-31	CL 150, RF, BALL VALVE

No.	DATE	REVISION	PAR / APP
2	2017/09/21	PROJECT TITLE REVISED	KHV
1	2017/09/11	LINE NUMBERS REVISED	KHV
0	2017/05/15	ISSUED FOR CONSTRUCTION	KHV

CLIENT:

AGNICO EAGLE

NUQSANA PROMEC MINING

ultragen

CONSULTANT PROJECT NO. 591700

NO. DE CONDUITE		SPECIFICATION	PRODUIT	SYSTEME REVETEMENT	CODE DE COULEUR	ISOLATION ET TRACAGE	EPAISS. D'ISOLATION		
116-150-PDI-CC10-0006		CC10	PDI		-			65-116-270-200	PIPE SUPPORT DETAILS
PRESSION D'OPERATION	TEMPERATURE D'OPERATION	PRESSION DE CONCEPTION	TEMPERATURE DE CONCEPTION	PRESSION D'ESSAI	CLASSE D'INSPECTION	CODE DE SERVICE	TRAITEMENT THERMIQUE	65-116-205-200	P&ID
PSIG	°F	PSIG	°F	PSIG				No. DESSIN	DESSINS DE REFERENCE

SCEAU PROFESSIONNEL
REGISTERED PROFESSIONAL ENGINEER
D. TRUONG
LICENSEE
NT/NU
2017/09/21

CONC.: KHV
DATE: 2017/04/25
DESSINE PAR: KVE
DATE: 2017/04/25
VER. PAR:
DATE:
APP.:
DATE:
ECHELLE: AUCUNE

PROJET: AGNICO EAGLE - MELIADINE DIVISION
116 - FUEL TANK FARM

TITRE: RANKIN INLET
FABRICATION ISOMETRIC
DIESEL FROM 65TNK11601 & 65TNK11602 TO PUMPING STATION

No PROJET	No DESSIN	PAGES	REV.
6515	116-150-PDI-CC10-0006	1/12	2

116-MN-01

IMPRIME LE: Sep 20, 2017, 2:45pm

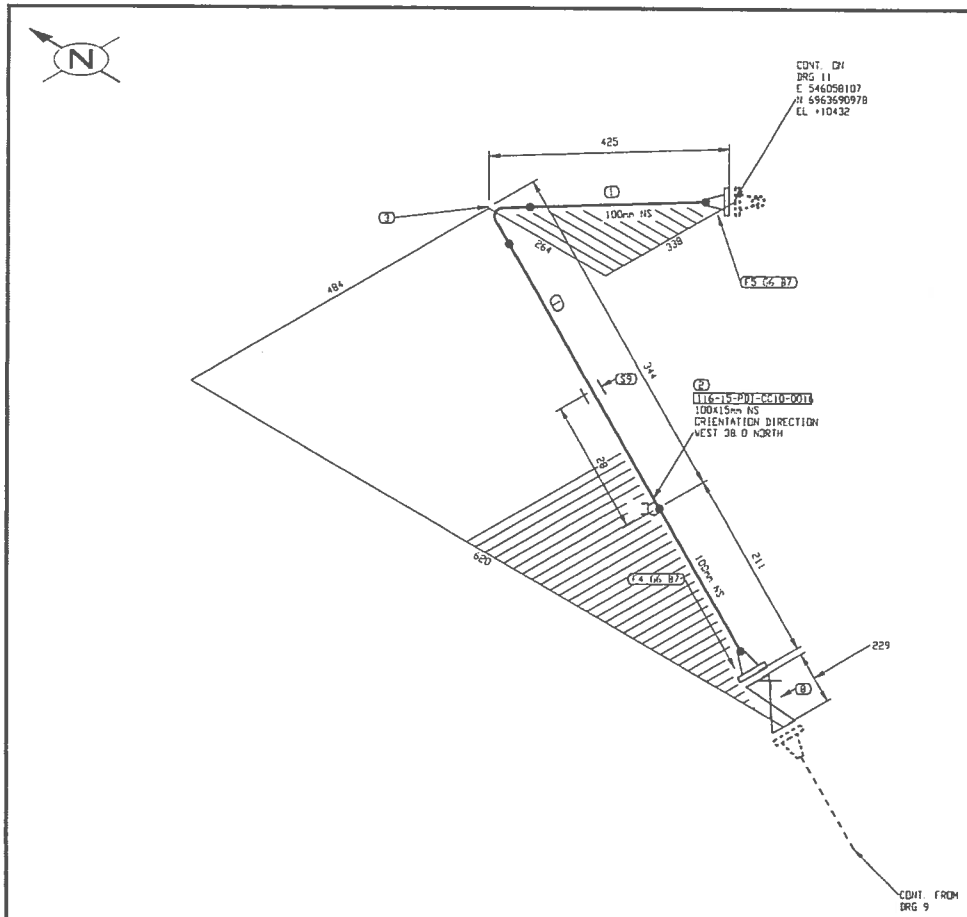

PERMIT TO PRACTICE
LE GROUPE ULTRAGEN LTÉE
Signature
Date SEP 2 1 2017
PERMIT NUMBER: P 1180
NT/NU Association of Professional Engineers and Geoscientists

FABRICATION DRAWINGS BASED ON WSP CERTIFIED ENGINEERING

LISTE DE MATERIEL

No	QTE	DIA	MATERIEL/CATALOGUE	DESCRIPTION
1	527 MM	100	A 333 Gr. 6	SCH STD, SMLS PIPE
2	1	100X15	A 350 Gr. LF2	CL 3000, THREDOLET
3	1	100	A 420 Gr. WPL6	SCH STD, BW LR 90 DEG ELBOW
4	1	100	A 350 Gr. LF2	CL 150, SCH STD, RF, WN FLANGE
5	1	100	A 350 Gr. LF2	CL 150, SCH STD, RF, WN FLANGE
6	2	100	ASME B16.20	CL 150, GARLOCK 5500, RING TYPE GASKET 1/8" THK
7	16	16	A 193 B7/A 194 2H	CL 150, 8 - 15.875 X 90 STUD BOLTS c/w TWO HEAVY HEX NUTS
8	1	100	GA-10	CL 150, RF, GATE VALVE
9	1	100		PIPE BRACKET C150x12x300 WELDED TO CONTAINER C/W U-BOLT

No.	DATE	REVISION	PAR / APP
2	2017/09/21	PROJECT TITLE REVISED	KHV
1	2017/09/11	LINE NUMBERS REVISED	KHV
0	2017/05/15	ISSUED FOR CONSTRUCTION	KHV

CLIENT:

AGNICO EAGLE

NUQSANA PROMEC MINING

ultragen

CONSULTANT PROJECT NO. 591700

NO. DE CONDUITE		SPECIFICATION	PRODUIT	SYSTEME REVETEMENT	CODE DE COULEUR	ISOLATION ET TRACAGE	EPAISS. D'ISOLATION		
116-150-PDI-CC10-0006		CC10	PDI		-			65-116-270-200	PIPE SUPPORT DETAILS
PRESSION D'OPERATION	TEMPERATURE D'OPERATION	PRESSION DE CONCEPTION	TEMPERATURE DE CONCEPTION	PRESSION D'ESSAI	CLASSE D'INSPECTION	CODE DE SERVICE	TRAITEMENT THERMIQUE	65-116-205-200	P&ID
PSIG	°F	PSIG	°F	PSIG				No. DESSIN	DESSINS DE REFERENCE

SCEAU PROFESSIONNEL
REGISTERED PROFESSIONAL ENGINEER
D. TRUONG
LICENSEE
NT/NU
2017/09/21

CONC.: KHV
DATE: 2017/04/25
DESSINÉ PAR: KVE
DATE: 2017/04/25
VER. PAR: -
DATE: -
APP.: -
DATE: -
ECHELLE: AUCUNE

PROJET: AGNICO EAGLE - MELIADINE DIVISION
116 - FUEL TANK FARM

TITRE: RANKIN INLET
FABRICATION ISOMETRIC
DIESEL FROM 65TNK11601 & 65TNK11602 TO PUMPING STATION

No PROJET	No DESSIN	PAGES	REV.
6515	116-150-PDI-CC10-0006	10/12	2

116-MN-01

FICHIER: N:\Agnico Eagle\Meliadine\591700 (Fuel Distribution)\05. Dessins\02. Tuyauterie\02. transférables\01. Rankin Inlet\116-150-PDI-CC10-0006-10.DWG

IMPRIMÉ LE: Sep 20, 2017, 2:45pm

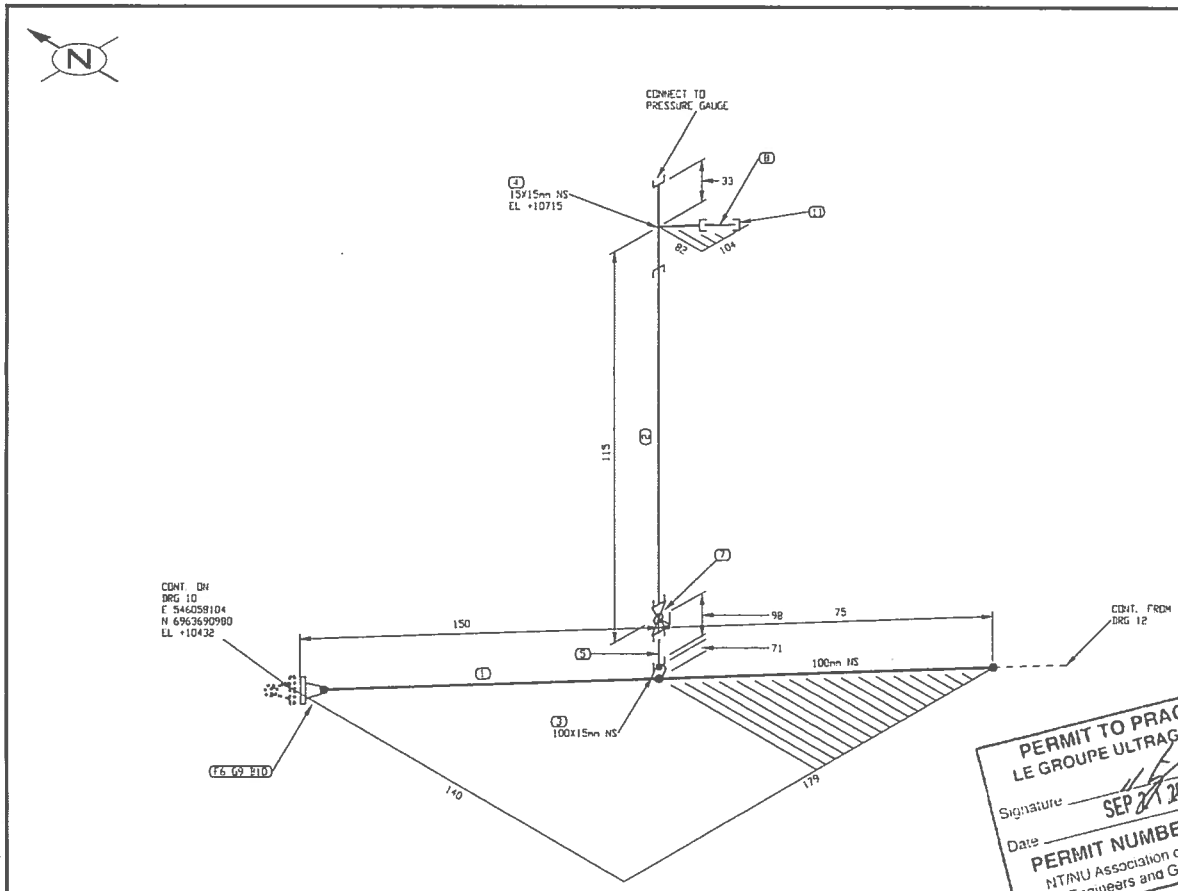

PERMIT TO PRACTICE
LE GROUPE ULTRAGEN LTÉE
Signature SEP 21 2017
Date
PERMIT NUMBER: P 1180
NT/NU Association of Professional Engineers and Geoscientists

FABRICATION DRAWINGS BASED ON WSP CERTIFIED ENGINEERING

LISTE DE MATERIEL

No	QTE	DIA	MATERIEL/CATALOGUE	DESCRIPTION
1	150 MM	100	A 333 Gr. 6	SCH STD, SMLS PIPE
2	74 MM	15	A 333 Gr. 6	SCH 80, SMLS PIPE
3	1	100X15	A 350 Gr. LF2	CL 3000, SOCKOLET
4	1	15X15	A 350 Gr. LF2	CL 3000, THRD STRAIGHT TEE
5	1	15	A 333 Gr. 6	SCH 80, NIPPLE x 75mm LG PDE*TOE
6	1	100	A 350 Gr. LF2	CL 150, SCH STD, RF, VN FLANGE
7	1	15	BA-32	CL 600, THRD, BALL VALVE
8	1	15	A 333 Gr. 6	SCH 80, NIPPLE x 75mm LG TBE
9	1	100	ASME B16.20	CL 150, GARLOCK 5500, RING TYPE GASKET 1/8" THK
10	8	16	A 193 B7/A 194 2H	CL 150, 8 - 15.875 X 90 STUD BOLTS c/w TWO HEAVY HEX NUTS
11	1	15	A 350 Gr. LF2	CL 3000, THRD CAP

No.	DATE	REVISION	PAR / APP.
2	2017/09/21	PROJECT TITLE REVISED	KHV
1	2017/09/11	LINE NUMBERS REVISED	KHV
0	2017/05/15	ISSUED FOR CONSTRUCTION	KHV

CLIENT: AGNICO EAGLE

NUQSANA-PROMEC MINING

ultragen.

CONSULTANT PROJECT NO. 591700

NO. DE CONDUITE		SPECIFICATION	PRODUIT	SYSTEME REVETEMENT	CODE DE COULEUR	ISOLATION ET TRACAGE	EPAISS. D'ISOLATION		
116-150-PDI-CC10-0006		CC10	PDI		-			65-116-270-200	PIPE SUPPORT DETAILS
PRESSION D'OPERATION	TEMPERATURE D'OPERATION	PRESSION DE CONCEPTION	TEMPERATURE DE CONCEPTION	PRESSION D'ESSAI	CLASSE D'INSPECTION	CODE DE SERVICE	TRAITEMENT THERMIQUE	65-116-205-200	P&ID
PSIG	°F	PSIG	°F	PSIG				No. DESSIN	DESSINS DE REFERENCE

SCEAU PROFESSIONNEL
REGISTERED PROFESSIONAL ENGINEER
D TRUONG
LICENSEE
2017/09/21

CONC.: KHV
DATE: 2017/04/25
DESSINÉ PAR: KVE
DATE: 2017/04/25
VÉR. PAR: -
DATE: -
APP.: -
DATE: -
ÉCHELLE: AUCUNE

PROJET: AGNICO EAGLE - MEL1ADINE DIVISION
116 - FUEL TANK FARM

TITRE: RANKIN INLET
FABRICATION ISOMETRIC
DIESEL FROM 65TNK11601 & 65TNK11602 TO PUMPING STATION

No PROJET	No DESSIN	PAGES	REV.
6515	116-150-PDI-CC10-0006	11/12	2

116-MN-01

I:\DWG\N_Yyyy\e Eagle\Work-date\591700 (Fuel Distribution)\05. Drawing\02. Isometrics\01. Revision in etl\116-150-PDI-CC10-0006-11.DWG
AUTOCAD LT. Sep 20, 2017, 2:44pm

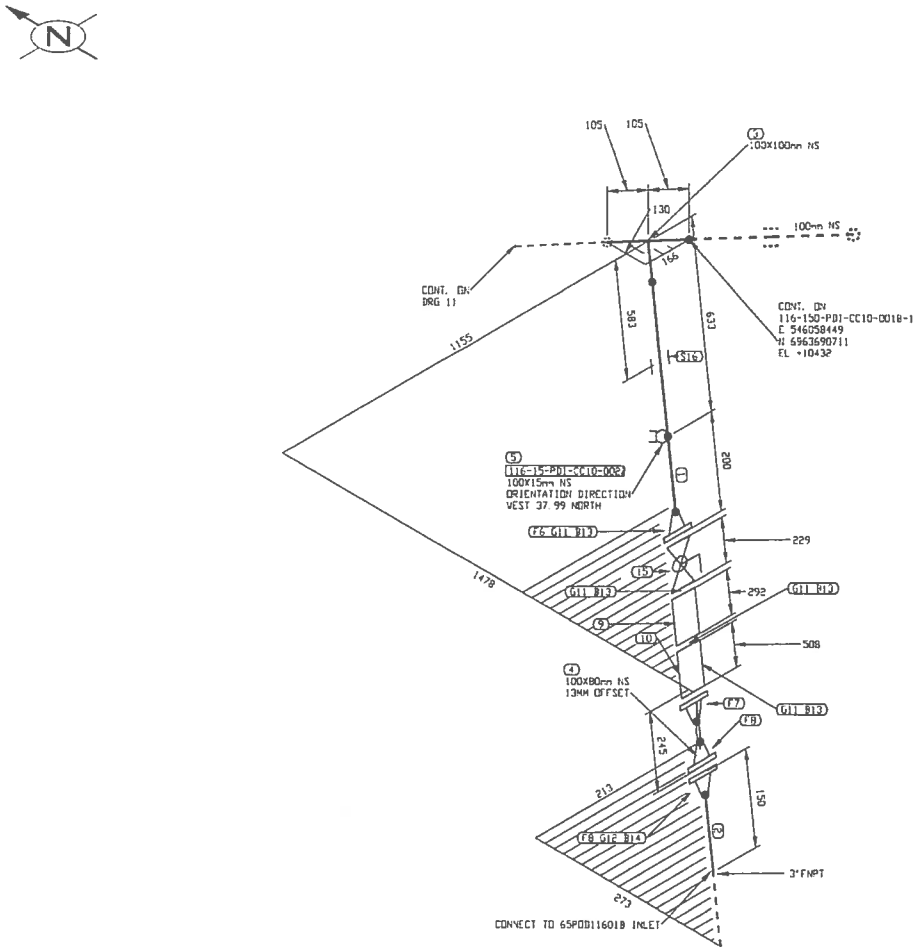

PERMIT TO PRACTICE
LE GROUPE ULTRAGEN LTÉE
Signature
Date SEP 21 2017
PERMIT NUMBER: P 1180
NT/NU Association of Professional Engineers and Geoscientists

FABRICATION DRAWINGS BASED ON WSP CERTIFIED ENGINEERING

LISTE DE MATERIEL

No	QTE	DIA	MATERIEL/CATALOGUE	DESCRIPTION
1	653 MM	100	A 333 Gr. 6	SCH STD, SMLS PIPE
2	81 MM	80	A 333 Gr. 6	SCH STD, SMLS PIPE POExTOE
3	1	100X100	A 420 Gr. WPL6	SCH STD, BW STRAIGHT TEE
4	1	100X80	A 420 Gr. WPL6	SCH STD, BW ECC RED
5	1	100X15	A 350 Gr. LF2	CL 3000, THREDOLET
6	1	100	A 350 Gr. LF2	CL 150, SCH STD, RF, WN FLANGE
7	1	100	A 350 Gr. LF2	CL 150, SCH STD, RF, WN FLANGE
8	2	80	A 350 Gr. LF2	CL 150, SCH STD, RF, WN FLANGE
9	1	100		CL 150, BASKET STRAINER
10	1	100		CL 150, SINGLE BRAIDED HOSE ASSEMBLY
11	4	100	ASME B16.20	CL 150, GARLOCK 5500, RING TYPE GASKET 1/8" THK
12	1	80	ASME B16.20	CL 150, GARLOCK 5500, RING TYPE GASKET 1/8" THK
13	32	16	A 193 B7/A 194 2H	CL 150, 8 - 15.875 X 90 STUD BOLTS c/w TWO HEAVY HEX NUTS
14	4	16	A 193 B7/A 194 2H	CL 150, 4 - 15.875 X 90 STUD BOLTS c/w TWO HEAVY HEX NUTS
15	1	100	BA-31	CL 150, RF, BALL VALVE
16	1	100		PIPE SUPPORT AS PER DETAIL 9, DWG 65-116-270-200

No.	DATE	REVISION	PAR / APP.
2	2017/09/21	PROJECT TITLE REVISED	KHV
1	2017/09/11	LINE NUMBERS REVISED	KHV
0	2017/05/15	ISSUED FOR CONSTRUCTION	KHV

CLIENT:

AGNICO EAGLE

NUQSANA PROMEC MINING

ultragen

CONSULTANT PROJECT NO. 591700

NO. DE CONDUITE		SPECIFICATION	PRODUIT	SYSTEME REVETEMENT	CODE DE COULEUR	ISOLATION ET TRACAGE	EPAISS. D'ISOLATION		
116-150-PDI-CC10-0006		CC10	PDI		-			65-116-270-200	PIPE SUPPORT DETAILS
PRESSION D'OPERATION	TEMPERATURE D'OPERATION	PRESSION DE CONCEPTION	TEMPERATURE DE CONCEPTION	PRESSION D'ESSAI	CLASSE D'INSPECTION	CODE DE SERVICE	TRAITEMENT THERMIQUE	65-116-205-200	P&ID
PSIG	°F	PSIG	°F	PSIG				No. DESSIN	DESSINS DE REFERENCE

SCEAU PROFESSIONNEL
REGISTERED PROFESSIONAL ENGINEER
D. TRUONG
LICENSEE
2017/09/21

CONC.: KHV
DATE: 2017/04/25
DESSINE PAR: KVE
DATE: 2017/04/25
VER. PAR:
DATE:
APP.:
DATE:
ECHELLE: AUCUNE

PROJET: AGNICO EAGLE - MELIADINE DIVISION
116 - FUEL TANK FARM

TITRE: RANKIN INLET
FABRICATION ISOMETRIC
DIESEL FROM 65TNK11601 & 65TNK11602 TO PUMPING STATION

No PROJET	No DESSIN	PAGES	REV.
6515	116-150-PDI-CC10-0006	12/12	2

116-MN-01

FICHIER: W:\Agnico Eagle\Meliadine\591700 (Fuel Distribution)\06. Dessins\02. Tuyauterie\02. Isométriques\01 Rankin Inlet\116-150-PDI-CC10-0006-12.DWG

APPRAIE LE: Sep 20, 2017, 2:41pm

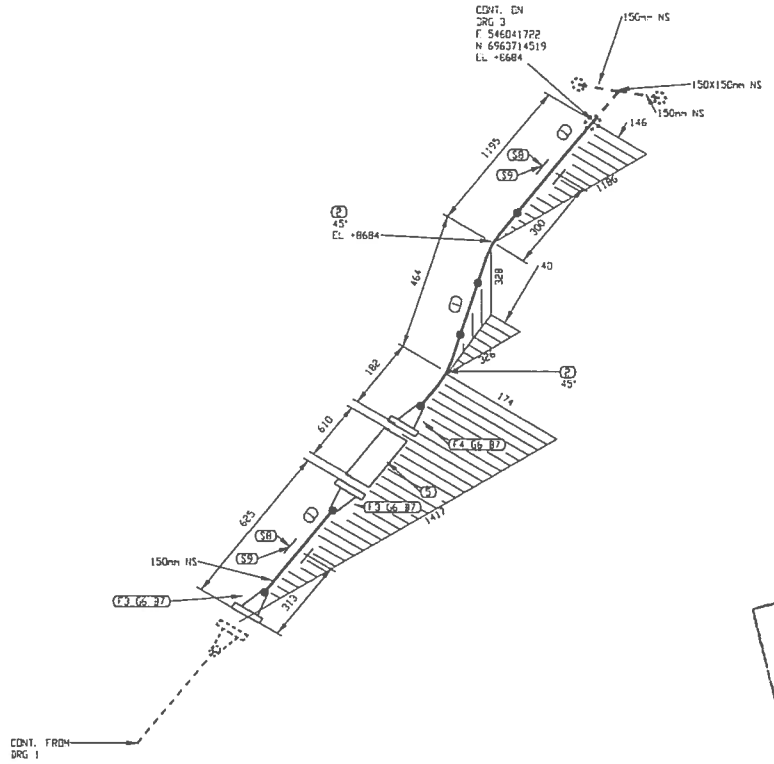

PERMIT TO PRACTICE
LE GROUPE ULTRAGEN LTÉE
Signature
Date SEP 11 2017
PERMIT NUMBER: P 1180
NT/NU Association of Professional Engineers and Geoscientists

FABRICATION DRAWINGS BASED ON WSP CERTIFIED ENGINEERING

LISTE DE MATERIEL

No	QTE	DIA	MATERIEL/CATALOGUE	DESCRIPTION
1	1825 MM	150	A 333 Gr. 6	SCH STD, SMLS PIPE
2	2	150	A 420 Gr. WPL6	SCH STD, BW LR 45 DEG ELBOW
3	2	150	A 350 Gr. LF2	CL 150, SCH STD, RF, WN FLANGE
4	1	150	A 350 Gr. LF2	CL 150, SCH STD, RF, WN FLANGE
5	1	150		CL 150, SINGLE BRAIDED HOSE ASSEMBLY
6	3	150	ASME B16.20	CL 150, GARLOCK 9500, RING TYPE GASKET 1/8" THK
7	24	19	A 193 B7/A 194 2H	CL 150, 8 - 19.05 X 100 STUD BOLTS c/w TWO HEAVY HEX NUTS
8	2	150		PIPE SUPPORT AS PER DETAIL 1, DWG 65-116-270-200
9	2	150		PIPE SHOE AS PER DETAIL 2, DWG 65-116-270-200

No.	DATE	REVISION	PAR / APP.
2	2017/09/21	PROJECT TITLE REVISED	KHV
1	2017/09/11	LINE NUMBERS REVISED	KHV
0	2017/05/15	ISSUED FOR CONSTRUCTION	KHV

CLIENT: AGNICO EAGLE

NUQSANA-PROMEC MINING

ultragen

CONSULTANT PROJECT NO. 591700

NO. DE CONDUITE		SPECIFICATION	PRODUIT	SYSTEME REVETEMENT	CODE DE COULEUR	ISOLATION ET TRACAGE	EPAISS. D'ISOLATION		
116-150-PDI-CC10-0006		CC10	PDI		-			65-116-270-200	PIPE SUPPORT DETAILS
PRESSION D'OPERATION	TEMPERATURE D'OPERATION	PRESSION DE CONCEPTION	TEMPERATURE DE CONCEPTION	PRESSION D'ESSAI	CLASSE D'INSPECTION	CODE DE SERVICE	TRAITEMENT THERMIQUE	65-116-205-200	P&ID
PSIG	°F	PSIG	°F	PSIG				No. DESSIN	DESSINS DE REFERENCE

SCEAU PROFESSIONNEL
REGISTERED PROFESSIONAL ENGINEER
D. TRUONG
LICENSEE

CONC.: KHV
DATE: 2017/04/25
DESSINE PAR: KVE
DATE: 2017/04/25
VER. PAR: -
DATE: -
APP.: -
DATE: -
ÉCHELLE: AUCUNE

PROJET: AGNICO EAGLE - MELIADINE DIVISION
116 - FUEL TANK FARM

TITRE: RANKIN INLET
FABRICATION ISOMETRIC
DIESEL FROM 65TNK11601 & 65TNK11602 TO PUMPING STATION

No PROJET	No DESSIN	PAGES	REV.
6515	116-150-PDI-CC10-0006	2/12	2

116-MN-01

IMPRIMÉ LE: Sep 20, 2017, 2:45pm

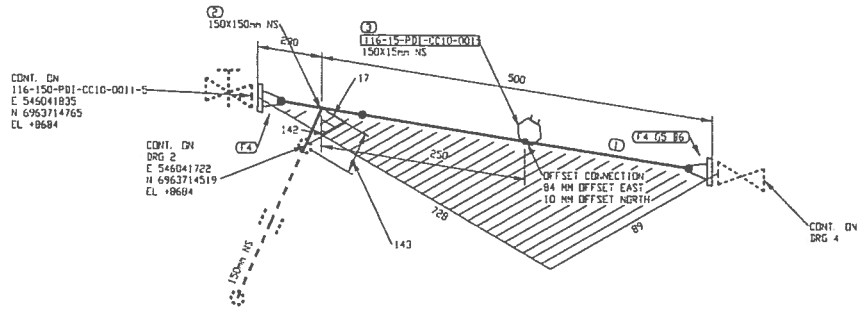

LISTE DE MATERIEL

No	QTE	DIA	MATERIEL/CATALOGUE	DESCRIPTION
1	270 MM	150	A 333 Gr. 6	SCH STD, SMLS PIPE
2	1	150X150	A 420 Gr. WPL6	SCH STD, BW STRAIGHT TEE
3	1	150X15	A 350 Gr. LF2	CL 3000, THREDOLET
4	2	150	A 350 Gr. LF2	CL 150, SCH STD, RF, WN FLANGE
5	1	150	ASME B16.20	CL 150, GARLOCK 5500, RING TYPE GASKET 1/8" THK
6	8	19	A 193 B7/A 194 2H	CL 150, Ø - 19.05 X 100 STUD BOLTS c/w TWO HEAVY HEX NUTS

PERMIT TO PRACTICE
LE GROUPE ULTRAGEN LTÉE
Signature
Date SEP 21 2017
PERMIT NUMBER: P 1180
NT/NU Association of Professional Engineers and Geoscientists

FABRICATION DRAWINGS BASED ON WSP CERTIFIED ENGINEERING

No.	DATE	REVISION	PAR / APP
2	2017/09/21	PROJECT TITLE REVISED	KHV
1	2017/09/11	LINE NUMBERS REVISED	KHV
0	2017/05/15	ISSUED FOR CONSTRUCTION	KHV

CLIENT: AGNICO EAGLE

NUQSANA-PROMEC MINING

ultragen

CONSULTANT PROJECT NO. 591700

NO. DE CONDUITE		SPECIFICATION	PRODUIT	SYSTEME REVETEMENT	CODE DE COULEUR	ISOLATION ET TRACAGE	EPAISS. D'ISOLATION		
116-150-PDI-CC10-0006		CC10	PDI		-			65-116-270-200	PIPE SUPPORT DETAILS
PRESSION D'OPERATION	TEMPERATURE D'OPERATION	PRESSION DE CONCEPTION	TEMPERATURE DE CONCEPTION	PRESSION D'ESSAI	CLASSE D'INSPECTION	CODE DE SERVICE	TRAITEMENT THERMIQUE	65-116-205-200	P&ID
PSIG	°F	PSIG	°F	PSIG				No. DESSIN	DESSINS DE REFERENCE

SCEAU PROFESSIONNEL
REGISTERED PROFESSIONAL ENGINEER
D. TRUONG
LICENSEE
NUNAVUT
2017/09/21

CONC.: KHV
DATE: 2017/04/23
DESSINÉ PAR: KVE
DATE: 2017/04/23
VÉR. PAR: -
DATE: -
APP.: -
DATE: -
ÉCHELLE: AUCUNE

PROJET: AGNICO EAGLE - MELIADINE DIVISION
116 - FUEL TANK FARM

TITRE: RANKIN INLET
FABRICATION ISOMETRIC
DIESEL FROM 65TNK11601 & 65TNK11602 TO PUMPING STATION

No PROJET	No DESSIN	PAGES	REV.
6515	116-150-PDI-CC10-0006	3/12	2

116-MM-01

IMPRIMÉ LE: Sep 20, 2017, 2:45pm

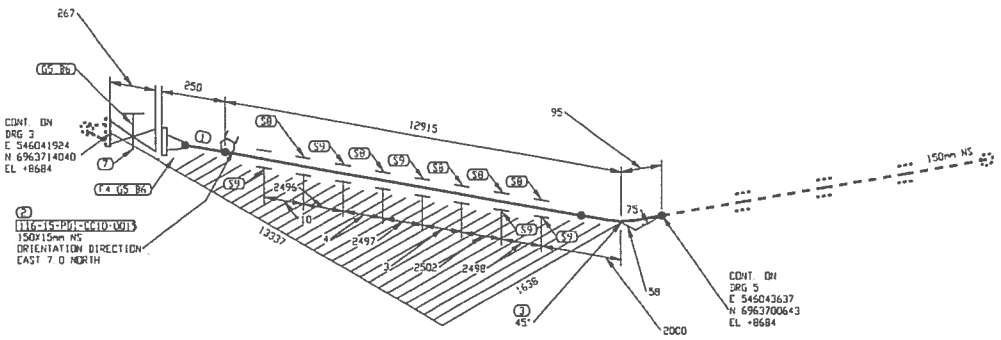

LISTE DE MATERIEL

No	QTE	DIA	MATERIEL/CATALOGUE	DESCRIPTION
1	12983 MM	150	A 333 Gr 6	SCH STD, SMLS PIPE
2	1	150X15	A 350 Gr LF2	CL 3000, THREDOLET
3	1	150	A 420 Gr WPL6	SCH STD, BW LR 45 DEG ELBOW
4	1	150	A 350 Gr LF2	CL 150, SCH STD, RF, WN FLANGE
5	2	150	ASME B16.20	CL 150, GARLOCK 5500, RING TYPE GASKET 1/8" THK
6	16	19	A 193 B7/A 194 2H	CL 150, 8 - 19.05 x 100 STUD BOLTS c/w TWO HEAVY HEX NUTS
7	1	150	GA-10	CL 150, RF, GATE VALVE
8	5	150		PIPE SUPPORT AS PER DETAIL 1, DWG: 65-116-270-200
9	5	150		PIPE SHOE AS PER DETAIL 2, DWG: 65-116-270-200

PERMIT TO PRACTICE
LE GROUPE ULTRAGEN LTÉE
Signature _____
Date SEP 21 2017
PERMIT NUMBER: P 1180
NT/NU Association of Professional Engineers and Geoscientists

FABRICATION DRAWINGS BASED ON WSP CERTIFIED ENGINEERING

No.	DATE	REVISION	APP.
2	2017/09/21	PROJECT TITLE REVISED	KHV
1	2017/09/11	LINE NUMBERS REVISED	KHV
0	2017/05/15	ISSUED FOR CONSTRUCTION	KHV

CLIENT: AGNICO EAGLE

NUQSANA PROMEC MINING

ultragen

CONSULTANT PROJECT NO. 591700

NO. DE CONDUITE		SPECIFICATION	PRODUIT	SYSTEME REVETEMENT	CODE DE COULEUR	ISOLATION ET TRACAGE	EPAISS. D'ISOLATION		
116-150-PDI-CC10-0006		CC10	PDI		-			65-116-270-200	PIPE SUPPORT DETAILS
PRESSION D'OPERATION	TEMPERATURE D'OPERATION	PRESSION DE CONCEPTION	TEMPERATURE DE CONCEPTION	PRESSION D'ESSAI	CLASSE D'INSPECTION	CODE DE SERVICE	TRAITEMENT THERMIQUE	65-116-205-200	P&ID
PSIG	°F	PSIG	°F	PSIG				No. DESSIN	DESSINS DE REFERENCE

SCEAU PROFESSIONNEL
REGISTERED PROFESSIONAL ENGINEER
D. TRUONG
LICENSEE
NT/NU
2017/09/21

CONC.: KHV
DATE: 2017/04/25
DESSINÉ PAR: KVE
DATE: 2017/04/25
VER. PAR: -
DATE: -
APP.: -
DATE: -
ÉCHELLE: AUCUNE

PROJET: AGNICO EAGLE - MELIADINE DIVISION
116 - FUEL TANK FARM

TITRE: RANKIN INLET
FABRICATION ISOMETRIC
DIESEL FROM 65TNK11601 & 65TNK11602 TO PUMPING STATION

No PROJET	No DESSIN	PAGES	REV.
6515	116-150-PDI-CC10-0006	4/12	2

116-MN-01

FICHIER: N:\Projets Engie\Meliadine\591700 (Fuel Distribution)\05. Dessins\02. Isométriques\01. Rankin Inlet\116-150-PDI-CC10-0006-4.DWG

IMPRIMÉ LE: Sep 20, 2017, 2:43pm

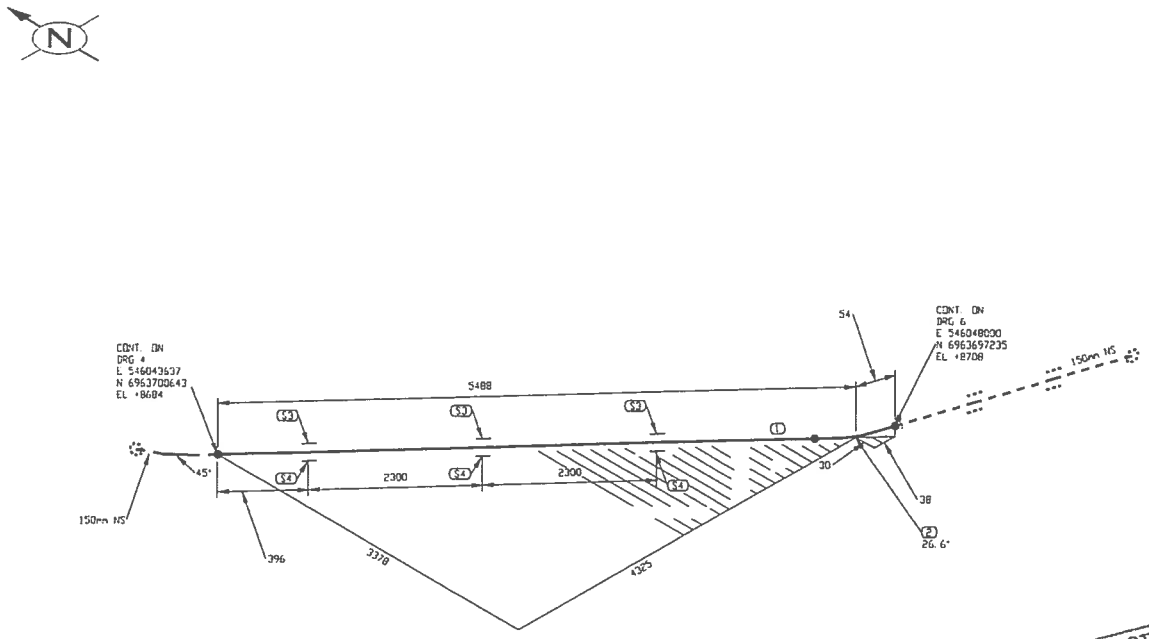

PERMIT TO PRACTICE
LE GROUPE ULTRAGEN LTÉE
Signature
Date SEP 21 2017
PERMIT NUMBER: P 1180
NT/NU Association of Professional Engineers and Geoscientists

FABRICATION DRAWINGS BASED ON WSP CERTIFIED ENGINEERING

LISTE DE MATERIEL

No	QTE	DIA	MATERIEL/CATALOGUE	DESCRIPTION
1	5434 MM	150	A 333 Gr. 6	SCH STD, SMLS PIPE
2	1	150	A 420 Gr. WPL6	SCH STD, BV LR 90 DEG ELBOW TRIM TO 26 57
3	3	150		PIPE SUPPORT AS PER DETAIL 1, DWG: 65-116-270-200
4	3	150		PIPE SHOE AS PER DETAIL 2, DWG: 65-116-270-200

No.	DATE	REVISION	PAR / APP
2	2017/09/21	PROJECT TITLE REVISED	KHV
1	2017/09/11	LINE NUMBERS REVISED	KHV
0	2017/05/15	ISSUED FOR CONSTRUCTION	KHV

CLIENT:

AGNICO EAGLE

NUQSANA PROMEC MINING

ultragen

CONSULTANT PROJECT NO. 591700

NO. DE CONDUITE		SPECIFICATION	PRODUIT	SYSTEME REVETEMENT	CODE DE COULEUR	ISOLATION ET TRACAGE	EPAISS. D'ISOLATION		
116-150-PDI-CC10-0006		CC10	PDI		-			65-116-270-200	PIPE SUPPORT DETAILS
PRESSION D'OPERATION	TEMPERATURE D'OPERATION	PRESSION DE CONCEPTION	TEMPERATURE DE CONCEPTION	PRESSION D'ESSAI	CLASSE D'INSPECTION	CODE DE SERVICE	TRAITEMENT THERMIQUE	65-116-205-200	P&ID
PSIG	°F	PSIG	°F	PSIG				No. DESSIN	DESSINS DE REFERENCE

SCEAU PROFESSIONNEL
REGISTERED PROFESSIONAL ENGINEER
D. TRUONG
LICENSEE
NT/NU
2017/09/21

CONC.: KHV
DATE: 2017/04/25
DESSINE PAR: KVE
DATE: 2017/04/25
VER. PAR: -
DATE: -
APP.: -
DATE: -
ECHELLE: AUCUNE

PROJET:
AGNICO EAGLE - MELIADINE DIVISION
116 - FUEL TANK FARM

TITRE:
RANKIN INLET
FABRICATION ISOMETRIC
DIESEL FROM 65TNK11601 & 65TNK11602 TO PUMPING STATION

No PROJET	No DESSIN	PAGES	REV.
6515	116-150-PDI-CC10-0006	5/12	2

116-MN-01

APPROVE LE: Sep 20, 2017, 2:45pm

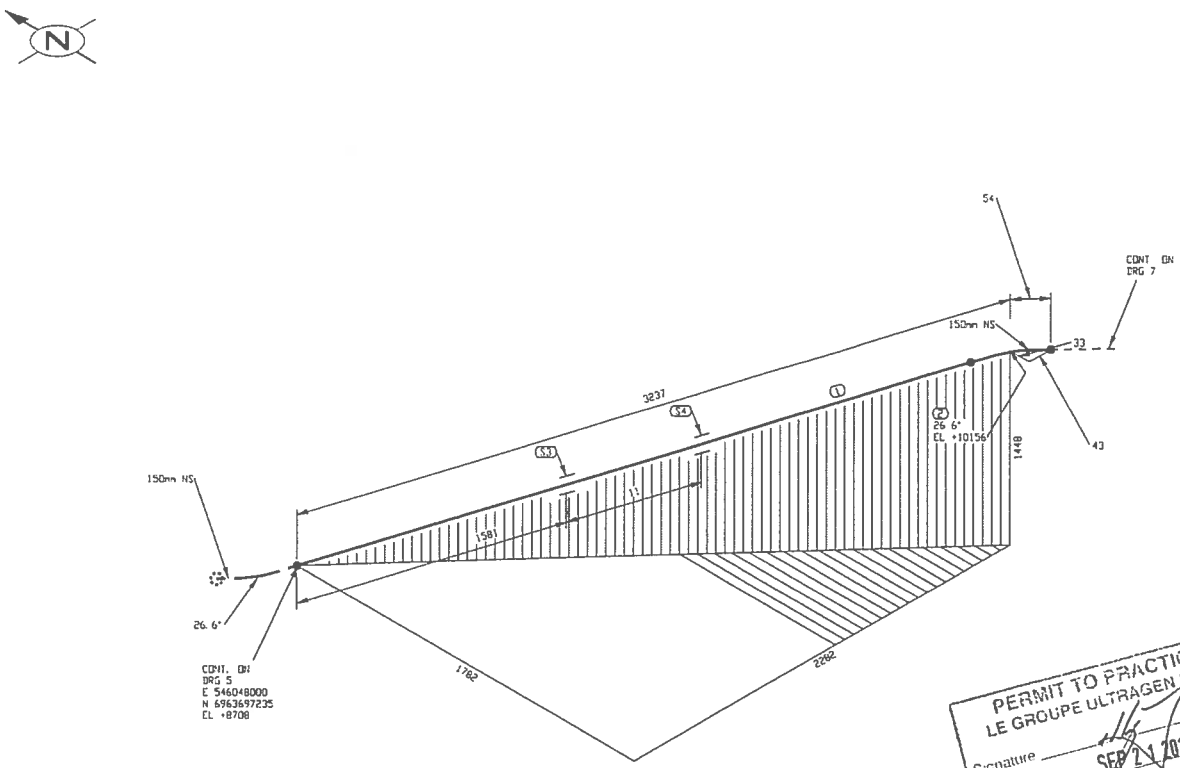

PERMIT TO PRACTICE
LE GROUPE ULTRAGEN LTÉE
Signature
Date SEP 21 2017
PERMIT NUMBER: P 1180
NT/NU Association of Professional Engineers and Geoscientists

FABRICATION DRAWINGS BASED ON WSP CERTIFIED ENGINEERING

LISTE DE MATERIEL

No	QTE	DIA	MATERIEL/CATALOGUE	DESCRIPTION
1	3183 MM	150	A 333 Gr. 6	SCH STD, SMLS PIPE
2	1	150	A 420 Gr. WPL6	SCH STD, BW LR 90 DEG ELBOW TRIM TO 26 57
3	1	150		PIPE SUPPORT AS PER DETAIL 1, DWG: 65-116-270-200
4	1	150		PIPE SHOE AS PER DETAIL 2, DWG: 65-116-270-200

No.	DATE	REVISION	PAR / APP.
2	2017/09/21	PROJECT TITLE REVISED	KHV
1	2017/09/11	LINE NUMBERS REVISED	KHV
0	2017/05/15	ISSUED FOR CONSTRUCTION	KHV

CLIENT:

AGNICO EAGLE

NUQSANA PROMEC MINING

ultragen

CONSULTANT PROJECT NO. 591700

NO. DE CONDUITE		SPECIFICATION	PRODUIT	SYSTEME REVETEMENT	CODE DE COULEUR	ISOLATION ET TRACAGE	EPAISS. D'ISOLATION		
116-150-PDI-CC10-0006		CC10	PDI		-			65-116-270-200	PIPE SUPPORT DETAILS
PRESSION D'OPERATION	TEMPERATURE D'OPERATION	PRESSION DE CONCEPTION	TEMPERATURE DE CONCEPTION	PRESSION D'ESSAI	CLASSE D'INSPECTION	CODE DE SERVICE	TRAITEMENT THERMIQUE	65-116-205-200	P&ID
PSIG	°F	PSIG	°F	PSIG				No. DESSIN	DESSINS DE REFERENCE

SCEAU PROFESSIONNEL
REGISTERED PROFESSIONAL ENGINEER
D TRUONG
LICENSEE
NT/NU
2017/09/21

CONC.: KHV
DATE: 2017/04/25
DESSINÉ PAR: KVE
DATE: 2017/04/25
VER. PAR: -
DATE: -
APP.: -
DATE: -
ECHELLE: AUCUNE

PROJET:
AGNICO EAGLE - MELIADINE DIVISION
116 - FUEL TANK FARM

TITRE:
RANKIN INLET
FABRICATION ISOMETRIC
DIESEL FROM 65TNK11601 & 65TNK11602 TO PUMPING STATION

No PROJET	No DESSIN	PAGES	REV.
6515	116-150-PDI-CC10-0006	6/12	2

116-MN-01

IMPRIMÉ LE: Sep 20, 2017, 2:45pm

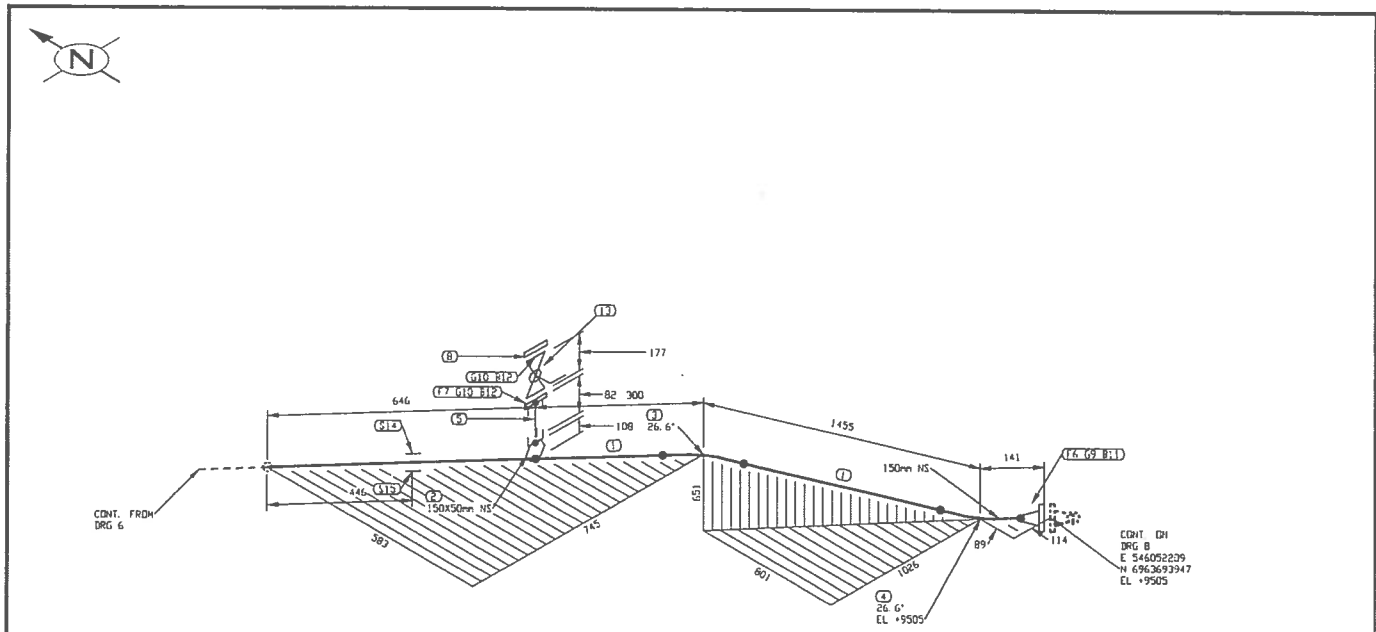

PERMIT TO PRACTICE
LE GROUPE ULTRAGEN LTÉE
Signature
Date SEP 2 1 2017
PERMIT NUMBER: P 1180
NT/NU Association of Professional Engineers and Geoscientists

FABRICATION DRAWINGS BASED ON WSP CERTIFIED ENGINEERING

LISTE DE MATERIEL

No	QTE	DIA	MATERIEL/CATALOGUE	DESCRIPTION
1	2239 MM	150	A 333 Gr 6	SCH STD, SMLS PIPE
2	1	150X50	A 350 Gr LF2	CL 3000, SOCKOLET
3	1	150	A 420 Gr WPL6	SCH STD, BW LR 45 DEG ELBOW TRIM TO 26.57
4	1	150	A 420 Gr WPL6	SCH STD, BW LR 90 DEG ELBOW TRIM TO 26.57
5	1	50	A 333 Gr 6	SCH 80, NIPPLE x 75mm LG PBE
6	1	150	A 350 Gr LF2	CL 150, SCH STD, RF, WN FLANGE
7	1	50	A 350 Gr LF2	CL 150, SCH 80, RF, SW FLANGE
8	1	50	A 350 Gr LF2	CL 150, RF, BLIND FLANGE
9	1	150	ASME B16.20	CL 150, GARLOCK 5500, RING TYPE GASKET 1/8" THK
10	2	50	ASME B16.20	CL 150, GARLOCK 5500, RING TYPE GASKET 1/8" THK
11	8	19	A 193 B7/A 194 2H	CL 150, 8 - 19.05 X 100 STUD BOLTS c/w TWO HEAVY HEX NUTS
12	8	16	A 193 B7/A 194 2H	CL 150, 4 - 15.875 X 85 STUD BOLTS c/w TWO HEAVY HEX NUTS
13	1	50	BA-30	CL 150, RF, BALL VALVE
14	1	150		PIPE SUPPORT AS PER DETAIL 1, DWG: 65-116-270-200
15	1	150		PIPE SHOE AS PER DETAIL 2, DWG: 65-116-270-200

No.	DATE	REVISION	PAR / APP
2	2017/09/21	PROJECT TITLE REVISED	KHV
1	2017/09/11	LINE NUMBERS REVISED	KHV
0	2017/05/15	ISSUED FOR CONSTRUCTION	KHV

CLIENT:

AGNICO EAGLE

NUQSANA PROJEC MINING

ultragen

CONSULTANT PROJECT NO 591700

NO. DE CONDUITE		SPECIFICATION	PRODUIT	SYSTEME REVETEMENT	CODE DE COULEUR	ISOLATION ET TRACAGE	EPAISS. D'ISOLATION		
116-150-PDI-CC10-0006		CC10	PDI		-			65-116-270-200	PIPE SUPPORT DETAILS
PRESSION D'OPERATION	TEMPERATURE D'OPERATION	PRESSION DE CONCEPTION	TEMPERATURE DE CONCEPTION	PRESSION D'ESSAI	CLASSE D'INSPECTION	CODE DE SERVICE	TRAITEMENT THERMIQUE	65-116-205-200	P&ID
PSIG	°F	PSIG	°F	PSIG				No. DESSIN	DESSINS DE REFERENCE

SCEAU PROFESSIONNEL
REGISTERED PROFESSIONAL ENGINEER
D TRUONG
LICENSEE
NT/NU
2017/09/21

CONC.: KHV
DATE: 2017/04/25
DESSINE PAR: KVE
DATE: 2017/04/25
VER. PAR: -
DATE: -
APP.: -
DATE: -
ECHELLE: AUCUNE

PROJET:
AGNICO EAGLE - MELIADINE DIVISION
116 - FUEL TANK FARM

TITRE:
RANKIN INLET
FABRICATION ISOMETRIC
DIESEL FROM 65TNK11601 & 65TNK11602 TO PUMPING STATION

No PROJET	No DESSIN	PAGES	REV.
6515	116-150-PDI-CC10-0006	7/12	2

116-MN-01

IMPRIME LE Sep 20, 2017, 2:45pm

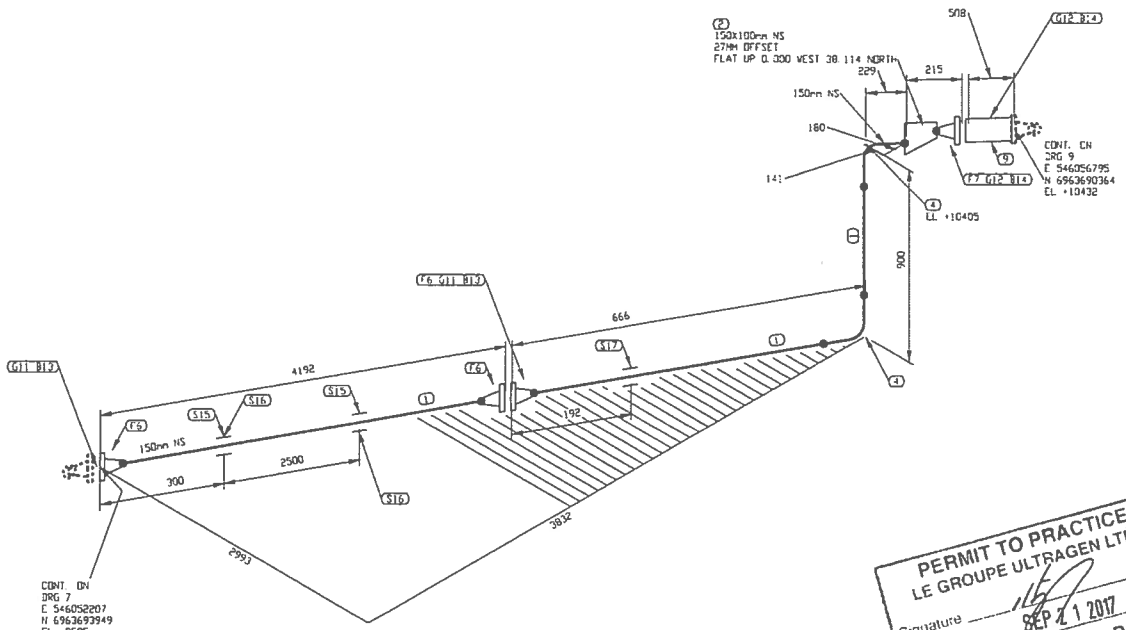

PERMIT TO PRACTICE
LE GROUPE ULTRAGEN LTÉE
Signature _____
Date SEP 21 2017
PERMIT NUMBER: P 1180
NT/NU Association of Professional Engineers and Geoscientists

FABRICATION DRAWINGS BASED ON WSP CERTIFIED ENGINEERING

LISTE DE MATERIEL

No	QTE	DIA	MATERIEL/CATALOGUE	DESCRIPTION
1	4810 MM	150	A 333 Gr. 6	SCH STD, SMLS PIPE
2	1	150X100	A 420 Gr. WPL6	SCH STD, BW CCC RED
3				
4	2	150	A 420 Gr. WPL6	SCH STD, BW LR 90 DEG ELBOW
5				
6	3	150	A 350 Gr. LF2	CL 150, SCH STD, RF, WN FLANGE
7	1	100	A 350 Gr. LF2	CL 150, SCH STD, RF, WN FLANGE
8				
9	1	100		TCS METER UNIT
10				
11	2	150	ASME B16.20	CL 150, GARLOCK 5500, RING TYPE GASKET 1/8" THK
12	2	100	ASME B16.20	CL 150, GARLOCK 5500, RING TYPE GASKET 1/8" THK
13	16	19	A 193 B7/A 194 2H	CL 150, 8 - 19.05 x 100 STUD BOLTS c/w TWO HEAVY HEX NUTS
14	16	16	A 193 B7/A 194 2H	CL 150, 8 - 15.875 x 90 STUD BOLTS c/w TWO HEAVY HEX NUTS
15	2	150		PIPE SHOE AS PER DETAIL 2, DWG: 65-116-270-200
16	2	150		PIPE SUPPORT AS PER DETAIL 1, DWG: 65-116-270-200
17	1	150		ABUTEMENT TYPE 2 AS PER DETAIL 5, DWG: 65-116-270-200

No.	DATE	REVISION	PAR / APP.
2	2017/09/21	PROJECT TITLE REVISED	KHV
1	2017/09/11	LINE NUMBERS REVISED	KHV
0	2017/05/15	ISSUED FOR CONSTRUCTION	KHV

CLIENT: AGNICO EAGLE

NUQSANA PROMEC MINING

ultragen

CONSULTANT PROJECT NO. 591700

NO. DE CONDUITE		SPECIFICATION	PRODUIT	SYSTEME REVETEMENT	CODE DE COULEUR	ISOLATION ET TRACAGE	EPAISS. D'ISOLATION		
116-150-PDI-CC10-0006		CC10	PDI		-			65-116-270-200	PIPE SUPPORT DETAILS
PRESSION D'OPERATION	TEMPERATURE D'OPERATION	PRESSION DE CONCEPTION	TEMPERATURE DE CONCEPTION	PRESSION D'ESSAI	CLASSE D'INSPECTION	CODE DE SERVICE	TRAITEMENT THERMIQUE	65-116-205-200	P&ID
PSIG	°F	PSIG	°F	PSIG				No. DESSIN	DESSINS DE REFERENCE

SCEAU PROFESSIONNEL
REGISTERED PROFESSIONAL ENGINEER
D TRUONG
LICENSEE
NT/NU
2017/09/21

CONC.: KHV DATE: 2017/04/25
DESSINÉ PAR: KVE DATE: 2017/04/25
VER. PAR: - DATE: -
APP.: - DATE: -
ÉCHELLE: AUCUNE

PROJET: AGNICO EAGLE - MELIADINE DIVISION
116 - FUEL TANK FARM

TITRE: RANKIN INLET
FABRICATION ISOMETRIC
DIESEL FROM 65TNK11601 & 65TNK11602 TO PUMPING STATION

No PROJET	No DESSIN	PAGES	REV.
6515	116-150-PDI-CC10-0006	8/12	2

116-MN-01

IMPRIMÉ LE: Sep 20, 2017, 2:41pm

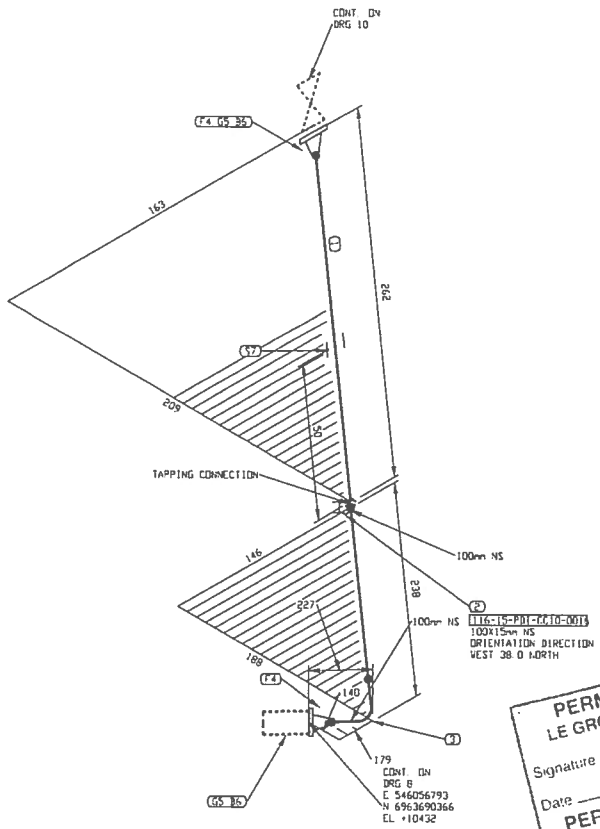

PERMIT TO PRACTICE
LE GROUPE ULTRAGEN LTÉE
Signature
Date SEP 2 1 2017
PERMIT NUMBER: P 1180
NT/NU Association of Professional Engineers and Geoscientists

FABRICATION DRAWINGS BASED ON WSP CERTIFIED ENGINEERING

LISTE DE MATERIEL

No	QTE	DIA	MATERIEL/CATALOGUE	DESCRIPTION
1	272 MM	100	A 333 Gr. 6	SCH STD, SMLS PIPE
2	1	100X15	A 350 Gr. LF2	CL 3000, THREDOLET
3	1	100	A 420 Gr. WPL6	SCH STD, BW LR 90 DEG ELBOW
4	2	100	A 350 Gr. LF2	CL 150, SCH STD, RF, WN FLANGE
5	2	100	ASME B16.20	CL 150, GARLOCK 5500, RING TYPE GASKET 1/8" THK
6	16	16	A 193 B7/A 194 2H	CL 150, 8 - 15.875 x 90 STUD BOLTS c/w TWO HEAVY HEX NUTS
7	1	100		PIPE BRACKET C150x12x300 WELDED TO CONTAINER C/W U-BOLT

No.	DATE	REVISION	PAR / APP.
2	2017/09/21	PROJECT TITLE REVISED	KHV
1	2017/09/11	LINE NUMBERS REVISED	KHV
0	2017/05/15	ISSUED FOR CONSTRUCTION	KHV

CLIENT: AGNICO EAGLE

NUQSANA-PROMEC MINING

ultragen

CONSULTANT PROJECT NO. 591700

NO. DE CONDUITE		SPECIFICATION	PRODUIT	SYSTEME REVETEMENT	CODE DE COULEUR	ISOLATION ET TRACAGE	EPAISS. D'ISOLATION		
116-150-PDI-CC10-0006		CC10	PDI		-			65-116-270-200	PIPE SUPPORT DETAILS
PRESSION D'OPERATION	TEMPERATURE D'OPERATION	PRESSION DE CONCEPTION	TEMPERATURE DE CONCEPTION	PRESSION D'ESSAI	CLASSE D'INSPECTION	CODE DE SERVICE	TRAITEMENT THERMIQUE	65-116-205-200	P&ID
PSIG	°F	PSIG	°F	PSIG				No. DESSIN	DESSINS DE REFERENCE

SCEAU PROFESSIONNEL
REGISTERED PROFESSIONAL ENGINEER
D TRUONG
LICENSEE
2017/09/21

CONC.: KHV
DATE: 2017/04/25
DESSINE PAR: KVE
DATE: 2017/04/25
VER. PAR: -
DATE: -
APP.: -
DATE: -
ECHELLE: AUCUNE

PROJET: AGNICO EAGLE - MELIADINE DIVISION
116 - FUEL TANK FARM

TITRE: RANKIN INLET
FABRICATION ISOMETRIC
DIESEL FROM 65TNK11601 & 65TNK11602 TO PUMPING STATION

No PROJET	No DESSIN	PAGES	REV.
6515	116-150-PDI-CC10-0006	9/12	2

116-MN-01

IMPRIME LE: Sep 20, 2017, 2:45pm

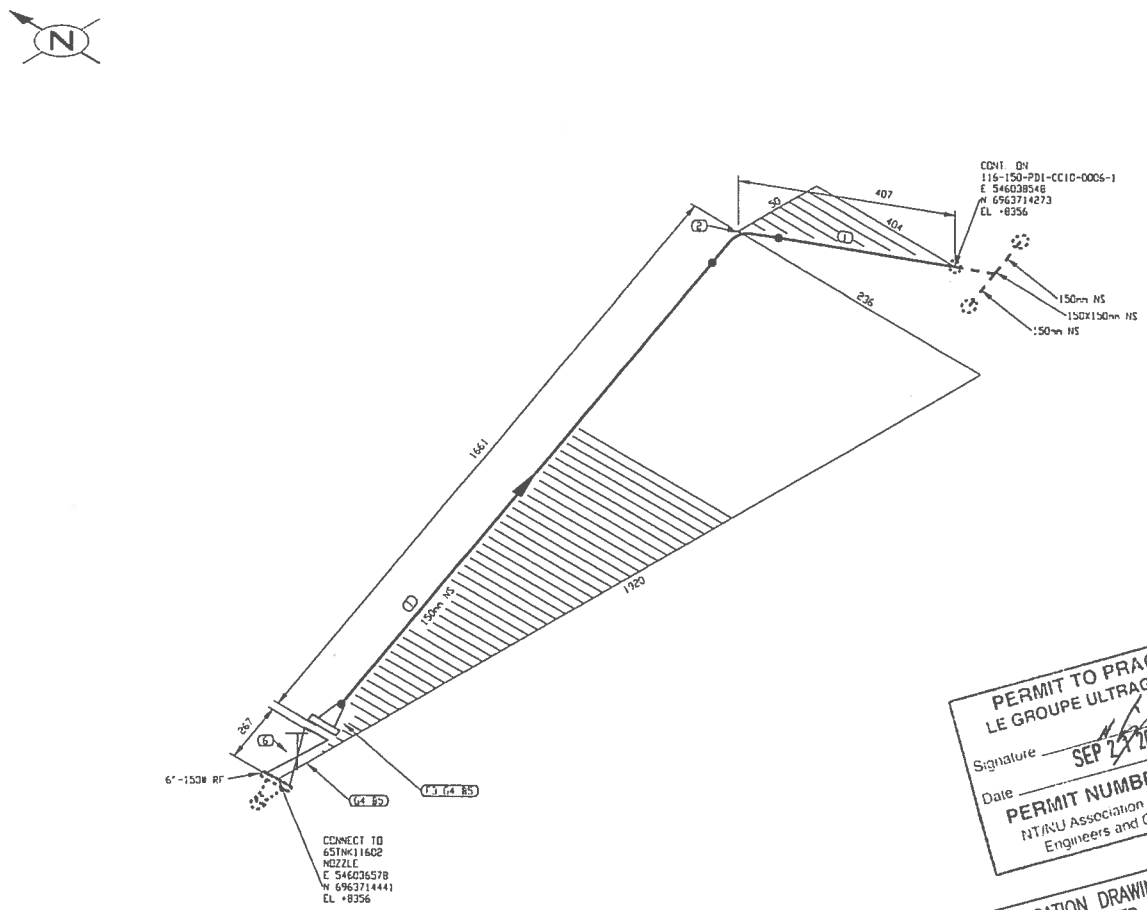

PERMIT TO PRACTICE
LE GROUPE ULTRAGEN LTÉE
Signature
Date SEP 21 2017
PERMIT NUMBER: P 1180
NT/NU Association of Professional Engineers and Geoscientists

FABRICATION DRAWINGS BASED ON WSP CERTIFIED ENGINEERING

LISTE DE MATERIEL

No	QTE	DIA	MATERIEL/CATALOGUE	DESCRIPTION
1	1523 MM	150	A 333 Gr. 6	SCH STD, SMLS PIPE
2	1	150	A 420 Gr. WPL6	SCH STD, BW LR 90 DEG ELBOW
3	1	150	A 350 Gr. LF2	CL 150, SCH STD, RF, WN FLANGE
4	2	150	ASME B16.20	CL 150, GARLOCK 5500, RING TYPE GASKET 1/8" THK
5	16	19	A 193 B7/A 194 2H	CL 150, 8 - 19.05 X 100 STUD BOLTS c/w TWO HEAVY HEX NUTS
6	1	150	GA-10	CL 150, RF, GATE VALVE

No.	DATE	REVISION	PAR / APP.
2	2017/09/21	PROJECT TITLE REVISED	KHV
1	2017/09/11	LINE NUMBERS REVISED	KHV
0	2017/05/15	ISSUED FOR CONSTRUCTION	KHV

CLIENT:

AGNICO EAGLE

NUQSANA-PROMEC MINING

ultragen

CONSULTANT PROJECT NO. 591700

NO. DE CONDUITE		SPECIFICATION	PRODUIT	SYSTEME REVETEMENT	CODE DE COULEUR	ISOLATION ET TRACAGE	EPAISS. D'ISOLATION		
116-150-PDI-CC10-0007		CC10	PDI		-			65-116-270-200	PIPE SUPPORT DETAILS
PRESSION D'OPERATION	TEMPERATURE D'OPERATION	PRESSION DE CONCEPTION	TEMPERATURE DE CONCEPTION	PRESSION D'ESSAI	CLASSE D'INSPECTION	CODE DE SERVICE	TRAITEMENT THERMIQUE	65-116-205-200	P&ID
PSIG	°F	PSIG	°F	PSIG				No. DESSIN	DESSINS DE REFERENCE

SCEAU PROFESSIONNEL
REGISTERED PROFESSIONAL ENGINEER
D. TRUONG
LICENSEE
2017/09/21

CONC.: KHV
DATE: 2017/04/25
DESSINE PAR: KVE
DATE: 2017/04/25
VER. PAR: -
DATE: -
APP.: -
DATE: -
ECHELLE: AUCUNE

PROJET:
AGNICO EAGLE - MELIADINE DIVISION
116 - FUEL TANK FARM

TITRE:
RANKIN INLET
FABRICATION ISOMETRIC
DIESEL FROM 65TNK11602 TO PUMPING STATION

No PROJET	No DESSIN	PAGES	REV.
6515	116-150-PDI-CC10-0007	1/1	2

116-MN-01

APPRVE LE. Sep 20, 2017, 2:46pm

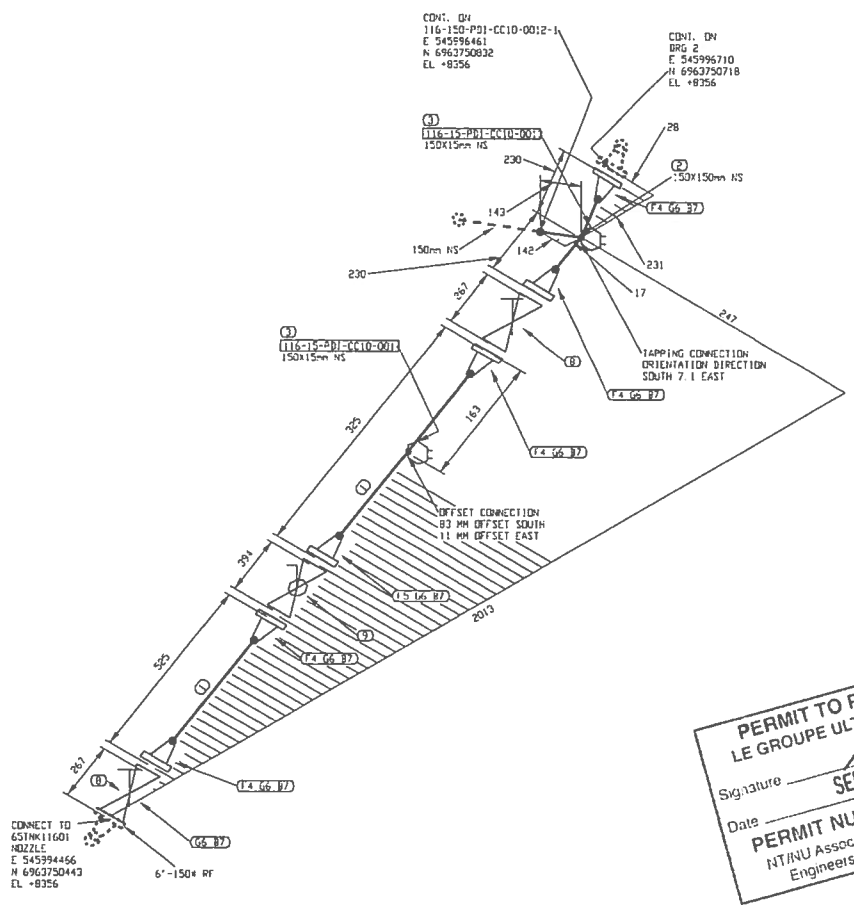

LISTE DE MATERIEL

No	QTE	DIA	MATERIEL/CATALOGUE	DESCRIPTION
1	502 MM	150	A 333 Gr. 6	SCH STD, SMLS PIPE
2	1	150X150	A 420 Gr. WPL6	SCH STD, BW STRAIGHT TEE
3	2	150X15	A 350 Gr. LF2	CL 3000, THREDOLET
4	5	150	A 350 Gr. LF2	CL 150, SCH STD, RF, WN FLANGE
5	1	150	A 350 Gr. LF2	CL 150, SCH STD, RF, WN FLANGE
6	7	150	ASME B16.20	CL 150, GARLOCK 5500, RING TYPE GASKET 1/8" THK
7	56	19	A 193 B7/A 194 2H	CL 150, 8 - 19.05 x 100 STUD BOLTS c/w TWO HEAVY HEX NUTS
8	2	150	GA-10	CL 150, RF, GATE VALVE
9	1	150	BA-31	CL 150, RF, BALL VALVE

PERMIT TO PRACTICE
LE GROUPE ULTRAGEN LTEE
Signature
Date SEP 21 2017
PERMIT NUMBER: P 1180
NT/NU Association of Professional Engineers and Geoscientists

FABRICATION DRAWINGS BASED ON WSP CERTIFIED ENGINEERING

No.	DATE	REVISION	
2	2017/09/21	PROJECT TITLE REVISED	KHV
1	2017/09/11	LINE NUMBERS REVISED	KHV
0	2017/05/15	ISSUED FOR CONSTRUCTION	KHV
			PAR / APP

CLIENT:

AGNICO EAGLE

NUQSANA-PROMEC MINING

ultragen

CONSULTANT PROJECT NO. 591700

NO. DE CONDUITE		SPECIFICATION	PRODUIT	SYSTEME REVETEMENT	CODE DE COULEUR	ISOLATION ET TRACAGE	EPAISS. D'ISOLATION		
116-150-PDI-CC10-0011		CC10	PDI		-			65-116-270-200	PIPE SUPPORT DETAILS
PRESSION D'OPERATION	TEMPERATURE D'OPERATION	PRESSION DE CONCEPTION	TEMPERATURE DE CONCEPTION	PRESSION D'ESSAI	CLASSE D'INSPECTION	CODE DE SERVICE	TRAITEMENT THERMIQUE	65-116-205-200	P&ID
PSIG	°F	PSIG	°F	PSIG				No. DESSIN	DESSINS DE REFERENCE

SCEAU PROFESSIONNEL
REGISTERED PROFESSIONAL ENGINEER
D. TRUONG
LICENSEE

CONC.: KHV
DATE: 2017/04/25
DESSINE PAR: KVE
DATE: 2017/04/25
VER. PAR: -
DATE: -
APP.: -
DATE: -
ÉCHELLE: AUCUNE

PROJET:
AGNICO EAGLE - MELIADINE DIVISION
116 - FUEL TANK FARM

TITRE:
RANKIN INLET
FABRICATION ISOMETRIC
DIESEL FROM 65TNK11601 TO PUMPING STATION

No PROJET	No DESSIN	PAGES	REV.
6515	116-150-PDI-CC10-0011	1/5	2

116-MN-01

IC:\ER #\Vapor Engr\Materials\591700 (Fuel Distribution)\05. Design\02. Isométriques\01. Revit\116-150-PDI-CC10-0011-1.DWG
APPROVE LE Sep 26, 2017, 2:46pm

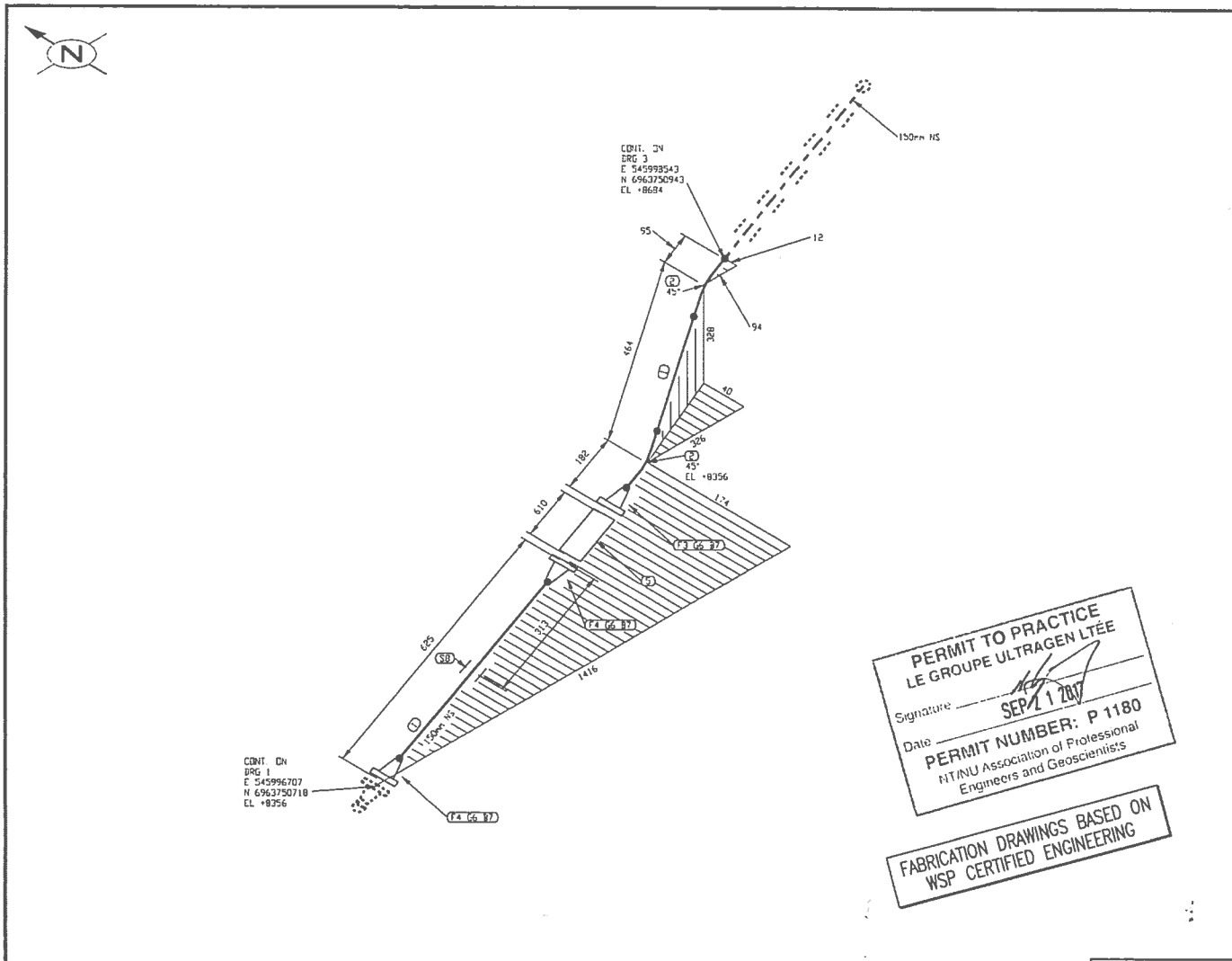

PERMIT TO PRACTICE
LE GROUPE ULTRAGEN LTÉE
Signature
Date SEP 21 2017
PERMIT NUMBER: P 1180
NT/NU Association of Professional Engineers and Geoscientists

FABRICATION DRAWINGS BASED ON WSP CERTIFIED ENGINEERING

LISTE DE MATERIEL

No	QTE	DIA	MATERIEL/CATALOGUE	DESCRIPTION
1	725 MM	150	A 333 Gr. 6	SCH STD, SMLS PIPE
2	2	150	A 420 Gr. WPL6	SCH STD, BW LR 45 DEG ELBOW
3	1	150	A 350 Gr. LF2	CL 150, SCH STD, RF, WN FLANGE
4	2	150	A 350 Gr. LF2	CL 150, SCH STD, RF, WN FLANGE
5	1	150		CL 150, SINGLE BRAIDED HOSE ASSEMBLY
6	3	150	ASME B16.20	CL 150, GARLOCK 5500, RING TYPE GASKET 1/8" THK
7	24	19	A 193 B7/A 194 2H	CL 150, 8 - 19 05 X 100 STUD BOLTS c/w TWO HEAVY HEX NUTS
8	1	150		PIPE SHOE AS PER DETAIL 2, DWG: 65-116-270-200

No.	DATE	REVISION	PAR / APP
2	2017/09/21	PROJECT TITLE REVISED	KHV
1	2017/09/11	LINE NUMBERS REVISED	KHV
0	2017/05/15	ISSUED FOR CONSTRUCTION	KHV

CLIENT:

AGNICO EAGLE

NUQSANA PROMEC MINING

ultragen

CONSULTANT PROJECT NO. 591700

NO. DE CONDUITE		SPECIFICATION	PRODUIT	SYSTEME REVETEMENT	CODE DE COULEUR	ISOLATION ET TRACAGE	EPAISS. D'ISOLATION		
116-150-PDI-CC10-0011		CC10	PDI		-			65-116-270-200	PIPE SUPPORT DETAILS
PRESSION D'OPERATION	TEMPERATURE D'OPERATION	PRESSION DE CONCEPTION	TEMPERATURE DE CONCEPTION	PRESSION D'ESSAI	CLASSE D'INSPECTION	CODE DE SERVICE	TRAITEMENT THERMIQUE	65-116-205-200	P&ID
PSIG	°F	PSIG	°F	PSIG				No. DESSIN	DESSINS DE REFERENCE

SCEAU PROFESSIONNEL
REGISTERED PROFESSIONAL ENGINEER
D. TRUONG
LICENSEE
NT/NU
2017/09/21

CONC.: KHV
DATE: 2017/04/25
DESSINÉ PAR: KVE
DATE: 2017/04/25
VER. PAR: -
DATE: -
APP.: -
DATE: -
ECHELLE: AUCUNE

PROJET: AGNICO EAGLE - MELIADINE DIVISION
116 - FUEL TANK FARM

TITRE: RANKIN INLET
FABRICATION ISOMETRIC
DIESEL FROM 65TNK11601 TO PUMPING STATION

No PROJET	No DESSIN	PAGES	REV.
6515	116-150-PDI-CC10-0011	2/5	2

116-MN-01

IMPRIME LE: Sep 20, 2017, 2:46pm

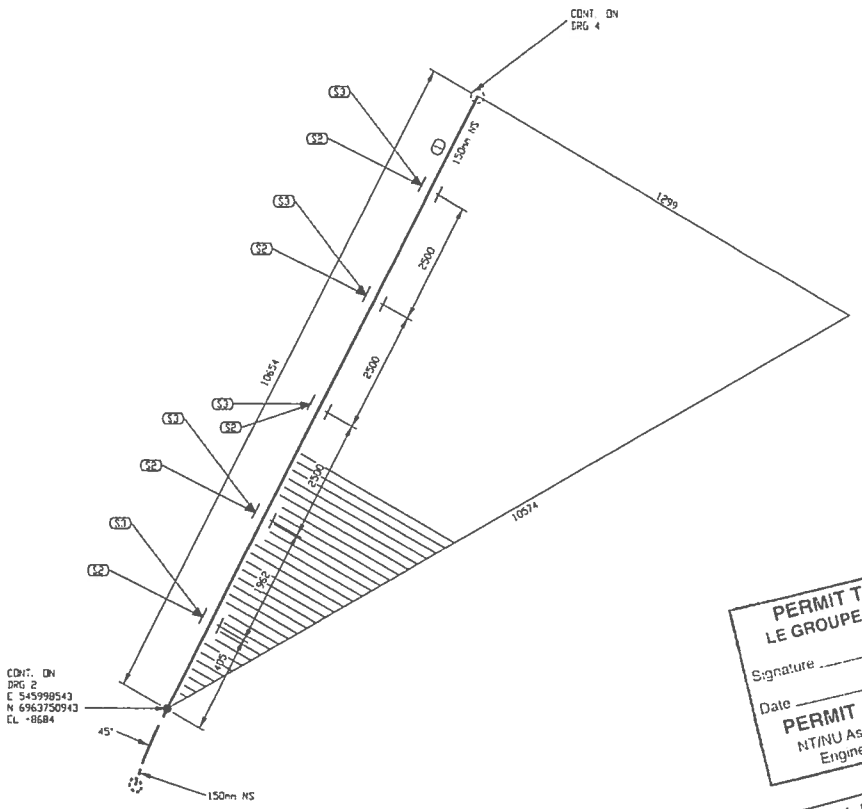

PERMIT TO PRACTICE
LE GROUPE ULTRAGEN LTÉE
Signature
Date SEP 2 1 2017
PERMIT NUMBER: P 1180
NT/NU Association of Professional Engineers and Geoscientists

FABRICATION DRAWINGS BASED ON WSP CERTIFIED ENGINEERING

LISTE DE MATERIEL

No	QTE	DIA	MATERIEL/CATALOGUE	DESCRIPTION
1	10654 MM	150	A 333 Gr 6	SCH STD, SMLS PIPE
2	5	150		PIPE SUPPORT AS PER DETAIL 1, DWG 65-116-270-200
3	5	150		PIPE SHOE AS PER DETAIL 2, DWG 65-116-270-200

No.	DATE	REVISION	PAR / APP.
2	2017/09/21	PROJECT TITLE REVISED	KHV
1	2017/09/11	LINE NUMBERS REVISED	KHV
0	2017/05/15	ISSUED FOR CONSTRUCTION	KHV

CLIENT: AGNICO EAGLE

NUOSANA PROJECT MINING

ultragen

CONSULTANT PROJECT NO. 591700

SCEAU PROFESSIONNEL
REGISTERED PROFESSIONAL ENGINEER
D TRUONG
LICENSEE

CONC.: KHV DATE: 2017/04/25
DESSINÉ PAR: KVE DATE: 2017/04/25
VOL. PAR: - DATE: -
APP.: - DATE: -
ÉCHELLE: AUCUNE

PROJET: AGNICO EAGLE - MELIADINE DIVISION
116 - FUEL TANK FARM

TITRE: RANKIN INLET
FABRICATION ISOMETRIC
DIESEL FROM 65TNK11601 TO PUMPING STATION

No PROJET	No DESSIN	PAGES	REV.
6515	116-150-PDI-CC10-0011	3/5	2

NO. DE CONDUITE		SPECIFICATION	PRODUIT	SYSTEME REVETEMENT	CODE DE COULEUR	ISOLATION ET TRACAGE	EPAISS. D'ISOLATION		
116-150-PDI-CC10-0011		CC10	PDI					65-116-270-200	PIPE SUPPORT DETAILS
PRESSION D'OPERATION	TEMPERATURE D'OPERATION	PRESSION DE CONCEPTION	TEMPERATURE DE CONCEPTION	PRESSION D'ESSAI	CLASSE D'INSPECTION	CODE DE SERVICE	TRAITEMENT THERMIQUE	65-116-205-200	P&ID
PSIG	°F	PSIG	°F	PSIG				No. DESSIN	DESSINS DE REFERENCE

116-MN-01

F:\CAD\Projets Eagle\Meliadine\591700 (Fuel Distribution)\02. Contract\02.1 Layout\Iso\02. Isométrique\01. Partie Ouest\116-150-PDI-CC10-0011-2.DWG

IMPRIMÉ LE: Sep 20, 2017 2:46pm

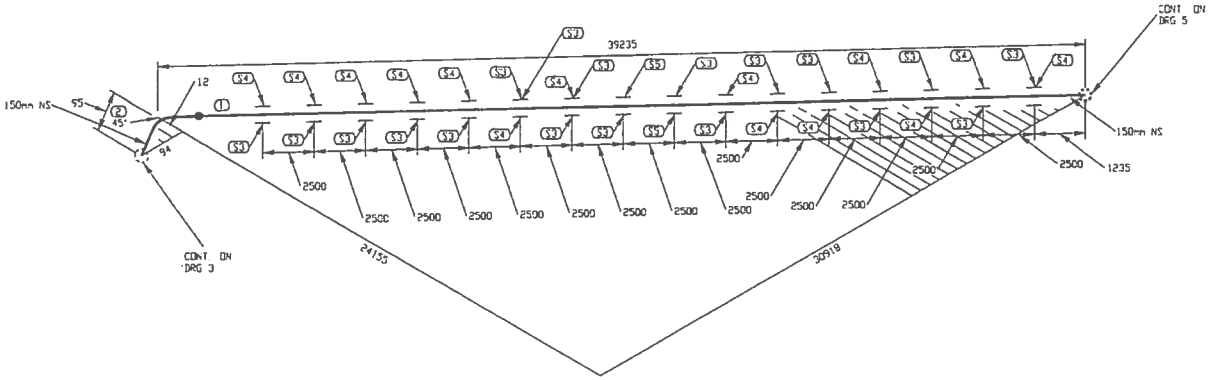

LISTE DE MATERIEL

No	QTE	DIA	MATERIEL/CATALOGUE	DESCRIPTION
1	39140 MM	150	A 333 Gr 6	SCH STD, SMLS PIPE
2	1	150	A 420 Gr WPL6	SCH STD, BW LR 45 DEG ELBOW
3	18	150		PIPE SHOE AS PER DETAIL 2, DWG 65-116-270-200
4	14	150		PIPE SUPPORT AS PER DETAIL 1, DWG 65-116-270-200
5	2	150		PIPE SUPPORT AS PER DETAIL 3, DWG 65-116-270-200

PERMIT TO PRACTICE
LE GROUPE ULTRAGEN LTÉE
Signature
Date SEP 2 1 2017
PERMIT NUMBER: P 1180
NT/NU Association of Professional Engineers and Geoscientists

FABRICATION DRAWINGS BASED ON WSP CERTIFIED ENGINEERING

No.	DATE	REVISION	PAR / APP.
2	2017/09/21	PROJECT TITLE REVISED	KHV
1	2017/09/11	LINE NUMBERS REVISED	KHV
0	2017/05/15	ISSUED FOR CONSTRUCTION	KHV

CLIENT: AGNICO EAGLE

NUQSANA-PROMEC MINING

ultragen

CONSULTANT PROJECT NO. 591700

NO. DE CONDUITE		SPECIFICATION	PRODUIT	SYSTEME REVETEMENT	CODE DE COULEUR	ISOLATION ET TRACAGE	EPAISS. D'ISOLATION		
116-150-PDI-CC10-0011		CC10	PDI		-			65-116-270-200	PIPE SUPPORT DETAILS
PRESSION D'OPERATION	TEMPERATURE D'OPERATION	PRESSION DE CONCEPTION	TEMPERATURE DE CONCEPTION	PRESSION D'ESSAI	CLASSE D'INSPECTION	CODE DE SERVICE	TRAITEMENT THERMIQUE	65-116-205-200	P&ID
PSIG	°F	PSIG	°F	PSIG				No. DESSIN	DESSINS DE REFERENCE

SCEAU PROFESSIONNEL
REGISTERED PROFESSIONAL ENGINEER
D. TRUONG
LICENSEE
NT/NU 21

CONC.: KHV
DATE: 2017/04/25
DESSINÉ PAR: KVE
DATE: 2017/04/25
VER. PAR: -
DATE: -
APP.: -
DATE: -
ÉCHELLE: AUCUNE

PROJET: AGNICO EAGLE - MELIADINE DIVISION
116 - FUEL TANK FARM

TITRE: RANKIN INLET
FABRICATION ISOMETRIC
DIESEL FROM 65TNK11601 TO PUMPING STATION

No PROJET	No DESSIN	PAGES	REV.
6515	116-150-PDI-CC10-0011	4/5	2

116-MN-01

TRACÉ: N:\Agnico Eagle\Meliadine\591700 (Fuel Distribution)\05. Drawings\02. Isométriques\01. Rankin Inlet\116-150-PDI-CC10-0011-1.DWG

IMPRIMÉ LE: Sep 20, 2017, 2:48pm

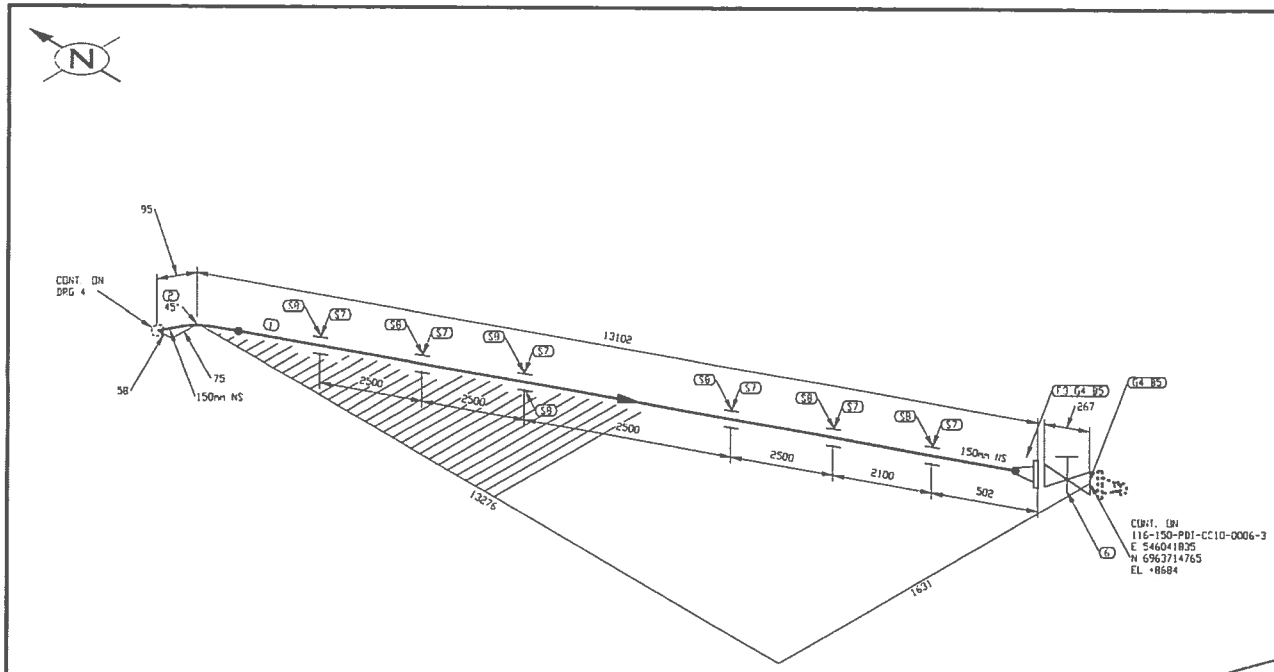

PERMIT TO PRACTICE
LE GROUPE ULTRAGEN LTÉE
Signature
Date SEP 2 1 2017
PERMIT NUMBER: P 1180
NT/NU Association of Professional Engineers and Geoscientists

FABRICATION DRAWINGS BASED ON WSP CERTIFIED ENGINEERING

LISTE DE MATERIEL

No	QTE	DIA	MATERIEL/CATALOGUE	DESCRIPTION
1	12919 MM	150	A 333 Gr. 6	SCH STD, SMLS PIPE
2	1	150	A 420 Gr. WPL6	SCH STD, BW LR 45 DEG ELBOW
3	1	150	A 350 Gr. LF2	CL 150, SCH STD, RF, WN FLANGE
4	2	150	ASME B16.20	CL 150, GARLOCK 5500, RING TYPE GASKET 1/8" THK
5	16	19	A 193 B7/A 194 2H	CL 150, 8 - 19.05 X 100 STUD BOLTS c/w TWO HEAVY HEX NUTS
6	1	150	GA-10	CL 150, RF, GATE VALVE
7	6	150		PIPE SUPPORT AS PER DETAIL 1, DWG: 65-116-270-200
8	7	150		PIPE SHOE AS PER DETAIL 2, DWG: 65-116-270-200

No.	DATE	REVISION	PAR / APP.
2	2017/09/21	PROJECT TITLE REVISED	KHV
1	2017/09/11	LINE NUMBERS REVISED	KHV
0	2017/05/15	ISSUED FOR CONSTRUCTION	KHV

CLIENT:

AGNICO EAGLE

NUQSANA PROHEC MINING

ultragen

CONSULTANT PROJECT NO. 591700

NO. DE CONDUITE		SPECIFICATION	PRODUIT	SYSTEME REVETEMENT	CODE DE COULEUR	ISOLATION ET TRACAGE	EPAISS. D'ISOLATION		
116-150-PDI-CC10-0011		CC10	PDI		-			65-116-270-200	PIPE SUPPORT DETAILS
PRESSION D'OPERATION	TEMPERATURE D'OPERATION	PRESSION DE CONCEPTION	TEMPERATURE DE CONCEPTION	PRESSION D'ESSAI	CLASSE D'INSPECTION	CODE DE SERVICE	TRAITEMENT THERMIQUE	65-116-205-200	P&ID
PSIG	°F	PSIG	°F	PSIG				No. DESSIN	DESSINS DE REFERENCE

SCEAU PROFESSIONNEL
REGISTERED PROFESSIONAL ENGINEER
D. TRUONG
LICENSEE
2017/09/21

CONC.: KHV
DATE: 2017/04/25
DESSINÉ PAR: KVE
DATE: 2017/04/25
VER. PAR: -
DATE: -
APP.: -
DATE: -
ECHELLE: AUCUNE

PROJET:
AGNICO EAGLE - MELIADINE DIVISION
116 - FUEL TANK FARM

TITRE:
RANKIN INLET
FABRICATION ISOMETRIC
DIESEL FROM 65TNK11601 TO PUMPING STATION

No PROJET	No DESSIN	PAGES	REV.
6515	116-150-PDI-CC10-0011	5/5	2

116-MN-01

FICHIER: W:\Agnico Eagle\Meliadine\591700 (Fuel Distribution)\05 Dessins\02. Typoutiquez\02. Isometriques\01 Rankin Inlet\116-150-PDI-CC10-0011-5.DWG

IMPRIME LE: Sep 20, 2017, 2:46pm

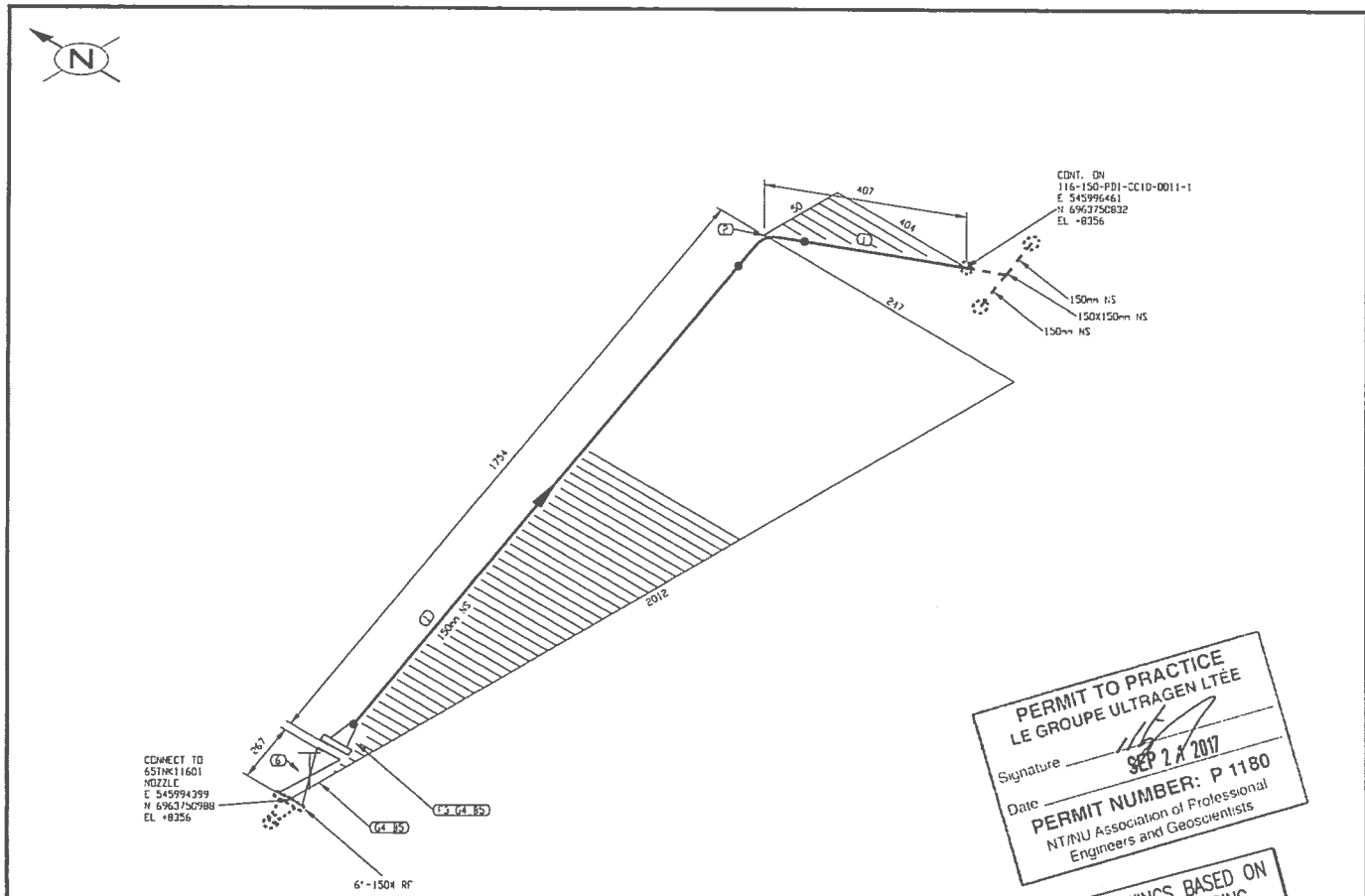

PERMIT TO PRACTICE
LE GROUPE ULTRAGEN LTÉE
Signature
Date SEP 2 1 2017
PERMIT NUMBER: P 1180
NT/NU Association of Professional Engineers and Geoscientists

FABRICATION DRAWINGS BASED ON WSP CERTIFIED ENGINEERING

LISTE DE MATERIEL

No	QTE	DIA	MATERIEL/CATALOGUE	DESCRIPTION
1	1616 MM	150	A 333 Gr. 6	SCH STD, SMLS PIPE
2	1	150	A 420 Gr. WPL6	SCH STD, BW LR 90 DEG ELBOW
3	1	150	A 350 Gr. LF2	CL 150, SCH STD, RF, WN FLANGE
4	2	150	ASME B16.20	CL 150, GARLOCK 5500, RING TYPE GASKET 1/8" THK
5	16	19	A 193 B7/A 194 2H	CL 150, 8 - 19.05 X 100 STUD BOLTS c/w TWO HEAVY HEX NUTS
6	1	150	GA-10	CL 150, RF, GATE VALVE

No.	DATE	REVISION	PAR / APP
2	2017/09/21	PROJECT TITLE REVISED	KHV
1	2017/09/11	LINE NUMBERS REVISED	KHV
0	2017/05/15	ISSUED FOR CONSTRUCTION	KHV

CLIENT:

AGNICO EAGLE

NUQSANA PROMEC MINING

ultragen

CONSULTANT PROJECT NO. 591700

NO. DE CONDUITE		SPECIFICATION	PRODUIT	SYSTEME REVETEMENT	CODE DE COULEUR	ISOLATION ET TRACAGE	EPAISS. D'ISOLATION		
116-150-PDI-CC10-0012		CC10	PDI		-			65-116-270-200	PIPE SUPPORT DETAILS
PRESSION D'OPERATION	TEMPERATURE D'OPERATION	PRESSION DE CONCEPTION	TEMPERATURE DE CONCEPTION	PRESSION D'ESSAI	CLASSE D'INSPECTION	CODE DE SERVICE	TRAITEMENT THERMIQUE	65-116-205-200	P&ID
PSIG	°F	PSIG	°F	PSIG				No. DESSIN	DESSINS DE REFERENCE

SCEAU PROFESSIONNEL
REGISTERED PROFESSIONAL ENGINEER
D TRUONG
LICENSEE
2017/09/21

CONC.: KHV
DATE: 2017/04/25
DESSINE PAR: KVE
DATE: 2017/04/25
VER. PAR: -
DATE: -
APP.: -
DATE: -
ECHELLE: AUCUNE

PROJET:
AGNICO EAGLE - MELIADINE DIVISION
116 - FUEL TANK FARM

TITRE:
RANKIN INLET
FABRICATION ISOMETRIC
DIESEL FROM 65TNK11601 TO PUMPING STATION

No PROJET	No DESSIN	PAGES	REV.
6515	116-150-PDI-CC10-0012	1/1	2

116-MN-01

IMPRIME LE Sep 20, 2017, 2:46pm

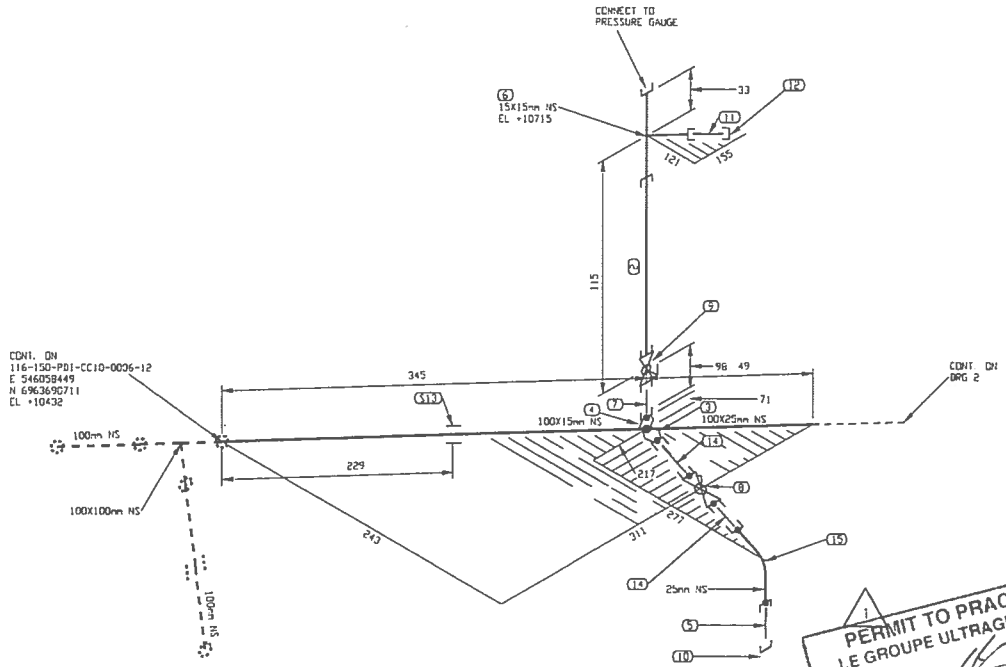

LISTE DE MATERIEL				
No	QTE	DIA	MATERIEL/CATALOGUE	DESCRIPTION
1	394 MM	100	A 333 Gr. 6	SCH STD, SMLS PIPE
2	73 MM	15	A 333 Gr. 6	SCH 80, SMLS PIPE
3	1	100x25	A 350 Gr. LF2	CL 3000, SOCKOLET
4	1	100x15	A 350 Gr. LF2	CL 3000, SOCKOLET
5	1	25	A 333 Gr. 6	SCH 80, NIPPLE x 75mm LG PDExTCE
6	1	15X15	A 350 Gr. LF2	CL 3000, THRD STRAIGHT TEE
7	1	15	A 333 Gr. 6	SCH 80, NIPPLE x 75mm LG PDExTCE
8	1	25	BA-29	CL 600, SW, BALL VALVE
9	1	15	BA-32	CL 600, THRD, BALL VALVE
10	1	25	A 350 Gr. LF2	CL 3000, THRD CAP
11	1	15	A 333 Gr. 6	SCH 80, NIPPLE x 75mm LG TBE
12	1	15	A 350 Gr. LF2	CL 3000, THRD CAP
13	1	100		PIPE SUPPORT AS PER DETAIL 9, DWG 65-116-270-200
14	2	25	A 333 Gr. 6	SCH 80, NIPPLE x 75mm LG PBE
15	1	25	A 350 Gr. LF2	CL 3000, SW 90 DEG ELBOW

PERMIT TO PRACTICE
LE GROUPE ULTRAGEN LTÉE
Signature
Date SEP 2 1 2017
PERMIT NUMBER: P 1180
NT/NU Association of Professional Engineers and Geoscientists

FABRICATION DRAWINGS BASED ON WSP CERTIFIED ENGINEERING

No	DATE	REVISION	APP.
3	2017/09/21	PROJECT TITLE REVISED	KHV
2	2017/09/11	LINE NUMBERS REVISED	KHV
1	2017/06/30	DRAIN REVISED AS PER CLIENT COMMENTS	OVN
0	2017/05/15	ISSUED FOR CONSTRUCTION	KHV

CLIENT: AGNICO EAGLE

NUQSANA-PROMEC MINING

ultragen

CONSULTANT PROJECT NO 591700

NO. DE CONDUITE		SPECIFICATION	PRODUIT	SYSTEME REVETEMENT	CODE DE COULEUR	ISOLATION ET TRACAGE	EPAISS. D'ISOLATION		
116-150-PDI-CC10-0018		CC10	PDI					65-116-270-200	PIPE SUPPORT DETAILS
PRESSION D'OPERATION	TEMPERATURE D'OPERATION	PRESSION DE CONCEPTION	TEMPERATURE DE CONCEPTION	PRESSION D'ESSAI	CLASSE D'INSPECTION	CODE DE SERVICE	TRAITEMENT THERMIQUE	65-116-205-200	P&ID
PSIG	°F	PSIG	°F	PSIG				No DESSIN	DESSINS DE REFERENCE

SCEAU PROFESSIONNEL
REGISTERED PROFESSIONAL ENGINEER
D TRUONG
LICENSEE
SOLUTIONS

CONC.: KHV DATE: 2017/09/25
DESSINÉ PAR: KVE DATE: 2017/09/25
VER. PAR: - DATE: -
APP.: - DATE: -
ÉCHELLE: AUCUNE

PROJET: AGNICO EAGLE – MELIADINE DIVISION
116 – FUEL TANK FARM

TITRE: RANKIN INLET
FABRICATION ISOMETRIC
DIESEL FROM 65TNK11601 & 65TNK11602 TO 65POD11601A

No PROJET	No DESSIN	PAGES	REV.
6515	116-150-PDI-CC10-0018	1/2	3

116-MN-01

C:\CAD\Projets Exp\Meadow\591700 Fuel Distribution\05. Dessin\02. Isométrique\01. Master mxd\116 150 PDI-CC10-0018-1.DWG
MARIANE LE Sep 22, 2017 2:46pm

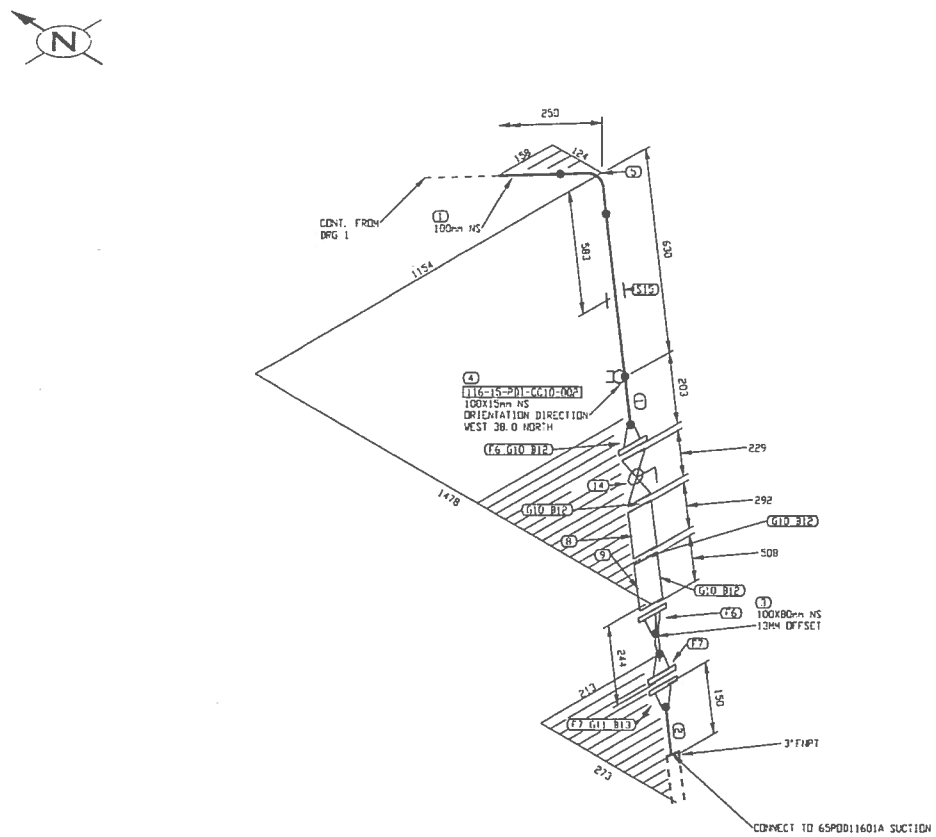

PERMIT TO PRACTICE
LE GROUPE ULTRAGEN LTÉE
Signature
Date SEP 21 2017
PERMIT NUMBER: P 1180
NT/NU Association of Professional Engineers and Geoscientists

FABRICATION DRAWINGS BASED ON WSP CERTIFIED ENGINEERING

LISTE DE MATERIEL

No	QTE	DIA	MATERIEL/CATALOGUE	DESCRIPTION
1	655 MM	100	A 333 Gr. 6	SCH STD, SMLS PIPE
2	81 MM	80	A 333 Gr. 6	SCH STD, SMLS PIPE POExTOE
3	1	100X80	A 420 Gr. WPL6	SCH STD, BW ECC RED
4	1	100X15	A 350 Gr. LF2	CL 3000, THREDOLET
5	1	100	A 420 Gr. WPL6	SCH STD, BW LR 90 DEG ELBOW
6	2	100	A 350 Gr. LF2	CL 150, SCH STD, RF, WN FLANGE
7	2	80	A 350 Gr. LF2	CL 150, SCH STD, RF, WN FLANGE
8	1	100		CL 150, BASKET STRAINER
9	1	100		CL 150, SINGLE BRAIDED HOSE ASSEMBLY
10	4	100	ASME B16.20	CL 150, GARLOCK 5500, RING TYPE GASKET 1/8" THK
11	1	80	ASME B16.20	CL 150, GARLOCK 5500, RING TYPE GASKET 1/8" THK
12	32	16	A 193 B7/A 194 2H	CL 150, 8 - 15.875 X 90 STUD BOLTS c/w TWO HEAVY HEX NUTS
13	4	16	A 193 B7/A 194 2H	CL 150, 4 - 15.875 X 90 STUD BOLTS c/w TWO HEAVY HEX NUTS
14	1	100	BA-31	CL 150, RF, BALL VALVE
15	1	100		PIPE SUPPORT AS PER DETAIL 9, DWG: 65-116-270-200

No.	DATE	REVISION	PAR / APP.
2	2017/09/21	PROJECT TITLE REVISED	KHV
1	2017/09/11	LINE NUMBERS REVISED	KHV
0	2017/05/15	ISSUED FOR CONSTRUCTION	KHV

CLIENT:

AGNICO EAGLE

NUQSANA PROMEC MINING

ultragen

CONSULTANT PROJECT NO. 591700

SCEAU PROFESSIONNEL

REGISTERED PROFESSIONAL ENGINEER
D. TRUONG
LICENSEE
2017/09/21

CONC.: KHV
DATE: 2017/04/25
DESSINÉ PAR: KVE
DATE: 2017/04/25
VER. PAR:
DATE:
APP.:
DATE:
ÉCHELLE: AUCUNE

PROJET:
AGNICO EAGLE - MELIADINE DIVISION
116 - FUEL TANK FARM

TITRE:
RANKIN INLET
FABRICATION ISOMETRIC
DIESEL FROM 65TNK11601 & 65TNK11602 TO 65PDD11601A

No PROJET	No DESSIN	PAGES	REV.
6515	116-150-PDI-CC10-0018	2/2	2

NO. DE CONDUITE		SPECIFICATION	PRODUIT	SYSTEME REVETEMENT	CODE DE COULEUR	ISOLATION ET TRACAGE	EPAISS. D'ISOLATION		
116-150-PDI-CC10-0018		CC10	PDI		-			65-116-270-200	PIPE SUPPORT DETAILS
PRESSION D'OPERATION	TEMPERATURE D'OPERATION	PRESSION DE CONCEPTION	TEMPERATURE DE CONCEPTION	PRESSION D'ESSAI	CLASSE D'INSPECTION	CODE DE SERVICE	TRAITEMENT THERMIQUE	65-116-205-200	P&ID
PSIG	°F	PSIG	°F	PSIG				No DESSIN	DESSINS DE REFERENCE

116-MN-01

FICHIER: K:\Agnico Eagle\Meliadine\591700 (Fuel Distribution)\05 Dessins\02 Typeprint\02. Nomenclature\01 Rankin Inlet\116-150-PDI-CC10-0018 2.DWG

IMPRIMÉ LE: Sep 20, 2017, 2:43pm

AGNICO EAGLE

Vendor Document Status

1 ☐ Proceed to next submission and status.

2 ☐ Proceed with exceptions as noted to next submission and status.

3 ☐ Do not proceed.
Revise as noted and resubmit next submission and status.

4 ☑ Complete, no further submission required.

By: Jean-Francois Tremblay Date: 2017-05-02

Review and authorization to fabricate are only for general conformance with the design concept of the Project as expressed in the Contract Documents. Sole responsibility for the accuracy and completeness of this document, including but not limited to dimensions and quantities, remains with the Supplier/Contractor. Agnico Eagle does not warrant the accuracy or completeness of any of the information contained herein, nor does Agnico Eagle authorize or approve any construction means, methods, techniques, sequences or any safety precautions or procedures.

Agnico Eagle No. 6515-C-270-007-141-TES-0014 R: Sub001

DOCUMENT FOR INFORMATION

NUQSANA PROMEC MINING

Agnico-Eagle Mines Ltd.
Non-Conformance Report

ITR Number : AEM-GE-ITR-002
Contract no. : C22466T / C22498E

AGNICO EAGLE

PART 1 – To be completed by Originator

ITR no. :	Supplier/Vendor/Manufacturer/Contractor :	Originator :	Date:

Equipment Identification: | **Equipment Tag No.:**

Disposition Requested:
☐ 48 Hours ☐ Other

NCR Classification:
☐ Supplier ☐ Fabrication ☐ Engineering ☐ Construction ☐

Current Status:
☐ Work Already Done ☐ Partially Done ☐ Other ____

Potential Impact (Check appropriate box and give estimate):
☐ Cost ☐ Schedule ☐ Other

Detailed Description of Non-Conformance (attach sketch, pictures, etc) :

Describe Deviation to Drawings, Specifications, Standard, Code or other Reference:

PART 2 - Disposition

* CONTRACTOR Proposed Disposition / Resolution: ☐ Use As Is ☐ Repair ☐ Rework ☐ Reject/Scrap	Concession Request No. (if applicable):	Contractors NCR No. (if applicable):

Details of Contractor Corrective Actions Proposed / Concession Request:

* Disposition: ☐ Use as Is ☐ Repair ☐ Rework ☐ Reject/Scrap	Dispositioning Party:	Signature:

Recommended Resolution / Actions:

PART 3 - Confirmation

Corrective Actions Completed By: Name: Date: Signature:	Corrective Actions Accepted by Dispositioning Party: Name: Date: Signature:
Corrective Actions Accepted by Originator: Name: Date: Signature:	**NCR Closed Out By (Area QA Coordinator)** Name: Date: Signature:

* ***Note:*** Dispositions are not to be construed as a change to any Contracts which may be affected. Prior to initiating any work which will impact the Contract terms, the Contractors must forward to AMEC written notice of all impacts, including but not limited to cost and schedule. Any work completed without a written instruction to proceed, if required, will be at the Contractor's risk.

6515-C-270-007

Fuel Tanks Piping Supply and Installation

Non-Conformance Log

Document Number : AEM-GE-LOG-002
Contract Number : C22466T / C22498E

Number	Company	Description	Initiator	Date Opened	Date Closed	Progress Status
NCR-001						N/A
NCR-002						N/A
NCR-003						N/A
NCR-004						N/A
NCR-005						N/A
NCR-006						N/A
NCR-007						N/A
NCR-008						N/A
NCR-009						N/A
NCR-010						N/A
NCR-011						N/A
NCR-012						N/A
NCR-013						N/A
NCR-014						N/A
NCR-015						N/A
NCR-016						N/A
NCR-017						N/A
NCR-018						N/A
NCR-019						N/A
NCR-020						N/A
NCR-021						N/A
NCR-022						N/A
NCR-023						N/A
NCR-024						N/A
NCR-025						N/A
NCR-026						N/A
NCR-027						N/A
NCR-028						N/A
NCR-029						N/A
NCR-030						N/A
NCR-031						N/A
NCR-032						N/A
NCR-033						N/A
NCR-034						N/A
NCR-035						N/A
NCR-036						N/A
NCR-037						N/A
NCR-038						N/A
NCR-039						N/A
NCR-040						N/A

Vendor Document Status

AGNICO EAGLE

1 ☐ Proceed to next submission and status.

2 ☐ Proceed with exceptions as noted to next submission and status.

3 ☐ Do not proceed.
Revise as noted and resubmit next submission and status.

4 ☑ Complete, no further submission required.

By: Jean-Francois Tremblay Date: 2017-05-02

Review and authorization to fabricate are only for general conformance with the design concept of the Project as expressed in the Contract Documents. Sole responsibility for the accuracy and completeness of this document, including but not limited to dimensions and quantities, remains with the Supplier/Contractor. Agnico Eagle does not warrant the accuracy or completeness of any of the information contained herein, nor does Agnico Eagle authorize or approve any construction means, methods, techniques, sequences or any safety precautions or procedures.

Agnico Eagle No. 6515-C-270-007-141-TES-0019 R: Sub001

DOCUMENT FOR INFORMATION

AGNICO EAGLE

Vendor Document Status

1 ☐ Proceed to next submission and status.

2 ☐ Proceed with exceptions as noted to next submission and status.

3 ☐ Do not proceed.
Revise as noted and resubmit next submission and status.

4 ☑ Complete, no further submission required.

By: JEAN-FRANCOIS TREMBLAY Date: 2017-05-02

Review and authorization to fabricate are only for general conformance with the design concept of the Project as expressed in the Contract Documents. Sole responsibility for the accuracy and completeness of this document, including but not limited to dimensions and quantities, remains with the Supplier/Contractor. Agnico Eagle does not warrant the accuracy or completeness of any of the information contained herein, nor does Agnico Eagle authorize or approve any construction means, methods, techniques, sequences or any safety precautions or procedures.

Agnico Eagle No. 6515-C-270-007-141-TES-0038 R: Sub001

DOCUMENT FOR INFORMATION

Agnico-Eagle Mines Ltd.

Contract no. 6515-C-270-007

Welding Control Procedure

AEM-WE-PRO-001

Area No.: All

System No.: All

PROMEC Approvals

Prepared by:	Stéphane Doré	**Signature:**		**Date:**	2017-04-26
Verified by:	Jérémy Duval	**Signature:**		**Date:**	2017-04-26
Approved by:	Éric Poulin	**Signature:**		**Date:**	2017-04-26

CLIENT Approvals

Verified by:		**Signature:**		**Date:**	
Approved by:		**Signature:**		**Date:**	

TABLE OF CONTENTS

Page

1. SCOPE 3
2. REFERENCES 3
3. WELDING PROCEDURES 3
4. WELDER PERFORMANCE QUALIFICATION 3
5. WELDING MATERIAL CONTROL 4
6. FIT-UP AND WELDING 4
7. RADIOGRAPHIC INSPECTION 5

APPENDIX A – ALL APPLICABLE ITRs & LOGs

1. Scope

- This procedure describes the system for maintaining control of all production welding to the requirements of the applicable engineering specifications, codes and standards.

2. References

- ASME, Section IX - Welding and Brazing Qualifications
- ANSI, B-31.3 - Petroleum Refinery Piping
- ANSI, B-31.1 - Power Piping
- AWS, American Welding Society

3. Welding Procedures

- All welding performed on site will comply with applicable qualified welding procedures as specified in the Standard S40 05 13.
- Prime contractor's welders will be qualified to weld procedures in accordance with contract specifications. Prime contractor is responsible for certifying their own welders.
- Copies of the qualified welding procedures approved for that project shall be maintained on site by the Welding Foreman and Site Q/C Representative for reference and permanent retention.

4. Welder Performance Qualification

- It is the responsibility of the Site Q/C Representative to conduct or supervise the Welder Performance Qualification tests. At the discretion of the Corporate Quality Control Manager, a Welding Foreman or other qualified site supervisor may conduct these tests.
- Records attesting to the Welder Performance Qualification tests shall be generated and maintained by the Site Q/C Representative and the Welding Foreman.
- The Site Q/C Representative and the Welding Foreman shall maintain a complete listing of welders and welding operators employed. The form, Welder Qualification Log, is to be updated and reissued on a monthly basis and is to be distributed as required.

5. Welding Material Control

- The Site Q/C Representative and Welding Foreman shall make certain that the welding material used conforms to that of the welding procedure. No substitutions for the specified material will be made without written approval from the client.

6. Fit-Up and Welding

- Visual surveillance shall be performed to establish compliance to welding procedures. The inspection parameters listed below are recommended as guidelines
  - ✓ Inspect end preparation and joint configuration as established by applicable weld procedures and engineering specifications.
  - ✓ Inspect internal alignment and root opening prior to welding.
  - ✓ Check tack welds that are to be incorporated into the final weld, and be assured of proper blend grinding and absence of visual defects.
  - ✓ Check for proper welding materials and other essential variables of applicable weld procedures.
  - ✓ Check visually root pass for cracks, porosity, slag, fusion lines and quality workmanship (if required use LP).
  - ✓ Inspect completed welds for proper reinforcement. All welds should blend smoothly into the base metal and be free of cold lap or fusion at the toe.
  - ✓ Inspect weld for surface discontinuities such as undercut. Surface porosity is to be considered as an injurious defect and shall be repaired.
  - ✓ All repairs are to be made in accordance with approved procedures.
  - ✓ Each welder shall be responsible for stamping his assigned symbol immediately after completion of the weld. A smooth, flat spot shall be ground or filed on the reinforcement cap. The welder shall stamp his/hers identifying mark upon this spot.
- For ferrous material less than 1/4" (1/2" for nonferrous), the welder's symbol shall be recorded on the base metal by use of a halogen-free paint marker, or recorded on isometric drawings by the welding supervisor which shall be available to the Quality Control Inspector.

7. Radiographic Inspection

- The Site Q/C Representative or Welding Foreman will schedule radiographic inspections.
- Radiographic requirements shall be determined by the client standard to assure compliance to contract Codes and specifications.
- Welds requiring radiography will be flagged by a suitable means which will be consistent through contract completion.
- The Site Q/C Representative will complete the Radiographic Inspection Status Record, to indicate status of radio graphically-inspected welds. This form will be forwarded to appropriate supervision for distribution.
- In addition to the records generated under this procedure, marked-up isometric and orthographic drawings will be used as weld maps to indicate completion of radiographic inspection. This will allow a progressive record and give system status.

PREMIÈRE PASSE E-6011 , 3/32
SMAW
REMPLISSAGE E-7018 , 1/8-5/32
SMAW
ACIER AU CARBONE
Procédure : P-1 , PR-1

et de la Protection du consommateur
Inspection des installations de tuyauterie
Division des appareils sous pression

DE SOUDAGE (DMS)
ding Procedure Specification (WPS)

lote: les titres désignent également les hommes et les femmes.

Entreprise/*Company*	
Nom	Construction Promec
Adresse/*Address*	369 rue Murdoch
	Rouyn-Noranda (Québec)
	(819) 797-3456 — Code postal J 9 X 1 G 4

(2) Enregistrement provincial / *Provincial Registration*	MS / WP 8814.6

(3) Désignation de la méthode/*Procedure Identification*

DMS N° / *WPS No.*	P1
Révision N° / *Revision No.*	0
RMS N° / *PQR No.*	PR1
Section du code / *Code section*	

(4) Procédé(s) de soudage / *Welding Process(es)*

1	SMAW	Manuel/*Manual* ☒	Semi-auto. ☐	Auto. ☐
2		Manuel/*Manual* ☐	Semi-auto. ☐	Auto. ☐
3		Manuel/*Manual* ☐	Semi-auto. ☐	Auto. ☐

(5) Joints/*Joints* (QW-402)

Genre/*Design*	VW Fillet — Chan Frein Simple — ~~Chan Frein Double~~
Soutien / *Backing*	Oui/*Yes* ☒ Non/*No* ☒
Matériau de soutien / *Backing material*	P1 ou soudure
Autre / *Other*	

Croquis/*Sketch*

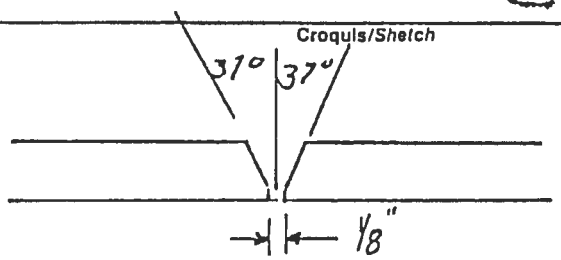

(6) Métaux de base/*Base Metals* (QW-403)

	P N°/*No.* P1	Gr N°/*No.*	à/*to*	P N°/*No.* P1	Gr N°/*No.*		
ou Spécifications type et grade / *or Specifications type and grade*			à/*to*				
Anal. chimique et prop. méc. / *Chemical Analysis and Mech. Prop.*			à/*to* F4				
Gamme des épaisseurs qualifiées / *Thickness Range Qualified*	Total 3/16" à 1½"	1 ¼"		2 1¼"		3	
Autre / *Other*							

(7) Métaux d'apport/*Filler Metals* (QW-404)

AWS N°/*No.*	E6011	SFA	5.1	*F-No.*	3	*A-No.*	1
AWS N°/*No.*	E7018	SFA	5.1	*F-No.*	4	*A-No.*	1
AWS N°/*No.*		SFA		*F-No.*		*A-No.*	

Dia.	3/32-1/8-5/32	Dia.	3/32-1/8-5/32
Dia.		Dia.	

Marque de commerce du flux / *Flux Tradename*	Classification du flux-électrode / *Electrode-Flux Classification*
Pièce insérée consumable / *Consumable Insert*	Autre / *Other*

(8) Positions/*Positions* (QW-405)

Position(s) du chanfrein / *Position(s) of Groove*	Toute position		
Progression du soudage / *Welding Progression*	Montant/*Up* ☒	Descendant/*Down* ☒	
Position(s) de l'angle / *Position(s) of Fillet*	Toute position		
Autre / *Other*			

(9) Préchauffage/*Preheat* (QW-406)

Température de préchauffage / *Preheat Temperature*	Min.	60°F
Température de l'interpasse / *Interpass Temperature*	Min.	
Maintien du préchauffage / *Preheat Maintenance*		
Autre / *Other*		

(10) Traitement thermique postsoudage/*Postweld Heat Treatment* (QW-407)

Gamme de températures / *Temperature Range*	Aucun
Gamme de durée / *Time Range*	
Autre / *Other*	

(11) Gaz/*Gas* (QW-408)

Composition du gaz de protection / *Shielding Gas Composition*	
Débit du gaz / *Gas Flow Rate*	
Composition du gaz de soutien / *Shielding Gas Composition*	
Débit du gaz / *Gas Flow Rate*	
Composition du gaz de protection trainant / *Trailing Shielding Gas Composition*	

Caractéristiques électriques et t[illegible]niques/Electrical Characteristics and Tec[illegible]ue (QW-409) + (QW-410)

[illegible]uche(s) de soudure [illegible]ver(s)	Procédé Process	Métal d'apport Filler Metal: Classification Classification	Diamètre Diameter	Courant Current: Type Type	Polarité Polarity	Gamme d'ampérage Amp Range	Gamme de voltage Volt Range	Gamme de vitesse Travel Speed Range
è	SHAW	E6011	$\frac{1}{8}$" à $\frac{5}{32}$"	DC	Inversé	75 - 85	26-30	--
tres	SHAW	E7018	$\frac{1}{8}$" à $\frac{5}{32}$"	DC	Inversé	105 -110	26-30	--

[illegible]sseur et type d'électrode de tungstène [illegible]gsten Electrode Size and Type	--
[illegible]e de transfert du métal pour GMAW [illegible]e of Metal Transfer for GMAW	--
[illegible]ion droit ou oscillant [illegible]g or Weave Bead	Droit et oscillant
[illegible]édé de gougeage arrière [illegible]od of Back Gouging	Arc Air
[illegible]oyage initial et entre les passes (brossage, meulage, etc.) [illegible] and Interpass Cleaning (Brushing, Grinding, etc.)	Brossage ou meulage
[illegible]ètre de la tuyère à gaz [illegible]e or Gas Cup Size	--
[illegible]llation [illegible]llation — Largeur Width	-- — Fréquence Frequency
[illegible]nce entre tuyère & pièce [illegible] to Work Distance	--
[illegible] ou multiple (par côté) [illegible] Single Pass (per Side)	--
[illegible]rode unique ou multiple [illegible]ple or Single Electrode	--
[illegible]me de vitesse d'alimentation de l'électrode [illegible]rode Wire feed speed range	--

Pas de martelage

Autres commentaires/Supplementary Comments

[illegible]gnature du représentant de l'entreprise [illegible]mpany Representative's Signature: Donald Dutil

Date: 15 janv. 88

Réservé au ministère/Department use only

[illegible]ar [illegible] Date: 88 01 20

N°

(16)

QC MINISTÈRE DU TRAVAIL ET DE LA MAIN-D'OEUVRE

APPROUVÉ

SELON LA [illegible] APPAREILS SOUS PRESSION [illegible]

VÉRIFIÉ PAR [illegible]

DATE 88 01 25

Gouvernement du Québec
Ministère de l'Habitation
et de la Protection du consommateur
Division des appareils sous pression

RÉSULTAT DE LA MÉTHODE DE SOUDAGE (RMS)
Procedure Qualification Record (PQR)

...tres désignent également les hommes et les femmes.

(Référence: ASME Section IX)

1 Entreprise/Company

om/Name: Construction Promec

dresse/Address: 369 rue Murdoch

Rouyn-Noranda (Québec)

819-797-3456 | Code postal: J 9 X 1 G 4

2 Enregistrement provincial / *Provincial Registration* | MS WP 8814.6

3 Désignation du résultat/*Record Identification*

RMS N° / *PQR No.*: PR-1

DMS N° / *WPS No.*: P -1

4 Procédé(s) de soudage/*Welding Process(es)*

SMAW — Type: Manuel

Type:

Type:

5

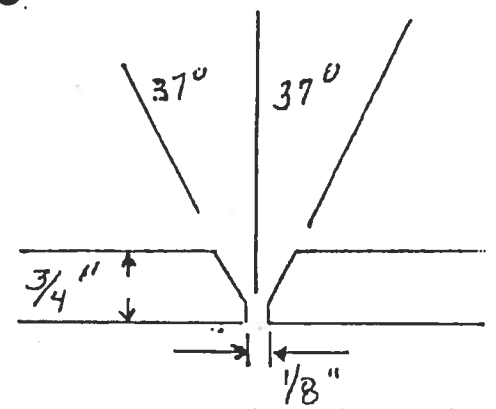

Croquis du joint utilisé/*Groove Design used*

6 Métaux de base/*Base Metals* (QW-403)

No. 1 Gr No. à/to P No. 1 Gr No.

pécification/*Specification* — Tension/*Tensile*

SA - 516 - 70 — 70 000

paisseur / *hickness*: 3/4 "

Diamètre/*Diameter*

utre / *ther*

7 Métaux d'apport/*Filler Metals* (QW-404)

Classification (AWS)	SFA - No.	F - No.	A - No.
E-6011	5.1	3	1
E-7018	5.1	4	1

utre / *ther*

8 Positions/*Positions* (QW-405)

osition(s) du joint / *osition(s) of Groove*: 1 - G

rogression du soudage / *elding Progression*: Montant / *Up* ☐ Descendant / *Down* ☐

utre / *ther*

9 Préchauffage/*Preheat* (QW-406)

empérature de préchauffage / *reheat Temperature*: 60 °F

empérature de l'interpasse / *terpass Temperature*

utre / *ther*

10 Traitement thermique postsoudage/ *Postweld Heat Treatment* (QW-407)

Température / *Temperature*: aucun

Durée / *Time*

Autre / *Other*

11 Gaz/*Gas* (QW-408)

Composition du gaz de protection / *Shielding Gas Composition*: --

Débit du gaz / *Gas Flow Rate*

Composition du gaz de soutien / *Backing Gas Composition*

Débit du gaz / *Gas Flow Rate*

Autre / *Other*

12 Technique/*Technique* (QW-410)

Cordon droit ou oscillant / *String or Weave Bead*: droit

Oscillation / *Oscillation*

Passe unique ou multiple (par côté) / *Multipass or Single Pass (Per Side)*: multiple

Électrode unique ou multiple / *Single or Multiple Electrode*: unique

Autre / *Other*

13 Caractéristiques électriques et techniques/*Electrical Characteristics and Technique* (QW-409) + (QW-410)

Couche(s) de ...ure / *Nel... r(s)*	Procédé / *Process*	Métal d'apport / *Filler Metal* — Classification / *Classification*	Métal d'apport — Diamètre / *Diameter*	Courant / *Current* — Type / *Type*	Polarité / *Polarity*	Ampérage / *Amp*	Voltage / *Volt*	Vitesse / *Travel Speed*
...ère	SMAW	E-6011	1/8	DC	Inversé	85	26-30	-
...utres	SMAW	E-7018	1/8	DC	Inversé	105	26-30	-

(15) Essais à la traction/Tensile Tests

Éprouvette Specimen	Dimensions Largeur Width	Dimensions Épaisseur Thickness	Surface Area	Charge limite Ultimate Total Load	Contrainte limite Ultimate Unit Stress	Nature et endroit de la rupture Character and Location of Failure
(i) G-1	.781	.810	.6326	51800	81,884	matériel
G-6	.785	.829	.6508	54300	83,436	matériel

(17) Essais de pliage guidé/Guided Bend Tests — Référence:

Éprouvette Specimen	Face Face	Racine Root	Côté Side	Résultat Result	Éprouvette Specimen	Face Face	Racine Root	Côté Side	Résultat Result
(i) G-2		X		Accepté	(i) G-3	X			Accepté
(i) G-4		X		Accepté	(i) G-5	X			Accepté

(16) Essais de résilience/Toughness Tests — Référence:

Éprouvette Specimen	Endroit de l'entaille Notch Location	Forme de l'entaille Notch Type	Température de l'éprouvette Specimen Temperature	Énergie de rupture Impact Value	Expansion latérale Lateral Expansion % cisaillement/shear	Expansion latérale Lateral Expansion Millièmes Mills	Essai en chute libre Drop Weight Cassé Break	Essai en chute libre Drop Weight Non cassé No Break

(17) Essai de soudure d'angle/Fillet Weld Test — Référence:

Résultat satisfaisant Result-Satisfactory — Oui Yes ☐ Non No ☐ — Pénétration dans métal adjacent Penetration into Parent Metal — Oui Yes ☐ Non No ☐

Résultats Macroscopiques Micro-Results

(18) Autres essais/Other Tests — Référence:

Reviewed and accepted by Construction Promec Inc. QC Manager
Date: March 29, 2007 Signed: Jean-Guy Bisson, eng

(19) Nom du soudeur Welder's Name: Serge Gagné — Symbole Stamp No.: G

Essais effectués par Tests conducted by: Megualtech — Essai de laboratoire No. Laboratory Test No.: 88-078

Nous certifions que les renseignements concernant ce résultat sont exacts et que les essais de soudage ont été préparés, soudés et exécutés conformément aux exigences de la section IX du Code ASME.

We certify that the statements in this record are correct and that the test welds were prepared, welded and tested in accordance with the requirements of section IX of the ASME Code.

(20) Signature du représentant de l'entreprise Company Representative's Signature: [signature] Date Date: 15 janvier 1988

QC MINISTÈRE DU TRAVAIL ET DE LA MAIN-D'OEUVRE
APPROUVÉ
SELON LA LOI SUR LES APPAREILS SOUS PRESSION R.L.R.Q.
VÉRIFIÉ PAR
DATE

Réservé au Ministère/Department Use Only 8814.6

Pièces soudées le Welded on: 14 janvier 88 — Inspecteur Inspector: Yvon Viau

Résultats vérifiés le Record Verified on: 880125 — Inspecteur Inspector: [signature]

Caractéristiques électriques et t[illegible]niques/*Electrical Characteristics and Tec*[illegible]ue (QW-409) + (QW-410)

Couche(s) de soudure / *Weld Layer(s)*	Procédé / *Process*	Métal d'apport / *Filler Metal*		Courant / *Current*				Gamme de vitesse / *Travel Speed Range*
		Classification / *Classification*	Diamètre / *Diameter*	Type / *Type*	Polarité / *Polarity*	Gamme d'ampérage / *Amp Range*	Gamme de voltage / *Volt Range*	
.e	SHAW	E6011	1" à 5" / 8 32	DC	Inversé	75 - 85	26-30	--
tres	SHAW	E7018	1" à 5" / 8 32	DC	Inversé	105 -110	26-30	--

sseur et type d'électrode de tungstène / *gsten Electrode Size and Type*	--
le de transfert du métal pour GMAW / *le of Metal Transfer for GMAW*	--
fon droit ou oscillant / *g or Weave Bead*	Droit et oscillant
:édé de gougeage arrière / *nod of Back Gouging*	Arc Air
oyage initial et entre les passes (brossage, meulage, etc.) / *al and Interpass Cleaning (Brushing, Grinding, etc.)*	Brossage ou meulage
nètre de la tuyère à gaz / *ce or Gas Cup Size*	--
illation / *illation* — Largeur / *Width*	-- — Fréquence / *Frequency*
ance entre tuyère & pièce / *ta[illegible] to Work Distance*	--
s[illegible] ou multiple (par côté) / *tiple [illegible]ingle Pass (per Side)*	--
:trode unique ou multiple / *'iple or Single Electrode*	--
nme de vitesse d'alimentation de l'électrode / *trode Wire feed speed range*	--
e / *er*	Pas de martelage

Autres commentaires/*Supplementary Comments*

INGÉNIEUR - ENGINEER
Jean-Guy Bisson
111343
QUÉBEC

Reviewed and accepted by Construction Promec Inc. QC Manage
Date: March 29, 2007 Signed: [signature]
Jean-Guy Bisson, eng

Signature du représentant de l'entreprise / *Company Representative's Signature*: [signature]

Date / *Date*: 15 janv. 88

(16)
QC MINISTÈRE DU TRAVAIL ET DE LA MAIN-D'OEUVRE
APPROUVÉ
SELON LA LOI [illegible] APPAREILS SOUS PRESSION L.R.Q.
VÉRIFIÉ PAR [signature]
DATE 88.01.25

Réservé au ministère/*Department use only*

[illegible] par [signature] Date: [illegible]

[illegible]ue N°

Appendix A

ALL APPLICABLE ITRs & LOGs

Appendix A

ALL APPLICABLE ITRs & LOGs

Date de qualification	Qualification
2017-05-06	Soudage sur appareils sous pression Classe A Tuyaux 50 mm, catégorie 160-P1-6G, F3-F4

Emploi Québec

Certificat de qualification

Nom de famille
MASSICOTTE-ROY

Prénom
ALEXANDRE

Numéro de dossier
0000000176159

Délivré en vertu de la Loi sur la formation et la qualification professionnelles de la main-d'oeuvre (L.R.Q., chapitre F-5).

Délivré le
2017-05-06

Expire le
2019-05-06

X

Signature

Ministère du Travail, de l'Emploi et de la Solidarité sociale

001386104

1-1016 (04-2015)

ıte de qualification	Qualification
2015-11-18	Soudage sur appareils sous pression Classe A Tuyaux 50 mm, catégorie 160-P1-6G, F3-F4

334 (07-2009)

Plier ici

Détacher sur le pointillé

Plier ici

Emploi Québec

Certificat de qualification

Nom de famille
FAUBERT

Prénom
STEVEN

Numéro de dossier
0000000125746

Délivré en vertu de la Loi sur la formation et la qualification professionnelles de la main-d'oeuvre (L.R.Q., chapitre F-5).

Délivré le
2015-11-18

Expire le
2017-11-18

X
Signature

Ministère du Travail, de l'Emploi et de la Solidarité sociale

001139657

Objet : Délivrance de votre certificat de qualification

Date de qualification	Qualification
2015-05-28	Soudage sur appareils sous pression Classe A Tuyaux 50 mm, catégorie 160-P1-6G, F3-F4

Emploi Québec

Certificat de qualification

Nom de famille
MARTEL

Prénom
SYLVAIN

Numéro de dossier
0000000046942

Délivré en vertu de la Loi sur la formation et la qualification professionnelles de la main-d'oeuvre (L.R.Q., chapitre F-5).

Délivré le
2015-05-28

Expire le
2017-05-28

X Sylvain Martel
Signature

Ministère de l'Emploi et de la Solidarité sociale

001055843

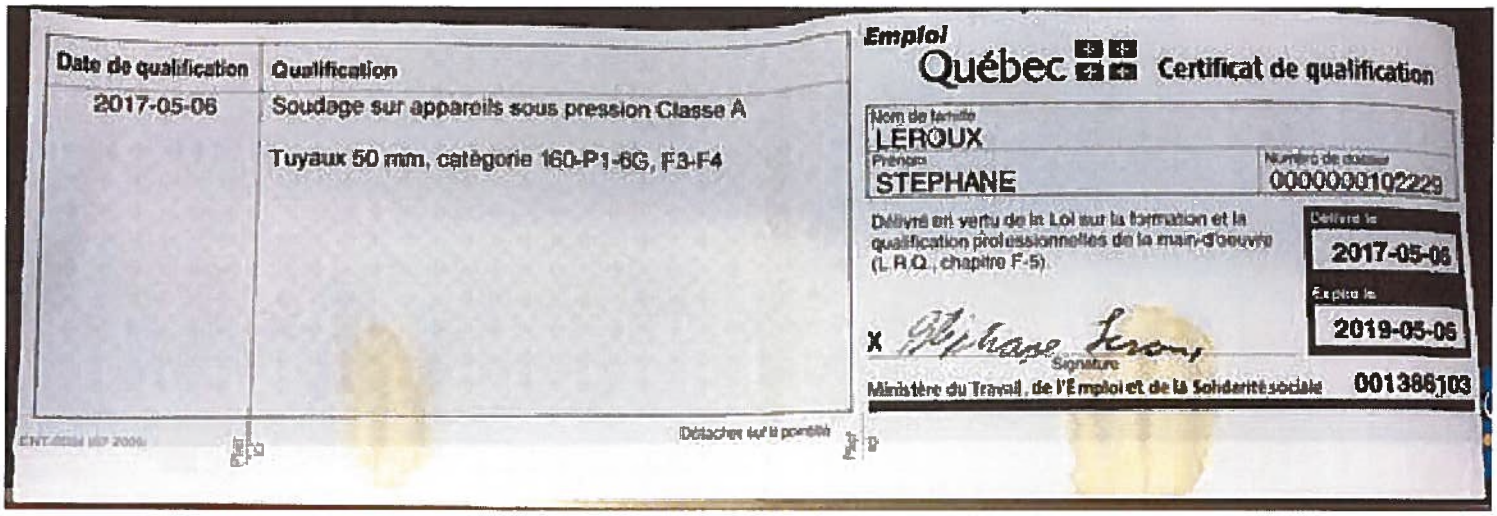

Date de qualification	Qualification
2017-05-06	Soudage sur appareils sous pression Classe A Tuyaux 50 mm, catégorie 160-P1-6G, F3-F4

Emploi Québec

Certificat de qualification

Nom de famille
LEROUX

Prénom
STEPHANE

Numéro de dossier
0000000102229

Délivré en vertu de la Loi sur la formation et la qualification professionnelles de la main-d'oeuvre (L.R.Q., chapitre F-5)

Délivré le
2017-05-06

Expire le
2019-05-06

X
Signature

Ministère du Travail, de l'Emploi et de la Solidarité sociale

001388103

Détacher sur le pointillé

Alberta
Municipal Affairs
and Housing

ABSA
the pressure equipment safety authority

21396

Grade "B" Pressure Welder's
Certificate of Competency

This is to certify that **Marylene Paul**
having complied with provisions of the Safety Codes Act, is authorized to engage in pressure welding in accordance with the prescribed Regulations.

Dated at Edmonton
October 04, 2007

W-26448
File no.

Chief Inspector and Administrator

Keyano COLLEGE

Welder Performance Qualification Card

AOQP No. 7121

MARYLENE PAUL — Name

W-26448 — File No.

This card is issued pursuant to the Safety Codes Act and the Pressure Welders Regulation. The performance qualification is in accordance with Section IX of the ASME Code and subject to the limitations on the reverse side.

MARCH 17-2016 — Date of Test

Marylene Paul — Welder's Signature

Louis Boutin — Welding Examiner (Print/type)

CARD No. 8816

Performance Qualification

CARD No. 8816

Process(es) SMAW SMAW

Materials (P. No.) P1/P1SF/P3/P4X

Filler Metal (F. No.) F3 F4

Min. Diameter 25mm OD

Max. Deposited Weld Metal 6mm MAX

Position(s) Qualified ALL

Backing OPTIONAL

Backing Gas N/A

Progression UPHILL

20 MARCH 17 [signature] E00101

PQ Expiry Date Welding Examiner Signature File No.

6515-C-270-007

Fuel Tanks Piping Supply and Installation

Inspection Deficiency Log

Document Number : AEM-GE-LOG-004
Contract Number : C22466T / C22498E

AGNICO EAGLE

Number	Description	Initiator	Dept.	Date	Contract No.		Progress Status
Deficiency-001	Broken Handle on man door operator room - Pumping Station Rankin	Promec	Piping	5-Sep-17	C22466T/C22498E		
Deficiency-002	Ripped door hinges - Damage Reported by Andrew Martin AEM - Becancour	AEM/Promec	Piping	5-Sep-17	C22466T/C22498E		
Deficiency-003						N/A	
Deficiency-004						N/A	
Deficiency-005						N/A	
Deficiency-006						N/A	
Deficiency-007						N/A	
Deficiency-008						N/A	
Deficiency-009						N/A	
Deficiency-010						N/A	
Deficiency-011						N/A	
Deficiency-012						N/A	
Deficiency-013						N/A	
Deficiency-014						N/A	
Deficiency-015						N/A	
Deficiency-016						N/A	
Deficiency-017						N/A	
Deficiency-018						N/A	
Deficiency-019						N/A	
Deficiency-020						N/A	
Deficiency-021						N/A	
Deficiency-022						N/A	
Deficiency-023						N/A	
Deficiency-024						N/A	
Deficiency-025						N/A	
Deficiency-026						N/A	
Deficiency-027						N/A	
Deficiency-028						N/A	
Deficiency-029						N/A	
Deficiency-030						N/A	
Deficiency-031						N/A	
Deficiency-032						N/A	
Deficiency-033						N/A	
Deficiency-034						N/A	
Deficiency-035						N/A	
Deficiency-036						N/A	
Deficiency-037						N/A	
Deficiency-038						N/A	
Deficiency-039						N/A	
Deficiency-040						N/A	

NUQSANA PROMEC MINING

Agnico-Eagle Mines Ltd.
Inspection Deficiency Report

ITR Number : AEM-GE-ITR-005
Contract no. : C22466T / C22498E

AGNICO EAGLE

Area: Rankin Inlet	CWP No: C-270-007
Equipment Tag No: Pumping Station Rankin	Inspection Deficiency Report No: 001
Date: 2017-09-05	Page 1 of 4

Reference Drawings: Not applicable

Reference Photos: IMG-0835, IMG-0836, Crushed Gutter_Container Rankin

Description of Deficiency:

Broken Door Handle of man door operator room side, as-found on Rankin Pumping Station Container.

Bump on container top back side wall, as-found on Rankin Container.

Crushed gutter above door on Pumping Station Container, as-found.

Suggested Solution: Purchase and replacement of the handle.

Repair the gutter, if possible, if not, purchase a new one and replacement.

Repair the bump (small puncture)on the wall, if possible.

Engineering Contact Made: Yes ☐ No ☐ Name:

Course of Action:

Engineering Follow-up Required: Yes ☐ No ☐ Date Required:

Robbie Lemaire		Stephane Giguet	
Promec's Representative Print Name		Client's Representative Print Name	
	07/09/17		07 Sept. 2017
Promec's Representative Signature	Date	Client's Representative Signature	Date



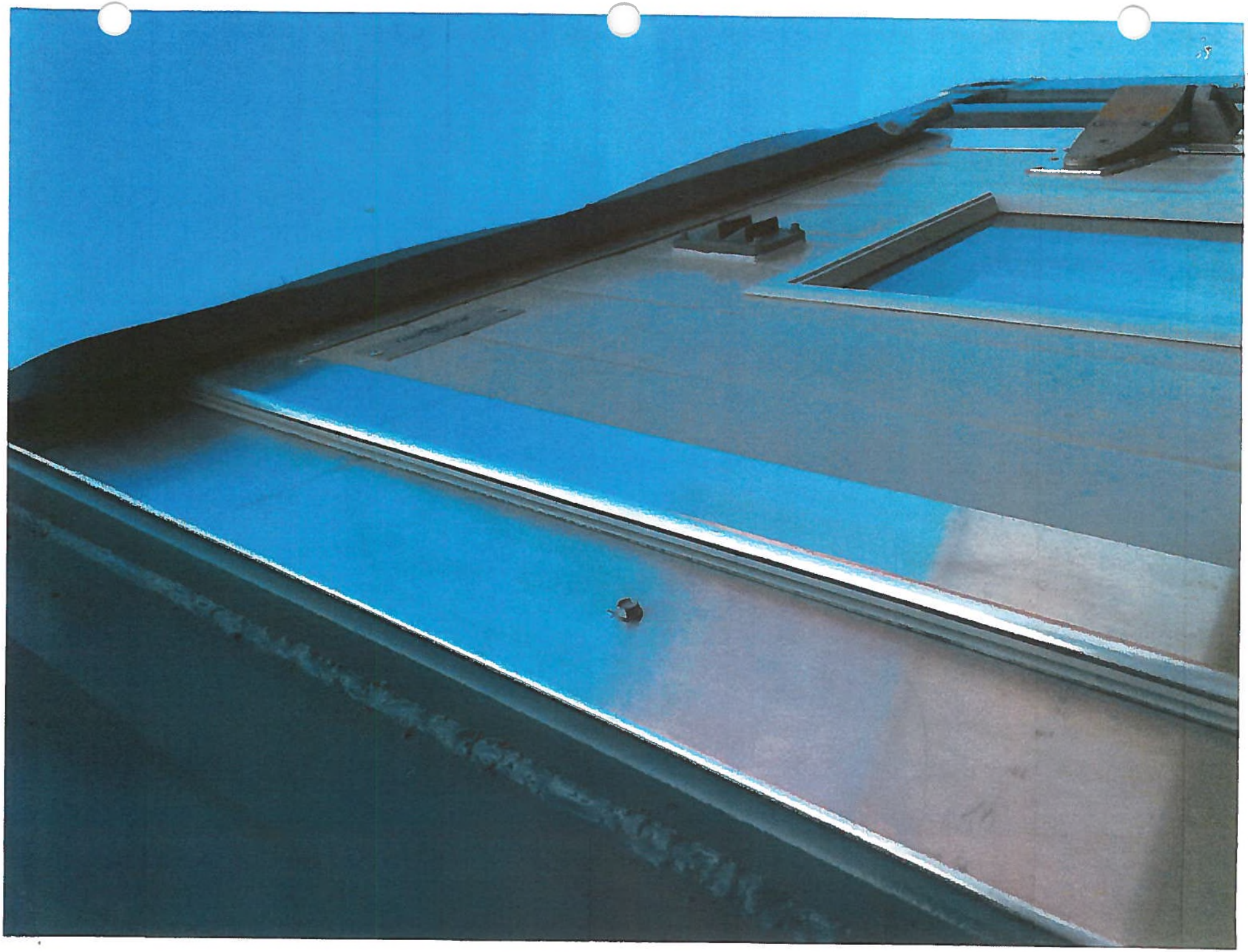

Agnico-Eagle Mines Ltd.
Inspection Deficiency Report

ITR Number : AEM-GE-ITR-005
Contract no. : C22466T / C22498E

AGNICO EAGLE

Area: Rankin Inlet - Port of Becancour	CWP No: C-270-007
Equipment Tag No: Filtration Container	Inspection Deficiency Report No: 002
Date: 2017-09-05	Page 1 of 5

Reference Drawings: Not applicable

Reference Photos: IMG_1352, IMG_1351, IMG_1350, IMG_1349

Description of Deficiency:
Damage reported by Andrew Martin, handling in port of Becancour.
Ripped door hinges. See pictures.

Suggested Solution: Purchase and replacement of ripped hinges.

Engineering Contact Made: Yes ☐ No ☐ Name:

Course of Action:

Engineering Follow-up Required: Yes ☐ No ☐ Date Required:

Robbie Lemoth

Promec's Representative Print Name

Client's Representative Print Name

Promec's Representative Signature | Date

Client's Representative Signature | Date

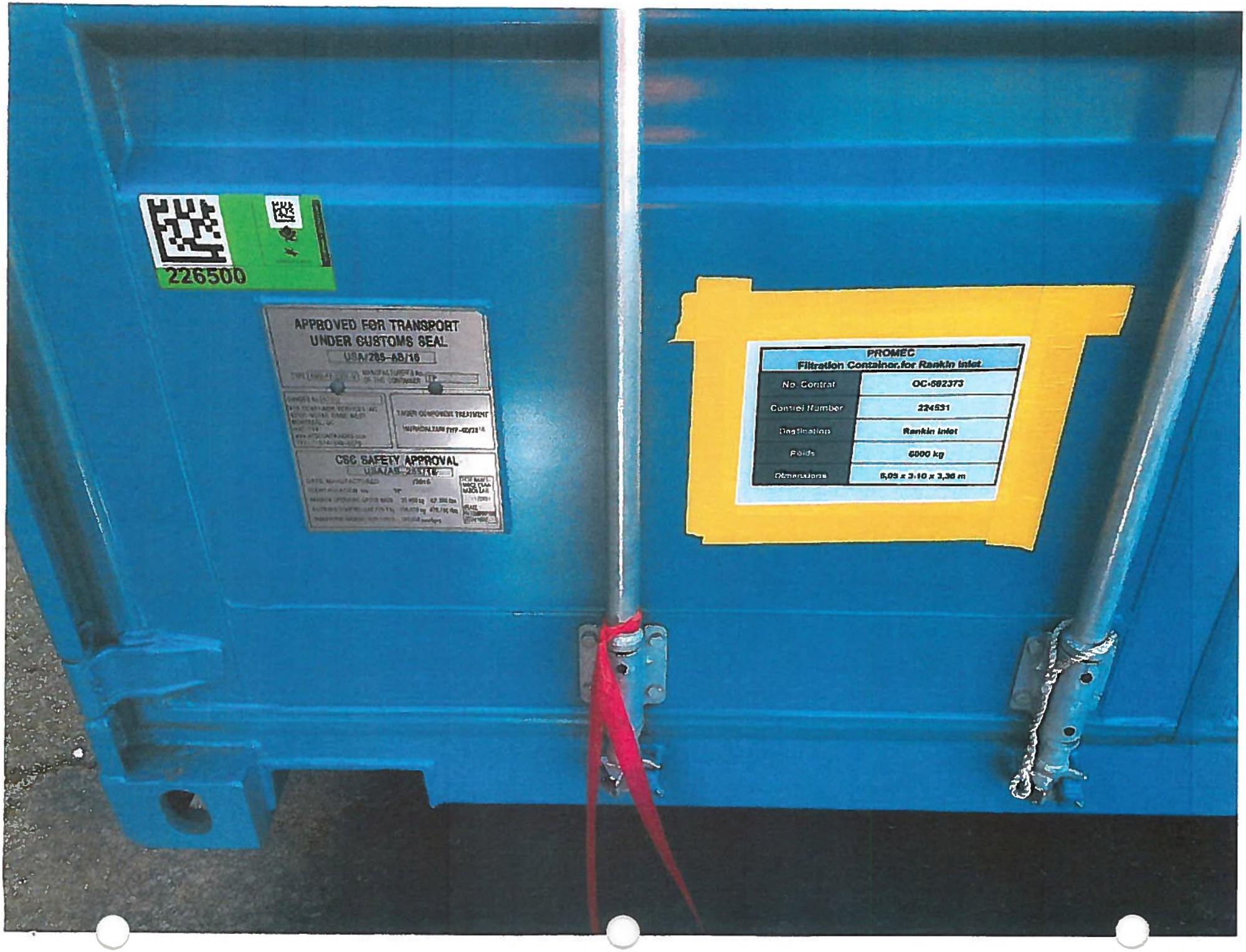
226500
APPROVED FOR TRANSPORT
UNDER CUSTOMS SEAL
CSC SAFETY APPROVAL
PROMEC
Filtration Container for Rankin Inlet
No. Contrat
OC-682373
Contrat Number
224531
Destination
Rankin Inlet
Poids
6000 kg
Dimensions
6,05 x 2,10 x 2,36 m

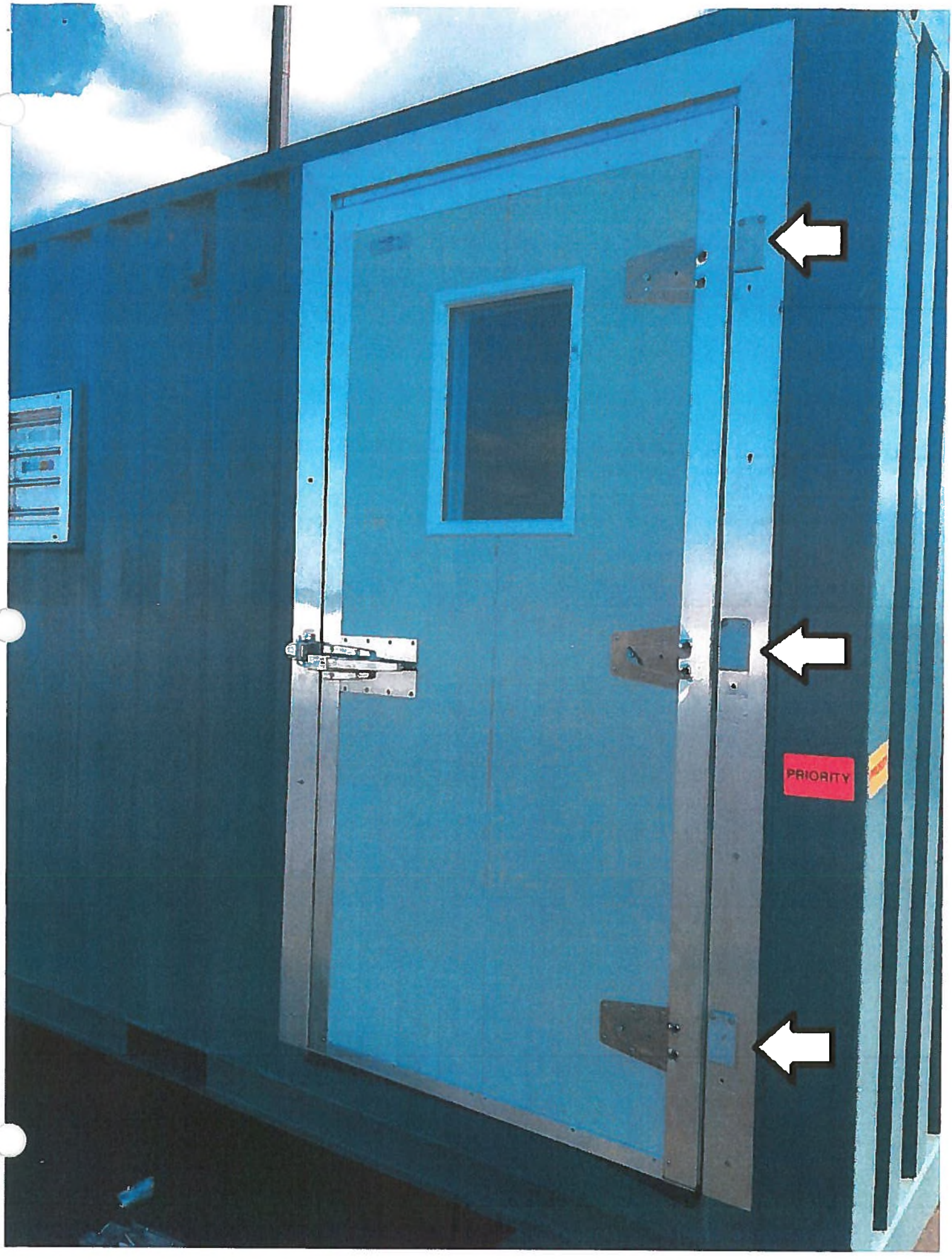
PRIORITY





AGNICO EAGLE

Vendor Document Status

1 ☐ Proceed to next submission and status.

2 ☐ Proceed with exceptions as noted to next submission and status.

3 ☐ Do not proceed.
Revise as noted and resubmit next submission and status.

4 ☑ Complete, no further submission required.

By: Jean-Francois Tremblay Date: 2017-05-02

Review and authorization to fabricate are only for general conformance with the design concept of the Project as expressed in the Contract Documents. Sole responsibility for the accuracy and completeness of this document, including but not limited to dimensions and quantities, remains with the Supplier/Contractor. Agnico Eagle does not warrant the accuracy or completeness of any of the information contained herein, nor does Agnico Eagle authorize or approve any construction means, methods, techniques, sequences or any safety precautions or procedures.

Agnico Eagle No. 6515-C-270-007-141-TES-0017 R: Sub001

DOCUMENT FOR INFORMATION

NUQSANA PROMEC MINING

Agnico-Eagle Mines Ltd.
Inspection Deficiency Report

ITR Number : AEM-GE-ITR-005
Contract no. : C22466T / C22498E

AGNICO EAGLE

Area:	CWP No:
Equipment Tag No:	Inspection Deficiency Report No:
Date:	Page_____ of _____
Reference Drawings:	
Reference Photos:	
Description of Deficiency:	
Suggested Solution:	
Engineering Contact Made: Yes ☐ No ☐ Name:	
Course of Action:	
Engineering Follow-up Required: Yes ☐ No ☐ Date Required:	

Promec's Representative Print Name		Client's Representative Print Name	
Promec's Representative Signature	Date	Client's Representative Signature	Date

6515-C-270-007

Fuel Tanks Piping Supply and Installation

Inspection Deficiency Log

Document Number : AEM-GE-LOG-004
Contract Number : C22466T / C22984E

Number	Description	Initiator	Dept.	Date	Contract No.		Progress Status
Deficiency-001						N/A	
Deficiency-002						N/A	
Deficiency-003						N/A	
Deficiency-004						N/A	
Deficiency-005						N/A	
Deficiency-006						N/A	
Deficiency-007						N/A	
Deficiency-008						N/A	
Deficiency-009						N/A	
Deficiency-010						N/A	
Deficiency-011						N/A	
Deficiency-012						N/A	
Deficiency-013						N/A	
Deficiency-014						N/A	
Deficiency-015						N/A	
Deficiency-016						N/A	
Deficiency-017						N/A	
Deficiency-018						N/A	
Deficiency-019						N/A	
Deficiency-020						N/A	
Deficiency-021						N/A	
Deficiency-022						N/A	
Deficiency-023						N/A	
Deficiency-024						N/A	
Deficiency-025						N/A	
Deficiency-026						N/A	
Deficiency-027						N/A	
Deficiency-028						N/A	
Deficiency-029						N/A	
Deficiency-030						N/A	
Deficiency-031						N/A	
Deficiency-032						N/A	
Deficiency-033						N/A	
Deficiency-034						N/A	
Deficiency-035						N/A	
Deficiency-036						N/A	
Deficiency-037						N/A	
Deficiency-038						N/A	
Deficiency-039						N/A	
Deficiency-040						N/A	

AGNICO EAGLE

Vendor Document Status

1 ☐ Proceed to next submission and status.

2 ☐ Proceed with exceptions as noted to next submission and status.

3 ☐ Do not proceed.
Revise as noted and resubmit next submission and status.

4 ☑ Complete, no further submission required.

By: JEAN-FRANCOIS TREMBLAY Date: 2017-05-16

Review and authorization to fabricate are only for general conformance with the design concept of the Project as expressed in the Contract Documents. Sole responsibility for the accuracy and completeness of this document, including but not limited to dimensions and quantities, remains with the Supplier/Contractor. Agnico Eagle does not warrant the accuracy or completeness of any of the information contained herein, nor does Agnico Eagle authorize or approve any construction means, methods, techniques, sequences or any safety precautions or procedures.

Agnico Eagle No. 6515-C-270-007-141-TES-0020 R: Sub001

DOCUMENT FOR INFORMATION

AIRMP.CA

Custom HVAC manufactured products

Inspection report – As built unit dimensions

Contract number : Amp17-17 (PS1-103)
Client : Groupe promec inc.

CLIENT IDENTIFICATION:					
Monitored points	**C**	**NC**	**NN**	**Comments**	**Reference documents**
Validation of dimensions according to plans	☑	☐	☐		
					C : complying NC : non-complying NN : not-needed

Verified by : Karen Gendreau-Lacoste **Signature :** Karen G. Lacoste **Date :** 26 mai 2017

Reviewd by : Richard Piquette, Operations director **Signature :** _____ **Date :** _____

AIRMP.CA
Custom HVAC manufactured products

Inspection report - General

Contract number : Amp17-17 (PSI-103)
Client : Groupe promec inc.

CLIENT IDENTIFICATION:

1. General look of the container

Points subject to monitoring	C	NC	NN	Comments	Reference dosumentation
1,1 State of the doores (joints, windows, etc.)	☑	☐	☐		
1,2 General structure state	☑	☐	☐		
1,3 Inside finnish	☑	☐	☐		
1,4 Sticker installation (Coils, units, etc.)	☐	☐	☑		
1,5 Cleanliness	☑	☐	☐		
1,6 Sealant joints	☑	☐	☐		

C : complying NC : non-complying NN : not-needed

2. OTHER INTEGRATED EQUIPMENTS & TESTS					
Points subject to monitoring	C	NC	NN	Comments	Reference dosumentation
2,1 Insulation (Installation as per specification)	☑	☐	☐		
2,2 Vents and piping	☐	☐	☑		
2,3 Watertight containment and drains	☑	☐	☐		
2,4 Filters and framing (state, type, number, arrangements, etc.)	☐	☐	☑		
2,5 Lights, sockets, switches (type, number, etc.)	☐	☐	☑		
2,6 Instrumentation (pressure, flow, temperature, etc.)	☐	☐	☑		
2,7 The state and disposition of other components (burner, water seperator, special filters, humidifier, electrical coils, etc.)	☐	☐	☑		
2,8 Silencers, valves, air scrubbers, etc.	☐	☐	☑		
2,9 Detailed pictures	☑	☐	☐		
2,10 Nameplates	☑	☐	☐		
				C : complying	NC : non-complying NN : not-needed

Verified by : Karen Gendreau-Lacoste **Signature :** Karen G. Lacoste **Date :** 26 mai 2017

Reviewed by : Richard Piquette, Operations director **Signature :** _____ **Date :** _____

AGNICO EAGLE

Vendor Document Status

1 ☐ Proceed to next submission and status.

2 ☐ Proceed with exceptions as noted to next submission and status.

3 ☐ Do not proceed.
Revise as noted and resubmit next submission and status.

4 ☑ Complete, no further submission required.

By: Joël Morliere Date: 2017-06-05

Review and authorization to fabricate are only for general conformance with the design concept of the Project as expressed in the Contract Documents. Sole responsibility for the accuracy and completeness of this document, including but not limited to dimensions and quantities, remains with the Supplier/Contractor. Agnico Eagle does not warrant the accuracy or completeness of any of the information contained herein, nor does Agnico Eagle authorize or approve any construction means, methods, techniques, sequences or any safety precautions or procedures.

Agnico Eagle No. 6515-C-270-007-265-EDS-0034 R: Sub002

DOCUMENT FOR INFORMATION

WSP

SHOP DRAWING
DATA SHEET

Affixing this stamp confirms that an administrative approval and/or a verification of compliance with shop drawings or specifications was made, but does not entail the liability of the author of the work or its owner with regards to this shop drawing or data sheet, for which the contractor is the sole responsible.

☑ Reviewed ☐ Reviewed as noted

☐ Rejected ☐ Filed for records

The contractor, supplier and/or sub-contractor is responsible for: comfirming and coordinating all quantities and dimensions; selecting fabrication processes and techniques of construction; coordinating his or her work with that of all other trades and performing all work in a safe and satisfactory manner.

By: J. Morliere Date: 2017/06/05

G-ADM-ZZZ-82-11E-2 Project #: 151-06440-40

AIRMP.CA
Manufacturier de produits CVAC sur mesure

750, rue Saguenay
Rouyn-Noranda (Québec) J9X 7B5

Téléphone : 819 797-1234
Télécopieur : 819 762 3801

PRE FABRICATED BUILDING

TECHNICAL SPECIFICATION



Equipment: **6515-103, Pumping station**

Date: **May** 23 **2017**

Client : **PROMEC**

Responsable: **Eric Poulin, piping Director**

Contract: **AMP17-17**

Revision : For fabrication

Submitted by : **Francis St-Pierre, Ing.**

Serial number : **AMP00378**

Table of Contents

1. General characteristics
2. Fabrication characteristics
3. Fabrication characteristics (continued)
4. General arrangement drawings

AIRMP
Manufacturier de produits CVAC sur mesure

Project : 6515-103, Pumping station
Client : Promec

Nomenclature

AMP -	PFB	2	160	E

BRAND
AMP- AIR MP

MODEL
PFB- PRE FABRICATED BUILDING

AHU- AIR HANDLING UNIT

INSTALLATION
1- INTERIOR
2- EXTERIOR

FT²

TYPE OF BUILDING

E- E-HOUSE
M- MECHANICAL ROOM

1. General characteristics

AIRMP
Manufacturier de produits CVAC sur mesure

Project : 6515-103, Pumping station
Client : Promec

General characteristics

Type of unit

- ☐ Recirculation
- ☐ Cooling
- ☐ Filtration
- ☐ Heating
- ☒ Shelter
- ☐ Evacuation
- ☐ Air compensation

Emplacement

- ☐ Interior
- ☒ Exterior

Dimensions

	Length	Width	Height
Building (mm)	6058	2438	2591
Estimated weight	5 500 kg		

By others

- ☒ Support pilars
- ☒ On site assembly
- ☒ Electrical integration
- ☒ HVAC
- ☒ Lighting services

Notes :

Standard 20' container

2. Fabrication characteristics

AIRMP
Manufacturier de produits CVAC sur mesure

Project : 6515-103, Pumping station
Client : Promec

Fabrication characteristics

Structure : 20 foot standard container

	Tôle				Gauge				Insulation		Thickness			R value
	AL	CP	GA	P	1/8	1	1 20	26	AI	TI	2"	4"	10"	
Interior finish	☐	☒	☐	☒	☐	☐	☐	☐	☐	☒	☐	☒	☐	26
Exterior finish	☐	☐	☐	☐	☐	☐	☐	☐	☐	☐	☐	☐	☐	--
Ceiling	☐	☒	☐	☒	☐	☐	☐	☐	☐	☒	☐	☒	☐	26
Roof	☐	☐	☐	☐	☐	☐	☐	☐	☐	☐	☐	☐	☐	--
Floor	☐	☐	☐	☐	☐	☐	☐	☐	☐	☒	☐	☒	☐	26

Finish

	Specification
Structural steel	Prep: Sandblast SSPC6 / Paint: Epoxy Barust 235, 8 to 12 mils dry
Exterior finish	Paint: Solvent clean SSPC1 / Polyurethane "Decthane 359" 2 to 3mils dry, Color: Slate Blue (QC 8260)
Inside finish	Galvanized grating on floor. Cement panels on walls.

AL:	ALuminum checker plate	CP:	Cement panel ½''	GA:	Galv. sheet metal	P:	Plywood ¾''
AI:	Acoustic insulation	TI:	Thermal insulation				

5/10/17 16:31:26

EMAIL PAGE COUVERTURE

==========

Société: Acier Leroux - Amos

5/10/17 16:31:26 Document Sommaire

Page couverture 1

Objet: MILL TEST CERTIFICATE

NO.COMMANDE :89337400

No.Bc Du Client :AIR-1822

City : ROUYN-NORANDA State/Province . QC

Séquence correspondant au(x) MTR imprimé(s):

Description item:	Coulée	MTR
1/8 X 1 19-4 CAILLEBOTIS GALV	LETTRE CONFORME	089026959

FISHER & LUDLOW
A NUCOR Company

CERTIFICAT DE CONFORMITÉ 2017

ACIER LEROUX
1331 Graham Bell
Boucherville, Qc
J4B 6A1

ATTN: Chantal Boisvert

A qui de droit,

Fisher & Ludlow certifie que le matériel utilisé pour la fourniture et/ou la fabrication du caillebotis soudé en acier, décrit ci-dessous, selon votre commande, est conforme à la norme de NAAMM MBG 531-00, NAAMM MBG 532-00.

DESCRIPTION	SPECIFICATION
Caillebotis et attaches	
Non peint, peint noir et galvanisé	ASTM -A1011/A1011M
Aluminium	ASTM -B221/B221M
Acier inoxydable	ASTM - A666
Planches de sécurité Grip Span & Shur Grip	
Pre-galvanise	(G90) - (ASTM - A653)
Aluminium	5052-H32 (ASTM-B209)
Acier inoxydable	(ASTM - A666)
Barreaux d'echelles et feuilles "Shur Step"	
H.R.P.O.	(ASTM - A569/A569M)
Alumnium	5052-H32 (ASTM-B209)
Acier inoxydable	(ASTM - A666)

Fisher & Ludlow Division Nucor
12450, Boul. Industriel Montreal, Pointe-aux-Trembles, Qc H1B 5M5
Tel: 514.640.5085 1.800.268.6277 *Télécopieur/Fax:* 514.640.1115

LEROUX

089026959

PermaBase[MD] BRAND

09 28 00/NGC

Cement Board Construction Guide







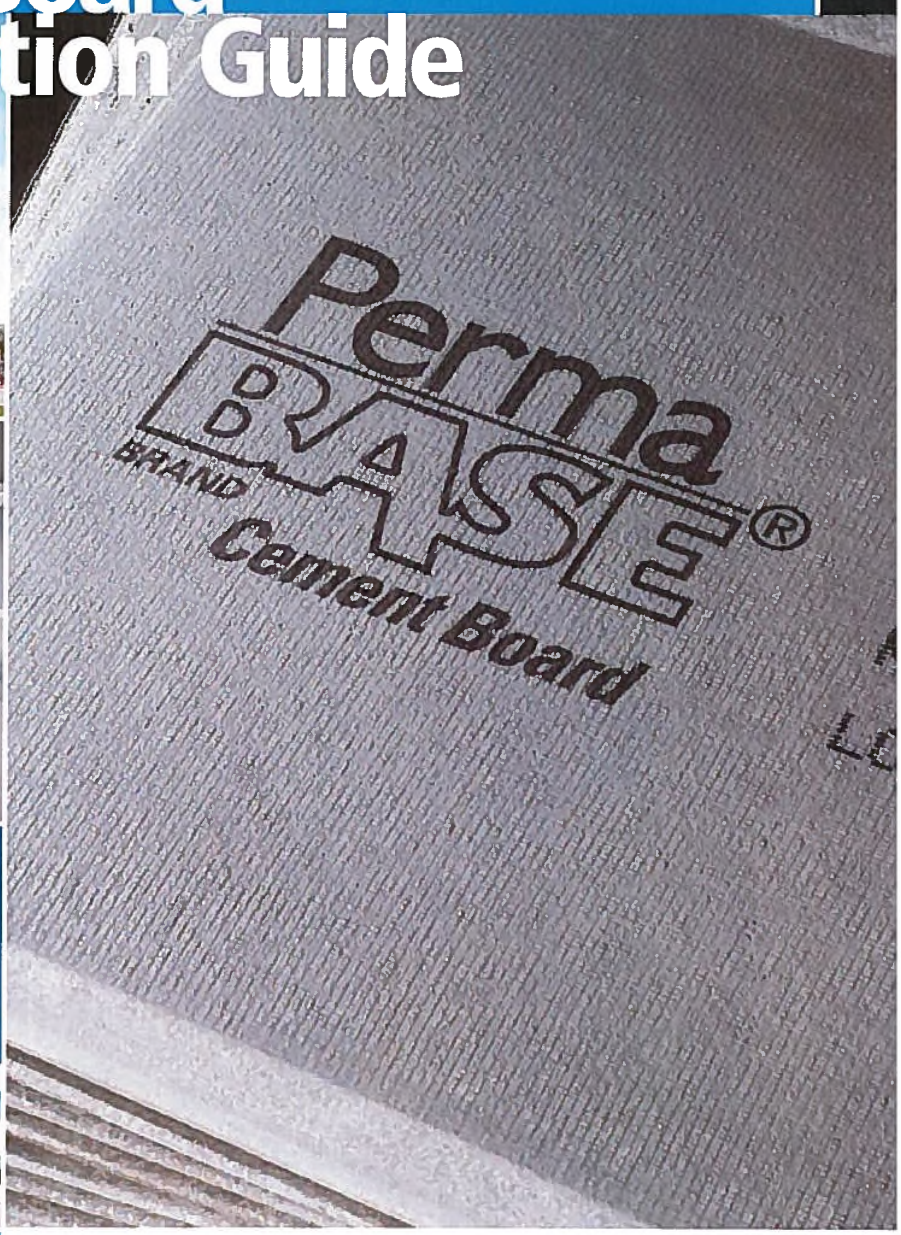

UNIFIX INC.®

A Subsidiary Of National Gypsum Company

Helping You Build Better

Look Closer At The Best Cement Board Substrate

PermaBase[MD] Product Line At A Glance 4

PermaBase[MD] Cement Board 6

PermaBase PLUS[MD] Cement Board 9

PermaBase UltraBacker[MD] Cement Board 10

PermaBase Flex[MD] Cement Board 11

Installation Guide How And Where 12

Interior Applications 12

Accessories 12

Exterior Applications 15

Ventilate Rainscreen Façade. 16

Cement Board Masonry Veneer Wall Systems (CBMV) 17

Heat Shield 18

Fire-Rated Assemblies 18

PermaBase Over Foundation Walls 19



With High-Quality Products And Resources

Founded in 1925, National Gypsum is one of the world's largest producers of quality building products. For nearly a century, customers like you have looked to us for the best products, service and technical support. With a focus on sustainability, we strive to bring you the finest in construction products, education and resources to meet and exceed your expectations.

With Design That Considers The Environment

Together, we can attain the highest level of ecological responsibility and resource-efficient technology. National Gypsum is committed to developing and implementing sustainable green building policies, standards and practices. Beyond offering products that can help contribute to healthier environments and have achieved GREENGUARD Certification for indoor air quality, we can help you meet the criteria for green programs and LEED credits.

GREENGUARD GOLD

PRODUCT CERTIFIED FOR LOW CHEMICAL EMISSIONS: UL.COM/GG UL 2818





With Technical Support You Can Count On

Great products are nothing without great customer service. For detailed technical information about product applications, installation requirements, code requirements or roof and wall assemblies, call 1-800-NATIONAL[MD]. Talk directly to a technical expert with up-to-date knowledge of products, specifications, building codes and more. Our technical experts can even review your plans and drawings and get back to you with answers to your questions within 48 hours.

Working Wherever Your Project Takes You



Choose From Four Types Of PermaBase[MD] BRAND Cement Board:

More Hard-Working Varieties With Qualities You Can Depend On

With four types of PermaBase[MD] BRAND Cement Board to choose from, you'll find a match for most any project. This durable substrate withstands prolonged exposure to moisture in both interior and exterior applications. Lightweight and easy to install, PermaBase promises to deliver for the long run – with the industry's best warranties. It is also GREENGUARD Certified for low-chemical emissions, which can contribute to healthier indoor environments.

Saving You Time And Money

These exclusive PermaBase features translate to cost savings for you:

EdgeTech[MD] Technology – This patented, reinforced edge allows fasteners to be installed closer to the board's edge and reduces damage from handling.

Polystyrene Beads – Embedded in the PermaBase core, these beads help to lighten the board's weight, improve the ease of cutting, and create lower water absorption, preventing the mortar/finish adhesive from drying prematurely.

Our PermaBase[MD] Product Family

1 PermaBase[MD] Cement Board

The original that set the industry standard.

2 PermaBase PLUS[MD] Cement Board

Weighs 25% less than other cement boards on the market.

3 PermaBase UltraBacker[MD] Cement Board

Provides excellent rigidity for special applications with the lowest water-absorption rate.

4 PermaBase Flex[MD] Cement Board

Very flexible yet strong, and ideal for use around archways, columns, stairwells – wherever an evenly curved surface is required.

APPLICATIONS

Product	Floors	Countertops	Walls	Ceilings	Exteriors
1/4" PermaBase	●	●	○	○	○
1/4" UltraBacker	●	●	○	○	○
7/16" PermaBase PLUS	●	●	●	●	●
1/2" PermaBase	●	●	●	●	●
1/2" PermaBase PLUS	●	●	●	●	●
5/8" PermaBase	●	●	●	●	●
5/8" PermaBase PLUS	●	●	●	●	●
1/2" PermaBase FLEX	○	○	●	●	●

Recommended: ● Yes ○ No

Building In Strength And Quality

Reinforce With The Best Rigid Substrate: PermaBase[MD] BRAND Cement Board

PermaBase[MD] provides a durable surface designed to withstand prolonged exposure to moisture. Made with Portland cement, aggregate and fiberglass mesh, it works well as an underlayment for tub and shower surrounds, countertops, flooring and a variety of other interior and exterior applications. Lightweight and easy to install, our patented EdgeTech[MD] Technology allows a closer nail or screw application.

Quality To The Core



1. **Patented Reinforced Edge**
2. **Fiberglass Mesh**
3. **Cementitious Core**

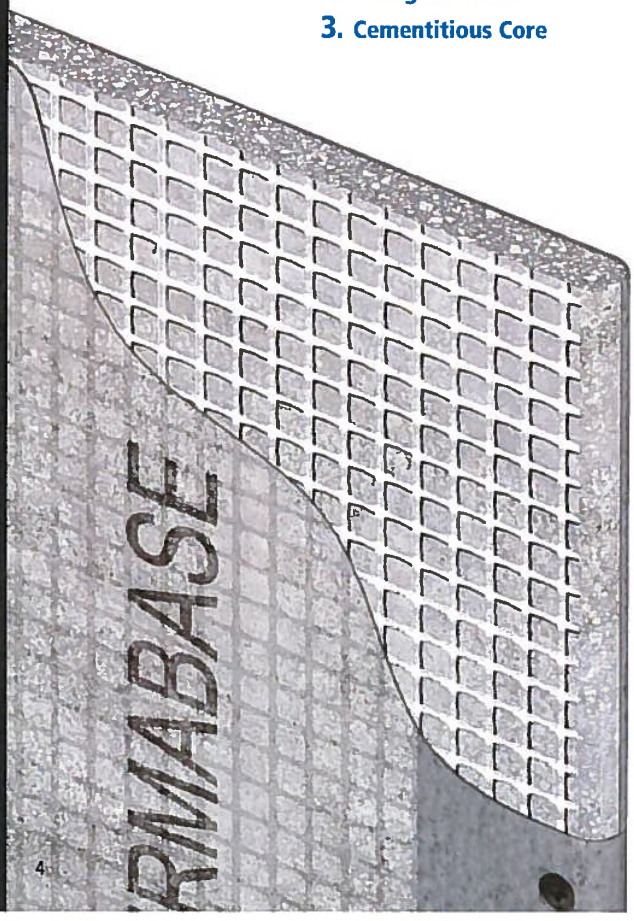



Resists Moisture Better

- Stays intact when exposed to water: will not rot, disintegrate or swell – built for the long run.
- Achieves the industry's lowest water-absorption rating (ASTM C473) – offering better installation.
- Helps inhibit mold growth with the highest possible score on mold tests (ASTM D3273 and ASTM G21).



Stays Strong And Lasts Long

- Resists impact and remains dimensionally stable – extending the life of your project.
- Holds up to the toughest conditions.



Installs Quickly

- Lightweight and easy to cut – speeding up installation.
- Reduces jobsite waste – easier, cleaner cut.
- Patented EdgeTech[MD] Technology allows for a closer edge fastening and reduces damage from handling.



Works For Interior And Exterior Projects

– One Panel, Many Applications

- Adhere tile, stone or thin brick directly to PermaBase in exterior applications – saving time and money.
- Durable substrate for direct-applied coating systems.
- Meets UL & ULC classifications for one- and two-hour fire-rated assemblies.
- Building code approved – one substrate that does the job of many.



Offers Best In Class Warranty

- Lifetime Limited Warranty: Interior applications.
- 15-Year Limited Warranty: Exterior applications.



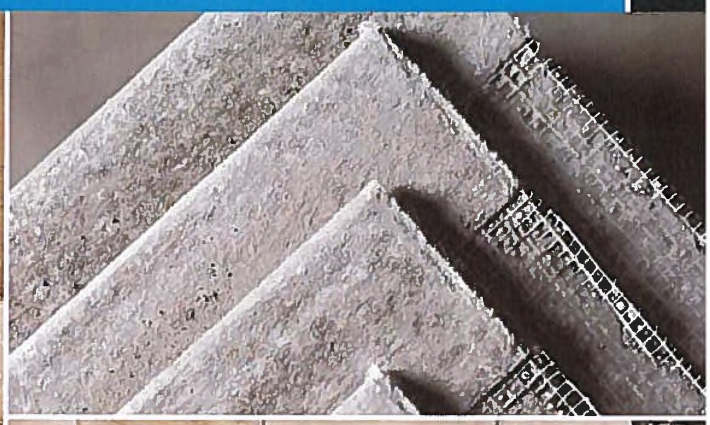



What Sets PermaBase[MD] Apart From The Rest?

Physical Feature Benefits	PermaBase Cement Board	Other Cement Boards	Fiber Cement Boards
Low Weight Glass Mesh Cement Board	✓	○	○
Reinforced Edge	✓	○	○
Fastens Near Edge With No Breakout	✓	○	○
Highest Damage Resistancy From Handling	✓	○	○
Cleanest To Score And Snap	✓	○	○
Lowest Water Absorption	✓	○	○
Meets 40 psf Rating Wind Load Test Results (Stud spacing 16" o.c.)	✓	○	○
Cuts With Utility Knife Vs. Power Tools	✓	✓	○
Standard Fasteners Countersink Into Board	✓	✓	○
Can Be Used In Both Residential And Commercial Steam Rooms And Saunas	✓	✓	○
Inorganic Vs. Organic Core	✓	✓	○
Lifetime Limited Warranty For Interior Use	✓	✓	○
15-Year Warranty For Exterior Use	✓	○	○

Product Feature: ✓ Yes ○ No

PermaBase[MD] BRAND Cement Board

Expanding Your Project Horizon

Dream Up Your Designs – Interior And Exterior

Install Fast, Cut Costs And Improve Quality With PermaBase[MD] BRAND Cement Board

- Stays strong – manufactured from cement and fiberglass reinforcement.
- Provides consistent quality – produced in a factory controlled environment and meets ASTM C1325.
- Remains dimensionally stable.
- Resists moisture and mold.
- Cuts and handles easily – patented EdgeTech[MD] Technology allows fasteners to be installed closer to the board's reinforced edge and reduces damage from handling.
- Absorbs less water – providing greater open time and increased workability of adhering materials.
- Offers performance enhancement options – stronger and lighter alternative to traditional methods.





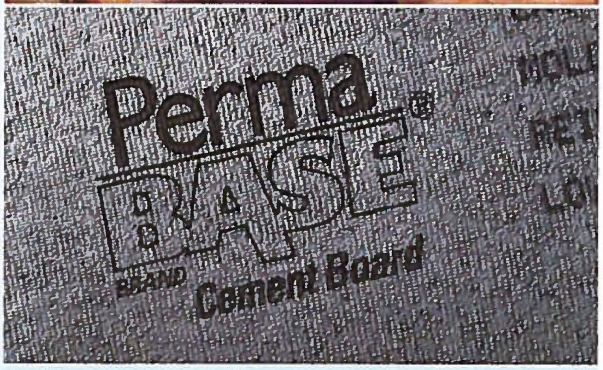

Interior Applications

PermaBase[MD] is a superior underlayment for many interior applications, including:

- **Kitchens**
  - Countertops
  - Backsplashes
- **Bathrooms**
  - Shower and tub enclosures
  - Garden and whirlpool tubs
  - Steamrooms and saunas
- **Special Additions**
  - Swimming pool and whirlpool decks and enclosures
- **Flooring**
  - For kitchens and bathrooms
  - For entryways and foyers
  - For laundry rooms
- **Walls**
  - For bathrooms
  - For accent walls
  - For fireplaces

Exterior Applications

PermaBase provides an excellent substrate for many in-demand exterior applications, including Cement Board Masonry Veneer Wall System (CBMV), Cement Board Stucco System (CBSS), Continuous Insulation (CI), and Exterior Insulation and Finish System (EIFS). PermaBase allows the combination of exterior finishes on one continuous wall sheathing, providing greater design flexibility.

- Commercial exteriors
- Residential exteriors
- Outdoor kitchens
- Decks



Cement Board Masonry Veneer Wall System (CBMV)

Combine the strength and durability of PermaBase with the popular beauty of stone and thin brick veneers. Use in residential and low-rise commercial applications.

Cement Board Masonry Veneer Wall System is designed to:

- Offer a complete, engineered solution for installation.
- Provide increased performance by utilizing polymer modified adhesive mortars (designed for hanging materials) vs. type S and N mortars (developed for stacking materials).
- Speed up your schedule – faster, easier and cleaner than traditional metal lath/scratch coat method.
- Offer the ability to incorporate an effective water-management system (type and placement of water barrier will vary based on local codes and/or warranties).

Designs you can achieve with this system:

- Use for a variety of building exteriors with manufactured or natural stone and thin brick veneers.

Note: A code-approved Water/Air Resistive Barrier (WRB) must first be installed to protect the cavity. For limitations, please see page 17 (Installation Guide).

Cement Board Stucco Wall System (CBSS)

Combine the strength and durability of PermaBase with the performance and aesthetics of reinforced base coats and textured finishes. Use in residential and low-rise commercial applications.

Cement Board Stucco Wall System is designed to:

- Provide increased impact and weather resistance (appropriate for all climates).
- Resist dirt, fading, cracking and peeling.
- Speed up your schedule – easier, cleaner installation than traditional stucco.
- Provide drainage system to help prevent water from penetrating behind cladding in frame construction.
- Comply with ASTM D226, protecting approved sheathings/structural components and helping to evacuate incidental water.

Designs you can achieve with this system:

- Attachment of special pre-molded shapes.
- Variety of finishes – many texture and color options.

Note: A code-approved Water/Air Resistive Barrier (WRB) must first be installed to protect the cavity. See page 17 (Installation Guide).



PermaBase[MD] BRAND Cement Board

More Reasons PermaBase Is Excellent For Exterior Applications

- Allows multiple finishes on one substrate.
- Saves time and labor when compared with field-applied metal lath, brown and scratch coat installations.
- Works rain or shine – less affected by jobsite weather conditions.
- Scores and snaps for quick installation.
- Qualifies for multiple-year system warranties.



PHYSICAL PROPERTIES

Property Method	Test	1/4"	7/16" PLUS	1/2"	5/8"
Water Absorption % By Weight/24 Hours	ASTM C473	<8	10	<8	<8
Flexural Strength (psi)	ASTM C47	>1750	750	750	>1000
Fastener Holding (Wet And Dry, lbs.) (0.400" head diameter)	ASTM D1037	>85	>90	>90	>90
Weight (psf)	ASTM C473	1.8	2.1	2.9	3.65
Freeze/Thaw (Cycles) Per ASTM C666 Procedure B	ASTM C666	100	100	100	100
Flame Spread/Smoke Developed	ASTM E84 CAN/ULC-S102	0/0	0/0	0/0	0/0
Compressive Strength (psi) (Indentation)	ASTM D2394	N/A	N/A	1250	1250
Wind Load (psf, Studs 16" o.c.)	ASTM E330	N/A	30	40	40
Thermal "R"/k Value	Property of Material	0.2/2.7	0.28/2.7	0.37/2.7	0.47/.2.7
Bending Radius (ft.)	Property of Material	N/A	5	5	5
Falling Ball Impact (12" Drop)	ASTM D1037	Pass	Pass	Pass	Pass
Linear Variation (Due to change in moisture content)	ASTM D1037	<0.07%	0.05%	0.05%	0.05%
Fungus Resistance	ASTM G21	(No growth)	(No growth)	(No growth)	(No growth)
Mold Growth On Surface	ASTM D3273*	10	10	10	10

*When tested by an independent laboratory per ASTM D3273 ("Standard Test Method for Resistance to Growth of Mold on the Surface of Interior Coatings in an Environmental Chamber"), PermaBase achieved a panel score of 10, the highest score possible, indicating no mold growth under the laboratory test conditions. The use of PermaBase in actual installations may not produce the same results as were achieved in controlled laboratory conditions. No material can be considered "mold proof," nor is it certain that any material will resist mold indefinitely.

SIZES AND PACKAGING

Size: Thickness, Width And Length	# Of Pcs Per Unit
PermaBase Cement Board	
1/2" x 32" x 5' (12.7 mm x 813 mm x 1524 mm)	50
1/2" x 32" x 8' (12.7 mm x 813 mm x 2438 mm)	30
1/2" x 36" x 4' (12.7 mm x 914 mm x 1219 mm)	50*
1/2" x 36" x 5' (12.7 mm x 914 mm x 1524 mm)	50
1/2" x 36" x 6' (12.7 mm x 914 mm x 1829 mm)	50*
1/2" x 36" x 8' (12.7 mm x 914 mm x 2438 mm)	30
1/2" x 48" x 8' (12.7 mm x 1219 mm x 2438 mm)	30
5/8" x 36" x 5' (15.9 mm x 914 mm x 1524 mm)	40
5/8" x 48" x 8' (15.9 mm x 1219 mm x 2438 mm)	24
3/8" x 48" x 8' (9.5 mm x 1219 mm x 2438 mm)	40*
3/4" x 48" x 8' (19.0 mm x 1219 mm x 2438 mm)	20*
PermaBase Underlayment	
1/4" x 48" x 4' (6.4 mm x 1219 mm x 1219 mm)	60
1/4" x 36" x 5' (6.4 mm x 914 mm x 1524 mm)	60

* Special Order

For installation instructions and accessories, see page 12.

PermaBase BRAND PLUS Cement Board

Lighter, Faster And Easier

When You Want The Best Lightweight Rigid Substrate: PermaBase BRAND PLUS Cement Board

This board has the same exceptional qualities built into PermaBase Cement Board but weighs 25% less. When you need to lighten your load, consider PermaBase PLUS for all interior and exterior applications.

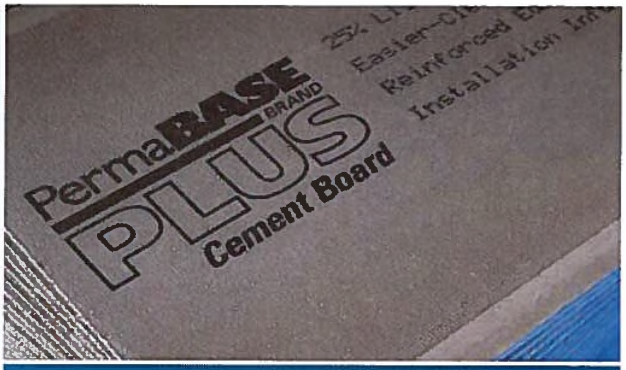

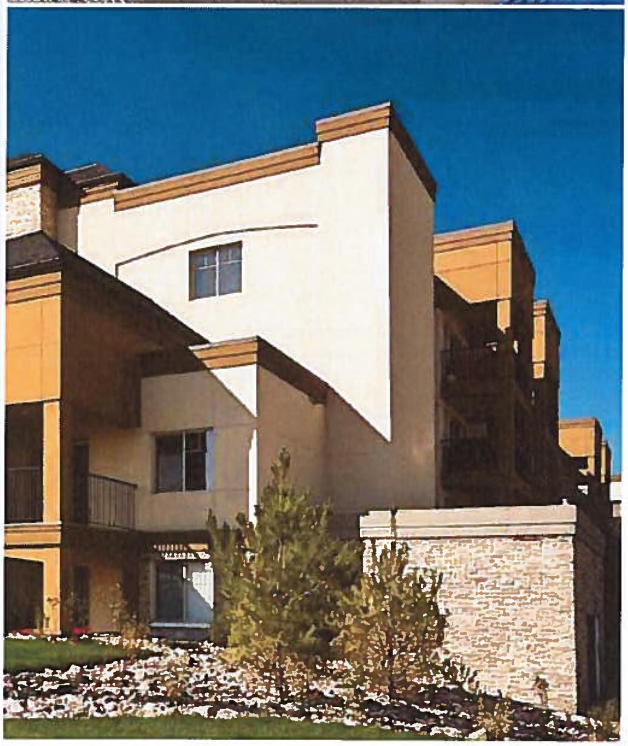

Resists Moisture Better

- Stays intact when exposed to water: will not rot, disintegrate or swell – built for the long run.
- Achieves the industry's lowest water-absorption rating (ASTM C473) – offering better installation.
- Helps inhibit mold growth with the highest possible score on mold tests (ASTM D3273 and ASTM G21).

Stays Strong And Lasts Long

- Resists impact and remains dimensionally stable – extending the life of your project.
- Holds up to the toughest conditions.

Installs Fast And Easy

- Lightweight and easy to cut – speeding up installation.
- Reduces jobsite waste – easier, cleaner cut.
- Patented EdgeTech® Technology allows for a closer edge fastening and reduces damage from handling.

Works For Interior And Exterior Projects

– One Panel, Many Applications

- Great for all interior applications, as well as exterior decks and outdoor kitchens.
- Meets UL & ULC classifications for one- and two-hour fire-rated assemblies.
- Building code approved – one substrate that does the job of many.
- Adhere tile, stone or thin brick directly to PermaBase PLUS in exterior applications – saving time and money.
- Durable substrate for direct-applied coating systems.

Offers Best In Class Warranty

- Lifetime Limited Warranty: Interior applications.
- 15-Year Limited Warranty: Exterior applications.

PermaBASE BRAND PLUS® Cement Board

SIZES AND PACKAGING

Size: Thickness, Width And Length	# Of Pcs Per Unit
7/16" x 36" x 5' (11.1 mm x 914 mm x 1,524 mm)	60
1/2" x 48" x 8' (12.7 mm x 1,219 mm x 2,438 mm)	40
5/8" x 48" x 8' (15.9 mm x 1,219 mm x 2,438 mm)	32

For installation instructions and accessories, see page 12.

PermaBase BRAND UltraBacker Cement Board

Smoother, Stronger, More Stable

When You Want The Best Rigid 1/4-Inch Underlayment That Buys You More Open Time: PermaBase BRAND UltraBacker Cement Board

UltraBacker features a smooth mesh and mat surface. The 1/4-inch thickness eliminates the need to modify adjacent thresholds when abutting it to carpet, hardwood and other common flooring materials.

Resists Moisture Better Than Any Other Cement Board

- Features the *lowest water-absorption rating of <8%* (ASTM C473) – offering better installation.
- Stays intact when exposed to water: will not rot, disintegrate or swell – built for the long run.
- Helps inhibit mold growth with the highest possible score on mold tests (ASTM D3273 and ASTM G21).

Stays Strong And Lasts Long

- Resists impact and remains dimensionally stable – extending the life of your project.
- Holds up to the toughest conditions.
- 30% stronger and four times more rigid than competitive 1/4-inch cement board.

Installs Fast And Easy

- Can be applied over new or existing countertops or as a flooring underlayment – pre-manufactured panels save you time.
- Reduces jobsite waste – easier, cleaner cut.
- Patented EdgeTech[MD] Technology allows for a closer edge fastening and reduces damage from handling.

Offers Best In Class Warranty

- Lifetime Limited Warranty: Interior applications.



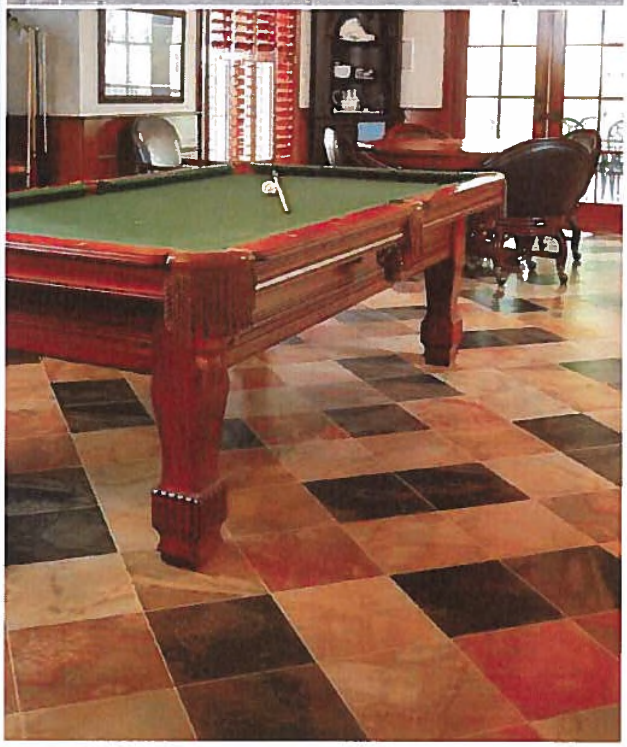

PermaBASE BRAND ULTRA BACKER Cement Board

SIZES AND PACKAGING	
Size: Thickness, Width And Length	**# Of Pcs Per Unit**
1/4" x 36" x 5' (6.4 mm x 914 mm x 1524 mm)	60

For installation instructions and accessories, see page 12.

PermaBase BRAND Flex Cement Board

Easy To Bend, Yet Stays Strong

When You Want The Best Substrate That Bends Like No Other: PermaBase[MD] BRAND Flex Cement Board

This very flexible PermaBase substrate is ideal to use around archways, columns, beams, or anywhere you need an evenly curved surface. Consider this also for radius shower walls, tub step-ups and stair construction – the possibilities are almost endless.



Resists Moisture Better

- Stays intact when exposed to water: will not rot, disintegrate or swell – built for the long run.
- Achieves the industry's lowest water-absorption rating (ASTM C473) – offering better installation.
- Helps inhibit mold growth with the highest possible score on mold tests (ASTM D3273 and ASTM G21).



Stays Strong Yet Flexes Like No Other Cement Board

- Holds up to the toughest conditions yet bends like no other.
- Resists impact and remains dimensionally stable – extending the life of your project.



Installs Fast And Easy

- Pre-manufactured panels save you time.
- Bends easily – 6" radius at 90°.
- Reduces jobsite waste – easier, cleaner cut.



Offers Best In Class Warranty

- Lifetime Limited Warranty: Interior applications.
- 15-Year Limited Warranty: Exterior applications.

Installation

Installation recommendations for PermaBase Flex are the same as for PermaBase Cement Board with this exception: framing must be spaced a maximum of 8"o.c. (See page 12 for more information.)

Limitations

PermaBase Flex has the same limitations as PermaBase with the following additions:

- For convex surfaces, PermaBase Flex must be applied with the rough surface and tapered edges exposed.
- For concave surfaces, PermaBase Flex must be applied with the smooth surface exposed.
- PermaBase Flex Cement Board should not be used for fire-rated assemblies.
- Maximum framing spacing should not exceed 8"o.c.
- Maximum fastener spacing should not exceed 8"o.c. for wall and 6"o.c. for ceiling applications.

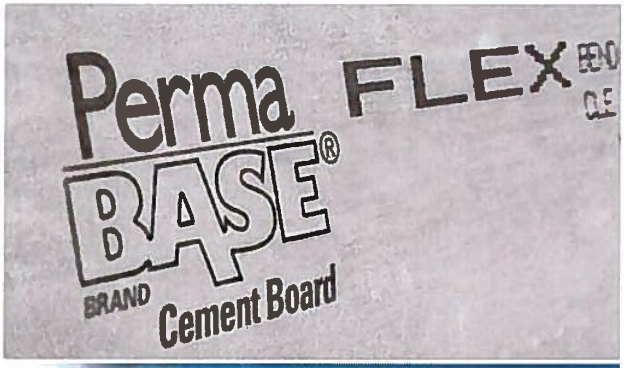

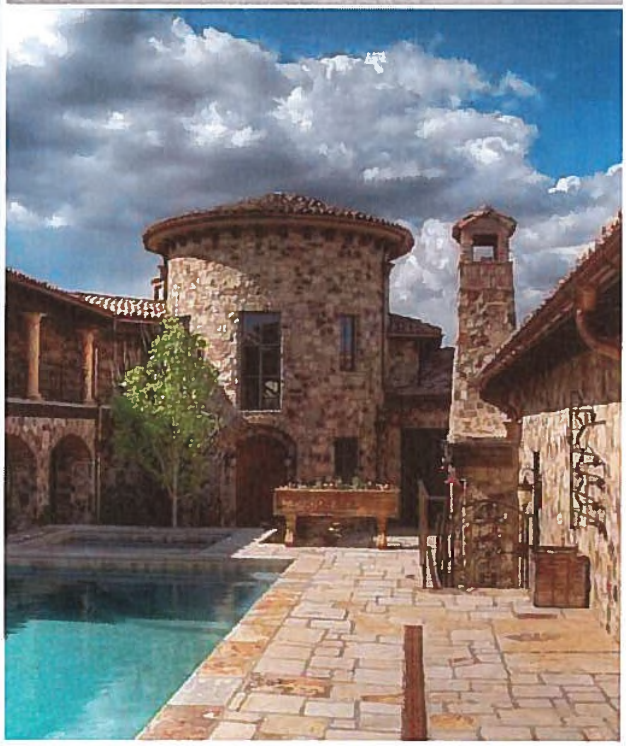

PermaBASE BRAND FLEX® Cement Board

SIZES AND PACKAGING	
Size: Thickness, Width and Length	**# Of Pcs Per Unit**
1/2" x 36" x 6' (12.7 mm x 914 mm x 1829 mm)	25
1/2" x 48" x 8' (12.7 mm x 1219 mm x 2438 mm)*	30

* Special Order

For installation instructions and accessories, see page 12.

Installation Guide

Interior Applications

An ideal substrate for interior applications, such as:

- Shower and tub endosures
- Garden/whirlpool tubs
- Countertops
- Backsplashes
- Steamrooms and saunas
- Swimming pool and whirlpool decks and endosures
- Floor underlayment
  - Entryways
  - Kitchens
  - Bathrooms
  - Foyers
  - Laundry rooms

Installation

General: All framing should comply with local building code requirements and be designed to provide support with a maximum allowable deflection of L/360 under all intended loads. Framing members should be spaced a maximum of 16" o.c.

Cut or score PermaBase on printed side of panel. Use a straightedge and pencil to mark line. Use utility knife to score/cut the glass mesh. Snap the board and cut through the now visible glass mesh on the other side. Install tile and tile setting materials in accordance with current ANSI specifications and Tile Council of North America (TCNA) guidelines.

Control Joints: For interior installations, allow a maximum of 30 lineal feet between control joints. A control joint must be installed but not limited to the following locations: where expansion joints occur in the framing or building (discontinue all cross furring members located behind joint); when boards abut dissimilar materials; where framing material changes; at changes of building shape or structural system; at each story separation. Place control joints at corners of window and door openings, or follow specifications of architect. Control joint cavity shall not be filled with coating or other materials.



Walls And Ceilings

Wall Framing: Edges of PermaBase parallel to framing should be continuously supported. Provide additional blocking when necessary to permit proper PermaBase attachment.

Do not install PermaBase directly over protrusions from stud plane, such as heavy brackets and fastener heads. Studs above a shower floor should either be notched or

Installation Accessories

For a seamless installation, we recommend PermaBase[MD] Tape and PermaBase[MD] Screws.



Fasteners

PermaBase corrosion resistant screws or equivalent, 1-1/4" or 2" long, for use with wood framing. Type S-12 screws or equivalent, 1-1/4" or 1-5/8" long, for use with 20 gauge or heavier steel framing.

Galvanized roofing nails, 1-1/2" long with hot dipped galvanized coating for use with wood framing. Nails should meet Federal Specification #FF-N105B/type 2 style 20.

Joint Reinforcement

PermaBase mesh tape must be used on all edges and cuts made to size. Use 2" wide polymer-coated (alkali resistant) mesh tape for interior applications and 3" wide polymer-coated (alkali resistant) mesh tape for exterior applications.

Bonding Materials

Treat joint and set facing material, preferably with latex-Portland cement mortar or with dry-set (thin-set) mortar. All mortars should comply with ANSI A118.1, A118.4 or A118.15 standards. Type 1 organic adhesive meeting ANSI A-136.1 may be utilized for interior use only.

furred to accommodate the thickness of the waterproof membrane or pan. The surround opening for a tub or precast shower receptor should not be more than 1/4" longer than unit to be installed.

Ceiling Framing: The deflection of the complete ceiling assembly due to dead load (including insulation, PermaBase, bonding material and facing material) should not exceed L/360. The dead load applied to the ceiling frame should not exceed 10 psf. Ceiling joist or furring channel should not exceed 16" o.c. (Edges of PermaBase parallel to framing should be continuously supported.) Provide additional blocking when necessary to permit proper PermaBase attachment.

PermaBase Cement Board: Apply PermaBase with ends and edges closely butted but not forced together. Stagger ends joints in successive courses. Drive fasteners into field of cement board first, working toward ends and edges. Space fasteners maximum 8" o.c. for walls, 6" o.c. for ceilings with perimeter fasteners at least 3/8" and less than 5/8" from ends and edges. Ensure PermaBase is tight to framing.

Fasteners must be installed into framing members. Select proper fastener type and length for the application.

Joint Reinforcement: Trowel bonding material to completely fill the tapered recessed board joints and gaps between each panel. On non-tapered joints apply a 6" wide, approx. 1/16" thick coat of bonding material over entire joint. For all joints, immediately embed 2" alkali resistant fiberglass mesh tape fully into applied bonding material and allow it to cure. For outside corners, 3" wide mesh tape is recommended. Same bonding material should be applied to corners, control joints, trims and other accessories. Feather bonding material over fasteners to fully conceal.

Divider Wall Installation



1. PermaBase Cement Board
2. Membrane
3. Latex-Portland Cement Mortar
4. Alkali-Resistant Mesh Tape

Shower Installation

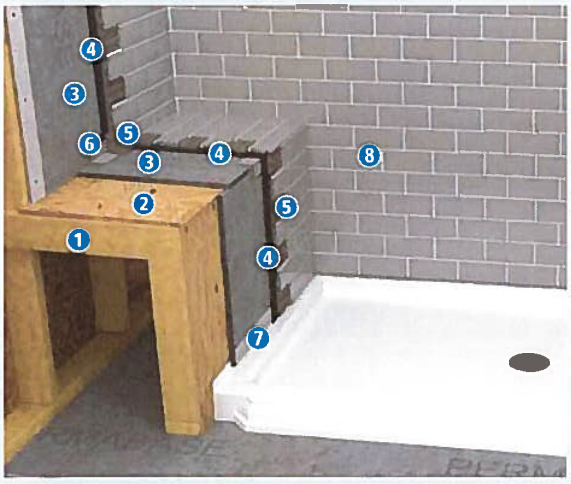

1. Support Framing 1/4" / 12" slope toward drain
2. Plywood, Min. 1/2"
3. PermaBase[MD] Cement Board
4. Membrane
5. Latex-Portland Cement Mortar
6. Alkali-Resistant Mesh Tape
7. Sealant
8. Tile and Grout

Floors And Counters

Subfloor Or Base: For flooring applications with 16" o.c. floor joists, 5/8" tongue and groove exterior grade plywood or 3/4" tongue and groove exterior grade OSB may be used. For 19.2" o.c. and 24" o.c. floor joists, 3/4" tongue and groove exterior grade plywood or OSB must be used. Tile size for floors with 24" o.c. floor joists must be 12" x 12" or larger. The joist and subfloor assembly must meet L/360 as well as the appropriate code tables for live and dead loads.

Underlayment: Using a 1/4" square-notched trowel, apply a setting bed of polymer-modified mortar (or thin-set mortar) to the subfloor or counter base. Immediately laminate PermaBase to subfloor or base leaving a 1/8" space between boards at all joints and corners. Leave a 1/4" gap along walls. Stagger all joints so that they do not line up with underlying substrate joints. Fasten PermaBase every 8" o.c. throughout board field and around all edges while setting bed mortar is still workable. Around perimeter of each board, locate fasteners 2" from corners and not less than 3/8" from the edges. Fill all joints solid with bonding material. On non-tapered joints such as butt ends, apply a 6" wide, 1/16" thick coat over the entire joint. For all joints, immediately embed 2" fiberglass mesh tape fully into applied bonding material; ensure that tape is centered over joint. Apply bonding material over fasteners to fully conceal. Remove all excess bonding material and allow to cure.

Limitations

- Joints should be treated with alkali resistant fiberglass mesh tape set in a polymer modified mortar.
- Conventional paper drywall tape, joint compound and drywall nails or screws should not be used.
- Maximum wall framing spacing should not exceed 16" o.c. and must be designed to limit deflection to L/360 under all live and dead loads.
- Steel framing must be 20 gauge (galvanized) or heavier – 16" o.c.
- 1/4" PermaBase and 1/4" UltraBacker should not be used on walls or ceilings.
- PermaBase is not a water barrier. Consult local building code for moisture barrier requirements.
- Not recommended for use with vinyl flooring or carpets.
- For exterior and interior finishes applied directly to PermaBase, reinforcing mesh must be embedded in basecoat. Consult finish manufacturer for additional requirements.
- PermaBase should not be exposed to temperatures over 220°F (105°C).
- PermaBase is not a nailing base for other finishes.

Countertop Installation



1. **Plywood**
2. **Latex-Portland Cement Mortar**
3. **PermaBase[MD] Cement Board**
4. **Fiberglass Mesh Tape (Alkali-Resistant) Embedded in Mortar**
5. **Latex-Portland Cement Mortar**
6. **Tile and Grout**

Floor Underlayment

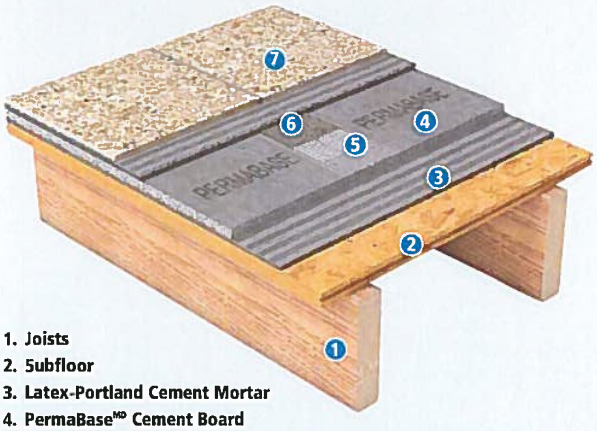

1. **Joists**
2. **Subfloor**
3. **Latex-Portland Cement Mortar**
4. **PermaBase[MD] Cement Board**
5. **Fiberglass Mesh Tape (Alkali-Resistant)**
6. **Latex-Portland Cement Mortar**
7. **Tile**

Exterior Applications

An ideal substrate for exterior applications such as:

- Tile applications
- Stucco applications
- Cement board stucco
- Thin brick
- Adhered stone veneer
- Thin porcelain tile
- Ventilated rainscreen facade
- EIFS
- Soffit panels
- Sheathing panels
- Outdoor kitchens/grills

Installation

General: All framing should comply with local building code requirements and be designed to provide support with a maximum allowable deflection of L/360 under all intended live including wind) and dead loads.

Some applications may require stricter deflection requirements. Consult finish manufacturer for recommendations.

Note: Cut or score PermaBase on rough side of panel.

Control Joints: For exterior installations, allow a maximum of 16 lineal feet between control joints. Consult finish manufacturer for other requirements. For exterior tile applications, control joints should be spaced a maximum of every 12'. A control joint must be installed but not limited to the following locations: where expansion joints occur in the framing or building (discontinue all cross furring members located behind joint); when boards abut dissimilar materials; where framing material changes; at changes of building shape or structural system; at each story separation. Place control joints at corners of window and door openings, or follow specifications of architect. Control joint cavity shall not be filled with coating or other materials.

Walls And Ceilings

Wall Framing: Studs should be spaced a maximum of 16" o.c. Edges/ends of PermaBase parallel to framing should be continuously supported. Provide additional blocking when necessary to permit proper PermaBase attachment. Do not install PermaBase directly over protrusions from stud plane such as heavy brackets or fastener heads.

Ceiling Framing: The deflection of the complete ceiling assembly due to dead load (including insulation, PermaBase, bonding material and facing material) should not exceed L/360. The dead load applied to the ceiling frame should not exceed 10 psf. Ceiling joist or furring channel should not exceed 16" o.c. (Edges of PermaBase parallel to framing should be continuously supported.) Provide additional blocking when necessary to permit proper PermaBase attachment.

Water Barrier: While PermaBase is unaffected by moisture, a Water/Air Resistive Barrier (WRB) must be installed to protect the cavity. The type and specific placement or location of the water barrier will vary based on local building codes and/or manufacturers warranties. Consult the WRB manufacturer's recommendations for specific installation guidelines.

PermaBase Cement Board: Apply PermaBase with ends and edges closely butted but not forced together. Stagger end joints in successive courses. Drive fasteners into field of cement board first, working toward ends and edges. Space fasteners maximum 8" o.c. for walls, 6" o.c. for ceilings with perimeter fasteners at least 3/8" and less than 5/8" from ends and edges.

Joint Reinforcement: Trowel bonding material to completely fill the tapered recessed board joints and gaps between each panel. On non-tapered joints apply a 6" wide, approximately 1/16" thick coat of bonding material over entire joint. For all joints, immediately embed 3" alkali resistant fiberglass mesh tape fully into applied bonding material and

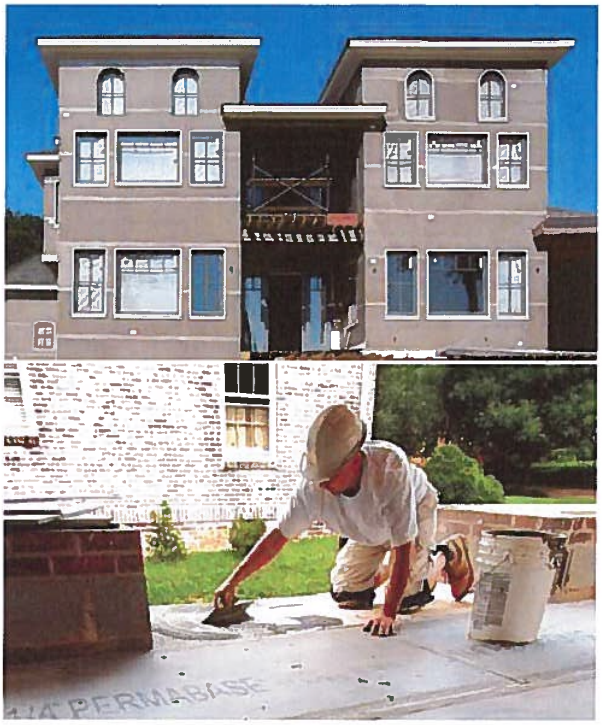

allow to cure. Same bonding material should be applied to corners, control joints, trims or other accessories. Feather bonding material over fasteners to fully conceal.

Decks

Subfloor: Plywood should be securely glued and fastened to floor joists spaced a maximum of 16"o.c. Subfloor should be sloped at a minimum pitch of 1/4" per foot. The floor surface should be true to plane within 1/8" in 10'.

Underlayment: Using a 1/4" square-notched trowel, apply a setting bed of Latex-Portland cement mortar to the subfloor. Immediately laminate PermaBase to subfloor leaving a 1/8" space between boards at all joints and corners. Leave a 1/4" gap along walls. Stagger joints so they do not line up with underlying substrate joints. Fasten PermaBase every 8" o.c. throughout board field and around all edges while setting bed mortar is still workable. Around perimeter of each board, locate fasteners 2" from the corners and not less than 3/8" from the edges. Fill all joints solid with bonding material. On non-tapered joints such as butt ends, apply a 6" wide, 1/16" thick coat over the entire joint. For all joints, embed alkali-resistant fiberglass mesh tape fully into applied bonding material; ensure that tape is centered over joint. Apply bonding material over fasteners to fully conceal. Remove all excess bonding material and allow it to cure.

Waterproof Membrane: Trowel apply waterproof membrane to the entire surface of the cement board, following membrane manufacturer's installation instructions in detail.

Water-Managed, High-Impact Resistant Wall System

Cement Board Ventilated Rainscreen Façade System

Description

The Cement Board Ventilated Rainscreen Facade System is a water managed exterior cladding wall system designed to provide increased high impact and weather resistance and improved dimensional stability.

The Cement Board Ventilated Rainscreen Facade System combines the strength and durability of PermaBase Cement Board with the performance and beauty of reinforced base coats and textured finishes. It includes specific components such as wood or metal furring, latex-modified Portland cement base coat, glass fiber mesh, trims, primer and acrylic textured finish coat. It provides unequaled protection against water penetration and weathering.

The Cement Board Ventilated Rainscreen Facade System allows you to enclose and finish a project in as little as two days, speeding occupancy. It has already been satisfactorily used for over 25 years on thousands and thousands of square meters of exterior walls.

Uses

For all your exterior walls needing high-impact and weather resistance in commercial, institutional and residential applications.

Advantages

Durability/Strength: PermaBase Cement Board provides an exceptionally hard, durable surface that is able to withstand prolonged exposure to moisture and has a proven durability in cold climates.

PermaBase offers a competitive advantage over similar products on the market with its patented EdgeTech[MD] technology. The tapered, reinforced edge design allows for closer nail or screw application to the edge.

Weather Resistance: Acrylic finishes repel weather at the system's surface.

Water-Managed Design: The water-managed design of the system provides positive drainage directly behind the cladding, enabling the escape of incidental water that might enter around or through window or door openings and penetrate behind the cladding in frame construction. It also provides air pressure equilibrium, minimizing the chances of water being driven into the wall cavity by incidental building envelope pressure differential.

Design Options: Cement Board Stucco provides the popular stucco look, including the attachment of special pre-molded shapes and a wide variety of finish texture and color options in standard colors and custom colors.

Contact exterior coatings manufacturer for color and installation instructions.

Some exterior wall assemblies including the PermaBase boards were tested according to CAN/ULC-S101. Consult ULC's online directories for details.

Limitations

- Boards shall never be fastened directly on studs.
- Thin veneer construction will tend to reveal planar irregularities in the frame construction.
- Minor cracking at joints might become visible in the finished exterior surface.
- For exterior finishes applied direct to PermaBase, reinforcing mesh must be embedded in basecoat. Consult Unifix's website to get the latest exterior cladding system complete architectural specifications and for detailed installation instructions.
- The cavity between the PermaBase Cement Board and the intermediate sheathing or the insulation board must allow for venting to the exterior, at the bottom and at the top of the wall, in order to provide efficient water drainage and humidity management.

Residential Ventilated Rain Screen Installation

1. Sheathing
2. Weather Resistant Barrier
3. Furring Strip
4. PermaBase[MD] Cement Board
5. Mesh Tape
6. Basecoat
7. Basecoat
8. Mesh
9. Basecoat
10. Primer
11. Finish Coat
12. Flashing Tape
13. Weep Screed

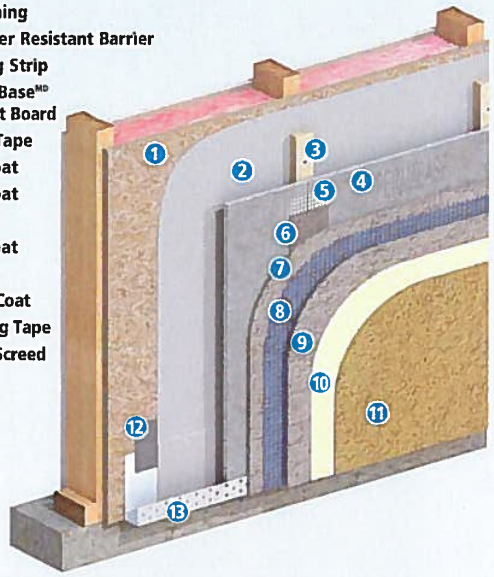

Commercial Ventilated Rain Screen Installation

1. Exterior Gypsum Sheathing
2. Weather Resistant Barrier
3. Insulation
4. Furring
5. PermaBase[MD] Cement Board
6. Mesh Tape
7. Basecoat
8. Basecoat
9. Mesh
10. Basecoat
11. Primer
12. Finish Coat
13. Flashing Tape
14. Weep Screed

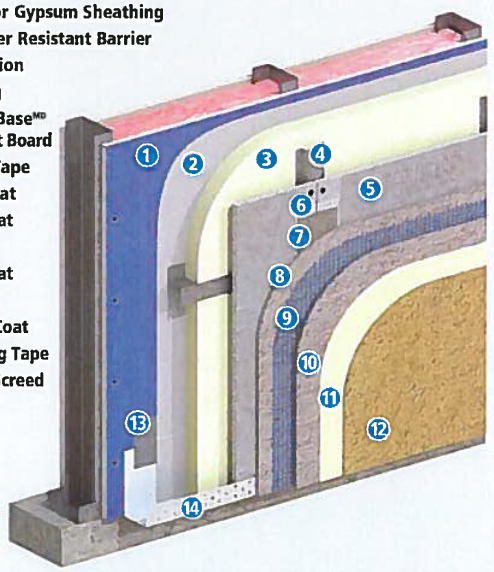

Cement Board Masonry Veneer Wall System (CBMV)

PermaBase as a component of CBMV Systems

The use of adhered manufactured stone and thin brick masonry veneers is increasing in popularity. Cement Board Masonry Veneer Wall Systems (CBMV) have been designed to offer complete, engineered solutions for the installation of manufactured and natural stone masonry veneer, as well as thin brick veneers.

These systems have been developed and are marketed by various manufacturers of the adhering materials used to install them as well as the veneer manufacturers themselves. CBMV Systems offer increased performance by utilizing polymer modified adhesive mortars which have been designed for hanging materials versus type S and N mortars that were primarily designed for stacking materials. In some cases these systems offer warranties.

Several of these systems call for the use of an ASTM C1325 cement board. In addition to meeting this requirement, the features and benefits of PermaBase Cement Board make it an ideal component for use in these systems.

Advantages

Durability/Strength: PermaBase Cement Board provides an exceptionally hard, durable surface that is able to withstand prolonged exposure to moisture and has a proven durability in cold climates.

Consistency: PermaBase is produced in a factory controlled environment which provides for a consistent product produced within tighter tolerances than can be achieved with field fabricated substrates.

Cutting and Handling: PermaBase is produced with its patented EdgeTech technology. The tapered, reinforced edge design allows for fastening of nails or screws closer to the edge without crumbling or spinout. The homogeneous core provides a very clean score and snap using a standard drywall knife.

Low Water Absorption: PermaBase has the lowest water absorption of any cement board which provides greater open time and increased workability of the adhering materials used in the application of veneer products.

Limitations

The system shall be engineered to withstand all applicable loads, including live, dead, seismic, positive and negative, etc. CBMV Systems utilize a primary sheathing beneath the PermaBase Cement Board to provide required structural performance. The selection and installation of this sheathing varies according to the type of wall construction.

In the case of exterior walls only, the CBMV Wall System shall not exceed 3 meters (9.8') in height above the foundation walls. Do not use the CBMV System to make soffits or use underground or in frequently submerged areas. Make sure to follow the latest national, provincial or local building code regulations.

Consult Unifix's website to get the latest exterior cladding system complete architectural specifications and for detailed installation instructions.

The details provided give a general sense of representative CBMV Systems only.

Water Resistant Barriers (WRB)

While PermaBase is unaffected by moisture, a water resistant barrier (WRB) must be installed to protect the cavity. One of the advantages of CBMV Systems is the ability to incorporate an effective, accountable water management system. The type and specific placement of the water barrier will vary based on local building codes and/or manufacturers warranties.

Residential Manufactured Stone Veneer Wall Installation

1. Sheathing
2. Weather Resistant Barrier
3. PermaBase[MD] Cement Board
4. Mesh Tape
5. Mortar
6. Mortar
7. Thin Stone Veneer
8. Flashing Tape
9. Weep Screed

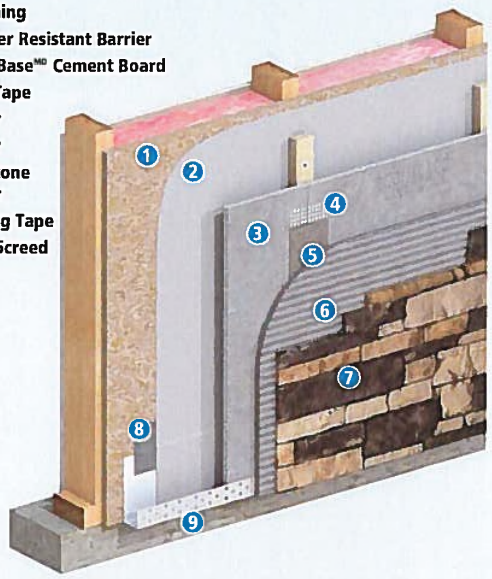

Commercial Manufactured Stone Veneer Wall

1. Exterior Gypsum Sheathing
2. Weather Resistant Barrier
3. Insulation
4. Z-Furring
5. PermaBase Cement Board
6. Mesh Tape
7. Mortar
8. Mortar
9. Stone Veneer
10. Flashing Tape
11. Weep Screed

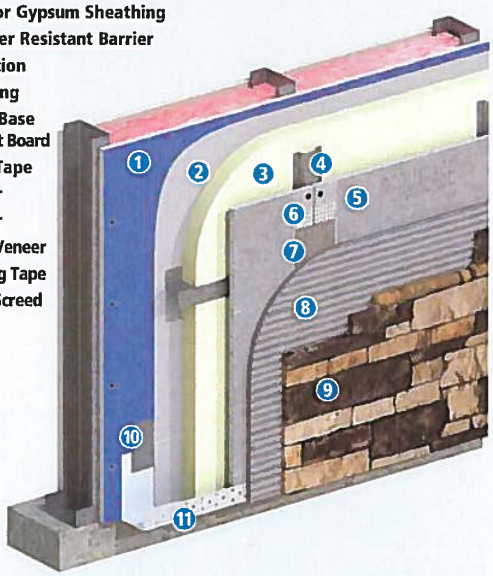

This section of the PermaBase Construction Guide provides information on how to utilize PermaBase within both a CBMV System and a Ventilated Rainscreen Facade System. While some typical examples are shown (right) for reference purposes, the specifications and details on how to design and construct individual systems should be obtained from the design professional, or the adhering material or veneer manufacturer of the materials that are being used to complete the system.

For more information go to: **unifixinc.com/applications**

Heat Shield Applications

Features/Benefits

- Protects walls and floors.
- Reduces clearance in back up to 40%.
- Lightweight and easy to install.
- CAN/ULC- S632 & UL1618 tested.

Limitations: Do not apply combustible finishes, such as wallpaper, on the panel surface.

Installation

The heat shield made with PermaBase boards can reduce the required clearance between a heat producing appliance and the wall by up to 40%, except where the clearance includes provision for access or ventilation.

Furring is made by cutting a full PermaBase panel into 4" (100 mm) wide strips. Attach a double layer of these furring strips to the wall studs using cement board screws which provide a minimum penetration of 3/4" (19 mm) into the framing. When installing the panels, leave a minimum 2" (50 mm) gap at the ceiling and a 1"- 2" (25-50 mm) gap at the floor.

Fasten the PermaBase panels to the studs with galvanized roofing nail or cement board screws spaced 8" (200 mm) o.c. Be sure your cement board screws are long enough to go through the furring and into the studs at least 3/4" (19 mm). Do not put any nails or screws into the wall area directly behind the proposed location of the appliance.

Finish the joints with polymer modified Portland cement mortar and alkali resistant fiberglass tape. Cover fasteners with the same mortar. The mortar should be dry before applying any decorative coating.

Heat build-up is reduced by allowing air to enter and exit the cavity between the wall and the heat shield. This air space is required for the good functioning of the heat shield. Do not close or block these openings.

Heat Shield Installation

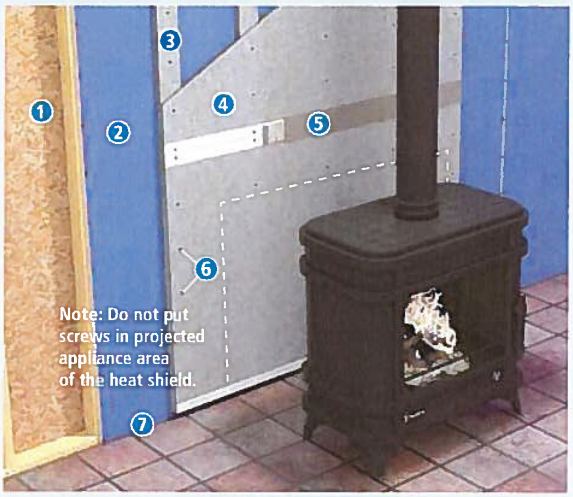

1. **Studs Spaced 16 in. o.c.**
2. **Existing Gypsum Board**
3. **Two Layers 4 in. wide Furring Strips**
4. **PermaBase[MD] Heat Shield**
5. **Joint Treatment**
6. **Fasteners Spaced 8 in. o.c. Maximum**
7. **1-2 in. Minimum Clearance from the Floor**

PermaBase[MD] heat shielding permits clearance reduction up to 40 percent of the manufacturer's suggested clearance.

UL Listed PermaBase[MD] Cement Board Partitions – Steel Framing

1-hour Fire Rating
V452 UL Design



7/16" PermaBase PLUS or 1/2" PermaBase applied vertically or horizontally to one side of 3-5/8" steel studs 16" o.c. 5/8" Fire-Shield Gypsum Board applied vertically to opposite side. 3" mineral wool insulation in stud cavities.

1-hour Fire Rating
U425 UL Design



7/16" PermaBase PLUS or 1/2" PermaBase applied vertically or horizontally over 5/8" Fire-Shield Gypsum Board applied vertically to each side of 3-1/2", 20-gauge steel studs 16" o.c. PermaBase secured to studs with cement board screws of adequate length to penetrate studs 3/8" spaced 8" o.c.

1-hour Fire Rating
V438 UL Design

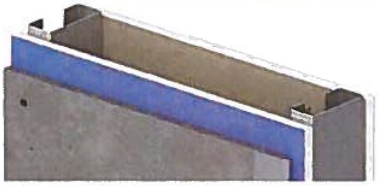

7/16" PermaBase PLUS or 1/2" PermaBase applied vertically or horizontally over 5/8" Fire-Shield Gypsum Board applied vertically to each side of 3-5/8" steel studs 16" o.c. PermaBase secured to studs with cement board screws of adequate length to penetrate studs 3/8" spaced 8" o.c.

2-hour Fire Rating
V452 UL Design



7/16" PermaBase PLUS or 1/2" PermaBase applied vertically over 1/2" Fire-Shield C or 5/8" Fire-Shield Gypsum Board, applied vertically to one side of 3-5/8" steel studs 16" o.c. 2 layers 1/2" Fire-Shield C or 5/8" Fire-Shield Gypsum Board applied vertically to opposite side. 3" mineral wool insulation in stud cavities.

PermaBase Over Foundation Walls

Installation

The 1/2" PermaBase boards can be installed below ground level over extruded polystyrene boards that are themselves installed over a foundation wall, under the following conditions.

1. That the PermaBase boards be fully supported, over their entire surface, by the polystyrene boards.
2. That the PermaBase boards be installed using our specially designed PermaBase screws, every 8" o.c. (200 mm), over furring channels (wood or galvanized metal 20 gauge or thicker) that comply with the following requirements:

   a. That the furring strips be spaced at a maximum of 24" (610 mm) o.c.

   b. That the furring strips have the same thickness (or depth) as the polystyrene board.

   c. That the furring strips be in full contact with the foundation wall.

   d. That the furring strip be affixed to the foundation wall with the proper fasteners and in sufficient number to provide an adequate support for the board, its finish and other building loads.

e. That the furring strips be corrosion or rot proof.

3. That the extruded polystyrene boards be approved for exterior use, below ground and that they have a compressive strength of 20 psi (140 kPa) or higher when tested according to ASTM D1621.
4. That the PermaBase boards are installed below ground at a maximum depth of 10' (3 m).
5. That the water table level be at all times be below the base of the foundation wall.
6. That the base of the foundation wall be properly drained in order to avoid any accumulation of water and consequently an added pressure on the wall.
7. That the wall design be in conformance with the applicable and most up to date local, provincial, and federal building codes where the project is located.

Limitations: The PermaBase boards are resistant to water but are not water impermeable or waterproof and cannot be considered a vapor barrier. Where a wall or cavity must be kept dry, use proper water resistant membranes, in conformance with the applicable and most up to date local, provincial, and federal building codes where the project is located. Some waterproofing compounds, sealants, or adhesives may contain solvents or petroleum distillates. These may damage the polystyrene. Please contact the manufacturers of these products to verify their compatibility with polystyrene and concrete. The PermaBase boards are not structural boards.

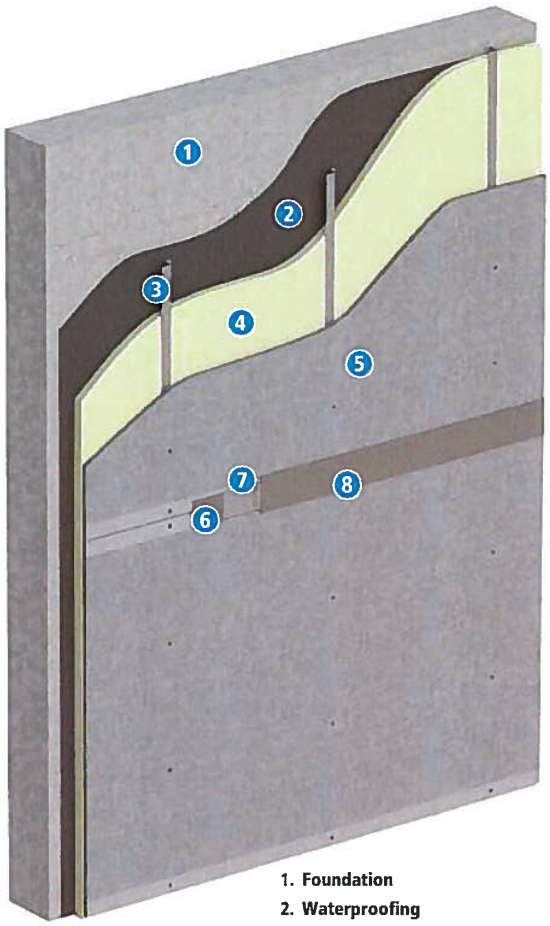

1. **Foundation**
2. **Waterproofing**
3. **Furring Strips**
4. **Insulation**
5. **PermaBase™ Cement Board**
6. **Mortar**
7. **Mesh Tape**
8. **Mortar**

LIMITED WARRANTY AND REMEDIES

Products manufactured and sold by National Gypsum Company are warranted by National Gypsum Company to its customers to be free from defects in materials and workmanship at the time of shipment. THIS EXPRESS WARRANTY IS THE ONLY WARRANTY APPLICABLE TO SUCH PRODUCTS, AND IS IN LIEU OF AND EXCLUDES ALL OTHER EXPRESS ORAL OR WRITTEN WARRANTIES AND ALL IMPLIED WARRANTIES, INCLUDING BUT NOT LIMITED TO THE IMPLIED WARRANTIES OF MERCHANTABILITY AND FITNESS FOR A PARTICULAR PURPOSE.

National Gypsum Company will not be liable for any incidental, indirect or consequential losses, damages or expenses. The customer's exclusive remedy for any type of claim or action for defective products will be limited to the replacement of the products (in the form originally shipped) or, at National Gypsum's option, to a payment or credit not greater than the original purchase price of the products.

National Gypsum Company will not be liable for products claimed to be defective where the defect resulted from causes not within National Gypsum's control, or which arose or occurred after shipment, including but not limited to accidents, misuse, mishandling, improper installation, contamination or adulteration by other materials or goods, or abnormal conditions of temperature, moisture, dirt or corrosive matter.

Any claim that products sold by National Gypsum Company were defective or otherwise did not conform to the contract of sale is waived unless the customer submits it in writing to National Gypsum within thirty (30) days from the date the customer discovered or should have discovered the defect or nonconformance. No legal action or proceeding complaining of goods sold by National Gypsum may be brought by the customer more than one year after the date the customer discovered or should have discovered the defect or problem of which it complains.

Mold And Mildew Resistance

PermaBase was designed to provide extra protection against mold and mildew. When tested by an independent laboratory, PermaBase received the highest possible ratings on ASTM G21 and D3273. The use of PermaBase in actual installations may not produce the same results as were achieved in controlled laboratory conditions. No material can be considered "mold-proof," nor is it certain that any material will resist mold or mildew indefinitely. When used in conjunction with good design, handling and construction practices, PermaBase can provide increased mold resistance. As with any building material, avoiding water exposure during handling, storage and installation, and after installation is complete, is the best way to avoid the formation of mold or mildew.

Member of TCNA

PermaBase BRAND Cement Board

GREENGUARD GOLD

PRODUCT CERTIFIED FOR LOW CHEMICAL EMISSIONS: UL.COM/GG UL 2818

UNIFIX Inc.
35, rue Unifix
Bromont, QC J2L 1N5
Canada

Web: unifixinc.com

Phone: (450) 534-0955
Fax: (450) 534-0953
Toll Free: (800) 461-0955
Email: info@unifixinc.com

UNIFIX INC.
A Subsidiary Of National Gypsum Company

National Gypsum

Safety Data Sheet

SDS No. GB-1504
PermaBase® BRAND
Cement Board Products

Section 1: Product and Company Identification

Product Name
PermaBase® BRAND Cement Board Products

Product Identifiers

PermaBase	***PermaBase UltraBacker***	***PermaBase DEK***
PermaBase Flex	***PermaBase Plus***	

Other means of identification
Tile Backer Board, Cementitous Backer Board (CBU)

Recommended Use
Underlayment for ceramic tile on floors, countertops, EIFS systems. Use per manufacturer's recommendations.

Restrictions on Use
Use in well-ventilated area and avoid breathing dust.
Avoid skin contact.

Manufacturer/Supplier Details
National Gypsum Company
2001 Rexford Road
Charlotte, NC 28211

In Canada:
UNIFIX INC. A subsidiary of National Gypsum Company
35, Unifix Street
Bromont, QC J2L 1N5 CANADA

Emergency Telephone Number
Director Quality Services
(704) 551-5820 - 24 Hour Emergency Response
Website: www.nationalgypsum.com

1-450-534-0955 or toll free 1-800-461-0955 (8h00 -17h00)
e-mail: info@unifixinc.com
Website: www.unifixinc.com

Section 2: Hazards Identification

United States (US)
According to OSHA 29CFR 1910.1200 (HCS)

GHS Classification of the substance or mixture
Carcinogenicity - Category 1A - (H-350)
Specific target organ toxicity, repeated exposure – Category 1 (H-372)
Acute toxicity, inhalation - Category 4 (H-332)
Skin corrosion/irritation Category 2 (H315)
Serious eye irritation – Category 2A (H-319)

GHS Label Elements
Pictogram



Signal Word **Danger**

Hazard Statements

H-350	May cause cancer.
H-332, 372	Harmful if inhaled. Causes damage to organs (lungs) through prolonged or repeated exposure.
H-315, 319	Causes skin irritation and serious eye irritation

Precautionary Statements
Prevention
Obtain special instructions before use.
Do not handle until all safety precautions have been read and understood.
Do not breathe dust.
Use personal protective equipment as required. (See Section 8)
Use engineering controls and wet methods to minimize dust.

Section 2: Hazards Identification (Continued)

Response
If breathing is difficult, remove victim to fresh air and keep at rest in a position comfortable for breathing.
If on skin, wash with plenty of soap and water. If skin irritation occurs, get medical attention.
If in eyes, rinse cautiously with water for several minutes. Remove contact lenses, if present and easy to do. Continue rinsing.
Get medical attention if exposed or concerned.

Storage
Store material in a cool, dry, ventilated area, away from excessive heat or sunlight.

Disposal
Dispose of material in accordance with federal, state, and local regulations.

Section 3: Composition/Information on Ingredients

Chemical Name	Common name/ Synonym	Identifiers CAS Number	% (weight)	Impurities
Silicon Dioxide (SiO_2)	Sand, quartz	14808-60-7	<50	
In CANADA- Calcium Carbonate	Limestone, industrial sand	1317-65-3	<50	Crystalline silica (CAS # 14808-60-7)
Mixture-calcium and aluminum silicates	Portland Cement	65997-15-1	<25	Crystalline silica (CAS # 14808-60-7)
Mixture-silicates, aluminates	Pozzolan, fly ash	68131-74-8	<25	Crystalline silica (CAS # 14808-60-7)
Mixture-calcium aluminates	High Alumina Cement	65997-16-2	<6	Crystalline silica (CAS # 14808-60-7)
Mixture-calcium, aluminum silicates, amorphous silica	Fiberglass scrim or fiberglass mat laminate	65997-17-3	<5	
Calcium Hydroxide	Hydrated lime	1305-62-0	<2	Crystalline silica (CAS # 14808-60-7)

Section 4: First-Aid Measures

Inhalation Remove exposed individual to fresh air immediately. If breathing difficulty persists, seek medical attention.

Eye contact Do not rub or scratch eyes. Immediately flush eyes with water for 15 minutes. Remove contact lenses (if applicable). Seek medical attention if irritation persists.

Skin contact Flush and wash skin with soap and water. Utilize lotions to alleviate dryness if present. Seek medical attention if irritation persists.

Ingestion This product is not expected to be hazardous and no harmful effects are expected upon ingestion of small amounts. Larger amounts may cause abdominal discomfort or possible obstruction of the digestive tract. Seek medical attention if problems persist.

Medical Conditions aggravated by exposure
Pre-existing upper respiratory and lung diseases such as, but not limited to, bronchitis, emphysema and asthma. Pre-existing skin diseases such as, but not limited to, rashes and dermatitis.

Most important symptoms/effects, acute and delayed: See Section 11. (Toxicological Information)

Section 5: Fire-Fighting Measures

Extinguishing Media
Dry chemical, foam, water, or extinguishing media appropriate for surrounding fire.

Unusual Fire and Explosion Hazards
Mixture poses no fire-related hazard.

Special hazards arising from the mixture
None known

Special Protective Equipment and Precautions for Firefighters
A SCBA is recommended to limit exposures to combustion products when fighting any fire.

Section 6: Accidental Release Measures

Personal precautions, protective equipment and emergency procedures
Product is an article composite.
General recommendations:
Wear appropriate Personal Protective Equipment. (See Section 8)
Maintain proper ventilation.

Environmental precautions
This product could be toxic to fish due to its high alkalinity from the Portland Cement.
Dispose of in accordance with applicable federal, state, and local regulations.

Methods and materials for containment and cleaning up
Pick-up larger pieces to avoid a tripping hazard.
Sweep or vacuum remaining material into a waste container for disposal.
Use a light water spray to minimize dust generation.

Section 7: Handling and Storage

Precautions for safe handling
Avoid breathing dust.
Minimize generation of dust.
Provide appropriate exhaust ventilation at places where dust is formed.
Avoid contact with eyes, skin and clothing.
Wear recommended personal protective equipment when handling. (See Section 8)

Conditions for safe storage, including any incompatibilities
Store material in a cool, dry, ventilated area, away from excessive heat or sunlight.
Store panels flat to minimize damage.
Do not stack panels too high when storing to minimize the risk of falling.
Avoid contact with strong acids.

Section 8: Exposure Controls/Personal Protection

Control Parameters

	Exposure Limits	
Component	**OSHA PEL (mg/m3)**	**ACGIH TLV (mg/m3)**
Portland Cement	15 (T) 5 (R)	10 (T)
High Alumina Cement	15 (T) 5 (R)	10 (T)
Pozzolan	15 (T) 5 (R)	10 (T)
Sand	[(10) / (%SiO2+2)] (R); [(30) / (%SiO2+2)] (T)	0.025 (R)
Crystalline Silica (Quartz)[1]	[(10) / (%SiO2+2)] (R); [(30) / (%SiO2+2)] (T)	0.025 (R)
Fiberglass Scrim	15 (T) 5 (R)	1 f/cc (R)
Calcium Hydroxide (Hydrated Lime)	15 (T) 5 (R)	5 (R)
Calcium Carbonate	15 (T) 5 (R)	10 (T)

1 – Present as an impurity in raw materials
T- Total Dust
R- Respirable Dust

Exposure Controls
Appropriate Engineering Controls
Work/Hygiene Practices: Utilize methods to minimize dust production. Utilize wet methods, when appropriate, to reduce generation of dust.
Ventilation: Provide local and general exhaust ventilation sufficient to maintain a dust level below the PEL/TLV.
Personal Protective Equipment
Respiratory Protection
A NIOSH approved particulate respirator is recommended in poorly ventilated areas or if the PEL/TLV is exceeded. OSHA's 29 CFR 1910.134 (Respiratory Protection Standard) must be followed whenever work conditions require respirator use.
Eye Protection
Safety glasses or goggles.
Skin
Gloves, protective clothing and/or barrier creams may be utilized if conditions warrant.

Section 9: Physical and Chemical Properties

(a) Appearance: Gray solid
(b) Odor: Slight organic odor upon opening that dissipates quickly.
(c) Odor threshold: Not available
(d) pH : ~12
(e) Melting point/freezing point: Not Available
(f) Initial boiling point and boiling range: Not Available
(g) Flash point: Not available
(h) Evaporation rate: Not available
(i) Flammability (solid, gas): Not flammable
(j) Upper/lower flammability or explosive limits: Not available
(k) Vapor pressure: Not available
(l) Vapor density: Not available
(m) Relative density: ~1.2
(n) Solubility(ies): Slightly soluble in water
(o) Partition coefficient: n-octanol/water: Not available
(p) Auto-ignition temperature: Not available
(q) Decomposition temperature: Unknown
(r) Viscosity: Not available
(s) VOC (Volatile Organic Compound): N/A

Section 10: Stability and Reactivity

(a) Reactivity: No data available
(b) Chemical stability: Stable in dry environments
(c) Possibility of hazardous reactions: None known
(d) Conditions to avoid (e.g., static discharge, shock, or vibration): Contact with strong acids.
(e) Incompatible materials: Strong acids
(f) Hazardous decomposition products: None known.

Section 11: Toxicological Information

Information on Toxicological effects
Information on likely routes of exposure

Ingestion	May cause gastrointestinal irritation.
Inhalation	Dust may irritate respiratory system. Chronic exposure may result in lung disease. (See below)
Skin contact	May cause irritation, itching or dermatitis. (See below)
Eye contact	Contact with dust may cause mechanical irritation.

Symptoms related to the physical, chemical and toxicological characteristics
Acute exposure to airborne dust concentrations in excess of the PEL/TLV may result in coughing, dyspnea, wheezing, and a burning irritation of the nose, throat, and upper respiratory tract, along with possible impaired pulmonary function. Chronic exposures may result in lung disease. (Silicosis and/or lung cancer)
Contact with wet Portland Cement may cause severe irritation, redness, and possible burns. Continued and prolonged contact may result in drying of the skin. Contact with dust or glass fibers may produce itching, rash and/or redness. Repeated or prolonged exposure may result in dermatitis.

Toxicological data
No toxicological data is available for this product. Toxicological information for components of this product listed below.

Acute toxicity	Not available
Skin corrosion/irritation	Not available
Serious eye damage/eye irritation	Not available
Skin sensitization	Not available
Respiratory sensitization	Not available
Sensitization	Not available
Mutagenicity	Not available
Carcinogenicity	Not available

This product contains crystalline silica. (quartz) The International Agency for Research on Cancer (IARC) classifies crystalline silica inhaled in the form of quartz or cristobalite from occupational sources as carcinogenic to humans, Group 1. The National Toxicology Program (NTP) classifies respirable crystalline silica as a substance which may be reasonably anticipated to be a carcinogen. OSHA does not regulate crystalline silica as a human carcinogen.

Reproductive effects	Not available
Specific target organ toxicity – single exposure	Not available
Aspiration toxicity	Not available

Section 12: Ecological Information

(a) Ecotoxicity (aquatic and terrestrial, where available): This product could be toxic to fish due to its high alkalinity from the Portland Cement. No studies are available.
(b) Persistence and degradability: Unknown
(c) Bioaccumulative potential: Unknown.
(d) Mobility in soil: Unknown
(e) Other adverse effects (such as hazardous to the ozone layer): None known

Section 13: Disposal Considerations

This material is not considered a hazardous waste. Dispose of according to Local, State, Federal, and Provincial Environmental Regulations.

Section 14: Transport Information

This product is not a DOT hazardous material
Shipping Name: Same as product name
ICAO/IATA/IMO: Not applicable

Section 15: Regulatory Information

All ingredients are included on the TSCA inventory.
Federal Regulations
SARA Title III: Not listed under Sections 302, 304, and 313
CERCLA: Not listed
RCRA: Not listed
OSHA: Dust and potential respirable crystalline silica generated during product use may be hazardous.

State Regulations
California Prop 65: Respirable crystalline silica is known to the state of California to cause cancer.
Canada WHMIS
All components of this product are included in the Canadian Domestic Substances List (DSL).
Crystalline silica: WHMIS Classification D2A

Section 16: Other Information

SDS Prepared by: National Gypsum Company
2001 Rexford Road
Charlotte, NC 28211
Phone Number: (704) 551-5820

Date of Preparation: July 16, 2015

Revision indicators and Date
Effective Date Change: 7/16/2015 Supersedes: 6/1/2015
Format Changes: Conforms to OSHA 29CFR 1910.1200 (HCS)
Compliant with the 2015 Canadian Workplace Hazardous Materials Information System (WHMIS 2015), the Canadian Hazardous Products Act, and the Controlled Products Regulations. (CPR)

Key to Abbreviations

ACGIH	American Conference of Governmental Industrial Hygienists
CAS	Chemical Abstract Services Number
CFR	Code of Federal Regulations
DOT	Department of Transportation
EPA	Environmental Protection Agency
HEPA	High Efficiency Particulate Air
HCS	Hazard Communications Standard
HMIS	Hazardous Material Identification System
IARC	International Agency for Research on Cancer
IATA	International Air Transport Association
ICAO	International Civil Aviation Organization
IMO	International Maritime Organization
NIOSH	National Institute for Occupational Safety and Health
NFPA	National Fire Protection Association
NTP	National Toxicology Program
OSHA	Occupational Safety and Health Administration
PEL	Permissible Exposure Limit
PPE	Personal Protective Equipment
TLV	Threshold Limit Value
TSCA	Toxic Substance Control Act
TWA	Time Weighted Average
WHMIS	Workplace Hazardous Materials Information System

The information and recommendations contained herein are based upon data believed to be correct. However, no guarantee or warranty of any kind expressed or implied is made with respect to the information contained herein. This safety data sheet was prepared to comply with the OSHA Hazard Communication Standard (29 CFR 1910.1200).

Disclaimer of Liability:
As the conditions or methods of use are beyond our control, we do not assume any responsibility and expressly disclaim any liability for any use of the material. Information contained herein is believed to be true and accurate, but all statements or suggestions are made without any warranty, express or implied, regarding accuracy of the information, the hazards connected with the use of the material, or the results to be obtained for the use thereof.

Distribution ES

Spécification

Pratique standardisé

Proposé à :

AIR MP
754, Rue Saguenay
Rouyn-Noranda (Qc) J9X 7B5

A/S : Guillaume Gauthier

Préparé et présenté par :

Danielle Matte

NACE CIP Certifié Niveau 3
#64593

Distribution E.S.
104-A, 5e Ave Est
La Sarre (Qc) J9Z 2Y1
T.819.339.2101
admin@distributiones.com

1. Système standard

Primer :

ARP Primer Époxy (Kits Gallon)
→Gris pâle
→Satiné

Finition :

Supershield Uréthane (Kits Gallon)
→Toutes les couleurs
→Standard Lustré 80-90% lustre
→Disponible en différents lustres sur demande.

2. Système salin

Projets résistance saline – 3000 heures

Primer :

Guertin EF75122 Époxy (Kits 4 Gallons)
→ Gris Charcoal
→ Semi-Lustre

Finition :

Supershield Uréthane (Kits Gallon)
→Toutes les couleurs
→Standard Lustré 80-90% lustre
→Disponible en différents lustres sur demande.

Distribution E.S.
104-A, 5e Ave Est
La Sarre (Qc) J9Z 2Y1
T.819.339.2101
admin@distributiones.com

PRIMER – Système 1 – Projet standard

Époxy de finition sans sablage ARP 2.1VOC Primer

Ratio : 3 :1 → vendus en kits 1x GALLONS

Partie-A : 83030A01 @ format 2.84 litres
Partie-B : 83030B01 @ format 950 ml

NE PAS DILUER ; PRÊT À L'USAGE

NE PAS PIGMENTER

Résistance saline : >1500hrs

Préparation :

- Bien lire la fiche technique avant d'appliquer
- Le nettoyage au solvant (SSPC-SP1) est nécessaire
- Arrondir tous les coins et adoucir les soudures, retirer les bavures de soudage, contaminants lousses (SSPC-SP2 ET SSPC-SP3)
- Pour acier autre que satiné, effectuer un grenaillage conformément la norme SSPC-SP6

Application :

- Mélanger la Partie A et Partie B indépendamment avant de les mélanger ensemble.
- Combiner les 2 parties ensemble en ratio 3 :1 en mélangeant mécaniquement à basse révolution pendant au moins 2 minutes jusqu'à ce que le mélange ait une consistance uniforme
- Utiliser un mesh 100 pour le filtre
- S'assurer que le taux d'humidité ambiante est en dessous de 80%.

ÉPAISSEURS :
Appliquer entre 4 et 6 mils humide
Vous obtiendrez entre 2.4 et 3.6 mils sec (DFT)

APPLIQUER LA FINITION SUPERSHIELD LA JOURNÉE MÊME, ENTRE 1h et 6h APRÈS

Distribution E.S.
104-A, 5e Ave Est
La Sarre (Qc) J9Z 2Y1
T.819.339.2101
admin@distributiones.com

PRIMER – Système 2 – Résistance Saline

Époxy Haute Performance EF75122

Ratio : 4 :1

Partie-A : EF75112P1-12L @ format 12 litres
Partie-B : EF75061P2-3L @ format 3 litres

NE PAS DILUER ; PRÊT À L'USAGE

NE PAS PIGMENTER

Résistance saline >3000h.

Préparation :

- Bien lire la fiche technique avant d'appliquer
- Le nettoyage au solvant (SSPC-SP1) est nécessaire
- Arrondir tous les coins et adoucir les soudures, retirer les bavures de soudage, contaminants lousses (SSPC-SP2 ET SSPC-SP3)
- Pour acier autre que satiné, effectuer un grenaillage conformément la norme SSPC-SP6

Application :

- Mélanger la Partie A et Partie B indépendamment avant de les mélanger ensemble.
- Combiner les 2 parties ensemble en ratio 4 :1 en mélangeant mécaniquement à basse révolution pendant au moins 3 minutes jusqu'à ce que le mélange ait une consistance uniforme
- Utiliser un mesh 100 pour le filtre
- S'assurer que le taux d'humidité ambiante est en dessous de 80%.

ÉPAISSEURS :
Appliquer entre 7 et 8 mils humide
Vous obtiendrez entre 4.2 et 4.8 mils sec (DFT)

APPLIQUER LA FINITION SUPERSHIELD LA JOURNÉE MÊME, ENTRE 1h et 6h APRÈS

Distribution E.S.
104-A, 5e Ave Est
La Sarre (Qc) J9Z 2Y1
T.819.339.2101
admin@distributiones.com

FINITION URÉTHANE – Système Universel (1 et 2)

Uréthane Supershield sans Isocyanathes formule 3 :1

Ratio : 3 :1

Partie-A : Supershield Intermix @ format 2.83l
Partie-B : SI25002P214 @ format 946ml

NE PAS DILUER ; PRÊT À L'USAGE

Préparation :

- Bien lire la fiche technique avant d'appliquer
- Aucun temps d'induction nécessaire

Application :

- Mélanger la Partie A et Partie B indépendamment avant de les mélanger ensemble.
- Combiner les 2 parties ensemble en ratio 3 :1 (vendu en kits) en mélangeant mécaniquement à basse révolution pendant au moins 2 minutes jusqu'à ce que le mélange ait une consistance uniforme
- Utiliser un mesh 100 pour le filtre
- S'assurer que le taux d'humidité ambiante est en dessous de 80%.
- Appliquer sur le primer en système « wet-on-wet » après 1 heure seulement, et dans un maximum de 6 heures sinon il y aura délamination entre les 2 produits.
- Le produit sera prêt à manipuler après 1 à 3 heures dépendant de la chaleur ambiante.

ÉPAISSEURS :
Appliquer entre 4 et 5 mils humide
Vous obtiendrez entre 2.6 et 3.2 mils sec (DFT)

Distribution E.S.
104-A, 5e Ave Est
La Sarre (Qc) J9Z 2Y1
T.819.339.2101
admin@distributiones.com

MÉTHODE DE PRISE DE MESURE D'ÉPAISSEUR DE PEINTURE

SELON SSPC-PA2

STANDARD DE BASE

- 3 relevés dans un rayon de 4cm à 5 endroits différents pour chaque surface de 100pi2
- Les relevés doivent être mesurés à maximum de 1po d'un rebord
- Total de 15 relevés individuels pour établir 1 mesure
- Un minimum de 5 relevés doit être dans le spectre de DFT requis par la spécification
- Aucun relevé peut représenter une valeur de :
  - Moins de 80% du DFT requis par la spécification
  - Plus de 120% du DFT requis par la spécification
- Si la moyenne des relevés indique une mesure acceptée par la spécification, passer à une autre pièce
- Si la moyenne des relevés indique une mesure hors spécification, la pièce ne doit pas être acceptée par le chargé de projet.

STANDARD SELON GRANDEUR DES SURFACES

- Pour les surfaces de moins de 1000pi2, sélectionner au hasard 3 endroits de 100pi2 et effectuer les prises de mesures conformément au standard de base mentionné ci-haut (45 relevés)
- Pour les surfaces de plus de 1000pi2, mesurer le premier 100pi2 conformément au standard de base mentionné ci-haut (45 relevés), et effectuer par la suite 1 seule mesure (15 relevés) pour chaque section de 100pi2 suivante.
- Lorsqu'une anomalie est détectée, reculer de section (100pi2) et prendre des relevés conformément au standard de base pour les surfaces de moins de 1000pi2 (5 spots de 3 relevés à 3 endroits différents = 45 relevés) jusqu'à ce que les sections respectent la spécification.
- Refaire les pièces défectueuses et recommencer.

LEXIQUE :

Relevé : Prise de mesure individuelle avec la jauge électronique à un endroit précis
Mesure : C'est la mesure du DFT utilisé pour le résultat final. Il est calculé en faisant moyenne des relevés.
DFT : Épaisseur de peinture sèche (dry film thickness)

Distribution E.S.
104-A, 5e Ave Est
La Sarre (Qc) J9Z 2Y1
T.819.339.2101
admin@distributiones.com

INTEGRITY
INNOVATION
PERFORMANCE

GUERTIN
A Division of Cloverdale Paint Inc.

TECHNICAL DATA
EF75122

Description

EF75122 is a grey, high solids, 2.8 VOC, epoxy primer. It is designed to fill blast profiles in a single coat. No induction time is required.

Mixed Coating Properties

Mix Ratio	4 Parts base to 1 Part epoxy part 2
VOC	
EF75060P2	3.00 lbs / gal or 360 grams / litre
EF75061P2	2.80 lbs / gal or 336 grams / litre
Volume Solids	
EF75060P2	57.61%
EF75061P2	60.64%
Sag	
Airless	12 - 15 mils
Air Assist Airless	12 - 15 mils
Air Spray	12 - 15 mils
HVLP	12 - 15 mils
Viscosity @ 70°F (21°C)	25 - 30 Seconds Zahn#2 / 300 cps
Pot Life @ 77°F (25°C)	
EF75060P2	5.00 hours
EF75061P2	4.00 hours
Salt Spray (B1000)	3000 hours @ 4 mils DFT
Theoretical Coverage	
EF75060P2	924 ft^2 / gal (22.6 m^2 / litre) @ 1 mil DFT
EF75061P2	972 ft^2 / gal (23.8 m^2 / litre) @ 1 mil DFT

DFT = Dry Film Thickness

Product Weight - *Container weight not included*

EF75122P1 base	13.82 lbs / gallon or 1.656 kg / litre
EF75060P2 standard cure	7.58 lbs / gallon or 0.909 kg / litre
EF75061P2 fast cure	7.76 lbs / gallon or 0.930 kg / litre

Shelf Life

Shelf Life is applicable only for material stored in unopened and undamaged original factory filled containers at 4°to 38°C (39°to 100°F).

EF75122P1	1 year	EF75060P2	2 years
		EF75061P2	2 years

Subject to reinspection. Store unused material in tightly closed containers. Contents of partially filled containers may show surface skinning after storage. If skinning forms, remove by straining before use.

BENEFITS

- excellent edge coverage
- exceptional corrosion resistance
- excellent adhesion
- excellent sprayability
- humidity resistance

USES

- power transmission & distribution equipment
- containment tanks
- OEM - chemical tankers & trailers
- OEM - oil patch applications
- OEM - fleet applications

Guertin Coatings, A Division of Cloverdale Paint Inc.
50 Panet Road • Winnipeg, Manitoba • R2J 0R9 • T 204.237.0241 • F 204.233.5051
www.cloverdalepaint.com

Distribution E.S.
104-A, 5e Ave Est
La Sarre (Qc) J9Z 2Y1
T.819.339.2101
admin@distributiones.com

TECHNICAL DATA
EF75122

Surface Preparation

SSPC – SP6 Commercial Blast minimum recommended or a minimum of 3-stage to 7-stage phosphate cleaning system.

Mixing Instructions

1) Pre-Mix EF75122P1 Base for 2 minutes with an air-operated Jiffy Mixer®, or equivalent, to produce a uniform consistency within its container

2) Properly ratio material at 4:1 (by volume):

4 Parts EF75122P1 Base to
1 Part EF75060P2 Standard Cure Epoxy Part 2 or
1 Part EF75061P2 Fast Cure Epoxy Part 2

3) Mix material for 3 minutes with an air-operated Jiffy Mixer®, or equivalent, to a uniform consistency before use

4) No induction time required

5) No Thinning required

6) Filter through 100 mesh in line filter

Application Instructions

Application Temperature

Minimum	55°F (10°C)
Maximum	100°F (38°C)

Equipment Settings

Air Spray:	pot pressure:	10 – 20 psi
	atomizing air:	45 – 65 psi
	nozzle set:	1.4 – 1.8
Airless Spray:	fluid pressure:	2000 - 2500 psi
	tip size:	.013 - .019
Air Assist Airless:	fluid pressure:	700 - 1500 psi
	atomizing air:	20 – 60 psi
	tip size:	.013 - .019

- Precision plural component equipment is recommended. All spray equipment including lines and filters must be kept clean at all times to avoid nozzle plugging. When hand mixing follow /Mixing Instructions' procedures.
- Apply in wet coats making even parallel passes. Overlap each pass 50% to minimize holidays, bare areas and pinholes.
- Excess wet film will cause sags and runs.

Recommended dry film thickness is 3 mils above profile.

If thinners are required: *Please contact your Guertin Representative for recommendations.*

Note: Successful application requires following the recommended temperature, humidity conditions and film thickness ranges.

Recoat Window for best D.O.I.

Substrate Temp	70°F (21°C)
Over Itself	up to 3 days
With Urethane Topcoat	4 hours up to 24 hours
With Super-Shield® Topcoat	1 hour to 4 hours

Flash times:
Allow a minimum of 4.0 hours flash off time before applying a two-component urethane topcoat. Higher film builds (>4mils) and/or cooler temperatures will require longer flash times.

The epoxy primer can be recoated with itself up to 3 days. After 3 days the epoxy primer must be scuff sanded.

It can be topcoated with 2K urethane and Super-Shield® topcoats up to 24 hours. After 24 hours the epoxy primer must be scuff sanded.

It is recommended to apply at ambient air and surface temperatures between 55° - 100°F (10° - 38°C). App ly at a relative humidity level below 80%.

Surface temperature must be at least 5°F (3°C) abov e the dew point to ensure that moisture condensation does not occur during application and the drying period.

Higher/lower temperatures & humidity, film thickness, improper activator range and poor air movement will affect the dry time and recoat window.

Equipment Cleanup

Clean application equipment with Guertin's SP02859T0 or SP05127T0.

Safety Precautions

FOR INDUSTRIAL USE ONLY. To be used by professionally trained personnel using proper safety equipment. Use only with adequate ventilation. Warning: this product is flammable, keep away from heat, sparks and open flame. Please refer to material safety data sheets.

Warranty

Guertin Coatings warrants its product to be free from defects in materials and workmanship and will REPLACE ANY PRODUCT PROVED TO BE DEFECTIVE, OR REFUND OF THE ORIGINAL PURCHASE PRICE OF THE QUANTITY PROVED TO BE DEFECTIVE. Requests for refund or replacement of product must be made in writing within one year from the original date of purchase. This Warranty does not apply to defects due, directly or indirectly, to misuse, abuse, negligent application, or acts of God.

GUERTIN COATINGS WILL NOT BE LIABLE FOR DEATH, INJURIES TO PERSONS OR PROPERTY, OR FOR INCIDENTAL, CONTINGENT, SPECIAL OR CONSEQUENTIAL DAMAGES ARISING FROM THE USE OF OUR PRODUCT, INCLUDING DOWNTIME OR LOSS OF USE OF PRODUCT.

All data, statements, and recommendations made herein are based upon information we believe to be reliable, but are made without any representation, guarantee or warranty of accuracy. Our products are sold on the condition that the user himself will evaluate them, as well as our recommendations, to determine their suitability for his own purpose before adoption. Also, statements regarding the use of our products or processes are not to be construed as recommendations for their use in violation of any patent rights or in violation of any applicable laws or regulations.

Guertin Coatings, A Division of Cloverdale Paint Inc.
50 Panet Road • Winnipeg, Manitoba • R2J 0R9 • T 204.237.0241 • F 204.233.5051
www.cloverdalepaint.com

Distribution E.S.
104-A, 5e Ave Est
La Sarre (Qc) J9Z 2Y1
T.819.339.2101
admin@distributiones.com

F I C H E S I G N A L E T I Q U E

SECTION I - RENSEIGNEMENTS SUR LE PRODUIT

Identificateur du Produit: GREY HIGH BUILD ANTICORROSIVE
NumÉro du Produit: EF75122P1
Usage du Produit: PEINTURE
WHMIS CATEGORIE: B2 D2A D2B

NOM DU FABRICANT:
Cloverdale Paint Inc.
50 PANET ROAD
WINNIPEG, MB
R2J 0R9 204/237-0241

NOM DU FOURNISSEUR:
Cloverdale Paint Inc.
50 PANET ROAD
WINNIPEG, MB
R2J 0R9 204/237-0241

PREPARE PAR: Mr Robert Tinsley, 204-237-0241 DATE: 04/10/15

SECTION II - INGREDIENTS DANGEREUX

INGREDIENTS	NUMERO CAS	POURCENTAGE	LIMITES D'EXPOSITION	LC50	LD50
TITANIUM DIOXIDE	13463-67-7	5.0-10.0	10 MG/M3	6.82MG/L RAT	>25G/KGORAL RAT
MAGNESIUM SILICATE(TALC)	13776-74-4	10.0-30.0	5 mg/m3 DUST	N/AV	N/AV
CARBON BLACK	1333-86-4	0.1-1.0	3.5mg/m3DUST	>156 MG/M3 RAT	>240 MG/KG IP
BISPHENOL A DIGLYCIDYL ETHER	25068-38-6	1.0-5.0	NO INFO	N/AV	N/AV
XYLENE; MIXED ISOMERS	1330-20-7	1.0-5.0	100 ppm	5000 PPM RAT	4G/KG RAT ORAL
METHYL AMYL KETONE	110-43-0	1.0-5.0	50 ppm	2000 PPM RAT	1600 MG/KG RAT
METHYL ISOBUTYL KETONE	108-10-1	1.0-5.0	50 ppm	5700 PPM RAT	2080MG/KG RAT
METHYL ETHYL KETONE	78-93-3	5.0-10.0	200 ppm	2000 PPM RAT	2737 MG/KG RAT
N BUTYL ACETATE	123-86-4	1.0-5.0	150 ppm	2000 PPM RAT	14.0 G/KG RAT
GLYCOL ETHER PM ACETATE	108-65-6	1.0-5.0	50 ppm	N/AV	8532MG/KG RAT
PROPYLENE GLYCOL MONOMETHYL ETHER	107-98-2	1.0-5.0	100 ppm	13000 MG/KG RAT	5660 MG/KG RAT
ETHYLBENZENE	100-41-4	1.0-5.0	100 ppm	>4000 PPM RAT	3.5 G/KG RAT

N.A. SANS OBJET

SECTION III - PROPRIETES PHYSIQUES

POINT D'EBULLITION : 79-260 C
ODEUR :ODEUR PIQUANTE
APPARENCE :LIQUIDE GRIS
SOLUBILITE :2% EAUABLEE
VOLATILES EN VOLUME: 40.0%
PH @ 0.00 % : 7.0
TENSION DE VAPEUR :77.5 mm Hg
DENSITE DE LA VAPEUR:PLUS LOURD QUE L'AIR
TAUX D'EVAPORATION :PLUS RAPIDE QUE ACETATE BUTYLE
DENSITE SPECIFIQUE : 1.584
POINT DE CONGELATION: -40 C

Distribution E.S.
104-A, 5e Ave Est
La Sarre (Qc) J9Z 2Y1
T.819.339.2101
admin@distributiones.com

SECTION IV - RISQUES D'INCENDIE OU D'EXPLOSION

POINT D'ECLAIR: -6 C
(TAGLIABUE C. C.)
CLASS 3, DIV. 1

LEL: 1.0%
UEL: 13.8%

MOYENS D'EXTINCTION: CHIMIQUES SECS CO2 LA MOUSSE BROUILLARD DE L'EAU

RISQUE PARTICULIERE DE LUTTE CONTRE L'INCENDIE: LIQUIDE COMBUSTIBLE (POINT ECLAIR EST INFERIEUR A 100 F/38 C). PEUT FORMER DES MELANGES INFLAMMABLES. LES VAPEURS PEUVENT ETRE EXPLOSIVE DANS L'AIR. ELIMINER TOUTE SOURCE D'IGNITION. TOUT EQUIPMENT DOIT ETRE MIS A LA TERRE. GARDER LE RECIPIENT FERME.

PROCEDURE D'EXTINCTION: LES POMPIERS DOIVENT PORTER UN APPAREIL RESPIRATOIRE AUTONOME ET DES VETEMENTS DE PROTECTION COMPLETS. UTILISER DE L'EAU PULVERIZEE POUR REFROIDER LES STRUCTURES ET LES CONTENANTS EXPOSES AU FEU.

SECTION V - DANGERS POUR LA SANTE

EFFETS DE LA SUREXPOSITION: *** INHALATION: LES VAPEURS PEUVENT IRRITER. L'EXPOSITION A DES VAPEURS TRES CONCENTREES PEUVENT CAUSER DES MAUX DE TETES, DES ETOURDISSEMENTS, DES NAUSEES, UNE DEPRESSION DU SYSTEME NERVEUX CENTRAL. L'EXPOSITION PROLONGEE A DES VAPEURS TRES CONCENTREES PEUT CAUSER L'EVANOUISSEMENT OU LA MORT. *** INGESTION: MODEREMENT TOXIQUE. LE PRODUIT EST NOCIF LORSQU'IL EST INGERE. L'INGESTION DE GRANDES QUANTITES PEUT CAUSER DES MAUX DE TETES, DES NAUSEES, DES VOMISSEMENTS, UNE DEPRESSION DU SYSTEME NERVEUX CENTRAL. UNE PETITE QUANTITE DE CE LIQUIDE ASPIREE DANS LES POUMONS SOIT PAR INGESTION OU PAR VOMISSEMENT, RISQUE D'AVOIR DE GRAVE EFFETS NOCIF POUR LA SANTE (P.EX., PROVOQUER UN OEDEMENT PULMONAIRE). *** PEAU: PEUT CAUSER DE L'IRRITATION MODEREE. PEUT CAUSER LE DEGRAISSMENT ET LA DERMATITE. UNE EXPOSITION PROLONGEE PEUT RESULTER A UNE SENSIBILITE DANS LA PEAU. PEUT PROVOQUER DES BRULURES CHIMIQUES. PEUT ETRE ABSORVER PAR LA PEAU ET PROVOQUER UN RISQUE POUR LA SANTE. *** YEUX: LES VAPEURS PEUVENT IRRITER. LE LIQUIDE ET LES BRUINES IRRITENT LES YEUX ET PEUVENT CAUSER DES BRULURES. *** EFFETS DE LA SUREXPOSITION: CONTIENT SILICE. LA SUREXPOSTION A LONG TERME AU SILICE CAUSE LA SILICOSE ET LA DETERIATION CARDIOPULMONAIRE. LA SUREXPOSITION A LONG TERME AU NOIR DE CARBONE PEUT ENTRAINER DES LESIONS CUMULATIVES AU COEUR ET AUX POUMONS. L'EXPOSITION PROLONGEES OU REPETEES PEUT CAUSER UNE SENSIBILITE DE LA PEAU ET/OU UNE SENSIBILITE RESPIRATOIRE. L'EXPOSITION PROLONGEES OU REPETEES PEUT CAUSER UN MAUVAIS FONCTIONNEMENT DU FOIE, DES REINS, ET/OU DU SYSTEME NERVEUX. L'EXPOSITION PROLONGEES OU REPETEES PEUVENT CAUSER A LA LONGUE DES DOMMAGES AUX SYSTEME SANGUIN, GASTRO-INTESTINAL, NERVEUX, ET/OU REPRODUCTEUR. LES EXPOSITIONS PROLONGEES ET REPETEES PEUVENT PROVOQUER DES EFFETS TOXIQUE. L'EXPOSITION A CE PRODUIT NE DEVRAIT CAUSER AUCUN PROBLEME LORSQUE MANIPULER AVEC SOINS. LE CIRC A CLASSÉ L'ÉTHYLBENZENE PARMI LES SUBSTANCES DU GROUPE 2B EN SE FONDANT SUR DES DONNÉES SUFFISANTES DÉMONTRANT SA CANCÉROGÉNÉCITÉ POUR LES ANIMAUX DE LABORATOIRE, MAIS DE DONNÉES INSUFFISANTES SELON LES RÉSULTATS DE CERTAINES ÉTUDES MENÉES SUR DES ANIMAUX, DE TRES GRANDES EXPOSITIONS AUX XYLENES ON ENTRAINÉ DES EFFETS NÉFASTES SURE LE DÉVELOPPEMENT DES EMBRYONS/FOTUS. CES EFFETS SONT SOUVENT APPARUS A DES NIVEAUX D'EXPOSITION TOXIQUES POUR LA MERE. LA PORTÉE DE CES RÉSULTATS POUR LES HUMAINS N'A PAS ÉTÉ ÉTABLIE. LES EXPOSITIONS EXCESSIVES LONG TERME PEUT CAUSER TALCOSE, FIBROSE PULMONAIRE, QUI A SON TOUR MON ENTRAINER DES DOMMAGES GRAVES ET PERMANENTS AUX POUMONS. UNE ÉTUDE PORTANT SUR L'INHALATION DURANT TOUTE UNE VIE FAIT RESSORTIR QU'UNE EXPOSITION A DE LA POUSSIERE DE DIOXYDE DE TITANE A UNE CONCENTRATION DE 250 MG/M3 A ENTRAINÉ L'APPARITION DE TUMEURS AUX POUMONS CHEZ DES RATS. CES TUMEURS NE SONT APPARUES QU'A DES CONCENTRATIONS DE POUSSIERES QUI DÉPASSENT LA CAPACITÉ DES MÉCANISMES DE CLAIRANCE PULMONAIRE DES ANIMAUX ET SONT DIFFÉRENTES DES TUMEURS PULMONAIRES COMMUNES CHEZ L'ETRE HUMAIN TANT DANS LE TYPE QUE DANS

Distribution E.S.
104-A, 5e Ave Est
La Sarre (Qc) J9Z 2Y1
T.819.339.2101
admin@distributiones.com

SECTION V - DANGERS POUR LA SANTE

L'EMPLACEMENT. LA PERTINENCE DE CES RÉSULTATS SURE LE CANCER (CIRC) A CLASSÉ LE DIOXYDE DE TITANE PARMI LES LES CANCÉROGENES PRÉSUMÉS POUR LES HUMAINS (GROUPE 2B) EN SE FONDANT SURE DES DONNÉES INSUFFISANTES DÉMONTRANT SA CANCÉROGÉNÉCITÉ CHEZ LES HUMAINS ET DE DONNÉES SUFFISANTES DÉMONTRANT SA

CONDITIONS MEDICALES GENERALEMENT AGGRAVEES PAR L'EXPOSITION: LES PROBLEMES CUTANES. LES PROBLEMES OCCULAIRES. LES PROBLEMES RESPIRATOIRE CHRONIQUES. EN 1995 CIRC A CONCLUDE EXISTE DES PREUVES SUFFISANTES CHEZ LES ANIMAUX EXPERIMENTAUX DE LA CANCEROGENICITE DU NOIR DE CARBONE CLASSEMENT BLACK PROBABLEMENT CANCEROGENE AUX HUMAINS.

VOIES PRIMAIRES DE PENETRATION: CONTACT DERMIQUE INHALATION INGESTION

MESURES DE PREMIERS SOINS: *** INHALATION: TRANSPORTER A L'AIR FRAIS. AIDER LA RESPIRATION SI NECESSAIRE. GARDER LA VICTIME AU CHAUD ET CALME. CONSULTER UN MEDECIN. *** INGESTION: NE PAS FAIRE VOMIR OU BOIRE. FAIRE REPOSER. CONSULTER SANS DELAI UN MEDECIN. SI LE VOMISSEMENT SE PRODUIT, GARDER LA TETE DE LA VICTIME BAISSEE AU-DESSOUS DE SES HANCHES POUR EVITER L'ASPIRATION DANS LES POUMONS. *** PEAU: LAVER LA PEAU CONTAMINEE AVEC DE L'EAU. CONSULTER SANS DELAI UN MEDECIN. *** YEUX: RINCER DE L'EAU CLAIRE PENDANT AU MOINS 15 MINUTES ET FAIRE IMMEDIATEMENT APPEL A UN MEDECIN.

SECTION VI - DONNEES SUR LA REACTIVITE

STABILITE: CE PRODUIT EST STABLE DANS DES CONDITIONS NORMALES D'ENTREPOSAGE.

POLYMERISATION DANGEREUSE: NE SE PRODUIRA PAS DANS DES CONDITIONS NORMALES.

PRODUITS DE DECOMPOSITION DANGEREUX: OXYDES DE CARBONE. VAPEURS TOXIQUES ET FUMEE. FUMEE INFLAMMABLES.

CONDITIONS A EVITER: CHALEUR, ETINCELLES, FLAMMES.

PRODUITS INCOMPATIBLES: AGENTS OXIDABLE. ACIDES. ALCALINS. AMINES. AGENTS REDUCTEURS. AGENTS D'AZOTES. LES SULFURES. HALOGENES. L'EAU. LES COMPOSES CHLORINES.

SENSIBILITE AUX DECHARGES ELECTROSTATIQUES: PRENDRE DES PRECAUTIONS CONTRE LES DECHARGES STATIQUES.

SECTION VII - MESURES POUR FUITE OU DEVERSEMENT

ACTION A PRENDRE EN CAS DE FUITE OU DE DEVERSEMENT: ELIMINER TOUTE SOURCE D'IGNITION. ARRETER LA SOURCE DE FUITE. ASSURER UN VENTILATION EVACUER TOUT PERSONNEL NON-ESSENTIEL. PORTER LES VETEMENTS NECESSAIRE. ENDIGER L'ENDROIT POUR EMPECHER PROPAGATION. ABSORBER LE LIQUIDE AVEC UN PRODUIT ABSORBANT INERTE. TRANSFERER DANS UN CONTENANT A L'EPREUVE D'IGNITION.

METHODES D'ELIMINATION: NE PAS CONTAMINER LES COURS D'EAU POTABLE, LES LACS, LES ETANGS OU LES RUISSEAUX. SELON REGLEMENTS MUNICIPAUX, LES LOIS PROVINCIAL ET FEDERALES APPLICABLE A VOTRE LOCALITE.

Distribution E.S.
104-A, 5e Ave Est
La Sarre (Qc) J9Z 2Y1
T.819.339.2101
admin@distributiones.com

SECTION VIII - PRECAUTIONS D'EMPLOI

PROTECTION RESPIRATOIRE: UTILISER UN MASQUE RESPIRATOIRE A HAUT RENDEMENT QUI PROTEGE CONTRE LES VAPEURS ORGANIQUES ET LES POUSSIERES TOXIQUES. POUR DES HAUTES CONCENTRATIONS, UTILISER UN MASQUE RESPIRATOIRE A ALIMENTATION D'

VENTILATION: VENTILATION EFFICACE SUR PLACE POUR EVACUER LA POUSSIERE. EMPLOYER UN APPAREILAGE DE VENTILATION ANTIDEFLATION.

GANTS PROTECTEURS: PORTER DES GANTS/VETEMENTS RESISTANTS AUX PRODUITS CHIMIQUES AFIN DE PROTEGER LA PEAU POTENTIELLEMENT EXPOSEE.

PROTECTION YEUX: EVITER LE CONTACT AVEC LES YEUX. PORTER DES LUNETTES PROTECTRICES CONTRE LES PRODUITS CHIMIQUES ET UN ECRAN FACIAL.

AUTRE EQUIPMENT PROTECTEUR: TABLIER ET BOTTES IMPERMEABLES. DOUCHE OCULAIRE ET DOUCHE D'URGENCE.

AUTRE MESURES DE PROTECTION: EVITER TOUT CONTACT AVEC LES YEUX, LA PEAU ET LES VETEMENTS. EVITER DE RESPIRER. NE PAS INGERER. CONSERVER LOIN DE TOUS ALIMENTS. BIEN LAVER LES MAINS APRES AVOIR MANIPULER LA MATIERE. CHANGER ET LAVER LES VETEMENTS CONTAMINES.

RENSEIGNEMENTS SPECAUX EN MATIERE D'EXPEDITION: PEINTURE. LIQUIDE INFLAMMABLE CLASSE:3 UN# 1263 LE GROUPE D'EMBALLAGE II. CANUTEC 24 HOUR EMERGENCY NUMBER: (613) 996-6666

SECTION IX - PRECAUTIONS SPECIALES

PRECAUTIONS A PRENDRE A LA MANIPULATION ET L'ENTREPOSAGE: ENTREPOSER DANS UN ENDROIT FRAIS, SEC ET BIEN VENTILE, A L'ECART DES MATIERES INCOMPATIBLES. NE PAS LAISSER A PROXIMITE D'UNE SOURCE DE CHALEUR, D'ETINCELLES, OU D'UNE FLAMME. GARDER LE RECIPIENT FERME. TOUT EQUIPMENT DOIT ETRE MIS A LA TERRE.

AUTRES PRECAUTIONS: NE PAS COUPER, BROYER, SOUDER OU PERCER SUR OU PRES DE CE CONTENANT.

SECTION X - HMIS INFORMATION

HMIS RATIO: SANTE: 2 FLAMMABILITE: 3 REACTIVITE: 1 PROTECTION PERSONNELLE: K

Distribution E.S.
104-A, 5e Ave Est
La Sarre (Qc) J9Z 2Y1
T.819.339.2101
admin@distributiones.com

INTEGRITY
INNOVATION
PERFORMANCE

Cloverdale INDUSTRIAL • INDUSTRIEL

TECHNICAL DATA
EF25000 SUPER-SHIELD® SERIES
3:1 & 4:1 Mix Ratio

Description

The EF25000 Series is a high performance, isocyanate free urethane system that is VOC compliant at ≤2.8 - 3.5 lbs / gal (≤335 - 420 grams/litre). Each of Cloverdale's Super-Shield® coatings are custom formulated to customer specifications; application and cure properties vary to optimize performance.

Mixed Coating Properties

Mix Ratio	3 Parts base to 1 Part catalyst (faster cure, lower spray viscosity, excellent flow out) 4 Parts base to 1 Part catalyst (STD cure, higher sag resistance, longer open time)
VOC	≤2.8 - 3.5 lbs / gal or ≤335 - 420 grams / litre
Volume Solids	50 - 65%
Sag	
Airless	4 – 5 mils
Air Assist Airless	4 – 5 mils
Air Spray	4 – 5 mils
HVLP	4 – 5 mils
Viscosity @ 70°F (21°C)	30 ± 3 Seconds Zahn#2 (3:1 Mixing) 35 ± 3 Seconds Zahn#2 (4:1 Mixing)
Pot Life @ 77°F (25°C)	2.00 hours
Gloss	
20°	Matte to ultra gloss (to customer specifications)
60°	Matte to ultra gloss (to customer specifications)
Impacts	160+ in/lbs @ 2 mils DFT
Pencil Hardness	HB – F
Theoretical Coverage @ 1 mil DFT	602 - 1042 ft²/ gal (19.7 – 25.6 m²/ litre)

DFT = Dry Film Thickness

Product Weight - *Container weight not included*

EF25000 base	8.76 – 11.26 lbs / gallon or 1.050 – 1.350 kg / litre
SI25002P2 catalyst	6.75 lbs / gallon or 0.810 kg / litre

Shelf Life

Shelf Life is applicable only for material stored in unopened and undamaged original factory filled containers at 39°- 100°F (4° to 38°C).

EF25000 series base	2 years	SI25002P2	6 months

Subject to reinspection. Store unused material in tightly closed containers. Contents of partially filled containers may show surface skinning after storage. If skinning forms, remove by straining before use.

BENEFITS

- ISO Free
- outstanding appearance
- excellent DOI
- excellent color & gloss retention
- low VOC
- ultra low HAP's
- meets Canadian auto refinish single stage VOC requirement
- 4:1 meets AIM VOC spec for 'other industrial maintenance coatings'

USES

- fleet finishing applications
- oil field application
- ACE
- electrical transformers
- recreational vehicles
- plastics

Cloverdale Paint Inc.
50 Panet Road • Winnipeg, Manitoba • R2J 0R9 • T 204.237.0241 • F 204.233.5051
www.cloverdalepaint.com

Distribution E.S.
104-A, 5e Ave Est
La Sarre (Qc) J9Z 2Y1
T.819.339.2101
admin@distributiones.com

TECHNICAL DATA
EF25000 Series

Surface Preparation
Properly prepared, primed surface following all application procedures and recoat instructions on primer technical data sheet.

Mixing Instructions
Mixing at 3:1 by volume:

3 Parts SI25000 series base to
1 Part SI25002P2 activator

Mixing at 4:1 by volume:

4 Parts SI25000 series base to
1 Part SI25002P2 activator

Mix thoroughly to uniform consistency before use. Filter through 100 mesh in line filter.

Application Instructions
Application Temperature

Minimum	55°F (10°C)
Maximum	100°F (38°C)

Equipment Settings

Air Spray:	pot pressure:	10 – 20 psi
	atomizing air:	45 – 65 psi
	nozzle set:	1.0 – 1.8
Airless Spray:	fluid pressure:	2000 - 2500 psi
	tip size:	.011 - .015
Air Assist Airless:	fluid pressure:	700 - 1500 psi
	atomizing air:	20 – 60 psi
	tip size:	.011 - .015

- Precision plural component equipment is recommended. All spray equipment including lines and filters must be kept clean at all times to avoid nozzle plugging. When hand mixing smaller quantities, stir thoroughly to a uniform consistency prior to use.
- Apply in wet coat making even parallel passes. Overlap each pass 50% to minimize holidays, bare areas and pinholes.
- Excess wet film will cause sags and runs.

Recommended dry film thickness is 2 – 3 mils.

Supershield® is only recommended to be a finish coat over two component epoxy primers. Never apply over one component or urethane primers.

If thinners are required: *Please contact your Cloverdale Representative for recommendations.*

Note: Successful application requires following the recommended temperature, humidity conditions and film thickness ranges.

Drying Schedule
To customer specifications

Recoat Window for Best DOI

Substrate Temp	70°F (21°C)
Over Itself	15 minutes to 1 day
Over Epoxy Primers	1 hour to 3 days

Flash times: Please refer to specific Cloverdale Primer Technical Data Sheet for appropriate flash times and recoat windows for this topcoat.

It is recommended to apply at ambient air and surface temperatures between 55° - 100°F (10° - 38°C). App ly at a relative humidity level between 33% - 85%.

Surface temperature must be at least 5°F (3°C) abov e the dew point to ensure that moisture condensation does not occur during application and the drying period.

Higher/lower temperatures & humidity, film thickness, improper activator range and poor air movement will affect the dry time and recoat window.

Equipment Cleanup
Clean application equipment with Cloverdale's SP03078T0.

Safety Precautions
FOR INDUSTRIAL USE ONLY. To be used by professionally trained personnel using proper safety equipment. Use only with adequate ventilation. Warning: this product is flammable, keep away from heat, sparks and open flame. Please refer to material safety data sheets.

Warranty
Cloverdale Paint Inc. warrants its product to be free from defects in materials and workmanship and will REPLACE ANY PRODUCT PROVED TO BE DEFECTIVE, OR REFUND OF THE ORIGINAL PURCHASE PRICE OF THE QUANTITY PROVED TO BE DEFECTIVE. Requests for refund or replacement of product must be made in writing within one year from the original date of purchase. This Warranty does not apply to defects due, directly or indirectly, to misuse, abuse, negligent application, or acts of God.

CLOVERDALE PAINT INC. WILL NOT BE LIABLE FOR DEATH, INJURIES TO PERSONS OR PROPERTY, OR FOR INCIDENTAL, CONTINGENT, SPECIAL OR CONSEQUENTIAL DAMAGES ARISING FROM THE USE OF OUR PRODUCT, INCLUDING DOWNTIME OR LOSS OF USE OF PRODUCT.

All data, statements, and recommendations made herein are based upon information we believe to be reliable, but are made without any representation, guarantee or warranty of accuracy. Our products are sold on the condition that the user himself will evaluate them, as well as our recommendations, to determine their suitability for his own purpose before adoption. As so, statements regarding the use of our products or processes are not to be construed as recommendations for their use in violation of any patent rights or in violation of any applicable laws or regulations.

Cloverdale Paint Inc.
50 Panet Road • Winnipeg, Manitoba • R2J 0R9 • T 204.237.0241 • F 204.233.5051
www.cloverdalepaints.com

Distribution E.S.
104-A, 5e Ave Est
La Sarre (Qc) J9Z 2Y1
T.819.339.2101
admin@distributiones.com

F I C H E S I G N A L E T I Q U E

SECTION I - RENSEIGNEMENTS SUR LE PRODUIT

Identificateur du Produit: SUPERSHIELD
Numéro du Produit: SI25000-12
Usage du Produit: PEINTURE WHMIS CATEGORIE: B2 D2AD2B

NOM DU FABRICANT:
Cloverdale Paint Inc.
50 PANET ROAD
WINNIPEG, MB
R2J 0R9 204/237-0241

NOM DU FOURNISSEUR:
Cloverdale Paint Inc.
50 PANET ROAD
WINNIPEG, MB
R2J 0R9 204/237-0241

PREPARE PAR: Mr Robert Tinsley, 204-237-0241 DATE: 05/16/13

SECTION II - INGREDIENTS DANGEREUX

INGREDIENTS	NUMERO CAS	POURCENTAGE	LIMITES D'EXPOSITION	LC50	LD50
IRON OXIDE	1309-37-1	5.0-10.0	10 mg/m3	N/AV	N/AV
ACRYLATED URETHANE OLIGOMER	N/AV	5.0-10.0	NO INFO	N/AV	N/AV
XYLENE; MIXED ISOMERS	1330-20-7	1.0-5.0	100 ppm	5000 PPM RAT	4G/KG RAT ORAL
METHYL AMYL KETONE	110-43-0	5.0-10.0	50 ppm	2000 PPM RAT	1600 MG/KG RAT
N-BUTYL ACETATE	123-86-4	10.0-30.0	150 ppm	2000 PPM RAT	14.0 G/KG RAT
ETHYL 3-ETHOXYPROPIONATE	763-69-9	1.0-5.0	50 ppm	>1000 PPM RAT	5000 MG/KG RAT
ETHYLBENZENE	100-41-4	1.0-5.0	100 ppm	>4000 PPM RAT	3.5 G/KG RAT
1,6 HEXANEDIOL DIACRYLATE	13048-33-4	1.0-5.0	NO INFO	N/AV	4.9 G/KG RAT
TRIMETHYLOLPROPANE TRIACRYLATE	15625-89-5	5.0-10.0	NO INFO	N/AV	>5 G/KG RAT

N.A. - SANS OBJET

SECTION III - PROPRIETES PHYSIQUES

POINT D'EBULLITION : 126-170 C
ODEUR :ODEUR PIQUANT
APPARENCE :LIQUIDE EPAIS
SOLUBILITE :NEGLIGEABLE
VOLATILES EN VOLUME: 32.7%
PH @ 0.00 % : 7.0
TENSION DE VAPEUR :18.8 mm Hg

DENSITE DE LA VAPEUR:PLUS LOURD QUE L'AIR
TAUX D'EVAPORATION :PLUS RAPIDE QUE ACETATE BUTYLE
DENSITE SPECIFIQUE : 1.100
POINT DE CONGELATION: -40 C

Distribution E.S.
104-A, 5e Ave Est
La Sarre (Qc) J9Z 2Y1
T.819.339.2101
admin@distributiones.com

SECTION IV - RISQUES D'INCENDIE OU D'EXPLOSION

POINT D'ECLAIR: 15 C
(TAGLIABUE C. C.)
CLASS 3, DIV. 2

LEL: 1.0%
UEL: 12.1%

MOYENS D'EXTINCTION: CO2 CHIMIQUES SECS LA MOUSSE

RISQUE PARTICULIER DE LUTTE CONTRE L'INCENDIE: LIQUIDE COMBUSTIBLE (POINT ECLAIR EST INFERIEUR A 100 F/38 C). PEUT FORMER DES MELANGES INFLAMMABLES. LES VAPEURS PEUVENT ETRE EXPLOSIVE DANS L'AIR. ELIMINER TOUTE SOURCE D'IGNITION. TOUT EQUIPMENT DOIT ETRE MIS A LA TERRE. GARDER LE RECIPIENT FERME.

PROCEDURE D'EXTINCTION: LES POMPIERS DOIVENT PORTER UN APPAREIL RESPIRATOIRE AUTONOME ET DES VETEMENTS DE PROTECTION COMPLETS. UTILISER DE L'EAU PULVERIZEE POUR REFROIDIR LES STRUCTURES ET LES CONTENANTS EXPOSES AU FEU.

SECTION V - DANGERS POUR LA SANTE

EFFETS DE LA SUREXPOSITION: *** INHALATION: LES VAPEURS PEUVENT IRRITER. L'EXPOSITION A DES VAPEURS TRES CONCENTREES PEUVENT CAUSER DES MAUX DE TETES, DES ETOURDISSEMENTS, DES NAUSEES, UNE DEPRESSION DU SYSTEME NERVEUX CENTRAL. L'EXPOSITION PROLONGEE A DES VAPEURS TRES CONCENTREES PEUT CAUSER L'EVANOUISSEMENT OU LA MORT. *** INGESTION: MODEREMENT TOXIQUE. LE PRODUIT EST NOCIF LORSQU'IL EST INGERE. L'INGESTION DE GRANDES QUANTITES PEUT CAUSER DES MAUX DE TETES, DES NAUSEES, DES VOMISSEMENTS, UNE DEPRESSION DU SYSTEME NERVEUX CENTRAL. UNE PETITE QUANTITE DE CE LIQUIDE ASPIREE DANS LES POUMONS SOIT PAR INGESTION OU PAR VOMISSEMENT, RISQUE D'AVOIR DE GRAVE EFFETS NOCIF POUR LA SANTE (P.EX., PROVOQUER UN OEDEM PULMONAIRE). *** PEAU: PEUT CAUSER DE L'IRRITATION MODEREE. PEUT CAUSER LE DEGRAISSMENT ET LA DERMATITE. UNE EXPOSITION PROLONGEE PEUT RESULTER A UNE SENSIBILITE DANS LA PEAU. PEUT PROVOQUER DES BRULURES CHIMIQUES. PEUT ETRE ABSORBER PAR LA PEAU ET PROVOQUER UN RISQUE POUR LA SANTE. *** YEUX: LES VAPEURS PEUVENT IRRITER. LE LIQUIDE ET LES BRUINES IRRITENT LES YEUX ET PEUVENT CAUSER DES BRULURES. *** EFFETS DE LA SUREXPOSITION: L'EXPOSITION PROLONGEES OU REPETEES PEUT CAUSER UNE SENSIBILITE DE LA PEAU ET/OU UNE SENSIBILITE RESPIRATOIRE. L'EXPOSITION PROLONGEES OU REPETEES PEUVENT CAUSER A LA LONGUE DES DOMMAGES AUX SYSTEME SANGUIN, GASTRO-INTESTINAL, NERVEUX, ET/OU REPRODUCTEUR. LE CIRC A CLASSE L'ETHYLBENZENE PARMI LES SUBSTANCES DU GROUPE 2B EN SE FONDANT SUR DES DONNEES SUFFISANTES DEMONTRANT SA CANCEROGENECITE POUR LES ANIMAUX DE LABORATOIRE, MAIS DE DONNEES INSUFFISANTES DEMONTRANT L'APPARITION DE CANCER CHEZ LES HUMAINS. SELON LES RESULTATS DE CERTAINES ETUDES MENEES SUR DES ANIMAUX, DE TRES GRANDES EXPOSITIONS AUX XYLENES ON ENTRAINE DES EFFETS NEFASTES SUR LE DEVELOPPEMENT DES EMBRYONS/FETUS. CES EFFETS SONT SOUVENT APPARUS A DES NIVEAUX D'EXPOSITION TOXIQUES POUR LA MERE. LA PORTEE DE CES RESULTATS POUR LES HUMAINS N'A PAS ETE ETABLIE.

CONDITIONS MEDICALES GENERALEMENT AGGRAVEES PAR L'EXPOSITION: LES PROBLEMES CUTANES. LES PROBLEMES RESPIRATOIRE CHRONIQUES.

VOIES PRIMAIRES DE PENETRATION: INHALATION CONTACT DERMIQUE

MESURES DE PREMIERS SOINS: *** INHALATION: TRANSPORTER A L'AIR FRAIS. AIDER LA RESPIRATION SI NECESSAIRE. GARDER LA VICTIME AU CHAUD ET CALME. CONSULTER UN MEDECIN. *** INGESTION: NE PAS FAIRE VOMIR OU BOIRE. FAIRE REPOSER. CONSULTER SANS DELAI UN MEDECIN. SI LE VOMISSEMENT SE PRODUIT, GARDER LA TETE DE LA VICTIME BAISSEE AU-DESSOUS DE SES HANCHES POUR EVITER L'ASPIRATION DANS LES POUMONS. *** PEAU: LAVER LA PEAU CONTAMINEE AVEC DE L'EAU. CONSULTER SANS DELAI UN MEDECIN. *** YEUX: RINCER DE L'EAU CLAIRE PENDANT AU MOINS 15 MINUTES ET FAIRE IMMEDIATEMENT APPEL A UN MEDECIN.

Distribution E.S.
104-A, 5e Ave Est
La Sarre (Qc) J9Z 2Y1
T.819.339.2101
admin@distributiones.com

SECTION VI - DONNEES SUR LA REACTIVITE

STABILITE: CE PRODUIT EST STABLE DANS DES CONDITIONS NORMALES D'ENTREPOSAGE.

POLYMERISATION DANGERUSE: NE SE PRODUIRA PAS DANS DES CONDITIONS NORMALES.

PRODUITS DE DECOMPOSITION DANGEREUX: OXYDES DE CARBONE. OXYDES D'AZOTE. VAPEURS TOXIQUES ET FUMEE.

CONDITIONS A EVITER: CHALEUR, ETINCELLES, FLAMMES.

PRODUITS INCOMPATIBLES: AGENTS OXIDABLE. ACIDES. ALCALINS. AGENTS REDUCTEURS. LES SULFURES. LES METAUX ACTIFS, IONS DE METAUX. LE CUIVRE. HALOGENES. L'EAU.

SENSIBILITE AUX DECHARGES ELECTROSTATIQUES: PRENDRE DES PRECAUTIONS CONTRE LES DECHARGES STATIQUES.

SECTION VII - MESURES POUR FUITE OU DEVERSEMENT

ACTION A PRENDRE EN CAS DE FUITE OU DE DEVERSEMENT: ELIMINER TOUTE SOURCE D'IGNITION. ARRETER LA SOURCE DE FUITE. EVACUER TOUT PERSONNEL NON-ESSENTIEL. PORTER LES VETEMENTS NECESSAIRE. ENDIGER L'ENDROIT POUR EMPECHER PROPAGATION. ABSORBER LE LIQUIDE AVEC UN PRODUIT ABSORBANT INERTE. TRANSFERER DANS UN CONTENANT A L'EPREUVE D'IGNITION.

METHODES D'ELIMINATION: NE PAS CONTAMINER LES COURS D'EAU POTABLE, LES LACS, LES ETANGS OU LES RUISSEAUX. SELON REGLEMENTS MUNICIPAUX, LES LOIS PROVINCIAL ET FEDERALES APPLICABLE A VOTRE LOCALITE.

SECTION VIII - PRECAUTIONS D'EMPLOI

PROTECTION RESPIRATOIRE: UTILISER UN MASQUE RESPIRATOIRE A HAUT RENDEMENT QUI PROTEGE CONTRE LES VAPEURS ORGANIQUES ET LES POUSSIERES TOXIQUES. POUR DES HAUTES CONCENTRATIONS, UTILISER UN MASQUE RESPIRATOIRE A ALIMENTATION D'AIR.

VENTILATION: VENTILATION EFFICACE SUR PLACE POUR EVACUER LA POUSSIERE. EMPLOYER UN APPAREILAGE DE VENTILATION ANTIDEFLATION.

GANTS PROTECTEURS: PORTER DES GANTS/VETEMENTS RESISTANTS AUX PRODUITS CHIMIQUES AFIN DE PROTEGER LA PEAU POTENTIELLEMENT EXPOSEE.

PROTECTION YEUX: EVITER LE CONTACT AVEC LES YEUX. PORTER DES LUNETTES PROTECTRICES CONTRE LES PRODUITS CHIMIQUES ET UN ECRAN FACIAL.

AUTRE EQUIPMENT PROTECTEUR: TABLIER ET BOTTES IMPERMEABLES. DOUCHE OCULAIRE ET DOUCHE D'URGENCE.

AUTRE MESURES DE PROTECTION: EVITER TOUT CONTACT AVEC LES YEUX, LA PEAU ET LES VETEMENTS. EVITER DE RESPIRER. NE PAS INGERER. CONSERVER LOIN DE TOUS ALIMENTS. BIEN LAVER LES MAINS APRES AVOIR MANIPULER LA MATIERE. CHANGER ET LAVER LES VETEMENTS CONTAMINES.

RENSEIGNEMENTS SPECAUX EN MATIERE D'EXPEDITION: PEINTURE. LIQUIDE INFLAMMABLE CLASSE:3 UN# 1263 LE GROUPE D'EMBALLAGE II. CANUTEC 24 HOUR EMERGENCY NUMBER: (613) 996-6666

Distribution E.S.
104-A, 5e Ave Est
La Sarre (Qc) J9Z 2Y1
T.819.339.2101
admin@distributiones.com

SECTION IX - PRECAUTIONS SPECIALES

PRECAUTIONS A PRENDRE A LA MANIPULATION ET L'ENTREPOSAGE: ENTREPOSER DANS UN ENDROIT FRAIS, SEC ET BIEN VENTILE, A L'ECART DES MATIERES INCOMPATIBLES. NE PAS LAISSER A PROXIMITE D'UNE SOURCE DE CHALEUR, D'ETINCELLES, OU D'UNE FLAMME. GARDER LE RECIPIENT FERME. TOUT EQUIPMENT DOIT ETRE MIS A LA TERRE.

AUTRES PRECAUTIONS: NE PAS UTILISER DE PRESSION POUR VIDER LE CONTENANT. NE PAS COUPER, BROYER, SOUDER OU PERCER SUR OU PRES DE CE CONTENANT. TOUS LES CONTENANTS CONTIENNENTDES RESIDUS ET DES VAPEURS. MANIPULER LES CONTENANTS VIDES COMME S'ILS ETAIENT PLEINS.

SECTION X - HMIS INFORMATION

HMIS RATIO: SANTE: 2 FLAMMABILITE: 3 REACTIVITE: 1 PROTECTION PERSONNELLE: E

Distribution E.S.
104-A, 5e Ave Est
La Sarre (Qc) J9Z 2Y1
T.819.339.2101
admin@distributiones.com

Cloverdale
INDUSTRIAL PROTECTIVE COATINGS

83030
DATA SHEET

2.1 VOC ARP Primer

Automotive Primer

Industry Approvals		
Auto Refinish:	✓	Category 1
Env. Canada:		Exempt
MPI:		N/a
AWWA:		N/a

General Properties

A high performance epoxy primer for vehicle refinish applications requiring a primer with less than 250 g/lt VOC. The 83030 primer has superior corrosion resistance when applied to prepared steel. No induction time required. 83030 has excellent sanding capability, but provides a finish so smooth that sanding is often not required.

Recommended Uses

For use in vehicle refinish applications, truck boxes & bodies, power distribution equipment, tanks, agricultural equipment, and general industrial priming.

Product Information

GENERIC TYPE
Amine Cured Epoxy

PIGMENT TYPE
Anti-corrosive

COLOR
Grey

BASES
N/a

FINISH
Flat

AVERAGE VOLUME SOLIDS
60.2%

AVERAGE WEIGHT SOLIDS
77.0%

RECOMMENDED FILM THICKNESS
Wet: 3.3-5.0 mils (82 - 125 microns)
Dry: 2-3 mils (50 - 75 microns)
See your Cloverdale Representative for project recommendations.

THEORETICAL COVERAGE
965 ft²/gal @ 1 mil (25 microns) DFT
23.7 m²/L @ 1 mil (25 microns) DFT
Actual coverage may vary depending on substrate and application methods.

MIXED RATIO
3 Parts 83030A; 1 Part 83030B

INDUCTION TIME
No induction time required

POT LIFE
7 hours at 25°C (77°F) (less at higher temperatures)

VISCOSITY MIXED
57 - 63 KU

TEMPERATURE RESISTANCE (DRY)
93°C (200°F) Continuous
120°C (250°F) Intermittent

V.O.C. MIXED
250 gm./lit. (2.1 lb./gal.)
**refer to MSD sheet for current VOC values*

THINNER
Use as supplied.

ACCELERATOR
A-65

Methods of Application

AIRLESS SPRAY	1500 - 2000 psi with tip sizes .011" - .013" or equivalent
H.V.L.P.	Tip size 1.4 - 1.6 mm. 8 - 10 psi cap pressure
CONVENTIONAL	40 - 50 psi gun pressure
BRUSH / ROLLER	Not recommended

Drying Time - Temperature, Relative Humidity, and Film Thickness will affect dry and re-coat times.

Substrate Temperature	Touch Dry	Hard Dry	Overcoat Interval with Armourshield		
			Minimum	Maximum	Normal
25°C (77°F)	3.5 hours	6 hours	2 hours	3 days	4 hours

Distribution E.S.
104-A, 5e Ave Est
La Sarre (Qc) J9Z 2Y1
T.819.339.2101
admin@distributiones.com

83030

Recommended Topcoats

Most Cloverdale Conventional and High Performance Coatings. Note: Only the 837 and 839 series urethanes should be used for ARP applications.

Surface Preparation

Area to be painted should be thoroughly cleaned with a detergent solution in water followed by a wash using a wax and grease remover. Sand the bare metal areas using 80-180 grit abrasive. Old, existing finishes should be sanded using 320 – 400 grit paper. Sanded areas should be re-cleaned and primed as quickly as possible after drying.

Limitations

Not recommended for immersion service. For best results apply when substrate temperature is above 10°C (50°F), and at a minimum of 3°C (5°F) above the dew point. Do not apply when the relative humidity is above 85%.

Mixing Instructions

Mix 83030 base A component and curing agent 83030 activator B separately with good agitation. Add curing agent to base component and mix thoroughly until homogenous. If thinning is necessary or required proceed only after recommended induction time has passed.

Safety Precautions

This product is for industrial use only. **Refer to Material Safety Data Sheet for proper health and safety information.**

Storage and Handling

FLASH POINT	-20°C (-4°F) TCC
PRODUCT WEIGHT	1.435 kg/lt mixed (container extra)
STORAGE	Cool, dry, secure location. See your Cloverdale Paint Representative.
PACKAGE SIZE	1 gal kit - 3 qts 83030A and 1 qt. 83030B 4 gal kit - 3 gal 83030A and 1 gal 83030B

Some package sizes or colors may be by special order only. Please check with your Cloverdale Representative when ordering.

Warranty Disclaimer

Cloverdale Paint manufactures quality products. In the event that this product is defective or in any way unsuitable for the application for which it is sold, Cloverdale Paint Inc. will replace the product free of charge. The warranty provided by this data sheet is the only warranty or guarantee of quality made in respect of this product by Cloverdale Paint Inc. By purchasing this product the customer accepts this warranty in lieu of all others, and waives all claims to any other remedy arising from any warranty or guarantee of quality, whether such warranty or guarantee of quality was made expressly to the customer or implied by any applicable law.

Cloverdale Paint Inc.
6950 King George Boulevard, Surrey, British Columbia, Canada V3W 4Z1
Web Site: www.cloverdalepaint.com Email: helpdesk@cloverdalepaint.com
Phone: 604 596 6261 Fax: 604 597 2677

Distribution E.S.
104-A, 5e Ave Est
La Sarre (Qc) J9Z 2Y1
T.819.339.2101
admin@distributiones.com

83030

PERFORMANCE CRITERIA

1. Abrasion Resistance
Method: ASTM D4060 Abrasion Resistance of Organic Coating by Taber Abrader, 1000 gram load, CS-17 Wheel, 1000 Cycles
Coating System: 1 coat 83030
Results: 161 mg.

2. Adhesion
Method: ASTM D4541, method "E"

Coating System: 83030 primer, 839 Armourshield topcoat
Results: >900 psi

3. Chemical Resistance
Method: Covered spot test for 1 week at room temperature

Coating System: 1 coat 83030

Coating was exposed to - 5% Sodium Hydroxide Solution; 5% Sulfuric Acid Solution; 5% Hydrochloric Acid; 5% Mono Basic Sodium Phosphate Solution; 5% Sodium Hypochlorite Solution; Heavy Duty Liquid Detergent
Results: Unaffected - slight discoloration permitted

4. Recoating Window
Method: Internal method - Minimum = the time to >80% gloss @ 20 degree angle. Maximum = longest time tested with 5B adhesion of topcoat

Coating System: 83030 primer, 839 Armourshield topcoat
Results: 2 hrs to >72 hrs

5. Salt Spray (Fog)
Method: ASTM B117
Coating System A: 1 coat 83030
Results:>1000 hrs
Coating System B: 1 coat 83030, 1 coat 83904
Results: >1500 hrs

6. Flexibility
Method: ASTM D522 Cylindrical Mandrel Bend

Coating System: 1 coat 83030
Results: Not less than 9% elongation

7. Pencil Hardness
Method: ASTM D3363
Coating System A: 1 coat 83030
Results: pass 2H

Check for recent amendments to this data sheet at www.cloverdalepaint.com

Cloverdale Paint Inc.
6950 King George Boulevard, Surrey, British Columbia, Canada V3W 4Z1
Web Site: www.cloverdalepaint.com **Email:** helpdesk@cloverdalepaint.com
Phone: 604 596 6261 **Fax:** 604 597 2677

Distribution E.S.
104-A, 5e Ave Est
La Sarre (Qc) J9Z 2Y1
T.819.339.2101
admin@distributiones.com

MATERIAL SAFETY DATA SHEET

SECTION I - PRODUCT IDENTIFICATION AND USE

Product Identifier: 2.1 VOC ARP PRIMER BASE
Identification Number: 83030A
Product Use: PAINT
WHMIS Class: B2 D1B D2A

MANUFACTURER:
Cloverdale Paint Inc.
50 PANET ROAD
WINNIPEG, MB
R2J 0R9 204/237-0241

SUPPLIER:
Cloverdale Paint Inc.
50 PANET ROAD
WINNIPEG, MB
R2J 0R9 204/237-0241

PREPARED BY: Mr Robert Tinsley, 204-237-0241 DATE: 03/19/14

SECTION II - HAZARDOUS INGREDIENTS

CHEMICAL NAME	CAS NUMBER	WT. PERCENT RANGE	EXPOSURE LIMIT	LC50	LD50
TITANIUM DIOXIDE	13463-67-7	10.0-30.0	10 MG/M3	6.82MG/L RAT	>25G/KGORAL R
MAGNESIUM SILICATE(TALC)	13776-74-4	10.0-30.0	5 mg/m3 DUST	N/AV	N/AV
BISPHENOL A DIGLYCIDYL ETHER	25068-38-6	10.0-30.0	NO INFO	N/AV	N/AV
ALKYL GLYCIDYL ETHER	68609-97-2	1.0-5.0	NO INFO	N/AV	>19.2 G/KG RA
XYLENE; MIXED ISOMERS	1330-20-7	1.0-5.0	100 ppm	5000 PPM RAT	4G/KG RAT ORA
METHYL ISOBUTYL KETONE	108-10-1	1.0-5.0	50 ppm	5700 PPM RAT	2080MG/KG RAT
METHYL ETHYL KETONE	78-93-3	5.0-10.0	200 ppm	2000 PPM RAT	2737 MG/KG RA
ACETONE	67-64-1	1.0-5.0	750 ppm	16000 PPM RAT	7400 MG/KG RA
PROPYLENE GLYCOL MONOMETHYL ETHER	107-98-2	1.0-5.0	100 ppm	13000 MG/KG RAT	5660 MG/KG RA
FURFURYL ALCOHOL	98-00-0	1.0-5.0	NO INFO	233 MG/KG RAT	177 MG/KG RAT
TER BUTYL ACETATE	504-88-5	1.0-5.0	NO INFO	3230 MG/M3 RAT	4100 MG/KG RA

N.A. - NOT APPLICABLE

SECTION III - PHYSICAL DATA

BOILING RANGE : 56-260 C
ODOR : AROMATIC
APPEARANCE : GREY LIQUID
VOLATILE BY WEIGHT: 18.6%
VOLATILE BY VOLUME: 35.7%
PH @ 0.00 % : 7.0
VAPOR PRESSURE : 184 mm Hg
VAPOR DENSITY : IS HEAVIER THAN AIR
EVAPORATION RATE: IS FASTER THAN BUTYL ACETATE
SOLUBILITY : 8% WATER SOLUBLE
SPECIFIC GRAVITY: 1.483
FREEZING POINT : -40 C

Distribution E.S.
104-A, 5e Ave Est
La Sarre (Qc) J9Z 2Y1
T.819.339.2101
admin@distributiones.com

SECTION IV - FIRE AND EXPLOSION DATA

FLASH POINT: -18 C
(TAGLIABUE C. C.)
CLASS 3, DIVISION 1

LEL: 1.0%
UEL: 16.3%

EXTINGUISHING MEDIA: DRY CHEMICAL CARBON DIOXIDE FOAM WATER FOG

UNUSUAL FIRE AND EXPLOSION HAZARDS: FLAMMABLE LIQUID (FLASH POINT LESS THAN 100 F/38 C). MAY FORM FLAMMABLE MIXTURES. VAPORS MAY BE EXPLOSIVE IN AIR. ELIMINATE IGNITION SOURCES. GROUND ALL EQUIPMENT. KEEP CONTAINER CLOSED.

SPECIAL FIREFIGHTING PROCEDURES: FIREFIGHTERS SHOULD WEAR SELF CONTAINED BREATHING APPARATUS AND FULL PROTECTIVE CLOTHING. USE WATER SPRAY TO COOL NEARBY CONTAINERS AND STRUCTURES EXPOSED TO FIRE.

SECTION V - HEALTH HAZARD DATA

EFFECTS OF OVER EXPOSURE: *** INHALATION: VAPORS MAY BE IRRITATING. EXPOSURE TO HIGH VAPOR CONCENTRATIONS MAY CAUSE HEADACHES, DIZZINESS, NAUSEA, AND CENTRAL NERVOUS SYSTEM DEPRESSION. PROLONGED EXPOSURE TO HIGH VAPOR CONCENTRATIONS MAY CAUSE UNCONSCIOUSNESS OR DEATH. *** INGESTION: MODERATELY TOXIC. HARMFUL IF SWALLOWED. SWALLOWING LARGE QUANTITIES CAUSES HEADACHES, NAUSEA, VOMITING, AND CENTRAL NERVOUS SYSTEM DEPRESSION. MAY CAUSE LIVER AND/OR KIDNEY DAMAGE. SMALL AMOUNTS OF LIQUID DRAWN INTO THE LUNGS FROM SWALLOWING OR VOMITING MAY CAUSE SEVERE HEALTH AFFECTS (E.G.PULMONARY EDEMA). *** SKIN: CAN CAUSE MODERATE IRRITATION. CAN CAUSE DEFATTING AND DERMATITIS. PROLONGED EXPOSURE MAY CAUSE SKIN SENSITIZATION. CAN CAUSE CHEMICAL BURNS. CAN BE ABSORBED THROUGH THE SKIN CAUSING A HEALTH HAZARD. *** EYES: VAPORS MAY IRRITATE. LIQUID AND MISTS WILL IRRITATE AND MAY BURN THE EYES. *** CHRONIC AFFECTS OF OVEREXPOSURE: CONTAINS SILICA. LONG TERM EXPOSURE TO SILICA DUST MAY CAUSE SILICOSIS AND CARDIOPULMONARY IMPAIRMENT. REPEATED OR PROLONGED EXPOSURES MAY CAUSE SKIN AND/OR RESPIRATORY SENSITIZATION. REPEATED OR PROLONGED EXPOSURES MAY CAUSE LIVER, KIDNEY, AND/OR NEURAL DYSFUNCTION. REPEATED OR PROLONGED EXPOSURES MAY CAUSE DELAYED EFFECTS INVOLVING BLOOD, GASTRO-INTESTINAL, NERVOUS AND/OR REPRODUCTIVE SYSTEMS. LONG TERM EXPOSURE TO DUSTS CAN LEAD TO RESPIRATORY IMPAIRMENT. HIGH EXPOSURES TO XYLENES IN SOME ANIMAL STUDIES HAVE BEEN REPORTED TO CAUSE HEALTH EFFECTS ON THE DEVELOPING EMBRYO/FETUS. THESE EFFECTS WERE OFTEN AT LEVELS TOXIC TO THE MOTHER. THE SIGNIFICANCE OF THESE FINDINGS TO HUMANS HAS NOT BEEN DETERMINED. LONG-TERM EXCESSIVE EXPOSURES MAY CAUSE TALCOSIS, PULMONARY FIBROSIS, WHICH IN TURN MAY LEAD TO SEVERE AND PERMANENT DAMAGE TO THE LUNGS. IN A LIFETIME INHALATION STUDY, EXPOSURE TO 250 MG/M3 TITANIUM DIOXIDE DUST RESULTED IN THE DEVELOPMENT OF LUNG TUMOURS IN RATS. THESE TUMOURS OCCURRED ONLY AT DUST LEVELS THAT OVERWHELMED THE ANIMALS' LUNG CLEARANCE MECHANISMS AND WERE DIFFERENT FROM COMMON HUMAN LUNG TUMOURS IN BOTH TYPE AND LOCATION. THE RELEVANCE OF THESE FINDINGS TO HUMANS IS UNKNOWN. THE INTERNATIONAL AGENCY FOR RESEARCH ON CANCER (IARC) HAS CLASSIFIED TITANTIUM DIOXIDE AS POSSIBLY CARCINOGENIC TO HUMANS (GROUP 2B) BASED ON INADEQUATE EVIDENCE OF CARCINOGENICITY IN HUMANS AND SUFFICIENT EVIDENCE OF CARCINOGENICITY IN EXPERIMENTAL ANIMALS. ACCORDING TO THE INTERNATIONAL AGENCY FOR RESEARCH ON CANCER (IARC), METHYL ISOBUTYL KETONE IS POSSIBLY CARCINOGENIC TO HUMANS (GROUP 2B)

MEDICAL CONDITIONS PRONE TO AGGRAVATION BY EXPOSURE: SKIN DISORDERS. EYE DISORDERS. CHRONIC RESPIRATORY DISORDERS.

PRIMARY ROUTE(S) OF ENTRY: DERMAL INHALATION INGESTION

EMERGENCY AND FIRST AID PROCEDURES: *** INHALATION: REMOVE TO FRESH AIR. ASSIST

Distribution E.S.
104-A, 5e Ave Est
La Sarre (Qc) J9Z 2Y1
T.819.339.2101
admin@distributiones.com

SECTION V - HEALTH HAZARD DATA

BREATHING IF NECESSARY. KEEP VICTIM WARM AND QUIET. SEEK MEDICAL ATTENTION. *** INGESTION: DO NOT INDUCE VOMITING OR GIVE FLUIDS. KEEP AT REST. GET PROMPT MEDICAL ATTENTION. IF VOMITING OCCURS, KEEP VICTIM'S HEAD BELOW HIPS TO PREVENT ASPIRATION INTO THE LUNGS. *** SKIN: FLUSH CONTAMINATED SKIN WITH WATER. GET PROMPT MEDICAL ATTENTION. *** EYES: FLUSH WITH CLEAN WATER FOR AT LEAST 15 MINUTES AND IMMEDIATELY GET MEDICAL ATTENTION.

SECTION VI - REACTIVITY DATA

STABILITY: THIS PRODUCT IS STABLE UNDER NORMAL STORAGE CONDITIONS.

HAZARDOUS POLYMERIZATION: COULD OCCUR UNDER NORMAL CONDITIONS. CARE MUST BE EXERCISED.

HAZARDOUS DECOMPOSITION PRODUCTS: OXIDES OF CARBON. TOXIC FUMES AND SMOKE. FLAMMABLE FUMES.

CONDITIONS TO AVOID: HEAT, SPARKS OR FLAME.

INCOMPATABILITY: OXIDIZING AGENTS. ACIDS. ALKALIES. AMINES. SULFIDES. ALDEHYDES. HALOGENS. CHLORINATED COMPOUNDS.

SENSITIVITY TO STATIC DISCHARGE: TAKE PRECAUTIONARY MEASURES AGAINST STATIC DISCHARGES.

SECTION VII - SPILL OR LEAK PROCEDURES

STEPS TO BE TAKEN IN CASE MATERIAL IS RELEASED OR SPILLED: ELIMINATE IGNITION SOURCES. STOP SOURCE OF SPILL. VENTILATE AREA. EVACUATE ALL NON ESSENTIAL PERSONNEL. WEAR APPROPRIATE PROTECTIVE EQUIPMENT. DIKE SPILL TO KEEP FROM SPREADING. COVER WITH INERT ABSORBENT. REMOVE TO DISPOSAL CONTAINER.

WASTE DISPOSAL METHOD: DO NOT CONTAMINATE ANY LAKES, PONDS, STREAMS, OR UNDERGROUND WATER SUPPLIES. DISPOSE OF IN ACCORDANCE WITH LOCAL, PROVINCIAL AND FEDERAL REGULATIONS IN YOUR AREA.

SECTION VIII - SAFE HANDLING AND USE INFORMATION

RESPIRATORY PROTECTION: USE A COMBINATION ORGANIC VAPOR/TOXIC PARTICULATE HIGH EFFICIENCY FILTER RESPIRATOR. FOR HIGH CONCENTRATIONS, USE AIR SUPPLIED RESPIRATOR.

VENTILATION: EFFICIENT LOCAL EXHAUST VENTILATION IS REQUIRED. USE EXPLOSION PROOF VENTILATION EQUIPMENT.

PROTECTIVE GLOVES: WEAR APPROPRIATE CHEMICAL RESISTANT GLOVES/CLOTHING TO PREVENT SKIN CONTACT.

EYE PROTECTION: DO NOT GET IN EYES. WEAR SAFETY GLASSES/GOGGLES OR A FACE SHIELD.

OTHER PROTECTIVE EQUIPMENT: IMPERMEABLE APRON AND BOOTS. EYE BATH AND SAFETY

Distribution E.S.
104-A, 5e Ave Est
La Sarre (Qc) J9Z 2Y1
T.819.339.2101
admin@distributiones.com

SECTION VIII - SAFE HANDLING AND USE INFORMATION

SHOWER.

HYGENIC PRACTICES: DO NOT GET IN EYES, SKIN OR CLOTHING. AVOID INHALING. DO NOT SWALLOW. KEEP AWAY FROM FOOD PRODUCTS. WASH HANDS THOROUGHLY AFTER HANDLING. CHANGE AND WASH CONTAMINATED CLOTHING.

SPECIAL SHIPPING INFORMATION: PAINT. FLAMMABLE LIQUID CLASS:3 UN#1263 PACKING GROUP II. CANUTEC 24 HOUR EMERGENCY NUMBER: (613) 996-6666

SECTION IX - SPECIAL PRECAUTIONS

PRECAUTIONS TO BE TAKEN IN HANDLING AND STORAGE: STORE IN A COOL, DRY, WELL VENTILATED AREA, AWAY FROM ALL INCOMPATIBLE MATERIALS. KEEP AWAY FROM HEAT, SPARKS AND FLAME. KEEP CONTAINER CLOSED. GROUND ALL EQUIPMENT.

OTHER PRECAUTIONS: DO NOT USE PRESSURE TO EMPTY CONTAINERS. DO NOT CUT, GRIND, WELD OR DRILL ON OR NEAR THIS CONTAINER. CONTAINERS WILL RETAIN PRODUCT RESIDUES AND VAPORS. HANDLE EMPTY CONTAINERS AS IF THEY WERE FULL. DO NOT PUNCTURE, INCINERATE, BURN OR STORE ABOVE 45 C. SOME OR ALL OF THE LISTED COMPONENTS OF THIS PRODUCT MAY PRESENT A HEALTH THREAT IN THE FORM OF DUSTS.

SECTION X - HMIS INFORMATION

HMIS: HEALTH: 2 FLAMMABILITY: 3 REACTIVITY: 1 PERSONAL PROTECTION: K

Distribution E.S.
104-A, 5e Ave Est
La Sarre (Qc) J9Z 2Y1
T.819.339.2101
admin@distributiones.com

MATERIAL SAFETY DATA SHEET

SECTION I - PRODUCT IDENTIFICATION AND USE

Product Identifier: 2.1 VOC ARP PRIMER ACTIVATOR
Identification Number: 83030B
Product Use: PAINT ADDITIVE
WHMIS Class: B2 D1AD2AE

MANUFACTURER:
Cloverdale Paint Inc.
50 PANET ROAD
WINNIPEG, MB
R2J 0R9 204/237-0241

SUPPLIER:
Cloverdale Paint Inc.
50 PANET ROAD
WINNIPEG, MB
R2J 0R9 204/237-0241

PREPARED BY: Mr Robert Tinsley, 204-237-0241 DATE: 02/03/16

SECTION II - HAZARDOUS INGREDIENTS

CHEMICAL NAME	CAS NUMBER	WT. PERCENT RANGE	EXPOSURE LIMIT	LC50	LD50
XYLENE: MIXED ISOMERS	1330-20-7	1.0-5.0	100 ppm	5000 PPM RAT	4G/KG RAT ORAL
METHYL ISOBUTYL KETONE	108-10-1	1.0-5.0	50 ppm	5700 PPM RAT	2080MG/KG RAT
ACETONE	67-64-1	5.0-10.0	750 ppm	16000 PPM RAT	7400 MG/KG RAT
N-BUTYL ALCOHOL	71-36-3	1.0-5.0	100 ppm	8000 PPM RAT	790 MG/KG RAT
2-BUTOXYETHANOL	111-76-2	1.0-5.0	50 ppm SKIN	925 PPM MOUSE	470 MG/KG RAT
DIMETHYLAMINOMETHYL PHENOL	90-72-2	1.0-5.0	NO INFO	N/AV	1200 MG/KG RAT
ETHYLBENZENE	100-41-4	1.0-5.0	100 ppm	>4000 PPM RAT	3.5 G/KG RAT
BENZYL ALCOHOL	100-51-6	10.0-30.0	NO INFO	1400 PPM RAT	1230 MG/KG RAT
ALIPHATIC POLYAMIDE	106906-26-1	10.0-30.0	NO INFO	N/AV	N/AV

N.A. - NOT APPLICABLE

SECTION III - PHYSICAL DATA

BOILING RANGE : 56-206 C
ODOR : AROMATIC
APPEARANCE : CLEAR LIQUID
VOLATILE BY WEIGHT: 13.2%
VOLATILE BY VOLUME: 20.8%
PH @ 0.00 % : 7.0
VAPOR PRESSURE : 184 mm Hg
VAPOR DENSITY : IS HEAVIER THAN AIR
EVAPORATION RATE: IS FASTER THAN BUTYL ACETATE
SOLUBILITY : 7% WATER SOLUBLE
SPECIFIC GRAVITY: 1.295
FREEZING POINT : -40 C

Distribution E.S.
104-A, 5e Ave Est
La Sarre (Qc) J9Z 2Y1
T.819.339.2101
admin@distributiones.com

SECTION IV - FIRE AND EXPLOSION DATA

FLASH POINT: -18 C
(TAGLIABUE C. C.)
CLASS 3, DIVISION 1

LEL: 1.0%
UEL: 12.8%

EXTINGUISHING MEDIA: DRY CHEMICAL CARBON DIOXIDE FOAM WATER FOG

UNUSUAL FIRE AND EXPLOSION HAZARDS: FLAMMABLE LIQUID (FLASH POINT LESS THAN 100 F/38 C). MAY FORM FLAMMABLE MIXTURES. VAPORS MAY BE EXPLOSIVE IN AIR. ELIMINATE IGNITION SOURCES. GROUND ALL EQUIPMENT. KEEP CONTAINER CLOSED.

SPECIAL FIREFIGHTING PROCEDURES: FIREFIGHTERS SHOULD WEAR SELF CONTAINED BREATHING APPARATUS AND FULL PROTECTIVE CLOTHING. USE WATER SPRAY TO COOL NEARBY CONTAINERS AND STRUCTURES EXPOSED TO FIRE.

SECTION V - HEALTH HAZARD DATA

EFFECTS OF OVER EXPOSURE: *** INHALATION: VAPORS AND MISTS ARE EXTREMELY CORROSIVE. BRONCHITIS, PULMONARY EDEMA, AND CHEMICAL PNEUMONITIS MAY OCCUR. *** INGESTION: HIGHLY TOXIC. MAY BE FATAL. SWALLOWING LARGE QUANTITIES CAUSES HEADACHES, NAUSEA, VOMITING, AND CENTRAL NERVOUS SYSTEM DEPRESSION. MAY CAUSE LIVER AND/OR KIDNEY DAMAGE. VAPORS, MISTS, AND LIQUID ARE CORROSIVE. SWALLOWING CAN CAUSE DEATH. SMALL AMOUNTS OF LIQUID DRAWN INTO THE LUNGS FROM SWALLOWING OR VOMITING MAY CAUSE SEVERE HEALTH AFFECTS (E.G.PULMONARY EDEMA). *** SKIN: VAPORS, MISTS AND LIQUID ARE EXTREMELY CORROSIVE. CAN CAUSE DEFATTING AND DERMATITIS. PROLONGED EXPOSURE MAY CAUSE SKIN SENSITIZATION. CAN CAUSE CHEMICAL BURNS. CAN BE ABSORBED THROUGH THE SKIN CAUSING A HEALTH HAZARD. *** EYES: VAPORS, LIQUID AND MISTS ARE EXTERMELY CORROSIVE. BRIEF CONTACT WILL BE SEVERELY IRRITATING AND MAY DAMAGE THE EYES AND CAUSE PEMANENT INJURY OR BLINDNESS. *** CHRONIC AFFECTS OF OVEREXPOSURE: REPEATED OR PROLONGED EXPOSURES MAY CAUSE SKIN AND/OR RESPIRATORY SENSITIZATION. REPEATED OR PROLONGED EXPOSURES MAY CAUSE LIVER, KIDNEY, AND/OR NEURAL DYSFUNCTION. REPEATED OR PROLONGED EXPOSURES MAY CAUSE DELAYED EFFECTS INVOLVING BLOOD, GASTRO-INTESTINAL, NERVOUS AND/OR REPRODUCTIVE SYSTEMS. ETHYL BENZENE HAS BEEN CLASSIFIED BY THE IARC AS A GROUP 2B SUBSTANCE ON THE BASIS OF SUFFICIENT EVIDENCE FOR CARCINOGENICITY IN LABORATORY ANIMALS BUT INADEQUATE EVIDENCE FOR CANCER IN HUMANS. HIGH EXPOSURES TO XYLENES IN SOME ANIMAL STUDIES HAVE BEEN REPORTED TO CAUSE HEALTH EFFECTS ON THE DEVELOPING EMBRYO/FETUS. THESE EFFECTS WERE OFTEN AT LEVELS TOXIC TO THE MOTHER. THE SIGNIFICANCE OF THESE FINDINGS TO HUMANS HAS NOT BEEN DETERMINED. CARCINOGENICITY IN EXPERIMENTAL ANIMALS. ACCORDING TO THE INTERNATIONAL AGENCY FOR RESEARCH ON CANCER (IARC), METHYL ISOBUTYL KETONE IS POSSIBLY CARCINOGENIC TO HUMANS (GROUP 2B) 2-BUTOXYETHANOL MAY CAUSE REPRODUCTIVE EFFECTS BASED ON STUDIES IN LABORATORY ANIMALS AT HIGH GENERALLY TOXIC DOSES. 2-BUTOXYETHANOL MAY CAUSE TERATOGENIC/EMBRYTOXIC EFFECTS BASED ON IN STUDIES IN LABORATORY ANIMALS

MEDICAL CONDITIONS PRONE TO AGGRAVATION BY EXPOSURE: ALLERGIES. SKIN DISORDERS. EYE DISORDERS. CENTRAL NERVOUS SYSTEM DISORDERS. CHRONIC RESPIRATORY DISORDERS.

PRIMARY ROUTE(S) OF ENTRY: INHALATION DERMAL INGESTION

EMERGENCY AND FIRST AID PROCEDURES: *** INHALATION: REMOVE TO FRESH AIR. ASSIST BREATHING IF NECESSARY. KEEP VICTIM WARM AND QUIET. SEEK MEDICAL ATTENTION. *** INGESTION: DO NOT INDUCE VOMITING OR GIVE FLUIDS. KEEP AT REST. GET PROMPT MEDICAL ATTENTION. IF VOMITING OCCURS, KEEP VICTIM'S HEAD BELOW HIPS TO PREVENT ASPIRATION INTO THE LUNGS. *** SKIN: FLUSH CONTAMINATED SKIN WITH WATER. GET PROMPT MEDICAL ATTENTION. *** EYES: FLUSH

Distribution E.S.
104-A, 5e Ave Est
La Sarre (Qc) J9Z 2Y1
T.819.339.2101
admin@distributiones.com

SECTION V - HEALTH HAZARD DATA

WITH CLEAN WATER FOR AT LEAST 15 MINUTES AND IMMEDIATELY GET MEDICAL ATTENTION.

SECTION VI - REACTIVITY DATA

STABILITY: THIS PRODUCT IS STABLE UNDER NORMAL STORAGE CONDITIONS.

HAZARDOUS POLYMERIZATION: COULD OCCUR UNDER NORMAL CONDITIONS. CARE MUST BE EXERCISED.

HAZARDOUS DECOMPOSITION PRODUCTS: OXIDES OF CARBON. OXIDES OF NITROGEN. TOXIC FUMES AND SMOKE.

CONDITIONS TO AVOID: HEAT, SPARKS OR FLAME.

INCOMPATABILITY: DIRECT SUNLIGHT AVOID EXTENDED CONTACT WITH AIR OR OXYGEN HEATING IN AIR MAY PRODUCE IRRITATING ALDEHYDES, ACIDS AND KETONES BASES. SODIUM HYDROXIDE ALUMINUM AND ITS ALLOYS OXIDIZING AGENTS. ACIDS. ALKALIES. AMINES. CYANIDES, ISOCYANATES. SULFIDES. ALDEHYDES. HALOGENS. WATER

SENSITIVITY TO STATIC DISCHARGE: TAKE PRECAUTIONARY MEASURES AGAINST STATIC DISCHARGES.

SECTION VII - SPILL OR LEAK PROCEDURES

STEPS TO BE TAKEN IN CASE MATERIAL IS RELEASED OR SPILLED: ELIMINATE IGNITION SOURCES. STOP SOURCE OF SPILL. VENTILATE AREA. EVACUATE ALL NON ESSENTIAL PERSONNEL. WEAR APPROPRIATE PROTECTIVE EQUIPMENT. DIKE SPILL TO KEEP FROM SPREADING. COVER WITH INERT ABSORBENT. REMOVE TO DISPOSAL CONTAINER.

WASTE DISPOSAL METHOD: DO NOT CONTAMINATE ANY LAKES, PONDS, STREAMS, OR UNDERGROUND WATER SUPPLIES. DISPOSE OF IN ACCORDANCE WITH LOCAL, PROVINCIAL AND FEDERAL REGULATIONS IN YOUR AREA.

SECTION VIII - SAFE HANDLING AND USE INFORMATION

RESPIRATORY PROTECTION: USE A COMBINATION ORGANIC VAPOR/TOXIC PARTICULATE HIGH EFFICIENCY FILTER RESPIRATOR. FOR HIGH CONCENTRATIONS, USE AIR SUPPLIED RESPIRATOR.

VENTILATION: EFFICIENT LOCAL EXHAUST VENTILATION IS REQUIRED. USE EXPLOSION PROOF VENTILATION EQUIPMENT.

PROTECTIVE GLOVES: WEAR APPROPRIATE CHEMICAL RESISTANT GLOVES/CLOTHING TO PREVENT SKIN CONTACT.

EYE PROTECTION: DO NOT GET IN EYES. WEAR SAFETY GLASSES/GOGGLES OR A FACE SHIELD.

OTHER PROTECTIVE EQUIPMENT: OVERALLS, APRON. EYE BATH AND SAFETY SHOWER.

HYGENIC PRACTICES: DO NOT GET IN EYES, SKIN OR CLOTHING. AVOID INHALING. DO NOT

Distribution E.S.
104-A, 5e Ave Est
La Sarre (Qc) J9Z 2Y1
T.819.339.2101
admin@distributiones.com

SECTION VIII - SAFE HANDLING AND USE INFORMATION

SWALLOW. KEEP AWAY FROM FOOD PRODUCTS. WASH HANDS THOROUGHLY AFTER HANDLING. CHANGE AND WASH CONTAMINATED CLOTHING.

SPECIAL SHIPPING INFORMATION: PAINT RELATED MATERIAL. FLAMMABLE LIQUID CLASS:3 UN#1263 PACKING GROUP II. CANUTEC 24 HOUR EMERGENCY NUMBER: (613) 996-6666

SECTION IX - SPECIAL PRECAUTIONS

PRECAUTIONS TO BE TAKEN IN HANDLING AND STORAGE: STORE IN A COOL, DRY, WELL VENTILATED AREA, AWAY FROM ALL INCOMPATIBLE MATERIALS. KEEP AWAY FROM HEAT, SPARKS AND FLAME. GROUND ALL EQUIPMENT.

OTHER PRECAUTIONS: DO NOT CUT, GRIND, WELD OR DRILL ON OR NEAR THIS CONTAINER. DO NOT PUNCTURE, INCINERATE, BURN OR STORE ABOVE 45 C.

SECTION X - HMIS INFORMATION

HMIS: HEALTH: 3 FLAMMABILITY: 3 REACTIVITY: 1 PERSONAL PROTECTION: K

Polyisocyanurate Foam Sheathing Continuous Insulation

AP™ FOIL-FACED

PRODUCT DATA SHEET



DESCRIPTION

Johns Manville AP™ Foil-Faced Foam Sheathing board consists of a uniform closed-cell polyisocyanurate foam core bonded on each side to a foil facer. One side has a reflective foil facer and the other side has a white non-reflective foil facer to suit your building needs.

Polyiso provides one of the highest R-values per inch of any rigid insulation (R-6.0 at 1 inch). Furthermore, when properly installed, AP Foil-Faced Foam Sheathing functions as a water-resistive barrier, vapor barrier and air barrier, eliminating the need to install additional components.

AP Foil-Faced Foam Sheathing is produced with an EPA-compliant hydrocarbon-based blowing agent that has zero Ozone Depletion Potential (ODP) and virtually no Global Warming Potential (GWP); it also meets both CFC- and HCFC-free specification requirements. Polyiso is one of North America's most widely used insulation products and has been cited by the EPA for its responsible impact on the environment.

AP Foil-Faced Foam Sheathing provides exceptional heat, moisture and air control to protect your building's exterior wall assembly.

INSTALLATION

AP Foil-Faced Foam Sheathing is lightweight and can be easily cut with a utility knife or saw. Use maximum board lengths to minimize the number of joints. Vertical joints should be staggered. Butt joints should be centered over framing. To create a water-resistive barrier or an air barrier, treat seams and penetrations as instructed in the installation guide and in accordance with manufacturer's guidelines. Once installed, AP Foil-Faced Foam Sheathing may be left exposed for up to 60 days. Consult your local building department for code requirements.

COMPLIANCES

- ASTM C1289 Type 1, Class 1
- CAN/ULC S704, Type 1, Class 1
- ICC-ES Evaluation Report ESR-3398
- Canadian Construction Materials Centre 13104-L
- Air Barrier Association of America Evaluated Air Barrier Material, Assembly & Water Resistive Barrier
- International Building Code
- International Residential Code
- International Energy Conservation Code
- ENERGY STAR
- ASHRAE 90.1
- California State Insulation Quality Standards

PERFORMANCE STANDARDS

- ASTM C1289, Standard Specification for Faced Rigid Cellular Polyisocyanurate Thermal Insulation Board
- CAN/ULC-S704, Standard for Thermal Insulation, Polyurethane and Polyisocyanurate, Boards, Faced
- ASTM E84, Test for Surface Burning Characteristics of Building Materials
- CAN/ULC S102, Standard Method of Test for Surface Burning Characteristics of Building Materials and Assemblies
- NFPA 259, Standard Test Method for Potential Heat of Building Materials
- NFPA 285, Standard Fire Test Method for Evaluation of Fire Propagation Characteristics of Exterior Non-Load-Bearing Wall Assemblies Containing Combustible Components
- AC 71, Acceptance Criteria for Foam Plastic Sheathing Panels Used as Water-Resistive Barriers
- ASTM E331, Standard Test Method for Water Penetration of Exterior Windows, Skylights, Doors, and Curtain Walls by Uniform Static Air Pressure Difference
- AATCC Test Method 127, Water Resistance: Hydro Static Pressure Test
- ASTM E1233, Standard Test Method for Structural Performance of Exterior Windows, Doors, Skylights, and Curtain Walls by Cyclic Air Pressure Differential
- ASTM E2178, Standard Test Method for Air Permeance of Building Materials
- ASTM E2357, Standard Test Method for Determining Air Leakage of Air Barrier Assemblies

AVAILABILITY

AP Foil-Faced Foam Sheathing is available in the sizes shown in Table 1 (see reverse). For additional information or special size inquiries, please consult a sales representative at 800-654-3103.

PERFORMANCE ADVANTAGES

Thermal Insulation: inch for inch, polyiso has one of the highest energy efficiencies. R-values for AP Foil-Faced Foam Sheathing are shown in Table 1, and physical properties are shown in Table 2 (see reverse). R means resistance to heat flow. The higher the R-value, the greater the insulating power.

Water-Resistive Barrier: when properly installed as part of a Johns Manville Wall System, AP Foil-Faced Foam Sheathing meets the ICC-ES AC71 acceptance criteria for foam plastic sheathing used as a water-resistive barrier. Please see the installation guide for qualifying assemblies and detailed instructions.

Vapor Barrier: at a minimum thickness of one inch, AP Foil-Faced Foam Sheathing has a vapor permeance of 0.05 perms and qualifies as a Class I vapor retarder.

Air Barrier: when properly installed as part of a Johns Manville Wall System, AP Foil-Faced Foam Sheathing meets the Air Barrier Association of America boardstock criteria for materials and assemblies. Please see installation guide for qualifying assemblies and detailed instructions.

Noncorrosive: does not accelerate corrosion of pipes, wiring or metal studs.

Lightweight: easy to handle, can be cut with a utility knife or saw.

ENERGY, QUALITY & ENVIRONMENT

ICC ES

Intertek

abaa EVALUATED

POLYISO™ The top performer.

LEARN MORE AT energystar.gov

Polyisocyanurate Foam Sheathing Continuous Insulation



PRODUCT DATA SHEET — **AP™ FOIL-FACED**

STORAGE
Store AP Foil-Faced Foam Sheathing elevated above the floor or ground and standing water. If stored outdoors, keep dry by covering completely with a waterproof tarpaulin.

LIMITATIONS
AP Foil-Faced Foam Sheathing is nonstructural. The walls must be braced in accordance with the requirements of the applicable code.

WARRANTY
All Johns Manville products are sold subject to Johns Manville's Limited Warranty and Limitation of Remedy. For a copy of these documents, call 800-654-3103.

WARNING
AP Foil-Faced Foam Sheathing is combustible and shall only be used as specified by the local building code with respect to flame spread classification and to the use of a suitable thermal barrier when required.

TECHNICAL SERVICES
Johns Manville can provide technical information to assist in addressing questions regarding AP Foil-Faced Foam Sheathing. Please call 800-654-3103 for technical assistance.

PERFORMANCE DATA

THERE ARE 2 LAYERS OF 2" THICK INSULATING PANELS, FOR A TOTAL OF 4" ALL AROUND. APPLIED ON WALLS, CEILING AND FLOOR.

Table 1: Thermal Performance

THICKNESS (inches)	R-VALUE U.S.[1] (°F•ft²•h/BTU)	THICKNESS (mm)	RSI-VALUE[1] (°K•m²/W)	BOARD SIZE (ft)	R-VALUE WITH REFLECTIVE AIR SPACE[2]		
					½" Air Space	¾" Air Space	1" Air Space
0.50	2.7	13	0.48	4 x 8, 9, or 10	5.2	5.5	5.4
0.625	3.5	16	0.62	4 x 8, 9, or 10	6.0	6.3	6.2
0.75	4.4	19	0.77	4 x 8, 9, or 10	6.8	7.1	7.0
0.85	5.0	22	0.91	4 x 8, 9, or 10	7.4	7.7	7.6
1.00	6.0	25	1.06	4 x 8, 9, or 10	8.5	8.8	8.7
1.50	9.3	38	1.63	4 x 8, 9, or 10	11.7	12	12
1.65	10	42	1.82	4 x 8, 9, or 10	12	12	12
2.00	13	51	2.21	4 x 8, 9, or 10	15	15	15
2.50	16	64	2.79	4 x 8, 9, or 10	18	19	19
3.00	19	76	3.36	4 x 8, 9, or 10	22	22	22
3.50	22	89	3.94	4 x 8, 9, or 10	25	25	25
4.00	26	102	4.52	4 x 8, 9, or 10	28	28	28
4.50	28	114	5.09	4 x 8, 9, or 10	30	31	31

[1]Aged R-value at 75° F in accordance with ASTM C1289.
[2]Only applies when an ideal reflective air space and horizontal heat flow conditions exist. The shiny foil side of product must face the air space. Determined in accordance with FTC 16 CFR Part 460 requirements and published ASHRAE air space R-values. Refer to the 2009 ASHRAE Handbook of Fundamentals, Chapter 26, Table 3, for details.

Table 2: Physical Properties

PROPERTY	UNITS	TEST METHOD	RESULT
Thermal Resistance, 1 inch	°F•ft²•hr/BTU	ASTM C518*	6.0
Compressive Strength	psi	ASTM D1621	≥ 16
Flexural Strength	psi	ASTM C203	≥ 40
Water Absorption	% by volume	ASTM C209	0.1
Water Vapor Permeance	perms	ASTM E96	0.05
Surface Burning Characteristics**			
Flame Spread[1]	index	ASTM E84	≤ 25
Smoke Developed[1]	index	ASTM E84	≤ 450
Service Temperature	°F		-100 to 250

**Aged R-value at 75° F in accordance with ASTM C1289.*
***Numerical ratings are not intended to reflect hazards present in actual fire conditions.*
[1]Foam core tested at 4 inches.

Visit our website at **www.JM.com** or call **800-654-3103** | **Building Insulation Division** P.O. Box 5108 | Denver, CO 80217-5108

Data as shown in this literature is intended to be used as a general guideline only. The physical and chemical properties of AP Foil-Faced Polyisocyanurate Foam Sheathing listed herein represent typical, average values obtained in accordance with accepted test methods and are subject to normal manufacturing variations. They are supplied as a technical service and are subject to change without notice. Any references to numerical flame spread or smoke developed ratings are not intended to reflect hazards presented by these or any other materials under actual fire conditions. Check with the sales office nearest you for current information. All Johns Manville products are sold subject to Johns Manville's Limited Warranty and Limitation of Remedy. For a copy of the Johns Manville Limited Warranty and Limitation of Remedy or for information on other Johns Manville thermal and acoustical insulation and systems, visit the website or call the 800 number above. 717 17th Street Denver CO, 80202

BID-0151 7/15

© 2015 Johns Manville. All Rights Reserved.

3. Fabrication characteristics (continued)

AIRMP
Manufacturier de produits CVAC sur mesure

Project : 6515-103, Pumping station
Client : Promec

Fabrication characteristics (continuation)

Identification tag

FABRICATION MEP	
TAG NO:	6515-103, Pumping station
MODEL:	AMP-PFB-2-160-E
SERIE:	AMP00378

Pedestrian door

Description:

(1x) 42" x 84"

4" insulated freezer style

Warning informations

☒ Risk of electrocution

Entrance®

GLACE-GUARD
Cold Storage Doors

ISO 9001 2008 CERTIFIED

The high performance entrance door!

The Glace-Guard™ Entrance door combines insulation performance and durability, while being attractive and virtually maintenance free. This entrance door, available in 3" or 4" thickness, is made of high quality metal skins. Its panels are insulated with a rigid polyurethane foam core, providing the highest insulation value. Its hardware is engineered to withstand an intensive usage, while providing safety and smoothness of operation.

The Glace-Guard™ Entrance door is operated by industrial cam-lift hinges, heavy duty pull handle and heavy gauge steel automatic door closer, ensuring trouble-free operation and effortless firm closing.

The Glace-Guard™ Entrance door is suitable for coolers and freezers, for both interior and exterior applications. It is your best door investment when performance, durability and low maintenance costs are criteria of selection.

The Glace-Guard™ Entrance door is ideal for applications such as:

- Supermarkets
- Restaurants
- Cold storage distribution warehouses
- Grocery distribution warehouses
- Food processing plants

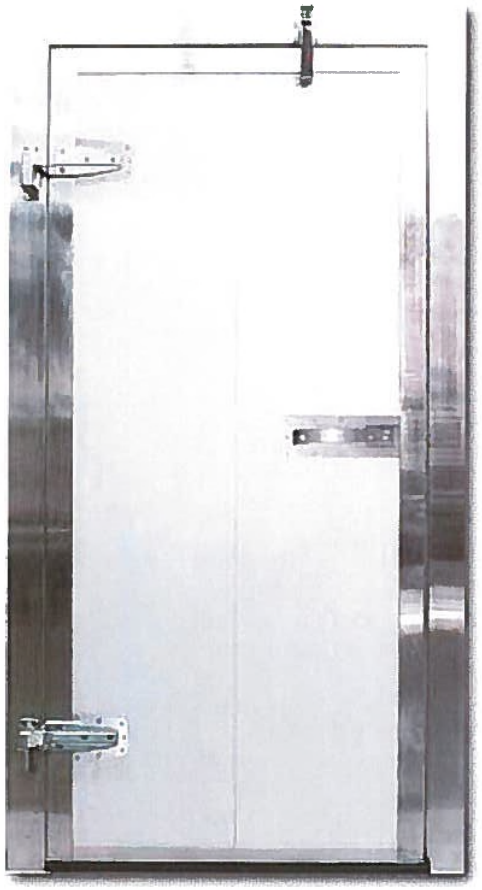

Cold storage entrance door
Model Glace-Guard™ Entrance ET-300

Entrance®/ Glace-Guard™

ET-300, ET-400 Series

Section 08326

Well insulated:

The Glace-Guard™ Entrance ET-300 (3" thick) and ET-400 (4" thick) doors are insulated with a rigid polyurethane foam core.

Designed for energy savings:

Full perimeter magnetic vinyl gasket and bottom double U-shaped rubber gasket to ensure airtight joints.

Built to last with superior quality materials:

Proven experience and expertise achieve a perfect adherence of the polyurethane foam to the metal skins, ensuring panel strength, rigidity and preservation of insulation value over time. The high quality 26 gauge galvanized steel with superior 25-micron polyester top coat, ensures durability and resistance to corrosion.

Heavy duty hardware for long lasting use and smooth operation:

Industrial cam-lift hinges, heavy duty pull handle and heavy gauge steel door closer, combined with a variety of accessories, provide trouble-free operation, safety and durability.

THERMOSTOP
Tradition of quality

CFC-FREE 3" 4" POLYURETHANE INSULATION

Entrance®
GLACE-GUARD Cold Storage Doors

Entrance ET-300	3" (75mm) thick
Entrance ET-400	4" (100mm) thick

Technical specifications

Section 08326

Reference product:
Glace-Guard™ Entrance ET-300 or Glace-Guard™ Entrance ET-400, as manufactured by Thermostop Inc., www.thermostop.com

Temperature range:
-20°F to +120°F (-29°C to +49°C)

Standard dimensions:
- 36" x 84" (914mm x 2134mm)
- 60" x 84" (1524mm x 2134mm)

Other dimensions available upon request.

Thickness:
- Glace-Guard™ Entrance ET-300: 3" (75mm) thick
- Glace-Guard™ Entrance ET-400: 4" (100mm) thick

Panels:
Insulated with rigid polyurethane, foamed in place under high pressure between two metal skins. Standard 26ga. steel skins, white stucco finish. For other skin options, please consult ***Metal skins options***. Panel frame is made with heavy duty aluminum extrusions.

Door frame and thermal barrier:
Door frame is made of shock-proof 5/32" (4mm) thick exterior and interior extruded aluminum angles. The exterior aluminum angle has an incorporated resin thermal break.

Hinges:
- For doors with width under 60" (1524mm): Self-closing and reversible high pressure die-cast zinc hinges with self-lubricating nylon cams. Brushed chrome finish.



- For doors with width of 60" (1524mm) and greater: Heavy duty self-closing and reversible high pressure die-cast zinc flanges, 3/16" (5mm) thick steel strap. Gray finish.



Pull handle:
High pressure die-cast zinc cylinder locking handle, complete with emergency inside release system. Brushed chrome finish.



Door closer:
Heavy gauge steel mechanical door closer, complete with extra-wide hook. Chrome finish.



Perimeter magnetic gasket:
A full perimeter magnetic vinyl gasket insures that the door is airtight and vapour-proof on the perimeter joint.

Bottom door gasket:
Extruded aluminum retainer with two U-shaped rubber gaskets to insure airtight joints.

Heat trace (optional):
For freezer applications, the door is equipped with a heat trace on four (4) sides of the door, preventing ice or frost accumulation and eliminating the need to have a heated threshold.

Kick plate (optional):
36" (914mm) high steel kick plate, on full door width, to protect the door bottom against forklift impacts.
- 16ga. galvanized steel, smooth finish
- 18ga. stainless steel, #304 finish

Metal skins options:

Steel	Finish
26ga. (0.41mm)	stucco, white
20ga. (0.86mm)	smooth, white
16ga. (1.42mm)	smooth, painted

Aluminum	Finish
24ga. (0.60mm)	stucco, white or grey RAL-9006
16ga. (1.30mm)	smooth, clear anodized

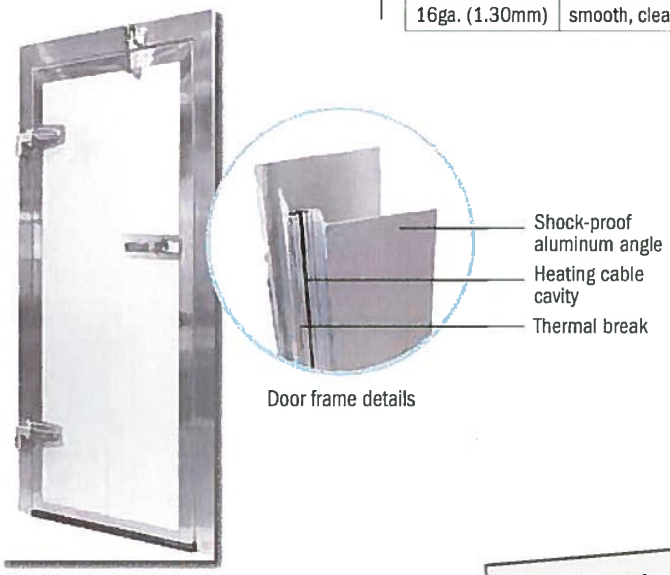

Door frame details

THERMOSTOP
Tradition of quality

3775 Losch Blvd.
Longueuil (Quebec)
Canada
J3Y 5T7

Phone: **450.678.8666**
Toll free: 866.678.0123
Fax: 450.678.7765
thermostop.com

Warranty

Thermostop doors and hardware carry a warranty of one (1) year against any defects or faulty workmanship. The door panels carry a ten (10) year limited warranty against perforation due to rusting, and a five (5) year limited warranty on delamination, under normal operational conditions.

THERMOSTOP

SHOP DRAWING - COOLER ENTRANCE DOOR GLACE-GUARD ET-400

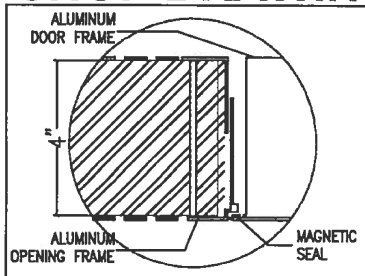

DOOR FRAME DETAIL

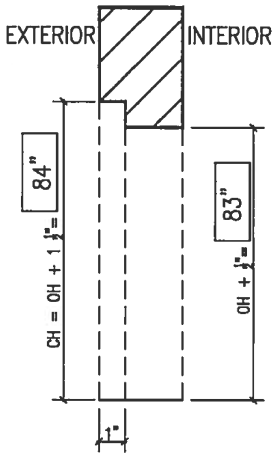

SECTION

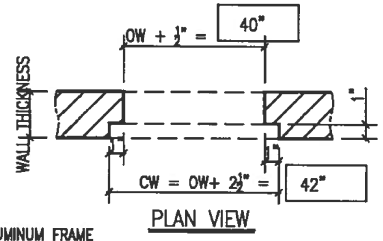

PLAN VIEW

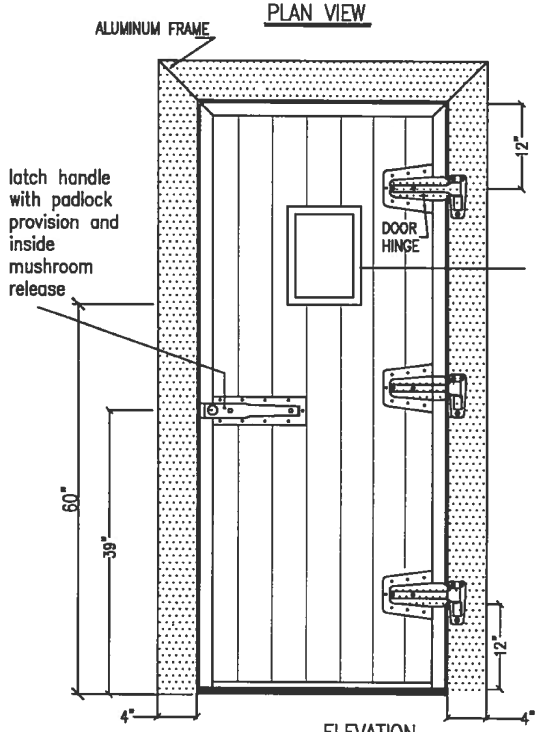

ELEVATION

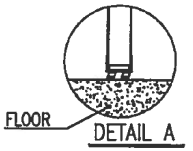

DETAIL A

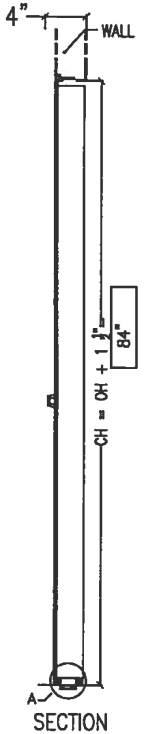

SECTION

Specifications:

☒ ET–400: 4"(100mm)
☒ Cooler application (36°F and above)

Standard Features:
*Polyurethane insulated panels
*20ga galvanized steel, white, smooth finish with ribs
*Heavy–duty mirror frame ⅝" (4mm) in two extruded angles. Aluminium mill finished.
*Magnetic seals on door frame perimeter.
*Bottom double blade seal on door panel.
* 3 (three) 10" cam–lift hinges.
* 1 (one) LATCH handle with padlock provision (padlock by others) & inside MUSHROOM release

Latch handle is chrome finished steel. Hinges are brush chrome finished steel

Others features:
* Exterior chain with S hook and eye bolt
* Interior storm door chain with spring

DIMENSIONS	QTY	FINISHED OPENING		REQUIRED CLEARANCE		APPROVED FOR MANUFACTURING BY:
	4	WIDTH (OW)	HEIGHT (OH)	WIDTH (CW)	HEIGHT (CH)	Name: Date:
		39.50"	82.50"	42"	84"	Signature:

GLACE–GUARD Cold Storage Doors

THERMOSTOP INC.

3775, boulevard Losch, Longueuil (Québec), Canada J3Y 5T7,
Tel.: (450) 678-8666, Fax: (450) 678-7765,www.thermostop.com

Distributor: AIRMP INC.	Date: 05–09–2017	Drawn by: F.L.	Verify by: L.H.	Page: 1/2	Note : *Drawings not to scale
Customer:	Revision:				

Legend

OW = OPENING WIDTH
OH = OPENING HEIGHT
CW = CLEARANCE WIDTH
CH = CLEARANCE HEIGHT

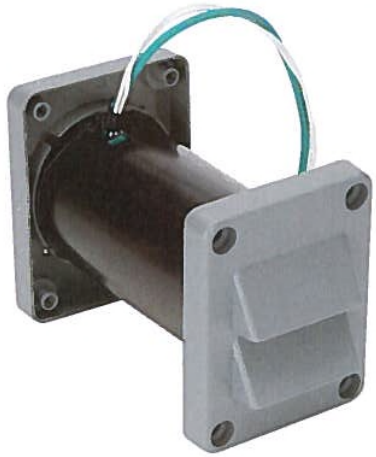

ITEM # 1825

STANDARD LOUVER

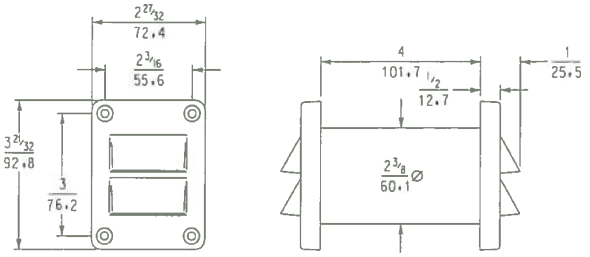

SQUARE LOUVER

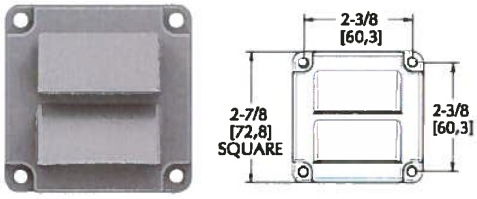

US Patent No. 6,176,776

1825 NARROW JAMB HEATED VENT

- Exclusive, patented Kason ventilator seals tight and opens at lowest pressure of any competitive vent.
- Lightweight, springless valves provide greater air flow at lower pressure than spring-loaded valves.
- Lower pressure allows doors to open and close with ease and reduces stress on walk-in enclosure joints, reducing chance of leaks.
- Computer-designed heater eliminates valve freezing.
- Narrow profile unit mounts in door jamb.
- Port installs through 2 1/2" (63.5mm) diameter hole with minimal wiring.
- Poppet valves close tightly to prevent air leakage.
- Engineered to optimize the self-closing potential of Kason Walk-in hinges, latches and door closers.

PERFORMANCE TESTED

Comprehensive performance tests show that Kason 1825 pressure relief ports provide better air flow at lower pressure and greater frost resistance than competitive ventilators.

SPECIFICATIONS

MATERIAL:
Gray ABS plastic valve body and louvers, PVC tube, internal aluminum and stainless steel parts.

POWER:
.04 amp @ 120 VAC; 4W heater.
.02 amp @ 230 VAC; 4W heater.

UL LISTING:
File No. E57306

SELECTION:
See Quantity Selector Chart, page B-59.

MOUNTING:
No. 1825 only mounts horizontally. Drilled for No. 10 (5.0mm) screws. Requires 2-1/2" (63.5mm) diameter hole.

Model No.	Item	Qty/Carton	Wgt./Carton
11825000004	Heated Vent, 120 VAC, 4" Wall	10	7 lb. (3.2 kg)
11825000006	Heated Vent, 230 VAC, 4" Wall	10	7 lb. (3.2 kg)
11825S00004	Heated Square Louver Vent, 120 VAC, 4" Wall	10	7 lb. (3.2 kg)
11825S00006	Heated Square Louver Vent, 230 VAC, 4" Wall	10	7 lb. (3.2 kg)
11825000008	Unheated Vent, 4" Wall	10	7 lb. (3.2 kg)

*Other thicknesses available. Contact factory.

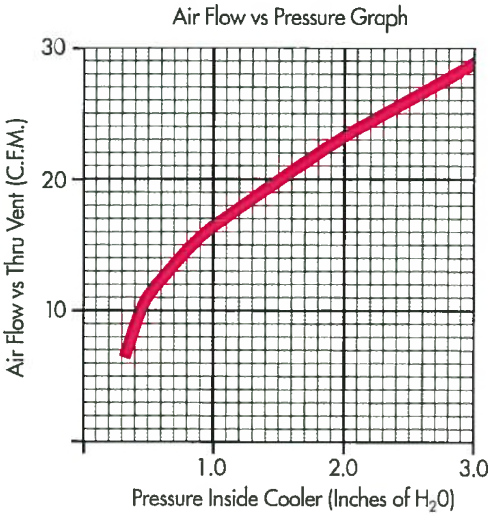

 © 2016 Kason Industries, Inc.

4. General arrangement drawings

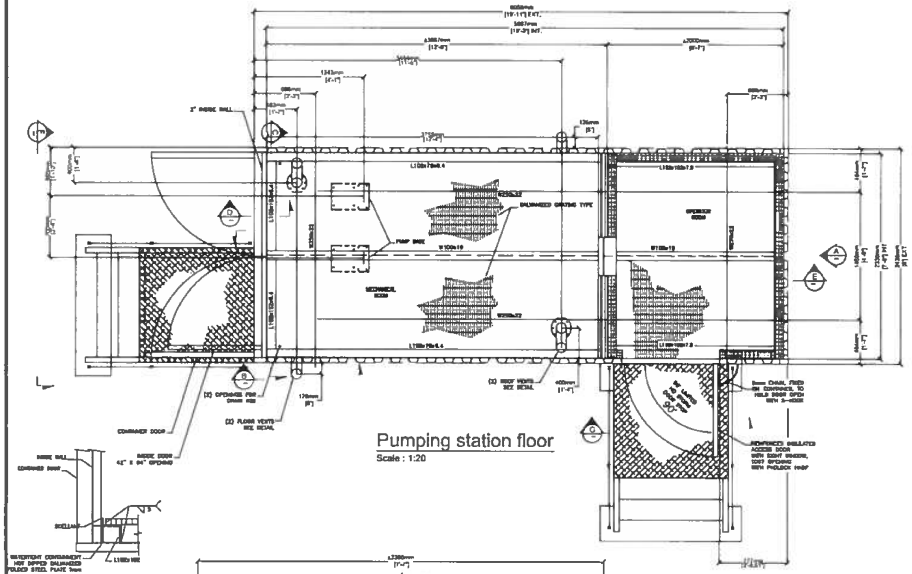

Pumping station floor
Scale : 1:20

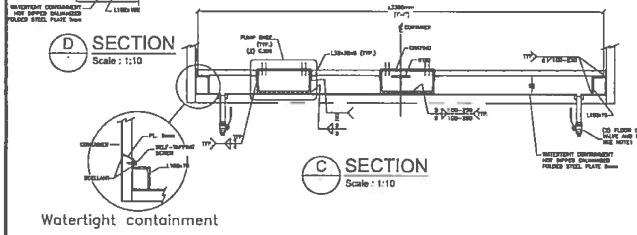

D SECTION
Scale : 1:10

C SECTION
Scale : 1:10

Watertight containment

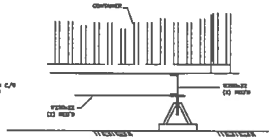

B SECTION
Scale : 1:20

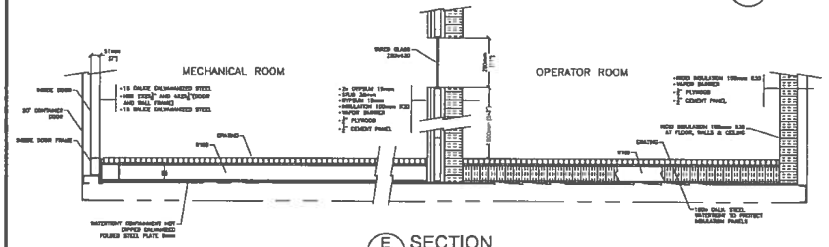

E SECTION
Scale : 1:10

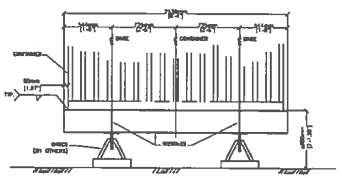

A Section
Scale : 1:20

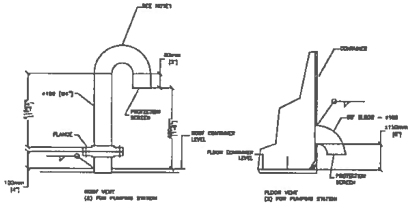

Vent for pumping station
Scale : 1:10

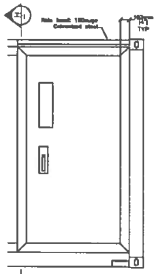

G Section
Scale : 1:10

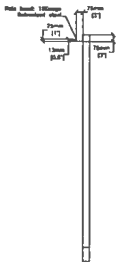

H Section
Scale : 1:10

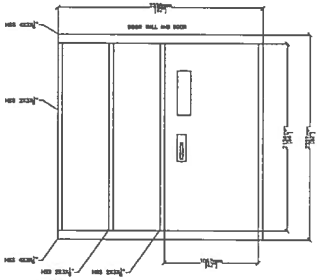

F VIEW
Scale : 1:10

PAINTING SPECIFICATION:
1 - SOLVENT CLEANING, SSPC-SP1
2 - APPLICATION OF "DEVTHANE 359" POLYURETHANE, 2 TO 3 MILS DRY
3 - COLOR: SLATE BLUE, QC 8260

NOTES:
1 - ALL VENTS, RAIN HOODS AND FLOOR DRAINS WILL BE PREPARED IN OUR SHOP AND SHIPPED LOOSE. HOLES ON THE CONTAINER WILL BE MADE IN OUR SHOP AND BLANKED FOR TRANSPORTATION.

4	Released for fabrication	F.S.	2017-05-23
3	For approval	F.S.	2017-05-04
2	For approval	F.S.	2017-05-01
1	For approval	F.S.	2017-04-12
# Rev.	Revision	By	Date

AIRMP
Custom HVAC manufactured products
750, rue Seguenay, Rouyn-Noranda, Québec, Canada, J9X 7S5
Tél. : (819) 762-2818 Téléc. : (819) 762-3801
www.airmp.com

Client : Groupe PROMEC Inc.

Project : 65-103-245-200, Pumping station

Title : General arrangement drawing

Designed by : WSP	# Quote : 17-0062	Sheet : 1 of 2
Drafted by : Francis St-Pierre	# Project : AMP17-17	
Verified by : Groupe PROMEC Inc.	# Drawing : AMP17-17 PS1	

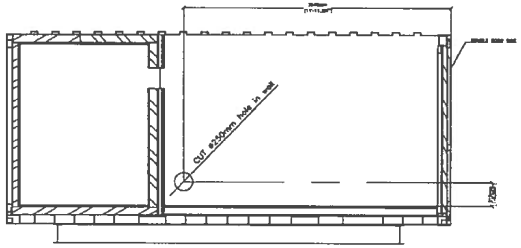

B SECTION
Scale : 1:20

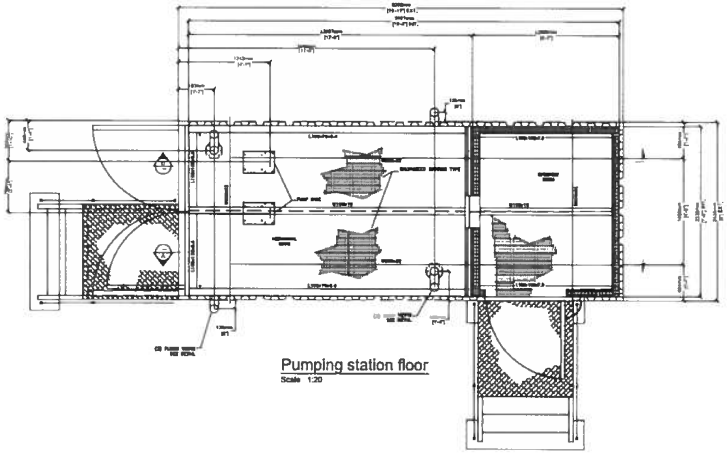

Pumping station floor
Scale : 1:20

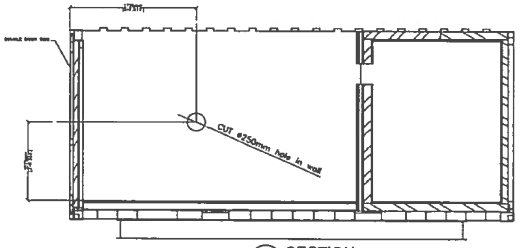

A SECTION
Scale : 1:20

3	Released for fabrication	F.S.	2017-05-23
2	For approval	F.S.	2017-05-09
1	For approval	F.S.	2017-04-12
# Rev.	Description	By	Date

AIRMP
Custom HVAC manufactured products
750, rue Saguenay, Rouyn-Noranda, Québec, Canada, J9X 7B5
Tél. : (819) 762-2818 Télec. : (819) 762-3801
www.airmp.com

Client : Groupe PROMEC Inc.

Project : 65-103-245-200, Pumping station

Title : Wall opening location

Designed by : WSP	# Quote : 17-0062	Sheet : 2 of 2
Drafted by : Francis St-Pierre, Ing.	# Project : AMP17-17	
Verified by : Groupe PROMEC Inc.	# Drawing : AMP17-17 PS1	

Imprimé le : 2017-05-23 16:12:41
Format : 11"x17" (Paysage)
E:\Projets AMP\17-17\2 Dessins\Dessins d'exportation\PS1 - 162-AMP17-17 PS1.dwg

Liste de matériel (Pour 1 assemblage)

# Pièces	Description	Grade	Détail	Épais.	Qté	Poids (lb)
AMP17-17 ST01	W250x22 X 8'-3 15/16" LG				2	124
AMP17-17 ST02	W250x22 X 15'-3 1/2" LG				2	226

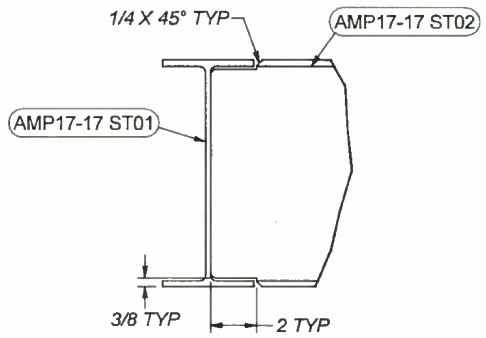

Détail A
Échelle 1 / 5

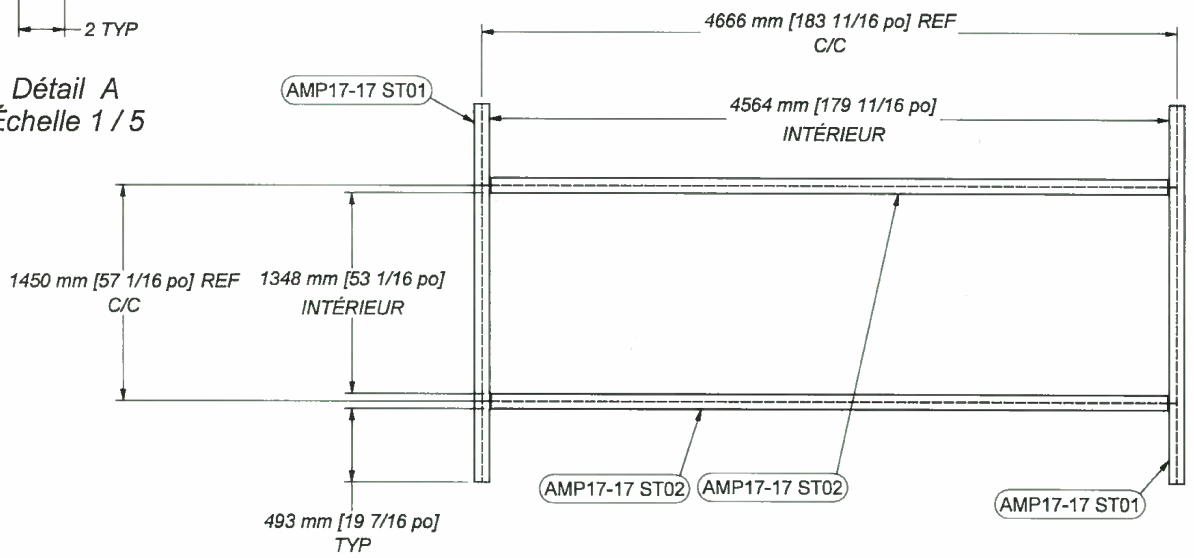

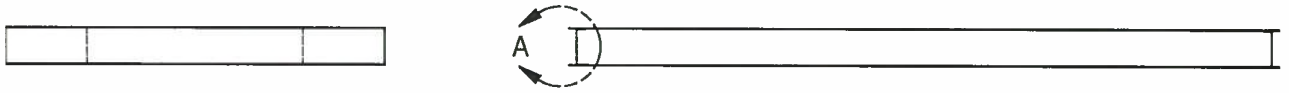

AIRMP.CA
Manufacturier de produits CVAC sur mesure

NOTES GÉNÉRALES :
GENERAL NOTES :

PROJET :
PROJECT # : **AMP17-17**

CLIENT :

TITRE :
TITLE :

PIECE :
PARTS : 20 foot pumping station

QTÉ :
QTY : req.

POIDS :
WEIGHT : 700 lb

SCEAU & SIGNÉ :
SEAL & SIGNED :

DESSINÉ :
DRAWN : Francis St-Pierre, Ing.

VÉRIFIÉ :
CHECKED : Richard Piquette

DATE : 2017-04-23

FEUILLE :
SHEET : 1 / 1

DESSIN REFERENCE :
REFERENCE DRAWING :

No. DESSIN :
DRAWING No. : AMP17-17 ST_1

REV: 0

R:\Projets\AMP17-17\3 Dessins\Dessins de fabrication\ST - Structure\AMP17-17 ST_1.idw

AIRMP.CA
Custom HVAC manufactured products

Inspection report – Paint of the unit

Contract number : Amp17-17 (PSI-103)
Client : Groupe promec inc.

CLIENT IDENTIFICATION:

Monitored points	C	NC	NN	Comments	Reference documents
Visual inspection :					
Runs	☑	☐	☐		
Misses/voids	☑	☐	☐		
Scrtches	☑	☐	☐		
Dry film thickness	☑	☐	☐		
				C : complying	**NC : non-complying** **NN : not needed**

Verified by : Karen Gendreau-Lacoste **Signature :** Karen G. Lacoste **Date :** 26 mai 2017

Reviewed by : Richard Piquette, Operations director **Signature :** _____ **Date :** _____

AIRMP.CA

Custom HVAC manufactured products

Inspection report – Paint of base

Contract number : Amp17-17 (PS1-103)
Client : Groupe promec inc.

CLIENT IDENTIFICATION:

Monitored points	C	NC	NN	Comments	Reference documents
Visual inspection :					
Runs	☑	☐	☐		
Misses/voids	☑	☐	☐		
Scrtches	☑	☐	☐		
Dry film thickness	☑	☐	☐		
				C : complying	**NC : non-complying** **NN : not needed**

Verified by : Karen Gendreau-Lacoste **Signature :** Karen G. lacoste **Date :** 26 mai 2017

Reviewed by : Richard Piquette, Operations director **Signature :** _____ **Date :** _____

AIRMP CA
Custom HVAC manufactured products

TABLE OF MEASURMENTS

UNIT - ROOF

SPOT -->	1	2	3	4	5	AVERAGE DFT FOR EPOXY	AVERAGE WANTED DFT
1	6	5,9	5,9	7,4	7,2		
2	6,7	6,3	5,6	7,9	7,4		
3	5,9	5,8	5,7	7,7	6,9		
AVERAGE	6,20	6,00	5,73	7,67	7,17	6,55	5 TO 6,8 mils

MAKE MODEL TEST EQUIPMENT : PosiTest DFT

SERIAL# TEST EQUIPMENT : A 13938F

STANDARD CALIBRATION USED : PLASTIC SHIM

DATE: 26-mai-17

PROJECT : amp17-17 PS1-103

Verified by : Karen Gendreau-Lacoste

Reviewed by : Richard Piquette, Operations director

SIGNATURE : Karen G. Lacoste

SIGNATURE :

AIRMP
Custom HVAC manufactured products

TABLE OF MEASURMENTS

UNIT - NORTH WALL

SPOT -->	1	2	3	4	5	AVERAGE DFT FOR EPOXY	AVERAGE WANTED DFT
1	10,5	7,4	7	6,1	7,4		
2	9,9	6,9	6,4	6,4	7,6		
3	9,5	6,7	6,4	5,5	6,9		
AVERAGE	9,97	7,00	6,60	6,00	7,30	7,37	5 TO 6,8 mils

UNIT - SOUTH WALL

SPOT -->	1	2	3	4	5	AVERAGE DFT FOR EPOXY	AVERAGE WANTED DFT
1	6,1	8,2	6,7	8,8	7,4		
2	6,5	8,7	6,2	8,6	7,7		
3	6,2	8,8	6,9	8,5	6,8		
AVERAGE	6,27	8,57	6,60	8,63	7,30	7,47	5 TO 6,8 mils

AIRMP CA
Custom HVAC manufactured products

TABLE OF MEASURMENTS

UNIT - EAST WALL

SPOT -->	1	2	3	4	5	AVERAGE DFT FOR EPOXY	AVERAGE WANTED DFT
1	6,9	6,5	6,3	4,7	5,5		
2	6,5	5,9	5,9	4,6	5,4		
3	7,2	5,8	6,2	4,9	6,3		
AVERAGE	6,87	6,07	6,13	4,73	5,73	5,91	5 TO 6,8 mils

UNIT - WEST WALL

SPOT -->	1	2	3	4	5	AVERAGE DFT FOR EPOXY	AVERAGE WANTED DFT
1	6,3	4,9	6,4	5	5,3		
2	5,6	5,2	5,8	5,2	4,9		
3	5,6	5,1	5,6	5,5	5,2		
AVERAGE	5,83	5,07	5,93	5,23	5,13	5,44	5 TO 6,8 mils

AIRMP
Custom HVAC manufactured products

TABLE OF MEASURMENTS

BASE

SPOT -->	1	2	3	4	5	AVERAGE DFT FOR EPOXY	AVERAGE WANTED DFT
1	10,9	8,9	7,8	6,9	6,6		
2	11,4	9,2	7,7	7,1	6,3		
3	11,5	9,5	7,5	6,3	7,3		
AVERAGE	11,27	9,20	7,67	6,77	6,73	8,33	6 TO 12 mils

MAKE MODEL TEST EQUIPMENT : PosiTest DFT

SERIAL# TEST EQUIPMENT : A 13938F

STANDARD CALIBRATION USED : PLASTIC SHIM

DATE: 26-mai-17

PROJECT : Amp17-17 PS1-103

Verified by : Karen Gendreau-Lacoste

Reviewed by : Richard Piquette, Operations director

SIGNATURE : Karen G. Lacoste

SIGNATURE :

AGNICO EAGLE

Vendor Document Status

1 ☐ Proceed to next submission and status.

2 ☐ Proceed with exceptions as noted to next submission and status.

3 ☐ Do not proceed.
Revise as noted and resubmit next submission and status.

4 ☑ Complete, no further submission required.

By: JEAN-FRANCOIS TREMBLAY Date: 2017-05-16

Review and authorization to fabricate are only for general conformance with the design concept of the Project as expressed in the Contract Documents. Sole responsibility for the accuracy and completeness of this document, including but not limited to dimensions and quantities, remains with the Supplier/Contractor. Agnico Eagle does not warrant the accuracy or completeness of any of the information contained herein, nor does Agnico Eagle authorize or approve any construction means, methods, techniques, sequences or any safety precautions or procedures.

Agnico Eagle No. 6515-C-270-007-141-TES-0046 R: Sub001

DOCUMENT FOR INFORMATION

NUQSANA PROMEC MINING

Agnico-Eagle Mines Ltd.
Walkways and Stairways Check List

ITR Number : AEM-ME-ITR-004
Contract no. : C22466T

AGNICO EAGLE

SYSTEM: Fuel Farm Rankin	TAG NO. N/A	
LOCATION: Rankin inlet	AREA: All.	UNIT: 4

Check when satisfactory. If not satisfactory, include nonconformance report, control and re-inspect when correct

DESCRIPTION	STATUS	REMARKS
1. Installed in accordance with drawings and specifications	✓	
2. Stairs and ladders are securely anchored	✓	
3. Bolts are correct type and length	✓	
4. Bolts tightened (indicated by the burnishing or preening of the corners by the impact wrench)	✓	
5. Ladders and stairs are free of obstructions and are the correct width	✓	
6. The first and last rung of stair riser is the correct height from grade or a platform	✓	
7. Safety chains or bars are installed at ladder openings		N/A
8. Hand grip surfaces on hand rails and ladders are ground smooth	✓	
9. Toe plate is rigid and installed at all required locations	✓	
10. Handrails & toe plates terminating at structural members are welded at structural joint	✓	
11. Penetrations of pipe, ducts and conduit through platforms are located properly, correct size and banded with toe plates		N/A
12. All grating secured to support steel with removable saddle clip anchors	✓	
13. All paint and galvanized damaged areas have been touched up	✓	
14. Ensure all valve operators, chain operators and access to valve handles		N/A.
15. Verify proper installation of fall arrest anchor points		N/A.

COMMENTS:

PROMEC DESIGNATE - SIGNATURE	Director Projects. TITLE	04-10-2017 DATE
CLIENT DESIGNATE - SIGNATURE	TITLE	DATE

16 mai 2017 21:27:16, marcil, C:\Mario Cliche EXP\Clients\Normex\Escaliers reservoir\60 Réalisation\999-00048075-PP - Escalier pour réservoir\Details\VUE ISO.dwg

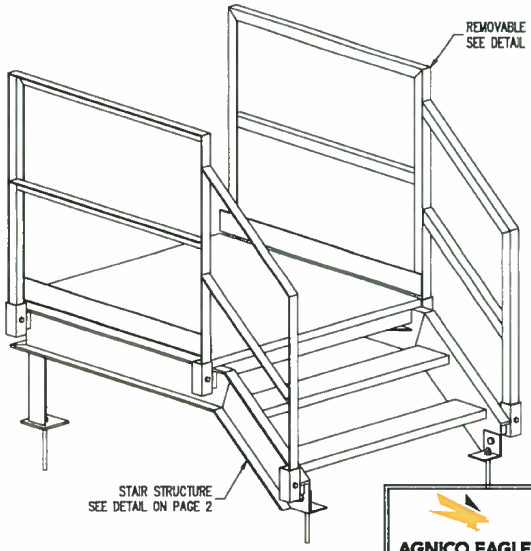

ISOMETRIC VIEW
CONTAINER CATWALK

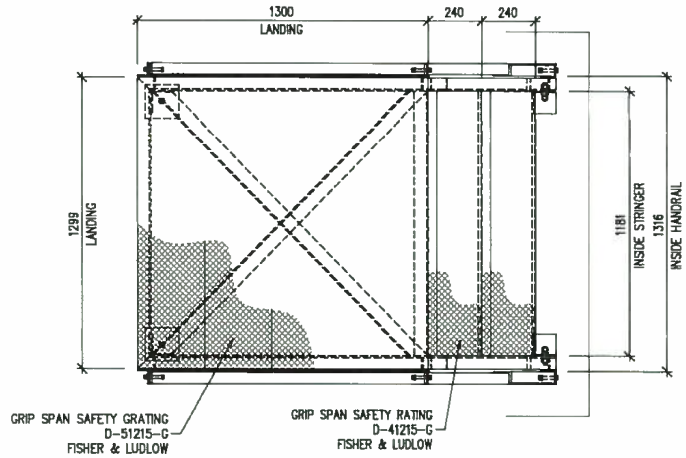

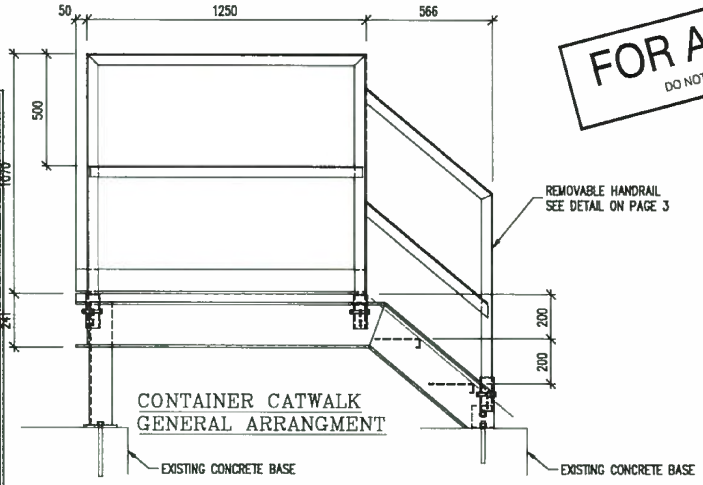

CONTAINER CATWALK
GENERAL ARRANGMENT

FOR APPROVAL
DO NOT USE FOR FABRICATION

WSP — SHOP DRAWING DATA SHEET

Affixing this stamp confirms that an administrative approval and/or a verification of compliance with shop drawings or specifications was made, but does not entail the liability of the author of the work or its owner with regards to this shop drawing or data sheet, for which the contractor is the sole responsible.

☑ Reviewed ☐ Reviewed as noted
☐ Rejected ☐ Filed for records

The contractor, supplier and/or sub-contractor is responsible for: confirming and coordinating all quantities and dimensions; selecting fabrication processes and techniques of construction; coordinating his or her work with that of all other trades and performing all work in a safe and satisfactory manner.

By: Joël Morliere Date: 2017/05/23

G-ADM-ZZZ-80-11E-2 Project # 151-06440-40

AGNICO EAGLE — Vendor Document Status

1 ☐ Proceed to next submission and status.
2 ☐ Proceed with exceptions as noted to next submission and status.
3 ☐ Do not proceed. Revise as noted and resubmit next submission and status.
4 ☑ Complete, no further submission required.

By: Joël Morliere Date: 2017-05-23

Review and authorization to fabricate are only for general conformance with the design concept of the Project as expressed in the Contract Documents. Sole responsibility for the accuracy and completeness of this document, including but not limited to dimensions and quantities, remains with the Supplier/Contractor. Agnico Eagle does not warrant the accuracy or completeness of any of the information contained herein, nor does Agnico Eagle authorize or approve any construction means, methods, techniques, sequences or any safety precautions or procedures.

Agnico Eagle No. 6515-C-270-007-245-SPD-0001 R: Sub001

DOCUMENT FOR INFORMATION

Révision:			
AA	2017-05-10	FOR APPROVAL	MC
No	Date (a-m-j)	Description	Par

Client : NORMEX, LA SARRE, QUEBEC (TEL.)819-333-1200 (FAX)819-333-1212

exp. Les Services exp inc. t : +1.819.762.2888 | f : +1.819.762.4814 26, 19e Rue, bureau 200 Rouyn-Noranda, QC J9X 2M3 CANADA www.exp.com

Projet :	AGNICO EAGLE - MELIADINE DIVISION - FUEL DISTRIBUTION		
Titre :	CONTAINER CATWALK STRUCTURAL GENERAL ARRANGEMENT		
Approuvé par : JONATHAN FAUCHER ing	Dessiné par : MARIO CLICHE ing.	Date : 2017-05-10	Page : 1 de 4
Dossier : 999-00048075-PP	Numéro de dessin : NMOI - 00048075 - A0 - S01 - AA		

16 mai 2017 21:26:56, marcil, C:\Mario Cliche EXP\Clients\Normex\Escaliers reservoir\60 Réalisation\999-00048075-PP - Escalier pour réservoir\Details\GA_Page 2.dt

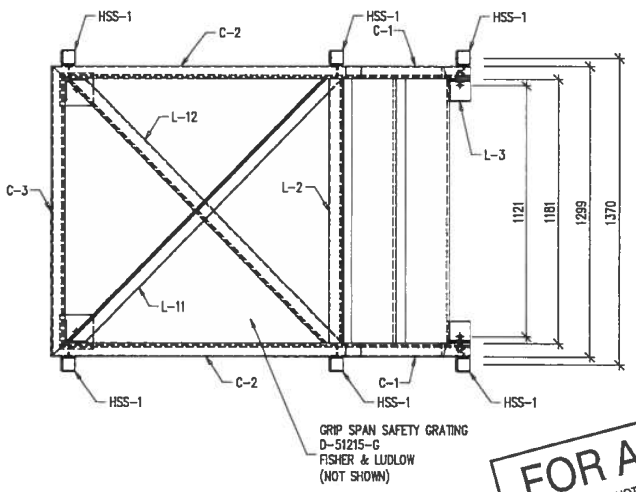

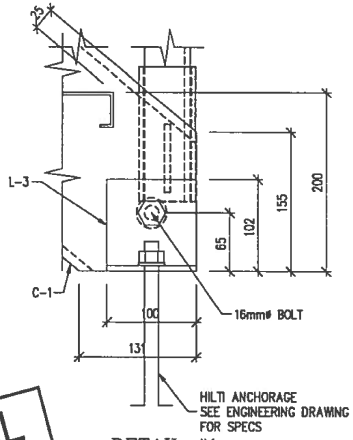

DETAIL #1

FOR APPROVAL
DO NOT USE FOR FABRICATION

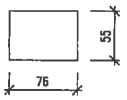

6X PL-1 PL 6.3x55x76-A36

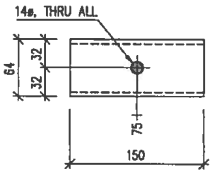

6X HSS-1 HS64x64x4.8-A500

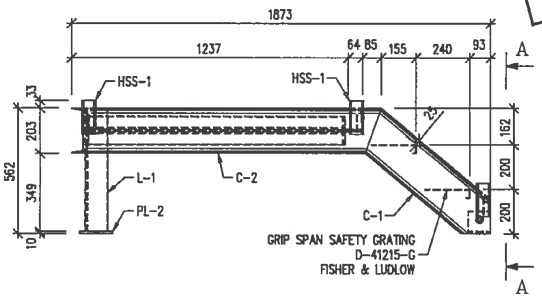

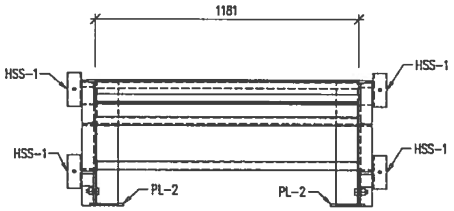

SECTION "A - A"

1 REQ'D STAIR STRUCTURE ARRANGEMENT

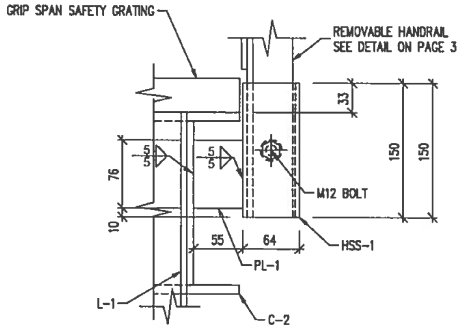

DETAIL #1

Révision :			
AA	2017-05-10	FOR APPROVAL	MC
No	Date (a-m-j)	Description	Par

Client
NORMEX
LA SARRE, QUEBEC
(TEL.)819-333-1200
(FAX)819-333-1212

exp.
Les Services exp inc.
t+1.819.762.2886 f+1.819.762.4814
28, 19e Rue, bureau 200
Rouyn-Noranda, QC J9X 2N3
CANADA
www.exp.com

Projet : AGNICO EAGLE - MELIADINE DIVISION - FUEL DISTRIBUTION			
Titre : CONTAINER CATWALK STRUCTURAL STAIR DETAILS			
Approuvé par : JONATHAN FAUCHER ing.	Dessiné par : MARIO CLICHE ing.	Date : 2017-05-10	Page : 2 de 4
Dossier : 999-00048075-PP	Numéro de dessin : NMOI - 00048075 - A0 - S01 - AA		

16 mai 2017 21:25:46, marcil, C:\Mario Cliche EXP\Clients\Normex\Escaliers reservoir\60 Réalisation\999-00048075-PP - Escalier pour réservoir\Details\DETAIL STAIR.

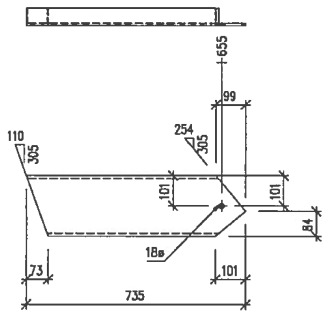

1L/1R C-1 C200x21-300W

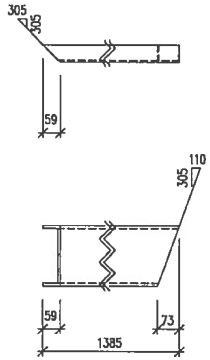

1L/1R C-2 C200x21-300W

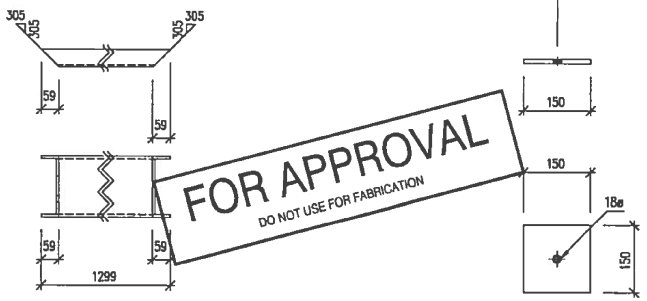

FOR APPROVAL
DO NOT USE FOR FABRICATION

1X C-3 C200x21-300W

2X PL-2 PL 10x150x150-A36

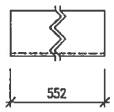

2X L-1 L102X102X6.4-300W

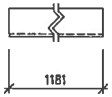

1X L-2 L64X64X6.4-300W

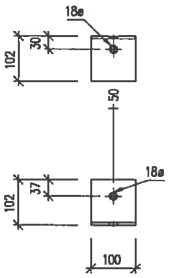

2X L-3 L102X102X6.4-300W

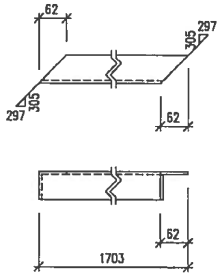

1X L-12 L64X64X6.4-300W

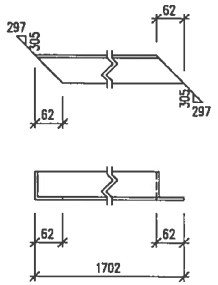

1X L-11 L64X64X6.4-300W

Révision :			
AA	2017-05-10	FOR APPROVAL	MC
No	Date (a-m-j)	Description	Par

Client :

NORMEX
LA SARRE, QUEBEC
(TEL.)819-333-1200
(FAX)819-333-1212

exp.
Les Services exp inc.
t : +1.819.762.2888 | f : +1.819.762.4814
28, 19e Rue, bureau 200
Rouyn-Noranda, QC J9X 2N3
CANADA
www.exp.com

Projet :	AGNICO EAGLE - MEL IADINE DIVISION - FUEL DISTRIBUTION		
Titre :	CONTAINER CATWALK STRUCTURAL STAIR DETAILS		
Approuvé par : JONATHAN FAUCHER ing.	Dessiné par : MARIO CLICHE ing.	Date : 2017-05-10	Page : 3 de 4
Dossier : 999-00048075-PP	Numéro de dessin : NMOI - 00048075 - A0 - S01 - AA		

16 mai 2017 21:25:23, marcli, C:\Mario Cliche EXP\Clients\Normex\Escaliers reservoir\60 Réalisation\999-00048075-PP - Escalier pour réservoir\Details\6.dwg

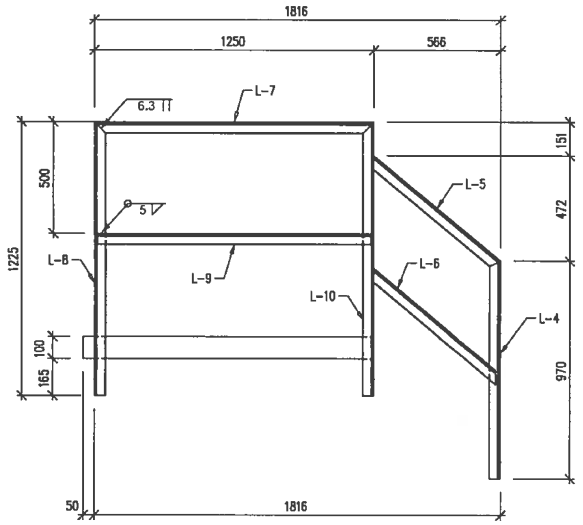

1L/1R REQ'D REMOVABLE HANDRAIL ARRANGEMENT

FOR APPROVAL
DO NOT USE FOR FABRICATION

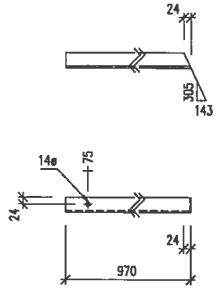

2x L-4 L51X51X6.4-300W

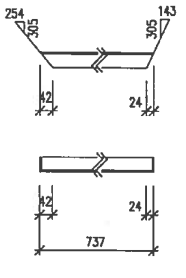

2x L-5 L51X51X6.4-300W

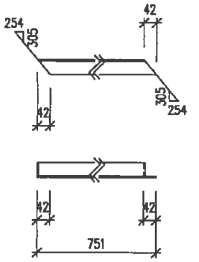

2x L-6 L51X51X6.4-300W

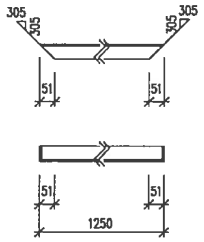

2x L-7 L51X51X6.4-300W

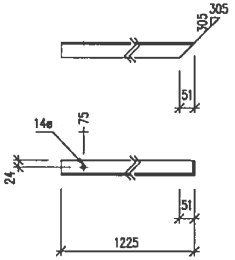

2x L-8 L51X51X6.4-300W

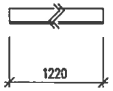

2x L-9 L51X51X6.4-300W

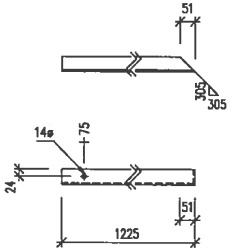

2x L-10 L51X51X6.4-300W

Révision :			
No	Date (a-m-j)	Description	Par
AA	2017-05-10	FOR APPROVAL	MC

Client :

NORMEX
LA SARRE, QUEBEC
(TEL.)819-333-1200
(FAX)819-333-1212

exp.
Les Services exp inc.
T : +1.819.762.2668 | F : +1.819.762.4814
28, 19e Rue, bureau 200
Rouyn-Noranda, QC J9X 2N3
CANADA
www.exp.com

Projet :	AGNICO EAGLE - MELIADINE DIVISION - FUEL DISTRIBUTION
Titre :	CONTAINER CATWALK STRUCTURAL HANDRAIL DETAILS

Approuvé par : JONATHAN FAUCHER ing.	Dessiné par : MARIO CLICHE ing.	Date : 2017-05-10	Page : 4 de 4
Dossier : 999-00048075-PP	Numéro de dessin : NMOI - 00048075 - A0 - S01 - AA		

29 mai 2017 17:06:03, mardi, R:\ROU-00240067-A0\60 Réalisation\63 Dessins\Proc\Dike catwalk\999-00048075-PP - Dike catwalk\Details\ISO VIEW_PAGE 1.dwg

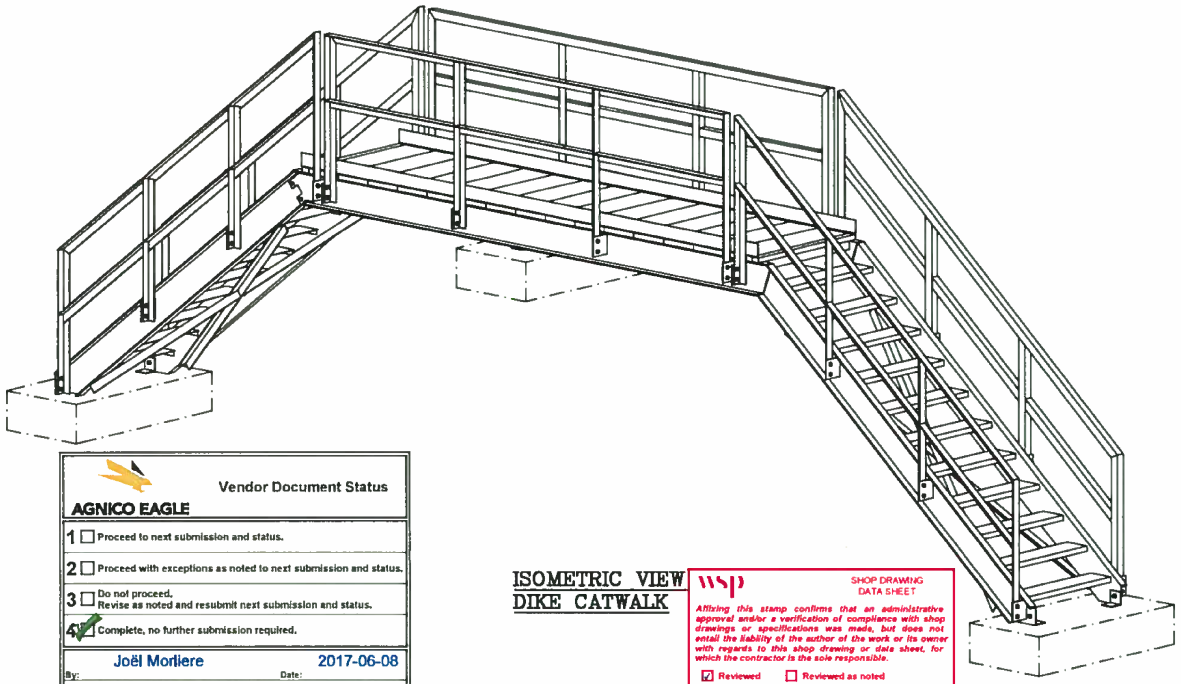

ISOMETRIC VIEW
DIKE CATWALK

GENERAL NOTES:
- REFERENCE DRAWING : 65-103-245-201 REVISION 2
- ✓ CATWALK, RAILING AND STAIRS ARE ASSEMBLED AND BOLTED ON SITE.

MATERIAL:
- GRATING FOR LANDING
  GRIP SPAN SAFETY GRATING
  GALVANIZED STEEL
  D-51215-G
  BY FISHER & LUDLOW
- STAIR
  GRIP SPAN SAFETY GRATING
  GALVANIZED STEEL
  D-41215-G
  BY FISHER & LUDLOW
- STEEL
  ALL STEEL MUST BE IN APPLIANCE WITH CSA G40.21
- WELD
  ALL WELDS MUST BE IN APPLIANCE WITH W59.1 AND W47
- PAINT
  SEE AGNICO EAGLE REQUESTED SPECS

DESIGN:
- DL = 0.5 KPa
- LL = 4.8 KPa
- DEFLECTION = L/300

FOR APPROVAL
DO NOT USE FOR FABRICATION

AGNICO EAGLE — Vendor Document Status

1 ☐ Proceed to next submission and status.
2 ☐ Proceed with exceptions as noted to next submission and status.
3 ☐ Do not proceed. Revise as noted and resubmit next submission and status.
4 ☑ Complete, no further submission required.

By: Joël Morliere Date: 2017-06-08

Review and authorization to fabricate are only for general conformance with the design concept of the Project as expressed in the Contract Documents. Sole responsibility for the accuracy and completeness of this document, including but not limited to dimensions and quantities, remains with the Supplier/Contractor. Agnico Eagle does not warrant the accuracy or completeness of any of the information contained herein, nor does Agnico Eagle authorize or approve any construction means, methods, techniques, sequences or any safety precautions or procedures.

Agnico Eagle No. 6515-C-270-007-245-SPD-0002 R: Sub002

DOCUMENT FOR INFORMATION

WSP — SHOP DRAWING DATA SHEET

Affixing this stamp confirms that an administrative approval and/or a verification of compliance with shop drawings or specifications was made, but does not entail the liability of the author of the work or its owner with regards to this shop drawing or data sheet, for which the contractor is the sole responsible.

☑ Reviewed ☐ Reviewed as noted
☐ Rejected ☐ Filed for records

The contractor, supplier and/or sub-contractor is responsible for: confirming and coordinating all quantities and dimensions; selecting fabrication processes and techniques of construction; coordinating his or her work with that of all other trades and performing all work in a safe and satisfactory manner.

By: J. Morliere Date: 2017/06/08
Project # 151-06440-40

Révision :

No	Date (a-m-j)	Description	Par
BB	2017-05-29	HANDRAIL & STRINGER MODIFICATION	MC
AA	2017-05-16	FOR APPROVAL	MC

Client :
NORMEX
LA SARRE, QUEBEC
(TEL.)819-333-1200
(FAX)819-333-1212

exp
Les Services exp Inc.
T : +1.819.782.2888 | F : +1.819.782.4814
28, 19e Rue, bureau 200
Rouyn-Noranda, QC J9X 2M3
CANADA
www.exp.com

Projet : AGNICO EAGLE - MELIADINE DIVISION - FUEL DISTRIBUTION
Titre : DIKE CATWALK
STRUCTURAL
GENERAL ARRANGEMENT

Approuvé par : JONATHAN FAUCHER ing.
Dessiné par : MARIO CLICHE ing.
Date : 2017-05-16
Page : 1 de 6
Dossier : 999-00048075-PP
Numéro de dessin : NMOI - 00048075 - A0 - S03 - BB

29 mai 2017 17:02:30, marcil, R:\ROU-00240067-A0\60 Réalisation\63 Dessins\Prac\Dike catwalk\999-00048075-PP - Dike catwalk\Details\GA STAIR_PAGE 2-A.dwg

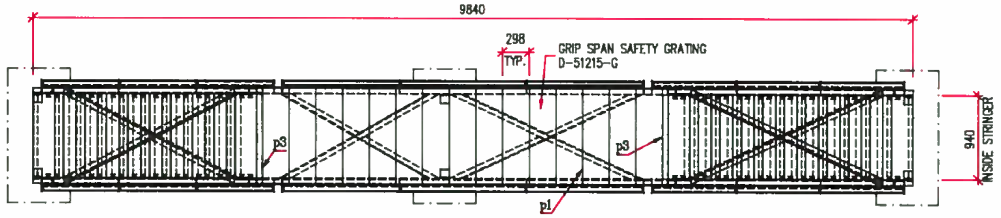

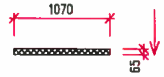

2x p3 PL 1070x38.1x65-GRIP SPAN

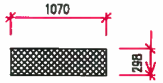

15x p1 PL 1070x38.1x298-GRIP SPAN

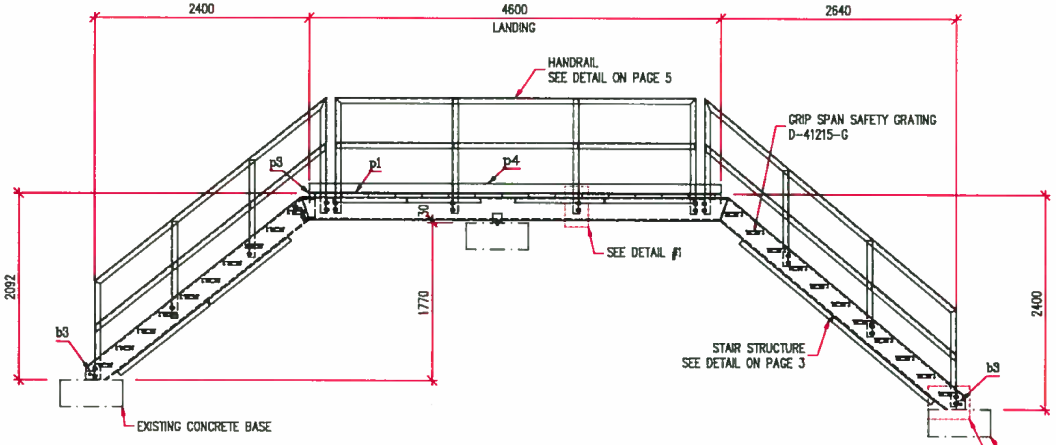

1 REQ'D DIKE STAIR ARRANGEMENT

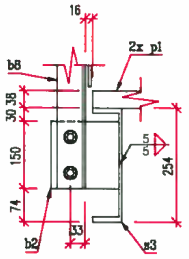

DETAIL #1

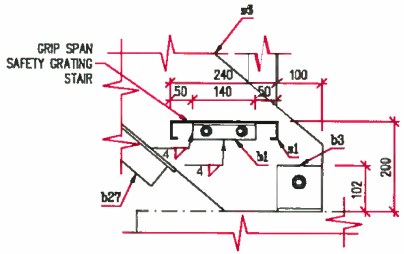

DETAIL #2

FOR APPROVAL
DO NOT USE FOR FABRICATION

Révision :			
BB	2017-05-29	HANDRAIL & STRINGER MODIFICATION	MC
AA	2017-05-16	FOR APPROVAL	MC
No	Date (a-m-j)	Description	Par

Client :
NORMEX
LA SARRE, QUEBEC
(TEL.)819-333-1200
(FAX)819-333-1212

exp
Les Services exp Inc.
T : +1.819.762.2666 | F : +1.819.762.4814
28, 19e Rue, bureau 200
Rouyn-Noranda, QC J9X 2M3
CANADA
www.exp.com

Projet :	AGNICO EAGLE - MELIADINE DIVISION - FUEL DISTRIBUTION
Titre :	DIKE CATWALK STRUCTURAL CATWALK ARRANGEMENT

Approuvé par : JONATHAN FAUCHER ing.	Dessiné par : MARIO CLICHE ing.	Date : 2017-05-16	Page : 2 de 6
Dossier : 999-00048075-PP	Numéro de dessin : NMOI - 00048075 - A0 - S03 - BB		

29 mai 2017 17:04:23, marcil, R:\ROU-00240067-A0\60 Réalisation\63 Dessins\Proc\Dike catwalk\999-00048075-PP - Dike catwalk\Details\GA STAIR_PAGE 3-A.dwg

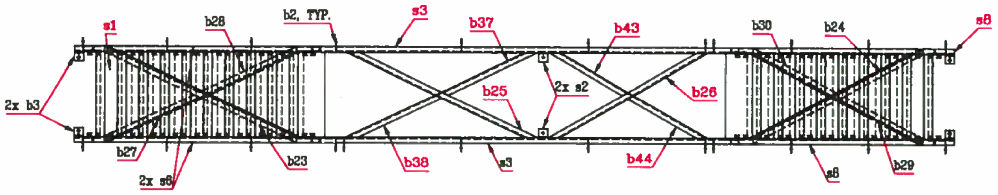

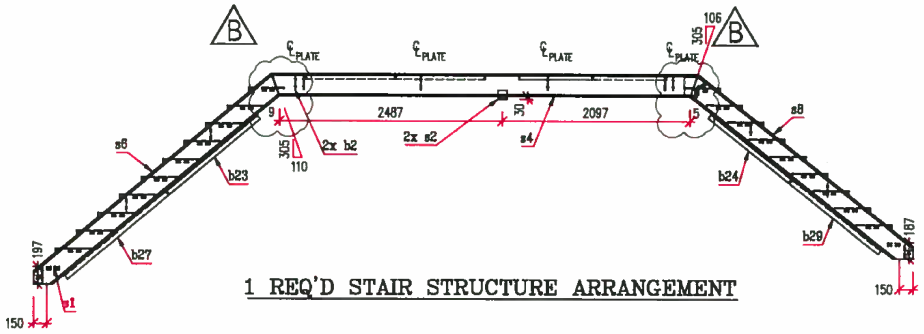

1 REQ'D STAIR STRUCTURE ARRANGEMENT

FOR APPROVAL
DO NOT USE FOR FABRICATION

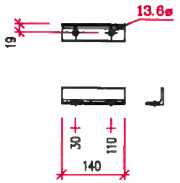

42x b1 L38X38X4.8-300W

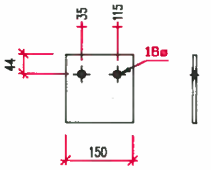

20x b2 FL 8X152 -44W

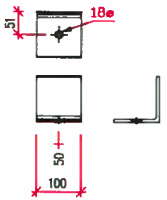

2x s2 L102X102X6.4-300W

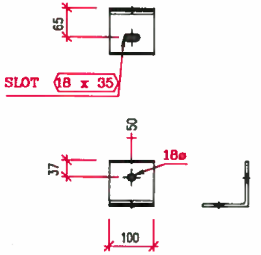

4x b3 L102X102X6.4-300W

Révision :			
BB	2017-05-29	HANDRAIL & STRINGER MODIFICATION	MC
AA	2017-05-16	FOR APPROVAL	MC
No	Date (a-m-j)	Description	Par

Client :
NORMEX
LA SARRE, QUEBEC
(TEL.)819-333-1200
(FAX)819-333-1212

Les Services exp Inc.
T : +1.819.762.2998 | F : +1.819.762.4814
29, 19e Rue, bureau 200
Rouyn-Noranda, QC J9X 2143
CANADA
www.exp.com

Projet :	AGNICO EAGLE - MELIADINE DIVISION - FUEL DISTRIBUTION
Titre :	DIKE CATWALK STRUCTURAL STAIR ARRANGEMENT

Approuvé par : JONATHAN FAUCHER ing.	Dessiné par : MARIO CLICHE ing.	Date : 2017-05-16	Page : 3 de 6
Dossier : 999-00048075-PP	Numéro de dessin : NMOI - 00048075 - A0 - S03 - BB		

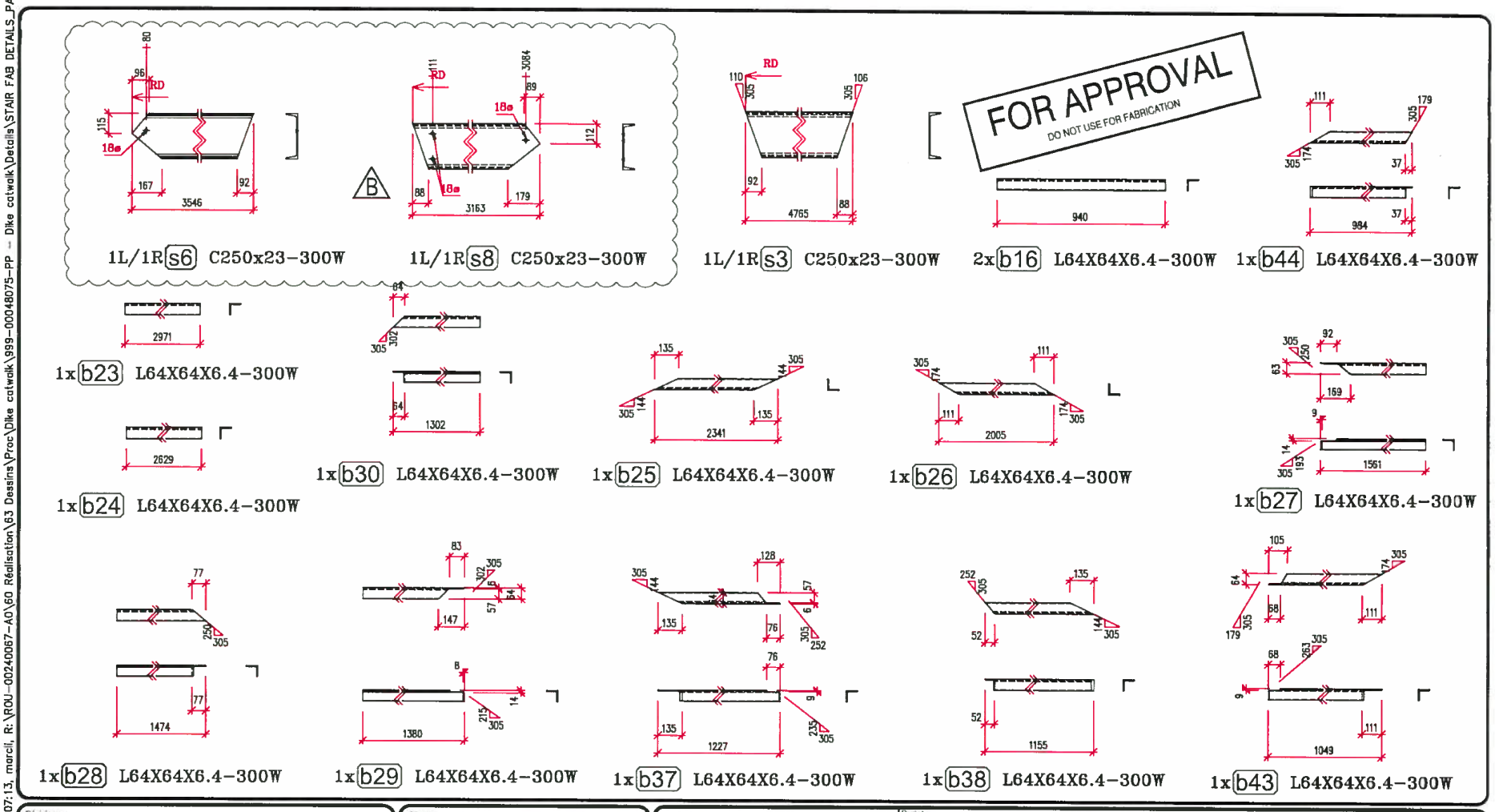

29 mai 2017 17:07:13, marcli, R:\ROU-00240067-A0\60 Réalisation\63 Dessins\Proc\Dike catwalk\999-00048075-PP - Dike catwalk\Details\STAIR FAB DETAILS_PAGI

Révision :

No	Date (a-m-j)	Description	Par
BB	2017-05-29	HANDRAIL & STRINGER MODIFICATION	MC
AA	2017-05-16	FOR APPROVAL	MC

Client :

NORMEX
LA SARRE, QUEBEC
(TEL.)819-333-1200
(FAX)819-333-1212

exp.
Les Services exp inc.
t : +1.819.762.2888 | f : +1.819.762.4814
26, 19e Rue, bureau 200
Rouyn-Noranda, QC J9X 2M3
CANADA
www.exp.com

Projet : AGNICO EAGLE - MELIADINE DIVISION - FUEL DISTRIBUTION

Titre : DIKE CATWALK
STRUCTURAL
STAIR DETAILS

Approuvé par :	Dessiné par :	Date :	Page :
JONATHAN FAUCHER ing.	MARIO CLICHE ing.	2017-05-16	4 de 6

Dossier : 999-00048075-PP

Numéro de dessin : NMOI - 00048075 - A0 - S03 - BB

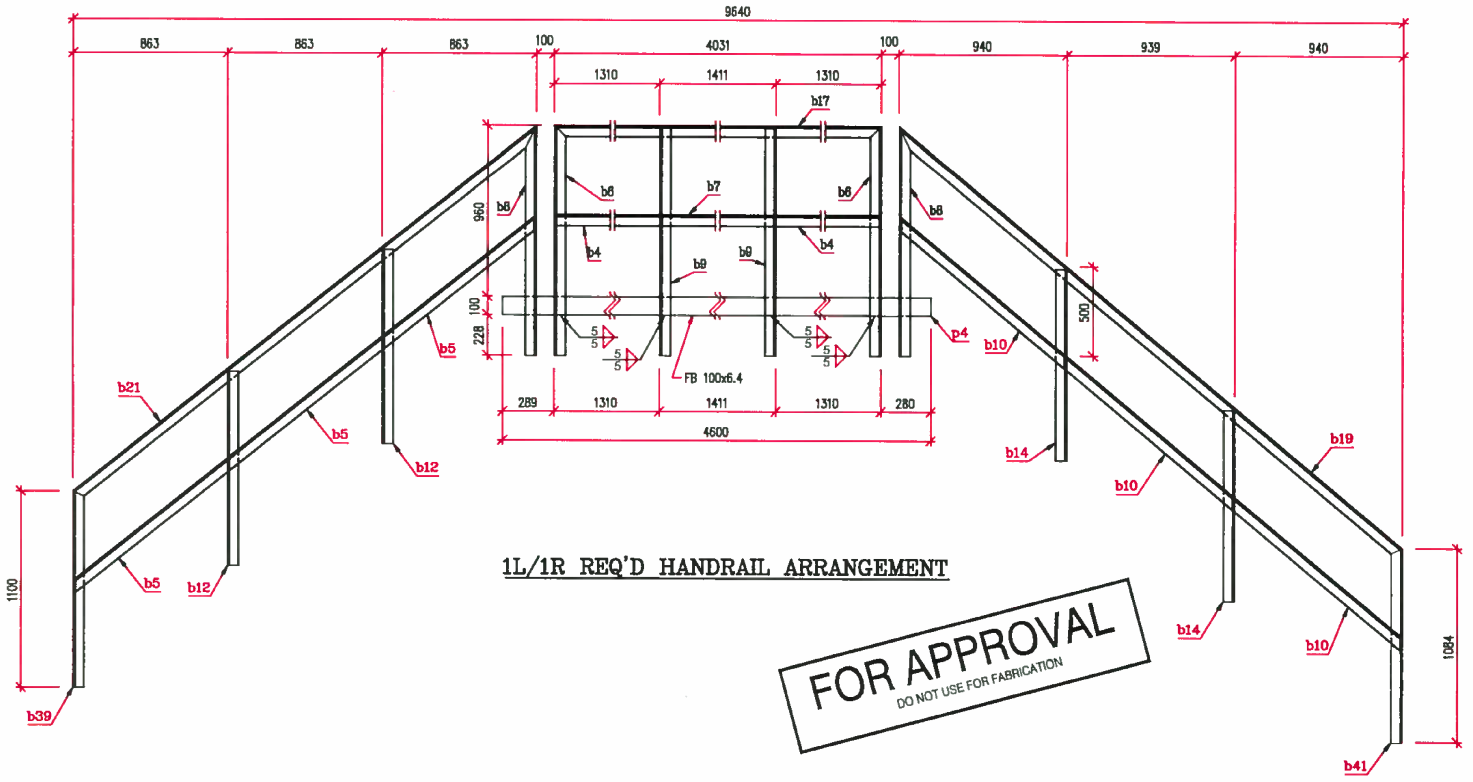

1L/1R REQ'D HANDRAIL ARRANGEMENT

FOR APPROVAL
DO NOT USE FOR FABRICATION

29 mai 2017 17:01:46, marcif, R:\ROU-00240067-A0\60 Réalisation\63 Dessins\Proc\Dike catwalk\999-00048075-PP - Dike catwalk\Details\GA HANDRAIL PAGE 5.dw

Révision :

No	Date (a-m-j)	Description	Par
BB	2017-05-29	HANDRAIL & STRINGER MODIFICATION	MC
AA	2017-05-16	FOR APPROVAL	MC

Client :

NORMEX
LA SARRE, QUEBEC
(TEL.)819-333-1200
(FAX)819-333-1212

exp.
Les Services exp Inc.
t : +1.819.762.2888 | f : +1.819.762.4814
26, 19e Rue, bureau 200
Rouyn-Noranda, QC J9X 2M3
CANADA
www.exp.com

Projet : AGNICO EAGLE - MELIADINE DIVISION - FUEL DISTRIBUTION

Titre : DIKE CATWALK
STRUCTURAL
HANDRAIL ARRANGEMENT

Approuvé par :	Dessiné par :	Date :	Page :
JONATHAN FAUCHER ing.	MARIO CLICHE ing.	2017-05-16	5 de 6

Dossier : 999-00048075-PP

Numéro de dessin : NMOI - 00048075 - A0 - S03 - BB

29 mai 2017 17:01:10, marcil, R:\R0U-00240067-A0\60 Réalisation\63 Dessins\Proc\Dike catwalk\999-00048075-PP - Dike catwalk\Details\HANDRAIL FAB DETAILS.j



4x b4 L64X64X6.4-300W

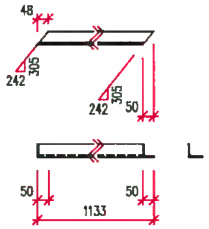

3L/3R b5 L64X64X6.4-300W



2x b7 L64X64X6.4-300W

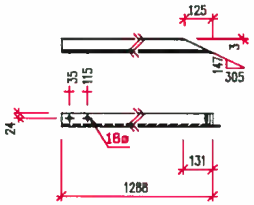

2L/2R b8 L64X64X6.4-300W

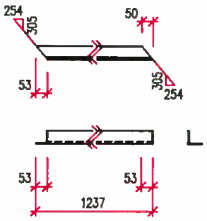

3L/3R b10 L64X64X6.4-300W

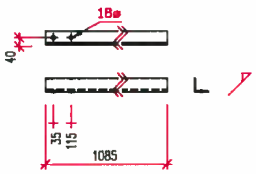

2L/2R b12 L64X64X6.4-300W

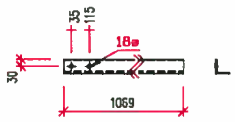

2L/2R b14 L64X64X6.4-300W

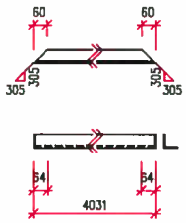

2x b17 L64X64X6.4-300W

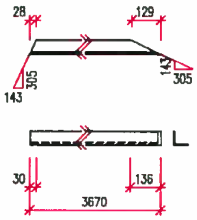

1L/1R b19 L64X64X6.4-300W

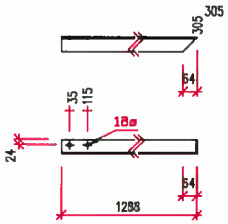

2L/2R b6 L64X64X6.4 - 300W

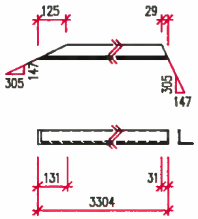

1L/1R b21 L64X64X6.4-300W

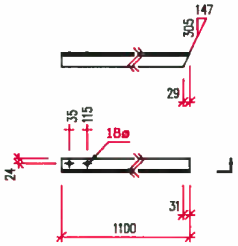

1L/1R b39 L64X64X6.4-300W

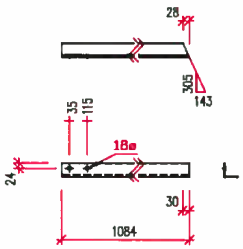

1L/1R b41 L64X64X6.4-300W

FOR APPROVAL
DO NOT USE FOR FABRICATION

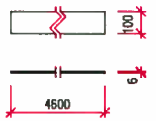

2x p4 PL 6.4x100x4600-A36

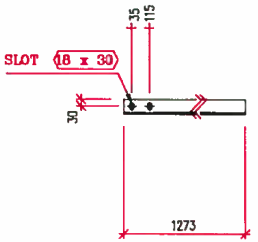

4x b9 L64X64X6.4 - 300W

Révision :			
BB	2017-05-29	HANDRAIL & STRINGER MODIFICATION	MC
AA	2017-05-16	FOR APPROVAL	MC
No	Date (a-m-j)	Description	Par

Client :

NORMEX
LA SARRE, QUEBEC
(TEL.)819-333-1200
(FAX)819-333-1212

Les Services exp Inc.
t : +1.819.762.2686 | f : +1.819.762.4814
29, Tiffe Rue, bureau 200
Rouyn-Noranda, QC J9X 2M3
CANADA
www.exp.com

Projet :	AGNICO EAGLE - MELIADINE DIVISION - FUEL DISTRIBUTION
Titre :	DIKE CATWALK STRUCTURAL HANDRAIL DETAILS

Approuvé par : JONATHAN FAUCHER ing.	Dessiné par : MARIO CLICHE ing.	Date : 2017-05-16	Page : 6 de 6
Dossier : 999-00048075-PP	Numéro de dessin : NMOI - 00048075 - A0 - S03 - BB		

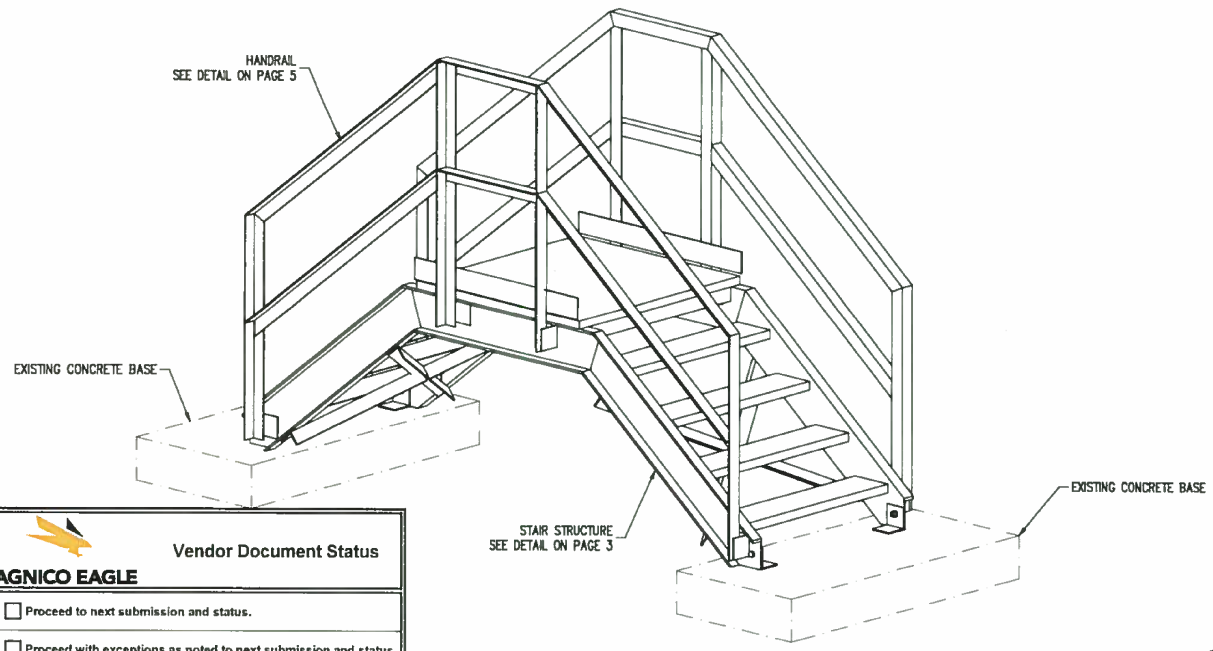

ISOMETRIC VIEW
PIPE CATWALK

GENERAL NOTES:
- REFERENCE DRAWING : 65-103-245-201 REVISION 2
- CATWALK, RAILING AND STAIRS ARE ASSEMBLED AND BOLTED ON SITE.

MATERIAL:
- GRATING FOR LANDING
  GRIP SPAN SAFETY GRATING
  GALVANIZED STEEL
  D-51215-G
  BY FISHER & LUDLOW
- STAIR
  GRIP SPAN SAFETY GRATING
  GALVANIZED STEEL
  D-41215-G
  BY FISHER & LUDLOW
- STEEL
  ALL STEEL MUST BE IN APPLIANCE WITH CSA G40.21
- WELD
  ALL WELDS MUST BE IN APPLIANCE WITH W59.1 AND W47
- PAINT
  SEE AGNICO EAGLE REQUESTED SPECS

DESIGN:
- DL = 0.5 KPa
- LL = 4.8 KPa
- DEFLECTION = L/300

FOR APPROVAL
DO NOT USE FOR FABRICATION

AGNICO EAGLE — Vendor Document Status

1 ☐ Proceed to next submission and status.
2 ☐ Proceed with exceptions as noted to next submission and status.
3 ☐ Do not proceed. Revise as noted and resubmit next submission and status.
4 ☑ Complete, no further submission required.

By: Joël Morliere Date: 2017-05-23

Review and authorization to fabricate are only for general conformance with the design concept of the Project as expressed in the Contract Documents. Sole responsibility for the accuracy and completeness of this document, including but not limited to dimensions and quantities, remains with the Supplier/Contractor. Agnico Eagle does not warrant the accuracy or completeness of any of the information contained herein, nor does Agnico Eagle authorize or approve any construction means, methods, techniques, sequences or any safety precautions or procedures.

Agnico Eagle No. 6515-C-270-007-245-SPD-0003 R: Sub001

DOCUMENT FOR INFORMATION

WSP SHOP DRAWING DATA SHEET

Affixing this stamp confirms that an administrative approval and/or a verification of compliance with shop drawings or specifications was made, but does not entail the liability of the author of the work or its owner with regards to this shop drawing or data sheet, for which the contractor is the sole responsible.

☑ Reviewed ☐ Reviewed as noted
☐ Rejected ☐ Filed for records

The contractor, supplier and/or sub-contractor is responsible for: comfirming and coordinating all quantities and dimensions; selecting fabrication processes and techniques of construction; coordinating his or her work with that of all other trades and performing all work in a safe and satisfactory manner.

By: Joël Morliere Date: 2017/05/23
G-ADM-ZZZ-82-11E-2 Project # 151-06440-40

16 mai 2017 21:19:02, marcli, C:\Mario Cliche EXP\Clients\Normex\Escaliers reservoir\61 Réalisation\999-00048075-PP - Escalier tuyau\Details\Vue iso_page 1.dwg

Révision :

No	Date (a-m-j)	Description	Par
AA	2017-05-15	FOR APPROVAL	MC

Client : NORMEX
LA SARRE, QUEBEC
(TEL.)819-333-1200
(FAX)819-333-1212

exp.
Les Services exp inc.
t +1.819.762.2888 | f +1.819.762.4814
28, 19e Rue, bureau 200
Rouyn-Noranda, QC J9X 2M3
CANADA
www.exp.com

Projet : AGNICO EAGLE - MELIADINE DIVISION - FUEL DISTRIBUTION

Titre : PIPE CATWALK
STRUCTURAL
GENERAL ARRANGEMENT

Approuvé par :	Dessiné par :	Date :	Page:
JONATHAN FAUCHER ing.	MARIO CLICHE ing.	2017-05-15	1 de 5

Dossier : 999-00048075-PP
Numéro de dessin : NMOI - 00048075 - A0 - S02 - AA

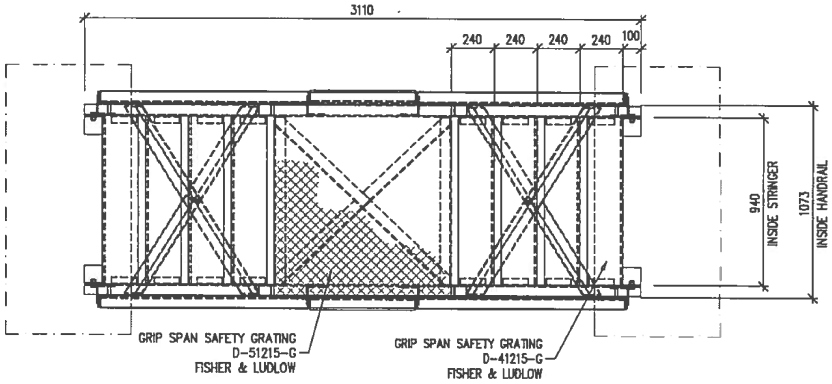

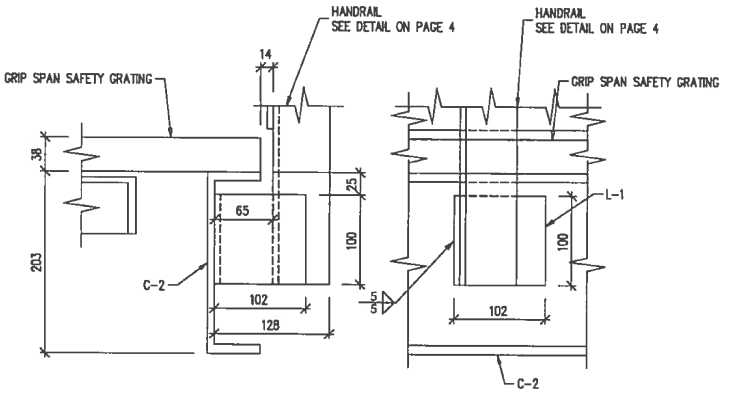

DETAIL #1

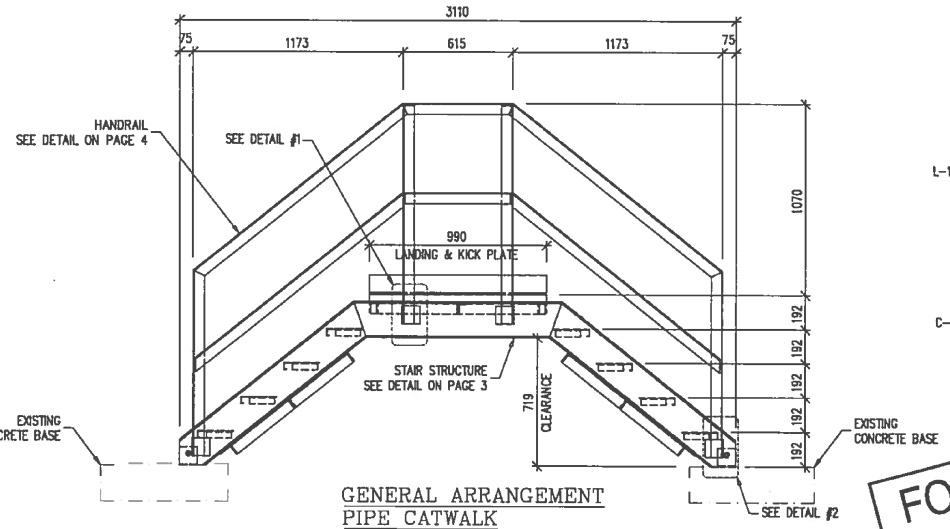

GENERAL ARRANGEMENT
PIPE CATWALK

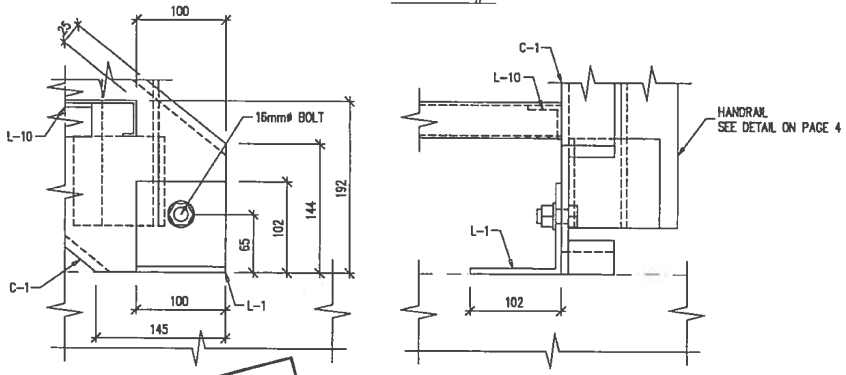

DETAIL #2

FOR APPROVAL
DO NOT USE FOR FABRICATION

Révision :			
AA	2017-05-15	FOR APPROVAL	MC
No	Date (a-m-j)	Description	Par

Client :

NORMEX
LA SARRE, QUEBEC
(TEL.)819-333-1200
(FAX)819-333-1212

exp.
Les Services exp inc.
t : +1.819.762.2888 | f : +1.819.762.4814
26, 18e Rue, bureau 200
Rouyn-Noranda, QC J9X 2M3
CANADA
www.exp.com

Projet :	AGNICO EAGLE - MELIADINE DIVISION - FUEL DISTRIBUTION
Titre :	PIPE CATWALK STRUCTURAL GENERAL ARRANGEMENT

Approuvé par : JONATHAN FAUCHER ing.	Dessiné par : MARIO CLICHE ing.	Date : 2017-05-15	Page. 2 de 5
Dossier : 999-00048075-PP	Numéro de dessin : NMOI - 00048075 - A0 - S02 - AA		

16 mai 2017 21:18:36, marcil, C:\Mario Cliche EXP\Clients\Normex\Escaliers reservoir\61 Réalisation\999-00048075-PP - Escalier tuyau\Details\GA Stair_page 2.dwg

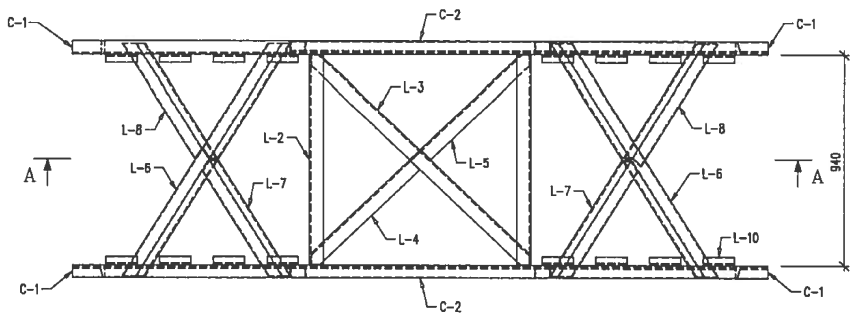

1 REQ'D STAIR STRUCTURE ARRANGEMENT

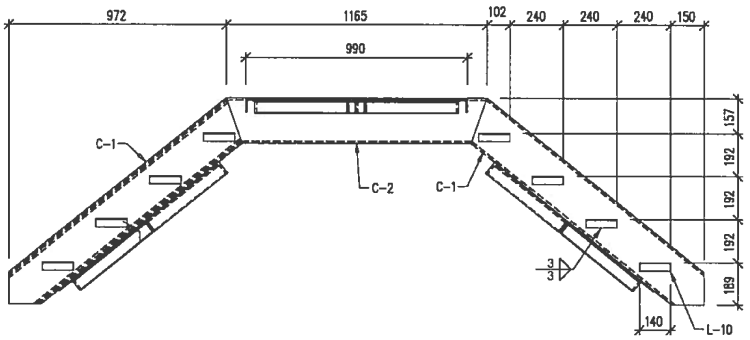

Section A – A

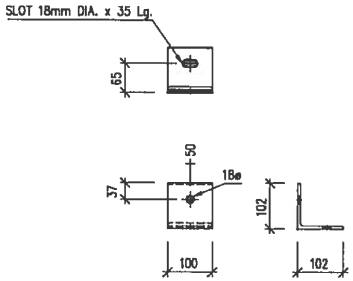

4x L-1 L102X102X6.4-300W

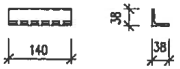

16x L-10 L38X38X4.8-300W

FOR APPROVAL
DO NOT USE FOR FABRICATION

16 mai 2017 21:18:07, marcil, C:\Mario Cliche EXP\Clients\Normex\Escaliers reservoir\61 Réalisation\999-00048075-PP - Escalier tuyau\Details\4.dwg

Révision :			
AA	2017-05-15	FOR APPROVAL	MC
No	Date (a-m-j)	Description	Par

Client :
NORMEX
LA SARRE, QUEBEC
(TEL.)819-333-1200
(FAX)819-333-1212

exp.
Les Services exp Inc.
t : +1.819.762.2666 | f : +1.819.762.4814
26, 19e Rue, bureau 200
Rouyn-Noranda, QC J9X 2N3
CANADA
www.exp.com

Projet :	AGNICO EAGLE - MELIADINE DIVISION - FUEL DISTRIBUTION			
Titre :	PIPE CATWALK STRUCTURAL STAIR DETAILS			
Approuvé par : JONATHAN FAUCHER ing.	Dessiné par : MARIO CLICHE ing.	Date : 2017-05-15	Page : 3 de 5	
Dossier : 999-00048075-PP	Numéro de dessin : NMOI - 00048075 - A0 - S02 - AA			

16 mai 2017 21:17:35, marcli, C:\Mario Cliche EXP\Clients\Normex\Escaliers reservoir\61 Réalisation\999-00048075-PP - Escalier tuyau\Details\Details escalier_page

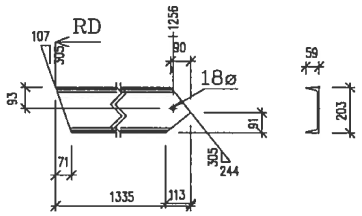

2L/2R C-1 C200x21-300W

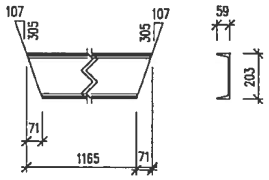

2x C-2 C200x21-300W

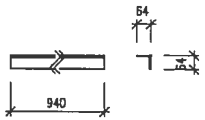

2x L-2 L64X64X6.4-300W

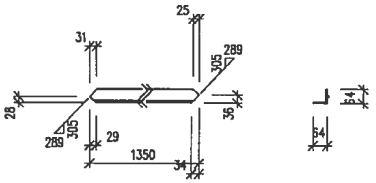

1x L-3 L64X64X6.4-300W

FOR APPROVAL
DO NOT USE FOR FABRICATION

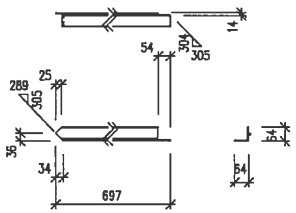

1x L-4 L64X64X6.4-300W

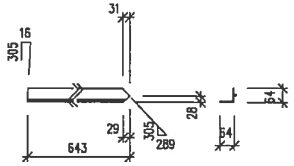

1x L-5 L64X64X6.4-300W

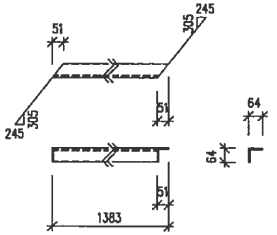

2x L-6 L64X64X6.4-300W

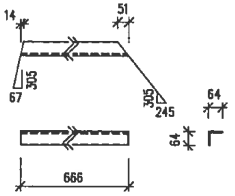

2x L-7 L64X64X6.4-300W

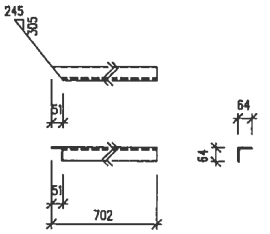

2x L-8 L64X64X6.4-300W

Révision :			
AA	2017-05-15	FOR APPROVAL	MC
No	Date (a-m-j)	Description	Par

Client :

NORMEX
LA SARRE, QUEBEC
(TEL.)819-333-1200
(FAX)819-333-1212

exp.
Les Services exp Inc.
T : +1.819.762.2666 | F : +1.819.762.4814
28, 19e Rue, bureau 200
Rouyn-Noranda, QC J9X 2M3
CANADA
www.exp.com

Projet :	AGNICO EAGLE - MELIADINE DIVISION - FUEL DISTRIBUTION		
Titre :	PIPE CATWALK STRUCTURAL STAIR DETAILS		
Approuvé par : JONATHAN FAUCHER ing.	Dessiné par : MARIO CLICHE ing.	Date : 2017-05-15	Page : 4 de 5
Dossier : 999-00048075-PP	Numéro de dessin : NMOI - 00048075 - A0 - S02 - AA		

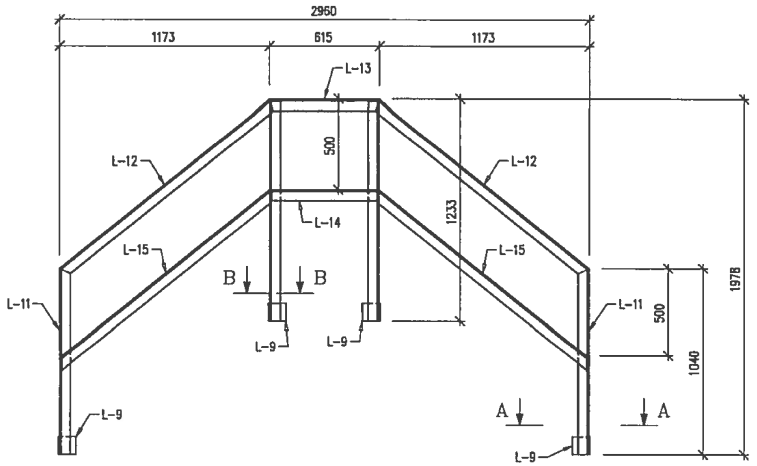

1L/1R REQ'D HANDRAIL ARRANGEMENT

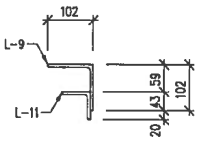

SECTION "A – A"

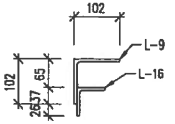

SECTION "B – B"

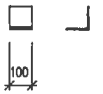

8x L-9 L102X102X6.4-300W

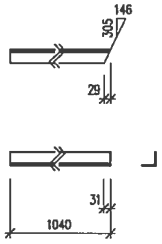

2L/2R L-11 L64X64X6.4-300W

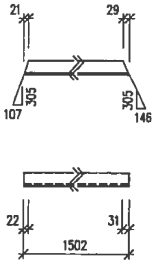

2L/2R L-12 L64X64X6.4-300W

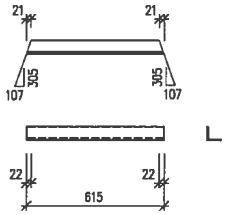

2x L-13 L64X64X6.4-300W

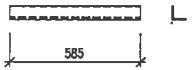

2x L-14 L64X64X6.4-300W

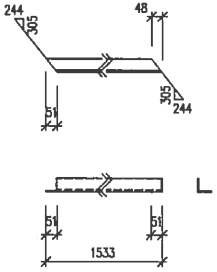

2L/2R L-15 L64X64X6.4-300W

FOR APPROVAL
DO NOT USE FOR FABRICATION

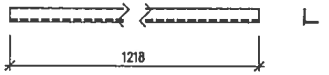

4x L-16 L64X64X6.4-300W

16 mai 2017 21:16:47, marcil, C:\Mario Cliche EXP\Clients\Normex\Escaliers reservoir\61 Réalisation\999-00048075-PP - Escalier tuyau\Details\Handrail_page 5.dwg

Révision :			
AA	2017-05-15	FOR APPROVAL	MC
No	Date (a-m-j)	Description	Par

Client :

NORMEX
LA SARRE, QUEBEC
(TEL.)819-333-1200
(FAX)819-333-1212

exp.
Les Services exp inc.
T : +1.819.762.2686 | T : +1.819.762.4614
26, 19e Rue, bureau 200
Rouyn-Noranda, QC J9X 2N3
CANADA
www.exp.com

Projet :	AGNICO EAGLE - MELIADINE DIVISION - FUEL DISTRIBUTION		
Titre :	PIPE CATWALK STRUCTURAL HANDRAIL DETAILS		
Approuvé par : JONATHAN FAUCHER ing.	Dessiné par : MARIO CLICHE ing.	Date : 2017-05-15	Page : 5 de 5
Dossier : 999-00048075-PP	Numéro de dessin : NMOI - 00048075 - A0 - S02 - AA		

31/05/2017
07:45:14

☐ YELLOW ☐ PINK ☐ PURPLE ☐ STOCKROOM
☐ GREEN ☐ BLUE ☐ ORANGE

REV:0000
PAGE :1

DESCRIPTION BON TRAVAIL: PEINTURE

#-BON TRAVAIL: W80055

#-PROJET: 4048 (B)FUEL MODULE CATWALK
#-CLIENT: 598 CONSTRUCTION PROMEC

#-COMMANDE...: 61086
DATE DEBUT...: 01/05/2017
DATE REQUISE.: 15/06/2017
#-P.L.....: 4841

BYE: S.L
PAINT: OUI
GROUP: .
UNIT:
PART:
CONTACT: ERIC POULIN

NORMEX MÉTAL
CONRÔLE DE QUALITÉ

CONFORME ✓	OUI	NON

INSPECTÉ PAR: Emmanuel Ouellet
SIGNATURE: Emmanuel Ouellet
DATE: 29 / 06 / 2017
JOUR / MOIS / ANNÉE

NOTES

PEINTURE DES HANDRAILS ET STRUCTURE
SYYTEME A 3 COUCHES,VOIR FEUILLES

MATERIAUX

#-REQUIS.	#-DESSIN	QTE	DESCRIPTION	MESURE	BATCH	ROLL	CUT	BEND	DRILL	MACH.	STOCK
001			POUR PEINTURE VOIR FEUILLE 2								

QUANTITE: 0.00 POIDS: 0.000 SURFACE: 0.00 D: Drawing S: Sketch T: Template

ICI DEVOE COATINGS
Membre du groupe mondial ICI

ICI DEVOE COATINGS

Devoe Coatings est membre du groupe mondial ICI

Bar-Rust[MC] 235

Revêtement époxy à usages multiples

Numéro de catalogue 235-K-XXXX

DESCRIPTION

Revêtements intérieurs de réservoirs et canalisations
- Réservoirs d'eau potable
- Pompes submergées, cavités humides et tuyaux de drainage

Structures d'acier, équipement et maçonnerie
- Usines de pâtes et papiers
- Usines de produits chimiques et de fabrication d'engrais
  Usine d'épuration et de traitement des eaux usées
- Réservoirs et canalisations
- Ponts

Maçonnerie et béton
- Entrepôts
- Usines de traitement des aliments
- Usines de fabrication de boissons

Fabrication et nouvelle construction
- Accélère la production, même à de basses températures
- Revêtement à usages multiples convenant à de nombreuses surfaces

CARACTÉRISTIQUES

Protection exceptionnelle contre la corrosion
- Résistance à l'immersion en eau douce
- Conseillé dans les endroits où l'on trouve des produits chimiques corrosifs

Réduit le coût de préparation des surfaces
- Convient à de nombreuses surfaces
- Adhère très bien à la rouille tenace
- Adhère bien aux surfaces humides

Durcit à de basses températures
- Durcit à 0 °F (-18 °C)
- Séchage rapide pour recouvrir

Application
- Auto-apprêtant

Approbations
- EPA (Environmental Protection Agency - États-Unis) - eau potable (blanc cassé et chamois seulement)
- Cargo de grain - North England Ind. Health Ser.
- MIL-P-23236B(SH), types 1 et IV, classe 2
- Santé et bien-être social Canada - aliments séchés, cales à poisson (blanc cassé et chamois seulement)
- Approbation de l'USDA pour contact occasionnel avec la nourriture
- MIL-P-24647 et chapitre 631, tableau 631-8-10, quille, rail et superstructure

DONNÉES TECHNIQUES

Type de revêtement	Époxy catalysé
Couleurs	**Numéro de catalogue**
Voir la carte des couleurs	235-K-XXXX
Emballage	5 gal (18,5 l) et 1 gal (3,7 l) Ensemble de deux constituants
Rapport volumique des constituants	4 à 1
Lustre	Semi-lustré
Point éclair	100 °F (38 °C) Setaflash
Diluant	
Pour extérieur et nettoyage	Devoe T-10
Pour intérieur	Devoe T-4
Pour eau potable	Devoe T-5
Sur d'anciens revêt. alkydes	Devoe T-5
Durée de vie en pot	4,5 heures à 77 °F (25 °C)
Stabilité en stockage	Plus de 2 ans
Densité	11 lb/gal (1,3 kg/l)
Temps d'incorporation	15 minutes à 77 °F (25 °C)
COV - EPA 24	2,4 lb/gal (292 g/l)
Résistance à la température	250 °F (121 °C) sec
Pourcentage de solides/volume	
68 % ASTM D2697 (7 jours)	
Rendement superficiel volumique	
1091 pi²/gal à un millième de po	
26,9 m²/l à 25 microns	
Épaisseur du feuil recommandée	
5,9 - 11,8 millièmes de po humide pour obtenir	
4,0 - 8,0 millièmes de po une fois sec	
Application	Pulvérisateur, pinceau ou rouleau
Courbe de temps de séchage	
Heures à 5 millièmes de po (125 microns) E.F.S.	

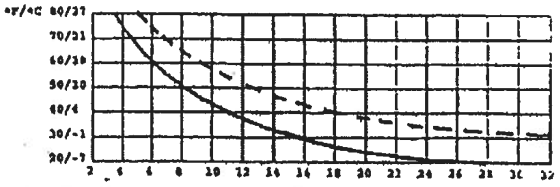

Sec pour recouvrir : ——— Sec en profondeur : — — —

Courbe fournie à titre indicatif seulement. Des facteurs comme l'aération, l'épaisseur du feuil, l'humidité et l'utilisation d'un diluant peuvent faire varier le temps de séchage (ASTM D1640).

PROPRIÉTÉS D'EMPLOI

ICI DEVOE COATINGS
Membre du groupe mondial ICI

9 Produits de finition
Revêtements spéciaux

GUIDE D'APPLICATION

Préparation de la surface

Tous les revêtements appliqués directement sur le métal offrent un rendement maximal lorsque la surface est décapée jusqu'à ce que le métal soit presque blanc. Cependant, le décapage au jet d'abrasif n'est pas toujours possible pour des raisons de coût ou autres. Les revêtements Bar-Rust ont été conçus pour être appliqué sur des surfaces qui n'ont pas reçu la meilleure préparation.La préparation recommandée pour une application de revêtement Bar-Rust 235 comprend l'enlèvement de l'eau, de la saleté, de l'huile, des débris et des écailles de rouille. Pour obtenir de meilleurs résultats, nettoyer la surface avec le nettoyeur Devprep 88 et laver ensuite avec de l'eau à haute pression. La norme minimale à respecter pour les applications sur des surfaces non immergées est la norme SSPC-SP2 du *Steel Structures Painting Council* ou la norme *Swedish Standard DSt2*. Pour les applications sur des surfaces immergées, la norme minimale est la norme SSPC-SP3 ou la norme *Swedish Standard DSt3*. Dans les deux cas, on peut aussi appliquer une couche de l'apprêt Pre-Prime 167 sous une couche de Bar-Rust 235. La plupart des époxy ont un pouvoir de repeinturage limité. S'adresser à un représentant Devoe pour obtenir plus de renseignements à ce sujet.

Mélange et dilution

Le revêtement Bar-Rust 235 est offert en ensemble de deux constituants de 5 gallons (18,5 litres) ou de 1 gallon (3,7 litres) qui contiennent chacun la quantité appropriée d'ingrédients. Les constituants doivent être bien mélangés ensemble. Brasser au mélangeur la base jusqu'à l'obtention d'une préparation lisse et homogène. Ajouter graduellement le convertisseur tout en mélangeant. Une fois tout le convertisseur ajouté, continuer à mélanger lentement. Allouer 15 minutes pour l'incorporation à 77 °F (25 °C). En général, il n'est ni nécessaire ni souhaitable de diluer la préparation. Toutefois, dans des conditions climatiques extrêmes, une petite quantité (10 % ou moins par volume) de l'un des diluants décrits au recto peut être ajoutée conformément aux règlements locaux relatifs à la teneur en composé organique volatil (COV) et à la qualité de l'air. Utiliser le diluant Devoe T-5 pour les applications de Bar-Rust 235 sur des réservoirs d'eau potable ou sur d'anciens revêtements alkydes. N'ajouter le diluant qu'après avoir bien mélangé les deux constituants. La durée de vie en pot de la préparation est de 5 heures à 77 °F (25 °C). Si elle est additionnée d'un diluant, sa durée de vie est de 4,5 heures à 70 °F (21 °C). Après cette période, la préparation peut sembler liquide, mais l'épaisseur du feuil risque de ne pas être adéquate et la pulvérisation moins bonne. À des températures plus élevées, la durée de vie en pot de la préparation diminue tandis qu'à des températures plus basses, elle augmente.

Application

Le revêtement Bar-Rust 235 peut être appliqué avec un pulvérisateur conventionnel ou sans air. On recommande, pour les applications avec un pulvérisateur conventionnel, un pistolet Graco n° 800 muni d'une buse de 0,070 po ou d'une buse plus large et une tête d'air à bon pouvoir de dispersion. La pression du liquide doit rester basse, à environ 15 psi (1,0 bar) et la pression de l'air doit être juste assez élevée pour obtenir une bonne dispersion du revêtement. Une pression d'air trop élevée peut causer une surpulvérisation.Pour les applications avec un pulvérisateur sans air, on recommande une pompe Bulldog Graco 30:1, une pompe Senator 35:1 ou une pompe plus puissante. Une buse de 0,021 à 0,025 po permettra d'obtenir une bonne forme de jet. Pour obtenir un résultat optimal, les tuyaux à liquide devraient avoir un d.i. d'au moins 3/8 de po et ne devraient pas avoir plus de 50 pi de longueur. Si on utilise un tuyau plus long ou que l'on fait l'application par temps froid, une pompe plus puissante ou l'ajout d'un diluant est recommandé. S'assurer d'obtenir un feuil d'épaisseur appropriée si on applique le revêtement Bar-Rust 235 au pinceau ou au rouleau. Appliquer une peinture anti-salissure sur le revêtement Bar-Rust 235 lorsque celui-ci n'est plus collant mais encore sensible à la pression du doigt. Les revêtements époxy peuvent changer de couleur et peuvent farîner lorsqu'ils sont exposés directement au soleil.

Systèmes de peintures pour revêtements de réservoirs : Deux couches de Bar-Rust 235 de 4 à 8 millièmes de po (100 à 200 microns) par couche, plus deux couches au pinceau sur les arêtes vives et les joints de soudure. Utiliser des couleurs différentes pour chaque couche, y compris les couches appliquées au pinceau.

Aération

Une bonne aération est essentielle pour obtenir un bon rendement du revêtement Bar-Rust 235 et pour la personne qui effectue le travail. S'assurer d'alimenter la pièce où le peinturage est effectué en air sec et frais afin que le solvant s'évapore. Comme les vapeurs de solvant sont plus lourdes que l'air, faire en sorte que les bouches d'aération atteignent les parties inférieures de la pièce. L'aération pendant le durcissement permet aux solvants contenus dans le revêtement de s'évaporer. Allouer une période d'aération de 7 jours pour le durcissement des réservoirs.

Précautions

Consulter la fiche technique sur la sécurité des substances et l'étiquette du produit pour connaître les mesures de sécurité et les précautions à prendre.

235/IM/Janvier 1996

DEVOE COATINGS
Devoe Coatings est membre du groupe mondial ICI
8200, rue Keele
Concord ON L4K 2A5
(905) 669-1020

LIMITATION DE RESPONSABILITÉ: À notre connaissance, les données techniques contenues dans le présent document sont vraies et exactes au moment de la publication, mais peuvent changer sans préavis. Nous garantissons que notre produit est conforme aux spécifications indiquées dans le présent document. NOUS NE FAISONS AUCUNE AUTRE GARANTIE EXPRESSE OU IMPLICITE; NOTAMMENT NOUS NE FAISONS AUCUNE GARANTIE RELATIVE À LA QUALITÉ MARCHANDE OU À L'ADAPTATION À UN USAGE PARTICULIER. La responsabilité, le cas échéant, se limite au remplacement du produit ou au remboursement du prix d'achat. LA MAIN-D'OEUVRE ET LES COÛTS DE MAIN-D'OEUVRE, AINSI QUE LES AUTRES DOMMAGES INDIRECTS, SONT EXCLUS.

DEVOE HIGH PERFORMANCE COATINGS

DEVTHANE® 359

Mastic à l'uréthane aliphatique brillant à pouvoir garnissant élevé pour application directe sur métal (DTM)
N° de réf. 359KXXXX

DESCRIPTION DU PRODUIT

Générique : uréthane aliphatique acrylique

Description générale : peinture émail brillante à l'uréthane aliphatique, à deux constituants, durcissement chimique, au pouvoir couvrant et au rendement élevés, conçue pour des surfaces nécessitant une stabilité maximale de brillance et de couleur.

Usages courants : utiliser sur des surfaces d'acier adéquatement préparées, planchers d'acier ou de béton, maçonnerie, cloisons sèches, plâtre, métal, blocs de béton, métal galvanisé, aluminium, béton coulé et brique émaillée. Idéal pour une utilisation, à l'intérieur et à l'extérieur, sur l'acier structural, la tuyauterie, les revêtements métalliques, le mobilier de cabines de contrôle, les convoyeurs, les pompes, les réservoirs de stockage, les tours éoliennes, les moteurs, la machinerie et les véhicules de transport. Peut aussi être utilisé dans les aires de service intense des usines de transformation des aliments, des laiteries, des écoles, des restaurants, des hôpitaux, des établissements correctionnels, des manufactures, des stades, des arénas et des parcs d'amusement.

CARACTÉRISTIQUES

Avantages :

- excellente stabilité de brillant et de couleur
- excellente résistance à l'abrasion et aux produits chimiques
- faible teneur en COV
- application facile avec un pinceau, un rouleau ou un pulvérisateur
- grand choix de couleurs, incluant les couleurs de sécurité
- excellente résistance aux maculations, au piquage et aux égratignures
- pouvoir couvrant élevé
- excellentes propriétés d'application
- applicable directement sur le métal

Restrictions : la couleur pourrait changer lorsque la température approche la limite de 250°F (121°C), mais le feuil demeurera intact.

DONNÉES TECHNIQUES

Couleur : disponible en blanc, noir et une gamme complète de couleurs sur commande
Fini : brillant élevé
Solvant de réduction : diluant T-9 (pulvérisateur), T-17 (pinceau ou rouleau)
Solvant de nettoyage : diluant T-9
Poids/gallon : 10,3 lb/gal (1,23 kg/l) – varie selon la couleur
COV (EPA 24) : 2, 8 lb/gal (340 g/l) – varie selon la couleur
Solides par volume (ASTM D-2697-7 jours) : 60 %
Rendement théorique à 1, 0 mil (25 microns) sec: 962 pi²/gal (23,7 m²/l)
Épaisseur de feuil recommendée : 4,0-6,0 mils (100-150 microns) sec – 8,7-10,0 mils (168-250 microns) humide. L'application directe sur le métal requiert une épaisseur de feuil sec de 5,0-6,0 mils (125-250 microns).
Systèmes : Veuillez consulter le guide du système approprié, les spécifications propres au travail ou votre représentant(e) d'ICI Peintures pour les systèmes indiqués pour ce produit. Choisir les systèmes en tenant compte de l'environnement particulier où ils seront appliqués.
Température de service maximale : 250° (121°C) sec
Temps de séchage minimum (ASTM D-1640) : à 4 mils (200 microns) sec

Température du subjectile	40°F (4°C)	60°F (16°C)	80°F (27°C)
Prêt à recouvrir - minimum	8 heures	5 heures	3 heures
Sec en profondeur	14 heures	9 heures	5 heures
Prêt à recouvrir - maximum			
par le même produit	2 semaines	2 semaines	2 semaines

Le temps de séchage peut être influencé par la ventilation, l'épaisseur du feuil, le taux d'humidité, le diluant et d'autres facteurs.
Avertissement : Les données qui précèdent sont uniquement des directives générales. Consultez toujours votre représentant(e) d'ICI Peintures pour les délais de recouvrement appropriés, étant donné que le délai de recouvrement maximum de ce produit peut diminuer ou augmenter de façon importante en raison de conditions variées incluant, mais sans s'y limiter, l'humidité, la température de la surface et l'utilisation d'additifs ou de diluants. L'utilisation d'accélérateurs ou de durcissement forcé peut diminuer le délai de recouvrement de couches individuelles. Les délais de recouvrement qui précèdent pourraient ne pas s'appliquer si un produit de recouvrement autre qu'un de ceux énumérés ci-dessus est utilisé. Si le délai de recouvrement maximum est dépassé, veuillez consulter votre représentant(e) d'ICI Peintures pour obtenir les recommandations appropriées afin d'améliorer l'adhérence. Le défaut de se conformer à ces précautions peut entraîner une délamination entre les couches.
Stabilité en stockage : plus de 12 mois à 77°F (25°C) non ouvert
Dureté : (ASTM D-3363, séchage pendant 7 jours à 77°F (25°C) : 5H
Proportions de mélange : 4 (base) : 1(convertisseur) – voir les instructions de mélangeage
Induction : aucune
Durée de vie en pot : 8 heures à 77°F (25°C) et 50% HR.

DONNÉES DE RENDEMENT

Adhérence : (ASTM D-4541) – Excellente
Résistance au brouillard salin : (ASTM B-117) – Excellente
Résistance à l'abrasion : (ASTM D-4060) – Excellente
Résistance à l'humidité : (ASTM D-2247) – Excellente
Exposition à l'extérieur : 45° sud de la Floride – Excellente

Résistance aux produits chimiques : (ASTM D-1308 – contact de 24 h) – excellente. Résiste aux éclaboussures et au déversement d'alcalis, sels, eau, graisses, produits alimentaires et détergents.
Résistance aux taches : (ASTM D-1308 – contact pendant une semaine) – excellente. Résiste, entre autres, aux taches de crayon, rouge à lèvres, café, terreau, poli à chaussures, jus de raisin, encre, marqueur et peinture pulvérisée.

DANGER! INFLAMMABLE. NOCIF OU MORTEL EN CAS D'INGESTION. Lire l'étiquette et la fiche signalétique avant d'utiliser.
Voir d'autres mises en garde sur la page suivante.

PRÉPARATION GÉNÉRALE DE LA SURFACE

Toutes les surfaces doivent être saines, sèches, propres et exemptes d'huile, de graisse, de moisissures, d'agents de démoulage, de produits de cure, de laitance ou autres substances étrangères. Pour assurer une apparence optimale, l'apprêt ou la couche de fond devra être lisse et exempte de tout défaut de surface tel que coulure, pulvérisation sèche et peau d'orange importante.

Nouvelles surfaces : Acier – Pour une application directe sur l'acier, décaper au jet d'abrasif jusqu'à ce que le métal soit presque blanc conformément aux normes SSPC-SP10 ou SSI-Sa2½. Le profil de l'acier, après le décapage, devrait être de 1,5-2,5 mils (38-63 microns) de profondeur et dentelé plutôt que bosselé (à la suite d'un grenaillage), ou nettoyer et apprêter avec l'époxy DEVRAN® 224HS, BAR-RUST® 235 ou BAR-RUST® 233H. Bloc de béton. – obturer avec l'époxy DEVRAN® 224HS, BAR-RUST® 235 ou BAR-RUST® 233H. Fibre de verre – essuyer avec le solvant, poncer légèrement et essuyer de nouveau avec le solvant. Apprêter avec le DEVRAN® 201. Planchers de béton, béton coulé – durcir au moins 30 jours.

Décaper à l'acide ou au jet d'abrasif le béton lisse, émaillé ou taché de laitance. Apprêter avec l'époxy DEVRAN® 224HS, BAR-RUST® 235 ou BAR-RUST® 233H dilué à 25% avec le diluant recommandé, ou utiliser l'enduit pénétrant PRE-PRIME® 167. Cloisons sèches – apprêter avec un apprêt vaporifuge au latex acrylique. Acier galvanisé et aluminium – enlever la saleté et les huiles avec un solvant ou avec le nettoyeur DEVPREP® 88, puis rincer à grande eau. Apprêter avec l'apprêt époxy DEVRAN® 201 ou 205. Pour une application directe sur le métal, décaper légèrement conformément à la norme SSPC-SP-7 pour créer un profil en surface.

Surfaces déjà peinturées : enlever la peinture cloquée et écaillée. Poncer légèrement les surfaces brillantes. Vérifier si il y a décollement ou saignement des anciens revêtements. Si oui, les enlever. Apprêter les surfaces nues avec l'apprêt spécifié à l'article Surfaces neuves.

MODE D'EMPLOI

Coloration : colorer la base appropriée avec les colorants CHROMA-CHEM 844. (Ne pas utiliser de colorants à base d'eau). Ajouter les colorants seulement à la portion base. Mélanger à fond avant d'ajouter la portion convertisseur. Lorsque le DEVTHANE® 359 est appliqué directement sur le métal, on obtient de meilleurs résultats en utilisant des couleurs prémélangées.

Dilution : normalement, la dilution n'est ni nécessaire ni souhaitable. Toutefois, dépendant des règlements locaux relatifs aux COV et à la qualité de l'air, une petite quantité (5% ou moins par volume) de solvants indiqués au recto peuvent être ajoutées. Une petite quantité (5% ou moins par volume) de diluant T-17 améliorera l'application au rouleau ou au pinceau. Si les règlements locaux relatifs au COV et à la qualité de l'air ne posent pas problème, et selon l'assemblage individuel de l'équipement de pulvérisation, une dilution additionnelle sera tolérée pour obtenir le fini individuel souhaité.

Mélangeage : la peinture-émail DEVTHANE® 359 est un produit à deux constituants fourni en ensembles de 5 gallons (18,925 l) et 1 gallon (3,785 l) qui contiennent la proportion adéquate d'ingrédients. Tout le contenu d'un contenant doit être mélangé avec l'autre. Il est important que les pièces d'équipement soient exemptes d'humidité et que celle-ci ne contamine pas le revêtement. Mélanger d'abord la portion base au malaxeur mécanique pour obtenir un mélange lisse et homogène. Puis ajouter le convertisseur lentement en agitant constamment. Quand tout le convertisseur a été ajouté, continuer de mélanger lentement. La durée d'utilisation du mélange est de 8 heures à 77°F (25°C). Des températures plus élevées et une humidité excessive réduiront le temps d'utilisation du revêtement, alors que des températures plus basses l'augmenteront.

Application : appliquer avec un pulvérisateur conventionnel ou sans air, un rouleau ou un pinceau. Pour la pulvérisation sans air, utiliser tout pulvérisateur sans air pneumatique, électrique ou à gaz ayant une capacité de 3000 psi (207 bars) et compatible avec des buses de 0,015 à 0,019" (0,375-0,475 mm). Des pistolets multiples et des longs tuyaux de liquide exigent des pompes ayant une capacité adéquate. Pour une pulvérisation à l'air, utiliser un pistolet DeVilbiss MBC-510, une buse « E » ou « D » et un chapeau d'air 704 ou l'équivalent. Ajuster la pression du liquide et de l'air pour obtenir une bonne forme de jet. L'application au pinceau et au rouleau peut nécessiter plusieurs couches pour obtenir l'épaisseur de feuil et/ou l'opacité requise.

Note : S'assurer que tout l'équipement de pulvérisation et les tuyaux de liquide sont propres et exempts d'eau ou de solvants non compatibles. Pour une application au pinceau, utiliser des pinceaux secs, propres et de bonne qualité. Pour une application au rouleau, utiliser des rouleaux neufs à poils courts. Ne pas appliquer sur des surfaces mouillées ou par temps très humide alors qu'une condensation ou un brouillard pourrait se déposer sur le revêtement pendant le durcissement.

Rendement superficiel spécifique : couvre 160-241 pi²/gal (3,9-5,9 m²/l) dépendant de la texture de la surface et de la porosité. Prévoir des pertes dues à la surpulvérisation ou aux aspérités des surfaces.

Temps de séchage : à 70°F (21°C) et 50% HR, prêt à recouvrir en 5 heures et sec en profondeur en 7 heures.

Nettoyage : utiliser le diluant T-9

Accélération du durcissement : on peut utiliser le catalyseur uréthane 070A0000 pour accélérer le durcissement si la température est à 40°F (5°C) ou moins. L'ajout de 1 (29,6 ml) ou 2 oz (59.12 ml) par gallon (3,785 l) réduira le temps de séchage en profondeur d'environ un tiers ou de moitié respectivement à 40°F (5°C). La durée de vie en pot sera réduite de moitié ou des trois quarts.

PRÉCAUTIONS

DANGER! LIQUIDE ET VAPEUR INFLAMMABLES. CAUSE DES BRÛLURES AUX YEUX ET À LA PEAU. NOCIF OU MORTEL EN CAS D'INGESTION. RISQUE D'ASPIRATION – PEUT PÉNÉTRER DANS LES POUMONS ET CAUSER DES DOMMAGES. NOCIF EN CAS D'INHALATION. PEUT AVOIR DES EFFETS SUR LE SYSTÈME NERVEUX CENTRAL, CAUSANT NOTAMMENT DES ÉTOURDISSEMENTS, MAUX DE TÊTE OU NAUSÉES. CAUSE L'IRRITATION DES VOIES RESPIRATOIRES. PEUT CAUSER DES RÉACTIONS ALLERGIQUES CUTANÉES ET PULMONAIRES. DANGEREUX SI ABSORBÉ PAR LA PEAU. UNE SUREXPOSITION PEUT CAUSER DES DOMMAGES AU SANG, AU FOIE ET AUX REINS. UTILISER UNIQUEMENT AVEC UNE VENTILATION ADÉQUATE. GARDER HORS DE LA PORTÉE DES ENFANTS. AVIS : les produits de cette série contiennent des solvants. Des rapports ont établi un lien entre une surexposition professionnelle répétée et prolongée aux solvants, et des dommages permanents au cerveau et au système nerveux. Un usage abusif intentionnel, en concentrant et en inhalant volontairement le contenu, peut être dangereux ou mortel. Pour toute information urgente, composer le 1 800 545-2643. Pour plus d'informations relatives à la sécurité, consulter la fiche signalétique de ce produit. Garder loin de la chaleur, des étincelles et des flammes. Ne pas fumer. Les vapeurs pourraient s'enflammer. Éteindre toutes les flammes, brûleurs, poêles, appareils de chauffage et becs brûleur et débrancher tous les moteurs et appareils électriques avant d'utiliser et jusqu'à ce que les vapeurs aient disparu. En cas de ponçage, porter un masque antipoussière pour éviter de respirer la poussière de ponçage. Ne pas respirer les vapeurs ou brumes de pulvérisation. Si vous éprouvez des larmoiements, des maux de tête ou des étourdissements, quittez l'endroit. Un respirateur bien utilisé peut offrir une protection additionnelle. Demander l'avis d'un professionnel avant son utilisation. Refermer le contenant après chaque usage. PREMIERS SOINS : en cas de contact avec la peau, bien laver rapidement à l'eau et au savon, et enlever les vêtements contaminés. En cas de contact avec les yeux, rincer immédiatement à grande eau, pendant au moins 15 minutes. Consulter un médecin de toute urgence. En cas d'ingestion, consulter immédiatement un médecin. Si l'inhalation entraîne un malaise, aller dans un endroit où l'air est frais. Si le malaise persiste ou que la respiration devient difficile, consulter un médecin. Note : ces mises en garde s'appliquent à l'ensemble des produits de cette série. Avant d'utiliser, lire et suivre les recommandations sur la FS et sur l'étiquette.

EXPÉDITION

Classification : peinture, 3 PG III, UN1263 (liquide inflammable)
Point d'éclair : 80°F (27°C)
Emballage : ensemble d'un gallon (3,785 l) — 0,8 gallon (3,04 l) de base — 0,2 gallon (0,76 l) de convertisseur
ensemble de 5 gallons (18,925 l) — 4 gallons (15,14 l) de base — 1 gallon (3,785 l) de convertisseur

Poids à l'expédition :
ensemble de 4 – 1 gallon (15,14) – 60 lbs (27,2 kg)
ensemble de 5 gallons (18,925) – 66 lbs (29,9 kg)

359KXXXX (08/01)
Formulaire n° 68656B

DEVOE HIGH PERFORMANCE COATINGS
Devoe Coatings est membre du groupe mondial ICI

8200, rue Keele
Concord ON L4K 2A5
(905) 669-1020

LIMITATION DE RESPONSABILITÉ: À notre connaissance, les données techniques contenues dans le présent document [illegible] et exactes au moment de la publication, mais peuvent changer sans préavis. Nous garantissons que notre produit est co[illegible] spécifications indiquées dans le présent document. NOUS NE FAISONS AUCUNE AUTRE GARANTIE EXPRESSE OU [illegible] NOTAMMENT NOUS NE FAISONS AUCUNE GARANTIE RELATIVE À LA QUALITÉ MARCHANDE OU À L'ADAPTATION À UN USAGE PARTICULIER. La responsabilité, le cas échéant, se limite au remplacement du produit ou au remboursement du prix d'achat. LA MAIN-D'OEUVRE ET LES COÛTS DE MAIN-D'OEUVRE, AINSI QUE LES AUTRES DOMMAGES INDIRECTS, SONT EXCLUS.

PROCÉDURE POUR PEINTURE

						COTE	4048
COMP.	GROUPE PROMEC		DATE	1-Jun-17	W.O.	W80055	
DESCRIPTION	PEINTURER STRUCTURE						
COMPLÉTÉ PAR:							
NETTOYAGE		QUA.					
SANDBLAST SABLE		QUA.					
SANDBLAST GRENAILLE D'ACIER		SSPC-SP6					

DÉLAIS POUR APPLIQUER LE PRIMER OU LA PEINTURE APRÈS LE SANDBLAST

DEGRÉ D'HUMIDITÉ	TEMPS/HEURES		DEGRÉ D'HUMIDITÉ	TEMPS/HEURES
85 A 90 %	1		60 A 69%	8
80 A 84%	2		50 A 59%	10
70 A 79%	4		50 ET MOINS	24

PRIMER ÉPOXY

COMPAGNIE:	DEVOE					COULEUR	
PRODUIT	BAR-RUST 235 2973					LIGHT GREY	
MILS PAR COUCHE HUMIDE	14.71	A	17.65	PAR COUCHE			
MILS PAR COUCHE SEC	10	A	12	PAR COUCHE		TAUX DE SOLIDE %	68
NOMBRE DE COUCHE	1						

RATIO	BASE	DURCISSEUR	DILUANT
	4	1	0 A 10%
	BAR-RUST 235	235C0910 (LENT)	XYLENE OU T-10

TEMPS DE SÉCHAGE MANIPULATION	77	°F	3.00	HRS			
DÉLAI DE RECOUVREMENT	6.00 A 720.00			HRS			
TEMPS D'INCORPORATION	0.15	MIN.				SURFACE	1900
DURÉE DE VIE EN POT	4.00	A	77	°F		PERTE	40
QUANTITÉ DE PRIMER MÉLANGE:						NOMBRE DE GALLONS	29.258

PEINTURE ÉPOXY

COMPAGNIE:	DEVOE					COULEUR	
PRODUIT	DEVTHANE 359 RAL 7030					STONE GREY	
MILS PAR COUCHE HUMIDE	5.00	A	6.67	PAR COUCHE			
MILS PAR COUCHE SEC	3	A	4	PAR COUCHE		TAUX DE SOLIDE %	60
NOMBRE DE COUCHE	1						

RATIO	BASE	DURCISSEUR	DILUANT
	4	1	0 A 5%
	DEVTHANE 359	DEVTHANE 359 CONVERTISSEUR	T-9

TEMPS DE SÉCHAGE MANIPULATION	80	°F	5.00	HRS			
DÉLAI DE RECOUVREMENT	3.00			HRS			
TEMPS D'INCORPORATION		MIN.				SURFACE	1900
DURÉE DE VIE EN POT	8.00	A	77	°F		PERTE	40
QUANTITÉ DE PEINTURE MÉLANGE:						NOMBRE DE GALLONS	11.060

NOMBRE DE MILS DE PRIMER ET DE PEINTURE SEC LA JOB TERMINÉ.	13	A	16

ÉPOXY

PROCÉDURE POUR PEINTURE

COTE	4048				
COMP.	GROUPE PROMEC	DATE	1-Jun-17	W.O.	W80055
DESCRIPTION	PEINTURER HANDRAIL				
COMPLÉTÉ PAR:					
NETTOYAGE		QUA.			
SANDBLAST SABLE		QUA.			
SANDBLAST GRENAILLE D'ACIER	SSPC-SP6				

DÉLAIS POUR APPLIQUER LE PRIMER OU LA PEINTURE APRÈS LE SANDBLAST

DEGRÉ D'HUMIDITÉ	TEMPS/HEURES	DEGRÉ D'HUMIDITÉ	TEMPS/HEURES
85 A 90 %	1	60 A 69%	8
80 A 84%	2	50 A 59%	10
70 A 79%	4	50 ET MOINS	24

PRIMER ÉPOXY

COMPAGNIE:	DEVOE			COULEUR	
PRODUIT	BAR-RUST 235 2973			LIGHT GREY	
MILS PAR COUCHE HUMIDE	14.71	A	17.65	PAR COUCHE	
MILS PAR COUCHE SEC	10	A	12	PAR COUCHE	TAUX DE SOLIDE % 68
NOMBRE DE COUCHE	1				

	BASE	DURCISSEUR	DILUANT
RATIO	4	1	0 A 10%
	BAR-RUST 235	235C0910 (LENT)	XYLENE OU T-10

TEMPS DE SÉCHAGE MANIPULATION	77	°F	3.00	HRS	
DÉLAI DE RECOUVREMENT	6.00 A 720.00			HRS	
TEMPS D'INCORPORATION	0.15	MIN.			SURFACE 1450
DURÉE DE VIE EN POT	4.00	A	77	°F	PERTE 200
QUANTITÉ DE PRIMER MÉLANGE:					NOMBRE DE GALLONS 47.846

PEINTURE ÉPOXY

COMPAGNIE:	DEVOE			COULEUR	
PRODUIT	DEVTHANE 359 RAL 1023			SAFETY YELLOW	
MILS PAR COUCHE HUMIDE	5.00	A	6.67	PAR COUCHE	
MILS PAR COUCHE SEC	3	A	4	PAR COUCHE	TAUX DE SOLIDE % 60
NOMBRE DE COUCHE	1				

	BASE	DURCISSEUR	DILUANT
RATIO	4	1	0 A 5%
	DEVTHANE 359	DEVTHANE 359 CONVERTISSEUR	T-9

TEMPS DE SÉCHAGE MANIPULATION	80	°F	5.00	HRS	
DÉLAI DE RECOUVREMENT	3.00			HRS	
TEMPS D'INCORPORATION		MIN.			SURFACE 1450
DURÉE DE VIE EN POT	8.00	A	77	°F	PERTE 200
QUANTITÉ DE PEINTURE MÉLANGE:					NOMBRE DE GALLONS 18.087

NOMBRE DE MILS DE PRIMER ET DE PEINTURE SEC LA JOB TERMINÉ. 13 A 16

ÉPOXY

NORMEX	RAPPORT DE JET DE SABLE ET RECOUVREMENT	W 800 55 1

Client : CONSTRUCTION PROTEC P.O.# : _____

Project : 4048 Quote No. : _____

Inspected by : _____ Date : _____

EQUIPMENT : _____

SANDBLAST (jet de sable)

SANDBLAST MATERIAL (matériel) : Grit INITIALS : BW DATE : 10-06-17

SANDBLAST PROFILE(Add PRESS-O-FILM below) **(profil du jet de sable)** (ajouter PRESS-O-FILM dans le rectangle)

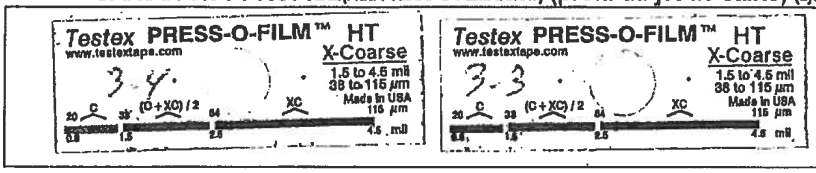

PRIMER (couche primaire)

PRODUCT (produit) : Bar Rust 235 COLOUR : grey NO. OF COATS (nombre de couches) : 1-2

DRYING TEMP (temp. de séchage) : 24 DRYING TIME (hrs) (temps de séchage) : 24 % HUMIDITY : 22

AVG MILS/COAT (DFT) (mils par couche sec) : 1st 7 et 8 / 2nd 7 et 8 INITIALS : BV DATE : 10-06-17 / 11-06-17

TOP COAT (peinture)

PRODUCT (produit) : DEVOE 359 COLOUR : Stone grey NO. OF COATS (nombre de couches) : 1

DRYING TEMP. (Temp. de séchage) : 24 DRYING TIME (hrs) (temps de séchage) : 24 % HUMIDITY : 25

AVG MILS/COAT (DFT) (mils par couche sec) : 12 et 20 INITIALS : _____ DATE : 12-06-17

FINAL INSPECTION: _____ DATE : _____
SIGNATURE

Remarks:

_____

_____

_____

_____

NORMEX	RAPPORT DE JET DE SABLE ET RECOUVREMENT	W 80055 1

Client : Construction Promec P.O.# : _____

Project : 4048 Quote No. : _____

Inspected by : _____ Date : _____

EQUIPMENT : _____

SANDBLAST (jet de sable)

SANDBLAST MATERIAL (matériel) : acier INITIALS : BW DATE : 12-06-17

SANDBLAST PROFILE(Add PRESS-O-FILM below) **(profil du jet de sable)** (ajouter PRESS-O-FILM dans le rectangle)

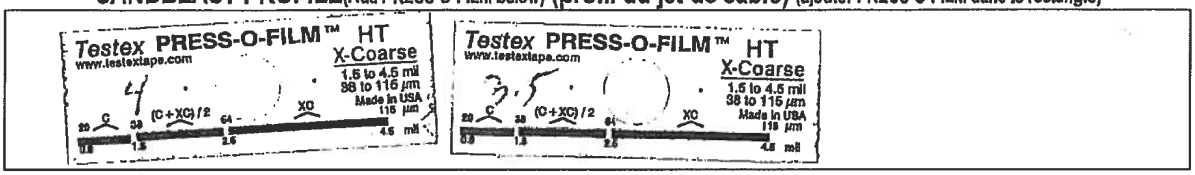

PRIMER (couche primaire)

PRODUCT (produit) : BAR-ROST 235 COLOUR : gris NO. OF COATS (nombre de couches) : 1-2

DRYING TEMP (temp. de séchage) : 24 DRYING TIME (hrs) (temps de séchage) : 24 % HUMIDITY : 22

AVG MILS/COAT (DFT) (mils par couche sec) : 12 2nd 8 / 22 2nd 8 INITIALS : BV DATE : 10-06-17 / 10-06-17

TOP COAT (peinture)

PRODUCT (produit) : DEVTHANE 359 COLOUR : Stone grey NO. OF COATS (nombre de couches) : 1

DRYING TEMP. (Temp. de séchage) : 24 DRYING TIME (hrs) (temps de séchage) : 24 % HUMIDITY : 25

AVG MILS/COAT (DFT) (mils par couche sec) : 12 20 INITIALS : BV DATE : 12-06-17

FINAL INSPECTION: _____ DATE : _____
SIGNATURE

Remarks:

_____

_____

_____

_____

NORMEX	RAPPORT DE JET DE SABLE ET RECOUVREMENT	W8055 1

Client : Construction Pharma

P.O.# : _____

Project : 4048

Quote No. : _____

Inspected by : _____

Date : _____

EQUIPMENT : _____

SANDBLAST (jet de sable)

SANDBLAST MATERIAL (matériel) : Grit INITIALS : MB DATE : 13-06-17

SANDBLAST PROFILE (Add PRESS-O-FILM below) **(profil du jet de sable)** (ajouter PRESS-O-FILM dans le rectangle)

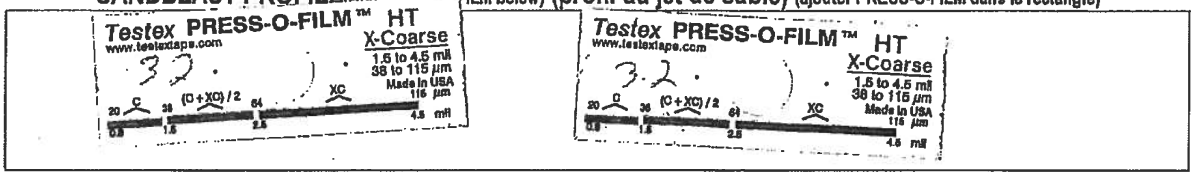

PRIMER (couche primaire)

PRODUCT (produit) : Amerlock 2 3.5 COLOUR : Light grey NO. OF COATS (nombre de couches) : 1 & 2

DRYING TEMP (temp. de séchage) : 24 DRYING TIME (hrs) (temps de séchage) : 24 % HUMIDITY : 23

AVG MILS/COAT (DFT) (mils par couche sec) : 1 2 to 3 / 2 to 8 INITIALS : MB DATE : 13-06-17 / 14-06-17

TOP COAT (peinture)

PRODUCT (produit) : Perlthane 359 COLOUR : stone grey NO. OF COATS (nombre de couches) : 1

DRYING TEMP. (Temp. de séchage) : 24 DRYING TIME (hrs) (temps de séchage) : 24 % HUMIDITY : 18

AVG MILS/COAT (DFT) (mils par couche sec) : 2 to 4 INITIALS : MB DATE : 15-06-17

FINAL INSPECTION: _____ DATE : _____
SIGNATURE

Remarks:

_____

_____

_____

_____

NORMEX	RAPPORT DE JET DE SABLE ET RECOUVREMENT	W8005 5 1

Client : Construction Promec P.O.# : _____

Project : 4048 Quote No. : _____

Inspected by : _____ Date : _____

EQUIPMENT : _____

SANDBLAST (jet de sable)

SANDBLAST MATERIAL (matériel) : Alum INITIALS : [illegible] DATE : 13-06-17

PROFILE (Add PRESS-O-FILM below) (profil du jet de sable) (ajouter PRESS-O-FILM dans le rectangle)

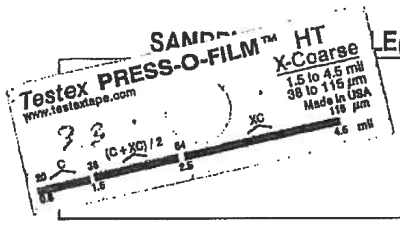

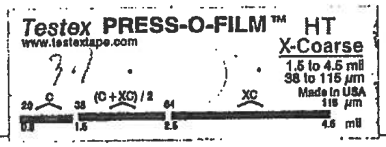

PRIMER (couche primaire)

PRODUCT (produit) : Bar Rust 235 COLOUR : light grey NO. OF COATS (nombre de couches) : 1-2

DRYING TEMP (temp. de séchage) : 24 DRYING TIME (hrs) (temps de séchage) : 24 % HUMIDITY : 23

AVG MILS/COAT (DFT) (mils par couche sec) : 1e 7.98 2e 7.98 INITIALS : [illegible] DATE : 13-06-17 14-06-17

TOP COAT (peinture)

PRODUCT (produit) : Devtha 359 COLOUR : Stone grey NO. OF COATS (nombre de couches) : 1

DRYING TEMP. (Temp. de séchage) : 24 DRYING TIME (hrs) (temps de séchage) : 24 % HUMIDITY : 18

AVG MILS/COAT (DFT) (mils par couche sec) : 12.17 INITIALS : [illegible] DATE : 15-06-17

FINAL INSPECTION: _____ DATE : _____
SIGNATURE

Remarks:

_____

_____

_____

_____

NORMEX	RAPPORT DE JET DE SABLE ET RECOUVREMENT	W 800 55	1

Client : Construction Bromec P.O.# : _____

Project : 4048 Quote No. : _____

Inspected by : _____ Date : _____

EQUIPMENT : _____

SANDBLAST (jet de sable)

SANDBLAST MATERIAL (matériel) : acier INITIALS : [illegible] DATE : 16-07-17

SANDBLAST PROFILE (Add PRESS-O-FILM below) (profil du jet de sable) (ajouter PRESS-O-FILM dans le rectangle)

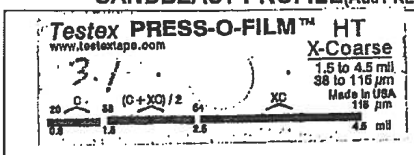

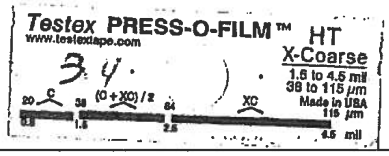

PRIMER (couche primaire)

PRODUCT : Ba ms 235 (produit) COLOUR : gris NO. OF COATS : 1.2 (nombre de couches)

DRYING TEMP : 24 (temp. de séchage) DRYING TIME (hrs) : 24 (temps de séchage) % HUMIDITY: 30

AVG MILS/COAT (DFT) : 1e 7.08 2e 7.08 (mils par couche sec) INITIALS : [illegible] DATE : 16-06-17 17-06-17

TOP COAT (peinture)

PRODUCT : Devatrane 359 (produit) COLOUR : Stone gray NO. OF COATS : 1 (nombre de couches)

DRYING TEMP. : 24 Temp. de séchage) DRYING TIME (hrs) : 24 (temps de séchage) % HUMIDITY : 28

AVG MILS/COAT (DFT) : 10 @ 15 (mils par couche sec) INITIALS : [illegible] DATE : 19-06-17

FINAL INSPECTION: _____ SIGNATURE DATE : _____

Remarks:

_____

_____

_____

_____

NORMEX	RAPPORT DE JET DE SABLE ET RECOUVREMENT	W 900 55 1

Client : Construction Phonec P.O.# : _____

Project : 4048 Quote No. : _____

Inspected by : _____ Date : _____

EQUIPMENT : _____

SANDBLAST (jet de sable)

SANDBLAST MATERIAL (matériel) : acier INITIALS : MR DATE : 16-07-17

SANDBLAST PROFILE(Add PRESS-O-FILM below) **(profil du jet de sable)** (ajouter PRESS-O-FILM dans le rectangle)

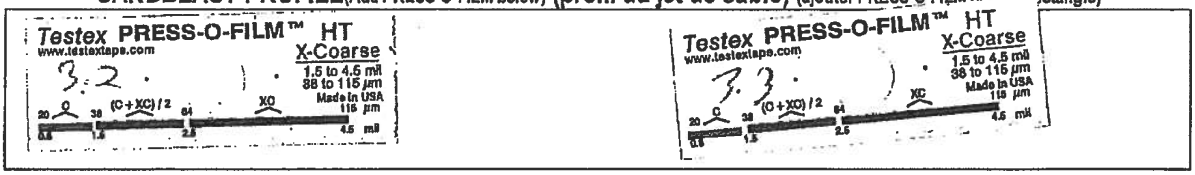

PRIMER (couche primaire)

PRODUCT : Barrier 235 (produit) COLOUR : gris NO. OF COATS : 1-2 (nombre de couches)

DRYING TEMP : 24 (temp. de séchage) DRYING TIME (hrs) : 24 (temps de séchage) % HUMIDITY: 30

AVG MILS/COAT (DFT) : 1st 7.8 2nd 7.08 (mils par couche sec) INITIALS : MR DATE : 16-06-17 17-06-17

TOP COAT (peinture)

PRODUCT : Devthane 379 (produit) COLOUR : jaune securit NO. OF COATS : 1 (nombre de couches)

DRYING TEMP. : 24 Temp. de séchage) DRYING TIME (hrs) : 24 (temps de séchage) % HUMIDITY : 28

AVG MILS/COAT (DFT) : lot 15 (mils par couche sec) INITIALS : MR DATE : 19-06-17

FINAL INSPECTION: _____ DATE : _____
SIGNATURE

Remarks:

_____

_____

_____

_____

NORMEX

Work Order Check List

Client: CONSTRUCTION PROMEC Quote: 4048 Work Order: 80049

Part Description: (11) CONTAINER CATWALK

N/A	YES	
☐	☑	Validate Material & Preparation
☐	☑	Visual Inspection complete. (Sharp edges, spatter, welding as per drawing...)
☐	☑	Dimensional Report.
☐	☑	Weld Map.
☐	☑	NDT (LPI, MPI, UT, X-Ray and Visual) refer to ITP & quality assurance program.
☐	☑	All parts fit as an assembly if required by production manager. (Revise packing list?)
☐	☑	Shop bolts required? If yes tightened. (How?)
☐	☑	Sandblasting & Coating Report.
☐	☑	Pictures.
☐	☑	All items on W.O. accounted for. (Work order screening)
☐	☑	Components packaged for shipping. (Includes ship loose items, belts, seals, motors....)
☑	☐	Are all extra materials and consumables entered on W.O.?
☑	☐	Are all error reports filled and attached?
☑	☐	Are all non conformance documented?

Note: Once complete and signed, returned to Project Manager.

Remark: Des fer angles ont été ajoutés sous les marches pour pouvoir les fixer dans les lisses

Project Leader: Emmanuel Quitin Date: 28/06/2017

Quality Control: Emmanuel Quitin Date: 28/06/2017

Production Manager: _____ Date: _____

Qualification pour soudeur

Valide uniquement lorsqu'employé dans une compagnie certifiée par le CWB

Transférable Soudeur

Nom: MARCELLIN PAUL
Employeur: Normex Métal, La Sarre, QC
Gamme d'épaisseur: 3mm et plus

Date d'exp: mai 03, 2019

Matériau: Acier au carbone
Procédé: FCAW/MCAW
Norme: CSA W47.1
Catégorie: S

Mode: Semi-Automatique
Mécanisé avec électrode unique
Automatique avec électrode unique

Classe: PLAT/HORIZONTALE/VERTICALE(M)/PLAFOND

Voir les conditions au verso

L09


Qualification pour soudeur
Valide uniquement lorsqu'employé dans une compagnie certifiée par le CWB
Transferable Soudeur
Nom : STEVE LAMOUREUX
Date d'exp. : juil. 30, 2017
Employeur : Normex Metal La Sarre QC
Gamme d'épaisseur : 3mm et plus
Matériau : Acier au carbone
Procédé : CAW/MCAW
Mode : Semi-Automatique
Mécanisé avec électrode unique
Automatique avec électrode unique
Norme : CSA W47.1
Catégorie : S
Classe : PLAT/HORIZONTAL/VERTICAL (M/PLAFOND)
Voir les conditions au verso

Soudeur # L06



Qualification pour soudeur

Valide uniquement lorsqu'employé dans une compagnie certifiée par le CWB

Transferable Soudeur

Nom: LOUIS CARON
Date d'exp.: févr. 16, 2018

Employeur: Normex Métal, La Sarre, QC

Gamme d'épaisseur: 3mm et plus

Matériau: Acier au carbone
Procédé: FCAW/MCAW
Norme: CSA W47.1
Catégorie: B

Mode: Semi-Automatique
Mécanisé avec électrode unique
Automatique avec électrode unique

Classe: PLAT/HORIZONTALE/VERTICALE(M)/PLAFOND

Voir les conditions au verso

L-03

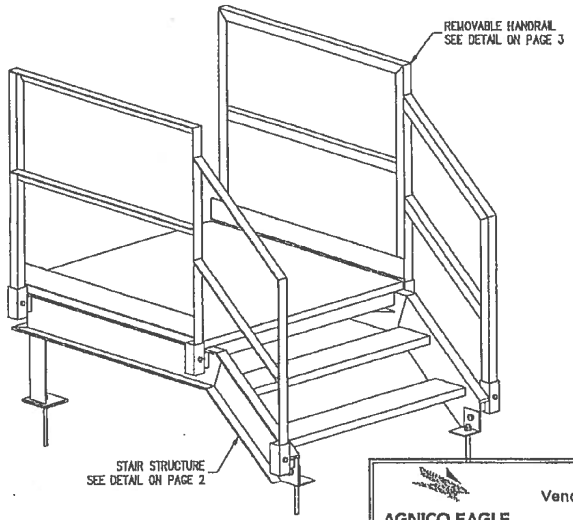

ISOMETRIC VIEW
CONTAINER CATWALK

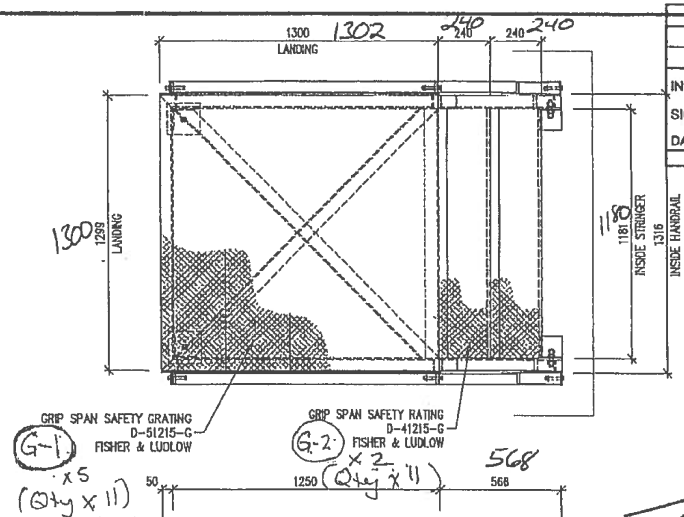

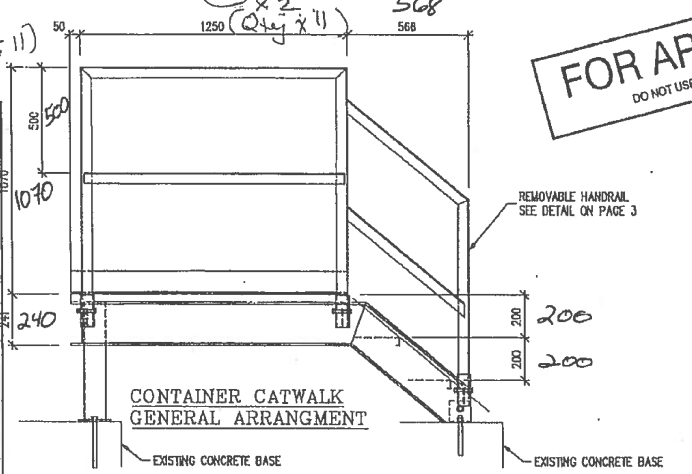

CONTAINER CATWALK
GENERAL ARRANGMENT

NORMEX METAL		
CONRÔLE DE QUALITÉ		
CONFORME ✓	OUI ✓	NON
INSPECTÉ PAR: Emmanuel Ouellet		
SIGNATURE: Emmanuel Ouellet		
DATE: 28 / 06 / 2017		
JOUR	MOIS	ANNÉE

Soudage fait par : L03 - L06 - L09

FOR APPROVAL
DO NOT USE FOR FABRICATION

WSP SHOP DRAWING DATA SHEET

Affixing this stamp confirms that an administrative approval and/or a verification of compliance with shop drawings or specifications was made, but does not entail the liability of the author of the work or its owner with regards to this shop drawing or data sheet, for which the contractor is the sole responsible.

☑ Reviewed ☐ Reviewed as noted
☐ Rejected ☐ Filed for records

The contractor, supplier and/or sub-contractor is responsible for: confirming and coordinating all quantities and dimensions; selecting fabrication processes and techniques of construction; coordinating his or her work with that of all other trades and performing all work in a safe and satisfactory manner.

By: Joël Morliere Date: 2017/05/23
G-ADM-2.22-82-118-2 Project #: 161-06440-40

AGNICO EAGLE Vendor Document Status

1 ☐ Proceed to next submission and status.
2 ☐ Proceed with exceptions as noted to next submission and status.
3 ☐ Do not proceed. Revise as noted and resubmit next submission and status.
4 ☑ Complete, no further submission required.

By: Joël Morliere Date: 2017-05-23

Review and authorization to fabricate are only for general conformance with the design concept of the Project as expressed in the Contract Documents. Sole responsibility for the accuracy and completeness of this document, including but not limited to dimensions and quantities, remains with the Supplier/Contractor. Agnico Eagle does not warrant the accuracy or completeness of any of the information contained herein, nor does Agnico Eagle authorize or approve any construction means, methods, techniques, sequences or any safety precautions or procedures.

Agnico Eagle No. 6515-C-270-007-245-SPD-0001 R: Sub001

DOCUMENT FOR INFORMATION

16 mai 2017 21:27:16, marcli, C:\Mario Cliche EXP\Clients\Normex\Escaliers reservoir\60 Réalisation\999-00048075-PP - Escalier pour réservoir\Details\VUE ISO.dwg

Révision :			
AA	2017-05-10	FOR APPROVAL	MC
No	Date (a-m-j)	Description	Par

Client : NORMEX LA SARRE, QUEBEC (TEL.)819-333-1200 (FAX)819-333-1212

exp. Les Services exp inc.

Projet : AGNICO EAGLE - MELIADINE DIVISION - FUEL DISTRIBUTION			
Titre : CONTAINER CATWALK STRUCTURAL GENERAL ARRANGEMENT			
Approuvé par : JONATHAN FAUCHER Ing	Dessiné par : MARIO CLICHE Ing.	Date : 2017-05-10	Page : 1 de 4
Dossier : 999-00048075-PP	Numéro de dessin : NMOI - 00048075 - A0 - S01 - AA		

16 mai 2017 21:26:56, marcil, C:\Mario Cliche EXP\Clients\Normex\Escaliers reservoir\60 Réalisation\999-00048075-PP - Escalier pour réservoir\Details\GA_Page 2.dgn

NORMEX MÉTAL
CONTRÔLE DE QUALITÉ
CONFORME ✓ OUI NON
INSPECTÉ PAR: EMMANUEL QUELLET
SIGNATURE: Emmanuel Quellet
DATE: 28 / 06 / 2017 (JOUR / MOIS / ANNÉE)

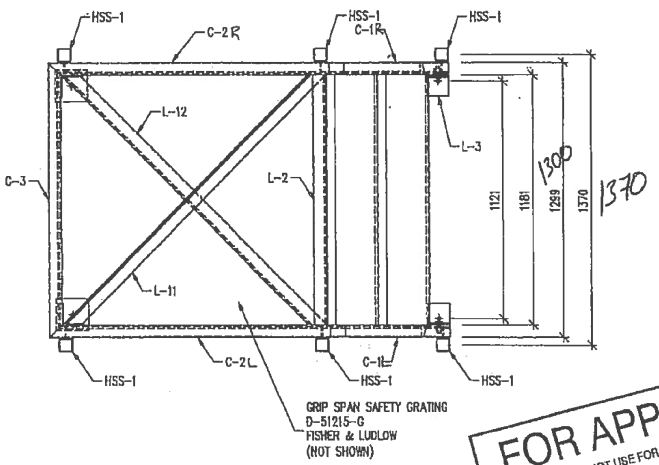

FOR APPROVAL
DO NOT USE FOR FABRICATION

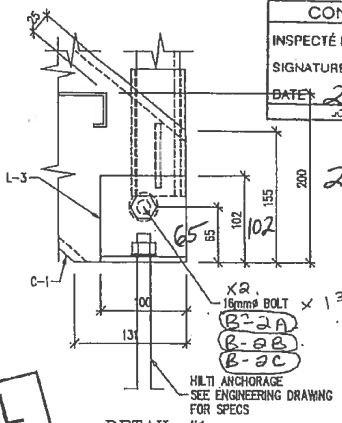

DETAIL #1

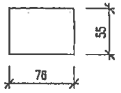

6x PL-1 PL 6.3x55x76-A36 ✓
(Qty x 11)

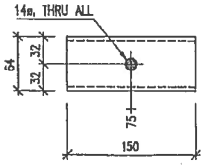

6x HSS-1 HS64x64x4.8-A500 ✓
(Qty x 11)

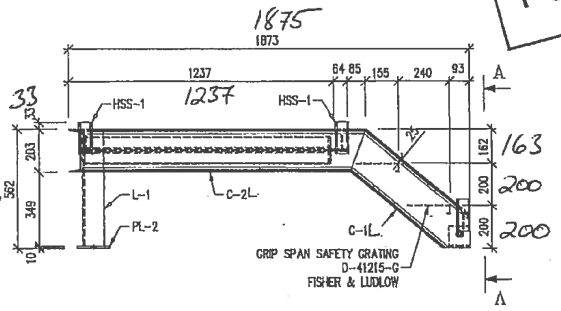

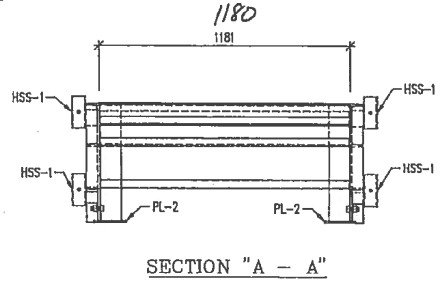

SECTION "A - A"

1 REQ'D STAIR STRUCTURE ARRANGEMENT

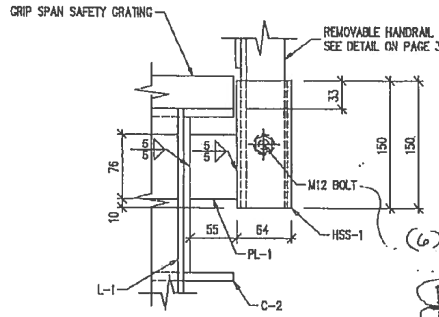

DETAIL #1

2 1/16" grip, 8" Lg

Révision :			
No	Date (a-m-j)	Description	Par
AA	2017-05-10	FOR APPROVAL	MC

Client :
NORMEX
LA SARRE, QUEBEC
(TEL.)819-333-1200
(FAX)819-333-1212

exp.
Les Services exp Inc.
11 rue Bell, bureau 200
Rouyn-Noranda, QC J9X 2A3
CANADA
www.exp.com

Projet :	AGNICO EAGLE - MEILADINE DIVISION - FUEL DISTRIBUTION
Titre :	CONTAINER CATWALK STRUCTURAL STAIR DETAILS

Approuvé par : JONATHAN FAUCHER ing.	Dessiné par : MARIO CLICHE ing.	Date : 2017-05-10	Page : 2 de 4
Dossier : 999-00048075-PP	Numéro de dessin : NMOI - 00048075 - A0 - S01 - AA		

NORMEX

Work Order Check List

Client: CONSTRUCTION PROMEC Quote: 4048 Work Order: 800665

Part Description: CONTAINER CATWALK HANDRAILS (11L + 11R)

N/A	YES	
☐	☑	Validate Material & Preparation
☐	☑	Visual inspection complete. (Sharp edges, spatter, welding as per drawing...)
☐	☑	Dimensional Report.
☐	☑	Weld Map.
☐	☑	NDT (LPI, MPI, UT, X-Ray and Visual) refer to ITP & quality assurance program.
☐	☑	All parts fit as an assembly if required by production manager. (Revise packing list?)
☑	☐	Shop bolts required? If yes tightened. (How?)
☐	☑	Sandblasting & Coating Report.
☐	☑	Pictures.
☐	☑	All items on W.O. accounted for. (Work order screening)
☐	☑	Components packaged for shipping. (Includes ship loose items, belts, seals, motors....)
☑	☐	Are all extra materials and consumables entered on W.O.?
☑	☐	Are all error reports filled and attached?
☑	☐	Are all non conformance documented?

Note: Once complete and signed, returned to Project Manager.

Remark: Les gardes-corps ont été fabriquées dans un gabarit afin d'en assurer l'exactitude et la similitude

Project Leader: Emmanuel Quette Date: 28/06/2017

Quality Control: Emmanuel Quette Date: 28/06/2017

Production Manager: _____ Date: _____

Qualification pour soudeur

Valide uniquement lorsqu'employé dans une compagnie certifiée par le CWB

Transférable Soudeur

Nom: SAMUEL GOULET
Employeur: Normex Métal, La Sarre, QC
Gamme d'épaisseur: 3mm et plus

Mode: MANUEL

Date d'exp: mars 15, 2019

Matériau: Acier au carbone
Procédé: SMAW
Norme: CSA W47.1
Catégorie: S
Électrode: F4

Classe: PLAT/HORIZONTALE/VERTICALE(M)/PLAFOND

Voir les conditions au verso

Qualification pour soudeur

Valide uniquement lorsqu'employé dans une compagnie certifiée par le CWB

Transférable Soudeur

Nom: SAMUEL GOULET
Employeur: Normex Métal, La Sarre, QC
Gamme d'épaisseur: 3mm et plus

Mode: Semi-Automatique
Mécanisé avec électrode unique
Automatique avec électrode unique

Date d'exp: mars 15, 2019

Matériau: Acier au carbone
Procédé: FCAW/MCAW
Norme: CSA W47.1
Catégorie: S

Classe: PLAT/HORIZONTALE/VERTICALE(M)/PLAFOND

Voir les conditions au verso

L 25



Qualification pour soudeur

Valide uniquement lorsqu'employé dans une compagnie certifiée par le CWB

Transférable Soudeur

Nom: LOUIS CARON

Employeur: Normex Métal, La Sarre, QC

Gamme d'épaisseur: 3mm et plus

Mode: Semi-Automatique
Mécanisé avec électrode unique
Automatique avec électrode unique

Classe: PLAT/HORIZONTALE/VERTICALE (M)/PLAFOND

Date d'exp. févr. 16, 2018

Matériau: Acier au carbone

Procédé: FCAW/MCAW

Norme: CSA W47.1

Catégorie: S

Voir les conditions au verso

L-03

Qualification pour soudeur

Valide uniquement lorsqu'employé dans une compagnie certifiée par le CWB

Transferable Soudeur

Nom: ALEXANDRE JULIEN
Employeur: Normex Métal, La Sarre, QC
Gamme d'épaisseur 3mm et plus

Mode: Semi-Automatique
Mécanisé avec électrode unique
Automatique avec électrode unique
Classe: PLAT

Date d'exp: nov. 17, 2010

Matériau: Acier au carbone
Procédé: FCAW/MCAW
Norme: CSA W47.1
Catégorie: S

Voir les conditions au verso

Qualification pour soudeur

Valide uniquement lorsqu'employé dans une compagnie certifiée par le CWB

Transferable Soudeur

Nom: ALEXANDRE JULIEN
Employeur: Normex Métal, La Sarre, QC
Gamme d'épaisseur: 3mm et plus

Mode: MANUEL

Classe: PLAT

Date d'exp: nov. 17, 2010

Matériau: Acier au carbone
Procédé: SMAW
Norme: CSA W47.1
Catégorie: S
Électrode: F4

Voir les conditions au verso

L 38

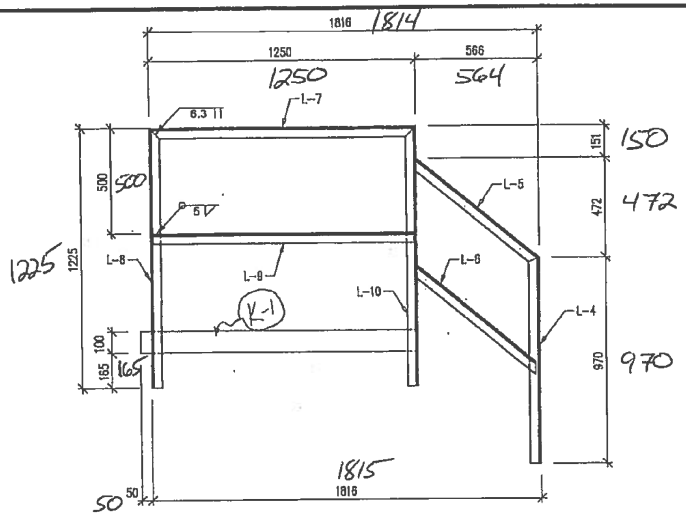

1L/1R REQ'D REMOVABLE HANDRAIL ARRANGEMENT

Qty X 11.

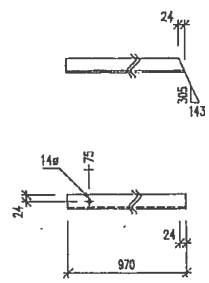

2x L-4 L51X51X6.4-300W

Qty x 11.

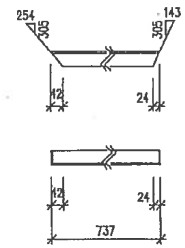

2x L-5 L51X51X6.4-300W

Qty x 11

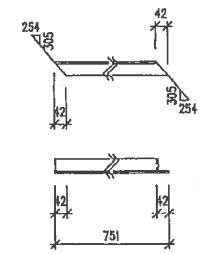

2x L-6 L51X51X6.4-300W

Qty x 11.

FOR APPROVAL
DO NOT USE FOR FABRICATION

NORMEX MÉTAL		
CONRÔLE DE QUALITÉ		
CONFORME ✓	QUI	NON
INSPECTÉ PAR: Emmanuel Ouellet		
SIGNATURE: Emmanuel Ouellet		
DATE: 28 / 06 / 2017		
JOUR	MOIS	ANNÉE

Soudage fait par:
L38 - L03 - L25

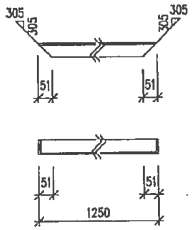

2x L-7 L51X51X6.4-300W

Qty x 11.

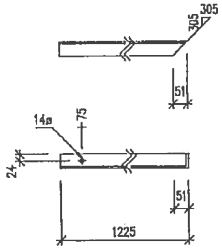

2x L-8 L51X51X6.4-300W

Qty x 11.

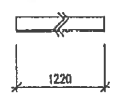

2x L-9 L51X51X6.4-300W

Qty x 11

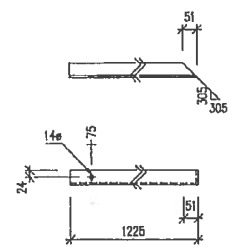

2x L-10 L51X51X6.4-300W

Qty x 11.

Révision :			
AA	2017-05-10	FOR APPROVAL	MC
No	Date (a-m-j)	Description	Par

Client :

NORMEX
LA SARRE, QUEBEC
(TEL.)819-333-1200
(FAX)819-333-1212

exp.
Les Services exp Inc.
1 : +1.819.762.2666 | f : +1.819.762.4814
25, 19e Rue, bureau 200
Rouyn-Noranda, QC J9X 2A3
CANADA
www.exp.com

Projet : AGNICO EAGLE - MELIADINE DIVISION - FUEL DISTRIBUTION			
Titre : CONTAINER CATWALK STRUCTURAL HANDRAIL DETAILS			
Approuvé par : JONATHAN FAUCHER Ing.	Dessiné par : MARIO CLICHE Ing.	Date : 2017-05-10	Page : 4 de 4
Dossier : 999-00048075-PP	Numéro de dessin : NMOI - 00048075 - A0 - S01 - AA		

16 mai 2017 21:25:23, mcrcil, C:\Mario Cliche EXP\Clients\Normex\Escaliers reservoir\60 Réalisation\999-00048075-PP - Escalier pour réservoir\Details\6.dwg

NORMEX

Work Order Check List

Client: CONSTRUCTION PROMEC Quote: 4048 Work Order: 80050

Part Description: (1) DIKE CATWALK SECTION 1 (1) DIKE CATWALK SECTION 2

N/A	YES	
☐	☑	Validate Material & Preparation
☐	☑	Visual Inspection complete. (Sharp edges, spatter, welding as per drawing...)
☐	☑	Dimensional Report.
☐	☑	Weld Map.
☐	☑	NDT (LPI, MPI, UT, X-Ray and Visual) refer to ITP & quality assurance program.
☐	☑	All parts fit as an assembly if required by production manager. (Revise packing list?)
☐	☑	Shop bolts required? If yes tightened. (How?)
☐	☑	Sandblasting & Coating Report.
☐	☑	Pictures.
☐	☑	All items on W.O. accounted for. (Work order screening)
☐	☑	Components packaged for shipping. (Includes ship loose items, belts, seals, motors....)
☑	☐	Are all extra materials and consumables entered on W.O.?
☑	☐	Are all error reports filled and attached?
☑	☐	Are all non conformance documented?

Note: Once complete and signed, returned to Project Manager.

Remark: Des fer angles ont été ajoutés sous les marches afin de les fixer. Ceci est le contrôle pour 1 dike catwalk sur 3 total.

Project Leader: Emmanuel Ouellet Date: 29/06/2017

Quality Control: Emmanuel Ouellet Date: 29/06/2017

Production Manager: _____ Date: _____

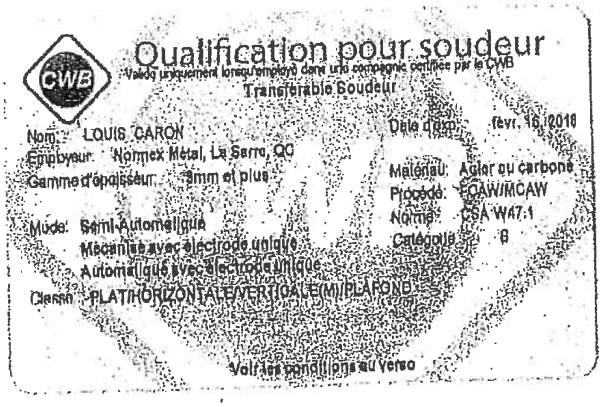
Qualification pour soudeur
Valide uniquement lorsqu'employé dans une compagnie certifiée par le CWB
Transférable Soudeur
Nom: LOUIS CARON
Employeur: Normex Métal, La Sarre, QC
Gamme d'épaisseur: 3mm et plus
Date d'exp.: févr. 16, 2018
Matériau: Acier au carbone
Procédé: FCAW/MCAW
Norme: CSA W47.1
Catégorie: B
Mode: Semi-Automatique
Mécanisé avec électrode unique
Automatique avec électrode unique
Classe: PLAT/HORIZONTALE/VERTICALE(M)/PLAFOND
Voir les conditions au verso

L-03


Qualification pour soudeur
Valide uniquement lorsqu'employé dans une compagnie certifiée par le CWB
Transférable Soudeur
Nom: STEVE LAMOUREUX
Employeur: Normex Metal Inc Sarre, QC
Épaisseur: 3mm et plus
Mode: Semi-automatique
Mécanisé avec électrode unique
Automatique avec électrode unique
Date d'examen: Juil. 30, 2017
Matériau: Acier au carbone
Procédé: FCAW/MCAW
Norme: CSA W47.1
Catégorie: S
Voir les conditions au verso

Soudeur # 106

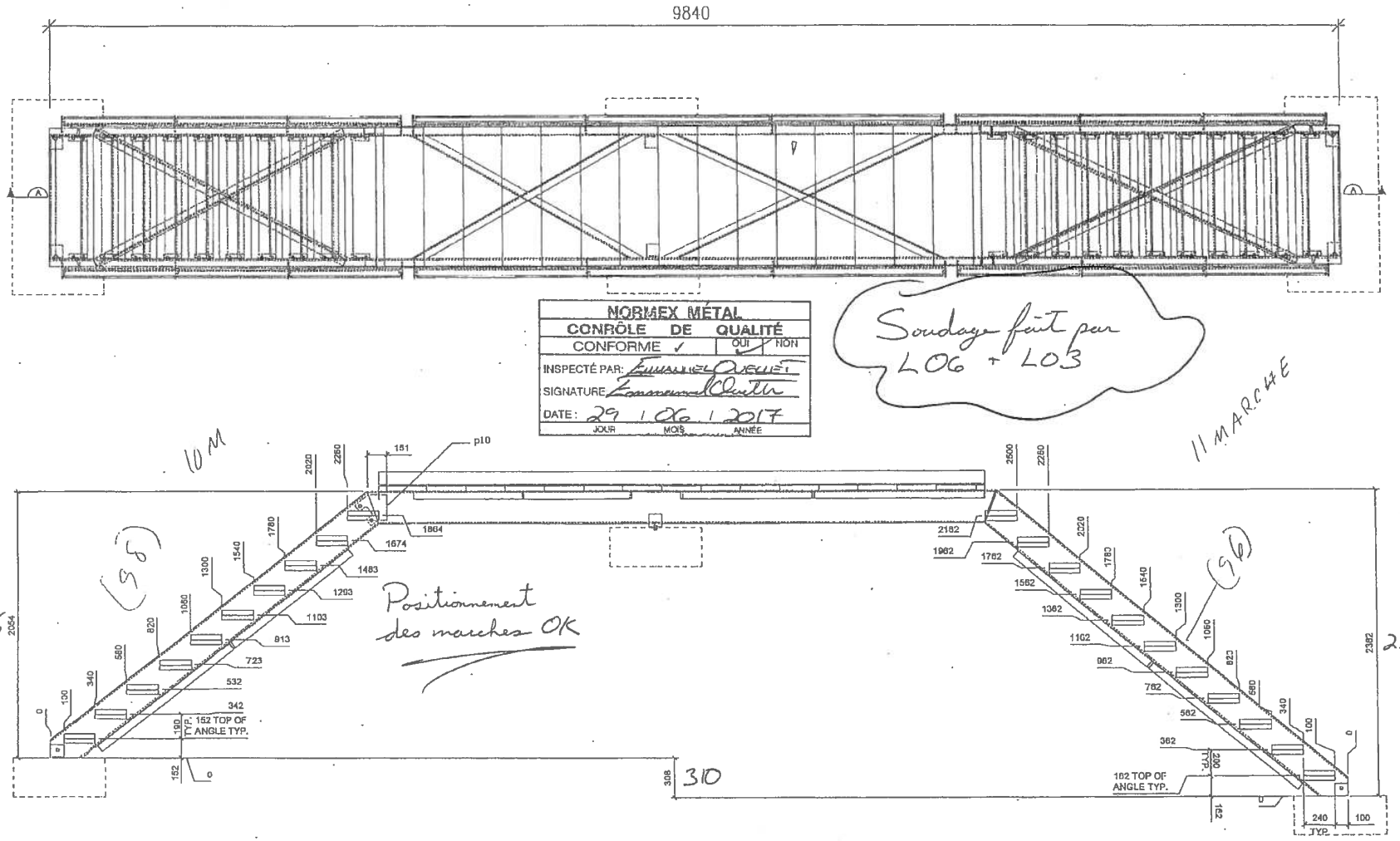

DIKE STAIR ARRANGEMENT – SECTION A–A

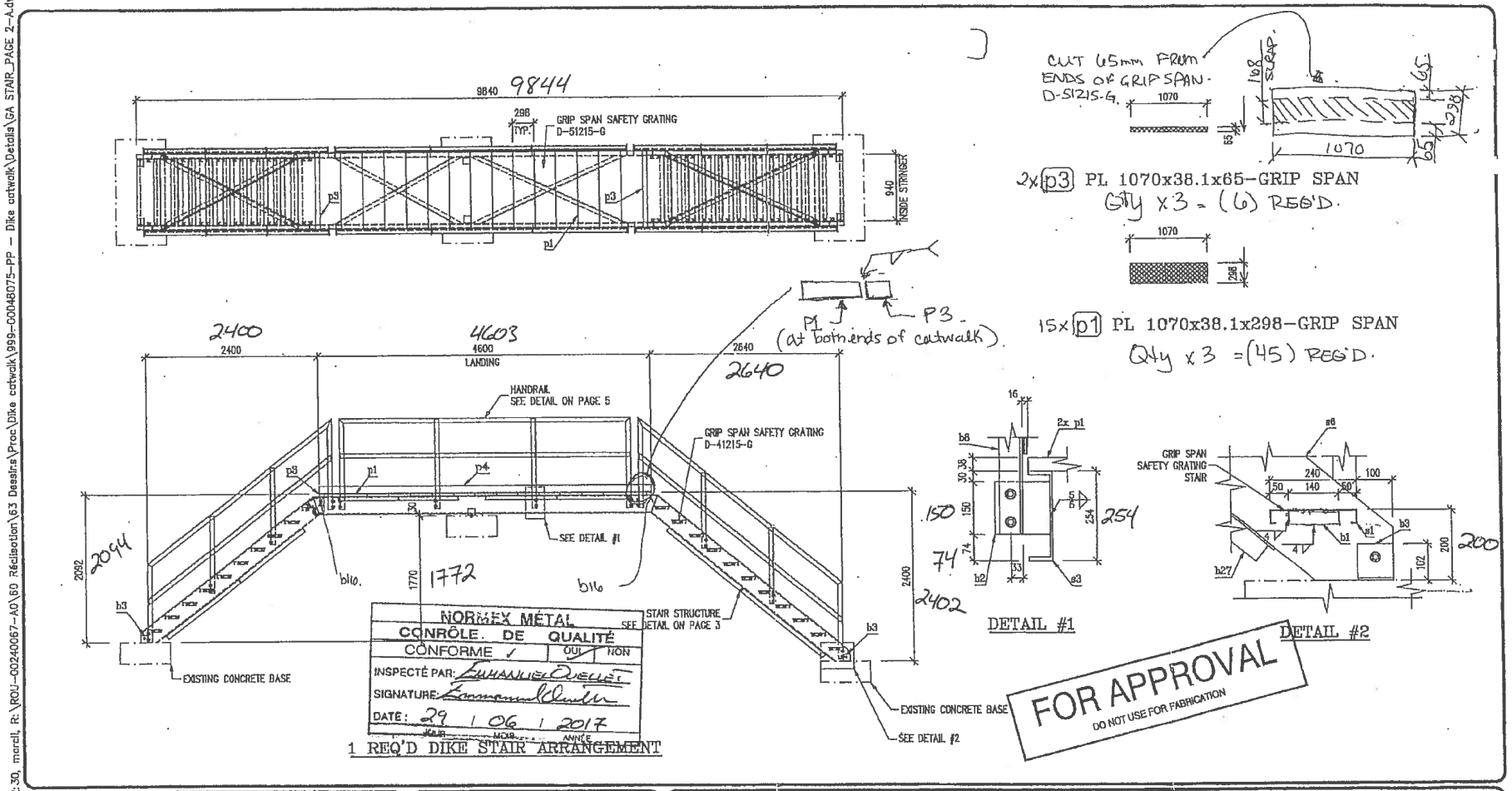

29 mai 2017 17:02:30, marcil, R:\ROU-00240067-A0\60 Réalisation\63 Dessins\Proc\Dike catwalk\999-00048075-PP - Dike catwalk\Details\GA STAIR_PAGE 2-A.dw

Révision :			
BB	2017-05-20	HANDRAIL & STRINGER MODIFICATION	MC
AA	2017-05-16	FOR APPROVAL	MC
No	Date (a-m-j)	Description	Par

Client :

NORMEX
LA SARRE, QUEBEC
(TEL.)819-333-1200
(FAX)819-333-1212

exp.
Les Services exp Inc.
1 : +1.819.762.7686 | 4 : +1.819.762.4814
28, 18e Rue, Bureau 200
Rouyn-Noranda, QC J9X 2N3
CANADA
www.exp.com

Projet :	AGNICO EAGLE - MELIADINE DIVISION - FUEL DISTRIBUTION
Titre :	DIKE CATWALK STRUCTURAL CATWALK ARRANGEMENT
Approuvé par : JONATHAN FAUCHER Ing.	Dessiné par : MARIO CLICHE Ing.
Date : 2017-05-16	Page : 2 de 6
Dossier : 999-00048075-PP	Numéro de dessin : NMOI - 00048075 - A0 - S03 - BB

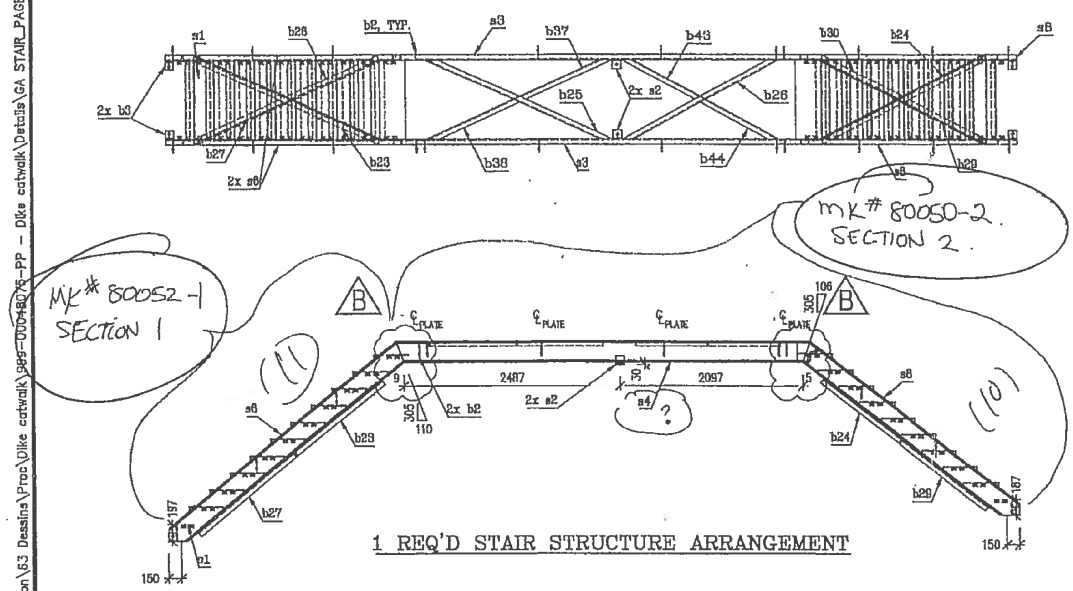

1 REQ'D STAIR STRUCTURE ARRANGEMENT

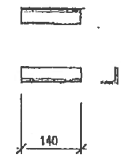

42x b1 L38X38X4.8-300W
Qty x 3 = (126) REQ'D

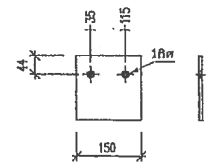

24x b2 FL 8X152 -44W
Qty x3 = (72) REQ'D.

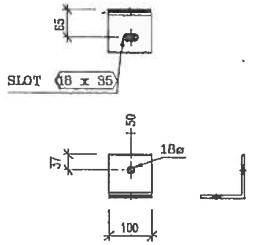

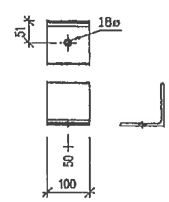

2x s2 L102X102X6.4-300W
Qty x3 = (6) REQ'D

4x b3 L102X102X6.4-300W
Qty x3 = (12) REQ'D.

FOR APPROVAL
DO NOT USE FOR FABRICATION

29 mai 2017 17:04:23, marcil, R:\ROU-00240067-A0\60 Réalisation\63 Dessins\Proc\Dike catwalk\999-00048075-PP - Dike catwalk\Details\GA STAIR_PAGE 3-A.dwg

Révision :

No	Date (a-m-j)	Description	Par
BB	2017-05-29	HANDRAIL & STRINGER MODIFICATION	MC
AA	2017-05-16	FOR APPROVAL	MC

Client :
NORMEX
LA SARRE, QUEBEC
(TEL.)819-333-1200
(FAX)819-333-1212

exp.
Les Services exp inc.

Projet : AGNICO EAGLE - MELIADINE DIVISION - FUEL DISTRIBUTION
Titre : DIKE CATWALK STRUCTURAL STAIR ARRANGEMENT
Approuvé par : JONATHAN FAUCHER Ing.
Dessiné par : MARIO CLICHE Ing.
Date : 2017-05-16
Page : 3 de 6
Dossier : 999-00048075-PP
Numéro de dessin : NMOI - 00048075 - A0 - S03 - BB

NORMEX

Work Order Check List

Client: CONSTRUCTION PROMEC Quote: 4048 Work Order: 80053

Part Description: STAIR HANDRAILS DIKE CATWALK
(1) 1L - (1) 1R - (1) 2L - (1) 2R

N/A	YES	
☐	☑	Validate Material & Preparation
☐	☑	Visual Inspection complete. (Sharp edges, spatter, welding as per drawing...)
☐	☑	Dimensional Report.
☐	☑	Weld Map.
☐	☑	NDT (LPI, MPI, UT, X-Ray and Visual) refer to ITP & quality assurance program.
☐	☑	All parts fit as an assembly if required by production manager. (Revise packing list?)
☐	☑	Shop bolts required? If yes tightened. (How?)
☐	☑	Sandblasting & Coating Report.
☐	☑	Pictures.
☐	☑	All items on W.O. accounted for. (Work order screening)
☐	☑	Components packaged for shipping. (Includes ship loose items, belts, seals, motors....)
☑	☐	Are all extra materials and consumables entered on W.O.?
☑	☐	Are all error reports filled and attached?
☑	☐	Are all non conformance documented?

Note: Once complete and signed, returned to Project Manager.

Remark: _____

Project Leader: Emmanuel Austin Date: 29/06/2017

Quality Control: Emmanuel Austin Date: 29/06/2017

Production Manager: _____ Date: _____

Qualification pour soudeur

Valide uniquement lorsqu'employé dans une compagnie certifiée par le CWB

Transférable Soudeur

Nom: ALEXANDRE JULIEN
Employeur: Normex Métal, La Sarre, QC
Gamme d'épaisseur 3mm et plus

Mode: Semi-Automatique
Mécanisé avec électrode unique
Automatique avec électrode unique
Classe: PLAT

Date d'exp: nov. 17, 2018

Matériau: Acier au carbone
Procédé: FCAW/MCAW
Norme: CSA W47.1
Catégorie: B

Voir les conditions au verso

Qualification pour soudeur

Valide uniquement lorsqu'employé dans une compagnie certifiée par le CWB

Transférable Soudeur

Nom: ALEXANDRE JULIEN
Employeur: Normex Métal, La Sarre, QC
Gamme d'épaisseur: 3mm et plus

Mode: MANUEL

Classe: PLAT

Date d'exp: nov. 17, 2018

Matériau: Acier au carbone
Procédé: SMAW
Norme: CSA W47.1
Catégorie: S
Électrode: F4

Voir les conditions au verso

L 38

Qualification pour soudeur

Valide uniquement lorsqu'employé dans une compagnie certifiée par le CWB

Transférable Soudeur

Nom: SAMUEL GOULET
Employeur: Normex Métal, La Sarre, QC
Gamme d'épaisseur: 3mm et plus

Mode: MANUEL

Date d'exp: mars 15, 2019

Matériau: Acier au carbone
Procédé SMAW
Norme: CSA W47.1
Catégorie: S
Électrode: F4

Classe: PLAT/HORIZONTALE/VERTICALE(M)/PLAFOND

Voir les conditions au verso

Qualification pour soudeur

Valide uniquement lorsqu'employé dans une compagnie certifiée par le CWB

Transférable Soudeur

Nom: SAMUEL GOULET
Employeur: Normex Métal, La Sarre, QC
Gamme d'épaisseur: 3mm et plus

Mode: Semi-Automatique
Mécanisé avec électrode unique
Automatique avec électrode unique

Date d'exp: mars 15, 2019

Matériau: Acier au carbone
Procédé: FCAW/MCAW
Norme: CSA W47.1
Catégorie: S

Classe: PLAT/HORIZONTALE/VERTICALE(M)/PLAFOND

Voir les conditions au verso

L 25

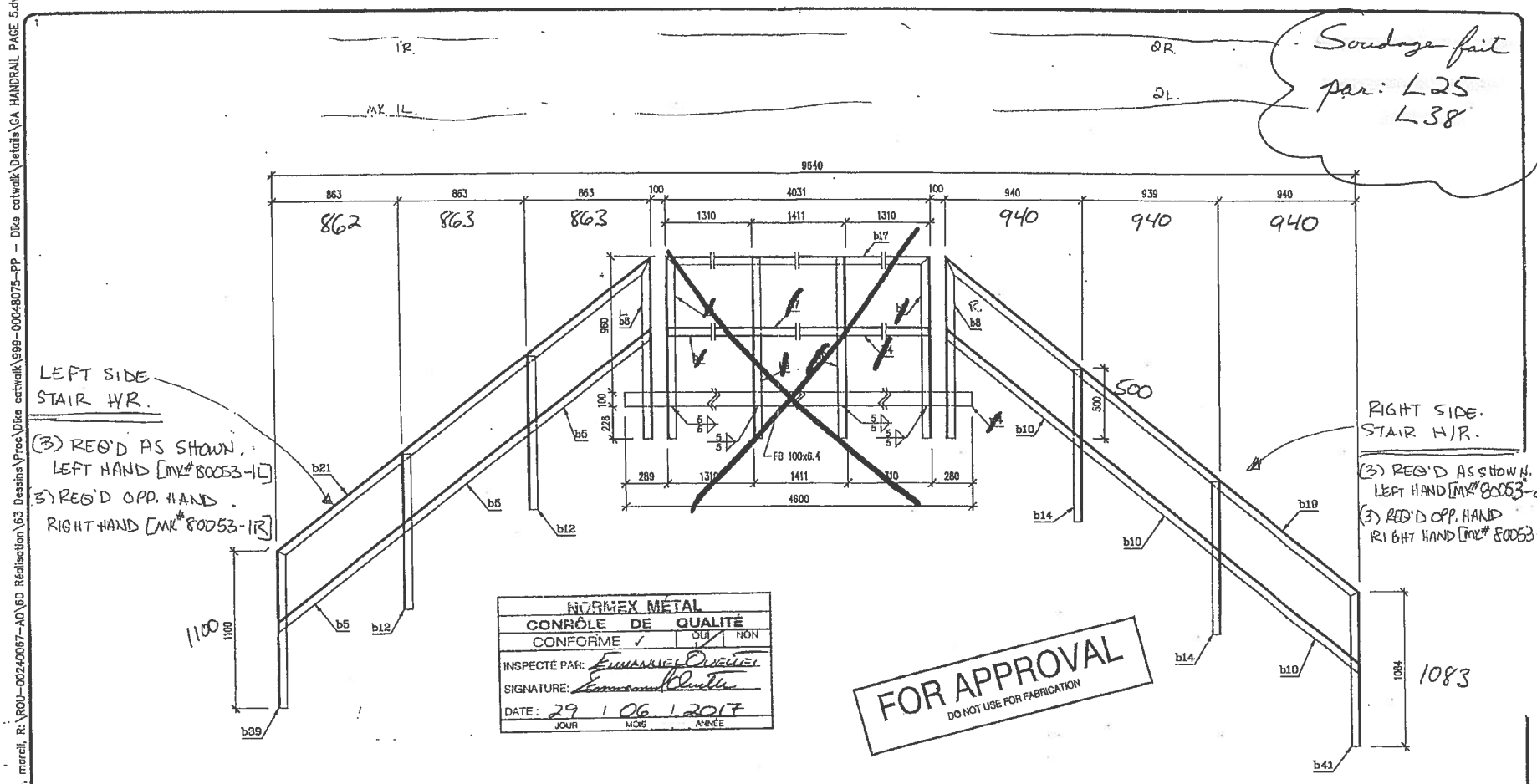

NORMEX MÉTAL
CONTRÔLE DE QUALITÉ

CONFORME ✓	OUI	NON

INSPECTÉ PAR: Emmanuel Ouellet
SIGNATURE: Emmanuel Ouellet
DATE: 29 / 06 / 2017
JOUR / MOIS / ANNÉE

FOR APPROVAL
DO NOT USE FOR FABRICATION

Révision :			
No	Date (a-m-j)	Description	Par
BB	2017-05-29	HANDRAIL & STRINGER MODIFICATION	MC
AA	2017-05-16	FOR APPROVAL	MC

Client :
NORMEX
LA SARRE, QUEBEC
(TEL.)819-333-1200
(FAX)819-333-1212

exp.
Les Services exp Inc.
T: +1.819.762.3899 | F: +1.819.762.4111
26, 10e Rue, bureau 200
Rouyn-Noranda, QC J9X 2M3
CANADA
www.exp.com

Projet :	AGNICO EAGLE - MELIADINE DIVISION - FUEL DISTRIBUTION		
Titre :	DIKE CATWALK STRUCTURAL HANDRAIL ARRANGEMENT		
Approuvé par : JONATHAN FAUCHER Ing.	Dessiné par : MARIO CLICHE Ing.	Date : 2017-05-16	Page : 5 de 6
Dossier : 999-00048075-PP	Numéro de dessin : NMOI - 00048075 - A0 - S03 - BB		

29 mai 2017 17:01:46, marcil, R:\ROU-00240067-A0\60 Réalisation\63 Dessins\Proc\Dike catwalk\999-00048075-PP - Dike catwalk\Details\CA HANDRAIL PAGE 5.dwg

NORMEX

Work Order Check List

Client: CONSTRUCTION PROMEC Quote: 4048 Work Order: 80052

Part Description: (2) STRAIGHT HANDRAIL DIKE CATWALK

N/A	YES	
☐	☑	Validate Material & Preparation
☐	☑	Visual inspection complete. (Sharp edges, spatter, welding as per drawing...)
☐	☑	Dimensional Report.
☐	☑	Weld Map.
☐	☑	NDT (LPI, MPI, UT, X-Ray and Visual) refer to ITP & quality assurance program.
☐	☑	All parts fit as an assembly if required by production manager. (Revise packing list?)
☑	☐	Shop bolts required? If yes tightened. (How?)
☐	☑	Sandblasting & Coating Report.
☐	☑	Pictures.
☐	☑	All items on W.O. accounted for. (Work order screening)
☐	☑	Components packaged for shipping. (Includes ship loose items, belts, seals, motors....)
☑	☐	Are all extra materials and consumables entered on W.O.?
☑	☐	Are all error reports filled and attached?
☑	☐	Are all non conformance documented?

Note: Once complete and signed, returned to Project Manager.

Remark: Contrôle de qualité pour les 2 handrails qui ont été envoyé sur un total de 6

Project Leader: Emmanuel Ouellet Date: 29/06/2017

Quality Control: Emmanuel Ouellet Date: 29/06/2017

Production Manager: _____ Date: _____

Qualification pour soudeur

Valide uniquement lorsqu'employé dans une compagnie certifiée par le CWB

Transférable Soudeur

Nom: SAMUEL GOULET
Employeur: Normex Métal, La Sarre, QC
Gamme d'épaisseur: 3mm et plus

Mode: MANUEL

Date d'exp: mars 15, 2018

Matériau: Acier au carbone
Procédé: SMAW
Norme: CSA W47.1
Catégorie: S
Électrode: F4

Classe: PLAT/HORIZONTALE/VERTICALE(M)/PLAFOND

Voir les conditions au verso

Qualification pour soudeur

Valide uniquement lorsqu'employé dans une compagnie certifiée par le CWB

Transférable Soudeur

Nom: SAMUEL GOULET
Employeur: Normex Métal, La Sarre, QC
Gamme d'épaisseur: 3mm et plus

Mode: Semi-Automatique
Mécanisé avec électrode unique
Automatique avec électrode unique

Date d'exp: mars 15, 2018

Matériau: Acier au carbone
Procédé: FCAW/MCAW
Norme: CSA W47.1
Catégorie: S

Classe: PLAT/HORIZONTALE/VERTICALE(M)/PLAFOND

Voir les conditions au verso

L 25

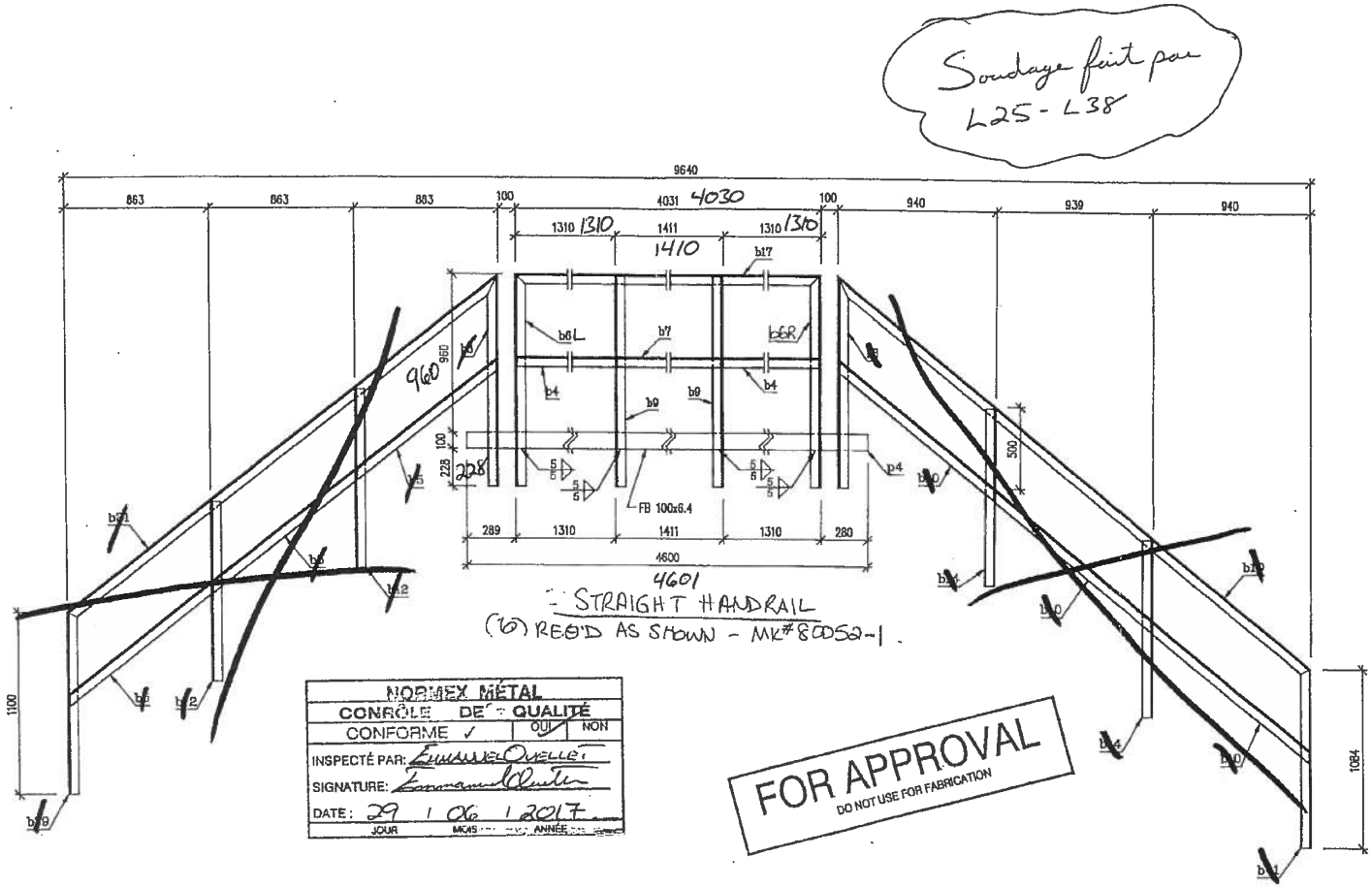

29 mai 2017 17:01:46, marcli, R:\ROU-00240067-A0\60 Réalisation\63 Dessins\Proc\Dike catwalk\999-00048075-PP - Dike catwalk\Details\GA HANDRAIL PAGE 5.dw

Révision :

No	Date (a-m-j)	Description	Par
BB	2017-05-29	HANDRAIL & STRINGER MODIFICATION	MC
AA	2017-05-16	FOR APPROVAL	MC

Client :

NORMEX
LA SARRE, QUEBEC
(TEL.)819-333-1200
(FAX)819-333-1212

exp.
Les Services exp inc.
t : +1.819.767.2660 | f : +1.819.767.4614
28, 18e Rue, bureau 200
Rouyn-Noranda, QC J9X 2M3
CANADA
www.exp.com

Projet : AGNICO EAGLE - MELIADINE DIVISION - FUEL DISTRIBUTION

Titre : DIKE CATWALK
STRUCTURAL
HANDRAIL ARRANGEMENT

Approuvé par :	Dessiné par :	Date :	Page :
JONATHAN FAUCHER ing.	MARIO CLICHE ing.	2017-05-16	5 de 6

Dossier : 999-00048075-PP

Numéro de dessin : NMOI - 00048075 - A0 - S03 - BB

NORMEX

Work Order Check List

Client: CONSTRUCTION PROMEC Quote: 4048 Work Order: 80051

Part Description: (5) PIPE CATWALK

N/A	YES	
☐	☑	Validate Material & Preparation
☐	☑	Visual inspection complete. (Sharp edges, spatter, welding as per drawing...)
☐	☑	Dimensional Report.
☐	☑	Weld Map.
☐	☑	NDT (LPI, MPI, UT, X-Ray and Visual) refer to ITP & quality assurance program.
☐	☑	All parts fit as an assembly if required by production manager. (Revise packing list?)
☐	☑	Shop bolts required? If yes tightened. (How?)
☐	☑	Sandblasting & Coating Report.
☐	☑	Pictures.
☐	☑	All items on W.O. accounted for. (Work order screening)
☐	☑	Components packaged for shipping. (Includes ship loose items, belts, seals, motors....)
☑	☐	Are all extra materials and consumables entered on W.O.?
☑	☐	Are all error reports filled and attached?
☑	☐	Are all non conformance documented?

Note: Once complete and signed, returned to Project Manager.

Remark: Des fer angles ont été ajoutés sous les marches pour les fixer dans les limons

Project Leader: Emmanuel Quette Date: 28/06/2017

Quality Control: Emmanuel Quette Date: 28/06/2017

Production Manager: _____ Date: _____

Qualification pour soudeur

Valide uniquement lorsqu'employé dans une compagnie certifiée par le CWB

Transférable Soudeur

Nom: MARCELLIN PAUL
Employeur: Normex Métal, La Sarre, QC
Gamme d'épaisseur: 3mm et plus

Date d'exp: mai 03, 2019

Matériau: Acier au carbone
Procédé: FCAW/MCAW
Norme: CSA W47.1
Catégorie: S

Mode: Semi-Automatique
Mécanisé avec électrode unique
Automatique avec électrode unique

Classe: PLAT/HORIZONTALE/VERTICALE(M)/PLAFOND

Voir les conditions au verso

L09

Qualification pour soudeur

Valide uniquement lorsqu'employé dans une compagnie certifiée par le CWB

Transferable Soudeur

Nom: JOEL GIRARD
Employeur: SMG SOUDURE INC, Duparquet, QC
Gamme d'épaisseur: 3mm et plus

Mode: Semi-Automatique
Mécanisé avec électrode unique
Automatique avec électrode unique

Classe: PLAT/HORIZONTALE/VERTICALE(M)/PLAFOND

Date d'exp: sept. 26, 2017
Matériau: Acier au carbone
Procédé: FCAW/MCAW
Norme: CSA W47.1
Catégorie: S

Voir les conditions au verso

Qualification pour soudeur

Valide uniquement lorsqu'employé dans une compagnie certifiée par le CWB

Transferable Soudeur

Nom: JOEL GIRARD
Employeur: SMG SOUDURE INC, Duparquet, QC
Gamme d'épaisseur: 3mm et plus

Mode: MANUEL

Classe: PLAT/HORIZONTALE/VERTICALE(M)/PLAFOND

Date d'exp: déc. 10, 2017
Matériau: Acier au carbone
Procédé: SMAW
Norme: CSA W47.1
Catégorie: S
Électrode: F4

Voir les conditions au verso

L37

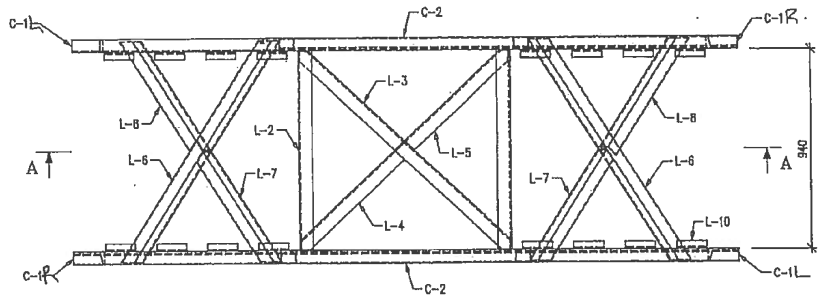

1 REQ'D STAIR STRUCTURE ARRANGEMENT

Qty x 5.

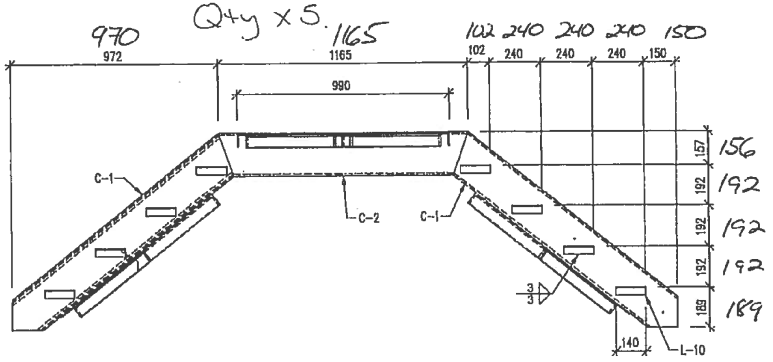

Section A – A

NORMEX MÉTAL
CONRÔLE DE QUALITÉ
CONFORME ✓ OUI NON
INSPECTÉ PAR: EMMANUEL OUELLET
SIGNATURE: Emmanuel Ouellet
DATE: 28 / 06 / 2017
JOUR MOIS ANNÉE

Soudage fait par
L37 - L09

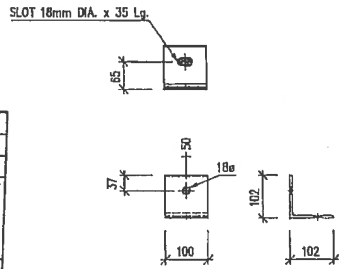

4x L-1 L102X102X6.4-300W

Qty X5

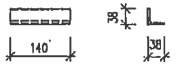

16x L-10 L38X38X4.8-300W

Qty x5.

FOR APPROVAL
DO NOT USE FOR FABRICATION

16 mai 2017 21:18:07, marcli, C:\Mario Cliche EXP\Clients\Normex\Escaliers reservoir\61 Réalisation\999-00048075-PP – Escalier tuycu\Details\4.dwg

Révision :			
AA	2017-05-15	FOR APPROVAL	MC
No	Date (a-m-j)	Description	Par

Client :
NORMEX
LA SARRE, QUEBEC
(TEL)819-333-1200
(FAX)819-333-1212

exp.
Les Services exp Inc.
CANADA
www.exp.com

Projet : AGNICO EAGLE - MELIADINE DIVISION - FUEL DISTRIBUTION			
Titre : PIPE CATWALK STRUCTURAL STAIR DETAILS			
Approuvé par : JONATHAN FAUCHER ing.	Dessiné par : MARIO CLICHE ing.	Date : 2017-05-15	Page : 3 de 5
Dossier : 999-00048075-PP	Numéro de dessin : NMOI - 00048075 - A0 - S02 - AA		

NORMEX

Work Order Check List

Client: CONSTRUCTION PROMEC Quote: 4048 Work Order: 80066

Part Description: PIPE CATWALK HANDRAILS (5L + 5R)

N/A	YES	
☐	☑	Validate Material & Preparation
☐	☑	Visual inspection complete. (Sharp edges, spatter, welding as per drawing...)
☐	☑	Dimensional Report.
☐	☑	Weld Map.
☐	☑	NDT (LPI, MPI, UT, X-Ray and Visual) refer to ITP & quality assurance program.
☐	☑	All parts fit as an assembly if required by production manager. (Revise packing list?)
☑	☐	Shop bolts required? If yes tightened. (How?)
☐	☑	Sandblasting & Coating Report.
☐	☑	Pictures.
☐	☑	All items on W.O. accounted for. (Work order screening)
☐	☑	Components packaged for shipping. (Includes ship loose items, belts, seals, motors....)
☑	☐	Are all extra materials and consumables entered on W.O.?
☑	☐	Are all error reports filled and attached?
☑	☐	Are all non conformance documented?

Note: Once complete and signed, returned to Project Manager.

Remark: Les gardes-corps ont été faliguées dans un gabarit afin d'en assurer l'exactitude et la similitude

Project Leader: Emmanuel Quitte Date: 28/06/2017

Quality Control: Emmanuel Quitte Date: 28/06/2017

Production Manager: _____ Date: _____


Qualification pour soudeur
Valide uniquement lorsqu'employé dans une compagnie certifiée par le CWB
Transférable Soudeur
Nom: LOUIS CARON
Date d'obt.: févr. 16, 2018
Employeur: Normex Métal, La Sarre, QC
Gamme d'épaisseur: 3mm et plus
Matériau: Acier au carbone
Procédé: FCAW/MCAW
Norme: CSA W47.1
Mode: Semi-Automatique
Catégorie: B
Mécanisé avec électrode unique
Automatique avec électrode unique
Class.: PLAT/HORIZONTAL/VERTICAL(M)/PLAFOND
Voir les conditions au verso

L-03

Qualification pour soudeur

Valide uniquement lorsqu'employé dans une compagnie certifiée par le CWB

Transférable Soudeur

Nom: ALEXANDRE JULIEN
Employeur: Normex Métal, La Sarre, QC
Gamme d'épaisseur 3mm et plus

Mode: Semi-Automatique
Mécanisé avec électrode unique
Automatique avec électrode unique
Classe: PLAT

Date d'exp: nov. 17, 2010

Matériau: Acier au carbone
Procédé: FCAW/MCAW
Norme: CSA W47.1
Catégorie: S

Voir les conditions au verso

Qualification pour soudeur

Valide uniquement lorsqu'employé dans une compagnie certifiée par le CWB

Transférable Soudeur

Nom: ALEXANDRE JULIEN
Employeur: Normex Métal, La Sarre, QC
Gamme d'épaisseur: 3mm et plus

Mode: MANUEL

Classe: PLAT

Date d'exp: nov. 17, 2018

Matériau: Acier au carbone
Procédé: SMAW
Norme: CSA W47.1
Catégorie: S
Électrode: F4

Voir les conditions au verso

L 38

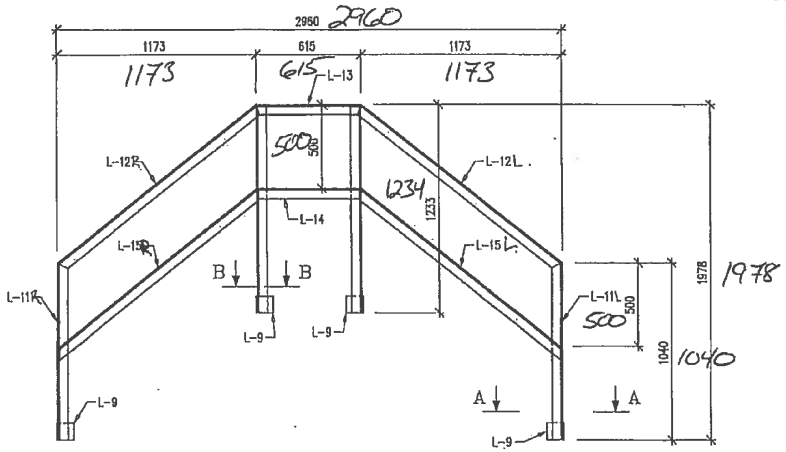

1L/1R REQ'D HANDRAIL ARRANGEMENT

Qty X5.

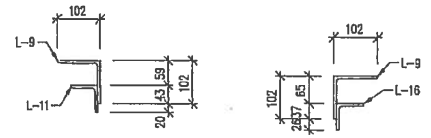

SECTION "A – A" SECTION "B – B"

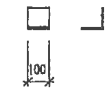

8x L-9 L102X102X6.4-300W

Qty x5.

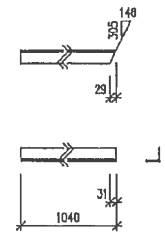

2L/2R L-11 L64X64X6.4-300W

(2) REQ'D. AS SHOWN. (L-11R).
(2) REQ'D OPP. HAND. (L-11L)

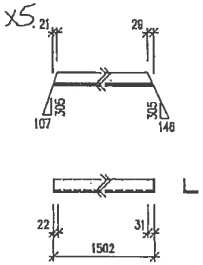

2L/2R L-12 L64X64X6.4-300W

Qty x5 (2) REQ'D AS SHOWN (L-12R)
(2) REQ'D OPP. HAND (L-12L).

NORMEX MÉTAL		
CONRÔLE DE QUALITÉ		
CONFORME ✓	OUI	NON
INSPECTÉ PAR: Emmanuel Ouellet		
SIGNATURE: Emmanuel Ouellet		
DATE: 28 / 06 / 2017		
JOUR	MOIS	ANNÉE

Qty X5.

Soudage fait par L38-L03

FOR APPROVAL
DO NOT USE FOR FABRICATION

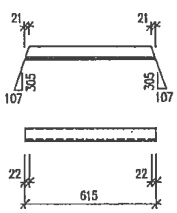

2x L-13 L64X64X6.4-300W

Qty x5.

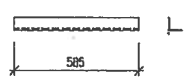

2x L-14 L64X64X6.4-300W

Qty x5.

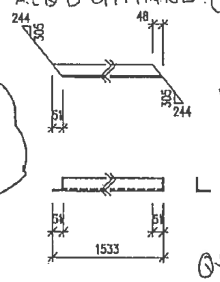

2L/2R L-15 L64X64X6.4-300W

(2) AS SHOWN (L-15L) + (2) OPP. HAND (L-15R)

Qty X5.

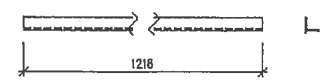

4x L-16 L64X64X6.4-300W

Qty X5.

16 mai 2017 21:16:47, marcli, C:\Mario Cliche EXP\Clients\Normex\Escaliers reservoir\61 Réalisation\999-00048075-PP - Escalier tuyau\Details\Handrail_page 5.dwg

Révision :			
AA	2017-05-15	FOR APPROVAL	MC
No	Date (a-m-j)	Description	Par

Client :

NORMEX
LA SARRE, QUEBEC
(TEL.)819-333-1200
(FAX)819-333-1212

exp.
Les Services exp Inc.
1 : +1.819.762.2998 | 1 : +1.819.762.4814
28, 16e Rue, bureau 200
Rouyn-Noranda, QC J9X 2S3
CANADA
www.exp.com

Projet : AGNICO EAGLE - MELIADINE DIVISION - FUEL DISTRIBUTION			
Titre : PIPE CATWALK STRUCTURAL HANDRAIL DETAILS			
Approuvé par : JONATHAN FAUCHER Ing.	Dessiné par : MARIO CLICHE Ing.	Date : 2017-05-15	Page: 5 de 5
Dossier : 999-00048075-PP	Numéro de dessin : NMOI - 00048075 - A0 - S02 - AA		

EROUX
DIVISION OF RUSSEL METALS INC.
DIVISION de MÉTAUX RUSSEL INC.

0E89340439-56661

COMBINATION SHORT FORM OF STRAIGHT BILL OF LADING - EXPRESS SHIPPING CONTRACT,
SUBJECT TO ALL TERMS, CONDITIONS AND LIMITATIONS INCORPORATED BY REFERENCE AS SHOWN ON THE BACK OF THIS BILL.
FORMULAIRE COMBINÉ DE CONNAISSEMENT DIRECT - ET DE CONTRAT D'EXPÉDITION PAR
MESSAGERIE ASSUJETTI À TOUTES LES MODALITÉS, CONDITIONS ET LIMITATIONS QUI Y SONT INTÉGRÉES PAR RENVOI, AINSI QU'IL EST INDIQUÉ AU VERSO DU PRÉSENT CONNAISSEMENT.

ACIER LEROUX
1675 ROUTE DE L'AÉROPORT
C.P. 550 AMOS QC J9T3 TEL#: (819)732-8381

PROMISE.....: 05/31/17
REPRESENTANT Yvan Bégin

EXPÉDIÉ: 00
NORMEX METAL
9088-6615 QUEBEC INC.
11 BOUL. INDUSTRIEL
ROUTE 111 EST
LA SARRE QC J9Z 2X2

VENDU: 8910165 05/29/17
NORMEX METAL
9088-6615 QUEBEC INC.
P.O. BOX 565
EARLTON ON P0J 1E0

FREIGHT TERMS / MODALITÉS DE TRANSPORT
PORT PAYÉ
CARRIER / TRANSPORTEUR RT# 006
NOTRE CAMION
CUSTOMER PHONE # / TÉLÉPHONE À LA CLIENTÈLE #
(819)333-1200

#BCC PLA06074 RELACHE#

INSTRUCTIONS CLIENT:
ECRIRE # DE COULEE SUR LA COPIE ROSE DU CLIENT
****
FERME A 13HR00 LE VENDREDI

COMMENT.:
LIVRAISON 31 MAI 17

VEHICLE IDENT / IDENTIFICATION DU VEHICULE
NIR:R-527158-1

PLOMBEC
CONFIRMER ATWALK

LN#03	38700 CORNIÈRE ACIER L.à.C.	2 X 2 X 1/4 44W		QTÉ COMM
#PIÉC		X 20'	28 EA	1786 LB
QTÉ expédiée.....				
ÉTQ 9063529	COUL 52078255	28 EA	1786 LB	PAYS CANADA

L-2409

CONFORME ✓ OUI NON
SIGNÉ
DATE 31/05/17
JOUR MOIS ANNÉE

Les certificats d'analyse (MTR) seront automatiquement envoyés par email

PAGE: 1 TOTALS PALETTES _____ 28 EA 1786 LB

STEEL, STAINLESS STEEL, ALUMINUM, BRASS, COPPER, NICKEL AND SPECIALTY STEEL

The above listed products, in a natural state, do not pose inhalation, ingestion or contact hazards.

Prolonged overexposure to dust or fumes during welding, burning, grinding or machining may result in respiratory irritation, skin irritation or disease. USE ADEQUATE VENTILATION AND APPROPRIATE PERSONAL PROTECTIVE EQUIPMENT.

For Brass and Copper Alloys, contact with acids may liberate flammable and explosive hydrogen gas. If heated, copper oxide, zinc oxide, nickel oxide, tin oxide, cadmium oxide and/or lead fumes may be evolved. Aluminum particles may slip during handling or transportation.

PRODUCTS MUST BE SECURED FOR HANDLING AND TRANSPORTATION. Steel containment strapping may result in the strapping rebounding and injuring those nearby. EXERCISE CARE.

For overexposure to metal fumes, remove to fresh air. For skin contact, wash thoroughly with soap and water. Obtain medical attention if symptoms persist.

SEE MATERIAL SAFETY DATA SHEETS FOR MORE DETAILED INFORMATION.

ACIER, ACIER INOXYDABLE, ALUMINIUM, LAITON, CUIVRE, NICKEL ET ACIER SPÉCIALISÉ

Les produits mentionnés ci-haut, à l'état brut, ne causent aucun danger au contact, en cas d'inhalation ou d'ingestion.

Une surexposition aux poussières ou aux émanations durant la soudure, la coupe au chalumeau, le meulage ou l'usinage pourrait irriter ou une irritation des voies respiratoires ou de la peau ou autres maladies. UNE VENTILATION ADÉQUATE EST DE MISE AINSI QU'UN ÉQUIPEMENT PROTECTEUR APPROPRIÉ.

Pour ce qui est des alliages de cuivre et de laiton, un contact avec certains acides pourrait dégager des gaz hydrogène explosifs et inflammables. Si chauffé, de l'oxyde de cuivre, de zinc, de nickel, d'étain, de cadmium et/ou des vapeurs de plomb pourraient s'échapper. Les produits d'aluminium peuvent glisser lors de leur manipulation ou transportation.

TOUS LES PRODUITS DOIVENT ÊTRE ATTACHÉS SOLIDEMENT LORS DU TRANSPORT ET DE LA MANIPULATION.

Lors de la coupe, les courroies d'acier peuvent rebondir et causer des blessures. MANIPULEZ AVEC PRÉCAUTION.

En cas d'une surexposition aux émanations, reculez-vous et respirez de l'air frais. S'il y a contact avec la peau lavez la région affectée avec de l'eau et du savon. Si les symptômes persistent consultez votre médecin.

POUR PLUS D'INFORMATION, CONSULTEZ LA FEUILLE DE DONNÉES DE SÉCURITÉ.

DATE 31-May-2017

SIGNED
SIGNÉ

PURCHASER'S ORDER IS FILLED IN ACCORDANCE WITH THE ABOVE TERMS AND CONDITIONS OF SALE AND THOSE ON THE REVERSE HEREOF, ALL OF WHICH TERMS AND CONDITIONS SUPERSEDE THE TERMS AND CONDITIONS (IF ANY) OF PURCHASER'S ORDER. BY ACCEPTING DELIVERY OF ALL OR PART OF THE ABOVE-DESCRIBED GOODS (HEREINAFTER CALLED THE "GOODS") OR BY PAYING FOR SAME IN WHOLE OR IN PART PURCHASER AGREES TO ALL THE TERMS AND CONDITIONS SET FORTH ABOVE AND ON THE REVERSE HEREOF.
LA COMMANDE DE L'ACHETEUR EST EXÉCUTÉE EN CONFORMITÉ DES CONDITIONS DE VENTE STIPULÉES CI-DESSUS ET AU VERSO DES PRÉSENTES. TOUTES CES CONDITIONS REMPLAÇANT CELLES (LE CAS ÉCHÉANT) ÉNONCÉES AU BON DE COMMANDE DE L'ACHETEUR ACCEPTANT LA LIVRAISON DE TOUT OU PARTIE DES MARCHANDISES DÉCRITES CI-DESSUS (CI-APRÈS APPELÉES LES "MARCHANDISES") OU EN LES PAYANT INTÉGRALEMENT OU PARTIELLEMENT, L'ACHETEUR ACCEPTE TOUTES LES CONDITIONS STIPULÉES CI-DESSUS ET AU VERSO DES PRÉSENTES.

OFFICE/ADMINISTRATIVE SHIPPING/EXPEDITION DRIVER/CHAUFFEUR CUSTOMER/CLIENT

RLS-L (

6/01/17 8:04:33

EMAIL PAGE COUVERTURE

==========

Société: Acier Leroux - Amos

6/01/17 8:04:33 Document Sommaire

Page couverture 1

Objet: MILL TEST CERTIFICATE

NO.COMMANDE :89340439

No.Bc Du Client :PLA06074

City : LA SARRE State/Province . QC

Séquence correspondant au(x) MTR imprimé(s):

Ln#	Description item:	Coulée	MTR
3	2 X 2 X 1/4 CORN. LÀC 44W	52078255	094131988

GERDAU

CERTIFIED MATERIAL TEST REPORT

CA-ML-CAMBRIDGE
160 ORION PLACE
CAMBRIDGE, ON N1T 1R9
Canada

CUSTOMER SHIP TO	CUSTOMER BILL TO
LEROUX STEEL 1331 RUE GRAHAM BELL BOUCHERVILLE,QC J4B 6A1 Canada	LEROUX STEEL 1331 RUE GRAHAM BELL BOUCHERVILLE,QC J4B 6A1 Canada

GRADE	SHAPE / SIZE	DOCUMENT
GGMULTI	Angle / 2X2X1/4	0000038149

LENGTH	WEIGHT	HEAT / BATCH
20'00"	37,324 LB	52078255/02

SALES ORDER	CUSTOMER MATERIAL N°
4774780/000100	

SPECIFICATION / DATE or REVISION
ASTM A529-14, A572-15
ASTM A6-14,A36-14, ASME SA-36
ASTM A709-15, AASHTO M270-12
CSA G40.20-13/G40.21-13

CUSTOMER PURCHASE ORDER NUMBER	BILL OF LADING	DATE
94038191-FEMQ2	1301-0000029491	05/05/2017

CHEMICAL COMPOSITION

C %	Mn %	P %	S %	Si %	Cu %	Ni %	Cr %	Mo %	V %	Nb %
0.14	0.74	0.015	0.033	0.18	0.37	0.09	0.10	0.034	0.013	0.001

MECHANICAL PROPERTIES

Elong. %	G/L Inch	UTS PSI	UTS MPa	YS PSI	YS MPa
25.00	8.000	73987	510	53590	370
27.50	8.000	72747	502	52205	360

COMMENTS / NOTES

This grade meets the requirements for the following grades:
ASTM Grades: A36; A529-50; A572-50; A709-36; A709-50
CSA Grades: 44W; 50W
AASHTO Grades: M270-36; M270-50
ASME Grades: SA36

LEROUX

094131988

The above figures are certified chemical and physical test records as contained in the permanent records of company. We certify that these data are correct and in compliance with specified requirements. This material, including the billets, was melted and manufactured in Canada. CMTR complies with EN 10204 3.1.

BHASKAR YALAMANCHILI
QUALITY DIRECTOR
Phone: (409) 769-1014 Email: Bhaskar.Yalamanchili@gerdau.com

LEONARDO NUNES
QUALITY ASSURANCE MGR.
Phone: (905) 668-8811 EXT 4055 Email: Leonardo.Nunes@gerdau.com

LEROUX
DIVISION OF RUSSEL METALS INC.
DIVISION de MÉTAUX RUSSEL INC.

0E89340438-56467

COMBINATION SHORT FORM OF STRAIGHT BILL OF LADING - EXPRESS SHIPPING CONTRACT,
SUBJECT TO ALL TERMS, CONDITIONS AND LIMITATIONS INCORPORATED BY REFERENCE AS SHOWN ON THE BACK OF THIS BILL.
FORMULAIRE COMBINÉ DE CONNAISSEMENT DIRECT - ET DE CONTRAT D'EXPÉDITION PAR
MESSAGERIE ASSUJETTI À TOUTES LES MODALITÉS, CONDITIONS ET LIMITATIONS QUI Y SONT INTÉGRÉES PAR RENVOI, AINSI QU'IL EST INDIQUÉ AU VERSO DU PRÉSENT CONNAISSEMENT.

ACIER LEROUX
1675 ROUTE DE L'AÉROPORT
C.P. 550 AMOS QC J9T3 TEL#: (819)732-8381

PROMISE.....: 05/26/17
REPRESENTANT Yvan Bégin

EXPÉDIÉ: 00
NORMEX METAL
9088-6615 QUEBEC INC.
11 BOUL. INDUSTRIEL
ROUTE 111 EST
LA SARRE QC J9Z 2X2

VENDU: 8910165 05/25/17
NORMEX METAL
9088-6615 QUEBEC INC.
P.O. BOX 565
EARLTON ON P0J 1E0

FREIGHT TERMS / MODALITÉS DE TRANSPORT
PORT PAYÉ
CARRIER / TRANSPORTEUR RT# 006
NOTRE CAMION
CUSTOMER PHONE # / TÉLÉPHONE À LA CLIENTÈLE #
(819)333-1200

#BCC PLA06074 RELACHE#

VEHICLE IDENT. / IDENTIFICATION DU VEHICULE
NIR:R-527158-1

INSTRUCTIONS CLIENT:
ECRIRE # DE COULEE SUR LA COPIE ROSE DU CLIENT
****
FERME A 13HR00 LE VENDREDI
COMMENT.:
LIVRAISON 26 MAI 17

CONTRAT CATWALK

LN#02 32222 CORNIèRE ACIER L.à.C 2 1/2 X 2 1/2 X 1/4 44W QTÉ COMM
#PIéC L-2457 X 20' 14 EA 1148 LB
QTÉ expédiée.....
ÉTQ 9062666 COUL 52077203 14 EA 1148 LB PAYS CANADA

LN#04 67628 CARRÉ PROFILÉ TUBULAIRE 2 1/2 X 2 1/2 X .188 A500C QTÉ COMM
#PIéC L-2458 X 24' 1 EA 135 LB
QTÉ expédiée.....
ÉTQ 9058058 COUL 824913 1 EA 135 LB PAYS CANADA

CONFORME	OUI ✓	NON
SIGNÉ		
DATE	26/05/17	
	JOUR MOIS	ANNÉE

Les certificats d'analyse (MTR) seront automatiquement envoyés par email

PAGE: 1 TOTALS PALETTES _____ 15 EA 1283 LB

STEEL, STAINLESS STEEL, ALUMINUM, BRASS, COPPER, NICKEL AND SPECIALTY STEEL

The above listed products, in a natural state, do not pose inhalation, ingestion or contact hazards.

Prolonged overexposure to dust or fumes during welding, burning, grinding or machining may result in respiratory irritation, skin irritation or disease. USE ADEQUATE VENTILATION AND APPROPRIATE PERSONAL PROTECTIVE EQUIPMENT.

For Brass and Copper Alloys, contact with acids may liberate flammable and explosive hydrogen gas. If heated, copper oxide, zinc oxide, nickel oxide, tin oxide, cadmium oxide and/or lead fumes may be evolved. Aluminum products may slip during handling or transportation.

PRODUCTS MUST BE SECURED FOR HANDLING AND TRANSPORTATION. Steel containment strapping may result in the strapping rebounding and injuring those nearby. EXERCISE CAUTION.

For overexposure to metal fumes, remove to fresh air. For skin contact, wash thoroughly with soap and water. Obtain medical attention if symptoms persist.

SEE MATERIAL SAFETY DATA SHEETS FOR MORE DETAILED INFORMATION.

ACIER, ACIER INOXYDABLE, ALUMINIUM, LAITON, CUIVRE, NICKEL ET ACIER SPÉCIALISÉ

Les produits mentionnés ci-haut, à l'état brut, ne causent aucun danger au contact, en cas d'inhalation ou d'ingestion.

Une surexposition aux poussières ou aux émanations durant la soudure, la coupe au chalumeau, le meulage ou l'usinage pourrait résulter en une irritation des voies respiratoires ou de la peau ou autres maladies. UNE VENTILATION ADÉQUATE EST DE MISE AINSI QU'UN ÉQUIPEMENT PROTECTEUR APPROPRIÉ.

Pour ce qui est des alliages de cuivre et de laiton, un contact avec certains acides pourrait dégager des gaz hydrogène explosifs et inflammables. Si chauffé, de l'oxyde de cuivre, de zinc, de nickel, d'étain, de cadmium et/ou des vapeurs de plomb pourraient s'échapper. Les produits d'aluminium peuvent glisser lors de leur manipulation ou transportation.

TOUS LES PRODUITS DOIVENT ÊTRE ATTACHÉS SOLIDEMENT LORS DU TRANSPORT ET DE LA MANIPULATION.

Lors de la coupe, les courroies d'acier peuvent rebondir et causer des blessures. MANIPULEZ AVEC PRÉCAUTION.

En cas d'une surexposition aux émanations, retirez-vous et respirez de l'air frais. S'il y a contact avec la peau lavez la région affectée avec de l'eau et du savon. Si les symptômes persistent consultez votre médecin.

POUR PLUS D'INFORMATION, CONSULTEZ LA FEUILLE DE DONNÉES DE SÉCURITÉ.

DATE 26/5/2017 RS

SIGNED
SIGNÉ

PURCHASER'S ORDER IS FILLED IN ACCORDANCE WITH THE ABOVE TERMS AND CONDITIONS OF SALE AND THOSE ON THE REVERSE HEREOF, ALL OF WHICH TERMS AND CONDITIONS SUPERSEDE THE TERMS AND CONDITIONS (IF ANY) OF PURCHASER'S ORDER. BY ACCEPTING DELIVERY OF ALL OR PART OF THE ABOVE-DESCRIBED GOODS (HEREINAFTER CALLED THE "GOODS") OR BY PAYING FOR SAME IN WHOLE OR IN PART PURCHASER AGREES TO ALL THE TERMS AND CONDITIONS SET FORTH ABOVE AND ON THE REVERSE HEREOF.
LA COMMANDE DE L'ACHETEUR EST EXÉCUTÉE EN CONFORMITÉ DES CONDITIONS DE VENTE STIPULÉES CI-DESSUS ET AU VERSO DES PRÉSENTES. TOUTES CES CONDITIONS REMPLAÇANT CELLES (LE CAS ÉCHÉANT) ÉNONCÉES AU BON DE COMMANDE DE L'ACHETEUR ACCEPTANT LA LIVRAISON DE TOUT OU PARTIE DES MARCHANDISES DÉCRITES CI DESSUS (CI-APRÈS APPELÉES LES "MARCHANDISES") OU EN LES PAYANT INTÉGRALEMENT OU PARTIELLEMENT, L'ACHETEUR ACCEPTE TOUTES LES CONDITIONS STIPULÉES CI-DESSUS ET AU VERSO DES PRÉSENTES.

OFFICE/ADMINISTRATIVE SHIPPING/EXPEDITION DRIVER/CHAUFFEUR CUSTOMER/CLIENT

RLB-L c

5/26/17 8:41:58

EMAIL PAGE COUVERTURE

==========

Société:

5/26/17 8:41:58 Document Sommaire

Page couverture 1

Objet: MILL TEST CERTIFICATE

NO.COMMANDE :89340438

No.Bc Du Client :PLA06074

City : LA SARRE State/Province . QC

Séquence correspondant au(x) MTR imprimé(s):

Ln#	Description item:	Coulée	MTR
2	2 1/2 X 2 1/2 X 1/4 CORN. LÀC 44W	52077203	094128583

4	2 1/2X2 1/2X.188PROF.TUB.CAR. A500C	824913	094119175

CERTIFIED MATERIAL TEST REPORT

GERDAU

CA-ML-WHITBY
1 GERDAU CT
WHITBY, ON L1N 5T1
Canada

CUSTOMER SHIP TO	CUSTOMER BILL TO
LEROUX STEEL 1331 RUE GRAHAM BELL BOUCHERVILLE,QC J4B 6A1 Canada	LEROUX STEEL 1331 RUE GRAHAM BELL BOUCHERVILLE,QC J4B 6A1 Canada

GRADE	SHAPE / SIZE	DOCUMENT ID:
GGMULTI	Angle / 2 1/2X2 1/2X1/4	0000031022

LENGTH	WEIGHT	HEAT / BATCH
20'00"	37,884 LB	52077203/02

SALES ORDER	CUSTOMER MATERIAL N°
4465103/000180	

SPECIFICATION / DATE or REVISION
ASTM A529-14, A572-15
ASTM A6-14,A36-14, ASME SA-36
ASTM A709-15, AASHTO M270-12
CSA G40.20-13/G40.21-13

CUSTOMER PURCHASE ORDER NUMBER	BILL OF LADING	DATE
94037803-FEMQ1	1302-0000055481	02/08/2017

CHEMICAL COMPOSITION

C %	Mn %	P %	S %	Si %	Cu %	Ni %	Cr %	V %	Nb %
0.13	0.77	0.018	0.044	0.18	0.31	0.11	0.13	0.016	0.001

MECHANICAL PROPERTIES

Elong. %	G/L Inch	UTS PSI	UTS MPa	YS 0.2% PSI	YS MPa
28.80	8.000	70992	489	55041	379
28.80	8.000	71000	490	54833	378

COMMENTS / NOTES

This grade meets the requirements for the following grades:
ASTM Grades: A36; A529-50; A572-50; A709-36; A709-50
CSA Grades: 44W; 50W
AASHTO Grades: M270-36; M270-50
ASME Grades: SA36

LEROUX



094128583

The above figures are certified chemical and physical test records as contained in the permanent records of company. We certify that these data are correct and in compliance with specified requirements. This material, including the billets, was melted and manufactured in Canada. CMTR complies with EN 10204 3.1.

BHASKAR YALAMANCHILI
QUALITY DIRECTOR
Phone: (409) 769-1014 Email: Bhaskar.Yalamanchili@gerdau.com

LEONARDO NUNES
QUALITY ASSURANCE MGR.
Phone: (905) 668-8811 EXT 4055 Email: Leonardo.Nunes@gerdau.com

ACIER

FATI

STEEL

Acier Fati Steel, Inc.
1445 Boul. Lionel-Boulet
Varennes, J3X 1P7
Québec, CANADA
Tél. : 450-929-1812
Télécop. : 450-929-1798
www.fatisteel.com

RAPPORT DE TEST MATÉRIEL

1/2

Vendu
à : ACIER LEROUX BOUCHERVILLE
Chantal Boisvert
1300 Graham Bell
Boucherville, QC
J4B 6A1
Canada

Expédier
à : ACIER LEROUX BOUCHERVILLE
Chantal Boisvert
1300 Graham Bell
Boucherville, QC
J4B 6A1
Canada

N° bon de livraison BL16-02681
Date de document 5/16/2016

Votre n° de commande M 94036779
Notre n° de vente SO16-00897

Description		2.500 x 2.500 x 288.000 x 0.188 HR A500 B/C									
Heat Number		6096B4				Made In		Canada			
C	Mn	P	S	Si	Al	Cu	Cb	Mo	Ni	Cr	V
0.170	0.650	0.010	0.005	0.020	0.030	0.020	0.000	0.000	0.010	0.020	0.000
Yield (Psi)		Tensile (Psi)		ELN.2IN (%)		Certification					
57,500		66,100.00		26.5		ASTM A500 B/C					

Description		2.500 x 2.500 x 288.000 x 0.188 HR A500 B/C									
Heat Number		6462B4				Made In		Canada			
C	Mn	P	S	Si	Al	Cu	Cb	Mo	Ni	Cr	V
0.160	0.650	0.008	0.006	0.020	0.029	0.020	0.000	0.000	0.010	0.020	0.000
Yield (Psi)		Tensile (Psi)		ELN.2IN (%)		Certification					
57,400		68,200.00		26.1		ASTM A500 B/C					

Description		2.500 x 2.500 x 288.000 x 0.188 HR A500 B/C									
Heat Number		7245B4				Made In		Canada			
C	Mn	P	S	Si	Al	Cu	Cb	Mo	Ni	Cr	V
0.170	0.690	0.009	0.008	0.020	0.029	0.030	0.000	0.000	0.020	0.030	0.000
Yield (Psi)		Tensile (Psi)		ELN.2IN (%)		Certification					
56,000		68,700.00		24		ASTM A500 B/C					

Description		2.500 x 2.500 x 288.000 x 0.188 HR A500 B/C									
Heat Number		7247B4				Made In		Canada			
C	Mn	P	S	Si	Al	Cu	Cb	Mo	Ni	Cr	V
0.170	0.670	0.012	0.006	0.020	0.026	0.040	0.000	0.000	0.020	0.030	0.000
Yield (Psi)		Tensile (Psi)		ELN.2IN (%)		Certification					
54,800		69,500.00		28		ASTM A500 B/C					

Les résultats reportés sur ce document représentent les attributs actuels du matériel fourni et indiquent [illegible] spécifications applicables et les conditions contractuelles.

LEROUX

094119175

ACIER

STEEL

Acier Fati Steel, Inc.
1445 Boul. Lionel-Boulet
Varennes, J3X 1P7
Québec, CANADA
Tél. : 450-929-1812
Télécop. : 450-929-1798
www.fatisteel.com

RAPPORT DE TEST MATÉRIEL

2/2

Vendu
à : ACIER LEROUX BOUCHERVILLE
Chantal Boisvert
1300 Graham Bell
Boucherville, QC
J4B 6A1
Canada

Expédier
à : ACIER LEROUX BOUCHERVILLE
Chantal Boisvert
1300 Graham Bell
Boucherville, QC
J4B 6A1
Canada

N° bon de livraison BL16-02681
Date de document 5/16/2016

Votre n° de commande M 94036779
Notre n° de vente SO16-00897

Description		2.500 x 2.500 x 288.000 x 0.188 HR A500 B/C									
Heat Number		824913				Made In		Canada			
C	Mn	P	S	Si	Al	Cu	Cb	Mo	Ni	Cr	V
0.170	0.790	0.014	0.008	0.021	0.000	0.029	0.002	0.003	0.009	0.027	0.003
Yield (Psi)		Tensile (Psi)		ELN.2IN (%)		Certification					
57,000		65,800.00		26		ASTM A500 B/C					

Les résultats reportés sur ce document représentent les attributs actuels du matériel fourni et indiquent la conformité compléete avec toutes les spécifications applicables et les conditions contractuelles.

EROUX
VISION OF RUSSEL METALS INC.
DIVISION de MÉTAUX RUSSEL INC.

0E89340440-56797

COMBINATION SHORT FORM OF STRAIGHT BILL OF LADING - EXPRESS SHIPPING CONTRACT,
SUBJECT TO ALL TERMS, CONDITIONS AND LIMITATIONS INCORPORATED BY REFERENCE AS SHOWN ON THE BACK OF THIS BILL.
FORMULAIRE COMBINÉ DE CONNAISSEMENT DIRECT - ET DE CONTRAT D'EXPÉDITION PAR
MESSAGERIE ASSUJETTI À TOUTES LES MODALITÉS, CONDITIONS ET LIMITATIONS QUI Y SONT INTÉGRÉES PAR RENVOI, AINSI QU'IL EST INDIQUÉ AU VERSO DU PRÉSENT CONNAISSEMENT.

ACIER LEROUX
1675 ROUTE DE L'AÉROPORT
C.P. 550 AMOS QC J9T3 TEL#: (819)732-8381

PROMISE.....: 05/31/17
REPRESENTANT Yvan Bégin

EXPÉDIÉ: 00
NORMEX METAL
9088-6615 QUEBEC INC.
11 BOUL. INDUSTRIEL
ROUTE 111 EST
LA SARRE QC J9Z 2X2

VENDU: 8910165 05/31/17
NORMEX METAL
9088-6615 QUEBEC INC.
P.O. BOX 565
EARLTON ON P0J 1E0

FREIGHT TERMS
MODALITÉS DE TRANSPORT
PORT PAYÉ
CARRIER
TRANSPORTEUR RT# 006
NOTRE CAMION
CUSTOMER PHONE #
TÉLÉPHONE À LA CLIENTÈLE #
(819)333-1200

#BCC PLA06074 RELACHE#

VEHICLE IDENT.
IDENTIFICATION DU VEHICULE
NIR:R-527158-1

INSTRUCTIONS CLIENT:
ECRIRE # DE COULEE SUR LA COPIE ROSE DU CLIENT
****
FERME A 13HR00 LE VENDREDI
COMMENT.:
LIVRAISON 31 MAI 17

PROMEC CATWALK containers

LN#				QTÉ COMM	
01	28862 PROFILÉ EN U	8 X 13.75	50W		
	#PIÉC		X 20'	11 EA	3025 LB
	Commentaire A COUPER				
	11 FOIS 20'				
	**********				

L-2490

CONFORME ? OUI NON
SIGNÉ
DATE 02/06/17 JOUR MOIS ANNÉE

Les certificats d'analyse (MTR) seront automatiquement envoyés par email

PAGE: 1 TOTALS PALETTES 11 EA 3025 LB

STEEL, STAINLESS STEEL, ALUMINUM, BRASS, COPPER, NICKEL AND SPECIALTY STEEL

...e above listed products, in a natural state, do not pose inhalation, ingestion or contact hazards.
...olonged overexposure to dust or fumes during welding, burning, grinding or machining may result in ...spiratory irritation, skin irritation or disease. USE ADEQUATE VENTILATION AND APPROPRIATE PERSONAL ...OTECTIVE EQUIPMENT.
...r Brass and Copper Alloys, contact with acids may liberate flammable and explosive hydrogen gas. If heated, ...pper oxide, zinc oxide, nickel oxide, tin oxide, cadmium oxide and/or lead fumes may be evolved. Aluminum ...oducts may slip during handling or transportation.
...UCTS MUST BE SECURED FOR HANDLING AND TRANSPORTATION. ...d containment strapping may result in the strapping rebounding and injuring those nearby. EXERCISE ...
...xposure to metal fumes, remove to fresh air. For skin contact, wash thoroughly with soap and water. ...btain medical attention if symptoms persist.
...EE MATERIAL SAFETY DATA SHEETS FOR MORE DETAILED INFORMATION.

ACIER, ACIER INOXYDABLE, ALUMINIUM, LAITON, CUIVRE, NICKEL ET ACIER SPÉCIALISÉ

Les produits mentionnés ci-haut, à l'état brut, ne causent aucun danger au contact, en cas d'inhalation ou d'ingestion.
Une surexposition aux poussières ou aux émanations durant la soudure, la coupe au chalumeau, le meulage ou l'usinage pourrait résulter en une irritation des voies respiratoires ou de la peau ou autres maladies. UNE VENTILATION ADÉQUATE EST DE MISE AINSI QU'UN ÉQUIPEMENT PROTECTEUR APPROPRIÉ.
Pour ce qui est des alliages de cuivre et de laiton, un contact avec certains acides pourrait dégager des gaz hydrogène explosifs et inflammables. Si chauffé, de l'oxyde de cuivre, de zinc, de nickel, d'étain, de cadmium et/ou des vapeurs de plomb pourraient s'échapper. Les produits d'aluminium peuvent glisser lors de leur manipulation ou transportation.
TOUS LES PRODUITS DOIVENT ÊTRE ATTACHÉS SOLIDEMENT LORS DU TRANSPORT ET DE LA MANIPULATION.
Lors de la coupe, les courroies d'acier peuvent rebondir et causer des blessures. MANIPULEZ AVEC PRÉCAUTION.
En cas d'une surexposition aux émanations, retirez-vous et respirez de l'air frais. S'il y a contact avec la peau, lavez la région affectée avec de l'eau et du savon. Si les symptômes persistent consultez votre médecin.
POUR PLUS D'INFORMATION, CONSULTEZ LA FEUILLE DE DONNÉES DE SÉCURITÉ.

DATE
SIGNED
SIGNÉ

...CHASER'S ORDER IS FILLED IN ACCORDANCE WITH THE ABOVE TERMS AND CONDITIONS OF SALE AND THOSE ON THE REVERSE HEREOF, ALL OF WHICH TERMS AND CONDITIONS SUPERSEDE THE TERMS AND CONDITIONS (IF ANY) OF PURCHASER'S ORDER. BY ACCEPTIN...
...VERY OF ALL OR PART OF THE ABOVE-DESCRIBED GOODS (HEREINAFTER CALLED THE "GOODS") OR BY PAYING FOR SAME IN WHOLE OR IN PART PURCHASER AGREES TO ALL THE TERMS AND CONDITIONS SET FORTH ABOVE AND ON THE REVERSE HEREOF.
...OMMANDE DE L'ACHETEUR EST EXÉCUTÉE EN CONFORMITÉ DES CONDITIONS DE VENTE STIPULÉES CI-DESSUS ET AU VERSO DES PRÉSENTES. TOUTES CES CONDITIONS REMPLAÇANT CELLES (LE CAS ÉCHÉANT) ÉNONCÉES AU BON DE COMMANDE DE L'ACHETEUR E...
...EPTANT LA LIVRAISON DE TOUT OU PARTIE DES MARCHANDISES DÉCRITES CI-DESSUS (CI-APRÈS APPELÉES LES "MARCHANDISES") OU EN LES PAYANT INTÉGRALEMENT OU PARTIELLEMENT, L'ACHETEUR ACCEPTE TOUTES LES CONDITIONS STIPULÉES CI-DESSUS ET A...
...SO DES PRÉSENTES.

OFFICE/ADMINISTRATIVE SHIPPING/EXPEDITION DRIVER/CHAUFFEUR CUSTOMER/CLIENT

RLS-L 04/1

6/02/17 9:02:40

EMAIL PAGE COUVERTURE

==========

Société:

6/02/17 9:02:40 Document Sommaire

Page couverture 1

Objet: MILL TEST CERTIFICATE

NO.COMMANDE :89340440

No.Bc Du Client :PLA06074

City : LA SARRE State/Province . QC

Séquence correspondant au(x) MTR imprimé(s):

Ln#	Description item:	Coulée	MTR
1	8 X 13.75 PROFILÉ EN U 50W	52077454	094130101

CERTIFIED MATERIAL TEST REPORT

GERDAU

CA-ML-WHITBY
1 GERDAU CT
WHITBY, ON L1N 5T1
Canada

CUSTOMER SHIP TO	CUSTOMER BILL TO
LEROUX STEEL 1331 RUE GRAHAM BELL BOUCHERVILLE,QC J4B 6A1 Canada	LEROUX STEEL 1331 RUE GRAHAM BELL BOUCHERVILLE,QC J4B 6A1 Canada

GRADE	SHAPE / SIZE	DOCUMENT ID:
GGMULTI	Channel / 8 X 13.75#	0000035240

LENGTH	WEIGHT	HEAT / BATCH
40'00"	61,600 LB	52077454/02

SALES ORDER	CUSTOMER MATERIAL N°
4777761/000040	

SPECIFICATION / DATE or REVISION
ASTM A529-14, A572-15
ASTM A6-14,A36-14, ASME SA-36
ASTM A709-15, AASHTO M270-12
CSA G40.20-13/G40.21-13

CUSTOMER PURCHASE ORDER NUMBER	BILL OF LADING	DATE
94038187	1302-0000057236	03/20/2017

CHEMICAL COMPOSITION

C %	Mn %	P %	S %	Si %	Cu %	Ni %	Cr %	V %	Nb %
0.16	0.85	0.014	0.021	0.19	0.24	0.09	0.09	0.021	0.001

MECHANICAL PROPERTIES

YS 0.2% PSI	UTS PSI	YS MPa	UTS MPa	G/L Inch	Elong. %
55132	74822	380	516	8.000	23.60
54768	74073	378	511	8.000	23.60

COMMENTS / NOTES

This grade meets the requirements for the following grades:
ASTM Grades: A36; A529-50; A572-50; A709-36; A709-50
CSA Grades: 44W; 50W
AASHTO Grades: M270-36; M270-50
ASME Grades: SA36

LEROUX

094130101

The above figures are certified chemical and physical test records as contained in the permanent records of company. We certify that these data are correct and in compliance with specified requirements. This material, including the billets, was melted and manufactured in Canada. CMTR complies with EN 10204 3.1.

BHASKAR YALAMANCHILI
QUALITY DIRECTOR
Phone: (409) 769-1014 Email: Bhaskar.Yalamanchili@gerdau.com

LEONARDO NUNES
QUALITY ASSURANCE MGR.
Phone: (905) 668-8811 EXT 4055 Email: Leonardo.Nunes@gerdau.com

EROUX
IVISION OF RUSSEL METALS INC.
ISION de MÉTAUX RUSSEL INC.

0E89340907-56883

COMBINATION SHORT FORM OF STRAIGHT BILL OF LADING - EXPRESS SHIPPING CONTRACT,
SUBJECT TO ALL TERMS, CONDITIONS AND LIMITATIONS INCORPORATED BY REFERENCE AS SHOWN ON THE BACK OF THIS BILL.
FORMULAIRE COMBINÉ DE CONNAISSEMENT DIRECT - ET DE CONTRAT D'EXPÉDITION PAR
MESSAGERIE ASSUJETTI À TOUTES LES MODALITÉS, CONDITIONS ET LIMITATIONS QUI Y SONT INTÉGRÉES PAR RENVOI, AINSI QU'IL EST INDIQUÉ AU VERSO DU PRÉSENT CONNAISSEMENT.

ACIER LEROUX
1675 ROUTE DE L'AÉROPORT
C.P. 550 AMOS QC J9T3 TEL#: (819)732-8381

PROMISE.....: 06/02/17
REPRESENTANT Yvan Bégin

EXPÉDIÉ: 00
NORMEX METAL
9088-6615 QUEBEC INC.
11 BOUL. INDUSTRIEL
ROUTE 111 EST
LA SARRE QC J9Z 2X2

VENDU: 8910165 06/01/17
NORMEX METAL
9088-6615 QUEBEC INC.
P.O. BOX 565
EARLTON ON P0J 1E0

FREIGHT TERMS
MODALITÉS DE TRANSPORT
PORT PAYÉ
CARRIER
TRANSPORTEUR RT# 006
NOTRE CAMION
CUSTOMER PHONE #
TÉLÉPHONE À LA CLIENTÈLE #
(819)333-1200

#BCC PLA06103 RELACHE# Etat Promec

VEHICLE IDENT.
IDENTIFICATION DU VEHICULE
NIR:R-527158-1

INSTRUCTIONS CLIENT:
ECRIRE # DE COULEE SUR LA COPIE ROSE DU CLIENT
****
FERME A 13HR00 LE VENDREDI
COMMENT.:
LIVRAISON 2 JUIN 17

3 CONTAINER CATWALK

LN#01	28862 PROFILÉ EN U	8 X 13.75	50W	QTÉ COMM
	#PIÉC		X 20'	1 EA 275 LB
Commentaire	A COUPER			
	1 FOIS 20'			
	**********			

L-2497

CONFORME OUI NON
SIGNÉ
DATE JOUR MOIS ANNÉE

Les certificats d'analyse (MTR) seront automatiquement envoyés par email

PAGE: 1 TOTALS PALETTES _____ 1 EA 275 LB

STEEL, STAINLESS STEEL, ALUMINUM, BRASS, COPPER, NICKEL AND SPECIALTY STEEL

The above listed products, in a natural state, do not pose inhalation, ingestion or contact hazards.

Prolonged overexposure to dust or fumes during welding, burning, grinding or machining may result in respiratory irritation, skin irritation or disease. USE ADEQUATE VENTILATION AND APPROPRIATE PERSONAL PROTECTIVE EQUIPMENT.

For Brass and Copper Alloys, contact with acids may liberate flammable and explosive hydrogen gas. If heated, copper oxide, zinc oxide, nickel oxide, tin oxide, cadmium oxide and/or lead fumes may be evolved. Aluminum products may slip during handling or transportation.

PRODUCTS MUST BE SECURED FOR HANDLING AND TRANSPORTATION. Material containment strapping may result in the strapping rebounding and injuring those nearby. EXERCISE CAUTION.

For overexposure to metal fumes, remove to fresh air. For skin contact, wash thoroughly with soap and water. Obtain medical attention if symptoms persist.

SEE MATERIAL SAFETY DATA SHEETS FOR MORE DETAILED INFORMATION.

ACIER, ACIER INOXYDABLE, ALUMINIUM, LAITON, CUIVRE, NICKEL ET ACIER SPÉCIALISÉ

Les produits mentionnés ci-haut, à l'état brut, ne causent aucun danger au contact, en cas d'inhalation ou d'ingestion.
Une surexposition aux poussières ou aux émanations durant la soudure, la coupe au chalumeau, le meulage ou l'usinage pourrait résulter en une irritation des voies respiratoires ou de la peau ou autres maladies. UNE VENTILATION ADÉQUATE EST DE MISE AINSI QU'UN ÉQUIPEMENT PROTECTEUR APPROPRIÉ.
Pour ce qui est des alliages de cuivre et de laiton, un contact avec certains acides pourrait dégager des gaz hydrogène explosifs et inflammables. Si chauffé, de l'oxyde de cuivre, de zinc, de nickel, d'étain, de cadmium et/ou des vapeurs de plomb pourraient s'échapper. Les produits d'aluminium peuvent glisser lors de leur manipulation ou transportation.
TOUS LES PRODUITS DOIVENT ÊTRE ATTACHÉS SOLIDEMENT LORS DU TRANSPORT ET DE LA MANIPULATION.
Lors de la coupe, les courroies d'acier peuvent rebondir et causer des blessures. MANIPULEZ AVEC PRÉCAUTION.
En cas d'une surexposition aux émanations, retirez-vous et respirez de l'air frais. S'il y a contact avec la peau lavez la région affectée avec de l'eau et du savon. Si les symptômes persistent consultez votre médecin.
POUR PLUS D'INFORMATION, CONSULTEZ LA FEUILLE DE DONNÉES DE SÉCURITÉ.

DATE

SIGNED
SIGNÉ

PURCHASER'S ORDER IS FILLED IN ACCORDANCE WITH THE ABOVE TERMS AND CONDITIONS OF SALE AND THOSE ON THE REVERSE HEREOF, ALL OF WHICH TERMS AND CONDITIONS SUPERSEDE THE TERMS AND CONDITIONS (IF ANY) OF PURCHASER'S ORDER. BY ACCEPTING DELIVERY OF ALL OR PART OF THE ABOVE-DESCRIBED GOODS (HEREINAFTER CALLED THE "GOODS") OR BY PAYING FOR SAME IN WHOLE OR IN PART PURCHASER AGREES TO ALL THE TERMS AND CONDITIONS SET FORTH ABOVE AND ON THE REVERSE HEREOF.
COMMANDE DE L'ACHETEUR EST EXÉCUTÉE EN CONFORMITÉ DES CONDITIONS DE VENTE STIPULÉES CI-DESSUS ET AU VERSO DES PRÉSENTES. TOUTES CES CONDITIONS REMPLAÇANT CELLES (LE CAS ÉCHÉANT) ÉNONCÉES AU BON DE COMMANDE DE L'ACHETEUR EN ACCEPTANT LA LIVRAISON DE TOUT OU PARTIE DES MARCHANDISES DÉCRITES CI-DESSUS (CI-APRÈS APPELÉES LES "MARCHANDISES") OU EN LES PAYANT INTÉGRALEMENT OU PARTIELLEMENT, L'ACHETEUR ACCEPTE TOUTES LES CONDITIONS STIPULÉES CI-DESSUS ET AU VERSO DES PRÉSENTES.

OFFICE/ADMINISTRATIVE SHIPPING/EXPEDITION DRIVER/CHAUFFEUR CUSTOMER/CLIENT

RL9-1 04

6/02/17 9:03:43

EMAIL PAGE COUVERTURE

==========

Société:

6/02/17 9:03:43 Document Sommaire

Page couverture 1

Objet: MILL TEST CERTIFICATE

NO.COMMANDE :89340907

No.Bc Du Client :PLA06103

City : LA SARRE State/Province . QC

Séquence correspondant au(x) MTR imprimé(s):

Ln#	Description item:	Coulée	MTR
1	8 X 13.75 PROFILÉ EN U 50W	52077454	094130101

CERTIFIED MATERIAL TEST REPORT

GERDAU

CA-ML-WHITBY
1 GERDAU CT
WHITBY, ON L1N 5T1
Canada

CUSTOMER SHIP TO	CUSTOMER BILL TO
LEROUX STEEL 1331 RUE GRAHAM BELL BOUCHERVILLE,QC J4B 6A1 Canada	LEROUX STEEL 1331 RUE GRAHAM BELL BOUCHERVILLE,QC J4B 6A1 Canada

GRADE	SHAPE / SIZE	DOCUMENT ID:
GGMULT1	Channel / 8 X 13.75#	0000035240

LENGTH	WEIGHT	HEAT / BATCH
40'00"	61,600 LB	52077454/02

SALES ORDER	CUSTOMER MATERIAL N°
4777761/000040	

SPECIFICATION / DATE or REVISION
ASTM A529-14, A572-15
ASTM A6-14,A36-14, ASME SA-36
ASTM A709-15, AASHTO M270-12
CSA G40.20-13/G40.21-13

CUSTOMER PURCHASE ORDER NUMBER	BILL OF LADING	DATE
94038187	1302-0000057236	03/20/2017

CHEMICAL COMPOSITION

C %	Mn %	P %	S %	Si %	Cu %	Ni %	Cr %	V %	Nb %
0.16	0.85	0.014	0.021	0.19	0.24	0.09	0.09	0.021	0.001

MECHANICAL PROPERTIES

YS 0.2% PSI	UTS PSI	YS MPa	UTS MPa	G/L inch	Elong. %
55132	74822	380	516	8.000	23.60
54768	74073	378	511	8.000	23.60

COMMENTS / NOTES

This grade meets the requirements for the following grades:
ASTM Grades: A36; A529-50; A572-50; A709-36; A709-50
CSA Grades: 44W; 50W
AASHTO Grades: M270-36; M270-50
ASME Grades: SA36

LEROUX

094130101

The above figures are certified chemical and physical test records as contained in the permanent records of company. We certify that these data are correct and in compliance with specified requirements. This material, including the billets, was melted and manufactured in Canada. CMTR complies with EN 10204 3.1.

BHASKAR YALAMANCHILI
QUALITY DIRECTOR
Phone: (409) 769-1014 Email: Bhaskar.Yalamanchili@gerdau.com

LEONARDO NUNES
QUALITY ASSURANCE MGR.
Phone: (905) 668-8811 EXT 4055 Email: Leonardo.Nunes@gerdau.com

EROUX
VISION OF RUSSEL METALS INC.
VISION de MÉTAUX RUSSEL INC.

0E89340908-56915

COMBINATION SHORT FORM OF STRAIGHT BILL OF LADING - EXPRESS SHIPPING CONTRACT,
SUBJECT TO ALL TERMS, CONDITIONS AND LIMITATIONS INCORPORATED BY REFERENCE AS SHOWN ON THE BACK OF THIS BILL.
FORMULAIRE COMBINÉ DE CONNAISSEMENT DIRECT - ET DE CONTRAT D'EXPÉDITION PAR
MESSAGERIE ASSUJETTI À TOUTES LES MODALITÉS, CONDITIONS ET LIMITATIONS QUI Y SONT INTÉGRÉES PAR RENVOI, AINSI QU'IL EST INDIQUÉ AU VERSO DU PRÉSENT CONNAISSEMENT.

ACIER LEROUX
1675 ROUTE DE L'AÉROPORT
C.P. 550 AMOS QC J9T3 TEL#: (819)732-8381

PROMISE.....: 06/02/17
REPRESENTANT Yvan Bégin

EXPÉDIÉ: 00
NORMEX METAL
9088-6615 QUEBEC INC.
11 BOUL. INDUSTRIEL
ROUTE 111 EST
LA SARRE QC J9Z 2X2

VENDU: 8910165 06/01/17
NORMEX METAL
9088-6615 QUEBEC INC.
P.O. BOX 565
EARLTON ON P0J 1E0

FREIGHT TERMS / MODALITÉS DE TRANSPORT
PORT PAYÉ
CARRIER / TRANSPORTEUR RT# 006
NOTRE CAMION
CUSTOMER PHONE # / TÉLÉPHONE À LA CLIENTÈLE #
(819)333-1200

#BCC PLA06103 RELACHE#

VEHICLE IDENT. / IDENTIFICATION DU VEHICULE
NIR:R-527158-1

INSTRUCTIONS CLIENT:
ECRIRE # DE COULEE SUR LA COPIE ROSE DU CLIENT
****
FERME A 13HR00 LE VENDREDI

Extra Propre
à conserver ATTENTION

COMMENT.:
LIVRAISON 2 JUIN 17

LN#02 38700 CORNIÈRE ACIER L.à.C.	2 X 2 X 1/4 44W				QTÉ COMM	
#PIÉC L-2487		X	20'	3 EA		191 LB
QTÉ expédiée.....						
ÉTQ 9063529 COUL 52078255	3 EA	191	LB	PAYS	CANADA	

LN#03 32222 CORNIÈRE ACIER L.à.C	2 1/2 X 2 1/2 X 1/4 44W				QTÉ COMM	
#PIÉC L-2488		X	20'	2 EA		164 LB
QTÉ expédiée.....						
ÉTQ 9063603 COUL 52077203	2 EA	164	LB	PAYS	CANADA	

CONFORME OUI NON
SIGNÉ
DATE 01/06/17
JOUR MOIS ANNÉE

Les certificats d'analyse (MTR) seront automatiquement envoyés par email

PAGE: 1 TOTALS PALETTES 5 EA 355 LB

STEEL, STAINLESS STEEL, ALUMINUM, BRASS, COPPER, NICKEL AND SPECIALTY STEEL

he above listed products, in a natural state, do not pose inhalation, ingestion or contact hazards.

rolonged overexposure to dust or fumes during welding, burning, grinding or machining may result in spiratory irritation, skin irritation or disease. USE ADEQUATE VENTILATION AND APPROPRIATE PERSONAL ROTECTIVE EQUIPMENT.

or Brass and Copper Alloys, contact with acids may liberate flammable and explosive hydrogen gas. If heated, opper oxide, zinc oxide, nickel oxide, tin oxide, cadmium oxide and/or lead fumes may be evolved. Aluminum roducts may slip during handling or transportation.

ODUCTS MUST BE SECURED FOR HANDLING AND TRANSPORTATION. rel containment strapping may result in the strapping rebounding and injuring those nearby. EXERCISE

or overexposure to metal fumes, remove to fresh air. For skin contact, wash thoroughly with soap and water. btain medical attention if symptoms persist.

EE MATERIAL SAFETY DATA SHEETS FOR MORE DETAILED INFORMATION.

ACIER, ACIER INOXYDABLE, ALUMINIUM, LAITON, CUIVRE, NICKEL ET ACIER SPÉCIALISÉ

Les produits mentionnés ci-haut, à l'état brut, ne causent aucun danger au contact, en cas d'inhalation ou d'ingestion.
Une surexposition aux poussières ou aux émanations durant la soudure, la coupe au chalumeau, le meulage ou l'usinage pourrait résulter en une irritation des voies respiratoires ou de la peau ou autres maladies. UNE VENTILATION ADÉQUATE EST DE MISE AINSI QU'UN ÉQUIPEMENT PROTECTEUR APPROPRIÉ.
Pour ce qui est des alliages de cuivre et de laiton, un contact avec certains acides pourrait dégager des gaz hydrogène explosifs et inflammables. Si chauffé, de l'oxyde de cuivre, de zinc, de nickel, d'étain, de cadmium et/ou des vapeurs de plomb pourraient s'échapper. Les produits d'aluminium peuvent glisser lors de leur manipulation ou transportation.
TOUS LES PRODUITS DOIVENT ÊTRE ATTACHÉS SOUDEMENT LORS DU TRANSPORT ET DE LA MANIPULATION.
Lors de la coupe, les courroies d'acier peuvent rebondir et causer des blessures. MANIPULEZ AVEC PRÉCAUTION.
En cas d'une surexposition aux émanations, retirez-vous et respirez de l'air frais. S'il y a contact avec la peau lavez la région affectée avec de l'eau et du savon. Si les symptômes persistent consultez votre médecin.
POUR PLUS D'INFORMATION, CONSULTEZ LA FEUILLE DE DONNÉES DE SÉCURITÉ.

DATE _____
SIGNED
SIGNÉ _____

CHASER'S ORDER IS FILLED IN ACCORDANCE WITH THE ABOVE TERMS AND CONDITIONS OF SALE AND THOSE ON THE REVERSE HEREOF, ALL OF WHICH TERMS AND CONDITIONS SUPERSEDE THE TERMS AND CONDITIONS (IF ANY) OF PURCHASER'S ORDER. BY ACCEPTI IVERY OF ALL OR PART OF THE ABOVE-DESCRIBED GOODS (HEREINAFTER CALLED THE "GOODS") OR BY PAYING FOR SAME IN WHOLE OR IN PART PURCHASER AGREES TO ALL THE TERMS AND CONDITIONS SET FORTH ABOVE AND ON THE REVERSE HEREOF.
COMMANDE DE L'ACHETEUR EST EXÉCUTÉE EN CONFORMITÉ DES CONDITIONS DE VENTE STIPULÉES CI-DESSUS ET AU VERSO DES PRÉSENTES, TOUTES DES CONDITIONS REMPLAÇANT CELLES (LE CAS ÉCHÉANT) ÉNONCÉES AU BON DE COMMANDE DE L'ACHETEUR E CEPTANT LA LIVRAISON DE TOUT OU PARTIE DES MARCHANDISES DÉCRITES CI-DESSUS (CI-APRÈS APPELÉES LES "MARCHANDISES") OU EN LES PAYANT INTÉGRALEMENT OU PARTIELLEMENT, L'ACHETEUR ACCEPTE TOUTES LES CONDITIONS STIPULÉES CI-DESSUS ET / SO DES PRÉSENTES.

OFFICE/ADMINISTRATIVE SHIPPING/EXPEDITION DRIVER/CHAUFFEUR CUSTOMER/CLIENT RLG-L 04/

6/02/17 8:47:14

EMAIL PAGE COUVERTURE

==========

Société:

6/02/17 8:47:14 Document Sommaire

Page couverture 1

Objet: MILL TEST CERTIFICATE

NO.COMMANDE :89340908

No.Bc Du Client :PLA06103

City : LA SARRE State/Province . QC

Séquence correspondant au(x) MTR imprimé(s):

Ln#	Description item:	Coulée	MTR
2	2 X 2 X 1/4 CORN. LÀC 44W	52078255	094131988
3	2 1/2 X 2 1/2 X 1/4 CORN. LÀC 44W	52077203	094128583

CERTIFIED MATERIAL TEST REPORT

GERDAU

CA-ML-CAMBRIDGE
160 ORION PLACE
CAMBRIDGE, ON N1T 1R9
Canada

CUSTOMER SHIP TO	CUSTOMER BILL TO
LEROUX STEEL 1331 RUE GRAHAM BELL BOUCHERVILLE,QC J4B 6A1 Canada	LEROUX STEEL 1331 RUE GRAHAM BELL BOUCHERVILLE,QC J4B 6A1 Canada

GRADE	SHAPE / SIZE	DOCUMENT I
GDMULTI	Angle / 2X2X1/4	0000038149

LENGTH	WEIGHT	HEAT / BATCH
20'00"	37,324 LB	52078255/02

SALES ORDER	CUSTOMER MATERIAL N°
4774780/000100	

SPECIFICATION / DATE or REVISION
ASTM A529-14, A572-15
ASTM A6-14,A36-14, ASME SA-36
ASTM A709-15, AASHTO M270-12
CSA G40.20-13/G40.21-13

CUSTOMER PURCHASE ORDER NUMBER	BILL OF LADING	DATE
94038191-FEMQ2	1301-0000029491	05/05/2017

CHEMICAL COMPOSITION

C %	Mn %	P %	S %	Si %	Cu %	Ni %	Cr %	Mo %	V %	Nb %
0.14	0.74	0.015	0.033	0.18	0.37	0.09	0.10	0.034	0.013	0.001

MECHANICAL PROPERTIES

Elong. %	G/L Inch	UTS PSI	UTS MPa	YS PSI	YS MPa
25.00	8.000	73987	510	53590	370
27.50	8.000	72747	502	52205	360

COMMENTS / NOTES

This grade meets the requirements for the following grades:
ASTM Grades: A36; A529-50; A572-50; A709-36; A709-50
CSA Grades: 44W; 50W
AASHTO Grades: M270-36; M270-50
ASME Grades: SA36

LEROUX

094131988

The above figures are certified chemical and physical test records as contained in the permanent records of company. We certify that these data are correct and in compliance with specified requirements. This material, including the billets, was melted and manufactured in Canada. CMTR complies with EN 10204 3.1.

BHASKAR YALAMANCHILI
QUALITY DIRECTOR
Phone: (409) 769-1014 Email: Bhaskar.Yalamanchili@gerdau.com

LEONARDO NUNES
QUALITY ASSURANCE MGR.
Phone: (905) 668-8811 EXT 4055 Email: Leonardo.Nunes@gerdau.com

CERTIFIED MATERIAL TEST REPORT

GERDAU

CA-ML-WHITBY
1 GERDAU CT
WHITBY, ON L1N 5T1
Canada

CUSTOMER SHIP TO	CUSTOMER BILL TO
LEROUX STEEL 1331 RUE GRAHAM BELL BOUCHERVILLE,QC J4B 6A1 Canada	LEROUX STEEL 1331 RUE GRAHAM BELL BOUCHERVILLE,QC J4B 6A1 Canada

GRADE	SHAPE / SIZE	DOCUMENT ID:
GGMULTI	Angle / 2 1/2X2 1/2X1/4	0000031022

LENGTH	WEIGHT	HEAT / BATCH
20'00"	37,884 LB	52077203/02

SALES ORDER	CUSTOMER MATERIAL N°
4465103/000180	

SPECIFICATION / DATE or REVISION
ASTM A529-14, A572-15
ASTM A6-14,A36-14, ASME SA-36
ASTM A709-15, AASHTO M270-12
CSA G40.20-13/G40.21-13

CUSTOMER PURCHASE ORDER NUMBER	BILL OF LADING	DATE
94037803-FEMQ1	1302-0000055481	02/08/2017

CHEMICAL COMPOSITION

C %	Mn %	P %	S %	Si %	Cu %	Ni %	Cr %	V %	Nb %
0.13	0.77	0.018	0.044	0.18	0.31	0.11	0.13	0.016	0.001

MECHANICAL PROPERTIES

Elong. %	G/L Inch	UTS PSI	UTS MPa	YS 0.2% PSI	YS MPa
28.80	8.000	70992	489	55041	379
28.80	8.000	71000	490	54833	378

COMMENTS / NOTES

This grade meets the requirements for the following grades:
ASTM Grades: A36; A529-50; A572-50; A709-36; A709-50
CSA Grades: 44W; 50W
AASHTO Grades: M270-36; M270-50
ASME Grades: SA36

LEROUX

094128583

The above figures are certified chemical and physical test records as contained in the permanent records of company. We certify that these data are correct and in compliance with specified requirements. This material, including the billets, was melted and manufactured in Canada. CMTR complies with EN 10204 3.1.

BHASKAR YALAMANCHILI
QUALITY DIRECTOR
Phone: (409) 769-1014 Email: Bhaskar.Yalamanchili@gerdau.com

LEONARDO NUNES
QUALITY ASSURANCE MGR.
Phone: (905) 668-8811 EXT 4055 Email: Leonardo.Nunes@gerdau.com

EROUX
DIVISION OF RUSSEL METALS INC.
DIVISION DE MÉTAUX RUSSEL INC.

0E89340478-56711

COMBINATION SHORT FORM OF STRAIGHT BILL OF LADING - EXPRESS SHIPPING CONTRACT,
SUBJECT TO ALL TERMS, CONDITIONS AND LIMITATIONS INCORPORATED BY REFERENCE AS SHOWN ON THE BACK OF THIS BILL.
FORMULAIRE COMBINÉ DE CONNAISSEMENT DIRECT - ET DE CONTRAT D'EXPÉDITION PAR
MESSAGERIE ASSUJETTI À TOUTES LES MODALITÉS, CONDITIONS ET LIMITATIONS QUI Y SONT INTÉGRÉES PAR RENVOI, AINSI QU'IL EST INDIQUÉ AU VERSO DU PRÉSENT CONNAISSEMENT.

ACIER LEROUX
1675 ROUTE DE L'AÉROPORT
C.P. 550 AMOS QC J9T3 TEL#: (819)732-8381

PROMISE.....: 05/31/17
REPRESENTANT J LALANCETTE

EXPÉDIÉ: 00
NORMEX METAL
9088-6615 QUEBEC INC.
11 BOUL. INDUSTRIEL
ROUTE 111 EST
LA SARRE QC J9Z 2X2

VENDU: 8910165 05/30/17
NORMEX METAL
9088-6615 QUEBEC INC.
P.O. BOX 565
EARLTON ON P0J 1E0

FREIGHT TERMS
MODALITÉS DE TRANSPORT
PORT PAYÉ
CARRIER
TRANSPORTEUR RT# 006
NOTRE CAMION
CUSTOMER PHONE #
TÉLÉPHONE À LA CLIENTÈLE #
(819)333-1200

#BCC PLA06076 RELACHE#

VEHICLE IDENT.
IDENTIFICATION DU VEHICULE
NIR:R-527158-1

INSTRUCTIONS CLIENT:
ECRIRE # DE COULEE SUR LA COPIE ROSE DU CLIENT
****
FERME A 13HR00 LE VENDREDI

DIKE ORT WATCK

LN#01 38642 CORNIÈRE ACIER L.à.C 1 1/2 X 1 1/2 X 3/16 44W QTÉ COMM
#PIÉC L-2478 X 20' 1 EA 36 LB
QTÉ expédiée.....
ÉTQ 9061831 COUL 52077556 1 EA 36 LB PAYS CANADA

LN#02 15889 PROFILÉ EN U 10 X 15.3 50W QTÉ COMM
#PIÉC L-2479 X 40' 7 EA 4284 LB
QTÉ expédiée.....
ÉTQ 9063112 COUL 613252 7 EA 4284 LB PAYS POLOGNE

CONFORME ☐ OUI ☐ NON
SIGNÉ
DATE 31/05/17
JOUR MOIS ANNÉE

Les certificats d'analyse (MTR) seront automatiquement envoyés par email

PAGE: 1 TOTALS PALETTES 8 EA 4320 LB

STEEL, STAINLESS STEEL, ALUMINUM, BRASS, COPPER, NICKEL AND SPECIALTY STEEL

The above listed products, in a natural state, do not pose inhalation, ingestion or contact hazards.

Prolonged overexposure to dust or fumes during welding, burning, grinding or machining may result in respiratory irritation, skin irritation or disease. USE ADEQUATE VENTILATION AND APPROPRIATE PERSONAL PROTECTIVE EQUIPMENT.

For Brass and Copper Alloys, contact with acids may liberate flammable and explosive hydrogen gas. If heated, copper oxide, zinc oxide, nickel oxide, tin oxide, cadmium oxide and/or lead fumes may be evolved. Aluminum products may slip during handling or transportation.

PRODUCTS MUST BE SECURED FOR HANDLING AND TRANSPORTATION.
Loose containment strapping may result in the strapping rebounding and injuring those nearby. EXERCISE CARE.

For overexposure to metal fumes, remove to fresh air. For skin contact, wash thoroughly with soap and water. Obtain medical attention if symptoms persist.

SEE MATERIAL SAFETY DATA SHEETS FOR MORE DETAILED INFORMATION.

ACIER, ACIER INOXYDABLE, ALUMINIUM, LAITON, CUIVRE, NICKEL ET ACIER SPÉCIALISÉ

Les produits mentionnés ci-haut, à l'état brut, ne causent aucun danger au contact, en cas d'inhalation ou d'ingestion.
Une surexposition aux poussières ou aux émanations durant la soudure, la coupe au chalumeau, le meulage ou l'usinage pourrait résulter en une irritation des voies respiratoires ou de la peau ou autres maladies. UNE VENTILATION ADÉQUATE EST DE MISE AINSI QU'UN ÉQUIPEMENT PROTECTEUR APPROPRIÉ.
Pour ce qui est des alliages de cuivre et de laiton, un contact avec certains acides pourrait dégager des gaz hydrogène explosifs et inflammables. Si chauffé, de l'oxyde de cuivre, de zinc, de nickel, d'étain, de cadmium et/ou des vapeurs de plomb pourraient s'échapper. Les produits d'aluminium peuvent glisser lors de leur manipulation ou transportation.
TOUS LES PRODUITS DOIVENT ÊTRE ATTACHÉS SOLIDEMENT LORS DU TRANSPORT ET DE LA MANIPULATION.
Lors de la coupe, les courroies d'acier peuvent rebondir et causer des blessures. MANIPULEZ AVEC PRÉCAUTION.
En cas d'une surexposition aux émanations, retirez-vous et respirez de l'air frais. S'il y a contact avec la peau lavez la région affectée avec de l'eau et du savon. Si les symptômes persistent consultez votre médecin.
POUR PLUS D'INFORMATION, CONSULTEZ LA FEUILLE DE DONNÉES DE SÉCURITÉ.

DATE 31 MAI 2017
SIGNED
SIGNÉ

PURCHASER'S ORDER IS FILLED IN ACCORDANCE WITH THE ABOVE TERMS AND CONDITIONS OF SALE AND THOSE ON THE REVERSE HEREOF, ALL OF WHICH TERMS AND CONDITIONS SUPERSEDE THE TERMS AND CONDITIONS (IF ANY) OF PURCHASER'S ORDER. BY ACCEPTING DELIVERY OF ALL OR PART OF THE ABOVE-DESCRIBED GOODS (HEREINAFTER CALLED THE "GOODS") OR BY PAYING FOR SAME IN WHOLE OR IN PART PURCHASER AGREES TO ALL THE TERMS AND CONDITIONS SET FORTH ABOVE AND ON THE REVERSE HEREOF.
COMMANDE DE L'ACHETEUR EST EXÉCUTÉE EN CONFORMITÉ DES CONDITIONS DE VENTE STIPULÉES CI-DESSUS ET AU VERSO DES PRÉSENTES. TOUTES CES CONDITIONS REMPLAÇANT CELLES (LE CAS ÉCHEANT) ÉNONCÉES AU BON DE COMMANDE DE L'ACHETEUR EN ACCEPTANT LA LIVRAISON DE TOUT OU PARTIE DES MARCHANDISES DÉCRITES CI-DESSUS (CI-APRÈS APPELÉES LES "MARCHANDISES") OU EN LES PAYANT INTÉGRALEMENT OU PARTIELLEMENT, L'ACHETEUR ACCEPTE TOUTES LES CONDITIONS STIPULÉES CI-DESSUS ET AU VERSO DES PRÉSENTES.

OFFICE/ADMINISTRATIVE SHIPPING/EXPEDITION DRIVER/CHAUFFEUR CUSTOMER/CLIENT

RL9-L 0

6/01/17 8:05:46

EMAIL PAGE COUVERTURE

==========

Société: Acier Leroux - Amos

6/01/17 8:05:46 Document Sommaire

Page couverture 1

Objet: MILL TEST CERTIFICATE

NO.COMMANDE :89340478

No.Bc Du Client :PLA06076

City : LA SARRE State/Province . QC

Séquence correspondant au(x) MTR imprimé(s):

Ln#	Description item:	Coulée	MTR
1	1 1/2 X 1 1/2 X 3/16 CORN. LÀC 44W	52077556	094129587
2	10 X 15.3 PROFILÉ EN U 50W	613252	094124694

CERTIFIED MATERIAL TEST REPORT

GERDAU

CA-ML-CAMBRIDGE
160 ORION PLACE
CAMBRIDGE, ON N1T 1R9
Canada

CUSTOMER SHIP TO	CUSTOMER BILL TO
LEROUX STEEL 1331 RUE GRAHAM BELL BOUCHERVILLE,QC J4B 6A1 Canada	LEROUX STEEL 1331 RUE GRAHAM BELL BOUCHERVILLE,QC J4B 6A1 Canada

GRADE	SHAPE / SIZE	DOCUMENT
GGMULTI	Angle / 1 1/2X1 1/2X3/16	0000033196

LENGTH	WEIGHT	HEAT / BATCH
20'00"	25,740 LB	52077556/02

SALES ORDER	CUSTOMER MATERIAL N°
4585552/000060	

SPECIFICATION / DATE or REVISION
ASTM A529-14, A572-15
ASTM A6-14,A36-14, ASME SA-36
ASTM A709-15, AASHTO M270-12
CSA G40.20-13/G40.21-13

CUSTOMER PURCHASE ORDER NUMBER	BILL OF LADING	DATE
94037961	1301-0000028506	03/07/2017

CHEMICAL COMPOSITION

C %	Mn %	P %	S %	Si %	Cu %	Ni %	Cr %	Mo %	V %	Nb %
0.15	0.78	0.020	0.018	0.17	0.25	0.11	0.15	0.031	0.012	0.001

MECHANICAL PROPERTIES

Elong. %	G/L Inch	UTS PSI	UTS MPa	YS PSI	YS MPa
25.00	8.000	74339	513	53274	367
25.00	8.000	74556	514	53590	370

COMMENTS / NOTES

This grade meets the requirements for the following grades:
ASTM Grades: A36; A529-50; A572-50; A709-36; A709-50
CSA Grades: 44W; 50W
AASHTO Grades: M270-36; M270-50
ASME Grades: SA36

LEROUX

094129587

The above figures are certified chemical and physical test records as contained in the permanent records of company. We certify that these data are correct and in compliance with specified requirements. This material, including the billets, was melted and manufactured in Canada. CMTR complies with EN 10204 3.1.

BHASKAR YALAMANCHILI
QUALITY DIRECTOR
Phone: (409) 769-1014 Email: Bhaskar.Yalamanchili@gerdau.com

LEONARDO NUNES
QUALITY ASSURANCE MGR.
Phone: (905) 668-8811 EXT 4055 Email: Leonardo.Nunes@gerdau.com

A01
ArcelorMittal Poland S.A.
Oddział w Dąbrowie Górniczej
al. J. Piłsudskiego 92
41-308 Dąbrowa Górnicza

A02
MILL TEST REPORT

ASTM A6/A6M Nr: 1001876000

Z01.1
Dąbrowa Górnicza, 12.09.2016

ArcelorMittal

A06.1
Purchaser: ARCELORMITTAL COMMERCIAL SECTIONS S A
4221 ESCH-SUR-ALZETTE Luksemburg / Luxembourg / Luxemburg
66 RUE DE LUXEMBOURG 66 RUE DE LUXEMBOURG

A06.2
Address: Acier Leroux div. of Russel Metals 401697
J4B 6A1 BOUCHERVILLE Kanada / Canada / Kanada
1331, GRAHAM BELL

A07	No of purchase order	Contract No	Manuf. Order No/Pos	Delivery Note	Number of transport
	M94037300	PL/277839653/16-10685468	20014545/000007	62452828	315139455689
	ORDER: M94037300	LOT: SOREL		PREBON: 1700023428/7	

B01

According	Classification standards	Tolerance standards
ASTM A6/A6M-14	CSA G40.21-04	ASTM A6/A6M-14

B02-B03 B09-B11
Heavy channels C 10 X 15,3 length: 12192,00 mm steel grade: 350W

B07 Heat	Bundles/Pieces	B13 Weight
613252	8 / 128	35,536 t
Total	04:33:02	ORYGINAŁ/ORIGINAL 1[illegible]2016
	8 / 128	35,536 t

C71-C92 Chemical composition [%]

B07 Heat	C	Mn	Si	P	S	Cu	Cr	Ni	Al	N_2	Mo	Nb	V	Ti	Sn	Pb	As	B	O	H_2	CEV
613252	0,15	0,71	0,195	0,013	0,010	0,03	0,04	0,015	0,003	0,0067	0,005	0,001	0,023	0,001	0,004	0,001	0,001	0,0002			0,28

Mechanical properties

B07	C11	C12	C13	D73	C41	C44	C42 - Work of fracture
	TENSILE TEST						CHARPY IMPACT TEST [J]

Heat	YS [Mpa]	YS02 [Mpa]	UTS [Mpa]	EL [mm]	EL [%]	YS/UTS	YS02/UTS	Pr.width KV [mm]	Temp. °C	Test 1	Test 2	Test 3	average test
613252	417,0		508,0	200	20,1	0,82							
613252	433,0		508,0	200	20,2	0,85							

Z01 Statement of compliance: The producer guarantees that delivered goods are in accordance with the conditions of the order.

A05, Z02.2

Główny Specjalista
dla Certyfikacji Wyrobów i Dokumentacji
Nadzorczej wyroby Ziegel
[illegible]

LEROUX

Wystawił: Antoni Czechowski

094124694

EROUX
DIVISION OF RUSSEL METALS INC.
DIVISION de MÉTAUX RUSSEL INC.

0E89340478-56711

COMBINATION SHORT FORM OF STRAIGHT BILL OF LADING - EXPRESS SHIPPING CONTRACT,
SUBJECT TO ALL TERMS, CONDITIONS AND LIMITATIONS INCORPORATED BY REFERENCE AS SHOWN ON THE BACK OF THIS BILL.
FORMULAIRE COMBINÉ DE CONNAISSEMENT DIRECT - ET DE CONTRAT D'EXPÉDITION PAR
MESSAGERIE ASSUJETTI À TOUTES LES MODALITÉS, CONDITIONS ET LIMITATIONS QUI Y SONT INTÉGRÉES PAR RENVOI, AINSI QU'IL EST INDIQUÉ AU VERSO OU PRÉSENT CONNAISSEMENT.

ACIER LEROUX
1675 ROUTE DE L'AÉROPORT
C.P. 550 AMOS QC J9T3 TEL#: (819)732-8381

PROMISE.....: 05/31/17
REPRESENTANT J LALANCETTE

EXPÉDIÉ: 00
NORMEX METAL
9088-6615 QUEBEC INC.
11 BOUL. INDUSTRIEL
ROUTE 111 EST
LA SARRE QC J9Z 2X2

VENDU: 8910165 05/30/17
NORMEX METAL
9088-6615 QUEBEC INC.
P.O. BOX 565
EARLTON ON P0J 1E0

FREIGHT TERMS / MODALITÉS DE TRANSPORT
PORT PAYÉ
CARRIER / TRANSPORTEUR RT# 006
NOTRE CAMION
CUSTOMER PHONE # / TÉLÉPHONE À LA CLIENTÈLE #
(819)333-1200

#BCC PLA06076 RELACHE#

VEHICLE IDENT / IDENTIFICATION DU VEHICULE
NIR:R-527158-1

INSTRUCTIONS CLIENT:
ECRIRE # DE COULEE SUR LA COPIE ROSE DU CLIENT
****
FERME A 13HR00 LE VENDREDI

DIKE ATTACK

LN#01	38642 CORNIèRE ACIER L.à.C	1 1/2 X 1 1/2 X 3/16	44W			QTÉ COMM		
	#PIéC L-2478			X	20'	1 EA	36 LB	
QTÉ expédiée.....								
ÉTQ 9061831	COUL 52077556	1 EA	36 LB	PAYS	CANADA			
LN#02	15889 PROFILÉ EN U	10 X 15.3	50W			QTÉ COMM		
	#PIéC L-2479			X	40'	7 EA	4284 LB	
QTÉ expédiée.....								
ÉTQ 9063112	COUL 613252	7 EA	4284 LB	PAYS	POLOGNE			

CONFORME ☒ OUI ☐ NON
SIGNÉ
DATE 31 / 05 / 17
JOUR MOIS ANNÉE

Les certificats d'analyse (MTR) seront automatiquement envoyés par email

PAGE: 1 TOTALS PALETTES 8 EA 4320 LB

STEEL, STAINLESS STEEL, ALUMINUM, BRASS, COPPER, NICKEL AND SPECIALTY STEEL

The above listed products, in a natural state, do not pose inhalation, ingestion or contact hazards.

Prolonged overexposure to dust or fumes during welding, burning, grinding or machining may result in respiratory irritation, skin irritation or disease. USE ADEQUATE VENTILATION AND APPROPRIATE PERSONAL PROTECTIVE EQUIPMENT.

For Brass and Copper Alloys, contact with acids may liberate flammable and explosive hydrogen gas. If heated, copper oxide, zinc oxide, nickel oxide, tin oxide, cadmium oxide and/or lead fumes may be evolved. Aluminum products may slip during handling or transportation.

PRODUCTS MUST BE SECURED FOR HANDLING AND TRANSPORTATION. Cut containment strapping may result in the strapping rebounding and injuring those nearby. EXERCISE CARE.

For overexposure to metal fumes, remove to fresh air. For skin contact, wash thoroughly with soap and water. Obtain medical attention if symptoms persist.

SEE MATERIAL SAFETY DATA SHEETS FOR MORE DETAILED INFORMATION.

ACIER, ACIER INOXYDABLE, ALUMINIUM, LAITON, CUIVRE, NICKEL ET ACIER SPÉCIALISÉ

Les produits mentionnés ci-haut, à l'état brut, ne causent aucun danger au contact, en cas d'inhalation ou d'ingestion.
Une surexposition aux poussières ou aux émanations durant la soudure, la coupe au chalumeau, le rainage ou l'usinage pourrait résulter en une irritation des voies respiratoires ou de la peau ou autres maladies. UNE VENTILATION ADÉQUATE EST DE MISE AINSI QU'UN ÉQUIPEMENT PROTECTEUR APPROPRIÉ.
Pour ce qui est des alliages de cuivre et de laiton, un contact avec certains acides pourrait dégager des gaz hydrogène explosifs et inflammables. Si chauffé, de l'oxyde de cuivre, de zinc, de nickel, d'étain, de cadmium et/ou des vapeurs de plomb pourraient s'échapper. Les produits d'aluminium peuvent glisser lors de leur manipulation ou transportation.
TOUS LES PRODUITS DOIVENT ÊTRE ATTACHÉS SOLIDEMENT LORS DU TRANSPORT ET DE LA MANIPULATION.
Lors de la coupe, les courroies d'acier peuvent rebondir et causer des blessures. MANIPULEZ AVEC PRÉCAUTION.
En cas d'une surexposition aux émanations, retirez-vous et respirez de l'air frais. S'il y a contact avec la peau lavez la région affectée avec de l'eau et du savon. Si les symptômes persistent consultez votre médecin.
POUR PLUS D'INFORMATION, CONSULTEZ LA FEUILLE DE DONNÉES DE SÉCURITÉ.

DATE 31 / MAI / 2012
SIGNED
SIGNÉ

PURCHASER'S ORDER IS FILLED IN ACCORDANCE WITH THE ABOVE TERMS AND CONDITIONS OF SALE AND THOSE ON THE REVERSE HEREOF, ALL OF WHICH TERMS AND CONDITIONS SUPERSEDE THE TERMS AND CONDITIONS (IF ANY) OF PURCHASER'S ORDER. BY ACCEPTING DELIVERY OF ALL OR PART OF THE ABOVE-DESCRIBED GOODS (HEREINAFTER CALLED THE "GOODS") OR BY PAYING FOR SAME IN WHOLE OR IN PART PURCHASER AGREES TO ALL THE TERMS AND CONDITIONS SET FORTH ABOVE AND ON THE REVERSE HEREOF.
LA COMMANDE DE L'ACHETEUR EST EXÉCUTÉE EN CONFORMITÉ DES CONDITIONS DE VENTE STIPULÉES CI-DESSUS ET AU VERSO DES PRÉSENTES. TOUTES CES CONDITIONS REMPLAÇANT CELLES (LE CAS ÉCHÉANT) ÉNONCÉES AU BON DE COMMANDE DE L'ACHETEUR EN ACCEPTANT LA LIVRAISON DE TOUT OU PARTIE DES MARCHANDISES DÉCRITES CI-DESSUS (CI-APRÈS APPELÉES LES "MARCHANDISES") OU EN LES PAYANT INTÉGRALEMENT OU PARTIELLEMENT, L'ACHETEUR ACCEPTE TOUTES LES CONDITIONS STIPULÉES CI-DESSUS ET AU VERSO DES PRÉSENTES.

OFFICE/ADMINISTRATIVE SHIPPING/EXPEDITION DRIVER/CHAUFFEUR CUSTOMER/CLIENT

BLD-L 0

6/01/17 8:05:46

EMAIL PAGE COUVERTURE

==========

Société: Acier Leroux - Amos

6/01/17 8:05:46 Document Sommaire

Page couverture 1

Objet: MILL TEST CERTIFICATE

NO.COMMANDE :89340478

No.Bc Du Client :PLA06076

City : LA SARRE State/Province . QC

Séquence correspondant au(x) MTR imprimé(s):

Ln#	Description item:	Coulée	MTR
1	1 1/2 X 1 1/2 X 3/16 CORN. LÀC 44W	52077556	094129587
2	10 X 15.3 PROFILÉ EN U 50W	613252	094124694

CERTIFIED MATERIAL TEST REPORT

GERDAU

CA-ML-CAMBRIDGE
160 ORION PLACE
CAMBRIDGE, ON N1T 1R9
Canada

CUSTOMER SHIP TO	CUSTOMER BILL TO
LEROUX STEEL 1331 RUE GRAHAM BELL BOUCHERVILLE,QC J4B 6A1 Canada	LEROUX STEEL 1331 RUE GRAHAM BELL BOUCHERVILLE,QC J4B 6A1 Canada

GRADE	SHAPE / SIZE	DOCUMENT
GGMULTI	Angle / 1 1/2X1 1/2X3/16	0000033196

LENGTH	WEIGHT	HEAT / BATCH
20'00"	25,740 LB	52077556/02

SALES ORDER	CUSTOMER MATERIAL N°
4585552/000060	

SPECIFICATION / DATE or REVISION
ASTM A529-14, A572-15
ASTM A6-14,A36-14, ASME SA-36
ASTM A709-15, AASHTO M270-12
CSA G40.20-13/G40.21-13

CUSTOMER PURCHASE ORDER NUMBER	BILL OF LADING	DATE
94037961	1301-0000028506	03/07/2017

CHEMICAL COMPOSITION

C %	Mn %	P %	S %	Si %	Cu %	Ni %	Cr %	Mo %	V %	Nb %
0.15	0.78	0.020	0.018	0.17	0.25	0.11	0.15	0.031	0.012	0.001

MECHANICAL PROPERTIES

Elong. %	G/L Inch	UTS PSI	UTS MPa	YS PSI	YS MPa
25.00	8.000	74339	513	53274	367
25.00	8.000	74556	514	53590	370

COMMENTS / NOTES

This grade meets the requirements for the following grades:
ASTM Grades: A36; A529-50; A572-50; A709-36; A709-50
CSA Grades: 44W; 50W
AASHTO Grades: M270-36; M270-50
ASME Grades: SA36

LEROUX

094129587

The above figures are certified chemical and physical test records as contained in the permanent records of company. We certify that these data are correct and in compliance with specified requirements. This material, including the billets, was melted and manufactured in Canada. CMTR complies with EN 10204 3.1.

BHASKAR YALAMANCHILI
QUALITY DIRECTOR
Phone: (409) 769-1014 Email: Bhaskar.Yalamanchili@gerdau.com

LEONARDO NUNES
QUALITY ASSURANCE MGR.
Phone: (905) 668-8811 EXT 4055 Email: Leonardo.Nunes@gerdau.com

EROUX
DIVISION OF RUSSEL METALS INC.
DIVISION de MÉTAUX RUSSEL INC.

0E94853576-21170

COMBINATION SHORT FORM OF STRAIGHT BILL OF LADING - EXPRESS SHIPPING CONTRACT,
SUBJECT TO ALL TERMS, CONDITIONS AND LIMITATIONS INCORPORATED BY REFERENCE AS SHOWN ON THE BACK OF THIS BILL.
FORMULAIRE COMBINÉ DE CONNAISSEMENT DIRECT - ET DE CONTRAT D'EXPÉDITION PAR
MESSAGERIE ASSUJETTI À TOUTES LES MODALITÉS, CONDITIONS ET LIMITATIONS QUI Y SONT INTÉGRÉES PAR RENVOI, AINSI QU'IL EST INDIQUÉ AU VERSO DU PRÉSENT CONNAISSEMENT.

ACIER LEROUX
1675 ROUTE DE L'AÉROPORT
C.P. 550 AMOS QC J9T3 TEL#: (819)732-8381

PROMISE.....: 05/31/17
REPRESENTANT J LALANCETTE

EXPÉDIÉ: 00
NORMEX METAL
9088-6615 QUEBEC INC.
11 BOUL. INDUSTRIEL
ROUTE 111 EST
LA SARRE QC J9Z 2X2

VENDU: 8910165 05/29/17
NORMEX METAL
9088-6615 QUEBEC INC.
P.O. BOX 565
EARLTON ON P0J 1E0

FREIGHT TERMS / MODALITÉS DE TRANSPORT
PORT PAYÉ
CARRIER / TRANSPORTEUR RT# 006
NOTRE CAMION
CUSTOMER PHONE # / TÉLÉPHONE À LA CLIENTÈLE #
(819)333-1200

#BCC PLA06076 RELACHE#

VEHICLE IDENT. / IDENTIFICATION DU VEHICULE
NIR:R-527158-1

INSTRUCTIONS CLIENT:
ECRIRE # DE COULEE SUR LA COPIE ROSE DU CLIENT
****
FERME A 13HR00 LE VENDREDI

Plomberie DICE Canada

LN#03 32222 CORNIÈRE ACIER L.à.C	2 1/2 X 2 1/2 X 1/4 44W X 20'	QTÉ COMM 43 EA	3526 LB
#PIÉC 20			
QTÉ expédiée..... 20			
ÉTQ 1411627 COUL 52076443	10 EA 820 LB PAYS CANADA		
ÉTQ 1413890 COUL 52077202	33 EA 2706 LB PAYS CANADA		
QTÉ Totale Expéd.:	43 EA 3526 LB		

CONFORME OUI NON
SIGNÉ
DATE 31 05 17
JOUR MOIS ANNÉE

Acier Leroux Amos
DIVISION DE MÉTAUX RUSSEL INC.
SUJET À INSPECTION QUANT À LA QUANTITÉ ET LA QUALITÉ
Reçu le : 30 MAI 2017 Par :
Inspecté le : Par:

L-2480

Les certificats d'analyse (MTR) seront automatiquement envoyés par email

PAGE: 1 TOTALS PALETTES 43 EA 3526 LB

STEEL, STAINLESS STEEL, ALUMINUM, BRASS, COPPER, NICKEL AND SPECIALTY STEEL

The above listed products, in a natural state, do not pose inhalation, ingestion or contact hazards.

Prolonged overexposure to dust or fumes during welding, burning, grinding or machining may result in respiratory irritation, skin irritation or disease. USE ADEQUATE VENTILATION AND APPROPRIATE PERSONAL PROTECTIVE EQUIPMENT.

For Brass and Copper Alloys, contact with acids may liberate flammable and explosive hydrogen gas. If heated, copper oxide, zinc oxide, nickel oxide, tin oxide, cadmium oxide and/or lead fumes may be involved. Aluminum products may slip during handling or transportation.

PRODUCTS MUST BE SECURED FOR HANDLING AND TRANSPORTATION. Steel containment strapping may result in the strapping rebounding and injuring those nearby. EXERCISE CAUTION.

For overexposure to metal fumes, remove to fresh air. For skin contact, wash thoroughly with soap and water. Obtain medical attention if symptoms persist.

SEE MATERIAL SAFETY DATA SHEETS FOR MORE DETAILED INFORMATION.

ACIER, ACIER INOXYDABLE, ALUMINIUM, LAITON, CUIVRE, NICKEL ET ACIER SPÉCIALISÉ

Les produits mentionnés ci-haut, à l'état brut, ne causent aucun danger au contact, en cas d'inhalation ou d'ingestion.
Une surexposition aux poussières ou aux émanations durant la soudure, la coupe au chalumeau, le meulage ou l'usinage pourrait résulter en une irritation des voies respiratoires ou de la peau ou autres maladies. UNE VENTILATION ADÉQUATE EST DE MISE AINSI QU'UN ÉQUIPEMENT PROTECTEUR APPROPRIÉ.
Pour ce qui est des alliages de cuivre et de laiton, un contact avec certains acides pourrait dégager des gaz hydrogène explosifs et inflammables. Si chauffé, de l'oxyde de cuivre, de zinc, de nickel, d'étain, de cadmium et/ou des vapeurs de plomb pourraient s'échapper. Les produits d'aluminium peuvent glisser lors de leur manipulation ou transportation.
TOUS LES PRODUITS DOIVENT ÊTRE ATTACHÉS SOLIDEMENT LORS DU TRANSPORT ET DE LA MANIPULATION.
Lors de la coupe, les courroies d'acier peuvent rebondir et causer des blessures. MANIPULEZ AVEC PRÉCAUTION.
En cas d'une surexposition aux émanations, retirez-vous et respirez de l'air frais. S'il y a contact avec la peau lavez la région affectée avec de l'eau et du savon. Si les symptômes persistent consultez votre médecin.
POUR PLUS D'INFORMATION, CONSULTEZ LA FEUILLE DE DONNÉES DE SÉCURITÉ.

DATE
SIGNED
SIGNÉ

PURCHASER'S ORDER IS FILLED IN ACCORDANCE WITH THE ABOVE TERMS AND CONDITIONS OF SALE AND THOSE ON THE REVERSE HEREOF, ALL OF WHICH TERMS AND CONDITIONS SUPERSEDE THE TERMS AND CONDITIONS (IF ANY) OF PURCHASER'S ORDER. BY ACCEPTANCE OF DELIVERY OF ALL OR PART OF THE ABOVE-DESCRIBED GOODS (HEREINAFTER CALLED THE "GOODS") OR BY PAYING FOR SAME IN WHOLE OR IN PART PURCHASER AGREES TO ALL THE TERMS AND CONDITIONS SET FORTH ABOVE AND ON THE REVERSE HEREOF.
LA COMMANDE DE L'ACHETEUR EST EXÉCUTÉE EN CONFORMITÉ DES CONDITIONS DE VENTE STIPULÉES CI-DESSUS ET AU VERSO DES PRÉSENTES. TOUTES CES CONDITIONS REMPLAÇANT CELLES (LE CAS ÉCHÉANT) ÉNONCÉES AU BON DE COMMANDE DE L'ACHETEUR ACCEPTANT LA LIVRAISON DE TOUT OU PARTIE DES MARCHANDISES DÉCRITES CI-DESSUS (CI-APRÈS APPELÉES LES "MARCHANDISES") OU EN LES PAYANT INTÉGRALEMENT OU PARTIELLEMENT, L'ACHETEUR ACCEPTE TOUTES LES CONDITIONS STIPULÉES CI-DESSUS ET AU VERSO DES PRÉSENTES.

OFFICE/ADMINISTRATIVE SHIPPING/EXPEDITION DRIVER/CHAUFFEUR CUSTOMER/CLIENT

RLB-L 04

5/29/17 10:30:07

EMAIL PAGE COUVERTURE

==========

Société:

5/29/17 10:30:07 Document Sommaire

Page couverture 1

Objet: MILL TEST CERTIFICATE

NO.COMMANDE :94853576

No.Bc Du Client :PLA06076

City : LA SARRE State/Province . QC

Séquence correspondant au(x) MTR imprimé(s):

Ln#	Description item:	Coulée	MTR
3	2 1/2 X 2 1/2 X 1/4 CORN. LÀC 44W	52076443	094128168
3	2 1/2 X 2 1/2 X 1/4 CORN. LÀC 44W	52077202	094128768

CERTIFIED MATERIAL TEST REPORT

GERDAU

CA-ML-WHITBY
4 GERDAU CT
WHITBY, ON L1N 5T1
Canada

CUSTOMER SHIP TO	CUSTOMER BILL TO
LEROUX STEEL 1331 RUE GRAHAM BELL BOUCHERVILLE,QC J4B 6A1 Canada	LEROUX STEEL 1331 RUE GRAHAM BELL BOUCHERVILLE,QC J4B 6A1 Canada

GRADE	SHAPE / SIZE	DOCUMENT ID:
GGMULTI	Angle / 2 1/2X2 1/2X1/4	0000030963

LENGTH	WEIGHT	HEAT / BATCH
20'00"	69,126 LB	52076443/03

SALES ORDER	CUSTOMER MATERIAL N°
4467119/000190	

SPECIFICATION / DATE or REVISION
ASTM A529-14, A572-15
ASTM A6-14,A36-14, ASME SA-36
ASTM A709-15, AASHTO M270-12
CSA G40.20-13/G40.21-13

CUSTOMER PURCHASE ORDER NUMBER	BILL OF LADING	DATE
94037796-FEMQ1	1302-0000055096	01/31/2017

CHEMICAL COMPOSITION

C %	Mn %	P %	S %	Si %	Cu %	Ni %	Cr %	V %	Nb %
0.14	0.70	0.015	0.034	0.20	0.28	0.10	0.14	0.015	0.001

MECHANICAL PROPERTIES

Elong. %	G/L Inch	UTS PSI	UTS MPa	YS 0.2% PSI	YS MPa
29.40	8.000	71765	495	53277	367
29.40	8.000	72203	498	53136	366

COMMENTS / NOTES

This grade meets the requirements for the following grades:
ASTM Grades: A36; A529-50; A572-50; A709-36; A709-50
CSA Grades: 44W; 50W
AASHTO Grades: M270-36; M270-50
ASME Grades: SA36

LEROUX

094128168

The above figures are certified chemical and physical test records as contained in the permanent records of company. We certify that these data are correct and in compliance with specified requirements. This material, including the billets, was melted and manufactured in Canada. CMTR complies with EN 10204 3.1.

BHASKAR YALAMANCHILI
QUALITY DIRECTOR
Phone: (409) 769-1014 Email: Bhaskar.Yalamanchili@gerdau.com

LEONARDO NUNES
QUALITY ASSURANCE MGR.
Phone: (905) 668-8811 EXT 4055 Email: Leonardo.Nunes@gerdau.com

CERTIFIED MATERIAL TEST REPORT

GERDAU

CA-ML-WHITBY
1 GERDAU CT
WHITBY, ON L1N 5T1
Canada

CUSTOMER SHIP TO	CUSTOMER BILL TO
LEROUX STEEL 1331 RUE GRAHAM BELL BOUCHERVILLE,QC J4B 6A1 Canada	LEROUX STEEL 1331 RUE GRAHAM BELL BOUCHERVILLE,QC J4B 6A1 Canada

GRADE	SHAPE / SIZE	DOCUMENT ID:
GGMULTI	Angle / 2 1/2X2 1/2X1/4	0000031506

LENGTH	WEIGHT	HEAT / BATCH
20'00"	37,884 LB	52077202/02

SALES ORDER	CUSTOMER MATERIAL N°
4585552/000160	

SPECIFICATION / DATE or REVISION
ASTM A529-14, A572-15
ASTM A6-14,A36-14, ASME SA-36
ASTM A709-15, AASHTO M270-12
CSA G40.20-13/G40.21-13

CUSTOMER PURCHASE ORDER NUMBER	BILL OF LADING	DATE
94037961	1302-0000055639	02/13/2017

CHEMICAL COMPOSITION

C %	Mn %	P %	S %	Si %	Cu %	Ni %	Cr %	V %	Nb %
0.13	0.84	0.018	0.029	0.19	0.31	0.12	0.15	0.016	0.001

MECHANICAL PROPERTIES

Elong. %	G/L Inch	UTS PSI	UTS MPa	YS 0.2% PSI	YS MPa
29.40	8.000	72857	502	57227	395
28.80	8.000	72833	502	57583	397

COMMENTS / NOTES

This grade meets the requirements for the following grades:
ASTM Grades: A36; A529-50; A572-50; A709-36; A709-50
CSA Grades: 44W; 50W
AASHTO Grades: M270-36; M270-50
ASME Grades: SA36

LEROUX

094128768

The above figures are certified chemical and physical test records as contained in the permanent records of company. We certify that these data are correct and in compliance with specified requirements. This material, including the billets, was melted and manufactured in Canada. CMTR complies with EN 10204 3.1.

BHASKAR YALAMANCHILI
QUALITY DIRECTOR
Phone: (409) 769-1014 Email: Bhaskar.Yalamanchili@gerdau.com

LEONARDO NUNES
QUALITY ASSURANCE MGR.
Phone: (905) 668-8811 EXT 4055 Email: Leonardo.Nunes@gerdau.com

EROUX
DIVISION OF RUSSEL METALS INC.
DIVISION de MÉTAUX RUSSEL INC.

0E89340988-57208

COMBINATION SHORT FORM OF STRAIGHT BILL OF LADING - EXPRESS SHIPPING CONTRACT, SUBJECT TO ALL TERMS, CONDITIONS AND LIMITATIONS INCORPORATED BY REFERENCE AS SHOWN ON THE BACK OF THIS BILL.
FORMULAIRE COMBINÉ DE CONNAISSEMENT DIRECT - ET DE CONTRAT D'EXPÉDITION PAR MESSAGERIE ASSUJETTI À TOUTES LES MODALITÉS, CONDITIONS ET LIMITATIONS QUI Y SONT INTÉGRÉES PAR RENVOI, AINSI QU'IL EST INDIQUÉ AU VERSO OU PRÉSENT CONNAISSEMENT.

ACIER LEROUX
1675 ROUTE DE L'AÉROPORT
C.P. 550 AMOS QC J9T3 TEL#: (819)732-8381

PROMISE.....: 06/14/17
REPRESENTANT Yvan Bégin

EXPÉDIÉ: 00
NORMEX METAL
9088-6615 QUEBEC INC.
11 BOUL. INDUSTRIEL
ROUTE 111 EST
LA SARRE QC J9Z 2X2

VENDU: 8910165 06/06/17
NORMEX METAL
9088-6615 QUEBEC INC.
P.O. BOX 565
EARLTON ON P0J 1E0

FREIGHT TERMS / MODALITÉS DE TRANSPORT
PORT PAYÉ
CARRIER / TRANSPORTEUR RT# 006
NOTRE CAMION
CUSTOMER PHONE # / TELEPHONE À LA CLIENTÈLE #
(819)333-1200

#BCC PLA06104 RELACHE#

VEHICLE IDENT. / IDENTIFICATION DU VEHICULE
NIR:R-527158-1

INSTRUCTIONS CLIENT:
ECRIRE # DE COULEE SUR LA COPIE ROSE DU CLIENT
****
FERME A 13HR00 LE VENDREDI
COMMENT.:
LIVRAISON 14 JUIN 17

Promec

				QTÉ COMM
LN#03 04188 GRIP SPAN ANCHOR AVEC VIS AUTO-PERC				
#PIÉC L-2507 ✓	X	1.0000	10 EA	1 LB
QTÉ expédiée.....				
ÉTQ 9063939 COUL LETTRE CONFORME	10 EA	1 LB	PAYS CANADA	

				QTÉ COMM
LN#04 04188 GRIP SPAN CLIPS (S-CLIP)				
#PIÉC L-2508 ✓	X	1.0000	20 EA	2 LB
QTÉ expédiée.....				
ÉTQ 9063940 COUL LETTRE CONFORME	20 EA	2 LB	PAYS CANADA	

CONFORME ✓ OUI NON
SIGNÉ
DATE 07/06/2017
JOUR MOIS ANNÉE

Les certificats d'analyse (MTR) seront automatiquement envoyés par email

PAGE: 1 TOTALS PALETTES _____ 30 EA 3 LB

STEEL, STAINLESS STEEL, ALUMINUM, BRASS, COPPER, NICKEL AND SPECIALTY STEEL

The above listed products, in a natural state, do not pose inhalation, ingestion or contact hazards.

Prolonged overexposure to dust or fumes during welding, burning, grinding or machining may result in respiratory irritation, skin irritation or disease. USE ADEQUATE VENTILATION AND APPROPRIATE PERSONAL PROTECTIVE EQUIPMENT.

For Brass and Copper Alloys, contact with acids may liberate flammable and explosive hydrogen gas. If heated, copper oxide, zinc oxide, nickel oxide, tin oxide, cadmium oxide and/or lead fumes may be evolved. Aluminum products may slip during handling or transportation.

PRODUCTS MUST BE SECURED FOR HANDLING AND TRANSPORTATION. Steel containment strapping may result in the strapping rebounding and injuring those nearby. EXERCISE CAUTION.

If overexposure to metal fumes, remove to fresh air. For skin contact, wash thoroughly with soap and water. Obtain medical attention if symptoms persist.

SEE MATERIAL SAFETY DATA SHEETS FOR MORE DETAILED INFORMATION.

ACIER, ACIER INOXYDABLE, ALUMINIUM, LAITON, CUIVRE, NICKEL ET ACIER SPÉCIALISÉ

Les produits mentionnés ci-haut, à l'état brut, ne courent aucun danger au contact, en cas d'inhalation ou d'ingestion.

Une surexposition aux poussières ou aux émanations durant la soudure, la coupe au chalumeau, le meulage ou l'usinage pourrait résulter en une irritation des voies respiratoires ou de la peau ou autres maladies. UNE VENTILATION ADÉQUATE EST DE MISE AINSI QU'UN ÉQUIPEMENT PROTECTEUR APPROPRIÉ.

Pour ce qui est des alliages de cuivre et de laiton, un contact avec certains acides pourrait dégager des gaz hydrogène explosifs et inflammables. Si chauffé, de l'oxyde de cuivre, de zinc, de nickel, d'étain, de cadmium et/ou des vapeurs de plomb pourraient s'échapper. Les produits d'aluminium peuvent glisser lors de leur manipulation ou transportation.

TOUS LES PRODUITS DOIVENT ÊTRE ATTACHÉS SOLIDEMENT LORS DU TRANSPORT ET DE LA MANIPULATION.

Lors de la coupe, les courroies d'acier peuvent rebondir et causer des blessures. MANIPULEZ AVEC PRÉCAUTION.

En cas d'une surexposition aux émanations, retirez-vous et respirez de l'air frais. S'il y a contact avec la peau lavez la région affectée avec de l'eau et du savon. Si les symptômes persistent consultez votre médecin.

POUR PLUS D'INFORMATION, CONSULTEZ LA FEUILLE DE DONNÉES DE SÉCURITÉ.

DATE _____

SIGNED
SIGNÉ _____

PURCHASER'S ORDER IS FILLED IN ACCORDANCE WITH THE ABOVE TERMS AND CONDITIONS OF SALE AND THOSE ON THE REVERSE HEREOF, ALL OF WHICH TERMS AND CONDITIONS SUPERSEDE THE TERMS AND CONDITIONS (IF ANY) OF PURCHASER'S ORDER. BY ACCEPTING DELIVERY OF ALL OR PART OF THE ABOVE-DESCRIBED GOODS (HEREINAFTER CALLED THE "GOODS") OR BY PAYING FOR SAME IN WHOLE OR IN PART PURCHASER AGREES TO ALL THE TERMS AND CONDITIONS SET FORTH ABOVE AND ON THE REVERSE HEREOF.
LA COMMANDE DE L'ACHETEUR EST EXÉCUTÉE EN CONFORMITÉ DES CONDITIONS DE VENTE STIPULÉES CI-DESSUS ET AU VERSO DES PRÉSENTES. TOUTES CES CONDITIONS REMPLAÇANT CELLES (LE CAS ÉCHÉANT) ÉNONCÉES AU BON DE COMMANDE DE L'ACHETEUR. EN ACCEPTANT LA LIVRAISON DE TOUT OU PARTIE DES MARCHANDISES DÉCRITES CI-DESSUS (CI-APRÈS APPELÉES LES "MARCHANDISES") OU EN LES PAYANT INTÉGRALEMENT OU PARTIELLEMENT, L'ACHETEUR ACCEPTE TOUTES LES CONDITIONS STIPULÉES CI-DESSUS ET AU VERSO DES PRÉSENTES.

OFFICE/ADMINISTRATIVE SHIPPING/EXPEDITION DRIVER/CHAUFFEUR CUSTOMER/CLIENT

RLS-L

6/06/17 14:48:33

EMAIL COVER PAGE

==========

Company:

6/06/17 14:48:33 Document Summary:

Cover Page: 1

Subject: MILL TEST CERTIFICATE

Order Number :89340988

Customer PO# :PLA06104

City : LA SARRE State/Province : QC

The order of the printed MTRs is as follows:

PO Ln#	Item Description:	Heat	MTR
3	INDUSTRIAL FASTENERS	LETTRE CONFORME	089022989

ACCURATE
SCREEN + GRATING
Products with holes, backed with solid service

10905-48 Street S.E, Unit #147, Calgary, AB T2C 1G8

To whom it may concern,

Accurate Screen and Grating certifies all bar grating materials conform to applicable NAAM specifications MBG 531-00 and that all expanded metal conforms to the expanded metal manual EMMA 557-99.

Compliance specification

Expanded Metal	Specification
Carbon Steel	ASTM A366 (alloy C1008)
Aluminum	3003 H-14 aluminum
Channel Grating Diamond and Round Hole	
Galvanized	ASTM A36 G90 coating
Aluminum	5052 H-32 aluminum
Ladder Rungs	
Galv	ASTM A36 G90 Coating
Aluminum	5052 H-32 aluminum
Bar Grating	
Bare and Painted	ASTM A36
Galv	ASTM A36 G90 coating
Aluminum	6063-T6

Materials Manager

Todd Bigelow

LEROUX
089022989

6/06/17 14:48:34

EMAIL COVER PAGE

==========

Company:

6/06/17 14:48:34 Document Summary:

Cover Page: 1

Subject: MILL TEST CERTIFICATE

Order Number :89340988

Customer PO# :PLA06104

City : LA SARRE State/Province : QC

The order of the printed MTRs is as follows:

PO Ln#	Item Description:	Heat	MTR
4	INDUSTRIAL FASTENERS	LETTRE CONFORME	089022989

ACCURATE
SCREEN+GRATING
Products with holes, backed with solid service

10905-48 Street S.E, Unit #147, Calgary, AB T2C 1G8

To whom it may concern,

Accurate Screen and Grating certifies all bar grating materials conform to applicable NAAM specifications MBG 531-00 and that all expanded metal conforms to the expanded metal manual EMMA 557-99.

Compliance specification

Expanded Metal	Specification
Carbon Steel	ASTM A366 (alloy C1008)
Aluminum	3003 H-14 aluminum
Channel Grating Diamond and Round Hole	
Galvanized	ASTM A36 G90 coating
Aluminum	5052 H-32 aluminum
Ladder Rungs	
Galv	ASTM A36 G90 Coating
Aluminum	5052 H-32 aluminum
Bar Grating	
Bare and Painted	ASTM A36
Galv	ASTM A36 G90 coating
Aluminum	6063-T6

Materials Manager

Todd Bigelow

LEROUX

089022989

EROUX
DIVISION OF RUSSEL METALS INC.
DIVISION de MÉTAUX RUSSEL INC.

0E89340822-57211

COMBINATION SHORT FORM OF STRAIGHT BILL OF LADING - EXPRESS SHIPPING CONTRACT,
SUBJECT TO ALL TERMS, CONDITIONS AND LIMITATIONS INCORPORATED BY REFERENCE AS SHOWN ON THE BACK OF THIS BILL.
FORMULAIRE COMBINÉ DE CONNAISSEMENT DIRECT - ET DE CONTRAT D'EXPÉDITION PAR
MESSAGERIE ASSUJETTI À TOUTES LES MODALITÉS, CONDITIONS ET LIMITATIONS QUI Y SONT INTÉGRÉES PAR RENVOI, AINSI QU'IL EST INDIQUÉ AU VERSO DU PRÉSENT CONNAISSEMENT.

ACIER LEROUX
1675 ROUTE DE L'AÉROPORT
C.P. 550 AMOS QC J9T3 TEL#: (819)732-8381

PROMISE.....: 06/07/17
REPRESENTANT Yvan Bégin

EXPÉDIÉ: 00
NORMEX METAL
9088-6615 QUEBEC INC.
11 BOUL. INDUSTRIEL
ROUTE 111 EST
LA SARRE QC J9Z 2X2

VENDU: 8910165 06/06/17
NORMEX METAL
9088-6615 QUEBEC INC.
P.O. BOX 565
EARLTON ON P0J 1E0

FREIGHT TERMS / MODALITÉS DE TRANSPORT
PORT PAYÉ
CARRIER / TRANSPORTEUR RT# 006
NOTRE CAMION
CUSTOMER PHONE # / TÉLÉPHONE À LA CLIENTÈLE #
(819)333-1200

#BCC P0055281 RELACHE#

VEHICLE IDENT. / IDENTIFICATION DU VEHICULE
NIR:R-527158-1

INSTRUCTIONS CLIENT:
ECRIRE # DE COULEE SUR LA COPIE ROSE DU CLIENT
****
FERME A 13HR00 LE VENDREDI
COMMENT.:
LIVRAISON 7 JUIN 17

PRumee

LN#03 04188 GRIP SPAN ANCHOR AVEC VIS AUTO-PERC QTÉ COMM
#PIéC L-2505 X .0394 188 EA 19 LB
QTÉ expédiée.....
ÉTQ 9063941 COUL LETTRE CONFORME 188 EA 19 LB PAYS CANADA
Commentaire GRIP SPAN ANCHORS AVEC VIS AUTO-PERCANTE 1/4" STAINLESS AVEC WASHER & RUBBER GASKET.

LN#06 04188 GRIP SPAN CLIPS ASS'Y (S-CLIP) QTÉ COMM
#PIéC L-2506 X .0394 492 EA 49 LB
QTÉ expédiée.....
ÉTQ 9063942 COUL LETTRE CONFORME 492 EA 49 LB PAYS CANADA
Commentaire GRIP SPAN CLIP ASSEMBLIES "S-CLIP" AVEC 5/16" HEX.HEAD BOLT & ANCHOR

CONFORME	OUI	NON
SIGNÉ		
DATE	07 / 06 / 17	
	JOUR / MOIS	ANNÉE

Les certificats d'analyse (MTR) seront automatiquement envoyés par email

PAGE: 1 TOTALS PALETTES 680 EA 68 LB

STEEL, STAINLESS STEEL, ALUMINUM, BRASS, COPPER, NICKEL AND SPECIALTY STEEL

The above listed products, in a natural state, do not pose inhalation, ingestion or contact hazards.

Prolonged overexposure to dust or fumes during welding, burning, grinding or machining may result in respiratory irritation, skin irritation or disease. USE ADEQUATE VENTILATION AND APPROPRIATE PERSONAL PROTECTIVE EQUIPMENT.

For Brass and Copper Alloys, contact with acids may liberate flammable and explosive hydrogen gas. If heated, copper oxide, zinc oxide, nickel oxide, tin oxide, cadmium oxide and/or lead fumes may be evolved. Aluminum ...ucts may slip during handling or transportation.

...ODUCTS MUST BE SECURED FOR HANDLING AND TRANSPORTATION. ...steel containment strapping may result in the strapping rebounding and injuring those nearby. EXERCISE ...ON.

For overexposure to metal fumes, remove to fresh air. For skin contact, wash thoroughly with soap and water. Obtain medical attention if symptoms persist.

SEE MATERIAL SAFETY DATA SHEETS FOR MORE DETAILED INFORMATION.

ACIER, ACIER INOXYDABLE, ALUMINIUM, LAITON, CUIVRE, NICKEL ET ACIER SPÉCIALISÉ

Les produits mentionnés ci-haut, à l'état brut, ne causent aucun danger au contact, en cas d'inhalation ou d'ingestion.
Une surexposition aux poussières ou aux émanations durant la soudure, la coupe ou chalumeau, le meulage ou l'usinage pourrait résulter en une irritation des voies respiratoires ou de la peau ou autres maladies. UNE VENTILATION ADÉQUATE EST DE MISE AINSI QUUN ÉQUIPEMENT PROTECTEUR APPROPRIÉ.
Pour ce qui est des alliages de cuivre et de laiton, un contact avec certains acides pourrait dégager des gaz hydrogène explosifs et inflammables. Si chauffé, de l'oxyde de cuivre, de zinc, de nickel, d'étain, de cadmium et/ou des vapeurs de plomb pourraient s'échapper. Les produits d'aluminium peuvent glisser lors de leur manipulation ou transportation.
TOUS LES PRODUITS DOIVENT ÊTRE ATTACHÉS SOLIDEMENT LORS DU TRANSPORT ET DE LA MANIPULATION.
Lors de la coupe, les courroies d'acier peuvent rebondir et causer des blessures. MANIPULEZ AVEC PRÉCAUTION.
En cas d'une surexposition aux émanations, retirez-vous et respirez de l'air frais. S'il y a contact avec la peau lavez la région affectée avec de l'eau et du savon. Si les symptômes persistent consultez votre médecin.
POUR PLUS D'INFORMATION, CONSULTEZ LA FEUILLE DE DONNÉES DE SÉCURITÉ.

DATE _____
SIGNED
SIGNÉ _____

...URCHASER'S ORDER IS FILLED IN ACCORDANCE WITH THE ABOVE TERMS AND CONDITIONS OF SALE AND THOSE ON THE REVERSE HEREOF, ALL OF WHICH TERMS AND CONDITIONS SUPERSEDE THE TERMS AND CONDITIONS (IF ANY) OF PURCHASER'S ORDER. BY ACCEP...
...ELIVERY OF ALL OR PART OF THE ABOVE-DESCRIBED GOODS (HEREINAFTER CALLED THE "GOODS") OR BY PAYING FOR SAME IN WHOLE OR IN PART PURCHASER AGREES TO ALL THE TERMS AND CONDITIONS SET FORTH ABOVE AND ON THE REVERSE HEREOF.
...A COMMANDE DE L'ACHETEUR EST EXÉCUTÉE EN CONFORMITÉ DES CONDITIONS DE VENTE STIPULÉES CI-DESSUS ET AU VERSO DES PRÉSENTES. TOUTES CES CONDITIONS REMPLAÇANT CELLES (LE CAS ÉCHÉANT) ÉNONCÉES AU BON DE COMMANDE DE L'ACHETEU...
...CCEPTANT LA LIVRAISON DE TOUT OU PARTIE DES MARCHANDISES DÉCRITES CI-DESSUS (CI-APRÈS APPELÉES LES "MARCHANDISES") OU EN LES PAYANT INTÉGRALEMENT OU PARTIELLEMENT, L'ACHETEUR ACCEPTE TOUTES LES CONDITIONS STIPULÉES CI-DESSUS E...
...ERSO DES PRÉSENTES.

OFFICE/ADMINISTRATIVE SHIPPING/EXPEDITION DRIVER/CHAUFFEUR CUSTOMER/CLIENT

RL9-L (

6/06/17 14:56:45

EMAIL COVER PAGE

==========

Company:

6/06/17 14:56:45 Document Summary:

Cover Page: 1

Subject: MILL TEST CERTIFICATE

Order Number :89340822

Customer PO# :P0055281

City : LA SARRE State/Province : QC

The order of the printed MTRs is as follows:

PO Ln#	Item Description:	Heat	MTR
3	INDUSTRIAL FASTENERS	LETTRE CONFORME	089022989

ACCURATE
SCREEN + GRATING
Products with holes, backed with solid service

10905-48 Street S.E, Unit #147, Calgary, AB T2C 1G8

To whom it may concern,

Accurate Screen and Grating certifies all bar grating materials conform to applicable NAAM specifications MBG 531-00 and that all expanded metal conforms to the expanded metal manual EMMA 557-99.

Compliance specification

Expanded Metal	Specification
Carbon Steel	ASTM A366 (alloy C1008)
Aluminum	3003 H-14 aluminum
Channel Grating Diamond and Round Hole	
Galvanized	ASTM A36 G90 coating
Aluminum	5052 H-32 aluminum
Ladder Rungs	
Galv	ASTM A36 G90 Coating
Aluminum	5052 H-32 aluminum
Bar Grating	
Bare and Painted	ASTM A36
Galv	ASTM A36 G90 coating
Aluminum	6063-T6

Materials Manager

Todd Bigelow

LEROUX
089022989

6/06/17 14:56:45

EMAIL COVER PAGE

==========

Company:

6/06/17 14:56:45 Document Summary:

Cover Page: 1

Subject: MILL TEST CERTIFICATE

Order Number :89340822

Customer PO# :P0055281

City : LA SARRE State/Province : QC

The order of the printed MTRs is as follows:

PO Ln#	Item Description:	Heat	MTR
6	INDUSTRIAL FASTENERS	LETTRE CONFORME	089022989

ACCURATE
SCREEN + GRATING
Products with holes, backed with solid service

10905-48 Street S.E, Unit #147, Calgary, AB T2C 1G8

To whom it may concern,

Accurate Screen and Grating certifies all bar grating materials conform to applicable NAAM specifications MBG 531-00 and that all expanded metal conforms to the expanded metal manual EMMA 557-99.

Compliance specification

Expanded Metal	Specification
Carbon Steel	ASTM A366 (alloy C1008)
Aluminum	3003 H-14 aluminum
Channel Grating Diamond and Round Hole	
Galvanized	ASTM A36 G90 coating
Aluminum	5052 H-32 aluminum
Ladder Rungs	
Galv	ASTM A36 G90 Coating
Aluminum	5052 H-32 aluminum
Bar Grating	
Bare and Painted	ASTM A36
Galv	ASTM A36 G90 coating
Aluminum	6063-T6

Materials Manager

Todd Bigelow

LEROUX
089022989

EROUX
DIVISION OF RUSSEL METALS INC.
DIVISION de MÉTAUX RUSSEL INC.

0E89340354-57185

COMBINATION SHORT FORM OF STRAIGHT BILL OF LADING - EXPRESS SHIPPING CONTRACT,
SUBJECT TO ALL TERMS, CONDITIONS AND LIMITATIONS INCORPORATED BY REFERENCE AS SHOWN ON THE BACK OF THIS BILL.
FORMULAIRE COMBINÉ DE CONNAISSEMENT DIRECT - ET DE CONTRAT D'EXPÉDITION PAR
MESSAGERIE ASSUJETTI À TOUTES LES MODALITÉS, CONDITIONS ET LIMITATIONS QUI Y SONT INTÉGRÉES PAR RENVOI, AINSI QU'IL EST INDIQUÉ AU VERSO DU PRÉSENT CONNAISSEMENT.

ACIER LEROUX
1675 ROUTE DE L'AÉROPORT
C.P. 550 AMOS QC J9T3 TEL#: (819)732-8381

PROMISE.....: 06/02/17
REPRESENTANT Yvan Bégin

EXPÉDIÉ: 00
NORMEX METAL
9088-6615 QUEBEC INC.
11 BOUL. INDUSTRIEL
ROUTE 111 EST
LA SARRE QC J9Z 2X2

VENDU: 8910165 06/06/17
NORMEX METAL
9088-6615 QUEBEC INC.
P.O. BOX 565
EARLTON ON P0J 1E0

FREIGHT TERMS / MODALITÉS DE TRANSPORT
PORT PAYÉ
CARRIER / TRANSPORTEUR RT# 006
NOTRE CAMION
CUSTOMER PHONE # / TÉLÉPHONE À LA CLIENTÈLE #
(819)333-1200

#BCC P0055281 — RELACHE#

VEHICLE IDENT. / IDENTIFICATION DU VEHICULE
NIR:R-527158-1

INSTRUCTIONS CLIENT:
ECRIRE # DE COULEE SUR LA COPIE ROSE DU CLIENT
****
FERME A 13HR00 LE VENDREDI
COMMENT.:
LIVRAISON PARTIELLE: 2 JUIN 17
LIVRAISON FINALE: 7 JUIN 17

~~EXP~~ PRUMEC CONTAINER CATHOLIC

LN#01 54306 GRILLE 9 1/2 X1 1/2 XCALIBRE12 SECURITE MOTIF DIAMANT GALV QTÉ COMM
#PIÉC L-2503 OK X 12' 41 EA 2460 LB
QTÉ expédiée.....
ÉTQ 9063943 COUL LETTRE CONFORME 41 EA 2460 LB PAYS CANADA

LN#02 54328 GRILLE 11 3/4X1 1/2 XCALIBRE12 SECURITE MOTIF DIAMANT GALV QTÉ COMM
#PIÈC L-2504 X 12' 50 EA 3540 LB
QTÉ expédiée..... OK
ÉTQ 9063884 COUL LETTRE CONFORME 3540 LB 50 EA PAYS CANADA

CONFORME OUI ✓ NON
SIGNÉ
DATE 06/06/17
JOUR MOIS ANNÉE

Les certificats d'analyse (MTR) seront automatiquement envoyés par email

PAGE: 1 TOTALS PALETTES 91 EA 6000 LB

STEEL, STAINLESS STEEL, ALUMINUM, BRASS, COPPER, NICKEL AND SPECIALTY STEEL

The above listed products, in a natural state, do not pose inhalation, ingestion or contact hazards.

Prolonged overexposure to dust or fumes during welding, burning, grinding or machining may result in respiratory irritation, skin irritation or disease. USE ADEQUATE VENTILATION AND APPROPRIATE PERSONAL PROTECTIVE EQUIPMENT.

For Brass and Copper Alloys, contact with acids may liberate flammable and explosive hydrogen gas. If heated, copper oxide, zinc oxide, nickel oxide, tin oxide, cadmium oxide and/or lead fumes may be evolved. Aluminum ...ings may ...p during handling or transportation.

...ODUCTS MUST BE SECURED FOR HANDLING AND TRANSPORTATION. ...le et containment strapping may result in the strapping rebounding and injuring those nearby. EXERCISE ...N.

For overexposure to metal fumes, remove to fresh air. For skin contact, wash thoroughly with soap and water. Obtain medical attention if symptoms persist.

SEE MATERIAL SAFETY DATA SHEETS FOR MORE DETAILED INFORMATION.

ACIER, ACIER INOXYDABLE, ALUMINIUM, LAITON, CUIVRE, NICKEL ET ACIER SPÉCIALISÉ

Les produits mentionnés ci-haut, à l'état brut, ne causent aucun danger au contact, en cas d'inhalation ou d'ingestion.
Une surexposition aux poussières ou aux émanations durant la soudure, la coupe au chalumeau, le meulage ou l'usinage pourrait résulter en une irritation des voies respiratoires ou de la peau ou autres maladies. UNE VENTILATION ADÉQUATE EST DE MISE AINSI QUUN ÉQUIPEMENT PROTECTEUR APPROPRIÉ.
Pour ce qui est des alliages de cuivre et de laiton, un contact avec certains acides pourrait dégager des gaz hydrogène explosifs et inflammables. Si chauffé, de l'oxyde de cuivre, de zinc, de nickel, d'étain, de cadmium et/ou des vapeurs de plomb pourraient s'échapper. Les produits d'aluminium peuvent glisser lors de leur manipulation ou transportation.
TOUS LES PRODUITS DOIVENT ÊTRE ATTACHÉS SOUDEMENT LORS DU TRANSPORT ET DE LA MANIPULATION.
Lors de la coupe, les courroies d'acier peuvent rebondir et causer des blessures. MANIPULEZ AVEC PRÉCAUTION.
En cas d'une surexposition aux émanations, retirez-vous et respirez de l'air frais. S'il y a contact avec la peau lavez la région affectée avec de l'eau et du savon. Si les symptômes persistent consultez votre médecin.
POUR PLUS D'INFORMATION, CONSULTEZ LA FEUILLE DE DONNÉES DE SÉCURITÉ.

DATE
SIGNED
SIGNÉ

...URCHASER'S ORDER IS FILLED IN ACCORDANCE WITH THE ABOVE TERMS AND CONDITIONS OF SALE AND THOSE ON THE REVERSE HEREOF, ALL OF WHICH TERMS AND CONDITIONS SUPERSEDE THE TERMS AND CONDITIONS (IF ANY) OF PURCHASER'S ORDER. BY ACCEP...
...ELIVERY OF ALL OR PART OF THE ABOVE-DESCRIBED GOODS (HEREINAFTER CALLED THE "GOODS") OR BY PAYING FOR SAME IN WHOLE OR IN PART PURCHASER AGREES TO ALL THE TERMS AND CONDITIONS SET FORTH ABOVE AND ON THE REVERSE HEREOF.
...A COMMANDE DE L'ACHETEUR EST EXÉCUTÉE EN CONFORMITÉ DES CONDITIONS DE VENTE STIPULÉES CI-DESSUS ET AU VERSO DES PRÉSENTES. TOUTES CES CONDITIONS REMPLAÇANT CELLES (LE CAS ÉCHÉANT) ÉNONCÉES AU BON DE COMMANDE DE L'ACHETEU...
...CCEPTANT LA LIVRAISON DE TOUT OU PARTIE DES MARCHANDISES DÉCRITES CI-DESSUS (CI-APRÈS APPELÉES LES "MARCHANDISES") OU EN LES PAYANT INTÉGRALEMENT OU PARTIELLEMENT, L'ACHETEUR ACCEPTE TOUTES LES CONDITIONS STIPULÉES CI-DESSUS E...
...ERSO DES PRÉSENTES.

OFFICE/ADMINISTRATIVE SHIPPING/EXPEDITION DRIVER/CHAUFFEUR CUSTOMER/CLIENT

RLS-L

6/07/17 9:22:54

EMAIL PAGE COUVERTURE

==========

Société:

6/07/17 9:22:54 Document Sommaire

Page couverture 1

Objet: MILL TEST CERTIFICATE

NO.COMMANDE :89340354

No.Bc Du Client :P0055281

City : LA SARRE State/Province . QC

Séquence correspondant au(x) MTR imprimé(s):

Ln#	Description item:	Coulée	MTR
1	9 1/2 X 1 1/2 X12CAL GR.SÉC DIA GAL LETTRE CONFORME	089022989	
2	11 3/4X 1 1/2 X12CAL G.SÉC DIA GALV LETTRE CONFORME	089026958	

ACCURATE
SCREEN + GRATING
Products with holes, backed with solid service

10905-48 Street S.E, Unit #147, Calgary, AB T2C 1G8

To whom it may concern,

Accurate Screen and Grating certifies all bar grating materials conform to applicable NAAM specifications MBG 531-00 and that all expanded metal conforms to the expanded metal manual EMMA 557-99.

Compliance specification

Expanded Metal	Specification
Carbon Steel	ASTM A366 (alloy C1008)
Aluminum	3003 H-14 aluminum
Channel Grating Diamond and Round Hole	
Galvanized	ASTM A36 G90 coating
Aluminum	5052 H-32 aluminum
Ladder Rungs	
Galv	ASTM A36 G90 Coating
Aluminum	5052 H-32 aluminum
Bar Grating	
Bare and Painted	ASTM A36
Galv	ASTM A36 G90 coating
Aluminum	6063-T6

Materials Manager

Todd Bigelow

LEROUX
089022989

3 janvier 2017

Client : ACIER LEROUX AMOS

Bon de Commande : VALIDE POUR 2017

La présente certifie qu'AMICO DRAMEX a expédié ou expédiera un ou plusieurs produits décrits ci-dessous, et que ces derniers répondent aux normes correspondantes.

PRODUIT	PAYS D'ORIGINE	SPECIFICATIONS
Métal déployé	Canada	EMMA-557 Acier : ASTM A1011 CS-T-B / A1008 Aluminium : ASTM B209 Galvanisé à chaud : ASTM A123 Inoxydable : T-304, T-316
Caillebotis a barre soudé	États-Unis	NAAMM MGB-531 Acier : ASTM A1011/A1011M Galvanisé à chaud : ASTM A123 Inoxydable : T-304, T-316
Caillebotis "Swage Locked"	États-Unis	NAAMM MGB-531 Aluminium : ASTM B-221, 6063-T6
Profilés Diamond Grip, Safety Grip, Safety Tread Planchers et Barreaux Safety Tread	Canada	Acier : ASTM 1011 Acier Pré-galvanisé : G 90, ASTM A653 Aluminium : 5052-H32 Inoxydable : T-304, T-316

LEROUX

089026958

AMICO DRAMEX

EROUX
IVISION OF RUSSEL METALS INC.
'ISION de MÉTAUX RUSSEL INC.

0E89340983-57649

COMBINATION SHORT FORM OF STRAIGHT BILL OF LADING - EXPRESS SHIPPING CONTRACT,
SUBJECT TO ALL TERMS, CONDITIONS AND LIMITATIONS INCORPORATED BY REFERENCE AS SHOWN ON THE BACK OF THIS BILL.
FORMULAIRE COMBINÉ DE CONNAISSEMENT DIRECT - ET DE CONTRAT D'EXPÉDITION PAR
MESSAGERIE ASSUJETTI À TOUTES LES MODALITÉS, CONDITIONS ET LIMITATIONS QUI Y SONT INTÉGRÉES PAR RENVOI, AINSI QU'IL EST INDIQUÉ AU VERSO DU PRÉSENT CONNAISSEMENT.

ACIER LEROUX
1675 ROUTE DE L'AÉROPORT
C.P. 550 AMOS QC J9T3 TEL#: (819)732-8381

PROMISE.....: 06/14/17
REPRESENTANT Yvan Bégin

EXPÉDIÉ: 00
NORMEX METAL
9088-6615 QUEBEC INC.
11 BOUL. INDUSTRIEL
ROUTE 111 EST
LA SARRE QC J9Z 2X2

VENDU: 8910165 06/13/17
NORMEX METAL
9088-6615 QUEBEC INC.
P.O. BOX 565
EARLTON ON P0J 1E0

FREIGHT TERMS / MODALITÉS DE TRANSPORT
PORT PAYÉ
CARRIER / TRANSPORTEUR RT# 006
NOTRE CAMION
CUSTOMER PHONE # / TÉLÉPHONE À LA CLIENTÈLE #
(819)333-1200

#BCC PLA06104 RELACHE#

VEHICLE IDENT. / IDENTIFICATION DU VEHICULE
NIR:R-527158-1

INSTRUCTIONS CLIENT:
ECRIRE # DE COULEE SUR LA COPIE ROSE DU CLIENT
****
FERME A 13HR00 LE VENDREDI
COMMENT.:
LIVRAISON 14 JUIN 17

Etiquettes
#4048
Attaché

LN#01 54306 GRILLE 9 1/2 X1 1/2 XCALIBRE12 SECURITE MOTIF DIAMANT GALV QTÉ COMM
#PIÉC X 12' 2 EA 120 LB
QTÉ expédiée.....
ÉTQ 9063943 COUL LETTRE CONFORME 120 LB 2 EA PAYS CANADA L2521

LN#02 54328 GRILLE 11 3/4X1 1/2 XCALIBRE12 SECURITE MOTIF DIAMANT GALV QTÉ COMM
#PIÉC X 12' 5 EA 354 LB
QTÉ expédiée.....
ÉTQ 9064010 COUL LETTRE CONFORME 354 LB 5 EA PAYS CANADA L2522

CONFORME OUI NON
SIGNÉ
DATE 14/06/17
JOUR MOIS ANNÉE

Les certificats d'analyse (MTR) seront automatiquement envoyés par email

PAGE: 1 TOTALS PALETTES 7 EA .474 LB

STEEL, STAINLESS STEEL, ALUMINUM, BRASS, COPPER, NICKEL AND SPECIALTY STEEL

The above listed products, in a natural state, do not pose inhalation, ingestion or contact hazards.

Prolonged overexposure to dust or fumes during welding, burning, grinding or machining may result in respiratory irritation, skin irritation or disease. USE ADEQUATE VENTILATION AND APPROPRIATE PERSONAL PROTECTIVE EQUIPMENT.

For Brass and Copper Alloys, contact with acids may liberate flammable and explosive hydrogen gas. If heated, copper oxide, zinc oxide, nickel oxide, tin oxide, cadmium oxide and/or lead fumes may be evolved. Aluminum products may slip during handling or transportation.

...DUCTS MUST BE SECURED FOR HANDLING AND TRANSPORTATION.
...sel containment strapping may result in the strapping rebounding and injuring those nearby. EXERCISE ...

For overexposure to metal fumes, remove to fresh air. For skin contact, wash thoroughly with soap and water. Obtain medical attention if symptoms persist.

SEE MATERIAL SAFETY DATA SHEETS FOR MORE DETAILED INFORMATION.

ACIER, ACIER INOXYDABLE, ALUMINIUM, LAITON, CUIVRE, NICKEL ET ACIER SPÉCIALISÉ

Les produits mentionnés ci-haut, à l'état brut, ne causent aucun danger au contact, en cas d'inhalation ou d'ingestion.

Une surexposition aux poussières ou aux émanations durant la soudure, la coupe au chalumeau, le meulage ou l'usinage pourrait résulter en une irritation des voies respiratoires ou de la peau ou autres maladies. UNE VENTILATION ADÉQUATE EST DE RIGUE AINSI QU'UN ÉQUIPEMENT PROTECTEUR APPROPRIÉ.

Pour ce qui est des alliages de cuivre et de laiton, un contact avec certains acides pourrait dégager des gaz hydrogène explosifs et inflammables. Si chauffé, de l'oxyde de cuivre, de zinc, de nickel, d'étain, de cadmium et/ou des vapeurs de plomb pourraient s'échapper. Les produits d'aluminium peuvent glisser lors de leur manipulation ou transportation.

TOUS LES PRODUITS DOIVENT ÊTRE ATTACHÉS SOLIDEMENT LORS DU TRANSPORT ET DE LA MANIPULATION.

Lors de la coupe, les cosses d'acier peuvent rebondir et causer des blessures. MANIPULEZ AVEC PRÉCAUTION.

En cas d'une surexposition aux émanations, retirez-vous et respirez de l'air frais. S'il y a contact avec la peau lavez la région affectée avec de l'eau et du savon. Si les symptômes persistent consultez votre médecin.

POUR PLUS D'INFORMATION, CONSULTEZ LA FEUILLE DE DONNÉES DE SÉCURITÉ.

DATE 14/6/2017

SIGNED
SIGNÉ

RCHASER'S ORDER IS FILLED IN ACCORDANCE WITH THE ABOVE TERMS AND CONDITIONS OF SALE AND THOSE ON THE REVERSE HEREOF, ALL OF WHICH TERMS AND CONDITIONS SUPERSEDE THE TERMS AND CONDITIONS (IF ANY) OF PURCHASER'S ORDER. BY ACCEPTI LIVERY OF ALL OR PART OF THE ABOVE-DESCRIBED GOODS (HEREINAFTER CALLED THE "GOODS") OR BY PAYING FOR SAME IN WHOLE OR IN PART PURCHASER AGREES TO ALL THE TERMS AND CONDITIONS SET FORTH ABOVE AND ON THE REVERSE HEREOF.
COMMANDE DE L'ACHETEUR EST EXÉCUTÉE EN CONFORMITÉ DES CONDITIONS DE VENTE STIPULÉES CI-DESSUS ET AU VERSO DES PRÉSENTES. TOUTES CES CONDITIONS REMPLAÇANT CELLES (LE CAS ÉCHÉANT) ÉNONCÉES AU BON DE COMMANDE DE L'ACHETEUR CEPTANT LA LIVRAISON DE TOUT OU PARTIE DES MARCHANDISES DÉCRITES CI-DESSUS (CI-APRÈS APPELÉES LES "MARCHANDISES") OU EN LES PAYANT INTÉGRALEMENT OU PARTIELLEMENT, L'ACHETEUR ACCEPTE TOUTES LES CONDITIONS STIPULÉES CI-DESSUS ET RSO DES PRÉSENTES.

OFFICE/ADMINISTRATIVE SHIPPING/EXPEDITION DRIVER/CHAUFFEUR CUSTOMER/CLIENT

RL9-L 04

6/14/17 9:05:39

EMAIL PAGE COUVERTURE

==========

Société:

6/14/17 9:05:39 Document Sommaire

Page couverture 1

Objet: MILL TEST CERTIFICATE

NO.COMMANDE :89340983

No.Bc Du Client :PLA06104

City : LA SARRE State/Province . QC

Séquence correspondant au(x) MTR imprimé(s):

Ln#	Description item:	Coulée	MTR
1	9 1/2 X 1 1/2 X12CAL GR.SÉC DIA GAL LETTRE CONFORME	089022989	
2	11 3/4X 1 1/2 X12CAL G.SÉC DIA GALV LETTRE CONFORME	089026958	

ACCURATE
SCREEN + GRATING
Products with holes, backed with solid service

10905-48 Street S.E, Unit #147, Calgary, AB T2C 1G8

To whom it may concern,

Accurate Screen and Grating certifies all bar grating materials conform to applicable NAAM specifications MBG 531-00 and that all expanded metal conforms to the expanded metal manual EMMA 557-99.

Compliance specification

Expanded Metal	Specification
Carbon Steel	ASTM A366 (alloy C1008)
Aluminum	3003 H-14 aluminum
Channel Grating Diamond and Round Hole	
Galvanized	ASTM A36 G90 coating
Aluminum	5052 H-32 aluminum
Ladder Rungs	
Galv	ASTM A36 G90 Coating
Aluminum	5052 H-32 aluminum
Bar Grating	
Bare and Painted	ASTM A36
Galv	ASTM A36 G90 coating
Aluminum	6063-T6

Materials Manager

Todd Bigelow

LEROUX

089022989

3 janvier 2017

Client : ACIER LEROUX AMOS

Bon de Commande : VALIDE POUR 2017

La présente certifie qu'AMICO DRAMEX a expédié ou expédiera un ou plusieurs produits décrits ci-dessous, et que ces derniers répondent aux normes correspondantes.

PRODUIT	PAYS D'ORIGINE	SPECIFICATIONS
Métal déployé	Canada	EMMA-557 Acier : ASTM A1011 CS-T-B / A1008 Aluminium : ASTM B209 Galvanisé à chaud : ASTM A123 Inoxydable : T-304, T-316
Caillebotis a barre soudé	États-Unis	NAAMM MGB-531 Acier : ASTM A1011/A1011M Galvanisé à chaud : ASTM A123 Inoxydable : T-304, T-316
Caillebotis "Swage Locked"	États-Unis	NAAMM MGB-531 Aluminium : ASTM B-221, 6063-T6
Profilés Diamond Grip, Safety Grip, Safety Tread Planchers et Barreaux Safety Tread	Canada	Acier : ASTM 1011 Acier Pré-galvanisé : G 90, ASTM A653 Aluminium : 5052-H32 Inoxydable : T-304, T-316

.EROUX

089026958

AMICO DRAMEX

62 rue Kelly, St-Jean-sur-Richelieu, Québec, Tel. 800.463.3255, Fax 450.347.0541, amico-online.com

:ROUX
/ISION OF RUSSEL METALS INC.
DIVISION de MÉTAUX RUSSEL INC.

0E89340445-56798

COMBINATION SHORT FORM OF STRAIGHT BILL OF LADING - EXPRESS SHIPPING CONTRACT,
SUBJECT TO ALL TERMS, CONDITIONS AND LIMITATIONS INCORPORATED BY REFERENCE AS SHOWN ON THE BACK OF THIS BILL.
FORMULAIRE COMBINÉ DE CONNAISSEMENT DIRECT - ET DE CONTRAT D'EXPÉDITION PAR
MESSAGERIE ASSUJETTI À TOUTES LES MODALITÉS, CONDITIONS ET LIMITATIONS QUI Y SONT INTÉGRÉES PAR RENVOI, AINSI QU'IL EST INDIQUÉ AU VERSO DU PRÉSENT CONNAISSEMENT.

ACIER LEROUX
1675 ROUTE DE L'AÉROPORT
C.P. 550 AMOS QC J9T3 TEL#: (819)732-8381

PROMISE.....: 05/31/17
REPRESENTANT Yvan Bégin

EXPÉDIÉ: 00
NORMEX METAL
9088-6615 QUEBEC INC.
11 BOUL. INDUSTRIEL
ROUTE 111 EST
LA SARRE QC J9Z 2X2

VENDU: 8910165 05/31/17
NORMEX METAL
9088-6615 QUEBEC INC.
P.O. BOX 565
EARLTON ON P0J 1E0

FREIGHT TERMS
MODALITÉS DE TRANSPORT
PORT PAYÉ
CARRIER
TRANSPORTEUR RT# 006
NOTRE CAMION
CUSTOMER PHONE #
TÉLÉPHONE À LA CLIENTÈLE #
(819)333-1200

#BCC PLA06075 RELACHE#

VEHICLE IDENT.
IDENTIFICATION DU VEHICULE
NIR:R-527158-1

INSTRUCTIONS CLIENT:
ECRIRE # DE COULEE SUR LA COPIE ROSE DU CLIENT
****
FERME A 13HR00 LE VENDREDI
COMMENT.:
LIVRAISON 31 MAI 17

PIPE CAT NAT/C
PRIMEC

LN#					QTÉ COMM	
04	28862 PROFILÉ EN U	.8 X 13.75	50W			
	#PIéC		X 20'	7 EA	1925 LB	
Commentaire	A COUPER					
	7 FOIS 20'					
	**********					

L-2492

CONFORME	OUI	NON
SIGNÉ		
DATE	02/06/17	
	JOUR MOIS ANNÉE	

Les certificats d'analyse (MTR) seront automatiquement envoyés par email

PAGE: 1 TOTALS PALETTES _____ 7 EA 1925 LB

STEEL, STAINLESS STEEL, ALUMINUM, BRASS, COPPER, NICKEL AND SPECIALTY STEEL.

e above listed products, in a natural state, do not pose inhalation, ingestion or contact hazards.
olonged overexposure to dust or fumes during welding, burning, grinding or machining may result in spiratory irritation, skin irritation or disease. USE ADEQUATE VENTILATION AND APPROPRIATE PERSONAL OTECTIVE EQUIPMENT.
r Brass and Copper Alloys, contact with acids may liberate flammable and explosive hydrogen gas. If heated, pper oxide, zinc oxide, nickel oxide, tin oxide, cadmium oxide and/or lead fumes may be evolved. Aluminum oducts may slip during handling or transportation.
UCTS MUST BE SECURED FOR HANDLING AND TRANSPORTATION.
containment strapping may result in the strapping rebounding and injuring those nearby. EXERCISE
posure to metal fumes, remove to fresh air. For skin contact, wash thoroughly with soap and water. ain medical attention if symptoms persist.
E MATERIAL SAFETY DATA SHEETS FOR MORE DETAILED INFORMATION.

ACIER, ACIER INOXYDABLE, ALUMINIUM, LAITON, CUIVRE, NICKEL ET ACIER SPÉCIALISÉ

Les produits mentionnés ci-haut, à l'état brut, ne causent aucun danger au contact, en cas d'inhalation ou d'ingestion.
Une surexposition aux poussières ou aux émanations durant la soudure, la coupe au chalumeau, le meulage ou l'usinage pourrait résulter en une irritation des voies respiratoires ou de la peau ou autres maladies. UNE VENTILATION ADÉQUATE EST DE MISE AINSI QU'UN ÉQUIPEMENT PROTECTEUR APPROPRIÉ.
Pour ce qui est des alliages de cuivre et de laiton, un contact avec certains acides pourrait dégager des gaz hydrogène explosifs et inflammables. Si chauffé, de l'oxyde de cuivre, de zinc, de nickel, d'étain, de cadmium ou/ou des vapeurs de plomb pourraient s'échapper. Les produits d'aluminium peuvent glisser lors de leur manipulation ou transportation.
TOUS LES PRODUITS DOIVENT ÊTRE ATTACHÉS SOLIDEMENT LORS DU TRANSPORT ET DE LA MANIPULATION.
Lors de la coupe, les courroies d'acier peuvent rebondir et causer des blessures. MANIPULEZ AVEC PRÉCAUTION.
En cas d'une surexposition aux émanations, retirez-vous et respirez de l'air frais. S'il y a contact avec la peau lavez la région affectée avec de l'eau et du savon. Si les symptômes persistent consultez votre médecin.
POUR PLUS D'INFORMATION, CONSULTEZ LA FEUILLE DE DONNÉES DE SÉCURITÉ.

DATE _____

SIGNED
SIGNÉ

CHASER'S ORDER IS FILLED IN ACCORDANCE WITH THE ABOVE TERMS AND CONDITIONS OF SALE AND THOSE ON THE REVERSE HEREOF, ALL OF WHICH TERMS AND CONDITIONS SUPERSEDE THE TERMS AND CONDITIONS (IF ANY) OF PURCHASER'S ORDER. BY ACCEPTIN VERY OF ALL OR PART OF THE ABOVE-DESCRIBED GOODS (HEREINAFTER CALLED THE "GOODS") OR BY PAYING FOR SAME IN WHOLE OR IN PART PURCHASER AGREES TO ALL THE TERMS AND CONDITIONS SET FORTH ABOVE AND ON THE REVERSE HEREOF.
OMMANDE DE L'ACHETEUR EST EXÉCUTÉE EN CONFORMITÉ DES CONDITIONS DE VENTE STIPULÉES CI-DESSUS ET AU VERSO DES PRÉSENTES. TOUTES CES CONDITIONS REMPLAÇANT CELLES (LE CAS ÉCHÉANT) ÉNONCÉES AU BON DE COMMANDE DE L'ACHETEUR EI EPTANT LA LIVRAISON DE TOUT OU PARTIE DES MARCHANDISES DÉCRITES CI-DESSUS (CI-APRÈS APPELÉES LES "MARCHANDISES") OU EN LES PAYANT INTÉGRALEMENT OU PARTIELLEMENT, L'ACHETEUR ACCEPTE TOUTES LES CONDITIONS STIPULÉES CI-DESSUS ET AI O DES PRÉSENTES.

OFFICE/ADMINISTRATIVE SHIPPING/EXPEDITION DRIVER/CHAUFFEUR CUSTOMER/CLIENT

RLS-L 04/1

6/02/17 9:05:21

EMAIL PAGE COUVERTURE

==========

Société:

6/02/17 9:05:21 Document Sommaire

Page couverture 1

Objet: MILL TEST CERTIFICATE

NO.COMMANDE :89340445

No.Bc Du Client :PLA06075

City : LA SARRE State/Province . QC

Séquence correspondant au(x) MTR imprimé(s):

Ln#	Description item:	Coulée	MTR
4	8 X 13.75 PROFILÉ EN U 50W	622636	094125424

4	8 X 13.75 PROFILÉ EN U 50W	52077454	094130101

A01
ArcelorMittal Poland S.A.
Oddział w Dąbrowie Górniczej
al. J. Piłsudskiego 92
41-308 Dąbrowa Górnicza

A02
MILL TEST REPORT

ASTM A6/A6M Nr: 1001875531

Z01.1
Dąbrowa Górnicza, 12.09.2016

ArcelorMittal

A05.1
Purchaser: ARCELORMITTAL COMMERCIAL SECTIONS S A
4221 ESCH-SUR-ALZETTE Luksemburg / Luxembourg / Luxemburg
66 RUE DE LUXEMBOURG 66 RUE DE LUXEMBOURG

A05.2
Address: Acier Leroux div. of Russel Metals 401697
J4B 6A1 BOUCHERVILLE Kanada / Canada / Kanada
1331, GRAHAM BELL

A07	No of purchase order	Contract No	Manuf. Order No/Pos	Delivery Note	Number of transport
	M94037300	PL/277839663/16-10885488	20014545/000005	62453689	315139456216
	ORDER: M94037300	LOT: SOREL		PREBON: 1700023428/5	

B01 According	Classification standards	Tolerance standards
ASTM A6/A6M-14	CSA G40.21-04	ASTM A6/A6M-14

B02-B03, B09-B11
Heavy channels C 8 X 13,7 length: 12192,00 mm steel grade: 350W

B07 Heat	Bundles/Pieces	B13 Weight
622636	6 / 120	29,934 t

Total 04:33:58 ORYGINAŁ/ORIGINAL 1[illegible]6
6 / 120 29,934 t

C71-C92 Chemical composition [%]

B07 Heat	C	Mn	Si	P	S	Cu	Cr	Ni	Al	N_2	Mo	Nb	V	Ti	Sn	Pb	As	B	O	H_2	CEV
622636	0,18	0,83	0,187	0,018	0,008	0,01	0,03	0,005	0,002	0,0059	0,001	0,001	0,040	0,001	0,002	0,001	0,001	0,0002			0,33

Mechanical properties

B07	C11	C12	C13	D73	C41	C44	C42 - Work of fracture
	TENSILE TEST						CHARPY IMPACT TEST (J)

Heat	YS (Mpa)	YS02 (Mpa)	UTS (Mpa)	EL (mm)	EL (%)	YS/UTS	YS02/UTS	Pr.width KV (mm)	Temp. °C	Test 1	Test 2	Test 3	average test
622636	354,0		493,0	200	22,3	0,72							
622636	360,0		499,0	200	22,3	0,72							

Z01 Statement of compliance: The producer guarantees that delivered goods are in accordance with the conditions of the order.

A05, Z02.2

Główny Specjalista
na Certyfikacji Wyrobów Pokrewnych
Kierownik Wydziału
[illegible]

Wystawił: Antoni Czechowski

LEROUX

094125424

CERTIFIED MATERIAL TEST REPORT

GERDAU

CA-ML-WHITBY
1 GERDAU CT
WHITBY, ON L1N 5T1
Canada

CUSTOMER SHIP TO	CUSTOMER BILL TO
LEROUX STEEL 1331 RUE GRAHAM BELL BOUCHERVILLE,QC J4B 6A1 Canada	LEROUX STEEL 1331 RUE GRAHAM BELL BOUCHERVILLE,QC J4B 6A1 Canada

GRADE	SHAPE / SIZE	DOCUMENT ID:
GGMULTI	Channel / 8 X 13.75#	0000035240

LENGTH	WEIGHT	HEAT / BATCH
40'00"	61,600 LB	52077454/02

SALES ORDER	CUSTOMER MATERIAL N°
4777761/000040	

SPECIFICATION / DATE or REVISION
ASTM A529-14, A572-15
ASTM A6-14,A36-14, ASME SA-36
ASTM A709-15, AASHTO M270-12
CSA G40.20-13/G40.21-13

CUSTOMER PURCHASE ORDER NUMBER	BILL OF LADING	DATE
94038187	1302-0000057236	03/20/2017

CHEMICAL COMPOSITION

C %	Mn %	P %	S %	Si %	Cu %	Ni %	Cr %	V %	Nb %
0.16	0.85	0.014	0.021	0.19	0.24	0.09	0.09	0.021	0.001

MECHANICAL PROPERTIES

YS 0.2% PSI	UTS PSI	YS MPa	UTS MPa	G/L Inch	Elong. %
55132	74822	380	516	8.000	23.60
54768	74073	378	511	8.000	23.60

COMMENTS / NOTES

This grade meets the requirements for the following grades:
ASTM Grades: A36; A529-50; A572-50; A709-36; A709-50
CSA Grades: 44W; 50W
AASHTO Grades: M270-36; M270-50
ASME Grades: SA36

LEROUX

094130101

The above figures are certified chemical and physical test records as contained in the permanent records of company. We certify that these data are correct and in compliance with specified requirements. This material, including the billets, was melted and manufactured in Canada. CMTR complies with EN 10204 3.1.

BHASKAR YALAMANCHILI
QUALITY DIRECTOR
Phone: (409) 769-1014 Email: Bhaskar.Yalamanchili@gerdau.com

LEONARDO NUNES
QUALITY ASSURANCE MGR.
Phone: (905) 668-8811 EXT 4055 Email: Leonardo.Nunes@gerdau.com

EROUX
IVISION OF RUSSEL METALS INC.
ION de MÉTAUX RUSSEL INC.

0E89340444-56695

COMBINATION SHORT FORM OF STRAIGHT BILL OF LADING - EXPRESS SHIPPING CONTRACT,
SUBJECT TO ALL TERMS, CONDITIONS AND LIMITATIONS INCORPORATED BY REFERENCE AS SHOWN ON THE BACK OF THIS BILL.
FORMULAIRE COMBINÉ DE CONNAISSEMENT DIRECT - ET DE CONTRAT D'EXPÉDITION PAR
MESSAGERIE ASSUJETTI À TOUTES LES MODALITÉS, CONDITIONS ET LIMITATIONS QUI Y SONT INTÉGRÉES PAR RENVOI, AINSI QU'IL EST INDIQUÉ AU VERSO DU PRÉSENT CONNAISSEMENT.

ACIER LEROUX
1675 ROUTE DE L'AÉROPORT
C.P. 550 AMOS QC J9T3 TEL#: (819)732-8381

PROMISE.....: 05/31/17
REPRESENTANT Yvan Bégin

EXPÉDIÉ: 00
NORMEX METAL
9088-6615 QUEBEC INC.
11 BOUL. INDUSTRIEL
ROUTE 111 EST
LA SARRE QC J9Z 2X2

VENDU: 8910165 05/30/17
NORMEX METAL
9088-6615 QUEBEC INC.
P.O. BOX 565
EARLTON ON P0J 1E0

FREIGHT TERMS
MODALITES DE TRANSPORT
PORT PAYÉ
CARRIER
TRANSPORTEUR RT# 006
NOTRE CAMION
CUSTOMER PHONE #
TÉLÉPHONE À LA CLIENTÈLE #
(819)333-1200

#BCC PLA06075 RELACHE#

VEHICLE IDENT.
IDENTIFICATION DU VEHICULE
NIR:R-527158-1

INSTRUCTIONS CLIENT:
ECRIRE # DE COULEE SUR LA COPIE ROSE DU CLIENT
****
FERME A 13HR00 LE VENDREDI

PIPE CATWALK

COMMENT.:
LIVRAISON 31 MAI 17

LN#05	32222 CORNIÈRE ACIER L.à.C	2 1/2 X 2 1/2 X 1/4 44W	QTÉ COMM	
	#PIÉC	X 20'	10 EA	820 LB
QTÉ expédiée.....				
ÉTQ 9063603	COUL 52077203	10 EA 820 LB	PAYS CANADA	

L-2472

CONFORME OUI NON
SIGNÉ
DATE 31/05/17
JOUR MOIS ANNÉE

Les certificats d'analyse (MTR) seront automatiquement envoyés par email

PAGE: 1 TOTALS PALETTES _____ 10 EA 820 LB

STEEL, STAINLESS STEEL, ALUMINUM, BRASS, COPPER, NICKEL AND SPECIALTY STEEL

The above listed products, in a natural state, do not pose inhalation, ingestion or contact hazards.

Prolonged overexposure to dust or fumes during welding, burning, grinding or machining may result in respiratory irritation, skin irritation or disease. USE ADEQUATE VENTILATION AND APPROPRIATE PERSONAL PROTECTIVE EQUIPMENT.

For Brass and Copper Alloys, contact with acids may liberate flammable and explosive hydrogen gas. If heated, copper oxide, zinc oxide, nickel oxide, tin oxide, cadmium oxide and/or lead fumes may be evolved. Aluminum ...s may slip during handling or transportation.

...DUCTS MUST BE SECURED FOR HANDLING AND TRANSPORTATION. ...steel containment strapping may result in the strapping rebounding and injuring those nearby. EXERCISE ...ON.

For overexposure to metal fumes, remove to fresh air. For skin contact, wash thoroughly with soap and water. Obtain medical attention if symptoms persist.

SEE MATERIAL SAFETY DATA SHEETS FOR MORE DETAILED INFORMATION.

ACIER, ACIER INOXYDABLE, ALUMINIUM, LAITON, CUIVRE, NICKEL ET ACIER SPÉCIALISÉ

Les produits mentionnés ci-haut, à l'état brut, ne causent aucun danger au contact, en cas d'inhalation ou d'ingestion.

Une surexposition aux poussières ou aux émanations durant la soudure, la coupe au chalumeau, la meulage ou l'usinage pourrait résulter en une irritation des voies respiratoires ou de la peau ou autres maladies. UNE VENTILATION ADÉQUATE EST DE MISE AINSI QU'UN ÉQUIPEMENT PROTECTEUR APPROPRIÉ.

Pour ce qui est des alliages de cuivre et de laiton, un contact avec certains acides pourrait dégager des gaz hydrogène explosifs et inflammables. Si chauffé, de l'oxyde de cuivre, de zinc, de nickel, d'étain, de cadmium et/ou des vapeurs de plomb pourraient s'échapper. Les produits d'aluminium peuvent glisser lors de leur manipulation ou transportation.

TOUS LES PRODUITS DOIVENT ÊTRE ATTACHÉS SOUDEMENT LORS DU TRANSPORT ET DE LA MANIPULATION.

Lors de la coupe, les courroies d'acier peuvent rebondir et causer des blessures. MANIPULEZ AVEC PRÉCAUTION.

En cas d'une surexposition aux émanations, retirez-vous et respirez de l'air frais. S'il y a contact avec la peau lavez la région affectée avec de l'eau et du savon. Si les symptômes persistent consultez votre médecin.

POUR PLUS D'INFORMATION, CONSULTEZ LA FEUILLE DE DONNÉES DE SÉCURITÉ.

DATE 31/05/17

SIGNED
SIGNÉ

...RCHASER'S ORDER IS FILLED IN ACCORDANCE WITH THE ABOVE TERMS AND CONDITIONS OF SALE AND THOSE ON THE REVERSE HEREOF, ALL OF WHICH TERMS AND CONDITIONS SUPERSEDE THE TERMS AND CONDITIONS (IF ANY) OF PURCHASER'S ORDER. BY ACCEP...
...LIVERY OF ALL OR PART OF THE ABOVE-DESCRIBED GOODS (HEREINAFTER CALLED THE "GOODS") OR BY PAYING FOR SAME IN WHOLE OR IN PART PURCHASER AGREES TO ALL THE TERMS AND CONDITIONS SET FORTH ABOVE AND ON THE REVERSE HEREOF.
...COMMANDE DE L'ACHETEUR EST EXÉCUTÉE EN CONFORMITÉ DES CONDITIONS DE VENTE STIPULÉES CI-DESSUS ET AU VERSO DES PRÉSENTES. TOUTES CES CONDITIONS REMPLAÇANT CELLES (LE CAS ÉCHÉANT) ANNONCÉES AU BON DE COMMANDE DE L'ACHETEUR
...CEPTANT LA LIVRAISON DE TOUT OU PARTIE DES MARCHANDISES DÉCRITES CI-DESSUS (CI-APRÈS APPELÉES LES "MARCHANDISES") OU EN LES PAYANT INTÉGRALEMENT OU PARTIELLEMENT, L'ACHETEUR ACCEPTE TOUTES LES CONDITIONS STIPULÉES CI-DESSUS E...
...RSO DES PRÉSENTES.

OFFICE/ADMINISTRATIVE SHIPPING/EXPEDITION DRIVER/CHAUFFEUR CUSTOMER/CLIENT

RLS-L

6/01/17 8:04:58

EMAIL PAGE COUVERTURE

==========

Société: Acier Leroux - Amos

6/01/17 8:04:58 Document Sommaire

Page couverture 1

Objet: MILL TEST CERTIFICATE

NO.COMMANDE :89340444

No.Bc Du Client :PLA06075

City : LA SARRE State/Province . QC

Séquence correspondant au(x) MTR imprimé(s):

Ln#	Description item:	Coulée	MTR
5	2 1/2 X 2 1/2 X 1/4 CORN. LÀC 44W	52077203	094128583

CERTIFIED MATERIAL TEST REPORT

GERDAU

CA-ML-WHITBY
1 GERDAU CT
WHITBY, ON L1N 5T1
Canada

CUSTOMER SHIP TO	CUSTOMER BILL TO
LEROUX STEEL 1331 RUE GRAHAM BELL BOUCHERVILLE,QC J4B 6A1 Canada	LEROUX STEEL 1331 RUE GRAHAM BELL BOUCHERVILLE,QC J4B 6A1 Canada

GRADE	SHAPE / SIZE	DOCUMENT ID:
GGMULTI	Angle / 2 1/2X2 1/2X1/4	0000031022

LENGTH	WEIGHT	HEAT / BATCH
20'00"	37,884 LB	52077203/02

SALES ORDER	CUSTOMER MATERIAL N°
4465103/000180	

SPECIFICATION / DATE or REVISION
ASTM A529-14, A572-15
ASTM A6-14,A36-14, ASME SA-36
ASTM A709-15, AASHTO M270-12
CSA G40.20-13/G40.21-13

CUSTOMER PURCHASE ORDER NUMBER	BILL OF LADING	DATE
94037803-FEMQ1	1302-0000055481	02/08/2017

CHEMICAL COMPOSITION

C %	Mn %	P %	S %	Si %	Cu %	Ni %	Cr %	V %	Nb %
0.13	0.77	0.018	0.044	0.18	0.31	0.11	0.13	0.016	0.001

MECHANICAL PROPERTIES

Elong. %	G/L Inch	UTS PSI	UTS MPa	YS 0.2% PSI	YS MPa
28.80	8.000	70992	489	55041	379
28.80	8.000	71000	490	54833	378

COMMENTS / NOTES

This grade meets the requirements for the following grades:
ASTM Grades: A36; A529-50; A572-50; A709-36; A709-50
CSA Grades: 44W; 50W
AASHTO Grades: M270-36; M270-50
ASME Grades: SA36

LEROUX



The above figures are certified chemical and physical test records as contained in the permanent records of company. We certify that these data are correct and in compliance with specified requirements. This material, including the billets, was melted and manufactured in Canada. CMTR complies with EN 10204 3.1.

BHASKAR YALAMANCHILI
QUALITY DIRECTOR
Phone: (409) 769-1014 Email: Bhaskar.Yalamanchili@gerdau.com

LEONARDO NUNES
QUALITY ASSURANCE MGR.
Phone: (905) 668-8811 EXT 4055 Email: Leonardo.Nunes@gerdau.com

EROUX

DIVISION OF RUSSEL METALS INC.
DIVISION de MÉTAUX RUSSEL INC.

0E89340442-56468

COMBINATION SHORT FORM OF STRAIGHT BILL OF LADING - EXPRESS SHIPPING CONTRACT,
SUBJECT TO ALL TERMS, CONDITIONS AND LIMITATIONS INCORPORATED BY REFERENCE AS SHOWN ON THE BACK OF THIS BILL.
FORMULAIRE COMBINÉ DE CONNAISSEMENT DIRECT - ET DE CONTRAT D'EXPÉDITION PAR
MESSAGERIE ASSUJETTI À TOUTES LES MODALITÉS, CONDITIONS ET LIMITATIONS QUI Y SONT INTÉGRÉES PAR RENVOI, AINSI QU'IL EST INDIQUÉ AU VERSO DU PRÉSENT CONNAISSEMENT.

ACIER LEROUX
1675 ROUTE DE L'AÉROPORT
C.P. 550 AMOS QC J9T3 TEL#: (819)732-8381

PROMISE.....: 05/26/17
REPRESENTANT Yvan Bégin

EXPÉDIÉ: 00
NORMEX METAL
9088-6615 QUEBEC INC.
11 BOUL. INDUSTRIEL
ROUTE 111 EST
LA SARRE QC J9Z 2X2

VENDU: 8910165 05/25/17
NORMEX METAL
9088-6615 QUEBEC INC.
P.O. BOX 565
EARLTON ON P0J 1E0

FREIGHT TERMS / MODALITÉS DE TRANSPORT
PORT PAYÉ
CARRIER / TRANSPORTEUR RT# 006
NOTRE CAMION
CUSTOMER PHONE # / TÉLÉPHONE À LA CLIENTÈLE #
(819)333-1200

#BCC PLA06075 RELACHE#

VEHICLE IDENT. / IDENTIFICATION DU VEHICULE
NIR:R-527158-1

INSTRUCTIONS CLIENT:
ECRIRE # DE COULEE SUR LA COPIE ROSE DU CLIENT
****
FERME A 13HR00 LE VENDREDI
COMMENT.:
LIVRAISON 26 MAI 17

PIPE
CAT WALK
4048

LN#01 38642 CORNIèRE ACIER L.à.C	1 1/2 X 1 1/2 X 3/16 44W			QTÉ COMM	
#PIéC L-2455	X 20'	2 EA	72 LB		
QTÉ expédiée.....					
ÉTQ 9061831 COUL 52077556	2 EA	72 LB	PAYS CANADA		
LN#03 32222 CORNIèRE ACIER L.à.C	2 1/2 X 2 1/2 X 1/4 44W			QTÉ COMM	
#PIéC L-2456	X 20'	20 EA	1640 LB		
QTÉ expédiée.....					
ÉTQ 9062666 COUL 52077203	20 EA	1640	LB PAYS CANADA		

	OUI	NON
CONFORME	✓	
SIGNÉ		
DATE 26/05/17 JOUR MOIS ANNÉE		

Les certificats d'analyse (MTR) seront automatiquement envoyés par email

PAGE: 1 TOTALS PALETTES _____ 22 EA 1712 LB

STEEL, STAINLESS STEEL, ALUMINUM, BRASS, COPPER, NICKEL AND SPECIALTY STEEL

The above listed products, in a natural state, do not pose inhalation, ingestion or contact hazards.

Prolonged overexposure to dust or fumes during welding, burning, grinding or machining may result in respiratory irritation, skin irritation or disease. USE ADEQUATE VENTILATION AND APPROPRIATE PERSONAL PROTECTIVE EQUIPMENT.

For Brass and Copper Alloys, contact with acids may liberate flammable and explosive hydrogen gas. If heated, copper oxide, zinc oxide, nickel oxide, tin oxide, cadmium oxide and/or lead fumes may be evolved. Aluminum ...ts may slip during handling or transportation.

...ODUCTS MUST BE SECURED FOR HANDLING AND TRANSPORTATION. ...sheet containment strapping may result in the strapping rebounding and injuring those nearby. EXERCISE ...ION.

For overexposure to metal fumes, remove to fresh air. For skin contact, wash thoroughly with soap and water. Obtain medical attention if symptoms persist.

SEE MATERIAL SAFETY DATA SHEETS FOR MORE DETAILED INFORMATION.

ACIER, ACIER INOXYDABLE, ALUMINIUM, LAITON, CUIVRE, NICKEL ET ACIER SPÉCIALISÉ

Les produits mentionnés ci-haut, à l'état brut, ne causent aucun danger au contact, en cas d'inhalation ou d'ingestion.
Une surexposition aux poussières ou aux émanations durant la soudure, la coupe au chalumeau, le meulage ou l'usinage pourrait résulter en une irritation des voies respiratoires ou de la peau ou autres maladies. UNE VENTILATION ADÉQUATE EST DE MISE AINSI QU'UN ÉQUIPEMENT PROTECTEUR APPROPRIÉ.
Pour ce qui est des alliages de cuivre et de laiton, un contact avec certains acides pourrait dégager des gaz hydrogène explosifs et inflammables. Si chauffé, de l'oxyde de cuivre, de zinc, de nickel, d'étain, de cadmium et/ou des vapeurs de plomb pourraient s'échapper. Les produits d'aluminium peuvent glisser lors de leur manipulation ou transportation.
TOUS LES PRODUITS DOIVENT ÊTRE ATTACHÉS SOLIDEMENT LORS DU TRANSPORT ET DE LA MANIPULATION.
Lors de la coupe, les courroies d'acier peuvent rebondir et causer des blessures. MANIPULEZ AVEC PRÉCAUTION.
En cas d'une surexposition aux émanations, retirez-vous et respirez de l'air frais. S'il y a contact avec la peau lavez la région affectée avec de l'eau et du savon. Si les symptômes persistent consultez votre médecin.
POUR PLUS D'INFORMATION, CONSULTEZ LA FEUILLE DE DONNÉES DE SÉCURITÉ.

DATE 26/5/2017 RF

SIGNED
SIGNÉ

PURCHASER'S ORDER IS FILLED IN ACCORDANCE WITH THE ABOVE TERMS AND CONDITIONS OF SALE AND THOSE ON THE REVERSE HEREOF, ALL OF WHICH TERMS AND CONDITIONS SUPERSEDE THE TERMS AND CONDITIONS (IF ANY) OF PURCHASER'S ORDER. BY ACCEPTING DELIVERY OF ALL OR PART OF THE ABOVE-DESCRIBED GOODS (HEREINAFTER CALLED THE "GOODS") OR BY PAYING FOR SAME IN WHOLE OR IN PART PURCHASER AGREES TO ALL THE TERMS AND CONDITIONS SET FORTH ABOVE AND ON THE REVERSE HEREOF.
COMMANDE DE L'ACHETEUR EST EXÉCUTÉES EN CONFORMITÉ DES CONDITIONS DE VENTE STIPULÉES CI-DESSUS ET AU VERSO DES PRÉSENTES. TOUTES CES CONDITIONS REMPLAÇANT CELLES (LE CAS ÉCHÉANT) ÉNONCÉES AU BON DE COMMANDE DE L'ACHETEUR ACCEPTANT LA LIVRAISON DE TOUT OU PARTIE DES MARCHANDISES DÉCRITES CI-DESSUS (CI-APRÈS APPELÉES LES "MARCHANDISES") OU EN LES PAYANT INTÉGRALEMENT OU PARTIELLEMENT, L'ACHETEUR ACCEPTE TOUTES LES CONDITIONS STIPULÉES CI-DESSUS ET AU VERSO DES PRÉSENTES.

OFFICE/ADMINISTRATIVE SHIPPING/EXPEDITION DRIVER/CHAUFFEUR CUSTOMER/CLIENT

RLS-L 04

5/26/17 8:41:49

EMAIL PAGE COUVERTURE

==========

Société:

5/26/17 8:41:49 Document Sommaire

Page couverture 1

Objet: MILL TEST CERTIFICATE

NO.COMMANDE :89340442

No.Bc Du Client :PLA06075

City : LA SARRE State/Province . QC

Séquence correspondant au(x) MTR imprimé(s):

Ln#	Description item:	Coulée	MTR
1	1 1/2 X 1 1/2 X 3/16 CORN. LÀC 44W	52077556	094129587
3	2 1/2 X 2 1/2 X 1/4 CORN. LÀC 44W	52077203	094128583

CERTIFIED MATERIAL TEST REPORT

GERDAU

CA-ML-CAMBRIDGE
160 ORION PLACE
CAMBRIDGE, ON N1T 1R9
Canada

CUSTOMER SHIP TO	CUSTOMER BILL TO
LEROUX STEEL 1331 RUE GRAHAM BELL BOUCHERVILLE,QC J4B 6A1 Canada	LEROUX STEEL 1331 RUE GRAHAM BELL BOUCHERVILLE,QC J4B 6A1 Canada

GRADE	SHAPE / SIZE	DOCUMENT
GGMULTI	Angle / 1 1/2X1 1/2X3/16	0000033196

LENGTH	WEIGHT	HEAT / BATCH
20'00"	25,740 LB	52077556/02

SALES ORDER	CUSTOMER MATERIAL N°
4585552/000060	

SPECIFICATION / DATE or REVISION
ASTM A529-14, A572-15
ASTM A6-14,A36-14, ASME SA-36
ASTM A709-15, AASHTO M270-12
CSA G40.20-13/G40.21-13

CUSTOMER PURCHASE ORDER NUMBER	BILL OF LADING	DATE
94037961	1301-0000028506	03/07/2017

CHEMICAL COMPOSITION

C %	Mn %	P %	S %	Si %	Cu %	Ni %	Cr %	Mo %	V %	Nb %
0.15	0.78	0.020	0.018	0.17	0.25	0.11	0.15	0.031	0.012	0.001

MECHANICAL PROPERTIES

Elong. %	G/L Inch	UTS PSI	UTS MPa	YS PSI	YS MPa
25.00	8.000	74339	513	53274	367
25.00	8.000	74556	514	53590	370

COMMENTS / NOTES

This grade meets the requirements for the following grades:
ASTM Grades: A36; A529-50; A572-50; A709-36; A709-50
CSA Grades: 44W; 50W
AASHTO Grades: M270-36; M270-50
ASME Grades: SA36

LEROUX

094129587

The above figures are certified chemical and physical test records as contained in the permanent records of company. We certify that these data are correct and in compliance with specified requirements. This material, including the billets, was melted and manufactured in Canada. CMTR complies with EN 10204 3.1.

BHASKAR YALAMANCHILI
QUALITY DIRECTOR
Phone: (409) 769-1014 Email: Bhaskar.Yalamanchili@gerdau.com

LEONARDO NUNES
QUALITY ASSURANCE MGR.
Phone: (905) 668-8811 EXT 4055 Email: Leonardo.Nunes@gerdau.com

CERTIFIED MATERIAL TEST REPORT

GERDAU

CA-ML-WHITBY
1 GERDAU CT
WHITBY, ON L1N 5T1
Canada

CUSTOMER SHIP TO	CUSTOMER BILL TO
LEROUX STEEL 1331 RUE GRAHAM BELL BOUCHERVILLE,QC J4B 6A1 Canada	LEROUX STEEL 1331 RUE GRAHAM BELL BOUCHERVILLE,QC J4B 6A1 Canada

GRADE	SHAPE / SIZE	DOCUMENT ID:
CGMULTI	Angle / 2 1/2X2 1/2X1/4	0000031022

LENGTH	WEIGHT	HEAT / BATCH
20'00"	37,884 LB	52077203/02

SALES ORDER	CUSTOMER MATERIAL N°
4465103/000180	

SPECIFICATION / DATE or REVISION
ASTM A529-14, A572-15
ASTM A6-14,A36-14, ASME SA-36
ASTM A709-15, AASHTO M270-12
CSA G40.20-13/G40.21-13

CUSTOMER PURCHASE ORDER NUMBER	BILL OF LADING	DATE
94037803-FEMQ1	1302-0000055481	02/08/2017

CHEMICAL COMPOSITION

C %	Mn %	P %	S %	Si %	Cu %	Ni %	Cr %	V %	Nb %
0.13	0.77	0.018	0.044	0.18	0.31	0.11	0.13	0.016	0.001

MECHANICAL PROPERTIES

Elong. %	G/L inch	UTS PSI	UTS MPa	YS 0.2% PSI	YS MPa
28.80	8.000	70992	489	55041	379
28.80	8.000	71000	490	54833	378

COMMENTS / NOTES

This grade meets the requirements for the following grades:
ASTM Grades: A36; A529-50; A572-50; A709-36; A709-50
CSA Grades: 44W; 50W
AASHTO Grades: M270-36; M270-50
ASME Grades: SA36

LEROUX

094128583

The above figures are certified chemical and physical test records as contained in the permanent records of company. We certify that these data are correct and in compliance with specified requirements. This material, including the billets, was melted and manufactured in Canada. CMTR complies with EN 10204 3.1.

BHASKAR YALAMANCHILI
QUALITY DIRECTOR
Phone: (409) 769-1014 Email: Bhaskar.Yalamanchili@gerdau.com

LEONARDO NUNES
QUALITY ASSURANCE MGR.
Phone: (905) 668-8811 EXT 4055 Email: Leonardo.Nunes@gerdau.com

NUQSANA-PROMEC MINING

Client: AGNICO-EAGLE MINES LTD.
Contract Title: Fuel Tanks Piping Supply and Installation
Contract No.: 6515-C-270-007
Promec Ref.: C22466T

Daily Weld Report

ITR No.: AEM-WE-ITR-001
Area No.: ALL
System No.: ALL

ISO or Pipe Dwg No.	Weld Number	Type	Ø Size (in)	Welder Ticket	Remarks
103-150-PDI-CC10-003 1/12	N/A				aucun Changement
103-150-PDI-CC10-003 2/12	①	Butt Weld	6"	A/O	
103-150-PDI-CC10-003 3/12	NA				aucun Changement
103-150-PDI-CC10-003 4/12	①	Butt Weld	6"	A/O	
	②	"	"	A/O	
103-150-PDI-CC10-002 5/12	①	Butt Weld	6"	A/O	
	②	"	"	A/O	

Prepared by

Date

Foreman

Signature

Date

NUQSANA PROMEC MINING

Client: AGNICO-EAGLE MINES LTD.
Contract Title: Fuel Tanks Piping Supply and Installation
Contract No.: 6515-C-270-007
Promec Ref.: C22466T

Daily Weld Report

ITR No.: AEM-WE-ITR-001
Area No.: ALL
System No.: ALL

ISO or Pipe Dwg No.	Weld Number	Type	Ø Size (in)	Welder Ticket	Remarks
103-150-PDI-CC10-003 6/12	①	Butt weld	6"	A/O	
103-150-PDI-CC10-003 7/12	①	Butt weld	6"	A/O	
	②	"	"	A/O	
103-150-PDI-CC10-003 8/12	①	Butt weld	6"	A/O	

Prepared by

_____ _____
Date

Foreman

_____ _____
Signature Date

NUQSANA-PROMEC MINING

Client: AGNICO-EAGLE MINES LTD.
Contract Title: Fuel Tanks Piping Supply and Installation
Contract No.: 6515-C-270-007
Promec Ref.: C22466T

Daily Weld Report

ITR No.: AEM-WE-ITR-001
Area No.: ALL
System No.: ALL

ISO or Pipe Dwg No.	Weld Number	Type	Ø Size (in)	Welder Ticket	Remarks
103-150-PDI-CC10-063 Pg 10/12	①	Butt Weld	4"	JM B	
	②	"	"	JM B	
	③	"	"	JM B	
	④	"	"	JM B	
	⑤	Butt Weld	½	JM B	
103-150-PDI-CC10-003 Pg 9/12	①	Butt Weld	4"	JM B	
	②	"	½"	JM B	
	③	"	4"	JM B	
	④	"	4"	JM B	

Prepared by

Date

Foreman

Signature

Date

NUQSANA-PROMEC MINING

Client: AGNICO-EAGLE MINES LTD.
Contract Title: Fuel Tanks Piping Supply and Installation
Contract No.: 6515-C-270-007
Promec Ref.: C22466T

Daily Weld Report

ITR No.: AEM-WE-ITR-001
Area No.: ALL
System No.: ALL

ISO or Pipe Dwg No.	Weld Number	Type	Ø Size (in)	Welder Ticket	Remarks
103-150-PDI-CC10-001 1/13	①	Socket	1"	A/O	
	②	Socket	1"	A/O	
	③	Butt weld	6"	A/O	
	④	Butt weld	6"	A/O	
	⑤				
	⑥				
103-150-PDI CC10-001 2/13	①	Butt weld	6"	A/O	
	②	Butt weld	6"	A/O	
	③	Butt weld	6"	A/O	
	④	BUTTWELD	6"	A/O	
	⑤	BUTTWELD	6"	A/O	

Prepared by

R Lamothe

Date

Foreman

Signature

Date

NUQSANA-PROMEC MINING

Client: AGNICO-EAGLE MINES LTD.
Contract Title: Fuel Tanks Piping Supply and Installation
Contract No.: 6515-C-270-007
Promec Ref.: C22466T

Daily Weld Report

ITR No.: AEM-WE-ITR-001
Area No.: ALL
System No.: ALL

ISO or Pipe Dwg No.	Weld Number	Type	Ø Size (in)	Welder Ticket	Remarks
103-150-PDI-CC10-001	1	Buttweld	6"	MC	
3/13	2	BUTTWELD	6"	MC	
	3	BUTTWELD	6"	MC	
103-150-PDI-CC10-001	1	Buttweld	6"	A/O	
4/13	2		"	A/O	
	3		"	JMB	
	4		"	A/O	
	5		"	JMB	
	6		"	MC MP	
	7		"	MP	
	8		"	MC	
	9		"	A/O	
	10		"	MP	

Prepared by

Date

Foreman

Signature

Date

NUQSANA PROMEC MINING

Client: AGNICO-EAGLE MINES LTD.
Contract Title: Fuel Tanks Piping Supply and Installation
Contract No.: 6515-C-270-007
Promec Ref.: C22466T

Daily Weld Report

ITR No.: AEM-WE-ITR-001
Area No.: ALL
System No.: ALL

ISO or Pipe Dwg No.	Weld Number	Type	Ø Size (in)	Welder Ticket	Remarks
103-150-PDI-CC10-001 5/13	1	Butt weld	6	A/O	
	2	"	6	A/O	
	3	"	6	A/O	
	4	"	6	A/O	
	5	"	6	A/O	
	6	"	6	A/O	
	7	"	6	A/O	
	8	"	6	A/O	
	9	"	6	A/O	
	10	"	6	A/O	
	13		10	A/O	
	14		10	A/O	
	15		10	A/O	
	16		10	A/O	
	17		10	A/O	
	18		10	A/O	

Prepared by

R Lamothe

Date

Foreman

Signature

Date

NUQSANA-PROMEC MINING

Client: AGNICO-EAGLE MINES LTD.
Contract Title: Fuel Tanks Piping Supply and Installation
Contract No.: 6515-C-270-007
Promec Ref.: C22466T

Daily Weld Report

ITR No.: AEM-WE-ITR-001
Area No.: ALL
System No.: ALL

ISO or Pipe Dwg No.	Weld Number	Type	Ø Size (in)	Welder Ticket	Remarks
103-150-PDI-CC10-001	①	Buttweld	6"	A/O	
6/13	②			A/O	
	③			A/O	
	④			A/O	
	⑤			A/O	
103-150-PDI-CC10-001	①	Buttweld	6"	A/O	
7/13					

Prepared by

Date

Foreman

Signature

Date

NUQSANA-PROMEC MINING

Client: AGNICO-EAGLE MINES LTD.
Contract Title: Fuel Tanks Piping Supply and Installation
Contract No.: 6515-C-270-007
Promec Ref.: C22466T

Daily Weld Report

ITR No.: AEM-WE-ITR-001
Area No.: ALL
System No.: ALL

ISO or Pipe Dwg No.	Weld Number	Type	Ø Size (in)	Welder Ticket	Remarks
103-150-PDI-CC10-001	(1)	Butt weld	6"	A/O	
8/13	(2)			AMR	
103-150-PDI-CC10-001	NA				
9/13					
103-150 PDI-CC10-001					
10/13					

Prepared by

Date

Foreman

Signature

Date

NUQSANA-PROMEC MINING

Client: AGNICO-EAGLE MINES LTD.
Contract Title: Fuel Tanks Piping Supply and Installation
Contract No.: 6515-C-270-007
Promec Ref.: C22466T

Daily Weld Report

ITR No.: AEM-WE-ITR-001
Area No.: ALL
System No.: ALL

ISO or Pipe Dwg No.	Weld Number	Type	Ø Size (in)	Welder Ticket	Remarks
103-150- PDI-CC10-061					
11/13					
103-150-PDI-CC10-001					
12/13					

Prepared by

Date

Foreman

Signature

Date

NUQSANA-PROMEC MINING

Client: AGNICO-EAGLE MINES LTD.
Contract Title: Fuel Tanks Piping Supply and Installation
Contract No.: 6515-C-270-007
Promec Ref.: C22466T

Daily Weld Report

ITR No.: AEM-WE-ITR-001
Area No.: ALL
System No.: ALL

ISO or Pipe Dwg No.	Weld Number	Type	Ø Size (in)	Welder Ticket	Remarks
103-150-PDT-CC10-001					
13/13					

Prepared by

_____ _____
Date

Foreman

_____ _____
Signature Date

NUQSANA-PROMEC MINING

Client: AGNICO-EAGLE MINES LTD.
Contract Title: Fuel Tanks Piping Supply and Installation
Contract No.: 6515-C-270-007
Promec Ref.: C22466T

Daily Weld Report

ITR No.: AEM-WE-ITR-001
Area No.: ALL
System No.: ALL

ISO or Pipe Dwg No.	Weld Number	Type	Ø Size (in)	Welder Ticket	Remarks
103-150-PDI-CC10-002 1/3	(1)	BW	6"	AMR	
103-150-PDI-CC10-002 2/3	(1)	BW	6"	AMR	
103-150-PDI-CC10-002 3/3	(1)	BW	6"	AMR	

Prepared by

Date

Foreman

Signature

Date

AGNICO EAGLE

Vendor Document Status

1 ☐ Proceed to next submission and status.

2 ☐ Proceed with exceptions as noted to next submission and status.

3 ☐ Do not proceed.
Revise as noted and resubmit next submission and status.

4 ☑ Complete, no further submission required.

By: JEAN-FRANCOIS TREMBLAY Date: 2017-05-02

Review and authorization to fabricate are only for general conformance with the design concept of the Project as expressed in the Contract Documents. Sole responsibility for the accuracy and completeness of this document, including but not limited to dimensions and quantities, remains with the Supplier/Contractor. Agnico Eagle does not warrant the accuracy or completeness of any of the information contained herein, nor does Agnico Eagle authorize or approve any construction means, methods, techniques, sequences or any safety precautions or procedures.

Agnico Eagle No. 6515-C-270-007-141-TES-0043 R: Sub001

DOCUMENT FOR INFORMATION

NUQSANA PROMEC MINING

Client: AGNICO-EAGLE MINES LTD.
Contract Title: Fuel Tanks Piping Supply and Installation
Contract No.: 6515-C-270-007
Promec Ref.: C22466T

Daily Weld Report

ITR No.: AEM-WE-ITR-001
Area No.: ALL
System No.: ALL

ISO or Pipe Dwg No.	Weld Number	Type	Ø Size (in)	Welder Ticket	Remarks

Prepared by

Date

Foreman

Signature

Date

AGNICO EAGLE

Vendor Document Status

1 ☐ Proceed to next submission and status.

2 ☐ Proceed with exceptions as noted to next submission and status.

3 ☐ Do not proceed.
Revise as noted and resubmit next submission and status.

4 ☑ Complete, no further submission required.

By: JEAN-FRANCOIS TREMBLAY Date: 2017-05-02

Review and authorization to fabricate are only for general conformance with the design concept of the Project as expressed in the Contract Documents. Sole responsibility for the accuracy and completeness of this document, including but not limited to dimensions and quantities, remains with the Supplier/Contractor. Agnico Eagle does not warrant the accuracy or completeness of any of the information contained herein, nor does Agnico Eagle authorize or approve any construction means, methods, techniques, sequences or any safety precautions or procedures.

Agnico Eagle No. 6515-C-270-007-141-TES-0049 R: Sub001

DOCUMENT FOR INFORMATION

6515-C-270-007

Fuel Tanks Piping Supply and Installation

Weld Log

Document Number : AEM-GE-LOG-005
Contract Number : C22466T

AGNICO EAGLE

Field Weld #	Type	Diam.	Material	Schedule	Welder Ticket	Visual	NDE	Pass/Fail	Spool #	Isometric

DESSINS ISOMÉTRIQUE IDENTIFAINT LES JOINTS AYANT SUBIS DES ESSAIS

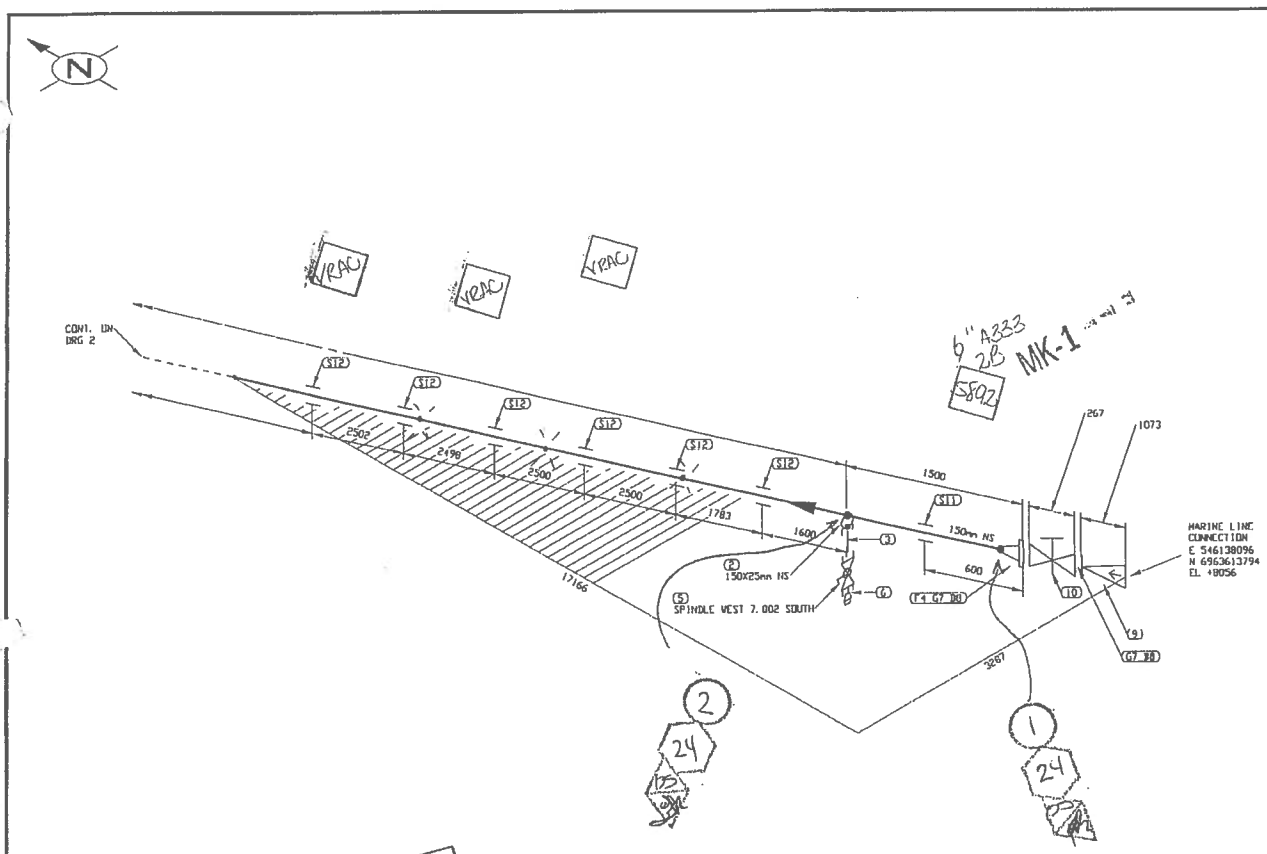

FABRICATION DRAWINGS BASED ON WSP CERTIFIED ENGINEERING

TABLEAU DE CONCEPTION		SOUDURE PAR CWB 3818 MB ISO 9606
NORME APPLICABLE	CSA Z662	
PRESSION DE CONCEPTION MAXIMALE	1480 PSIG	
TEMPERATURE MAXIMALE DE CONCEPTION	104 °F	SOUDURE BOUT À BOUT TOTALE
MÉTAL	5L Gr B	
FILETÉ	Class 3000	
PLACE TEMPÉE	Type 01	
ESSAIS NON DESTRUCTIFS		
SOUDURES DE TYPE ENGRENAGE	0% RT	SOUDURE BRIDES TOTALE
SOUDURES DE TYPE BOUT À BOUT	0% RT	
AUTRES		
DESSIN D'ISOMÉTRIQUE	N/A	TUYAUTERIE SOUTENUE TOUS LES

UNIES-FAB	C	N/C	N/A		C	N/C	N/A
MATÉRIEL	☑	☐	☐	MILL TEST	☑	☐	☐
VISUEL	☑	☐	☐	RAYON X	☑	☐	☐
DIMENSIONNEL	☑	☐	☐	POINÇON	☑	☐	☐
LOCALISATION	☑	☐	☐	EXTRÉMITÉ BOUCHE	☑	☐	☐
ORIENTATION	☑	☐	☐	NETTOYAGE	☑	☐	☐
IDENTIFICATION	☑	☐	☐	PEINTURE	☑	☐	☐
RESPONSABLE ATELIER				DATE	29/06/2017		
INSPECTEUR QUALITÉ				DATE	29/06/17		

SCEAU PROFESSIONNEL

LISTE DE MATERIEL

No	QTÉ	DIA	MATÉRIEL/CATALOGUE	DESCRIPTION
1	1604G HH	150	A 333 Gr. 6	SCH STD, SMLS PIPE
2	1	150X25	A 350 Gr. LF2	CL 3000, SOCKOLET
3	1	25	A 333 Gr. 6	SCH 80, NIPPLE x 75mm LG PDEXTOE
4	1	150	A 350 Gr. LF2	CL 150, SCH STD, RF, WN FLANGE
5	1	25	BA-32	CL 600, THRD, BALL VALVE
6	1	25	A 350 Gr. LF2	MNPT SOLID STL BULL PLUG
7	2	150	ASME B16.20	CL 150, GARLOCK 5500, RING TYPE GASKET 1/8" THK
8	16	19	A 193 B7/A 194 2H	CL 150, 8 - 19.05 X 100 STUD BOLTS c/w TWO HEAVY HEX NUTS
9	1	150	CW-29	CL 150, RF, SWING CHECK VALVE
10	1	150	GA-10	CL 150, RF, GATE VALVE
11	1	150		ABUTEMENT TYPE 1 AS PER DETAIL 4, DWG 65-103-270-200
12	6	150		PIPE SUPPORT AS PER DETAIL 3, DWG 65-103-270-200

CONTRAT UF
2106

EN ATELIER LE
31 MAI 2017
par : JS

No.	DATE	REVISION	PAR / APP.
0	2017/05/15	ISSUED FOR CONSTRUCTION	KHV

CLIENT: AGNICO EAGLE

NUOSANA PROMEC MINING

ultragen

CONSULTANT PROJECT NO. 591700

NO. DE CONDUITE	SPÉCIFICATION	PRODUIT	SYSTÈME REVÊTEMENT	CODE DE COULEUR	ISOLATION ET TRAÇAGE	ÉPAISS. D'ISOLATION		
103-150-PDI-CC10-001	CC10	PDI		–			65-103-270-200	PIPE SUPPORT DETAILS
							65-103-205-200	P&ID

PRESSION D'OPÉRATION	TEMPÉRATURE D'OPÉRATION	PRESSION DE CONCEPTION	TEMPÉRATURE DE CONCEPTION	PRESSION D'ESSAI	CLASSE D'INSPECTION	CODE DE SERVICE	TRAITEMENT THERMIQUE	No. DESSIN	DESSINS DE RÉFÉRENCE
PSIG	°F	PSIG	°F	PSIG					

CONC.: KHV
DATE: 2017/04/25
DESSINÉ PAR: KVE
DATE: 2017/04/25
VÉR. PAR: –
DATE: –
APP.: –
DATE: –
ÉCHELLE: AUCUNE

PROJET: AGNICO EAGLE – MEADOWBANK DIVISION
103 – COMBUSTIBLE

TITRE: RANKIN INLET
FABRICATION ISOMETRIC
MARINE LINE TO 65TNK11601 & 65TNK11602

No PROJET	No DESSIN	PAGES	REV.
6515	103-150-PDI-CC10-001	1/13	0

103-NN-E01

NOM DE W:\

IMPRIMÉ LE: May 18, 2017, 11:36am

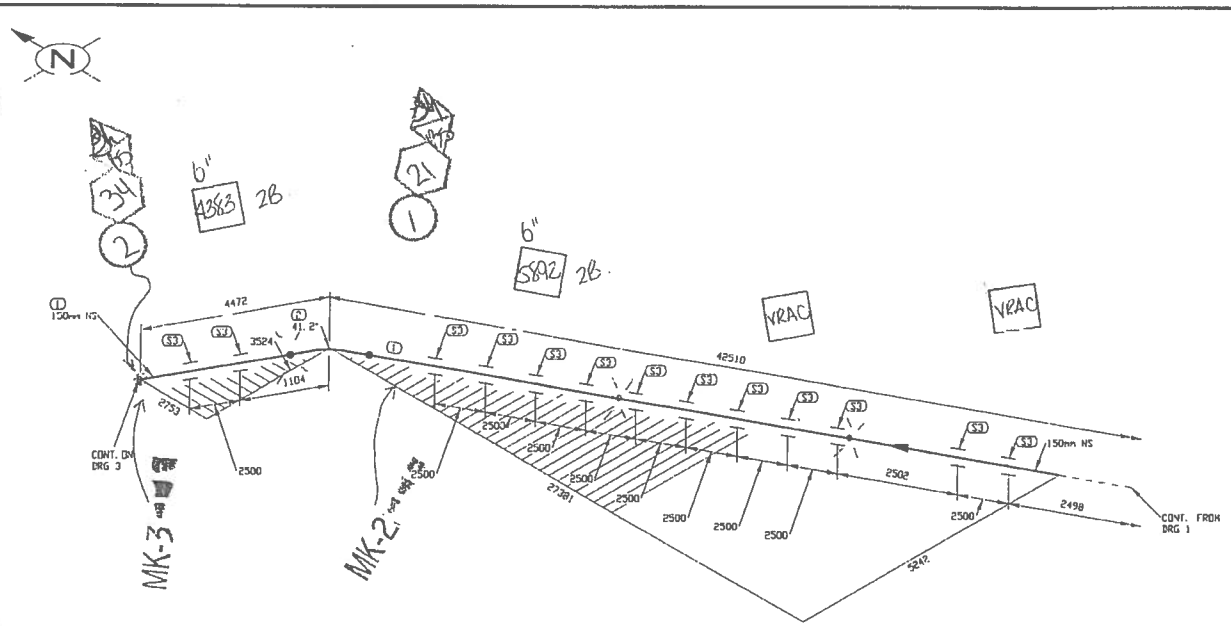

LISTE DE MATERIEL

No.	QTE	DIA	MATERIEL/CATALOGUE	DESCRIPTION
1	32178 MM	150	A 333 Gr. 6	SCH STD, SMLS PIPE
2	1	150	A 420 Gr. WPLG	SCH STD, BW LR 45 DEG ELBOW TRIM TO 41.16
3	13	150		PIPE SUPPORT AS PER DETAIL 3, ISO 65-103-270-200

A = 104 B = 225 CK 86

CONTRAT UF
2106

EN ATELIER LE
31 MAI 2017
par :

2 long vrac.

FABRICATION DRAWINGS BASED ON WSP CERTIFIED ENGINEERING

TABLEAU DE CONCEPTION

MODÈLE APPLICABLE	321.3	CONÇU PAR L'ENTREPRENEUR TYPIQUE
PRESSION/TEMPÉRATURE DE CONCEPTION	225	
TEMPÉRATURE MAX. DE CONCEPTION	104 °C	
MESURE	2012	CHARGE POUR L'ÉQUIPE TYPIQUE
PEINTURE	DIRECT	
PEINTURE ZINC RICH	NON	
LOCATIONS DES CONSTRUCTIONS		CHARGES DIVERSES TYPIQUE
SPÉCIFICATION DE TUYAUTERIE	Jacobs	
RACCORDS EN TUYAUTERIE		
AUTRES		
ESSAIS NON-DESTRUCTIFS	N/A	DESSIN DE CHARGES TYPIQUE
ESSAIS		
TRAITEMENT THERMIQUE		
LOCALISATION		

UNIES-FAB

	C	N/C	N/A		C	N/C	N/A
MATÉRIEL	☑	☐	☐	MILL TEST	☐	☐	☐
VISUEL	☑	☐	☐	RAYON X	☐	☐	☐
DIMENSIONNEL	☑	☐	☐	POINÇON	☐	☐	☐
LOCALISATION	☑	☐	☐	EXTRÉMITÉ BOUCHE	☐	☐	☐
ORIENTATION	☑	☐	☐	NETTOYAGE	☐	☐	☑
IDENTIFICATION	☑	☐	☐	PEINTURE	☐	☐	☐

RESPONSABLE ATELIER: DATE 24/05/2017
INSPECTEUR QUALITÉ: DATE 30/05/17

SCEAU PROFESSIONNEL

No.	DATE	REVISION	KHV / PAR / APP.
0	2017/05/15	ISSUED FOR CONSTRUCTION	KHV

CLIENT: AGNICO EAGLE

NUQSANA-PROMEC MINING

Ultragen

CONSULTANT PROJECT NO. 591700

NO. DE CONDUITE		SPECIFICATION	PRODUIT	SYSTEME REVETEMENT	CODE DE COULEUR	ISOLATION ET TRAÇAGE	EPAISS. D'ISOLATION		
103-150-PDI-CC10-001		CC10	PDI		-			65-103-270-200	PIPE SUPPORT DETAILS
PRESSION D'OPERATION	TEMPERATURE D'OPERATION	PRESSION DE CONCEPTION	TEMPERATURE DE CONCEPTION	PRESSION D'ESSAI	CLASSE D'INSPECTION	CODE DE SERVICE	TRAITEMENT THERMIQUE	65-103-205-200	P&ID
PSIG	°F	PSIG	°F	PSIG				No. DESSIN	DESSINS DE REFERENCE

CONC.: KHV
DATE: 2017/04/25
DESSINÉ PAR: KVC
DATE: 2017/04/25
VER. PAR: -
DATE: -
APP.: -
DATE: -
ÉCHELLE: AUCUNE

PROJET: AGNICO EAGLE - MELIADINE DIVISION
103 - COMBUSTIBLE

TITRE: RANKIN INLET
FABRICATION ISOMETRIC
MARINE LINE TO 65TNK11601 & 65TNK11602

No PROJET	No DESSIN	PAGES	REV.
6515	103-150-PDI-CC10-001	2/13	0

103-MN-01

TRACÉ le: May 17, 2017, 3:04pm

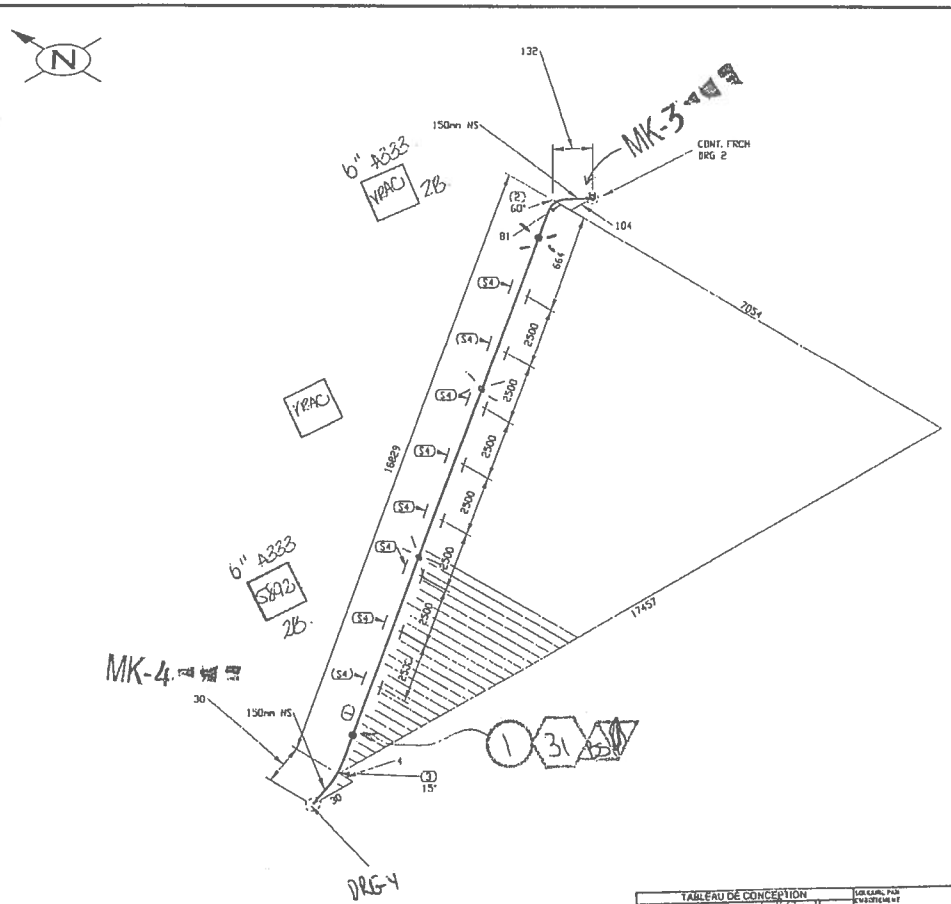
N
132
150mm NS
MK-3
CONT. FROM DRG 2
6" 4333
YPAC
28
104
81
2054
2500
2500
2500

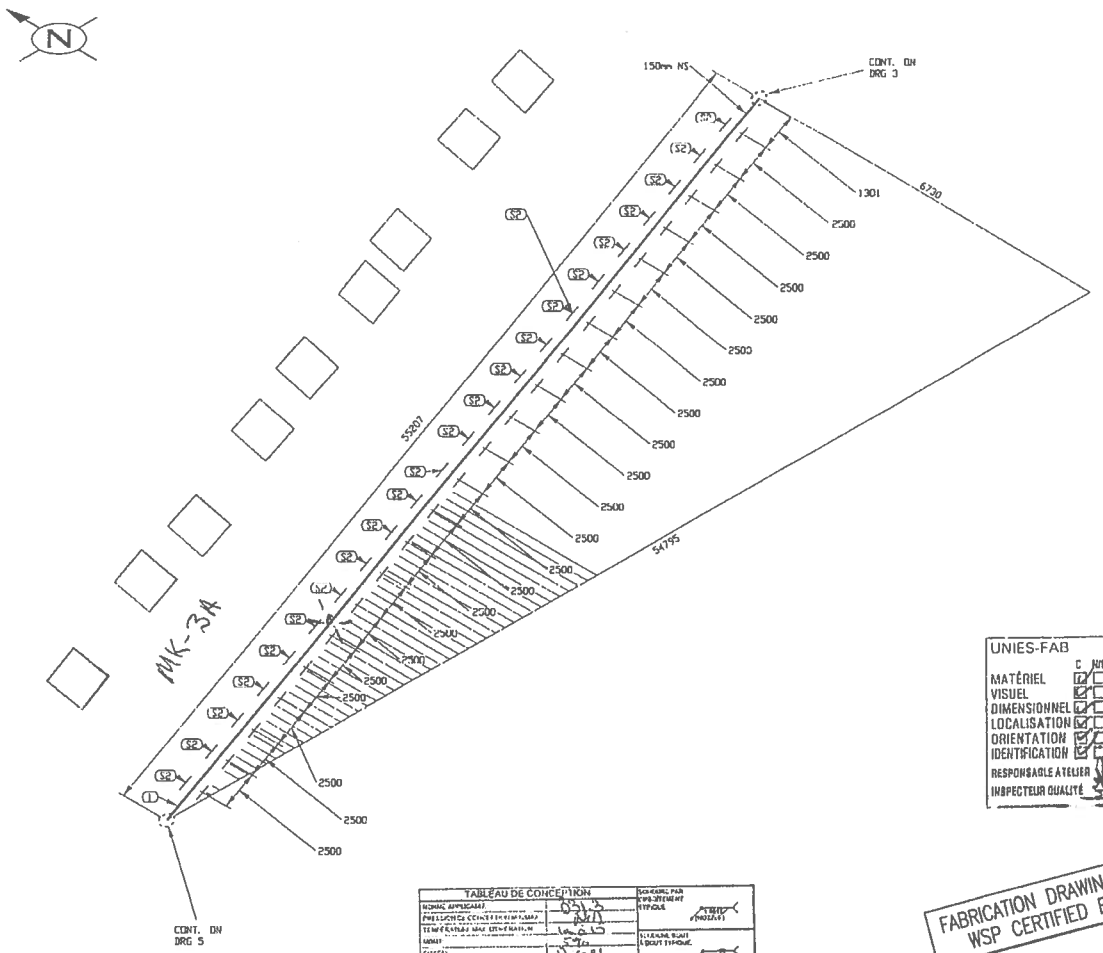

LISTE DE MATERIEL

No	QTE	DIA	MATERIEL/CATALOGUE	DESCRIPTION
1	55207 MM	150	A 333 Gr. 6	SCH STD, SMLS PIPE
2	23	150		PIPE SUPPORT AS PER DETAIL 3, DWG 65-103-270-200

CONTRAT UF
2106

EN ATELIER LE
31 MAI 2017
par: KV

10 long vrac.

UNIES-FAB

	C	N/C	N/A		C	N/C	N/A
MATÉRIEL	☑	☐	☐	MILL TEST	☑	☐	☐
VISUEL	☑	☐	☐	RAYON X	☑	☐	☐
DIMENSIONNEL	☑	☐	☐	POINÇON	☑	☐	☐
LOCALISATION	☑	☐	☐	EXTRÉMITÉ BOUCHE	☑	☐	☐
ORIENTATION	☑	☐	☐	NETTOYAGE	☑	☐	☐
IDENTIFICATION	☑	☐	☐	PEINTURE	☑	☐	☐

RESPONSABLE ATELIER: DATE 29/oct/17
INSPECTEUR QUALITÉ: DATE 29/OCT/17

FABRICATION DRAWINGS BASED ON WSP CERTIFIED ENGINEERING

TABLEAU DE CONCEPTION

NOMINAL APPLICABLE	03/3
PRESSION(S) CONCEPTION(S)	0,10
TEMPÉRATURE MAX CONCEPTION	10,0
VIDAGE	S/O
FASCES	Diesel
FLUIDE CONCEPT	Diesel
ESSAIS NON DESTRUCTIFS	
SOUDURE TYPE EN CHANTIER	
SOUDURE TYPE ATELIER	5027616
ANNEXES	
ÉTANCHÉITÉ/ESSAI	03
PWHT	
HOLISME	

SCHÉMA PAR ENLÈVEMENT TYPIQUE

SUPPORTS À GUIDAGE TYPIQUE

COUDURE SOUDÉE À TYPIQUE

SOUDURE À GOUSSET TYPIQUE

NO. DE CONDUITE		SPÉCIFICATION	PRODUIT	SYSTÈME REVÊTEMENT	CODE DE COULEUR	ISOLATION ET TRAÇAGE	ÉPAISS. D'ISOLATION		
103-150-PDI-CC10-001		CC10	PDI		–			65-103-270-200	PIPE SUPPORT DETAILS
PRESSION D'OPÉRATION	TEMPÉRATURE D'OPÉRATION	PRESSION DE CONCEPTION	TEMPÉRATURE DE CONCEPTION	PRESSION D'ESSAI	CLASSE D'INSPECTION	CODE DE SERVICE	TRAITEMENT THERMIQUE	65-103-205-200	P&ID
PSIG	°F	PSIG	°F	PSIG				No. DESSIN	DESSINS DE RÉFÉRENCE

SCEAU PROFESSIONNEL

CONC.: KHV
DATE: 2017/04/25
DESSINÉ PAR: KVE
DATE: 2017/04/25
VÉR. PAR: –
DATE: –
APP.: –
DATE: –
ÉCHELLE: AUCUNE

CLIENT: AGNICO EAGLE

NUQSANA-PROMEC MINING

ultragen

CONSULTANT PROJECT NO. 591700

PROJET: AGNICO EAGLE – MELIADINE DIVISION
103 – COMBUSTIBLE

TITRE: RANKIN INLET
FABRICATION ISOMETRIC
MARINE LINE TO 65TNK11601 & 65TNK11602

No PROJET	No DESSIN	PAGES	REV.
6515	103-150-PDI-CC10-001	4/13	0

No.	DATE	REVISION	PAR / APP
0	2017/05/15	ISSUED FOR CONSTRUCTION	KHV

10-MM-103

IMPRIMÉ LE: May 17, 2017, 3:04pm

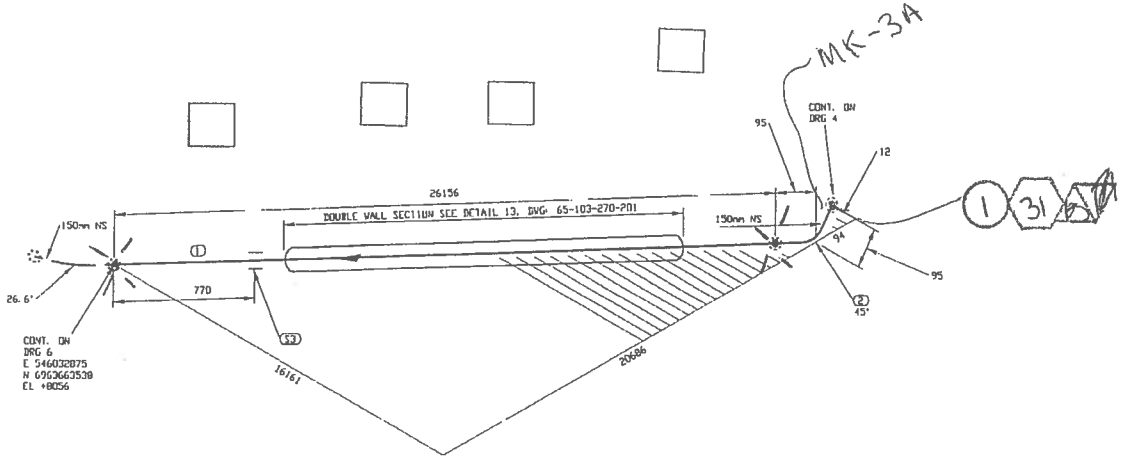

LISTE DE MATERIEL

No	QTE	DIA	MATERIEL/CATALOGUE	DESCRIPTION
1	26156 MM	150	A 333 Gr. 6	SCH STD, SMLS PIPE
2	1	150	A 420 Gr. WPL6	SCH STD, BV LR 45 DEG ELBOW
3	1	150		ABUTMENT TYPE 2 AS PER DETAIL 5, DWG: 65-103-270-200

CONTRAT UF
2106

EN ATELIER LE
31 MAI 2017

UNIES-FAB

	C	NIC	N/A		C	NIC	N/A
MATÉRIEL	☑	☐	☐	MILL TEST	☑	☐	☐
VISUEL	☑	☐	☐	RAYON X	☐	☐	☑
DIMENSIONNEL	☑	☐	☐	POINÇON	☐	☐	☑
LOCALISATION	☑	☐	☐	EXTRÉMITÉ BOUCHE	☐	☐	☑
ORIENTATION	☑	☐	☐	NETTOYAGE	☐	☐	☑
IDENTIFICATION	☑	☐	☐	PEINTURE	☐	☐	☑

RESPONSABLE ATELIER: DATE 25/05/17
INSPECTEUR QUALITÉ: DATE 25/05/17

No.	DATE	REVISION	PAR / APP.
0	2017/05/15	ISSUED FOR CONSTRUCTION	KHV

FABRICATION DRAWINGS BASED ON WSP CERTIFIED ENGINEERING

TABLEAU DE CONCEPTION

NORME APPLICABLE	B31.3	SOUDÉ PAR PÉNÉTRATION TYPIQUE
PRESSION DE CONCEPTION (PSIG)	615	
TEMPÉRATURE MAX DE CONCEPTION (°F)	104.50	
MÉTAL	316 SS	SOUDURE BOUT À BOUT TYPIQUE
FINESS	Nesta	
FLUIDE DE SERVICE	Nesta	
ESSAIS NON DESTRUCTIFS		
SOUDURES DE TYPE EMPLACEMENT		CONSOMMABLES TYPIQUE
SOUDURES DE TYPE CIRCUIT À BRIDE	100% RT	
AUTRES		
EXAMEN MÉTALLOGRAPHIQUE	N/A	SOUDURE D'ANCRAGE TYPIQUE
PROFIL		
NO USINE		
LOCALISATION		

SCEAU PROFESSIONNEL

CONC.: KHV
DATE: 2017/04/25
DESSINÉ PAR: KVF
DATE: 2017/04/25
VÉR. PAR: -
DATE: -
APP.: -
DATE: -
ÉCHELLE: AUCUNE

CLIENT: AGNICO EAGLE

NUQSANA-PROMEC MINING

ultragen

CONSULTANT PROJECT NO. 591700

PROJET: AGNICO EAGLE - MELIADINE DIVISION
103 - COMBUSTIBLE

TITRE: RANKIN INLET
FABRICATION ISOMETRIC
MARINE LINE TO 65TNK11601 & 65TNK11602

No PROJET	No DESSIN	PAGES	REV.
6515	103-150-PDI-CC10-001	5/13	0

NO. DE CONDUITE		SPÉCIFICATION	PRODUIT	SYSTÈME REVÊTEMENT	CODE DE COULEUR	ISOLATION ET TRAÇAGE	ÉPAISS. D'ISOLATION		
103-150-PDI-CC10-001		CC10	PDI		-			65-103-270-200	PIPE SUPPORT DETAILS
PRESSION D'OPÉRATION	TEMPÉRATURE D'OPÉRATION	PRESSION DE CONCEPTION	TEMPÉRATURE DE CONCEPTION	PRESSION D'ESSAI	CLASSE D'INSPECTION	CODE DE SERVICE	TRAITEMENT THERMIQUE	65-103-205-200	P&ID
PSIG	°F	PSIG	°F	PSIG				No. DESSIN	DESSINS DE RÉFÉRENCE

103-MN-01

IMPRIMÉ LE: May 18, 2017, 11:57am

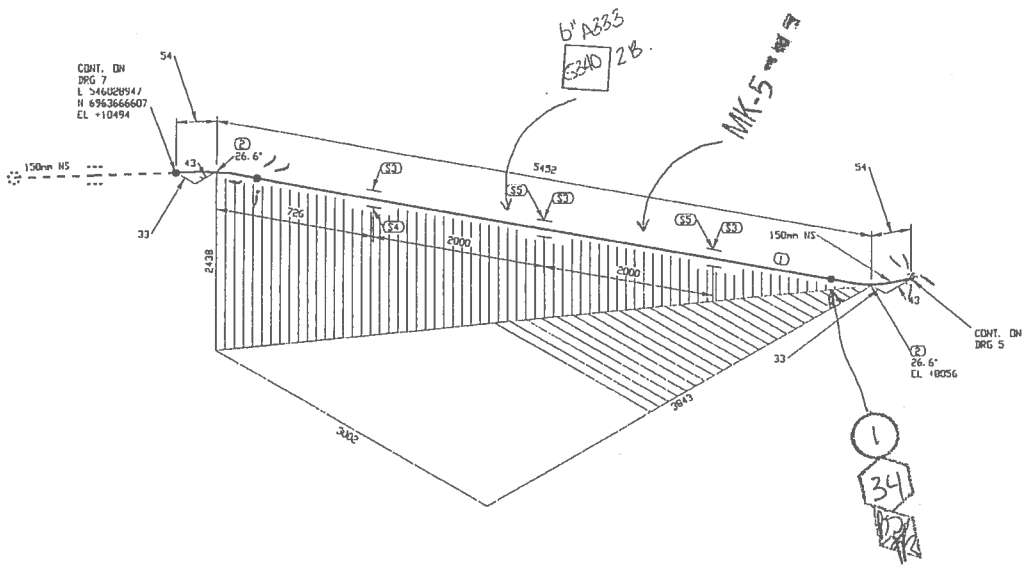

LISTE DE MATERIEL

No	QTE	DIA	MATERIEL/CATALOGUE	DESCRIPTION
1	5344 MM	150	A 333 Gr. 6	SCH STD, SMLS PIPE
2	6	150	A 420 Gr. WPLG	SCH STD, BW LR 45 DEG ELBOW TRIM TO PG 57
3	3	150		PIPE SUPPORT AS DETAIL 1, DWG 65-103-270-200
4	1	150		PIPE SHOE AS PER DETAIL 2, DWG 65-103-270-200
5	2	150		PIPE SHOE AS PER DETAIL 2, DWG 65-103-270-200

A-66 B-115

CONTRAT UF
2106

EN ATELIER LE
31 MAI 2017

No.	DATE	REVISION	PAR / APP.
0	2017/05/15	ISSUED FOR CONSTRUCTION	KHV

CLIENT: AGNICO EAGLE

NUQSANA-PROMEC MINING

ultragen

CONSULTANT PROJECT NO. 591700

TABLEAU DE CONCEPTION

NORME APPLICABLE	DNV
PRESSION DE CONCEPTION MANOMÉTRIQUE	N/A
TEMPÉRATURE MAX. DE CONCEPTION	10 à 50
VENT	10 à 50
FLUIDE	Diesel
FLUIDE SERVICE	Diesel

ESSAIS NON DESTRUCTIFS

RADIOGRAPHIE DE TYPE EXPOSITION UNIQUE	
RADIOGRAPHIE DE TYPE CIRCUIT À BRIDE	
MANUEL	5 à 25%
ESSAI HYDROSTATIQUE	
PNEU	N/A
NO USINE	
LOCALISATION	

UNIES-FAB

	C	N/C	N/A		C	N/C	N/A
MATÉRIEL	☑	☐	☐	MILL TEST	☐	☐	☐
VISUEL	☑	☐	☐	RAYON X	☐	☐	☐
DIMENSIONNEL	☑	☐	☐	POINÇON	☐	☐	☐
LOCALISATION	☑	☐	☐	EXTRÉMITÉ BOUCHE	☐	☐	☐
ORIENTATION	☑	☐	☐	NETTOYAGE	☐	☐	☐
IDENTIFICATION	☐	☐	☐	PEINTURE	☐	☐	☐

RESPONSABLE ATELIER: DATE 25/05/2017
INSPECTEUR QUALITÉ: DATE 29/04/17

FABRICATION DRAWINGS BASED ON WSP CERTIFIED ENGINEERING

SCEAU PROFESSIONNEL

CONC.: KHV	
DATE: 2017/04/25	
DESSINÉ PAR: KVE	
DATE: 2017/04/25	
VÉR. PAR: -	
DATE: -	
APP.: -	
DATE: -	
ÉCHELLE: AUCUNE	

PROJET: AGNICO EAGLE - MELIADINE DIVISION
103 - COMBUSTIBLE

TITRE: RANKIN INLET
FABRICATION ISOMETRIC
MARINE LINE TO 65TNK11601 & 65TNK11602

No PROJET	No DESSIN	PAGES	REV.
6515	103-150-PDI-CC10-001	6/13	0

NO. DE CONDUITE	SPECIFICATION	PRODUIT	SYSTEME REVETEMENT	CODE DE COULEUR	ISOLATION ET TRACAGE	EPAISS. D'ISOLATION		
103-150-PDI-CC10-001	CC10	PDI		-			65-103-270-200	PIPE SUPPORT DETAILS
PRESSION D'OPERATION / TEMPERATURE D'OPERATION	PRESSION DE CONCEPTION	TEMPERATURE DE CONCEPTION	PRESSION D'ESSAI	CLASSE D'INSPECTION	CODE DE SERVICE	TRAITEMENT THERMIQUE	65-103-205-200	P&ID
PSIG / T	PSIG	T	PSIG				No. DESSIN	DESSINS DE REFERENCE

FORMER: mJV

SAVED: May 17, 2017, 3:05pm

103-MN-01

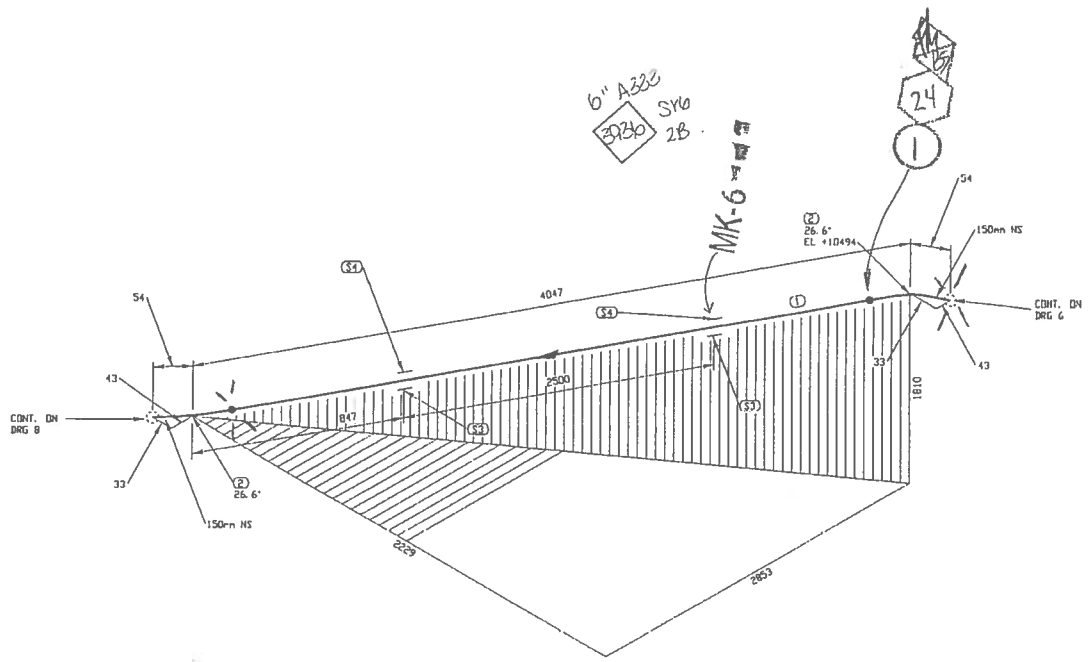

A = 66 B = 145

LISTE DE MATERIEL

No	QTE	DIA	MATERIEL/CATALOGUE	DESCRIPTION
1	3939 MM	150	A 333 Gr. 6	SCH STD, SMLS PIPE
2	2	150	A 420 Gr WPL6	SCH STD, BW LR 45 DEG ELBOW TRIM TO 26.57
3	2	150		PIPE SUPPORT AS PER DETAIL 1, DWG: 65-103-270-200
4	2	150		PIPE SHOE AS PER DETAIL 2, DWG: 65-103-270-200

CONTRAT UF
2106

EN ATELIER LE
31 MAI 2017
par:

No.	DATE	REVISION	PAR / APP.
0	2017/05/15	ISSUED FOR CONSTRUCTION	KHV

TABLEAU DE CONCEPTION

		SOUDEUR PAR RADIOGRAPHIE TYPIQUE
NOMBRE APPLICABLE	651.5	
PRESSION DE CONCEPTION (PSIG)	1440	
TEMPERATURE MAX DE CONCEPTION (°F)	650	
GRADE	X52	
FINITION	Drisco	
FACTEUR DE JOINT	1.0	
ESSAIS AVEC DESTRUCTIBLES		
ANALYSES DE PIPE ENCASTRE/MECHE		
SOUDURES DE PIPE ENCASTRE A BOUT	0622460-h	
AUTRES		
ESSAI HYDROSTATIQUE	N/A	
PLAN		
AUTRE		

UNIES-FAB

	C	N/C	N/A		E	N/E	N/E
MATÉRIEL	☐	☐	☐	MILL TEST	☐	☐	☐
VISUEL	☐	☐	☐	RAYON X	☐	☐	☐
DIMENSIONNEL	☐	☐	☐	POINÇON	☐	☐	☐
LOCALISATION	☐	☐	☐	EXTRÉMITÉ BOUCHE	☐	☐	☐
ORIENTATION	☐	☐	☐	NETTOYAGE	☐	☐	☐
IDENTIFICATION	☐	☐	☐	PEINTURE	☐	☐	☐

RESPONSABLE ATELIER Dricsa DATE 25/06/2017
INSPECTEUR QUALITÉ DATE 29/06/17

FABRICATION DRAWINGS BASED ON WSP CERTIFIED ENGINEERING

NO. DE CONDUITE		SPECIFICATION	PRODUIT	SYSTEME REVETEMENT	CODE DE COULEUR	ISOLATION ET TRACAGE	EPAISS. D'ISOLATION		
103-150-PDI-CC10-001		CC10	PDI		-			65-103-270-200	PIPE SUPPORT DETAILS
PRESSION D'OPERATION	TEMPERATURE D'OPERATION	PRESSION DE CONCEPTION	TEMPERATURE DE CONCEPTION	PRESSION D'ESSAI	CLASSE D'INSPECTION	CODE DE SERVICE	TRAITEMENT THERMIQUE	65-103-205-200	P&ID
PSIG	°F	PSIG	°F	PSIG				No. DESSIN	DESSINS DE REFERENCE

SCEAU PROFESSIONNEL

CONC.: KHV
DATE: 2017/04/25
DESSINÉ PAR: KVC
DATE: 2017/04/25
VER. PAR: -
DATE: -
APP.: -
DATE: -
ÉCHELLE: AUCUNE

CLIENT: AGNICO EAGLE

NUQSAHAVRONMIUT MINING

ultragen
CONSULTANT PROJECT NO. 591700

PROJET: AGNICO EAGLE - MELIADINE DIVISION
103 - COMBUSTIBLE

TITRE: RANKIN INLET
FABRICATION ISOMETRIC
MARINE LINE TO 65TNK11601 & 65TNK11602

No PROJET	No DESSIN	PAGES	REV.
6515	103-150-PDI-CC10-001	7/13	0

103-MN-01

IMPRIMÉ LE: May 17, 2017, 3:05pm

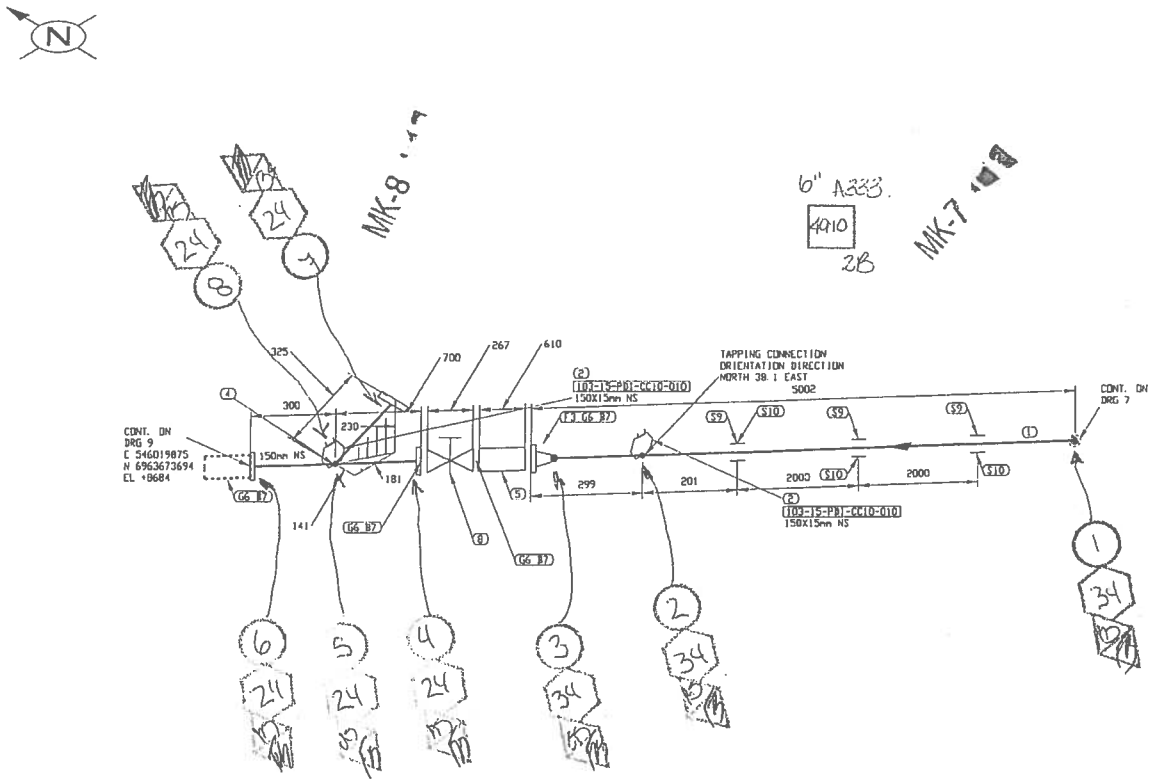

LISTE DE MATERIEL				
No	QTE	DIA	MATERIEL/CATALOGUE	DESCRIPTION
1	4914 MM	150	A 333 Gr. 6	SCH STD, SMLS PIPE
2	2	150X15	A 350 Gr. LF2	CL 3000, THREDOLET
3	1	150	A 350 Gr. LF2	CL 150, SCH STD, RF, WN FLANGE
4	1	150X150		CL 150, PIG CATCHER AS PER DETAIL 8, DWG: 65-103-270-200
5	1	150		CL 150, SINGLE BRAIDED HOSE ASSEMBLY
6	4	150	ASME B16.20	CL 150, GARLOCK 5500, RING TYPE GASKET 1/8" THK
7	32	19	A 193 B7/A 194 2H	CL 150, 8 - 19.05 X 100 STUD BOLTS c/w TWO HEAVY HEX NUTS
8	1	150	GA-10	CL 150, RF, CS, FULL PORT GATE VALVE
9	3	150		PIPE SUPPORT AS PER DETAIL 1, DWG: 65-103-270-200
10	3	150		PIPE SHOE AS PER DETAIL 2, DWG: 65 103 270 200

CONTRAT UF
2106

EN ATELIER LE
31 MAI 2017
par : BS

No.	DATE	REVISION	PAR / APP.
0	2017/05/15	ISSUED FOR CONSTRUCTION	KHV

CLIENT:

AGNICO EAGLE

NUQSANA PROMEC MINING

ultragen

CONSULTANT PROJECT NO. 591700

TABLEAU DE CONCEPTION	
NORME APPLICABLE	B31.3
PRESSION DE CONCEPTION MAX	N/A
TEMPERATURE MAX DE CONCEPTION	10.6 °F
MILIEU	0 PSIG
FLUIDE	Diesel
FLUIDE SERVICE	Diesel
ESSAIS NON DESTRUCTIFS	
SOUDURES DE TYPE ENGORGEMENT	
SOUDURES DE TYPE AVEC FOUT A SOUDER	3022166
AUTRES	
ESSAIS HYDROSTATIQUE	N/A
PIGAGE	
NO LIGNE	
LOCALISATION	

SOUDURE PAR EMBOITEMENT TYPIQUE

SOUDURE A BOUT A BOUT TYPIQUE

SOUDURE A BRISES TYPIQUE

SOUDURE A DOUBLE TYPIQUE

UNIES-FAB	C	N/C	N/A		C	N/C	N/A
MATÉRIEL	☑	☐	☐	MILL TEST	☑	☐	☐
VISUEL	☑	☐	☐	RAYON X	☑	☐	☐
DIMENSIONNEL	☑	☐	☐	POINÇON	☑	☐	☐
LOCALISATION	☑	☐	☐	EXTRÉMITÉ BOUCHE	☑	☐	☐
ORIENTATION	☑	☐	☐	NETTOYAGE	☐	☐	☐
IDENTIFICATION	☑	☐	☐	PEINTURE	☑	☐	☐

RESPONSABLE ATELIER Bruno Sal DATE 29/06/2017

INSPECTEUR QUALITÉ [signature] DATE 29/06/17

FABRICATION DRAWINGS BASED ON WSP CERTIFIED ENGINEERING

SCEAU PROFESSIONNEL

NO. DE CONDUITE		SPECIFICATION	PRODUIT	SYSTEME REVETEMENT	CODE DE COULEUR	ISOLATION ET TRACAGE	EPAISS. D'ISOLATION		
103-150-PDI-CC10-001		CC10	PDI		-			65-103-270-200	PIPE SUPPORT DETAILS
PRESSION D'OPERATION	TEMPERATURE D'OPERATION	PRESSION DE CONCEPTION	TEMPERATURE DE CONCEPTION	PRESSION D'ESSAI	CLASSE D'INSPECTION	CODE DE SERVICE	TRAITEMENT THERMIQUE	65-103-205-200	P&ID
		PSIG	°F	PSIG				No. DESSIN	DESSINS DE REFERENCE

CONC.: KHV
DATE: 2017/04/25
DESSINÉ PAR: KVE
DATE: 2017/04/25
VER. PAR: -
DATE: -
APP.: -
DATE: -
ECHELLE: AUCUNE

PROJET: AGNICO EAGLE - MELIADINE DIVISION
103 - COMBUSTIBLE

TITRE: RANKIN INLET
FABRICATION ISOMETRIC
MARINE LINE TO 65TNK11601 & 65TNK11602

No PROJET	No DESSIN	PAGES	REV.
6515	103-150-PDI-CC10-001	8/13	0

103-MN-01

SUPRIMÉ LE: May 17, 2017, 3:00pm

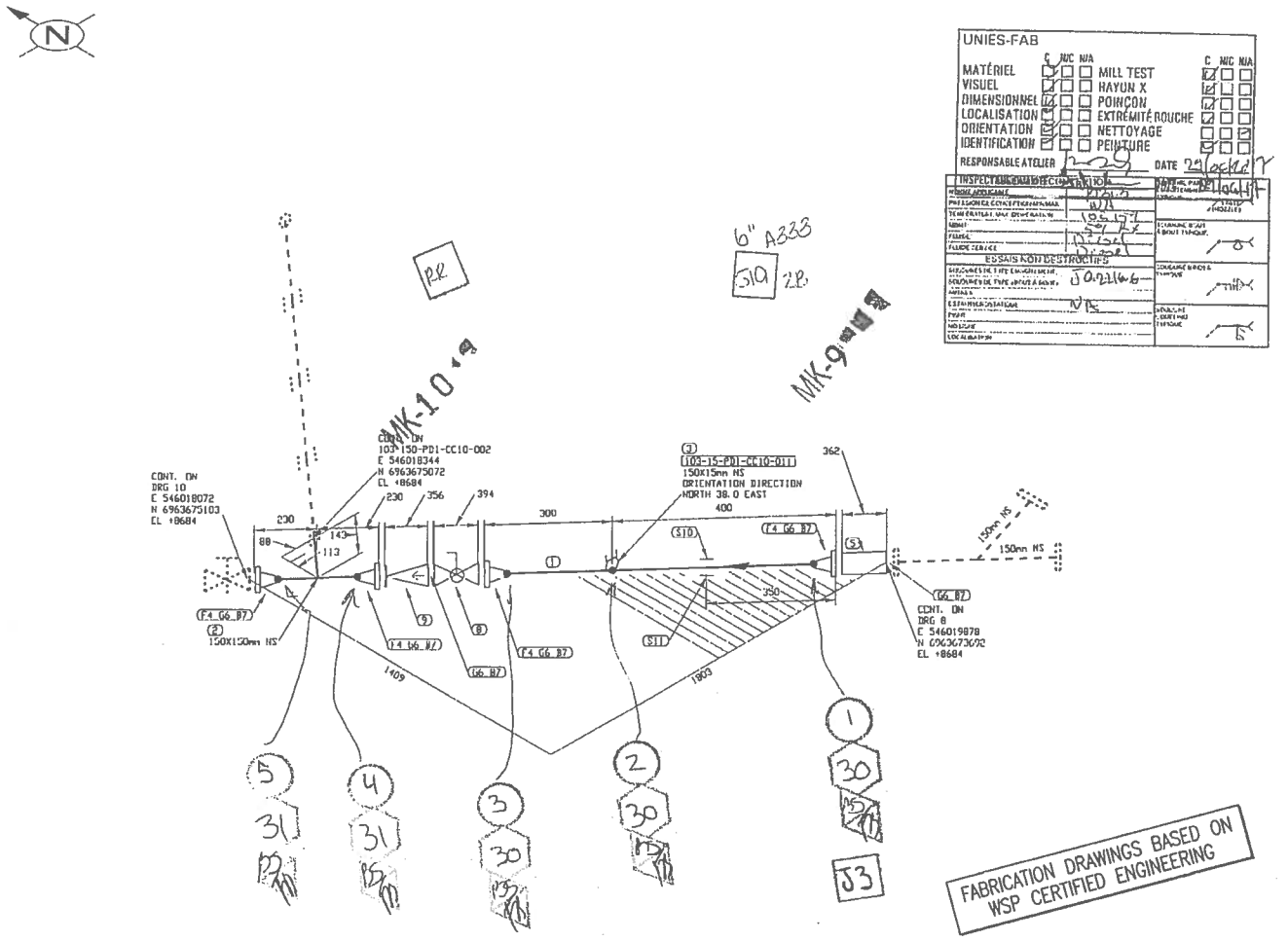

FABRICATION DRAWINGS BASED ON WSP CERTIFIED ENGINEERING

UNIES-FAB

	C	N/C	N/A		C	N/C	N/A
MATÉRIEL	☑	☐	☐	MILL TEST	☑	☐	☐
VISUEL	☑	☐	☐	HAYON X	☑	☐	☐
DIMENSIONNEL	☑	☐	☐	POINÇON	☑	☐	☐
LOCALISATION	☑	☐	☐	EXTRÉMITÉ BOUCHE	☑	☐	☐
ORIENTATION	☑	☐	☐	NETTOYAGE	☐	☐	☐
IDENTIFICATION	☑	☐	☐	PEINTURE	☑	☐	☐

RESPONSABLE ATELIER [signature] DATE 29/06/17

INSPECTION DIMENSIONNELLE

NOMBRE APPLICABLE	2/3/2		
PRESSION DE CONCEPTION/MAX	N/A		
TEMPÉRATURE DE CONCEPTION	195.17		
MINUT	50		
FLUIDE	Diesel		
FLUIDE SERVICE	Diesel		

ESSAIS NON DESTRUCTIFS

SOUDURES DE TYPE ENVIRONNEMENT			
SOUDURES DE TYPE AMORCE & BOUT	J0.2216.6		
AMPAGE			
ESTAMPAGE/DATATIONS	N/A		
PIVOT			
NOISIGNE			
LOCALISATION			

MATÉRIEL PAR	29/06/17
DATE	
SCANNING BOUT & BOUT TYPIQUE	
SOUDURE BOUT & TYPIQUE	
SOUDURE COUPE TYPIQUE	

LISTE DE MATERIEL

No	QTE	DIA	MATERIEL/CATALOGUE	DESCRIPTION
1	525 MM	150	A 333 Gr. 6	SCH STD, SMLS PIPE
2	1	150X150	A 420 Gr. WPL6	SCH STD, DW STRAIGHT TEE
3	1	150X15	A 350 Gr. LF2	CL 3000, THREDOLET
4	4	150	A 350 Gr. LF2	CL 150, SCH STD, RF, WN FLANGE
5	1	150		CL 150, IFLOW INDICATOR "VISI-FLO"
6	6	150	ASHL B16.20	CL 150, GARLOCK 5500, RING TYPE GASKET 1/8" THK
7	48	19	A 193 B7/A 194 2H	CL 150, 8 - 19.05 X 100 STUD BOLTS c/w TWO HEAVY HEX NUTS
8	1	150	BA-31	CL 150, RF, BALL VALVE
9	1	150	CK-29	CL 150, RF, SWING CHECK VALVE
10	1	150		PIPE SUPPORT AS PER DETAIL 1, DWG: 65-103-270-200
11	1	150		PIPE SHOE AS PER DETAIL 2, DWG: 65-103-270-200

CONTRAT UF
2106

EN ATELIER LE
31 MAI 2017
par : [signature]

No.	DATE	REVISION	PAR / APP.
0	2017/05/15	ISSUED FOR CONSTRUCTION	KHV

CLIENT:

AGNICO EAGLE

NUQSANA PROMEC MINING

ultragen

CONSULTANT PROJECT NO. 591700

SCEAU PROFESSIONNEL

CONC.: KHV
DATE: 2017/04/25
DESSINÉ PAR: KVE
DATE: 2017/04/25
VER. PAR: -
DATE: -
APP.: -
DATE: -
ÉCHELLE: AUCUNE

PROJET: AGNICO EAGLE - MELIADINE DIVISION
103 - COMBUSTIBLE

TITRE: RANKIN INLET
FABRICATION ISOMETRIC
MARINE LINE TO 65TNK11601 & 65TNK11602

No PROJET	No DESSIN	PAGES	REV.
6515	103-150-PDI-CC10-001	9/13	0

NO. DE CONDUITE		SPECIFICATION	PRODUIT	SYSTEME REVETEMENT	CODE DE COULEUR	ISOLATION ET TRACAGE	EPAISS. D'ISOLATION		
103-150-PDI-CC10-001		CC10	PDI		-			65-103-270-200	PIPE SUPPORT DETAILS
PRESSION D'OPERATION	TEMPERATURE D'OPERATION	PRESSION DE CONCEPTION	TEMPERATURE DE CONCEPTION	PRESSION D'ESSAI	CLASSE D'INSPECTION	CODE DE SERVICE	TRAITEMENT THERMIQUE	65-103-205-200	P&ID
PSIG	°F	PSIG	°F	PSIG				No. DESSIN	DESSINS DE REFERENCE

103-MN-01

IMPRIMÉ LE: May 17, 2017, 3:06pm

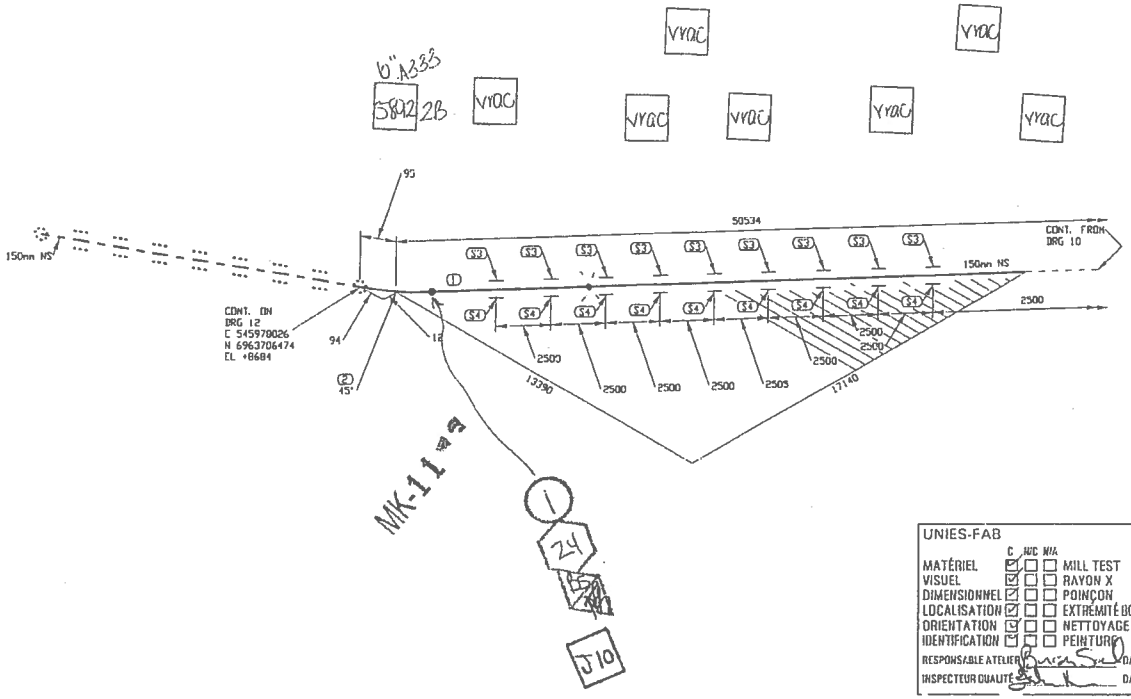

UNIES-FAB

	C	N/C	N/A		C	N/C	N/A
MATÉRIEL	☑	☐	☐	MILL TEST	☑	☐	☐
VISUEL	☑	☐	☐	RAYON X	☐	☐	☐
DIMENSIONNEL	☑	☐	☐	POINÇON	☑	☐	☐
LOCALISATION	☑	☐	☐	EXTRÉMITÉ BOUCHE	☑	☐	☐
ORIENTATION	☑	☐	☐	NETTOYAGE	☑	☐	☐
IDENTIFICATION	☑	☐	☐	PEINTURE	☑	☐	☐

RESPONSABLE ATELIER: DATE 29/06/2017

INSPECTEUR QUALITÉ: DATE 29/06/17

TABLEAU DE CONCEPTION

NORME APPLICABLE:	B31.3
PRESSION DE CONCEPTION MAX:	N/A
TEMPERATURE MAX DE CONCEPTION:	106°F
SOUD:	85%
PLUS:	N/A
PLUS DE CORROSION:	0.254

ESSAIS NON DESTRUCTIFS

SOUDURES DE TYPE ENQUÊTE MAG:	30/216.6
SOUDURES DE TYPE « BOUT À BOUT »:	
AUTRES:	
ESSAI HYDROSTATIQUE:	N/A
PMHS:	
NOTCHE:	
LOCALISATION:	

FABRICATION DRAWINGS BASED ON WSP CERTIFIED ENGINEERING

LISTE DE MATERIEL

No	QTE	DIA	MATERIEL/CATALOGUE	DESCRIPTION
1	21655 MM	150	A 333 Gr. 6	SCH STD, SMLS PIPE
2	1	150	A 420 Gr. WPL6	SCH STD, BW LR 45 DEG ELBOW
3	9	150		PIPE SUPPORT AS PER DETAIL 1, DWG 65-103-270-200
4	9	150		PIPE SHOE AS PER DETAIL 2, DWG 65-103-270-200

CONTRAT UF 2106

EN ATELIER LE 31 MAI 2017 par: _____

4 longueurs vrac.

No.	DATE	REVISION	PAR / APP.
0	2017/05/15	ISSUED FOR CONSTRUCTION	KHV

CLIENT: AGNICO EAGLE

NUQSANA-PROMEC MINING

ultragen

CONSULTANT PROJECT NO. 591700

SCEAU PROFESSIONNEL

CONC.: KHV	
DATE: 2017/04/25	
DESSINÉ PAR: KVE	
DATE: 2017/04/25	
VÉR. PAR: -	
DATE: -	
APP.: -	
DATE: -	
ÉCHELLE: AUCUNE	

PROJET: AGNICO EAGLE - MELIADINE DIVISION
103 - COMBUSTIBLE

TITRE: RANKIN INLET
FABRICATION ISOMETRIC
MARINE LINE TU 65INK11601 & 65TNK11602

No PROJET	No DESSIN	PAGES	REV.
6515	103-150-PDI-CC10-001	11/13	0

NO. DE CONDUITE	SPECIFICATION	PRODUIT	SYSTÈME REVÊTEMENT	CODE DE COULEUR	ISOLATION ET TRAÇAGE	ÉPAISS. D'ISOLATION		
103-150-PDI-CC10-001	CC10	PDI		-			65 103 270 200	PIPE SUPPORT DETAILS
PRESSION D'OPÉRATION / TEMPÉRATURE D'OPÉRATION	PRESSION DE CONCEPTION / TEMPÉRATURE DE CONCEPTION	PRESSION D'ESSAI	CLASSE D'INSPECTION	CODE DE SERVICE	TRAITEMENT THERMIQUE	65-103-205-200	P&ID	
PSIG / °F	PSIG / °F	PSIG				No. DESSIN	DESSINS DE RÉFÉRENCE	

103-WM-001

APPROVED: May 17, 2017, 3:12pm

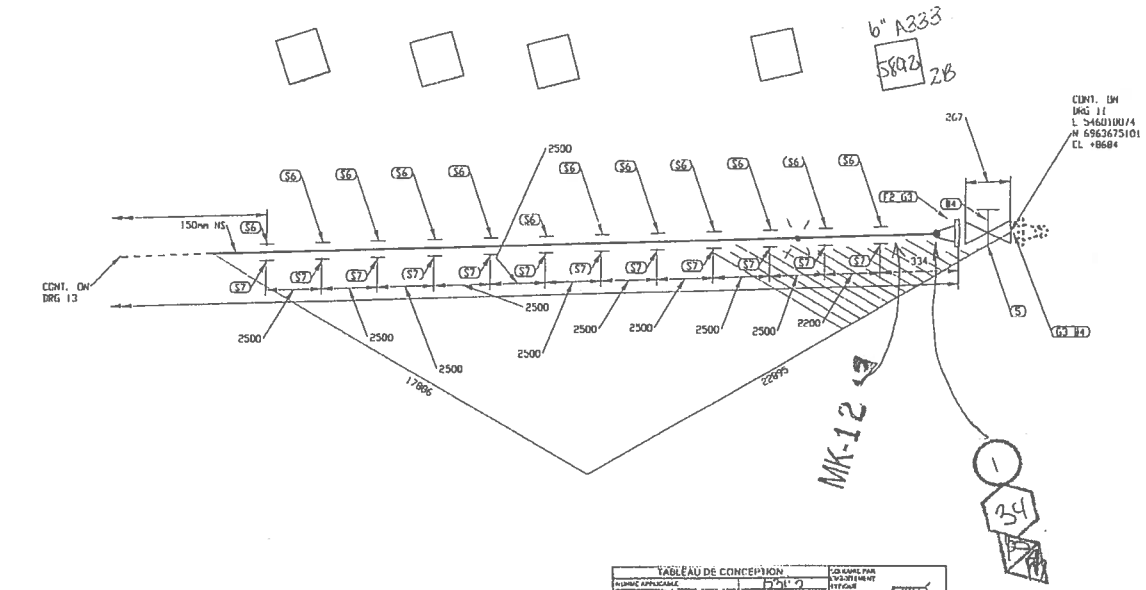

LISTE DE MATERIEL

No	QTY	DIA	MATERIEL / CATALOGUE	DESCRIPTION
1	28696 MM	150	A 333 Gr. 6	SCH STD, SMLS PIPE
2	1	150	A 350 Gr. LF2	CL 150, SCH STD, RF, WN FLANGE
3	2	150	ASME B16.20	CL 150, GARLOCK 9500, RING TYPE GASKET 1/8" THK
4	16	19	A 193 B7/A 194 2H	CL 150, B - 19.05 X 100 STUD BOLTS c/w TWO HEAVY HEX NUTS
5	1	150	GA-10	CL 150, RF, CS, GATE VALVE
6	12	150		PIPE SUPPORT AS PER DETAIL 1, DWG 65-103-270-200
7	12	150		PIPE SHOE AS PER DETAIL 2, DWG 65-103-270-200

CONTRAT UF
2106

EN ATELIER LE
3 1 MAI 2017
par : _____

TABLEAU DE CONCEPTION	
NORME APPLICABLE	B31.3
PRESSION DE CONCEPTION (PSIG)	616
TEMPERATURE DE CONCEPTION (°F)	104/59
MEDIA	Air/Gas
FLUIDE	Air/Gas
PLAGE DE TEMPERATURE	Diesel
ESSAIS NON DESTRUCTIFS	
GAZ / VAPEUR / TYPE D'EMISSION	
ECOULEMENT / TYPE / VITESSE / DENSITE	3000 lb/hr
AUTRE	
ESSAI HYDROSTATIQUE	N/A
PEINTURE	
ISOLATION	
LOCALISATION	

FABRICATION DRAWINGS BASED ON WSP CERTIFIED ENGINEERING

UNIES-FAB

	C	N/C	N/A		C	N/C	N/A
MATÉRIEL	☑	☐	☐	MILL TEST	☑	☐	☐
VISUEL	☑	☐	☐	RAYON X	☐	☐	☐
DIMENSIONNEL	☑	☐	☐	POINÇON	☐	☐	☐
LOCALISATION	☑	☐	☐	EXTRÉMITÉ OUVERTE	☐	☐	☐
ORIENTATION	☑	☐	☐	NETTOYAGE	☐	☐	☐
IDENTIFICATION	☑	☐	☐	PEINTURE	☐	☐	☐

RESPONSABLE ATELIER: DATE 25 Sep 2017
INSPECTEUR QUALITÉ: DATE 28 Nov 17

No.	DATE	REVISION	PAR	APP.
0	2017/05/15	ISSUED FOR CONSTRUCTION	KHV	

CLIENT: AGNICO EAGLE

NUQSANA PROMEC MINING

ultragen

CONSULTANT PROJECT NO. 591700

SCEAU PROFESSIONNEL

CONC.: KHV
DATE: 2017/04/25
DESSINE PAR: KVE
DATE: 2017/04/25
VER. PAR: -
DATE: -
APP.: -
DATE: -
ÉCHELLE: AUCUNE

PROJET: AGNICO EAGLE - MEADOWBANK DIVISION
103 - COMBUSTIBLE

TITRE: RANKIN INLET
FABRICATION ISOMETRIC
MARINE LINE TO 65TNK11601 & 65TNK11602

No PROJET	No DESSIN	PAGES	REV.
6515	103-150-PDI-CC10-001	12/13	0

NO. DE CONDUITE	SPECIFICATION	PRODUIT	SYSTEME REVETEMENT	CODE DE COULEUR	ISOLATION ET TRACAGE	EPAISS. D'ISOLATION		
103-150-PDI-CC10-001	CC10	PDI		-			65-103-270-200	PIPE SUPPORT DETAILS
PRESSION D'OPERATION / TEMPERATURE D'OPERATION	PRESSION DE CONCEPTION	TEMPERATURE DE CONCEPTION	PRESSION D'ESSAI	CLASSE D'INSPECTION	CODE DE SERVICE	TRAITEMENT THERMIQUE	65-103-205-200	P&ID
PSIG / °F	PSIG	°F	PSIG				No. DESSIN	DESSINS DE REFERENCE

103-MM-01

J:\Vidéon\591700 (Fwd Distributor)\05. Dessin\02. Isométriques\01. Rankin Inlet\103-150-PDI-CC10-001-12.DWG
FICHIER: M-V
IMPRIMÉ LE: May 17, 2017, 3:14pm

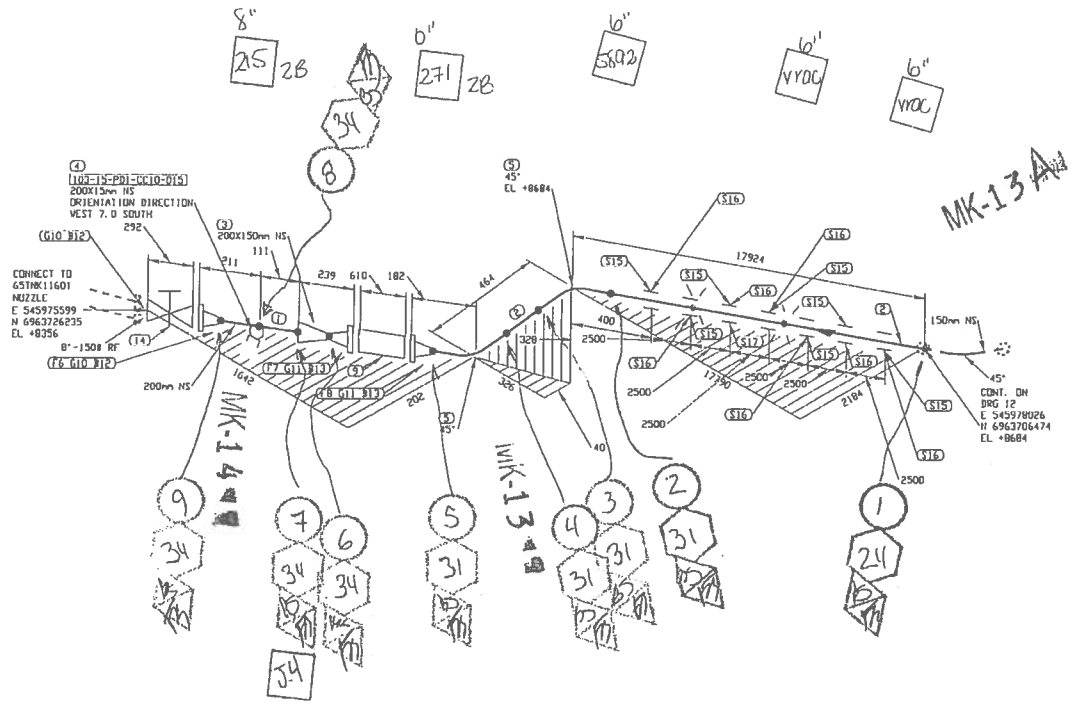

LISTE DE MATERIEL

No	QTE	DIA	MATERIEL/CATALOGUE	DESCRIPTION
1	222 MM	200	A 333 Gr. 6	SCH STD, SMLS PIPE
2	18103 MM	150	A 333 Gr. 6	SCH STD, SMLS PIPE
3	1	200X150	A 420 Gr. WPL6	SCH STD, BW CONC RED
4	1	200X15	A 350 Gr. LF2	CL 3000, THREDOLET
5	2	150	A 420 Gr. WPL6	SCH STD, BW LR 45 DEG ELBOW
6	1	200	A 350 Gr. LF2	CL 150, SCH STD, RF, WN FLANGE
7	1	150	A 350 Gr. LF2	CL 150, SCH STD, RF, WN FLANGE
8	1	150	A 350 Gr. LF2	CL 150, SCH STD, RF, WN FLANGE
9	1	150		CL 150, SINGLE BRAIDED HOSE ASSEMBLY
10	2	200	ASME B16.20	CL 150, GARLOCK 5500, RING TYPE GASKET 1/8" THK
11	2	150	ASME B16.20	CL 150, GARLOCK 5500, RING TYPE GASKET 1/8" THK
12	16	19	A 193 B7/A 194 2H	CL 150, 8 - 19.05 X 110 STUD BOLTS c/w TWO HEAVY HEX NUTS
13	16	19	A 193 B7/A 194 2H	CL 150, 8 - 19.05 X 100 STUD BOLTS c/w TWO HEAVY HEX NUTS
14	1	200	GA-10	CL 150, RF, CS, FULL PORT GATE VALVE
15	7	150		PIPE SUPPORT AS PER DETAIL 1, DWG: 65-103-270-200
16	7	150		PIPE SHOE AS PER DETAIL 2, DWG: 65-103-270-200
17	1	150		PIPE SHOE AS PER DETAIL 2, DWG: 65-103-270-200

CONTRAT UF
2106

EN ATELIER LE
3 1 MAI 2017
par :

No.	DATE	REVISION	PAR / APP.
0	2017/05/15	ISSUED FOR CONSTRUCTION	KHV

UNIES-FAB

	C	N/C	N/A		C	N/C	N/A
MATÉRIEL	☑	☐	☐	MILL TEST	☐	☐	☑
VISUEL	☑	☐	☐	RAYON X	☐	☐	☑
DIMENSIONNEL	☑	☐	☐	POINÇON	☐	☐	☑
LOCALISATION	☑	☐	☐	EXTRÉMITÉ BOUCHE	☑	☐	☐
ORIENTATION	☑	☐	☐	NETTOYAGE	☐	☐	☑
IDENTIFICATION	☑	☐	☐	PEINTURE	☐	☐	☑

RESPONSABLE ATELIER — DATE 25/04/2017
INSPECTEUR QUALITÉ — DATE 26/04/17

TABLEAU DE CONCEPTION

NORME APPLICABLE	B31.3 2015
PRESSION DE CONCEPTION/TEMPÉRATURE	150 PSIG @ 150°F
TEMPÉRATURE MAX DE PAROI	150°F
GRADE	A106 GR B
FEMELLE	N/A
PLAQUE DE BASE	N/A
ESSAIS NON DESTRUCTIFS	
SOUDURES DE TYPE EMBOÎTEMENT	0%
SOUDURES DE TYPE BOUT À BOUT	10%
AUTRES	
ÉCLAIRCISSEMENT	0%
PWHT	N/A
HOUSSE	
NO. ISOMÉTRIQUE	

FABRICATION DRAWINGS BASED ON WSP CERTIFIED ENGINEERING

SCEAU PROFESSIONNEL

CLIENT: AGNICO EAGLE

NUQSAUNA PROMEC MINING

ultragen

CONSULTANT PROJECT NO. 591700

CONC.: KHV	
DATE: 2017/04/25	
DESSINÉ PAR: KVE	
DATE: 2017/04/25	
VER. PAR: -	
DATE: -	
APP.: -	
DATE: -	
ÉCHELLE: AUCUNE	

PROJET: AGNICO EAGLE - MELIADINE DIVISION
103 - COMBUSTIBLE

TITRE: RANKIN INLET
FABRICATION ISOMETRIC
MARINE LINE TO 65TNK11601 & 65TNK11602

No PROJET	No DESSIN	PAGES	REV.
6515	103-150-PDI-CC10-001	13/13	0

NO. DE CONDUITE	SPECIFICATION	PRODUIT	SYSTÈME REVÊTEMENT	CODE DE COULEUR	ISOLATION ET TRAÇAGE	ÉPAISS. D'ISOLATION		
103-150-PDI-CC10-001	CC10	PDI		-			65-103-270-200	PIPE SUPPORT DETAILS
PRESSION D'OPÉRATION / TEMPÉRATURE D'OPÉRATION	PRESSION DE CONCEPTION	TEMPÉRATURE DE CONCEPTION	PRESSION D'ESSAI	CLASSE D'INSPECTION	CODE DE SERVICE	TRAITEMENT THERMIQUE	65-103-205-200	P&ID
PSIG / °F	PSIG	°F	PSIG				No. DESSIN	DESSINS DE RÉFÉRENCE

103-MM-01

PLOTTED: May 17, 2017, 3:15pm

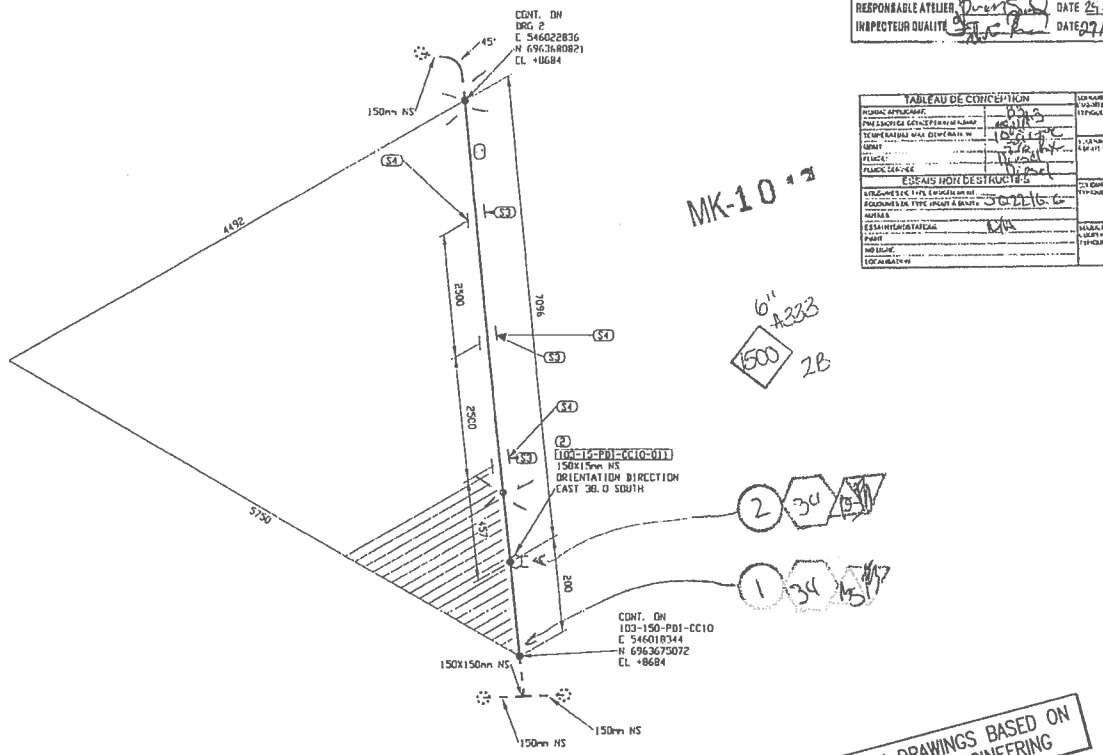

FABRICATION DRAWINGS BASED ON WSP CERTIFIED ENGINEERING

UNIES-FAB

	C	NIC	N/A		C	NIC	N/A
MATÉRIEL	☑	☐	☐	MILL TEST	☑	☐	☐
VISUEL	☑	☐	☐	RAYON X	☐	☐	☐
DIMENSIONNEL	☑	☐	☐	POINÇON	☑	☐	☐
LOCALISATION	☑	☐	☐	EXTRÉMITÉ DOUCHE	☑	☐	☐
ORIENTATION	☐	☐	☐	NETTOYAGE	☐	☐	☐
IDENTIFICATION	☑	☐	☐	PEINTURE	☑	☐	☐

RESPONSABLE ATELIER: DATE 25/04/2017
INSPECTEUR QUALITÉ: DATE 27/04/17

TABLEAU DE CONCEPTION

NUMÉRO APPLICABLE	03	
PRESSION DE CONCEPTION (PSIG)	1440 PSIG	
TEMPÉRATURE MAX. DE CONCEPTION (°F)	150°F	
ÉPAISSEUR	SCH 80	
FLUIDE	NATURAL GAS	
FLUIDE CORROSIF	DI Diesel	
ESSAIS NON DESTRUCTIFS		
RADIOGRAPHIE (TYPE ENREGISTRÉ)		
RADIOGRAPHIE (TYPE IMAGE À BANDE)	502216.6	
AUTRES		
ESSAI HYDROSTATIQUE	KHV	
PEINT		
NDT LIGNE		
LOCALISATION		

LISTE DE MATERIEL

No	QTÉ	DIA	MATÉRIEL/CATALOGUE	DESCRIPTION
1	7496 MM	150	A 333 Gr. 6	SCH 80, SMLS PIPE
2	1	150X15	A 350 Gr. LF2	CL 3000, THREDOLET
3	3	150		PIPE SUPPORT AS PER DETAIL 1, DWG 65-103-270-200
4	3	150		PIPE SHOE AS PER DETAIL 2, DWG 65-103-270-200

CONTRAT UF
2106

EN ATELIER LE
31 MAI 2017
CONT:

No.	DATE	REVISION	PAR / APP
0	2017/05/15	ISSUED FOR CONSTRUCTION	KHV

CLIENT: AGNICO EAGLE

NUQSANA PROMEC MINING

ultragen
CONSULTANT PROJECT NO. 591700

SCEAU PROFESSIONNEL

CONC.: KHV
DATE: 2017/04/23
DESSINÉ PAR: KVE
DATE: 2017/04/23
VÉR. PAR: -
DATE: -
APP.: -
DATE: -
ÉCHELLE: AUCUNE

PROJET: AGNICO EAGLE - MEL IADINE DIVISION
103 - COMBUSTIBLE

TITRE: RANKIN INLET
FABRICATION ISOMETRIC
MARINE LINE TO 65TNK11602

No PROJET	No DESSIN	PAGES	REV.
6515	103-150-PDI-CC10-002	1/3	0

NO. DE CONDUITE		SPÉCIFICATION	PRODUIT	SYSTÈME REVÊTEMENT	CODE DE COULEUR	ISOLATION ET TRAÇAGE	ÉPAISS. D'ISOLATION		
103-150-PDI-CC10-002		CC10	PDI		-			65-103-270-200	PIPE SUPPORT DETAILS
PRESSION D'OPÉRATION	TEMPÉRATURE D'OPÉRATION	PRESSION DE CONCEPTION	TEMPÉRATURE DE CONCEPTION	PRESSION D'ESSAI	CLASSE D'INSPECTION	CODE DE SERVICE	TRAITEMENT THERMIQUE	65-103-205-200	P&ID
		PSIG	°F	PSIG				No. DESSIN	DESSINS DE RÉFÉRENCE

103-MN-0.

P:\Vitrallen\251700 (Tool Distribution)\05. Dessins\02. Tuyauterie\02. Isométriques\01. Rankin Inlet\103-150-PDI-CC10-002-1.DWG

IMPRIMÉ LE: May 17, 2017, 3:15pm

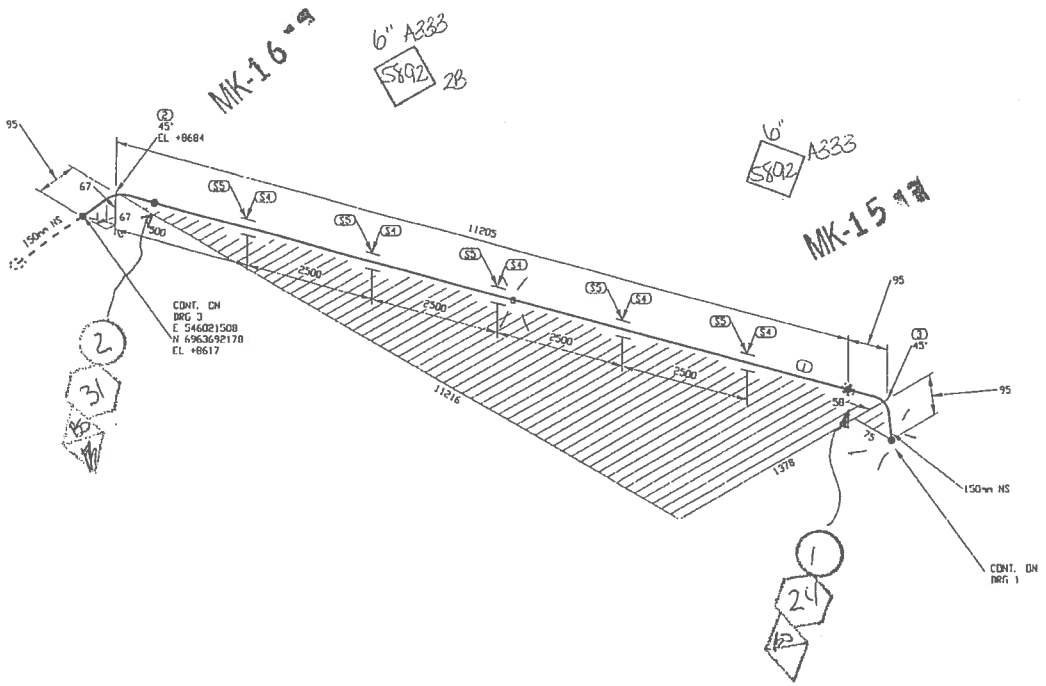

LISTE DE MATERIEL

No	QTE	DIA	MATERIEL/CATALOGUE	DESCRIPTION
1	11110 MM	150	A 333 Gr. 6	SCH STD, SMLS PIPE
2	1	150	A 420 Gr. WPL6	SCH STD, BW LR 45 DEG ELBOW
3	1	150	A 420 Gr. WPL6	SCH STD, BW LR 90 DEG ELBOW TRIM TO 45.00
4	5	150		PIPE SUPPORT AS PER DETAIL 1, DWG: 65-103-270-200
5	5	150		PIPE SHOE AS PER DETAIL 2, DWG: 65-103-270-200

CONTRAT UF
2106

EN ATELIER LE
31 MAI 2017
par: BS

No.	DATE	REVISION	PAR / APP.
0	2017/05/15	ISSUED FOR CONSTRUCTION	KHV

TABLEAU DE CONCEPTION

	D3.1.5	
	16.2.17	
	D3.2.2	
	D3.2.2	
	J-G-2.16.6	
	N/A	

UNIES-FAB

	C	N/C	N/A		C	N/C	N/A
MATÉRIEL	☑	☐	☐	MILL TEST	☐	☐	☑
VISUEL	☑	☐	☐	RAYON X	☐	☐	☑
DIMENSIONNEL	☑	☐	☐	POINÇON	☐	☐	☑
LOCALISATION	☑	☐	☐	EXTRÉMITÉ BOUCHE	☐	☐	☑
ORIENTATION	☑	☐	☐	NETTOYAGE	☐	☐	☑
IDENTIFICATION	☑	☐	☐	PEINTURE	☐	☐	☑

RESPONSABLE ATELIER: DATE 25/05/17
INSPECTEUR QUALITÉ: DATE 29/05/17

FABRICATION DRAWINGS BASED ON WSP CERTIFIED ENGINEERING

CLIENT:
AGNICO EAGLE

NUQSAAN-PROMEC MINING
ultragen
CONSULTANT PROJECT NO. 591700

SCEAU PROFESSIONNEL

CONC.: KHV
DATE: 2017/04/25
DESSINÉ PAR: KVE
DATE: 2017/04/25
VER. PAR: -
DATE: -
APP.: -
DATE: -
ÉCHELLE: AUCUNE

PROJET: AGNICO EAGLE - MEADOWBANK DIVISION
103 - COMBUSTIBLE

TITRE: RANKIN INLET
FABRICATION ISOMETRIC
MARINE LINE TO 65TNK11602

No PROJET	No DESSIN	PAGES	REV.
6515	103-150-PDI-CC10-002	2/3	0

NO. DE CONDUITE		SPÉCIFICATION	PRODUIT	SYSTÈME REVÊTEMENT	CODE DE COULEUR	ISOLATION ET TRAÇAGE	ÉPAISS. D'ISOLATION		
103-150-PDI-CC10-002		CC10	PDI		-			65-103-270-200	PIPE SUPPORT DETAILS
PRESSION D'OPÉRATION	TEMPÉRATURE D'OPÉRATION	PRESSION DE CONCEPTION	TEMPÉRATURE DE CONCEPTION	PRESSION D'ESSAI	CLASSE D'INSPECTION	CODE DE SERVICE	TRAITEMENT THERMIQUE	65-103-205-200	P&ID
PSIG	°F	PSIG	°F	PSIG				No. DESSIN	DESSINS DE RÉFÉRENCE

103-MN-01

IMPRIMÉ LE: May 17, 2017, 3:18pm

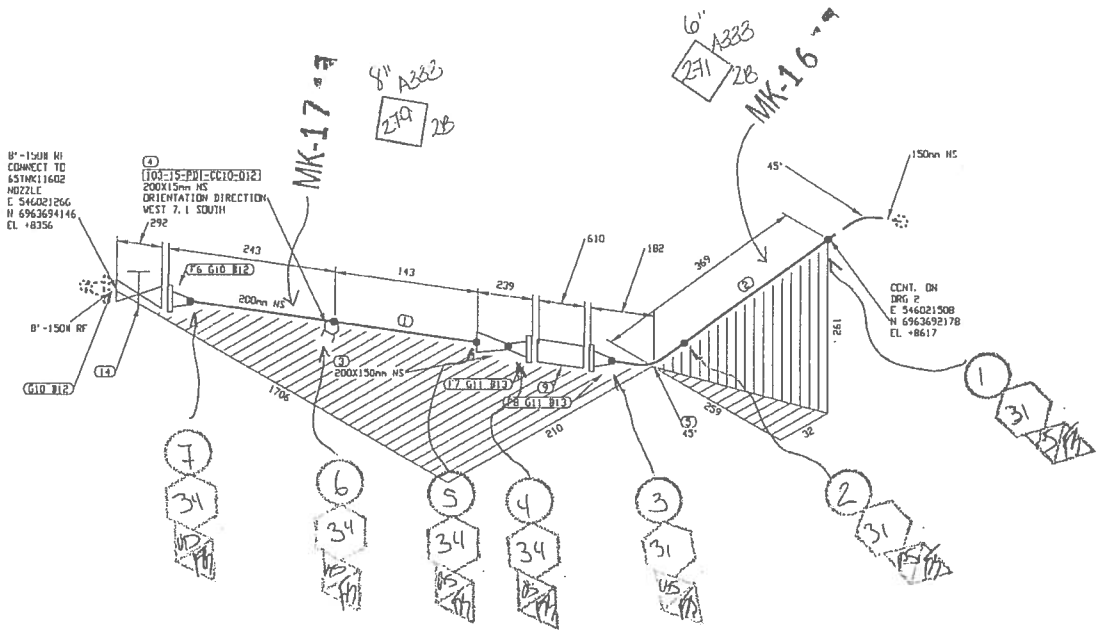

LISTE DE MATERIEL

No	QTE	DIA	MATERIEL/CATALOGUE	DESCRIPTION
1	286 MM	200	A 333 Gr. 6	SCH STD, SMLS PIPE
2	274 MM	150	A 333 Gr. 6	SCH STD, SMLS PIPE
3	1	200X150	A 420 Gr. WPL6	SCH STD, BW CONC RED
4	1	200X15	A 350 Gr. LF2	CL 3000, THREDOLET
5	1	150	A 420 Gr. WPL6	SCH STD, BW LR 45 DEG ELBOW
6	1	200	A 350 Gr. LF2	CL 150, SCH STD, RF, WN FLANGE
7	1	150	A 350 Gr. LF2	CL 150, SCH STD, RF, WN FLANGE
8	1	150	A 350 Gr. LF2	CL 150, SCH STD, RF, WN FLANGE
9	1	150		CL 150, SINGLE BRAIDED HOSE ASSEMBLY
10	2	200	ASME B16.20	CL 150, GARLOCK 5500, RING TYPE GASKET 1/8" THK
11	2	150	ASME B16.20	CL 150, GARLOCK 5500, RING TYPE GASKET 1/8" THK
12	16	19	A 193 B7/A 194 2H	CL 150, 8 - 19.05 X 110 STUD BOLTS c/w TWO HEAVY HEX NUTS
13	16	19	A 193 B7/A 194 2H	CL 150, 8 - 19.05 X 100 STUD BOLTS c/w TWO HEAVY HEX NUTS
14	1	200	GA-10	CL 150, RF, GATE VALVE

CONTRAT UF
2106

EN ATELIER LE
31 MAI 2017
par: BS

UNIES-FAB

	C	N/C	N/A		C	N/C	N/A
MATÉRIEL	☑	☐	☐	MILL TEST	☐	☐	☐
VISUEL	☑	☐	☐	RAYON X	☐	☐	☐
DIMENSIONNEL	☑	☐	☐	POINÇON	☐	☐	☐
LOCALISATION	☑	☐	☐	EXTRÉMITÉ BOUCHE	☐	☐	☐
ORIENTATION	☑	☐	☐	NETTOYAGE	☐	☐	☐
IDENTIFICATION	☑	☐	☐	PEINTURE	☐	☐	☐

RESPONSABLE ATELIER: DATE 25-04-2017
INSPECTEUR QUALITÉ: DATE 25/04/17

TABLEAU DE CONCEPTION

NORME APPLICABLE	B31.3
PRESSION & TEMPÉRATURE DE CONCEPTION	N/A
TEMPÉRATURE MAX. D'OPÉRATION	60 à 65°F
MEDIA	796 KG
VITESSE	VIDE 0
FRÉQUENCE	VIDE 0

DESSIN D'INSTRUCTIONS

SUPPORTS DE TYPE ENGLOBANT	5922166
SUPPORTS DE TYPE GUIDE / BUTÉE	
ANCRES	
ÉTAIS/ENCASTRAGE	N/A
PENTE	
NOTE(S)	
VOIR AUSSI	

FABRICATION DRAWINGS BASED ON WSP CERTIFIED ENGINEERING

No.	DATE	REVISION	PAR	APP.
0	2017/05/15	ISSUED FOR CONSTRUCTION	KHV	

CLIENT: AGNICO EAGLE

NUQSAHAK'PROMEC MINING

ultragen
CONSULTANT PROJECT NO. 591700

SCEAU PROFESSIONNEL

CONC.: KHV
DATE: 2017/04/25
DESSINÉ PAR: KVE
DATE: 2017/04/25
VER. PAR: -
DATE: -
APP.: -
DATE: -
ÉCHELLE: AUCUNE

PROJET: AGNICO EAGLE - MELIADINE DIVISION
103 - COMBUSTIBLE

TITRE: RANKIN INLET
FABRICATION ISOMETRIC
MARINE LINE TO 65TNK11602

No PROJET	No DESSIN	PAGES	REV.
6515	103-150-PDI-CC10-002	3/3	0

NO. DE CONDUITE	SPECIFICATION	PRODUIT	SYSTEME REVETEMENT	CODE DE COULEUR	ISOLATION ET TRACAGE	EPAISS. D'ISOLATION		
103-150-PDI-CC10-002	CC10	PDI		-			65-103-270-200	PIPE SUPPORT DETAILS
PRESSION D'OPERATION / TEMPERATURE D'OPERATION	PRESSION DE CONCEPTION / TEMPERATURE DE CONCEPTION	PRESSION D'ESSAI	CLASSE D'INSPECTION	CODE DE SERVICE	TRAITEMENT THERMIQUE		65-103-205-200	P&ID
PSIG / °F	PSIG / °F	PSIG					No. DESSIN	DESSINS DE REFERENCE

POSER R/V

IMPRIMÉ LE: May 17, 2017, 3:18pm

103-MN-01

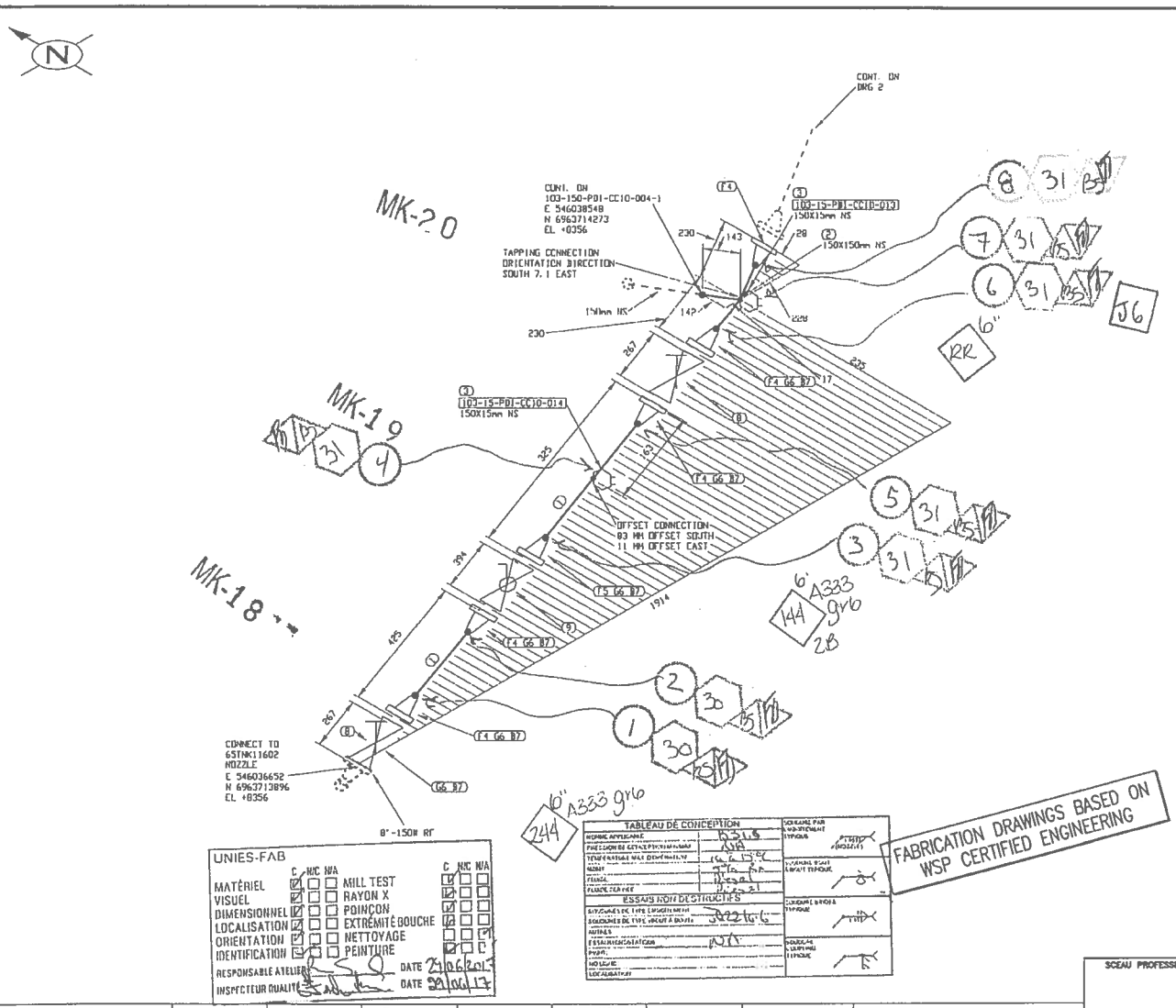

LISTE DE MATERIEL

No	QTE	DIA	MATERIEL/CATALOGUE	DESCRIPTION
1	402 MM	150	A 333 Gr. 6	SCH STD, SMLS PIPE
2	1	150X150	A 420 Gr. WPL6	SCH STD, BW STRAIGHT TEE
3	2	150X15	A 350 Gr. LF2	CL 3000, THREDOLET
4	5	150	A 350 Gr. LF2	CL 150, SCH STD, RF, WN FLANGE
5	1	150	A 350 Gr. LF2	CL 150, SCH STD, RF, WN FLANGE
6	6	150	ASME B16.20	CL 150, GARLOCK 9500, RING TYPE GASKET 1/8" THK
7	48	19	A 193 B7/A 194 2H	CL 150, 8 - 19.05 X 100 STUD BOLTS c/w TWO HEAVY HEX NUTS
8	2	150	GA-10	CL 150, RF, GATE VALVE
9	1	150	BA-31	CL 150, RF, BALL VALVE

CONTRAT UF
2106

EN ATELIER LE
31 MAI 2017
par: 5

No.	DATE	REVISION	
0	2017/05/15	ISSUED FOR CONSTRUCTION	KHV / PAR / APP.

UNIES-FAB

	C	N/C	N/A		C	N/C	N/A
MATÉRIEL	☑	☐	☐	MILL TEST	☐	☐	☐
VISUEL	☑	☐	☐	RAYON X	☐	☐	☐
DIMENSIONNEL	☑	☐	☐	POINÇON	☐	☐	☐
LOCALISATION	☑	☐	☐	EXTRÉMITÉ BOUCHE	☐	☐	☐
ORIENTATION	☑	☐	☐	NETTOYAGE	☐	☐	☐
IDENTIFICATION	☑	☐	☐	PEINTURE	☑	☐	☐

RESPONSABLE ATELIER — DATE 26/06/2017
INSPECTEUR QUALITÉ — DATE 29/06/17

TABLEAU DE CONCEPTION

NOMBRE APPLIQUÉ	53.15
PRESSION DE CONCEPTION (PSIG)	N/A
TEMPÉRATURE MAX DE CONCEPTION (°F)	176 °F
VIDAGE	176 °F
FERMÉ	Hydro
FLUIDE CONTENU	Diesel

ESSAIS NON DESTRUCTIFS

RADIOGRAPHIE DE TYPE LONGITUDINALE	
SOUDURES DE TYPE CIRCULAIRE	5/22 to 6
AUTRES	
DÉSIGNATION	N/A
PWHT	
NOTE	
LOCALISATION	

SOUDURE PAR PÉNÉTRATION TYPIQUE

SOUDURE D'ANGLE TYPIQUE

SOUDURE À BOUCHON TYPIQUE

SOUDURE À CRÉNEAU TYPIQUE

FABRICATION DRAWINGS BASED ON WSP CERTIFIED ENGINEERING

NO. DE CONDUIT	SPECIFICATION	PRODUIT	SYSTEME REVETEMENT	CODE DE COULEUR	ISOLATION LI INNOCUL	ETAPES D'ISOLATION		
103-150-PDI-CC10-003	CC10	PDI		-			65-103-270-200	PIPE SUPPORT DETAILS
PRESSION D'OPERATION	TEMPERATURE D'OPERATION	PRESSION DE CONCEPTION	TEMPERATURE DE CONCEPTION	PRESSION D'ESSAI	CLASSE D'INSPECTION	CODE DE SERVICE	TRAITEMENT THERMIQUE	65-103-205-200 P&ID
PSIG	°F	PSIG	°F	PSIG				No. DESSIN / DESSINS DE REFERENCE

SCEAU PROFESSIONNEL

CONC.: KHV
DATE: 2017/04/25
DESSINÉ PAR: KVE
DATE: 2017/04/25
VER. PAR: -
DATE: -
APP.: -
DATE: -
ECHELLE: AUCUNE

CLIENT: AGNICO EAGLE

NUQSANA PROJEC MINING

ultragen
CONSULTANT PROJECT NO. 591700

PROJET: AGNICO EAGLE - MELIADINE DIVISION
103 - COMBUSTIBLE

TITRE: RANKIN INLET
FABRICATION ISOMETRIC
DIESEL FROM 65TNK11601 & 65TNK11602 TO PUMPING STATION

No PROJET	No DESSIN	PAGES	REV.
6515	103-150-PDI-CC10-003	1/12	0

103-MM-031

P:_Jobs\6515\103\100 (Fuel Distribution)\05. Drawings\02. Isométriques\01. Rankin Inlet\103-150-PDI-CC10-003-1.DWG
IMPRIMÉ LE: May 17, 2017, 3:18pm

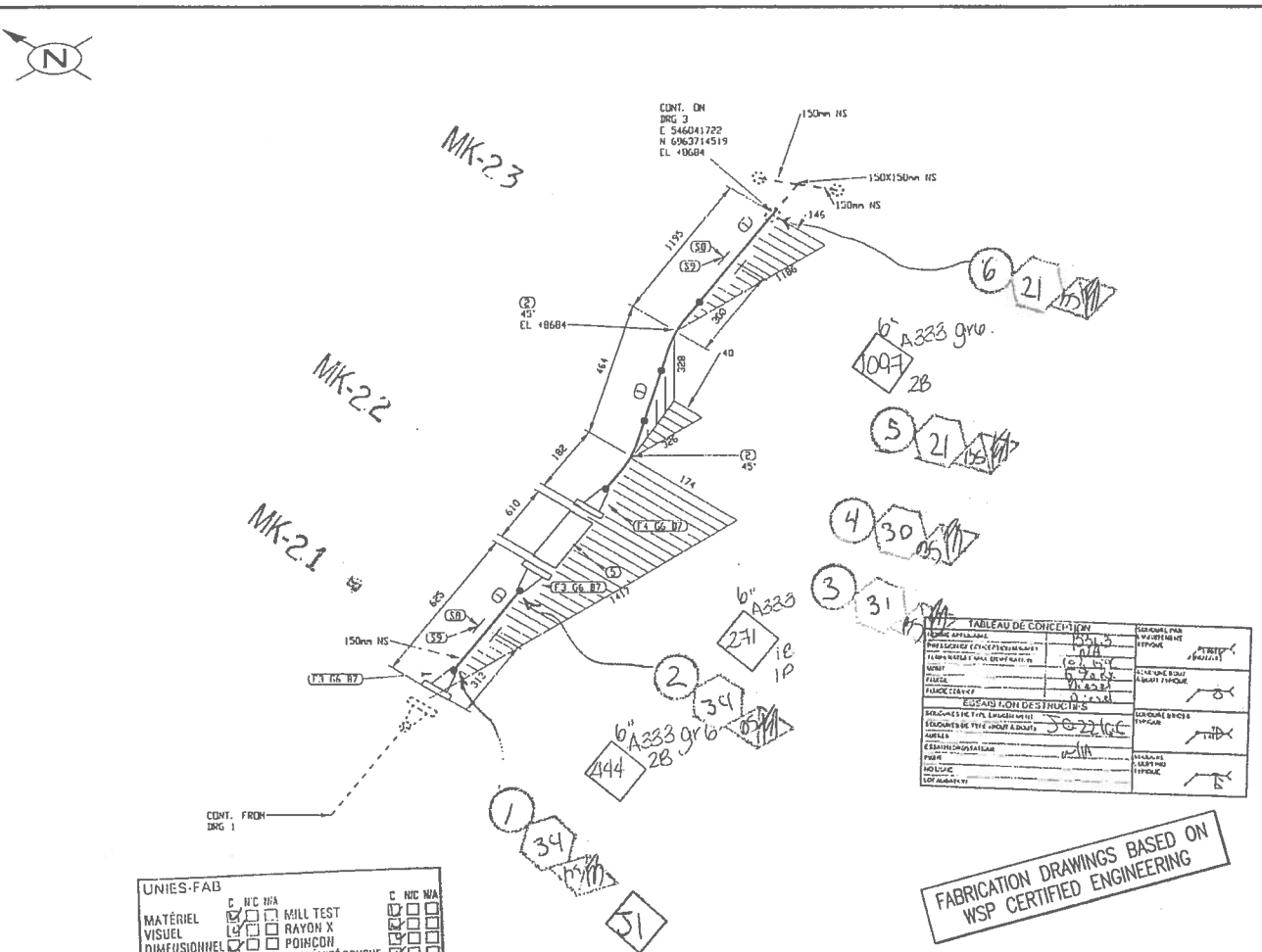

TABLEAU DE CONCEPTION	
NOMBRE APPLICABLE	1331.3
PRESSION DE CONCEPTION (MAXIMUM)	N/A
TEMPERATURE DE CONCEPTION	104 °F
MOIST	6 Yard
FLUIDE	Diesel
FLUIDE DE CONCEPTION	Diesel
ESSAIS NON DESTRUCTIFS	
SOUDURES DE TYPE ENRICHEMENT	
SOUDURES DE TYPE AVANT & ARRIÈRE	JO-22166
AUTRES	
ESSAIS HYDROSTATIQUE	N/A
PAIRE	
NO LIGNE	
LOCALISATION	

SOUDURE PAR MAINTENANT TYPIQUE

SOUDURE BOUT À BOUT TYPIQUE

SOUDURE BRIDES TYPIQUE

SOUDURE DOUBLE TYPIQUE

FABRICATION DRAWINGS BASED ON WSP CERTIFIED ENGINEERING

UNIES-FAB

	C	N/C	N/A		C	N/C	N/A
MATÉRIEL	☑	☐	☐	MILL TEST	☑	☐	☐
VISUEL	☑	☐	☐	RAYON X	☑	☐	☐
DIMENSIONNEL	☑	☐	☐	POINÇON	☑	☐	☐
LOCALISATION	☑	☐	☐	EXTRÉMITÉ BOUCHE	☑	☐	☐
ORIENTATION	☑	☐	☐	NETTOYAGE	☐	☐	☐
IDENTIFICATION	☑	☐	☐	PEINTURE	☑	☐	☐

RESPONSABLE ATELIER [signature] DATE 29/06/2017

INSPECTEUR QUALITÉ [signature] DATE 29/06/17

LISTE DE MATERIEL

No	QTE	DIA	MATERIEL/CATALOGUE	DESCRIPTION
1	1025 MM	150	A 333 Gr. 6	SCH STD, SMLS PIPE
2	2	150	A 420 Gr. WPL6	SCH STD, BW LR 45 DEG ELBOW
3	2	150	A 350 Gr. LF2	CL 150, SCH STD, RF, WN FLANGE
4	1	150	A 350 Gr. LF2	CL 150, SCH STD, RF, WN FLANGE
5	1	150		CL 150, SINGLE BRAIDED HOSE ASSEMBLY
6	3	150	ASME B16.20	CL 150, GARLOCK 5500, RING TYPE GASKET 1/8" THK
7	24	19	A 193 B7/A 194 2H	CL 150, 8 - 19.05 X 100 STUD BOLTS c/w TWO HEAVY HEX NUTS
8	2	150		PIPE SUPPORT AS PER DETAIL 1, DWG: 65-103-270-200
9	2	150		PIPE SHUL AS PER DETAIL 2, DWG: 65-103-270-200

CONTRAT UF
2106

EN ATELIER LE
31 MAI 2017
par : BS

No.	DATE	REVISION	PAR / APP.
0	2017/05/15	ISSUED FOR CONSTRUCTION	KHV

CLIENT:

AGNICO EAGLE

NUQSANA PROMEC MINING

ultragen

CONSULTANT PROJECT NO. 591700

SCEAU PROFESSIONNEL

CONC.: KHV
DATE: 2017/04/25
DESSINE PAR: KVE
DATE: 2017/04/25
VER. PAR: -
DATE: -
APP.: -
DATE: -
ECHELLE: AUCUNE

PROJET: AGNICO EAGLE - MELIADINE DIVISION
103 - COMBUSTIBLE

TITRE: RANKIN INLET
FABRICATION ISOMETRIC
DIESEL FROM 65TNK11601 & 65TNK11602 TO PUMPING STATION

No PROJET	No DESSIN	PAGES	REV.
6515	103-150-PDI-CC10-003	2/12	0

NO. DE CONDUITE		SPECIFICATION	PRODUIT	SYSTEME REVETEMENT	CODE DE COULEUR	ISOLATION ET TRACAGE	EPASS. D'ISOLATION		
103-150-PDI-CC10-003		CC10	PDI		-			65-103-270-200	PIPE SUPPORT DETAILS
PRESSION D'OPERATION	TEMPERATURE D'OPERATION	PRESSION DE CONCEPTION	TEMPERATURE DE CONCEPTION	PRESSION D'ESSAI	CLASSE D'INSPECTION	CODE DE SERVICE	TRAITEMENT THERMIQUE	65-103-205-200	P&ID
PSIG	°F	PSIG	°F	PSIG				No. DESSIN	DESSINS DE REFERENCE

103-MN-01

SUPPRIMÉ LE: May 17, 2017, 3:17pm

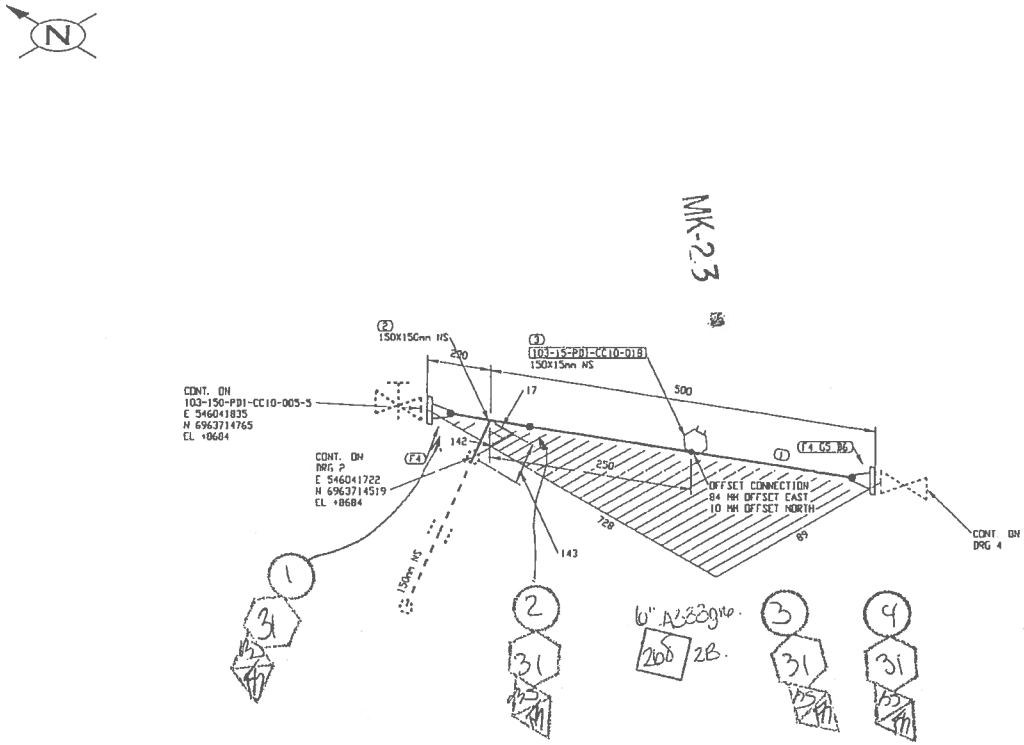

LISTE DE MATERIEL

No	QTE	DIA	MATERIEL/CATALOGUE	DESCRIPTION
1	270 MM	150	A 333 Gr. 6	SCH STD, SMLS PIPE
2	1	150X150	A 420 Gr. WPL6	SCH STD, BW STRAIGHT TEE
3	1	150X15	A 350 Gr. LF2	CL 3000, THREDOLET
4	2	150	A 350 Gr. LF2	CL 150, SCH STD, RF, WN FLANGE
5	1	150	ASME B16.20	CL 150, GARLOCK 5500, RING TYPE GASKET 1/8" THK
6	8	19	A 193 B7/A 194 2H	CL 150, 8 - 19.05 X 100 STUD BOLTS c/w TWO HEAVY HEX NUTS

CONTRAT UF
2106

EN ATELIER LE
31 MAI 2017
par :

No.	DATE	REVISION	PAR / APP.
0	2017/05/15	ISSUED FOR CONSTRUCTION	KHV

CLIENT:

AGNICO EAGLE

NUQSANA PROMEC MINING

ultragen

CONSULTANT PROJECT NO. 591700

UNIES-FAB

	C	N/C	N/A		C	N/C	N/A
MATÉRIEL	☑	☐	☐	MILL TEST	☑	☐	☐
VISUEL	☑	☐	☐	RAYON X	☑	☐	☐
DIMENSIONNEL	☑	☐	☐	POINÇON	☑	☐	☐
LOCALISATION	☑	☐	☐	EXTRÉMITÉ BOUCHE	☑	☐	☐
ORIENTATION	☑	☐	☐	NETTOYAGE	☐	☐	☑
IDENTIFICATION	☑	☐	☐	PEINTURE	☑	☐	☐

RESPONSABLE ATELIER [signature] DATE 29/06/2017
INSPECTEUR QUALITÉ [signature] DATE 29/06/17

TABLEAU DE CONCEPTION

NORME APPLICABLE	PDI-2	SOUDURE PAR L'ENTREPRENEUR TYPIQUE	
PRESSION DE CONCEPTION (MAXIMUM)	N/A		
TEMPÉRATURE MAX D'OPÉRATION	106 15°C		
MOUT	5% FE	SOUDURE BOUT À BOUT TYPIQUE	
FLUIDE	0.250		
FLUIDE SERVICE	0.250		
ESSAIS NON DESTRUCTIFS			
SOUDURES DE TYPE ENTREPRENEUR		SOUDURE À INDEX TYPIQUE	
SOUDURES DE TYPE BOUT À BOUT	5622/66		
AUTRES			
ESSAI HYDROSTATIQUE	N/A		
POUR		NOTAIRE DE LIMITING TYPIQUE	
NOTAIRE			
LOCALISATION			

FABRICATION DRAWINGS BASED ON WSP CERTIFIED ENGINEERING

SCEAU PROFESSIONNEL

CONC.: KHV
DATE: 2017/04/25
DESSINÉ PAR: KVE
DATE: 2017/04/25
VER. PAR: -
DATE: -
APP.: -
DATE: -
ÉCHELLE: AUCUNE

PROJET: AGNICO EAGLE - MELIADINE DIVISION
103 - COMBUSTIBLE

TITRE: RANKIN INLET
FABRICATION ISOMETRIC
DIESEL FROM 65TNK11601 & 65TNK11602 TO PUMPING STATION

No PROJET	No DESSIN	PAGES	REV.
6515	103-150-PDI-CC10-003	3/12	0

NO. DE CONDUITE		SPECIFICATION	PRODUIT	SYSTEME REVETEMENT	CODE DE COULEUR	ISOLATION ET TRACAGE	EPAISS. D'ISOLATION		
103-150-PDI-CC10-003		CC10	PDI		-			65-103-270-200	PIPE SUPPORT DETAILS
PRESSION D'OPERATION	TEMPERATURE D'OPERATION	PRESSION DE CONCEPTION	TEMPERATURE DE CONCEPTION	PRESSION D'ESSAI	CLASSE D'INSPECTION	CODE DE SERVICE	TRAITEMENT THERMIQUE	65-103-205-200	P&ID
PSIG	°F	PSIG	°F	PSIG				No. DESSIN	DESSINS DE REFERENCE

103-MN-01

FICHIER: W:\Meliadine\591700 (Fuel Distribution)\03. Dessins\02. Tuyauterie\02. Isometriques\01. Rankin Inlet\103-150-PDI-CC10-003-3.DWG

IMPRIMÉ LE: May 17, 2017, 3:30pm

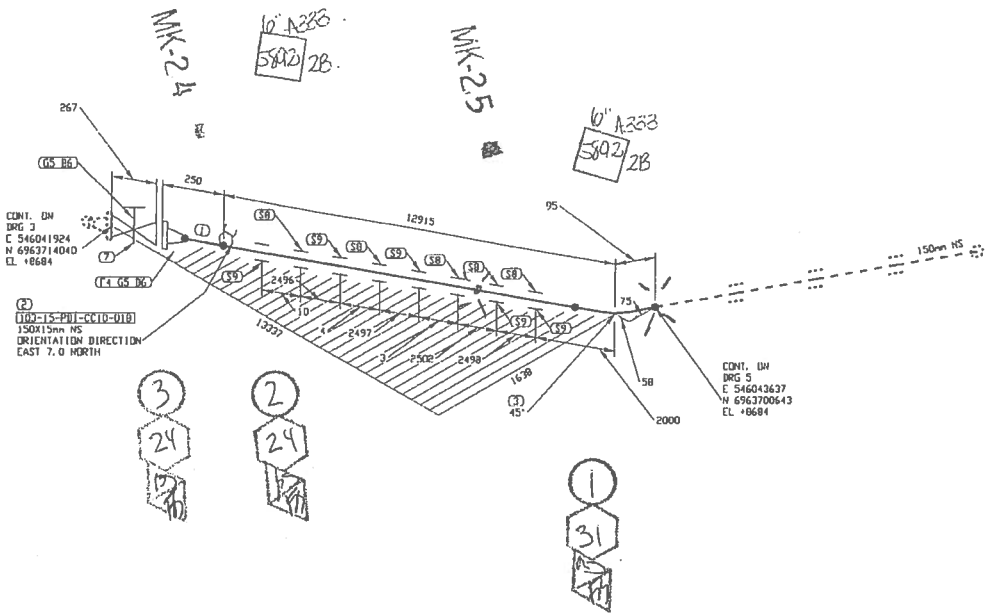

LISTE DE MATERIEL

No	QTE	DIA	MATERIEL/CATALOGUE	DESCRIPTION
1	12 VOIR NH	150	A 333 Gr. 6	SCH STD, SMLS PIPE
2	1	150X15	A 350 Gr. LF2	CL 3000, THREDOLET
3	1	150	A 420 Gr. WPL6	SCH STD, BW LR 45 DEG ELBOW
4	1	150	A 350 Gr. LF2	CL 150, SCH STD, RF, WN FLANGE
5	2	150	ASME B16.20	CL 150, GARLOCK 3500, RING TYPE GASKET 1/8" THK
6	16	19	A 193 B7/A 194 2H	CL 150, Ø - 19.05 X 100 STUD BOLTS c/w TWO HEAVY HEX NUTS
7	1	150	GA-10	CL 150, RF, GATE VALVE
8	5	150		PIPE SUPPORT AS PER DETAIL 1, DWG 65-103-270-200
9	3	150		PIPE SHOE AS PER DETAIL 7, DWG 65-103-270-200

CONTRAT UF
2106

EN ATELIER LE
31 MAI 2017
par :

No.	DATE	REVISION	PAR / APP.
0	2017/05/15	ISSUED FOR CONSTRUCTION	KHV

UNIES-FAB

	C	N/C	N/A		C	N/C	N/A
MATÉRIEL	☑	☐	☐	MILL TEST	☑	☐	☐
VISUEL	☑	☐	☐	RAYON X	☑	☐	☐
DIMENSIONNEL	☑	☐	☐	POINÇON	☑	☐	☐
LOCALISATION	☑	☐	☐	EXTRÉMITÉ BOUCHE	☑	☐	☐
ORIENTATION	☑	☐	☐	NETTOYAGE	☐	☐	☑
IDENTIFICATION	☑	☐	☐	PEINTURE	☐	☐	☑

RESPONSABLE ATELIER: DATE 29/06/17
INSPECTEUR QUALITÉ: DATE 29/06/17

TABLEAU DE CONCEPTION	
NORME APPLICABLE	CONCEPTION PAR CALCUL OU PAR TYPE
PRESSION DE DÉTENTE (PSIG)	
TEMPÉRATURE MAX. D'OPÉRATION	
MONT.	SOUDAGE BOUT À BOUT OU TYPIQUE
FLUIDE:	
PHASE DE SERVICE	
ESSAIS NON DESTRUCTIFS	
SOUDURES DE TYPE EXIGENCE MINIMUM	CONTRÔLE À 100% TYPIQUE
SOUDURES DE TYPE « BOUT À BOUT »	
AUTRES	
RÉSERVOIR SOUS PRESSION	
PWHT	MANUEL OU TYPIQUE
MP/PAINE	
LOCALISATION	

FABRICATION DRAWINGS BASED ON WSP CERTIFIED ENGINEERING

CLIENT: AGNICO EAGLE

NUQSANA-PROMEC MINING

ultragen

CONSULTANT PROJECT NO. 591700

NO. DE CONDUITE		SPECIFICATION	PRODUIT	SYSTÈME REVÊTEMENT	CODE DE COULEUR	ISOLATION ET TRAÇAGE	ÉPAISS. D'ISOLATION		
103-150-PDI-CC10-003		CC10	PDI		-			65-103-270-200	PIPE SUPPORT DETAILS
PRESSION D'OPÉRATION	TEMPÉRATURE D'OPÉRATION	PRESSION DE CONCEPTION	TEMPÉRATURE DE CONCEPTION	PRESSION D'ESSAI	CLASSE D'INSPECTION	CODE DE SERVICE	TRAITEMENT THERMIQUE	65-103-205-200	P&ID
PSIG	°F	PSIG	°F	PSIG				No. DESSIN	DESSINS DE RÉFÉRENCE

SCEAU PROFESSIONNEL

CONC.: KHV
DATE: 2017/04/25
DESSINÉ PAR: KVE
DATE: 2017/04/25
VÉR. PAR: -
DATE: -
APP.: -
DATE: -
ÉCHELLE: AUCUNE

PROJET: AGNICO EAGLE - MELIADINE DIVISION
103 - COMBUSTIBLE

TITRE: RANKIN INLET
FABRICATION ISOMETRIC
DIESEL FROM 65TNK11601 & 65TNK11602 TO PUMPING STATION

No PROJET	No DESSIN	PAGES	REV.
6515	103-150-PDI-CC10-003	4/12	0

103-MN-01

FICHIER: N:\V

IMPRIMÉ LE: May 17, 2017, 3:30pm

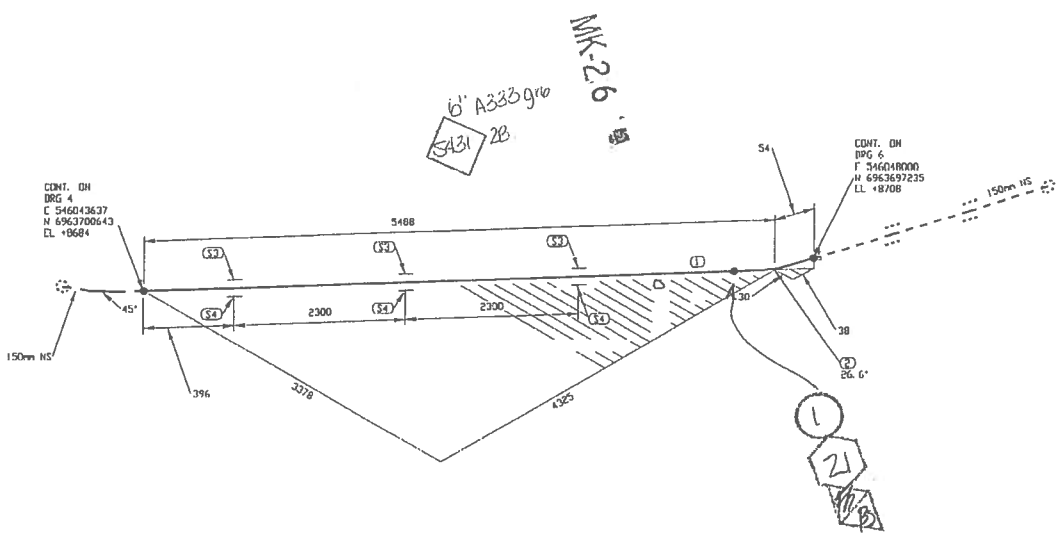

LISTE DE MATERIEL

No	QTE	DIA	MATERIEL/CATALOGUE	DESCRIPTION
1	5434 MM	150	A 333 Gr. 6	SCH STD, SMLS PIPE
2	1	150	A 420 Gr WPL6	SCH STD, BW LR 90 DEG ELBOW TRIM TO 26.57
3	3	150		PIPE SUPPORT AS PER DETAIL 1, DWG: 65-103-270-200
4	3	150		PIPE SHOE AS PER DETAIL 2, DWG: 65-103-270-200

A=66 B=KG CK:SA

CONTRAT UF
2106

EN ATELIER LE
31 MAI 2017
par : BS

No.	DATE	REVISION	PAR / APP.
0	2017/05/15	ISSUED FOR CONSTRUCTION	KHV

UNIES-FAB

	C	NIC	N/A		C	NIC	N/A
MATÉRIEL	☑	☐	☐	MILL TEST	☐	☐	☐
VISUEL	☑	☐	☐	RAYON X	☐	☐	☐
DIMENSIONNEL	☑	☐	☐	POINÇON	☐	☐	☐
LOCALISATION	☑	☐	☐	EXTRÉMITÉ BOUCHE	☐	☐	☐
ORIENTATION	☑	☐	☐	NETTOYAGE	☐	☐	☐
IDENTIFICATION	☑	☐	☐	PEINTURE	☐	☐	☐

RESPONSABLE ATELIER DATE 29/06/2017
INSPECTEUR QUALITÉ DATE 31/05/17

TABLEAU DE CONCEPTION

NORME APPLICABLE	B31.3
PRESSION DE CONCEPTION MANOM.	1974
TEMPÉRATURE MAX. DE CONCEPTION	79.4 °C
MOAT	7/16 FX
FLUIDE	Diesel
FLUIDE SERVICE	Diesel
ESSAIS NON DESTRUCTIFS	
RADIOGRAPHIE DE PIPE EXPOSITION	36-22-6-6
RADIOGRAPHIE DE TYPE «MOAT À BOUT»	
AUTRES	
ESSAI HYDROSTATIQUE	N/A
PWHT	
NDT SOUDE	
LOCALISATION	

FABRICATION DRAWINGS BASED ON WSP CERTIFIED ENGINEERING

CLIENT:

AGNICO EAGLE

NUQSANA PROMEC MINING

ultragen

CONSULTANT PROJECT NO. 591700

SCEAU PROFESSIONNEL

CONC.: KHV
DATE: 2017/04/25
DESSINÉ PAR: KVE
DATE: 2017/04/23
VÉR. PAR: -
DATE: -
APP.: -
DATE: -
ÉCHELLE: AUCUNE

PROJET: AGNICO EAGLE - MELIADINE DIVISION
103 - COMBUSTIBLE

TITRE: RANKIN INLET
FABRICATION ISOMETRIC
DIESEL FROM 65TNK11601 & 65TNK11602 TO PUMPING STATION

No PROJET	No DESSIN	PAGES	REV.
6515	103-150-PDI-CC10-003	5/12	0

NO. DE CONDUITE		SPÉCIFICATION	PRODUIT	SYSTÈME REVÊTEMENT	CODE DE COULEUR	ISOLATION ET TRAÇAGE	ÉPAISS. D'ISOLATION		
103-150-PDI-CC10-003		CC10	PDI		-			65-103-270-200	PIPE SUPPORT DETAILS
PRESSION D'OPÉRATION	TEMPÉRATURE D'OPÉRATION	PRESSION DE CONCEPTION	TEMPÉRATURE DE CONCEPTION	PRESSION D'ESSAI	CLASSE D'INSPECTION	CODE DE SERVICE	TRAITEMENT THERMIQUE	65-103-205-200	P&ID
PSIG	°F	PSIG	°F	PSIG				No. DESSIN	DESSINS DE RÉFÉRENCE

FICHIER: R-V

IMPRIMÉ LE: May 18, 2017, 11:40am

103-MK-01

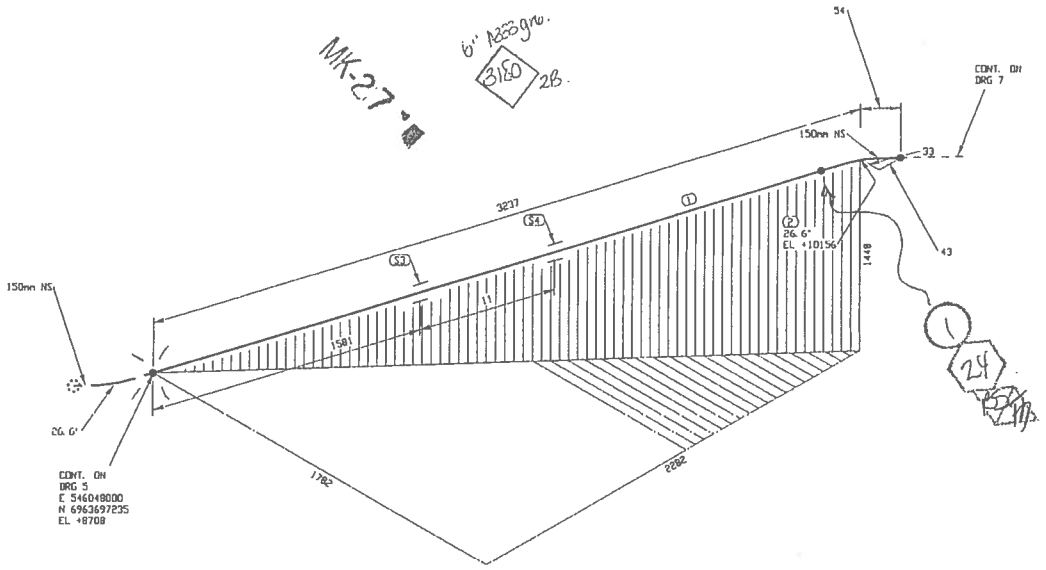

LISTE DE MATERIEL

No	QTE	DIA	MATERIEL/CATALOGUE	DESCRIPTION
1	3103 MM	150	A 333 Gr. 6	SCH STD, SMLS PIPE
2	1	150	A 420 Gr. WPL6	SCH STD, BW LR 90 DEG ELBOW TRIM TO 26.57
3	1	150		PIPE SUPPORT AS PER DETAIL 1, DWG: 65-103-270-200
4	1	150		PIPE SHOE AS PER DETAIL 2, DWG: 65-103-270-200

A-66 B-145

CONTRAT UF
2106

EN ATELIER LE
31 MAI 2017
par:

No.	DATE	REVISION	PAR / APP.
0	2017/05/15	ISSUED FOR CONSTRUCTION	KHV

UNIES-FAB

	C	NRC	N/A		C	NRC	N/A
MATÉRIEL	☑	☐	☐	BILL TEST	☑	☐	☐
VISUEL	☑	☐	☐	RAYON X	☑	☐	☐
DIMENSIONNEL	☑	☐	☐	POINÇON	☑	☐	☐
LOCALISATION	☑	☐	☐	EXTRÉMITÉ BOUCHE	☑	☐	☐
ORIENTATION	☑	☐	☐	NETTOYAGE	☑	☐	☐
IDENTIFICATION	☑	☐	☐	PEINTURE	☑	☐	☐

RESPONSABLE ATELIER: DATE 21/06/17
INSPECTEUR QUALITÉ: DATE 22/06/17

TABLEAU DE CONCEPTION

NORME APPLICABLE	B31.3
PRESSION/TEMPÉRATURE	1034
TEMPÉRATURE MAX DESIGN	65°C
MOAT	350
FLUIDE	Diesel
FLUIDE SEVÈRE	

ESSAIS NON DESTRUCTIFS

SPÉCIFICATION D'ENQUÊTE	103211GF
EQUIPEMENTS DE SPÉCIALISTES REQUIS	
AUTRES	
ESSAIS HYDROSTATIQUES	N/A
PNEUMATIQUE	
HOUSSE	
LOCALISATION	

FABRICATION DRAWINGS BASED ON WSP CERTIFIED ENGINEERING

CLIENT: AGNICO EAGLE

NUQSANA PROMEC MINING

ultragen

CONSULTANT PROJECT NO. 591700

SCEAU PROFESSIONNEL

CONC.: KHV
DATE: 2017/04/25
DESSINÉ PAR: KVE
DATE: 2017/04/25
VÉR. PAR: -
DATE: -
APP.: -
DATE: -
ÉCHELLE: AUCUNE

PROJET: AGNICO EAGLE - MELIADINE DIVISION
103 - COMBUSTIBLE

TITRE: RANKIN INLET
FABRICATION ISOMETRIC
DIESEL FROM 65TNK11601 & 65TNK11602 TO PUMPING STATION

No PROJET	No DESSIN	PAGES	REV.
6515	103-150-PDI-CC10-003	6/12	0

NO. DE CONDUITE	SPÉCIFICATION	PRODUIT	SYSTÈME REVÊTEMENT	CODE DE COULEUR	ISOLATION ET TRAÇAGE	ÉPAISS. D'ISOLATION		
103-150-PDI-CC10-003	CC10	PDI		-			65-103-270-200	PIPE SUPPORT DETAILS
							65-103-205-200	P&ID

PRESSION D'OPÉRATION	TEMPÉRATURE D'OPÉRATION	PRESSION DE CONCEPTION	TEMPÉRATURE DE CONCEPTION	PRESSION D'ESSAI	CLASSE D'INSPECTION	CODE DE SERVICE	TRAITEMENT THERMIQUE	No. DESSIN	DESSINS DE RÉFÉRENCE
PSIG	°F	PSIG	°F	PSIG					

103-MN-01

IMPRIMÉ LE: May 17, 2017, 3:25pm

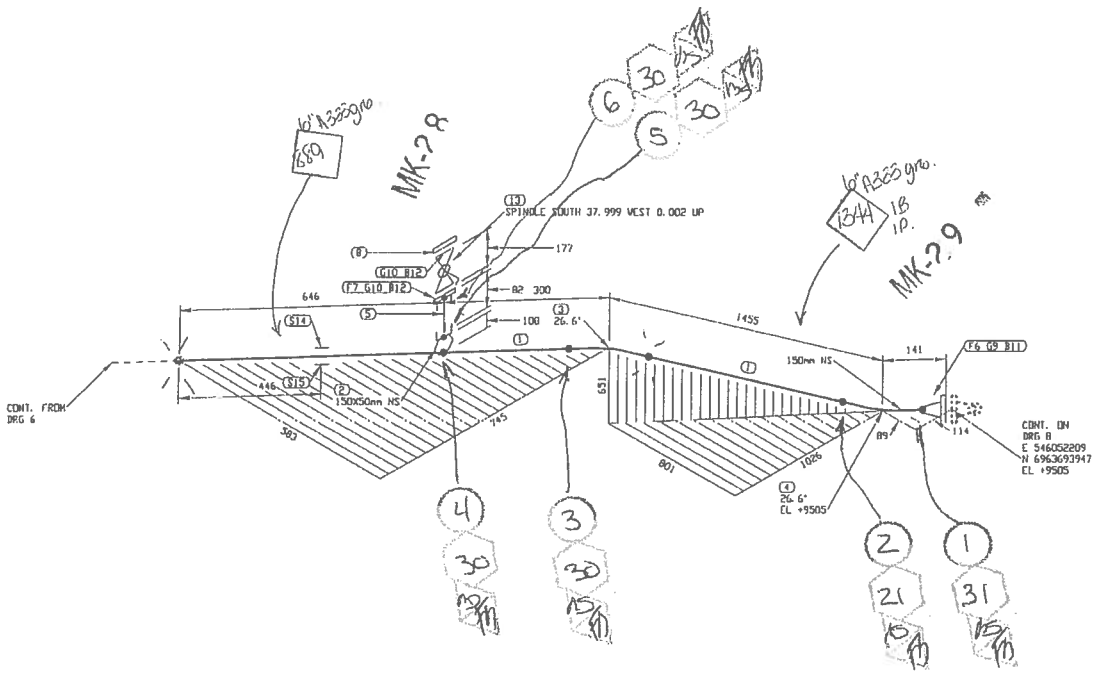

LISTE DE MATERIEL

No	QTE	DIA	MATERIEL/CATALOGUE	DESCRIPTION
1	2239 MM	150	A 333 Gr. 6	SCH STD, SMLS PIPE
2	1	150x50	A 350 Gr. LF2	CL 3000, SOCKOLET
3	1	150	A 420 Gr. WPL6	SCH STD, BW LR 45 DEG ELBOW TRIM TO 26.57
4	1	150	A 420 Gr. WPL6	SCH STD, BW LR 90 DEG ELBOW TRIM TO 26.57
5	1	50	A 333 Gr. 6	SCH 80, NIPPLE x 75mm LG PIPE
6	1	150	A 350 Gr. LF2	CL 150, SCH STD, RF, WN FLANGE
7	1	50	A 350 Gr. LF2	CL 150, SCH 80, RF, SW FLANGE
8	1	50	A 350 Gr. LF2	CL 150, RF, BLIND FLANGE
9	1	150	ASME B16.20	CL 150, GARLOCK 5500, RING TYPE GASKET 1/8" THK
10	2	50	ASME B16.20	CL 150, GARLOCK 5500, RING TYPE GASKET 1/8" THK
11	8	19	A 193 B7/A 194 2H	CL 150, 8 - 19.05 X 100 STUD BOLTS c/w TWO HEAVY HEX NUTS
12	8	16	A 193 B7/A 194 2H	CL 150, 4 - 15.875 X 85 STUD BOLTS c/w TWO HEAVY HEX NUTS
13	1	50	BA-30	CL 150, RF, BALL VALVE
14	1	150		PIPE SUPPORT AS PER DETAIL 1, DWG 65-103-270-200
15	1	150		PIPE SHOE AS PER DETAIL 2, DWG 65-103-270-200

A:66 B:145
A:66 B:145

CONTRAT UF
2106

ENATELIFRIF
31 MAI 2017
par:

No.	DATE	REVISION	APP.
0	2017/05/15	ISSUED FOR CONSTRUCTION	KHV

UNIES-FAB

	C	NC	N/A		C	NC	N/A
MATÉRIEL	☑	☐	☐	MILL TEST	☐	☐	☐
VISUEL	☑	☐	☐	RAYON X	☐	☐	☐
DIMENSIONNEL	☑	☐	☐	POINÇON	☐	☐	☐
LOCALISATION	☑	☐	☐	EXTRÉMITÉ BOUCHE	☐	☐	☐
ORIENTATION	☑	☐	☐	NETTOYAGE	☐	☐	☐
IDENTIFICATION	☑	☐	☐	PEINTURE	☐	☐	☐

RESPONSABLE ATELIER: DATE 29/06/2017
INSPECTION QUALITÉ: DATE 29/06/17

TABLEAU DE CONCEPTION

NORME APPLICABLE	
PRESSION DE CONCEPTION (PSIG)	P3M3
TEMPÉRATURE MAX (°F) / MIN (°F)	150 / -20
NIVEAU	2" Ø RX
FLUIDE	Diesel
FLUIDE CERVICE	

ESSAIS NON DESTRUCTIFS

APPLICABILITÉ DE TYPE D'ESSAI (OUI/NON)	
EMPLACEMENTS DE TYPE D'ESSAI (SOUDURES)	2022-16-6
MATÉRIAUX	
ESSAI(S) À EFFECTUER	UT PT
POINT	
NO ISOMÉTRIQUE	
LOT ALLIAGE	

NO CHARGE PAR SOUDEUSE TYPIQUE

CHARGE SOUDÉE À BOUT TYPIQUE

SOUDURE BRIDES TYPIQUE

SOUDURE CHARNIÈRES TYPIQUE

FABRICATION DRAWINGS BASED ON WSP CERTIFIED ENGINEERING

CLIENT:

AGNICO EAGLE

NUQSANA PROMEC MINING

ultragen

CONSULTANT PROJECT NO. 591700

SCEAU PROFESSIONNEL

CONC.: KHV
DATE: 2017/04/25
DESSINÉ PAR: KVE
DATE: 2017/04/25
VÉR. PAR: -
DATE: -
APP.: -
DATE: -
ÉCHELLE: AUCUNE

PROJET: AGNICO EAGLE - MELIADINE DIVISION
103 - COMBUSTIBLE

TITRE: RANKIN INLET
FABRICATION ISOMETRIC
DIESEL FROM 65TNK11601 & 65TNK11602 TO PUMPING STATION

No PROJET	No DESSIN	PAGES	REV.
6515	103-150-PDI-CC10-003	7/12	0

NO. DE CONDUITE		SPÉCIFICATION	PRODUIT	SYSTÈME REVÊTEMENT	CODE DE COULEUR	ISOLATION ET TRAÇAGE	ÉPAISS. D'ISOLATION		
103-150-PDI-CC10-003		CC10	PDI		-			65-103-270-200	PIPE SUPPORT DETAILS
PRESSION D'OPÉRATION	TEMPÉRATURE D'OPÉRATION	PRESSION DE CONCEPTION	TEMPÉRATURE DE CONCEPTION	PRESSION D'ESSAI	CLASSE D'INSPECTION	CODE DE SERVICE	TRAITEMENT THERMIQUE	65-103-205-200	P&ID
PSIG	°F	PSIG	°F	PSIG				No. DESSIN	DESSINS DE RÉFÉRENCE

103-MM-01

PDF/E N-V

SUPPRIMÉ LE: May 17, 2017, 3:26pm

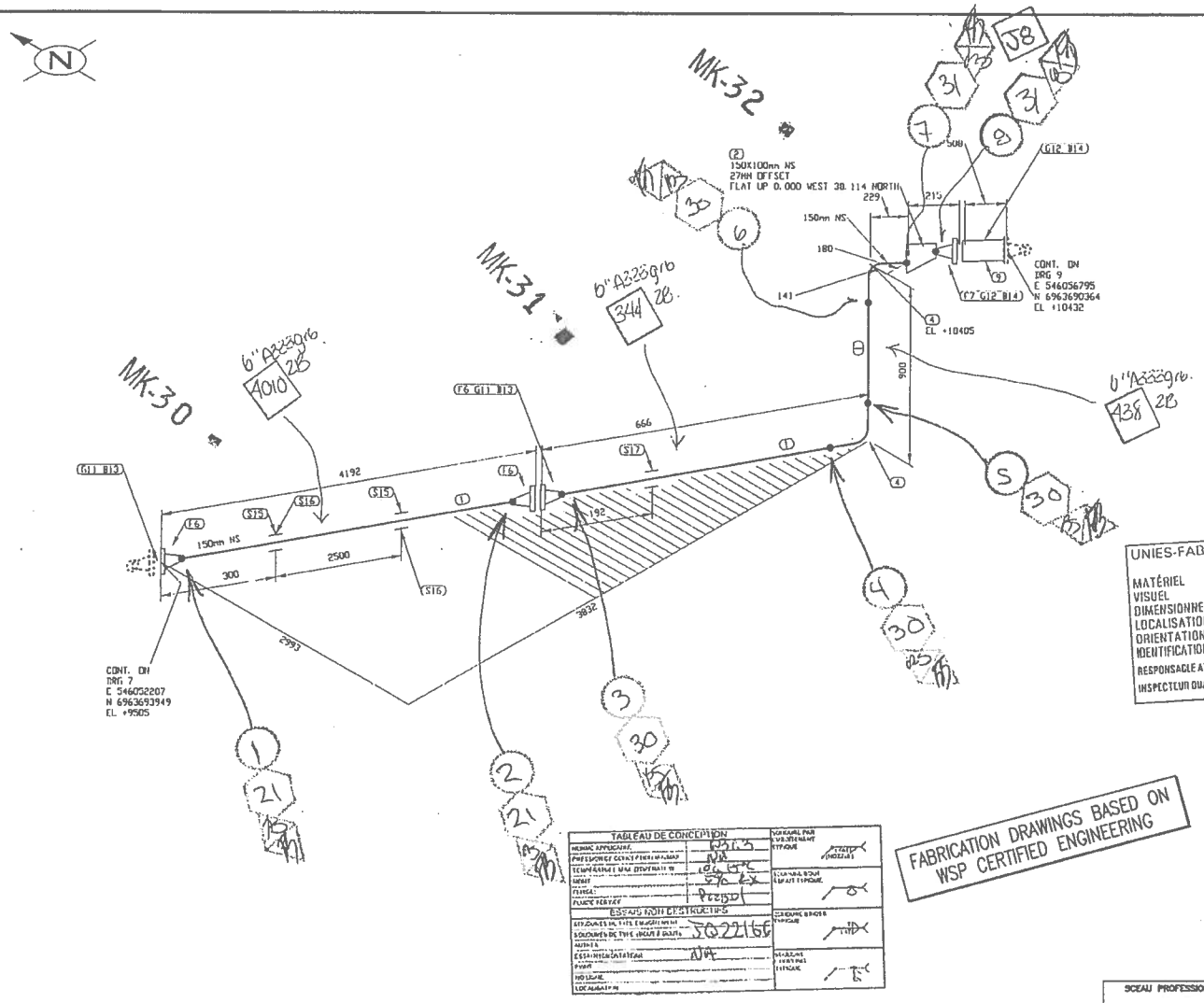

LISTE DE MATERIEL

No	QTE	DIA	MATERIEL/CATALOGUE	DESCRIPTION
1	4010 MM	150	A 333 Gr. 6	SCH STD, SMLS PIPE
2	1	150X100	A 420 Gr. WPL6	SCH STD, BW ECC RED
3				
4	2	150	A 420 Gr. WPL6	SCH STD, BW LR 90 DEG ELBOW
5				
6	3	150	A 350 Gr. LF2	CL 150, SCH STD, RF, WN FLANGE
7	1	100	A 350 Gr. LF2	CL 150, SCH STD, RF, WN FLANGE
8				
9	1	100		TCS METER UNIT
10				
11	2	150	ASME B16.20	CL 150, GARLOCK 3500, RING TYPE GASKET 1/8" THK
12	2	100	ASME B16.20	CL 150, GARLOCK 3500, RING TYPE GASKET 1/8" THK
13	16	19	A 193 B7/A 194 2H	CL 150, Ø - 19.05 X 100 STUD BOLTS c/w TYD HEAVY HEX NUTS
14	16	16	A 193 B7/A 194 2H	CL 150, Ø - 15.075 X 90 STUD BOLTS c/w TYD HEAVY HEX NUTS
15	2	150		PIPE SHOE AS PER DETAIL 2, DWG 65-103-270-200
16	2	150		PIPE SUPPORT AS PER DETAIL 1, DWG 65-103-270-200
17	1	150		ABUTEMENT TYPE 2 AS PER DETAIL 3, DWG 65-103-270-200

UNIES-FAB

	C	WC	N/A
MATÉRIEL	☑	☐	☐
VISUEL	☑	☐	☐
DIMENSIONNEL	☑	☐	☐
LOCALISATION	☑	☐	☐
ORIENTATION	☑	☐	☐
IDENTIFICATION	☑	☐	☐
RESPONSABLE ATELIER	DATE 25/06/2017		
INSPECTEUR QUALITÉ	DATE 29/06/17		

	C	WC	N/A
MILL TEST	☐	☐	☐
RAYON X	☐	☐	☐
POINÇON	☐	☐	☐
EXTRÉMITÉ BOUCHE	☐	☐	☐
NETTOYAGE	☐	☐	☐
PEINTURE	☐	☐	☐

CONTRAT UF
2106

EN ATELIER LE
31 MAI 2017
par: BS

No.	DATE	REVISION	PAR / APP.
0	2017/05/15	ISSUED FOR CONSTRUCTION	KHV

CLIENT: AGNICO EAGLE

NUQSANA PROMEC MINING

ultragen

CONSULTANT PROJECT NO. 591700

SCEAU PROFESSIONNEL

CONC.: KHV
DATE: 2017/04/25
DESSINÉ PAR: KVE
DATE: 2017/04/25
VÉR. PAR: –
DATE: –
APP.: –
DATE: –
ÉCHELLE: AUCUNE

PROJET: AGNICO EAGLE – MELIADINE DIVISION
103 – COMBUSTIBLE

TITRE: RANKIN INLET
FABRICATION ISOMETRIC
DIESEL FROM 65TNK11601 & 65TNK11602 TO PUMPING STATION

No PROJET	No DESSIN	PAGES	REV.
6515	103-150-PDI-CC10-003	8/12	0

NO. DE CONDUITE		SPÉCIFICATION	PRODUIT	SYSTÈME REVÊTEMENT	CODE DE COULEUR	ISOLATION ET TRAÇAGE	ÉPAISS. D'ISOLATION		
103-150-PDI-CC10-003		CC10	PDI		–			65-103-270-200	PIPE SUPPORT DETAILS
PRESSION D'OPÉRATION	TEMPÉRATURE D'OPÉRATION	PRESSION DE CONCEPTION	TEMPÉRATURE DE CONCEPTION	PRESSION D'ESSAI	CLASSE D'INSPECTION	CODE DE SERVICE	TRAITEMENT THERMIQUE	65-103-205-200	P&ID
PSIG	°F	PSIG	°F	PSIG				No. DESSIN	DESSINS DE RÉFÉRENCE

IMPRIMÉ LE: May 18, 2017, 12:02pm

103-MN-01

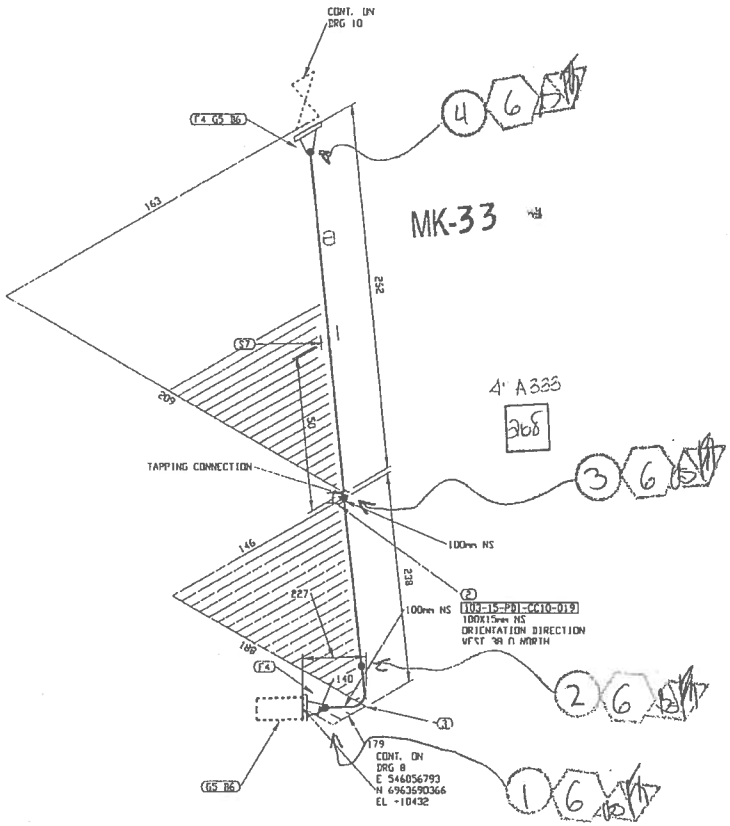

LISTE DE MATERIEL

No	QTE	DIA	MATERIEL/CATALOGUE	DESCRIPTION
1	≥72 MM	100	A 333 Gr. 6	SCH STD, SMLS PIPE
2	1	100X15	A 350 Gr. LF2	CL 3000, THREDOLET
3	1	100	A 420 Gr. WPL6	SCH STD, BW LR 90 DEG ELBOW
4	2	100	A 350 Gr. LF2	CL 150, SCH STD, RF, WN FLANGE
5	2	100	ASME B16.20	CL 150, GARLOCK 5500, RING TYPE GASKET 1/8" THK
6	16	16	A 193 B7/A 194 2H	CL 150, Ø - 15.875 X 90 STUD BOLTS c/w TWO HEAVY HEX NUTS
7	1	100		PIPE BRACKET C150x12wx300 WELDED TO CONTAINER C/W U-BOLT

CONTRAT UF
2106

EN ATELIER LE
31 MAI 2017
par: [illegible]

No.	DATE	REVISION	APP.
0	2017/05/15	ISSUED FOR CONSTRUCTION	KHV

UNIES-FAB

	C	N/C	N/A		C	N/C	N/A
MATÉRIEL	☒	☐	☐	MILL TEST	☐	☐	☐
VISUEL	☒	☐	☐	RAYON X	☐	☐	☐
DIMENSIONNEL	☒	☐	☐	POINÇON	☐	☐	☐
LOCALISATION	☒	☐	☐	EXTRÉMITÉBOUCHE	☐	☐	☐
ORIENTATION	☒	☐	☐	NETTOYAGE	☐	☐	☐
IDENTIFICATION	☒	☐	☐	PEINTURE	☐	☐	☐

RESPONSABLE ATELIER: DATE 25/06/2017
INSPECTEUR QUALITÉ: DATE 29/06/17

TABLEAU DE CONCEPTION	
NORME APPLICABLE	B31.3
PRESSION DE CONCEPTION MANOMÉTRIQUE	1965 PSIG
TEMPÉRATURE MAX. DE CONCEPTION	570 °F
FLUIDE	DIESEL
PHASE SERVICE	
ESSAIS NON DESTRUCTIFS	
RADIOGRAPHIE DE PIPE ENSOUDÉ/SOUDURE	SG22166
RADIOGRAPHIE DE PIPE ADJACENT/SOUDURE	
MARTEAU	
ESSAI HYDROSTATIQUE	N/A
PEINTURE	
NOTICE	
LOT ALIMENTÉ	

NON EXAMINÉ PAR RADIOGRAPHIE TYPIQUE

FABRICATION DRAWINGS BASED ON WSP CERTIFIED ENGINEERING

CLIENT: AGNICO EAGLE

NUQSANA PROMEC MINING

ultragen

CONSULTANT PROJECT NO. 591700

SCEAU PROFESSIONNEL

CONC.: KHV
DATE: 2017/04/25
DESSINÉ PAR: KVE
DATE: 2017/04/25
VER. PAR: -
DATE: -
APP.: -
DATE: -
ÉCHELLE: AUCUNE

PROJET: AGNICO EAGLE - MELIADINE DIVISION
103 - COMBUSTIBLE

TITRE: RANKIN INLET
FABRICATION ISOMETRIC
DIESEL FROM 65TNK11601 & 65TNK11602 TO PUMPING STATION

No PROJET	No DESSIN	PAGES	RÉV.
6515	103-150-PDI-CC10-003	9/12	0

NO. DE CONDUITE		SPÉCIFICATION	PRODUIT	SYSTÈME REVÊTEMENT	CODE DE COULEUR	ISOLATION ET TRAÇAGE	ÉPAISS. D'ISOLATION		
103-150-PDI-CC10-003		CC10	PDI		-			65-103-270-200	PIPE SUPPORT DETAILS
PRESSION D'OPÉRATION	TEMPÉRATURE D'OPÉRATION	PRESSION DE CONCEPTION	TEMPÉRATURE DE CONCEPTION	PRESSION D'ESSAI	CLASSE D'INSPECTION	CODE DE SERVICE	TRAITEMENT THERMIQUE	65-103-205-200	P&ID
PSIG	°F	PSIG	°F	PSIG				No. DESSIN	DESSINS DE RÉFÉRENCE

POINTE N-V

IMPRIMÉ LE: May 17, 2017, 3:26pm

103-NM-101

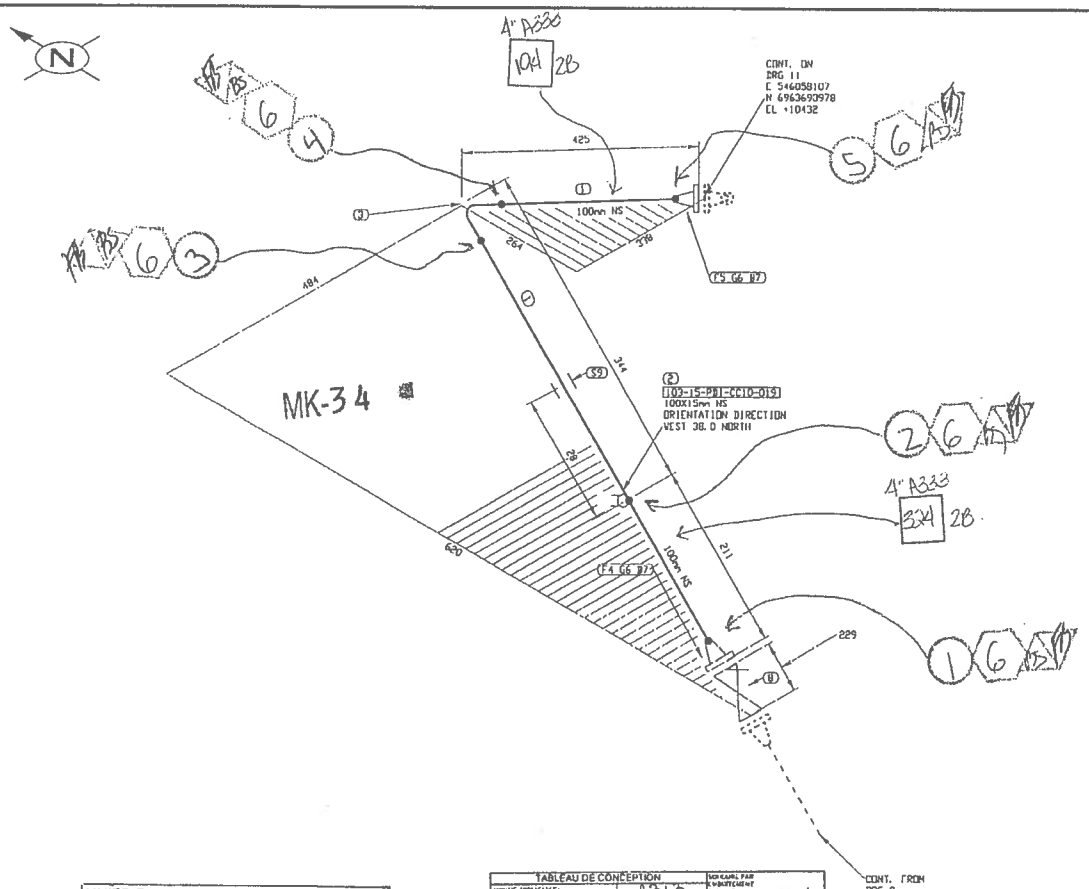

LISTE DE MATERIEL

No	QTE	DIA	MATERIEL/CATALOGUE	DESCRIPTION
1	527 MM	100	A 333 Gr. 6	SCH STD, SMLS PIPE
2	1	100X15	A 350 Gr. LF2	CL 3000, THREDOLET
3	1	100	A 420 Gr. WPL6	SCH STD, BW LR 90 DEG ELBOW
4	1	100	A 350 Gr. LF2	CL 150, SCH STD, RF, WN FLANGE
5	1	100	A 350 Gr LF2	CL 150, SCH STD, RF, WN FLANGE
6	2	100	ASME B16.20	CL 150, GARLOCK 9500, RING TYPE GASKET 1/8" THK
7	16	16	A 193 B7/A 194 2H	CL 150, 8 - 15.875 X 90 STUD BOLTS c/w TWO HEAVY HEX NUTS
8	1	ICO	GA-10	CL 150, RF, GATE VALVE
9	1	ICO		PIPE BRACKET C150x12x300 WELDED TO CONTAINER C/W U-BOLT

CONTRAT UF
2106

EN ATELIER LE
31 MAI 2017
par: BS

No.	DATE	REVISION	PAR / APP.
0	2017/05/15	ISSUED FOR CONSTRUCTION	KHV

UNIES-FAB

	C	N/C	N/A		C	N/C	N/A
MATÉRIEL	☑	☐	☐	MILL TEST	☑	☐	☐
VISUEL	☑	☐	☐	RAYON X	☐	☐	☐
DIMENSIONNEL	☑	☐	☐	POINÇON	☑	☐	☐
LOCALISATION	☑	☐	☐	EXTRÉMITÉ BOUCHE	☐	☐	☐
ORIENTATION	☑	☐	☐	NETTOYAGE	☐	☐	☐
IDENTIFICATION	☑	☐	☐	PEINTURE	☑	☐	☐

RESPONSABLE ATELIER: DATE 25/06/2017
INSPECTEUR QUALITÉ: DATE 29/06/17

TABLEAU DE CONCEPTION		NOMBRE PAR ASSEMBLAGE TYPIQUE
NORME APPLICABLE	B31.3	
PRESSION DE CONCEPTION MAXI	1500 PSIG	
TEMPERATURE MAX DE CONCEPTION	150°F	
MOAT		
FLUIDE	Diesel	
FLUIDE SERVICE		
ESSAIS NON DESTRUCTIFS		
NIVEAUX DE TYPE ENGORGEMENT		
NIVEAUX DE TYPE JOINT À BOUT	2022166	
AIMANT		
ESSAI MICROSTRUCTURE	0/S	
PMI		
SOUDURE		
SOUDABILITÉ		

FABRICATION DRAWINGS BASED ON WSP CERTIFIED ENGINEERING

CLIENT: AGNICO EAGLE

NUQSANA PROMEC MINING

ultragen

CONSULTANT PROJECT NO. 591700

SCEAU PROFESSIONNEL

CONC.: KHV
DATE: 2017/04/25
DESSINÉ PAR: KVE
DATE: 2017/04/25
VÉR. PAR: -
DATE: -
APP.: -
DATE: -
ÉCHELLE: AUCUNE

PROJET: AGNICO EAGLE - MELIADINE DIVISION
103 - COMBUSTIBLE

TITRE: RANKIN INLET
FABRICATION ISOMETRIC
DIESEL FROM 65TNK11601 & 65TNK11602 TO PUMPING STATION

No PROJET	No DESSIN	PAGES	REV.
6515	103-150-PDI-CC10-003	10/12	0

NO. DE CONDUITE	SPECIFICATION	PRODUIT	SYSTEME REVETEMENT	CODE DE COULEUR	ISOLATION ET TRAÇAGE	EPAISS. D'ISOLATION		
103-150-PDI-CC10-003	CC10	PDI		-			65-103-270-200	PIPE SUPPORT DETAILS
PRESSION D'OPERATION	TEMPERATURE D'OPERATION	PRESSION DE CONCEPTION	TEMPERATURE DE CONCEPTION	PRESSION D'ESSAI	CLASSE D'INSPECTION	CODE DE SERVICE	TRAITEMENT THERMIQUE	65-103-205-200	P&ID
PSIG	°F	PSIG	°F	PSIG				No. DESSIN	DESSINS DE REFERENCE

FICHIER #: \\Mkedata\y\51703 (Fuel Distribution)\05. Design\02. Typicals\02. Isométriques\pt. Rankin Inlet\103-150-PDI-CC10-003-10.DWG

IMPRIMÉ LE: May 17, 2017, 3:28pm

103-MN-01

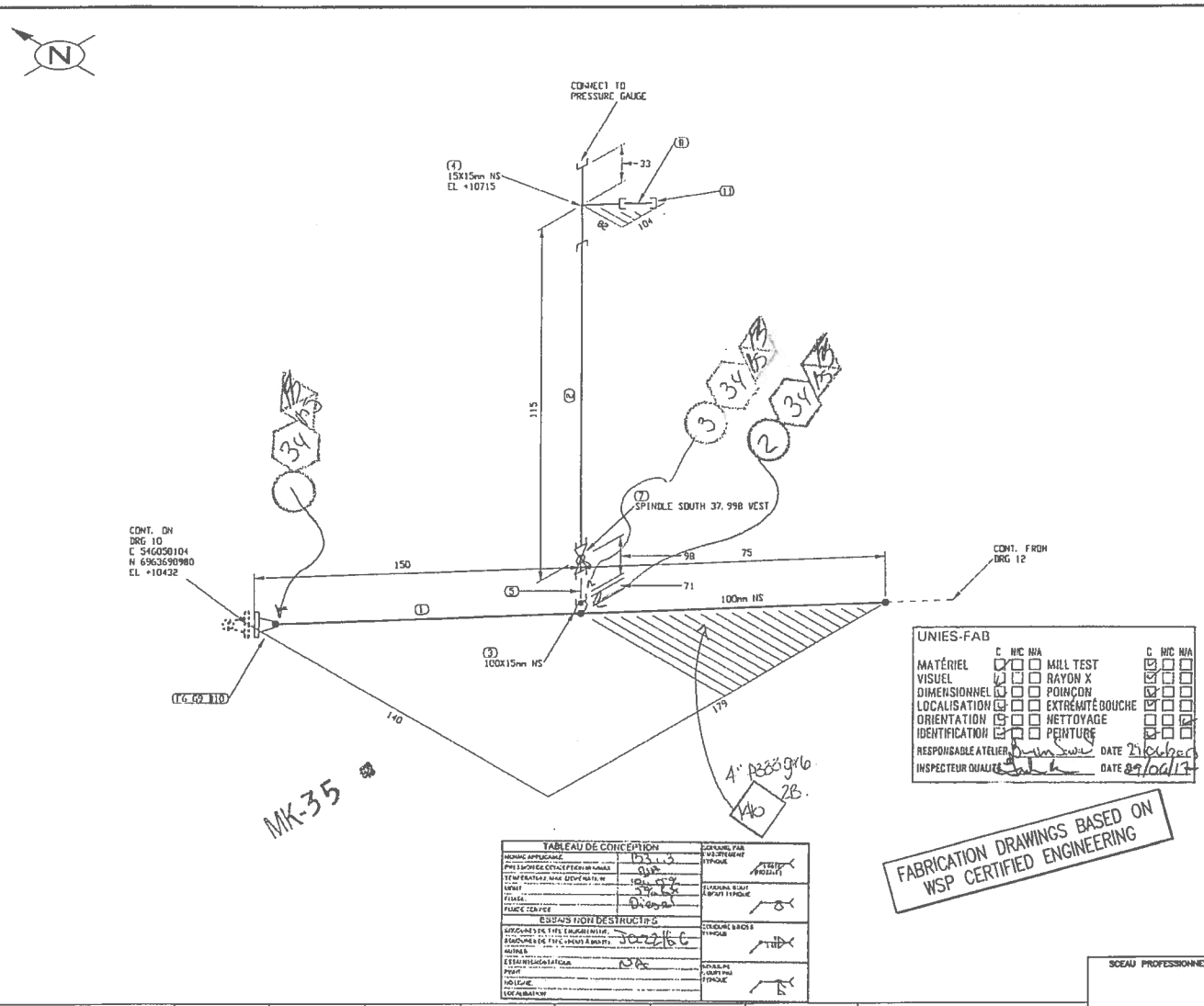

UNIES-FAB	C	N/C	N/A		C	N/C	N/A
MATÉRIEL	☑	☐	☐	MILL TEST	☑	☐	☐
VISUEL	☑	☐	☐	RAYON X	☐	☐	☐
DIMENSIONNEL	☑	☐	☐	POINÇON	☑	☐	☐
LOCALISATION	☑	☐	☐	EXTRÉMITÉ BOUCHE	☑	☐	☐
ORIENTATION	☑	☐	☐	NETTOYAGE	☐	☐	☑
IDENTIFICATION	☑	☐	☐	PEINTURE	☑	☐	☐
RESPONSABLE ATELIER				DATE 21 October			
INSPECTEUR QUALITÉ				DATE 29/06/17			

FABRICATION DRAWINGS BASED ON WSP CERTIFIED ENGINEERING

TABLEAU DE CONCEPTION		
NORME APPLICABLE	B31.3	
PRESSION DE CONCEPTION MANOM.	1500 PSIG	
TEMPÉRATURE MAX DE CONCEPTION	100 °F	
LIQUIDE	Diesel	
FLUIDE	Diesel	
FLUIDE CRITIQUE		
ESSAIS NON DESTRUCTIFS		
RADIOGRAPHIE DES SOUDURES	5 of 216	
RADIOGRAPHIE DES SOUDURES		
AUTRES		
ÉTANCHÉITÉ DE LA TUYAUTERIE	OK	
PRINT		
NOUVELLE		
LOCALISATION		

LISTE DE MATERIEL				
No	QTÉ	DIA	MATÉRIEL/CATALOGUE	DESCRIPTION
1	150 MM	100	A 333 Gr. 6	SCH STD, SMLS PIPE
2	74 MM	15	A 333 Gr. 6	SCH 80, SMLS PIPE
3	1	100X15	A 350 Gr. LF2	CL 3000, SOCKOLET
4	1	15X15	A 350 Gr. LF2	CL 3000, THRD STRAIGHT TEE
5	1	15	A 333 Gr. 6	SCH 80, NIPPLE x 75mm LG PDCxTOE
6	1	100	A 350 Gr. LF2	CL 150, SCH STD, RF, WN FLANGE
7	1	15	DA-3E	CL 800, THRD, BALL VALVE
8	1	15	A 333 Gr. 6	SCH 80, NIPPLE x 75mm LG TBE
9	1	100	ASME B16.20	CL 150, GARLOCK 9500, RING TYPE GASKET 1/8" THK
10	8	16	A 193 B7/A 194 2H	CL 150, 8 - 15.875 x 90 STUD BOLTS c/w TWO HEAVY HEX NUTS
11	1	15	A 350 Gr. LF2	CL 3000, THRD CAP

CONTRAT UF
2106

EN ATELIER LE
31 MAI 2017
par: BF

No.	DATE	REVISION	PAR / APP.
0	2017/05/15	ISSUED FOR CONSTRUCTION	KHV

CLIENT: AGNICO EAGLE

NUQSANA-PROMEC MINING

ultragen

CONSULTANT PROJECT NO. 591700

SCEAU PROFESSIONNEL

CONC.: KHV
DATE: 2017/04/25
DESSINÉ PAR: KVE
DATE: 2017/04/25
VÉR. PAR: -
DATE: -
APP.: -
DATE: -
ÉCHELLE: AUCUNE

PROJET: AGNICO EAGLE - MEADOWBANK DIVISION
103 - COMBUSTIBLE

TITRE: RANKIN INLET
FABRICATION ISOMETRIC
DIESEL FROM 65TNK11601 & 65TNK11602 TO PUMPING STATION

No PROJET	No DESSIN	PAGES	REV.
6515	103-150-PDI-CC10-003	11/12	0

NO. DE CONDUIT		SPÉCIFICATION	PRODUIT	SYSTÈME REVÊTEMENT	CODE DE COULEUR	ISOLATION ET TRAÇAGE	ÉPAISS. D'ISOLATION		
103-150-PDI-CC10-003		CC10	PDI		-			65-103-270-200	PIPE SUPPORT DETAILS
PRESSION D'OPÉRATION	TEMPÉRATURE D'OPÉRATION	PRESSION DE CONCEPTION	TEMPÉRATURE DE CONCEPTION	PRESSION D'ESSAI	CLASSE D'INSPECTION	CODE DE SERVICE	TRAITEMENT THERMIQUE	65-103-205-200	P&ID
PSIG	T	PSIG	T	PSIG				No. DESSIN	DESSINS DE RÉFÉRENCE

103-MM-010

IMPRIMÉ LE: May 17, 2017, 3:27pm

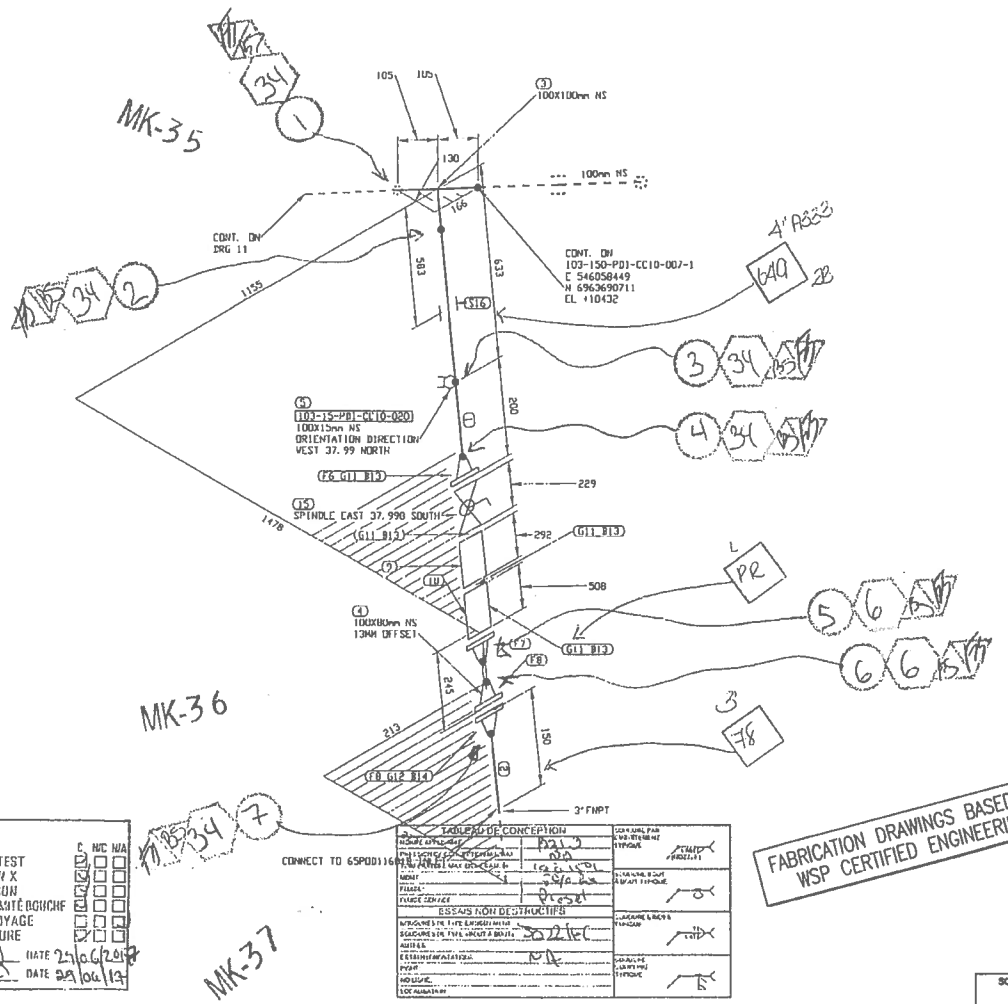

LISTE DE MATERIEL

No	QTE	DIA	MATERIEL/CATALOGUE	DESCRIPTION
1	653 MM	100	A 333 Gr. 6	SCH STD, SMLS PIPE
2	81 MM	80	A 333 Gr. 6	SCH STD, SMLS PIPE PDExTDE
3	1	100X100	A 420 Gr. WPL6	SCH STD, BW STRAIGHT TEE
4	1	100X80	A 420 Gr. WPL6	SCH STD, BW ECC RED
5	1	100X15	A 350 Gr. LF2	CL 3000, THREDOLET
6	1	100	A 350 Gr. LF2	CL 150, SCH STD, RF, WN FLANGE
7	1	100	A 350 Gr. LF2	CL 150, SCH STD, RF, WN FLANGE
8	2	80	A 350 Gr. LF2	CL 150, SCH STD, RF, WN FLANGE
9	1	100		CL 150, BASKET STRAINER
10	1	100		CL 150, SINGLE BRAIDED HOSE ASSEMBLY
11	1	100	ASME B16.20	CL 150, GARLOCK 3500, RING TYPE GASKET 1/8" THK
12	1	80	ASME B16.20	CL 150, GARLOCK 3500, RING TYPE GASKET 1/8" THK
13	32	16	A 193 B7/A 194 2H	CL 150, 8 - 15.875 X 90 STUD BOLTS c/w TWO HEAVY HEX NUTS
14	4	16	A 193 B7/A 194 2H	CL 150, 4 - 15.875 X 90 STUD BOLTS c/w TWO HEAVY HEX NUTS
15	1	100	BA-31	CL 150, RF, BALL VALVE
16	1	100		PIPE SUPPORT AS PER DETAIL 9, DWG 65-103-270-200

CONTRAT UF
2106

EN ATELIER LE
31 MAI 2017
par: BS

No.	DATE	REVISION	PAR / APP.
0	2017/05/15	ISSUED FOR CONSTRUCTION	KHV

CONTRÔLES-FAB

	C	N/C	N/A		C	N/C	N/A
MATÉRIEL	☑	☐	☐	MILL TEST	☑	☐	☐
VISUEL	☑	☐	☐	RAYON X	☑	☐	☐
DIMENSIONNEL	☑	☐	☐	POINÇON	☑	☐	☐
LOCALISATION	☑	☐	☐	EXTRÉMITÉ BOUCHE	☑	☐	☐
ORIENTATION	☑	☐	☐	NETTOYAGE	☐	☐	☐
IDENTIFICATION	☑	☐	☐	PEINTURE	☑	☐	☐

RESPONSABLE ATELIER: DATE 29/06/2017
INSPECTEUR QUALITÉ: DATE 29/04/17

TABLEAU DE CONCEPTION

PRESSION/TEMPÉRATURE DE CONCEPTION	P231.3 / 204	SOMMAIRE PAR CHARGE TYPIQUE
MOMENT	5960 lbs	SOMMAIRE DE CHARGE AU PIED TYPIQUE
FORCE	1652 lbs	
ESSAIS NON DESTRUCTIFS		
SOUDURES DE TUYAUTERIE	20% RT	SOMMAIRE DE SOUDURE TYPIQUE
SOUDURES DE TYPE ACIER À RAILS	100% MT	
AUTRES	N/A	
EXAMEN VISUEL	100%	SOMMAIRE DE CHARGE TYPIQUE
PWHT	N/A	
NO WELDS		
LOCALISATION		

FABRICATION DRAWINGS BASED ON WSP CERTIFIED ENGINEERING

SCEAU PROFESSIONNEL

CLIENT: AGNICO EAGLE

NUQSAHA PROMEC MINING

ultragen

CONSULTANT PROJECT NO. 591700

CONC.: KHV	
DATE: 2017/04/25	
DESSINÉ PAR: KVE	
DATE: 2017/04/25	
VÉR. PAR: -	
-	
DATE: -	
APP.: -	
-	
DATE: -	
ÉCHELLE: AUCUNE	

PROJET: AGNICO EAGLE - MEL IADINE DIVISION
103 - COMBUSTIBLE

TITRE: RANKIN INLET
FABRICATION ISOMETRIC
DIESEL FROM 65TNK11601 & 65TNK11602 TO PUMPING STATION

No PROJET	No DESSIN	PAGES	REV.
6515	103-150-PDI-CC10-003	12/12	0

103-MM-01

NO. DE CONSOLTE		SPECIFICATION	PRODUIT	SYSTEME REVETEMENT	CODE DE COULEUR	ISOLATION ET TRAÇAGE	EPAISS. D'ISOLATION		
103-150-PDI-CC10-003		CC10	PDI		-			65-103-270-200	PIPE SUPPORT DETAILS
PRESSION D'OPERATION	TEMPERATURE D'OPERATION	PRESSION DE CONCEPTION	TEMPERATURE DE CONCEPTION	PRESSION D'ESSAI	CLASSE D'INSPECTION	CODE DE SERVICE	TRAITEMENT THERMIQUE	65-103-205-200	P&ID
PSIG	°F	PSIG	°F	PSIG				No. DESSIN	DESSINS DE REFERENCE

IMPRIMÉ LE: May 17, 2017, 3:27pm

P:\Projets\591700 (Fuel Distribution)\03. Données\02. Dessins\02. Isométriques\01. Rankin Inlet\103-150-PDI-CC10-003-12.DWG

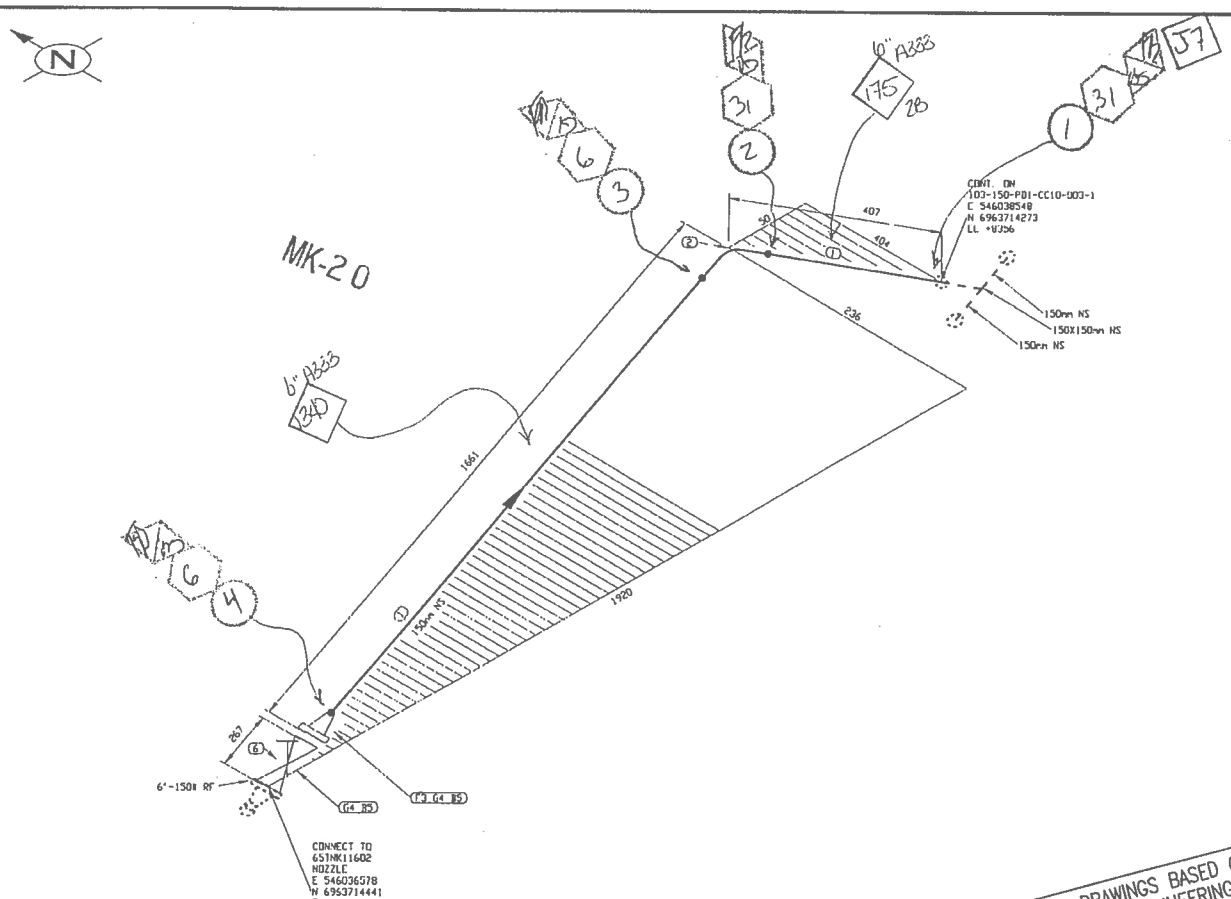

LISTE DE MATERIEL

No	QTE	DIA	MATERIEL/CATALOGUE	DESCRIPTION
1	1523 MM	150	A 333 Gr. 6	SCH STD, SMLS PIPE
2	1	150	A 420 Gr. WPL6	SCH STD, BW LR 90 DEG ELBOW
3	1	150	A 350 Gr. LF2	CL 150, SCH STD, RF, WN FLANGE
4	2	150	ASME B16.20	CL 150, GARLOCK 5500, RING TYPE GASKET 1/8" THK
5	16	19	A 193 B7/A 194 2H	CL 150, Ø - 19.05 X 100 STUD BOLTS c/w TWO HEAVY HEX NUTS
6	1	150	GA-10	CL 150, RF, GATE VALVE

CONTRAT UF
2106

EN ATELIER LE
31 MAI 2017
par: BS

No.	DATE	REVISION	PAR / APP.
0	2017/05/15	ISSUED FOR CONSTRUCTION	KHV

CLIENT: AGNICO EAGLE

NUQSANA PROMEC MINING

ultragen

CONSULTANT PROJECT NO. 591700

UNIES-FAB

	C	N/C	N/A		C	N/C	N/A
MATÉRIEL	☐	☐	☐	MILL TEST	☐	☐	☐
VISUEL	☑	☐	☐	RAYON X	☐	☐	☐
DIMENSIONNEL	☑	☐	☐	POINÇON	☐	☐	☐
LOCALISATION	☑	☐	☐	EXTRÉMITÉ BOUCHE	☑	☐	☐
ORIENTATION	☑	☐	☐	NETTOYAGE	☐	☐	☐
IDENTIFICATION	☑	☐	☐	PEINTURE	☐	☐	☐

RESPONSABLE ATELIER: DATE 25/05/17
INSPECTEUR QUALITÉ: DATE 29/05/17

TABLEAU DE CONCEPTION	
NORME APPLICABLE	B31.3
PRESSION DE CONCEPTION MINIMALE	N/A
TEMPÉRATURE DE CONCEPTION MINIMALE	10 °C
ÂGE	0 an(s)
FLUIDE	Diesel
FLUIDE DE SERVICE	Diesel
ESSAIS NON DESTRUCTIFS	
RADIOGRAPHIE	0.22 %
ULTRASON	N/A
MAGNÉTOSCOPIE	
PRESSION	
HYDROSTATIQUE	
PNEUMATIQUE	
HOLIDAY	
LOCALISATION	

FABRICATION DRAWINGS BASED ON WSP CERTIFIED ENGINEERING

SCEAU PROFESSIONNEL

CONC.: KHV	
DATE:	2017/04/25
DESSINÉ PAR:	KVE
DATE:	2017/04/25
VÉR. PAR:	-
DATE:	-
APP.:	-
DATE:	-
ÉCHELLE:	AUCUNE

PROJET: AGNICO EAGLE - MELIADINE DIVISION
103 - COMBUSTIBLE

TITRE: RANKIN INLET
FABRICATION ISOMETRIC
DIESEL FROM 65TNK11602 TO PUMPING STATION

No PROJET	No DESSIN	PAGES	REV.
6515	103-150-PDI-CC10-004	1/1	0

NO. DE CONDUITE	SPECIFICATION	PRODUIT	SYSTÈME REVÊTEMENT	CODE DE COULEUR	ISOLATION ET TRAÇAGE	ÉPAISS. D'ISOLATION		
103-150-PDI-CC10-004	CC10	PDI		-			65-103-270-200	PIPE SUPPORT DETAILS
PRESSION D'OPÉRATION / TEMPÉRATURE D'OPÉRATION	PRESSION DE CONCEPTION / TEMPÉRATURE DE CONCEPTION	PRESSION D'ESSAI	CLASSE D'INSPECTION	CODE DE SERVICE	TRAITEMENT THERMIQUE		65-103-205-200	P&ID
PSIG / °F	PSIG / °F	PSIG					No. DESSIN	DESSINS DE RÉFÉRENCE

103-MN-01

IMPRIMÉ LE: May 17, 2017, 3:37pm

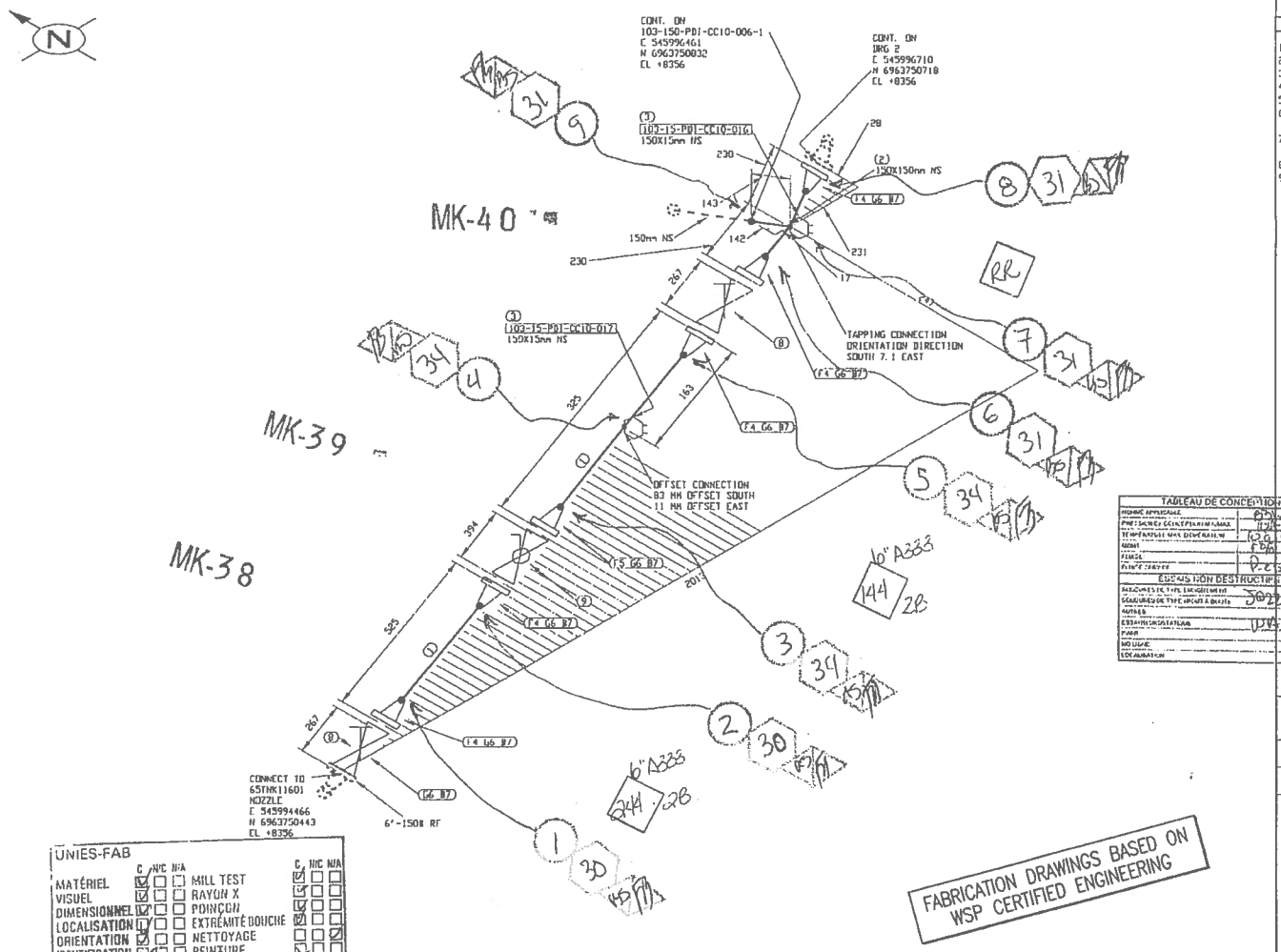

FABRICATION DRAWINGS BASED ON WSP CERTIFIED ENGINEERING

UNIES-FAB

	C	N/C	N/A		C	N/C	N/A
MATÉRIEL	☑	☐	☐	MILL TEST	☑	☐	☐
VISUEL	☑	☐	☐	RAYON X	☑	☐	☐
DIMENSIONNEL	☑	☐	☐	POINÇON	☑	☐	☐
LOCALISATION	☑	☐	☐	EXTRÉMITÉ BOUCHE	☑	☐	☐
ORIENTATION	☑	☐	☐	NETTOYAGE	☐	☐	☑
IDENTIFICATION	☑	☐	☐	PEINTURE	☑	☐	☐

RESPONSABLE ATELIER [signature] DATE 29/06/2017
INSPECTEUR QUALITÉ [signature] DATE 29/06/17

LISTE DE MATERIEL

No	QTE	DIA	MATERIEL/CATALOGUE	DESCRIPTION
1	502 MM	150	A 333 Gr. 6	SCH STD, SMLS PIPE
2	1	150X150	A 420 Gr. WPL6	SCH STD, BW STRAIGHT TEE
3	2	150X15	A 350 Gr. LF2	CL 3000, THREDOLET
4	5	150	A 350 Gr. LF2	CL 150, SCH STD, RF, WN FLANGE
5	1	150	A 350 Gr. LF2	CL 150, SCH STD, RF, WN FLANGE
6	7	150	ASME B16.20	CL 150, GARLOCK 5500, RING TYPE GASKET 1/8" THK
7	56	19	A 193 B7/A 194 2H	CL 150, 8 - 19.05 X 100 STUD BOLTS c/w TWO HEAVY HEX NUTS
8	2	150	GA-10	CL 150, RF, GATE VALVE
9	1	150	BA-31	CL 150, RF, BALL VALVE

CONTRAT UF
2106

EN ATELIER LE
31 MAI 2017
par: BS

No.	DATE	REVISION	PAR / APP.
0	2017/05/15	ISSUED FOR CONSTRUCTION	KHV

CLIENT:

AGNICO EAGLE

NUQSANA PROMEC MINING

ultragen

CONSULTANT PROJECT NO. 591700

SCEAU PROFESSIONNEL

CONC.: KHV
DATE: 2017/04/25
DESSINÉ PAR: KVC
DATE: 2017/04/25
VER. PAR: -
DATE: -
APP.: -
DATE: -
ÉCHELLE: AUCUNE

PROJET: AGNICO EAGLE - MELIADINE DIVISION
103 - COMBUSTIBLE

TITRE: RANKIN INLET
FABRICATION ISOMETRIC
DIESEL FROM 65TNK11601 TO PUMPING STATION

No PROJET	No DESSIN	PAGES	REV.
6515	103-150-PDI-CC10-005	1/5	0

NO. DE CONDUITE		SPECIFICATION	PRODUIT	SYSTEME REVETEMENT	CODE DE COULEUR	ISOLATION ET TRACAGE	EPAISS. D'ISOLATION		
103-150-PDI-CC10-005		CC10	PDI		-			65-103-270-200	PIPE SUPPORT DETAILS
PRESSION D'OPERATION	TEMPERATURE D'OPERATION	PRESSION DE CONCEPTION	TEMPERATURE DE CONCEPTION	PRESSION D'ESSAI	CLASSE D'INSPECTION	CODE DE SERVICE	TRAITEMENT THERMIQUE	65-103-205-200	P&ID
PSIG	°F	PSIG	°F	PSIG				No. DESSIN	DESSINS DE REFERENCE

103-MN-01

IMPRIME LE: May 17, 2017, 3:28pm

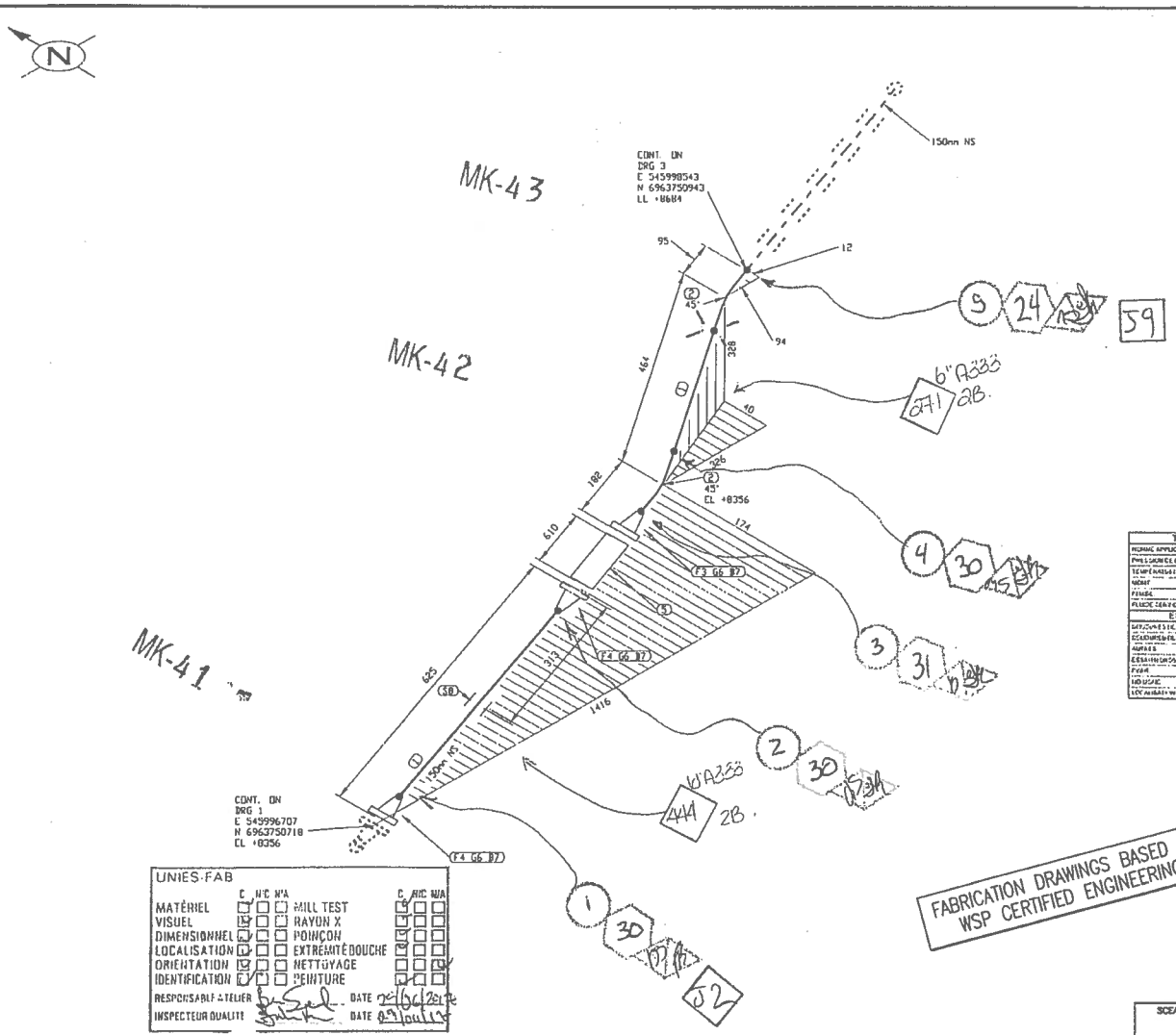

No	QTE	DIA	MATERIEL/CATALOGUE	DESCRIPTION
1	2 c/s MM	150	A 333 Gr. 6	SCH STD, SMLS PIPE
2	2	150	A 420 Gr. WPL6	SCH STD, BW LR 45 DEG ELBOW
3	1	150	A 350 Gr. LF2	CL 150, SCH STD, RF, WN FLANGE
4	2	150	A 350 Gr. LF2	CL 150, SCH STD, RF, WN FLANGE
5	1	150		CL 150, SINGLE BRAIDED NOSE ASSEMBLY
6	3	150	ASME B16.20	CL 150, GARLOCK 5500, RING TYPE GASKET 1/8" THK
7	24	19	A 193 B7/A 194 2H	CL 150, 8 - 19.05 X 100 STUD BOLTS c/w TWO HEAVY HEX NUTS
8	1	150		PIPE SHOE AS PER DETAIL 2, DWG. GS 103 270 200

TABLEAU DE CONCEPTION

MOMENT APPLICABLE			
PRESSION DE CONCEPTION (PSIG)			
TEMPERATURE MAX DE CONCEPTION			
NOMBRE			
PENDEL			
FLUIDE DE SERVICE			
ESSAIS NON DESTRUCTIFS			
RADIOGRAPHIE (TYPE D'ENREGISTREMENT)			
ECOUTURES RADIOGRAPHIEES (%)			
ESSAIS			
ESSAIS HYDROSTATIQUE			
POINT			
MOUSSE			
TEST MAGNETIQUE			

CONTRAT UF
2106

EN ATELIER LE
31 MAI 2017
par:

No.	DATE	REVISION	
0	2017/05/15	ISSUED FOR CONSTRUCTION	KHV
			PAR
			APP

FABRICATION DRAWINGS BASED ON WSP CERTIFIED ENGINEERING

UNIES-FAB

	C	N/C	N/A		C	N/C	N/A
MATÉRIEL	☐	☐	☐	MILL TEST	☐	☐	☐
VISUEL	☑	☐	☐	RAYON X	☐	☐	☐
DIMENSIONNEL	☑	☐	☐	POINÇON	☐	☐	☐
LOCALISATION	☑	☐	☐	EXTRÉMITÉ DOUCHE	☐	☐	☐
ORIENTATION	☑	☐	☐	NETTOYAGE	☐	☐	☐
IDENTIFICATION	☑	☐	☐	PEINTURE	☐	☐	☐

RESPONSABLE ATELIER — DATE 25/06/2017
INSPECTEUR QUALITÉ — DATE 29 juin 17

CLIENT: AGNICO EAGLE

NUQSANA PROMEC MINING

ultragen
CONSULTANT PROJECT NO. 591700

SCEAU PROFESSIONNEL

CONC.: KHV
DATE: 2017/04/25
DESSINÉ PAR: KVC
DATE: 2017/04/25
VÉR. PAR: -
DATE: -
APP.: -
DATE: -
ÉCHELLE: AUCUNE

PROJET: AGNICO EAGLE - MELIADINE DIVISION
103 - COMBUSTIBLE

TITRE: RANKIN INLET
FABRICATION ISOMETRIC
DIESEL FROM 65TNK11601 TO PUMPING STATION

No PROJET	No DESSIN	PAGES	REV.
6515	103-150-PDI-CC10-005	2/5	0

NO. DE CONDUITE		SPECIFICATION	PRODUIT	SYSTEME REVETEMENT	CODE DE COULEUR	ISOLATION ET TRACAGE	EPAISS. D'ISOLATION		
103-150-PDI-CC10-005		CC10	PDI		-			65-103-270-200	PIPE SUPPORT DETAILS
PRESSION D'OPERATION	TEMPERATURE D'OPERATION	PRESSION DE CONCEPTION	TEMPERATURE DE CONCEPTION	PRESSION D'ESSAI	CLASSE D'INSPECTION	CODE DE SERVICE	TRAITEMENT THERMIQUE	65-103-205-200	P&ID
PSIG	°F	PSIG	°F	PSIG				No. DESSIN	DESSINS DE REFERENCE

103-NN-01

IMPRIMÉ LE: May 17, 2017, 3:28pm

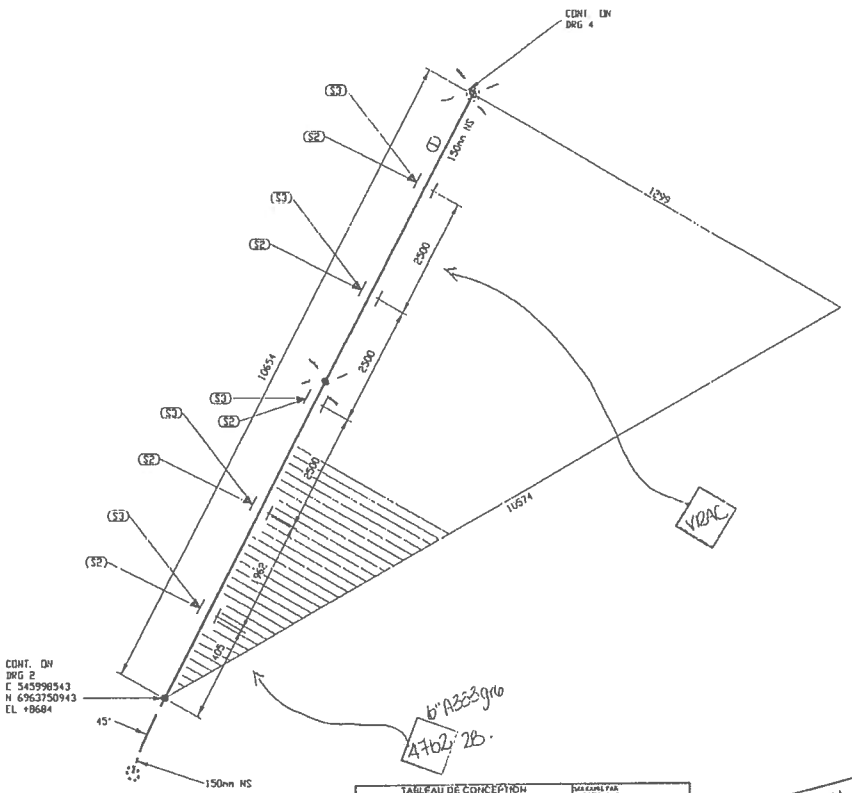

TABLEAU DE CONCEPTION		
NOMINE APPLICABLE	B31.3	
PRESSION DE CONCEPTION (psig)	N/A	
TEMPERATURE MAX DE CONCEPTION	150 °F	
NOMBRE	3	
FLUIDE	Diesel	
FLUIDE DE SERVICE		
ESSAIS NON DESTRUCTIFS		
RADIOGRAPHIE DE PLEIN ENVOLUME	0.02/66	
RADIOGRAPHIE DE PLEIN VOLUME DE SOUDURE		
AUTRES		
ESSAI HYDROSTATIQUE	N/A	
PNEU		
HOLIDAY		
LOCALISATION		

FABRICATION DRAWINGS BASED ON WSP CERTIFIED ENGINEERING

LISTE DE MATERIEL

No	QTE	DIA	MATERIEL/CATALOGUE	DESCRIPTION
1	10654 MM	150	A 333 Gr. 6	SCH STD, SMLS PIPE
2	5	150		PIPE SUPPORT AS PER DETAIL 1, DWG# 65-103-270-200
3	5	150		PIPE SHOE AS PER DETAIL 2, DWG# 65-103-270-200

CONTRAT UF
2106

EN ATELIER LE
31 MAI 2017
par: BS

No.	DATE	REVISION	PAR / APP.
0	2017/05/15	ISSUED FOR CONSTRUCTION	KHV

CLIENT: AGNICO EAGLE

NUQSANA PROMEC MINING

ultragen

CONSULTANT PROJECT NO. 591700

SCEAU PROFESSIONNEL

CONC.: KHV
DATE: 2017/04/28
DESSINE PAR: KVE
DATE: 2017/04/23
VER. PAR: -
DATE: -
APP.: -
DATE: -
ÉCHELLE: AUCUNE

PROJET: AGNICO EAGLE - MEL1ADINE DIVISION
103 - COMBUSTIBLE

TITRE: RANKIN INLET
FABRICATION ISOMETRIC
DIESEL FROM 65TNK11601 TO PUMPING STATION

No PROJET	No DESSIN	PAGES	REV.
6515	103-150-PDI-CC10-005	3/5	0

NO. DE CONDUITE		SPECIFICATION	PRODUIT	SYSTEME REVETEMENT	CODE DE COULEUR	ISOLATION ET TRACAGE	EPAISS. D'ISOLATION		
103-150-PDI-CC10-005		CC10	PDI		-			65-103-270-200	PIPE SUPPORT DETAILS
PRESSION D'OPERATION	TEMPERATURE D'OPERATION	PRESSION DE CONCEPTION	TEMPERATURE DE CONCEPTION	PRESSION D'ESSAI	CLASSE D'INSPECTION	CODE DE SERVICE	TRAITEMENT THERMIQUE	65-103-205-200	P&ID
PSIG	°F	PSIG	°F	PSIG				No. DESSIN	DESSINS DE REFERENCE

103-NW-F01

PDF/E REV

IMPRIMÉ LE: May 17, 2017, 3:29pm

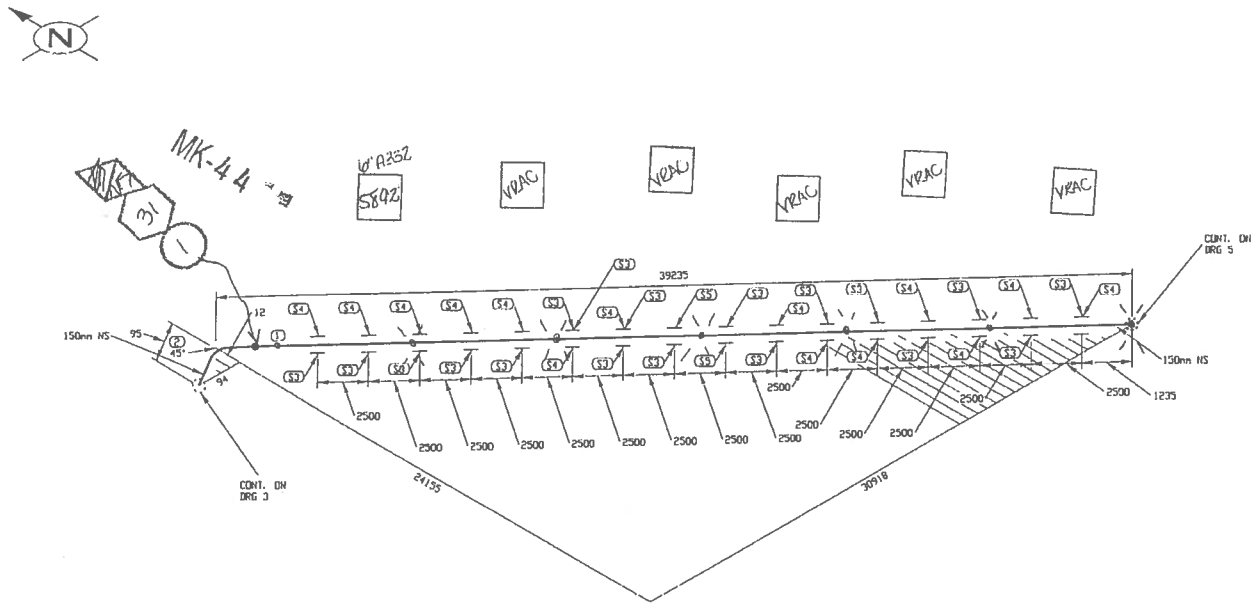

LISTE DE MATERIEL

No	QTE	DIA	MATERIEL/CATALOGUE	DESCRIPTION
1	39140 MM	150	A 333 Gr. 6	SCH STD, SMLS PIPE
2	1	150	A 420 Gr. WPL6	SCH STD, BW LR 45 DEG ELBOW
3	18	150		PIPE SHOE AS PER DETAIL 2, DWG 65-103-270-200
4	14	150		PIPE SUPPORT AS PER DETAIL 1, DWG 65-103-270-200
5	2	150		PIPE SUPPORT AS PER DETAIL 3, DWG 65-103-270-200

CONTRAT UF
2106

EN ATELIER LE
31 MAI 2017
par : _____

No.	DATE	REVISION	KHV / PAR / APP.
0	2017/05/15	ISSUED FOR CONSTRUCTION	KHV

CLIENT:

AGNICO EAGLE

NUQSANA PROMEC MINING

ultragen

CONSULTANT PROJECT NO. 591700

FABRICATION DRAWINGS BASED ON WSP CERTIFIED ENGINEERING

UNIES-FAB

	C	N/C	N/A		C	N/C	N/A
MATÉRIEL	☑	☐	☐	MILL TEST	☑	☐	☐
VISUEL	☑	☐	☐	RAYON X	☑	☐	☐
DIMENSIONNEL	☑	☐	☐	POINÇON	☑	☐	☐
LOCALISATION	☑	☐	☐	EXTRÉMITÉ BOUCHE	☑	☐	☐
ORIENTATION	☑	☐	☐	NETTOYAGE	☐	☐	☑
IDENTIFICATION	☑	☐	☐	PEINTURE	☑	☐	☐

RESPONSABLE ATELIER [signature] DATE 25/06/2017
INSPECTEUR QUALITE [signature] DATE 29/06/17

TABLEAU DE CONCEPTION

NOMBRE APPLICABLE	D515
PRESSION DE CONCEPTION MINIMUM	NPD
TEMPERATURE MAX OPERATION	10 à 15 °C
MINUT	2%
FINAL	Diesel
FLUIDE CONTENU	

ESSAIS NON DESTRUCTIFS

SOUDURES DE TYPE ENGAGEMENT	30 à 216 °C
SOUDURES DE TYPE (BOUT À BOUT)	
MINUTE	
ESSAI HYDROSTATIQUE	N/A
PIVOT	
NOTICE	
LOCALISATION	

COLONNE PAR ENGAGEMENT TYPIQUE — PIPE (NOZZLE)
SOUDURE BOUT À BOUT TYPIQUE — O
COLONNE BRIDER TYPIQUE — HD
SOUDURE PIVOT TYPIQUE — E

SCEAU PROFESSIONNEL

CONC.: KHV
DATE: 2017/04/25
DESSINÉ PAR: KVE
DATE: 2017/04/25
VÉR. PAR: -
DATE: -
APP.: -
DATE: -
ÉCHELLE: AUCUNE

PROJET: AGNICO EAGLE - MELIADINE DIVISION
103 - COMBUSTIBLE

TITRE: RANKIN INLET
FABRICATION ISOMETRIC
DIESEL FROM 65TNK11601 TO PUMPING STATION

No PROJET	No DESSIN	PAGES	RÉV.
6515	103-150-PDI-CC10-005	4/5	0

NO. DE CONDUITE		SPECIFICATION	PRODUIT	SYSTEME REVETEMENT	CODE DE COULEUR	ISOLATION ET TRACAGE	EPAISS. D'ISOLATION		
103-150-PDI-CC10-005		CC10	PDI		-			65-103-270-200	PIPE SUPPORT DETAILS
PRESSION D'OPERATION	TEMPERATURE D'OPERATION	PRESSION DE CONCEPTION	TEMPERATURE DE CONCEPTION	PRESSION D'ESSAI	CLASSE D'INSPECTION	CODE DE SERVICE	TRAITEMENT THERMIQUE	65-103-205-200	P&ID
PSIG	°F	PSIG	°F	PSIG				No. DESSIN	DESSINS DE REFERENCE

103-MN-01

FICHIER: M V

IMPRIMÉ LE: May 17, 2017, 3:29pm

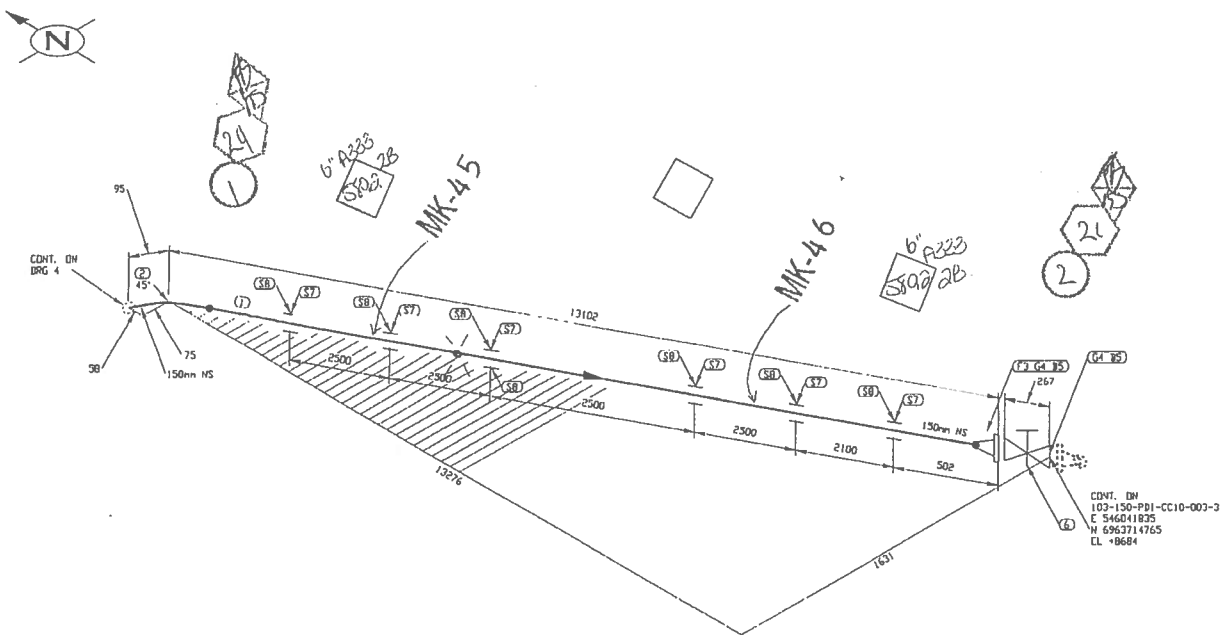

LISTE DE MATERIEL

No	QTE	DIA	MATERIEL/CATALOGUE	DESCRIPTION
1	12919 MM	150	A 333 Gr. 6	SCH STD, SMLS PIPE
2	1	150	A 420 Gr. WPL6	SCH STD, BW LR 45 DEG ELBOW
3	1	150	A 350 Gr. LF2	CL 150, SCH STD, RF, WN FLANGE
4	2	150	ASME B16.20	CL 150, GARLOCK 5500, RING TYPE GASKET 1/8" THK
5	16	19	A 193 B7/A 194 2H	CL 150, Ø - 19.05 X 100 STUD BOLTS c/w TWO HEAVY HEX NUTS
6	1	150	GA-10	CL 150, RF, GATE VALVE
7	6	150		PIPE SUPPORT AS PER DETAIL 1, DWG 65-103-270-200
8	7	150		PIPE SHOE AS PER DETAIL 2, DWG 65-103-270-200

CONTRAT UF
2106

EN ATELIER LE
31 MAI 2017
par:

UNIES-FAB

	C	NC	N/A		C	NC	N/A
MATÉRIEL	☑	☐	☐	MILL TEST	☐	☐	☐
VISUEL	☑	☐	☐	RAYON X	☐	☐	☐
DIMENSIONNEL	☑	☐	☐	POINÇON	☐	☐	☐
LOCALISATION	☑	☐	☐	EXTRÉMITÉ BOUCHE	☐	☐	☐
ORIENTATION	☑	☐	☐	NETTOYAGE	☐	☐	☐
IDENTIFICATION	☑	☐	☐	PEINTURE	☐	☐	☐

RESPONSABLE ATELIER: DATE 2/16/2017
INSPECTEUR QUALITÉ: DATE 2/16/17

TABLEAU DE CONCEPTION		SOUDAGE PAR EMBOÎTEMENT TYPIQUE
NORME APPLICABLE	B31.3	
PRESSION DE CONCEPTION (PSIG)	740	
TEMPÉRATURE MAX DE CONCEPTION	158°F	SOUDAGE BOUT À BOUT TYPIQUE
DÉBIT	350 GPM	
FLUIDE	DIESEL	
FLUIDE CORROSIF		SOUDAGE BRIDES TYPIQUE
ESSAIS NON DESTRUCTIFS		
RT-2 OU RT-3 TYPE ENREGISTRÉ	20 %	
RÉPARATION TYPE UNIQUE À NOTER		
AUTRES		
ÉCHANTILLONNAGE	N/A	SOUDAGE D'ADAPTATION EN HAUT
PWHT		
HORIZONTAL		
LUG ALIGNMENT		

FABRICATION DRAWINGS BASED ON WSP CERTIFIED ENGINEERING

No.	DATE	REVISION	PAR / APP.
0	2017/05/15	ISSUED FOR CONSTRUCTION	KHV

CLIENT: AGNICO EAGLE

NUQSANA/PROMEC MINING

ultragen

CONSULTANT PROJECT NO. 591700

SCEAU PROFESSIONNEL

CONC.: KHV
DATE: 2017/04/25
DESSINÉ PAR: KVE
DATE: 2017/04/25
VÉR. PAR: –
DATE: –
APP.: –
DATE: –
ÉCHELLE: AUCUNE

PROJET: AGNICO EAGLE – MELIADINE DIVISION
103 – COMBUSTIBLE

TITRE: RANKIN INLET
FABRICATION ISOMETRIC
DIESEL FROM 65TNK11601 TO PUMPING STATION

No PROJET	No DESSIN	PAGES	REV.
6515	103-150-PDI-CC10-005	5/5	0

NO. DE CONDUITE		SPECIFICATION	PRODUIT	SYSTÈME REVÊTEMENT	CODE DE COULEUR	ISOLATION ET TRAÇAGE	ÉPAISS. D'ISOLATION		
103-150-PDI-CC10-005		CC10	PDI		–			65-103-270-200	PIPE SUPPORT DETAILS
PRESSION D'OPÉRATION	TEMPÉRATURE D'OPÉRATION	PRESSION DE CONCEPTION	TEMPÉRATURE DE CONCEPTION	PRESSION D'ESSAI	CLASSE D'INSPECTION	CODE DE SERVICE	TRAITEMENT THERMIQUE	65-103-205-200	P&ID
PSIG	°F	PSIG	°F	PSIG				No. DESSIN	DESSINS DE RÉFÉRENCE

103-MN-01

PDF/E: K.V

IMPRIMÉ LE: May 17, 2017, 3:29pm

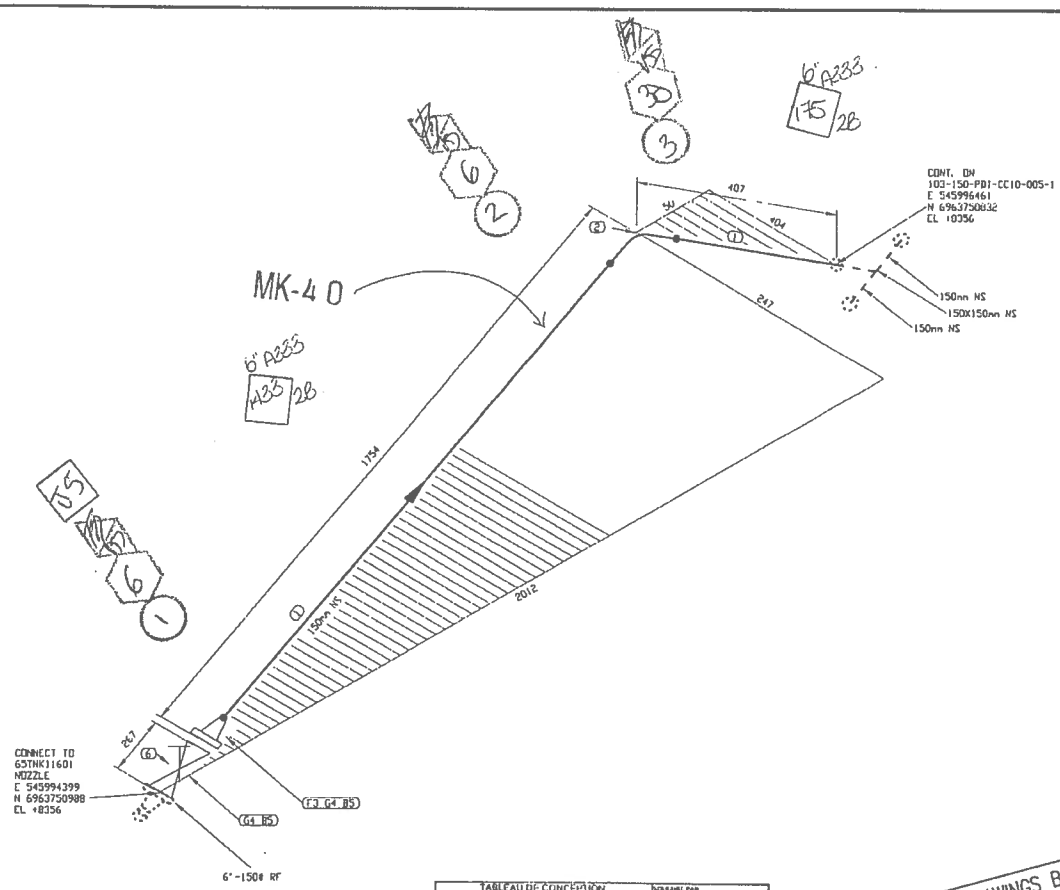

LISTE DE MATERIEL

No	QTE	DN	MATERIEL/CATALOGUE	DESCRIPTION
1	1616 MM	150	A 333 Gr. 6	SCH STD, SMLS PIPE
2	1	150	A 420 Gr. WPL6	SCH STD, BW LR 90 DEG ELBOW
3	1	150	A 350 Gr. LF2	CL 150, SCH STD, RF, WN FLANGE
4	2	150	ASME B16.20	CL 150, GARLOCK 5500, RING TYPE GASKET 1/8" THK
5	16	19	A 193 B7/A 194 2H	CL 150, Ø - 19.05 X 100 STUD BOLTS c/w TWO HEAVY HEX NUTS
6	1	150	GA-10	CL 150, RF, GATE VALVE

CONTRAT UF
2106

EN ATELIER LE
31 MAI 2017
par:

No.	DATE	REVISION	PAR / APP.
0	2017/05/15	ISSUED FOR CONSTRUCTION	KHV

UNIES-FAB

	C	NC	N/A		C	NC	N/A
MATÉRIEL	☑	☐	☐	MILL TEST	☐	☐	☐
VISUEL	☑	☐	☐	RAYON X	☐	☐	☐
DIMENSIONNEL	☑	☐	☐	POINÇON	☑	☐	☐
LOCALISATION	☑	☐	☐	EXTRÉMITÉ BOUCHE	☐	☐	☐
ORIENTATION	☑	☐	☐	NETTOYAGE	☐	☐	☐
IDENTIFICATION	☑	☐	☐	PEINTURE	☐	☐	☐

RESPONSABLE ATELIER: DATE 25 oct 17
INSPECTEUR QUALITÉ: DATE 2 Nov 17

TABLEAU DE CONCEPTION

NORME APPLICABLE	B31.3
PRESSION & CONDITION DE DESIGN	N/A
TEMPERATURE MAX DE DESIGN	100-150
MINIMUM	N/A
FLUIDE	Diesel
FACTEUR DE JOINT	

ESSAIS NON DESTRUCTIFS

% DES JOINTS DE TYPE ENREGISTRÉS	5022166
% DES JOINTS DE TYPE "BOUT À BOUT"	
AUTRES	N/A
RADIOGRAPHIQUE	
PMI	
MOUSSE	
LOCALISATION	

NORMES PAR ENREGISTREMENT TYPIQUE: TRAITEMENT THERMIQUE
LOCALISATION DES SOUDURES: TRAITEMENT THERMIQUE
LOCALISATION DES SOUDURES: ESSAI NON DESTRUCTIF

FABRICATION DRAWINGS BASED ON WSP CERTIFIED ENGINEERING

CLIENT: AGNICO EAGLE

NUQSANA PROMEC MINING

ultragen

CONSULTANT PROJECT NO. 591700

SCEAU PROFESSIONNEL

CONC.: KHV
DATE: 2017/04/25
DESSINÉ PAR: KVE
DATE: 2017/04/25
VÉR. PAR: -
DATE: -
APP.: -
DATE: -
ÉCHELLE: AUCUNE

PROJET: AGNICO EAGLE - MEL1ADINE DIVISION
103 - COMBUSTIBLE

TITRE: RANKIN INLET
FABRICATION ISOMETRIC
DIESEL FROM 65TNK11601 TO PUMPING STATION

No PROJET	No DESSIN	PAGES	REV.
6515	103-150-PDI-CC10-006	1/1	0

NO. DE CONDUITE		SPECIFICATION	PRODUIT	SYSTEME REVETEMENT	CODE DE COULEUR	ISOLATION ET TRACAGE	EPAISS. D'ISOLATION		
103-150-PDI-CC10-006		CC10	PDI		-			65-103-270-200	PIPE SUPPORT DETAILS
PRESSION D'OPERATION	TEMPERATURE D'OPERATION	PRESSION DE CONCEPTION	TEMPERATURE DE CONCEPTION	PRESSION D'ESSAI	CLASSE D'INSPECTION	CODE DE SERVICE	TRAITEMENT THERMIQUE	65-103-205-200	P&ID
PSIG	°F	PSIG	°F	PSIG				No. DESSIN	DESSINS DE REFERENCE

103-MN-01

IMPRIMÉ LE: May 17, 2017, 3:30pm



(9127-8754 Québec inc.)
2380 de la Métallurgie
Jonquière (Québec)
G7X 9H2

MANUEL DE CONTRÔLE DE LA QUALITÉ

RAPPORT DE FABRICATION

FABRICANT : UNIES-FAB

(NOTRE REF. :UF-2106)

PROJET

PROJET

FABRIQUANT : UNIES-FAB (NOTRE REF. : UF-2106)

CLIENT :

INDEX DES SECTIONS

1. LÉGENDE
2. LISTE DES PROCÉDURES
3. PROCÉDURES DE SOUDURES
4. LISTE DES SOUDEURS
5. RAPPORTS DES TESTS DE QUALIFICATIONS DES SOUDEURS
6. LISTE DES JOINTS DE SOUDURE INSPECTÉS (E.N.D)
7. RAPPORTS D'INSPECTION & D'ESSAI
8. DÉCLARATION DU CLIENT
9. DÉCLARATION DE CONFORMITÉ DU CONSTRUCTEUR
10. FEUILLE DE ROUTE DE LA TUYAUTERIE
11. DESSINS ISOMÉTRIQUE IDENTIFIANT LES JOINTS AYANT SUBIS DES ESSAIS
12. MILLS TESTS

LÉGENDE

LÉGENDE DES DESSINS

 NUMÉRO DE SOUDURE

 IDENTIFICATION DU SOUDEUR (POINÇON)

 INSPECTION VISUEL

 NUMÉRO D'ESSAIS RADIOGRAPHIQUE (E.N.D.)

LISTE DES PROCÉDURES DE SOUDURE

NO. PROCEDURE	RÉVISION	TYPE DE MATÉRIEL	REMARQUE
JQ2216.6		A333 GR 6	

PROCÉDURES DE SOUDURE

Régie du bâtiment Québec — Appareils sous pression

DESCRIPTION DE LA METHODE DE SOUDAGE (DMS)
Welding Procedure Specification (WPS)

Notes: Les titres désignent également les hommes et les femmes.

(1) Entreprise/*Company*

Nom/Name: UNIES FAB INC

Adresse/Adress: 2380 DE LA MÉTALLURGIE JONQUIÈRE

QC

Code postal: G7X 9H2

(2) Enregistrement provincial / *Provincial Registration*: MS WP JQ 2216.6

(3) Désignation de la méthode/*Procédure Identification*

DMS N° / WPS No.: PT-GMAW-AC-001 — Révision N° / Revision No.: 7

RMS N° / PQR No.: PT-GMAW-001,GMAW-001

Section du code / Code section: SECTION IX

(4) Procédé(s) de soudage / *Welding Process(es)*

1	GMAW COURT CIRCUIT	Manuel/Manual ☐	Semi-auto. ☒	Machine ☐	Auto. ☐
2	GMAW GLOBULAIRE ,PLUIE	Manuel/Manual ☐	Semi-auto. ☒	Machine ☐	Auto. ☐
3		Manuel/Manual ☐	Semi-auto. ☐	Machine ☐	Auto. ☐

(5) Joints/*Joints* (QW-402)

Genre/Design: BOUT À BOUT , ANGLE

Soutien / Backing — Oui / Yes ☒ — Non / No ☒ — Matériau de soutien / Backing material: P1 OU SOUDURE

Support de retenue / Retainer: NON

Autre / Other: N/A

Voir Annexe ⓪

(6) Métaux de base/*Base Metals* (QW-403)

PN°/No. 1 Gr N°/No. 1-2-3 à/to PN°/No. 1 Gr N°/no. 1-2-3

ou Spécifications type et grade / or Specifications type and grade: N/A à/to N/A

ou Analyse chimique et prop. méc. / or Chemical Analysis and Mech. Prop.: N/A à/to N/A

Gamme des épaisseurs qualifiées métaux de base / Base Metal Thickness Range Qualified — Chanfrein / Groove — Min.: 3/16" — Max.: 8" — Angle: Fillet: AUCUNE

Épaisseur maximale de la plus épaisse des passes de soudage / Maximum thickness of any welding pass: 1/4"

Autre / Other: N/A

(7) Métaux d'apport/*Filler Metals* (QW-404)

1 AWS N° No. E70C-6C-H4/ 6M H4	SFA 5.18	F-No. 6	A-No. (*)	Dia. 0.062" À 1/16"
2 AWS N° No.	SFA	F-No.	A-No.	Dia.
3 AWS N° No.	SFA	F-No.	A-No.	Dia.

Gamme des épaisseurs qualifiées pour dépôt de soudage / Weld Metal Thickness Range Qualified — Chanfrein / Groove — 1 max.: 0.1375 — 2 max.: 8" — 3 max.: — Angle: Fillet: ALL

Marque de commerce du flux / Flux Tradename: N/A — Classification du flux-électrode / Electrode-Flux Classification:

Pièce insérée consumable / Consumable Insert: N/A — Autre / Other: FIL FOURRÉ SANS LAITIER (METAL CORED)

Autre / Other: CARBON:0.07%-0.15% MANGANESE:1.40%-1.85% SILICON

(8) Positions/*Positions* (QW-405)

Position(s) du chanfrein / Position(s) of Groove: TOUTE POSITION

Progression du soudage / Welding Progression — Montant / Up ☒ — Descendant / Down ☒

Position(s) de l'angle / Position(s) of Fillet: TOUTE POSITION

Autre / Other: N/A

(9) Préchauffage/*Preheat* (QW-406)

Température de préchauffage / Preheat Temperature: Min. .60 °F

Température de l'interpasse / Interpass Temperature: Max. 450°F

Maintien du préchauffage / Preheat Maintenance: N/A

Autre / Other: N/A

(10) *Traitement thermique postsoudage/ Postweld Heat Treatment* (QW-407)

Gamme de températures / Temperature Range: N/A

Gamme de durée / Time range: N/A

Autre / Other: N/A

(11) Gaz/*Gas* (QW-408)

Composition du gaz de protection / Shielding Gas Composition: 83%AR 17%CO2

Débit du gaz / Gas Flow Rate: 30-40 CFH

Composition du gaz de soutien / Backing Gas Composition: N/A

Débit du gaz / Gas Flow Rate: N/A

Composition du gaz de protection traînant / Trailing Shielding Gas Composition: N/A

(12) Caractéristiques électriques et techniques/Electrical Characteristics and Technique (QW-409) + (QW-410)

Couche(s) de soudure Weld Layer(s)	Procédé Process	Métal d'apport/Filler Metal		Courant/Current				Gamme de vitesse Travel Speed Range
		Classification Classification	Diamètre Diameter	Type Type	Polarité Polarity	Gamme d'ampérage Amp Range	Gamme de voltage Volt Range	
1	GMAW	E70-6C / 6M	0.052"	DC	EP	190-310	23-31	N/A
2& PLUS	GMAW	E70-6C / 6M	0.052"	DC	EP	190-310	23-31	N/A
1	GMAW	E70-6C / 6M	1/16"	DC	EP	200-340	23-33	N/A
2& PLUS	GMAW	E70-6C / 6M	1/16"	DC	EP	200-340	23-33	N/A

Énergie de chaleur maximale / Maximum Heat Input: N/A

Courant variable / Pulsing Current: N/A

Grosseur et type d'électrode de tungstène / Tungsten Electrode Size and Type: N/A

Mode de transfert du métal pour GMAW / Mode of Metal Transfert for GMAW: 1ière passe COURT CIRCUIT 2ième &plus , GLOBULAIRE ,PLUIE

Cordon droit ou oscillant / String or Weave Bead:

Procédé de gougeage arrière / Method of Back Gouging: arc air , meulage

Nettoyage initial et entre les passes (brossage, meulage, etc) / Initial and Interpass Cleaning (Brushing, Grinding, etc.): brossage et meulage

Diamètre de la tuyère à gaz / Orifice or Gas Cup Size: 1/2" à 3/4"

Oscillation / Oscillation: N/A — Largeur / Width: N/A — Fréquence / Frequency: N/A

Distance entre tube-contact et pièce / Contact Tube to Work Distance: 1/2" à 3/4"

Passe unique ou multiple (par côté) / Multiple or single Pass (per Side): UNIQUE / MULTIPLE

Électrode unique ou multiple / Multiple or Single Electrode: UNIQUE

Gamme de vitesse d'alimentation de l'électrode / Electrode Wire feed speed range: N/A

Martelage / Peening: NON

Autre / Other: 410.64 NON /APPLIQUABLE

(13) Autres commentaires/Supplementary Comments

REVISION #7 :AJOUT DE MÉTAL D'APPORT E70C6M 0.052 & 1/16"

(14) Signature du représentant de l'entreprise / Company Representative's Signature: Brian Savard — Date / Date: 08 NOV. 2016

(15) Réservé à la Régie/Board use only

Vérifié par: C. Kmieux — Date: 08 NOV. 2016

Facture N°:

(16)

QC RÉGIE DU BÂTIMENT
JQ-2216.6
APPROUVÉ
SELON LA LOI SUR LES APPAREILS SOUS PRESSION 20.01
C. Kmieux
VÉRIFIÉ PAR
DATE 08 NOV. 2016

UNIES-FAB inc.

Résultat de la méthode de soudage (RMS)
Procedure Qualification Record (PQR)

Note: Les titres désignent également les hommes et les femmes.

(Référence: ASME section 1X)

Entreprise/Compagny	
Nom/Name	UNIES-FAB
Adresse/Adress	2380, de la Métallurgie
Ville/City	Jonquière (Québec)
Code postal	G7X 9H2

Enregistrement provincial / Provincial registration	MS / WP	JQ 2216,6

Désignation du résultat/ Record identification

RMS No / PQR No	PT-GMAW-001
DMS No / WPS No	PT-GMAW-AC-001

Procédé(s) de soudage/ Welding Process(es)

1	GMAW	Type	Semi-automatique
2		Type	
3		Type	

Métaux de base/ Base Metals (QW404)

P No:	Gr No:	à/to	P No:	Gr No:
1	2		1	2

Spécification/ Specification	Tension/ Tensile
SA53, Grade B	60 Ksi

Épaisseur du coupon / Thickness of test coupon	0,432	Diamètre / Diameter	6"
Épaisseur de la plus épaisse des passes de soudage / Thickness of the welding pass with the highest thickness	1/4"		

Métaux d'apport/ Filler Metals (QW-404)

	Classification (AWS)	SFA	F No	A No	Épaisseur du dépôt
1	ER 7056	5,18	6	*	0,432"
2					
3					

Autre / Other: (*) Chem: C:0,07%-0,15%, Mn1,40%-1,85% Si: 0,80%-1,15%

Positions/ Positions (QW-405)

Position(s) du joint / Position(s) of grove	6G			
Progression du soudage / Welding progression		Montant / Up	X	Descendant / Down
Autre / Other	N/A			

Préchauffage/ Preheat (QW-406)

Température de préchauffage / Preheat temperature	50F
Température de l'interpasse / Interpass temperature	450F MAX
Autre / Other	N/A

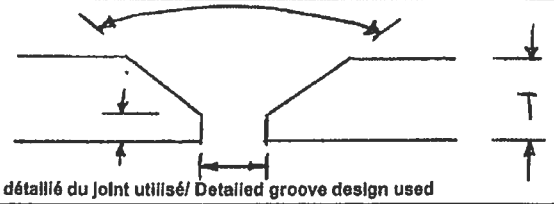

Croquis détaillé du joint utilisé/ Detailed groove design used

Traitement thermique postsoudage / Postweld heat treatment (QW-407)

Température / Temperature	N/A
Durée / Time	N/A
Autre / Other	N/A

Gaz/ Gas (QW-408)

Composition du gaz de protection / Shielding gas composition	83% AIR, 17% CO2
Débit du gaz / Gas flow rate	
Composition du gaz de soutien / Backing gas composition	N/A
Débit du gaz / Gas flow rate	N/A
Autre / Other	N/A

Technique/ Technique (QW-409) (QW-410)

Cordon droit ou oscillant / String or weave bead	String bead
Oscillation / Oscillation	N/A
Passe unique ou multiple (par coté) / Multipass or single pass (per side)	Multipass
Électrode unique ou multiple / Singie or multiple electrode	Single electrode
Mode de transfert du métal pour GMAW / Mode of metal transfer for GMAW	Short circuit et pluie
Autre / Other	N/A

Caractéristiques électrique et techniques/ Electrical characteristics and technique (QW-409) +(QW-410)

Couche(s) de soudure / Weld Layer(s)	Procédé / Process	Métal d'apport / Filler metal		Courant/ Current				vitesse / travel speed	Énergie absorbée J/po / Heat input J/in
		Classification / Classification	Diamètre / Diametre	Type / Type	polarité / polarity	ampérage / amp.	voltage / Volt		
Root	GMAW	ER 7056	0,035	DC	EP	88	17,5		
Fill	GMAW	ER 7056	0,045	DC	EP	124	20		

Essais à la traction/ Tensile test				Référence		
Éprouvette Specimen	Dimensions Largeur Width	Dimensions Épaisseur Thickness	Surface Area	Charge limite Ultimate total load	Contrainte limite Ultimate unit stress	Nature et endroit de la rupture Character and location or failure
2:1T PT1	0,410"	0,750"	0,308 po 2	67 854 lbs/po2	20 900 lbs	Base Metal
5:4T PT1	0,418"	0,749"	0,313 po 2	68 690 lbs/po2	21 500 lbs	Base Metal

Essais de pliage guide/ Guided bend tests 13-avril-07					Référence					13-avril-07
Éprouvette Specimen	Face Face	Racine Root	Coté Side	Résultat Result (D)	Éprouvette Specimen	Face Face	Racine Root	Coté Side	Résultat Result (D)	
1:2SPT1			X	Satisfactory	4:5SPT1			X	Satisfactory	
3:3SPT1			X	Satisfactory	6:6SPT1			X	Satisfactory	

Essais de résilience/ Thoughness tests					Référence			
Éprouvette Specimen	Endroit de l'entaille Notch location	Forme de l'entaille Notch type	Température de l'éprouvette Specimen temperature	Énergie de rupture Impact value	Expansion latérale Lateral Expansion % cisaillement Shear	Expansion latérale Lateral Expansion Millièmes Mils	Essai en chute libre Drop weight Cassé Break	Essai en chute libre Drop weight Non cassé No break

Essai de soudure d'angle/ Fillet weld test			Référence		
Résultat sastisfaisant / Result satisfactory	Oui / Yes	Non / No	Pénétration dans le métal adjacent / Penetration into parent metal	Oui / Yes	Non / No

Résultat macroscopiques / Macro-results

Autre / Other: 2003-11-04 Changement de nom de l'entreprise. Voir Révision 3

Nom du soudeur / Welder's name: Dave Lagacé

Symbole / Stamp No.: PT-1

Essais effectués par / Test conducted by: Eric Gosselin X-PER-X INC.

Essai de laboratoire No. / Laboratory test No.: 96001-43

Nous certifions que les renseignements concernant ce résultat sont exacts et que les essais de soudage ont été préparés, soudés et exécutés conformément aux exigences de la section IX du code ASME.

We certify that the statement in this record are correct and that the test welds were prepared, welded and tested in accordance with the requirement of section IX of the ASME code.

Signature du représentant de l'entreprise / Compagny representative's Signature du représentant

Date 18-oct-96

Réservé à la Régie/ Board use only

Pièce soudé le 10-oct-96 Inspecteur

Résultat vérifiés le 18-oct-96 Inspector

RÉGIE DU BÂTIMENT JONQUIÈRE

APPROUVÉ

Selon la loi sur les appareils sous pression ch A-20.01

VÉRIFIÉ PAR

DATE 18-oct-96

RÉSULTAT DE LA MÉTHODE DE SOUDAGE (RMS)

Les titres désignent également les hommes et les femmes

(1) Entreprise	
Nom	Unies-Fab
Adresse	2380, de la Métallurgie
Ville	Jonquière (Québec)
Code Postal	G7X 9H2

(4) Procédé(s) de soudage	
1 GMAW	Type MANUEL
2	Type
3	Type

(6) Métaux de base	
PNo 1 GrNo 1 à	Pno 1 GrNo 1
Spécification	Tension
A516 gr 50	65 000PSI
Épaisseur du coupon 1.5'' PLAQUE	
Épaisseur de la plus épaisse des passes de soudage 1/2"	

(7) Métaux d'apport (QW-404)

Classification	SFA-No	F-N	A-No	Épaisseur du dépôt
E70C 6M	5.18	6		1 ½''

Autre

(8) Positions (QW-406)	
Position(s) du joint	HOR. 2G
Progression du soudage	Montant ☐ Descendant ☐
Autre	N/A

(9) Préchauffage (QW-406)	
Température de préchauffage	200 F
Température de l'interpasse	
Autre	N/A

(2) Enregistrement provincial	MS JQ 2216.6
(3) Désignation du résultat	
RMS No	GMAW-001
DMS No	PT-GMAW-AC-001 Rev 6
(5)	Voir feuille en annexe

Croquis détaillé du joint utilisé

(10) Traitement thermique postsoudage (QW-407)	
Température	N/A
Durée	N/A
Autre	N/A

(11) Gaz (QW-408)	
Composition du gaz de protection	83% ar 17% Co2
Débit du gaz	30
Combustion du gaz de soutien	NON
Débit du gaz	NON
Autre	NON

(12) Technique (QW-409)+(QW-410)	
Cordon droit ou oscillant	Droit ou oscillant
Oscillation	oui
Passe unique ou multiple	Multiple
Électrode unique ou multiple	Unique
Mode de transfert du métal pour gmaw	cc et pluie
Autre	N/A

(13) Caractéristiques électriques et techniques (QW-409) + (QW-410)

Couche(s) de soudure	Procédé	Métal d'apport		Courant				Vitesse	Énergie absorbée
		Classification	Diamètre	Type	Polarité	Ampérage	Voltage		
1 court-circuit	GMAW	ER 70C-6M	0.045''	DC	EN	145	19		
2 -72 pluie	GMAW	ER 70C-6M	0.045"	DC	EP	245	29		

VERSO DE JQ2216.6

(14) Essais à la traction					Référence QW 150, Section IX	
Éprouvette	Dimensions		Surface	Charge limite	Contrainte limite	Nature et endroit de la rupture
	Largeur	Épaisseur				
QT2	0,755"	1,441"	1,088 po²	86 020 lbs	79 100 PSi	métal de base
QT5	0,758"	1,455"	1,103 po²	87 780 lbs	79 600 PSi	métal de base

(15) Essais de pliage guidé					Référence QW 160, Section IX				
Éprouvette	Face	Racine	Coté	Résultat	Éprouvette	Face	Racine	Coté	Résultat
QS1			X	Accepté	QS4			X	Accepté
QS3			X	Accepté	QS6			X	Accepté

(16) Essais de résilience				Référence				
Éprouvette	Endroit de l'entaille	Forme de l'entaille	Température de l'éprouvette	Énergie de rupture	Expansion latérale		Essai en chute libre	
					% cisaillement	Millièmes	Cassé	Non cassé

(17) Essai de soudure d'angle	Référence
Résultat satisfaisant Oui ☐ Non ☐ ☐	Pénétration dans le métal adjacent Oui Non
Résultats Macroscopiques	

(18) Autre

(19) Nom du soudeur Jean-François Roberge Symbole 31

Essais effectuées par Philippe Virpillot Essai de laboratoire no Q15-22434A-001

Nous certifions que les renseignements concernant ce résultat sont exacts et que les essais de soudage ont été préparés, Soudés et exécutés conformément aux exigences de la section IX du Code ASME

(20) Signature du représentant de l'entreprise [signature] Date 2015-01-13

RÉGIE DU BÂTIMENT JONQUIÈRE APPROUVÉ Selon la loi sur les appareils sous pression ch A 20.01 VÉRIFIÉ PAR [signature] DATE 16 Jan 2015

(21) Réservé à la Régie	
Pièces soudées le 18 déc 2014	Inspecteur [signature]
Résultats vérifiés le 16 Jan 2015	Inspecteur [signature]

Méthode de soudage SQ2216.6

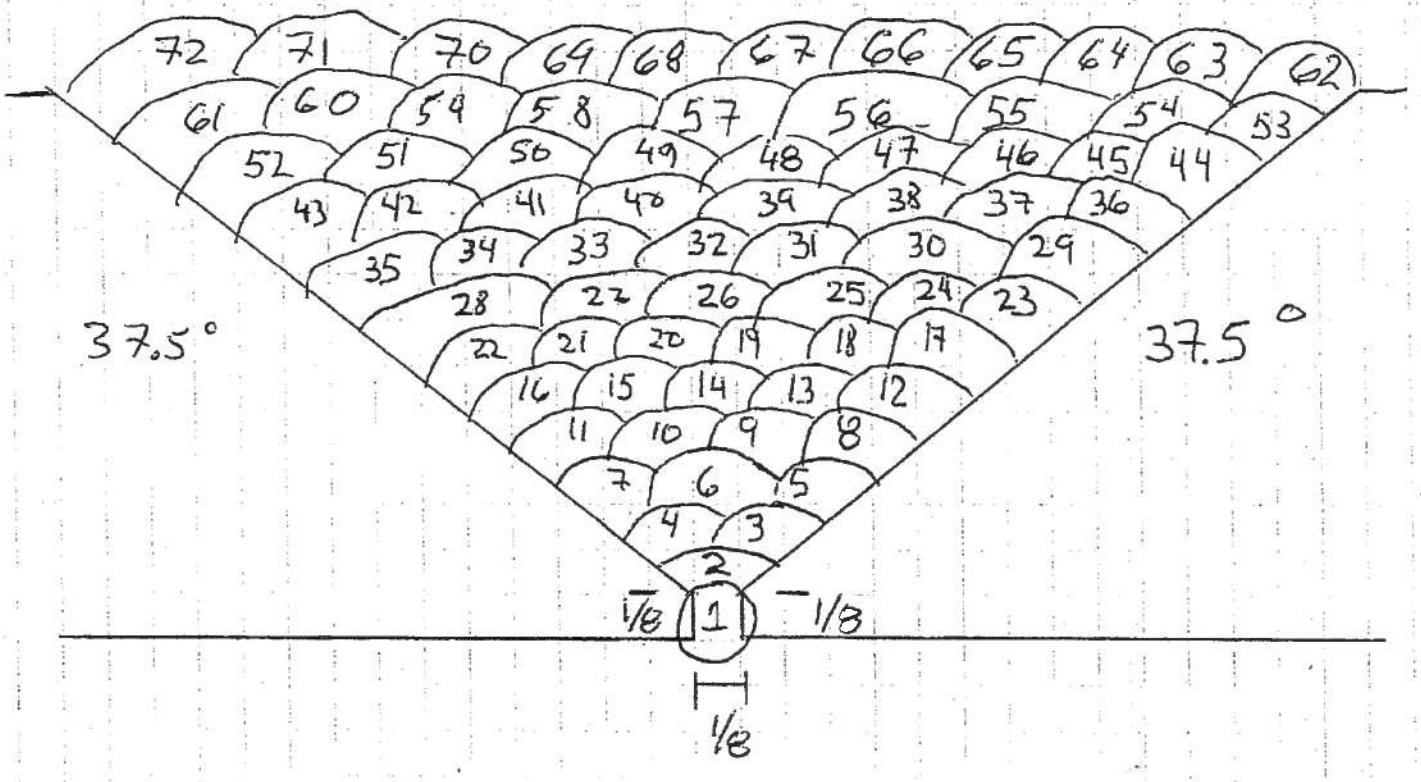

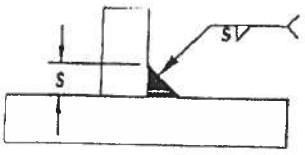
S
S

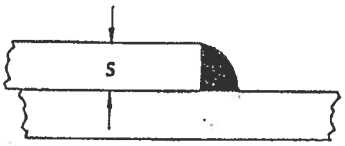
S

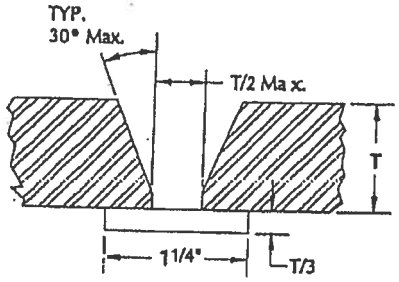
TYP.
30° Max.
T/2 Max.
T
1 1/4"
T/3

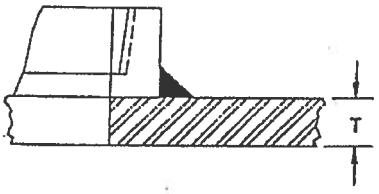
T

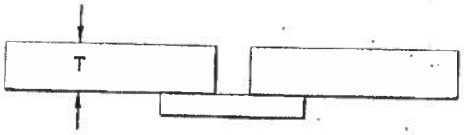
T

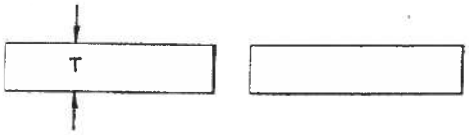
T

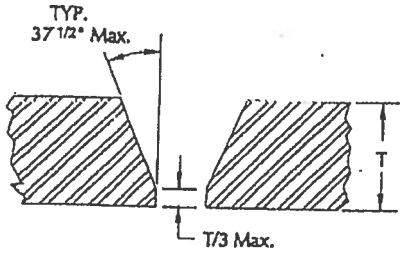
TYP.
37 1/2° Max.
T
T/3 Max.

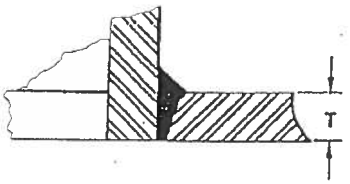
T

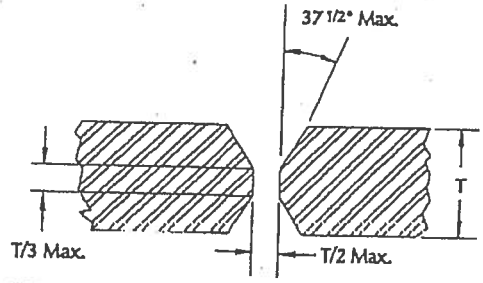
37 1/2° Max.
T
T/3 Max.
T/2 Max.

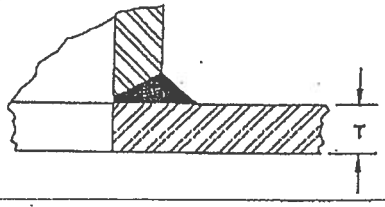
T

LISTE DES SOUDEURS

LISTE DES SOUDEURS

NOM DU SOUDEUR	NO. DE POINÇON	REMARQUES
Antonio Déry	6	
Benoit Tremblay	21	
Christian Michaud	24	
Cédric Villeneuve	30	
Jean Francois Roberge	31	
Christopher Lagacé	38	

RAPPORTS DES TESTS DE QUALIFICATIONS DES SOUDEURS

Régie du bâtiment Québec — Appareils sous pression

ÉPREUVE DE SOUDEUR OU D'OPÉRATEUR
WELDER OR WELDING OPERATOR QUALIFICATION TEST

Entreprise / *Organisation*		Désignation de la méthode / *Using WPS NO*
Nom *Name*: UNIES-FAB		DMS / *WPS*: PT-GMAW-AC-001 REV.7
Adresse *Adresse*: 2380 DE LA MÉTALLURGIE		Enregistrement provincial *Provincial registration*
JONQUIÈRE , QC	Code postal / Postal code: G7X 9H2	MS / *WP*: JQ2216.6
Nom du soudeur ou opérateur *Welder or welding operator's name*: Cédric Villeneuve		Symbole *Stamp No*: 30

Variables / *Variables*		Inscrire valeurs *Record actual values*	Gamme qualifiée / *Qualification range*
Soudeur / Welder ☒ ou / or Opérateur / Operator ☐			SOUDEUR
Procédé / *Process*: GMAW		Type: SEMI-AUTO	GMAW SEMI AUTO
QW-403 Métaux de base *Base Metals*	Mat'l (P.-No): P1 @ P1		P1@P15F,P34 ETP41@P49
	Diamètre / *Diameter*: 2" SCH 160		1" DIA.EXT. MINIMUM ET PLUS
	Chanfrein / *Groove*:	Épaisseur / *Thickness*: .344	AUCUNE LIMITE
	Angle / *Fillet*:	Épaisseur / *Thickness*:	AUCUNE LIMITE
QW-408	Gaz de soutien / *Backing gas*: NON	Type / *Type*: N/A	AVEC OU SANS
QW-409 C. Élect. *Elec. C.*	Courant / *Current*: D.C.	Polarité / *Polarity*: INVERSÉE	TOUT COURANT,TOUTE POLARITÉ
	Mode transfert / *Transfer mode*	COURT CIRCUIT /~~PLUIE~~ GLOBULAIRE	COURT CIRCUIT /GLOBULAIRE, PLUIE
QW-404 Métaux d'apport *Filler métals*	Classe / *Class (AWS)*: E-70C6M	*Fno*: 6	F6
	Dépot soudure / *Weld deposit*: 1ère :0,125"/2e:0.219"		1ère:0,1375"/ 2ième:0.436"
	Nb. de couche / Nb layer: N/A		N/A
	Pièce insérée / *Insert*: N/A		N/A
QW-402 Joint	Soutien / *Backing*: SANS		AVEC OU SANS SOUTIEN
QW-405	Position: 2G	Progression: N/A	PLAT ,HORIZONTALE
QW-360	Contrôle visuel direct ou à distance *Direct or remote visual control*: N/A		N/A
	Contrôle de voltage automatique *Automatic voltage control*: N/A		N/A
	Suiveur de joint automatique *Automatic joint tracking*: N/A		N/A
	Passe unique ou multiple *Single pass or multiple*: N/A		N/A

Résultats de pliage ou radiographie / *Guided bend or radiographic result*

Éprouvette *Spécimen*	Pliage de côté *Side bend*	Pliage transversal *Transverse bend*	Pliage longitudinal *Longitudinal bend*	Radiographie *Radiographic*	Résultats / *Results*
1R		X			accepté PDA
2F		X			accepté PDA.

Résultats examen visuel / *Visual examination results (QW-302.4)*: C.

Résultats de soudage d'angle: (voir verso) / *For fillet weld test result : (see over)*

Essais effectués par *Test conducted by*	Date *Date*	Laboratoire-Essai N° *Laboratory-Test No*

Nous certifions que les renseignements ci-dessus sont exacts et que les essais de soudage ont été préparés et exécutés conformément aux exigences de la section IX du Code ASME
We certify that the statements in this record are correct and the test weld were prepared, welded and tested in accordance with the requirements of Section IX of the ASME Code

	Entreprise *Organisation*	Signature	Date *Date*

Réservé à la Régie / *Board use only*

Pièces soudées le: 20 DEC. 2016	Inspecteur: C. Simard	N°	Accepté: 2G ◎	N° facture:
Essais vérifiés le: 20 DEC. 2016	Inspecteur: C. Simard		Refusé:	N° dossier:

807(2003-01)

UNIES-FAB Inc.

ÉPREUVE DE SOUDEUR OU D'OPERATEUR
WELDER OR WELDING OPERATOR QUALIFICATION TEST

NOTE: Les titres désignent également les hommes et les femmes.

Entreprise / *Organization*		Désignation de la méthode / *Using wps NO*	
Nom / *Name*	UNIES-FAB.	DMS / *WPS*	PT-GMAW-AC-001 REV 4
Adresse / *Address*	2380, de la Métallurgie	Enregistrement provincial / *Provincial registration* MS / *WP*	JQ-2216,6
	Jonquière QC — Code postal / *postal code* G 7 X 9 H 2		
Nom du soudeur ou operateur / *Welder or welding operator's name*	BENOÎT TREMBLAY	Symbole / *Stamp No*	21 — N.A.S. / *S.I.N.*

Variables / *Variables*		Inscrire valeurs / *Record actual values*	Gamme qualifiée / *Qualification range*
Soudeur / *Welder* ☒ ou / *or* Operateur / *Operator* ☐			SOUDEUR
Procédé / *Process:*	GMAW	Type: MANUEL	GMAW-MANUEL
QW-403 Metaux de base *Base Metals*	Mat'l (P.-No):	P1 @ P1	P1 A P11 , P34 , P41 À P47 ET TOUS MATÉRIAUX DE COMPOSITION CHIMIQUE
	Diametre / *Diameter:*	2"	1" DIA. EXT.MINIMUM ET PLUS
	Chanfrein / *Groove* Épaisseur / *Thickness:*	0,344	AUCUNE LIMITE
	Angle / *Fillet* Épaisseur / *Thickness:*		AUCUNE LIMITE
QW-408	Gaz de soutien / *Backing gas:*	N/A Type / *Type:* N/A	
QW-409 C. elect. *Elec. C.*	Courant / *Current:*	C.C, Polarité / *Polarity:* INVERSÉE	TOUS COURANTS, TOUTES POLARITÉS
	Mode transfert / *Transfer mode:*	COURT-CIRCUIT ~~ET~~ PLUIE	COURT-CIRCUIT/GLOBULAIRE, PLUIE
QW-404 Metaux d'apport *Filler metals*	No spec. / *Spec No (SFA):*	5,18	TOUTES
	Classe / *Class (AWS):*	E-70C 6M *F No:* F6	F6
	Dépôt soudure / *Weld deposit:*	C-CIRCUIT0,125 PLUIE 0,219	(COURT-CIRCUIT 0,1375) (PLUIE 0,436)
	Pièce insérée / *Insert:*	NON	AVEC OU SANS
QW-402 Joint	Soutien / *Backing:*	NON	AVEC OU SANS
QW-405	Position: 2G	Progression: N/A	PLAT ET HORIZONTAL
QW-360 Machine	Contrôle visuel direct ou à distance / *Direct or remote visual control*	N/A	N/A
	Contrôle de voltage automatique / *Automatic voltage control*	N/A	N/A
	Suiveur de joint automatique / *Automatic joint tracking*	N/A	N/A
	Passe unique ou multiple / *Single pass or multiple*	N/A	N/A

Résultats de pliage ou radiographie / *Guided bend or radiographic results*

Éprouvette *Specimen*	Pliage de côté *Side bend*	Pliage transversal *Transverse bend*	Pliage longitudinal *Longitudinal bend*	Radiographie *Radiographic*	Résultats / *Results*
Q4RB		X face			accepté - pda
Q2RB		X racine			accepté - pda

Résultats examen visuel / *Visual examination results (QW-302.4):* [signature]

Résultats de soudure d'angle (voir verso) / *For fillet weld test results (see over)*

Essais effectués par / *Test conducted by*	Date / *Date*	23-août-11	Laboratoire-Essais N° / *Laboratory-test No*

Nous certifions que les renseignements ci-dessus sont exacts et que les essais de soudage ont été préparés et exécutés conformément aux exigences de la section IX du code ASME.
We certify that the statements in this record are correct and the test welds were prepared, welded and tested in accordance with the requirement of Section IX of the ASME code.

Entreprise / *Organization*	Signature	Date / *Date*
	André Gaudreault	23 août 2011

Réservé à la Régie / *Board use only*

Pièces soudées le: 2011/08/23	Inspecteur: [signature]	No 14436	Accepté: X (C1)	N° facture:
Essais vérifiés le: 2011/08/23	Inspecteur: Marcel S. Rousset		Refusé:	N° dossier:

DAVE(01-2003)

UNIES-FAB inc.

ÉPREUVE DE SOUDEUR OU D'OPERATEUR
WELDER OR WELDING OPERATOR QUALIFICATION TEST

NOTE: Les titres désignent également les hommes et les femmes.

Entreprise / *Organization*		Désignation de la méthode / *Using wps NO*	
Nom / *Name*	UNIES-FAB.	DMS / *WPS*	PT-GMAW-AC-001 REV 4
Adresse / *Address*	2380, de la Métallurgie	Enregistrement provincial / *Provincial registration*	JQ-2216,6
	Jonquière QC Code postal / *postal code* G 7 X 9 H 2	MS / *WP*	
Nom du soudeur ou operateur / *Welder or welding operator's name*	CHRISTIAN MICHAUD	Symbole / *Stamp No.* 24	N.A.S. / *S.I.N.*

Variables / *Variables*		Inscrire valeurs / *Record actual values*	Gamme qualifiée / *Qualification range*
Soudeur / *Welder* ☒ ou / *or* Operateur / *Operator* ☐			SOUDEUR
Procédé / *Process:*		GMAW Type: MANUEL	GMAW-MANUEL
QW-403 Metaux de base *Base Metals*	Mat'l (P.-No):	P1 @ P1	P1 A P11 , P34 , P41 À P47 ET TOUS MATÉRIAUX DE COMPOSITION CHIMIQUE
	Diametre / *Diameter:*	2"	1" DIA. EXT.MINIMUM ET PLUS
	Chanfrein / *Groove* Épaisseur / *Thickness:*	0,344	AUCUNE LIMITE
	Angle / *Fillet* Épaisseur / *Thickness:*		AUCUNE LIMITE
QW-408	Gaz de soutien / *Backing gas:*	N/A Type / *Type:* N/A	
QW-409 C. elect. *Elec. C.*	Courant / *Current:*	C.C, Polarité / *Polarity:* INVERSÉE	TOUS COURANTS, TOUTES POLARITÉS
	Mode transfert / *Transfer mode:*	COURT-CIRCUIT ET PLUIE	COURT-CIRCUIT, GLOBULAIRE, PLUIE
QW-404 Metaux d'apport *Filler metals*	No spec. / *Spec No (SFA):*	5,18	TOUTES
	Classe / *Class (AWS):*	E-70C 6M *F No:* F6	F6
	Dépôt soudure / *Weld deposit:*	C-CIRCUIT0,125 PLUIE 0,219	(COURT-CIRCUIT 0,1375) (PLUIE 0,436)
	Pièce insérée / *Insert:*	NON	AVEC OU SANS
QW-402 Joint	Soutien / *Backing:*	NON	AVEC OU SANS
QW-405	Position:	2G Progression: N/A	PLAT ET HORIZONTAL
QW-360 Machine	Contrôle visuel direct ou à distance / *Direct or remote visual control*	N/A	N/A
	Contrôle de voltage automatique / *Automatic voltage control*	N/A	N/A
	Suiveur de joint automatique / *Automatic joint tracking*	N/A	N/A
	Passe unique ou multiple / *Single pass or multiple*	N/A	N/A

Résultats de pliage ou radiographie / *Guided bend or radiographic results*

Éprouvette *Specimen*	Pliage de côté *Side bend*	Pliage transversal *Transverse bend*	Pliage longitudinal *Longitudinal bend*	Radiographie *Radiographic*	Résultats / *Results*
Q01F		X			accepté PDA
Q02R		X			accepté PDA

Résultats examen visuel / *Visual examination results (QW-302.4):* NAG

Résultats de soudure d'angle (voir verso) / *For fillet weld test results (see over)*

Essais effectués par / *Test conducted by*	Date / *Date* 02-sept-10	Laboratoire-Essais N° / *Laboratory-test No*

Nous certifions que les renseignements ci-dessus sont exacts et que les essais de soudage ont été préparés et exécutés conformément aux exigences de la section IX du code ASME.
We certify that the statements in this record are correct and the test welds wereprepared,welded and tested in accordance with the requirement of Section IX of the ASME code.

Entreprise / *Organization*	Signature	Date / *Date*
	André Gauchard	2010-09-02

Réservé à la Régie / *Board use only*

Pièces soudées le: 02 SEP. 2010	Inspecteur: C. Bonneau	No 13838	Accepté: 2G	N° facture:
Essais vérifiés le: 09 SEP. 2010	Inspecteur C. Bonneau		Refusé:	N° dossier:

DAVE(01-2003)

Régie du bâtiment Québec — Appareils sous pression

ÉPREUVE DE SOUDEUR OU D'OPÉRATEUR
WELDER OR WELDING OPERATOR QUALIFICATION TEST

Entreprise / *Organisation*			Désignation de la méthode / *Using WPS NO*
Nom *Name*	UNIES-FAB inc.		DMS / *WPS* PT-GMAW-AC-001-REV 4
Adresse *Adresse*	2380, de la MÉTALLURGIE		Enregistrement provincial *Provincial registration*
	JONQUIÈRE, QUÉBEC	Code postal / *Postal code* G7X 9H2	MS / *WP* JQ-2216,6
Nom du soudeur ou opérateur *Welder or welding operator's name*	JEAN-FRANÇOIS ~~DEGBIENG~~ BERGE		Symbole *Stamp No* 31
Variables / *Variables*	Inscrire valeurs *Record actual values*	15 AVR. 2011	**Gamme qualifiée / *Qualification range***
Soudeur / Welder ☑ ou / or Opérateur / Operator ☐			SOUDEUR
Procédé / *Process*: GMAW	Type: SEMI-AUTO		GMAW SEMI - AUTO
QW-403 Métaux de base *Base Metals*	Mat'l (P.-No): P1@P1		P1 A P15F, P34 ET P41 A P49 ET TOUS MATÉRIAUX DE COMPOSITION CHIMIQUE
	Diamètre / *Diameter*: 2"		1"DIA. EXT. MINIMUM ET PLUS
	Chanfrein / *Groove*:	Épaisseur / *Thickness*: 0.344	AUCUNE LIMITE
	Angle / *Fillet*:	Épaisseur / *Thickness*:	AUCUNE LIMITE
QW-408	Gaz de soutien / *Backing gas*: N/A	Type / *Type*: N/A	
QW-409 C. Élect. *Elec. C.*	Courant / *Current*: CC	Polarité / *Polarity*: INVERSÉE	TOUS COURANTS, TOUTES POLARITÉS
	Mode transfert / *Transfer mode*	COURT-CIRCUIT ET PLUIE	COURT-CIRCUIT, GLOBULAIRE ET PLUIE
QW-404 Métaux d'apport	Classe / *Class (AWS)*: ~~(5.22) E309LT1-1~~ E-70C 5.18 F6 C1		F6
	Dépot soudure / *Weld deposit*: C-CIRCUIT 0.125 PLUIE 0.219		(COUR-CIRCUIT 0.1375) (PLUIE 0.436)
Filler métals	Nb. do couche / Nb layer: N/A		
	Pièce insérée / *Insert*: NON		AVEC OU SANS
QW-402 Joint	Soutien / *Backing*: COURT-CIRCUIT SANS / PLUIE AVEC		COURT-CIRCUIT AVEC OU SANS / PLUIE AVEC
QW-405	Position: 6G	Progression: N/A	TOUTES POSITIONS MONTANTES
QW-360	Contrôle visuel direct ou à distance *Direct or remote visual control* N/A		N/A
	Contrôle de voltage automatique *Automatic voltage control* N/A		N/A
	Suiveur de joint automatique *Automatic joint tracking* N/A		N/A
	Passe unique ou multiple *Single pass or multiple* N/A		N/A

Résultats de pliage ou radiographie / *Guided bend or radiographic result*

Éprouvette *Spécimen*	Pliage de côté *Side bend*	Pliage transversal *Transverse bend*	Pliage longitudinal *Longitudinal bend*	Radiographie *Radiographic*	Résultats / *Results*
1F		X			accepté pas defauts
2F		X			accepté defauts < 3mm
3F		X			accepté defauts < 3mm
4F		X			accepté defauts < 3mm.

Résultats examen visuel / *Visual examination results (QW-302.4)*: N/A

Résultats de soudage d'angle: (voir verso) / *For fillet weld test result : (see over)*

Essais effectués par *Test conducted by*	Date *Date*	Laboratoire-Essai N° Laboratory-Test No

Nous certifions que les renseignements ci-dessus sont exacts et que les essais de soudage ont été préparés et exécutés conformément aux exigences de la section IX du Code ASME
We certify that the statements in this record are correct and the test weld were prepared, welded and tested in accordance with the requirements of Section IX of the ASME Code

Entreprise *Organisation*	Signature	Date *Date*
	André Gaudreault	2011-04-14

Réservé à la Régie / *Board use only*

Pièces soudées le: 14 AVR. 2011 Inspecteur C. Lamieux	N°	Accepté: 6G Q	N° facture:
Essais vérifiés le: 14 AVR. 2011 Inspecteur C. Lamieux		Refusé:	N° dossier:

807(200...)

UNIES-FAB Inc.

ÉPREUVE DE SOUDEUR OU D'OPERATEUR
WELDER OR WELDING OPERATOR QUALIFICATION TEST

NOTE: Les titres désignent également les hommes et les femmes.

Entreprise / *Organization*		Désignation de la méthode / *Using WPS No*	
Nom / *Name*	UNIES-FAB.	DMS / *WPS*	PT-GMAW-AC-001 REV 4
Adresse / *Address*	2380, de la Métallurgie	Enregistrement provincial / *Provincial registration*	JQ-2216,6
	Jonquière QC Code postal / *postal code* G 7 X 9 H 2	MS / *WP*	
Nom du soudeur ou operateur / *Welder or welding operator's name*	MAXIME BOULIANNE-TREMBLAY	Symbole / *Stamp No* 34	N.A.S. / *S.I.N.*

Variables / *Variables*		Inscrire valeurs / *Record actual values*	Gamme qualifiée / *Qualification range*
Soudeur / *Welder* ☒ ou / *or* Operateur / *Operator* ☐			SOUDEUR
Procédé / *Process:*		GMAW Type: MANUEL	GMAW-MANUEL
QW-403 Metaux de base *Base Metals*	Mat'l (P.-No):	P1 À P1	P1 A P15F , P34 , P41 À P49 ET TOUS
			MÉTAUX DE COMPOSITION CHIMIQUE
	Diametre / *Diameter:*	2" SCH 160	1" DIA. EXT.MINIMUM ET PLUS
	Chanfrein / *Groove* Épaisseur / *Thickness:*	0,344	AUCUNE LIMITE
	Angle / *Fillet* Épaisseur / *Thickness:*		AUCUNE LIMITE
QW-408	Gaz de soutien / *Backing gas:*	N/A Type / *Type:* N/A	
QW-409 C. elect. *Elec. C.*	Courant / *Current:*	C.C, Polarité / *Polarity:* INVERSÉE	TOUS COURANT, TOUTES POLARITÉ
	Mode transfert / *Transfer mode:*	COURT-CIRCUIT ET PLUIE	COURT-CIRCUIT/GLOBULAIRE ET PLUIE
QW-404 Metaux d'apport *Filler metals*	No spec. / *Spec No (SFA):*	5,18	
	Classe / *Class (AWS):*	E70C6M *F No:* F6	F6
	Dépôt soudure / *Weld deposit:*	C,C = 0,125 ET PLUIE 0,219	(COURT-CIRCUIT 0,1375) (PLUIE 0,438)
	Pièce insérée / *Insert:*	NON	AVEC OU SANS
QW-402 Joint	Soutien / *Backing:*	C-C SANS / PLUIE AVEC	C-C AVEC OU SANS/ PLUIE AVEC
QW-405	Position:	2G Progression: N/A	PLAT ET HORIZONTAL
QW-360 Machine	Contrôle visuel direct ou à distance / *Direct or remote visual control*	N/A	N/A
	Contrôle de voltage automatique / *Automatic voltage control*	N/A	N/A
	Suiveur de joint automatique / *Automatic joint tracking*	N/A	N/A
	Passe unique ou multiple / *Single pass or multiple*	N/A	N/A

Résultats de pliage ou radiographie / *Guided bend or radiographic results*

Éprouvette *Specimen*	Pliage de côté *Side bend*	Pliage transversal *Transverse bend*	Pliage longitudinal *Longitudinal bend*	Radiographie *Radiographic*	Résultats / *Results*
D1F3		FACE			accepté
D2R3		RACINE			accepté

Résultats examen visuel / *Visual examination results (QW-302.4):*

Résultats de soudure d'angle / *Fillet weld test results* (voir verso / *see over*)

Essais effectués par / *Test conducted by*	Date / *Date*	Laboratoire-Essais N° / *Laboratory-test No*

Nous certifions que les renseignements ci-dessus sont exacts et que les essais de soudage ont été préparés et exécutés conformément aux exigences de la section IX du code ASME.
We certify that the statements in this record are correct and the test welds were prepared, welded and tested in accordance with the requirement of Section IX of the ASME code.

UNIES-FAB	Entreprise / *Organization*	Signature	Date / *Date* 12 août 2015

Réservé au Bureau / *Board use only*

Pièces soudées le: 12 août 2015	Inspecteur:	No 2	Accepté: oui	N° facture:
Essais vérifiés le: 12 août 2015	Inspecteur:		Refusé:	N° dossier:

DAVE(01-2003)

Régie du bâtiment
Québec — Appareils sous pression

ÉPREUVE DE SOUDEUR OU D'OPÉRATEUR
WELDER OR WELDING OPERATOR QUALIFICATION TEST

Entreprise / *Organisation*			Désignation de la méthode / *Using WPS NO*
Nom *Name*	UNIES-FAB INC		DMS / *WPS* PT-GMAW-AC-001 REV. 60
Adresse *Adresse*	2380 DE LA MÉTALLURGIE		Enregistrement provincial *Provincial registration*
JONQUIÈRE ,QC		Code postal / *Postal code* G7X 9H2	MS / *WP* JQ2216.6
Nom du soudeur ou opérateur *Welder or welding operator's name*	CHRISTOPHER LAGACÉ		Symbole *Stamp No* 38

Variables / *Variables*		Inscrire valeurs *Record actual values*	Gamme qualifiée / *Qualification range*
	Soudeur / Welder ☒ ou / or Opérateur / Operator ☐		SOUDEUR
	Procédé / *Process*: GMAW	Type: SEMI-AUTO	GMAW SEMI AUTO
QW-403 Métaux de base *Base Metals*	Mat'l (P.-No): P1@P1		P1@P15F , P34 ET P41@P49
	Diamètre / *Diameter*: 2" SCH 160		1" DIA.EXT. MINIMUM ET PLUS
	Chanfrein / *Groove*:	Épaisseur / *Thickness*: .344	AUCUNE LIMITE
	Angle / *Fillet*:	Épaisseur / *Thickness*:	AUCUNE LIMITE
QW-408	Gaz de soutien / *Backing gas*: NON	Type / *Type*: N/A	AVEC OU SANS
QW-409 C. Élect. *Elec. C.*	Courant / *Current*: D,C,	Polarité / *Polarity*: INVERSÉE	TOUT COURANT ,TOUTE POLARITÉ
	Mode transfert / *Transfer mode*	COURT CIRCUIT /PLUIE	COURT CIRCUIT / GLOBULAIRE ,PLUIE
QW-404 Métaux d'apport	Classe / *Class (AWS)*: E-70C 6M	*Fno*: 6	F6
	Dépot soudure / *Weld deposit*:	1ere:0,125"/ 2e :0,219"	1ere:0,1375" / 2ième :0,436"
Filler métals	Nb. de couche / Nb layer: N/A		N/A
	Pièce insérée / *Insert*: N/A		N/A
QW-402 Joint	Soutien / *Backing*: SANS		avec ou sans soutien
QW-405	Position: 2G	Progression: N/A	plat,horizontale
QW-360	Contrôle visuel direct ou à distance *Direct or remote visual control* N/A		N/A
	Contrôle de voltage automatique *Automatic voltage control* N/A		N/A
	Suiveur de joint automatique *Automatic joint tracking* N/A		N/A
	Passe unique ou multiple *Single pass or multiple* N/A		N/A

Résultats de pliage ou radiographie / *Guided bend or radiographic result*

Éprouvette *Spécimen*	Pliage de côté *Side bend*	Pliage transversal *Transverse bend*	Pliage longitudinal *Longitudinal bend*	Radiographie *Radiographic*	Résultats / *Results*
1R		X			accepté DÉFaut < 1/8"
2F		X			Accepté PDA

Résultats examen visuel / *Visual examination results (QW-302.4)*: BS

Résultats de soudage d'angle: (voir verso) / *For fillet weld test result : (see over)*

Essais effectués par *Test conducted by*	Date *Date*	Laboratoire-Essai N° *Laboratory-Test No*

Nous certifions que les renseignements ci-dessus sont exacts et que les essais de soudage ont été préparés et exécutés conformément aux exigences de la section IX du Code ASME
We certify that the statements in this record are correct and the test weld were prepared, welded and tested in accordance with the requirements of Section IX of the ASME Code

Entreprise *Organisation*	Signature	Date *Date*
	Brian Savio	08 NOV. 2016

Réservé à la Régie / *Board use only*

Pièces soudées le 08 NOV. 2016 Inspecteur: Gmieux	N°	Accepté: 2 GO	N° facture:
Essais vérifiés le: 08 NOV. 2016 Inspecteur: Gmieux		Refusé:	N° dossier:

807(2003-01)

LISTE DES JOINTS DE SOUDURE INSPECTÉS (E.N.D)

UNIFAB Inc.

DATE: 31-août-17

PROJET: UF-2106 & UF-2165

LISTE DES JOINTS DE SOUDURE E.N.D.

# DESSIN ISOMÉTRIQUE	DIA	NO PIÈCES	NO JOINT	CODE	NO SOUDEUR	NO RAPPORT D'ESSAIS	DATE	STATUS	SCH	ACIER	SS	REMARQUES
103-150-PDI-CC10-003 2/12	6"	MK-21	J1	31,3	34	s17-22434a-011	2017-06-14	ok	0,28	A333		RADIOGRAPHIE
103-150-PDI-CC10-005 2/5	6"	MK-41	J2	31,3	30	s17-22434a-011	2017-06-14	ok	0,28	A333		RADIOGRAPHIE
103-150-PDI-CC10-001 9/13	6"	MK-9	J3	31,3	30	s17-22434a-011	2017-06-14	ok	0,28	A333		RADIOGRAPHIE
103-150-PDI-CC10-001 13/13	8"	MK-14	J4	31,3	34	s17-22434a-011	2017-06-14	ok	0,322	A333		RADIOGRAPHIE
103-150-PDI-CC10-006 1/1	6"	MK-40	J5	31,3	6	s17-22434a-011	2017-06-14	ok	0,28	A333		RADIOGRAPHIE
103-150-PDI-CC10-004 1/1	6"	MK-20	J6	31,3	31	s17-22434a-011	2017-06-14	ok	0,28	A333		RADIOGRAPHIE
103-150-PDI-CC10-004 1/1	6"	MK-20	J7	31,3	31	s17-22434a-011	2017-06-14	ok	0,28	A333		RADIOGRAPHIE
103-150-PDI-CC10-003 3/12	6"	MK-32	J8	31,3	31	s17-22434a-011	2017-06-14	ok	0,28	A333		RADIOGRAPHIE
103-150-PDI-CC10-005 3/5	6"	MK-43	J9	31,3	24	s17-22434a-011	2017-06-14	ok	0,28	A333		RADIOGRAPHIE
103-150-PDI-CC10-001 11/13	6"	MK-11	J10	31,3	24	s17-22434a-011	2017-06-14	ok	0,28	A333		RADIOGRAPHIE
103-150-PDI-CC10-005 5/5	6"	MK-46	J11	31,3	21	s17-22434a-011	2017-06-14	ok	0,28	A333		RADIOGRAPHIE
403P-100-PDI-CC10-002 6/12	4"	MK-54	J12	31,3	31	s17-22434a-013	2017-07-10	ok	0,28	A333		RADIOGRAPHIE
403P-100-PDI-CC10-004 1/2	4"	MK-67	J13	31,3	38	s17-22434a-013	2017-07-10	ok	0,28	A333		RADIOGRAPHIE
403P-100-PDI-CC10-001 2/6	4"	MK-52	J14	31,3	31	s17-22434a-013	2017-07-10	ok	0,28	A333		RADIOGRAPHIE
403P-100-PDI-CC10-001 2/6	4"	MK-53	J15	31,3	6	s17-22434a-013	2017-07-10	ok	0,28	A333		RADIOGRAPHIE
403P-100-PDI-CC10-002 6/12	4"	MK-55A	J16	31,3	24	s17-22434a-013	2017-07-10	ok	0,28	A333		RADIOGRAPHIE
403P-100-PDI-CC10-002 6/12	4"	MK-55	J17	31,3	24	s17-22434a-013	2017-07-10	ok	0,28	A333		RADIOGRAPHIE
403P-100-PDI-CC10-004 1/2	4"	MK-65	J18	31,3	24	s17-22434a-013	2017-07-10	ok	0,28	A333		RADIOGRAPHIE
403I-100-PDI-CC10-102 9/10	4	MK-138	J19	31,3	30	s17-22434a-028	2017-08-31	ok	0,237	A333		RADIOGRAPHIE
403I-100-PDI-CC10-102 5/10	4	MK-131	J20	31,3	31	s17-22434a-028	2017-08-31	ok	0,237	A333		RADIOGRAPHIE
403I-100-PDI-CC10-102 5/10	4	MK-130	J21	31,3	21	s17-22434a-028	2017-08-31	ok	0,237	A333		RADIOGRAPHIE
403I-100-PDI-CC10-102 6/10	4	MK-132	J22	31,3	38	s17-22434a-028	2017-08-31	ok	0,237	A333		RADIOGRAPHIE
403I-100-PDI-CC10-114 1/1	3	MK-160	J23	31,3	34	s17-22434a-028	2017-08-31	ok	0,216	A333		RADIOGRAPHIE
403I-100-PDI-CC10-104 1/2	4	MK-141	J24	31,3	21	s17-22434a-028	2017-08-31	ok	0,237	A333		RADIOGRAPHIE
403I-100-PDI-CC10-129 10/10	3	MK-157	J25	31,3	34	s17-22434a-028	2017-08-31	ok	0,216	A333		RADIOGRAPHIE

403I-100-PDI-CC10-114 1/1	3	MK-162	J26	31,3	30	s17-22434a-028	2017-08-31	ok	0,216	A333		RADIOGRAPHIE
403I-100-PDI-CC10-102 8/10	4	MK-134	J27	31,3	31	s17-22434a-028	2017-08-31	ok	0,237	A333		RADIOGRAPHIE
403I-100-PDI-CC10-114 1/1	3	MK-161	J28	31,3	38	s17-22434a-028	2017-08-31	ok	0,216	A333		RADIOGRAPHIE
403I-100-PDI-CC10-102 6/10	4	MK-133	J29	31,3	24	s17-22434a-028	2017-08-31	ok	0,237	A333		RADIOGRAPHIE

AGNICO EAGLE

Vendor Document Status

1 ☐ Proceed to next submission and status.

2 ☐ Proceed with exceptions as noted to next submission and status.

3 ☐ Do not proceed.
Revise as noted and resubmit next submission and status.

4 ☑ Complete, no further submission required.

By: JEAN-FRANCOIS TREMBLAY JG Date: 2017-05-16

Review and authorization to fabricate are only for general conformance with the design concept of the Project as expressed in the Contract Documents. Sole responsibility for the accuracy and completeness of this document, including but not limited to dimensions and quantities, remains with the Supplier/Contractor. Agnico Eagle does not warrant the accuracy or completeness of any of the information contained herein, nor does Agnico Eagle authorize or approve any construction means, methods, techniques, sequences or any safety precautions or procedures.

Agnico Eagle No. 6515-C-270-007-141-TES-0044 R: Sub001

DOCUMENT FOR INFORMATION

NUQSANA PROMEC MINING

Agnico-Eagle Mines Ltd.
Check List for Pipe Systems

ITR Number : AEM-PI-ITR-002
Contract no. : C22466T

AGNICO EAGLE

SYSTEM:	DRAWING No.(s):
LOCATION:	
P&ID REFERENCE:	

GENERAL	YES	N/A
Correct Origin & Destination	o	o
Line Size Correct	o	o
Material Correct	o	o
Schedule Correct	o	o
Flange Rating & Facing Correct	o	o
Line Slopes per Drawing	o	o
Branches Located Correctly	o	o
Weep Holes in Reinforcing Pad	o	o
High Point Vents Installed	o	o
Low Point Drains Installed	o	o
Reducers Correct	o	o
Blinds Installed	o	o
Cold Spring or Pre-Spring Per Drawing	o	o
Strainers Installed	o	o
Seal Welding Complete	o	o
Flange Face Checked	o	o
Painting / Insulation Complete	o	o
Identification / Tagging Complete	o	o
WORKMANSHIP		
Fit-Up	o	o
Cleanliness	o	o
Installation Straight & Plumb	o	o
VALVES		
Flow Direction Correct	o	o
Correct Tag Number, Description & Trim	o	o
By-Pass Installed (if required)	o	o
Chain Wheel Installed	o	o
Extension Installed	o	o
Stem Oriented Properly	o	o
Drain, Flush, Connections Installed	o	o
Special Packing	o	o
Check Valve Flappers Removed	o	o

GASKETS & BOLTS	YES	N/A
Correct Number of Bolts	o	o
Correct Bolting Material	o	o
Correct Bolt Length	o	o
Nuts Tight	o	o
Correct Gasket Type & Thickness	o	o
Stud Ends Machine and Stamped	o	o
Studs Cleaned and Lubricated	o	o
PIPE SUPPORTS		
Supports in accordance with Drawings	o	o
Anchors Installed	o	o
Guides Installed	o	o
Proper Shoes Installed & Welded	o	o
Spring Hanger Type & Setting	o	o
Field Supports Installed (Small Bore)	o	o
Temporary Supports Removed	o	o
Lines Properly Supported for Hydrotest	o	o
INSTRUMENTS		
PSV's Tested (Correct Item Number)	o	o
Correct Control Valves Installed	o	o
Meter Runs Properly Installed	o	o
Jacking Screws Included	o	o
Valves at Meter Runs Installed	o	o
Pressure Gauge Valves Installed	o	o
Temperature Connections Properly Oriented	o	o
Sample Connections Installed	o	o
Orifice Taps Correctly Installed	o	o
Spec. Changes Occur at Point Specified	o	o
NON-DESTRUCTIVE EXAMINATION		
Welding Complete	o	o
Stress Relieving Complete	o	o
NDE Complete & Signed-Off	o	o

STÉPHANE DORÉ — Verified by (Print)

Verified by (Sign)

04-10-2017 — Date

Eric Parlow — Approved by (Print)

Approved by (Sign)

04-10-2017. — Date

UNIES-FAB INC.
2380 de la Métallurgie
Jonquière (Québec)
G7X 9H2
Tel:(418) 546-0044
Fax:(418) 546-0074

Bon de livraison: UF-2106-2

Exp. Par: BRIAN SAVARD
 # contrat: UF-2106

Exp. À: Groupe Promec inc. 1300 rue Saguenay, Rouyn-Noranda, Québec, J9X7C3
DATE: 2017-06-05
Transport: TRANSCOL

EXP À:
DATE:
Transport:
COMMANDE 21065-19445

# ART.	Qte	DESCRIPTION		
		CAP	LIVR	Pièce de tuyauterie
1	21			PIED TUYAU 1/2" SMLS A333 GR 6 SCH STD
2	21			PIED TUYAU 3" SMLS CA333 GR 6 SCH STD
3	42			PIED TUYAU 4" SMLSA333 GR 6 SCH STD
4	4			Te 4 BW sch.STD A420 Gr.WPL6
5	2			Reduit concentric 4x3 BW CS sch.STD A420 Gr.WPL6
6	2			Reduit excentric 4x3 BW CS sch.STD A420 Gr.WPL6
7	8			Elbow 4x90 BW CS sch.STD A420 Gr.WPL6
8	10			Flange WN 150# FS Raised Face A350 LF2 (3")
9	24			Flange WN 150# FS Raised Face A350 LF2 (4")
10	16			Nipple 3"long - CS Sch80 Seamless Threaded A333 Gr.6 (½")
11	16			Nipple 6"long - CS Sch80 Seamless Threaded A333 Gr.6 (1")
12	8			plug 3000 fs A350 lf2 npt (½")
13	4			plug 3000 fs A350 lf2 npt (1")
14	6			Tc ½ 3000lbs fs A350 lf2 npt (½")

		PIECES RETOURNER CHEZ UNIES-FAB (AVANT 15 JOURS)	PIECES À FACTURER
Heure d'arrivée			
Heure de départ			
PIECES DE BOIS 4" x 4"			

Total 184 pièces

Remarques:

REÇU PAR: _____
SIGNATURE DU TRANSPORT

Veuillez faxer ce document une fois signé S.V.P

_____
SIGNATURE DU CLIENT

Heat: 117447
Your PO: QPM0019296D/0

TUBOS REUNIDOS INDUSTRIAL, S.L.U

Barrio Sagarribai, 2 - 01470 AMURRIO (Spain)

QUALITY MANAGEMENT SYSTEM certified by LRQA

EN 10204:2004 / 3.1

CERTIFICADO DE CALIDAD
MILL TEST CERTIFICATE

THE BILLETS AND THE MATERIAL COVERED BY THIS CERTIFICATE ARE MANUFACTURED AT OUR STEEL PLANT IN AMURRIO, SPAIN.

Nº 0000338420/1 Rev. 000

CLIENTE: CUSTOMER	TEXAS PIPE & SUPPLY CO., INC.	PEDIDO / PARTIDA: P.ORDER / ITEM	168670-00 1.
PRODUCTO: ARTICLE	TUBO SIN SOLDADURA ESTIRADO EN FRIO COLD DRAWN SEAMLESS TUBES	REF. FABRICA: WORK ORDER	300018151 000010
EXTREMOS: ENDS	LISOS A ESCUADRA SQUARE CUT PLAIN END	PROTECCIÓN SUPERF: EXT. COATING	ACEITE LIGERO EXTERIOR SLIGHTLY OILED
NORMA / GRADO: APL.STANDARD AND GRADE	ASTM A333/A333M-16 / ASME II SA-333/SA-333M 2015 ASTM A106/A106M-13 / ASME II SA-106/SA-106M-2015 1/6/B	PROCESO FUSION: MELTING PROCESS	HORNO ELECTRICO ACERO TOTALMENTE CALMADO ELECTRIC FURNACE // FULLY KILLED
ESPEC. ADICIONALES: ADITIONAL SPECS.	NACE MR0175/ISO 15156 NACE MR0103	FAB. DE PALANQUILLA: BILLETS MANUFACTURE	COLADA CONTINUA CONTINUOUS CASTING
DIMENSIONES: DIMENSIONS	1/2" NB X 0.147" X 20-24 FT.		
MARCAS: MARKING	ESTAMPADO: DIE STAMPING		
	PINTADO: STENCILLED	TRI ASTM/ASME A/SA106 A/SA333 GR. 1 / 6 / B C.D.S. HN (HEAT) 2470,0 PS I (LENGTH IN FEET) FT 1/2 " NPS 0.147 " LT -45 C NACE MR0175/ISO 15156 + MR0103 - SPAIN TRI ASTM/ASME A/SA106 A/SA333 GR. 1 / 6 / B C.D.S. H N (HEAT) 2470,0 PSI (LENGTH IN FEET) FT 1/2 " NPS 0.147 " LT -45 C	
	CODIGO COLOR: COLOUR CODE		
TRAT. TERMICO: HEAT TREATMENT	NORMALIZADO. / NORMALIZED. 890 °C 7 MIN		

DESCRIPCION SUMINISTRO / DESCRIPTION OF DELIVERY

ITEM FAB. T.R. ITEM	ITEM CLI. CLIENTS ITEM	LONG.INDIV (F) INDIVIDUAL LENGTH	COLADA CAST NR.	Nº TUBOS QUANTITY	LONG. TOTAL (F) LENGTH	PESO(KG) WEIGHT
000010	1.	20,000 - 24,000	117447	347	7.172,244	3.534
TOTAL				347	7.172,244	3.534

Lista de Bultos / Packing List 402361

ENSAYOS NO DESTRUCTIVOS / NON DESTRUCTIVE TESTS

ENSAYO / TEST	%CONTROL / TEST RATE(%)	REQUISITOS / REQUIREMENTS	RESULTADO / RESULT
VISUAL Y DIMENSIONAL VISUAL & DIMENSIONAL INSP.	100%		O.K.

TUBOS REUNIDOS INDUSTRIAL GARANTIZA QUE TODOS LOS TUBOS CUBIERTOS POR ESTE CERTIFICADO CUMPLEN LOS REQUISITOS DEL PEDIDO Y CON LAS ESPECIFICACIONES ARRIBA MENCIONADAS.
TUBOS REUNIDOS INDUSTRIAL CERTIFY THAT ALL THE TUBES COVERED BY THIS CERTIFICATE COMPLY WITH ORDER REQUIREMENTS AND ABOVE MENTIONED SPECIFICATIONS.

AMURRIO 26.12.2016

CONTROL DE CALIDAD DE TUBOS REUNIDOS INDUSTRIAL
TUBOS REUNIDOS INDUSTRIAL QUALITY CONTROL
José Manuel Huerga
P.O.: :

Heat: 117447
Your PO: QPM0019296D/0

TUBOS REUNIDOS INDUSTRIAL, S.L.U

Barrio Sagarribai, 2 - 01470 AMURRIO (Spain)

QUALITY MANAGEMENT SYSTEM certified by LRQA

EN 10204:2004 / 3.1

CERTIFICADO DE CALIDAD
MILL TEST CERTIFICATE

Nº 0000338420/1 Rev. 000

ENSAYOS NO DESTRUCTIVOS / NON DESTRUCTIVE TESTS

ENSAYO / TEST	%CONTROL / TEST RATE(%)	REQUISITOS / REQUIREMENTS	RESULTADO / RESULT
P.HIDROSTATICA/ HYDROTEST	100%	2.470,0 PSI 5 SEC.	O.K.

ENSAYOS TECNOLÓGICOS Y METALÚRGICOS / TECHNOLOGICAL AND METALLURGICAL TEST

APLASTADO /FLATTENING: AC/ A 333 -OK

DOBLADO /BENDING: AC/ A 333 -OK

ANALISIS DE COLADA / CAST ANALYSYS

	C	Mn	Si	P	S	Cr	Ni	Mo	Cu	V	Al	Nb	C.E.
MIN.		0,40	0,10										
MAX.	0,24	1,35		0,015	0,0100	0,300	0,400	0,1200	0,4000	0,0800		0,0200	0,40
117447	0,1530	0,69	0,22	0,008	0,0025	0,098	0,140	0,0308	0,3478	0,0002	0,0031	0,0008	0,33

ANALISIS DE PRODUCTO / PRODUCT ANALYSIS

	C	Mn	Si	P	S	Cr	Ni	Mo	Cu	V	Al	Nb	C.E.
MIN.		0,40	0,10										
MAX.	0,24	1,35		0,015	0,0100	0,300	0,400	0,1200	0,4000	0,0800		0,0200	0,40
117447	0,1530	0,69	0,22	0,008	0,0025	0,098	0,140	0,0308	0,3478	0,0002	0,0031	0,0007	0,33

FORMULAS

	(01)
MIN.	
MAX.	1,000
117447	0,6162

(01) Cr + Ni + Mo + Cu + V

ENSAYOS DE TRACCIÓN / TENSILE TEST

COLADA CAST	Nº	L/T (1)	T/P (2)	DIMENSION (inches)	L.ELAST. YIELD POINT (Psi) (3)	R.TRACC. T.STRENGTH (Psi)	ALARG. ELONG. (%) (4)	Estricción Reduction of Area (%)	DUREZA HARDNESS (HRB)
MIN.					35.000	60.000			
MAX.									99
117447	1	L	T	0,839 x 0,150	44.793	71.896	38		78
117447	2	L	T	0,835 x 0,154	45.803	68.270	45		77
117447	3	L	T	0,839 x 0,150	46.123	69.465	40		78
117447	4	L	T	0,835 x 0,146	44.880	69.122	40		78
117447	5	L	T	0,839 x 0,146	44.546	70.131	40		78
117447	6	L	T	0,835 x 0,154	45.146	67.011	45		77
117447	7	L	T	0,839 x 0,146	45.113	72.112	38		78
117447	8	L	T	0,835 x 0,154	46.048	70.798	40		79
117447	9	L	T	0,839 x 0,146	45.132	69.546	38		79
117447	10	L	T	0,835 x 0,142	45.988	69.110	35		79
117447	11	L	T	0,839 x 0,142	46.123	70.546	38		78
117447	12	L	T	0,835 x 0,138	46.043	69.113	39		77
117447	13	L	T	0,839 x 0,146	45.113	70.004	38		78
117447	14	L	T	0,835 x 0,146	46.073	69.116	42		79

AMURRIO 26.12.2016

CONTROL DE CALIDAD DE TUBOS REUNIDOS INDUSTRIAL
TUBOS REUNIDOS INDUSTRIAL QUALITY CONTROL)
José Manuel Huerga
P.O.: :

Heat: 117447
Your PO: QPM0019296D/0

TUBOS REUNIDOS INDUSTRIAL, S.L.U

Barrio Sagarribai, 2 - 01470 AMURRIO (Spain)

QUALITY MANAGEMENT SYSTEM certified by LRQA

EN 10204:2004 / 3.1

CERTIFICADO DE CALIDAD
MILL TEST CERTIFICATE

N° 0000338420/1 Rev. 000

ENSAYOS DE TRACCIÓN / TENSILE TEST

COLADA CAST	N°	L/T (1)	T/P (2)	DIMENSION (inches)	L.ELAST. YIELD POINT (Psi) (3)	R.TRACC. T.STRENGTH (Psi)	ALARG. ELONG. (%) (4)	Estricción Reduction of Area (%)	DUREZA HARDNESS (HRB)
MIN.					35.000	60.000			
MAX.									99
117447	15	L	T	0,839 x 0,146	45.453	70.741	38		79
117447	16	L	T	0,835 x 0,150	46.078	69.164	40		79
117447	17	L	T	0,839 x 0,150	45.965	70.336	38		78
117447	18	L	T	0,835 x 0,150	46.114	69.110	40		79

(1) : L = LONGITUDINAL // T = TRANSVERSAL
(2) : T = Full size tube // P = Strip specimen
(3) : yield point (0,2%)
(4) : Lo = 2" (50 mm)

ENSAYOS DE IMPACTO - CHARPY V / IMPACT TEST

COLADA CAST	N°	L/T (1)	DIMENS (inches)		T° (°C)	RESILIENCIA IMPACT TEST (lb/ft)		AVG (lb/ft)	
		10	10,00	-45	10 / 13				
		10	10,00	25	25 / 25				
117447	1	L	0,394	0,098	-45	18	19	18	18
117447	2	L	0,394	0,098	25	21	22	19	21

(1) : L = LONGITUDINAL // T = TRANSVERSAL

ANEXOS / ANNEX

" BILLETS ARE PRODUCED AT OUR AMURRIO STEEL PLANT, WHICH IS ALSO CERTIFIED TO ISO 9001, THE SAME AS OUR TUBE PLANT ".

" NO WELD REPAIR "
" MERCURY FREE"

AMURRIO 26.12.2016

CONTROL DE CALIDAD DE TUBOS REUNIDOS INDUSTRIAL
TUBOS REUNIDOS INDUSTRIAL QUALITY CONTROL)
José Manuel Huerga
P.O.: :

Heat: 1607740
Your PO: QPM00192960/0

ArcelorMittal South Africa Limited
Tubular Products
273 Genl. Hertzog Rd,
Peacehaven Vereeniging 1939
P O Box 48 Vereeniging 1930
South Africa

Telephone +27 (0)16 450 4220
Fax +27 (0)16 423 4906

MATERIAL TEST CERTIFICATE
SEAMLESS TUBE

Licensed under API Spec 5L and 5CT
5L - 0318
5CT - 0418

ISO 9001: 2008
DB-395997 QM

Test Certificate
BS 10204:2004 TYPE 3.1

ArcelorMittal

Customer:	Texas Pipe & Supply Company, LTD	Customer Order/Contract No:	SUS1 155057
Order No:	4000022918	Material No:	1000042061
Certificate Reference No:	040062068106	Cast/Heat No:	1607740
Product:	FULLY KILLED HOT FINISHED CARBON STEEL SEAMLESS TUBES		
Specification:	ASTM A333.15/A106B:15/A53B:12 A999.15 ASME SA333.15/SA106B:15/SA53B:15 A999.15		
Product Marking:	ARCELORMITTAL SA ASTM A106 GR B/ASME SA106 GR B ASTM A333 GR 6/ASME SA333 GR 6 HFS LT M50F 3.500 0.216 40.000 TESTED 3000 psi CAST NO: 1607740 PROD/O NO: T1242291810 NDE MADE IN SOUTH AFRICA		

General Information

Quantity	Mass	Dimensions			Total Length
		Tube OD	Thickness	Length	
175	53,152.355(lb)	3.500(")	0.216(")	40.000 (ft)	7,000.000(ft)

Steel making process	Final Rolling Operation
Electric Arc	As Rolled Normalised rolled with finishing in the range of 1,553-1,733°F and cooled in still air

Chemical Composition

R05-(Cr+Ni+Mo+Cu+V) R22-(V+Nb+Ti) R24-(Nb+V)

Element(%)	C	Si	Mn	S	P	Cr	Ni	Mo	Cu	V	Al	Ti	Sn	Ca	N	B	Nb	CE	R05	R22	R24		
Minimum	-	0.10	0.29	-	-	-	-	-	-	-	-	-	-	-	-	-	-	-	-	-	-		
Maximum	0.230	-	1.20	0.025	0.025	0.30	0.40	0.120	0.400	0.080	-	-	-	-	-	-	-	0.43	-	-	-		
Heat	0.130	0.23	1.20	0.003	0.013	0.03	0.01	0.001	0.010	0.058	0.027	0.019	0.001	0.0020	0.0100	0.0000	0.0010	0.35	0.11	0.08	0.059		
Product	0.1300	0.2300	1.2000	0.0030	0.0130	0.0300	0.0100	0.0010	0.0100	0.0580	0.0270	-	-	-	-	-	-	0.3491	-	-	-		
Product (ADD)	0.1300	0.2300	1.2000	0.0030	0.0130	0.0300	0.0100	0.0010	0.0100	0.0580	0.0270	-	-	-	-	-	-	0.3491	-	-	-		

Mechanical Properties

Specification Limits	UTS (Rm) MPa	UTS (Rm) psi	Yield (0.5%) MPa	Yield (0.5%) psi	% EL 2 inch
Minimum		60000		35000	30.0
Maximum		-		-	-
(1) Actual		72083		54679	35.0
(2) Actual		73389		55694	37.0
(3) Actual					
(4) Actual					

	UTS (Rm) MPa	UTS (Rm) psi	Yield (0.5%) MPa	Yield (0.5%) psi	% EL 2 inch
(5) Actual					
(6) Actual					
(7) Actual					
Orientation & type of tensile test	Longitudinal, Strip				
Width of tensile piece (inch)	0.75 Inch				
Orientation of impact test piece	0.394 X 0.197" - long				

OTHER TESTS	
Category	Result
Flattening	Passed
Hydrostatic	3000 psi for 5 Sec
NDI: EMI	PASS - ASTM E570 - 12.5% NOTCH
NDI: UT	UT not required
HV 22 lbs	157 163 163

Remarks:

Material in accordance with NACE MR0175:2015/ISO15156-2:2015, MR0103:2015. Dimensions to ASME B36.10M-2015. The material conform to the hot yield strength requirements as per ASME, Sect II, Pt D, Table Y-1, 2015. All the material conform to the visual and dimensional requirements and is made to a suitable fine grain practice.

Quality Assurance Manager: PJ Venter *Date of Release: 2016.12.29* *Certified by:*

We hereby certify that the material was manufactured, tested and inspected as and fully comply with the requirements of referenced specifications. No changes, amendments or additions may be made to this document. Any changes which are effected shall invalidate this certificate.

ArcelorMittal South Africa Limited
Tubular Products
273 Genl. Hertzog Rd,
Peacehaven Vereeniging 1939
P O Box 48 Vereeniging 1930
South Africa

Telephone +27 (0)16 450 4220
Fax +27 (0)16 423 4906

MATERIAL TEST CERTIFICATE
SEAMLESS TUBE

Licensed under API Spec 5L and 5CT
5L - 0319
5CT - 0419

ISO 9001: 2008
DE-395997 QM

Test Certificate
EN 10204:2004 TYPE 3.1

ArcelorMittal

Customer:	Texas Pipe & Supply Company, LTD
Order No:	4000022918
Certificate Reference No:	040062068106
Product:	FULLY KILLED HOT FINISHED CARBON STEEL SEAMLESS TUBES
Specification:	ASTM A333.15/A106B:15/A53B:12 A999.15 ASME SA333.15/SA106B:15/SA53B:15 A999.15
Product Marking:	ARCELORMITTAL SA ASTM A106 GR B/ASME SA106 GR B ASTM A333 GR 6/ASME SA333 GR 6 HFS LT M50F 3.500 0.216 40.000 TESTED 3000 psi CAST NO: 1607740 PROD/O NO: T1242291810 NDE MADE IN SOUTH AFRICA
Customer Order/Contract No:	SUS1 155057
Material No:	1000042061
Cast/Heat No:	1607740

Mechanical Properties

Specification Limits	UTS (Rm) MPa	UTS (Rm) psi	Yield (0.6%) MPa	Yield (0.6%) psi	% EL 2 inch
Minimum		60000		35000	30.0
Maximum		-		-	-
(8) Actual					
(9) Actual					
(10) Actual					
(11) Actual					
(12) Actual					
(13) Actual					
(14) Actual					
(15) Actual					
(16) Actual					
(17) Actual					

	UTS (Rm) MPa	UTS (Rm) psi	Yield (0.5%) MPa	Yield (0.5%) psi	% EL 2 inch
(18) Actual					
(19) Actual					
(20) Actual					
(21) Actual					
(22) Actual					
(23) Actual					
(24) Actual					
(25) Actual					
(26) Actual					
(27) Actual					
(28) Actual					
(29) Actual					

Other Tests

Impact (ft.lbs)	13.0 13.0 16.0 Ave. 14.0 @ -51 °F
Shear Fracture (%)	22.0 22.0 22.0 Ave. 22.0
Impact (Spec)	7 ft.lbs min - Longitudinal

Remarks:

Material in accordance with NACE MR0175:2015/ISO15156-2:2015, MR0103:2015. Dimensions to ASME B36.10M-2015. The material conform to the hot yield strength requirements as per ASME, Sect II, Pt D, Table Y-1, 20.5. All the material conform to the visual and dimensional requirements and is made to a suitable fine grain practice.

Quality Assurance Manager: PJ Venter *Date of Release: 2016.12.29* *Certified by:*

We hereby certify that the material was manufactured, tested and inspected to and fully comply with the requirements of referenced specifications. No changes, amendments or additions may be made to this document. Any changes which are effected shall invalidate this certificate.

Heat: 1607740
Your PO: OPM00019296D/0

Heat: 160783O
Your PO: QPM0019296D/0

ArcelorMittal South Africa Limited
Tubular Products
273 Genl. Hertzog Rd,
Peacehaven Vereeniging 1939
P O Box 48 Vereeniging 1930
South Africa

Telephone +27 (0)16 450 4220
Fax +27 (0)16 423 4906

MATERIAL TEST CERTIFICATE
SEAMLESS TUBE

Licensed under API Spec 5L and 5CT
5L - 0319
5CT - 0419

ISO 9001: 2008
DE-385997 QM

Test Certificate EN 10204:2004 TYPE 3.1

ArcelorMittal

Customer:	Texas Pipe & Supply Company, LTD	Customer Order/Contract No:	SUS3 155360
Order No:	4000023163	Material No:	1000042130
Certificate Reference No:	040062128514	Cast/Heat No:	1607830
Product:	FULLY KILLED HOT FINISHED CARBON STEEL SEAMLESS TUBES		
Specification:	ASTM A333.15/A106B:15/A53B:12 A999.15 ASME SA333.15/SA106B:15/SA53B:15 A999.15		
Product Marking:	ARCELORMITTAL SA ASTM A106 GR B/ASME SA106 GR B ASTM A333 GR 6/ASME SA333 GR 6 HFS LT M50F 4.500 0.237 40.000 TESTED 3000 psi CAST NO: 1607830 PROD/O NO: T0242316310 NDE MADE IN SOUTH AFRICA		

General Information

Quantity	Mass	Dimensions			Total Length
		Tube OD	Thickness	Length	
18	7,782.194(lb)	4.500(")	0.237(")	40.000 (ft)	720.000(ft)

Steel making process	Final Rolling Operation
	Normalised
Electric Arc	Normalised rolled with finishing in the range of 1,553-1,733°F and cooled in still air

Chemical Composition

R24-(Nb+V)

Element(%)	C	Si	Mn	S	P	Cr	Ni	Mo	Cu	V	Al	Ti	Sn	Ca	N	B	Nb	CE	R24
Minimum	-	0.10	0.29	-	-	-	-	-	-	-	-	-	-	-	-	-	-	-	-
Maximum	0.230	-	1.20	0.025	0.025	0.30	0.40	0.120	0.400	0.080	-	-	-	-	-	-	-	0.43	-
Heat	0.120	0.22	1.20	0.002	0.009	0.03	0.01	0.002	0.010	0.060	0.029	0.018	0.001	0.0017	0.0080	0.0002	0.0005	0.34	0.061
Product	0.1200	0.2200	1.2000	0.0020	0.0090	0.0300	0.0100	0.0020	0.0100	0.0600	0.029C	-	-	-	-	-	-	0.3397	-
Product (ADD)	0.1200	0.2200	1.2000	0.0020	0.0090	0.0300	0.0100	0.0020	0.0100	0.0600	0.029C	-	-	-	-	-	-	0.3397	-

Mechanical Properties

Specification Limits	UTS (Rm) MPa	UTS (Rm) psi	Yield (0.5%) MPa	Yield (0.5%) psi	% EL 2 inch
Minimum		60000		35000	30.0
Maximum		-		-	-
(1) Actual		71068		52358	33.0
(2) Actual		71503		52793	36.0
(3) Actual					
(4) Actual					

	UTS (Rm) MPa	UTS (Rm) psi	Yield (0.5%) MPa	Yield (0.5%) psi	% EL 2 inch
(5) Actual					
(6) Actual					
(7) Actual					

Orientation & type of tensile test	Longitudinal, Strip
Width of tensile piece (inch)	1 inch
Orientation of impact test piece	0.394 X 0.197" - long

OTHER TESTS	
Category	Result
Flattening	Passed
Hydrostatic	3000 psi for 5 Sec
NDE: EMI	PASS - ASTM E570 - 12.5% NOTCH
NDE: UT	UT not required
HV 22 lbs	153 154 155

Remarks:

Material in accordance with NACE MR0175:2015/ISO15156-2:2015, MR0103:2015. Dimensions to ASME B36.10M-2015. The material conform to the hot yield strength requirements as per ASME, Sect II, Pt D, Table Y-1, 2015. All the material conform to the visual and dimensional requirements and is made to a suitable fine grain practice.

Quality Assurance Manager: PJ Venter *Date of Release: 2017.04.11* *Certified by:*

We hereby certify that the material was manufactured, tested and inspected to and fully comply with the requirements of referenced specifications. No changes, amendments or additions may be made to this document. Any changes which are effected shall invalidate this certificate.

Heat: 1607830
Your PO: QPM0019296D/0

ArcelorMittal South Africa Limited
Tubular Products
273 Genl. Hertzog Rd,
Peacehaven Vereeniging 1939
P O Box 48 Vereeniging 1930
South Africa

Telephone +27 (0)16 450 4220
Fax +27 (0)16 423 4906

MATERIAL TEST CERTIFICATE
SEAMLESS TUBE

Licensed under API Spec 5L and 5CT
5L - 0319
5CT - 0419

ISO 9001: 2008
DS-39 5897 QM
Test Certificate EN 10204:2004 TYPE 3.1

ArcelorMittal

Customer:	Texas Pipe & Supply Company, LTD	Customer Order/Contract No:	SUS3 155360
Order No:	4000023163	Material No:	1000042130
Certificate Reference No:	040062128514	Cast/Heat No:	1607830
Product:	FULLY KILLED HOT FINISHED CARBON STEEL SEAMLESS TUBES		
Specification:	ASTM A333.15/A106B:15/A53B:12 A999.15 ASME SA333.15/SA106B:15/SA53B:15 A999.15		
Product Marking:	ARCELORMITTAL SA ASTM A106 GR B/ASME SA106 GR B ASTM A333 GR 6/ASME SA333 GR 6 HFS LT M50F 4.500 0.237 40.900 TESTED 3000 psi CAST NO: 1607830 PROD/O NO: T0242316310 NDE MADE IN SOUTH AFRICA		

Mechanical Properties

Specification Limits	UTS (Rm) MPa	UTS (Rm) psi	Yield (0.5%) MPa	Yield (0.5%) psi	% EL 2 inch
Minimum		60000		35000	30.0
Maximum		-		-	-
(8) Actual					
(9) Actual					
(10) Actual					
(11) Actual					
(12) Actual					
(13) Actual					
(14) Actual					
(15) Actual					
(16) Actual					
(17) Actual					

	UTS (Rm) MPa	UTS (Rm) psi	Yield (0.5%) MPa	Yield (0.5%) psi	% EL 2 inch
(18) Actual					
(19) Actual					
(20) Actual					
(21) Actual					
(22) Actual					
(23) Actual					
(24) Actual					
(25) Actual					
(26) Actual					
(27) Actual					
(28) Actual					
(29) Actual					

Other Tests

Impact (ft.lbs)	86.0 100.0 145.0 Ave. 110.0 @ -51 °F
Shear Fracture (%)	30.0 30.0 40.0 Ave. 33.3
Impact (Spec)	7 ft.lbs min - Longitudinal

Remarks:

Material in accordance with NACE MR0175:2015/ISO15156-2:2015, MR0103:2015. Dimensions to ASME B36.10M-2015.
The material conform to the hot yield strength requirements as per ASME, Sect II, Pt D, Table Y-1, 2015. All the material conform to the visual and dimensional requirements and is made to a suitable fine grain practice.

Quality Assurance Manager: PJ Venter *Date of Release: 2017.04.11* *Certified by:*

We hereby certify that the material was manufactured, tested and inspected to and fully comply with the requirements of referenced specifications. No changes, amendments or additions may be made to this document. Any changes which are effected shall invalidate this certificate.

HENGYANG VALIN STEEL TUBE CO.,LTD

MILL TEST CERTIFICATE

Add: 10 Dalixincun, Hengyang City,Hunan,P.R.China P.C.:421001
Tel and Fax: +86 734 8873739
E-mail: hsiec@hysteeltube.com

(ACCORDING TO EN10204 3.1B)

CUSTOMER	R + R TRADING CO.,LTD			CERTIFICATE NO.	C201533163-1
CONTRACT-ITEM NO.	2211003181-18	P.O.NO.	405398	DATE:	2015-10-8 PAGE: 2/3
PRODUCT	SEAMLESS STEEL LINE PIPE			DELIVERY CONDITION	NR
SPECIFICATION	SEE SPECIFICATION NOTE			HEAT TREATMENT	
GRADE	B/X42,GR.6,Grade 290			DIMENSIONS	NPS 4 ×0.237inch ×40ft
TOTAL BUNDLES: 22	TOTAL PIECES: 216	TOTAL LENGTH: 8640.026	ft	TOTAL WEIGHT:	42.314 mt

NO.	HEAT No. / BATCH No.	Type	CHEMICAL COMPOSITION (%)																												
			C	Si	Mn	Cr	Mo	W	Cu	Ni	P	Al	Sn	As	Pb	Sb	Nb	Ti	Zr	N	Bi	S	V	B	Ca	CE	SUM1	SUM2	SUM3	R1	R2	R3
			*100			*1000																*10000				*100	*1000					
		P																														
1	1535111V	H	9	31	135	39	10		51	23	11						12	12				17	63	0.4		17	129.3	18.3	30.3			
	6E9242011	P	10	32	134	40	12		48	25	10						13	10				20	81	1		18	133.1	21.1	31.1			
	6E9242011	P	11	34	135	41	13		50	26	11						15	11				23	81	2		20	138.1	23.1	34.1			
2	1535111V	H	9	31	135	39	10		51	23	11						12	12				17	63	0.4		17	129.3	18.3	30.3			
	6E9242012	P	10	32	134	41	12		51	24	10						14	10				18	80	1		18	136	22	32			
	6E9242012	P	10	32	134	40	13		50	23	10						13	10				15	81	1		18	134.1	21.1	31.1			
		H																													
		P																													
		P																													
		H																													
		P																													
		P																													
		H																													
		P																													
		P																													

NON-DESTRUCTIVE TEST

POSITION	PIPE BODY	PIPE END	END SURFACE(GROOVE)	BEVELLING
NDT Type(Level)	EMI/L4	UT/L4		ACCEPTABLE
				VISUAL & DIMENSION
LAMINAR				ACCEPTABLE
TEST RESULT	ACCEPTABLE	ACCEPTABLE	N/A	COATING
RESIDUAL MAGNETISM		ACCEPTAELE		
UT THICKNESS MEASUREMENT		N/A		
HYDROSTATIC TEST Min(psi/s)	2650/6	ACCEPTAELE		ACCEPTABLE

NOTES: H--HEAT ANALYSIS P--PRODUCT ANALYSIS CE--EQUIVALENT CARBON R--RATIO R1=Ca /S R2=Al /N R3=Mn /C

CEIIW=C+Mn/6+(Cr+Mo+V)/5+(Cu+Ni)/15 CEPCM=C+Si/30+(Mn+Cr+Cu)/20+Ni/60+Mo/15+V/10+5*B SUM1=Cr+Cu+Mo+Ni+V SUM2=Nb+V SUM3=Nb+V+Ti

ET-ISO10893-2-2011、UT-ISO10893-10-2011、MPI-ISO10893-5-2011、EMI-ISO10893-3-2011、WT-ISO10893-12-2011、LaminationT-ISO-10893-8-2011

L4/L3/L2--ACCEPT LEVEL L4/L3/L2,NOTCH DEPTH IS 12.5% /10% /5% THE SPECIFIED WALL THICKNESS.

HENGYANG VALIN
STEEL TUBE CO.,LTD

MILL TEST CERTIFICATE

(ACCORDING TO EN10204 3.1B)

Add: 10 Dalixincun, Hengyang
City,Hunan,P.R.China P.C.:421001
Tel and Fax: +86 734 8873739
E-mail: hsiec@hysteeltube.com

CUSTOMER	R + R TRADING CO.,LTD			CERTIFICATE NO.	C201533163-1
CONTRACT-ITEM NO.	2211003181-18	P.O.NO.	405398	DATE: 2015-10-8	PAGE: 3/3
PRODUCT	SEAMLESS STEEL LINE PIPE			DELIVERY CONDITION	NR
SPECIFICATION	SEE SPECIFICATION NOTE	HEAT TREATMENT			
GRADE	B/X42,GR.6,Grade 290			DIMENSIONS	NPS 4 ×0.237inch ×40ft
TOTAL BUNDLES: 22	TOTAL PIECES: 216	TOTAL LENGTH: 8640.026 ft		TOTAL WEIGHT : 42.314 mt	

REMARK : ORIGIN:MADE IN CHINA

SPECIFICATION NOTE	ASTM/ASME A/SA 333 Gr 6/CSA Z245.1 Gr 290 CAT 2, API 5L 45th BN/ X42N PSL2, NACE MR0175/MR0103 and ISO 15156(hardness only)

We hereby certify that material herein described has been manufactured in accordance with the standards and specifications required in your order and satisfies the corresponding requirements.

This certificate is issued by a computerized system and it is valid with electronic signature. In case the owner of the certificate would release a copy of it ,he must attest its conformity to the original one taking upon himself the responsibility for any unlawful or not allowed use.

Any alteration and/or falsification will be subject to the law.

If you need to assure the authenticity of this certificate ,please do not hesitate to contact Hengyang Valin Steel Tube CO.,LTD, E-mail: hsiec@hysteeltube.com

CUSTOMER THIRD PARTY

Quality Manager:

Certificate-maker: 唐妍娜

Awaji ASK

ISO 9001 :2008 Manufacturing Company
Certified by BV. Certificate No. TH004535

Material manufacturer QMS acc.
PED 97/23/EC. Annex1. Par4.3/AD2000W0
Certified by Lloyd's Register
Certificate No. 50207/1

INSPECTION CERTIFICATE

EN 10204 3.1 : 2004

AWAJI MATERIA (THAILAND) CO.,LTD.

81,MOO4, PRAKASA ROAD, TAMBOL BANGMUANG, AMPHUR MUANG
SAMUTPRAKARN THAILAND 10270. Tel : (662)701-5226

Date : MAY 30, 2015

Purchaser : Allied Fittings L.P. (Canada)

MADE FROM SEAMLESS STEEL PIPE

Certificate No. : T15-52174

Order No.	Job No.	Product	Raw Material Pipe Maker
120714AAW/WPL6/18	-	CARBON STEEL BUTT WELDING FITTINGS	NIPPON STEEL & SUMITOMO METAL CORPORATION. (JAPAN)
Inspection Standard	Material Standard		Pipe Heat No. : J4K9152

Inspection Standard	Material Standard	Visual	Dimension	*5 UT Inspection	Magnetic Particle Test
ASME B16.9-12, ASME B16.25-07 ASTM A960-14a NACE MR-0175/ISO 15156-09. SS Region3 MR-0103-12	ASTM A420-14, WPL6 ASME SA420-13, WPL6 except nuclear usage CSA Z245.11-13, GR.241 CAT.II - SS	GOOD	GOOD	-	GOOD

Manufacturing No. (Heat code.)	Product Code	Material	Article & Size	Quantity	Note.
54510	-	WPL6	STD TEE 4"	100 Pcs.	

		*1 Chemical Composition (%)																	*2 Mechanical Test			Hardness	Impact Test
Specification		C	Si	Mn	P	S	Cu	Ni	Cr	Mo	V	Nb	Ti	B	Ca	N	Al	C.E.	Y.S.	T.S.	E		
Min.		X100	X100	X100	X1000	X10000	X100	X100	X100	X100	X100	X1000	X100	X10000	X10000	x1000	X1000	X100	MPa		%	HB	J
Max.		-	15	50	-	-	-	-	-	-	-	-	-	-	-	-	-	-	240	415	27	-	-50°C
Heat No.		30	40	135	35	400	40	40	30	12	8	20	-	-	-	-	-	-	-	655	-	197	*3 5
J4K9152	L	11	30	131	11	15	1	2	12	1	0	0	2	1	18	2	36	36	336	475	41.4	134	*4 E 147.81 E 133.27
	P	-	-	-	-	-	-	-	-	-	-	-	-	-	-	-	-	-				134	E 131.82 A 137.63

$$C.E. = C + \frac{Mn}{6} + \frac{Cr+Mo+V}{5} + \frac{Ni+Cu}{15}$$

*1 Equivalent for A420 WPL6

*2 Y.S.= Yield Strength (0.2% offset). T.S. = Tensile Strength. E = Elongation (in 50mm)

L = Ladle Analysis, P = Product Analysis

Weld repair is not applied to our products.

Steel Making by Vacuum degassed, fully silicon aluminium killed & fine grain.

*5 UT = Ultrasonic thickness inspection

Impact Test

*3 Size of Specimen	A	E	*4
F. 10.0 by 10.0	17.6	13.6	E = Each Test
7. 10.0 by 7.5	13.6	10.8	A = Average Value
5. 10.0 by 5.0	9.5	7.0	
2. 10.0 by 2.5	5.4	4.1	

ELBOW , TEE , REDUCER & CAP / Normalizing : 910°C (Holding Time : (Nominal Wall Thickness/ 1mm) x 1.5 min.))

AT-24(2)24

"We certify that the fitting was manufactured, sampled, tested and inspected in accordance with the specification and was found to meet the requirements.

Material complies with ASTM A/SA234 WPB (14)

Surveyor to

QA. GM. /Work Inspector S. MAEKAWA

Maekawa@awaji.co.th

ISO 9001 :2008 Manufacturing Company
Certified by BV. Certificate No. TH004535

Material manufacturer QMS acc.
PED 97/23/EC. Annex1. Par4.3/AD2000W0
Certified by Lloyd's Register
Certificate No. 50207/1

INSPECTION CERTIFICATE

EN 10204 3.1 : 2004

AWAJI MATERIA (THAILAND) CO.,LTD.

81,MOO4, PRAKASA ROAD, TAMBOL BANGMUANG, AMPHUR MUANG
SAMUTPRAKARN THAILAND 10270, Tel : (662)701-5226

Date : MARCH 17, 2015

Certificate No. : T15-30626

Purchaser Allied Fittings L.P. (Canada)

MADE FROM SEAMLESS STEEL PIPE

Order No.	Job No.	Product	Raw Material Pipe Maker
E1-5517/WPL6/2	-	CARBON STEEL BUTT WELDING FITTINGS	NIPPON STEEL & SUMITOMO METAL CORPORATION, (JAPAN)
Inspection Standard	Material Standard		Pipe Heat No. : J4LB550
ASME B16.9-12, ASME B16.25-07 ASTM A960-14a NACE MR-0175/ISO 15156-09, SS Region3 MR-0103-12	ASTM A420-14, WPL6 ASME SA420-13, WPL6 except nuclear usage CSA Z245.11-13, GR.241 CAT.II - SS	Visual: GOOD; Dimension: GOOD	*5 UT Inspection: - ; Magnetic Particle Test: -

Manufacturing No. (Heat code.)	Product Code	Material	Article & Size	Quantity	Note.
52247-1	-	WPL6	STD REDUCER CONCENTRIC 4" x 3"	16 Pcs.	

		*1 Chemical Composition (%)																	*2 Mechanical Test			Hardness	Impact Test
Specification		C	Si	Mn	P	S	Cu	Ni	Cr	Mo	V	Nb	Ti	B	Ca	N	Al	C.E.	Y.S.	T.S.	E		
Min.		X100	X100	X100	X1000	X10000	X100	X100	X100	X100	X100	X1000	X100	X10000	X10000	x1000	X1000	X100	MPa		%	HB	J
Max.		-	15	50	-	-	-	-	-	-	-	-	-	-	-	-	-	-					
Heat No.		30	40	135	35	400	40	40	30	12	8	20	-	-	-	-	-	-	240	415	25.5	-	-50°C
J4LB550	L	11	23	127	9	12	2	2	13	1	0	0	2	1	23	4	33	35	-	655	-	197	*3 5
	P	-	-	-	-	-	-	-	-	-	-	-	-	-	-	-	-	-	335	463	41.1	131 140	*4 E 158.59 E 141.97 E 131.82 A 144.12

$$C.E = C + \frac{Mn}{6} + \frac{Cr+Mo+V}{5} + \frac{Ni+Cu}{15}$$

*1 Equivalent for A420 WPL6

*2 Y.S.= Yield Strength (0.2% offset). T.S. = Tensile Strength, E = Elongation (in 50mm)

L = Lacle Analysis, P = Product Analysis

Weld repair is not applied to our products.

Steel Making by Vacuum degassed, fully silicon aluminium killed & fine grain.

*5 UT = Ultrasonic thickness inspection

Impact Test

*3 Size of Specimen	A	E	*4
F. 10.0 by 10.0	17.6	13.6	E = Each Test
7. 10.0 by 7.5	13.6	10.8	A = Average Value
5. 10.0 by 5.0	9.5	7.0	
2. 10.0 by 2.5	5.4	4.1	

ELBOW , TEE , REDUCER & CAP / Normalizing : 910°C (Holding Time : (Nominal Wall Thickness/1mm) x 1.5 min.))

We certify that the fitting was manufactured, sampled, tested and inspected in accordance with the specification and was found to meet the requirements.

AT-24(2)24

Material complies with ASTM A/SA234 WPB (14)

Surveyor to

QA. GM. /Work Inspector S. MAEKAWA

Maekawa@awaji.co.th

TRILAD Flanges and Fittings, Inc.

172 Turbo Drive
Sherwood Park, AB, CANADA T8H 2J6
(PHONE) 780-464-7774
(FAX) 780-464-0044
www.tri-lad.com

ISO 9001:2008

CERTIFIED MATERIAL TEST REPORT

Certificate No. 16241668 | EN 10204 3.1 | Date of Report 8/ 15/ 2016

Customer
ALLIED EDMONTON - CAD$
172 TURBO DRIVE
SHERWOOD PARK AB T8H 2J6

Customer Order No. 083016 | Quantity 50

Tri-Lad Order No. 930375 | Line No. 29

Specification: A420-16 / SA420 2015 ED WPL6	Heat Treatment: NORMALISED
Item Description: 4 X 3 STD ECC (889752)	Temperature: Init 1670 F 910 C
Shop Order/Trace No.	Time / Lot Definition
Lot No.	
Heat Code: TL10013043	
C.E.: .31 / Melt Practice	

Chemical Composition

	C	Mn	P	S	Si	Cu	Ni	Cr	Mo	V
Heat Product	.14	.86	.011	.000	.22	.00	.06	.12	.00	.00
Heat Product	Nb .01									
Heat Product										

Mechanical Properties

Yield	Tensile	Elongation	Reduction of Area	Hardness	Impact Test Temperature	Impact Values			Shear Fracture
Ksi 58	Ksi 71			HBW 135	M59 F	Ft-lbs 49	72	72	
Mpa 398	Mpa 490	45 %		HBW 133	M51 C	Joules 66	98	98	
Tensile Specimen: STD RD									

Lateral Expansion	Impact Type	Impact Orientation	Starting Material	Impact Specimen
		LONGITUDINAL	PIPE	1/2 SIZE

Notes

Mn/C Ratio =	6.14
CE = C + Mn/6 + (Cr+Mo+V)/5 + (Ni+Cu)/15	0.31
Yield/Tensile ratio =	
Fully killed	CSA Z245.11 GR 241 CAT II M45C
Sour Service Region 3	Also meets A234-15 / SA234 2015 ED WPB
	NACE MR0103 LATEST ED.
	NACE MR0175/ISO15156-09

Material is in accordance with the applicable Standard to which it is ordered including:
ASME Sect II, ASME B16.5, B16.9, B16.36, B16.47, CSA, MSS, AWWA C-207.
NO WELD REPAIR MERCURY FREE
Material conforms to both ASTM (A) and ASME (SA) applicable specifications.
We hereby certify that all information presented on this CMTR conforms to the above specification.
We hereby certify the results to be a true copy of the records of the company.

Troy Gorrell
Q.C. Inspector

BS.

Awaji ASK

INSPECTION CERTIFICATE

EN 10204 3.1 : 2004

AWAJI MATERIA (THAILAND) CO.,LTD.

Factory : 81 MOO 4, PRAKASA ROAD, TAMBOL BANGMUANG AMPHUR MUANG
SAMUTPRAKARN, THAILAND 10270, Tel : (662) 701-5226
Head Office : 4-2, KAMIGAMO, SUMOTO CITY, HYOGO, 656-0015, JAPAN
Tel : (81)799-22-1751 : FAX (81) 799-22-1739

ISO 9001 :2008 Manufacturing Company
Certified by BV. Certificate No. TH004535

Material manufacturer QMS acc.
PED 97/23/EC. Annex1. Par4.3/AD2000W0
Certified by Lloyd's Register
Certificate No. 50207/1

Purchaser : Allied Fittings L.P. (Canada)

Date : FEBRUARY 3, 2017

Certificate No. : T17-20439

Order No.	Job No.	Product	
120516AAW/WPL6/1	-	CARBON STEEL BUTT WELDING FITTINGS	MADE FROM SEAMLESS STEEL PIPE
Inspection Standard	**Material Standard**		
ASME B16.9-12, ASME B16.25-12 ASTM A960-15 NACE MR-0175/ISO 15156-15, SS Region3 MR-0103-15	ASTM A420-16, WPL6 ASME SA420-15, WPL6 except nuclear usage CSA Z245.11-13, GR.241 CAT.II – SS	Visual: GOOD Dimension: GOOD	*5 UT Inspection: W.T. INSPECTED Magnetic Particle Test: -

Manufacturing No. (Heat code.)	Product Code	Material	Article & Size	Quantity	Note.
711M04	P9LS4-AW	WPL6	STD 90 LONG RADIUS ELBOW 4"	300 Pcs.	

Specification		*1 Chemical Composition (%)																	*2 Mechanical Test			Hardness	Impact Test
		C	Si	Mn	P	S	Cu	Ni	Cr	Mo	V	Nb	Ti	B	Ca	N	Al	C.E.	Y.S.	T.S.	E		
Min.		X100	X100	X100	X1000	X10000	X100	X100	X100	X100	X100	X1000	X100	X10000	X10000	x1000	X1000	X100	MPa		%	HB	J
Max.		-	15	50	-	-	-	-	-	-	-	-	-	-	-	-	-	-	240	415	25.5	-	-50°C
Heat No.		30	40	135	35	400	40	40	30	12	8	20	-	-	-	-	-	-	-	655	-	197	*3 5
665222	L	12	27	115	9	20	7	4	5	3	2	0	0	0	22	7	37	34	345	465	37	149	*4 E 73.73
	P	-	-	-	-	-	-	-	-	-	-	-	-	-	-	-	-	-				143	E 65.06 E 70.25 A 69.68

$$C.E. = C + \frac{Mn}{6} + \frac{Cr+Mo+V}{5} + \frac{Ni+Cu}{15}$$

*1 Equivalent for A420 WPL6

*2 Y.S.= Yield Strength (0.2% offset), T.S. = Tensile Strength, E = Elongation (in 50mm)

L = Ladle Analysis, P = Product Analysis

Weld repair is not applied to our products.

Steel Making by Vacuum degassed, fully silicon aluminium killed & fine grain.

*5 UT = Ultrasenic thickness inspection

Impact Test

*3 Size of Specimen	A	E	*4
F. 10.0 by 10.0	17.5	13.6	E = Each Test
7. 10.0 by 7.5	13.5	10.8	A = Average Value
5. 10.0 by 5.0	9.5	7.0	
2. 10.0 by 2.5	5.4	4.1	

ELBOW , TEE , REDUCER & CAP / Normalizing : 910°C (Holding Time : (Nominal Wall Thickness/1mm) x 1.5 min.))

AT-24(2)26

"We certify that the fitting was manufactured, sampled, tested and inspected in accordance with the specification and was found to meet the requirements.

Material complies with ASTM A/SA234 WPB (15)

Surveyor to

QA. GM. /Work Inspector S. MAEKAWA

Maekawa@awaji.co.th

TRILAD Flanges and Fittings, Inc.

172 Turbo Drive
Sherwood Park, AB, CANADA T8H 2J6
(PHONE) 780-464-7774
(FAX) 780-464-0044
www.tri-lad.com

ISO 9001:2008

CERTIFIED MATERIAL TEST REPORT

Certificate No. 17255506	EN 10204 3.1	Date of Report 3/21/2017	
Customer: ALLIED EDMONTON - CAD$ 172 TURBO DRIVE SHERWOOD PARK AB T8H 2J6		Customer Order No. 575051	Quantity 70
		Tri-Lad Order No. 961256	Line No. 1

Specification: A350-LF2-CL 1 STOCK	Heat Treatment: NORMALISED
Item Description: 3 150 WN STD RF . (877923)	Temperature: Init 1700 F 926 C
Shop Order/Trace No.	Time: N=1.15HRS; Lot Definition:
Lot No.	
Heat Code: TL10014925	
C.E. .38; Melt Practice: EF	

Chemical Composition

	C	Mn	P	S	Si	Cu	Ni	Cr	Mo	V
Heat	.21	.98	.028	.011	.18	.00	.01	.01	.01	.004
Product										
Heat	Nb .01									
Product										
Heat										
Product										

Mechanical Properties

Yield	Tensile	Elongation	Reduction of Area	Hardness	Impact Test Temperature	Impact Values	Shear Fracture
Ksi 49	Ksi 76	33 %	67 %	HBW 144	M50 F	Ft-lbs 53 47 50	
Mpa 339	Mpa 523			HBW 146	M46 C	Joules 72 64 68	
Tensile Specimen: STD RD							

Lateral Expansion	Impact Type	Impact Orientation	Starting Material	Impact Specimen
	VNOTCH	TANGENTIAL		FULL SIZE

Notes

Cr+Mo <= 0.32%	0.02
Cr+Cu+Mo+Ni+V <= 1.00%	0.04
Mn/C >= 3.0	4.67
CE = C + Mn/6 + (Cr+Mo+V)/5 + (Ni+Cu)/15	0.38

ASTM A350-15 LF2 CLASS 1
ASME SA350 2013 Ed LF2 CLASS 1

CSA Z245.12-13 GR 248 CAT II M46C SS
ANSI/NACE MR0175/ISO15156:2009(E)
NACE MR0103 LATEST ED.
NACE MR0175/ISO15156-09

Material is in accordance with the applicable Standard to which it is ordered including: ASME Sect II, ASME B16.5, B16.9, B16.36, B16.47, CSA, MSS, AWWA C-207.

NO WELD REPAIR MERCURY FREE

Material conforms to both ASTM (A) and ASME (SA) applicable specifications.

We hereby certify that all information presented on this CMTR conforms to the above specification.

We hereby certify the results to be a true copy of the records of the company.

Troy Gorrell
Q.C. Inspector

TRILAD Flanges and Fittings, Inc.

172 Turbo Drive
Sherwood Park, AB, CANADA T8H 2J6
(PHONE) 780-464-7774
(FAX) 780-464-0044
www.tri-lad.com

ISO 9001:2008

CERTIFIED MATERIAL TEST REPORT

Certificate No. 16232325 | EN 10204 3.1 | Date of Report 3/11/2016

Customer
ALLIED EDMONTON - CAD$
172 TURBO DRIVE
SHERWOOD PARK AB T8H 2J6

Customer Order No. 2519 | Quantity 10

Tri-Lad Order No. 910384 | Line No. 1

Specification: A350-LF2-CL 1 STOCK	Heat Treatment: NORMALISED
Item Description: 4 150 WN STD RF (876017)	Temperature: Init 1706 F 930 C
Shop Order/Trace No.	Time: N=1.05HRS / Lot Definition:
Lot No.	
Heat Code: TL10012519	
C.E.: .42 / Melt Practice: EF	

Chemical Composition

	C	Mn	P	S	Si	Cu	Ni	Cr	Mo	V
Heat	.19	1.18	.015	.017	.23	.11	.04	.09	.02	.001
Product										
Heat	Nb .00									
Product										
Heat										
Product										

Mechanical Properties

Yield	Tensile	Elongation	Reduction of Area	Hardness	Impact Test Temperature	Impact Values	Shear Fracture
Ksi 61	Ksi 81	31 %	60 %	HBW 159	M50 F	Ft-lbs 143 134 139	
Mpa 418	Mpa 555			HBW 159	M46 C	Joules 194 182 188	

Tensile Specimen: STD RD

Lateral Expansion	Impact Type	Impact Orientation	Starting Material	Impact Specimen
	VNOTCH	TANGENTIAL		FULL SIZE

Notes

Cr+Mo <= 0.32%
Cr+Cu+Mo+Ni+V <= 1.00%
Mn/C >= 3.0
CE = C + Mn/6 + (Cr+Mo+V)/5 + (Ni+Cu)/15

0.10
0.25
6.21
0.42

ASTM A350-15 LF2 CLASS 1
ASME SA350 2013 Ed LF2 CLASS 1

CSA Z245.12-13 GR 248 CAT II M46C SS
ANSI/NACE MR0175/ISO15156:2009(E)
NACE MR0103 LATEST ED.
NACE MR0175/ISO15156-09

Material is in accordance with the applicable Standard to which it is ordered including:
ASME Sect II, ASME B16.5, B16.9, B16.36, B16.47, CSA, MSS, AWWA C-207.
NO WELD REPAIR
Material conforms to both ASTM (A) and ASME (SA) applicable specifications.
We hereby certify that all information presented on this CMTR conforms to the above specification.
We hereby certify the results to be a true copy of the records of the company.

Troy Gorrell
Q.C. Inspector

CapProducts, Ltd.
25 Winnipeg St
Vanastra, ON N0M 1L0

Phoenix * Capitol * Camco

CapProducts

Commanding a Higher Standard℠

Certified Mill Test Report

Printed: 6/9/2017
Customer
WOLSELEY CANADA INC.
(QUEBEC REGION-DIV: PLUMBING)
4075 BOUL. INDUSTRIEL
LAVAL, QC H7L 6E3

Certified: 04/19/2017
P.O. QPM0011402
Tag

Heat No 598534
Heat Code 86IC
Phoenix Order # 1289117
Material ASTM A333 GR6 2015/ASME SA333 GR6 2015 Edition

Part Number
15110512CSA

Description
1/2 X 6" XHSML BK STL NIPL A333-GR6 CSA

Chemical Properties

C	Mn	P	S	Si	Cu	Ni	Cr
0.1300	0.7500	0.0060	0.0010	0.2000	0.0900	0.0600	0.1100

C Eq. Long
0.2934

Mo	V	Co	Al	Cb	N	Pb	Sn	Ta	Ti
0.0300	0.0020			0.0110					0.0020

Additional Chemical Properties

Cr + Cu + Ni
0.2600

Mechanical Properties

Tensile (PSI)	Yield (PSI)	Elong. % in 2 in. or 4D	R of A	HBW	HBW2
69,618	52,069	38.0%	0.0%	139	0

Charpy Minimum Impact - ft/lbs

Test 1	Test 2	Test 3	Average	Test Temp.
47	45	45	45.67	45

* Hydro test passed. at 3000 psi.

* Bend test passed.

We hereby certify that these parts were manufactured, sampled, tested, and inspected in accordance with the product specifications stated and were found to meet the requirements.
We further certify that this material was inspected using independent inspectors conforming to the requirements of EN 10204 3.1. These products meet the requirements of the latest editions of NACE MR0175, NACE MR0103, and ISO 15156. No weld repair has been performed on these products. This material was not exposed to mercury or any other metal alloy that is liquid at ambient temperatures during processing or while in our possession.

Comments:
Charpy V Impact Tested at -45° C. Specimen size - 10 x 4 mm.

CapProducts, Ltd.
25 Winnipeg St
Vanastra, ON N0M 1L0

Phoenix * Capitol * Camco
CapProducts

Commanding a Higher Standard℠

Certified Mill Test Report

Printed: 6/16/2017
Certified: 05/09/2017

Customer
WOLSELEY CANADA INC.
(QUEBEC REGION-DIV: PLUMBING)
4075 BOUL. INDUSTRIEL
LAVAL, QC H7L 6E3

P.O. QPM0020790D
Tag

Heat No 599766
Heat Code 86GZ
Phoenix Order # 1291264

Material ASTM A333 GR6 2015/ASME SA333 GR6 2015 Edition

Part Number
15111012CSA

Description
1 X 6" XHSML BLK NIPL A333-GR6 CSA

Chemical Properties

C	Mn	P	S	Si	Cu	Ni	Cr
0.1300	0.7200	0.0070	0.0010	0.2000	0.0600	0.0700	0.0600

C Eq. Long
0.2749

Mo	V	Co	Al	Cb	N	Pb	Sn	Ta	Ti
0.0200	0.0010			0.0100					0.0020

Additional Chemical Properties

Cr + Cu + Ni
0.1900

Mechanical Properties

Tensile (PSI)	Yield (PSI)	Elong. % in 2 in. or 4D	R of A	HBW	HBW2
72,809	54,679	48.0%	0.0%	155	0

Charpy Minimum Impact - ft/lbs

Test 1	Test 2	Test 3	Average	Test Temp.
63	62	60	61.67	45

* Hydro test passed. at 3000 psi.

* Bend test passed.

We hereby certify that these parts were manufactured, sampled, tested, and inspected in accordance with the product specifications stated and were found to meet the requirements.
We further certify that this material was inspected using independent inspectors conforming to the requirements of EN 10204 3.1. These products meet the requirements of the latest editions of NACE MR0175, NACE MR0103, and ISO 15156. No weld repair has been performed on these products. This material was not exposed to mercury or any other metal alloy that is liquid at ambient temperatures during processing or while in our possession.

Comments:
Charpy V Impact Tested at -45° C. Specimen size - 10 x 5 mm.

BOTH-WELL STEEL FITTINGS CO., LTD.

NO.303, REN-SIN ROAD, REN-WU DISTRICT, KAOHSIUNG CITY TAIWAN R.O.C.(81460)
TEL : (886)7-3711536, 3710497, 3720260 FAX : (886)7-3713864, 3713886
WEB SITE : http://www.bothwell.com.tw E-Mail : box@bothwell.com.tw

ISO 9001:2008 Management System
TÜVRheinland CERTIFIED
An ISO 9001:2008 Registered Manufacturer

MILL TEST & INSPECTION CERTIFICATE

ACCORDING TO EN 10204 3.1

CUSTOMER : SEYBOLD INTERNATIONAL CORP.
CERT NO : 143017
ORDER NO : 7008567
INVOICE NO : 5200002809
L/C NO :
PAGE : 2
DATE : 09/27/2014
ORIGIN : TAIWAN

ITEM	RAW HEAT NO. HEAT CODE	QTY	DESC/GRADE OR SPECIFICATION NO. CHEMICAL COMPOSITION(%) MECHANICAL PROPERTIES. SUPPLIER.
159	X1658. Y5015	4,000 PCS	HEX PLUG LF2 CL1 1/2" 3000#/6000# NPT C:0.190 SI:0.210 MN:0.980 P:0.014 S:0.001 CU:0.040 CR:0.260 NI:0.080 MO:0.020 V:0.003 NB:0.000 N:- CE:0.418 TS(KSI):78.9 YS 0.2%(KSI):60.5 EL(%):35.2 R.A.(%):80.0 HARDNESS1(HBW):146 HARDNESS2(HBW):148 IMPACT TEST -46℃ (-50℉) 1:167J 2:206J 3:192J AVG:188J

REMARK :
THE MATERIAL SUPPLIED IDENTIFIED AS ASTM A350 -13 LF2 CL.1, ASME SA350-2013ED LF2 CL.1
THE FITTING SUPPLIED IDENTIFIED AS ASME B16.11 - 2011
THE PRODUCT SUPPLIED WAS INSPECTED IN ACCORDANCE WITH SPECIFICATION(SURFACE & DIM). : GOOD
FULLY KILLED AND FINE GRAIN PRACTICE

	C	Si	Mn	P	S	Cu	Cr	Ni	Mo	V	Cb(Nb)
MIN	-	0.15	0.60	-	-	-	-	-	-	-	-
MAX	0.30	0.30	1.35	0.035	0.040	0.40	0.30	0.40	0.12	0.08	0.02
	N	Al	Ti	Zr	CE	TS(KSI)	YS	YS 0.2%(KSI)	EL(%)	R of A(%)	HARDNESS(H
MIN	-					70		36	22	30	-
MAX	-				0.47	95		-		-	197

HEAT TREATMENT : QUENCHED: 900℃(1652℉) W.Q./TEMPERED : 670℃(1238℉) A.C.
CONFORM TO NACE MR0175-09/MR0103-12

WE CERTIFY THE ABOVE MENTIONED FITTINGS HAVE BEEN MANUFACTURED, SAMPLED, TESTED, AND INSPECTED IN ACCORDANCE WITH THE SPECIFICATIONS SHOWN

C. C. Huang
Q.C. MANAGER

C. L. Ko
INSPECTOR

CLIENTE / Customer / Client

ALLIED FITTING CANADA
172 TURBO DRIVE
SHERWOOD PARK, ALBERTA
T8H 2J6 - CANADA

CERTIFICADO DE INSPECCION

Inspection Certificate - Certificat de Réception

DIN EN 10204 / 3.1
ISO 10474 / 3.1

FECHA / Date: 07/11/2014

N.º / No.: 168137

HOJA / Page: 3

ISO 14001 SGI 1922164 · ISO 9001 SGI 6000236 · OHSAS 18001 SGI 6009967

ULMA FORJA, S.COOP.
Management Systems certified by LRQAE

8º Zubillaga, 3 - Apdo. 14
20560 OÑATI (Gipuzkoa) SPAIN
Tel.: 34 - 943 780552
Fax: 34 - 943 781808
E-mail : ulma@ulmapiping.com

PRODUCTO / Article - Produit: FITTING

SU PEDIDO N.º / Your Order No. / Votre Cde. N.º: 52614AES-EDMONTON

DE / of. - de: 26/05/2014

NORMAS APLICABLES / Requirements - Normes Applicables: ASME B16.11-2013

Certified acc. PED 97/23/EC+AD2000-W0 by TÜV Rheinland N.º 01 202 EC 02 7443

MARCA DEL FABRICANTE / Mark of factory / Marque du fabricant

Packing List: 112727

MATERIAL CORRESPONDIENTE / Material Correspondent - Qualité: ASME SA350LF2CL1-13, ASTM A350LF2CL1-13

MODO DE FUSION (*) / Steel Making - Elaboration de l'acier: NACE MR0175/ISO15156-2-09 & MR0103-12

E = Elec. Y = Oxígeno básico

DEPARTAMENTO / Section / Département: QUALITY ASSURANCE

PARTIDA / Item / Poste	CANTIDAD / Quantity / Quantité	DESCRIPCION / Description / Description LOTE	OBSERVACIONES / Remarks / Observations (*)	COLADA Nº / Heat No / N.ºCoulée	RESISTENCIA / T.Strength / Resist Rupt N/mm2	LIMITE ELAST. / Y.Strength / 0.2 % N/mm2	ALARGAM. / Elongation / Allongement Lo: 4 d %	ESTRICCION / Red. Area / Striction %	RESILIENCIA / Impact test / Résilience Joules			CHARPY V 10x10mm MEDIA / Average / Moyenne	ºC	DUREZA / Hardness / Dureté HBW
40	228	COUPLING 1 3000LB NPT A350LF2	NE	689V1	506	318	32,40	59,20	55	60	51	55	-50	148 155
42	5	TEE 1.1/2 6000LB NPT A350LF2	NE	209V1	531	370	29,80	57,00	69	75	81	75	-50	152 159
42	45	TEE 1.1/2 6000LB NPT A350LF2	NE	A23V4	500	325	29,30	53,80	48	55	63	55	-50	151 162
44	1.000	H/H-PLUG 3/4 NPT A350LF2	NE	482V8	510	312	30,80	59,00	50	58	62	57	-50	150 156
45	2.350	H/H-PLUG 1 NPT A350LF2	NE	118V9	514	322	34,00	61,30	59	63	54	59	-50	148 156
45	650	H/H-PLUG 1 NPT A350LF2	NE	182V9	516	329	35,00	61,80	55	63	67	62	-50	149 156

COMPOSICION QUIMICA - STEEL MAKER'S LADLE ANALYSIS - ANALYSE CHIMIQUE

COLADA N.º / Heat No / N.ºCoulée	C %	Si %	Mn %	P %	S %	Cr %	Ni %	Mo %	Nb %	V %	Cu %	Al %	Ti %	CEq %
118V9	0,190	0,240	0,830	0,008	0,008	0,120	0,090	0,030	0,002	0,002	0,180	0,030	0,000	0,377
182V9	0,190	0,230	0,840	0,005	0,006	0,130	0,100	0,040	0,002	0,001	0,170	0,026	0,000	0,382
209V1	0,150	0,210	1,270	0,012	0,008	0,090	0,090	0,005	0,001	0,070	0,210	0,045	0,000	0,415
482V8	0,200	0,210	0,840	0,011	0,009	0,130	0,090	0,040	0,002	0,001	0,160	0,028	0,000	0,391
689V1	0,190	0,260	0,840	0,012	0,004	0,080	0,070	0,010	0,001	0,002	0,160	0,023	0,000	0,364
A23V4	0,210	0,260	0,950	0,011	0,008	0,081	0,105	0,034	0,000	0,000	0,251	0,027	0,002	0,415

- Las dimensiones y la condición superficial se hallaron satisfactorias.
- Dimension and surface condition were found acceptable.
- Les dimensions et états de surface sont satisfaisants.

- Los materiales citados cumplen las normas aplicables.
- Manufacturing requirements are satisfied
- Les normes applicables sont respectées.

EL INSPECTOR
Works Inspector - L'Inspecteur

ULMA FORJA S. COOP.
Dpto. de Garantía de calidad
Quality Assurance Dept.

(*) OBSERVACIONES: Remarks / Observations: N_NORMALIZED AT 900 C AND ALLOWED TO COOL IN STILL AIR.

BS

CLIENTE / Customer / Client

ALLIED FITTING CANADA
172 TURBO DRIVE
SHERWOOD PARK, ALBERTA
T8H 2J6 - CANADA

CERTIFICADO DE INSPECCION

Inspection Certificate - Certificat de Réception

DIN EN 10204 / 3.1
ISO 10474 / 3.1

FECHA: Date: 19/06/2013

N.º No. 158199

HOJA: Page: 5

SGI 1922164 SGI 6000236 SGI 6009987

ULMA FORJA, S.COOP.
B° Zubillaga, 3 - Apdo. 14
20560 OÑAT (Gipuzkoa) SPAIN
Tel.: 34 - 943 780552
Fax: 34 - 943 781808
E-mail: ulma@ulmapiping.com

PRODUCTO / Article - Produit: FITTING

SU PEDIDO N.º / Your Order No. / Votre Cde. N.º: 012213AMG - EDMONTON

DE / of. - de: 24/01/2013

Certified acc. PED 97/23/EC+AD2000-W0 by TÜV Rheinland N.º 01 202 E/Q 02 7443

Packing List: 103143

NORMAS APLICABLES / Requirements - Normes Applicables: ASME B16.11-2013

MATERIAL CORRESPONDIENTE / Material Correspondent - Qualité: ASTM/ASME A/SA350LF2CL1-12

MODO DE FUSION (*) / Steel Making - Elaboration de l'acier: NACE MR0175/ISO15156-2-09 & MR0103-12

E = Elec. Y = Oxígeno básico

MARCA DEL FABRICANTE / Mark of factory / Marque du fabricant

DEPARTAMENTO / Section / Département: QUALITY ASSURANCE

PARTIDA / Item / Poste	CANTIDAD / Quantity / Quantité	DESCRIPCION / Description / Description	LOTE	OBSERVACIONES / Remarks / Observations (*)	COLADA N.º / Heat No / N.ºCoulée	RESISTENCIA / T.Strength / Resist Rupt N/mm2	LIMITE ELAST. / Y.Strength 0.2 % N/mm2	ALARGAM. / Elongation / Allongement Lo: 4 d %	ESTRICCION / Red. Area / Striction %	RESILIENCIA / Impact test / Résilience Joules			CHARPY V 10x10mm MUESTRA / SPECIMEN: MEDIA / Average / Moyenne	°C	DUREZA / Hardness / Dureté HBW	
122	1.020	TEE 1/2 3000LB NPT A350LF2		NE	A13V3	521	314	29,70	59,40	45	43	49	46	-50	149	154
138	300	UNION 1/2 6000LB NPT A350LF2 - Female		NE	A13V3	521	314	29,70	59,40	45	43	49	46	-50	149	154
138	300	UNION 1/2 6000LB NPT A350LF2 - Male		NE	737V1	508	319	31,90	60,20	58	49	53	53	-50	146	152
138	300	UNION 1/2 6000LB NPT A350LF2 - Nut		NE	233V8	527	337	34,00	67,80	57	49	53	53	-50	150	155
140	50	UNION 1.1/2 6000LB NPT A350LF2 - Nut		NE	236V5	518	329	34,00	68,20	52	49	60	54	-50	151	159
140	50	UNION 1.1/2 6000LB NPT A350LF2 - Female		NE	643V1	517	333	28,20	63,60	92	89	93	91	-50	160	164
140	50	UNION 1.1/2 6000LB NPT A350LF2 - Male		NE	643V1	517	333	28,20	63,60	92	89	93	91	-50	160	164
141	100	UNION 1.1/2 6000LB SW A350LF2 - Nut		NE	236V5	518	329	34,00	68,20	52	49	60	54	-50	151	159
141	100	UNION 1.1/2 6000LB SW A350LF2 - Female		NE	643V1	517	333	28,20	63,60	92	89	93	91	-50	160	164
141	100	UNION 1.1/2 6000LB SW A350LF2 - Male		NE	643V1	517	333	28,20	63,60	92	89	93	91	-50	160	164

COLADA N.º / Heat No / N.ºCoulée	COMPOSICION QUIMICA - STEEL MAKER'S LADLE ANALYSIS - ANALYSE CHIMIQUE														
	C %	Si %	Mn %	P %	S %	Cr %	Ni %	Mo %	Nb %	V %	Cu %	Al %	Ti %	N %	CEq %
233V8	0,210	0,240	0,950	0,012	0,022	0,110	0,070	0,020	0,001	0,002	0,120	0,022	0,000	0,000	0,407
236V5	0,190	0,270	1,020	0,014	0,027	0,200	0,180	0,030	0,002	0,003	0,230	0,028	0,000	0,000	0,434
643V1	0,170	0,230	1,290	0,010	0,021	0,080	0,080	0,010	0,001	0,002	0,190	0,021	0,000	0,000	0,421
737V1	0,180	0,220	0,850	0,014	0,007	0,080	0,060	0,010	0,001	0,002	0,140	0,028	0,000	0,000	0,353
A13V3	0,190	0,240	0,830	0,020	0,004	0,070	0,070	0,010	0,001	0,002	0,200	0,023	0,000	0,007	0,363

- Las dimensiones y la condición superficiel se hallaron satisfactorias.
- Dimension and surface condition were found acceptable.
- Les dimensions et états de surface sont satisfaisants.

- Los materiales citados cumplen las normas aplicables.
- Manufacturing requirements are satisfied.
- Les normes applicables sont respectées.

EL INSPECTOR
Works Inspector - L'Inspecteur

ULMA FORJA S. COOP.
Dpto. de Garantía de calidad
Quality Assurance Dept.

(*) OBSERVACIONES: Remarks Observations: N_NORMALIZED AT 900 C AND ALLOWED TO COOL IN STILL AIR

BS

RAPPORTS D'INSPECTION & D'ESSAI

Rapport d'inspection

Client : UNIES - FAB Projet: 777

Sablage

SP-1	SP-2	SP-3	SP-5	SP-6	SP-7	SP-8	SP-10	SP-11
				X				

Profil:

Peinture

Primer: INTERGARD 345 4-6 MILS

Temp Ambiante	Temp Morceau	Humidité	Point de rosée
24.1 °C	21.4 °C	43.7 %	11.1 °C

Moyenne: 4.1 MILS

INTERGARD 345 4-6 MILS

Temp Ambiante	Temp Morceau	Humidité	Point de rosée
23.8 °C	22.3 °C	58.4 %	15.1 °C

Moyenne: 8.2 MILS

MILS

Tem Ambiante	Temp Morceau	Humidité	Point de rosée

Moyenne:

Couleur: JAUNE PENTONE C

Remarque: UF-2106X16 19473
MK1 À MK-46 (50)

N.B. Peinture selon devis

UF-2106-01

DÉCLARATION DU CLIENT

F 6.2

DÉCLARATION DU CLIENT

Identification du client : Nom : Groupe Promec. Adresse : 1300 rue Saguenay/R-N 224 66 et. No téléphone : 819-797-7500

No contrat : 6515-C-270-007. No télécopieur : 819-797-7501

Lieu de l'installation : Nunavut, Meliadine Project.

Test Hydrostatique ☑
Test Pneumatique ☑ ☑ au Chantier ☐ en Atelier ☐ N/A

Responsabilité : du test hydrostatique ☑ CLIENT ☐ UNIES-FAB
Dimension et Type de tuyauterie : A333, acier Noir 3"-4"-6"-½"

Pression de soupape de sûreté ou de conception : N/A.

Température : conception : 10 A 15°
Type de fluide : Diesel

Méthode de soudage ☑ GMAW ☐ GTAW ☐ SMAW en atelier.

Types d'essais à effectuer

- ☐ Liquide Pénétrant
- ☑ Radiographie
- ☐ Particule magnétique
- ltrason
- ☐ Autres

Pourcentage : 5%.

Lequel : _____

Code à respecter pour la Fabrication

☐ B 31.1 ☑ B 31.3 ☐ B 31.5
☐ Autre Lequel : _____

Conception de la tuyauterie effectuée par : Ultragen. (w$p client Agricu-eagle.)
Je reconnais que les informations sur cette déclaration sont exactes.

Approbation du client : [signature] date : 24-05-2017.

Section Unies-Fab : projet : UF 2106
Responsable du projet : Brian Sage

REV. : 3

DÉCLARATION DE CONFORMITÉ DU CONSTRUCTEUR

UNIES-FAB (9127-8754 Québec Inc.)	DÉCLARATION DE CONFORMITÉ DU CONSTRUCTEUR DE

Contrat No. : UF -2135

1. Construit par UNIES-FAB (9127-8754 Québec Inc.), 2380 de la Métallurgie, Jonquière, Québec, G7X 9H2

2. Construit pour : GROUPE PROMEC 1300 RUE SAGUENAY ROUYN- NORANDA QU.BEC
Nom et adresse

3. Utilisateur : NUNAVUT MELIADINE PROJECT

4. No. C.R.N. : N/A

5. No. Enreg. Programme provincial de contrôle de la qualité et date d'expiration : QQP 468 25 FEV 2019

6. Code - ANSI/ASME B31.1 ☐ B31.3 ☒ B31.5 ☐ Autre ☐

Procédé (Air, Vapeur, etc.)	Pression maximale opération (S.V. permise)	Température de conception	Pression d'essais	Dia. tuyau	Médium d'essais	Essais non destructifs (E.N.D.)
DIESEL	N/A	10 À 15°C	N/A			5% RADIOGRPHIE

Identification

Lieu d'essais ☒ Chantier ☒ Atelier 5% RADIOGRAPHIE
Essais effectués par le client ☒ Oui ☐ Non

CERTIFICAT DE CONFORMITÉ

Nous certifions que les données de cette déclaration de conformité sont correctes et que les tuyauteries décrites dans cette déclaration sont conformes à la loi et aux règlements provinciaux régissant les chaudières
et appareils sous pression.

Date : 15/09/2017 UNIES-FAB (9127-8754 Québec Inc.)

Par : Brian Savage Gérant contrôle qualité

CERTIFICAT D'INSPECTION

Je, soussigné, employé par _____ ai inspecté la tuyauterie décrite dans cette déclaration
de conformité et, autant que je le sache, la construction de cette tuyauterie est conforme aux sections pertinentes du Code ANSI/ASME ainsi qu'à la loi et aux règlements provinciaux régissant les chaudières et appareils sous pression.

Date : _____ Date : _____

_____ _____
Inspecteur du propriétaire Inspecteur autorisé

FEUILLE DE ROUTE DE LA TUYAUTERIE

F 6.1

UNIES-FAB (9127-8754 Québec Inc.)	FEUILLE DE ROUTE DE TUYAUTERIE	
	CLIENT :GROUPE PROMEC	
	PROJET : NUNAVUT MELIADINE PROJECT	
CONTRAT # :UF2106 P.O.# : **61284**	DESSIN # :MK-1@MK-46	FEUILLE DE ROUTE#01

APPROBATION			PRÉPARÉ PAR :B. SAVARD	DATE :2017-06-23
UNIES-FAB	CLIENT	I.A.		
PAR :	PAR	PAR :		
DATE :	DATE :	DATE :		

DESCRIPTION DE LA TUYAUTERIE	Dia.	Sch.	Longueur appr.	Dia.	Sch.	Longueur appr.
Année de Construction : 2017	8"	40S	3 PIED			
Code Const. : B31.3	6"	40S	420 PIED			
Pression Conception : N/A	4"	40S	6 PIED			
Temp. Conception :10 À 15°C	3"	40S	1 PIED			
C.R.N.# : N/A						
Longueur Total Appr. 430 PIED						

LIEU D'INSTALLATION : NUNAVUT MELIADINE PROJECT

POLITIQUE D'UNIES-FAB (9127-8754 Québec Inc.) LORS DE LA FABRICATION, EN 8 POINTS

	DATE :	PAR ICQ
1 - Rédiger la déclaration du client	21-06-2017	BS
2 - Réception du matériel (Mill test)	12-06-2017	BS
3 - Coupe des matériaux	16-06-2017	BS
4 - Assemblage	21-06-2017	BS
5 - Soudage (poinçonnage)	26-06-2017	BS
6 - Inspection de la soudure (et essais non-destructif s'il y a lieu)	15-06-2017	BS
7 - Inspection dimensionnelle et identification	26-06-2017	BS
8 - Expédition	29-06-2017	BS

NOTES : L'I.C.Q. doit initialer et dater chaque étape qui est complétée.

Lorsqu'un point d'arrêt est indiqué par le contrôle de la qualité, aucun autre travail ne peut être entrepris avant que l'inspection n'est signifié son acceptation en initialant et datant la feuille de route.

Lorsqu'un point d'arrêt est indiqué par l'I.A., aucun travail ne peut être entrepris avant que l'Inspecteur Autorisé n'est signifié son acceptation en initialant et datant la feuille de route.

REV. : 3

UNIES-FAB (9127-8754 Québec Inc.)	FEUILLE DE ROUTE DE TUYAUTERIE	
	CLIENT :GROUPE PROMEC	
	PROJET : NUNAVUT MELIADINE PROJECT	
CONTRAT # :UF2106 / P.O.# : **61284**	DESSIN # :	FEUILLE DE ROUTE#01

APPROBATION		PRÉPARÉ PAR :B. SAVARD	DATE :2017-06-15
UNIES-FAB	CLIENT	I.A.	
PAR :	PAR	PAR :	
DATE :	DATE :	DATE :	

DESCRIPTION DE LA TUYAUTERIE

Année de Construction : 2017
Code Const. : B31.3
Pression Conception : N/A
Temp. Conception :10 À 15°C
C.R.N.# : N/A
Longueur Total Appr. 792 PIED

Dia.	Sch.	Longueur appr.	Dia.	Sch.	Longueur appr.
6"	40S	2 PIED			
4"	40S	325 PIED			
3"	40S	465 PIED			

LIEU D'INSTALLATION : NUNAVUT MELIADINE PROJECT

POLITIQUE D'UNIES-FAB (9127-8754 Québec Inc.) LORS DE LA FABRICATION, EN 8 POINTS

	DATE :	PAR ICQ
1 - Rédiger la déclaration du client	21-06-2017	BS
2 - Réception du matériel (Mill test)	29-06-2017	BS
3 - Coupe des matériaux	07-07-2017	BS
4 - Assemblage	14-07-2017	BS
5 - Soudage (poinçonnage)	14-07-2017	BS
6 - Inspection de la soudure (et essais non-destructif s'il y a lieu)	10-07-2017	BS
7 - Inspection dimensionnelle et identification	14-07-2017	BS
8 - Expédition	20-07-2017	BS

NOTES : L'I.C.Q. doit initialer et dater chaque étape qui est complétée.

Lorsqu'un point d'arrêt est indiqué par le contrôle de la qualité, aucun autre travail ne peut être entrepris avant que l'inspection n'est signifié son acceptation en initialant et datant la feuille de route.

Lorsqu'un point d'arrêt est indiqué par l'I.A., aucun travail ne peut être entrepris avant que l'Inspecteur Autorisé n'est signifié son acceptation en initialant et datant la feuille de route.

REV. : 3

F 6.1

UNIES-FAB (9127-8754 Québec Inc.)	FEUILLE DE ROUTE DE TUYAUTERIE	
	CLIENT :GROUPE PROMEC	
	PROJET : NUNAVUT MELIADINE PROJECT	
CONTRAT # :UF2135 / P.O.# : **61284**	DESSIN # :	FEUILLE DE ROUTE#01

APPROBATION			PRÉPARÉ PAR :B. SAVARD	DATE :2017-08-14
UNIES-FAB	CLIENT		I.A.	
PAR :	PAR		PAR :	
DATE :	DATE :		DATE :	

DESCRIPTION DE LA TUYAUTERIE	Dia.	Sch.	Longueur appr.	Dia.	Sch.	Longueur appr.
Année de Construction : 2017	4"	40S	305			
Code Const. : B31.3	3"	40S	155			
Pression Conception : N/A						
Temp. Conception :10 À 15°C						
C.R.N.# : N/A						
Longueur Total Appr. 460 PIED						

LIEU D'INSTALLATION : NUNAVUT MELIADINE PROJECT

POLITIQUE D'UNIES-FAB (9127-8754 Québec Inc.) LORS DE LA FABRICATION, EN 8 POINTS

	DATE :	PAR ICQ
1 - Rédiger la déclaration du client	21-06-2017	BS
2 - Réception du matériel (Mill test)	12-06-2017	BS
3 - Coupe des matériaux	14-08-2017	BS
4 - Assemblage	31-08-2017	BS
5 - Soudage (poinçonnage)	05-09-2017	BS
6 - Inspection de la soudure (et essais non-destructif s'il y a lieu)	31-08-2017	BS
7 - Inspection dimensionnelle et identification	05-09-2017	BS
8 - Expédition	06-09-2017	BS

NOTES : L'I.C.Q. doit initialer et dater chaque étape qui est complétée.

Lorsqu'un point d'arrêt est indiqué par le contrôle de la qualité, aucun autre travail ne peut être entrepris avant que l'inspection n'est signifié son acceptation en initialant et datant la feuille de route.

Lorsqu'un point d'arrêt est indiqué par l'I.A., aucun travail ne peut être entrepris avant que l'Inspecteur Autorisé n'est signifié son acceptation en initialant et datant la feuille de route.

REV. : 3

AGNICO EAGLE

Vendor Document Status

1 ☐ Proceed to next submission and status.

2 ☐ Proceed with exceptions as noted to next submission and status.

3 ☐ Do not proceed.
Revise as noted and resubmit next submission and status.

4 ☑ Complete, no further submission required.

By: JEAN-FRANCOIS TREMBLAY Date: 2017-05-02

Review and authorization to fabricate are only for general conformance with the design concept of the Project as expressed in the Contract Documents. Sole responsibility for the accuracy and completeness of this document, including but not limited to dimensions and quantities, remains with the Supplier/Contractor. Agnico Eagle does not warrant the accuracy or completeness of any of the information contained herein, nor does Agnico Eagle authorize or approve any construction means, methods, techniques, sequences or any safety precautions or procedures.

Agnico Eagle No. 6515-C-270-007-141-TES-0048 R: Sub001

DOCUMENT FOR INFORMATION

FORMULAIRE	No doc: F174-33
RAPPORT D'ALIGNEMENT AU LASER - MOTEUR	Version : 01
	Révision : a

Équipement:

Numéro équipement: 65VSD11601B

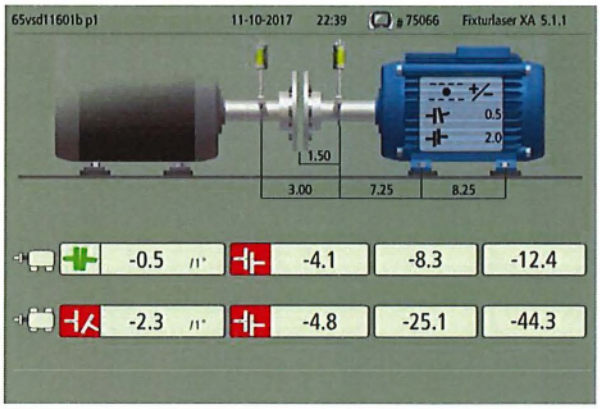

Relevé des lectures	
Verticale angulaire	-0.0005''
Verticale parallèle	-0.0023''
Horizontale angulaire	-0.0041''
Horizontale parallèle	-0.0048''

Désalignement maximale - angulaire :	.014''
Désalignement maximale en parallèle :	.087''

Note : Coupling Lovejoy

Fait par : Jérémie Lecompte Cie : Nuqsana Promec Date : 2017-11-10

Approuvé par (PROMEC) : Jérémie Lecompte Signature : Date : 13-11-2017

Approuvé par (CLIENT) : Signature : Date :

Préparé par : Teresa Punys	Approuvé par : Sophia-Lyse Capkun	Date : 03-09-2017

Ce document peut-être une version/révision périmée.
Si vous devez l'imprimer S.V.P. Référez-vous au site PROMEC officiel afin de déterminer si cette version/révision est celle en vigueur.
I:\Site-NOR\Processus Promec 9001-2015\174

FORMULAIRE	No doc: F174-33
RAPPORT D'ALIGNEMENT AU LASER - MOTEUR	Version : 01
	Révision : a

Équipement:

Numéro équipement: 65VSD11601A

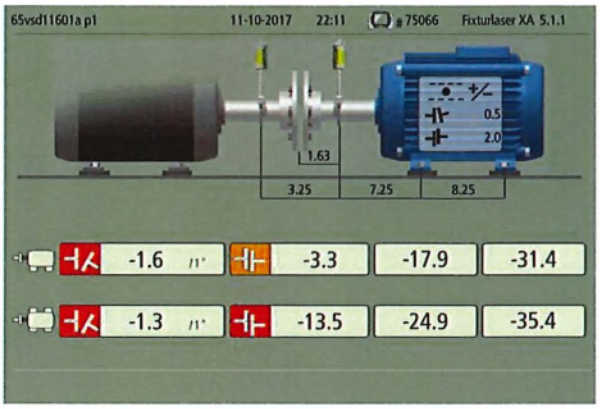

Relevé des lectures	
Verticale angulaire	-0.0016''
Verticale parallèle	-0.0013''
Horizontale angulaire	-0.0033''
Horizontale parallèle	-0.0135''

Désalignement maximale - angulaire :	.014''
Désalignement maximale en parallèle :	.087''

Note : Coupling Lovejoy

Fait par : Jérémie Lecompte Cie : Nuqsana Promec Date : 2017-11-10

Approuvé par (PROMEC) : Jérémie Lecompte Signature : Date : 23-11-2017

Approuvé par (CLIENT) : Signature : Date :

Préparé par : Teresa Punys	Approuvé par : Sophia-Lyse Capkun	Date : 03-09-2017

Ce document peut-être une version/révision périmée.
Si vous devez l'imprimer S.V.P. Référez-vous au site PROMEC officiel afin de déterminer si cette version/révision est celle en vigueur.
I:\Site-NOR\Processus Promec 9001-2015\174

NUQSANA PROMEC MINING

Agnico-Eagle Mines Ltd.
Pump Alignment Report

ITR Number : AEM-ME-ITR-001
Contract no. : C22466T

AGNICO EAGLE

SYSTEM :	**UNIT :** 65 POD 11601A
LOCATION : PUMPING STATION - RANKIN	**SPECIFICATION :**

Instrument : _____

Serial : _____

File number : _____

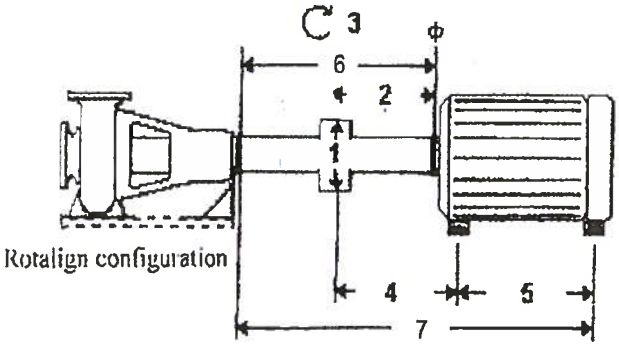

Rotalign configuration

1 Coupling Diameter _____
2 Sensor to Center _____
3 RPM _____
4 Center to First Foot _____
5 Distance Between Feet _____
6 Distance Between Prisim _____
7 Sensor to first foot _____

COUPLING RESULTS

Vertical Gap	Vertical Offset	Horizontal Gap	Horizontal Offset
(+) (-)	(+) (-)	(+) (-)	(+) (-)

FEET RESULTS

Vertical Front Foot	Vertical Rear Foot	Horizontal Front Foot	Horizontal Rear Foot

SOFT FOOT

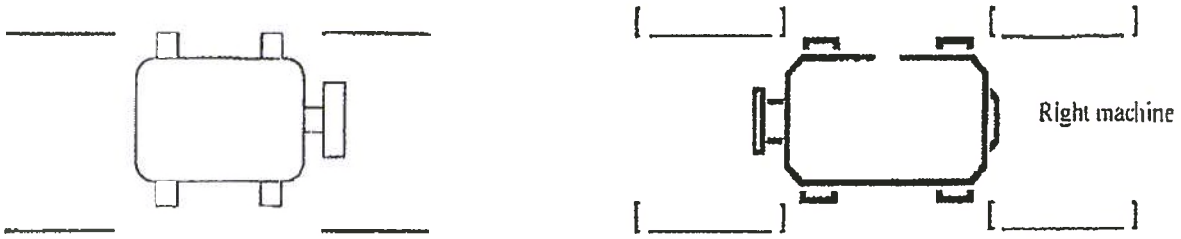

Comments :

PROMEC DESIGNATE - SIGNATURE	TITLE	DATE
CLIENT DESIGNATE - SIGNATURE	TITLE	DATE

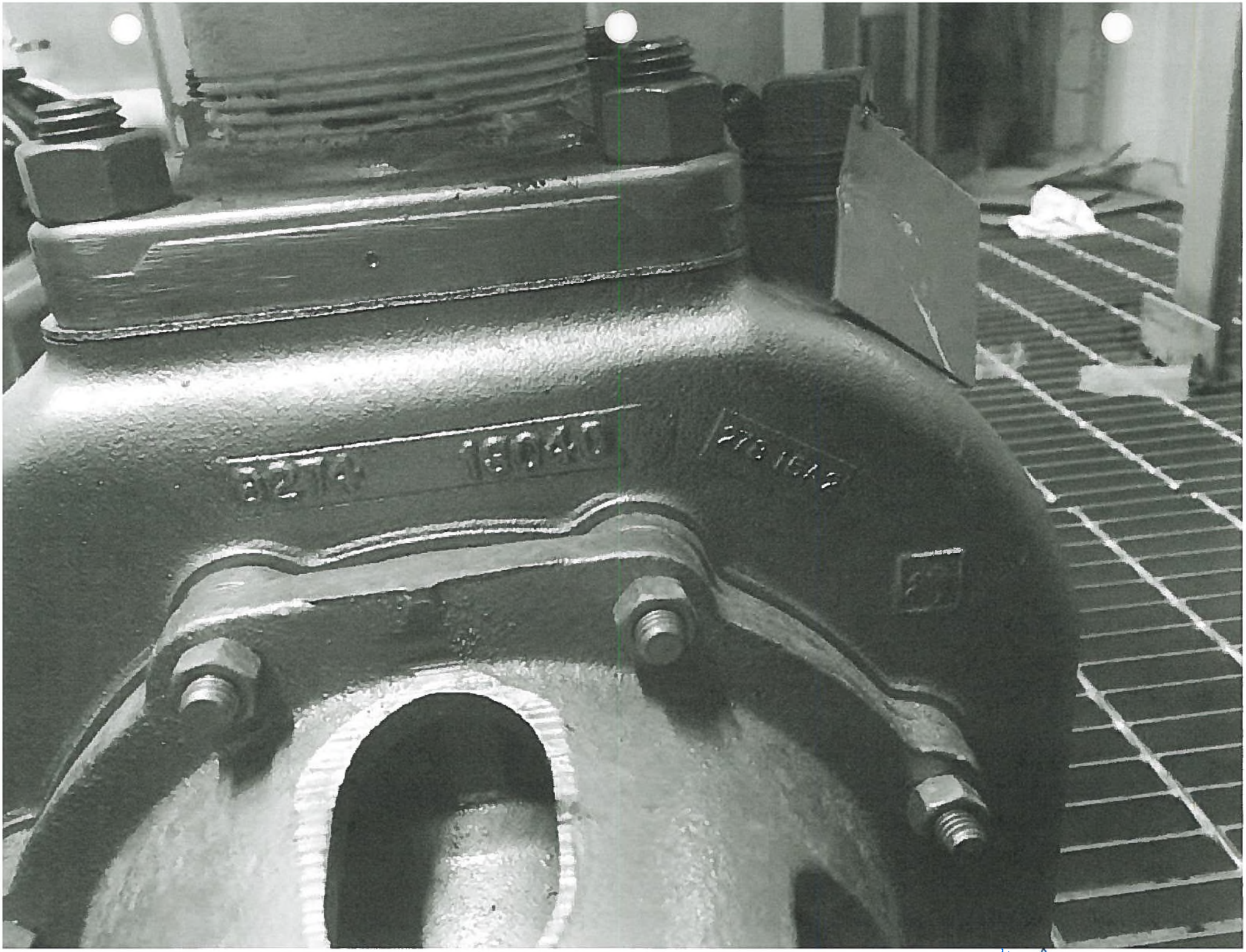

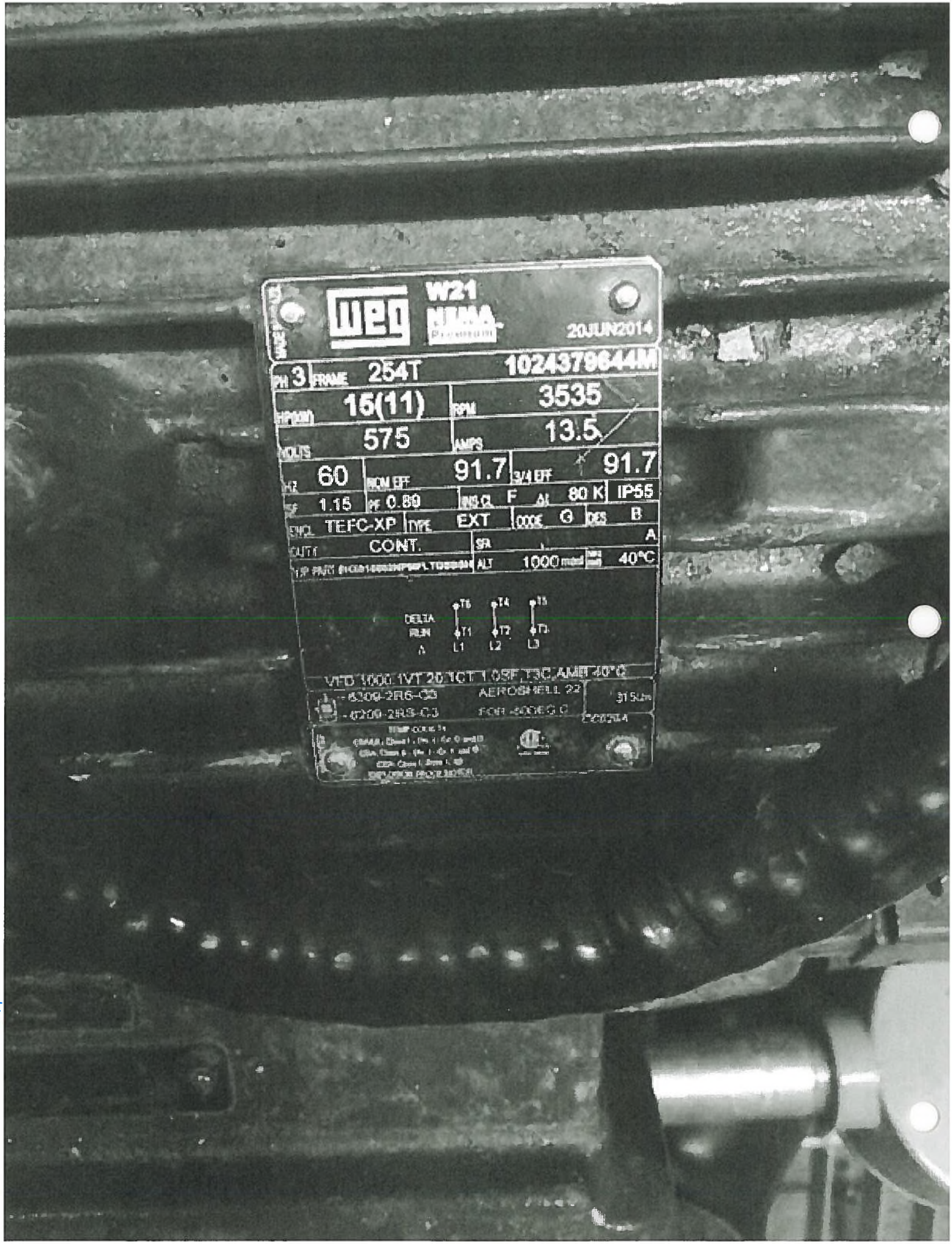
WEG
W21
NEMA
20JUN2014
PH 3 FRAME 254T
1024379644M
HP(kW) 15(11)
RPM 3535
VOLTS 575
AMPS 13.5
HZ 60
NOM EFF 91.7
3/4 EFF 91.7
SF 1.15
PF 0.89
INS CL F
Δt 80 K
IP55
ENCL TEFC-XP
TYPE EXT
CODE G
DES B
DUTY CONT.
SFA A
ALT 1000 mas
40°C
DELTA
RUN
T6 T4 T5
T1 T2 T3
L1 L2 L3
VFD 1000 1VT 20 1CT 1.0SF T3C AMB 40°C
AEROSHELL 22
315Lm

AGNICO EAGLE

Vendor Document Status

1 ☐ Proceed to next submission and status.

2 ☐ Proceed with exceptions as noted to next submission and status.

3 ☐ Do not proceed.
Revise as noted and resubmit next submission and status.

4 ☑ Complete, no further submission required.

By: JEAN-FRANCOIS TREMBLAY Date: 2017-05-02

Review and authorization to fabricate are only for general conformance with the design concept of the Project as expressed in the Contract Documents. Sole responsibility for the accuracy and completeness of this document, including but not limited to dimensions and quantities, remains with the Supplier/Contractor. Agnico Eagle does not warrant the accuracy or completeness of any of the information contained herein, nor does Agnico Eagle authorize or approve any construction means, methods, techniques, sequences or any safety precautions or procedures.

Agnico Eagle No. 6515-C-270-007-141-TES-0048 R: Sub001

DOCUMENT FOR INFORMATION

Agnico-Eagle Mines Ltd.
Pump Alignment Report

ITR Number : AEM-ME-ITR-001
Contract no. : C22466T

NUQSANA PROMEC MINING

AGNICO EAGLE

SYSTEM :	UNIT : 65 POD 116 01 B
LOCATION : PUMPING STATION - RANKIN	SPECIFICATION :

Instrument : _____

Serial : _____

File number : _____

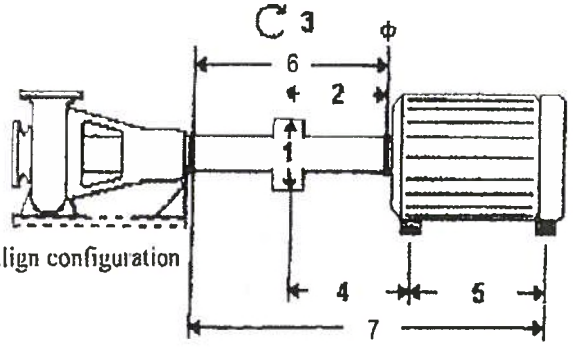

Rotalign configuration

1 Coupling Diameter _____
2 Sensor to Center _____
3 RPM _____
4 Center to First Foot _____
5 Distance Between Feet _____
6 Distance Between Prisim _____
7 Sensor to first foot _____

COUPLING RESULTS

Vertical Gap	Vertical Offset	Horizontal Gap	Horizontal Offset
(+) (-)	(+) (-)	(+) (-)	(+) (-)

FEET RESULTS

Vertical Front Foot	Vertical Rear Foot	Horizontal Front Foot	Horizontal Rear Foot

SOFT FOOT



Comments :

PROMEC DESIGNATE - SIGNATURE	TITLE	DATE
CLIENT DESIGNATE - SIGNATURE	TITLE	DATE

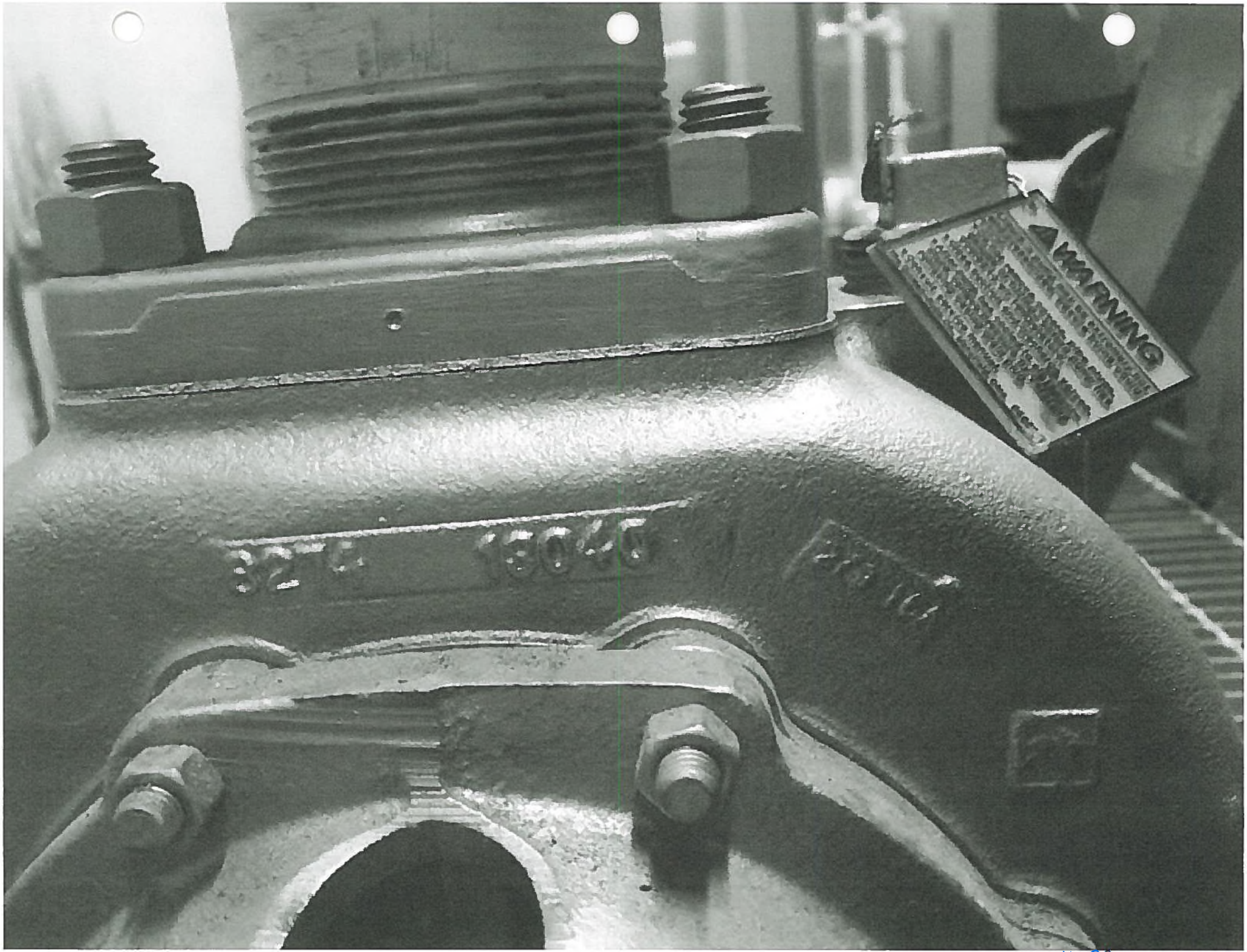
WARNING

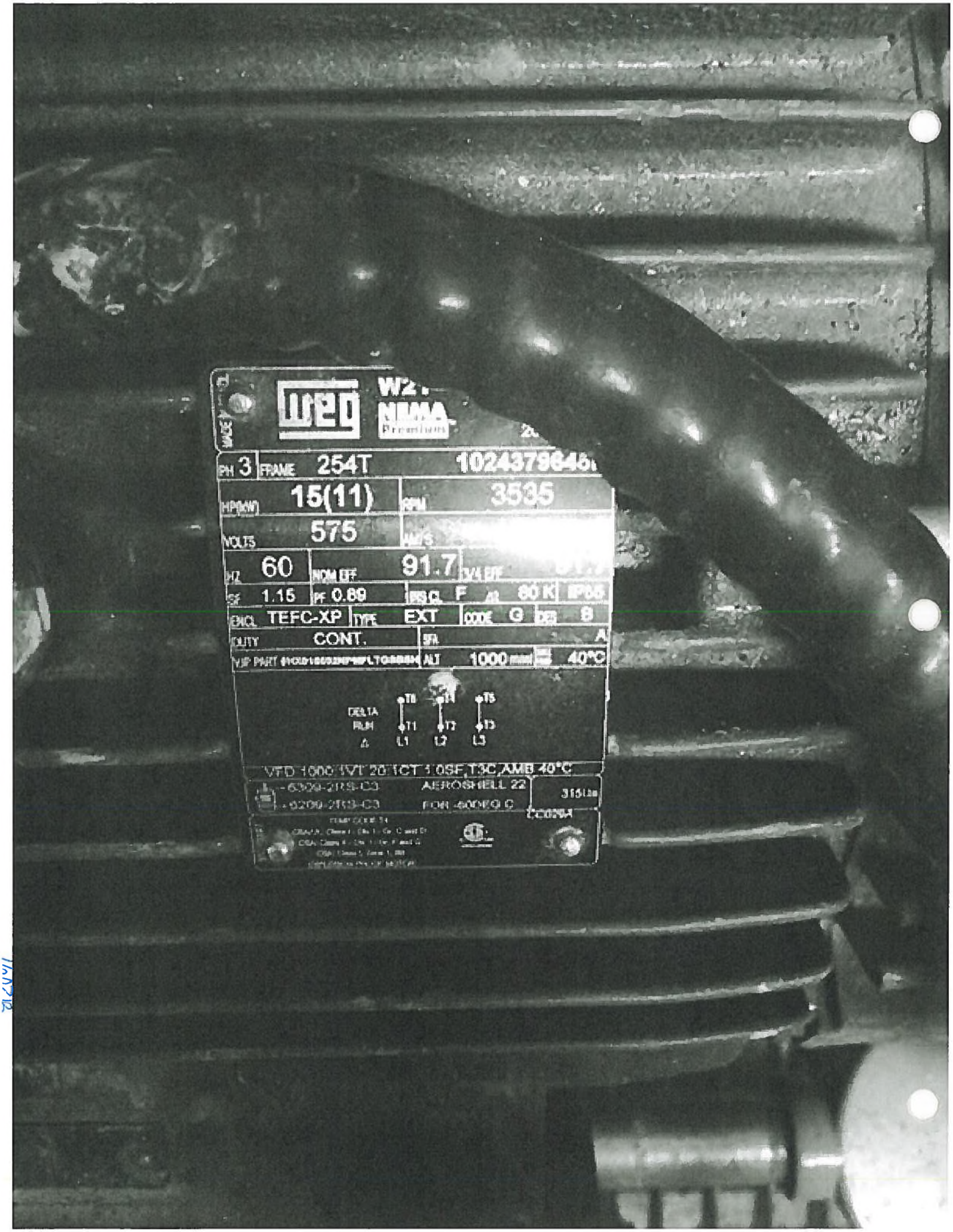
WEG
NEMA
PH 3
FRAME 254T
HP/kW 15(11)
RPM 3535
VOLTS 575
HZ 60
NOM EFF 91.7
SF 1.15
PF 0.89
INSUL F
ENCL TEFC-XP
TYPE EXT
CODE G
DES B
DUTY CONT.
AMB 40°C
DELTA
RUN
VFD 1000 TVT 20 TCT 1 0SF T3C AMB 40°C
AEROSHELL 22
FOR -40DEG C

RAPPORT INSPECTION DE PEINTURE F-90 / PAINT INSPECTION REPORT F-90

CONTRÔLE DE QUALITÉ / QUALITY CONTRÔLE

Projet / *Project #*: 5389-02 Client / *Customer* : Promec

Description : Pipe Support – HSS 10"

Référence spécification de peinture/ *Paint specifications ref* : AE Méliadine

Inspection visuel du sablage/ *Visual Sandblast inspection* SP 6 (TYPE / INITIAL)

Instruction spécial/ *Special instructions* : N/A

Testex PRESS-O-FILM™ HT X-Coarse
www.testexlape.com
5389B 2.5 MP
1.5 to 4.5 mil
38 to 115 µm
Made in USA
115 µm
20 C 38 (C + XC) / 2 64 XC
0.8 1.5 2.5 4.5 mil
14-05-2017

Quantité sable utilisé/ *Quantity sand used:* 10 poches

Profile de sablage/ *Sandblast profil* :

#1 Quantité d'apprêt utilisée/ *Quantity primer used*: 5 gal # de lot d'appret primer/ *Lot # of primer:* TE6874UH Diluant/ *Thinner* :

Temps de séchage/ *Drying time* 2 hrs Température pièce/ *Room Temperature* 23.4°C Taux d'humidité/ *Humidity Level* 20.7 %

#2 Quantité de peinture utilisée/ *Quantity paint used*: 5 gal # de lot de peinture/ *Lot # of paint:* SM2383 UH Diluant/ *Thinner* : GTA 415

Temps de séchage/ *Drying time* 10 hrs Température pièce/ *Room Temperature* 23 °C Taux d'humidité/ *Humidity Level* 24 %

#3 Quantité de peinture utilisée/ *Quantity paint used*: 5 gal # de lot de peinture/ *Lot # of paint:* SH9274 UH Diluant/ *Thinner* : GTA 056

Temps de séchage/ *Drying time* 10 hrs Température pièce/ *Room Temperature* 25.4°C Taux d'humidité/ *Humidity Level* 22.8 %

No de pièces/ *Part Number :*	Esp Moyenne/ *Dft Average*	Vérifié par/ *Verified by:* Peintre/ *Painter*	Control Qualité/ *Quality control*	DATE
(1) 5389-01	14.3	[signature]	[signature]	2017/05/14
(2) 5389-01	15.1			
(3) 5389-01	15.8			
(4) 5389-01	14.8			
(5) 5389-01	14.0			
(6) 5389-01	15.9			
(7) 5389-01	15.2			
(8) 5389-01	15.8			
(9) 5389-01	14.6			
(10) 5389-01	14.8			
(11) 5389-01	16.4			
(12) 5389-01	16.1	[signature]		

Peintre / Painter: [signature]

Peinture rencontre les spécifications / *Paint meets specs* OUI / *YES* NON / *NO*

Contrôleur de qualité / *Quality Controller* : [signature] Signature 2017/05/16 Date

F-90 Rapport inspection de peinture / Paint Inspection Report
Reviseur : J.P. Leclerc
2017-03-27

No de pièces/ Part Number :	Esp Moyenne/ Dft Average	Vérifié par/ Verified by:		DATE
		Peintre/ Painter	Control Qualité/ Quality control	
(13) 5389-01	14.8			2017/05/
(14) 5389-01	16.1			
(15) 5389-01	17.0			
(16) 5389-01	15.2			
(17) 5389-01	15.8			
(18) 5389-01	16.3			
(19) 5389-01	17.1			
(20) 5389-01	15.3			
(21) 5389-01	14.6			
(22) 5389-01	14.7			
(23) 5389-01	14.8			
(24) 5389-01	15.2			
(25) 5389-01	15.8			
(26) 5389-01	14.9			
(27) 5389-01	16.2			
(28) 5389-01	15.3			
(29) 5389-01	16.0			
(30) 5389-01	17.2			
(31) 5389-01	16.8			
(32) 5389-01	14.9			
(33) 5389-01	16.2			
(34) 5389-01	15.8			
(35) 5389-01	14.2			
(36) 5389-01	15.8			
(37) 5389-01	16.2			
(38) 5389-01	16.8			
(39) 5389-01	15.8			
(40) 5389-01	14.8			
(41) 5389-01	15.2			
(42) 5389-01	14.9			
(43) 5389-01	16.2			
(44) 5389-01	14.8			
(45) 5389-01	16.6			
(46) 5389-01	17.2			
(47) 5389-01	14.6			
(48) 5389-01	15.6			

RAPPORT INSPECTION DE PEINTURE F-90 / PAINT INSPECTION REPORT F-90

CONTRÔLE DE QUALITÉ / QUALITY CONTRÔLE

Projet / *Project #*: 5389-02 Client / *Customer* : Promec

Description : Pipe Support – HSS 10"

Référence spécification de peinture/ *Paint specifications ref* : AE Méliadine

Inspection visuel du sablage/ *Visual Sandblast inspection* Sp 6 (TYPE) (INITIAL)

Instruction spécial/ *Special instructions* : N/A

Testex PRESS-O-FILM™ HT X-Coarse
www.testextape.com
5389B 2.6 MP
1.5 to 4.5 mil 38 to 115 µm Made in USA 115 µm
20 C 33 (C+XC)/2 64 XC 45 mil
0.8 1.5 16-05-2017

Quantité sable utilisé/ *Quantity sand used:* 10 poches

Profile de sablage/ *Sandblast profil* :

#1

Quantité d'apprêt utilisée/ *Quantity primer used*: 5 gal

de lot d'appret primer/ *Lot # of primer:* TE6874UH

Diluant/ *Thinner* : GTA 415

Temps de séchage/ *Drying time* 2 hrs

Température pièce/ *Room Temperature* 22.8

Taux d'humidité/ *Humidity Level* 36.4 %

#2

Quantité de peinture utilisée/ *Quantity paint used*: 5 gal

de lot de peinture/ *Lot # of paint:* SM2383UH

Diluant/ *Thinner* : GTA 415

Temps de séchage/ *Drying time* 8 hrs

Température pièce/ *Room Temperature* 25.6

Taux d'humidité/ *Humidity Level* 33.8 %

#3

Quantité de peinture utilisée/ *Quantity paint used*: 5 gal

de lot de peinture/ *Lot # of paint:* SH9274UH

Diluant/ *Thinner* : GTA 056

Temps de séchage/ *Drying time* 5 hrs

Température pièce/ *Room Temperature* 21.3

Taux d'humidité/ *Humidity Level* 31.6 %

No de pièces/ *Part Number :*	Esp Moyenne/ *Dft Average*	Vérifié par/ *Verified by:* Peintre/ *Painter*	Control Qualité/ *Quality control*	DATE
(49) 5389-01	16.8	[signature]	[signature]	2017/05/16
(50) 5389-01	16.9			
(51) 5389-01	15.7			
(52) 5389-01	16.2			
(53) 5389-01	16.8			
(54) 5389-01	16.3			
(55) 5389-01	16.9			
(56) 5389-01	17.2			
(57) 5389-01	15.8			
(58) 5389-01	16.2			
(59) 5389-01	16.7			
(60) 5389-01	16.9			
(61) 5389-01	16.1	[signature]	[signature]	2017/05/16

Peintre / Painter: [signature]

Peinture rencontre les spécifications / *Paint meets specs* OUI / *YES* NON / *NO*

Contrôleur de qualité / *Quality Controller* : [signature] 2017/05/18

F-90 Rapport inspection de peinture / Paint Inspection Report
Reviseur : J.P. Leclerc
2017-03-27

Signature Date

No de pièces/ *Part Number :*	Esp Moyenne/ *Dft Average*	Vérifié par/ *Verified by:* Peintre/ *Painter*	Control Qualité/ *Quality control*	DATE
(62) 5389-01	15.9			2017/05/16
(63) 5389-01	16.2			
(64) 5389-01	15.9			
(65) 5389-01	15.9			
(66) 5389-01	16.1			
(67) 5389-01	16.9			
(68) 5389-01	16.9			
(69) 5389-01	17.2			
(70) 5389-01	17.1			
(71) 5389-01	17.00			
(72) 5389-01	16.5			
(73) 5389-01	16.3			
(74) 5389-01	16.9			
(75) 5389-01	16.8			
(76) 5389-01	16.7			
(77) 5389-01	16.3			
(78) 5389-01	17.7			
(79) 5389-01	14.9			
(80) 5389-01	15.8			
(81) 5389-01	16.2			
(82) 5389-01	16.4			
(83) 5389-01	16.3			
(84) 5389-01	16.8			
(85) 5389-01	17.3			
(86) 5389-01	16.7			
(87) 5389-01	16.3			
(88) 5389-01	16.9			
(89) 5389-01	16.6			
(90) 5389-01	16.2			
(91) 5389-01	15.8			

RAPPORT INSPECTION DE PEINTURE F-90 / PAINT INSPECTION REPORT F-90

CONTRÔLE DE QUALITÉ / QUALITY CONTRÔLE

Projet / *Project #*: 5389-02 Client / *Customer* : Promec

Description : Pipe Support - HSS 10"

Référence spécification de peinture/ *Paint specifications ref* : AE Méliadine

Inspection visuel du sablage/ *Visual Sandblast inspection* SP6 (TYPE) CB (INITIAL)

Instruction spécial/ *Special instructions* : N/A

Quantité sable utilisé/ *Quantity sand used*: 10 pocles

Profile de sablage/ *Sandblast profil* : Testex PRESS-O-FILM™ HT www.testextape.com 5389B 2.2 MP X-Coarse 1.5 to 4.5 mil 38 to 115 µm Made in USA 115 µm 18-05-2017 4.5 mil

#1 Quantité d'apprêt utilisée/ *Quantity primer used*: 5 gal # de lot d'appret primer/ *Lot # of primer*: 8E6874UH Diluant/ *Thinner* : 6TA 415

Temps de séchage/ *Drying time* 3hrs Température pièce/ *Room Temperature* 22°C Taux d'humidité/ *Humidity Level* 28%

#2 Quantité de peinture utilisée/ *Quantity paint used*: 5 gal # de lot de peinture/ *Lot # of paint*: SM2383 UH Diluant/ *Thinner* : 6TA 415

Temps de séchage/ *Drying time* 8hrs Température pièce/ *Room Temperature* 22.8°C Taux d'humidité/ *Humidity Level* 28%

#3 Quantité de peinture utilisée/ *Quantity paint used*: 5 gal # de lot de peinture/ *Lot # of paint*: SM9274UH Diluant/ *Thinner* : 6TA 056

Temps de séchage/ *Drying time* 10hrs Température pièce/ *Room Temperature* 26.7°C Taux d'humidité/ *Humidity Level* 27.8%

No de pièces/ *Part Number* :	Esp Moyenne/ *Dft Average*	Vérifié par/ *Verified by:* Peintre/ *Painter*	Control Qualité/ *Quality control*	DATE
(97) 5389-01	18.2	MG	SD	2017/05/28
(98) 5389-01	15.9			
(99) 5389-01	16.1			
(100) 5389-01	14.7			
(101) 5389-01	14.5			
(102) 5389-01	18.2			
(103) 5389-01	17.1			
(104) 5389-01	14.9			
(105) 5389-01	15.2			
(106) 5389-01	16.2			
(107) 5389-01	16.9	MG	SD	
(108) 5389-01	14.8			2017/05/28

Peintre / Painter: Marc-André Gagnon

Peinture rencontre les spécifications / *Paint meets specs* OUI / *YES* NON / *NO*

Contrôleur de qualité / *Quality Controller* : Signature Date 2017/05/28

F-90 Rapport inspection de peinture / Paint Inspection Report
Reviseur : J.P. Leclerc
2017-03-27

No de pièces/ *Part Number :*	Esp Moyenne/ *Dft Average*	Vérifié par/ *Verified by:* Peintre/ *Painter*	Control Qualité/ *Quality control*	DATE
(109) 5389-01	17.3			2017/05/10
(110) 5389-01	16.9			
(111) 5389-01	17.8			
(112) 5389-01	15.9			
(113) 5389-01	16.2			
(114) 5389-01	16.5			
(115) 5389-01	15.8			
(116) 5389-01	16.3			
(117) 5389-01	14.8			
(118) 5389-01	16.2			
(119) 5389-01	15.8			
(120) 5389-01	15.6			
(121) 5389-01	15.8			
(122) 5389-01	15.7			
(123) 5389-01	16.2			
(124) 5389-01	17.0			
(125) 5389-01	16.8			
(126) 5389-01	17.2			
(127) 5389-01	16.9			
(128) 5389-01	15.7			
(129) 5389-01	15.8			
(130) 5389-01	16.1			
(131) 5389-01	16.1			
(132) 5389-01	16.2			
(133) 5389-01	14.8			
(134) 5389-01	14.7			
(135) 5389-01	16.0			
(136) 5389-01	14.9			
(137) 5389-01	16.2			
(138) 5389-01	14.7			
				2017/05/10

RAPPORT INSPECTION DE PEINTURE F-90 / PAINT INSPECTION REPORT F-90

CONTRÔLE DE QUALITÉ / QUALITY CONTRÔLE

Projet / *Project* #: 5389-02 Client / *Customer* : Promec

Description : Pipe Support – HSS 10"

Référence spécification de peinture/ *Paint specifications ref* : AE Méliadine

Inspection visuel du sablage/ *Visual Sandblast inspection* SP6 TYPE GB INITIAL

Instruction spécial/ *Special instructions* : N/A

Testex PRESS-O-FILM™ HT www.testexlape.com 3989B 2.8 HP X-Coarse 1.5 to 4.5 mil 38 to 115 µm Made in USA 115 µm

Quantité sable utilisé/ *Quantity sand used:* 10 poches

Profile de sablage/ *Sandblast profil* :

#1 Quantité d'apprêt utilisée/ *Quantity primer used:* 5 gal # de lot d'appret primer/ *Lot # of primer:* TE6874UH Diluant/ *Thinner* : GTA 415

Temps de séchage/ *Drying time* 2 hrs Température pièce/ *Room Temperature* 19.8°C Taux d'humidité/ *Humidity Level* 32%

#2 Quantité de peinture utilisée/ *Quantity paint used:* 5 gal # de lot de peinture/ *Lot # of paint:* SM2383UH Diluant/ *Thinner* : GTA 415

Temps de séchage/ *Drying time* 10 hrs Température pièce/ *Room Temperature* 23°C Taux d'humidité/ *Humidity Level* 38%

#3 Quantité de peinture utilisée/ *Quantity paint used:* 5 gal. # de lot de peinture/ *Lot # of paint:* SA9274UH Diluant/ *Thinner* : GTA 056

Temps de séchage/ *Drying time* 6 hrs Température pièce/ *Room Temperature* 21.6°C Taux d'humidité/ *Humidity Level* 27%.

No de pièces/ *Part Number :*	Esp Moyenne/ *Dft Average*	Vérifié par/ *Verified by:* Peintre/ *Painter*	Control Qualité/ *Quality control*	DATE
(139) 5389-01	14.6			2017/05/23
(140) 5389-01	14.8			
(141) 5389-01	16.1			
(142) 5389-01	14.9			
(143) 5389-01	15.6			
(144) 5389-01	14.8			
(145) 5389-01	14.7			
(146) 5389-01	15.2			
(147) 5389-01	16.3			
(148) 5389-01	16.7			
(149) 5389-01	15.9			
(150) 5389-01	16.2			2017/05/23

Peintre / Painter:

Peinture rencontre les spécifications / *Paint meets specs* OUI / *YES* NON / *NO*

Contrôleur de qualité / *Quality Controller* : Signature Date 2017/05/25

No de pièces/ *Part Number :*	Esp Moyenne/ *Dft Average*	Vérifié par/ *Verified by:*		DATE
		Peintre/ *Painter*	Control Qualité/ *Quality control*	
(151) 5389-01	18.4			2017/05/25
(152) 5389-01	17.6			
(153) 5389-01	17.3			
(154) 5389-01	16.8			
(155) 5389-01	16.9			
(156) 5389-01	14.6			
(157) 5389-01	15.2			
(158) 5389-01	17.1			
(159) 5389-01	14.9			
(160) 5389-01	15.8			
(161) 5389-01	16.7			
(162) 5389-01	16.8			
(163) 5389-01	17.8			
(164) 5389-01	16.1			
(165) 5389-01	15.1			
(166) 5389-01	16.2			
(167) 5389-01	15.8			
(168) 5389-01	15.9			
(169) 5389-01	16.2			
(170) 5389-01	16.9			
(171) 5389-01	16.9			
(172) 5389-01	14.3			
(173) 5389-01	14.9			
(174) 5389-01	14.8			
(175) 5389-01	15.1			
(176) 5389-01	14.7			
(177) 5389-01	14.6			
(178) 5389-01	15.2			
(179) 5389-01	14.3			
(180) 5389-01	15.3.			

RAPPORT INSPECTION DE PEINTURE F-90 / PAINT INSPECTION REPORT F-90

CONTRÔLE DE QUALITÉ / QUALITY CONTRÔLE

Projet / *Project #*: 5389-02 Client / *Customer* : Promec

Description : Pipe Support – HSS 10"

Référence spécification de peinture/ *Paint specifications ref* : AE Méliadine

Inspection visuel du sablage/ *Visual Sandblast inspection* SP6 (TYPE) CB (INITIAL)

Instruction spécial/ *Special Instructions* : N/A

Quantité sable utilisé/ *Quantity sand used*: 10 palets

Profile de sablage/ *Sandblast profil* :

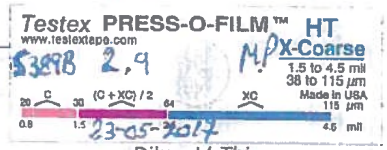

#1 Quantité d'apprêt utilisée/ *Quantity primer used*: 5 gal # de lot d'appret primer/ *Lot # of primer*: TE687UH Diluant/ *Thinner* : GTA 415

Temps de séchage/ *Drying time* 3 hrs Température pièce/ *Room Temperature* 23.8°C Taux d'humidité/ *Humidity Level* 28%

#2 Quantité de peinture utilisée/ *Quantity paint used*: 5 gal # de lot de peinture/ *Lot # of paint*: SM23830H Diluant/ *Thinner* : GTA 415

Temps de séchage/ *Drying time* 10 hrs Température pièce/ *Room Temperature* 27.2°C Taux d'humidité/ *Humidity Level* 22%

#3 Quantité de peinture utilisée/ *Quantity paint used*: 5 gal # de lot de peinture/ *Lot # of paint*: SH9274UH Diluant/ *Thinner* : GTA 056.

Temps de séchage/ *Drying time* 6 hrs Température pièce/ *Room Temperature* 19.8°C Taux d'humidité/ *Humidity Level* 33%

No de pièces/ *Part Number :*	Esp Moyenne/ *Dft Average*	Vérifié par/ *Verified by:* Peintre/ *Painter*	Control Qualité/ *Quality control*	DATE
(181) 5389-01	16.2			2017/05/25
(182) 5389-01	16.6			
(183) 5389-01	17.1			
(184) 5389-01	16.8			
(185) 5389-01	16.9			
(186) 5389-01	17.0			
(187) 5389-01	16.9			
(188) 5389-01	16.9			
(189) 5389-01				

No de pièces/ *Part Number :*	Esp Moyenne/ *Dft Average*	Vérifié par/ *Verified by:*		DATE
		Peintre/ *Painter*	Control Qualité/ *Quality control*	
(193) 5389-01	16.3			2017/05/25
(194) 5389-01	16.9			
(195) 5389-01	17.2			
(196) 5389-01	17.0			
(197) 5389-01	16.8			
(198) 5389-01	16.4			
(199) 5389-01	16.8			
(200) 5389-01	17.0			
(201) 5389-01	16.6			
(202) 5389-01	16.8			
(203) 5389-01	17.8			
(204) 5389-01	18.7			
(205) 5389-01	17.6			
(206) 5389-01	16.9			
(207) 5389-01	17.3			
(208) 5389-01	16.8			
(209) 5389-01	17.8			
(210) 5389-01	15.6			
(211) 5389-01	15.4			
(212) 5389-01	15.8			
(213) 5389-01	16.2			
(214) 5389-01	15.9			
(215) 5389-01	16.3			
(216) 5389-01	15.2			
(217) 5389-01	16.4			
(218) 5389-01	15.8			
(219) 5389-01	16.2			
(220) 5389-01	16.4			
(221) 5389-01	15.9			
(222) 5389-01	15.4			
				2017/05/25

RAPPORT INSPECTION DE PEINTURE F-90 / PAINT INSPECTION REPORT F-90

CONTRÔLE DE QUALITÉ / QUALITY CONTRÔLE

Projet / *Project #:* 5389-02 Client / *Customer* : Promec

Description : Pipe Support – HSS 10"

Référence spécification de peinture/ *Paint specifications ref* : AE Mélladine

Inspection visuel du sablage/ *Visual Sandblast inspection* Sp6 (TYPE) JB (INITIAL)

Instruction spécial/ *Special instructions* : N/A

Quantité sable utilisé/ *Quantity sand used*: 6 poches

Profile de sablage/ *Sandblast profil* : Testex PRESS-O-FILM™ HT X-Coarse 1.5 to 4.5 mil 38 to 115 µm Made in USA 5389 2.8 MP 20-Oct-2017

#1 Quantité d'apprêt utilisée/ *Quantity primer used*: 3 gal # de lot d'appret primer/ *Lot # of primer*: TE68746H GTA 415 Diluant/ *Thinner* :

Temps de séchage/ *Drying time* 2 hrs Température pièce/ *Room Temperature* 23.8 °C Taux d'humidité/ *Humidity Level* 22 %

#2 Quantité de peinture utilisée/ *Quantity paint used*: 3 gal # de lot de peinture/ *Lot # of paint*: SM2383UH Diluant/ *Thinner* : GTA 415

Temps de séchage/ *Drying time* 9 hrs Température pièce/ *Room Temperature* 25.6 °C Taux d'humidité/ *Humidity Level* 21 %

#3 Quantité de peinture utilisée/ *Quantity paint used*: 3 gal # de lot de peinture/ *Lot # of paint*: SM9274H Diluant/ *Thinner* : GTA 056

Temps de séchage/ *Drying time* 6 hrs Température pièce/ *Room Temperature* 24.8 °C Taux d'humidité/ *Humidity Level* 32 %

No de pièces/ *Part Number :*	Esp Moyenne/ *Dft Average*	Vérifié par/ *Verified by:*		DATE
		Peintre/ *Painter*	Control Qualité/ *Quality control*	
(223) 5389-01	16.4	MA	ZB	2017/05/26
(224) 5389-01	15.8			
(225) 5389-01	16.2			
(226) 5389-01	15.6			
(227) 5389-01	15.8			
(228) 5389-01	15.6			
(229) 5389-01	15.4			
(230) 5389-01	16.2			
(231) 5389-01	15.8			
(232) 5389-01	16.8			
(233) 5389-01	15.4			
(234) 5389-01	16.2			
(235) 5389-01	15.6	MA	ZB	2017/05/26

Peintre / Painter: MA

Peinture rencontre les spécifications / *Paint meets specs* OUI / *YES* NON / *NO*

Contrôleur de qualité / *Quality Controller* : ZB 2017/05/26

Signature Date

No de pièces/ *Part Number :*	Esp Moyenne/ *Dft Average*	Vérifié par/ *Verified by:*		DATE
		Peintre/ *Painter*	Control Qualité/ *Quality control*	
(236) 5389-01	15.4			2017/05/28
(237) 5389-01	15.8			
(238) 5389-01	15.6			
(239) 5389-01	16.2			
(240) 5389-01	16.1			
5389 - 06A	14.9			
5389 - 06A	14.2			
5389 - 06A	16.1			
5389 - 06A.	14.8			2017/05/28

RAPPORT INSPECTION DE PEINTURE F-90 / PAINT INSPECTION REPORT F-90

CONTRÔLE DE QUALITÉ / QUALITY CONTRÔLE

Projet / *Project #:* 5389-02 Client / *Customer :* Promec

Description : Pipe Support – HSS 10" avec U-Bolt

Référence spécification de peinture/ *Paint specifications ref :* AE Méliadine

Inspection visuel du sablage/ *Visual Sandblast inspection* S16 (TYPE) CB (INITIAL)

Instruction spécial/ *Special instructions :* N/A

Quantité sable utilisé/ *Quantity sand used:* 11 poches

Profile de sablage/ *Sandblast profil :* Testex PRESS-O-FILM™ HT www.testextape.com — B 2.8 — Med X-Coarse 1.5 to 4.5 mil 38 to 115 µm — Made in USA — 30-05-2017

#1 Quantité d'apprêt utilisée/ *Quantity primer used:* 6 gal # de lot d'appret primer/ *Lot # of primer:* TE6894UH Diluant/ *Thinner :* GTA 415

Temps de séchage/ *Drying time* 8 hrs Température pièce/ *Room Temperature* 21.7 °C Taux d'humidité/ *Humidity Level* 27%

#2 Quantité de peinture utilisée/ *Quantity paint used:* 6 gal # de lot de peinture/ *Lot # of paint:* TE5015UH Diluant/ *Thinner :* GTA 415

Temps de séchage/ *Drying time* 12 hrs Température pièce/ *Room Temperature* 23.6 °C Taux d'humidité/ *Humidity Level* 31%

#3 Quantité de peinture utilisée/ *Quantity paint used:* 6 gal. # de lot de peinture/ *Lot # of paint:* 6H9274UH Diluant/ *Thinner :* GTA 05a

Temps de séchage/ *Drying time* 8 hrs Température pièce/ *Room Temperature* 20.8°C Taux d'humidité/ *Humidity Level* 26%.

No de pièces/ *Part Number :*	Esp Moyenne/ *Dft Average*	Vérifié par/ *Verified by:* Peintre/ *Painter*	Control Qualité/ *Quality control*	DATE
(1) 5389-01A	19.9			2017/05/30
(2) 5389-01A	18.9			
(3) 5389-01A	17.6			
(4) 5389-01A	19.2			
(5) 5389-01A	16.9			
(6) 5389-01A	17.2			
(7) 5389-01A	17.4			
(8) 5389-01A	16.8			
(9) 5389-01A	18.0			
(10) 5389-01A	18.7			
(11) 5389-01A	18.5			
(12) 5389-01A	18.2			
(13) 5389-01A	18.8			2017/05/30

Peintre / Painter:

Peinture rencontre les spécifications / *Paint meets specs* OUI / *YES* NON / *NO*

Contrôleur de qualité / *Quality Controller* : 2017/06/01

Signature Date

No de pièces/ *Part Number :*	Esp Moyenne/ *Dft Average*	Vérifié par/ *Verified by:* Peintre/ *Painter*	Control Qualité/ *Quality control*	DATE
(14) 5389-01A	17.9			2017/05/30
(15) 5389-01A	17.8			
(16) 5389-01A	17.5			
(17) 5389-01A	16.9			
(18) 5389-01A	17.2			
(19) 5389-01A	16.9			
(20) 5389-01A	17.0			
(21) 5389-01A	17.2			
(22) 5389-01A	16.8			
(23) 5389-01A	16.9			
(24) 5389-01A	16.4			
(25) 5389-01A	16.9			
(26) 5389-01A	17.2			
(27) 5389-01A	18.4			
(28) 5389-01A	17.2			
(29) 5389-01A	16.4			
(30) 5389-01A	18.3			
(31) 5389-01A	16.9			
(32) 5389-01A	16.8			
(33) 5389-01A	17.9			
(34) 5389-01A	16.8			
(35) 5389-01A	17.9			
(36) 5389-01A	17.8			
(37) 5389-01A	17.2			
(38) 5389-01A	17.0			
(39) 5389-01A	16.9			
(40) 5389-01A	16.8			
(41) 5389-01A	16.6			
(42) 5389-01A	17.8			
(43) 5389-01A	16.9			
(44) 5389-01A	17.8			
(45) 5389-01A	16.9			
(46) 5389-01A	16.8			
(47) 5389-01A	16.4			
(48) 5389-01A	16.2			
(49) 5389-01A	16.9			
(50) 5389-01A	17.2			
(51) 5389-01A	17.9			
(52) 5389-01A	17.8			2017/05/30

(53) 5389-01A	18.2			2017/05/30
(54) 5389-01A	17.9			
(55) 5389-01A	17.1			

RAPPORT INSPECTION DE PEINTURE F-90 / PAINT INSPECTION REPORT F-90

CONTRÔLE DE QUALITÉ / QUALITY CONTRÔLE

Projet / *Project #:* 5389-02 Client / *Customer :* Promec

Description : Pipe Support – ~~AGS-184~~ Flag.

Référence spécification de peinture/ *Paint specifications ref :* AE Méliadine

Inspection visuel du sablage/ *Visual Sandblast inspection* SP6 TYPE GB INITIAL

Instruction spécial/ *Special instructions :* N/A

Testex PRESS-O-FILM™ HT www.testextape.com X-Coarse 1.5 to 4.5 mil 38 to 115 µm Made in USA

5389-02 2.7 MP 31-Oct 2017

Quantité sable utilisé/ *Quantity sand used:* 2 poches

Profile de sablage/ *Sandblast profil :*

#1

Quantité d'apprêt utilisée/ *Quantity primer used:* 2 gal

de lot d'appret primer/ *Lot # of primer:* TE6874UH

Diluant/ *Thinner :* GTA 415

Temps de séchage/ *Drying time* 2 hrs

Température pièce/ *Room Temperature* 24.7°C

Taux d'humidité/ *Humidity Level* 54.6 %

#2

Quantité de peinture utilisée/ *Quantity paint used:* 2 gal

de lot de peinture/ *Lot # of paint:* TE7081UH

Diluant/ *Thinner :* GTA 415

Temps de séchage/ *Drying time* 10 hrs

Température pièce/ *Room Temperature* 25.0°C

Taux d'humidité/ *Humidity Level* 52.1 %

#3

Quantité de peinture utilisée/ *Quantity paint used:* 2 gal

de lot de peinture/ *Lot # of paint:* SF9274UH

Diluant/ *Thinner :* GTA 0510

Temps de séchage/ *Drying time* 10 hrs

Température pièce/ *Room Temperature* 22.8°C

Taux d'humidité/ *Humidity Level* 36.2 %

No de pièces/ *Part Number :*	Esp Moyenne/ *Dft Average*	Vérifié par/ *Verified by:*		DATE
		Peintre/ *Painter*	Control Qualité/ *Quality control*	
(1) 5389-02A	14.2	MP	SP	2017/05/31
(2) 5389-02A	14.6			
(3) 5389-02A	14.6			
(4) 5389-02A	14.8			
(5) 5389-02A	14.9			
(6) 5389-02A	14.1			
(7) 5389-02A	13.9			
(8) 5389-02A	14.7			
(9) 5389-02A				

No de pièces/ *Part Number :*	Esp Moyenne/ *Dft Average*	Vérifié par/ *Verified by:*		DATE
		Peintre/ *Painter*	Control Qualité/ *Quality control*	
(13) 5389-02A	13.9			2017/05/31
(14) 5389-02A	14.2			
(15) 5389-02A	14.6			
(16) 5389-02A	15.1			
(17) 5389-02A	14.3			
(18) 5389-02A	14.5			
(19) 5389-02A	14.5			
(20) 5389-02A	15.3			
(21) 5389-02A	14.2			
(22) 5389-02A	15.2			
(23) 5389-02A	14.7			
(24) 5389-02A	14.8			
(25) 5389-02A	14.6			2017/05/31

RAPPORT INSPECTION DE PEINTURE F-90 / PAINT INSPECTION REPORT F-90

CONTRÔLE DE QUALITÉ / QUALITY CONTRÔLE

Projet / *Project #*: 5389-02 Client / *Customer* : Promec

Description : Pipe Support – Small « T »

Référence spécification de peinture/ *Paint specifications ref* : AE Méliadine

Inspection visuel du sablage/ *Visual Sandblast inspection* SP 6 (TYPE) MP (INITIAL)

Instruction spécial/ *Special instructions* : N/A

Quantité sable utilisé/ *Quantity sand used:* 10 poches

Profile de sablage/ *Sandblast profil* : B 2.9 mil

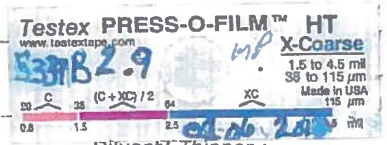

#1 Quantité d'apprêt utilisée/ *Quantity primer used:* 5 gal # de lot d'appret primer/ *Lot # of primer:* TE6874UH Diluant/ *Thinner :* GTA 415

Temps de séchage/ *Drying time* 2 hrs Température pièce/ *Room Temperature* 22°C Taux d'humidité/ *Humidity Level* 31.9 %

#2 Quantité de peinture utilisée/ *Quantity paint used:* 5 gal # de lot de peinture/ *Lot # of paint:* TE5015UH Diluant/ *Thinner :* GTA 415

Temps de séchage/ *Drying time* 8 hrs Température pièce/ *Room Temperature* 24°C Taux d'humidité/ *Humidity Level* 33 %

#3 Quantité de peinture utilisée/ *Quantity paint used:* 5 gal # de lot de peinture/ *Lot # of paint:* SH9274UH Diluant/ *Thinner :* GTA 056

Temps de séchage/ *Drying time* 6 hrs Température pièce/ *Room Temperature* 22°C Taux d'humidité/ *Humidity Level* 27 %

No de pièces/ *Part Number :*	Esp Moyenne/ *Dft Average*	Vérifié par/ *Verified by:*		DATE
		Peintre/ *Painter*	Control Qualité/ *Quality control*	
(1) 5389-03A	17.8			2017/08/04
(2) 5389-03A	16.9			
(3) 5389-03A	18.2			
(4) 5389-03A	17.3			
(5) 5389-03A	17.6			
(6) 5389-03A	18.1			
(7) 5389-03A	16.9			
(8) 5389-03A	17.0			
(9) 5389-03A				

No de pièces/ *Part Number :*	Esp Moyenne/ *Dft Average*	Vérifié par/ *Verified by:*		DATE
		Peintre/ *Painter*	Control Qualité/ *Quality control*	
(13) 5389-03A	16.6			2017/06/01
(14) 5389-03A	16.8			
(15) 5389-03A	17.2			
(16) 5389-03A	17.6			
(17) 5389-03A	17.8			
(18) 5389-03A	16.4			
(19) 5389-03A	16.6			
(20) 5389-03A	15.8			
(21) 5389-03A	17.2			
(22) 5389-03A	18.3			
(23) 5389-03A	19.2			
(24) 5389-03A	15.5			
(25) 5389-03A	16.8			
(26) 5389-03A	17.2			
(27) 5389-03A	15.8			
(28) 5389-03A	16.2			
(29) 5389-03A	15.8			
(30) 5389-03A	17.8			
(31) 5389-03A	18.3			
(32) 5389-03A	16.8			
(33) 5389-03A	17.8			
(34) 5389-03A	14.9			
(35) 5389-03A	17.8			
(36) 5389-03A	15.6			
(37) 5389-03A	17.8			
(38) 5389-03A	16.4			
(39) 5389-03A	15.7			
(40) 5389-03A	18.2			
(41) 5389-03A	16.5			
(42) 5389-03A	17.4			
(43) 5389-03A	16.3			
(44) 5389-03A	15.8			
(45) 5389-03A	15.9			
(46) 5389-03A	16.2			
(47) 5389-03A	16.8			
(48) 5389-03A	15.2			2017/06/01

RAPPORT INSPECTION DE PEINTURE F-90 / PAINT INSPECTION REPORT F-90

CONTRÔLE DE QUALITÉ / QUALITY CONTRÔLE

Projet / *Project #* : 5389-02 Client / *Customer* : Promec

Description : Pipe Support – Small « T »

Référence spécification de peinture/ *Paint specifications ref* : AE Méliadine

Inspection visuel du sablage/ *Visual Sandblast inspection* SPG (TYPE) CB (INITIAL)

Instruction spécial/ *Special instructions* : N/A

Quantité sable utilisé/ *Quantity sand used*: 10 poches

Profile de sablage/ *Sandblast profil* : Testex PRESS-O-FILM™ HT X-Coarse 1.5 to 4.5 mil 38 to 115 µm Made in USA — 3898 2.8

#1 Quantité d'apprêt utilisée/ *Quantity primer used*: 5 gal # de lot d'appret primer/ *Lot # of primer*: TE6874UH Diluant/ *Thinner* : GTA 415

Temps de séchage/ *Drying time* 3 hrs Température pièce/ *Room Temperature* 28°C Taux d'humidité/ *Humidity Level* 32.8%

#2 Quantité de peinture utilisée/ *Quantity paint used*: 5 gal # de lot de peinture/ *Lot # of paint*: SM2383UH Diluant/ *Thinner* : GTA 415

Temps de séchage/ *Drying time* 10 hrs Température pièce/ *Room Temperature* 24°C Taux d'humidité/ *Humidity Level* 31.7%

#3 Quantité de peinture utilisée/ *Quantity paint used*: 5 gal # de lot de peinture/ *Lot # of paint*: SH9274UH Diluant/ *Thinner* : GTA 056

Temps de séchage/ *Drying time* 10 hrs Température pièce/ *Room Temperature* 23°C Taux d'humidité/ *Humidity Level* 28%

No de pièces/ *Part Number :*	Esp Moyenne/ *Dft Average*	Vérifié par/ *Verified by:* Peintre/ *Painter*	Vérifié par/ *Verified by:* Control Qualité/ *Quality control*	DATE
(49) 5389-03A	17.3			2017/06/05
(50) 5389-03A	17.4			
(51) 5389-03A	18.8			
(52) 5389-03A	18.3			
(53) 5389-03A	16.3			
(54) 5389-03A	16.9			
(55) 5389-03A	15.3			
(56) 5389-03A	15.7			
(57) 5389-03A	16.5			
(58) 5389-03A	15.8			
(59) 5389-03A	15.2			
(60) 5389-03A	14.9			
(61) 5389-03A	16.8			2017/06/05

Peintre / Painter:

Peinture rencontre les spécifications / *Paint meets specs* OUI / *YES* NON / *NO*

Contrôleur de qualité / *Quality Controller* : 2017/06/07

RAPPORT INSPECTION DE PEINTURE F-90 / PAINT INSPECTION REPORT F-90

CONTRÔLE DE QUALITÉ / QUALITY CONTRÔLE

Projet / *Project #:* 5389-02 Client / *Customer* : Promec

Description : Pipe Support – Small « T »

Référence spécification de peinture/ *Paint specifications ref* : AE Mélladine

Inspection visuel du sablage/ *Visual Sandblast inspection* SPG (TYPE) CB (INITIAL)

Instruction spécial/ *Special instructions* : N/A

Quantité sable utilisé/ *Quantity sand used:* 10 poches

Profile de sablage/ *Sandblast profil* : Testex PRESS-O-FILM™ HT X-Coarse 1.5 to 4.5 mil 38 to 115 µm Made in USA — F3898 2.8

#1 Quantité d'apprêt utilisée/ *Quantity primer used:* 5 gal # de lot d'appret primer/ *Lot # of primer:* TE6874VH Diluant/ *Thinner :* GTA 415

Temps de séchage/ *Drying time* 3 hrs Température pièce/ *Room Temperature* 28°C Taux d'humidité/ *Humidity Level* 32.8%

#2 Quantité de peinture utilisée/ *Quantity paint used:* 5 gal # de lot de peinture/ *Lot # of paint:* SM2383 VH Diluant/ *Thinner :* GTA 415

Temps de séchage/ *Drying time* 10 hrs Température pièce/ *Room Temperature* 24°C Taux d'humidité/ *Humidity Level* 31.7%

#3 Quantité de peinture utilisée/ *Quantity paint used:* 5 gal # de lot de peinture/ *Lot # of paint:* SH9274VH Diluant/ *Thinner :* GTA 056

Temps de séchage/ *Drying time* 10 hrs Température pièce/ *Room Temperature* 23°C Taux d'humidité/ *Humidity Level* 28%

No de pièces/ *Part Number :*	Esp Moyenne/ *Dft Average*	Vérifié par/ *Verified by:* Peintre/ *Painter*	Vérifié par/ *Verified by:* Control Qualité/ *Quality control*	DATE
(49) 5389-03A	17.3			2017/06/05
(50) 5389-03A	17.4			
(51) 5389-03A	18.8			
(52) 5389-03A	18.3			
(53) 5389-03A	16.3			
(54) 5389-03A	16.9			
(55) 5389-03A	15.3			
(56) 5389-03A	15.7			
(57) 5389-03A	16.5			
(58) 5389-03A	15.8			
(59) 5389-03A	15.2			
(60) 5389-03A	14.9			
(61) 5389-03A	16.8			2017/06/05

Peintre / Painter:

Peinture rencontre les spécifications / *Paint meets specs* OUI / *YES* NON / *NO*

Contrôleur de qualité / *Quality Controller* : 2017/06/07

Signature Date

No de pièces/ *Part Number :*	Esp Moyenne/ *Dft Average*	Vérifié par/ *Verified by:* Peintre/ *Painter*	Vérifié par/ *Verified by:* Control Qualité/ *Quality control*	DATE
(62) 5389-03A	14.7			2017/06/05
(63) 5389-03A	16.8			
(64) 5389-03A	15.9			
(65) 5389-03A	16.2			
(66) 5389-03A	14.7			
(67) 5389-03A	16.9			
(68) 5389-03A	18.7			
(69) 5389-03A	19.9			
(70) 5389-03A	18.8			
(71) 5389-03A	15.9			
(72) 5389-03A	17.3			
(73) 5389-03A	16.7			
(74) 5389-03A	14.8			
(75) 5389-03A	14.8			
(76) 5389-03A	15.6			
(77) 5389-03A	14.7			
(78) 5389-03A	16.2			
(79) 5389-03A	16.5			
(80) 5389-03A	15.9			
(81) 5389-03A	14.9			
(82) 5389-03A	15.0			
(83) 5389-03A	17.4			
(84) 5389-03A	16.7			
(85) 5389-03A	16.3			
(86) 5389-03A	14.7			
(87) 5389-03A	14.6			
(88) 5389-03A	17.7			
(89) 5389-03A	18.7			
(90) 5389-03A	20.7			
(91) 5389-03A	19.2			
(92) 5389-03A	17.8			
(93) 5389-03A	16.2			
(94) 5389-03A	18.9			
(95) 5389-03A	16.2			
(96) 5389-03A	17.8			2017/06/05

RAPPORT INSPECTION DE PEINTURE F-90 / PAINT INSPECTION REPORT F-90

CONTRÔLE DE QUALITÉ / QUALITY CONTRÔLE

Projet / *Project #:* 5389-02 Client / *Customer :* Promec

Description : Pipe Support – Small « T »

Référence spécification de peinture/ *Paint specifications ref :* AE Méliadine

Inspection visuel du sablage/ *Visual Sandblast inspection* SP6 (TYPE) CB (INITIAL)

Instruction spécial/ *Special instructions :* N/A

Quantité sable utilisé/ *Quantity sand used:* 10 poches

Profile de sablage/ *Sandblast profil :* Testex PRESS-O-FILM™ HT www.testexinc.com 5389B2.7 X-Coarse 1.5 to 4.5 mil 38 to 115 µm Made in USA 115 µm 45 mil

#1

Quantité d'apprêt utilisée/ *Quantity primer used:* 5 gal

de lot d'appret primer/ *Lot # of primer:* TE6874UH

Diluant/ *Thinner :* GTA 415

Temps de séchage/ *Drying time* 2 hrs

Température pièce/ *Room Temperature* 22.8°C

Taux d'humidité/ *Humidity Level* 32%

#2

Quantité de peinture utilisée/ *Quantity paint used:* 5 gal

de lot de peinture/ *Lot # of paint:* SM2383 UH

Diluant/ *Thinner :* GTA 415

Temps de séchage/ *Drying time* 16 hrs

Température pièce/ *Room Temperature* 25.6 °C

Taux d'humidité/ *Humidity Level* 28%

#3

Quantité de peinture utilisée/ *Quantity paint used:* 5 gal.

de lot de peinture/ *Lot # of paint:* SH9274UH

Diluant/ *Thinner :* GTA 056

Temps de séchage/ *Drying time* 8 hrs

Température pièce/ *Room Temperature* 24.3°C

Taux d'humidité/ *Humidity Level* 21%

No de pièces/ *Part Number :*	**Esp Moyenne/ *Dft Average***	**Vérifié par/ *Verified by:***		**DATE**
		Peintre/ *Painter*	Control Qualité/ *Quality control*	
(97) 5389-03A	17.8	MS	CB	2017/06/09
(98) 5389-03A	16.5			
(99) 5389-03A	16.1			
(100) 5389-03A	19.1			
(101) 5389-03A	18.6			
(102) 5389-03A	18.3			
(103) 5389-03A	17.0			
(104) 5389-03A	23.1			
(105) 5389-03A	20.8			
(106) 5389-03A	15.3			
(107) 5389-03A	15.7			
(108) 5389-03A	16.0	MS	CB	2017/06/09

Peintre / Painter: MS

Peinture rencontre les spécifications / *Paint meets specs* OUI / *YES* NON / *NO*

Contrôleur de qualité / *Quality Controller :* CB (Signature) 2017/06/14 (Date)

No de pièces/ *Part Number :*	Esp Moyenne/ *Dft Average*	Vérifié par/ *Verified by:*		DATE
		Peintre/ *Painter*	Control Qualité/ *Quality control*	
(109) 5389-03A	19.1			2017/06/09
(110) 5389-03A	19.9			
(111) 5389-03A	15.8			
(112) 5389-03A	19.4			
(113) 5389-03A	17.1			
(114) 5389-03A	15.6			
(115) 5389-03A	15.7			
(116) 5389-03A	20.5			
(117) 5389-03A	16.7			
(118) 5389-03A	17.2			
(119) 5389-03A	14.7			
(120) 5389-03A	16.5			
(121) 5389-03A	18.4			
(122) 5389-03A	19.9			
(123) 5389-03A	16.6			
(124) 5389-03A	16.3			
(125) 5389-03A	20.8			
(126) 5389-03A	16.2			
(127) 5389-03A	15.6			
(128) 5389-03A	20.3			
(129) 5389-03A	17.4			
(130) 5389-03A	19.5			
(131) 5389-03A	20.8			
(132) 5389-03A	16.7			
(133) 5389-03A	15.6			
(134) 5389-03A	16.7			
(135) 5389-03A	17.5			
(136) 5389-03A	18.6			
(137) 5389-03A	17.0			
(138) 5389-03A	14.3			2017/06/09

RAPPORT INSPECTION DE PEINTURE F-90 / PAINT INSPECTION REPORT F-90

CONTRÔLE DE QUALITÉ / QUALITY CONTRÔLE

Projet / *Project #*: 5389-02 Client / *Customer* : Promec

Description : Pipe Support – Small « T »

Référence spécification de peinture/ *Paint specifications ref* : AE Mélladine

Inspection visuel du sablage/ *Visual Sandblast inspection* SP6 (TYPE) CB (INITIAL)

Instruction spécial/ *Special instructions* : N/A

Quantité sable utilisé/ *Quantity sand used*: 10 poches

Profile de sablage/ *Sandblast profil* :

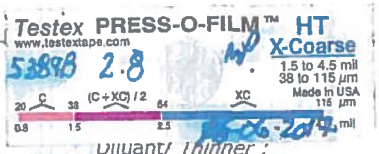

#1 Quantité d'apprêt utilisée/ *Quantity primer used*: 5 gal # de lot d'appret primer/ *Lot # of primer*: TE68740H Diluant/ *Thinner* : GTA 415

Temps de séchage/ *Drying time* 3 hrs Température pièce/ *Room Temperature* 23.7 °C Taux d'humidité/ *Humidity Level* 21%

#2 Quantité de peinture utilisée/ *Quantity paint used*: 5 gal # de lot de peinture/ *Lot # of paint*: SM23830H Diluant/ *Thinner* : GTA 415

Temps de séchage/ *Drying time* 10 hrs Température pièce/ *Room Temperature* 23.1 °C Taux d'humidité/ *Humidity Level* 23%

#3 Quantité de peinture utilisée/ *Quantity paint used*: 5 gal # de lot de peinture/ *Lot # of paint*: SH92740H Diluant/ *Thinner* : GTA 056

Temps de séchage/ *Drying time* 8 hrs Température pièce/ *Room Temperature* 24 °C Taux d'humidité/ *Humidity Level* 32%

No de pièces/ *Part Number :*	**Esp Moyenne/ *Dft Average***	**Vérifié par/ *Verified by:***		**DATE**
		Peintre/ *Painter*	Control Qualité/ *Quality control*	
(139) 5389-03A	16.2	MA	CB	2016/06/16
(140) 5389-03A	14.7			
(141) 5389-03A	19.0			
(142) 5389-03A	16.8			
(143) 5389-03A	14.6			
(144) 5389-03A	15.1			
(145) 5389-03A	18.5			
(146) 5389-03A	16.3			
(147) 5389-03A	16.3			
(148) 5389-03A	14.6			
(149) 5389-03A	15.5			
(150) 5389-03A	24.2	MA	CB	2016/06/16

Peintre / Painter: MA

Peinture rencontre les spécifications / *Paint meets specs* OUI / *YES* NON / *NO*

Contrôleur de qualité / *Quality Controller* : CB (Signature) Date 2016/06/20

No de pièces/ *Part Number :*	Esp Moyenne/ *Dft Average*	Vérifié par/ *Verified by:*		DATE
		Peintre/ *Painter*	Control Qualité/ *Quality control*	
(151) 5389-03A	20.1			2017/06/16
(152) 5389-03A	23.6			
(153) 5389-03A	16.7			
(154) 5389-03A	17.4			
(155) 5389-03A	15.0			
(156) 5389-03A	14.9			
(157) 5389-03A	19.7			
(158) 5389-03A	16.3			
(159) 5389-03A	18.2			
(160) 5389-03A	15.9			
(161) 5389-03A	20.7			
(162) 5389-03A	14.9			
(163) 5389-03A	14.7			
(164) 5389-03A	17.4			
(165) 5389-03A	14.2			
(166) 5389-03A	14.6			
(167) 5389-03A	19.3			
(168) 5389-03A	21.1			
(169) 5389-03A	19.8			
(170) 5389-03A	20.4			
(171) 5389-03A	17.7			
(172) 5389-03A	20.2			
(173) 5389-03A	18.7			
(174) 5389-03A	23.3			
(175) 5389-03A	17.8			
(176) 5389-03A	19.2			
(177) 5389-03A	18.3			
(178) 5389-03A	16.9			
(179) 5389-03A	16.3			
(180) 5389-03A	16.8			2017/06/16

RAPPORT INSPECTION DE PEINTURE F-90 / PAINT INSPECTION REPORT F-90

CONTRÔLE DE QUALITÉ / QUALITY CONTRÔLE

Projet / *Project #*: 5389-02 Client / *Customer :* Promec

Description : Pipe Support – Small « T »

Référence spécification de peinture/ *Paint specifications ref :* AE Méliadine

Inspection visuel du sablage/ *Visual Sandblast Inspection* SP6 (TYPE) G (INITIAL)

Instruction spécial/ *Special Instructions :* N/A

Testex PRESS-O-FILM™ HT www.testextape.com 5389B 2.9 M! X-Coarse 1.5 to 4.5 mil 38 to 115 µm Made in USA 115 µm 14-06-2019 4.5 mil

Quantité sable utilisé/ *Quantity sand used:* 10 poches

Profile de sablage/ *Sandblast profil :*

#1

Quantité d'apprêt utilisée/ *Quantity primer used:* 5 gal # de lot d'appret primer/ *Lot # of primer:* TE 6874UH Diluant/ *Thinner :* GTA 415

Temps de séchage/ *Drying time* 72 hrs Température pièce/ *Room Temperature* 21.7 °C Taux d'humidité/ *Humidity Level* 33%

#2

Quantité de peinture utilisée/ *Quantity paint used:* 5 gal # de lot de peinture/ *Lot # of paint:* SM2388UH Diluant/ *Thinner :* GTA 415

Temps de séchage/ *Drying time* 10 hrs Température plèce/ *Room Temperature* 24°C Taux d'humidité/ *Humidity Level* 34.8%

#3

Quantité de peinture utilisée/ *Quantity paint used:* 5 gal # de lot de peinture/ *Lot # of paint:* SH9274UH Diluant/ *Thinner :* GTA 050

Temps de séchage/ *Drying time* 8 hrs Température pièce/ *Room Temperature* 22.8 °C Taux d'humidité/ *Humidity Level* 28%

No de pièces/ *Part Number :*	**Esp Moyenne/ *Dft Average***	**Vérifié par/ *Verified by:***		**DATE**
		Peintre/ *Painter*	Control Qualité/ *Quality control*	
(181) 5389-03A	16.8			2019/06/19
(182) 5389-03A	14.9			
(183) 5389-03A	16.4			
(184) 5389-03A	14.8			
(185) 5389-03A	16.4			
(186) 5389-03A	15.8			
(187) 5389-03A	14.6			
(188) 5389-03A	15.4			
(189) 5389-03A				

No de pièces/ *Part Number :*	Esp Moyenne/ *Dft Average*	Vérifié par/ *Verified by:*		DATE
		Peintre/ *Painter*	Control Qualité/ *Quality control*	
(193) 5389-03A	16.2			2017/06/19
(194) 5389-03A	16.8			
(195) 5389-03A	14.7			
(196) 5389-03A	15.8			
(197) 5389-03A	16.2			
(198) 5389-03A	15.4			
(199) 5389-03A	17.2			
(200) 5389-03A	18.3			
(201) 5389-03A	16.9			
(202) 5389-03A	15.8			
(203) 5389-03A	17.3			
(204) 5389-03A	16.9			
(205) 5389-03A	14.6			
(206) 5389-03A	15.8			
(207) 5389-03A	16.8			
(208) 5389-03A	14.7			
(209) 5389-03A	15.9			
(210) 5389-03A	16.6			
(211) 5389-03A	17.8			
(212) 5389-03A	14.9			
(213) 5389-03A	16.6			
(214) 5389-03A	17.8			
(215) 5389-03A	15.8			
(216) 5389-03A	16.9			
(217) 5389-03A	17.3			
(218) 5389-03A	16.2			
(219) 5389-03A	15.8			
(220) 5389-03A	14.9			
(221) 5389-03A	15.8			
(222) 5389-03A	16.7			2017/06/19

RAPPORT INSPECTION DE PEINTURE F-90 / PAINT INSPECTION REPORT F-90

CONTRÔLE DE QUALITÉ / QUALITY CONTRÔLE

Projet / *Project #*: 5389-02 Client / *Customer* : Promec

Description : Pipe Support – Small « T »

Référence spécification de peinture/ *Paint specifications ref* : AE Méliadine

Inspection visuel du sablage/ *Visual Sandblast inspection* SP6 (TYPE) CB (INITIAL)

Instruction spécial/ *Special instructions* : N/A

Quantité sable utilisé/ Quantity sand used: 11 poches

Profile de sablage/ Sandblast profil : Testex PRESS-O-FILM™ HT www.testextape.com 5389-03 3.1 MP X-Coarse 1.5 to 4.5 mil 38 to 115 µm Made in USA 115 µm 4.5 mil

#1

Quantité d'apprêt utilisée/ *Quantity primer used:* 6 gal

de lot d'appret primer/ *Lot # of primer:* TE:687400

Diluant/ *Thinner* : GTA 415

Temps de séchage/ *Drying time* 2 hrs

Température pièce/ *Room Temperature* 24.2°C

Taux d'humidité/ *Humidity Level* 37%

#2

Quantité de peinture utilisée/ *Quantity paint used:* 6 gal

de lot de peinture/ *Lot # of paint:* SM2383UH

Diluant/ *Thinner* : GTA 415

Temps de séchage/ *Drying time* 10 hrs

Température pièce/ *Room Temperature* 23.9°C

Taux d'humidité/ *Humidity Level* 33%

#3

Quantité de peinture utilisée/ *Quantity paint used:* 6 gal.

de lot de peinture/ *Lot # of paint:* SH9274UH

Diluant/ *Thinner* : GTA 056.

Temps de séchage/ *Drying time* 10 hrs

Température pièce/ *Room Temperature* 24°C

Taux d'humidité/ *Humidity Level* 36%

No de pièces/ *Part Number :*	**Esp Moyenne/ *Dft Average***	**Vérifié par/ *Verified by:***		**DATE**
		Peintre/ *Painter*	Control Qualité/ *Quality control*	
(223) 5389-03A	14.7	MA		2017/06/21
(224) 5389-03A	15.8			
(225) 5389-03A	16.2			
(226) 5389-03A	14.7			
(227) 5389-03A	18.9			
(228) 5389-03A	19.3			
(229) 5389-03A	18.4			
(230) 5389-03A	16.4			
(231) 5389-03A	17.4			
(232) 5389-03A	16.3			
(233) 5389-03A	17.3			
(234) 5389-03A	17.8			
(235) 5389-03A	16.4	MA		2017/06/21

Peintre / Painter:

Peinture rencontre les spécifications / *Paint meets specs* OUI / *YES* NON / *NO*

Contrôleur de qualité / *Quality Controller* : 2017/06/23

Signature Date

No de pièces/ *Part Number :*	Esp Moyenne/ *Dft Average*	Vérifié par/ *Verified by:*		DATE
		Peintre/ *Painter*	Control Qualité/ *Quality control*	
(236) 5389-03A	16.6			2017/06/21
(237) 5389-03A	16.2			
(238) 5389-03A	17.4			
(239) 5389-03A	16.2			
(240) 5389-03A	16.3			
(241) 5389-03A	16.4			
(242) 5389-03A	17.8			
(243) 5389-03A	14.7			
(244) 5389-03A	15.8			
(245) 5389-03A	16.2			
(246) 5389-03A	15.6			
(247) 5389-03A	14.8			
(248) 5389-03A	14.2			
(249) 5389-03A	15.3			
(250) 5389-03A	16.6			
(251) 5389-03A	14.2			
(252) 5389-03A	15.7			
(253) 5389-03A	14.2			
(254) 5389-03A	16.3			
(255) 5389-03A	15.7			
(256) 5389-03A	16.2			
(257) 5389-03A	14.7			
(258) 5389-03A	16.3			
(259) 5389-03A	15.7			
(260) 5389-03A	14.2			
(261) 5389-03A	17.3			
(262) 5389-03A	14.2			
(263) 5389-03A	16.3			
(264) 5389-03A	15.2			
(265) 5389-03A	15.7			
(266) 5389-03A	16.2			
(267) 5389-03A	17.3			
(268) 5389-03A	15.2			
(269) 5389-03A	15.7			
(270) 5389-03A	15.8			
(271) 5389-03A	16.7			
(272) 5389-03A	20.8			
(273) 5389-03A	19.2			2017/06/21

RAPPORT INSPECTION DE PEINTURE F-90 / PAINT INSPECTION REPORT F-90

CONTRÔLE DE QUALITÉ / QUALITY CONTRÔLE

Projet / *Project #*: 5389-02 Client / *Customer* : Promec

Description : Pipe Support ~ Pipe Shoe

Référence spécification de peinture/ *Paint specifications ref* : AE Méliadine

Inspection visuel du sablage/ *Visual Sandblast inspection* SPG (TYPE) (INITIAL)

Instruction spécial/ *Special instructions* : N/A

Testex PRESS-O-FILM™ HT X-Coarse 1.5 to 4.5 mil 38 to 115 µm Made in USA 115 µm 12-06-2017 www.testextape.com 5389B 3.1 MP

Quantité sable utilisé/ *Quantity sand used:* 10 poches

Profile de sablage/ *Sandblast profil* :

#1 Quantité d'apprêt utilisée/ *Quantity primer used*: 5 gal # de lot d'appret primer/ *Lot # of primer:* TE6874UH Diluant/ *Thinner* : GTA 415

Temps de séchage/ *Drying time* 2 hrs Température pièce/ *Room Temperature* 23.4°C Taux d'humidité/ *Humidity Level* 32%

#2 Quantité de peinture utilisée/ *Quantity paint used*: 5 gal # de lot de peinture/ *Lot # of paint:* TE5015UH Diluant/ *Thinner* : GTA 415

Temps de séchage/ *Drying time* 10 hrs Température pièce/ *Room Temperature* 25°C Taux d'humidité/ *Humidity Level* 37%

#3 Quantité de peinture utilisée/ *Quantity paint used*: 5 gal. # de lot de peinture/ *Lot # of paint:* SH9274UH Diluant/ *Thinner* : GTA 056

Temps de séchage/ *Drying time* 8 hrs Température pièce/ *Room Temperature* 21°C Taux d'humidité/ *Humidity Level* 28%.

No de pièces/ *Part Number :*	Esp Moyenne/ *Dft Average*	Vérifié par/ *Verified by:* Peintre/ *Painter*	Control Qualité/ *Quality control*	DATE
(1) 5389-04A	16.8	[signature]	[signature]	2017/06/12
(2) 5389-04A	14.9			
(3) 5389-04A	15.8			
(4) 5389-04A	16.2			
(5) 5389-04A	16.8			
(6) 5389-04A	14.9			
(7) 5389-04A	18.2			
(8) 5389-04A	14.8			
(9) 5389-04A	15.9			
(10) 5389-04A	16.9			
(11) 5389-04A	14.8			
(12) 5389-04A	18.2	[signature]	[signature]	2017/06/12

Peintre / Painter: [signature]

Peinture rencontre les spécifications / *Paint meets specs* OUI / *YES* NON / *NO*

Contrôleur de qualité / *Quality Controller* : [signature] Signature 2017/06/14 Date

F-90 Rapport inspection de peinture / Paint Inspection Report
Reviseur : J.P. Leclerc
2017-03-27

No de pièces/ *Part Number :*	Esp Moyenne/ *Dft Average*	Vérifié par/ *Verified by:*		DATE
		Peintre/ *Painter*	Control Qualité/ *Quality control*	
(13) 5389-04A	17.8			2017/06/13
(14) 5389-04A	18.9			
(15) 5389-04A	14.8			
(16) 5389-04A	15.2			
(17) 5389-04A	16.9			
(18) 5389-04A	14.8			
(19) 5389-04A	14.6			
(20) 5389-04A	15.9			
(21) 5389-04A	15.8			
(22) 5389-04A	14.9			
(23) 5389-04A	14.7			
(24) 5389-04A	16.2			
(25) 5389-04A	16.1			
(26) 5389-04A	17.3			
(27) 5389-04A	16.7			
(28) 5389-04A	15.2			
(29) 5389-04A	15.9			
(30) 5389-04A	15.8			
(31) 5389-04A	16.2			
(32) 5389-04A	16.4			
(33) 5389-04A	15.6			
(34) 5389-04A	15.8			
(35) 5389-04A	15.8			
(36) 5389-04A	15.6			
(37) 5389-04A	16.2			
(38) 5389-04A	18.2			
(39) 5389-04A	17.6			
(40) 5389-04A	17.2			
(41) 5389-04A	16.9			
(42) 5389-04A	14.8			
(43) 5389-04A	16.7			

RAPPORT INSPECTION DE PEINTURE F-90 / PAINT INSPECTION REPORT F-90

CONTRÔLE DE QUALITÉ / QUALITY CONTRÔLE

Projet / *Project #*: 5389-02 Client / *Customer* : Promec

Description : Pipe Support – Pipe Shoe

Référence spécification de peinture/ *Paint specifications ref* : AE Méliadine

Inspection visuel du sablage/ *Visual Sandblast inspection* SP6 (TYPE) CD (INITIAL)

Instruction spécial/ *Special instructions* : N/A

Testex PRESS-O-FILM™ HT X-Coarse 1.5 to 4.5 mil 38 to 115 µm Made in USA 115 µm 13-06-2017 www.testextape.com 5389B 2.9 MP

Quantité sable utilisé/ *Quantity sand used:* 6 poches

Profile de sablage/ *Sandblast profil* :

#1 Quantité d'apprêt utilisée/ *Quantity primer used*: 4 gal # de lot d'appret primer/ *Lot # of primer:* TE6874UH Diluant/ *Thinner* : GTA 415

Temps de séchage/ *Drying time* 2 hrs Température pièce/ *Room Temperature* 23°C Taux d'humidité/ *Humidity Level* 38%

#2 Quantité de peinture utilisée/ *Quantity paint used*: 4 gal # de lot de peinture/ *Lot # of paint:* TE5015UH Diluant/ *Thinner* : GTA 415

Temps de séchage/ *Drying time* 8 hrs Température pièce/ *Room Temperature* 24°C Taux d'humidité/ *Humidity Level* 33%

#3 Quantité de peinture utilisée/ *Quantity paint used*: 4 gal # de lot de peinture/ *Lot # of paint:* SH9274UH Diluant/ *Thinner* : GTA 056.

Temps de séchage/ *Drying time* 8 hrs. Température pièce/ *Room Temperature* 21 °C Taux d'humidité/ *Humidity Level* 37.6%

No de pièces/ *Part Number :*	Esp Moyenne/ *Dft Average*	Vérifié par/ *Verified by:* Peintre/ *Painter*	Control Qualité/ *Quality control*	DATE
(1) 5389-05A	16.2	[signature]	[signature]	2017/06/13
(2) 5389-05A	14.8			
(3) 5389-05A	15.9			
(4) 5389-05A	16.8			
(5) 5389-05A	16.9			
(6) 5389-05A	16.8			
(7) 5389-05A	17.2			
(8) 5389-05A	17.8			
(9) 5389-05A	14.9			
(10) 5389-05A	14.6			
(11) 5389-05A	14.8			
(12) 5389-05A	16.2	[signature]	[signature]	2017/06/13

Peintre / Painter: [signature]

Peinture rencontre les spécifications / *Paint meets specs* OUI / *YES* NON / *NO*

Contrôleur de qualité / *Quality Controller* : [signature] Signature 2017/06/15 Date

F-90 Rapport inspection de peinture / Paint Inspection Report
Reviseur : J.P. Leclerc
2017-03-27

No de pièces/ *Part Number :*	Esp Moyenne/ *Dft Average*	Vérifié par/ *Verified by:*		DATE
		Peintre/ *Painter*	Control Qualité/ *Quality control*	
(13) 5389-05A	15.8			2017/06/13
(14) 5389-05A	17.2			
(15) 5389-05A	16.8			
(16) 5389-05A	16.8			
(17) 5389-05A	14.8			
(18) 5389-05A	15.6			
(19) 5389-05A	15.8			
(20) 5389-05A	16.2			
(21) 5389-05A	14.8			
(22) 5389-05A	15.9			
(23) 5389-05A	15.2			
(24) 5389-05A	16.8			
(25) 5389-05A	14.8			
(26) 5389-05A	16.2			
(27) 5389-05A	14.7			
(28) 5389-05A	15.8			
(29) 5389-05A	17.2			
(30) 5389-05A	15.8			
(31) 5389-05A	18.1			
(32) 5389-05A	18.6			
(33) 5389-05A	15.9			
(34) 5389-05A	16.9			
(35) 5389-05A	14.3			
(36) 5389-05A	16.2			
(37) 5389-05A	15.8			
(38) 5389-05A	14.9			
(39) 5389-05A	14.8			
(40) 5389-05A	16.2			
(41) 5389-05A	17.8			
(42) 5389-05A	14.9			2017/06/13

RAPPORT INSPECTION DE PEINTURE F-90 / PAINT INSPECTION REPORT F-90

CONTRÔLE DE QUALITÉ / QUALITY CONTRÔLE

Projet / *Project #*: 5389-02 Client / *Customer* : Promec

Description : Pipe Support – Pipe Shoe

Référence spécification de peinture/ *Paint specifications ref* : AE Méliadine

Inspection visuel du sablage/ *Visual Sandblast inspection* Spc (TYPE) CB (INITIAL)

Instruction spécial/ *Special instructions* : N/A

Testex PRESS-O-FILM™ HT X-Coarse 1.5 to 4.5 mil 38 to 115 µm Made in USA 115 µm 31-05-2017

Quantité sable utilisé/ *Quantity sand used*: 7 pocles.

Profile de sablage/ *Sandblast profil* :

#1 Quantité d'apprêt utilisée/ *Quantity primer used*: 4 gal # de lot d'appret primer/ *Lot # of primer*: TE6874UH Diluant/ *Thinner* : GTA 415

Temps de séchage/ *Drying time* 2 hrs Température pièce/ *Room Temperature* 21°C Taux d'humidité/ *Humidity Level* 23%

#2 Quantité de peinture utilisée/ *Quantity paint used*: 4 gal # de lot de peinture/ *Lot # of paint*: TE5015UH Diluant/ *Thinner* : GTA 415

Temps de séchage/ *Drying time* 10 hrs Température pièce/ *Room Temperature* 24.6°C Taux d'humidité/ *Humidity Level* 28%

#3 Quantité de peinture utilisée/ *Quantity paint used*: 4 gal # de lot de peinture/ *Lot # of paint*: SH9274UH Diluant/ *Thinner* : GTA 056

Temps de séchage/ *Drying time* 10 hrs Température pièce/ *Room Temperature* 21.8°C Taux d'humidité/ *Humidity Level* 22%

No de pièces/ *Part Number* :	Esp Moyenne/ *Dft Average*	Vérifié par/ *Verified by*: Peintre/ *Painter*	Control Qualité/ *Quality control*	DATE
(1) 5389-07A	14.8	[signature]	[signature]	2017/05/31
(2) 5389-07A	14.6			
(3) 5389-07A	14.9			
(4) 5389-07A	15.2			
(5) 5389-07A	15.6			
(6) 5389-07A	14.8			
(7) 5389-07A	14.9			
(8) 5389-07A	15.6			
(9) 5389-07A	15.4			
(10) 5389-07A	16.3			
(11) 5389-07A	14.8			
(12) 5389-07A	16.9	[signature]	[signature]	2017/05/31

Peintre / Painter: [signature]

Peinture rencontre les spécifications / *Paint meets specs* OUI / *YES* NON / *NO*

Contrôleur de qualité / *Quality Controller* : [signature] Signature 2017/06/02 Date

F-90 Rapport inspection de peinture / Paint Inspection Report
Reviseur : J.P. Leclerc
2017-03-27

No de pièces/ *Part Number :*	Esp Moyenne/ *Dft Average*	Vérifié par/ *Verified by:*		DATE
		Peintre/ *Painter*	Control Qualité/ *Quality control*	
(13) 5389-07A	14.6	MA	SB	2017/05/31
(14) 5389-07A	13.9			
(15) 5389-07A	15.2			
(16) 5389-07A	16.4			
(17) 5389-07A	16.8			
(18) 5389-07A	14.9			
(19) 5389-07A	15.2			
(20) 5389-07A	16.3			
(21) 5389-07A	15.8			
(22) 5389-07A	14.9			
(23) 5389-07A	15.3			
(24) 5389-07A	14.5			
(25) 5389-07A	14.6			
(26) 5389-07A	15.5			
(27) 5389-07A	16.3			
(28) 5389-07A	15.8			
(29) 5389-07A	16.8			
(30) 5389-07A	15.6			
(31) 5389-07A	16.8			
(32) 5389-07A	16.4			
(33) 5389-07A	17.8			
(34) 5389-07A	14.6			
(35) 5389-07A	14.9			
(36) 5389-07A	15.1			
(37) 5389-07A	16.8			
(38) 5389-07A	14.2			
(39) 5389-07A	15.9			
(40) 5389-07A	14.8			
(41) 5389-07A	16.2			
(42) 5389-07A	17.3			
(43) 5389-07A	15.8			
(44) 5389-07A	14.9			
(45) 5389-07A	16.9			
(46) 5389-07A	15.8			
(47) 5389-07A	14.7			
(48) 5389-07A	15.9			
(49) 5389-07A	16.2			
(50) 5389-07A	14.8			
(51) 5389-07A	14.2.	MA	SB	2017/05/31

(52) 5389-07A	16.1			2017/06/13
(53) 5389-07A	17.8			
(54) 5389-07A	19.1			
(55) 5389-07A	18.4			
(56) 5389-07A	14.9			
(57) 5389-07A	15.16			
(58) 5389-07A	18.2			
(59) 5389-07A	17.1			
(60) 5389-07A	17.0			
(61) 5389-07A	16.4			
(62) 5389-07A	18.1			
(63) 5389-07A	17.6			
(64) 5389-07A	16.9			
(65) 5389-07A	16.8			
(66) 5389-07A	16.7			
(67) 5389-07A	17.8			
(68) 5389-07A	17.1			
(69) 5389-07A	18.4			
(70) 5389-07A	18.6			
(71) 5389-07A	16.4			
(72) 5389-07A	16.8			
(73) 5389-07A	17.4			
(74) 5389-07A	18.2			
(75) 5389-07A	16.4			
(76) 5389-07A	17.3			
(77) 5389-07A	15.9			
(78) 5389-07A	16.8			
(79) 5389-07A	15.9			
(80) 5389-07A	16.8			
(81) 5389-07A	17.3			
(82) 5389-07A	18.7			
(83) 5389-07A	16.7			
(84) 5389-07A	14.8			
(85) 5389-07A	15.9			
(86) 5389-07A				

(95) 5389-07A	16.1			2017/05/31
(96) 5389-07A	14.9			
(97) 5389-07A	16.2			
(98) 5389-07A	17.3			
(99) 5389-07A	16.9			
(100) 5389-07A	14.8			2017/05/31

Parts listing (For 1 ass'y)

# Part	Description	Grade	Detail	Thick.	Width	Height	Length	Qty	Weight
5389B-01A-01	HSS	A500-C		9.5 mm	254 mm	254 mm	1000 mm	1	71 kg
5389B-01A-02	Steel angle	44W	PUNCH	9.5 mm	76 mm	76 mm	260 mm	2	3 kg

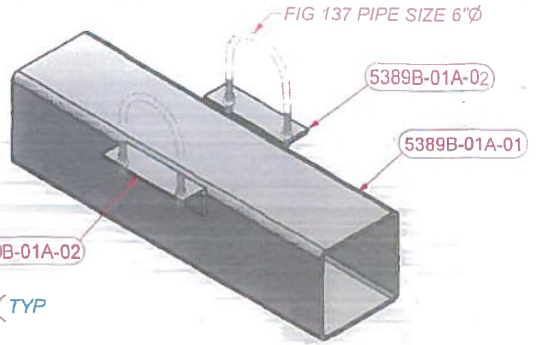

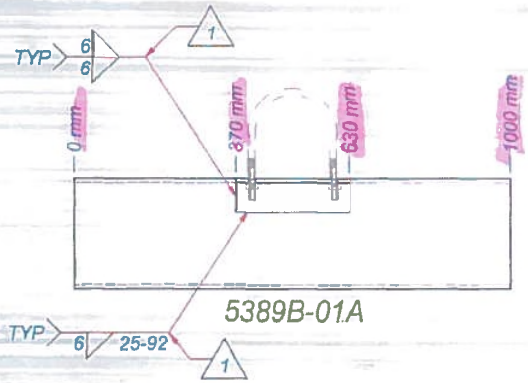

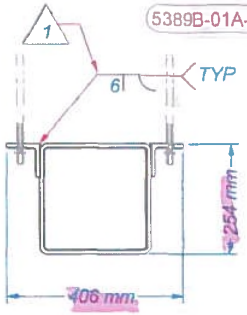

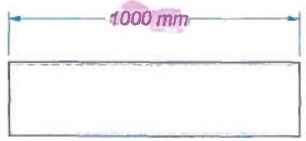

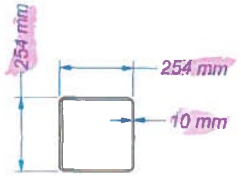

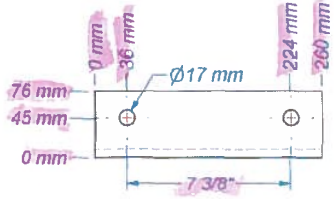

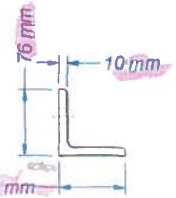

AJP

Tel. (819) 947-8291
Fax. (819) 947-6321
E-Mail: info@acier.com
Site Web: www.acierjp.com

NOTES GÉNÉRALES :
GENERAL NOTES :

1. FOR STRUCTURAL STEEL GENERAL NOTES SEE DRAWING SS-00
2. SPEC. PEINTURE : AE-Maliadine-02 (Coating System 2. Color Code RAL 7030)

Historique des revisions / Revision history

Rev	Description	Date	Par / By
1	Mod soudures	2017-05-11	B.Lauzon

Promec

PROJET / PROJECT # : 5389

WO : WO-5389-02

CLIENT : AGNICO EAGLE

TITRE / TITLE :
PIPING FUEL DISTRIBUTION

PIPE SUPPORT

PIECE / PARTS : MARINE LINE SUPPORT

QTÉ / QTY : 55 req.

POIDS / WEIGHT : 77 kg

SCEAU & SIGNE / SEAL & SIGNED :
12 MAI 2017.

DESSINÉ / DRAWN : B.Lauzon

VÉRIFIÉ / CHECKED : Rémi Jean

DATE : 2017-04-18

FEUILLE / SHEET : 1 / 1

DESSIN REFERENCE / REFERENCE DRAWING :
65-403-270-200

No DESSIN / DRAWING No : 5389B-01A

REV : 1

P:\Clients\Promec\5389 Support tuyau\Des Fab\5389B-01A.idw

Parts listing (For 1 ass'y)

# Part	Description	Grade	Detail	Thick.	Width	Height	Length	Qty	Weight
5389B-02A-01	Tuyau Ø3/4" SCH40	A53		2.9 mm	27 mm	21 mm	200 mm	1	0 kg
5389B-02A-02	Steel rod	44W		19.1 mm			1650 mm	1	4 kg
5389B-02A-03	Flat Bar	44W		6.4 mm	152 mm		152 mm	1	1 kg

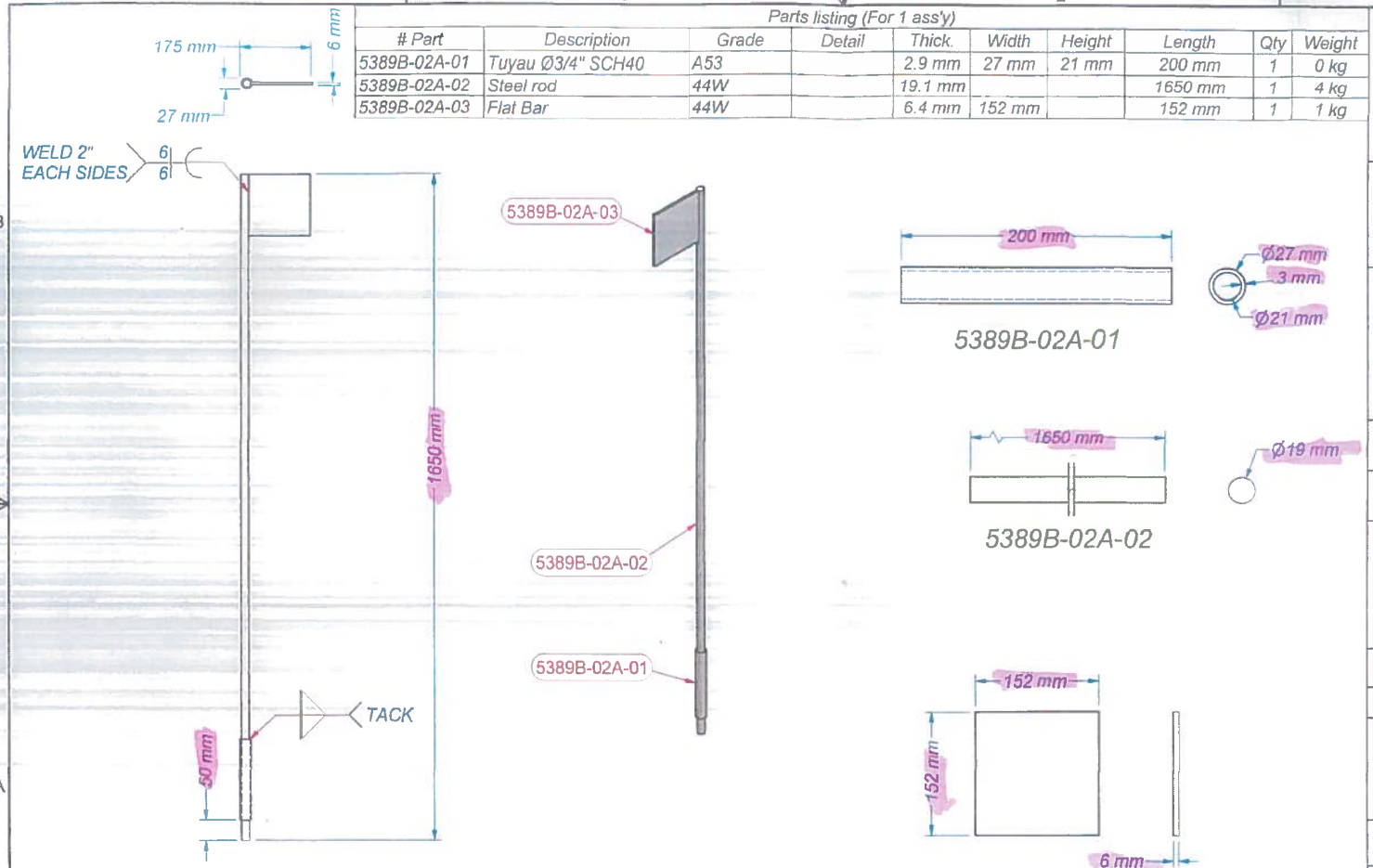

AJP
Tél. (819) 647-8291
Fax. (819) 647-6321
E-Mail: info@acier.com
Site Web: www.acierjp.com

NOTES GÉNÉRALES
GENERAL NOTES :

1. FOR STRUCTURAL STEEL GENERAL NOTES SEE DRAWING SS-00
2. SPEC. PEINTURE : AE-Méliadine-02 (Coating System 2, Color Code RAL 7030)

PROJET / PROJECT # : 5389
WO : WO-5389-02

CLIENT : AGNICO EAGLE

TITRE / TITLE :
PIPING FUEL DISTRIBUTION

PIPE SUPPORT

PIÈCE / PARTS : IDENTIFICATION PLATE

QTÉ / QTY : 25 req.
POIDS / WEIGHT : 5 kg

SCEAU & SIGNÉ / SEAL & SIGNED :
15 MAI 2017

DESSINÉ / DRAWN : B.Lauzon
VÉRIFIÉ / CHECKED : Rémi Jean

DATE : 2017-04-18
FEUILLE / SHEET : 1 / 1

DESSIN RÉFÉRENCE / REFERENCE DRAWING
65-403-270-200

No. DESSIN / DRAWING No. : 5389B-02A
REV : 0

P:\Clients\Promec\5389 Support tuyau\Des Fab\5389B-02A.idw

Parts listing (For 1 ass'y)

# Part	Description	Grade	Detail	Thick.	Width	Height	Length	Qty	Weight
5389B-03A-01	HSS	A500-C		4.8 mm	102 mm	102 mm	600 mm	2	8 kg
5389B-03A-02	HSS	A500-C		4.8 mm	102 mm	102 mm	497 mm	1	7 kg
5389B-03A-03	HSS	A500-C		4.8 mm	102 mm	102 mm	400 mm	2	6 kg
5389B-03A-05	Flat Bar	44W		4.8 mm	102 mm		252 mm	2	1 kg
5389B-03A-06	U.H.M.W	UHMW	DRILL	9.5 mm	102 mm		398 mm	1	0 kg
94195A177	SS Self-Tapping Screw #10 1 1/4"lg	SS						4	0 kg

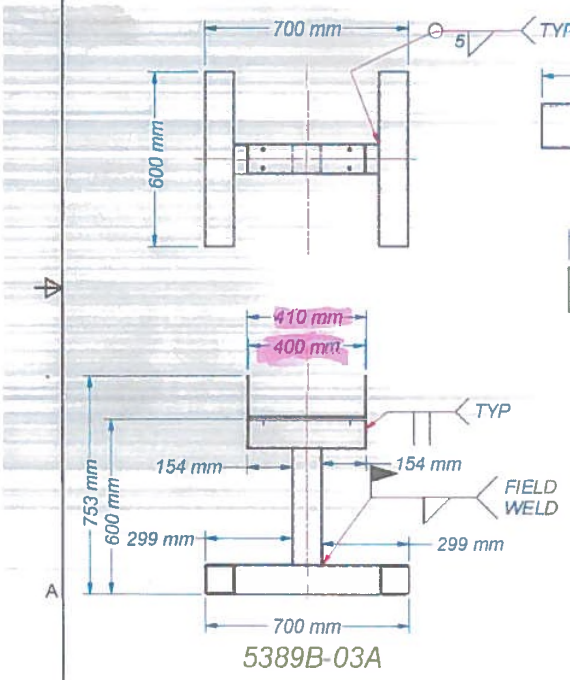

5389B-03A

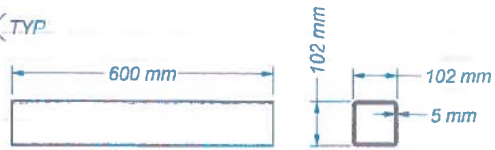

5389B-03A-01

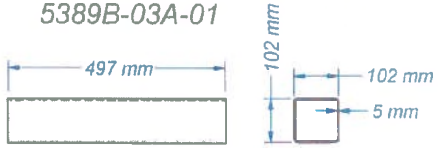

5389B-03A-02



5389B-03A-03

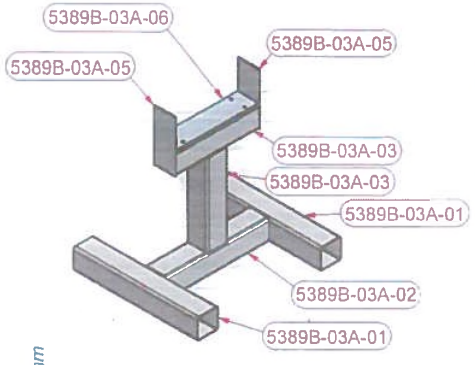

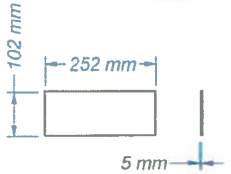

5389B-03A-05

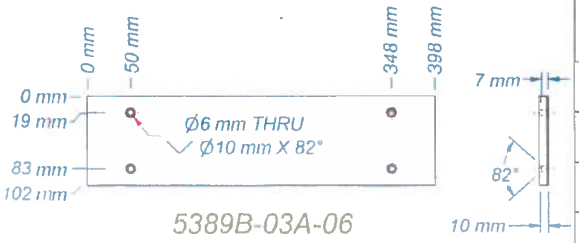

5389B-03A-06

AJP

Tél.:(819) 947-5291
Fax.:(819) 947-5321
E-Mail: info@acier.com
Site Web: www.acierjp.com

NOTES GENERALES
GENERAL NOTES :

1. FOR STRUCTURAL STEEL GENERAL NOTES SEE DRAWING SS-00
2. SPEC. PEINTURE : AE-Meliadine-02 (Coating System 2, Color Code RAL 7030)

PROJET
PROJECT # : 5389

WO WO-5389-02

CLIENT : AGNICO EAGLE

TITRE :
TITLE : PIPING FUEL DISTRIBUTION

PIPE SUPPORT

PIECE
PARTS : PIPE SUPPORT (1) PIPE

QTÉ :
QTY : 273 req.

POIDS :
WEIGHT : 37 kg

SCEAU & SIGNÉ
SEAL & SIGNED

DESSINÉ :
DRAWN : B.Lauzon

VÉRIFIÉ :
CHECKED : Rémi Jean

DATE : 2017-04-18

FEUILLE
SHEET : 1 / 1

DESSIN REFERENCE
REFERENCE DRAWING : 65-403-270-200

No. DESSIN
DRAWING No : 5389B-03A

REV : 0

P:\Clients\Promec\5389 Support tuyau\Des Fab\5389B-03A.idw

Parts listing (For 1 ass'y)

# Part	Description	Grade	Detail	Thick.	Width	Height	Length	Qty	Weight
5389B-03A-01	HSS	A500-C		4.8 mm	102 mm	102 mm	600 mm	2	8 kg
5389B-03A-02	HSS	A500-C		4.8 mm	102 mm	102 mm	497 mm	1	7 kg
5389B-03A-03	HSS	A500-C		4.8 mm	102 mm	102 mm	400 mm	2	6 kg
5389B-03A-05	Flat Bar	44W		4.8 mm	102 mm		252 mm	2	1 kg

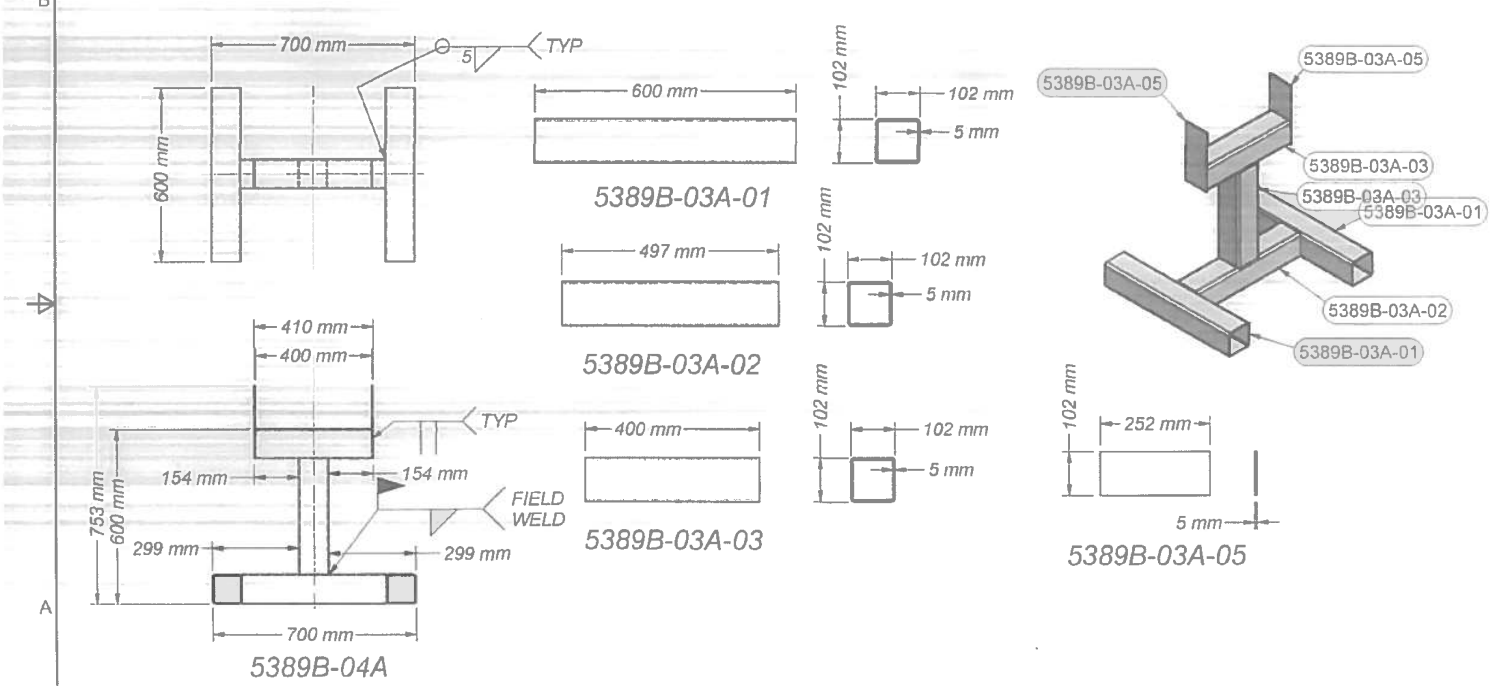

Tél.:(819) 947-8291
Fax. (819) 947-5321
E-Mail: info@acier.com
Site Web: www.acierjp.com

NOTES GÉNÉRALES
GENERAL NOTES :

1. FOR STRUCTURAL STEEL GENERAL NOTES SEE DRAWING SS-00
2. SPEC. PEINTURE : AE-Meliadine-02 (Coating System 2, Color Code RAL 7030)

PROJET / PROJECT # 5389

WO WO-5389-02

CLIENT: AGNICO EAGLE

TITRE / TITLE:
PIPING FUEL DISTRIBUTION

PIPE SUPPORT

PIECE / PARTS: PIPE SUPPORT (1) PIPE NO TEFLON

QTÉ / QTY: 100 req. | POIDS / WEIGHT: 37 kg

SCEAU & SIGNÉ / SEAL & SIGNED:

DESSINÉ / DRAWN: B.Lauzon

VÉRIFIÉ / CHECKED: Rémi Jean

DATE: 2017-04-18

FEUILLE / SHEET: 1 / 1

DESSIN RÉFÉRENCE / REFERENCE DRAWING:
65-403-270-200

No. DESSIN / DRAWING No: 5389B-04A

REV: 0

P:\Clients\Promec\5389 Support tuyau\Des Fab\5389B-04A.idw

Parts listing (For 1 ass'y)

# Part	Description	Grade	Detail	Thick.	Width	Height	Length	Qty	Weight
5389B-03A-01	HSS	A500-C		4.8 mm	102 mm	102 mm	600 mm	2	8 kg
5389B-03A-02	HSS	A500-C		4.8 mm	102 mm	102 mm	497 mm	1	7 kg
5389B-03A-03	HSS	A500-C		4.8 mm	102 mm	102 mm	400 mm	1	6 kg
5389B-03A-05	Flat Bar	44W		4.8 mm	102 mm		252 mm	2	1 kg
5389B-05A-01	HSS	A500-C		4.8 mm	102 mm	102 mm	600 mm	1	8 kg
5389B-05A-02	U.H.M.W	UHMW	DRILL	9.5 mm	102 mm		598 mm	1	1 kg
94195A177	SS Self-Tapping Screw #10 1 1/4"lg	SS						4	0 kg

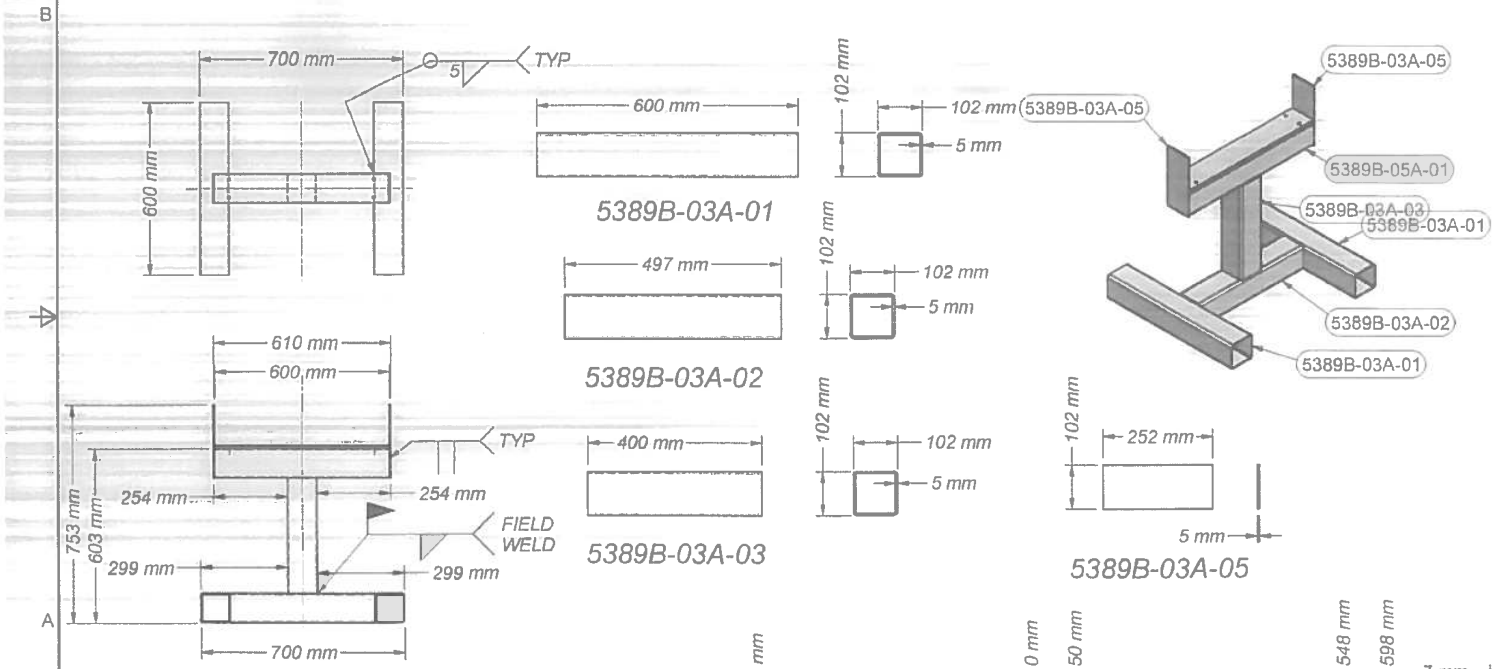

Tél.:(819) 947-8291
Fax.:(819) 947-5321
E-Mail: info@aciar.com
Site Web: www.aciarjp.com

NOTES GENERALES :
GENERAL NOTES :

1. FOR STRUCTURAL STEEL GENERAL NOTES SEE DRAWING SS-00
2. SPEC. PEINTURE : AE-Meliadine-02 (Coating System 2, Color Code RAL 7030)

PROJET :
PROJECT # **5389**

WO WO-5389-02

CLIENT : **AGNICO EAGLE**

TITRE
TITLE
PIPING FUEL DISTRIBUTION

PIPE SUPPORT

PIECE :
PARTS PIPE SUPPORT (2) PIPES

QTÉ
QTY 42 req.

POIDS
WEIGHT 40 kg

SCEAU & SIGNÉ
SEAL & SIGNED

DESSINÉ
DRAWN B.Lauzon

VÉRIFIÉ
CHECKED : Rémi Jean

DATE 2017-04-18

FEUILLE :
SHEET 1 / 1

DESSIN RÉFÉRENCE
REFERENCE DRAWING :
65-403-270-200

N/S DESSIN :
DRAWING No 5389B-05A

REV. 0

P:\Clients\Promec\5389 Support tuyau\Des Fab\5389B-05A.idw

Parts listing (For 1 ass'y)

# Part	Description	Grade	Detail	Thick.	Width	Height	Length	Qty	Weight
5389B-03A-01	HSS	A500-C		4.8 mm	102 mm	102 mm	600 mm	2	8 kg
5389B-03A-02	HSS	A500-C		4.8 mm	102 mm	102 mm	497 mm	1	7 kg
5389B-03A-03	HSS	A500-C		4.8 mm	102 mm	102 mm	400 mm	1	6 kg
5389B-03A-05	Flat Bar	44W		4.8 mm	102 mm		252 mm	2	1 kg
5389B-03A-06	U.H.M.W	UHMW	DRILL	9.5 mm	102 mm		398 mm	1	0 kg
5389B-06A-01	HSS	A500-C	DETAIL	4.8 mm	102 mm	102 mm	400 mm	1	5 kg
94195A177	SS Self-Tapping Screw #10 1 1/4"lg	SS						4	0 kg

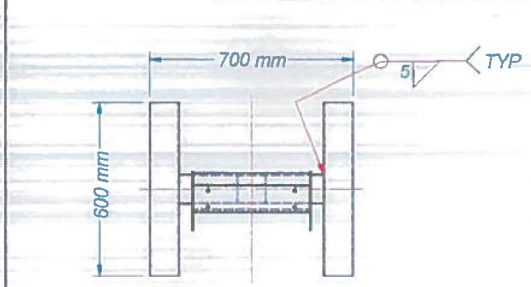

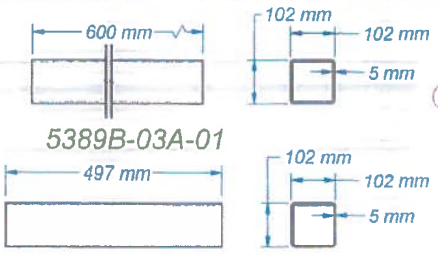

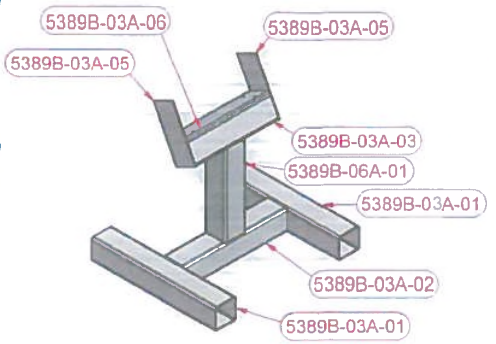

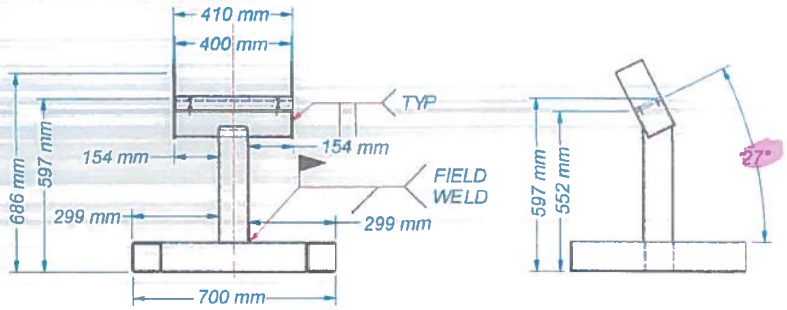

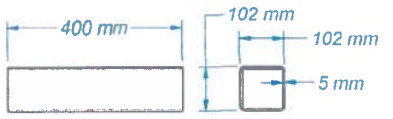

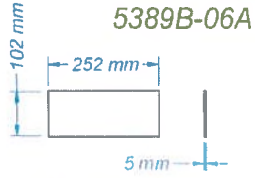

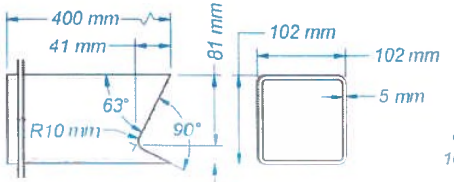

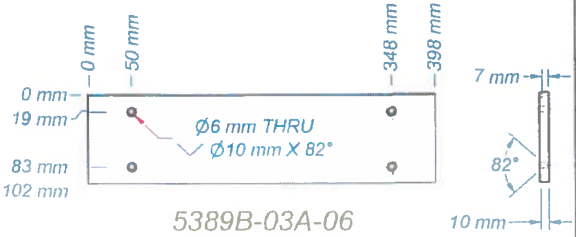

AJP

Tél.: (819) 947-8291
Fax. (819) 947-8321
E-Mail: info@acier.com
Site Web: www.acierjp.com

NOTES GENERALES :
GENERAL NOTES :

1. FOR STRUCTURAL STEEL GENERAL NOTES SEE DRAWING SS-00
2. SPEC. PEINTURE : AE-Meliadine-02 (Coating System 2, Color Code RAL 7030)

PROJET : PROJECT # **5389**

WO : WO-5389-02

CLIENT : **AGNICO EAGLE**

TITRE : TITLE
PIPING FUEL DISTRIBUTION

PIPE SUPPORT

PIECE : PARTS : PIPE SUPPORT (1) PIPE WITH SLOPE

QTE : QTY : 4 req.

POIDS : WEIGHT : 37 kg

SCEAU & SIGNE
SEAL & SIGNED
03 MAI 2017.

DESSINE : DRAWN : B.Lauzon

VERIFIE : CHECKED : Rémi Jean

DATE : 2017-04-18

FEUILLE : SHEET : 1 / 1

DESSIN REFERENCE : REFERENCE DRAWING : 65-403-270-200

No. DESSIN : DRAWING No : 5389B-06A

REV : 0

P:\Clients\Promec\5389 Support tuyau\Des Fab\5389B-06A.idw

Parts listing (For 1 ass'y)

# Part	Description	Grade	Detail	Thick.	Width	Height	Length	Qty	Weight
5389B-07A-01	W200x36 (W8x24)	50W	DETAIL				300 mm	1	5 kg
5389B-07A-02	U.H.M.W	UHMW	DRILL	9.5 mm	165 mm		300 mm	1	0 kg
94195A177	SS Self-Tapping Screw #10 1 1/4"lg	SS						4	0 kg

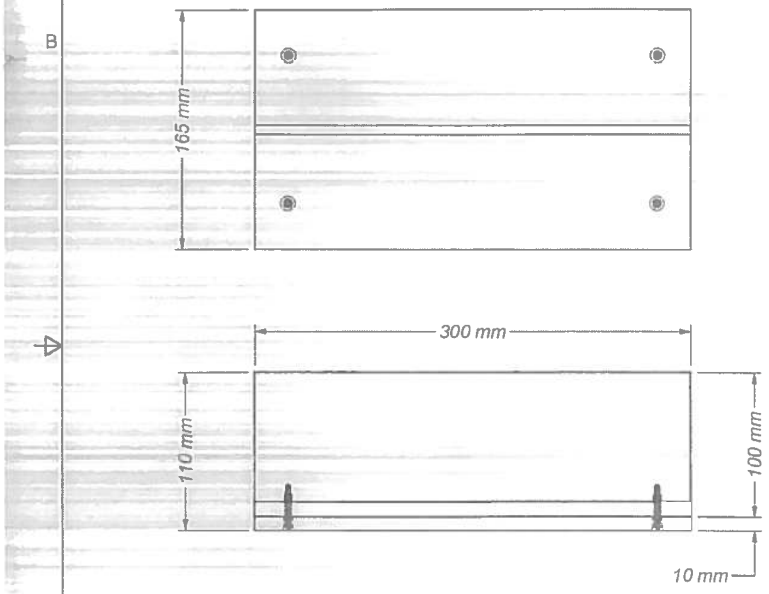

5389B-07A

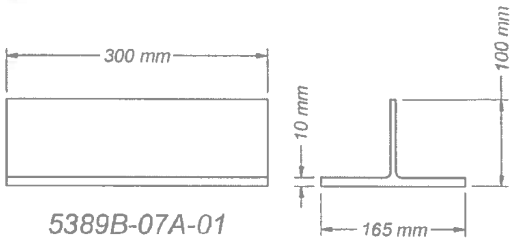

5389B-07A-01

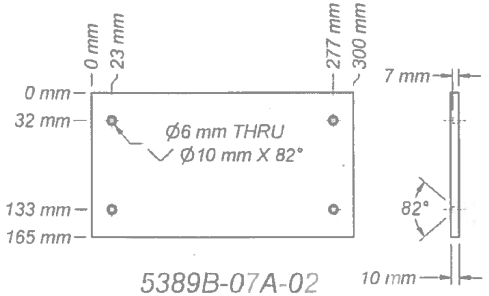

5389B-07A-02

AJP

Tél.:(819) 947-8291
Fax.:(819) 947-6321
E-Mail: info@acier.com
Site Web: www.acierp.com

NOTES GÉNÉRALES
GENERAL NOTES :

1. FOR STRUCTURAL STEEL GENERAL NOTES SEE DRAWING SS-00
2. SPEC. PEINTURE : AE-Meliadine-02 (Coating System 2, Color Code RAL 7030)

PROJET / PROJECT # 5389

WO WO-5389-02

CLIENT: AGNICO EAGLE

TITRE / TITLE:
PIPING FUEL DISTRIBUTION

PIPE SUPPORT

PIECE / PARTS: PIPE SHOE

QTÉ / QTY: 100 req. | POIDS / WEIGHT: 6 kg

SCEAU & SIGNÉ / SEAL & SIGNED:

DESSINÉ / DRAWN: B.Lauzon | VÉRIFIÉ / CHECKED: Rémi Jean

DATE: 2017-04-18 | FEUILLE / SHEET: 1 / 1

DESSIN REFERENCE / REFERENCE DRAWING: 65-403-270-200

No DESSIN / DRAWING No: 5389B-07A | REV: 0

P:\Clients\Promec\5389 Support tuyau\Des Fab\5389B-07A.idw

SPÉCIFICATION DE PROCÉDURE DE SOUDAGE FEUILLE DE DONNÉES DE PROCÉDURE DE SOUDAGE	No.: MC-2F-045-MF				Rev.: 1	
	Jour	2	Mois	1	Année	2012

Nom de la compagnie: Les Aciers J.P. Inc.
Adressse: 15, 3ième ı ave, La Reine (QC) J0Z 2L0
Norme(s) de référence: CSA W47.1 et CSA W59

Procédés de soudage	1	MCAW	Pulsé	Oui ☐	Non ☑	2	N/A	Pulsé ☐ Oui ☐ Non ☐
Gaz de protection		92 Ar-8 CO_2	Débit	15-25 l/min				Débit
Position		1 er côté : Plat et Hor. 2 è côté:						
Mode d'application		Manuel ☐	Semi-auto ☑	Machine ☐	Auto ☐			
Type d'assemblage		— — ☐	T ☑	☑ = = ☑	ıı ☐			
Type de soudure		Complet ☐	Partiel E= ☐	Angle ☑				
Support envers		Matériel : N/A		Épaisseur:				
Gougeage à l'envers		Oui ☐ Méthode :						
		Non ☑ Profondeur :		Largeur :				
Longueur de fil libre		15-25 mm						
Diamètre(s) de buses		12-16 mm						
Classification du flux		N/A						
Électrode de tungstène		Type: N/A		Diamètre: N/A				
Procédures de nettoyage								

T1 et T2 peuvent etre inverses

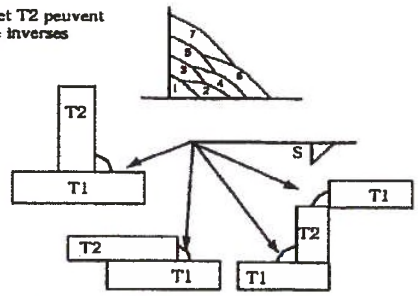

Identification du matériel de base (Pour CSA W186 indiquer le carbone équivalent et contenu maximum de souffre et de phosphore)

Pièce	Normes de référence et grade ou classe	Épaiss. Ou Diam.	Exigences spécifiques
I	CSA W59, Tableau 11-1 Groupes 1-2-3	3 mm min	
II	CSA W59, Tableau 11-1 Groupes 1-2-3	3 mm min	

Identification du métal d'apport

Procédé	Classification	Numéro(s) de(s) passe(s)	Exigences spécifiques
1	E491C-6M-HXX ou E492C-6M-HXX (XX = 4, 8 ou 16)	toutes	Protéger des saletés une fois
2			désemballé

Paramètres de soudage — Taux de dépôt(kg/hre): 4.56

Dimension S (mm)	Épaisseur T1 (mm)	Épaisseur T2 (mm)	No. de la couche	Numéro des passes	Diamètre du métal d'apport (mm)	Vitesse de dévidage (cm/min)	Polarité CCEP Courant +/-10%(A)	Tension +/-7% (Volts)	Vitesse d'arc +/-15% (mm/min)	Apport de chaleur (KJ/po)	Poids de soudure (kg/m)
4	3-4	3 min	1	1	1.2	1000	270	27.5	800		
5	5	5 min	1	1	1.2	1000	270	27.5	650		
5	6-12	6-12	1	1	1.2	1000	270	27.5	650		
6	6	6 min	1	1	1.2	1000	270	27.5	435		
6	8-20	8-20	1	1	1.2	1000	270	27.5	435		
8	8 min	8 min	1typ	1 typ	1.2	1000	270	27.5	250		
10	10 min	10 min	2	2-3	1.2	1000	270	27.5	435		
13	13 min	13 min	2-3	2-5	1.2	1000	270	27.5	370		
16	16 min	16 min	2-4	2-7	1.2	1000	270	27.5	500		

Caractéristique statique tension-courant: tension const. | Temp. entrepasse max.: N/A | Préch. min.: CSA W59 Tab 5-3

Traitement Thermique N/A | Degré C: N/A | Temp. entrepasse min.: CSA W59 Tab 5-3

Rem.:

Acceptation du CWB (Spécification)	Acceptation du CWB (Feuille de données)	Représentant de la cie
	Accepté par le CWB January 19, 2012 Valide uniquement lorsque les produits d'apport sont certifés par le CWB	INGÉNIEUR - ENGINEER Louis Croteau 40310 QUÉBEC JAN 17 2012

Omniweld™ Solutions Intégrées

Spécification de mode opératoire de soudage

Application:

Cette spécification de mode opératoire de soudage (SMOS) s'applique au procédé **MCAW** et vise à compléter les feuilles de données de mode opératoire de soudage (FDMOS). Cette SMOS doit être reproduite à l'endos de chacune des FDMOS du mode opératoire MCAW. Elle n'indique que les informations qui ne sont pas déjà inscrites sur la FDMOS et qui sont exigées par les articles applicables des sections 10 et 11 de la norme W47.1-03.

Tout changement apporté aux variables essentielles d'une FDMOS ou SMOS, entraînera obligatoirement la révision ou la rédaction d'une nouvelle SMOS ou FDMOS.

Préparation du métal de base:

La préparation des bords ou des surfaces à joindre doit être effectuée par cisaillage, par meulage, par burinage, par usinage, par coupage ou par gougeage à l'arc au carbone avec jet d'air, par oxycoupage ou par gougeage avec oxygène.

Les surfaces à souder doivent être exemptes d'arêtes, de fissures ou autres défauts susceptibles de nuire à la qualité ou à la résistance de la soudure. Également, dans un rayon de 2" de la soudure, il ne doit pas avoir sur les surfaces, de calamine non adhérente, de laitier, de rouille écaillée, de peinture, de graisse, d'humidité ou autre corps étranger qui empêcheront l'obtention de soudures répondants aux critères de qualité de la norme ou qui dégageraient des vapeurs toxiques pour le soudeur.

Conditionnement des produits d'apport:

L'électrode de soudage doit être sèche et libre de rouille de surface, de poussière ou matière étrangère.

Gaz de protection:

Le gaz de protection utilisé doit avoir un point de rosé de -40C ou moins. Le soudage ne doit pas se faire dans un courant d'air ou au vent sauf si la zone de travail est protégée par un abris dont la forme et les matériaux utilisés permettront de réduire le vent à moins de 8 Km/h et empêchera la neige ou la pluie d'entrer.

Nettoyage des soudures:

Toute substance nuisible doit être enlevée avant l'application des passes suivantes.

Préchauffage/interpasse:

Le préchauffage doit être appliqué avant le début du soudage du côté opposé au soudage de façon à ce que la température atteigne la température de préchauffage spécifiée sur toute l'épaisseur du matériau et sur une largeur égale à l'épaisseur de la pièce mais pas moins que 3 po de chaque côté de la soudure et devant le point de soudage.

Si le soudage est interrompu et que la température du métal de base descend sous la température spécifiée, le préchauffage doit être appliqué à nouveau pour ramener la température de la pièce à la température de préchauffage spécifiée.

Quand le soudage est terminé, la pièce doit refroidir à l'air libre sans l'utilisation de moyens pour accélérer le refroidissement, comme de l'air comprimé soufflé sur la pièce, de l'eau et on ne doit pas la sortir dehors pour qu'elle soit exposée au froid l'hiver et/ou au vent à la pluie ou à la neige.

Traitement thermique:

Aucun PWHT n'est prévu sauf si les spécifications sont indiquées sur la feuille de données de mode opératoire de soudage et qu' elle n'ait été approuvées par le CWB.

Qualité:

Les soudures doivent être exemptes de défauts excédant les spécifications de la section 5 de la norme W59.

- Les défauts internes débouchant ou pas, (fissures, soufflures, inclusions, manque de fusion etc) doivent être réparés en enlevant la partie défectueuse et en ajoutant de la soudure pour obtenir une soudure saine conforme aux spécifications.
- Les défauts de surface (caniveau, cratère non rempli, soudure trop petite, etc.) peuvent être réparés par l'ajout de soudure.
- Les défauts de profil (convexité excessive, débordement etc.) peuvent être corrigés par meulage ou burinage.

Approbation CWB

Accepté par le CWB

January 19, 2012

Valide uniquement lorsque les produits d'apport sont certifiés par le CWB

Approbation Compagnie

INGÉNIEUR - ENGINEER
Louis Croteau
40310
QUEBEC

JAN 16 2012

SPÉCIFICATION DE PROCÉDURE DE SOUDAGE FEUILLE DE DONNÉES DE PROCÉDURE DE SOUDAGE	No.: MC-F1-3-1G-MF-045				Rev.: 2	
	Jour	2	Mois	1	Année	2012

Nom de la compagnie Les Aciers J.P. Inc.
Adresse: 15, 3ième ave
La Reine (QC) J0Z 2L0

Norme(s) de référence:
CSA W47.1 et CSA W59

Procédés de soudage	1	MCAW	Pulsé ☐	Oui ☐	Non ☑	2	N/A	Pulsé ☐	Oui ☐	Non ☐
Gaz de protection		92 Ar-8 CO_2	Débit	15-25 li/min				Débit		
Position		1 er côté : Plat		2 è côté: Plat						
Mode d'application		Manuel ☐	Semi-auto ☑	Machine ☐	Auto ☐					
Type d'assemblage		— — ☑	T ☐	⌐ ☐	= ☐	II ☐				
Type de soudure		Complet ☑	Partiel E= ☐	Angle ☐						
Support envers		Matériel : N/A		Épaisseur:						
Gougeage à l'envers		Oui ☐	Méthode :							
		Non ☑	Profondeur :	Largeur :						
Longueur de fil libre		15-25 mm								
Diamètre(s) de buses		12-16 mm								
Classification du flux		N/A								
Électrode de tungstène		Type: N/A		Diamètre: N/A						
Procédures de nettoyage										

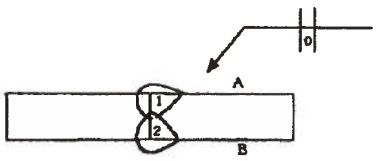

T ⩽ 6
BTT = T

Identification du matériel de base (Pour CSA W186 indiquer le carbone équivalent et contenu maximum de souffre et de phosphore)

Pièce	Normes de référence et grade ou classe	Épaiss. Ou Diam.	Exigences spécifiques
I	CSA W59, Tableau 11-1 Groupes 1-2-3	3 à 6 mm	
II	CSA W59, Tableau 11-1 Groupes 1-2-3	3 à 6 mm	

Identification du métal d'apport

Procédé	Classification	Numéro(s) de(s) passe(s)	Exigences spécifiques
1	E491C-6M-HXX ou E492C-6M-HXX (XX = 4, 8 ou 16)	toutes	Protéger des saletés une fois
2			désemballé

Paramètres de soudage

Épaisseur des pièces (mm)	Gorge efficace E (mm)	No. du côté	No. de la couche	Numéro des passes	Diamètre du métal d'apport (mm)	Vitesse de dévidage (cm/min)	Polarité CCEP Courant +/-10%(A)	Tension +/-7% (Volts)	Taux de dépôt(kg/hre) Vitesse d'arc +/-15% (mm/min)	Apport de chaleur (KJ/po)	Poids de soudure (kg/m)
3	3	A-B	1-2	1 - 2	1.2	900	230	26.5	500		
4	4	A-B	1-2	1 - 2	1.2	950	250	27.5	400		
5	5	A-B	1-2	1 - 2	1.2	1000	270	27.5	325		
6	6	A-B	1-2	1 - 2	1.2	1000	270	27.5	220		
T1 = 3	3	A-B	1-2	1 - 2	1.2	925	240	26.5	450		
T2 = 6											

Caractéristique statique tension-courant: tension const.		Temp. entrepasse max.:	N/A	Préch. min.:	10 C
Traitement Thermique N/A	Degré C: N/A	Temp. entrepasse min.:	10 C		

Rem.:

Acceptation du CWB (Spécification)	Acceptation du CWB (Feuille de données)	Représentant de la cie
	Accepté par le CWB January 19, 2012 Valide uniquement lorsque les produits d'apport sont certifés par le CWB	INGÉNIEUR - ENGINEER Louis Croteau 40310 QUÉBEC JAN 2012

Omniweld™
Solutions Intégrées

Spécification de mode opératoire de soudage

Application:

Cette spécification de mode opératoire de soudage (SMOS) s'applique au procédé **MCAW** et vise à compléter les feuilles de données de mode opératoire de soudage (FDMOS). Cette SMOS doit être reproduite à l'endos de chacune des FDMOS du mode opératoire MCAW. Elle n'indique que les informations qui ne sont pas déjà inscrites sur la FDMOS et qui sont exigées par les articles applicables des sections 10 et 11 de la norme W47.1-03.

Tout changement apporté aux variables essentielles d'une FDMOS ou SMOS, entraînera obligatoirement la révision ou la rédaction d'une nouvelle SMOS ou FDMOS.

Préparation du métal de base:

La préparation des bords ou des surfaces à joindre doit être effectuée par cisaillage, par meulage, par burinage, par usinage, par coupage ou par gougeage à l'arc au carbone avec jet d'air, par oxycoupage ou par gougeage avec oxygène.

Les surfaces à souder doivent être exemptes d'arêtes, de fissures ou autres défauts susceptibles de nuire à la qualité ou à la résistance de la soudure. Également, dans un rayon de 2" de la soudure, il ne doit pas avoir sur les surfaces, de calamine non adhérente, de laitier, de rouille écaillée, de peinture, de graisse, d'humidité ou autre corps étranger qui empêcheront l'obtention de soudures répondants aux critères de qualité de la norme ou qui dégageraient des vapeurs toxiques pour le soudeur.

Conditionnement des produits d'apport:

L'électrode de soudage doit être sèche et libre de rouille de surface, de poussière ou matière étrangère.

Gaz de protection:

Le gaz de protection utilisé doit avoir un point de rosé de -40C ou moins. Le soudage ne doit pas se faire dans un courant d'air ou au vent sauf si la zone de travail est protégée par un abris dont la forme et les matériaux utilisés permettront de réduire le vent à moins de 8 Km/h et empêchera la neige ou la pluie d'entrer.

Nettoyage des soudures:

Toute substance nuisible doit être enlevée avant l'application des passes suivantes.

Préchauffage/interpasse:

Le préchauffage doit être appliqué avant le début du soudage du côté opposé au soudage de façon à ce que la température atteigne la température de préchauffage spécifiée sur toute l'épaisseur du matériau et sur une largeur égale à l'épaisseur de la pièce mais pas moins que 3 po de chaque côté de la soudure et devant le point de soudage.

Si le soudage est interrompu et que la température du métal de base descend sous la température spécifiée, le préchauffage doit être appliqué à nouveau pour ramener la température de la pièce à la température de préchauffage spécifiée.

Quand le soudage est terminé, la pièce doit refroidir à l'air libre sans l'utilisation de moyens pour accélérer le refroidissement, comme de l'air comprimé soufflé sur la pièce, de l'eau et on ne doit pas la sortir dehors pour qu'elle soit exposée au froid l'hiver et/ou au vent à la pluie ou à la neige.

Traitement thermique:

Aucun PWHT n'est prévu sauf si les spécifications sont indiquées sur la feuille de données de mode opératoire de soudage et qu' elle n'ait été approuvées par le CWB.

Qualité:

Les soudures doivent être exemptes de défauts excédant les spécifications de la section 5 de la norme W59.

- Les défauts internes débouchant ou pas, (fissures, soufflures, inclusions, manque de fusion etc) doivent être réparés en enlevant la partie défectueuse et en ajoutant de la soudure pour obtenir une soudure saine conforme aux spécifications.
- Les défauts de surface (caniveau, cratère non rempli, soudure trop petite, etc.) peuvent être réparés par l'ajout de soudure.
- Les défauts de profil (convexité excessive, débordement etc.) peuvent être corrigés par meulage ou burinage.

CWB
Accepté par le CWB
January 19, 2012
Valide uniquement lorsque les produits d'apport sont certifiés par le CWB

Approbation CWB

INGÉNIEUR - ENGINEER
Louis Croteau
40310
QUÉBEC
JAN 16 2012

Approbation Compagnie

LISTE DE PLANIFICATION DE PROJET POUR LA CERTIFICATION CSA W47.1-09 M à J #7

PROJET # :	5389-02
ACHETEUR :	Promec
DESSINS ET SPÉCIFICATIONS DE RÉFÉRENCE :	5389
MÉTAUX DE BASE UTILISÉ :	44W
MÉTAUX D'APPORT (MARQUE, NOM DE COMMERCE ET CLASSIFICATION) :	E491C6M
NORMES APPLICABLES :	47,1
INSTRUCTIONS CONCERNANT LES MÉTAUX DE BASES PARTICULIERS SOUDÉS AVEC DES MÉTAUX D'APPORT APPROPRIÉS. (Si applicable) Commentaires:	N/A
ESSAIS NON-DESTRUCTIFS À EFFECTUER ET STIPULÉS AU CONTRAT AINSI QUE LES EXIGENCES À RENCONTRER. (Si applicable) Commentaires:	N/A

POINTS À VÉRIFIER EN RAPPORT AU SOUDAGE

	OUI	NON	N/A
Y-a-t-il des écarts entre les renseignements inscrits au contrat et les capacités immédiates de l'entreprise à effectuer les travaux de soudage? Si oui, comment l'acheteur en a été avisé et quelles sont les actions à prendre pour remédier à la situation:		✓	
Les actions à prendre pour remédier aux écarts ont-elles toutes été prises avant le début du contrat? Si non, pourquoi:			✓
Le superviseur en soudage, ou son délégué, est-il aux emplacements où le soudage est effectué? Nom: Patrick Perreault	✓		
Une vérification à savoir si les équipements pour le soudage indiquent les mêmes paramètres que sur FDMOS a-t-elle été faite? Numéros des équipements utilisés:	✓		
Y-a-t-il des certificats de coulée (mill tests) ou bons de commandes pour identifier tous les matériaux soudés ? Numéros des bons de commandes/certificats de coulée:	✓		
Les produits d'apport sont-ils dans des emballages étanches et entreposés dans un endroit au chaud et sec?	✓		
Les électrodes à bas hydrogène sont-ils dans des emballages scellées et/ou dans les fours aux températures prescrites?			✓
Des opérations de préchauffage sont-elles requises SELON LES MODES OPÉRATOIRES et/ou SELON LE TABLEAU 5.3 DE LA NORME CSA W59 selon la désignation de l'hydrogène diffusible des métaux d'apport utilisés (aucune, H16, H8, H4)?		✓	
Température de préchauffage et entre-passes à rencontrer (si requis) #FDMOS/Temp° :	Degré de température : N/A		
Le métal de base a-t-il été préparé conformément aux exigences des SMOS et selon les exigences des normes applicables ?	✓		
La compagnie possède-t-elle toutes les SMOS/FDMOS pour les assemblages à souder?	✓		
Les Modes Opératoires de Soudage (SMOS/FDMOS) sont-ils disponibles pour l'atelier et/ou le chantier?	✓		
Tous les soudeurs effectuant le soudage pour le projet sont-ils qualifiés selon les travaux de soudage à réaliser? Nom des soudeurs utilisés ou rapports CWB mensuels à consulter (mois/année).	✓		
Y a-t-il un responsable externe de l'inspection visuelle pour que toutes les soudures rencontrent les exigences des normes, codes ou des spécifications applicables AVANT LIVRAISON? Nom(s):		✓	

Document approuvé par (lettres moulées): Patrick Perreault **Date:** 04/04/17

Signature du principal responsable de la planification du projet :

LISTE DE PLANIFICATION DE PROJET POUR LA CERTIFICATION CSA W47.1-09 M à J #7

PROJET # :	5389-02
ACHETEUR :	Promec
DESSINS ET SPÉCIFICATIONS DE RÉFÉRENCE :	5389
MÉTAUX DE BASE UTILISÉ :	44W
MÉTAUX D'APPORT (MARQUE, NOM DE COMMERCE ET CLASSIFICATION) :	E491C 6M
NORMES APPLICABLES :	47,1
INSTRUCTIONS CONCERNANT LES MÉTAUX DE BASES PARTICULIERS SOUDÉS AVEC DES MÉTAUX D'APPORT APPROPRIÉS. (Si applicable) Commentaires:	N/A
ESSAIS NON-DESTRUCTIFS À EFFECTUER ET STIPULÉS AU CONTRAT AINSI QUE LES EXIGENCES À RENCONTRER. (Si applicable) Commentaires:	N/A

POINTS À VÉRIFIER EN RAPPORT AU SOUDAGE

	OUI	NON	N/A
Y-a-t-il des écarts entre les renseignements inscrits au contrat et les capacités immédiates de l'entreprise à effectuer les travaux de soudage? Si oui, comment l'acheteur en a été avisé et quelles sont les actions à prendre pour remédier à la situation:		✓	
Les actions à prendre pour remédier aux écarts ont-elles toutes été prises avant le début du contrat? Si non, pourquoi:			✓
Le superviseur en soudage, ou son délégué, est-il aux emplacements où le soudage est effectué? Nom: Patrick Perreault	✓		
Une vérification à savoir si les équipements pour le soudage indiquent les mêmes paramètres que sur FDMOS a-t-elle été faite? Numéros des équipements utilisés:	✓		
Y-a-t-il des certificats de coulée (mill tests) ou bons de commandes pour identifier tous les matériaux soudés ? Numéros des bons de commandes/certificats de coulée:	✓		
Les produits d'apport sont-ils dans des emballages étanches et entreposés dans un endroit au chaud et sec?	✓		
Les électrodes à bas hydrogène sont-ils dans des emballages scellées et/ou dans les fours aux températures prescrites?			✓
Des opérations de préchauffage sont-elles requises SELON LES MODES OPÉRATOIRES et/ou SELON LE TABLEAU 5.3 DE LA NORME CSA W59 selon la désignation de l'hydrogène diffusible des métaux d'apport utilisés (aucune, H16, H8, H4)?		✓	
Température de préchauffage et entre-passes à rencontrer (si requis) #FDMOS/Temp° :	Degré de température : N/A		
Le métal de base a-t-il été préparé conformément aux exigences des SMOS et selon les exigences des normes applicables ?	✓		
La compagnie possède-t-elle toutes les SMOS/FDMOS pour les assemblages à souder?	✓		
Les Modes Opératoires de Soudage (SMOS/FDMOS) sont-ils disponibles pour l'atelier et/ou le chantier?	✓		
Tous les soudeurs effectuant le soudage pour le projet sont-ils qualifiés selon les travaux de soudage à réaliser? Nom des soudeurs utilisés ou rapports CWB mensuels à consulter (mois/année).	✓		
Y a-t-il un responsable externe de l'inspection visuelle pour que toutes les soudures rencontrent les exigences des normes, codes ou des spécifications applicables AVANT LIVRAISON? Nom(s):		✓	

Document approuvé par (lettres moulées): Patrick Perreault **Date:** 04/09/17

Signature du principal responsable de la planification du projet : [signature]

RAPPORT	06	2017
POUR	MOIS	ANNÉE

Code de compagnie					
A	C	I	J	P	1

Formulaire CWB 108F/2003-2

			QUALIFICATION						
# Employé	#	Nom de famille et prénom	Type	Procédé	Position / Classe / Catégorie	Niveau (W47.1 seul.)	Date expiration	Autorité de qualification	Usine (u) Chantier (c)
195	1	BRAULT, DARCY	S	FCAW	1 & 2 & 3		6 avr. 2019	CWB	U-C
		BRAULT, DARCY	S	MCAW	1 & 2 & 3		6 avr. 2019	CWB	U-C
		BRAULT, DARCY	S	FCAW/MCAW	1 & 2	MC-G8:G9	27 mars 2019	CWB	U-C
134	2	GAUTHIER, JEAN FRANÇOIS	S	FCAW	1 & 2 & 3		4 mai 2019	CWB	U-C
		GAUTHIER, JEAN FRANÇOIS	S	MCAW	1 & 2 & 3		4 mai 2019	CWB	U-C
270	3	AROUA, BASSEM	S	FCAW	1 & 2 & 3 & 4		25 mars 2019	CWB	U-C
		AROUA, BASSEM	S	MCAW	1 & 2 & 3 & 4		25 mars 2019	CWB	U-C
		AROUA, BASSEM	S	SMAW	1 & 2 & 3 & 4		25 juil. 2017	CWB	U-C
271	4	BERRACHED, MOHAMED	S	MCAW	1 & 2 & 3 & 4		4 mai 2019	CWB	U-C
		BERRACHED, MOHAMED	S	FCAW	1 & 2 & 3 & 4		4 mai 2019	CWB	U-C
		BERRACHED, MOHAMED	S	FCAW/MCAW	1 & 2	MC-G8:G9	27 mars 2019	CWB	U-C
15	5	MÉLANÇON, PIER-LUC	S	FCAW	1 & 2 & 3		4 mai 2019	CWB	U-C
		MÉLANÇON, PIER-LUC	S	MCAW	1 & 2 & 3		4 mai 2019	CWB	U-C
193	6	JEAN, SÉBASTIEN	S	FCAW	1		25 mars 2019	CWB	U-C
		JEAN, SÉBASTIEN	S	MCAW	1		25 mars 2019	CWB	U-C
336	7	MARIE-EVE BÉLANGER-MONAST	S	FCAW	1 & 2		30 avr. 2018	CWB	U-C
		MARIE-EVE BÉLANGER-MONAST	S	MCAW	1 & 2		30 avr. 2018	CWB	U-C
		MARIE-EVE BÉLANGER-MONAST	S	FCAW/MCAW	1 & 2	MC-G8:G9	27 mars 2019	CWB	U-C
330	8	JEAN-FRANÇOIS GILBERT	S	SMAW	1 & 2		30 avr. 2018	CWB	U-C
		JEAN-FRANÇOIS GILBERT	S	FCAW	1		20 oct. 2018	CWB	U-C
		JEAN-FRANÇOIS GILBERT	S	MCAW	1		20 oct. 2018	CWB	U-C
302	9	GIBBS SÉBASTIEN	S	FCAW	1 & 2		20 oct. 2018	CWB	U-C
		GIBBS SÉBASTIEN	S	MCAW	1 & 2		20 oct. 2018	CWB	U-C
331	10	DESROSIERS JACQUES	S	FCAW	1		20 oct. 2018	CWB	U-C
		DESROSIERS JACQUES	S	MCAW	1		20 oct. 2018	CWB	U-C
304	11	YVES LAROCHE	S	MCAW	1		11 févr. 2019	CWB	U-C
		YVES LAROCHE	S	FCAW	1		11 févr. 2019	CWB	U-C
204	12	KEVIN TREMBLAY	S	SMAW	1 & 2		30 avr. 2018	CWB	U-C
		KEVIN TREMBLAY	S	MCAW	1		25 mars 2019	CWB	U-C
		KEVIN TREMBLAY	S	FCAW	1		25 mars 2019	CWB	U-C
366	13	PILON MARC	S	SMAW	1		10 déc. 2018	CWB	U-C

PATRICK PERREAULT
MARC BRIÈRE
Signature du superviseur du soudage



6515-C-270-007

Fuel Tanks Piping Supply and Installation

Weld Log

Document Number : AEM-GE-LOG-005
Contract Number : C22466T



AGNICO EAGLE

Field Weld #	Type	Diam.	Material	Schedule	Welder Ticket	Visual	NDE	Pass/Fail	Spool #	Isometric

MISTRAS
Division Estrie

Rapport / Report	A17- 26447A-006			
	Page	1	de/of	2

Ultrasons ULTRASONIC TESTING

Client / Customer	Fabricant / Manufacturer	Commande no / P.O. Number
Groupe Promec Inc.	Groupe Promec Inc.	22466T
Éric Poulin Responsable / Responsible	Éric Poulin Responsable / Responsible	40376292 No d'ouvrage / Job no
Projet / Project	Description	
AGNICO EAGLE-MELIADINE DIVISION 103-COMBUSTIBLE	UT sur des joints 4" SCH 40	

Équipement / Equipment

Olympus	Omniscan MX, 16/64M	100714
Marque / Mark	Modèle / Model	# Série / Serial #

Palpeurs / Transducers

Cable: type BNC-microdot, L 6 pi/ft

Marque / Mark	MHz	Diam.	Angle	# Série / Serial #
Technisonic	2,25	1/2"	70°	43004

Matériau / Material	Doc. de référence / Reference Doc.	
Acier carbone	Norme / Code:	ASME
Type de soudure / Weld type	Section:	B31.1
Butt	Année / Year:	2016
Bloc de calibration / calibration bloc	Critères / Criteria:	--
IIW type 2 +Bloc ASME	Technique / Method	
Milieu de couplage / Coupling liquid	I-TEC-02	
Echogel Grade-20		

Identification Soudure / Weld	Face de contact / Contact Face	Epaisseur / Thickness	No réflecteur / Reflector Number	Angle de palpeur / of probe (°)	Evaluation: DAC, Référence / Reference (dB)	Evaluation ou / or: Amplitude, de la DAC / from DAC (%)	Evaluation ou / or: Amplitude, de la DAC / from DAC (dB)	Evaluation: Type d'indication / Indication Type	Localisation / Localization: Longueur / Length	Localisation / Localization: Trajet sonore / Soundpath	Localisation / Localization: Profondeur à partir de la surface / Depth from the surface	Localisation / Localization: Distance: De / From X	Localisation / Localization: Distance: De / From Y	Acceptation / Acceptability
Une inspection par ultrasons a été réalisée sur 5% des joints à pleine pénétration.														
Pour l'idendification des joints inspectés se conférer au tableau de la page 2.														
Joint 4" # 1		SCH 40		0°	42									Accepté
		SCH 40		70°	53									Accepté
Joint 4" # 2		SCH 40		0°	42									Accepté
		SCH 40		70°	53									Accepté
Joint 4" # 3		SCH 40		0°	42									Accepté
		SCH 40		70°	53									Accepté
Joint 4" # 4		SCH 40		0°	42									Accepté
		SCH 40		70°	53									Accepté
Joint 4" # 5		SCH 40		0°	42									Accepté
		SCH 40		70°	53									Accepté
Joint 4" # 6		SCH 40		0°	42									Accepté
		SCH 40		70°	53									Accepté

Technicien / Technician	Date	Approuvé par / Approved by	Niveau / Level		Vérifié par / Verified by
Pape Arago Bodian	2017-06-22	*Pape Arago Bodian*	ONGC / CGSB	2	KF

Ultrasons ULTRASONIC TESTING

Client / Customer	Fabricant / Manufacturer	Commande no / P.O. Number
Groupe Promec Inc.	Groupe Promec Inc.	22466T
Éric Poulin Responsable / Responsible	Éric Poulin Responsable / Responsible	40376292 No d'ouvrage / Job no
Projet / Project	Description	
AGNICO EAGLE-MELIADINE DIVISION 103-COMBUSTIBLE	UT sur des joints 4" SCH 40	

Identification Soudure / Weld	Face de contact / Contact Face	Epaisseur / Thickness	No réflecteur / Reflector Number	Angle de palpeur / of probe (°)	Evaluation: DAC, Référence / Reference (dB)	Evaluation: Amplitude, de la DAC / from DAC (%) (ou / or)	Evaluation: Amplitude, de la DAC / from DAC (dB) (ou / or)	Evaluation: Type d'indication / Indication Type	Localisation / Localization: Longueur / Length	Localisation / Localization: Trajet sonore / Soundpath	Localisation / Localization: Profondeur à partir de la surface / Depth from the surface	Localisation / Localization: Distance: De / From X	Localisation / Localization: Distance: De / From Y	Acceptation / Acceptability
Joint 4" # 7	SCH 40			0°	42									Accepté
	SCH 40			70°	53									Accepté
Joint 4" # 8	SCH 40			0°	42									Accepté
	SCH 40			70°	53									Accepté

Joint inspectée	N° DESSIN	N° SOUDURE	SOUDEUR
Joint 4" # 1	103-105-PDI-CC10-003	#3	SF
Joint 4" # 2	103-100-PDI-CC10-009 page (2/4)	#5	SF
Joint 4" # 3	103-100-PDI-CC10-009 page (2/4)	#6	SF
Joint 4" # 4	103-100-PDI-CC10-009 page (3/4)	#1	AR
Joint 4" # 5	103-100-PDI-CC10-009 page (2/4)	#4	AR
Joint 4" # 6	103-100-PDI-CC10-009 page (1/4)	#10	SF
Joint 4" # 7	103-100-PDI-CC10-009 page (3/4)	#13	AR
Joint 4" # 8	103-100-PDI-CC10-009 page (4/4)	#5	AR

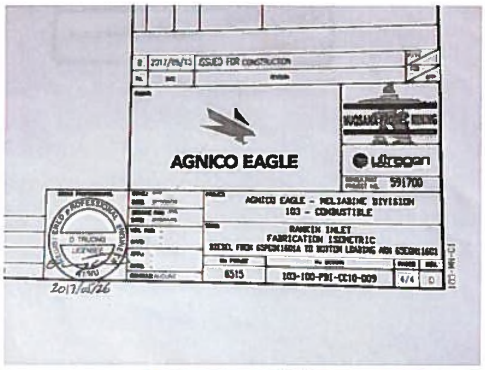



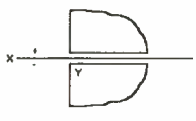

LÉGENDE

Surf. :	Surface / Surface	L.O.P. :	Manque de pénétration / Lack of Penetration	B.T. ;	Traversée / Burn Through
C. :	Concavité / Concavity	L.O.F. :	Manque de Fusion / Lack of Fusion	H.L. :	Alignement défectueux / Misalignment
C.K. :	Fissure / Crack	I.U.C. :	Caniveau intérieur / Inside Undercut	S.I. :	Inclusion de Laitier / Slag Inclusion
P. :	Porosité / Porosity	O.U.C. :	Caniveau Extérieur / Outside Undercut	F/A. :	Défaut du film / Film Artefact

Technicien / Technician	Date	Approuvé par / Approved by	Niveau / Level		Vérifié par / Verified by
Pape Arago Bodian	2017-06-22	*Pape Arago Bodian*	ONGC / CGSB	2	KF

MISTRAS
Division Saguenay

Rapport / Report: S17- 22434A-011 | Page 1 | de/of 2

Radiographie / RADIOGRAPHY

Client / Customer	Fabricant / Manufacturer	Commande no / P.O. Number
Unies-Fab	Unies-Fab	
Responsable / Responsible: Brian Savard	Responsable / Responsible: Brian Savard	No dossier / Job no: UF-2106-19846
Projet / Project: UF-2106-19846	Description: Radiographie sur tuyauteries	

Source
Appareil/ Device: Delta 880 S/N D4446
Isotope: Iridium 192
Cu: 60 MA:
Exposition: varia min
Point focal/focal spot: po

Distance
Source/ surface: varia po/ inch
Distance: Surface / film : varia po/ inch

Exposition
Méthode/method: Double paroi / double wall — Contact

Interprétation / viewing
Méthode/method: Lecture simple / simple viewing

Développement / Processing
Méthode/method: Manuel/manual

FILMS

Film:	Qté / Qty	Type
3½ x 8½		
3½ x 17		
4½ x 8½		
4½ x 17	33	Fuji 80
7 x 17		
14 x 17		

Doc. de référence / Reference Doc.

Norme / Code:	ASME
Section:	B31,3
Année / Year:	2014
Critères / Criteria:	Condition Normal

Technique / Method: I-TEC-03

Péné. / I.Q.I.	Plomb / Lead	Film / cassette	Exposition Qté/Qty	Matériau / Material
ASTM 1B11	ASTM 1B11	0,010" /0,010"	Simple	33	Acier carbone/Carbone steel

Identification de la radiographie / Radiograph identification		Épaisseur / Thickness: Matériel / Matériel	Renforcement / Build up	Soudure / Weld	Soudeur / Welder	Évaluation / Interpretation: ACC	REJ	Discontinuité et Localisation du manque / Discontinuity and Defect location			CR: Contraste / Contrast	Brillance / Brightness
Joint 1 MK-21	0 - 7	STD			34	√						
	7 - 14	STD			34	√						
	14 - 0	STD			34	√						
Joint 2 MK-41	0 - 7	STD			30	√						
	7 - 14	STD			30	√						
	14 - 0	STD			30	√						
Joint 3 MK-9	0 - 7	STD			30	√						
	7 - 14	STD			30	√						
	14 - 0	STD			30	√						
Joint 4 MK-14	0 - 9	STD			34	√						
	9 - 18	STD			34	√						
	18 - 0	STD			34	√						
Joint 5 MK-40	0 - 7	STD			6	√						
	7 - 14	STD			6	√						
	14 - 0	STD			6	√						

LEGENDE / LEGEND

Surf. : Surface / Surface — I.O.P. : Manque de pénétration / Lack of Penetration — B.T. : Traversée / Burn Through — O. : Oiseau / Bird
C. : Concavité / Concavity — L.O.F. : Manque de Fusion / Lack of Fusion — H.L. : Alignement défectueux / Misalignment — A.D. : Arrêt-départ / Stop-start
C.K. : Fissure / Crack — I.U.C. : Caniveau intérieur / Inside Undercut — S.I. : Inclusion de Laitier / Slag Inclusion — T.I. : Inclusion de tungstène / tungsten incl.
P. : Porosité / Porosity — O.U.C. : Caniveau Extérieur / Outside Undercut — F/A. : Défaut du film / Film Artefact

Technicien / Technician	Date	Approuvé par / Approved by	Niveau / Level		Vérifié par / Verified by
Gilbert Asselin	2017-06-15	*David Gauthier*	ONGC / CGSB	2	VR

F-Radiog.xlsx — Rév 25

Brian Savard 15/06/2017

MISTRAS
Division Saguenay

Rapport / Report	S17- 22434A-011			
	Page	2	de/of	2

Radiographie / RADIOGRAPHY

Client / Customer	Fabricant / Manufacturer	Commande no / P. O. Number
Unies-Fab	Unies-Fab	
Responsable / Responsible	Responsable / Responsible	No d'ouvrage / Job no
Brian Savard	Brian Savard	UF-2106-19846
Projet / Project	Description	
UF-2106-19846	Radiographie sur tuyauteries	

Identification de la radiographie / Radiograph identification		Épaisseur / Thickness			Soudeur / Welder	Évaluation / Interpretation		Discontinuité et Localisation du manque / Discontinuity and Defect location			CR	
		Matériel / Matériel	Renforcement / Build up	Soudure / Weld		ACC	REJ				Contraste / Contrast	Brillance / Brightness
Joint 6 MK-20	0 - 7	STD			31	√						
	7 - 14	STD			31	√						
	14 - 0	STD			31	√						
Joint 7 MK-20	0 - 7	STD			31	√						
	7 - 14	STD			31	√						
	14 - 0	STD			31	√						
Joint 8 MK-32	0 - 7	STD			31	√						
	7 - 14	STD			31	√						
	14 - 0	STD			31	√						
Joint 8 MK-43	0 - 7	STD			24	√						
	7 - 14	STD			24	√						
	14 - 0	STD			24	√						
Joint 10 MK-11	0 - 7	STD			24	√						
	7 - 14	STD			24	√						
	14 - 0	STD			24	√						
Joint 11 MK-46	0 - 7	STD			21	√						
	7 - 14	STD			21	√						
	14 - 0	STD			21	√						

LEGENDE / LEGEND

Surf. : Surface / Surface	L.O.P. : Manque de pénétration / Lack of Penetration	B.T. : Traversée / Burn Through	G : Glaçon / Icicle
C. : Concavité / Concavity	L.O.F. : Manque de Fusion / Lack of Fusion	M.L. : Alignement défectueux / Misalignment	A.D. : Arrêt-départ / Stop-start
C.K. : Fissure / Crack	I.U.C. : Caniveau intérieur / Inside Undercut	S.I. : Inclusion de Laitier / Slag Inclusion	T.I. : Inclusion de tungstène / tungsten incl.
P. : Porosité / Porosity	O.U.C. : Caniveau Extérieur / Outside Undercut	F/A : Défaut du film / Film Artefact	

Technicien / Technician	Date	Approuvé par / Approved by	Niveau / Level		Vérifié par / Verified by
Gilbert Asselin	2017-06-15	*David Gauthier*	ONGC / CGSB	2	VR

F-Radiog.xlsx

Rév 25

Brian Savard 15/06/2017

MISTRAS
Division Abitibi-Témiscamingue

Rapport / Report	A17- 26447A-016			
	Page	1	de/of	1

Magnétoscopie
Magnetic particule

Client / Customer	Fabricant / Manufacturer	Commande no / P.O. Number
GROUPE PROMEC		62508
Éric Poulin Responsable / Responsible	Responsable / Responsible	WO-40413640 No d'ouvrage / Job no
Projet / Project	Description	
Tagger 22466T - Meliadine	AGNICO EAGLE Rankin Inlet Marine Line for Tank Farm	

Technique
- ☑ Poudre sèche / Dry Powder
- ☐ Fluorescent (humide / wet)
- ☐ Noir et blanc / Black & White (humide / wet)

Courant / Current
- ☑ AC — Intensité: 6 amps
- ☐ DC

Matériau / Material: Cabon Steel

Doc. de référence / Reference Doc.

Norme / Code:	ASME
Section:	B31,3
Année / Year:	2015
Critères / Criteria:	Normal
Technique / Method	ASTM E709 / I-TEC-05

Méthode / Method
- ☑ Continuelle / Continuous
- ☐ Résiduelle / Residual

Magnétisation / Magnetization
- ☑ Long.
- ☐ Circ.

- ☐ Aimant / Permanent magnet
- ☑ Culasse électromagnétique / Electromagnetic Yoke
- ☐ Électrodes d'amenée / Prods
- ☐ Serpentin / Coil
- ☐ Tête magnétisante / Head shot
- ☐ Conducteur central / Central conductor

Medium
- ☐ Huile / Oil
- ☐ Eau / Water

Magnétoscope / Magnetoscope

Marque / Mark	Modèle / Model	# Série / Serial #	Levage/Lift test	Poids/Weight
Parker	B-300	4568	6"	10lbs

Matériel / Material

Marque / Mark	No.	Couleur / Color
Circle Sys.	66	Jaune

Lampe noire/ Blacklight

Marque / Mark	Modèle / Model	# Série / Serial #	Intensité/Intensity
n/a	n/a	n/a	n/a

Photomètre UV/ UV light meter

Marque / Mark	Modèle / Model	# Série / Serial #	Cal due
n/a	n/a	n/a	n/a

Photomètre lumière blanche/ White light meter

Marque / Mark	Modèle / Model	# Série / Serial #	Cal due
n/a	n/a	n/a	n/a

État de la surface / Surface conditionning
- ☑ La surface inspectée rencontrait les exigences de la norme ASTM E709. According to ASTM E709.
- ☐ La surface inspectée ne rencontrait pas les exigences de la norme ASTM E709. Not in accordance with ASTM E709.
  - ☐ Eau / Water ☐ Saleté / Dirt ☐ Rouille / Rust ☐ Peinture / Paint ☐

Résultats / Results

An magnetic particles inspection was conducted on 23 socket weld.







Accepted & conforme to the standards

Technicien / Technician	Date	Approuvé par / Approved by	Niveau / Level		Vérifié par / Verified by
Pierre Goyette	2017-09-28	*Pierre Goyette*	SNT-TC	3	KF

MISTRAS | Métaltec
Division Abitibi-Témiscamingue

Rapport / Report	A17- 26447A-017			
	Page	1	de/of	1

Ultrasons ULTRASONIC TESTING

Client / Customer	Fabricant / Manufacturer	Commande no / P.O. Number
GROUPE PROMEC		62508
Éric Poulin Responsable / Responsible	Responsable / Responsible	WO-40413640 No d'ouvrage / Job no
Projet / Project	Description	
Tagger 22466T - Meliadine	AGNICO EAGLE Rankin Inlet Marine Line for Tank Farm	

Équipement / Equipment

Sonatest	D70	I0007829
Marque / Mark	Modèle / Model	# Série / Serial #

Palpeurs / Transducers

Cable: type BNC-BNC, L 6 pi/ft

NDT Syst.	2,25	0,5	60	8987432
Marque / Mark	MHz	Diam.	Angle	# Série / Serial #

Matériau / Material	Doc. de référence / Reference Doc.	
Carbon Steel	Norme / Code:	ASME
Type de soudure / Weld type	Section:	B31,3
But Weld	Année / Year:	2015,00
Bloc de calibration / calibration bloc	Critères / Criteria:	Normal
IIW & DAC	Technique / Method	
Milieu de couplage / Coupling liquid	I-TEC-02 RB rev07	
Echogel 40		

Identification Soudure / Weld	Face de contact / Contact Face	Epaisseur / Thickness	No réflecteur / Reflector Number	Angle de palpeur / of probe (°)	Evaluation: DAC, Référence/Reference (dB)	Evaluation: Amplitude, de la DAC / from DAC (%) ou / or	Evaluation: Amplitude, de la DAC / from DAC (dB)	Evaluation: Type d'indication / Indication Type	Localisation / Localization: Longueur / Length	Localisation: Trajet sonore / Soundpath	Localisation: Profondeur à partir de la surface / Depth from the surface	Distance: De / From X	Distance: De / From Y	Acceptation / Acceptability
AMR (1)	A	sch40		60	49									Accepted
AO (1)	A	sch40		60	49									Accepted
AO (2)	A	sch40		60	49									Accepted
AMR (2)	A	sch40		60	49									Accepted
JMP	A	sch40		60	49									Accepted



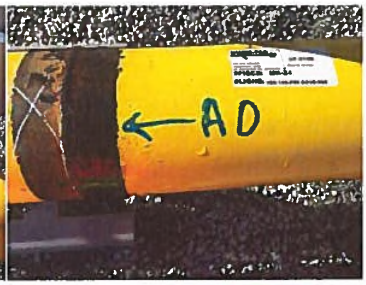







Technicien / Technician	Date	Approuvé par / Approved by	Niveau / Level		Vérifié par / Verified by
Pierre Goyette	2017-09-28	*Pierre Goyette*	SNT-TC	3	KF

AGNICO EAGLE

Vendor Document Status

1 ☐ Proceed to next submission and status.

2 ☐ Proceed with exceptions as noted to next submission and status.

3 ☐ Do not proceed.
Revise as noted and resubmit next submission and status.

4 ☑ Complete, no further submission required.

By: JEAN-FRANCOIS TREMBLAY Date: 2017-06-22

Review and authorization to fabricate are only for general conformance with the design concept of the Project as expressed in the Contract Documents. Sole responsibility for the accuracy and completeness of this document, including but not limited to dimensions and quantities, remains with the Supplier/Contractor. Agnico Eagle does not warrant the accuracy or completeness of any of the information contained herein, nor does Agnico Eagle authorize or approve any construction means, methods, techniques, sequences or any safety precautions or procedures.

Agnico Eagle No. 6515-C-270-007-141-TES-0045 R: Sub002

DOCUMENT FOR INFORMATION

Agnico-Eagle Mines Ltd.
Pressure Test Report

ITR Number : AEM-PI-ITR-001
Contract no. : C22466T

Design Code	Design Test Pressure	Test Medium	Medium Temp.	Test Duration

P&ID (Highlight Boundaries)	Rev	Line	Drawing/ISO	Rev	Spool

Pressure Test Specifications

	Contractor	Date (dd-mm-yy)	Client	Date (dd-mm-yy)
Pre-Hydro Inspection				
NDE/PWHT Clearance				
Release for Test				

Test Instruments

	Make/Model	Serial Number	Test Range (psi)	Calibration Date
Upper				
Lower				

Test Data

	Time	Test Pressure	Ambient Temp. (C)	Pipe Temp. (C)	Comments
Start					
Finish					

Comments/Referenced Documents (e.g. applicable field reports):

PRESSURE TEST COMPLETE

Contractor Representative			Client Representative		
Name (Print)	Signature	Date	Name (Print)	Signature	Date

LINE RESTORATION COMPLETE

Contractor Representative			Client Representative		
Name (Print)	Signature	Date	Name (Print)	Signature	Date

ADDITIONAL LINES

P&ID	Rev	Line	Drawing/ISO	Rev	Spool

P&ID	Rev	Line	Drawing/ISO	Rev	Spool

Agnico-Eagle Mines Ltd.
Pressure Test Report

ITR Number : AEM-PI-ITR-001
Contract no. : C22466T

Design Code	Design Test Pressure	Test Medium	Medium Temp.	Test Duration
	15 PSI	Air	10°C	1 hrs

P&ID (Highlight Boundaries)	Rev	Line	Drawing/ISO	Rev	Spool
		103-150-PDE-CC010-001	5/13	0	

Pressure Test Specifications

	Contractor	Date (dd-mm-yy)	Client	Date (dd-mm-yy)
Pre-Hydro Inspection	Promec	26/08/17	AEM	26/08/17
NDE/PWHT Clearance				
Release for Test				

Test Instruments

	Make/Model	Serial Number	Test Range (psi)	Calibration Date
Upper	Winters PFQ Series	G17-0675	0 - 300	05 — 2017
Lower				

Test Data

	Time	Test Pressure	Ambient Temp. (C)	Pipe Temp. (C)	Comments
Start	2h 15	15 PSI	15	15	None
Finish	3h 15	15 PSI	15	15	None

Comments/Referenced Documents (e.g. applicable field reports):

PRESSURE TEST COMPLETE

Contractor Representative			Client Representative		
Robbie Lamothe			Clem Bonin		
Name (Print)	Signature	Date	Name (Print)	Signature	Date Sept 14/17

LINE RESTORATION COMPLETE

Contractor Representative			Client Representative		
Name (Print)	Signature	Date	Name (Print)	Signature	Date

NUQSANA-PROMEC MINING

Agnico-Eagle Mines Ltd.
Pressure Test Report

ITR Number : AEM-PI-ITR-001
Contract no. : C22466T

AGNICO EAGLE

Design Code	Design Test Pressure	Test Medium	Medium Temp.	Test Duration
	60 PSI	Air	5 °C	1 hrs

P&ID (Highlight Boundaries)	Rev	Line	Drawing/ISO	Rev	Spool
65-103-205-200		103-150-PDI-CC10-001	6/13 7/13 8/13	0	
			9/13		
65-103-205-200		103-150-PDI-CC10-002	1/3 2/3 3/3	0	

Pressure Test Specifications

	Contractor	Date (dd-mm-yy)	Client	Date (dd-mm-yy)
Pre-Hydro Inspection	Promec	24/09/17	AEM	24/09/17
NDE/PWHT Clearance				
Release for Test				

Test Instruments

	Make/Model	Serial Number	Test Range (psi)	Calibration Date
Upper	Winters PFG Series	617-0675	0 - 300	05 — 2017
Lower				

Test Data

	Time	Test Pressure	Ambient Temp. (C)	Pipe Temp. (C)	Comments
Start	10h15	60 PSI	10 °C	10 °C	None
Finish	11h15	60 PSI	10 °C	10 °C	None

Comments/Referenced Documents (e.g. applicable field reports):

PRESSURE TEST COMPLETE

Contractor Representative			Client Representative		
Robbie Lamothe		24/09/17	Clem Bonin		24/09/17
Name (Print)	Signature	Date	Name (Print)	Signature	Date

LINE RESTORATION COMPLETE

Contractor Representative			Client Representative		
Name (Print)	Signature	Date	Name (Print)	Signature	Date

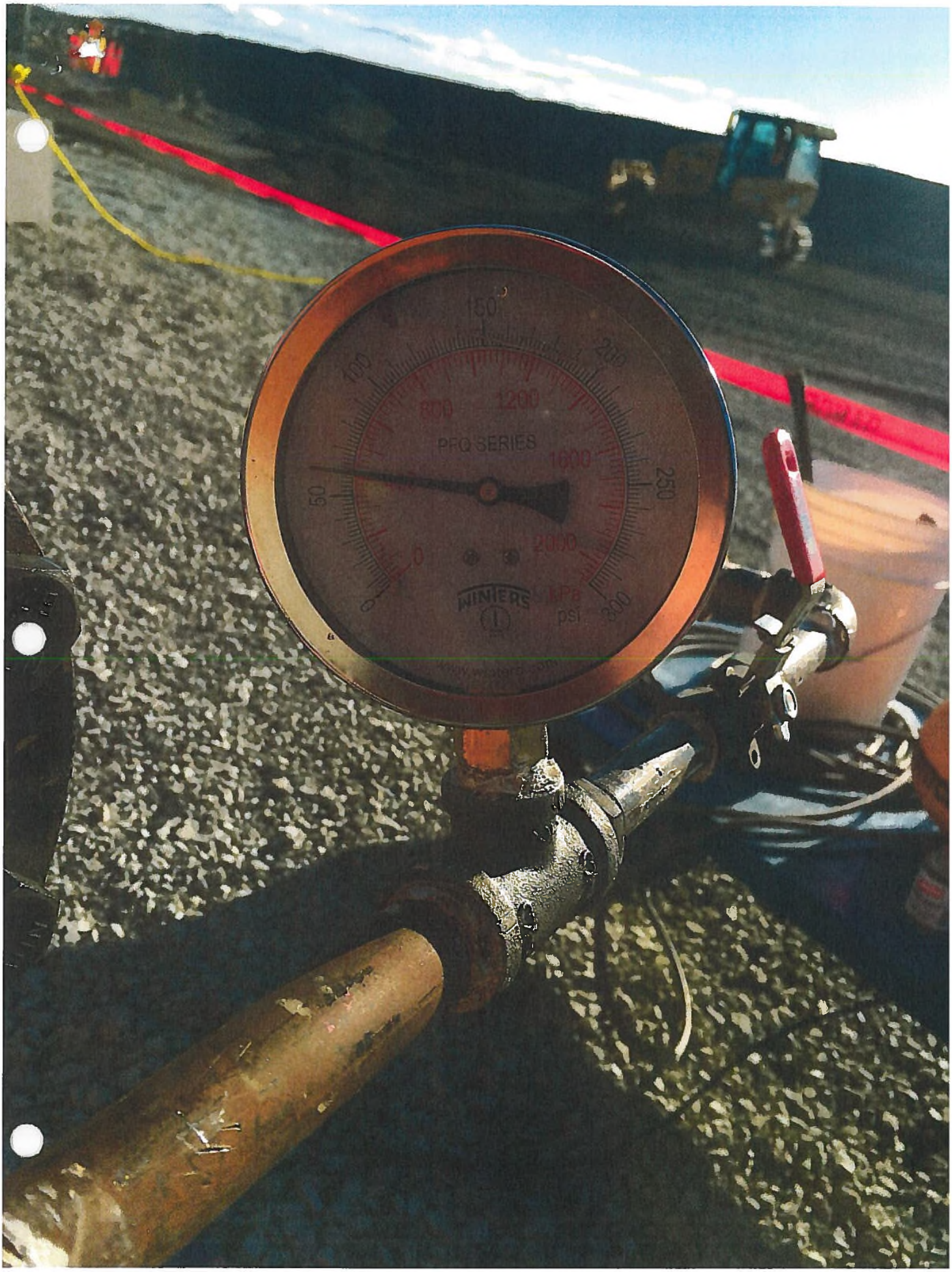
PFQ SERIES
WINIERS
kPa
psi

Agnico-Eagle Mines Ltd.
Pressure Test Report

ITR Number : AEM-PI-ITR-001
Contract no. : C22466T

Design Code	Design Test Pressure	Test Medium	Medium Temp.	Test Duration
	60 PSI	Air	5°C	1 hrs

P&ID (Highlight Boundaries)	Rev	Line	Drawing/ISO	Rev	Spool
65-103-205-200		103-150-PDI-CC10-003	1/12 2/12 3/12	0	
			4/12 5/12 6/12		
			7/12 8/12 9/12		
65-103-205-200		103-150-PDI-CC10-004	1/1	0	

Pressure Test Specifications

	Contractor	Date (dd-mm-yy)	Client	Date (dd-mm-yy)
Pre-Hydro Inspection	Promec	24/09/17	AEM	24/09/17
NDE/PWHT Clearance				
Release for Test				

Test Instruments

	Make/Model	Serial Number	Test Range (psi)	Calibration Date
Upper	Winters PFQ Series	617-0675	0 - 300	05 — 2017
Lower				

Test Data

	Time	Test Pressure	Ambient Temp. (C)	Pipe Temp. (C)	Comments
Start	3h00 PM	60 PSI	5	5	None
Finish	4h00	60 PSI	5	5	None

Comments/Referenced Documents (e.g. applicable field reports):

PRESSURE TEST COMPLETE

Contractor Representative			Client Representative		
Robbie Lamothe			Clem Bonin	Clem Bonin	Sept 25/17
Name (Print)	Signature	Date	Name (Print)	Signature	Date

LINE RESTORATION COMPLETE

Contractor Representative			Client Representative		
Name (Print)	Signature	Date	Name (Print)	Signature	Date

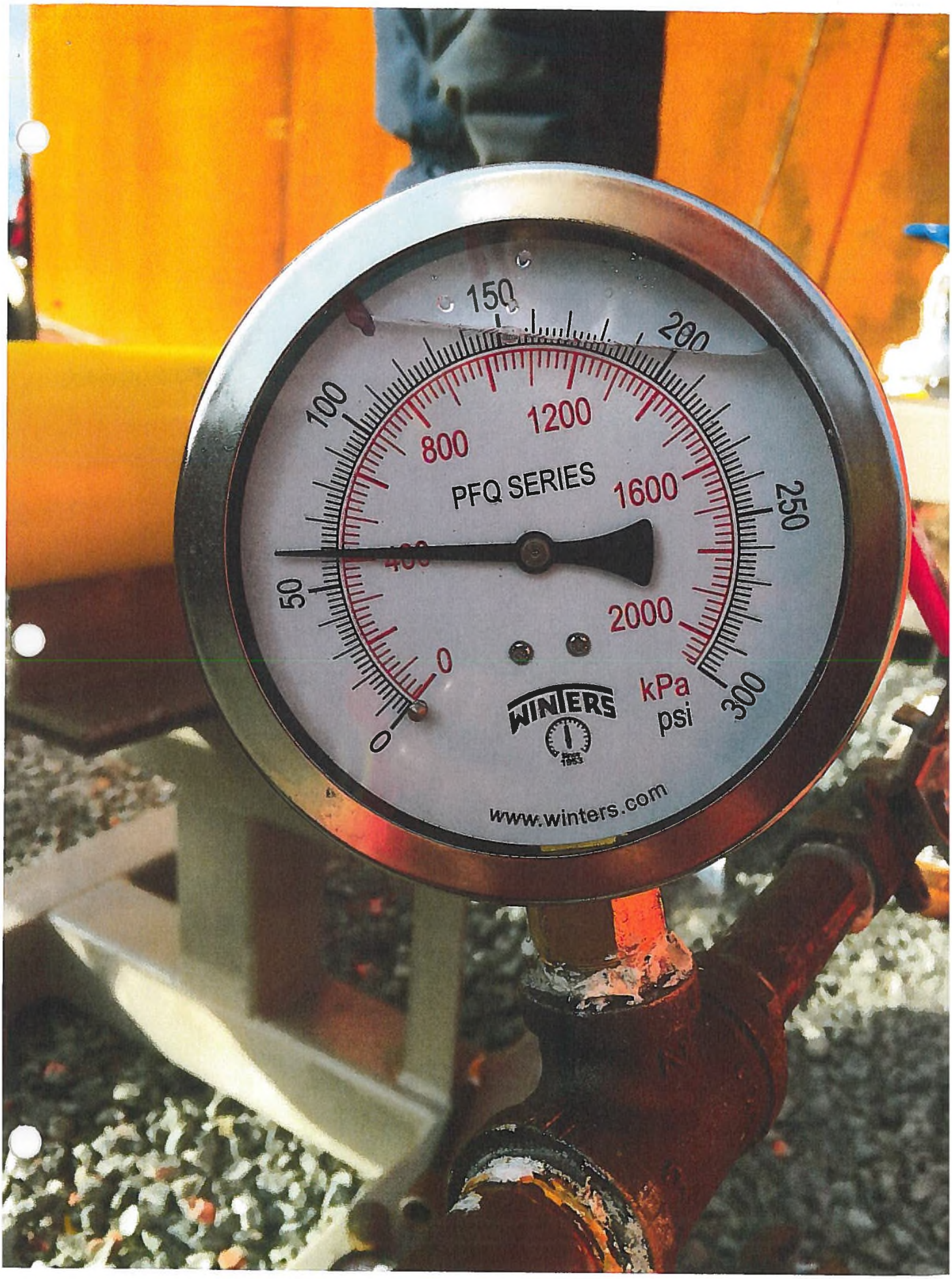
150
200
100
1200
800
PFQ SERIES
1600
250
50
2000
0
300
0
WINTERS
kPa
psi
www.winters.com

NUQSANA-PROMEC MINING

Agnico-Eagle Mines Ltd.
Pressure Test Report

ITR Number : AEM-PI-ITR-001
Contract no. : C22466T

AGNICO EAGLE

Design Code	Design Test Pressure	Test Medium	Medium Temp.	Test Duration
	120	Water	12 °C	1 hrs

P&ID (Highlight Boundaries)	Rev	Line	Drawing/ISO	Rev	Spool
		Double Wall Section	103-150-PDI-001		Complet

Pressure Test Specifications

	Contractor	Date (dd-mm-yy)	Client	Date (dd-mm-yy)
Pre-Hydro Inspection	Promec	01/09/17	AEM	01/9/17
NDE/PWHT Clearance				
Release for Test				

Test Instruments

	Make/Model	Serial Number	Test Range (psi)	Calibration Date
Upper	Waters PFQ Series	617-0675	0 - 300	May 15 2017
Lower				

Test Data

	Time	Test Pressure	Ambient Temp. (C)	Pipe Temp. (C)	Comments
Start	2h00	120	12 °C	12 °C	CB
Finish	3 h00	120	12 °C	12 °C	[signature]

Comments/Referenced Documents (e.g. applicable field reports):

PRESSURE TEST COMPLETE

Contractor Representative			Client Representative		
Robbie Lamothe	[signature]	09/01/17	Clem Bonia	[signature]	3:10 PM 10-1-2017
Name (Print)	Signature	Date	Name (Print)	Signature	Date

LINE RESTORATION COMPLETE

Contractor Representative			Client Representative		
Name (Print)	Signature	Date	Name (Print)	Signature	Date

NUQSANA PROMEC MINING

Agnico-Eagle Mines Ltd.
Pressure Test Report

ITR Number : AEM-PI-ITR-001
Contract no. : C22466T

AGNICO EAGLE

Design Code	Design Test Pressure	Test Medium	Medium Temp.	Test Duration
	60 PSI	Pneumatic	-6 °C	60 min

P&ID (Highlight Boundaries)	Rev	Line	Drawing/ISO	Rev	Spool
65-116-205-2000	2	103-150-PDI-CC10-003	1-2-3	0	
		103-150-PDI-CC10-004	1/1	0	

Pressure Test Specifications

	Contractor	Date (dd-mm-yy)	Client	Date (dd-mm-yy)
Pre-Hydro Inspection				
NDE/PWHT Clearance				
Release for Test				

Test Instruments

	Make/Model	Serial Number	Test Range (psi)	Calibration Date
Upper	Winters PFQ Series	617-0675	6 - 300	May 15 2017
Lower				

Test Data

	Time	Test Pressure	Ambient Temp. (C)	Pipe Temp. (C)	Comments
Start	4h 08	60 PSI	-6 °C	-6 °C	
Finish	5h 08	60 PSI	-6 °C	-6 °C	

Comments/Referenced Documents (e.g. applicable field reports):

PRESSURE TEST COMPLETE

Contractor Representative			Client Representative		
Robert Lamothe		11/10/17	Stephane Gionet		11/10/17
Name (Print)	Signature	Date	Name (Print)	Signature	Date

LINE RESTORATION COMPLETE

Contractor Representative			Client Representative		
Robert Lamothe		11/10/17	Stephane Gionet		11/10/17
Name (Print)	Signature	Date	Name (Print)	Signature	Date

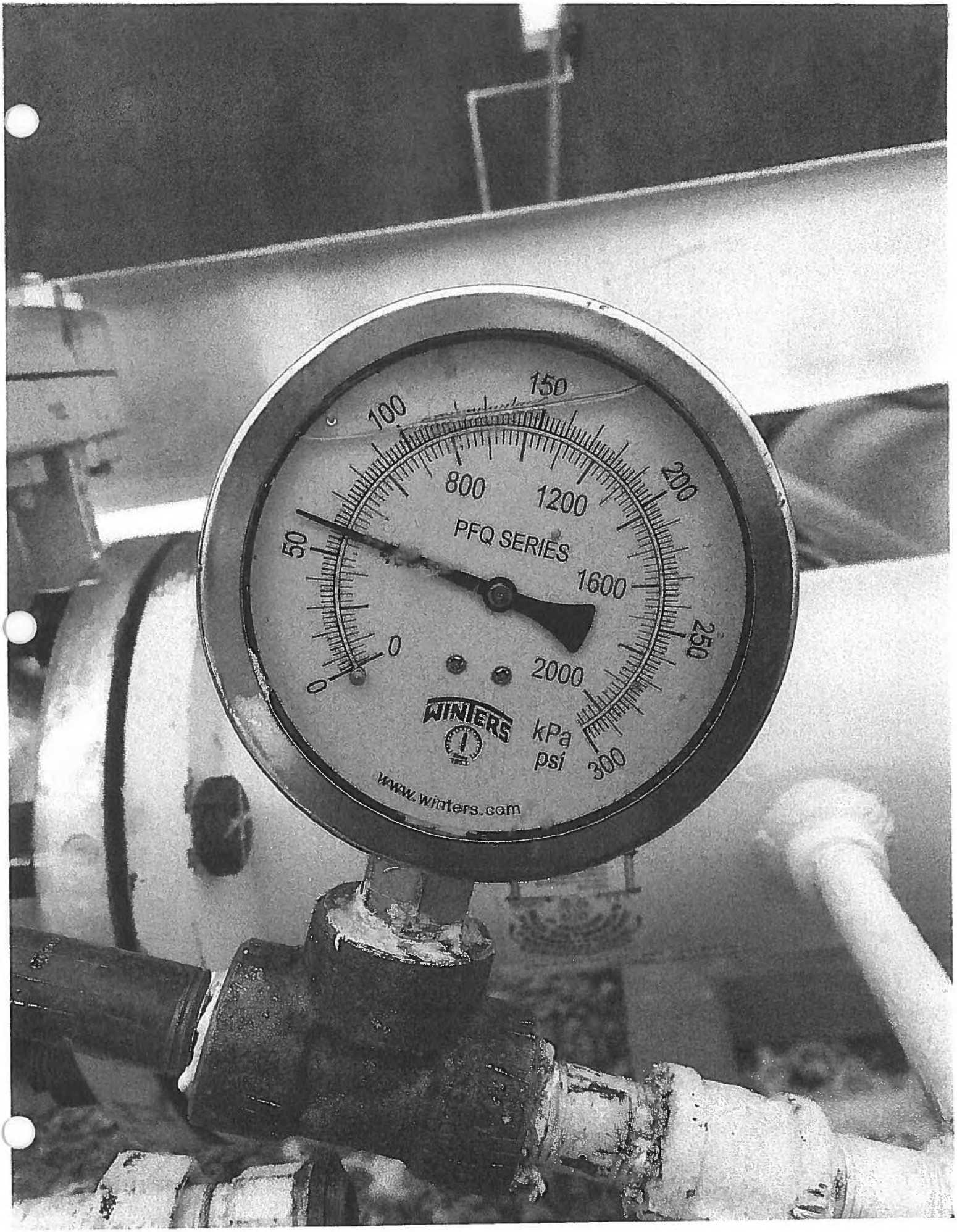
100
150
200
800
1200
PFQ SERIES
50
1600
0
0
250
2000
WINTERS
kPa
psi
300
www.winters.com

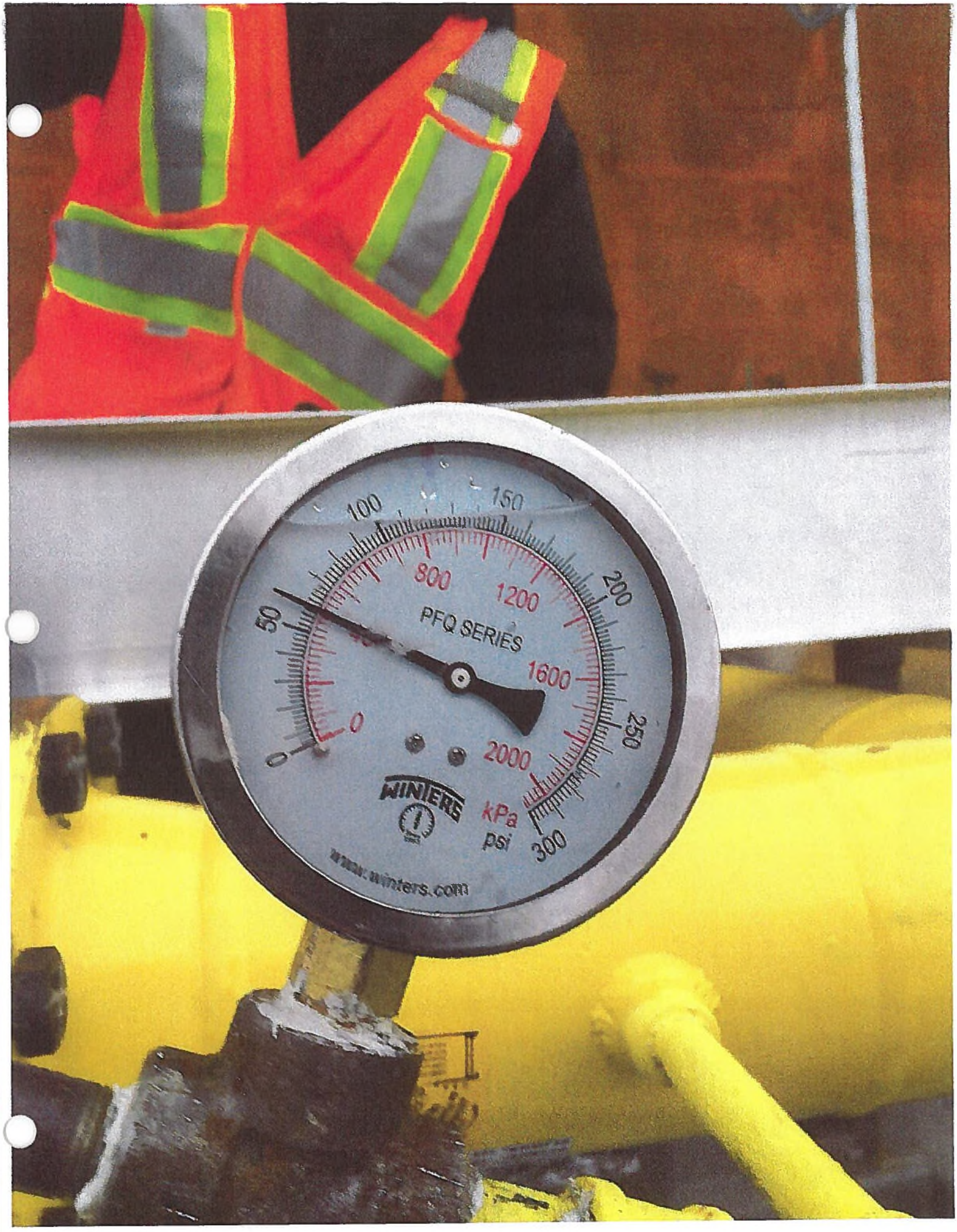
100
150
200
50
800
1200
PFQ SERIES
1600
0
250
2000
WINTERS
kPa
psi
300
www.winters.com

NUQSANA PROMEC MINING

Agnico-Eagle Mines Ltd.
Pressure Test Report

ITR Number : AEM-PI-ITR-001
Contract no. : C22466T

AGNICO EAGLE

Design Code	Design Test Pressure	Test Medium	Medium Temp.	Test Duration
	60 PSI	Pneumatic		60 min

P&ID (Highlight Boundaries)	Rev	Line	Drawing/ISO	Rev	Spool
65-116-205-200	2	116-150-PD1-CC10-0001	103-150-PD1-CC10 001	0	Pg 1-9
"	2	116-150-PD1-CC10-002	103-150-PD1 CC10-002	0	Pg 1-3

Pressure Test Specifications

	Contractor	Date (dd-mm-yy)	Client	Date (dd-mm-yy)
Pre-Hydro Inspection				
NDE/PWHT Clearance				
Release for Test				

Test Instruments

	Make/Model	Serial Number	Test Range (psi)	Calibration Date
Upper	Winters PFQ Series	617-0675	0 - 300 PSI	May 15 2017
Lower				

Test Data

	Time	Test Pressure	Ambient Temp. (C)	Pipe Temp. (C)	Comments
Start	4h 46 PM	60 PSI	-2	-2	
Finish	5h 46 PM	60 PSI	-2	-2	

Comments/Referenced Documents (e.g. applicable field reports):

PRESSURE TEST COMPLETE

Contractor Representative			Client Representative		
Robert Lamothe	[signature]	7 oct 2017	Stephane Gicnet	[signature]	07 oct, 2017
Name (Print)	Signature	Date	Name (Print)	Signature	Date

LINE RESTORATION COMPLETE

Contractor Representative			Client Representative		
Robert Lamoth	[signature]	8 oct 2017	Stephane Gicnet	[signature]	08 oct, 2017
Name (Print)	Signature	Date	Name (Print)	Signature	Date


PFQ SERIES
WINTERS
kPa
psi
www.winters.com


PRO SERIES
WINTERS
kPa
psi
www.winters.com

Pigging of Pipe

1 fois le RX 3
1 fois le RX4
6 fois le RX5
2 fois le G1 swabs

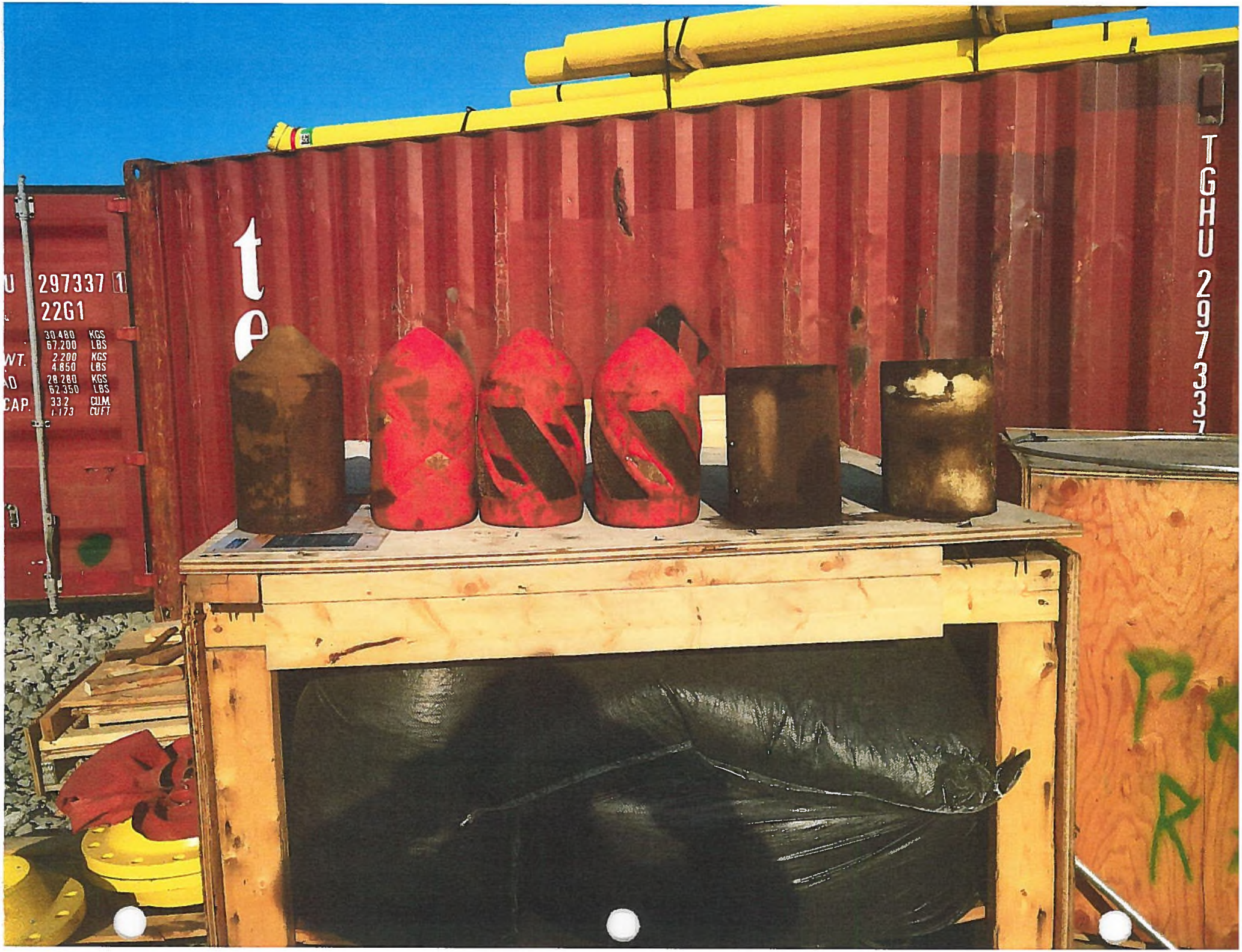
297337 1
22G1
30.480 KGS
67.200 LBS
2.200 KGS
4.850 LBS
28.280 KGS
62.350 LBS
33.2 CUM.
1173 CUFT
TGHU 297337

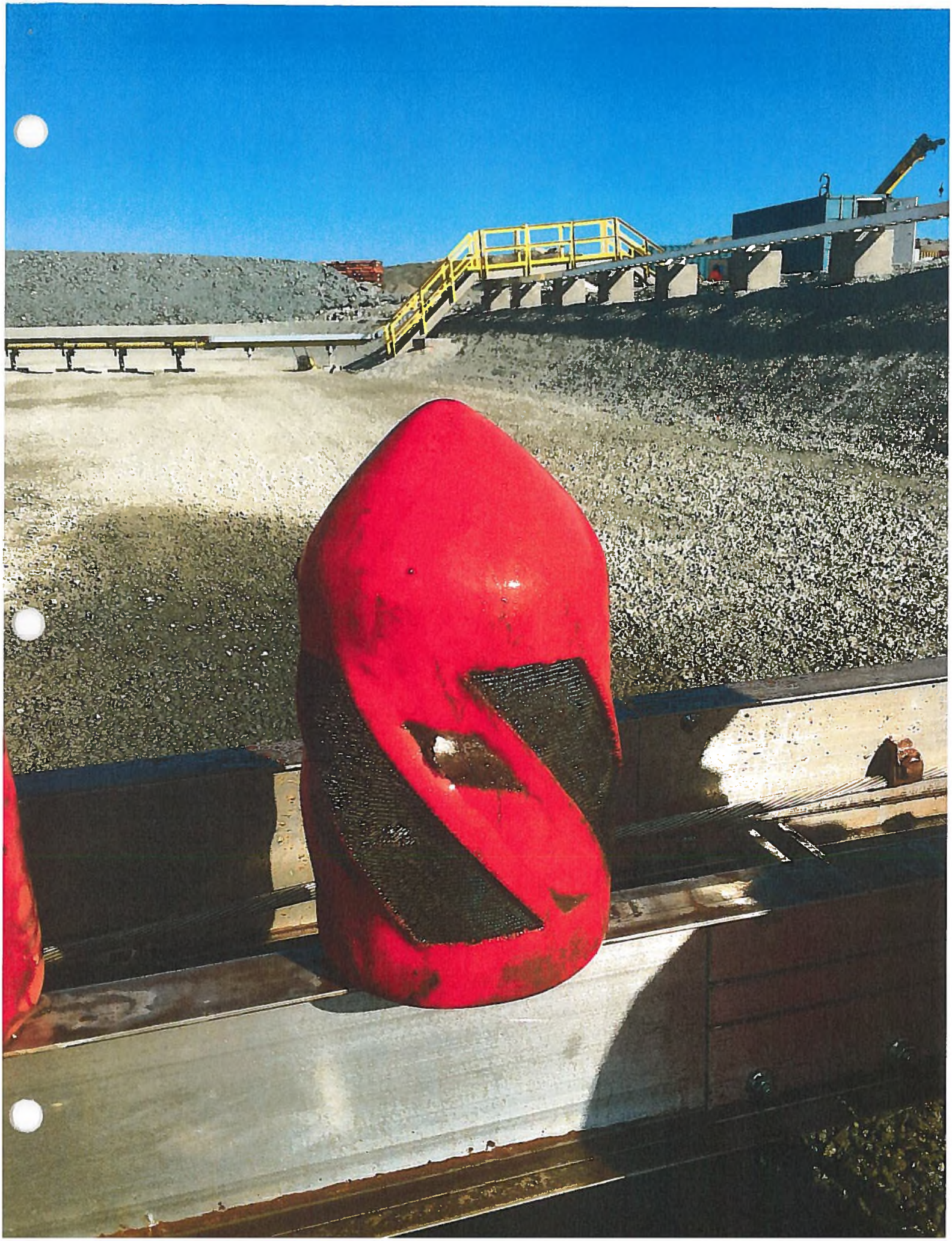

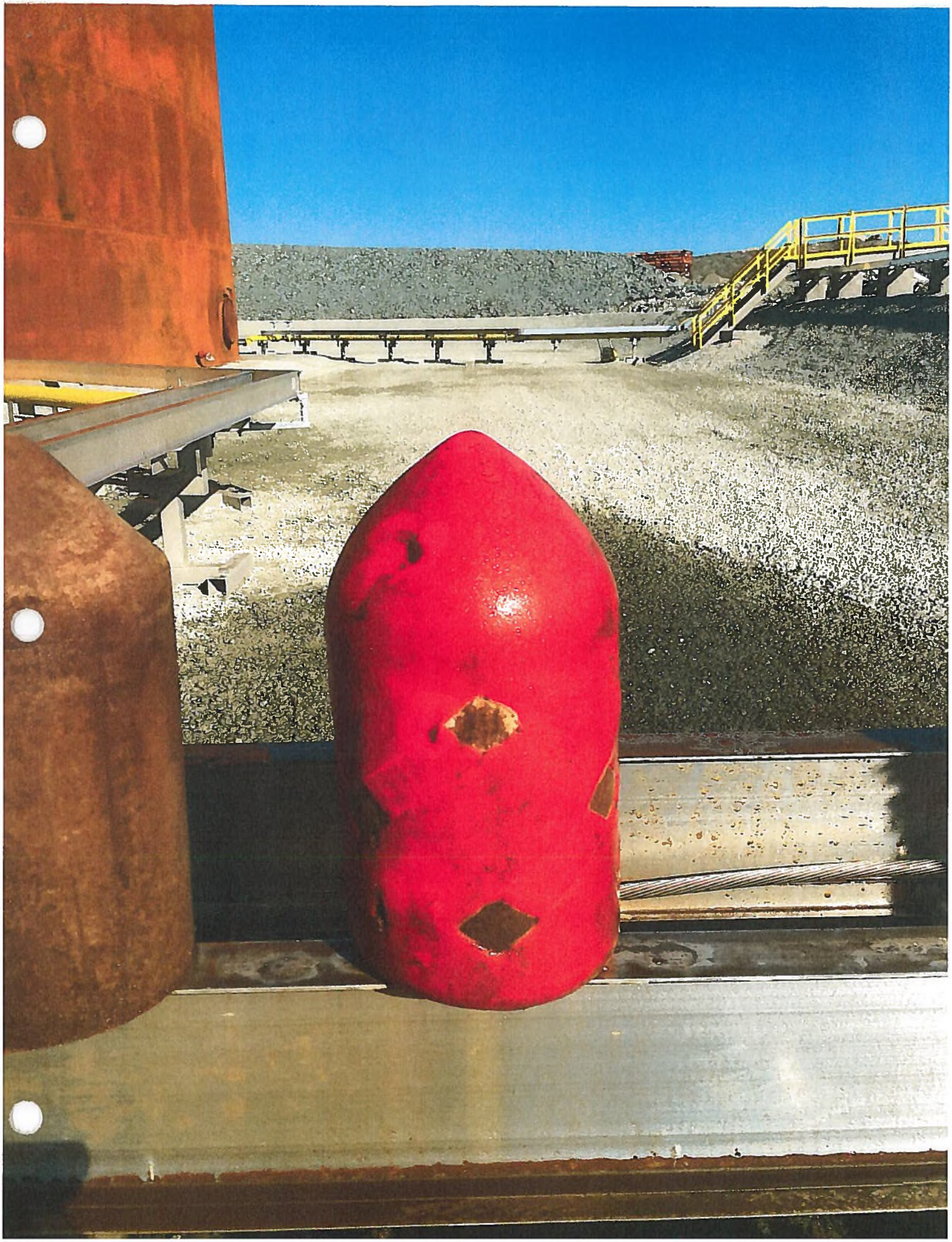

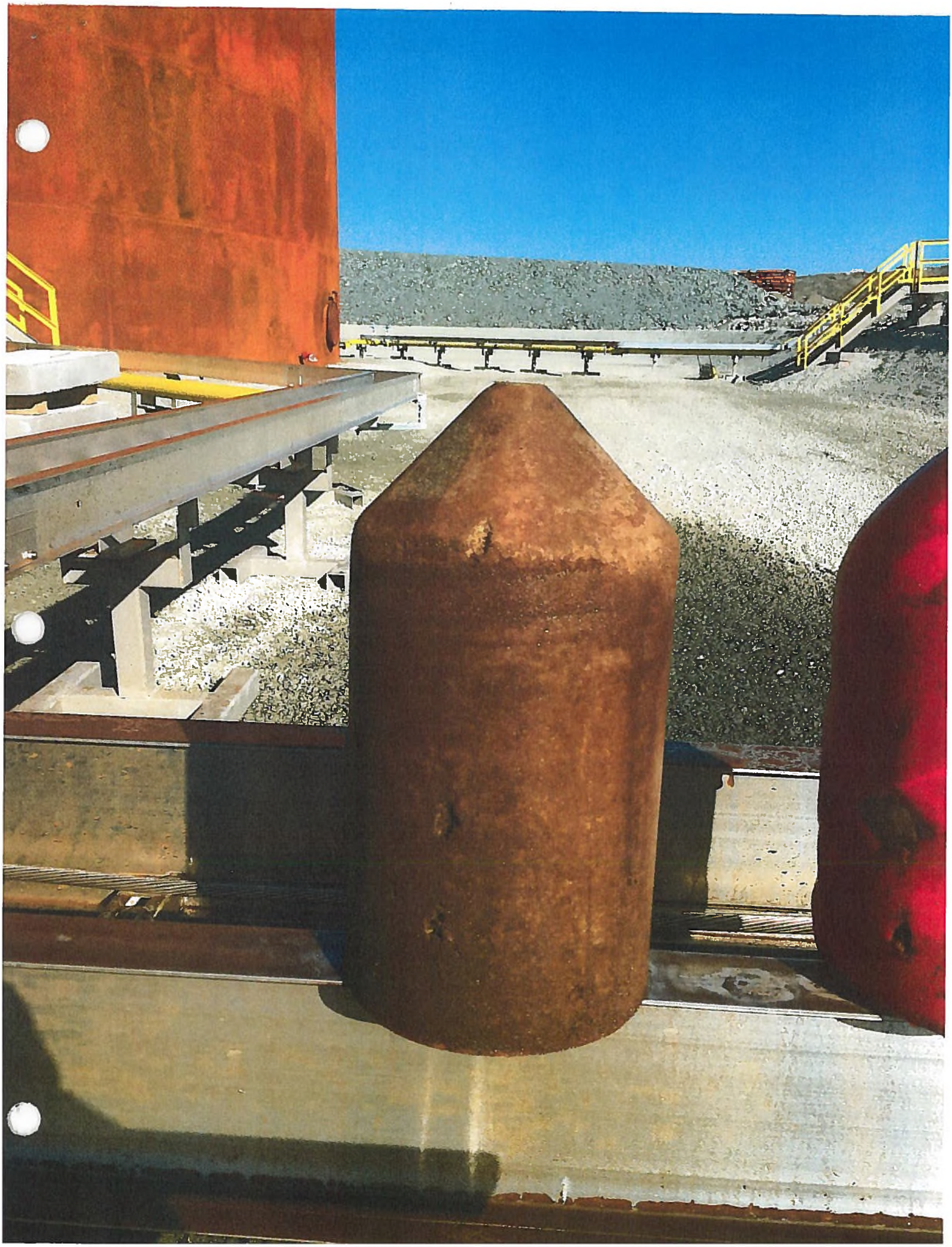

Pigging of Pipe

1 fois le RX 3
1 fois le RX4
6 fois le RX5
2 fois le G1 swabs


U 297337 1
22G1
30 480 KGS
67 200 LBS
WT. 2 200 KGS
4 850 LBS
AO 28 280 KGS
62 350 LBS
CAP. 33 2 CUM.
1 173 CUFT
TGHU 297337

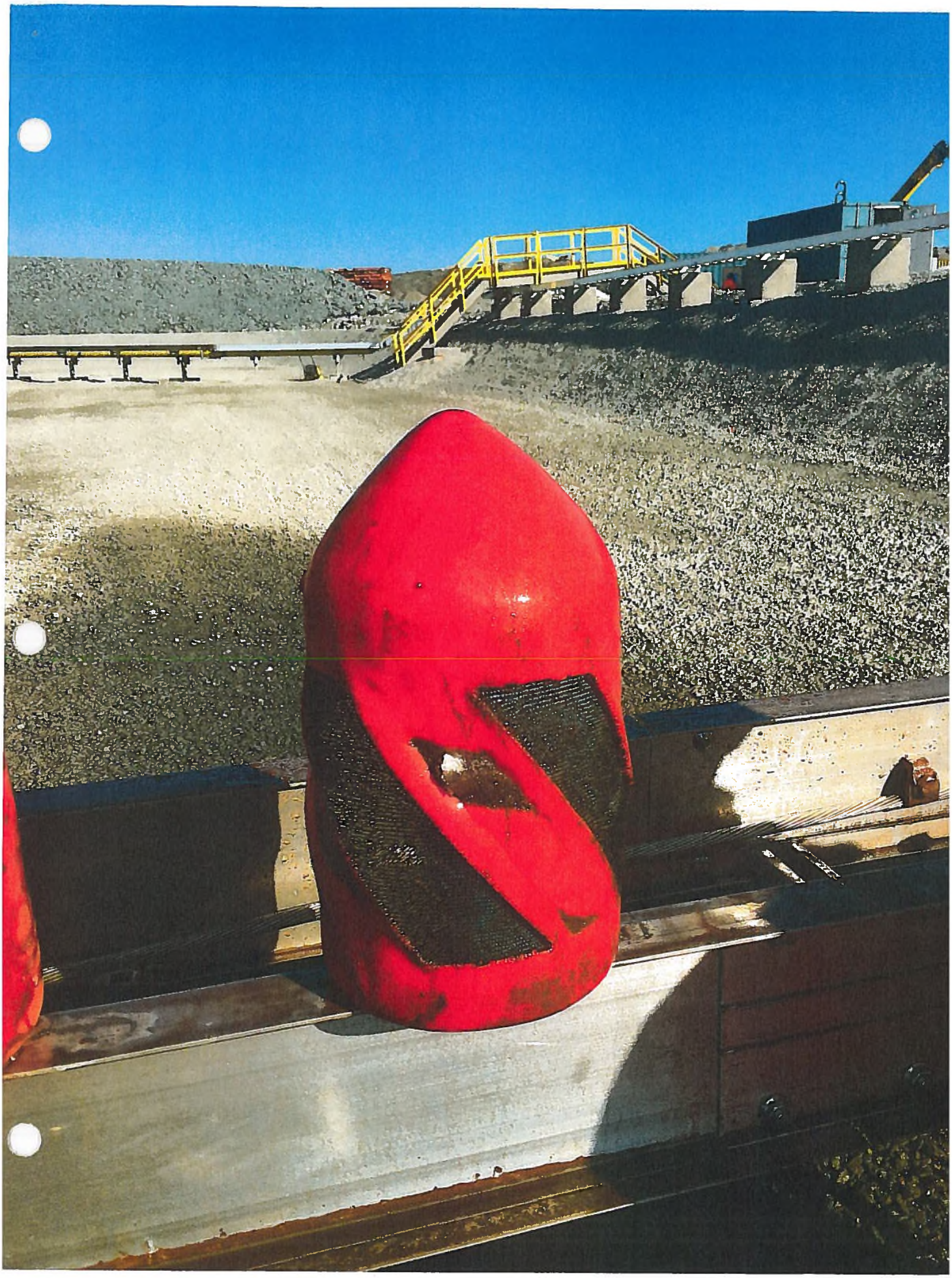

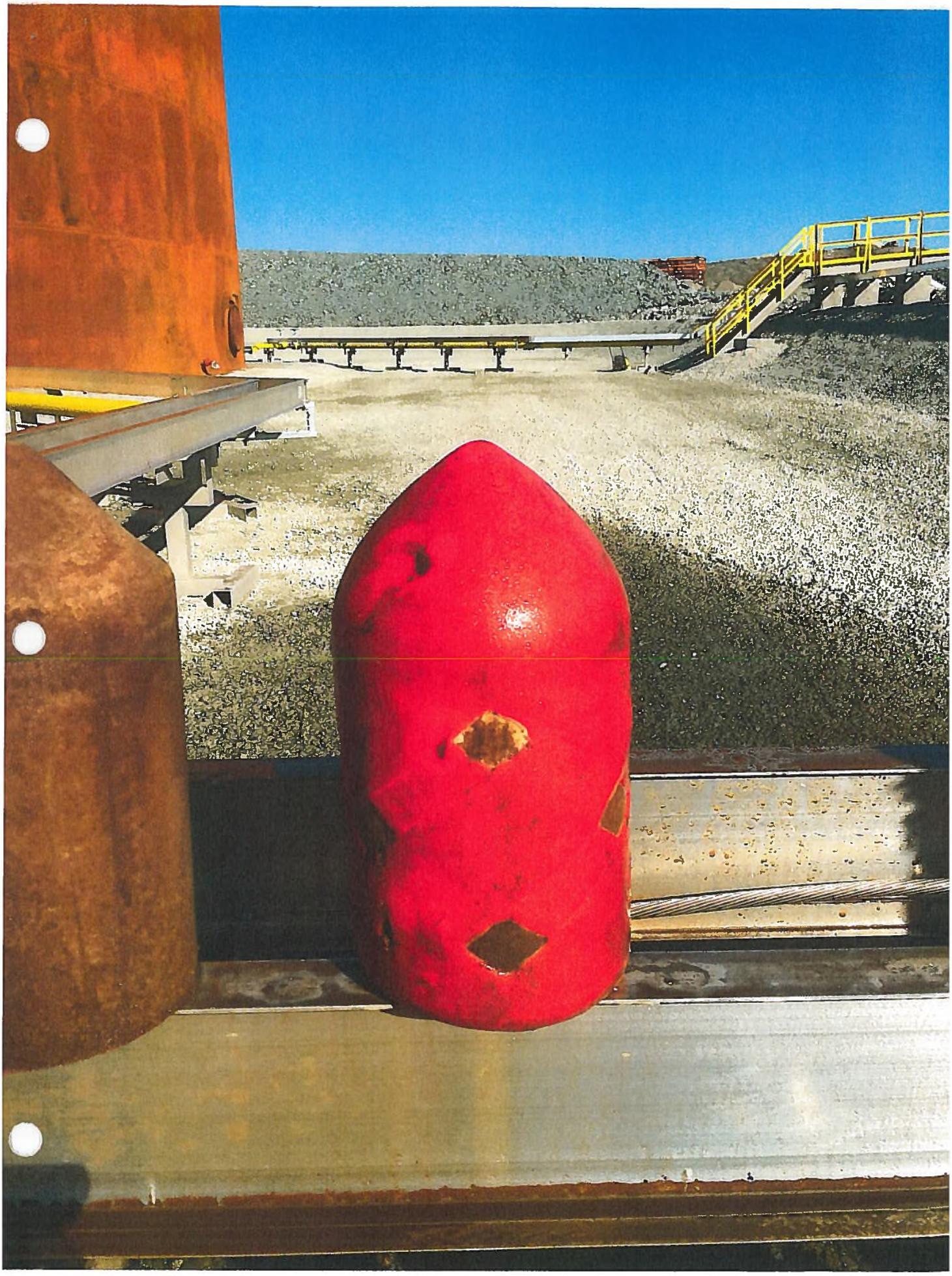

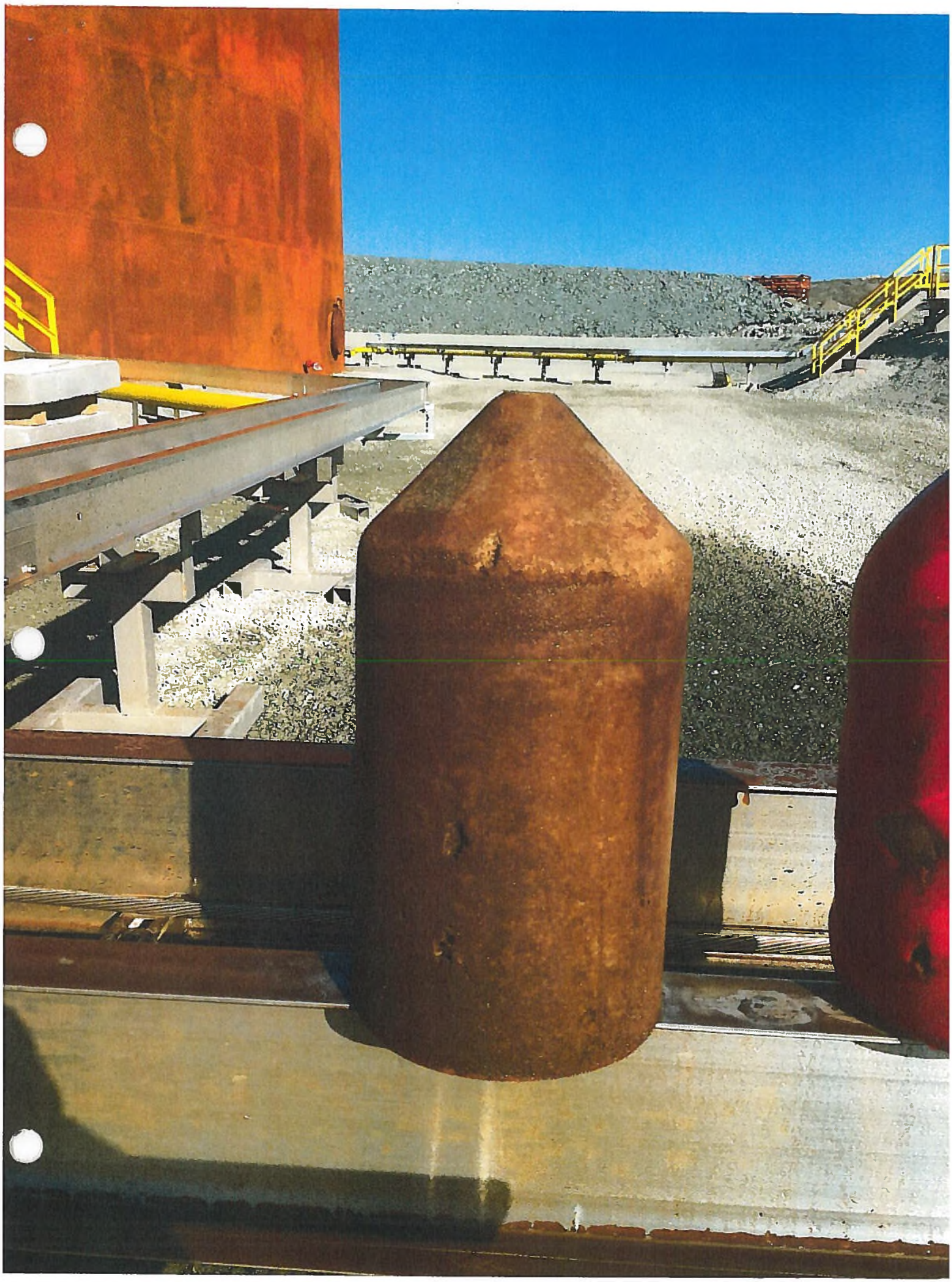

VIKING FIRE PROTECTION INC. 3005 | Pitfield boulevard | Saint-Laurent, Québec, Canada | H4S 1H4
Tel.: 514.332.5110 Fax: 514.332.6260 info@vikingfire.ca

AUTOMATIC DRY CHEMICAL FIRE SUPRESSION SYSTEMS

TECHNICAL MANUAL

FOR

AGNICO EAGLE
MELIADINE PROJECT
KIVALLIQ REGION,
NUNAVUT TERRITORY,
CANADA

C-270-007 – FUEL MODULES

SUBMITTED BY

VIKING FIRE PROTECTION INC.
3005, PITFIELD BOUL.
ST-LAURENT, QUÉBEC,
CANADA H4S 1H4
Tel.: 514-332-5110
Fax: 514-332-6260

CONTRACT N° VMC04097

July 2017

VIKING FIRE PROTECTION INC. 3005 | Pitfield boulevard | Saint-Laurent, Québec, Canada | H4S 1H4
Tel.: 514.332.5110 Fax: 514.332.6260 info@vikingfire.ca

TABLE OF CONTENT

- **Chapter 1**
  General Information
- **Chapter 2**
  Components
- **Chapter 3**
  Design
- **Chapter 4**
  Installation
- **Chapter 5**
  Maintenance

VIKING FIRE PROTECTION INC. 3005 | Pitfield boulevard | Saint-Laurent, Québec, Canada | H4S 1H4
Tel.: 514.332.5110 Fax: 514.332.6260 info@vikingfire.ca

CHAPTER 1

GENERAL INFORMATION

CHAPTER I
General Information

INTRODUCTION

PYRO-CHEM automatic dry chemical fire suppression systems are of the pre-engineered type as defined by the NFPA Standard for Dry Chemical Extinguishing Systems, NFPA-17. The extinguishing units described in this manual are intended to be installed, inspected, and maintained in accordance with NFPA-17. Limitations detailed in this manual have been established through extensive testing by Underwriters Laboratories, Inc. Installation and maintenance of the system must conform to the limitations detailed in this manual and be performed by an Authorized PYRO-CHEM dealer.

The PYRO-CHEM Industrial Fire Suppression System utilizes a either a sodium bicarbonate based dry chemical agent (specifically designed to suppress liquid, gas or electrical fires) or a monoammonium phosphate based dry chemical agent (specifically designed to suppress carbonaceous solid, liquid, gas or electrical fires). The system provides mechanical or electrical automatic actuation and can be manually actuated through a remote mechanical pull station. Upon actuation, the system discharges a pre-determined amount of agent to the hazard area.

The shutdown of fuel and power to the hazard area is required upon system actuation. Exhaust fan(s) in the ventilation system must be shut off during system discharge to allow the proper concentration of agent to build up in the hazard area.

TEMPERATURE LIMITATIONS

The operating temperature ranges of the PYRO-CHEM System are:

Monoammonium Phosphate (ABC) Total Flooding Systems: –20 °F (–28 °C) minimum to 120 °F (49 °C) maximum.

Local Application – Overhead Systems: 32 °F (0 °C) minimum to 120 °F (49 °C) maximum.

Local Application – Tankside Systems: –20 °F (–28 °C) minimum to 120 °F (49 °C) maximum.

UL LISTING

The PYRO-CHEM Industrial Fire Suppression System has been tested to the UL Standard for Pre-Engineered Dry Chemical Extinguishing System Units, UL1254 (Revised Sept. 29, 1998), and Listed by Underwriters Laboratories, Inc.

VIKING FIRE PROTECTION INC. 3005 | Pitfield boulevard | Saint-Laurent, Québec, Canada | H4S 1H4
Tel.: 514.332.5110 Fax: 514.332.6260 info@vikingfire.ca

CHAPTER 2

COMPONENTS

CHAPTER II
COMPONENTS

CYLINDERS & VALVE

PYRO-CHEM automatic dry chemical systems are supplied in 17 pound, 25 pound, 35 pound, 50 pound, and 70 pound capacity cylinders. They are the Models PCI-15ABC, PCI-17ABC, PCI-25sBC, PCI-25sABC, PCI-35ABC, PCI-50sBC, PCI-50sABC, and PCI-70ABC. Each cylinder must be separately piped to its own nozzles. All models are charged with dry nitrogen to 350 psi @ 70° F. These systems are for indoor hazard protection only. The particular models are as follows:

PCI-15ABC. This system is charged with 12.5 pounds of monoammonium phosphate-based dry chemical, PYRO-CHEM Part No. 550170. It is Listed for use in total flooding applications. It is rated to protect Class "A," "B," and "C" hazards.

PCI-17ABC. This system is charged with 17 pounds of monoammonium phosphate based dry chemical, PYRO-CHEM Part No. 550170. It is Listed for use in total flooding applications. It is rated to protect Class "A," "B," and "C" hazards.

PCI-25sBC. This system is charged with 25 pounds of regular sodium bicarbonate based dry chemical, PYRO-CHEM Part No. 550162. It is Listed for use in local overhead and local tankside applications. It is rated to protect only Class "B" and "C" hazards.

PCI-25sABC. This system is charged with 25 pounds of monoammonium phosphate based dry chemical, PYRO-CHEM Part No. 550170. It is Listed for use in local overhead and local tankside applications. It is rated to protect Class "A," "B," and "C" hazards.

PCI-35ABC. This system is charged with 35 pounds of monoammonium phosphate based dry chemical, PYRO-CHEM Part No. 550170. It is Listed for use in total flooding applications. It is rated to protect Class "A," "B," and "C" hazards.

PCI-50sBC. This system is charged with 50 pounds of regular sodium bicarbonate based dry chemical, PYRO-CHEM Part No. 550162. It is Listed for use in local overhead and local tankside applications. It is rated to protect only Class "B" and "C" hazards.

PCI-50sABC. This system is charged with 50 pounds of monoammonium phosphate based dry chemical, PYRO-CHEM Part No. 550170. It is Listed for use in local overhead and local tankside applications. It is rated to protect Class "A," "B," and "C" hazards.

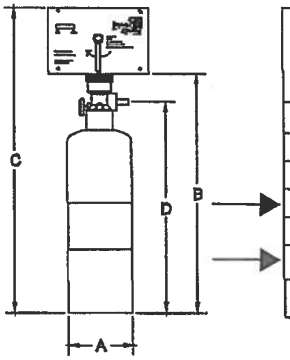

MODEL NO.	A	B	C	D	WEIGHT	MOUNTING BRACKET USED
PCI-15ABC	6.00	21.44	27.19	18.69	30 lbs.	MB-15
PCI-17ABC	8.00	24.81	30.56	22.06	50 lbs.	MB-15
PCI-25sABC/BC	8.00	24.81	30.56	22.06	58 lbs.	MB-15
PCI-35ABC	10.00	29.94	35.69	27.18	71 lbs.	MB-1
PCI-50sABC/BC	10.00	29.94	35.69	27.18	86 lbs.	MB-1
PCI-70ABC	12.00	35.31	41.06	32.56	130 lbs.	MB-1
ALL DIMENSIONS IN INCHES						

Figure 2-1 Cylinder and Valve Assemblies
002841PC

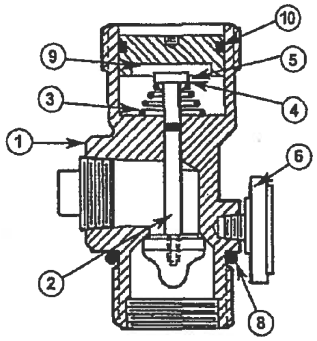

ITEM	PART NO.	DESCRIPTION
1	- - -	VALVE BODY
2	- - -	VALVE STEM & CAP ASSEMBLY
3	550022	CONICAL SPRING
4	550261	RETAINING WASHER
5	550024	E-RING
6	550025	PRESSURE GAUGE
7	550026	HIGH TEMPERATURE RELIEF PLUG
8	550029	VALVE BODY O-RING
9	550805	PISTON
10	550636	PISTON O-RING

Figure 2-2 Valve Cross Section
002842PC

PCI-70ABC. This system is charged with 70 pounds of monoammonium phosphate based dry chemical, PYRO-CHEM Part No. 550170. It is Listed for use in total flooding applications. It is rated to protect Class "A," "B," and "C" hazards.

The dimensions of the PCI-15/17/25s/35/50s/70 cylinder and valve assemblies are shown in Figure 2-1. The cylinder is manufactured, tested, and marked in accordance with DOT specification 4BW350.

The valve shown in Figure 2-2 is a pressure sealed, poppet type valve. It is used on the PCI-15/17/25s/35/50s/70, PAC-10, and PAC-200 cylinders. The valve discharge port is 3/4 in. NPT.

NOZZLES

Nozzles have been developed for total flooding, local application overhead, and local application tankside. The Model NF-ABC nozzle is used for total flooding protection. The Model N-SCR nozzle is used for screening the opening. The Model N-OTF nozzle is used for overhead total flooding application in the work area. The Model N-PLU nozzle is used for overhead application in the plenum area. The Model N-DCT nozzle is used for exhaust duct protection. The Models N-LA-ABC and N-LA-BC nozzles are used for local overhead application. The Model N-TS nozzle is used for local tankside application. See Figure 2-3.

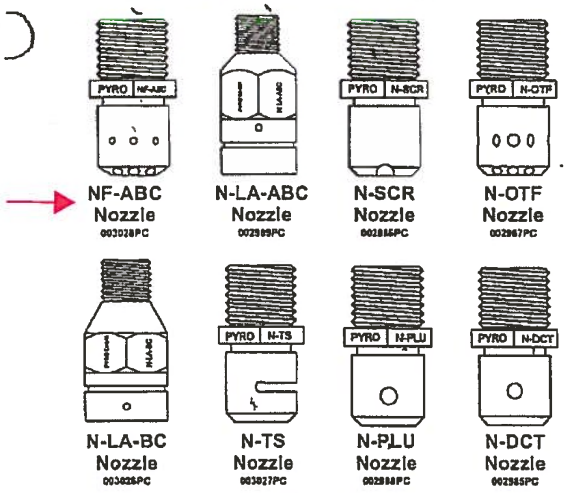

Figure 2-3. Nozzles.

CYLINDER BRACKETING

Vertical wall mounting for the PCI-15ABC, PCI-17ABC, and PCI-25sBC/ABC, is provided by the Model MB-15 mounting bracket kit. Vertical wall mounting for the PCI-35ABC, PCI-50sBC/ABC and PCI-70ABC is provided by the Model MB-1 mounting bracket kit. See Figure 2-4.

For vertical floor mounting of the PCI-15ABC, PCI-17ABC, PCI-25sBC and PCI-25sABC, an 8 in. unistrut type mounting bracket is available, the Model MB-U8.

For vertical floor mounting of the PCI-35ABC, PCI-50sBC, and PCI-50sABC, a 10 in. unistrut type mounting bracket is available, the Model MB-U10.

For vertical floor mounting of the PCI-70ABC, a 12 in. unistrut type mounting bracket is available, the Model MB-U12.

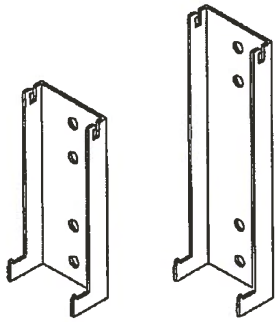

Figure 2-4 Mounting Brackets MB-15 and MB-1.
002843PC

MODEL MCH3 – MECHANICAL CONTROL HEAD

The Model MCH3 mechanical control head is a fully mechanical control head which can be connected to the PCI-15/17/25s/35/50s/70 cylinder valve. This control head will support a fusible link detection system, a remote mechanical pull station (Model RPS-M), and a mechanical or electric gas shut-off valve. A micro switch (Model MS-SPDT, MS-DPDT, MS-3PDT, or MS-4PDT) can be ordered separately and field installed. It is equipped with a local manual control handle that allows for mechanical system actuation. Operation of the local manual control requires removing the pull pin and rotating the handle clockwise. The Model MCH3 control head can actuate a maximum of five (5) cylinders. See Figure 2-5.

MODEL MCH3 CONTROL HEAD

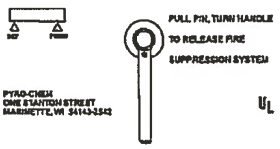

Figure 2-5. Mechanical Control Head.
004796PC

MODEL ECH3 – ELECTRIC CONTROL HEAD

The Model ECH3 electric control head is an electrically operated control head which can be connected to the PCI-15/17/25s/35/50s/70 cylinder valve. This control head will support an electric thermal detection system, a remote mechanical pull station (Model RPS-M), and an electric gas shut-off valve. It will not support a fusible link detection system. A micro switch (Model MS-DPDT) is included. The Model ECH3 control head is available in both 120 VAC (Model ECH3-120) and 24 VDC (Model ECH3-24). It is equipped with a local manual control handle that allows for mechanical system actuation. Operation of the local manual control requires removing the pull pin and rotating the handle clockwise. The Model ECH3 control head can actuate a maximum of five (5) cylinders. See Figure 2-6.

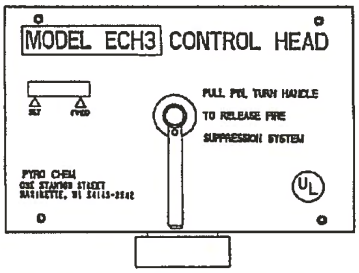

Figure 2-6. Electric Control Head.
004789PC

MODEL NMCH3 – MECHANICAL CONTROL HEAD

The Model NMCH3 Mechanical Control Head is a fully mechanical control head which can be connected to the PCI-15/17/25s/35/50s/70 cylinder valve. This control head will support a fusible link detection system, a remote mechanical pull station (Model RPS-M), and a mechanical or electric shut-off valve. A micro switch (Model MS-SPDT, MS-DPDT, MS-3PDT, or MS-4PDT) can be ordered separately and field installed. There is no local manual actuation for the Model NMCH3. The Model NMCH3 control head can actuate a maximum of five (5) cylinders. See Figure 2-6a.

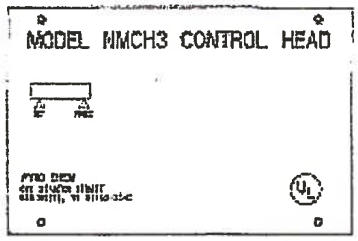

Figure 2-6a. Mechanical Control Head.
006843PC

MODEL MB-P2 - CONTROL HEAD MOUNTING BRACKET

The Model MB-P2 mounting bracket must be used to mount the Model MCH3, NMCH3 or ECH3 control head if the control head is not mounted directly on a cylinder valve. See Figure 2-7.

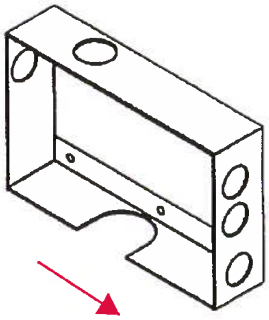

Figure 2-7. Model MB-P2 – Control Head Mounting Bracket.
002845PC

CAUTION

Do not screw the control head directly to a wall as this will warp the control head, not allowing the mechanism to actuate.

MODEL PDA-D2 PNEUMATIC ACTUATING ADAPTOR

The Model PDA-D2 Pneumatic Actuating Adaptor is used to open the cylinder valve when the system is actuated. It must be installed on the valve of each cylinder unless a control head has been mounted on the cylinder valve. See Figure 2-7a.

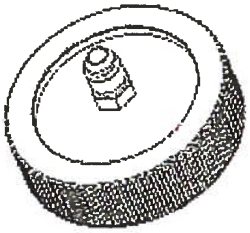

Figure 2-7a. Model PDA-D2 Pneumatic Actuating Adaptor.
006886PC

DETECTION EQUIPMENT

1. Model FLK-1.

The Model FLK-1 fusible link kit includes a 10 in. steel bracket, two (2) 1/2 in. EMT connectors, two (2) cable crimps, and two (2) "S" hooks. Fusible links must be ordered separately. See Figure 2-10.

2. Model FLK-1A.

The Model FLK-1A fusible link kit includes an 8 in. steel bracket, two (2) 1/2 in. EMT connectors, two (2) cable crimps, and two (2) "S" hooks. Fusible links must be ordered separately.

3. Model FLH-1.

The Model FLH-1 fusible link hanger is an accessory designed to simplify the installation of fusible links in the fusible link line. It can be used with the Model FLK-1/1A fusible link kits (kits must be ordered separately). The Fusible Link Hanger makes it possible to install fusible links without cutting and crimping loops in the fusible link line for each link. They are available in packages of 25 (FLH-25) only. See Figure 2-11.

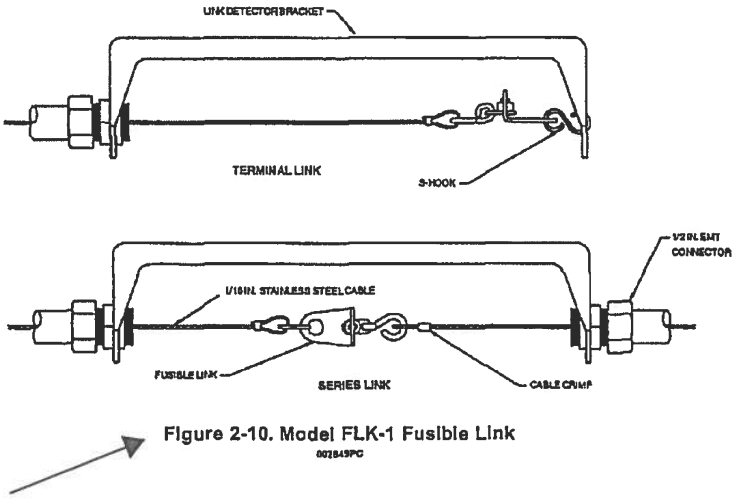

Figure 2-10. Model FLK-1 Fusible Link
002849PC

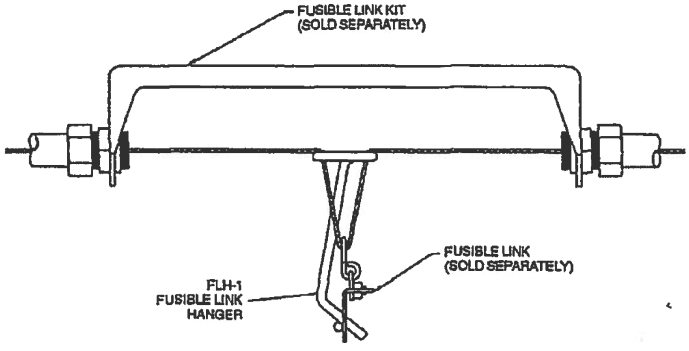

Figure 2-11. Model FLH-1 Fusible Link Hanger
002850PC

4. Fusible Links.

The fusible link is designed to separate at a specific temperature, releasing tension from the fusible link line, causing system actuation. See Figure 2-12.

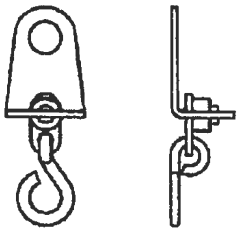

Figure 2-12. ML Style Fusible Link.
002851PC

After determining the maximum ambient temperature at the fusible link location, select the correct fusible link according to the temperature condition chart below:

Fusible Link Model No.	Maximum Ambient Temperature
FL-165	100° F. (38° C.)
FL-212	150° F. (66° C.)
FL-280	225° F. (107° C.)
FL-360	290° F. (143° C.)
FL-450	360° F. (182° C.)
FL-500	400° F. (204° C.)

5. Thermal Detectors.

Rate compensated temperature thermal detectors are normally open, mechanical contact closure switches designed to operate at a factory preset temperature. They are available in six preset temperatures which meet NFPA standards and are UL Listed and FM Approved.

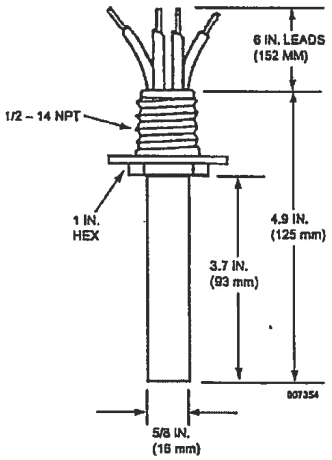

Figure 2-12a. Thermal Detector.

After determining the maximum ambient temperature at the thermal detector location, select the correct thermal detector according to the temperature condition chart below:

Thermal Detector Model No.	Maximum Ambient Temperature
TD-140	100° F. (38° C.)
TD-190	150° F. (66° C.)
TD-225	185° F. (85° C.)
TD-325	285° F. (141° C.)
TD-450	410° F. (210° C.)
TD-600	560° F. (293° C.)

REMOTE MECHANICAL PULL STATION

Model RPS-M

Remote manual control for system releasing devices is provided by the Model RPS-M remote mechanical pull station. It is connected to the system releasing device by stainless steel cable. This cable is enclosed in 1/2 in. EMT with corner pulleys at each change in direction. The remote mechanical pull station shall be located at the point of egress from the hazard area. See Figure 2-13.

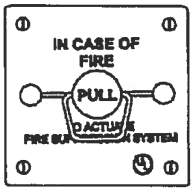

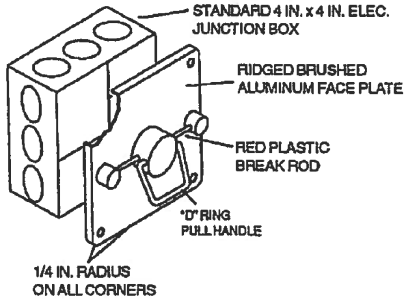

Figure 2-13. Model RPS-M Mechanical Pull Station.
002852PC

CORNER PULLEYS

1. Model SBP-1.

A corner pulley is used whenever a change in stainless steel cable direction is required. The Model SBP-1 corner pulley is equipped with a set screw fitting for connection to 1/2 in. EMT. See Figure 2-15.

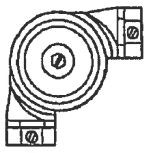

Figure 2-15. Model SBP-1 Corner Pulley.
000180

2. Model CBP-1.

A corner pulley is used whenever a change in stainless cable direction is required. The Model CBP-1 is a grease-tight corner pulley designed for areas likely to experience excessive deposit build-up. It is equipped with a compression fitting for connection to 1/2 in. EMT. See Figure 2-16.

Note: The Model CBP-1 is not a liquid tight sealing device.

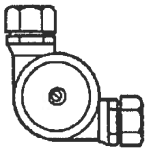

Figure 2-16. Model CBP-1 Corner Pulley.
000181

3. Model WBP-1.

A corner pulley is used whenever a change in stainless cable direction is required. The Model WBP-1 is a liquid-tight corner pulley designed for areas likely to experience excessive moisture build-up. It is equipped with a female pipe thread for connection to 1/2 in. rigid conduit. See Figure 2-17.

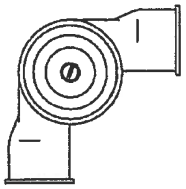

Figure 2-17. Model WBP-1 Corner Pulley.
000194PC

TEE PULLEY

The Model TP-1 tee pulley is used to connect two mechanical gas valves or two remote mechanical pull stations to a single control head. The tee pulley replaces two standard 90° corner pulleys. See Figure 2-18.

CAUTION

The Tee Pulley must never be used to connect multiple fusible link lines to a single control head.

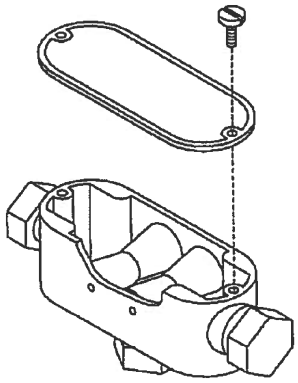

Figure 2-18. Model TP-1 Tee Pulley.
002687PC

SWING CHECK VALVE

The Swing Check Valve, Part No. 417788, is required when piping a main and reserve Monarch tank on the same distribution piping. It allows the dry chemical agent to discharge through the agent piping leading to the discharge nozzles, while preventing it from flowing into the piping from the other tank. The swing check valve body is constructed of brass with a 1 in. NPT female thread. See Figure 2-19.

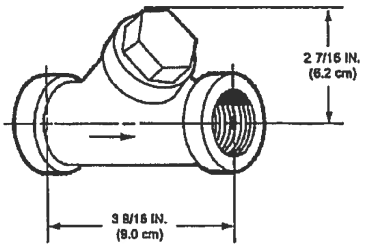

Figure 2-19. Swing Check Valve.
000430

ELECTRICAL SWITCHES

The electrical switches are intended for use with electric gas valves, alarms, contactors, lights, contractor supplied electric power shut-off devices and other electrical devices that are designed to shut off or turn on when the system is actuated.

Switches are available in kits: One Switch Kit, Part No. 551154; Two Switch Kit, Part No. 551155; Three Switch Kit, Part No. 551156, and Four Switch Kit, Part No. 551157. Mounting hardware and 12 in. wire assemblies are provided with each kit. Each switch has a set of single-pole, double-throw contacts rated:

UL/cUL/CSA Rating	ENEC Rating
250 VAC, 21A Resistive	IE4T105μ Approved
250 VAC, 2 HP	250V, 21A Resistive
125 VAC, 1 HP	8A Motor Load

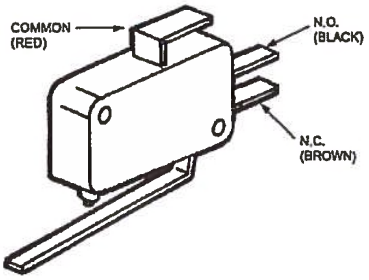

Figure 2-20a. Model MS-SPDT Micro Switch.
001812

The Alarm Initiating Switch Kit, Part No. 550077, can be field mounted within the control head. This switch must be used to close a supervised alarm circuit to the building main fire alarm panel when the control head actuates. This action will signal the fire alarm panel that there was a system actuation in the hazard area. The switch kit contains all necessary mounting components along with a mounting instruction sheet. The switch is rated 50 mA, 28 VDC.

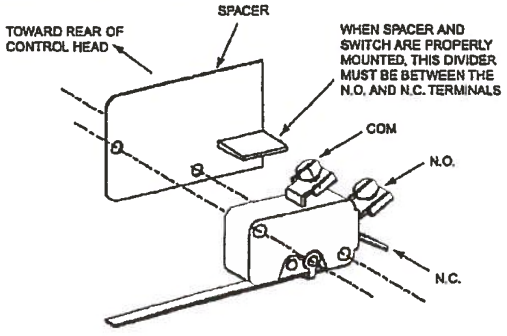

Figure 2-20b. Alarm Initiating Switch.
004890

See NFPA 72, "National Fire Alarm Code," Initiating Devices section, for the correct method of wiring connection to the fire alarm panel.

MODEL SM-120/24 SOLENOID MONITOR

The Model SM-120/24 solenoid monitor is used in conjunction with the Model ECH3 control head to supervise the actuation and detection circuits. In the event of a problem in the circuit, a light on the monitor goes out. The Model SM-120 is used with the Model ECH3-120 control head. The Model SM-24 is used with the Model ECH3-24 control head. Two sets of NO/NC dry contacts are provided. The unit mounts directly to a three gang wall outlet box. The Model SM-120 acts as a reset relay when used with an electric gas valve. Electric gas valve wiring instructions are provided in the installation section of this manual. See Figure 2-21.

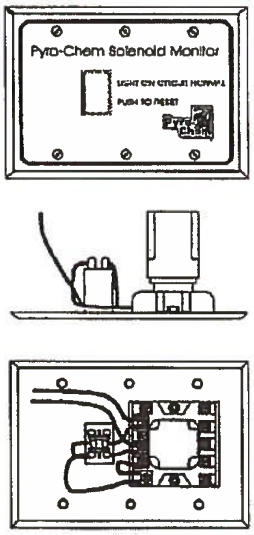

Figure 2-21. Model SM-24/120 Solenoid Monitor.
002868PC

COMPONENT LIST
GENERAL PURPOSE SYSTEM

MODEL NO.	DESCRIPTION	PART NO.
PCI-15ABC	15 lb. ABC Cylinder and Valve Assembly	550388
PCI-17ABC	17 lb. ABC Cylinder and Valve Assembly	551654
PCI-25sBC	25 lb. BC Cylinder and Valve Assembly	550391
PCI-25sABC	25 lb. ABC Cylinder and Valve Assembly	550390
PCI-35ABC	35 lb. ABC Cylinder and Valve Assembly	551097
PCI-50sBC	50 lb. BC Cylinder and Valve Assembly	550393
PCI-50sABC	50 lb. ABC Cylinder and Valve Assembly	550392
PCI-70ABC	70 lb. ABC Cylinder and Valve Assembly	551094
PAC-10	Pneumatic Actuating Cylinder	550104
PAC-200	Pneumatic Actuating Cylinder	550690
MB-P2	Control Head Mounting Bracket	550853
MB-15	Mounting Bracket (PCI-15,17,25s Cylinders)	550054
MB-1	Mounting Bracket (PCI-35,70 Cylinders)	550053
MB-U8	8 In. Unistrut Mounting Bracket	550324
MB-U10	10 in. Unistrut Mounting Bracket	550383
MB-U12	12 In. Unistrut Mounting Bracket	550638
MCH3	Mechanical Control Head	551200
NMCH3	Mechanical Control Head	551203
ECH3-24	24VDC Electrical Control Head	551201
ECH3-120	120VDC Electrical Control Head	551202
– – –	8 In. S.S. Actuation Hose	417582
– – –	16 In. S.S. Actuation Hose	31809
– – –	24 In. S.S. Actuation Hose	32336
– – –	42 In. S.S. Actuation Hose	430815
– – –	Male Elbow	31810
– – –	Male Tee	31811
– – –	Male Straight Connector	32338
PDA-D2	Pneumatic Actuating Adaptor	550829
– – –	Swing Check Valve	417788
NF-ABC	Nozzle Assembly	551678
N-LA-ABC	Nozzle Assembly	550646
N-LA-BC	Nozzle Assembly	550342
N-TS	Nozzle Assembly	550337
RPS-M	Remote Mechanical Pull Station	551074
RPS-E2	Remote Electric Pull Station	551166
FKL-1	10 In. Fusible Link Bracket	550131
FKL-1A	8 In. Fusible Link Bracket	550132
FLH-25	Fusible Link Hanger (25)	550876
FL-165	165° F Fusible Link	550368
FL-212	212° F Fusible Link	550365
FL-280	280° F Fusible Link	550366
FL-360	360° F Fusible Link	550009
FL-450	450° F Fusible Link	550367
FL-500	500° F Fusible Link	56816
SM-24	24VDC Solenoid Monitor	550303
SM-120	120VAC Solenoid Monitor	550302
TD-140	140° F Thermal Detector	550351
TD-190	190° F Thermal Detector	550352
TD-225	225° F Thermal Detector	550353
TD-325	325° F Thermal Detector	550354
TD-450	450° F Thermal Detector	550355
TD-600	600° F Thermal Detector	550356
GV-75	3/4 In. Mechanical Gas Valve	550593
GV-100	1 In. Mechanical Gas Valve	550594

COMPONENT LIST
GENERAL PURPOSE SYSTEM (Continued)

MODEL NO.	DESCRIPTION	PART NO.
GV-125	1 1/4 In. Mechanical Gas Valve	550595
GV-150	1 1/2 In. Mechanical Gas Valve	550596
GV-200	2 In. Mechanical Gas Valve	551049
GV-250	2 1/2 In. Mechanical Gas Valve	550185
GV-300	3 In. Mechanical Gas Valve	550186
EGVSO-75	3/4 In. Electric Gas Valve	550358
EGVSO-100	1 In. Electric Gas Valve	550359
EGVSO-125	1 1/4 In. Electric Gas Valve	550360
EGVSO-150	1 1/2 In. Electric Gas Valve	550361
EGVSO-200	2 In. Electric Gas Valve	550362
EGVSO-250	2 1/2 In. Electric Gas Valve	550363
EGVSO-300	3 In. Electric Gas Valve	550385
MS-SPDT	Micro-Switch – Single Pole Double Throw	551154
MS-DPDT	Micro-Switch – Double Pole Double Throw	551155
MS-3PDT	Micro-Switch – 3 Pole Double Throw	551156
MS-4PDT	Micro-Switch – 4 Pole Double Throw	551157
– – –	Alarm Initiating Switch	550077
PS-SPDT-XP	Pressure Switch – Single Pole Double Throw	550052
CO2-6	6 x CO_2 Cartridge	551059
CBP-1	Compression Bearing Corner Pulley	423250
SBP-1	Screw Bearing Corner Pulley	415670
WBP-1	Weather Proof Corner Pulley (10 Per Package)	550983
TP-1	Tee Pulley	550166
WC-100	Oval Sleeve Crimps (100 Per Package)	550122
– – –	Stop Sleeves (Pack of 10)	24919
– – –	Valve – Piston O-Ring	550636
– – –	Valve – Stem Washer	550284
– – –	Valve – Seat Washer	550021
– – –	Valve – Stem Head	550020
– – –	Valve – Body O-Ring	550029
– – –	Valve – Pressure Gauge	550025
– – –	Valve – Stem	550806
– – –	Valve – Stem O-Ring	550028
– – –	Valve – Conical Spring	550022
– – –	Valve – Piston	550805
FR-25sBC	Flow Restrictor	550235
– – –	Pressure Bleed Down Adaptor Assembly	551736
– – –	Dry Valve Rebuilding Kit	550037
– – –	Recharge Adaptor	550130
– – –	Dry Valve Hydrotest Adaptor	552182

VIKING FIRE PROTECTION INC. 3005 Pitfield boulevard Saint-Laurent, Québec, Canada H4S 1H4
Tel.: 514.332.5110 Fax: 514.332.6260 info@vikingfire.ca

CHAPTER 3

DESIGN

TABLE 3-1

Total Flooding Nozzle Protection Chart

Maximum Dimensions in feet/nozzle for one (1) Model NF-ABC

Side 1 (ft.)	Nozzle Height (ft.)	Maximum Side 2 (ft.)	Side 1 (ft.)	Nozzle Height (ft.)	Maximum Side 2 (ft.)	Side 1 (ft.)	Nozzle Height (ft.)	Maximum Side 2 (ft.)	Side 1 (ft.)	Nozzle Height (ft.)	Maximum Side 2 (ft.)
3	8	16.70	7	8	15.46	11	8	12.92	15	8	7.94
	9	16.70		9	15.46		9	12.92		9	7.94
	10	16.70		10	15.46		10	11.78		10	7.94
	11	16.70		11	15.46		11	10.71		11	7.85
	12	16.70		12	15.43		12	9.82		12	7.20
	13	16.70		13	14.24		13	9.06		13	6.65
	14	16.70		14	13.22		14	8.42		14	6.17
	15	16.70		15	12.34		15	7.85		15	5.76
	16	16.70		16	11.57		16	7.36		16	5.40
	17	16.70		17	10.89		17	6.93		17	5.08
	18	16.70		18	10.29		18	6.55		18	4.80
	19	16.70		19	9.74		19	6.20		19	4.55
	20	16.70		20	9.26		20	5.89		20	4.32
4	8	16.49	8	8	14.97	12	8	12.00	16	8	5.66
	9	16.49		9	14.97		9	12.00		9	5.66
	10	16.49		10	14.97		10	10.80		10	5.66
	11	16.49		11	14.73		11	9.82		11	5.66
	12	16.49		12	13.50		12	9.00		12	5.66
	13	16.49		13	12.46		13	8.31		13	5.66
	14	16.49		14	11.57		14	7.71		14	5.66
	15	16.49		15	10.80		15	7.20		15	5.40
	16	16.49		16	10.13		16	6.75		16	5.06
	17	16.49		17	9.53		17	6.35		17	4.76
	18	16.49		18	9.00		18	6.00		18	4.50
	19	16.49		19	8.53		19	5.68		19	4.26
	20	16.20		20	8.10		20	5.40		20	4.05
5	8	16.22	9	8	14.39	13	8	10.91			
	9	16.22		9	14.39		9	10.91			
	10	16.22		10	14.39		10	9.97			
	11	16.22		11	13.09		11	9.06			
	12	16.22		12	12.00		12	8.31			
	13	16.22		13	11.08		13	7.67			
	14	16.22		14	10.29		14	7.12			
	15	16.22		15	9.60		15	6.65			
	16	16.20		16	9.00		16	6.23			
	17	15.25		17	8.47		17	5.86			
	18	14.40		18	8.00		18	5.54			
	19	13.64		19	7.58		19	5.25			
	20	12.96		20	7.20		20	4.98			
6	8	15.87	10	8	13.71	14	8	9.59			
	9	15.87		9	13.71		9	9.59			
	10	15.87		10	12.96		10	9.26			
	11	15.87		11	11.78		11	8.42			
	12	15.87		12	10.80		12	7.71			
	13	15.87		13	9.97		13	7.12			
	14	15.43		14	9.26		14	6.61			
	15	14.40		15	8.64		15	6.17			
	16	13.50		16	8.10		16	5.79			
	17	12.71		17	7.62		17	5.45			
	18	12.00		18	7.20		18	5.14			
	19	11.37		19	6.82		19	4.87			
	20	10.80		20	6.48		20	4.63			

PCI-17ABC with 1 nozzle

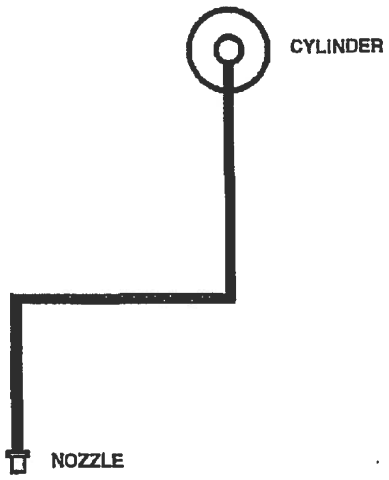

Total Flooding Piping Limits PCI-17ABC

Cylinder Size	Nozzle Quantity	Nozzle Type	Piping Section	Size	Length Maximum	Elbows Maximum
▸ PCI-17ABC	1	NF-ABC	Cylinder to Nozzle	3/4 in.	30 ft.	4

NOTE:

1. PCI-17ABC uses one (1) NF-ABC nozzle.
▸ 2. A Main/Reserve Swing Check Valve, Part No. 417788, may be located between the cylinder and T1.

PCI-35ABC with 2 nozzles

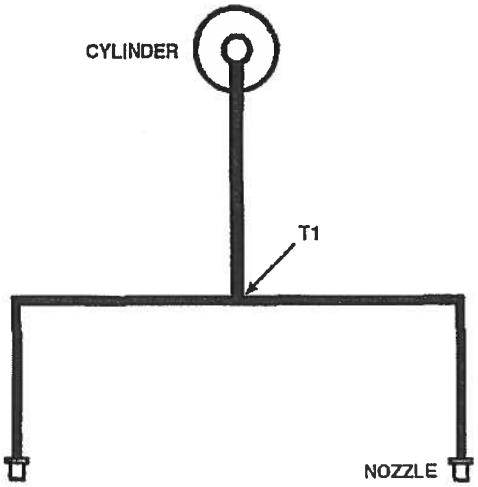

Total Flooding Piping Limits PCI-35ABC

Cylinder Size	Maximum Nozzle Quantity	Nozzle Type	Piping Section	Size	Length Maximum	Elbows Maximum
PCI-35ABC	2	NF-ABC	Cylinder to T1	3/4 in.	30 ft. (9.1 m)	4
			T1 to Nozzle	3/4 in.	9 ft. (2.7 m)	2

NOTE:

1. PCI-35ABC must always use two (2) NF-ABC nozzles.
2. System piping must be balanced. Balanced piping is that in which the difference between the shortest actual pipe length from T1 to nozzle and the longest actual pipe length from T1 to nozzle does not exceed 10% of the longest actual pipe length from T1 to nozzle. The number and type of fittings from all last tee to nozzle sections must be equal.
3. A Main/Reserve Swing Check Valve, Part No. 417788, may be located between the cylinder and T1.

PCI-70ABC with 4 nozzles

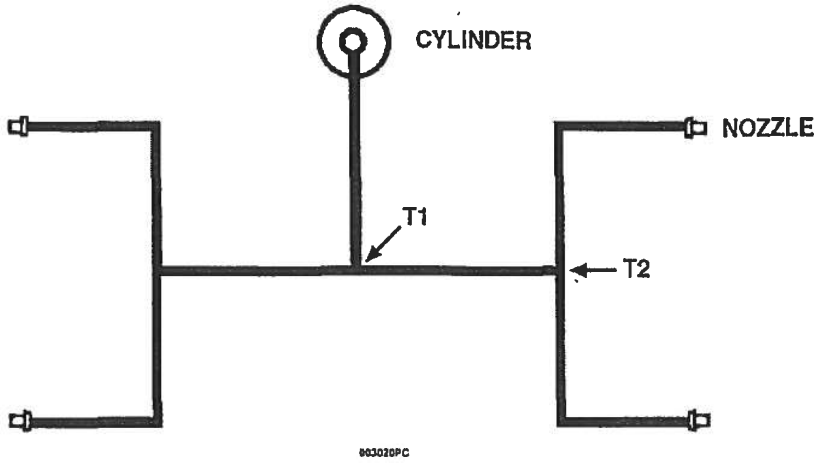

Total Flooding Piping Limits PCI-70ABC

Cylinder Size	Maximum Nozzle Quantity	Nozzle Type	Piping Section	Size	Length Maximum	Elbows Maximum
PCI-70ABC	4	NF-ABC	Cylinder to T1	1 in.	30 ft. (9.1 m)	3
			T1 to T2	1 in.	14 ft. (4.3 m)	2
			T2 to Nozzle	3/4 in.	9 ft. (2.7 m)	2

NOTE:

1. PCI-70ABC must always use four (4) NF-ABC nozzles.
2. System piping must be balanced. Balanced piping is that in which the difference between the shortest actual pipe length from T1 to nozzle and the longest actual pipe length from T1 to nozzle does not exceed 10% of the longest actual pipe length from T1 to nozzle. T2 to nozzle on the same branch must not exceed 10% of each other. The number and type of fittings from all last tee to nozzle sections must be equal.
3. A Main/Reserve Swing Check Valve, Part No. 417788, may be located between the cylinder and T1.

Detector Placement.

Thermal detectors are required in all hazard areas protected by the PYRO-CHEM Industrial Fire Suppression Systems if automatic system operation is required. Either mechanical or electrical thermal detectors can be used for automatic system operation. Mechanical detectors (fusible links) are used in conjunction with the PYRO-CHEM Models MCH3 and NMCH3 control devices. Electrical detectors are used in conjunction with the PYRO-CHEM Models ECH3-24 and ECH3-120 Control Heads.

TOTAL FLOODING (DETECTOR SPACING) – THERMAL

Ceiling Height	Spacing
Up to 14 ft. (4.2 m) Height	15 ft. (4.5 m) maximum between detectors 7 ft. 6 in. (2.3 m) max. from wall 225 sq. ft. (20.9 sq. m) max. coverage per detector
Greater than 14 ft. (4.2 m) up to 20 ft. (6.1 m) height	13 ft. (3.9 m) maximum between detectors 6 ft. 6 in. (1.9 m) max. from wall 169 sq. ft. (15.7 sq. m) max. coverage per detector
Greater than 20 ft. (6.9 m) up to 24 ft. (7.3 m)	11 ft. (3.4 m) max. between detectors 5 ft. 6 in. (1.7 m) max. from wall 121 sq. ft. (11.2 sq. m) max. coverage per detector
Greater than 24 ft. (7.3 m) up to 30 ft. (9.1 m)	9 ft. (2.7 m) max. between detectors 4 ft. 6 in. (1.4 m) max. from wall 81 sq. ft. (7.5 sq. m) max. coverage per detector

NOTE: For sloped ceiling (peaked type or shed type) installations, refer to NFPA-72, "National Fire Alarm Code" for detailed spacing requirements.

LOCAL APPLICATION – OVERHEAD (DETECTOR SPACING) – Maximum spacing per detector is 100 ft.^{2} (9.3 m^2) or 5 ft. (1.5 m) from edge of hazard and 10 ft. (3.1 m) between detectors. When detectors are mounted below the ceiling in an open area, heat traps are recommended.

LOCAL APPLICATION – TANKSIDE (DETECTOR SPACING) – Detectors can be located either near the inner tank wall and flammable liquid surface or above the tank. If located above the tank, the rules for local application overhead would apply. If located on the tank wall, the detectors can be mounted horizontally or vertically in the freeboard area, but must be protected from damage during normal working operations. The maximum spacing per detector is 5 ft. (1.5 m) from edge of hazard and 10 ft. (3.1 m) between detectors.

A temperature survey must be performed to determine the maximum ambient temperature of the hazard survey. See Temperature Chart in Chapter 2 – Components.

TOTAL FLOODING (DETECTOR SPACING) – FUSIBLE LINKS

Ceiling Height	Spacing
Up to 14 ft. (4.2 m) Height	10 ft. (3.0 m) maximum detectors 5 ft. (1.5 m) max. from a wall* 100 sq. ft. (9.2 sq. m) max. coverage per detector
Greater than 14 ft. (4.2 m) up to 20 ft. (6.1 m) height	8 ft. (2.4 m) max. between detectors 4 ft. (1.2 m) max. from wall 64 sq. ft. (5.9 sq. m) max. coverage per detector

NOTE: For sloped ceiling (peaked type or shed type) installations, refer to NFPA-72, "National Fire Alarm Code" for detailed spacing requirements.

LOCAL APPLICATION – OVERHEAD (DETECTOR SPACING) – Maximum spacing per fusible link detector is 36 ft.^{2} (3.3 m^2) or 3 ft. (.9 m) from edge of hazard and 6 ft. (1.8 m) between fusible link detectors.

When a detector(s) is mounted more than 1 ft. (.3 m) below ceiling or in an open area, heat trap(s) is recommended. Detectors should be mounted overhead at nozzle height or as close to the hazard as possible without interference, not to exceed 10 ft. (3 m).

Detectors should not be located where they will be susceptible to damage during the normal work operation.

LOCAL APPLICATION – TANKSIDE (DETECTOR SPACING) – Detectors can be located either near the inner tank wall and flammable liquid surface or above the tank. If located above the tank, the rules for local application overhead would apply. If located on the tank wall, the detectors can be mounted horizontally or vertically in the freeboard area but must be protected from damage during normal working operation. Detectors should be located at a maximum spacing per detector of 3 ft. (.9 m) from edge of hazard and 6 ft. (1.8 m) between detectors on the long side of the tank.

*For 14 ft. (4.3 m) wide booths with maximum height of 12 ft. (3.7 m), the detector location off the side wall can be a maximum of 7 ft. (2.1 m).

VIKING FIRE PROTECTION INC. 3005 | Pitfield boulevard | Saint-Laurent, Québec, Canada | H4S 1H4
Tel.: 514.332.5110 Fax: 514.332.6260 info@vikingfire.ca

CHAPTER 4

INSTALLATION

CHAPTER IV
SYSTEM INSTALLATION

This chapter will detail the basic information necessary for proper installation of the PYRO-CHEM Industrial Fire Suppression System. However, before attempting any installation it is necessary to attend a Factory Certification Training Class and become Certified to install the PYRO-CHEM Industrial Fire Suppression System.

Pipe and fittings for the discharge piping, conduit (EMT), pipe straps, pipe hangers, mounting bolts, and other miscellaneous equipment are not furnished as part of the PYRO-CHEM Industrial Fire Suppression System. These items must be furnished by the installer.

Before attempting any installation, unpack the entire system and check that all necessary parts are on hand. Inspect parts for damage. Verify that cylinder pressure is within the acceptable range as shown on the gauge.

CYLINDER INSTALLATION

The cylinder and valve assembly is shipped with an anti-recoil plug in the valve discharge port.

> **CAUTION**
> The anti-recoil plug must remain in the valve discharge port until the discharge piping is connected to the valve.

The cylinder must be mounted vertically with the discharge port facing either left or right. The Models PCI-17 and PCI-25 cylinders must be mounted using a Model MB-15 Mounting Bracket Kit. The Model PCI-35, PCI-50, PCI-70, and PCI-cylinders must be mounted using a Model MB-1 Mounting Bracket Kit.

The bracket must be securely anchored to the wall using bolts or lag screws. The wall to which the bracket is attached must be sufficiently strong to support the cylinder. The bracket should never be fastened to dry wall or similar material. If this type of wall is encountered, studs must be located and the bracket fastened to them. See Figure 4-1.

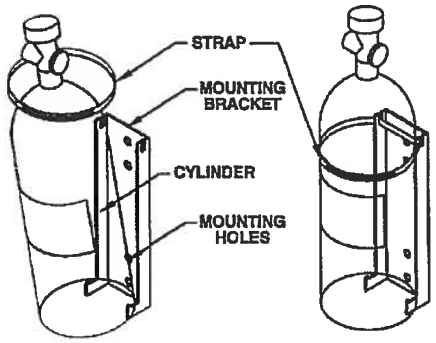

Figure 4-1. Cylinder and Mounting Bracket Installation.
002871PC

CONTROL HEAD INSTALLATION

1. Single Cylinder Installations.

For single cylinder system installations the Model MCH3/ECH3/NMCH3 Control Head can be installed directly onto the cylinder valve. When the control head is properly aligned in the desired position, tighten the knurled locking ring to secure the assembly. See Figure 4-2.

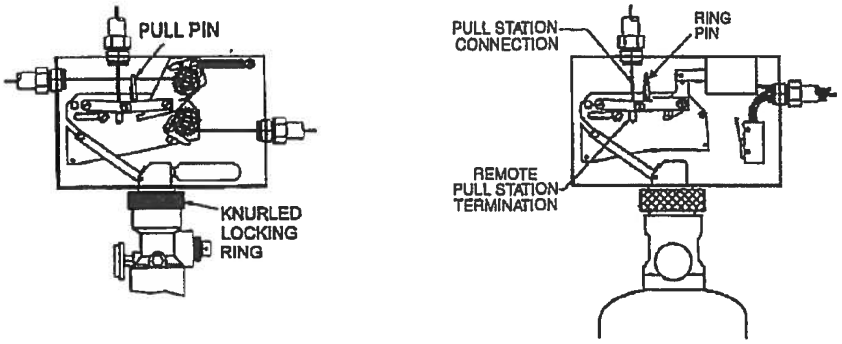

Figure 4-2. Single Cylinder Installation Using Model MCH3/ECH3/NMCH3 Control Head
002872PC/000647PC

FUSIBLE LINK DETECTOR INSTALLATION

Fusible links are always used in conjunction with the Model MCH3 Mechanical Control Head. After mounting the cylinder and control head, the fusible link line can be installed. The first step to installing the fusible link line is to install the detector bracket(s). These brackets must be installed in the plenum area, hazard area, and in each duct. See Chapter III for detector placement guidelines.

Note: Only ML-style Fusible Links can be used.

▸ Connect the fusible link brackets together using 1/2 in. conduit and the conduit connectors supplied in the detector kit (Model FLK-1/1A). A PYRO-CHEM corner pulley must be used whenever a change in conduit direction is necessary. The conduit is connected to the control head through a knockout in the upper left-side corner.

In general, fusible links centered in the detector brackets ▸ are connected in series using 1/16 in. diameter stainless steel cable. The spring plate in the control head maintains tension on this series of fusible links. If the tension is released for any reason (i.e., a fusible link separates), the control head will operate and actuate the system. Maximum limitations for the fusible link detection line are as follows:

Fusible links can be installed with or without fusible link hangers (see Chapter II for description).

Fusible Link Line Limitations When Used With Model MCH3 and NMCH3 Control Heads and Part No. 415670 and 423250 Pulley Elbows	
Maximum # of Detectors:	20
▸ Maximum length of cable:	150 ft. (45.7 m)
Maximum # of pulleys:	40

1. Fusible Link Installation Without Hangers.

Begin installing links at the terminal bracket. The link is connected to the far side of the terminal bracket using an "S" hook. The "S" hook must be crimped closed after the link is installed. A tight loop is then made in the cable and secured by the crimp provided. This loop is connected to the other side of the terminal link (see Figure 4-6) and the cable fed through the conduit to the next bracket. The cable proceeding from the terminal link will be used to connect the series links (see Figure 4-7). Series links must be centered in their detector brackets.

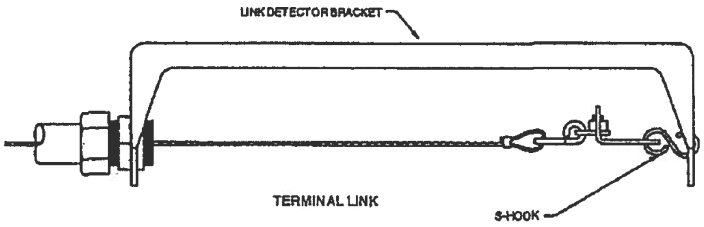

Figure 4-6. Terminal Link Installation.
002846aPC

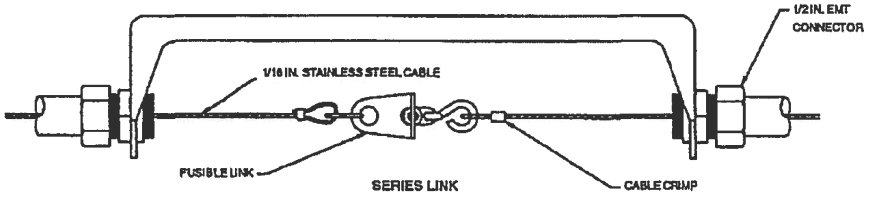

Figure 4-7. Series Link Installation.
002846bPC

After the last link in the series is connected, the cable should be fed through the conduit back to the control head. Thread the cable through the hole in the fusible link ratchet wheel. The line must then be crimped, and the crimp positioned inside the center of the ratchet wheel.

NOTE

Crimps must always be used in conjunction with two (2) cable lengths. Loops are the accepted method of connecting the cable to mechanical components. The crimp must never be used on a single cable. Exception: Single cable crimp allowed in detection and gas valve ratchet wheel using stop sleeve, Part No. 26317 (packages of 10: Part No. 24919).

The fusible link line can now be put into a set position by applying tension to the fusible link line. This is accomplished by using a 1/2 in. hex wrench on the fusible link line ratchet wheel. The ratchet wheel will be ratcheted in a clockwise direction until the spring plate makes contact with the top of the control head box. The fusible link line is now in a set position. See Figure 4-8.

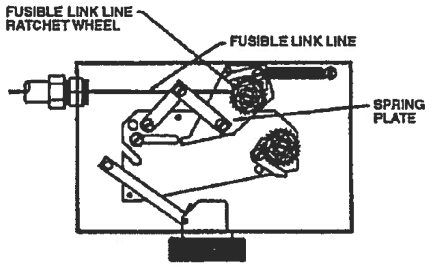

Figure 4-8. Fusible Link Line Termination.
002676PC

2. Fusible Link Installation Using Model FLH-1 Fusible Link Hangers.

Beginning at the control head, feed the stainless steel cable through the conduit and brackets to the terminal bracket in one continuous length. Allow approximately 2.5 in. (6.4 cm) of slack at each bracket for the installation of the Fusible Link Hangers. At the terminal link, a tight loop is made in the cable and secured by the crimp provided. The cable is attached to the far side of the terminal bracket using an "S" hook. The "S" hook must be crimped closed after the cable is installed. See Figure 4-9.

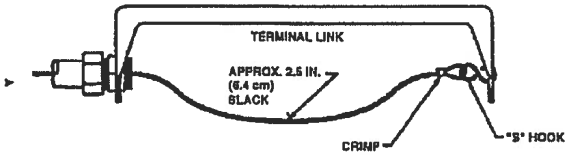

Figure 4-9. Terminal Bracket Connection.
002677PC

Begin installing the Fusible Link Hangers at the terminal bracket and work toward the control head. Loop the cable through the oval opening in the hanger and hook the fusible link on the loop. See Figure 4-10.

Note: Only ML-style Fusible Links can be used

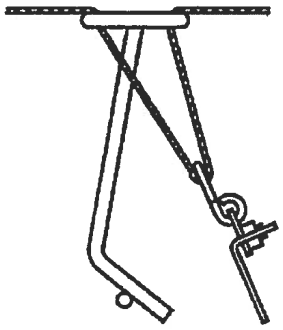

Figure 4-10. Fusible Link Connection.
002678PC

Hook the bottom of the link onto the bottom leg of the hanger. See Figure 4-11.

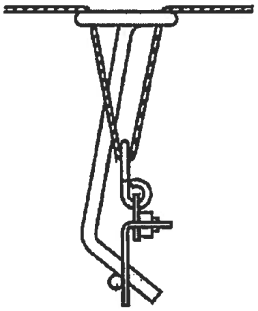

Figure 4-11. Fusible Link/Hanger Connection.
002679PC

Center the hanger/link in the fusible link bracket by sliding it along the link line. This is easily accomplished before any tension is applied to the link line. Repeat this procedure for all fusible links.

After the last hanger/link in the series is connected, the cable should be fed through the hole in the fusible link ratchet wheel. The line must then be crimped, and the crimp positioned inside the center of the ratchet wheel.

NOTE

Crimps must always be used in conjunction with two (2) cable lengths. Loops are the accepted method of connecting the cable to mechanical components. The crimp must never be used on a single cable. Exception: Single cable crimp allowed in detection and gas valve ratchet wheel using stop sleeve, Part No. 26317 (packages of 10: Part No. 24919).

The fusible link line can now be put into a set position by applying tension to the fusible link line. This is accomplished by using a 1/2 in. hex wrench on the fusible link line ratchet wheel. The ratchet wheel will be ratcheted in a clockwise direction until the spring plate makes contact with the top of the control head box. The fusible link line is now in a set position. See Figure 4-8. Check to ensure that the fusible link hanger(s) remain centered in the bracket after the fusible link line is set. See Figure 4-12.

THERMAL DETECTOR INSTALLATION

Thermal detectors are always used in conjunction with the Model ECH3 Electrical Control Head. After mounting the cylinder and control head, the thermal detector(s) can be installed. See Chapter III for detector placement guidelines. Follow the instructions included with the detector for proper detector mounting procedures.

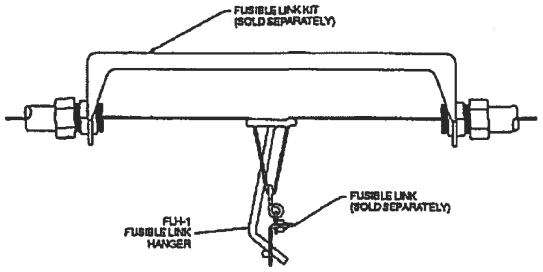

Figure 4-12. Fusible Link/Hanger in Set Position
002850PC

SETTING THE CONTROL HEAD

1. Model MCH3/NMCH3 Mechanical Control Head.

Once the fusible link line is set, the control head can be placed in the set position. To set the control head, the slide plate is moved from right to left, ensuring the bolt extending from the cam arm is in the slot provided in the slide plate. Continue moving the slide plate to the left until the latching arm is in the locked position. Insert the pull pin into the hole in the slide plate above the latching arm. This will lock the control head in the set position, eliminating accidental actuation during the rest of the installation procedure. See Figure 4-13.

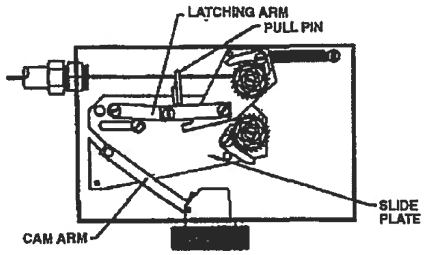

Figure 4-13. Control Head in Set Position.
002880PC

2. Model ECH3 Electrical Control Head.

Once the thermal detectors have been installed, the control head can be placed in the set position. To set the control head, the slide plate is moved from right to left, ensuring the bolt extending from the cam arm is in the slot provided in the slide plate. Continue moving the slide plate to the left until the latching arm is in the locked position. Insert the pull pin into the hole in the slide plate above the latching arm. This will lock the control head in the set position, eliminating accidental actuation during the rest of the installation procedure.

Once the Model ECH Electrical Control Head is in the set position, it can be connected to the detection/actuation circuit.

NOTE

No electrical connections shall be made inside the control head. All electrical wiring shall exit the control head through the knock-out on the side of the box. All electrical connections must be made in an approved electrical box.

Connect one of the black wires on the solenoid in the control head to the red wire of the Model MS-SPDT Micro Switch. The brown wire from the micro switch is then connected to one side of the first thermal detector in series. Connect the other side of the first thermal detector in series and the remaining black wire on the solenoid in the control head to the appropriate power source after installing the Model SM-24/120 Solenoid Monitor.

CAUTION

The solenoid must never be wired "hot" (not through the micro-switch). If wired this way, the non-field replaceable solenoid will be damaged and the complete control head will require replacement.

NOTE

A Model SM-24/120 Solenoid Monitor must always be used with an Electrical Control Head to supervise the actuation/detection circuit.

The Model ECH3-24 Electrical Control Head requires a UL Listed 24VDC power supply with a minimum 2A rating. The Model ECH3-120 Electrical Control Head requires a 1A, 120VAC power supply.

SOLENOID MONITOR INSTALLATION

1. Solenoid Monitor Installation In Detection Circuit.

After installing the thermal detectors and the control head, the Model SM-120/24 Solenoid Monitor can be installed. The Solenoid Monitor is connected to the wires leading from the last thermal detector. It should be mounted in a location where it can be readily observed.

The Solenoid Monitor is an end-of-line device that supervises the actuation/detection circuit. It is comprised of a push-type switch with a built-in indicator light, a plug-type relay, a relay socket, and a cover plate. The light, when illuminated, indicates that the detection/actuation circuit is in the normal condition. The Solenoid Monitor also provides two sets of dry contacts. The Solenoid Monitor's cover plate is used to mount the Solenoid Monitor in a standard 6 in. x 4 in. x 3 in. deep electrical box (See Figure 4-14).

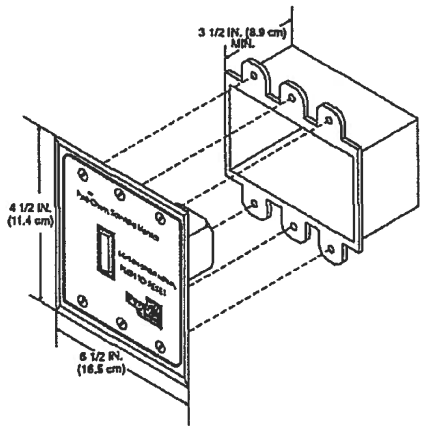

Figure 4-14. Solenoid Monitor Installation.
002681PC

All wire for circuits using the Model SM-24 shall be 18 gauge minimum, or as required by local code. All wire for circuits using the Model SM-120 shall be 14 gauge minimum, or as required by local code. The basic wiring diagram for both the Model SM-24 and Model SM-120 is shown in **Figure 4-14.1.**

After the Solenoid Monitor has been installed, the detection/actuation circuit can be connected to the appropriate power source and energized. To energize the detector/actuation circuit, depress the switch on the Solenoid Monitor. The light will illuminate to indicate that the circuit is properly installed. If the light fails to illuminate, the wiring must be checked.

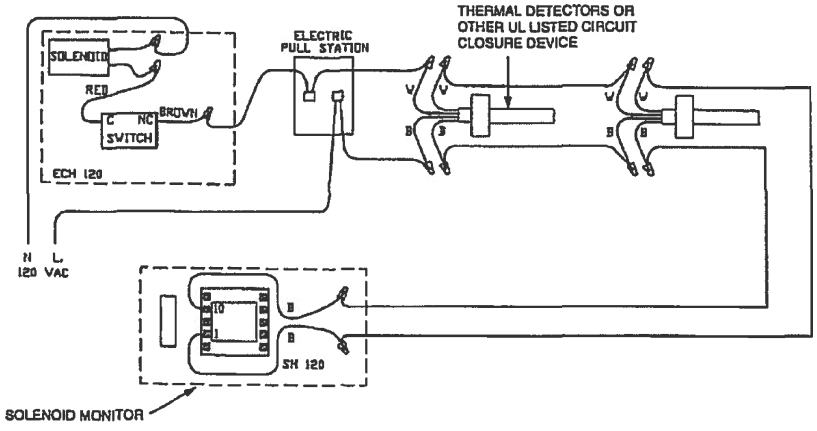

Figure 4-14.1. Wiring Diagram, Solenoid.
002682PC

2. Solenoid Monitor When Used As A Reset Relay

The Model SM-24/120 can be used as a reset relay when required. A reset relay is required whenever an electrical gas shut-off valve is used in conjunction with the Pyro-Chem Booth Industrial Fire Suppression System. For typical wiring connections, see **Figure 4-15.**

REMOTE PULL STATION INSTALLATION

1. Model RPS-M.

The Model RPS-M Remote Mechanical Pull Station is used for remote mechanical actuation of the Model MCH3/ECH3/NMCH3 Control Head. It is to be located near an exit in the path of egress from the hazard area no more than 4 ft. (1.2 m) above the floor.

NOTE

A model RPS-M remote mechanical pull station must be used for manual actuation of a Model NMCH3 releasing device.

The Pull Station can be surface mounted or recessed. It is connected to the control head using 1/16 in. diameter stainless steel cable. The cable enters the pull station box from the bottom, top, either side, or back. The cable enters the control head through the top-center knockout. The cable must be enclosed in 1/2 in. conduit with a PYRO-CHEM corner pulley at each change in conduit direction. Maximum limitations for the Model RPS-M Remote Mechanical Pull Station are as follows:

Model RPS-M Cable Run Limitations When Used With Model MCH3, ECH3, and NMCH3 Control Heads and Part No. 415670 and 423250 Pulley Elbows	
Maximum length of cable:	150 ft. (45.7 m)
Maximum # of pulleys:	40

After mounting the pull station box and conduit, feed the stainless steel cable from the control head, through the conduit, and into the pull station box. Insert the bushing into the pull station's cover plate and secure it with the locknut provided. Feed the cable through the bushing and into the pull handle ensuring that the cable fully crosses the set screw hole. Fasten the cable to the pull handle with the set screw (see **Figure 4-16**).

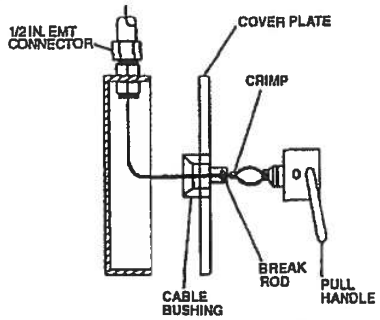

Figure 4-16. Model RPS-M Remote Pull Station Installation.

002884PC

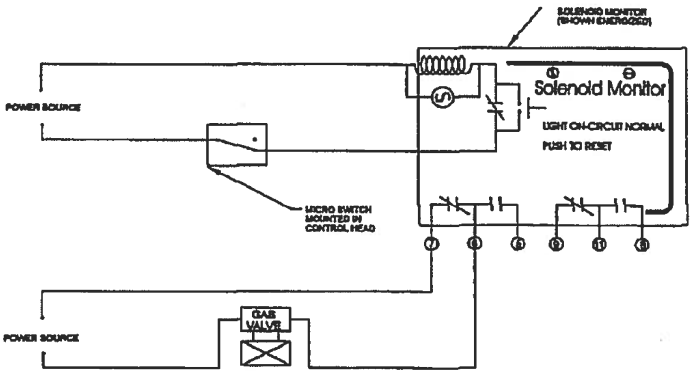

Figure 4-15. Solenoid Monitor Wiring With Electrical Gas Shut-off Valve.

002883PC

NOTE

Crimps must always be used in conjunction with two (2) cable lengths. Loops are the accepted method of connecting the cable to mechanical components. The crimp must never be used on a single cable. Exception: Single cable crimp allowed in detection and gas valve ratchet wheel using stop sleeve, Part No. 26317 (packages of 10: Part No. 24919).

Cut and thread the cable through the hole in the latching arm of the control head and pull the cable tight. Crimp the cable 6 in. (15.2 cm) below the latching arm.

Pull the pull handle until the crimp touches the latching arm. Coil the excess cable in the pull box and attach the cover plate with the four screws provided. Insert the pull handle into the cover plate and insert the pull pin through the bushing and the pull handle. Secure the pull pin with the nylon tie provided. **See Figure 4-17.**

2. Model RPS-E2.

The Model RPS-E2 remote electrical pull station is used for remote actuation of the Model ECH3 Control Head. It is to be located near an exit in the path of egress from the hazard area no more than 4 ft. (1.2 m) above the floor. The Model RPS-E2 is installed in the detection/actuation circuit and wired in accordance with the instructions included. See Figure 4-14.1 for typical circuit wiring.

GAS SHUT-OFF VALVE INSTALLATION

1. Mechanical Gas Shut-Off Valve Installation.

The Model MCH3/NMCH3 Control Head is used to operate the mechanical gas shut-off valve. This valve is located in the fuel gas supply line. The valve body has an arrow which indicates direction of gas flow through the valve. The gas shut-off valve is spring loaded and requires five pounds of force to hold it open. This force is supplied by a 1/16 in. diameter stainless steel cable that is connected to the control head. After the valve is installed in the gas line, 1/2 in. conduit must be run from the top center knockout of the gas valve box to the lower right-hand knockout in the control head. A PYRO-CHEM corner pulley is used wherever a change in conduit direction is required.

Gas Valve Cable Run Limitations When Used With Model NMCH3 or MCH3 Control Heads and Part No. 415670 and 423250 Pulley Elbows	
Maximum length of cable:	100 ft. (30.5 m)
Maximum # of pulleys:	30

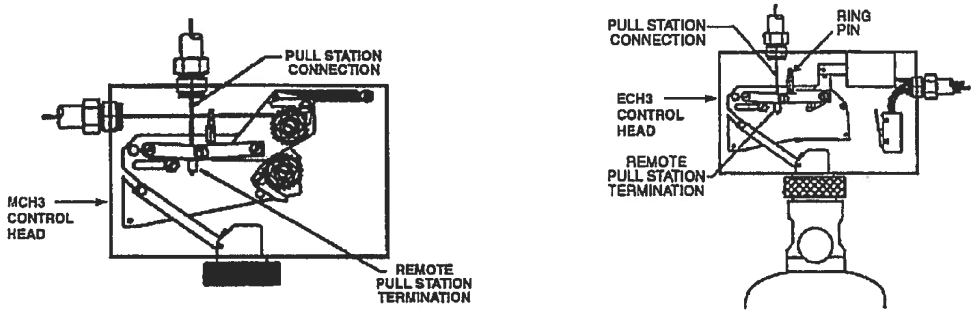

Figure 4-17. Model RPS-M Remote Pull Station Termination.

00288SPC/003847PC

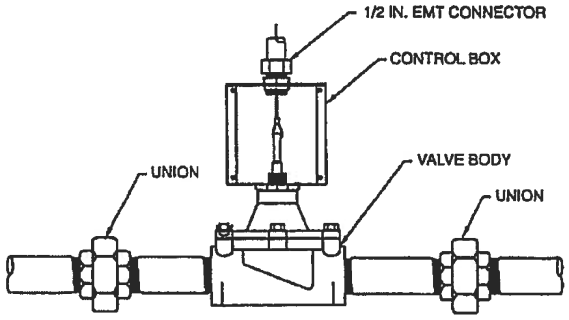

Figure 4-18. Gas Valve Installation.

002884PC

Remove the gas valve cover and thread the stainless steel cable through the conduit back to the control head. Thread the cable through the hole in the gas valve ratchet wheel. The line must then be crimped, and the crimp positioned inside the center of the ratchet wheel.

At the gas valve, loop the cable through the valve stem and secure it with the crimp provided (see Figure 4-18).

▸ Note: See Chapter 2 – Components for maximum dimen-
▸ sion to extend valve stem.

The gas valve line can now be put into a set position by applying tension to the gas valve line. This is accomplished by using a 1/2 in. hex wrench on the gas valve ratchet wheel. The ratchet wheel will be ratcheted in a clockwise direction until the gas valve is fully open. Secure the gas valve cover plate to the gas valve box with the four (4) screws provided. The gas valve line is now in a set position. See Figure 4-19.

CAUTION

Overtightening the gas valve may cause the system not to actuate.

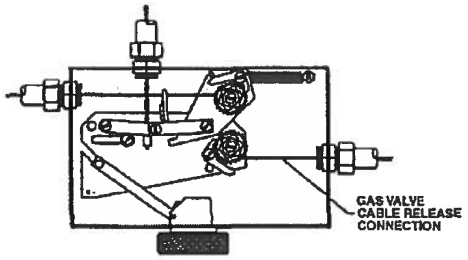

Figure 4-19. Gas Valve Line Termination.
002887PC

2. Electrical Gas Shut-Off Valve Installation.

The Model MCH3/ECH3/NMCH3 Control Head is used to operate the electrical gas shut-off valve. This valve is located in the fuel gas supply line. The valve body has an arrow which indicates direction of gas flow through the valve. A reset relay must always be used with an electrical gas shut-off valve. For proper wiring of the electrical gas shut-off valve, see Figure 4-15.

TEE PULLEY INSTALLATION

The Model TP-1 Tee Pulley is used to connect two (2) mechanical gas valves or two (2) remote mechanical pull stations to a single control head. The cable proceeding from the control head must always enter the branch of the tee pulley. See Figure 4-20.

A tee pulley that is used to close two (2) gas valves can only be used to close gas valves with similar stem travel. Gas valves from 3/4 in. up to 1 1/2 in. can be used on the same tee pulley. A 2 in. gas valve can be used only with another 2 in. gas valve. Gas valves from 2 1/2 in. up to 3 in. can be used on the same tee pulley. As an example, using a 3/4 in. gas valve with a 3 in. gas valve will not allow the 3 in. valve to fully open.

CAUTION

The tee pulley must never be used to connect multiple fusible link lines to a single control head.

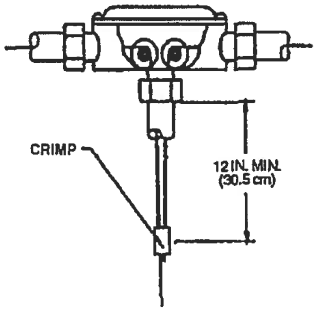

Figure 4-20. Tee Pulley Installation.
002888PC

MICRO SWITCH INSTALLATION

See NFPA 72, "National Fire Alarm Code," Initiating Devices section, for the correct method of wiring connection to the fire alarm panel.

The Model MS-SPDT, MS-DPDT, MS-3PDT, or MS-4PDT Micro Switch is available for use where an electrical output is required. These switches can be field installed in the control head. See Figure 4-21 and Figure 4-22 and refer to Instruction Sheet, Part No. 551159, included with switch shipping assembly, for detailed mounting instructions.

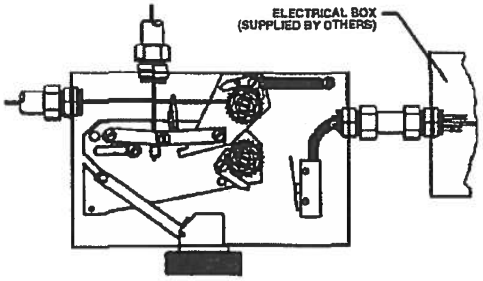

Figure 4-21. Micro Switch Installation in Model MCH3/NMCH3 Control Head.
002889PC

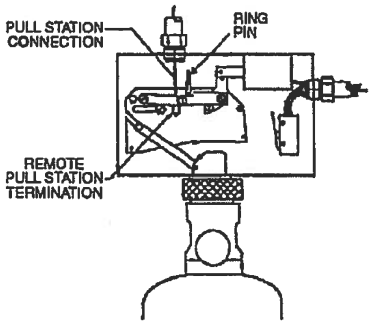

Figure 4-22. Micro Switch Installation In Model ECH3 Control Head.
003647PC

NOTE

The Model ECH3 Control Head is supplied with a Model MS-DPDT Micro Switch. This switch can be used in the actuation/detection circuit and for electrical output.

These switches may be used to provide an electrical signal to the main breaker and/or operate electrical accessories provided the rating of the switch is not exceeded. Wiring connections are shown in Figure 4-23. The contact ratings for the switches are as follows:

Contact Ratings For Micro Switches
21 amps, 1 HP, 125, 250, 277 VAC
or 2 HP, 250, 277 VAC

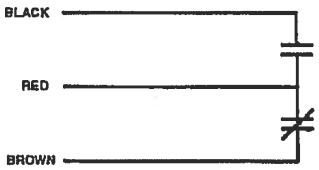

Figure 4-23. Wiring Diagram For Model MS-SPDT Micro Switch.
002803PC

The Alarm Initiating Switch, Part No. 550077, must be used to close a supervised alarm circuit to the building main fire alarm panel when the control head actuates. This will signal the fire alarm panel that there was a system actuation in the hazard area. This switch can be field installed in the control head. Refer to Instruction Sheet, Part No. 550081, included with the switch shipping assembly, for detailed mounting instructions. Wiring connections are shown in Figure 4-24. The switch is rated at 50mA, 28VDC.

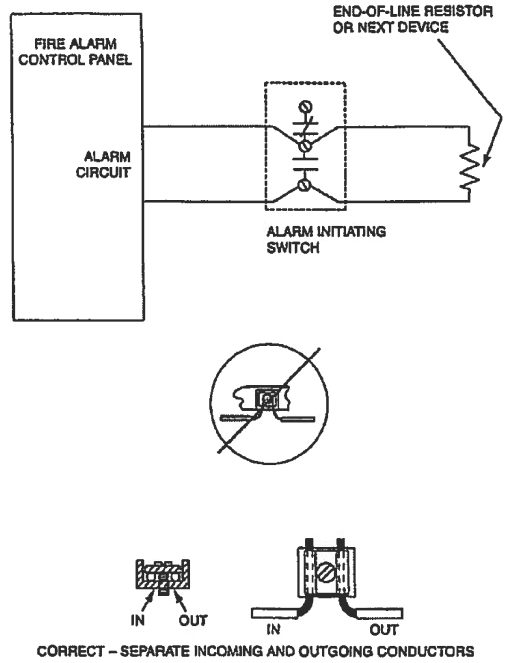

Figure 4-24. Wiring Diagram for Alarm Initiating Switch.
004891/004905

PIPE AND NOZZLE INSTALLATION

General Piping Requirements

1. Use Schedule 40 black iron (if used in a relatively non-corrosive atmosphere), galvanized, chrome-plated, or stainless steel pipe conforming to ASTM A120, A53, or A106. Fittings must be a minimum of 150 lb. Class. However, the PCI 35, 50, and 70 lb. cylinders must have a minimum of two (2) nozzles per cylinder to utilize the 150 lb. Class fittings. If the PCI 35, 50, or 70 lb. cylinder has one (1) nozzle, then a 300 lb. Class fitting must be used. The remaining Monarch cylinders have no limitations for the 150 lb. Class fittings. Distribution pipe sizes are 3/4 in. or 1 in. depending on number of nozzles.
2. Pipe unions are acceptable.
3. Use reducing tees for all pipe splits.
4. Reducing bushings are not acceptable.
5. Cast iron pipe and fittings are not acceptable.
6. **Pipe thread sealant or pipe joint compound is not allowed for distribution piping.**
7. Bell Reducer or any non-restrictive fittings are allowed.
8. Before assembling the pipe and fittings, make certain all ends are carefully reamed and blown clear of chips and scale. Inside of pipe and fittings must be free of oil and dirt.

9. If Teflon tape is used on threaded ends, start at the second male thread and wrap the tape clockwise around the threads, away from the pipe opening.
10. All system piping must comply with Section A-5-9.1 of NFPA-17.

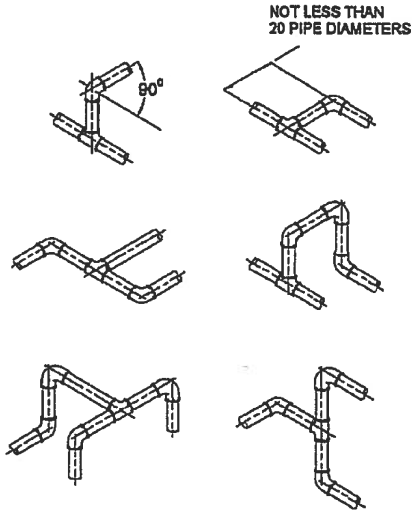

Figure 4-25. Acceptable Piping Methods.
002965PC

CAUTION

Do not apply Teflon tape to cover or overlap the pipe opening, as the pipe and nozzles could become blocked and prevent the proper flow of agent.

TEE POSITIONING

In order to obtain equal distribution at a tee, the dry chemical must enter the side port of the tee and exit through the two end ports. See Figure 4-26.

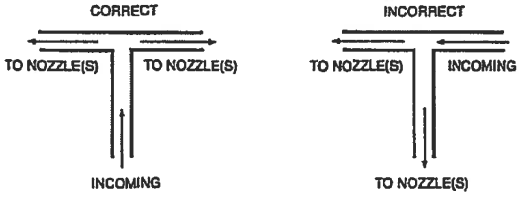

Figure 4-26. Tee Positioning
003126

Hanger/Support Installation

The hanger/supports must be installed in conjunction with the pipe and fittings. The spacing requirements for hangers/supports depend on the pipe size being utilized; refer to the Spacing Guidelines Chart.

PIPE HANGER SPACING GUIDELINES CHART

Distribution Pipe Size	Maximum Spacing Distance Hanger to Hanger	
in.	ft.	m
1/4	4	(1.2)
1/2	6	(1.8)
3/4	8	(2.4)
1	12	(3.6)

Other factors that influence hanger/support spacing are:

- Hanger/Support must be placed within 1 ft. (0.3 m) of the discharge nozzle.

Hanger/Support must be placed between elbows when distance is greater than 2 ft. (0.6 m).

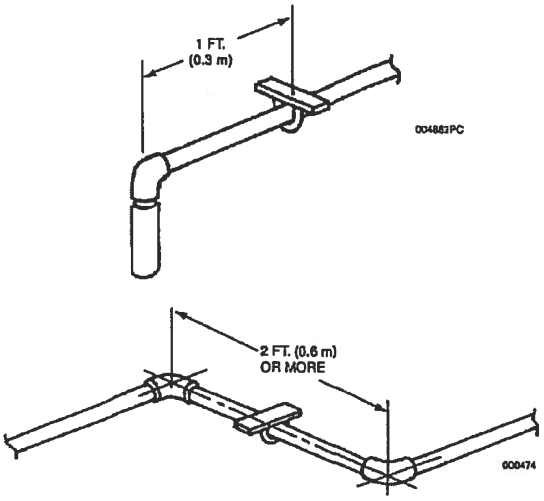

Figure 4-27. Hanger/Support.

MAIN/RESERVE SYSTEM

When a reserve system is being utilized, two 1 in. swing check valves, Part No. 417788, must be installed in the distribution piping network. They should be positioned as close as possible to the "Y" fitting joining the piping from the main and reserve tanks to one common supply pipe. See **Figure 4-28.** **Note:** Make certain to install swing check valves in the direction of dry chemical flow as shown with an arrow stamped on the valve body.

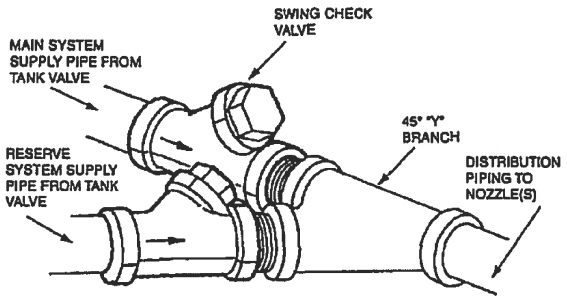

Figure 4-28. Main/Reserve System.

PRESSURE SWITCH INSTALLATION

The Model PS-SPDT-X Pressure Switch is available for use when an electrical output is required. It must be installed in the discharge piping within 12 in. (30.5 cm) of the valve discharge port as shown in **Figure 4-29.** An inline tee is used for the installation. The switch is isolated from the chemical by a 12 in. to 15 in. (30.5 to 38.1 cm) column of air in the form of a vertical pipe nipple. The switch is then mounted at the top of this nipple.

> **NOTE**
>
> Piping for pressure switch must be included in total cylinder to T1 piping limitations. The fitting used to connect the pressure switch to the distribution piping counts as one (1) elbow in that section.

As an alternate, the switch may be connected directly to the copper tubing of a remotely mounted control head or a PAC cylinder. The PS-SPDT-X counts as one cylinder in this section, and the limitations on copper tubing and/or pipe previously stated in this manual apply.

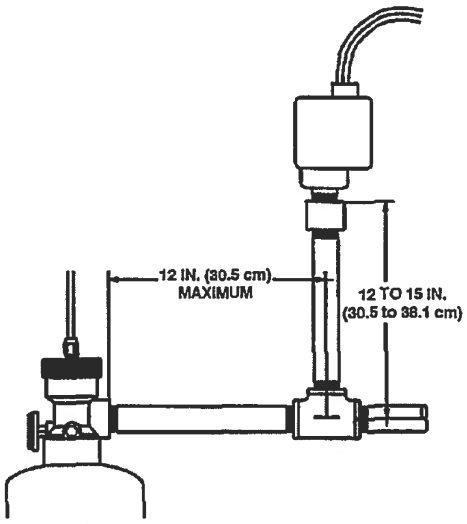

Figure 4-29. Pressure Switch Installation.

SYSTEM CHECKOUT AFTER INSTALLATION

1. Model MCH3 Mechanical Control Head.

Before putting the system into service, all components must be checked for proper operation. During this checkout, assure that the carbon dioxide pilot cartridge is not installed in the control head actuator. Remove the pull pin from the hole in the slide plate.

To check satisfactory operation of the control head, cut the terminal link or the "S" hook holding the link. This will relieve all tension on the fusible link line and operate the control head. The slide plate will move fully to the right. The gas valve cable will be released, causing the gas valve to close. Any auxiliary equipment connected to the dry contacts of the solenoid monitor and/or the Micro Switch in the control head will operate.

If any of these events fail to occur, the problem must be investigated and repaired.

Repair the terminal link and put the fusible link line back into the set position. This is accomplished by using a 1/2 in. hex wrench on the fusible link line ratchet wheel. The ratchet wheel will be ratcheted in a clockwise direction until the spring plate makes contact with the top of the control head box.

VIKING FIRE PROTECTION INC. 3005 | Pitfield boulevard | Saint-Laurent, Québec, Canada | H4S 1H4
Tel.: 514.332.5110 Fax: 514.332.6260 info@vikingfire.ca

CHAPTER 5

MAINTENANCE

CHAPTER V
SYSTEM MAINTENANCE

GENERAL

This chapter will detail the basic information necessary for proper maintenance of the PYRO-CHEM Industrial Fire Suppression System. However, before attempting any system maintenance, it is necessary to attend a Factory Certification Training Class and become Certified to Install and maintain the PYRO-CHEM Industrial Fire Suppression System.

MAINTENANCE AFTER SYSTEM DISCHARGE

1. System Cleanup.

The hazard area cleanup after a system discharge is very basic. The dry chemical agent should be cleaned up by either sweeping or vacuuming. Residual dry chemical should be wiped off effected surfaces with a damp cloth.

2. System Cylinder Recharge.

CAUTION

Protective eye goggles and protective footwear must be worn when performing system maintenance.

1. Remove the cylinder from the control head or pneumatic adaptors and inspect for visual damage. If there is any damage the cylinder must be hydrostatically tested before being refilled. If there is no damage, the cylinder can be recharged.
2. Reset all pneumatic actuators (Models PDA-D2) by depressing the check valve on top and relieving the pressure. Remove the pneumatic actuator or control head from the valve and use any 1/4-20 UN screw or bolt to screw into the top of the piston. Pull up on the piston until the piston is flush with the top of the valve body and remove the screw or bolt from the piston.
3. Remove the valve and siphon tube assembly from the cylinder and unscrew the siphon tube from the valve.
4. Inspect the valve to make sure no mechanical damage has occurred. If there is evidence of any damage to the seals, rebuild the valve using the Dry Valve Rebuilding Kit (PYRO-CHEM Part Number 550037).
5. Screw the siphon tube back into the valve.
6. Refill the cylinder with agent. Use the table below for easy reference.

Cylinder	Recharge
PCI-15ABC	12.5 lb. ABC (Part No. 550170)
PCI-17ABC	17 lb. ABC (Part No.550170)
PCI-25sBC	25 lb. BC (Part No.550162)
PCI-25sABC	25 lb. ABC (Part No.550170)
PCI-35ABC	35 lb. ABC (Part No.550170)
PCI-50sBC	50 lb. BC (Part No.550162)
PCI-50sABC	50 lb. ABC (Part No.550170)
PCI-70ABC	70 lb. ABC (Part No.550170)

The Model RC-50ABC (Part No. 550170) is a 50 lb. pail of ABC dry chemical recharge agent available from PYRO-CHEM. The Model RC-50BC (Part No. 550162) is a 50 lb. pail of BC dry chemical recharge agent available from PYRO-CHEM.

7. Insert the siphon tube into the cylinder, and screw the valve onto the cylinder. Make sure that the valve is screwed completely into the cylinder.
8. Attach the Recharge Adaptor (PYRO-CHEM Part No. 550130) to the discharge port of the valve. The adaptor O-ring should be completely inside the discharge port. Attach a source of dry nitrogen to the adaptor.

   Charge the cylinder with dry nitrogen to 350 psi at 70°F.

NOTE

1. The pressure gauge attached to the cylinder valve should not be used to determine when the charging pressure has been reached. A pressure regulator should be used.
2. Higher pressure may be needed during the initial charging stage to blow the agent out of the siphon tube. Secure the cylinder during this stage, as it may jump as the agent is blown from the siphon tube.

9. Slowly disconnect the nitrogen source from the Recharge Adaptor. The cylinder valve will close when the Recharge Adaptor is depressurized. When the valve is closed and the nitrogen source is disconnected from the Recharge Adaptor, remove the recharge adaptor from the valve discharge port. Immediately screw the recoil preventer into the discharge port.

CAUTION

The recoil preventer must remain in the valve discharge port until the cylinder is attached to the piping network.

10. Reinstall the cylinder to the piping network. Reattach the control head or pneumatic adaptor.

3. Piping and Nozzles.

Piping should be blown out with air or dry nitrogen. Nozzle blow off caps should be replaced.

4. System Reset.

All fusible links should be replaced. The fusible link line can now be put into a set position by applying tension to the fusible link line. This is accomplished by using a 1/2 in. hex wrench on the fusible link line ratchet wheel. The ratchet wheel will be ratcheted in a clockwise direction until the spring plate makes contact with the top of the control head box. The fusible link line is now in a set position.

After setting the fusible link line, the system can be put back into service by following the SYSTEM CHECKOUT AFTER INSTALLATION Section of Chapter IV.

REGULAR SYSTEM MAINTENANCE

1. Six (6) Month Maintenance.

1. Check that the hazard has not changed.
2. Check that all nylon ties are in place and the system has not been tampered with.
3. Check the entire system for mechanical damage.
4. Check the solenoid monitor.
5. Disconnect the control head or pneumatic tubing from each agent cylinder. Remove the carbon dioxide pilot cartridge and exercise the control head to ensure it is functioning properly. Make sure the gas shut-off valve and the remote pull station are functioning properly.

NOTE

Before continuing, remove the cover from the control head and insert the pull pin in the hole in the slide plate above the latching arm. This will secure the system, preventing accidental discharge.

6. Inspect fusible link detectors for excessive grease buildup. Clean or replace links if necessary. Visually inspect thermal detectors.

NOTE

Methods and frequency of inspection, testing and maintenance of detectors should be in accordance with NFPA-72.

7. Reinstall the carbon dioxide pilot cartridge and replace the control head cover and nylon tie.

CAUTION

Before screwing the carbon dioxide pilot cartridge into the actuator, ensure that the actuator has an O-ring installed.

8. Inspect the cylinder pressure. Tap the gauge lightly to ensure the needle is moving freely. If the gauge shows a loss in pressure indicated by the needle being below the green band, the tank should be removed and recharged per the SYSTEM CYLINDER RECHARGE section of Chapter V (System Maintenance) in this manual.

2. Annual Maintenance.

1. Inspect as per six (6) month maintenance instructions.
2. Disconnect and remove the discharge piping from the system. Using air or nitrogen, blow out the discharge piping. Replace all nozzle caps.
3. Fixed temperature sensing elements of the fusible alloy type shall be replaced at least annually or more frequently, if necessary, to assure proper operation of the system.
4. Test thermal detectors and remote pull station per SYSTEM CHECKOUT AFTER INSTALLATION section located in Chapter IV (System Installation) of this manual. Per NFPA 72, two (2) or more detectors per circuit should be tested. Note individual detector location and date of testing. Within 5 years, all detectors in system must be tested.
5. Replace the carbon dioxide pilot cartridge, recording the date of installation on the cartridge with a felt-tipped marker.

CAUTION

Before screwing the carbon dioxide pilot cartridge into the actuator, ensure that the actuator has an O-ring installed.

3. Six (6) Year Maintenance.

1. Inspect as per annual maintenance instructions.
2. Examine the dry chemical. If there is evidence of caking, the dry chemical shall be discarded.

4. Hydrostatic Testing.

The dry chemical agent cylinder(s) and pneumatic cylinder(s) shall be hydrostatically tested at least every twelve (12) years as per NFPA-17.

NOTE

Refer to NFPA-17 for additional maintenance requirements.

AGNICO EAGLE

Vendor Document Status

1 ☐ Proceed to next submission and status.

2 ☐ Proceed with exceptions as noted to next submission and status.

3 ☐ Do not proceed.
Revise as noted and resubmit next submission and status.

4 ☑ Complete, no further submission required.

By: Jean-Francois Tremblay Date: 2017-05-02

Review and authorization to fabricate are only for general conformance with the design concept of the Project as expressed in the Contract Documents. Sole responsibility for the accuracy and completeness of this document, including but not limited to dimensions and quantities, remains with the Supplier/Contractor. Agnico Eagle does not warrant the accuracy or completeness of any of the information contained herein, nor does Agnico Eagle authorize or approve any construction means, methods, techniques, sequences or any safety precautions or procedures.

Agnico Eagle No. 6515-C-270-007-141-TES-0015 R: Sub001

DOCUMENT FOR INFORMATION

NUQSANA-PROMEC MINING

Fuel Tanks Piping

Supply and Installation

AGNICO EAGLE

Punchlist

Document Number : AEM-GE-ITR-003
Contract Number : C22466T / C22498E

Equipment/System description:

ITEM No	DESCRIPTION	CAT 1	CAT 2	CAT 3	COMMENTS	COMPLETED
1						
2						
3						
4						
5						
6						
7						
8						
9						
10						
11						
12						
13						
14						
15						
16						
17						
18						
19						
20						

CAT 1 = Effects commissioning
CAT 2 = Effects operation
CAT 3 = Post operation

AGNICO EAGLE

Vendor Document Status

1 ☐ Proceed to next submission and status.

2 ☐ Proceed with exceptions as noted to next submission and status.

3 ☐ Do not proceed.
Revise as noted and resubmit next submission and status.

4 ☑ Complete, no further submission required.

By: Jean-Francois Tremblay Date: 2017-05-02

Review and authorization to fabricate are only for general conformance with the design concept of the Project as expressed in the Contract Documents. Sole responsibility for the accuracy and completeness of this document, including but not limited to dimensions and quantities, remains with the Supplier/Contractor. Agnico Eagle does not warrant the accuracy or completeness of any of the information contained herein, nor does Agnico Eagle authorize or approve any construction means, methods, techniques, sequences or any safety precautions or procedures.

Agnico Eagle No. 6515-C-270-007-141-TES-0016 R: Sub001

DOCUMENT FOR INFORMATION

Date: _____

To: _____

Project No: _____

Contract No: _____

Contract Title: _____

Contractor: _____

We, _____ (Contractor's Name), the Contractor for the above described contract, hereby certify that we have reviewed the Contract Documents pertaining to:

Contract No.: _____

Contract Name: _____

Partial Completion Certificates: _____

and having physically inspected the Work performed, do hereby file claim for a notice of Final Completion.

I do declare that I am, _____ (Responsible's Name), HAVING AUTHORITY FROM MY COMPANY TO PETITION FOR THE ABOVE REFERRED TO FINAL COMPLETION NOTICE.

Signature: _____

Name: _____

Title: _____

NO. DESSIN DRAWING NO. 65-ULT-116-MP-001

FORMAT ARCH D

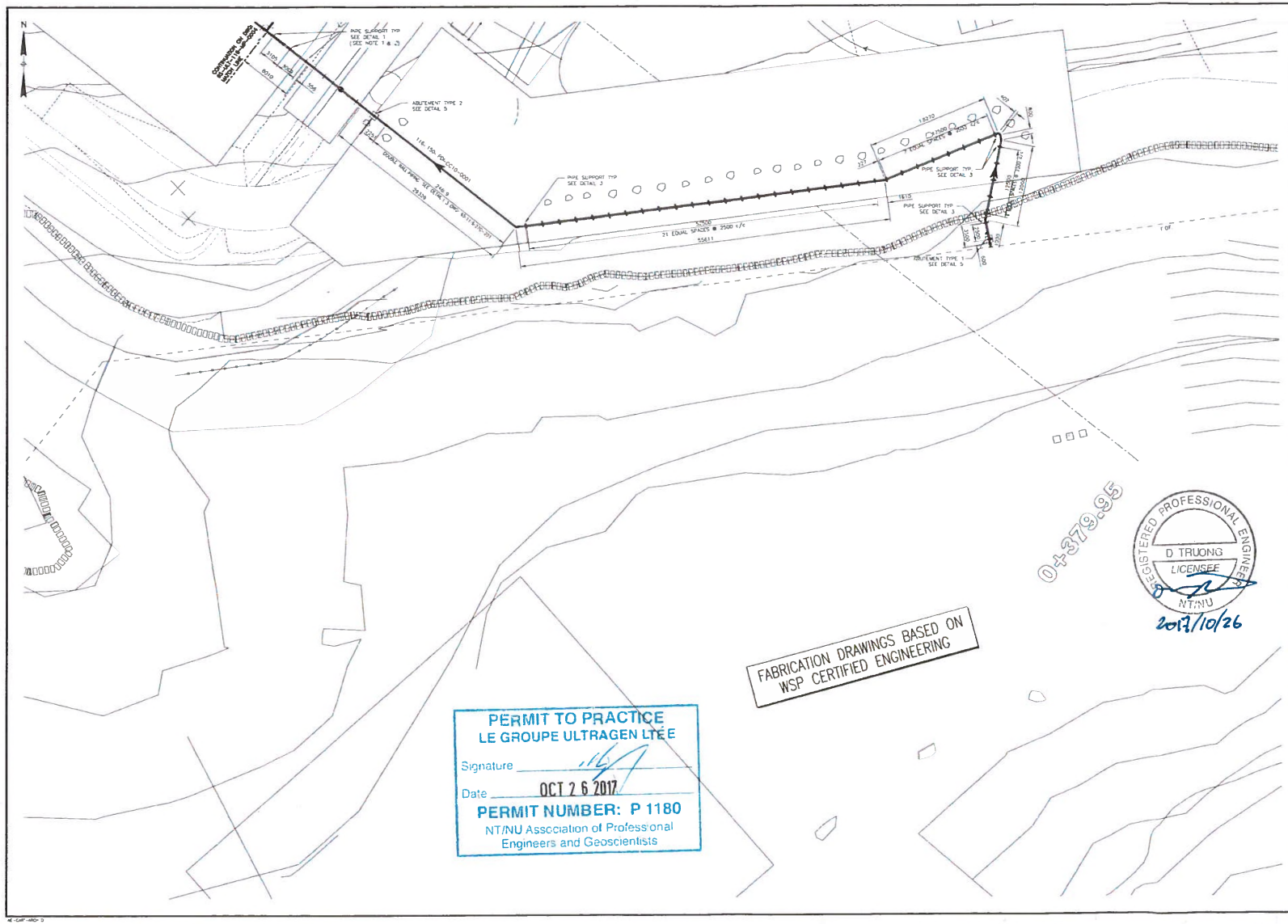



NOTES GENERALES / GENERAL NOTES

1. GUIDES SHALL BE PLACED AT LEAST NO TO BE PIPE DIAMETERS AWAY FROM PIPE EXPANSION LOOPS OR CHANGES IN DIRECTION
2. IN GENERAL GUIDES USED ON LINES ON 100 AND SMALLER ARE LOCATED AT EVERY OTHER PIPE SUPPORT AND ON LINES ON 150 AND LARGER AT EVERY THIRD SUPPORT

DESSINS EN REFERENCE / REFERENCE DRAWINGS

TITRE / TITLE	# DWG
GENERAL ARRANGEMENT - PLAN VIEWS	65-ULT-116-MP-002
GENERAL ARRANGEMENT - PLAN VIEWS	65-ULT-116-MP-003
FUEL DISTRIBUTION - FLOW DIAGRAM	65-116-205-200
PIPING & PIPE SUPPORT DETAILS	65-116-270-200
PIPING DETAILS	65-116-270-201

AGNICO EAGLE

REV	DATE	DESCRIPTION	PAR/DIT	APP	CLIENT
3	2017-10-26	AS BUILT	A.H.		
2	2017-09-27	PROJECT TITLE REVISED	AHH		
1	2017-09-11	LINE NUMBERS REVISED	TRG		
0	2017-05-17	ISSUED FOR CONSTRUCTION	A.H.		

REVISIONS

MAKSAVIK PROJECT MINING

ultragen

NO. PROJET PROJECT NO. 591700

TITRE / TITLE
AGNICO EAGLE - MELIADINE DIVISION
116 - FUEL TANK FARM
FUEL DISTRIBUTION
GENERAL ARRANGEMENT
PLAN VIEW

DESSINE PAR DRAWN BY	A. HEBERT	DATE	2017-05-10
VERIFIE PAR CHECKED BY	-		-
APPROUVE PAR APPROVED BY	-		-
ECHELLE SCALE	1 = 250	DATE	2017-04-28

NO. DESSIN DRAWING NO. 65-ULT-116-MP-001

NO. PROJET PROJECT NO.	REVISION	FEUILLE / SHT
6515	3	1/1

AE-CART-ARCH D

FILE NO. 65-ULT-116-MP-001.dwg

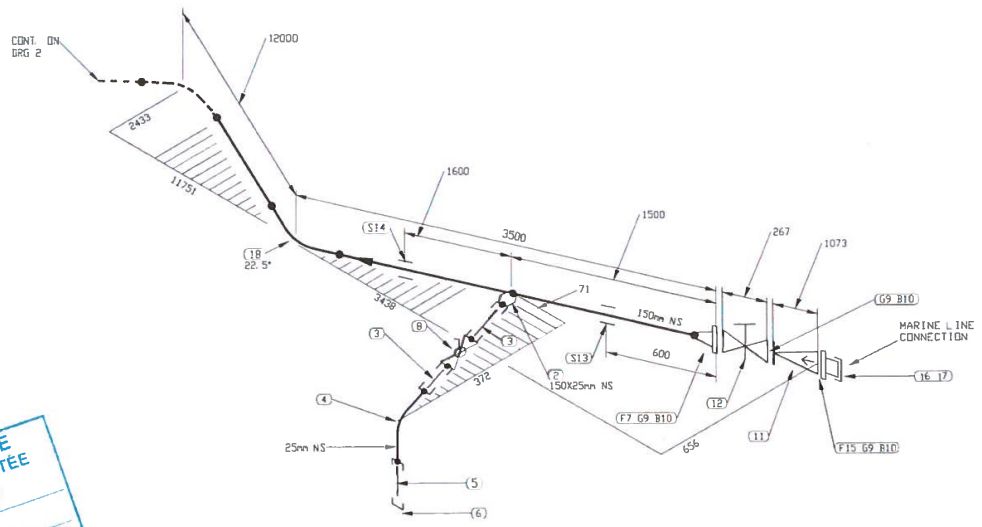

PERMIT TO PRACTICE
LE GROUPE ULTRAGEN LTÉE
Signature
Date OCT 26 2017
PERMIT NUMBER: P 1180
NT/NU Association of Professional Engineers and Geoscientists

FABRICATION DRAWINGS BASED ON WSP CERTIFIED ENGINEERING

LISTE DE MATERIEL

No	QTE	DIA	MATERIEL/CATALOGUE	DESCRIPTION
1	16045 MM	150	A 333 Gr. 6	SCH STD, SMLS PIPE
2	1	150X25	A 350 Gr. LF2	CL 3000, SOCKOLET
3	2	25	A 333 Gr. 6	SCH 80, NIPPLE x 75mm LG PBE
4	1	25	A 350 Gr. LF2	CL 3000, SW 90 DEG ELBOW
5	1	25	A 333 Gr. 6	SCH 80, NIPPLE x 75mm LG PDExTOE
6	1	25	A 350 Gr. LF2	CL 3000, THRD CAP
7	1	150	A 350 Gr. LF2	CL 150, SCH STD, RF, WN FLANGE
8	1	25	BA-29	CL 600, SW, BALL VALVE
9	3	150	ASME B16.20	CL 150, GARLOCK 5500, RING TYPE GASKET 1/8" THK
10	24 1	19	A 193 B7/A 194 2H	CL 150, 8 - 19.05 X 100 STUD BOLTS c/w TWO HEAVY HEX NUTS
11	1	150	CK-29	CL 150, RF, SWING CHECK VALVE
12	1	150	GA-10	CL 150, RF, GATE VALVE
13		150		PIPE GUIDE AS PER DETAIL 4, DWG: 65-116-270-200
14	1	150		PIPE SUPPORT AS PER DETAIL 3, DWG: 65-116-270-200
15	1	150	A 350 Gr. LF2	CL 150, RF, BLIND FLANGE (C/W 4" NPT HOLE)
16	1	100		CAMLOCK F400-SS
17	1	100		CAMLOCK DC400-SS
18	1	150	A 420 Gr. WPL6	SCH STD, BW LR 45 DEG ELBOW TRIM TO 22.5

No.	DATE	REVISION	APP.
4	2017/10/13	AS BUILT	A.H
3	2017/09/21	PROJECT TITLE REVISED	KHV
2	2017/09/11	LINE NUMBERS REVISED	QVN
1	2017/06/30	DRAIN REVISED AS PER CLIENT COMMENTS	QVN
0	2017/05/15	ISSUED FOR CONSTRUCTION	KHV

CLIENT: AGNICO EAGLE

NUQSANA PROMEC MINING

ultragen

CONSULTANT PROJECT NO. 591700

NO. DE CONDUITE		SPECIFICATION	PRODUIT	SYSTEME REVETEMENT	CODE DE COULEUR	ISOLATION ET TRACAGE	EPAISS. D'ISOLATION		
116-150-PDI-CC10-0001		CC10	PDI					65-116-270-200	PIPE SUPPORT DETAILS
PRESSION D'OPERATION	TEMPERATURE D'OPERATION	PRESSION DE CONCEPTION	TEMPERATURE DE CONCEPTION	PRESSION D'ESSAI	CLASSE D'INSPECTION	CODE DE SERVICE	TRAITEMENT THERMIQUE	65-116-205-200	P&ID
PSIG	°F	PSIG	°F	PSIG				No. DESSIN	DESSINS DE REFERENCE

SCEAU PROFESSIONNEL — REGISTERED PROFESSIONAL ENGINEER — D TRUONG — LICENSEE — NT/NU — 2017/10/26

CONC.: KHV
DATE: 2017/04/25
DESSINÉ PAR: KVE
DATE: 2017/04/25
VER. PAR: -
DATE: -
APP.: -
DATE: -
ÉCHELLE: AUCUNE

PROJET: AGNICO EAGLE - MELIADINE DIVISION
116 - FUEL TANK FARM

TITRE: RANKIN INLET
FABRICATION ISOMETRIC
MARINE LINE TO 65TNK11601 & 65TNK11602

No PROJET	No DESSIN	PAGES	REV.
6515	116-150-PDI-CC10-0001	1/13	4

116-MN-01, TEMP-01

IMPRIMÉ LE: Oct 20, 2017 9:9 am

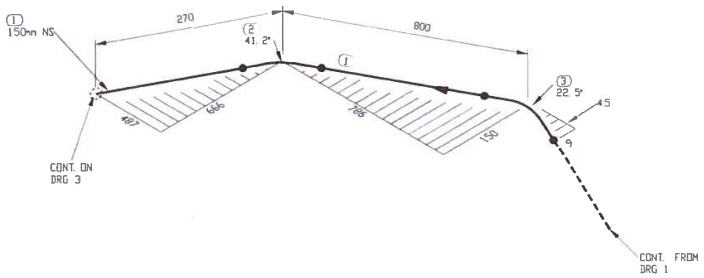

LISTE DE MATERIEL

No	QTE	DIA	MATERIEL/CATALOGUE	DESCRIPTION
1	32178 MM	150	A 333 Gr. 6	SCH STD, SMLS PIPE
2	1	150	A 420 Gr. WPL6	SCH STD, BW LR 45 DEG ELBOW TRIM TO 41.16
3	1	150	A 420 Gr. WPL6	SCH STD, BW LR 45 DEG ELBOW TRIM TO 22.5

No.	DATE	REVISION	PAR APP.
3	2017/10/13	AS BUILT	A.H.
2	2017/09/21	PROJECT TITLE REVISED	KHV
1	2017/09/11	LINE NUMBERS REVISED	KHV
0	2017/05/15	ISSUED FOR CONSTRUCTION	KHV

PERMIT TO PRACTICE
LE GROUPE ULTRAGEN LTÉE
Signature
Date OCT 26 2017
PERMIT NUMBER: P 1180
NT/NU Association of Professional Engineers and Geoscientists

FABRICATION DRAWINGS BASED ON WSP CERTIFIED ENGINEERING

CLIENT: AGNICO EAGLE

NUQSANA PROMEC MINING

ultragen

CONSULTANT PROJECT NO. 591700

NO. DE CONDUITE		SPECIFICATION	PRODUIT	SYSTEME REVETEMENT	CODE DE COULEUR	ISOLATION ET TRACAGE	EPAISS. D'ISOLATION		
116-150-PDI-CC10-0001		CC10	PDI		-			65-116-270-200	PIPE SUPPORT DETAILS
PRESSION D'OPERATION	TEMPERATURE D'OPERATION	PRESSION DE CONCEPTION	TEMPERATURE DE CONCEPTION	PRESSION D'ESSAI	CLASSE D'INSPECTION	CODE DE SERVICE	TRAITEMENT THERMIQUE	65-116-205-200	P&ID
PSIG	°F	PSIG	°F	PSIG				No. DESSIN	DESSINS DE REFERENCE

SCEAU PROFESSIONNEL
REGISTERED PROFESSIONAL ENGINEER
D TRUONG
LICENSEE
NT/NU
2017/10/26

CONC.: KHV
DATE: 2017/04/25
DESSINÉ PAR: KVE
DATE: 2017/04/25
VÉR. PAR: -
DATE: -
APP.: -
DATE: -
ÉCHELLE: AUCUNE

PROJET: AGNICO EAGLE - MELIADINE DIVISION
116 - FUEL TANK FARM

TITRE: RANKIN INLET
FABRICATION ISOMETRIC
MARINE LINE TO 65TNK11601 & 65TNK11602

No PROJET	No DESSIN	PAGES	RÉV.
6515	116-150-PDI-CC10-0001	2/13	3

116-MN-01

FICHIER: M:\Agnico Eagle\Meliadine\591700 (Fuel Distribution)\05. Drawing\02. Tuyauterie\02. Isométriques\01. Rankin Inlet\116-150-PDI-CC10-0001-2.DWG

IMPRIMÉ LE: Oct 20, 2017 11:46am

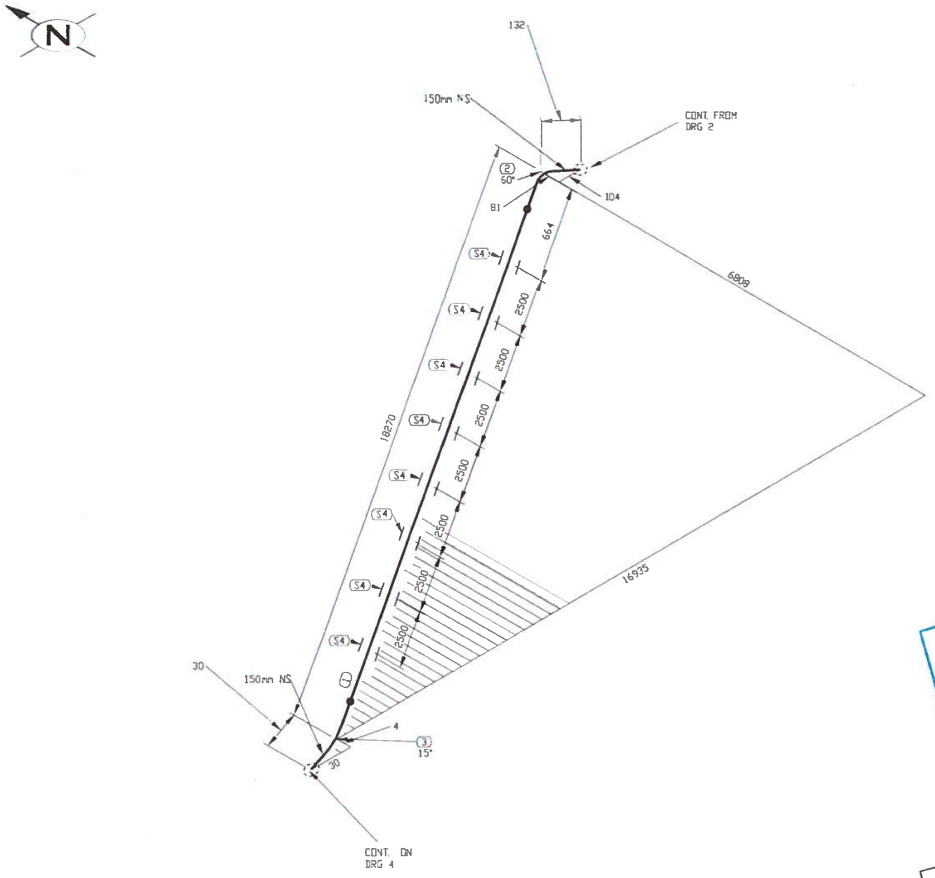

LISTE DE MATERIEL

No	QTE	DIA	MATERIEL/CATALOGUE	DESCRIPTION
1	18667 MM	150	A 333 Gr. 6	SCH STD, SMLS PIPE
2	1	150	A 420 Gr. WPL6	SCH STD, BV LR 90 DEG ELBOW TRIM TO 60.00
3	1	150	A 420 Gr. WPL6	SCH STD, BV LR 90 DEG ELBOW TRIM TO 15.00
4	8	150		PIPE SUPPORT AS PER DETAIL 3, DWG 65-116-270-200

PERMIT TO PRACTICE
LE GROUPE ULTRAGEN LTÉE
Signature
Date OCT 26 2017
PERMIT NUMBER: P 1180
NT/NU Association of Professional Engineers and Geoscientists

FABRICATION DRAWINGS BASED ON WSP CERTIFIED ENGINEERING

No.	DATE	REVISION	PAR APP.
3	2017/10/13	AS BUILT	A.H.
2	2017/09/21	PROJECT TITLE REVISED	KHV
1	2017/09/11	LINE NUMBERS REVISED	KHV
0	2017/05/15	ISSUED FOR CONSTRUCTION	KHV

CLIENT:

AGNICO EAGLE

NUQSANA PROMEC MINING

ultragen

CONSULTANT PROJECT NO. 591700

NO. DE CONDUITE		SPECIFICATION	PRODUIT	SYSTEME REVETEMENT	CODE DE COULEUR	ISOLATION ET TRACAGE	EPAISS. D'ISOLATION		
116-150-PDI-CC10-0001		CC10	PDI		-			65-116-270-200	PIPE SUPPORT DETAILS
PRESSION D'OPERATION	TEMPERATURE D'OPERATION	PRESSION DE CONCEPTION	TEMPERATURE DE CONCEPTION	PRESSION D'ESSAI	CLASSE D'INSPECTION	CODE DE SERVICE	TRAITEMENT THERMIQUE	65-116-205-200	P&ID
PSIG	°F	PSIG	°F	PSIG				No. DESSIN	DESSINS DE REFERENCE

REGISTERED PROFESSIONAL ENGINEER
D. TRUONG
LICENSEE
NT/NU
2017/10/26

CONC.: KHV
DATE: 2017/04/25
DESSINÉ PAR: KVE
DATE: 2017/04/25
VER. PAR: -
DATE: -
APP.: -
DATE: -
ÉCHELLE: AUCUNE

PROJET: AGNICO EAGLE - MELIADINE DIVISION
116 - FUEL TANK FARM

TITRE: RANKIN INLET
FABRICATION ISOMETRIC
MARINE LINE TO 65TNK11601 & 65TNK11602

No PROJET	No DESSIN	PAGES	REV.
6515	116-150-PDI-CC10-0001	3/13	3

116-MN-01

FICHIER: W:\Agnico Eagle\Meliadine\591700 (Fuel Distribution)\05. Drawing\02. Isometrics\01. Rankin Inlet\116-150-PDI-CC10-0001-3.DWG

IMPRIMÉ LE: Oct 13, 2017, 2:44pm

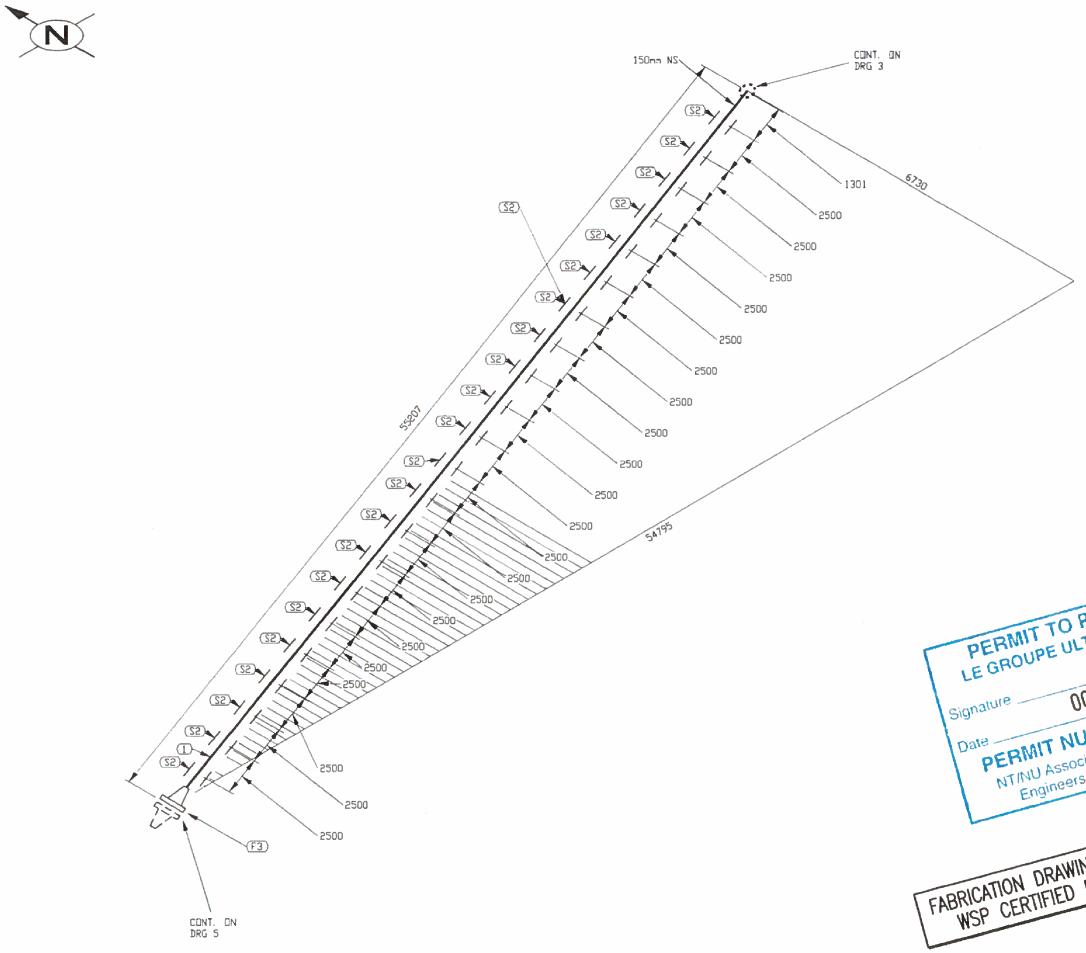

LISTE DE MATERIEL

No	QTE	DIA	MATERIEL/CATALOGUE	DESCRIPTION
1	55207 MM	150	A 333 Gr. 6	SCH STD, SMLS PIPE
2	23	150		PIPE SUPPORT AS PER DETAIL 3, DWG 65-116-270-200
3	1	150	A 350 Gr. LF2	CL 150, SCH STD, RF, WN FLANGE

PERMIT TO PRACTICE
LE GROUPE ULTRAGEN LTÉE
Signature
Date OCT 26 2017
PERMIT NUMBER: P 1180
NT/NU Association of Professional Engineers and Geoscientists

FABRICATION DRAWINGS BASED ON WSP CERTIFIED ENGINEERING

No.	DATE	REVISION	PAR APP.
3	2017/10/13	AS BUILT	A.H.
2	2017/09/21	PROJECT TITLE REVISED	KHV
1	2017/09/11	LINE NUMBERS REVISED	KHV
0	2017/05/15	ISSUED FOR CONSTRUCTION	KHV

CLIENT:

AGNICO EAGLE

NUQSANA PROMEC MINING

ultragen

CONSULTANT PROJECT NO. 591700

NO. DE CONDUITE		SPECIFICATION	PRODUIT	SYSTEME REVETEMENT	CODE DE COULEUR	ISOLATION ET TRACAGE	EPAISS. D'ISOLATION		
116-150-PDI-CC10-0001		CC10	PDI		-			65-116-270-200	PIPE SUPPORT DETAILS
PRESSION D'OPERATION	TEMPERATURE D'OPERATION	PRESSION DE CONCEPTION	TEMPERATURE DE CONCEPTION	PRESSION D'ESSAI	CLASSE D'INSPECTION	CODE DE SERVICE	TRAITEMENT THERMIQUE	65-116-205-200	P&ID
PSIG	°F	PSIG	°F	PSIG				No. DESSIN	DESSINS DE REFERENCE

SCEAU PROFESSIONNEL
REGISTERED PROFESSIONAL ENGINEER
D. TRUONG
LICENSEE
NT/NU
2017/10/26

CONC.: KHV
DATE: 2017/04/25
DESSINÉ PAR: KVE
DATE: 2017/04/25
VÉR. PAR: -
DATE: -
APP.: -
DATE: -
ÉCHELLE: AUCUNE

PROJET: AGNICO EAGLE - MELIADINE DIVISION
116 - FUEL TANK FARM

TITRE: RANKIN INLET
FABRICATION ISOMETRIC
MARINE LINE TO 65TNK11601 & 65TNK11602

No PROJET	No DESSIN	PAGES	RÉV.
6515	116-150-PDI-CC10-0001	4/13	3

116-MN-01

FICHIER: M:\Agnico Eagle\Meliadine\591700 (Fuel Distribution)\05. Dessins\02. Isométriques\01. Rankin Inlet_116-150-PDI-CC10-0001-4.DWG

IMPRIMÉ LE: Oct 13, 2017, 2:40pm

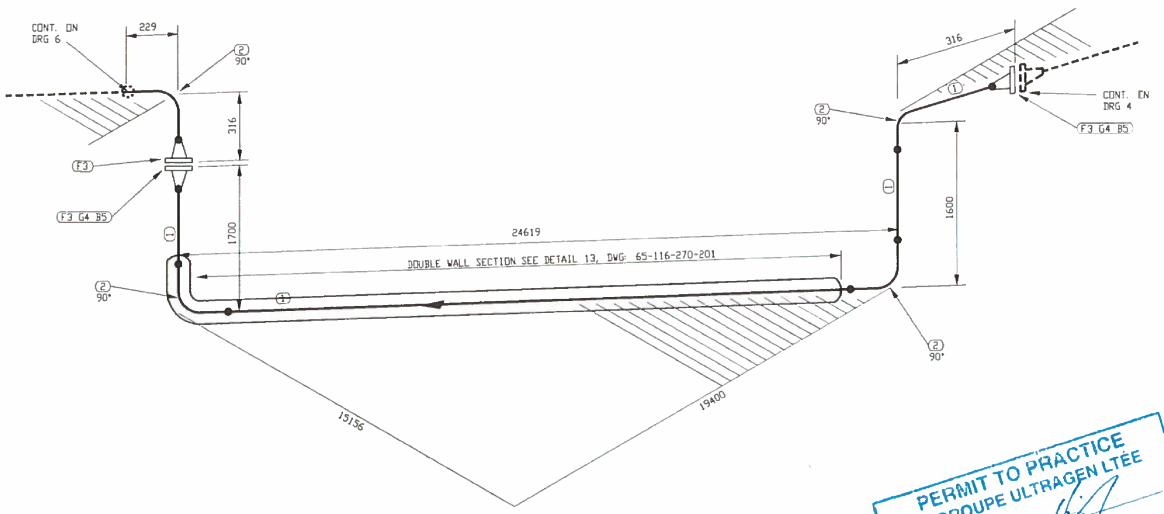

LISTE DE MATERIEL

No	QTE	DIA	MATERIEL/CATALOGUE	DESCRIPTION
1	26156 MM	150	A 333 Gr. 6	SCH STD, SMLS PIPE
2	4	150	A 420 Gr. WPL6	SCH STD, BW LR 90 DEG ELBOW
3	3	150	A 350 Gr. LF2	CL 150, SCH STD, RF, WN FLANGE
4	2	150	ASME B16.20	CL 150, GARLOCK 5500, RING TYPE GASKET 1/8" THK
6	16	19	A 193 B7/A 194 2H	CL 150, 8 - 19.05 X 100 STUD BOLTS c/w TWO HEAVY HEX NUTS

PERMIT TO PRACTICE
LE GROUPE ULTRAGEN LTÉE
Signature
Date OCT 26 2017
PERMIT NUMBER: P 1180
NT/NU Association of Professional Engineers and Geoscientists

FABRICATION DRAWINGS BASED ON WSP CERTIFIED ENGINEERING

No.	DATE	REVISION	PAR APP.
3	2017/10/13	AS BUILT	A.H.
2	2017/09/21	PROJECT TITLE REVISED	KHV
1	2017/09/11	LINE NUMBERS REVISED	KHV
0	2017/05/15	ISSUED FOR CONSTRUCTION	KHV

CLIENT: AGNICO EAGLE

NUQSANA PROMEC MINING

ultragen

CONSULTANT PROJECT NO. 591700

NO. DE CONDUITE		SPECIFICATION	PRODUIT	SYSTEME REVETEMENT	CODE DE COULEUR	ISOLATION ET TRACAGE	EPAISS. D'ISOLATION		
116-150-PDI-CC10-0001		CC10	PDI		-			65-116-270-200	PIPE SUPPORT DETAILS
PRESSION D'OPERATION	TEMPERATURE D'OPERATION	PRESSION DE CONCEPTION	TEMPERATURE DE CONCEPTION	PRESSION D'ESSAI	CLASSE D'INSPECTION	CODE DE SERVICE	TRAITEMENT THERMIQUE	65-116-205-200	P&ID
PSIG	°F	PSIG	°F	PSIG				No. DESSIN	DESSINS DE REFERENCE

REGISTERED PROFESSIONAL ENGINEER
D. TRUONG
LICENSEE
NT/NU
2017/10/26

CONC.: KHV DATE: 2017/04/25
DESSINÉ PAR: KVE DATE: 2017/04/25
VÉR. PAR: - DATE: -
APP.: - DATE: -
ÉCHELLE: AUCUNE

PROJET: AGNICO EAGLE - MELIADINE DIVISION
116 - FUEL TANK FARM

TITRE: RANKIN INLET
FABRICATION ISOMETRIC
MARINE LINE TO 65TNK11601 & 65TNK11602

No PROJET	No DESSIN	PAGES	RÉV.
6515	116-150-PDI-CC10-0001	5/13	3

116-MN-01

FICHIER: M:\Agnico Eagle\Meliadine\591700 (Fuel Distribution)\05. Dessins\02. Tuyauterie\02. Isométriques\01. Rankin Inlet\116-150-PDI-CC10-0001-3.DWG

IMPRIMÉ LE: Oct 17, 2017, 3:35pm

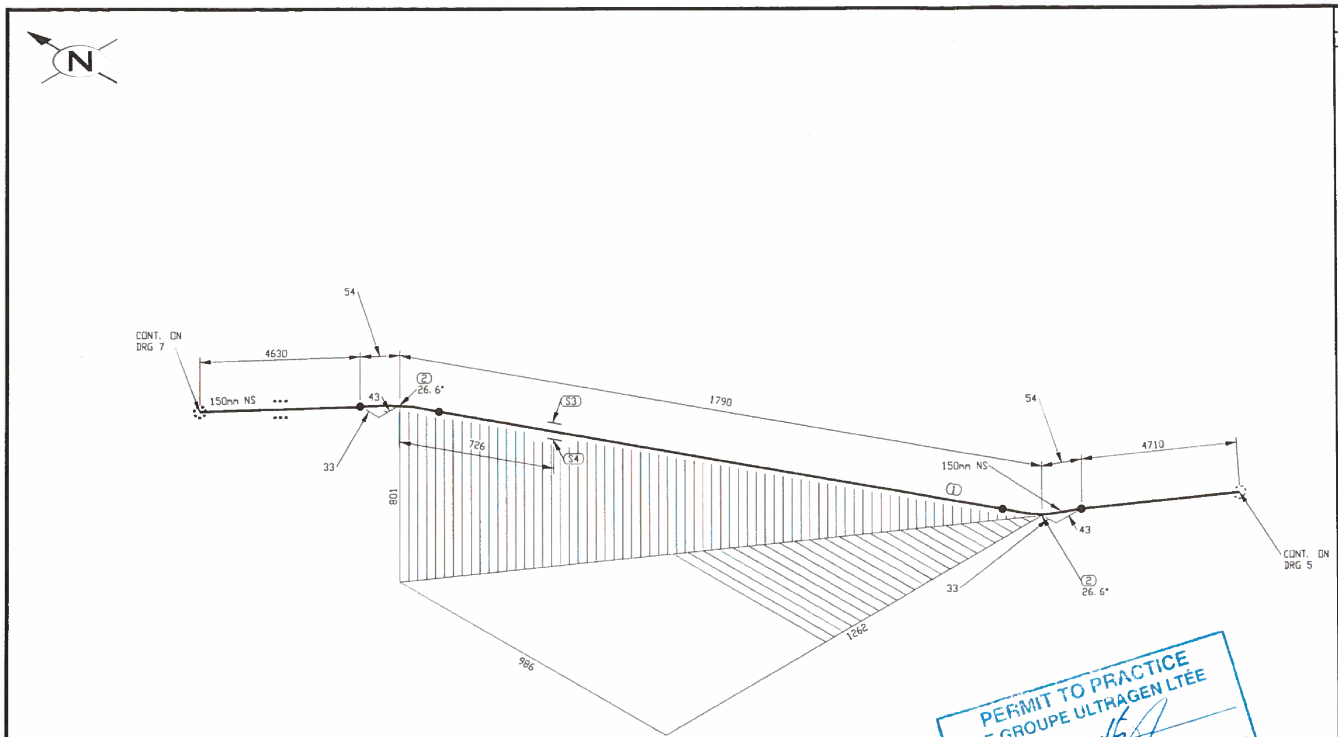

PERMIT TO PRACTICE
LE GROUPE ULTRAGEN LTÉE
Signature
Date OCT 26 2017
PERMIT NUMBER: P 1180
NT/NU Association of Professional Engineers and Geoscientists

FABRICATION DRAWINGS BASED ON WSP CERTIFIED ENGINEERING

LISTE DE MATERIEL

No	QTE	DIA	MATERIEL/CATALOGUE	DESCRIPTION
1	5344 MM	150	A 333 Gr. 6	SCH STD, SMLS PIPE
2	2	150	A 420 Gr. WPL6	SCH STD, BW LR 45 DEG ELBOW TRIM TO 26.57
3	3	150		PIPE SUPPORT AS DETAIL 1, DWG 65-116-270-200
4	1	150		PIPE SHOE AS PER DETAIL 2, DWG 65-116-270-200
5	2	150		PIPE SHOE AS PER DETAIL 2, DWG 65-116-270-200

No.	DATE	REVISION	PAR / APP.
3	2017/10/13	AS BUILT	A.H.
2	2017/09/21	PROJECT TITLE REVISED	KHV
1	2017/09/11	LINE NUMBERS REVISED	KHV
0	2017/05/15	ISSUED FOR CONSTRUCTION	KHV

CLIENT:

AGNICO EAGLE

NUQSANA PROMEC MINING

ultragen

CONSULTANT PROJECT NO. 591700

NO. DE CONDUITE		SPECIFICATION	PRODUIT	SYSTEME REVETEMENT	CODE DE COULEUR	ISOLATION ET TRACAGE	EPAISS. D'ISOLATION		
116-150-PDI-CC10-0001		CC10	PDI		-			65-116-270-200	PIPE SUPPORT DETAILS
PRESSION D'OPERATION	TEMPERATURE D'OPERATION	PRESSION DE CONCEPTION	TEMPERATURE DE CONCEPTION	PRESSION D'ESSAI	CLASSE D'INSPECTION	CODE DE SERVICE	TRAITEMENT THERMIQUE	65-116-205-200	P&ID
PSIG	°F	PSIG	°F	PSIG				No. DESSIN	DESSINS DE REFERENCE

REGISTERED PROFESSIONAL ENGINEER
D TRUONG
LICENSEE
NT/NU
2017/10/26

CONC.: KHV
DATE: 2017/04/25
DESSINE PAR: KVE
DATE: 2017/04/25
VÉR. PAR: -
DATE: -
APP.: -
DATE: -
ÉCHELLE: AUCUNE

PROJET: AGNICO EAGLE - MELIADINE DIVISION
116 - FUEL TANK FARM

TITRE: RANKIN INLET
FABRICATION ISOMETRIC
MARINE LINE TO 65TNK11601 & 65TNK11602

No PROJET	No DESSIN	PAGES	REV.
6515	116-150-PDI-CC10-0001	6/13	3

116-MN-01

FICHIER: W:\Agnico Eagle\Meliadine\591700 (Fuel Distribution)\05. Dessins\02. Tuyauterie\02. Isométriques\01. Rankin Inlet\116-150-PDI-CC10-0001-6.DWG

IMPRIMÉ LE: Oct 13, 2017 11:57am

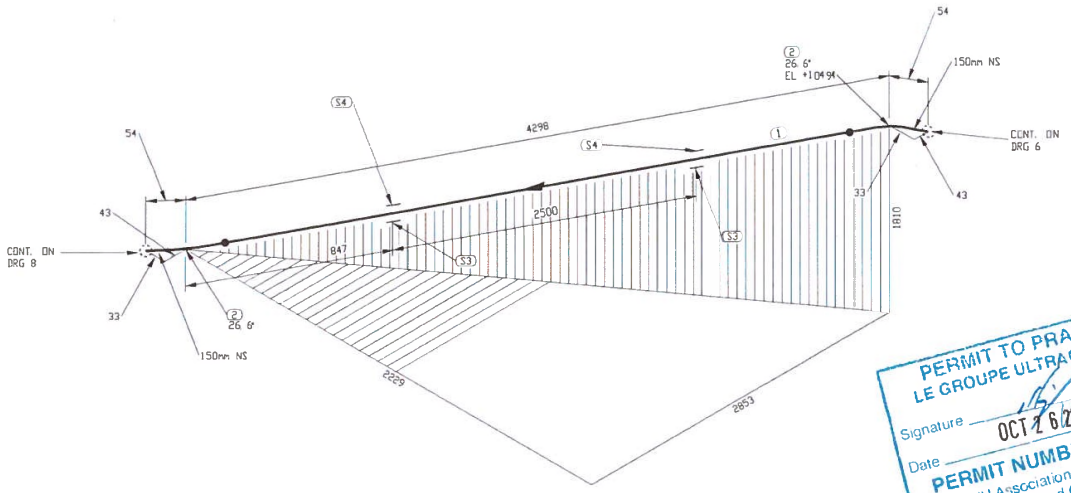

PERMIT TO PRACTICE
LE GROUPE ULTRAGEN LTÉE
Signature
Date OCT 26 2017
PERMIT NUMBER: P 1180
NT/NU Association of Professional Engineers and Geoscientists

FABRICATION DRAWINGS BASED ON WSP CERTIFIED ENGINEERING

LISTE DE MATERIEL

No	QTE	DIA	MATERIEL/CATALOGUE	DESCRIPTION
1	3939 MM	150	A 333 Gr. 6	SCH STD, SMLS PIPE
2	2	150	A 420 Gr. WPL6	SCH STD, BW LR 45 DEG ELBOW TRIM TO 26.57
3	2	150		PIPE SUPPORT AS PER DETAIL 1, DWG: 65-116-270-200
4	2	150		PIPE SHOE AS PER DETAIL 2, DWG: 65-116-270-200

No.	DATE	REVISION	PAR APP.
3	2017/10/13	AS BUILT	A.H.
2	2017/09/21	PROJECT TITLE REVISED	KHV
1	2017/09/11	LINE NUMBERS REVISED	KHV
0	2017/05/15	ISSUED FOR CONSTRUCTION	KHV

CLIENT: AGNICO EAGLE

NUQSANA PROMEC MINING

ultragen

CONSULTANT PROJECT NO. 591700

NO. DE CONDUITE		SPECIFICATION	PRODUIT	SYSTEME REVETEMENT	CODE DE COULEUR	ISOLATION ET TRACAGE	EPAISS. D'ISOLATION		
116-150-PDI-CC10-0001		CC10	PDI		-			65-116-270-200	PIPE SUPPORT DETAILS
PRESSION D'OPERATION	TEMPERATURE D'OPERATION	PRESSION DE CONCEPTION	TEMPERATURE DE CONCEPTION	PRESSION D'ESSAI	CLASSE D'INSPECTION	CODE DE SERVICE	TRAITEMENT THERMIQUE	65-116-205-200	P&ID
PSIG	°F	PSIG	°F	PSIG				No. DESSIN	DESSINS DE REFERENCE

SCEAU PROFESSIONNEL
REGISTERED PROFESSIONAL ENGINEER
D. TRUONG
LICENSEE
NT/NU
2017/10/26

CONC.: KHV DATE: 2017/04/25
DESSINÉ PAR: KVE DATE: 2017/04/25
VER. PAR: - DATE: -
APP.: - DATE: -
ÉCHELLE: AUCUNE

PROJET: AGNICO EAGLE - MELIADINE DIVISION
116 - FUEL TANK FARM

TITRE: RANKIN INLET
FABRICATION ISOMETRIC
MARINE LINE TO 65TNK11601 & 65TNK11602

No PROJET	No DESSIN	PAGES	REV.
6515	116-150-PDI-CC10-0001	7/13	3

116-MN-01

FICHIER: W:\Agnico Eagle\Meliadine\591700 (Fuel Distribution)\05 Dessins\02 Isométriques\01 Rankin Inlet\116-150-PDI-CC10-0001-7.DWG

IMPRIMÉ LE: Oct 13, 2017, 11:37am

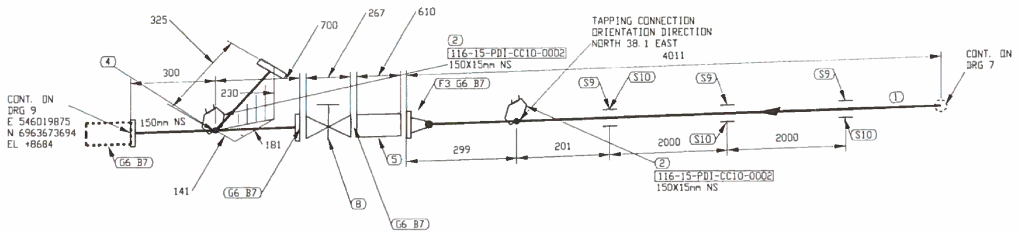

LISTE DE MATERIEL

No	QTE	DIA	MATERIEL/CATALOGUE	DESCRIPTION
1	4914 MM	150	A 333 Gr. 6	SCH STD, SMLS PIPE
2	2	150X15	A 350 Gr. LF2	CL 3000, THREDOLET
3	1	150	A 350 Gr. LF2	CL 150, SCH STD, RF, WN FLANGE
4	1	150X150		CL 150, PIG CATCHER AS PER DETAIL B, DWG 65-116-270-200
5	1	150		CL 150, SINGLE BRAIDED HOSE ASSEMBLY
6	4	150	ASME B16.20	CL 150, GARLOCK 5500, RING TYPE GASKET 1/8" THK
7	32	19	A 193 B7/A 194 2H	CL 150, 8 - 19.05 X 100 STUD BOLTS C/W TWO HEAVY HEX NUTS
8	1	150	GA-10	CL 150, RF, CS, FULL PORT GATE VALVE
9	3	150		PIPE SUPPORT AS PER DETAIL 1, DWG 65-116-270-200
10	3	150		PIPE SHOE AS PER DETAIL 2, DWG 65-116-270-200

PERMIT TO PRACTICE
LE GROUPE ULTRAGEN LTÉE
Signature
Date OCT 26 2017
PERMIT NUMBER: P 1180
NT/NU Association of Professional Engineers and Geoscientists

FABRICATION DRAWINGS BASED ON WSP CERTIFIED ENGINEERING

No.	DATE	REVISION	PAR APP.
3	2017/10/13	AS BUILT	A.H.
2	2017/09/21	PROJECT TITLE REVISED	KHV
1	2017/09/11	LINE NUMBERS REVISED	KHV
0	2017/05/15	ISSUED FOR CONSTRUCTION	KHV

CLIENT: AGNICO EAGLE

NUQSANA PROMEC MINING

ultragen

CONSULTANT PROJECT NO. 591700

NO. DE CONDUITE		SPECIFICATION	PRODUIT	SYSTEME REVETEMENT	CODE DE COULEUR	ISOLATION ET TRACAGE	EPAISS. D'ISOLATION		
116-150-PDI-CC10-0001		CC10	PDI		-			65-116-270-200	PIPE SUPPORT DETAILS
PRESSION D'OPERATION	TEMPERATURE D'OPERATION	PRESSION DE CONCEPTION	TEMPERATURE DE CONCEPTION	PRESSION D'ESSAI	CLASSE D'INSPECTION	CODE DE SERVICE	TRAITEMENT THERMIQUE	65-116-205-200	P&ID
		PSIG	°F	PSIG				No. DESSIN	DESSINS DE REFERENCE

REGISTERED PROFESSIONAL ENGINEER
SCEAU PROFESSIONNEL
D. TRUONG
LICENSEE
NT/NU
2017/10/26

CONC.: KHV
DATE: 2017/04/25
DESSINÉ PAR: KVE
DATE: 2017/04/25
VÉR. PAR: -
DATE: -
APP.: -
DATE: -
ÉCHELLE: AUCUNE

PROJET: AGNICO EAGLE - MELIADINE DIVISION
116 - FUEL TANK FARM

TITRE: RANKIN INLET
FABRICATION ISOMETRIC
MARINE LINE TO 65TNK11601 & 65TNK11602

No PROJET	No DESSIN	PAGES	RÉV.
6515	116-150-PDI-CC10-0001	8/13	3

116-MN-01

FICHIER: N:\Agnico Eagle\Meliadine\591700 (Fuel Distribution)\05. Dessins\02. Tuyauterie\02. Isométriques\01. Rankin Inlet\116-150-PDI-CC10-0001-8.DWG

IMPRIMÉ LE: Oct 13, 2017, 11:33am

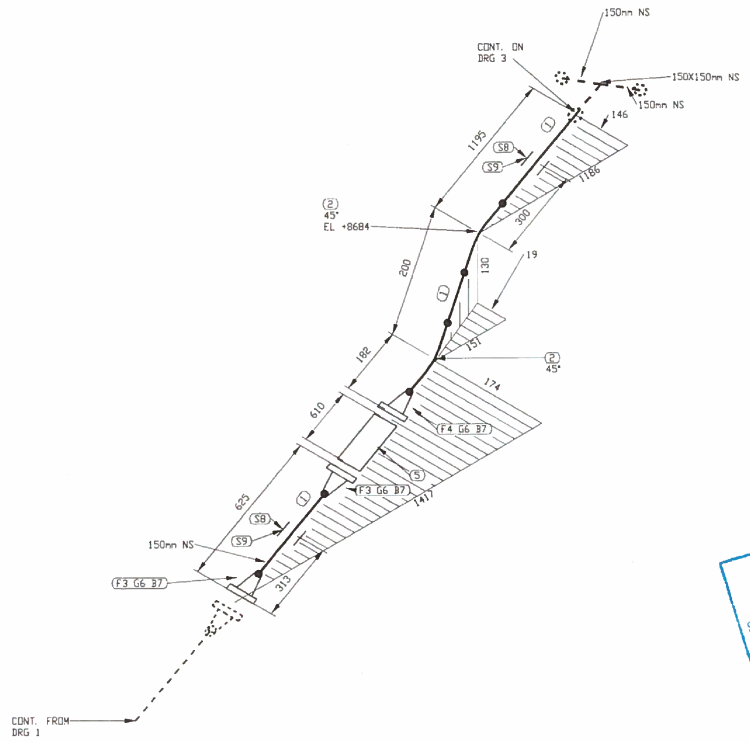

PERMIT TO PRACTICE
LE GROUPE ULTRAGEN LTÉE
Signature
Date OCT 26 2017
PERMIT NUMBER: P 1180
NT/NU Association of Professional Engineers and Geoscientists

FABRICATION DRAWINGS BASED ON WSP CERTIFIED ENGINEERING

LISTE DE MATERIEL

No	QTE	DIA	MATERIEL/CATALOGUE	DESCRIPTION
1	1825 MM	150	A 333 Gr. 6	SCH STD, SMLS PIPE
2	2	150	A 420 Gr. WPL6	SCH STD, BW LR 45 DEG ELBOW
3	2	150	A 350 Gr. LF2	CL 150, SCH STD, RF, WN FLANGE
4	1	150	A 350 Gr. LF2	CL 150, SCH STD, RF, WN FLANGE
5	1	150		CL 150, SINGLE BRAIDED HOSE ASSEMBLY
6	3	150	ASME B16.20	CL 150, GARLOCK 5500, RING TYPE GASKET 1/8" THK
7	24	19	A 193 B7/A 194 2H	CL 150, 8 - 19.05 X 100 STUD BOLTS c/w TWO HEAVY HEX NUTS
8	2	150		PIPE SUPPORT AS PER DETAIL 1, DWG 65-116-270-200
9	2	150		PIPE SHOE AS PER DETAIL 2, DWG 65-116-270-200

No.	DATE	REVISION	PAR APP.
3	2017/10/13	AS BUILT	A.H.
2	2017/09/21	PROJECT TITLE REVISED	KHV
1	2017/09/11	LINE NUMBERS REVISED	KHV
0	2017/05/15	ISSUED FOR CONSTRUCTION	KHV

CLIENT: AGNICO EAGLE

NUQSANA PROMEC MINING

ultragen

CONSULTANT PROJECT NO. 591700

NO. DE CONDUITE		SPECIFICATION	PRODUIT	SYSTEME REVETEMENT	CODE DE COULEUR	ISOLATION ET TRACAGE	EPAISS. D'ISOLATION		
116-150-PDI-CC10-0006		CC10	PDI		-			65-116-270-200	PIPE SUPPORT DETAILS
PRESSION D'OPERATION	TEMPERATURE D'OPERATION	PRESSION DE CONCEPTION	TEMPERATURE DE CONCEPTION	PRESSION D'ESSAI	CLASSE D'INSPECTION	CODE DE SERVICE	TRAITEMENT THERMIQUE	65-116-205-200	P&ID
PSIG	°F	PSIG	°F	PSIG				No. DESSIN	DESSINS DE REFERENCE

SCEAU PROFESSIONNEL
REGISTERED PROFESSIONAL ENGINEER
D. TRUONG
LICENCEE
NT/NU
2017/10/26

CONC.: KHV DATE: 2017/04/25
DESSINÉ PAR: KVE DATE: 2017/04/25
VÉR. PAR: - DATE: -
APP.: - DATE: -
ÉCHELLE: AUCUNE

PROJET: AGNICO EAGLE - MELIADINE DIVISION
116 - FUEL TANK FARM

TITRE: RANKIN INLET
FABRICATION ISOMETRIC
DIESEL FROM 65TNK11601 & 65TNK11602 TO PUMPING STATION

No PROJET	No DESSIN	PAGES	RÉV.
6515	116-150-PDI-CC10-0006	2/12	3

116-MN-01

IMPRIMÉ LE: Oct 13, 2017, 3:33pm

FICHIER: N:\Agnico Eagle\Meliadine\591700 (Fuel Distribution)\05. Dessins\02. Tuyauterie\02. Isométriques\01. Rankin Inlet\116-150-PDI-CC10-0006-2.DWG

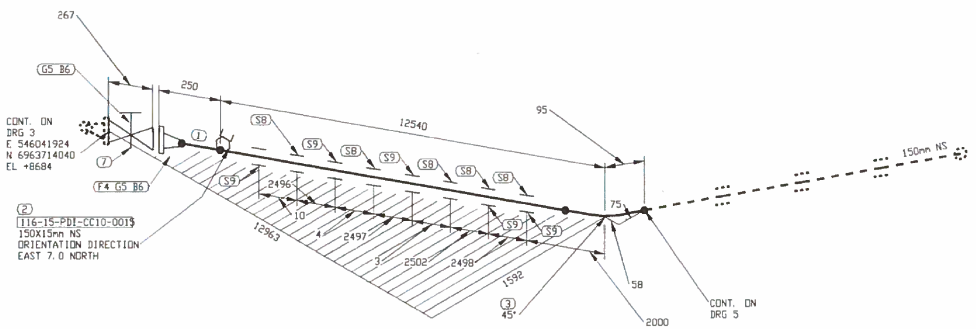

LISTE DE MATERIEL

No	QTE	DIA	MATERIEL/CATALOGUE	DESCRIPTION
1	12983 MM	150	A 333 Gr. 6	SCH STD, SMLS PIPE
2	1	150X15	A 350 Gr. LF2	CL 3000, THREDOLET
3	1	150	A 420 Gr. WPL6	SCH STD, BW LR 45 DEG ELBOW
4	1	150	A 350 Gr. LF2	CL 150, SCH STD, RF, WN FLANGE
5	2	150	ASME B16.20	CL 150, GARLOCK 5500, RING TYPE GASKET 1/8" THK
6	16	19	A 193 B7/A 194 2H	CL 150, 8 - 19.05 X 100 STUD BOLTS c/w TWO HEAVY HEX NUTS
7	1	150	GA-10	CL 150, RF, GATE VALVE
8	5	150		PIPE SUPPORT AS PER DETAIL 1, DWG 65-116-270-200
9	5	150		PIPE SHOE AS PER DETAIL 2, DWG 65-116-270-200

PERMIT TO PRACTICE
LE GROUPE ULTRAGEN LTÉE
Signature
Date OCT 26 2017
PERMIT NUMBER: P 1180
NT/NU Association of Professional Engineers and Geoscientists

FABRICATION DRAWINGS BASED ON WSP CERTIFIED ENGINEERING

No.	DATE	REVISION	PAR APP.
3	2017/10/13	AS BUILT	A.H.
2	2017/09/21	PROJECT TITLE REVISED	KHV
1	2017/09/11	LINE NUMBERS REVISED	KHV
0	2017/05/15	ISSUED FOR CONSTRUCTION	KHV

CLIENT: AGNICO EAGLE

NUQSANA PROMEC MINING

ultragen

CONSULTANT PROJECT NO. 591700

NO. DE CONDUITE		SPECIFICATION	PRODUIT	SYSTEME REVETEMENT	CODE DE COULEUR	ISOLATION ET TRACAGE	EPAISS. D'ISOLATION		
116-150-PDI-CC10-0006		CC10	PDI		-			65-116-270-200	PIPE SUPPORT DETAILS
PRESSION D'OPERATION	TEMPERATURE D'OPERATION	PRESSION DE CONCEPTION	TEMPERATURE DE CONCEPTION	PRESSION D'ESSAI	CLASSE D'INSPECTION	CODE DE SERVICE	TRAITEMENT THERMIQUE	65-116-205-200	P&ID
PSIG	°F	PSIG	°F	PSIG				No. DESSIN	DESSINS DE REFERENCE

SCEAU PROFESSIONNEL: REGISTERED PROFESSIONAL ENGINEER D. TRUONG LICENSEE NT/NU 2017/10/26

CONC.: KHV DATE: 2017/04/25
DESSINÉ PAR: KVE DATE: 2017/04/25
VER. PAR: - DATE: -
APP.: - DATE: -
ÉCHELLE: AUCUNE

PROJET: AGNICO EAGLE - MELIADINE DIVISION
116 - FUEL TANK FARM

TITRE: RANKIN INLET
FABRICATION ISOMETRIC
DIESEL FROM 65TNK11601 & 65TNK11602 TO PUMPING STATION

No PROJET	No DESSIN	PAGES	RÉV.
6515	116-150-PDI-CC10-0006	4/12	3

116-MN-01

FICHIER: W:\Agnico Eagle\Meliadine\591700 (Fuel Distribution)\05. Dessins\02. Tuyauterie\02. Isométriques\01. Rankin Inlet\116-150-PDI-CC10-0006-4.DWG

IMPRIMÉ LE: Oct 13, 2017, 3:44pm

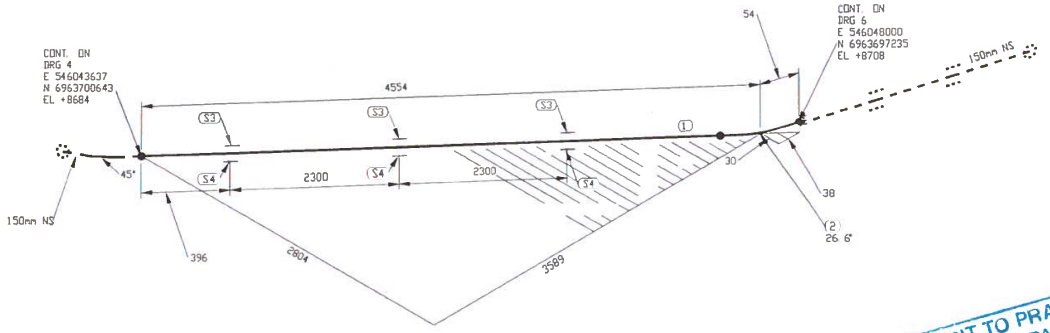

LISTE DE MATERIEL

No	QTE	DIA	MATERIEL/CATALOGUE	DESCRIPTION
1	5434 MM	150	A 333 Gr. 6	SCH STD, SMLS PIPE
2	1	150	A 420 Gr. WPL6	SCH STD, BW LR 90 DEG ELBOW TRIM TO 26.57
3	3	150		PIPE SUPPORT AS PER DETAIL 1, DWG 65-116-270-200
4	3	150		PIPE SHOE AS PER DETAIL 2, DWG 65-116-270-200

PERMIT TO PRACTICE
LE GROUPE ULTRAGEN LTÉE
Signature
Date OCT 17 2017
PERMIT NUMBER: P 1180
NT/NU Association of Professional Engineers and Geoscientists

FABRICATION DRAWINGS BASED ON WSP CERTIFIED ENGINEERING

No.	DATE	REVISION	PAR APP.
3	2017/10/13	AS BUILT	A.H.
2	2017/09/21	PROJECT TITLE REVISED	KHV
1	2017/09/11	LINE NUMBERS REVISED	KHV
0	2017/05/15	ISSUED FOR CONSTRUCTION	KHV

CLIENT: AGNICO EAGLE

NUQSANA PROMEC MINING

ultragen

CONSULTANT PROJECT NO. 591700

NO. DE CONDUITE		SPECIFICATION	PRODUIT	SYSTEME REVETEMENT	CODE DE COULEUR	ISOLATION ET TRACAGE	EPAISS. D'ISOLATION		
116-150-PDI-CC10-0006		CC10	PDI		-			65-116-270-200	PIPE SUPPORT DETAILS
PRESSION D'OPERATION	TEMPERATURE D'OPERATION	PRESSION DE CONCEPTION	TEMPERATURE DE CONCEPTION	PRESSION D'ESSAI	CLASSE D'INSPECTION	CODE DE SERVICE	TRAITEMENT THERMIQUE	65-116-205-200	P&ID
PSIG	°F	PSIG	°F	PSIG				No. DESSIN	DESSINS DE REFERENCE

SCEAU PROFESSIONNEL — TRUONG LICENSEE NT/NU 2017/10/26

CONC.: KHV DATE: 2017/04/25
DESSINÉ PAR: KVE DATE: 2017/04/25
VÉR. PAR: - DATE: -
APP.: - DATE: -
ÉCHELLE: AUCUNE

PROJET: AGNICO EAGLE - MELIADINE DIVISION
116 - FUEL TANK FARM

TITRE: RANKIN INLET
FABRICATION ISOMETRIC
DIESEL FROM 65TNK11601 & 65TNK11602 TO PUMPING STATION

No PROJET	No DESSIN	PAGES	REV.
6515	116-150-PDI-CC10-0006	5/12	3

116-MN-01

FICHIER: M:\Agnico Eagle\Meliadine\591700 (Fuel Distribution)\05- Dessin\02- Tuyauterie\02- Isométriques\01- Rankin Inlet\116-150-PDI-CC10-0006-3.DWG

IMPRIMÉ LE: Oct 13, 2017, 3:54pm

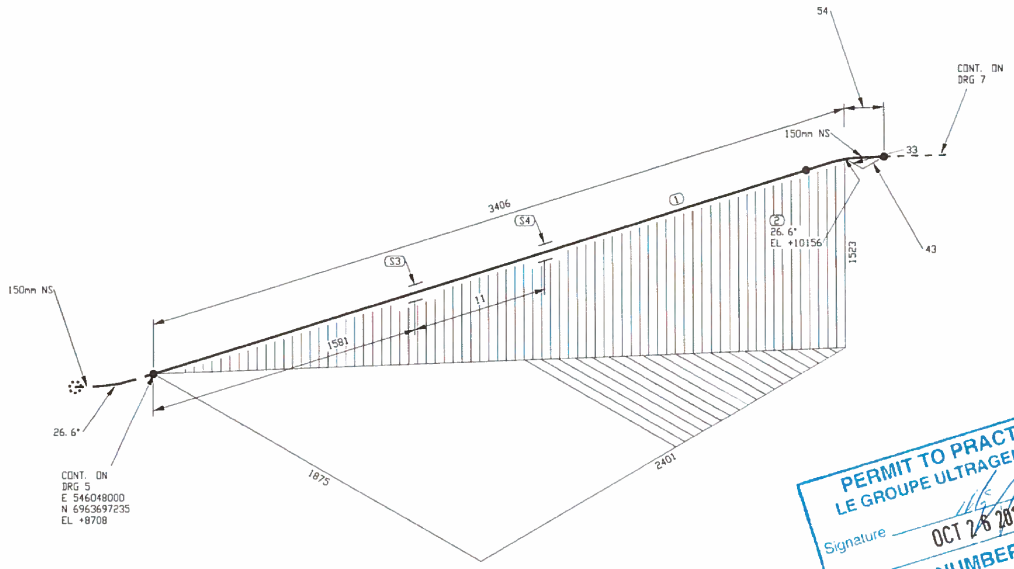

LISTE DE MATERIEL

No	QTE	DIA	MATERIEL/CATALOGUE	DESCRIPTION
1	3183 MM	150	A 333 Gr. 6	SCH STD, SMLS PIPE
2	1	150	A 420 Gr. WPL6	SCH STD, BW LR 90 DEG ELBOW TRIM TO 26.57
3	1	150		PIPE SUPPORT AS PER DETAIL 1, DWG 65-116-270-200
4	1	150		PIPE SHOE AS PER DETAIL 2, DWG 65-116-270-200

PERMIT TO PRACTICE
LE GROUPE ULTRAGEN LTÉE
Signature
Date OCT 26 2017
PERMIT NUMBER: P 1180
NT/NU Association of Professional Engineers and Geoscientists

FABRICATION DRAWINGS BASED ON WSP CERTIFIED ENGINEERING

No.	DATE	REVISION	PAR / APP.
3	2017/10/13	AS BUILT	A.H.
2	2017/09/21	PROJECT TITLE REVISED	KHV
1	2017/09/11	LINE NUMBERS REVISED	KHV
0	2017/05/15	ISSUED FOR CONSTRUCTION	KHV

CLIENT: AGNICO EAGLE

NUQSANA PROMEC MINING

ultragen

CONSULTANT PROJECT NO. 591700

NO. DE CONDUITE		SPECIFICATION	PRODUIT	SYSTEME REVETEMENT	CODE DE COULEUR	ISOLATION ET TRACAGE	EPAISS. D'ISOLATION		
116-150-PDI-CC10-0006		CC10	PDI		-			65-116-270-200	PIPE SUPPORT DETAILS
PRESSION D'OPERATION	TEMPERATURE D'OPERATION	PRESSION DE CONCEPTION	TEMPERATURE DE CONCEPTION	PRESSION D'ESSAI	CLASSE D'INSPECTION	CODE DE SERVICE	TRAITEMENT THERMIQUE	65-116-205-200	P&ID
PSIG	°F.	PSIG	°F	PSIG				No. DESSIN	DESSINS DE REFERENCE

REGISTERED PROFESSIONAL ENGINEER
D. TRUONG
LICENSEE
NT/NU
2017/10/26

CONC.: KHV
DATE: 2017/04/25
DESSINÉ PAR: KVE
DATE: 2017/04/25
VÉR. PAR: -
DATE: -
APP.: -
DATE: -
ÉCHELLE: AUCUNE

PROJET: AGNICO EAGLE - MEL IADINE DIVISION
116 - FUEL TANK FARM

TITRE: RANKIN INLET
FABRICATION ISOMETRIC
DIESEL FROM 65TNK11601 & 65TNK11602 TO PUMPING STATION

No PROJET	No DESSIN	PAGES	RÉV.
6515	116-150-PDI-CC10-0006	6/12	3

116-MN-01

IMPRIMÉ LE: Oct. 13, 2017, 3:52pm

FICHIER: W:\Agnico Eagle\Meliadine\591700 (Fuel Distribution)\05. Dessins\02. Topsoline\02. Isométriques\01. Rankin Inlet\116-150-PDI-CC10-0006-R.DWG

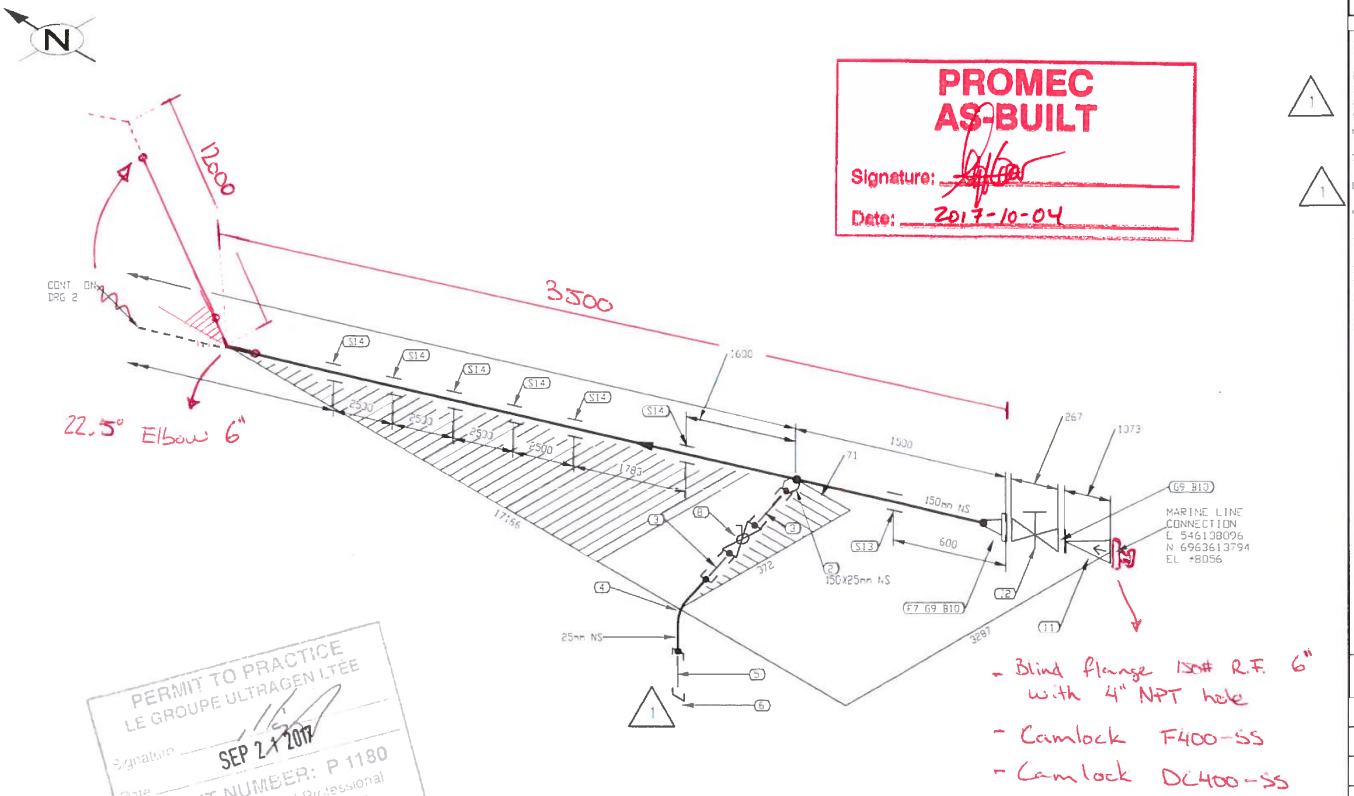

- Blind flange 150# R.F. 6" with 4" NPT hole
- Camlock F400-SS
- Camlock DC400-SS

PROMEC AS-BUILT
Signature:
Date: 2017-10-04

PERMIT TO PRACTICE
LE GROUPE ULTRAGEN LTÉE
Signature
Date SEP 21 2017
PERMIT NUMBER: P 1180
NT/NU Association of Professional Engineers and Geoscientists

FABRICATION DRAWINGS BASED ON WSP CERTIFIED ENGINEERING

LISTE DE MATERIEL

No	QTE	DIA	MATERIEL/CATALOGUE	DESCRIPTION
1	16745 MM	150	A 333 Gr. 6	SCH STD, SMLS PIPE
2	1	150X25	A 350 Gr. LF2	CL 3000, SOCKOLET
3	2	25	A 333 Gr. 6	SCH 80, NIPPLE x 75mm LG PBE
4	1	25	A 350 Gr. LF2	CL 3000, SW 90 DEG ELBOW
5	1	25	A 333 Gr. 6	SCH 80, NIPPLE x 75mm LG PCE×TOE
6	1	25	A 350 Gr. LF2	CL 3000, THRD CAP
7	1	150	A 350 Gr. LF2	CL 150, SCH STD, RF, WN FLANGE
8	1	25	BA-29	CL 600, SW, BALL VALVE
9	2	150	ASME B16.20	CL 150, GARLOCK 5500, RING TYPE GASKET 1/8" THK
10	16	19	A 193 B7/A 194 2H	CL 150, 8 - 19.05 X 100 STUD BOLTS c/w TWO HEAVY HEX NUTS
11	1	150	Ck-29	CL 150, RF, SWING CHECK VALVE
12	1	150	GA-10	CL 150, RF, GATE VALVE
13		150		PIPE GUIDE AS PER DETAIL 4, DWG 65-116-270-200
14	6	150		PIPE SUPPORT AS PER DETAIL 3, DWG 65-116-270-200

No.	DATE	REVISION	PAR / APP.
3	2017/09/21	PROJECT TITLE REVISED	KHV
2	2017/09/11	LINE NUMBERS REVISED	QVN
1	2017/06/30	DRAIN REVISED AS PER CLIENT COMMENTS	QVN
0	2017/05/15	ISSUED FOR CONSTRUCTION	KHV

CLIENT: AGNICO EAGLE

NUQSANA PROMEC MINING

ultragen

CONSULTANT PROJECT NO. 591700

NO. DE CONDUITE		SPECIFICATION	PRODUIT	SYSTEME REVETEMENT	CODE DE COULEUR	ISOLATION ET TRACAGE	EPAISS. D'ISOLATION		
116-150-PDI-CC10-0001		CC10	PDI					65-116-270-200	PIPE SUPPORT DETAILS
PRESSION D'OPERATION	TEMPERATURE D'OPERATION	PRESSION DE CONCEPTION	TEMPERATURE DE CONCEPTION	PRESSION D'ESSAI	CLASSE D'INSPECTION	CODE DE SERVICE	TRAITEMENT THERMIQUE	65-116-205-200	P&ID
PSIG	°F	PSIG	°F	PSIG				No. DESSIN	DESSINS DE REFERENCE

SCEAU PROFESSIONNEL
REGISTERED PROFESSIONAL ENGINEER
D TRUONG
LICENSEE
NT/NU
2017/09/21

CONC.: KHV
DATE: 2017/04/25
DESSINÉ PAR: KVE
DATE: 2017/04/25
VÉR. PAR: -
DATE: -
APP.: -
DATE: -
ÉCHELLE: AUCUNE

PROJET: AGNICO EAGLE - MELIADINE DIVISION
116 - FUEL TANK FARM

TITRE: RANKIN INLET
FABRICATION ISOMETRIC
MARINE LINE TO 65TNK11601 & 65TNK11602

No PROJET	No DESSIN	PAGES	REV.
6515	116-150-PDI-CC10-0001	1/13	3

116-MN-01, TEMP-01

FICHIER: W:\Agnico-eagle\Meliadine\591700 (Fuel Distribution)\05 Dessins\02 Tuyauterie\02 Isométriques\01 Rankin Inlet\116-150-PDI-CC10-0001-1.DWG

IMPRIMÉ LE Sep 20, 2017, 2:43pm

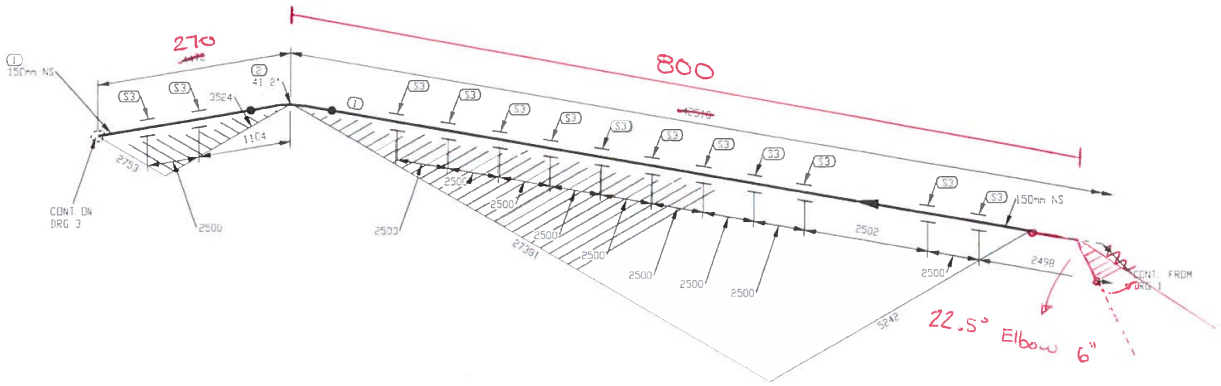

LISTE DE MATERIEL

No	QTE	DIA	MATERIEL/CATALOGUE	DESCRIPTION
1	32178 MM	150	A 333 Gr. 6	SCH STD, SMLS PIPE
2	1	150	A 420 Gr. WPL6	SCH STD, BW LR 45 DEG ELBOW TRIM TO 41.16
3	13	150		PIPE SUPPORT AS PER DETAIL 3, DWG 65-116-270-200

PERMIT TO PRACTICE
LE GROUPE ULTRAGEN LTÉE
Signature
Date SEP 2 1 2017
PERMIT NUMBER: P 1180
NT/NU Association of Professional Engineers and Geoscientists

FABRICATION DRAWINGS BASED ON WSP CERTIFIED ENGINEERING

PROMEC AS-BUILT
Signature:
Date: 2017-10-04

No.	DATE	REVISION	PAR APP.
2	2017/09/21	PROJECT TITLE REVISED	KHV
1	2017/09/11	LINE NUMBERS REVISED	KHV
0	2017/05/15	ISSUED FOR CONSTRUCTION	KHV

CLIENT: AGNICO EAGLE

NUQSANA PROMEC MINING

ultragen
CONSULTANT PROJECT NO. 591700

NO. DE CONDUITE		SPECIFICATION	PRODUIT	SYSTEME REVETEMENT	CODE DE COULEUR	ISOLATION ET TRACAGE	EPAISS. D'ISOLATION		
116-150-PDI-CC10-0001		CC10	PDI		--			65-116-270-200	PIPE SUPPORT DETAILS
PRESSION D'OPERATION	TEMPERATURE D'OPERATION	PRESSION DE CONCEPTION	TEMPERATURE DE CONCEPTION	PRESSION D'ESSAI	CLASSE D'INSPECTION	CODE DE SERVICE	TRAITEMENT THERMIQUE	65-116-205-200	P&ID
PSIG	°F	PSIG	°F	PSIG				No. DESSIN	DESSINS DE REFERENCE

SCEAU PROFESSIONNEL
REGISTERED PROFESSIONAL ENGINEER
D. TRUONG
LICENSEE
NT/NU
2017/09/21

CONC.: KHV
DATE: 2017/04/25
DESSINÉ PAR: KVE
DATE: 2017/04/25
VÉR. PAR: -
DATE: -
APP.: -
DATE: -
ÉCHELLE: AUCUNE

PROJET: AGNICO EAGLE - MELIADINE DIVISION
116 - FUEL TANK FARM

TITRE: RANKIN INLET
FABRICATION ISOMETRIC
MARINE LINE TO 65TNK11601 & 65TNK11602

No PROJET	No DESSIN	PAGES	REV.
6515	116-150-PDI-CC10-0001	2/13	2

115-MN-01

M:\Rankin Inlet\Meliadine\591700\Revit Data\Revit\05 Drawings\02 Isometrics\A02 Isometrics.rvt\115-150-PDI-CC10-0001-2.DWG
IMPRIMÉ LE Sep 20, 2017, 2:43pm

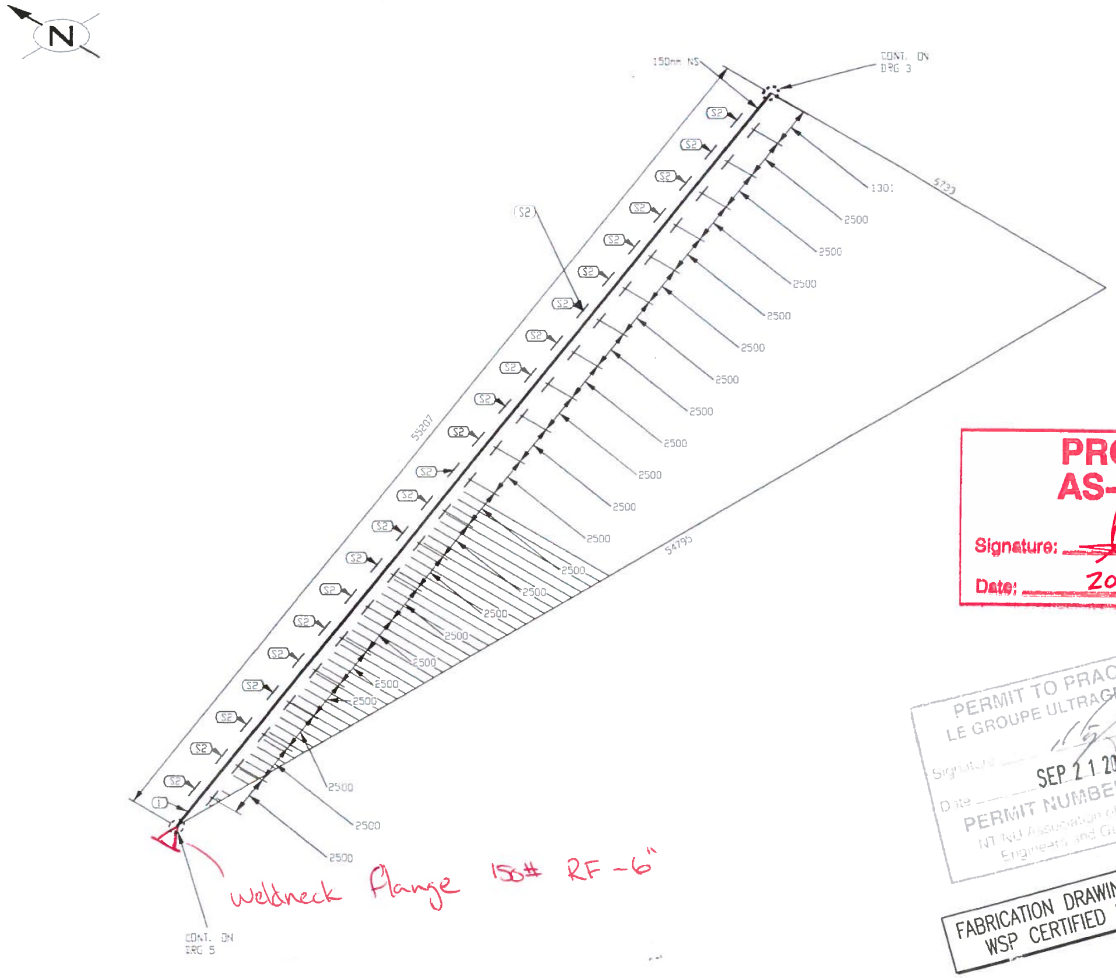

PROMEC AS-BUILT
Signature:
Date: 2017-10-04

PERMIT TO PRACTICE
LE GROUPE ULTRAGEN LTÉE
Signature
Date SEP 21 2017
PERMIT NUMBER: P 1180
NT/NU Association of Professional Engineers and Geoscientists

FABRICATION DRAWINGS BASED ON WSP CERTIFIED ENGINEERING

LISTE DE MATERIE

No	QTE	DIA	MATERIEL/CATALOGUE	DESCRIPTION
1	55207 MM	150	A 333 Gr. 6	SCH STD, SMLS PIPE
2	23	150		PIPE SUPPORT AS PER DETAIL 3 DWG 65-116-270-200

No.	DATE	REVISION	PAR / APP.
2	2017/09/21	PROJECT TITLE REVISED	KHV
1	2017/09/11	LINE NUMBERS REVISED	KHV
0	2017/05/15	ISSUED FOR CONSTRUCTION	KHV

CLIENT: AGNICO EAGLE

NUQSANA PROMEC MINING

ultragen

CONSULTANT PROJECT NO. 591700

NO. DE CONDUITE		SPECIFICATION	PRODUIT	SYSTEME REVETEMENT	CODE DE COULEUR	ISOLATION ET TRACAGE	EPAISS. D'ISOLATION		
116-150-PDI-CC10-0001		CC10	PDI		-			65-116-270-200	PIPE SUPPORT DETAILS
PRESSION D'OPERATION	TEMPERATURE D'OPERATION	PRESSION DE CONCEPTION	TEMPERATURE DE CONCEPTION	PRESSION D'ESSAI	CLASSE D'INSPECTION	CODE DE SERVICE	TRAITEMENT THERMIQUE	65-116-205-200	P&ID
PSIG	°F	PSIG	°F	PSIG				No. DESSIN	DESSINS DE REFERENCE

SCEAU PROFESSIONNEL
REGISTERED PROFESSIONAL ENGINEER
D TRUONG
LICENSEE
NT/NU
2017/09/21

CONC.: KHV
DATE: 2017/04/25
DESSINÉ PAR: KVE
DATE: 2017/04/25
VÉR. PAR: -
DATE: -
APP.: -
DATE: -
ÉCHELLE: AUCUNE

PROJET: AGNICO EAGLE - MELIADINE DIVISION
116 - FUEL TANK FARM

TITRE: RANKIN INLET
FABRICATION ISOMETRIC
MARINE LINE TO 65TNK11601 & 65TNK11602

No PROJET	No DESSIN	PAGES	REV.
6515	116-150-PDI-CC10-0001	4/13	2

116-MN-01

MPRIME LE Sep 20, 2017, 2:44pm

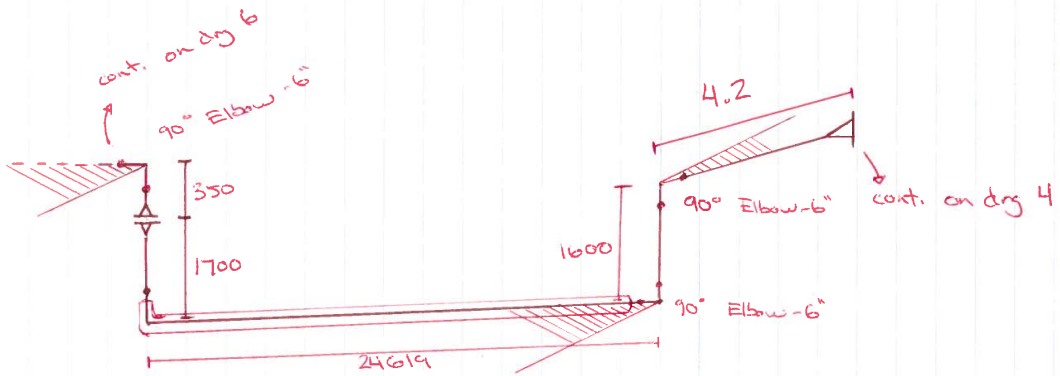

PROMEC AS-BUILT

Signature:

Date: 2017-10-04

ART.	QUANTITÉ	MATÉRIEL

224667

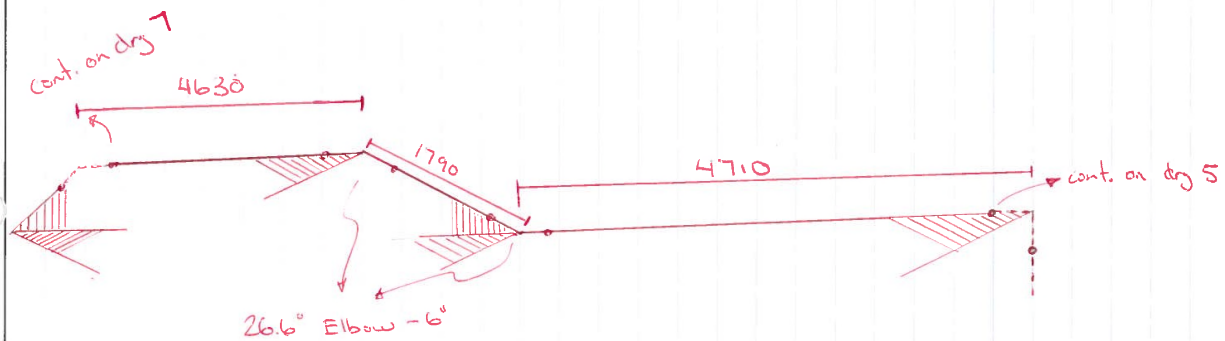

PROMEC
AS-BUILT
Signature:
Date: 2017-10-04

ART.	QUANTITÉ	MATÉRIEL

REV.	DATE	REMARQUE

CLIENT: Agnico Eagle - Meliadine division
116 - Fuel Tank Farm

PROMEC

CONTRAT:

REF.:

DESSINÉ PAR:

DATE:

VÉRIFIÉ PAR:

DATE:

DESSIN: 116-150-PD1-CC10-0001

REV. 3

ASSEMBLÉ PAR:

DATE:

PROCÉDÉ SOUDAGE:

ESSAI(S)/ % RX

IPAN # 63740

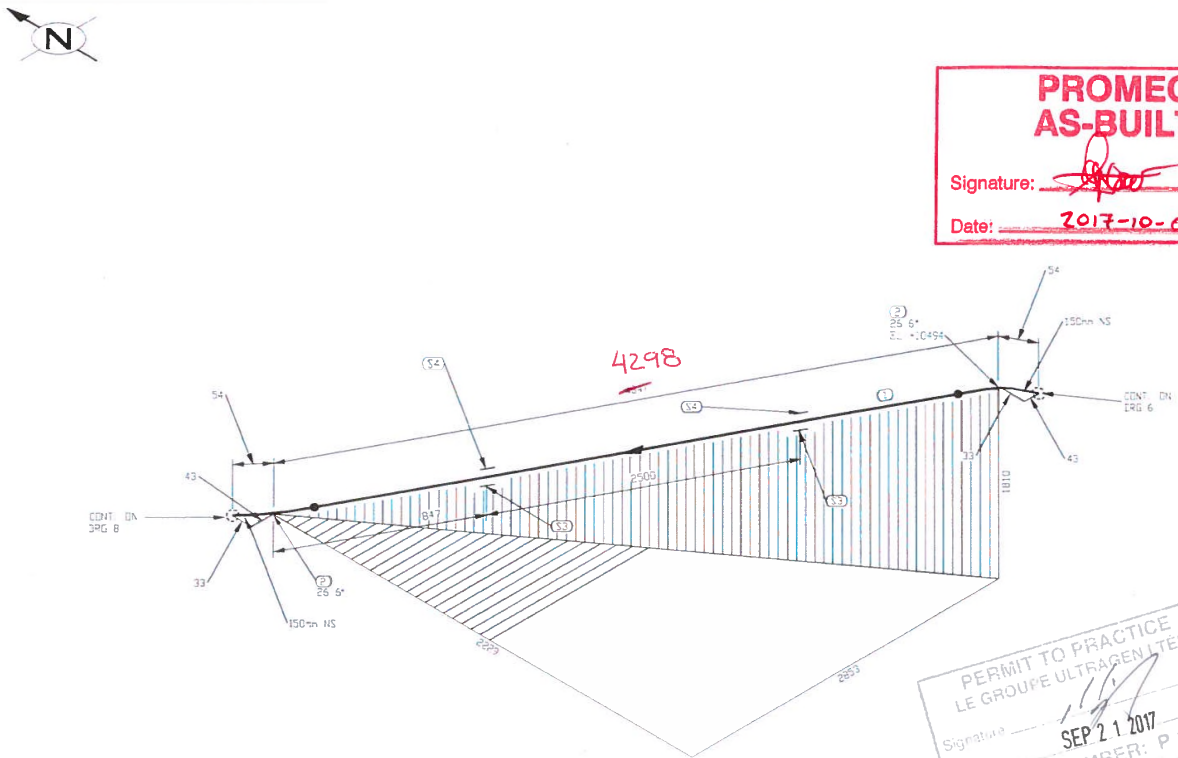

PROMEC AS-BUILT
Signature:
Date: 2017-10-04

PERMIT TO PRACTICE
LE GROUPE ULTRAGEN LTÉE
Signature
Date SEP 2 1 2017
PERMIT NUMBER: P 1180
NT/NU Association of Professional Engineers and Geoscientists

FABRICATION DRAWINGS BASED ON WSP CERTIFIED ENGINEERING

LISTE DE MATERIEL

No	QTE	DIA	MATERIEL/CATALOGUE	DESCRIPTION
1	3939 MM	150	A 333 Gr. 6	SCH STD, SMLS PIPE
2	2	150	A 420 Gr. WPL6	SCH STD, BW LR 45 DEG ELBOW TRIM TO 26 57
3	2	150		PIPE SUPPORT AS PER DETAIL 1, DWG 65-116-270-200
4	2	150		PIPE SHOE AS PER DETAIL 2, DWG 65-116-270-200

No.	DATE	REVISION	PAR / APP.
2	2017/09/21	PROJECT TITLE REVISED	KHV
1	2017/09/11	LINE NUMBERS REVISED	KHV
0	2017/05/15	ISSUED FOR CONSTRUCTION	KHV

CLIENT:

AGNICO EAGLE

NUQSANA PROMEC MINING

ultragen

CONSULTANT PROJECT NO. 591700

NO. DE CONDUITE		SPECIFICATION	PRODUIT	SYSTEME REVETEMENT	CODE DE COULEUR	ISOLATION ET TRACAGE	EPAISS. D'ISOLATION		
116-150-PDI-CC10-0001		CC10	PDI		-			65-116-270-200	PIPE SUPPORT DETAILS
PRESSION D'OPERATION	TEMPERATURE D'OPERATION	PRESSION DE CONCEPTION	TEMPERATURE DE CONCEPTION	PRESSION D'ESSAI	CLASSE D'INSPECTION	CODE DE SERVICE	TRAITEMENT THERMIQUE	65-116-205-200	P&ID
PSIG	°F	PSIG	°F	PSIG				No. DESSIN	DESSINS DE REFERENCE

SCEAU PROFESSIONNEL
REGISTERED PROFESSIONAL ENGINEER
D TRUONG
LICENSEE
NT/NU
2017/09/21

CONC.: KHV
DATE: 2017/04/25
DESSINÉ PAR: KVE
DATE: 2017/04/25
VÉR. PAR: -
DATE: -
APP.: -
DATE: -
ÉCHELLE: AUCUNE

PROJET:
AGNICO EAGLE - MELIADINE DIVISION
116 - FUEL TANK FARM

TITRE:
RANKIN INLET
FABRICATION ISOMETRIC
MARINE LINE TO 65TNK11601 & 65TNK11602

No PROJET	No DESSIN	PAGES	REV.
6515	116-150-PDI-CC10-0001	7/13	2

116-MN-01

MPRIME LE Sep 20, 2017, 2:44pm

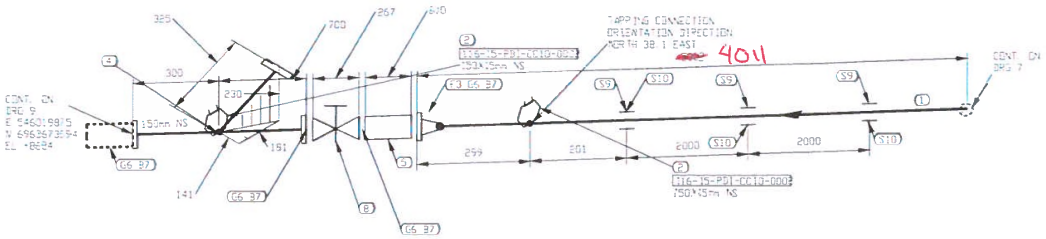

PROMEC
AS-BUILT
Signature:
Date: 2017-10-04

PERMIT TO PRACTICE
LE GROUPE ULTRAGEN LTÉE
Signature
Date SEP 2 1 2017
PERMIT NUMBER: P 1150
NT&U Association of Professional Engineers and Geoscientists

FABRICATION DRAWINGS BASED ON WSP CERTIFIED ENGINEERING

LISTE DE MATÉRIEL

No	QTÉ	DA	MATÉRIEL/CATALOGUE	DESCRIPTION
1	4914 MM	150	A 333 Gr. 6	SCH STD, SMLS PIPE
2	2	150X15	A 350 Gr. LF2	CL 3000, THREDOLET
3	1	150	A 350 Gr. LF2	CL 150, SCH STD, RF, WN FLANGE
4	1	150X150		CL 150, PIG CATCHER AS PER DETAIL 8, DWG 65-116-270-200
5	1	150		CL 150, SINGLE BRAIDED HOSE ASSEMBLY
6	4	150	ASME B16.20	CL 150, GARLOCK 9500, RING TYPE GASKET 1/8" THK
7	52	19	A 193 B7/A 194 2H	CL 150, 8 - 19.05 X 100 STUD BOLTS c/w TWO HEAVY HEX NUTS
8	1	150	G4-10	CL 150, RF, CS, FULL PORT GATE VALVE
9	3	150		PIPE SUPPORT AS PER DETAIL 1, DWG 65-116-270-200
10	3	150		PIPE SHOE AS PER DETAIL 2, DWG 65-116-270-200

No.	DATE	REVISION	PAR APP.
2	2017/09/21	PROJECT TITLE REVISED	KHV
1	2017/09/11	LINE NUMBERS REVISED	KHV
0	2017/05/15	ISSUED FOR CONSTRUCTION	KHV

CLIENT: AGNICO EAGLE

NUQSANA PROMEC MINING

ultragen

CONSULTANT PROJECT NO. 591700

NO. DE CONDUITE		SPÉCIFICATION	PRODUIT	SYSTÈME REVÊTEMENT	CODE DE COULEUR	ISOLATION ET TRAÇAGE	ÉPAISS. D'ISOLATION		
116-150-PDI-CC10-0001		CC10	PDI		–			65-116-270-200	PIPE SUPPORT DETAILS
PRESSION D'OPÉRATION	TEMPÉRATURE D'OPÉRATION	PRESSION DE CONCEPTION	TEMPÉRATURE DE CONCEPTION	PRESSION D'ESSAI	CLASSE D'INSPECTION	CODE DE SERVICE	TRAITEMENT THERMIQUE	65-116-205-200	P&ID
		PSIG	°F	PSIG				No. DESSIN	DESSINS DE RÉFÉRENCE

SCEAU PROFESSIONNEL
REGISTERED PROFESSIONAL ENGINEER
D TRUONG
LICENSEE
NT/NU
2017/09/21

CONC.: KHV
DATE: 2017/04/25
DESSINÉ PAR: KVE
DATE: 2017/04/25
VÉR. PAR: –
DATE: –
APP.: –
DATE: –
ÉCHELLE: AUCUNE

PROJET: AGNICO EAGLE – MELIADINE DIVISION
116 – FUEL TANK FARM

TITRE: RANKIN INLET
FABRICATION ISOMETRIC
MARINE LINE TO 65TNK11601 & 65TNK11602

No PROJET	No DESSIN	PAGES	RÉV.
6515	116-150-PDI-CC10-0001	8/13	2

116-MN-01

TECKLA W:\Agnico Eagle\Meliadine\591700 (Fuel Dist)\Autocad\CAD Issues\A.D.I. Signature\102 Isométriques\101 Marine Line\116-150-PDI-CC10-0001-8.DWG
MPRINT LE Sep 20, 2017, 2:44pm

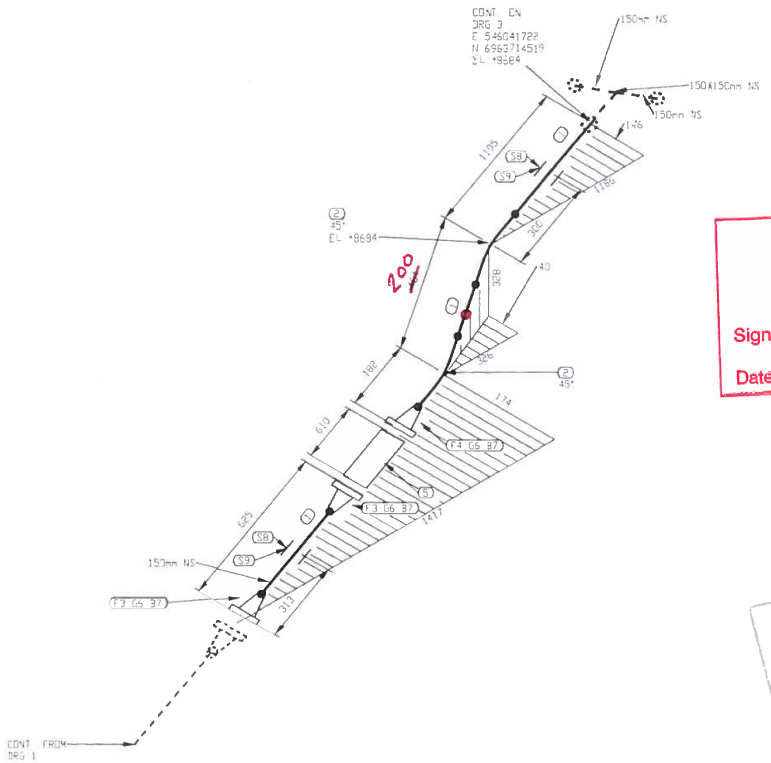

PROMEC
AS-BUILT
Signature:
Date: 2017-10-04

PERMIT TO PRACTICE
LE GROUPE ULTRAGEN LTÉE
Signature
Date SEP 11 2017
PERMIT NUMBER: P 1180
NTANU Association of Professional Engineers and Geoscientists

FABRICATION DRAWINGS BASED ON WSP CERTIFIED ENGINEERING

LISTE DE MATÉRIEL

No	QTÉ	DA	MATÉRIEL/CATALOGUE	DESCRIPTION
1	1825 MM	150	A 333 Gr. 6	SCH STD, SMLS PIPE
2	2	150	A 420 Gr. WPL6	SCH STD, BW LR 45 DEG ELBOW
3	2	150	A 350 Gr. LF2	CL 150, SCH STD, RF, WN FLANGE
4	1	150	A 350 Gr. LF2	CL 150, SCH STD, RF, WN FLANGE
5	1	150		CL 150, SINGLE BRAIDED HOSE ASSEMBLY
6	3	150	ASME B16.20	CL 150, GARLOCK 9500, RING TYPE GASKET 1/8" THK
7	24	19	A 193 B7/A 194 2H	CL 150, 8 - 19.05 X 100 STUD BOLTS c/w TWO HEAVY HEX NUTS
8	2	150		PIPE SUPPORT AS PER DETAIL 1, DWG 65-116-270-200
9	2	150		PIPE SHOE AS PER DETAIL 2, DWG 65-116-270-200

No.	DATE	REVISION	PAR / APP.
2	2017/09/21	PROJECT TITLE REVISED	KHV
1	2017/09/11	LINE NUMBERS REVISED	KHV
0	2017/05/15	ISSUED FOR CONSTRUCTION	KHV

CLIENT: AGNICO EAGLE

NUQSANA PROMEC MINING

ultragen

CONSULTANT PROJECT NO. 591700

NO. DE CONDUITE		SPÉCIFICATION	PRODUIT	SYSTÈME REVÊTEMENT	CODE DE COULEUR	ISOLATION ET TRAÇAGE	ÉPAISS. D'ISOLATION		
116-150-PDI-CC10-0006		CC10	PDI		–			65-116-270-200	PIPE SUPPORT DETAILS
PRESSION D'OPÉRATION	TEMPÉRATURE D'OPÉRATION	PRESSION DE CONCEPTION	TEMPÉRATURE DE CONCEPTION	PRESSION D'ESSAI	CLASSE D'INSPECTION	CODE DE SERVICE	TRAITEMENT THERMIQUE	65-116-205-200	P&ID
PSIG	°F	PSIG	°F	PSIG				No. DESSIN	DESSINS DE RÉFÉRENCE

SCEAU PROFESSIONNEL
REGISTERED PROFESSIONAL ENGINEER
D. TRUONG
LICENSEE
2017/09/21

CONC.: KHV
DATE: 2017/04/25
DESSINÉ PAR: KVE
DATE: 2017/04/25
VÉR. PAR: –
DATE: –
APP.: –
DATE: –
ÉCHELLE: AUCUNE

PROJET: AGNICO EAGLE – MELIADINE DIVISION
116 – FUEL TANK FARM

TITRE: RANKIN INLET
FABRICATION ISOMETRIC
DIESEL FROM 65TNK11601 & 65TNK11602 TO PUMPING STATION

No PROJET	No DESSIN	PAGES	REV.
6515	116-150-PDI-CC10-0006	2/12	2

116-MW-01

IMPRIMÉ LE Sep 20, 2017, 7:45pm

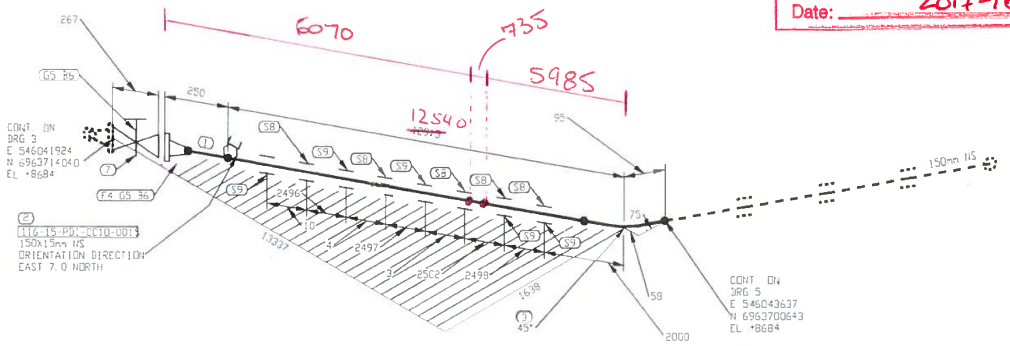

PROMEC AS-BUILT

Signature: [signature]

Date: 2017-10-04

PERMIT TO PRACTICE
LE GROUPE ULTRAGEN LTEE
Signature: [signature]
Date: SEP 2 1 2017
PERMIT NUMBER: P 1180
NT/NU Association of Professional Engineers and Geoscientists

FABRICATION DRAWINGS BASED ON WSP CERTIFIED ENGINEERING

LISTE DE MATERIEL

No	QTE	DIA	MATERIEL/CATALOGUE	DESCRIPTION
4	12983 MM	150	A 333 Gr. 6	SCH STD, SMLS PIPE
2	1	150X15	A 350 Gr. LF2	CL 3000, THREDOLET
3	1	150	A 420 Gr. WPL6	SCH STD, BW LR 45 DEG ELBOW
4	1	150	A 350 Gr. LF2	CL 150, SCH STD, RF, WN FLANGE
5	2	150	ASME B16.20	CL 150, GARLOCK 5500, RING TYPE GASKET 1/8" THK
6	16	19	A 193 B7/A 194 2H	CL 150, 8 - 19.05 x 100 STUD BOLTS c/w TWO HEAVY HEX NUTS
7	1	150	GA-10	CL 150, RF, GATE VALVE
8	5	150		PIPE SUPPORT AS PER DETAIL 1, DWG 65-116-270-200
9	5	150		PIPE SHOE AS PER DETAIL 2, DWG 65-116-270-200

No.	DATE	REVISION	PAR APP.
2	2017/09/21	PROJECT TITLE REVISED	KHV
1	2017/09/11	LINE NUMBERS REVISED	KHV
0	2017/05/15	ISSUED FOR CONSTRUCTION	KHV

CLIENT: AGNICO EAGLE

NUQSANA PROMEC MINING

ultragen

CONSULTANT PROJECT NO. 591700

NO. DE CONDUITE		SPECIFICATION	PRODUIT	SYSTEME REVETEMENT	CODE DE COULEUR	ISOLATION ET TRACAGE	EPAISS. D'ISOLATION		
116-150-PDI-CC10-0006		CC10	PDI		–			65-116-270-200	PIPE SUPPORT DETAILS
PRESSION D'OPERATION	TEMPERATURE D'OPERATION	PRESSION DE CONCEPTION	TEMPERATURE DE CONCEPTION	PRESSION D'ESSAI	CLASSE D'INSPECTION	CODE DE SERVICE	TRAITEMENT THERMIQUE	65-116-205-200	P&ID
PSIG	°F	PSIG	°F	PSIG				No. DESSIN	DESSINS DE REFERENCE

SCEAU PROFESSIONNEL
REGISTERED PROFESSIONAL ENGINEER
D. TRUONG
LICENSEE
2017/09/21

CONC.: KHV
DATE: 2017/04/25
DESSINÉ PAR: KVE
DATE: 2017/04/25
VÉR. PAR: –
DATE: –
APP.: –
DATE: –
ÉCHELLE: AUCUNE

PROJET: AGNICO EAGLE – MELIADINE DIVISION
116 – FUEL TANK FARM

TITRE: RANKIN INLET
FABRICATION ISOMETRIC
DIESEL FROM 65TNK11601 & 65TNK11602 TO PUMPING STATION

No PROJET	No DESSIN	PAGES	REV.
6515	116-150-PDI-CC10-0006	4/12	2

116-MN-01

FICHIER: M:\Active Eagle\Meliadine\591700 Fuel Distribution\PLOTS Dessins\DGN Translated\DGN thumbnails\001 thumbnail.dgn

IMPRIMÉ LE : Sep 20, 2017, 2:45pm

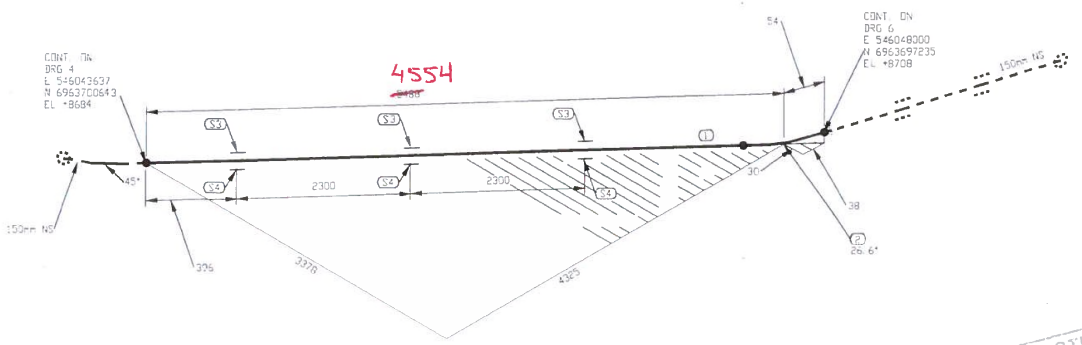

PROMEC
AS-BUILT
Signature:
Date: 2017-10-04

PERMIT TO PRACTICE
I.E GROUPE ULTRAGEN LTEE
Signature
Date SEP 21 2017
PERMIT NUMBER: P 1180
NT/NU Association of Professional Engineers and Geoscientists

FABRICATION DRAWINGS BASED ON WSP CERTIFIED ENGINEERING

LISTE DE MATERIEL

No.	QTE	DIA	MATERIEL/CATALOGUE	DESCRIPTION
1	5434 MM	150	A 333 Gr. 6	SCH STD, SMLS PIPE
2	1	150	A 420 Gr. WPL6	SCH STD, BW LR 90 DEG ELBOW TRIM TO 26.57
3	3	150		PIPE SUPPORT AS PER DETAIL 1, DWG 65-116-270-200
4	3	150		PIPE SHOE AS PER DETAIL 2, DWG 65-116-270-200

No.	DATE	REVISION	PAR APP.
2	2017/09/21	PROJECT TITLE REVISED	KHV
1	2017/09/11	LINE NUMBERS REVISED	KHV
0	2017/05/15	ISSUED FOR CONSTRUCTION	KHV

CLIENT: AGNICO EAGLE

NUQSANA PROMEC MINING

ultragen

CONSULTANT PROJECT NO. 591700

NO. DE CONDUITE		SPECIFICATION	PRODUIT	SYSTEME REVETEMENT	CODE DE COULEUR	ISOLATION ET TRACAGE	EPAISS. D'ISOLATION		
116-150-PDI-CC10-0006		CC10	PDI		–			65-116-270-200	PIPE SUPPORT DETAILS
PRESSION D'OPERATION	TEMPERATURE D'OPERATION	PRESSION DE CONCEPTION	TEMPERATURE DE CONCEPTION	PRESSION D'ESSAI	CLASSE D'INSPECTION	CODE DE SERVICE	TRAITEMENT THERMIQUE	65-116-205-200	P&ID
PSIG	°F	PSIG	°F	PSIG				No. DESSIN	DESSINS DE REFERENCE

SCEAU PROFESSIONNEL
REGISTERED PROFESSIONAL ENGINEER
D. TRUONG
LICENSEE
NT/NU
2017/09/21

CONC.: KHV
DATE: 2017/04/25
DESSINÉ PAR: KVE
DATE: 2017/04/25
VÉR. PAR: –
DATE: –
APP.: –
DATE: –
ÉCHELLE: AUCUNE

PROJET: AGNICO EAGLE – MELIADINE DIVISION
116 – FUEL TANK FARM

TITRE: RANKIN INLET
FABRICATION ISOMETRIC
DIESEL FROM 65TNK11601 & 65TNK11602 TO PUMPING STATION

No PROJET	No DESSIN	PAGES	REV.
6515	116-150-PDI-CC10-0006	5/12	2

115-MN-01

I:\Projets Eagle\Meadowbank\591700 (Fuel Storage)\Dessins\02 Isométriques\01 Rankin Inlet\116-150-PDI-CC10-0006-5.DWG
WRITTEN BY: Sep 20, 2017, 2:45pm

PROMEC AS-BUILT

Signature: [signature]

Date: 2017-10-04

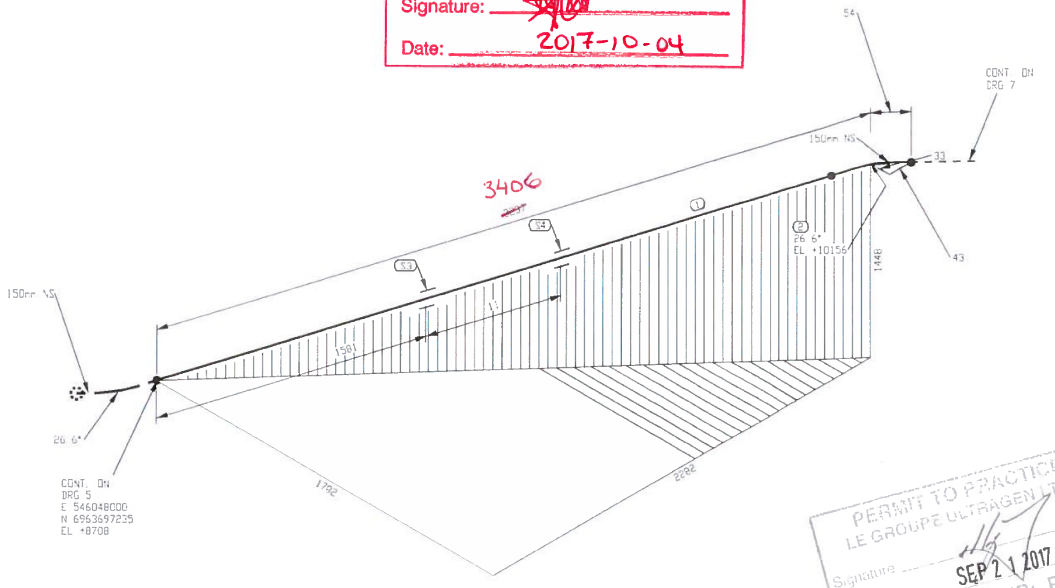

PERMIT TO PRACTICE
LE GROUPE ULTRAGEN LTÉE
Signature [signature]
Date SEP 2 1 2017
PERMIT NUMBER: P 1180
NT/NU Association of Professional Engineers and Geoscientists

FABRICATION DRAWINGS BASED ON WSP CERTIFIED ENGINEERING

LISTE DE MATERIEL

No.	QTE.	DIA.	MATERIEL/CATALOGUE	DESCRIPTION
1	3183 MM	150	A 333 Gr. 6	SCH STD, SMLS PIPE
2	1	150	A 420 Gr. WPL6	SCH STD, BW LR 90 DEG ELBOW TRIM TO 26.57
3	1	150		PIPE SUPPORT AS PER DETAIL 1, DWG 65-116-270-200
4	1	150		PIPE SHOE AS PER DETAIL 2, DWG 65-116-270-200

No.	DATE	REVISION	PAR. APP.
2	2017/09/21	PROJECT TITLE REVISED	KHV
1	2017/09/11	LINE NUMBERS REVISED	KHV
0	2017/05/15	ISSUED FOR CONSTRUCTION	KHV

CLIENT: AGNICO EAGLE

NUQSANA PROMEC MINING

ultragen

CONSULTANT PROJECT NO. 591700

NO. DE CONDUITE		SPECIFICATION	PRODUIT	SYSTEME REVETEMENT	CODE DE COULEUR	ISOLATION ET TRACAGE	EPAISS. D'ISOLATION		
116-150-PDI-CC10-0006		CC10	PDI		-			65-116-270-200	PIPE SUPPORT DETAILS
PRESSION D'OPERATION	TEMPERATURE D'OPERATION	PRESSION DE CONCEPTION	TEMPERATURE DE CONCEPTION	PRESSION D'ESSAI	CLASSE D'INSPECTION	CODE DE SERVICE	TRAITEMENT THERMIQUE	65-116-205-200	P&ID
PSIG	°F	PSIG	°F	PSIG				No. DESSIN	DESSINS DE REFERENCE

SCEAU PROFESSIONNEL
REGISTERED PROFESSIONAL ENGINEER
D. TRUONG
LICENSEE
2017/09/21

CONC.: KHV
DATE: 2017/04/25
DESSINÉ PAR: KVE
DATE: 2017/04/25
VÉR. PAR: -
DATE: -
APP.: -
DATE: -
ÉCHELLE: AUCUNE

PROJET: AGNICO EAGLE - MELIADINE DIVISION
116 - FUEL TANK FARM

TITRE: RANKIN INLET
FABRICATION ISOMETRIC
DIESEL FROM 65TNK11601 & 65TNK11602 TO PUMPING STATION

No PROJET	No DESSIN	PAGES	REV.
6515	116-150-PDI-CC10-0006	6/12	2

116-MN-01

FICHIER: W:\Agnico Eagle\Meliadine\591700 Rankin Detroloader\05. Dessins\05.03 Isométriques\Fab Rankin mark\116-150-PDI-CC10-0006-6.DWG
IMPRIMÉ LE Sep 20, 2017, 2:44pm

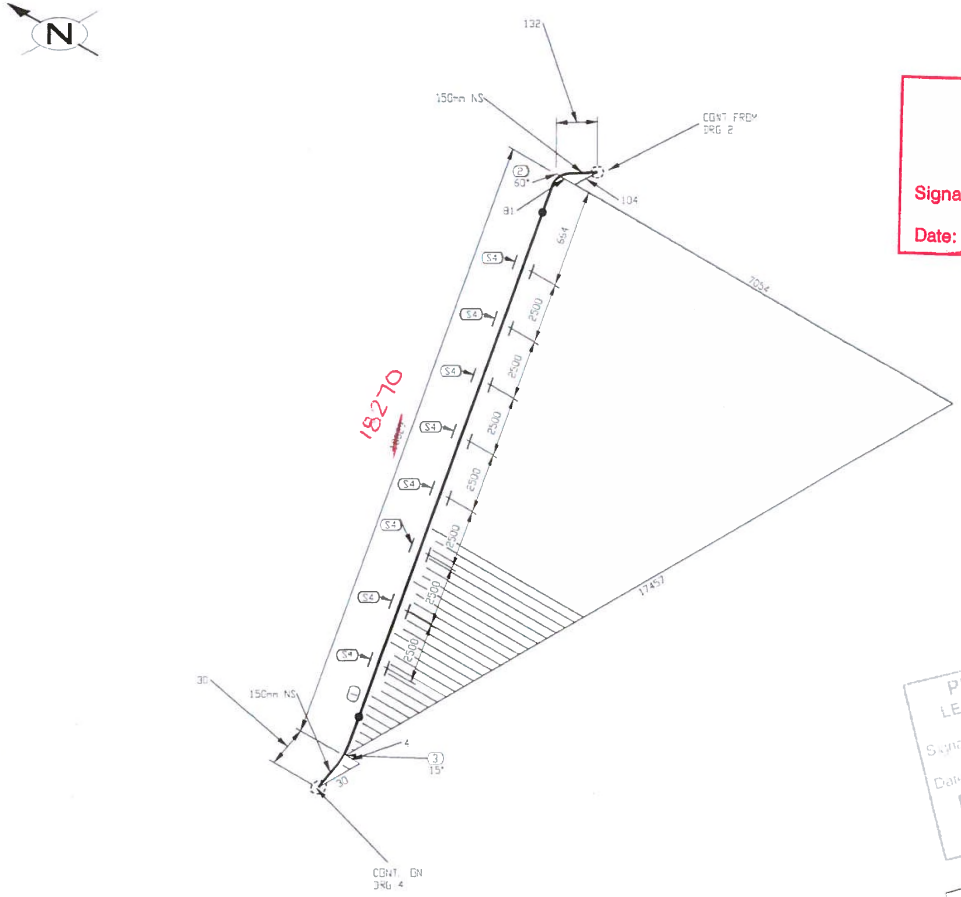

PROMEC
AS-BUILT
Signature:
Date: 2017-10-04

PERMIT TO PRACTICE
LE GROUPE ULTRAGEN LTÉE
Signature
Date SEP 21 2017
PERMIT NUMBER: P 1180
NT/NU Association of Professional Engineers and Geoscientists

FABRICATION DRAWINGS BASED ON WSP CERTIFIED ENGINEERING

LISTE DE MATERIEL

No	QTE	DIA	MATERIEL/CATALOGUE	DESCRIPTION
1	18667 MM	150	A 333 Gr. 6	SCH STD, SMLS PIPE
2	1	150	A 420 Gr. WPL6	SCH STD, BW LR 90 DEG ELBOW TRIM TO 60.00
3	1	150	A 420 Gr. WPL6	SCH STD, BW LR 90 DEG ELBOW TRIM TO 15.00
4	8	150		PIPE SUPPORT AS PER DETAIL 3, DWG 65-116-270-200

No.	DATE	REVISION	PAR / APP.
2	2017/09/21	PROJECT TITLE REVISED	KHV
1	2017/09/11	LINE NUMBERS REVISED	KHV
0	2017/05/15	ISSUED FOR CONSTRUCTION	KHV

CLIENT:

AGNICO EAGLE

NUQSANA PROMEC MINING

ultragen

CONSULTANT PROJECT NO. 591700

NO. DE CONDUITE		SPECIFICATION	PRODUIT	SYSTEME REVETEMENT	CODE DE COULEUR	ISOLATION ET TRACAGE	EPAISS. D'ISOLATION		
116-150-PDI-CC10-0001		CC10	PDI		-			65-116-270-200	PIPE SUPPORT DETAILS
PRESSION D'OPERATION	TEMPERATURE D'OPERATION	PRESSION DE CONCEPTION	TEMPERATURE DE CONCEPTION	PRESSION D'ESSAI	CLASSE D'INSPECTION	CODE DE SERVICE	TRAITEMENT THERMIQUE	65-116-205-200	P&ID
PSIG	°F	PSIG	°F	PSIG				No. DESSIN	DESSINS DE REFERENCE

SCEAU PROFESSIONNEL
REGISTERED PROFESSIONAL ENGINEER
D TRUONG
LICENSEE
NT/NU
2017/09/21

CONC.: KHV
DATE: 2017/04/25
DESSINÉ PAR: KVE
DATE: 2017/04/25
VER. PAR: -
DATE: -
APP.: -
DATE: -
ECHELLE: AUCUNE

PROJET:
AGNICO EAGLE - MELIADINE DIVISION
116 - FUEL TANK FARM

TITRE:
RANKIN INLET
FABRICATION ISOMETRIC
MARINE LINE TO 65TNK11601 & 65TNK11602

No PROJET	No DESSIN	PAGES	REV.
6515	116-150-PDI-CC10-0001	3/13	2

116-MN-01

IMPRIMÉ LE Sep 20, 2017, 3:44pm

Draft

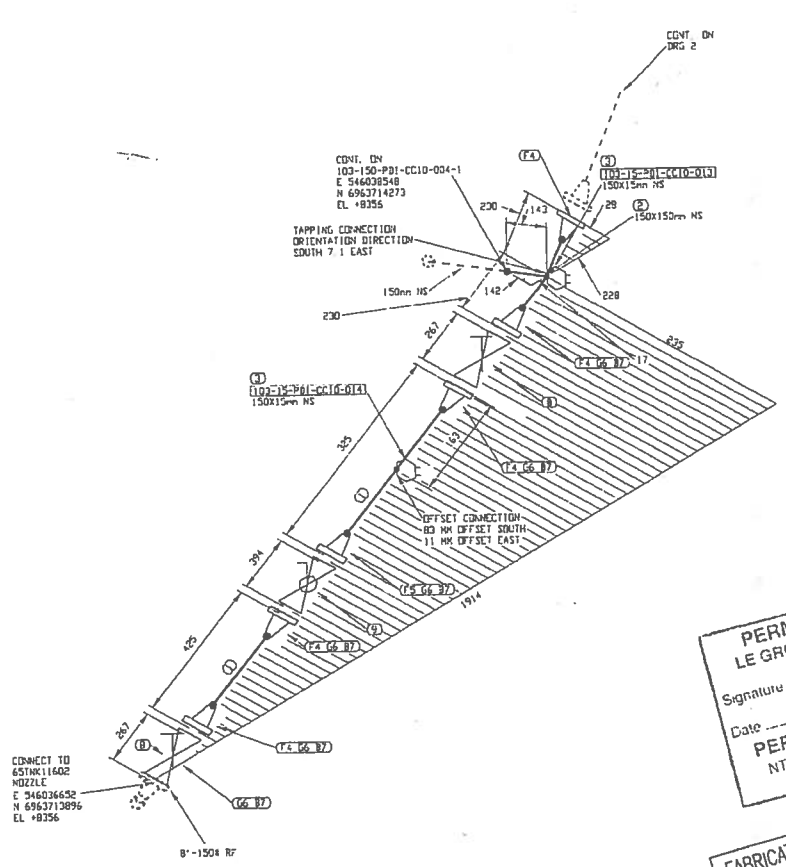

PERMIT TO PRACTICE
LE GROUPE ULTRAGEN LTÉE
Signature
Date MAY 2 6 2017
PERMIT NUMBER: P 1180
NT/NU Association of Professional Engineers and Geoscientists

FABRICATION DRAWINGS BASED ON WSP CERTIFIED ENGINEERING

LISTE DE MATERIEL

No	QTE	DIA	MATERIEL/CATALOGUE	DESCRIPTION
1	402 MM	150	A 333 Gr. 6	SCH STD, SMLS PIPE
2	1	150X150	A 420 Gr. WPL6	SCH STD, BV STRAIGHT TEE
3	2	150X15	A 350 Gr. LF2	CL 3000, THREDOLET
4	5	150	A 350 Gr. LF2	CL 150, SCH STD, RF, WN FLANGE
5	1	150	A 350 Gr. LF2	CL 150, SCH STD, RF, WN FLANGE
6	6	150	ASME B16.20	CL 150, GARLOCK 5500, RING TYPE GASKET 1/8" THK
7	48	19	A 193 B7/A 194 2H	CL 150, 8 - 19.05 X 100 STUD BOLTS c/w TWO HEAVY HEX NUTS
8	2	150	GA-10	CL 150, RF, GATE VALVE
9	1	150	BA-31	CL 150, RF, BALL VALVE

No.	DATE	REVISION	KHV / PAR APP.
0	2017/05/15	ISSUED FOR CONSTRUCTION	KHV

CLIENT: AGNICO EAGLE

NUQSANAPROMEC MINING

ultragen

CONSULTANT PROJECT NO. 591700

SCEAU PROFESSIONNEL

2017/05/26

NO. DE CONDUITE		SPECIFICATION	PRODUIT	SYSTEME REVETEMENT	CODE DE COULEUR	ISOLATION ET TRAÇAGE	EPAISS. D'ISOLATION		
103-150-PDI-CC10-003		CC10	PDI		-			65-103-270-200	PIPE SUPPORT DETAILS
PRESSION D'OPERATION	TEMPERATURE D'OPERATION	PRESSION DE CONCEPTION	TEMPERATURE DE CONCEPTION	PRESSION D'ESSAI	CLASSE D'INSPECTION	CODE DE SERVICE	TRAITEMENT THERMIQUE	65-103-205-200	P&ID
PSIG	°F	PSIG	°F	PSIG				No. DESSIN	DESSINS DE REFERENCE

CONC.: KHV	
DATE: 2017/04/23	
DESSINE PAR: KVE	
DATE: 2017/04/23	
VER. PAR: -	
DATE: -	
APP.: -	
DATE: -	
ÉCHELLE: AUCUNE	

PROJET: AGNICO EAGLE - MELIADINE DIVISION
103 - COMBUSTIBLE

TITRE: RANKIN INLET
FABRICATION ISOMETRIC
DIESEL FROM 65TNK11601 & 65TNK11602 TO PUMPING STATION

No PROJET	No DESSIN	PAGES	REV.
6515	103-150-PDI-CC10-003	1/12	0

103-MN-01

ICONES: N:\Agnico Eagle\Meliadine\5\103\00 Plant Distribution\20. Drawings\02. Isometrics\01. Rankin Inlet\103-150-PDI-CC10-003-1.DWG

Plotted: May 17, 2017, 3:16pm

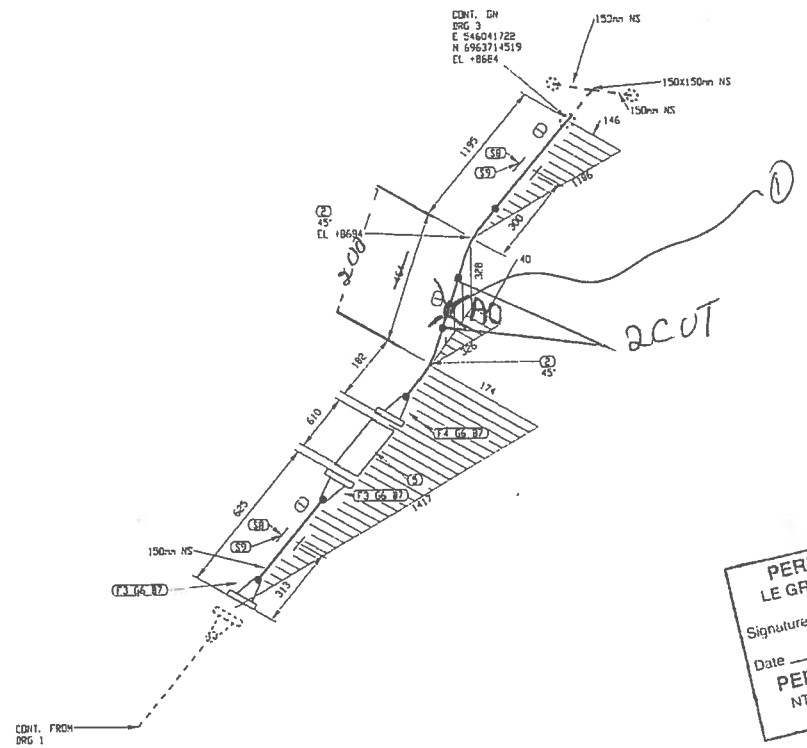

PERMIT TO PRACTICE
LE GROUPE ULTRAGEN LTÉE
Signature
Date MAY 26 2017
PERMIT NUMBER: P 1160
NT/NU Association of Professional Engineers and Geoscientists

FABRICATION DRAWINGS BASED ON WSP CERTIFIED ENGINEERING

LISTE DE MATERIEL

No	QTE	DIA	MATERIEL/CATALOGUE	DESCRIPTION
1	1825 MM	150	A 333 Gr. 6	SCH STD, SMLS PIPE
2	2	150	A 420 Gr. WPL6	SCH STD, BW LR 45 DEG ELBOW
3	2	150	A 350 Gr. LF2	CL 150, SCH STD, RF, WN FLANGE
4	1	150	A 350 Gr. LF2	CL 150, SCH STD, RF, WN FLANGE
5	1	150		CL 150, SINGLE BRAIDED HOSE ASSEMBLY
6	3	150	ASME B16.20	CL 150, GARLOCK 3500, RING TYPE GASKET 1/8" Thk
7	24	19	A 193 B7/A 194 2H	CL 150, Ø - 19.05 X 100 STUD BOLTS c/w TWO HEAVY HEX NUTS
8	2	150		PIPE SUPPORT AS PER DETAIL 1, DWG 65-103-270-200
9	2	150		PIPE SHOE AS PER DETAIL 2, DWG 65-103-270-200

No.	DATE	REVISION	
0	2017/05/15	ISSUED FOR CONSTRUCTION	KHV
			PAR / APP.

CLIENT: AGNICO EAGLE

NUQSANA PROMEC MINING

ultragen

CONSULTANT PROJECT NO. 591700

NO. DE CONDUITE		SPECIFICATION	PRODUIT	SYSTEME REVETEMENT	CODE DE COULEUR	ISOLATION ET TRAÇAGE	EPAISS. D'ISOLATION		
103-150-PDI-CC10-003		CC10	PDI		-			65-103-270-200	PIPE SUPPORT DETAILS
PRESSION D'OPERATION	TEMPERATURE D'OPERATION	PRESSION DE CONCEPTION	TEMPERATURE DE CONCEPTION	PRESSION D'ESSAI	CLASSE D'INSPECTION	CODE DE SERVICE	TRAITEMENT THERMIQUE	65-103-205-200	P&ID
PSIG	°F	PSIG	°F	PSIG				No. DESSIN	DESSINS DE REFERENCE

SCEAU PROFESSIONNEL
REGISTERED PROFESSIONAL ENGINEER
D TRUONG
LICENSEE
NT/NU
2017/05/26

CONC.: KHV
DATE: 2017/04/25
DESSINE PAR: HVE
DATE: 2017/04/25
VER. PAR: -
DATE: -
APP.: -
DATE: -
ÉCHELLE: AUCUNE

PROJET: AGNICO EAGLE - MELIADINE DIVISION
103 - COMBUSTIBLE

TITRE: RANKIN INLET
FABRICATION ISOMETRIC
DIESEL FROM 65TNK11601 & 65TNK11602 TO PUMPING STATION

No PROJET	No DESSIN	PAGES	REV.
6515	103-150-PDI-CC10-003	2/12	0

103-MAN-01

IMPRIMÉ LE: May 17, 2017, 3:17pm

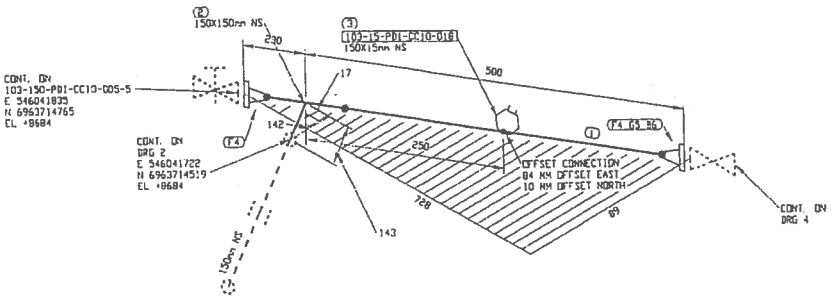

LISTE DE MATÉRIEL

No	QTÉ	DIA	MATÉRIEL/CATALOGUE	DESCRIPTION
1	270 MM	150	A 333 Gr 6	SCH STD, SMLS PIPE
2	1	150X150	A 420 Gr WPL6	SCH STD, BW STRAIGHT TEE
3	1	150X15	A 350 Gr LF2	CL 3000, THREDOLET
4	2	150	A 350 Gr LF2	CL 150, SCH STD, RF, WN FLANGE
5	1	150	ASME B16.20	CL 150, GARLOCK 9500, RING TYPE GASKET 1/8" THK
6	8	19	A 193 B7/A 194 2H	CL 150, 8 - 19.05 X 100 STUD BOLTS c/w TWO HEAVY HEX NUTS

PERMIT TO PRACTICE
LE GROUPE ULTRAGEN LTÉE
Signature
Date MAY 26 2017
PERMIT NUMBER: P 1180
NT/NU Association of Professional Engineers and Geoscientists

FABRICATION DRAWINGS BASED ON WSP CERTIFIED ENGINEERING

No.	DATE	REVISION	APP.
0	2017/05/15	ISSUED FOR CONSTRUCTION	KHV

CLIENT: AGNICO EAGLE

NUQSANA PROMEC MINING

ultragen

CONSULTANT PROJECT NO. 591700

NO. DE CONDUITE		SPÉCIFICATION	PRODUIT	SYSTÈME REVÊTEMENT	CODE DE COULEUR	ISOLATION ET TRAÇAGE	ÉPAISS. D'ISOLATION		
103-150-PDI-CC10-003		CC10	PDI		-			65-103-270-200	PIPE SUPPORT DETAILS
PRESSION D'OPÉRATION	TEMPÉRATURE D'OPÉRATION	PRESSION DE CONCEPTION	TEMPÉRATURE DE CONCEPTION	PRESSION D'ESSAI	CLASSE D'INSPECTION	CODE DE SERVICE	TRAITEMENT THERMIQUE	65-103-205-200	P&ID
PSIG	°F	PSIG	°F	PSIG				No. DESSIN	DESSINS DE RÉFÉRENCE

SCEAU PROFESSIONNEL
REGISTERED PROFESSIONAL ENGINEER
TROY DRUMM
NT/NU
2017/05/26

CONC.: KHV
DATE: 2017/04/13
DESSINÉ PAR: KYE
DATE: 2017/04/13
VÉR. PAR: -
DATE: -
APP.: -
DATE: -
ÉCHELLE: AUCUNE

PROJET: AGNICO EAGLE - MELIADINE DIVISION
103 - COMBUSTIBLE

TITRE: RANKIN INLET
FABRICATION ISOMETRIC
DIESEL FROM 65TNK11601 & 65TNK11602 TO PUMPING STATION

No PROJET	No DESSIN	PAGES	REV.
6515	103-150-PDI-CC10-003	3/12	0

103-HAN-01

FICHIER: N:\Projets Engr\Meadows\591700 (Rus Bhatia&Ryan)\05. Drawing\02. Isometrics\01 Revit Mod\103-HAN-PID-CC10-003-150#5
DERNIÈRE LE: May 17, 2017, 3:32pm

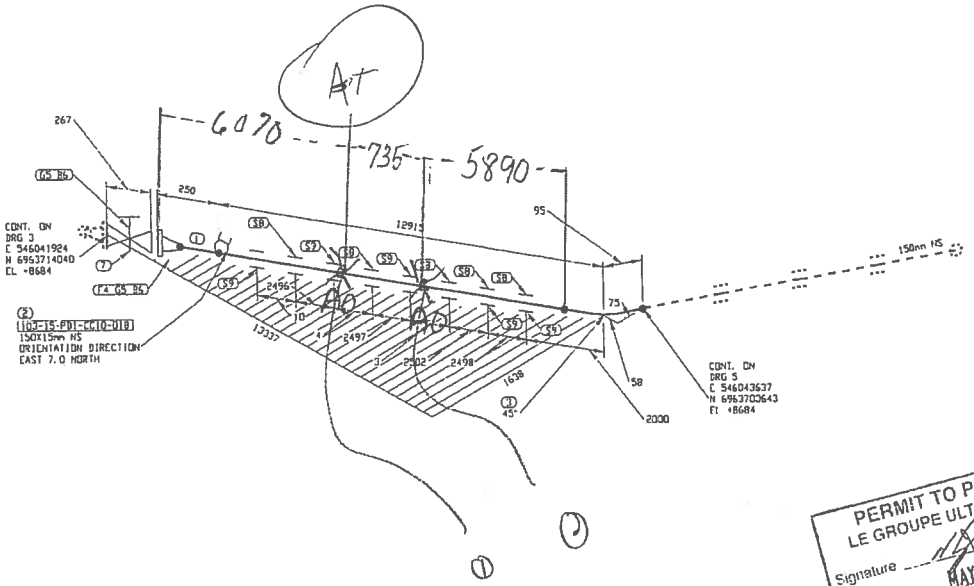

LISTE DE MATERIEL

No	QTE	DIA	MATERIEL/CATALOGUE	DESCRIPTION
1	12983 MM	150	A 333 Gr. 6	SCH STD, SMLS PIPE
2	1	150X15	A 350 Gr. LF2	CL 3000, THREDOLET
3	1	150	A 420 Gr. WPL6	SCH STD, BW LR 45 DEG ELBOW
4	1	150	A 350 Gr. LF2	CL 150, SCH STD, RF, WN FLANGE
5	2	150	ASME B16.20	CL 150, GARLOCK 9500, RING TYPE GASKET 1/8" THK
6	16	19	A 193 B7/A 194 2H	CL 150, 8 - 19.05 X 100 STUD BOLTS c/w TWO HEAVY HEX NUTS
7	1	150	GA-IC	CL 150, RF, GATE VALVE
8	5	150		PIPE SUPPORT AS PER DETAIL 1, DWG: 65-103-270-200
9	5	150		PIPE SHOE AS PER DETAIL 2, DWG: 65-103-270-200

PERMIT TO PRACTICE
LE GROUPE ULTRAGEN LTÉE
Signature
Date MAY 16 2017
PERMIT NUMBER: P 1180
NT/NU Association of Professional Engineers and Geoscientists

FABRICATION DRAWINGS BASED ON WSP CERTIFIED ENGINEERING

No.	DATE	REVISION	
0	2017/05/15	ISSUED FOR CONSTRUCTION	KHV / PAR / APP.

CLIENT: AGNICO EAGLE

NUQSANA PROMEC MINING

ultragen

CONSULTANT PROJECT NO. 591700

NO. DE CONDUITE		SPECIFICATION	PRODUIT	SYSTEME REVETEMENT	CODE DE COULEUR	ISOLATION ET TRACAGE	EPAISS. D'ISOLATION		
103-150-PDI-CC10-003		CC10	PDI		-			65-103-270-200	PIPE SUPPORT DETAILS
PRESSION D'OPERATION	TEMPERATURE D'OPERATION	PRESSION DE CONCEPTION	TEMPERATURE DE CONCEPTION	PRESSION D'ESSAI	CLASSE D'INSPECTION	CODE DE SERVICE	TRAITEMENT THERMIQUE	65-103-205-200	P&ID
PSIG	T	PSIG	T	PSIG				No. DESSIN	DESSINS DE REFERENCE

SCEAU PROFESSIONNEL
REGISTERED PROFESSIONAL ENGINEER
D TRUCKS
LICENSEE
NT/NU
2017/05/26

CONC.: KHV
DATE: 2017/04/25
DESSINE PAR: KVE
DATE: 2017/04/25
VER. PAR: -
DATE: -
APP.: -
DATE: -
ECHELLE: AUCUNE

PROJET: AGNICO EAGLE - MELIADINE DIVISION
103 - COMBUSTIBLE

TITRE: RANKIN INLET
FABRICATION ISOMETRIC
DIESEL FROM 65TNK11601 & 65TNK11602 TO PUMPING STATION

No PROJET	No DESSIN	PAGES	REV.
6515	103-150-PDI-CC10-003	4/12	0

103-MN-01

IMPRIME LE: May 17, 2017, 3:12pm

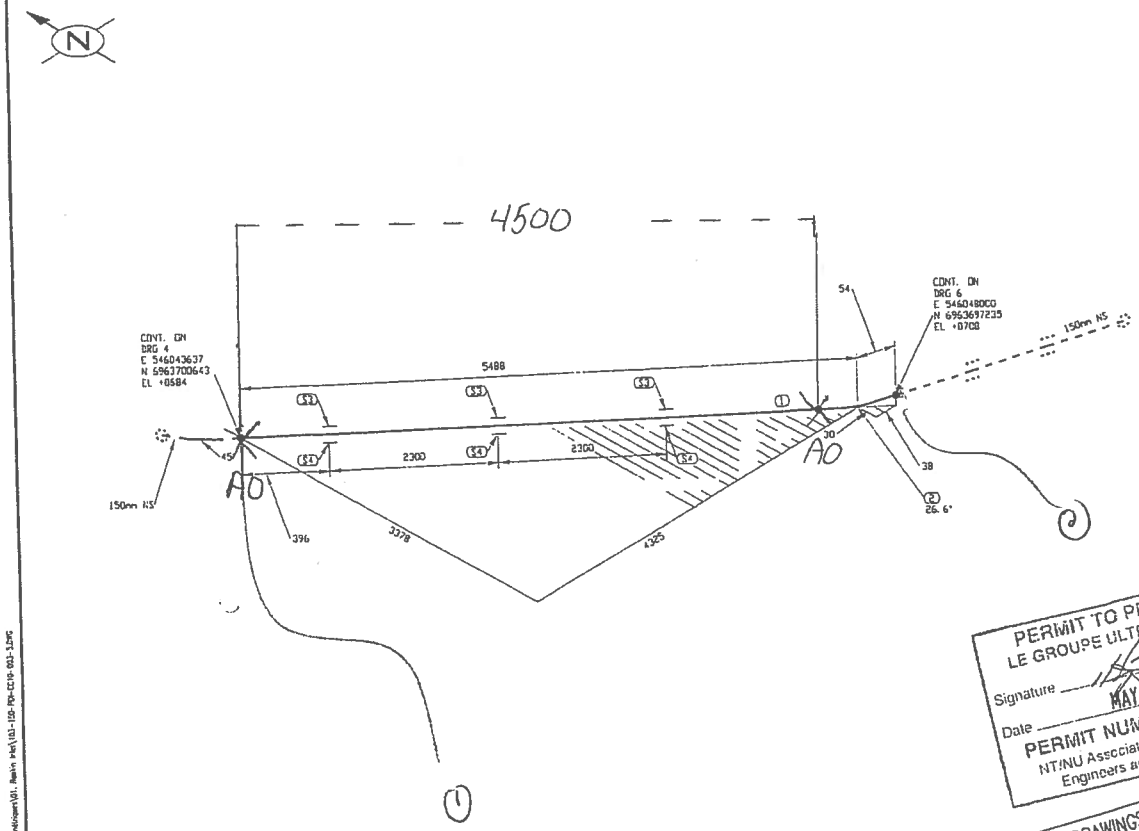

PERMIT TO PRACTICE
LE GROUPE ULTRAGEN LTÉE
Signature
Date MAY 26 2017
PERMIT NUMBER: P 1180
NT/NU Association of Professional Engineers and Geoscientists

FABRICATION DRAWINGS BASED ON WSP CERTIFIED ENGINEERING

LISTE DE MATERIEL

No	QTE	DIA	MATERIEL/CATALOGUE	DESCRIPTION
1	5434 MM	150	A 333 Gr. 6	SCH STD, SMLS PIPE
2	1	150	A 420 Gr. WPL6	SCH STD, BV LR 90 DEG ELBOW TRIM TO 26.57
3	3	150		PIPE SUPPORT AS PER DETAIL 1, DWG: 65-103-270-200
4	3	150		PIPE SHOE AS PER DETAIL 2, DWG: 65-103-270-200

No.	DATE	REVISION	PAR / APP.
0	2017/05/15	ISSUED FOR CONSTRUCTION	KHV

CLIENT:

AGNICO EAGLE

NUQSANA PROMEC MINING

ultragen

CONSULTANT PROJECT NO. 591700

SCEAU PROFESSIONNEL

REGISTERED PROFESSIONAL ENGINEER
D. TRUONG
LICENSEE
NT/NU

2017/05/26

CONC.: KHV
DATE: 2017/04/25
DESSINÉ PAR: KYE
DATE: 2017/04/25
VÉR. PAR: -
DATE: -
APP.: -
DATE: -
ÉCHELLE: AUCUNE

PROJET: AGNICO EAGLE - MELIADINE DIVISION
103 - COMBUSTIBLE

TITRE: RANKIN INLET
FABRICATION ISOMETRIC
DIESEL FROM 65TNK11601 & 65TNK11602 TO PUMPING STATION

No PROJET	No DESSIN	PAGES	RÉV.
6515	103-150-PDI-CC10-003	5/12	0

NO. DE CONDUITE		SPECIFICATION	PRODUIT	SYSTEME REVETEMENT	CODE DE COULEUR	ISOLATION ET TRACAGE	EPAISS. D'ISOLATION		
103-150-PDI-CC10-003		CC10	PDI		-			65-103-270-200	PIPE SUPPORT DETAILS
PRESSION D'OPERATION	TEMPERATURE D'OPERATION	PRESSION DE CONCEPTION	TEMPERATURE DE CONCEPTION	PRESSION D'ESSAI	CLASSE D'INSPECTION	CODE DE SERVICE	TRAITEMENT THERMIQUE	65-103-205-200	P&ID
PSIG	°F	PSIG	°F	PSIG				No. DESSIN	DESSINS DE REFERENCE

103-MN-01

IMPRIMÉ LE: May 18, 2017, 11:40am

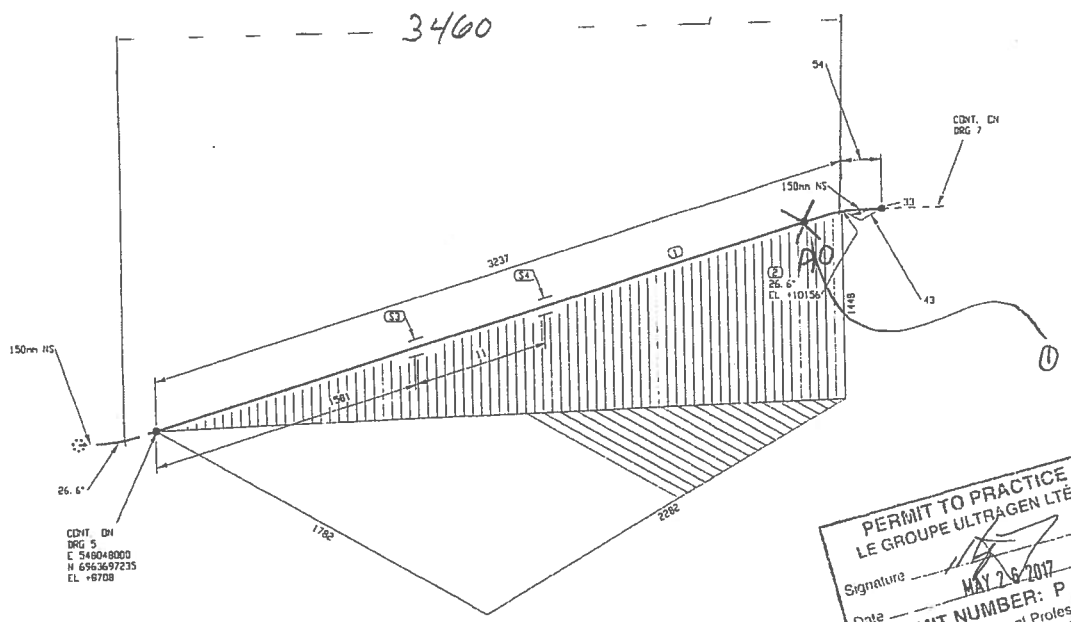

LISTE DE MATERIEL

No	QTE	DIA	MATERIEL/CATALOGUE	DESCRIPTION
1	3183 MM	150	A 333 Gr 6	SCH STD, SMLS PIPE
2	1	150	A 420 Gr. WPL6	SCH STD, BW LR 90 DEG ELBOW TRIM TO 26.57
3	1	150		PIPE SUPPORT AS PER DETAIL 1, DWG 65-103-270-200
4	1	150		PIPE SHOE AS PER DETAIL 2, DWG 65-103-270-200

PERMIT TO PRACTICE
LE GROUPE ULTRAGEN LTÉE
Signature
Date MAY 26 2017
PERMIT NUMBER: P 1180
NT/NU Association of Professional Engineers and Geoscientists

FABRICATION DRAWINGS BASED ON WSP CERTIFIED ENGINEERING

No.	DATE	REVISION	APP.
0	2017/05/15	ISSUED FOR CONSTRUCTION	KHV

CLIENT:

AGNICO EAGLE

NUQSANAQ PROMEC MINING

ultragen

CONSULTANT PROJECT NO. 591700

SCEAU PROFESSIONNEL
REGISTERED PROFESSIONAL ENGINEER
D. TRUONG
LICENSEE
NT/NU

2017/05/26

NO. DE CONDUITE		SPECIFICATION	PRODUIT	SYSTEME REVETEMENT	CODE DE COULEUR	ISOLATION ET TRACAGE	EPAISS. D'ISOLATION		
103-150-PDI-CC10-003		CC10	PDI		-			65-103-270-200	PIPE SUPPORT DETAILS
PRESSION D'OPERATION	TEMPERATURE D'OPERATION	PRESSION DE CONCEPTION	TEMPERATURE DE CONCEPTION	PRESSION D'ESSAI	CLASSE D'INSPECTION	CODE DE SERVICE	TRAITEMENT THERMIQUE	65-103-205-200	P&ID
PSIG	°F	PSIG	°F	PSIG				No. DESSIN	DESSINS DE REFERENCE

CONC.: KHV
DATE: 2017/04/25
DESSINE PAR: KVE
DATE: 2017/04/28
VER. PAR: -
DATE: -
APP.: -
DATE: -
ÉCHELLE: AUCUNE

PROJET: AGNICO EAGLE - MEL1ADINE DIVISION
103 - COMBUSTIBLE

TITRE: RANKIN INLET
FABRICATION ISOMETRIC
DIESEL FROM 65TNK11601 & 65TNK11602 TO PUMPING STATION

No PROJET	No DESSIN	PAGES	REV.
6515	103-150-PDI-CC10-003	6/12	0

103-MN-01

DWG NAME: N:\Agnico Eagle\Workdir\591700 (Fuel Distribution)\03_Design\02_Symbolize\02_Symbolized\01_Rankin Inlet\103-150-PDI-CC10-003-0.DWG
PLOTTED: May 17, 2017, 3:27pm

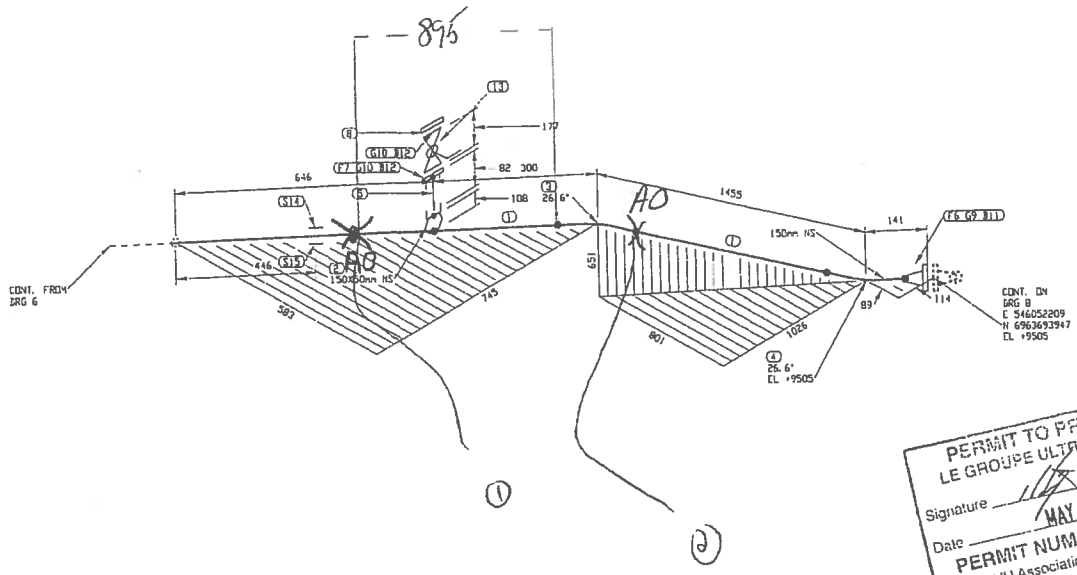

PERMIT TO PRACTICE
LE GROUPE ULTRAGEN LTÉE
Signature
Date MAY 26 2017
PERMIT NUMBER: P 1180
NT/NU Association of Professional Engineers and Geoscientists

FABRICATION DRAWINGS BASED ON WSP CERTIFIED ENGINEERING

LISTE DE MATERIEL

No	QTE	DIA	MATERIEL/CATALOGUE	DESCRIPTION
1	2239 MM	150	A 333 Gr. 6	SCH STD, SMLS PIPE
2	1	150X50	A 350 Gr. LF2	CL 3000, SOCKOLET
3	1	150	A 420 Gr. WPL6	SCH STD, BV LR 45 DEG ELBOW TRIM TO 26.57
4	1	150	A 420 Gr. WPL6	SCH STD, BV LR 90 DEG ELBOW TRIM TO 26.57
5	1	50	A 333 Gr. 6	SCH 80, NIPPLE x 75mm LG PBE
6	1	150	A 350 Gr. LF2	CL 150, SCH STD, RF, WN FLANGE
7	1	50	A 350 Gr. LF2	CL 150, SCH 80, RF, SW FLANGE
8	1	50	A 350 Gr. LF2	CL 150, RF, BLIND FLANGE
9	1	150	ASME B16.20	CL 150, GARLOCK 5500, RING TYPE GASKET 1/8" THK
10	2	50	ASME B16.20	CL 150, GARLOCK 5500, RING TYPE GASKET 1/8" THK
11	8	19	A 193 B7/A 194 2H	CL 150, 8 - 19.05 X 100 STUD BOLTS c/w TWO HEAVY HEX NUTS
12	8	16	A 193 B7/A 194 2H	CL 150, 4 - 15.875 X 85 STUD BOLTS c/w TWO HEAVY HEX NUTS
13	1	50	BA-30	CL 150, RF, BALL VALVE
14	1	150		PIPE SUPPORT AS PER DETAIL 1, DWG: 65-103-270-200
15	1	150		PIPE SHOE AS PER DETAIL 2, DWG: 65-103-270-200

No.	DATE	REVISION	APP.
0	2017/05/15	ISSUED FOR CONSTRUCTION	KHV

CLIENT: AGNICO EAGLE

NUQSANA-PROMEC MINING

ultragen

CONSULTANT PROJECT NO. 591700

NO. DE CONDUITE		SPECIFICATION	PRODUIT	SYSTEME REVETEMENT	CODE DE COULEUR	ISOLATION ET TRACAGE	EPAISS. D'ISOLATION		
103-150-PDI-CC10-003		CC10	PDI		-			65-103-270-200	PIPE SUPPORT DETAILS
PRESSION D'OPERATION	TEMPERATURE D'OPERATION	PRESSION DE CONCEPTION	TEMPERATURE DE CONCEPTION	PRESSON D'ESSAI	CLASSE D'INSPECTION	CODE DE SERVICE	TRAITEMENT THERMIQUE	65-103-205-200	P&ID
PSIG	°F	PSIG	°F	PSIG				No. DESSIN	DESSINS DE REFERENCE

SCEAU PROFESSIONNEL
REGISTERED PROFESSIONAL ENGINEER
D TRUONG
LICENSEE
NT/NU

2017/05/26

CONC.: KHV
DATE: 2017/04/25
DESSINE PAR: KVE
DATE: 2017/04/15
VER. PAR: -
DATE: -
APP.: -
DATE: -
ECHELLE: AUCUNE

PROJET: AGNICO EAGLE - MEL IADINE DIVISION
103 - COMBUSTIBLE

TITRE: RANKIN INLET
FABRICATION ISOMETRIC
DIESEL FROM 65TNK11601 & 65TNK11602 TO PUMPING STATION

No PROJET	No DESSIN	PAGES	REV.
6515	103-150-PDI-CC10-003	7/12	0

103-HN-01

I:\2016\6515 Rankin Inlet\Design\103 Fuel Distribution\105 Detailing\103 Isometrics\103-150-PDI-CC10-003-1.DWG
PLOTTED: May 23, 2017, 3:59pm

TCS

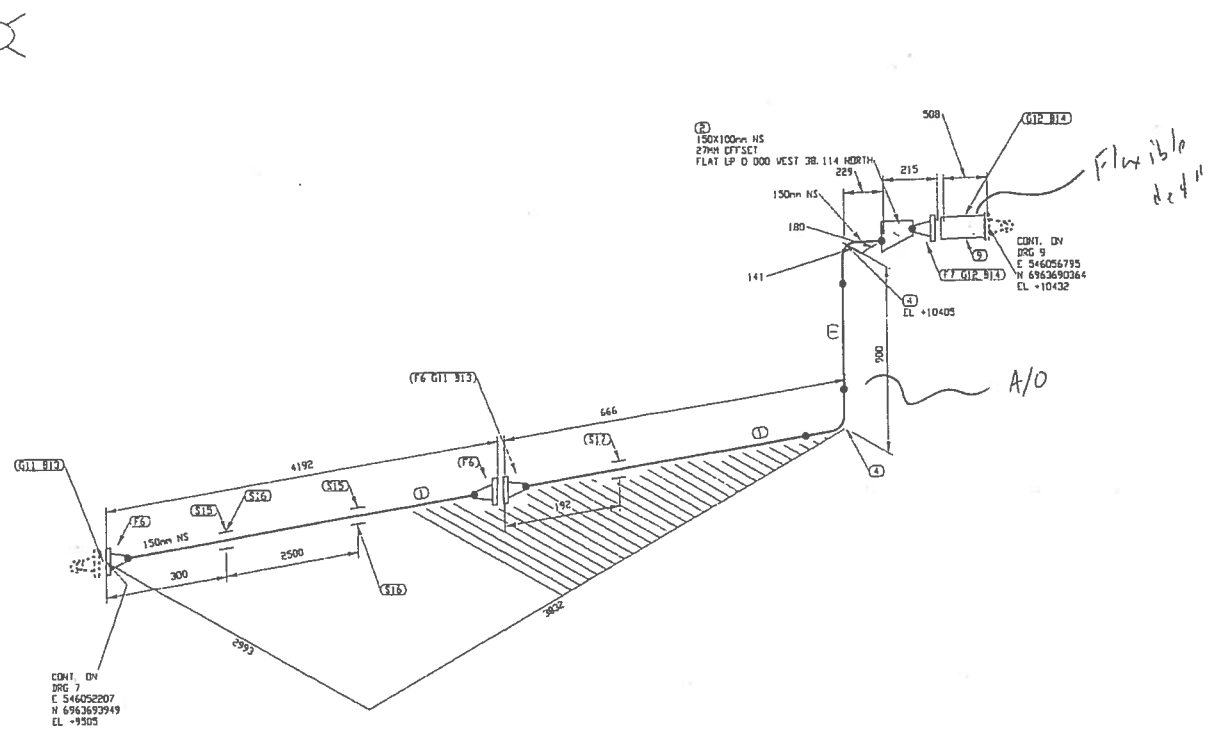

LISTE DE MATERIEL

No	QTE	DIA	MATERIEL/CATALOGUE	DESCRIPTION
1	4810 MM	150	A 333 Gr. 6	SCH STD, SMLS PIPE
2	1	150X100	A 420 Gr. WPL6	SCH STD, BW ECC RED
3				
4	2	150	A 420 Gr. WPL6	SCH STD, BW LR 90 DEG ELBOW
5				
6	3	150	A 350 Gr. LF2	CL 150, SCH STD, RF, WN FLANGE
7	1	100	A 350 Gr. LF2	CL 150, SCH STD, RF, WN FLANGE
8				
9	1	100 —		(TCS METER UNIT) Flexible
10				
11	2	150	ASME B16.20	CL 150, GARLOCK 5500, RING TYPE GASKET 1/8" THK
12	2	100	ASME B16.20	CL 150, GARLOCK 5500, RING TYPE GASKET 1/8" THK
13	16	19	A 193 B7/A 194 2H	CL 150, 8 - 19.05 X 100 STUD BOLTS c/w TWO HEAVY HEX NUTS
14	16	16	A 193 B7/A 194 2H	CL 150, 8 - 15.875 X 90 STUD BOLTS c/w TWO HEAVY HEX NUTS
15	2	150		PIPE SHOE AS PER DETAIL 2, DWG 65-103-270-200
16	2	150		PIPE SUPPORT AS PER DETAIL 1, DWG 65-103-270-200
17	1	150		ABUTMENT TYPE 2 AS PER DETAIL 5, DWG 65-103-270-200

No.	DATE	REVISION	PAR / APP.
0	2017/05/15	ISSUED FOR CONSTRUCTION	KHV

CLIENT: AGNICO EAGLE

NUQSANA PROMEC MINING

ultragen

CONSULTANT PROJECT NO. 591700

PERMIT TO PRACTICE
LE GROUPE ULTRAGEN LTÉE
Signature
Date MAY 26 2017
PERMIT NUMBER: P 1180
NT/NU Association of Professional Engineers and Geoscientists

FABRICATION DRAWINGS BASED ON WSP CERTIFIED ENGINEERING

SCEAU PROFESSIONNEL
REGISTERED PROFESSIONAL ENGINEER
D. TRUONG
LICENSEE
NT/NU
2017/05/26

CONC.: KHV
DATE: 2017/04/25
DESSINÉ PAR: KVE
DATE: 2017/04/25
VER. PAR: -
DATE: -
APP.: -
DATE: -
ECHELLE: AUCUNE

PROJET: AGNICO EAGLE - MELIADINE DIVISION
103 - COMBUSTIBLE

TITRE: RANKIN INLET
FABRICATION ISOMETRIC
DIESEL FROM 65TNK11601 & 65TNK11602 TO PUMPING STATION

No PROJET	No DESSIN	PAGES	REV.
6515	103-150-PDI-CC10-003	8/12	0

NO. DE CONDUITE		SPECIFICATION	PRODUIT	SYSTEME REVETEMENT	CODE DE COULEUR	ISOLATION ET TRACAGE	EPAISS. D'ISOLATION		
103-150-PDI-CC10-003		CC10	PDI		-			65-103-270-200	PIPE SUPPORT DETAILS
PRESSION D'OPERATION	TEMPERATURE D'OPERATION	PRESSION DE CONCEPTION	TEMPERATURE DE CONCEPTION	PRESSION D'ESSAI	CLASSE D'INSPECTION	CODE DE SERVICE	TRAITEMENT THERMIQUE	65-103-205-200	P&ID
PSIG	°F	PSIG	°F	PSIG				No. DESSIN	DESSINS DE REFERENCE

103-MN-01

IMPRIME LE: May 18, 2017, 12:32pm

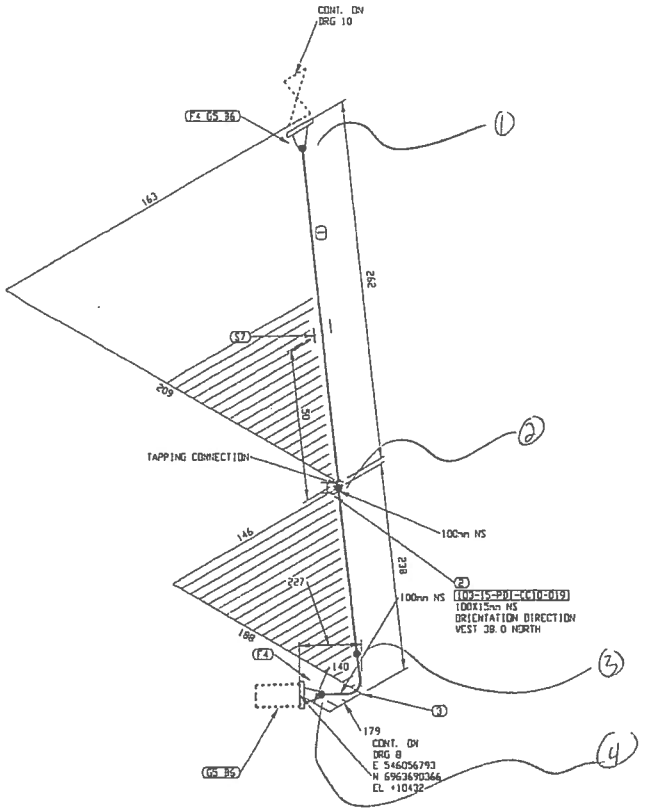

LISTE DE MATERIEL

No	QTE	DIA	MATERIEL/CATALOGUE	DESCRIPTION
1	272 MM	100	A 333 Gr. 6	SCH STD, SMLS PIPE
2	1	100X15	A 350 Gr. LF2	CL 3000, THREDOLET
3	1	100	A 420 Gr. WPL6	SCH STD, BW LR 90 DEG ELBOW
4	2	100	A 350 Gr. LF2	CL 150, SCH STD, RF, WN FLANGE
5	2	100	ASME B16.20	CL 150, GARLOCK 3500, RING TYPE GASKET 1/8" THK
6	16	16	A 193 B7/A 194 2H	CL 150, 8 - 15.875 X 90 STUD BOLTS c/w TWO HEAVY HEX NUTS
7	1	100		PIPE BRACKET C150x12x300 WELDED TO CONTAINER C/W U-BOLT

No.	DATE	REVISION	APP.
0	2017/05/15	ISSUED FOR CONSTRUCTION	KHV

PERMIT TO PRACTICE
LE GROUPE ULTRAGEN LTÉE
Signature
Date MAY 26 2017
PERMIT NUMBER: P 1180
NT/NU Association of Professional Engineers and Geoscientists

FABRICATION DRAWINGS BASED ON WSP CERTIFIED ENGINEERING

CLIENT: AGNICO EAGLE

NUOSANA PROMEC MINING

ultragen
CONSULTANT PROJECT NO. 591700

SCEAU PROFESSIONNEL
REGISTERED PROFESSIONAL ENGINEER
D TRUONG
LICENSEE
NT/NU
2017/05/26

CONC.: KHV
DATE: 2017/04/25
DESSINE PAR: KVE
DATE: 2017/04/25
VER. PAR: -
DATE: -
APP.: -
DATE: -
ÉCHELLE: AUCUNE

PROJET: AGNICO EAGLE – MEL IADINE DIVISION
103 – COMBUSTIBLE

TITRE: RANKIN INLET
FABRICATION ISOMETRIC
DIESEL FROM 65TNK11601 & 65TNK11602 TO PUMPING STATION

No PROJET	No DESSIN	PAGES	REV.
6515	103-150-PDI-CC10-003	9/12	0

NO. DE CONDUITE		SPECIFICATION	PRODUIT	SYSTEME REVETEMENT	CODE DE COULEUR	ISOLATION ET TRACAGE	EPAISS. D'ISOLATION		
103-150-PDI-CC10-003		CC10	PDI		-			65-103-270-200	PIPE SUPPORT DETAILS
PRESSION D'OPERATION	TEMPERATURE D'OPERATION	PRESSION DE CONCEPTION	TEMPERATURE DE CONCEPTION	PRESSION D'ESSAI	CLASSE D'INSPECTION	CODE DE SERVICE	TRAITEMENT THERMIQUE	65-103-205-200	P&ID
PSIG	°F	PSIG	°F	PSIG				No. DESSIN	DESSINS DE REFERENCE

103-MN-01

IDMS: P:\Agnico Eagle\Meliadine\103700 (Fuel Distribution)\02- Permits\02- Engineering\02- Construction\01- Design Basis\103-150-PDI-CC10-003-0.DWG
Printed: May 17, 2017, 3:26pm

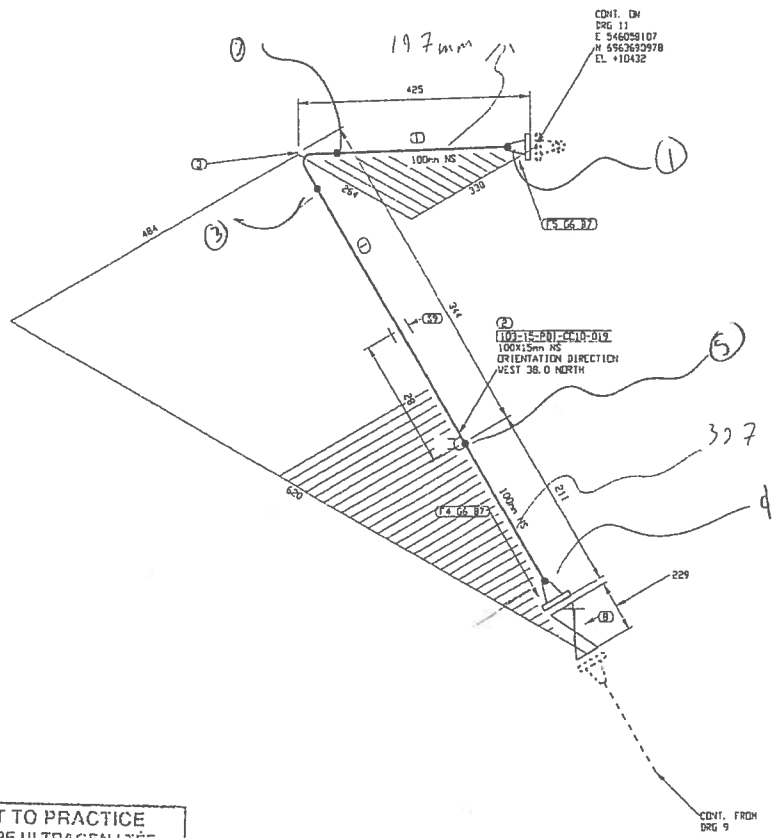

LISTE DE MATERIEL

No	QTE	DIA	MATERIEL/CATALOGUE	DESCRIPTION
1	527 MM	100	A 333 Gr. 6	SCH STD, SMLS PIPE
2	:	100X15	A 350 Gr. LF2	CL 3000, THREDOLET
3	:	100	A 420 Gr. WPL6	SCH STD, BW LR 90 DEG ELBOW
4	1	100	A 350 Gr. LF2	CL 150, SCH STD, RF, WN FLANGE
5	1	100	A 350 Gr. LF2	CL 150, SCH STD, RF, WN FLANGE
6	2	100	ASME B16.20	CL 150, GARLOCK 3500, RING TYPE GASKET 1/8" THK
7	:6	16	A 193 B7/A 194 2H	CL 150, 8 - 15.875 X 90 STUD BOLTS c/w TWO HEAVY HEX NUTS
8	:	100	GA-10	CL 150, RF, GATE VALVE
9	1	100		PIPE BRACKET C150x12x300 WELDED TO CONTAINER C/W U-BOLT

No.	DATE	REVISION	APP.
0	2017/05/15	ISSUED FOR CONSTRUCTION	KHV / PAR

PERMIT TO PRACTICE
LE GROUPE ULTRAGEN LTÉE
Signature
Date MAY 26 2017
PERMIT NUMBER: P 1180
NT/NU Association of Professional Engineers and Geoscientists

FABRICATION DRAWINGS BASED ON WSP CERTIFIED ENGINEERING

CLIENT: AGNICO EAGLE

NUQSANA PROMEC MINING

ultragen

CONSULTANT PROJECT NO. 591700

SCEAU PROFESSIONNEL
REGISTERED PROFESSIONAL ENGINEER
D TRUONG
LICENSEE
NT/NU
2017/05/26

CONC.: KHV
DATE: 2017/04/25
DESSINE PAR: KVE
DATE: 2017/04/25
VER. PAR: -
DATE: -
APP.: -
DATE: -
ÉCHELLE: AUCUNE

PROJET: AGNICO EAGLE - MEADOWBANK DIVISION
103 - COMBUSTIBLE

TITRE: RANKIN INLET
FABRICATION ISOMETRIC
DIESEL FROM 65TNK11601 & 65TNK11602 TO PUMPING STATION

No PROJET	No DESSIN	PAGES	REV.
6515	103-150-PDI-CC10-003	10/12	0

103-MAN-01

NO. DE CONDUITE		SPECIFICATION	PRODUIT	SYSTEME REVETEMENT	CODE DE COULEUR	ISOLATION ET TRAÇAGE	EPAISS. D'ISOLATION		
103-150-PDI-CC10-003		CC10	PDI		-			65-103-270-200	PIPE SUPPORT DETAILS
PRESSION D'OPERATION	TEMPERATURE D'OPERATION	PRESSION DE CONCEPTION	TEMPERATURE DE CONCEPTION	PRESSION D'ESSAI	CLASSE D'INSPECTION	CODE DE SERVICE	TRAITEMENT THERMIQUE	65-103-205-200	P&ID
PSIG	°F	PSIG	°F	PSIG				No. DESSIN	DESSINS DE REFERENCE

IMPRIMÉ LE: May 17, 2017, 3:36pm

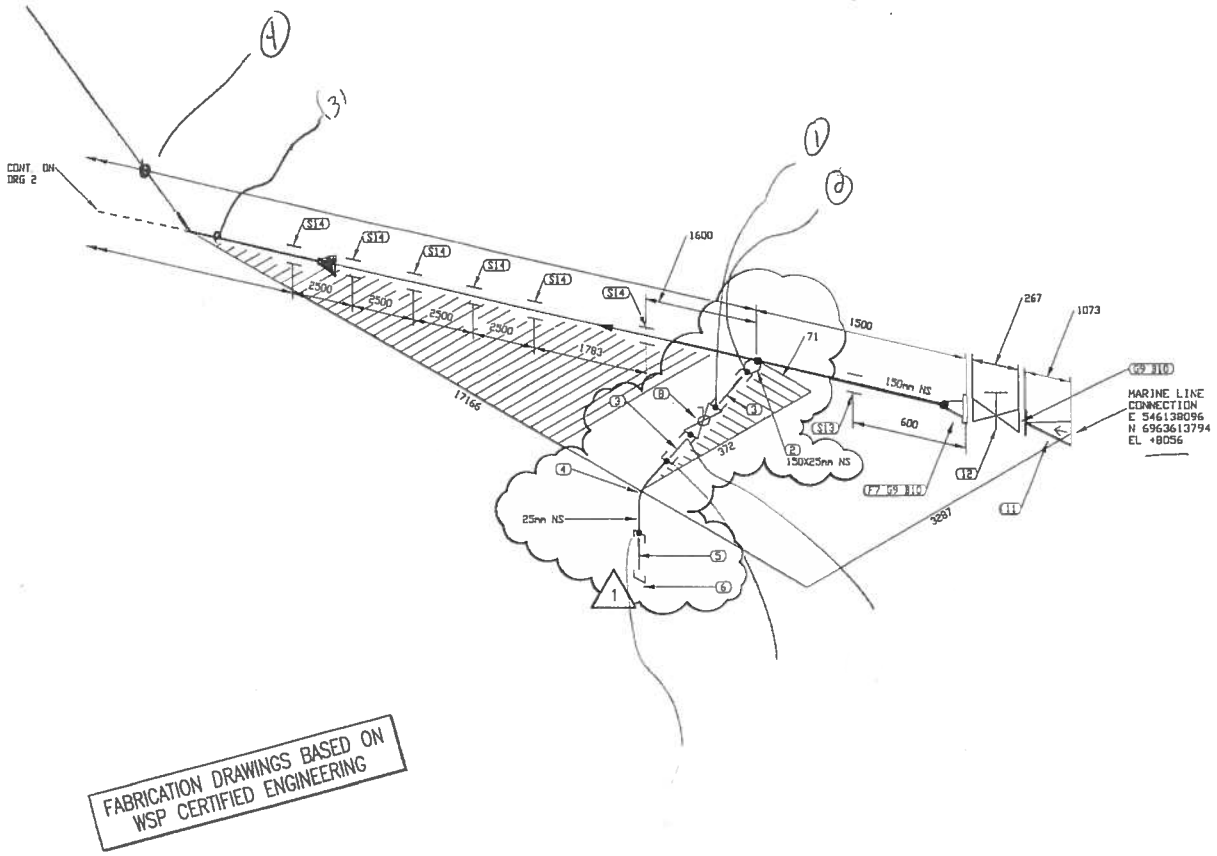

FABRICATION DRAWINGS BASED ON WSP CERTIFIED ENGINEERING

LISTE DE MATERIEL

No	QTE	DIA	MATERIEL/CATALOGUE	DESCRIPTION
1	16045 MM	150	A 333 Gr. 6	SCH STD, SMLS PIPE
2	1	150X25	A 350 Gr. LF2	CL 3000, SOCKOLET
3	2	25	A 333 Gr. 6	SCH 80, NIPPLE x 75mm LG PBE
4	1	25	A 350 Gr. LF2	CL 3000, SW 90 DEG ELBOW
5	1	25	A 333 Gr. 6	SCH 80, NIPPLE x 75mm LG PDExTOE
6	1	25	A 350 Gr. LF2	CL 3000, THRD CAP
7	1	150	A 350 Gr. LF2	CL 150, SCH STD, RF, WN FLANGE
8	1	25	BA-29	CL 600, SW, BALL VALVE
9	2	150	ASME B16.20	CL 150, GARLOCK 9500, RING TYPE GASKET 1/8" THK
10	16	19	A 193 B7/A 194 2H	CL 150, 8 - 19.05 X 100 STUD BOLTS c/w TWO HEAVY HEX NUTS
11	1	150	CK-29	CL 150, RF, SWING CHECK VALVE
12	1	150	GA-10	CL 150, RF, GATE VALVE
13		150		PIPE GUIDE AS PER DETAIL 4, DWG 65-103-270-200
14	6	150		PIPE SUPPORT AS PER DETAIL 3, DWG 65-103-270-200

No.	DATE	REVISION	PAR / APP.
1	2017/06/30	DRAIN REVISED AS PER CLIENT COMMENTS	QVN / KHV
0	2017/05/15	ISSUED FOR CONSTRUCTION	KHV / PAR

CLIENT: AGNICO EAGLE

NUQSANA-PRONEC MINING

ultragen

CONSULTANT PROJECT NO. 591700

SCEAU PROFESSIONNEL

NO. DE CONDUITE		SPECIFICATION	PRODUIT	SYSTEME REVETEMENT	CODE DE COULEUR	ISOLATION ET TRACAGE	EPAISS. D'ISOLATION		
103-150-PDI-CC10-001		CC10	PDI					65-103-270-200	PIPE SUPPORT DETAILS
PRESSION D'OPERATION	TEMPERATURE D'OPERATION	PRESSION DE CONCEPTION	TEMPERATURE DE CONCEPTION	PRESSION D'ESSAI	CLASSE D'INSPECTION	CODE DE SERVICE	TRAITEMENT THERMIQUE	65-103-205-200	P&ID
PSIG	°F	PSIG	°F	PSIG				No. DESSIN	DESSINS DE REFERENCE

CONC.: KHV
DATE: 2017/04/25
DESSINE PAR: KVE
DATE: 2017/04/25
VER. PAR: -
DATE: -
APP.: -
DATE: -
ÉCHELLE: AUCUNE

PROJET: AGNICO EAGLE - MELIADINE DIVISION
103 - COMBUSTIBLE

TITRE: RANKIN INLET
FABRICATION ISOMETRIC
MARINE LINE TO 65TNK11601 & 65TNK11602

No PROJET	No DESSIN	PAGES	REV.
6515	103-150-PDI-CC10-001	1/13	1

103-MN-01, TEMP-01

IMPRIMÉ LE: Jul 05, 2017, 10:31:xx

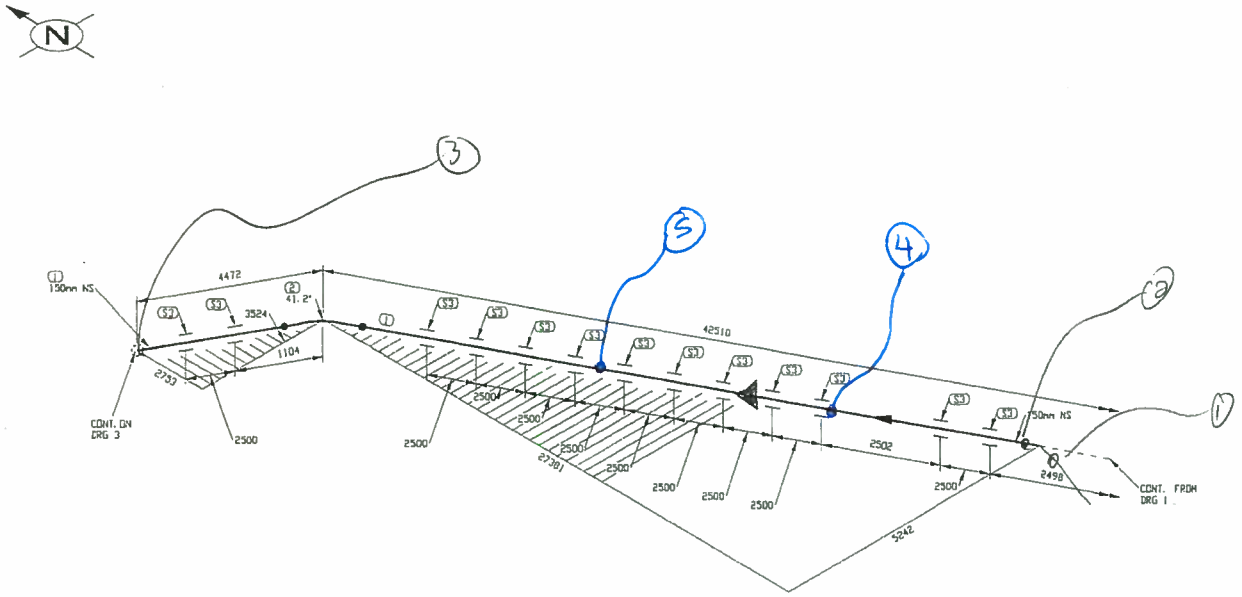

LISTE DE MATERIEL

No.	QTE.	DIA.	MATERIEL/CATALOGUE	DESCRIPTION
1	38178 MM	150	A 333 Gr. 6	SCH STD, SMLS PIPE
2	1	150	A 420 Gr. WPLG	SCH STD, BW LR 45 DEG ELBOW TRIM TO 41.16
3	13	150		PIPE SUPPORT AS PER DETAIL 3, DWG 65-103-270-200

FABRICATION DRAWINGS BASED ON WSP CERTIFIED ENGINEERING

PERMIT TO PRACTICE
LE GROUPE ULTRAGEN LTÉE
Signature
Date MAY 26 2017
PERMIT NUMBER: P 1180
NT/NU Association of Professional Engineers and Geoscientists

No.	DATE	REVISION	PAR	APP.
0	2017/05/15	ISSUED FOR CONSTRUCTION	KHV	

CLIENT: AGNICO EAGLE

NUQSANA PROMEC MINING

ultragen

CONSULTANT PROJECT NO. 591700

NO. DE CONDUITE		SPECIFICATION	PRODUIT	SYSTEME REVETEMENT	CODE DE COULEUR	ISOLATION ET TRACAGE	EPAISS. D'ISOLATION		
103-150-PDI-CC10-001		CC10	PDI		-			65-103-270-200	PIPE SUPPORT DETAILS
PRESSION D'OPERATION	TEMPERATURE D'OPERATION	PRESSION DE CONCEPTION	TEMPERATURE DE CONCEPTION	PRESSION D'ESSAI	CLASSE D'INSPECTION	CODE DE SERVICE	TRAITEMENT THERMIQUE	65-103-205-200	P&ID
PSIG	T	PSIG	T	PSIG				No. DESSIN	DESSINS DE REFERENCE

SCEAU PROFESSIONNEL
REGISTERED PROFESSIONAL ENGINEER
D. TRUONG
LICENSEE
NTI/NU
2017/05/26

CONC.: KHV
DATE: 2017/04/25
DESSINÉ PAR: KVE
DATE: 2017/04/25
VÉR. PAR: -
DATE: -
APP.: -
DATE: -
ÉCHELLE: AUCUNE

PROJET: AGNICO EAGLE - MELIADINE DIVISION
103 - COMBUSTIBLE

TITRE: RANKIN INLET
FABRICATION ISOMETRIC
MARINE LINE TO 65TNK11601 & 65TNK11602

No PROJET	No DESSIN	PAGES	REV.
6515	103-150-PDI-CC10-001	2/13	0

103-MN-01

DATE: May 17, 2017, 3:04pm

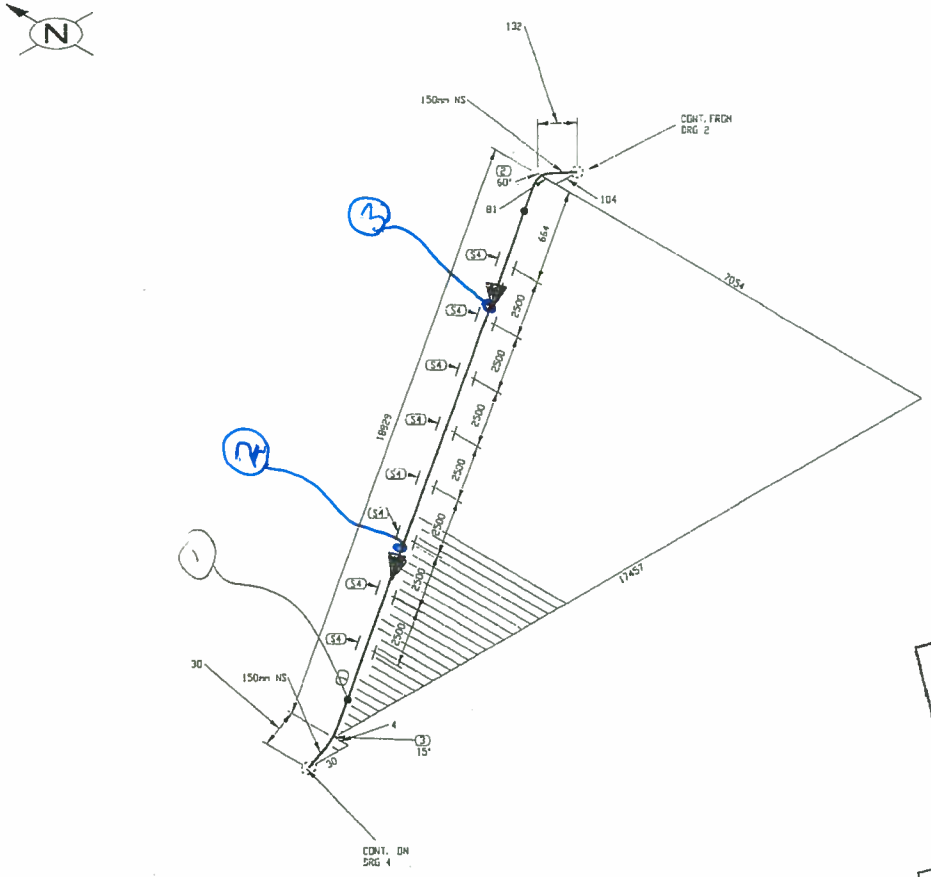

LISTE DE MATERIEL

No	QTE	DIA	MATERIEL/CATALOGUE	DESCRIPTION
1	18667 MM	150	A 333 Gr. 6	SCH STD, SMLS PIPE
2	1	150	A 420 Gr. WPL6	SCH STD, BV LR 90 DEG ELBOW TRIM TO 60.00
3	1	150	A 420 Gr. WPL6	SCH STD, BV LR 90 DEG ELBOW TRIM TO 15.00
4	8	150		PIPE SUPPORT AS PER DETAIL 3, DWG: 65-103-270-200

PERMIT TO PRACTICE
LE GROUPE ULTRAGEN LTÉE
Signature
Date MAY 2 6 2017
PERMIT NUMBER: P 1180
NT/NU Association of Professional Engineers and Geoscientists

FABRICATION DRAWINGS BASED ON WSP CERTIFIED ENGINEERING

No.	DATE	REVISION	PAR / APP.
0	2017/05/15	ISSUED FOR CONSTRUCTION	KHV

CLIENT: AGNICO EAGLE

NUQSANA-PROMEC MINING

ultragen

CONSULTANT PROJECT NO. 591700

SCEAU PROFESSIONNEL
REGISTERED PROFESSIONAL ENGINEER
D. TRUONG
LICENSEE
NT/NU
2017/05/26

CONC.: KHV
DATE: 2017/04/25
DESSINÉ PAR: KVE
DATE: 2017/04/25
VÉR. PAR: -
DATE: -
APP.: -
DATE: -
ÉCHELLE: AUCUNE

PROJET: AGNICO EAGLE - MEADOWBANK DIVISION
103 - COMBUSTIBLE

TITRE: RANKIN INLET
FABRICATION ISOMETRIC
MARINE LINE TO 65TNK11601 & 65TNK11602

No PROJET	No DESSIN	PAGES	REV.
6515	103-150-PDI-CC10-001	3/13	0

NO. DE CONDUITE		SPECIFICATION	PRODUIT	SYSTEME REVETEMENT	CODE DE COULEUR	ISOLATION ET TRACAGE	EPAISS. D'ISOLATION		
103-150-PDI-CC10-001		CC10	PDI		-			65-103-270-200	PIPE SUPPORT DETAILS
PRESSION D'OPERATION	TEMPERATURE D'OPERATION	PRESSION DE CONCEPTION	TEMPERATURE DE CONCEPTION	PRESSION D'ESSAI	CLASSE D'INSPECTION	CODE DE SERVICE	TRAITEMENT THERMIQUE	65-103-205-200	P&ID
PSIG	°F	PSIG	°F	PSIG				No. DESSIN	DESSINS DE REFERENCE

103-MN-01

IMPRIMÉ LE May 17, 2017, 1:04pm

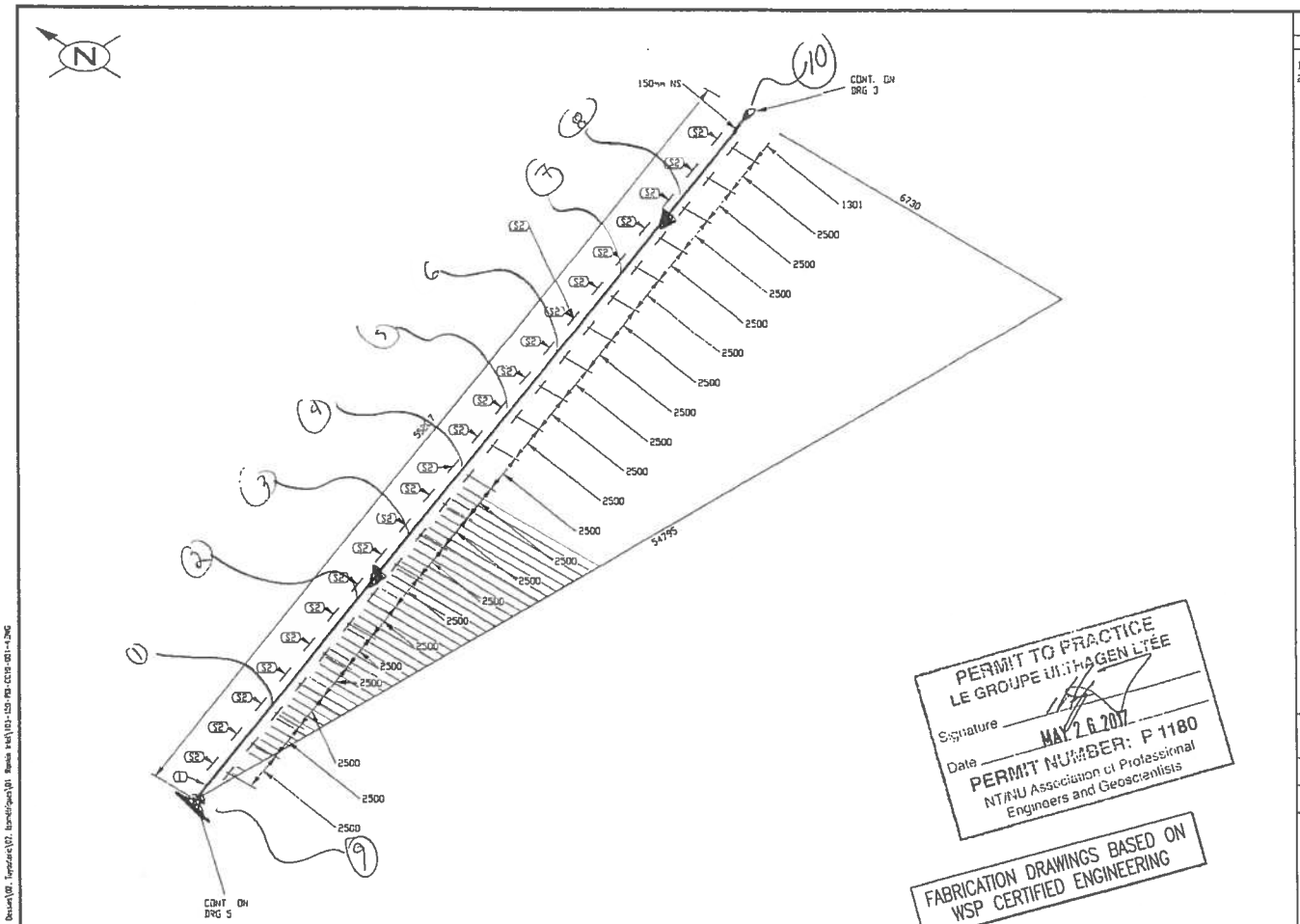

PERMIT TO PRACTICE
LE GROUPE ULTRAGEN LTÉE
Signature
Date MAY 2 6 2017
PERMIT NUMBER: P 1180
NT/NU Association of Professional Engineers and Geoscientists

FABRICATION DRAWINGS BASED ON WSP CERTIFIED ENGINEERING

LISTE DE MATERIEL

No	QTE	DIA	MATERIEL/CATALOGUE	DESCRIPTION
1	55207 MM	150	A 333 Gr 6	SCH STD, SMLS PIPE
2	23	150		PIPE SUPPORT AS PER DETAIL 3, DWG: 65-103-270-200

No.	DATE	REVISION	PAR / APP
0	2017/05/15	ISSUED FOR CONSTRUCTION	KHV

CLIENT:

AGNICO EAGLE

NUQSANA PROMEC MINING

ultragen

CONSULTANT PROJECT NO. 591700

NO. DE CONDUITE		SPECIFICATION	PRODUIT	SYSTEME REVETEMENT	CODE DE COULEUR	ISOLATION ET TRACAGE	EPAISS. D'ISOLATION		
103-150-PDI-CC10-001		CC10	PDI		-			65-103-270-200	PIPE SUPPORT DETAILS
PRESSION D'OPERATION	TEMPERATURE D'OPERATION	PRESSION DE CONCEPTION	TEMPERATURE DE CONCEPTION	PRESSION D'ESSAI	CLASSE D'INSPECTION	CODE DE SERVICE	TRAITEMENT THERMIQUE	65-103-205-200	P&ID
PSIG	°F	PSIG	°F	PSIG				No. DESSIN	DESSINS DE REFERENCE

SCEAU PROFESSIONNEL

REGISTERED PROFESSIONAL ENGINEER
D. TRUONG
LICENSEE
NT/NU

2017/05/26

CONC.: KHV
DATE: 2017/04/25
DESSINE PAR: KVE
DATE: 2017/04/25
VER. PAR: -
DATE: -
APP.: -
DATE: -
ECHELLE: AUCUNE

PROJET: AGNICO EAGLE - MELIADINE DIVISION
103 - COMBUSTIBLE

TITRE: RANKIN INLET
FABRICATION ISOMETRIC
MARINE LINE TO 65TNK11601 & 65TNK11602

No PROJET	No DESSIN	PAGES	REV.
6515	103-150-PDI-CC10-001	4/13	0

103-MN-01

FICHIER: R:\Agnico Eagle\Meliadine\591700 (Fuel Cistern)\03 Dessins\02. Tuyauterie\02. Isometriques\01 Rankin Inlet\103-150-PDI-CC10-001-4.DWG

MARINE LE: May 17, 2017, 3:04pm

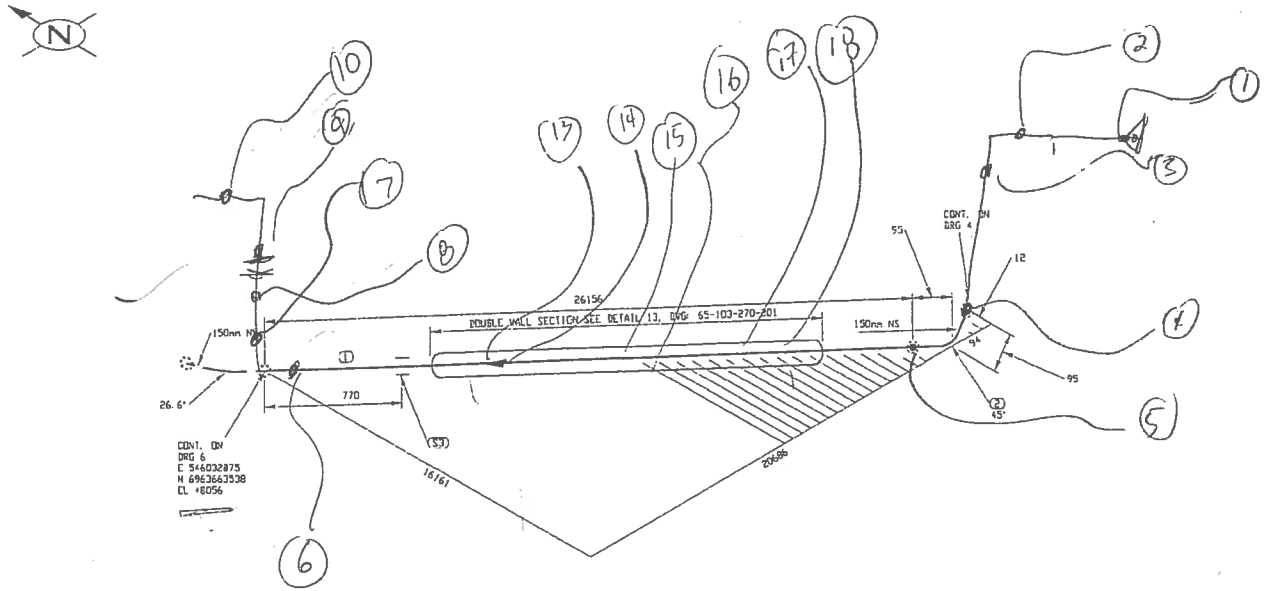

LISTE DE MATERIEL

No	QTE	DIA	MATERIEL/CATALOGUE	DESCRIPTION
1	26156 MM	150	A 333 Gr 6	SCH STD, SMLS PIPE
2	1	150	A 420 Gr WPL6	SCH STD, BW LR 45 DEG ELBOW
3	1	150		ABUTEMENT TYPE 2 AS PER DETAIL 5, DWG 65-103-270-200

PERMIT TO PRACTICE
LE GROUPE ULTHAGEN LTÉE
Signature
Date MAY 26 2017
PERMIT NUMBER: P 1180
NT/NU Association of Professional Engineers and Geoscientists

FABRICATION DRAWINGS BASED ON WSP CERTIFIED ENGINEERING

No.	DATE	REVISION	
0	2017/05/15	ISSUED FOR CONSTRUCTION	KHV / PAR / APP.

CLIENT: AGNICO EAGLE

NUQSANA-PROMEC MINING

ultragen

CONSULTANT PROJECT NO. 591700

SCEAU PROFESSIONNEL
REGISTERED PROFESSIONAL ENGINEER
D. TRUONG
LICENSEE
NT/NU
2017/05/26

CONC.: KHV
DATE: 2017/04/25
DESSINÉ PAR: KVE
DATE: 2017/04/25
VÉR. PAR: -
DATE: -
APP.: -
DATE: -
ÉCHELLE: AUCUNE

PROJET: AGNICO EAGLE - MEADOWBANK DIVISION
103 - COMBUSTIBLE

TITRE: RANKIN INLET
FABRICATION ISOMETRIC
MARINE LINE TO 65TNK11601 & 65TNK11602

No PROJET	No DESSIN	PAGES	REV.
6515	103-150-PDI-CC10-001	5/13	0

NO. DE CONDUITE	SPÉCIFICATION	PRODUIT	SYSTÈME REVÊTEMENT	CODE DE COULEUR	ISOLATION ET TRAÇAGE	ÉPAISS. D'ISOLATION		
103-150-PDI-CC10-001	CC10	PDI		-			65-103-270-200	PIPE SUPPORT DETAILS
PRESSION D'OPÉRATION	TEMPÉRATURE D'OPÉRATION	PRESSION DE CONCEPTION	TEMPÉRATURE DE CONCEPTION	PRESSION D'ESSAI	CLASSE D'INSPECTION	CODE DE SERVICE	TRAITEMENT THERMIQUE	65-103-205-200	P&ID
PSIG	°F	PSIG	°F	PSIG				No. DESSIN	DESSINS DE RÉFÉRENCE

103-HN-01

TRACÉ: N:\Agnico Eagle\Meadow\591700 (Fort Dickson Only)\05 Design\02 Symbols\02. Symboles\01. Plans Mec\103-150-PDI-CC10-001-1.dwg
IMPRIMÉ LE: May 18, 2017, 11:57am

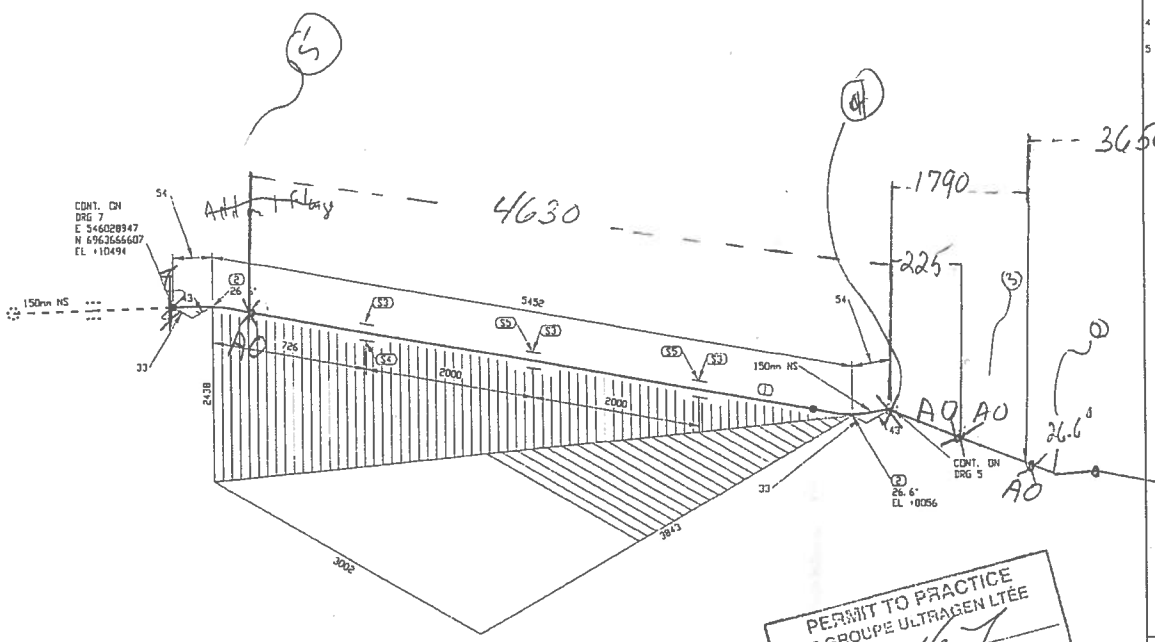

LISTE DE MATERIEL

No	QTE	D/A	MATERIEL/CATALOGUE	DESCRIPTION
1	5344 MM	150	A 333 Gr 6	SCH STD, SMLS PIPE
2	2	150	A 420 Gr WPL6	SCH STD, BV LR 45 DEG ELBOW TRIM TO 26.57
3	3	150		PIPE SUPPORT AS DETAIL 1, DWG 65-103-270-200
4	1	150		PIPE SHOE AS PER DETAIL 2, DWG 65-103-270-200
5	2	150		PIPE SHOE AS PER DETAIL 2, DWG 65-103-270-200

PERMIT TO PRACTICE
LE GROUPE ULTRAGEN LTÉE
Signature
Date MAI-26-2017
PERMIT NUMBER: P 1180
NT/NU Association of Professional Engineers and Geoscientists

FABRICATION DRAWINGS BASED ON WSP CERTIFIED ENGINEERING

No.	DATE	REVISION	PAR APP.
0	2017/05/15	ISSUED FOR CONSTRUCTION	KHV

CLIENT: AGNICO EAGLE

NUQSANA PROMEC MINING

ultragen

CONSULTANT PROJECT NO. 591700

SCEAU PROFESSIONNEL
REGISTERED PROFESSIONAL ENGINEER
D TRUONG
LICENSEE
NT/NU
2017/05/26

CONC.: KHV
DATE: 2017/04/25
DESSINÉ PAR: KVE
DATE: 2017/04/25
VER. PAR: -
DATE: -
APP.: -
DATE: -
ÉCHELLE: AUCUNE

PROJET: AGNICO EAGLE - MELIADINE DIVISION
103 - COMBUSTIBLE

TITRE: RANKIN INLET
FABRICATION ISOMETRIC
MARINE LINE TO 65TNK11601 & 65TNK11602

No PROJET	No DESSIN	PAGES	REV.
6515	103-150-PDI-CC10-001	6/13	0

NO. DE CONDUITE		SPÉCIFICATION	PRODUIT	SYSTÈME REVÊTEMENT	CODE DE COULEUR	ISOLATION ET TRAÇAGE	ÉPAISS. D'ISOLATION		
103-150-PDI-CC10-001		CC10	PDI		-			65-103-270-200	PIPE SUPPORT DETAILS
PRESSION D'OPÉRATION	TEMPÉRATURE D'OPÉRATION	PRESSION DE CONCEPTION	TEMPÉRATURE DE CONCEPTION	PRESSION D'ESSAI	CLASSE D'INSPECTION	CODE DE SERVICE	TRAITEMENT THERMIQUE	65-103-205-200	P&ID
PSIG	°F	PSIG	°F	PSIG				No. DESSIN	DESSINS DE RÉFÉRENCE

103-WM-101

I:\DWG\Agnico Eagle\Meliadine\103\103 Fuel Distribution\103 Design\CAD Isometric\01 Rankin Inlet\103-150-PDI-CC10-001-ISO.DWG
IMPRIMÉ LE: May 17, 2017, 3:25PM

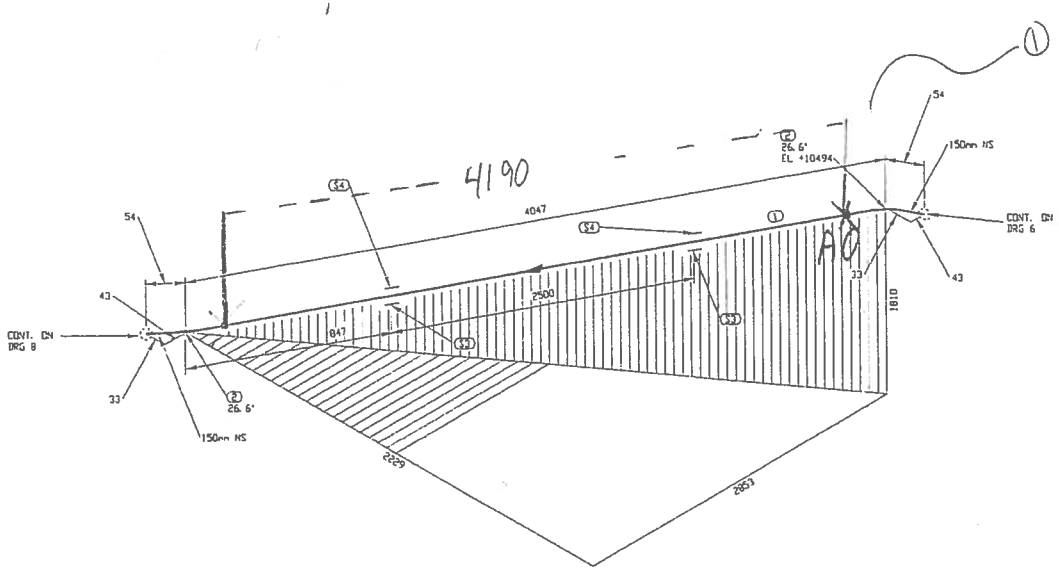

LISTE DE MATERIEL

No	QTE	DIA	MATERIEL/CATALOGUE	DESCRIPTION
1	3939 MM	150	A 333 Gr. 6	SCH STD, SMLS PIPE
2	2	150	A 420 Gr. WPL6	SCH STD, BW LR 45 DEG ELBOW TRIM TO 26.57
3	2	150		PIPE SUPPORT AS PER DETAIL 1, DWG 65-103-270-200
4	2	150		PIPE SHOE AS PER DETAIL 2, DWG 65-103-270-200

No.	DATE	REVISION	APP.
0	2017/05/15	ISSUED FOR CONSTRUCTION	KHV

PERMIT TO PRACTICE
LE GROUPE ULTRAGEN LTÉE
Signature
Date MAY 26 2017
PERMIT NUMBER: P 1180
NT/NU Association of Professional Engineers and Geoscientists

FABRICATION DRAWINGS BASED ON WSP CERTIFIED ENGINEERING

CLIENT: AGNICO EAGLE

NUQSANA PROMEC MINING

ultragen

CONSULTANT PROJECT NO. 591700

SCEAU PROFESSIONNEL
REGISTERED PROFESSIONAL ENGINEER
D TRUONG
LICENSEE
NT/NU
2017/05/26

NO. DE CONDUITE		SPECIFICATION	PRODUIT	SYSTEME REVETEMENT	CODE DE COULEUR	ISOLATION ET TRACAGE	EPAISS. D'ISOLATION		
1C3-150-PDI-CC10-001		CC10	PDI		-			65-103-270-200	PIPE SUPPORT DETAILS
PRESSION D'OPERATION	TEMPERATURE D'OPERATION	PRESSION DE CONCEPTION	TEMPERATURE DE CONCEPTION	PRESSION D'ESSAI	CLASSE D'INSPECTION	CODE DE SERRAGE	TRAITEMENT THERMIQUE	65-103-205-200	P&ID
PSIG	°F	PSIG	°F	PSIG				No. DESSIN	DESSINS DE REFERENCE

CONC.: KHV
DATE: 2017/04/25
DESSINE PAR: KVE
DATE: 2017/04/25
VER. PAR: -
DATE: -
APP.: -
DATE: -
ECHELLE: AUCUNE

PROJET: AGNICO EAGLE - MELIADINE DIVISION
103 - COMBUSTIBLE

TITRE: RANKIN INLET
FABRICATION ISOMETRIC
MARINE LINE TO 65TNK11601 & 65TNK11602

No PROJET	No DESSIN	PAGES	REV.
6515	103-150-PDI-CC10-001	7/13	0

103-MN-01

TRACE: N:\Projets (sys)\Versions\591700 (Last Distributed)\Dessins\CC (Cr. hydraulic)\01. Revit (ext)\103-150-PDI-CC10-001-ISO.DWG
IMPRIMÉ LE: May 17, 2017, 3:05pm

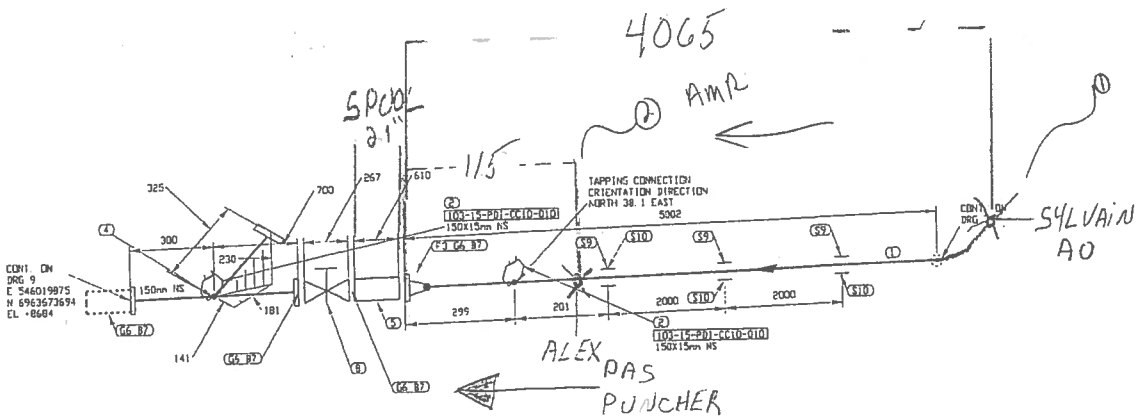

LISTE DE MATERIEL

No	QTE	DIA	MATERIEL/CATALOGUE	DESCRIPTION
1	4914 MM	150	A 333 Gr. 6	SCH STD, SMLS PIPE
2	2	150X15	A 350 Gr. LF2	CL 3000, THREDOLET
3	1	150	A 350 Gr. LF2	CL 150, SCH STD, RF, WN FLANGE
4	1	150X150		CL 150, PIG CATCHER AS PER DETAIL 8, DWG: 65-103-270-200
5	1	150		CL 150, SINGLE BRAIDED HOSE ASSEMBLY
6	4	150	ASME B16.20	CL 150, GARLOCK 9500, RING TYPE GASKET 1/8" THK
7	32	19	A 193 B7/A 194 2H	CL 150, 8 - 19.05 x 100 STUD BOLTS c/w TWO HEAVY HEX NUTS
8	1	150	GA-10	CL 150, RF, CS, FULL PORT GATE VALVE
9	3	150		PIPE SUPPORT AS PER DETAIL 1, DWG: 65-103-270-200
10	3	150		PIPE SHOE AS PER DETAIL 2, DWG: 65-103-270-200

No.	DATE	REVISION	APP.
0	2017/05/15	ISSUED FOR CONSTRUCTION	KHV / PAR

PERMIT TO PRACTICE
LE GROUPE ULTRAGEN LTÉE
Signature _____
Date MAY 26 2017
PERMIT NUMBER: P 1180
NT/NU Association of Professional Engineers and Geoscientists

FABRICATION DRAWINGS BASED ON WSP CERTIFIED ENGINEERING

CLIENT: AGNICO EAGLE

NUQSANA PROMEC MINING

ultragen

CONSULTANT PROJECT NO. 591700

SCEAU PROFESSIONNEL
REGISTERED PROFESSIONAL ENGINEER
D TRUONG
LICENSEE
2017/05/26

CONC.: KHV
DATE: 2017/01/25
DESSINE PAR: KVE
DATE: 2017/04/25
VER. PAR: -
DATE: -
APP.: -
DATE: -
ÉCHELLE: AUCUNE

PROJET: AGNICO EAGLE - MELIADINE DIVISION
103 - COMBUSTIBLE

TITRE: RANKIN INLET
FABRICATION ISOMETRIC
MARINE LINE TO 6STNK11601 & 6STNK11602

No PROJET	No DESSIN	PAGES	REV.
6515	103-150-PDI-CC10-001	8/13	0

NO. DE CONDUITE		SPECIFICATION	PRODUIT	SYSTEME REVETEMENT	CODE DE COULEUR	ISOLATION ET TRACAGE	EPAISS. D'ISOLATION		
103-150-PDI-CC10-001		CC10	PDI		-			65-103-270-200	PIPE SUPPORT DETAILS
PRESSION D'OPERATION	TEMPERATURE D'OPERATION	PRESSION DE CONCEPTION	TEMPERATURE DE CONCEPTION	PRESSION D'ESSAI	CLASSE D'INSPECTION	CODE DE SERVICE	TRAITEMENT THERMIQUE	65-103-205-200	P&ID
		PSIG	°F	PSIG				No. DESSIN	DESSINS DE REFERENCE

103-HAN-01

FICHIER: N:\Agnico Eagle\Modelisation\103\2D (Fort Banzai\Cad\103-150-PDI-CC10-001 ISO.dwg
DERNIÈRE LE: May 17, 2017, 3:36pm

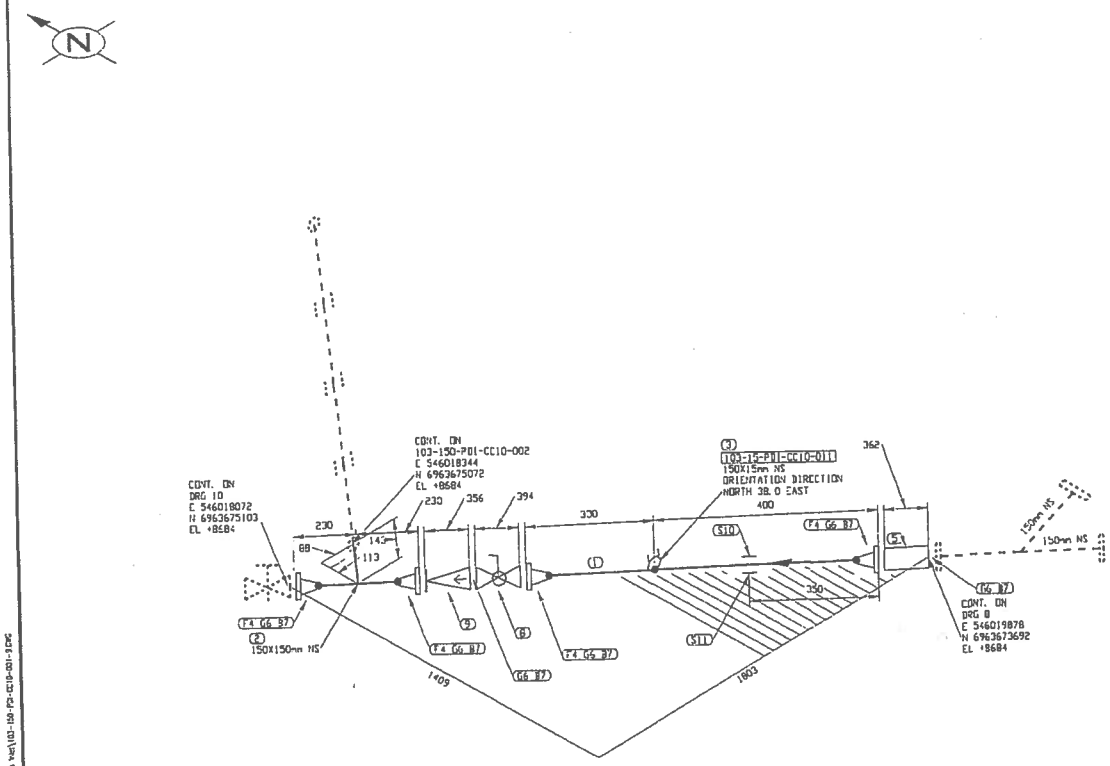

LISTE DE MATERIEL

No	QTE	D.A	MATERIEL/CATALOGUE	DESCRIPTION
1	525 MM	150	A 333 Gr. 6	SCH STD, SMLS PIPE
2	1	150X150	A 420 Gr. WPL6	SCH STD, BW STRAIGHT TEE
3	1	150X15	A 350 Gr. LF2	CL 3000, THREDOLET
4	4	150	A 350 Gr. LF2	CL 150, SCH STD, RF, WN FLANGE
5	1	150		CL 150, IFLOW INDICATOR 'VISI-FLO'
6	6	150	ASME B16.20	CL 150, GARLOCK 5500, RING TYPE GASKET 1/8' THK
7	48	19	A 193 B7/A 194 2H	CL 150, 8 - 19.05 X 100 STUD BOLTS c/w TWO HEAVY HEX NUTS
8	1	150	BA-31	CL 150, RF, BALL VALVE
9	1	150	CK-29	CL 150, RF, SWING CHECK VALVE
10	1	150		PIPE SUPPORT AS PER DETAIL 1, DWG: 65-103-270-200
11	1	150		PIPE SHOE AS PER DETAIL 2, DWG: 65-103-270-200

No.	DATE	REVISION	PAR / APP.
0	2017/05/15	ISSUED FOR CONSTRUCTION	KHV

CLIENT:

AGNICO EAGLE

NUQSANA PROMEC MINING

ultragen

CONSULTANT PROJECT NO. 591700

PERMIT TO PRACTICE
LE GROUPE ULTRAGEN LTÉE
Signature
Date MAY 26 2017
PERMIT NUMBER: P 1180
NT/NU Association of Professional Engineers and Geoscientists

FABRICATION DRAWINGS BASED ON WSP CERTIFIED ENGINEERING

SCEAU PROFESSIONNEL
REGISTERED PROFESSIONAL ENGINEER
D TRUONG
LICENSEE
NT/NU
2017/05/26

CONC.: KHV
DATE: 2017/04/25
DESSINE PAR: KVE
DATE: 2017/04/25
VER. PAR: -
DATE: -
APP.: -
DATE: -
ECHELLE: AUCUNE

PROJET: AGNICO EAGLE - MELIADINE DIVISION
103 - COMBUSTIBLE

TITRE: RANKIN INLET
FABRICATION ISOMETRIC
MARINE LINE TO 65TNK11601 & 65TNK11602

No PROJET	No DESSIN	PAGES	REV.
6515	103-150-PDI-CC10-001	9/13	0

NO. DE CONDUITE		SPECIFICATION	PRODUIT	SYSTEME REVETEMENT	CODE DE COULEUR	ISOLATION ET TRACAGE	EPAISS. D'ISOLATION		
103-150-PDI-CC10-001		CC10	PDI		-			65-103-270-200	PIPE SUPPORT DETAILS
PRESSION D'OPERATION	TEMPERATURE D'OPERATION	PRESSION DE CONCEPTION	TEMPERATURE DE CONCEPTION	PRESSION D'ESSAI	CLASSE D'INSPECTION	CODE DE SERVICE	TRAITEMENT THERMIQUE	65-103-205-200	P&ID
PSIG	°F	PSIG	°F	PSIG				No. DESSIN	DESSINS DE REFERENCE

103-MN-01

NOPRINT LE: May 17, 2017, 3:06pm

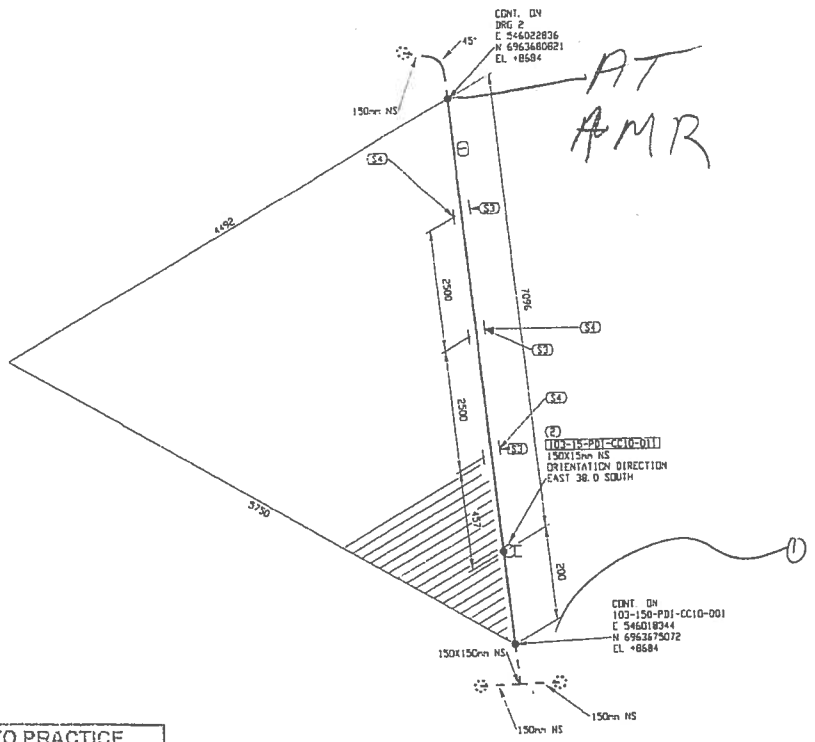

LISTE DE MATERIEL

No	QTE	DIA	MATERIEL/CATALOGUE	DESCRIPTION
1	7296 MM	150	A 333 Gr. 6	SCH STD, SMLS PIPE
2	1	150X15	A 350 Gr. LF2	CL 3000, THREDOLET
3	3	150		PIPE SUPPORT AS PER DETAIL 1, DWG: 65-103-270-200
4	3	150		PIPE SHOE AS PER DETAIL 2, DWG: 65-103-270-200

No.	DATE	REVISION	PAR	APP.
0	2017/05/15	ISSUED FOR CONSTRUCTION	KHV	

PERMIT TO PRACTICE
LE GROUPE ULTRAGEN LTÉE
Signature _____
Date MAY 26 2017
PERMIT NUMBER: P 1180
NT/NU Association of Professional Engineers and Geoscientists

FABRICATION DRAWINGS BASED ON WSP CERTIFIED ENGINEERING

CLIENT: AGNICO EAGLE

NUQSANA PROMEC MINING

ultragen
CONSULTANT PROJECT NO. 591700

SCEAU PROFESSIONNEL
REGISTERED PROFESSIONAL ENGINEER
D TRUONG
LICENSEE
NT/NU
2017/05/26

CONC.: KHV
DATE: 2017/04/25
DESSINÉ PAR: KVC
DATE: 2017/04/25
VÉR. PAR: -
DATE: -
APP.: -
DATE: -
ÉCHELLE: AUCUNE

PROJET: AGNICO EAGLE - MEADOWBANK DIVISION
103 - COMBUSTIBLE

TITRE: RANKIN INLET
FABRICATION ISOMETRIC
MARINE LINE TO 65TNK11602

No PROJET	No DESSIN	PAGES	REV.
6515	103-150-PDI-CC10-002	1/3	0

NO. DE CONDUITE		SPECIFICATION	PRODUIT	SYSTEME REVETEMENT	CODE DE COULEUR	ISOLATION ET TRAÇAGE	EPAISS. D'ISOLATION		
103-150-PDI-CC10-002		CC10	PDI		-			65-103-270-200	PIPE SUPPORT DETAILS
PRESSION D'OPERATION	TEMPERATURE D'OPERATION	PRESSION DE CONCEPTION	TEMPERATURE DE CONCEPTION	PRESSION D'ESSAI	CLASSE D'INSPECTION	CODE DE SERVICE	TRAITEMENT THERMIQUE	65-103-205-200	P&ID
		PSIG	°F	PSIG				No. DESSIN	DESSINS DE REFERENCE

103-MN-01

I:\CIVIL PROJECTS\591700 (Fuel Distribution)\05 Drawings\02 Isometrics\01 Rankin Inlet\103-150-PDI-CC10-002-1.DWG
MAY 11, 2017, 3:15pm

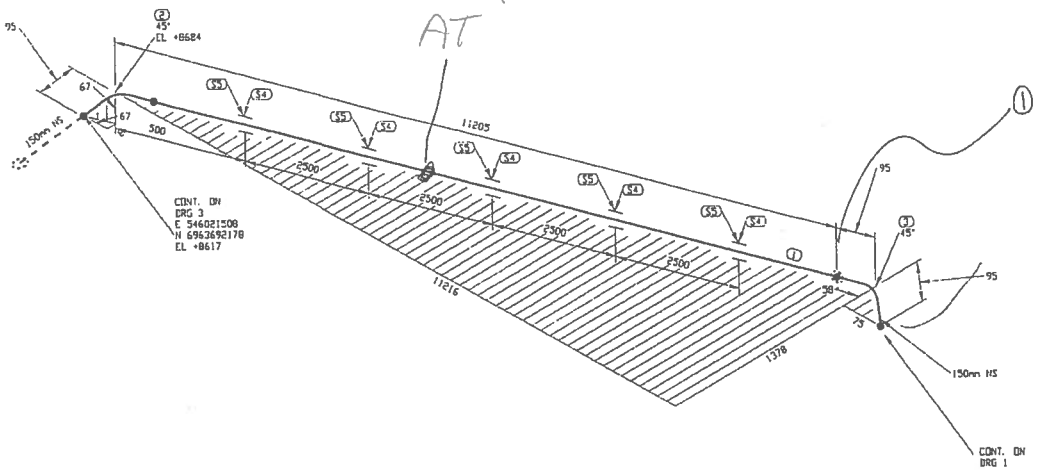

LISTE DE MATERIEL

No	QTE	DIA	MATERIEL/CATALOGUE	DESCRIPTION
1	11110 MM	150	A 333 Gr. 6	SCH STD, SMLS PIPE
2	1	150	A 420 Gr. WPL6	SCH STD, BW LR 45 DEG ELBOW
3	1	150	A 420 Gr. WPL6	SCH STD, BW LR 90 DEG ELBOW TRIM TO 45.00
4	5	150		PIPE SUPPORT AS PER DETAIL 1, DWG 65-103-270-200
5	5	150		PIPE SHOE AS PER DETAIL 2, DWG 65-103-270-200

No.	DATE	REVISION	KHV / PAR / APP.
0	2017/05/15	ISSUED FOR CONSTRUCTION	KHV

PERMIT TO PRACTICE
LE GROUPE ULTRAGEN LTÉE
Signature _____
Date MAY 26 2017
PERMIT NUMBER: P 1180
NT/NU Association of Professional Engineers and Geoscientists

FABRICATION DRAWINGS BASED ON WSP CERTIFIED ENGINEERING

CLIENT: AGNICO EAGLE

NUQSANA PROMEC MINING

ultragen

CONSULTANT PROJECT NO. 591700

SCEAU PROFESSIONNEL — REGISTERED PROFESSIONAL ENGINEER — D. TRUONG — LICENSEE — NT/NU

2017/05/26

CONC.: KHV
DATE: 2017/04/23
DESSINE PAR: KVE
DATE: 2017/04/25
VER. PAR: -
DATE: -
APP.: -
DATE: -
ÉCHELLE: AUCUNE

PROJET: AGNICO EAGLE - MELIADINE DIVISION
103 - COMBUSTIBLE

TITRE: RANKIN INLET
FABRICATION ISOMETRIC
MARINE LINE TO 65TNK11602

No PROJET: 6515
No DESSIN: 103-150-PDI-CC10-002
PAGES: 2/3
REV.: 0

NO. DE CONDUITE		SPECIFICATION	PRODUIT	SYSTEME REVETEMENT	CODE DE COULEUR	ISOLATION ET TRAÇAGE	EPAISS. D'ISOLATION		
103-150-PDI-CC10-002		CC10	PDI		-			65-103-270-200	PIPE SUPPORT DETAILS
PRESSION D'OPERATION	TEMPERATURE D'OPERATION	PRESSION DE CONCEPTION	TEMPERATURE DE CONCEPTION	PRESSION D'ESSAI	CLASSE D'INSPECTION	CODE DE SERVICE	TRAITEMENT THERMIQUE	65-103-205-200	P&ID
PSIG	°F	PSIG	°F	PSIG				No. DESSIN	DESSINS DE REFERENCE

103-MN-01

IMPRIMÉ LE: May 17, 2017, 3:16pm

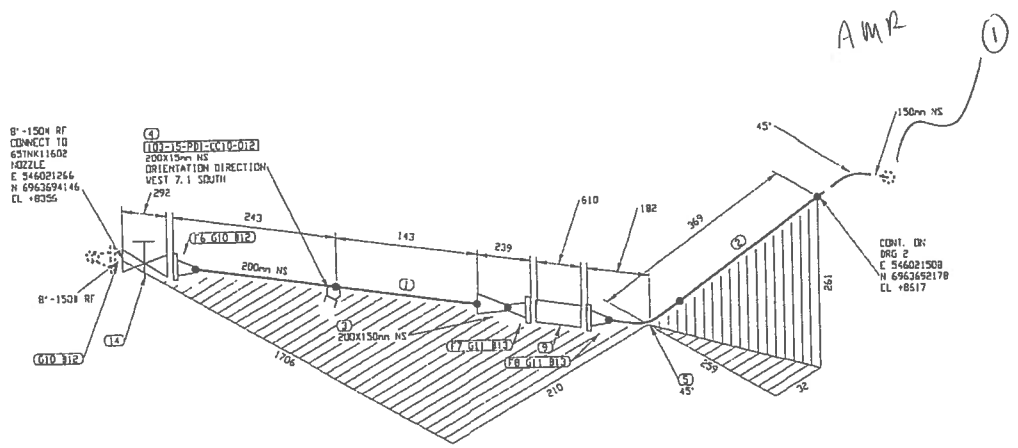

AMR

LISTE DE MATERIEL				
No	QTE	D-A	MATERIEL/CATALOGUE	DESCRIPTION
1	286 MM	200	A 333 Gr. 6	SCH STD, SMLS PIPE
2	274 MM	150	A 333 Gr. 6	SCH STD, SMLS PIPE
3	1	200X150	A 420 Gr. WPL6	SCH STD, BW CONC RED
4	1	200X15	A 350 Gr. LF2	CL 3000, THREDOLET
5	1	150	A 420 Gr. WPL6	SCH STD, BW LR 45 DEG ELBOW
6	1	200	A 350 Gr. LF2	CL 150, SCH STD, RF, WN FLANGE
7	1	150	A 350 Gr. LF2	CL 150, SCH STD, RF, WN FLANGE
8	1	150	A 350 Gr. LF2	CL 150, SCH STD, RF, WN FLANGE
9	1	150		CL 150, SINGLE BRAIDED HOSE ASSEMBLY
10	2	200	ASME B16.20	CL 150, GARLOCK 9500, RING TYPE GASKET 1/8" THK
11	2	150	ASME B16.20	CL 150, GARLOCK 9500, RING TYPE GASKET 1/8" THK
12	16	19	A 193 B7/A 194 2H	CL 150, 8 - 19.05 X 110 STUD BOLTS c/w TWO HEAVY HEX NUTS
13	16	19	A 193 B7/A 194 2H	CL 150, 8 - 19.05 X 100 STUD BOLTS c/w TWO HEAVY HEX NUTS
14	1	200	GA-10	CL 150, RF, GATE VALVE

No.	DATE	REVISION	
0	2017/05/15	ISSUED FOR CONSTRUCTION	KHV / PAR. / APP.

PERMIT TO PRACTICE
LE GROUPE ULTRAGEN LTÉE
Signature
Date MAY 2 8 2017
PERMIT NUMBER: P 1180
NT/NU Association of Professional Engineers and Geoscientists

FABRICATION DRAWINGS BASED ON WSP CERTIFIED ENGINEERING

CLIENT: AGNICO EAGLE

NUQSANA-PRONEC MINING

ultragen
CONSULTANT PROJECT NO. 591700

SCEAU PROFESSIONNEL
REGISTERED PROFESSIONAL ENGINEER
D TRUONG
LICENSEE
NT/NU
2017/05/26

CONC.: KHV
DATE: 2017/04/25
DESSINÉ PAR: KVE
DATE: 2017/04/25
VÉR. PAR: -
DATE: -
APP.: -
DATE: -
ÉCHELLE: AUCUNE

PROJET: AGNICO EAGLE - MELIADINE DIVISION
103 - COMBUSTIBLE

TITRE: RANKIN INLET
FABRICATION ISOMETRIC
MARINE LINE TO 65TNK11602

No PROJET	No DESSIN	PAGES	REV.
6515	103-150-PDI-CC10-002	3/3	0

No. DE CONDUITE		SPÉCIFICATION	PRODUIT	SYSTÈME REVÊTEMENT	CODE DE COULEUR	ISOLATION ET TRAÇAGE	ÉPAISS. D'ISOLATION		
103-150-PDI-CC10-002		CC10	PDI		-			65-103-270-200	PIPE SUPPORT DETAILS
PRESSION D'OPÉRATION	TEMPÉRATURE D'OPÉRATION	PRESSION DE CONCEPTION	TEMPÉRATURE DE CONCEPTION	PRESSION D'ESSAI	CLASSE D'INSPECTION	CODE DE SERVICE	TRAITEMENT THERMIQUE	65-103-205-200	P&ID
PSIG	°F	PSIG	°F	PSIG				No. DESSIN	DESSINS DE RÉFÉRENCE

103-MN-01

I:\DWG\ W\Vol3 Exp\Woodfibre\191700 (Fort Hope)\03 Design\02 Isométriques\01 Rankin Inlet\103-150-PDI-CC10-002-3.DWG

IMPRIMÉ LE: May 17, 2017, 3:16pm

APPENDIX L

Inspection Report – Fuel Module Quality Control Documents

AGNICO EAGLE

Vendor Document Status

1 ☐ Proceed to next submission and status.

2 ☐ Proceed with exceptions as noted to next submission and status.

3 ☐ Do not proceed.
Revise as noted and resubmit next submission and status.

4 ☑ Complete, no further submission required.

By: Date:

Review and authorization to fabricate are only for general conformance with the design concept of the Project as expressed in the Contract Documents. Sole responsibility for the accuracy and completeness of this document, including but not limited to dimensions and quantities, remains with the Supplier/Contractor. Agnico Eagle does not warrant the accuracy or completeness of any of the information contained herein, nor does Agnico Eagle authorize or approve any construction means, methods, techniques, sequences or any safety precautions or procedures.

Agnico Eagle No. 6515-C-270-007-141-QCR-0002 R: Sub002

DOCUMENT FOR INFORMATION

GROUPE PROMEC INC.

22466T / 22498E

FUEL MODULES

AGNICO EAGLE

MÉLIADINE

6515-C-270-007

TABLE OF CONTENT

SECTION 1 – INSPECTION AND TEST PLAN

SECTION 1.1 – ITP-003 - FUEL FARM – RANKIN INLET #
SECTION 1.2 – PROCEDURES SUBMITTED AND APPROVED #
SECTION 1.3 – DRAWINGS INDEX (IFC) LATEST REVISION #

SECTION 2 – SPECIFIC

SECTION 2.1 – NON-CONFORMANCE REPORT & LOG – AEM-GE-ITR-002 / AEM-GE-LOG-002 #
SECTION 2.2 – INSPECT MATERIAL/EQUIPMENT FOR DAMAGES OR DEFICIENCIES #
SECTION 2.3 – INSPECTION DEFICIENCY REPORT & LOG – AEM-GE-ITR-005 / AEM-GE-LOG-004 #

SECTION 3 – ELECTRICAL AND INSTRUMENTATION

SECTION 3.1 – ALL CERTIFIED TEST RECORDS, FIRE ALARM CERT'S – VENDOR DOCUMENTS #
SECTION 3.2 – ELECTRICAL EQUIPMENT INSTALLATION INSPECTION RECORD #
SECTION 3.3 – DISTRIBUTION PANEL INSPECTION & TEST RECORD #
SECTION 3.4 – DISTRIBUTION TRANSFORMER FIELD INSPECTION TEST RECORD #
SECTION 3.5 – PCR INSTALLATION AND INSPECTION #
SECTION 3.6 – HEATING DEVICE INSTALLATION RECORD #
SECTION 3.7 – CABLE TRAY INSPECTION RECORD #
SECTION 3.8 – POWER/CONTROL CABLES INSTALLATION TEST RECORD #
SECTION 3.9 – LOW VOLTAGE CABLE INSTALLATION TEST RECORD #
SECTION 3.10 – INSTRUMENT CABLE INSTALLATION TEST RECORD #
SECTION 3.11 – GROUNDING SYSTEM INSTALLATION INSPECTION AND TEST RECORD #
SECTION 3.12 – BRANCH CCT TEST RECORD, LIGHT, RECEPTACLES, HEATERS, ETC #
SECTION 3.13 – FIRE ALARM PANEL AND DEVICE INSTALLATION RECORD #
SECTION 3.14 – INSTRUMENTATION INSTALLATION TEST RECORD (POWERED INSTRUMENTS) #
SECTION 3.15 – INSTRUMENTATION INSTALLATION TEST RECORD (NON-POWERED INSTRUMENTS) #
SECTION 3.16 – MOTOR/INSTALL/MEGGER/ROTATION TEST AND POLARIZATION RECORDS #
SECTION 3.17 – INSTRUMENT LOOP TEST (PRE-COMMISSIONING / COMMISSIONING ACTIVITY) #

SECTION 4 – FINAL TURNOVER

SECTION 4.1 – CONSTRUCTION COMPLETION (JOINT WALKDOWN PUNCHLIST) #
SECTION 4.2 – FINAL ACCEPTANCE OF TURNOVER PACKAGE #
SECTION 4.3 – DECLARATION OF COMPLETION #
SECTION 4.4 – AS-BUILT DRAWINGS #

AGNICO EAGLE

Vendor Document Status

1 ☐ Proceed to next submission and status.

2 ☐ Proceed with exceptions as noted to next submission and status.

3 ☐ Do not proceed.
Revise as noted and resubmit next submission and status.

4 ☒ Complete, no further submission required.

By: LUC SÉNÉCAL Date: 2017-07-10

Review and authorization to fabricate are only for general conformance with the design concept of the Project as expressed in the Contract Documents. Sole responsibility for the accuracy and completeness of this document, including but not limited to dimensions and quantities, remains with the Supplier/Contractor. Agnico Eagle does not warrant the accuracy or completeness of any of the information contained herein, nor does Agnico Eagle authorize or approve any construction means, methods, techniques, sequences or any safety precautions or procedures.

Agnico Eagle No. 6515-C-270-007-141-TES-0007 R: Sub002

DOCUMENT FOR INFORMATION

Inspection and Testing Plan

NUQSANA PROMEC MINING

AGNICO EAGLE

Contract title:	Meliadine Fuel Tanks Piping Supply and Installation	**ITP #**	**AEM-ITP-003**
Contract number:	6515-C-270-007	**Area**	**rankin inlet**
Promec Ref.:	C22498E	**System**	**ALL**
		Discipline	**Electrical Instrumentation**
Approved on :			
Approved by:			

Approval Signature

Updated on: 2017-04-26

Legend

H - Hold
W - Witness
I - Inspect
R - Review

Activity No. and CDRL Code	Activity Description (Per Scope of Work)	Responsibility Contractor and/or Sub	Acceptance Criteria (Specifications, Drawings, Industry Code, Regulatory Authority, Manufacturers O&M manual, Controlling Procedure, Quality/Engineering Bulletins, Other/ Site Quality Plan, Contractor Quality Manuals, etc.)	Verification Point				Verification Document(s) 1. List ONLY the Form(s) applicable to installation. 2. ▲ Commissioning Required Document
				Contractor		Client		
				H W I R	Initials & Date	H W I R	Initials & Date	
1.0	**GENERAL**							
1.1	Inspection and Test Plan	Promec / CLIENT		H/R				Approved ITP
1.2	Document review (Acquire and review all applicable documentation)	Promec / CLIENT	Quality Plan	H/R				
1.3	Procedures Submitted and Approved (Cable Installation, Testing, etc.)	Promec / CLIENT	Quality Plan	H/R				All Applicable Approved Procedures
1.4	Drawing Index (IFC) to Latest Revision	Promec	Quality Plan	I/R				VDRL
2.0	**ITP SPECIFIC**							
2.1	Non-Conformance Report & Log (Both CLIENT & Contractor Issued)	Promec / CLIENT	Quality Plan	H/R				AEM-GE-ITR-002 (Non-Conformance Report) ▲ AEM-GE-LOG-002 (Non-Conformance Log)
2.2	Inspect Material/Equipment for Damages or Deficiencies	Promec	Quality Plan	I/R				AEM-GE-ITR-005 (Inspection Deficiency Report) ▲ AEM-GE-LOG-004 (Inspection Deficiency Log)

Inspection and Testing Plan

NUQSANA PROMEC MINING

AGNICO EAGLE

Contract title: Meliadine Fuel Tanks Piping Supply and Installation
Contract number: 6515-C-270-007
Promec Ref.: C22498E

Approved on : _____
Approved by: _____

Approval Signature

ITP # AEM-ITP-003
Area rankin inlet
System ALL
Discipline Electrical Instrumentation

Updated on: 2017-04-26

Legend
H - Hold
W - Witness
I - Inspect
R - Review

Activity No. and CDRL Code	Activity Description (Per Scope of Work)	Responsibility Contractor and/or Sub	Acceptance Criteria (Specifications, Drawings, Industry Code, Regulatory Authority, Manufacturers O&M manual, Controlling Procedure, Quality/Engineering Bulletins, Other/ Site Quality Plan, Contractor Quality Manuals, etc.)	Verification Point				Verification Document(s) 1. List ONLY the Form(s) applicable to installation. 2. ▲ Commissioning Required Document
				Contractor		Client		
				H W I R	Initials & Date	H W I R	Initials & Date	
3.0	**Electrical & Instrumentation**							
3.1	All Certified Test Records • Fire Alarm Cert's - (Engineer's Stamp; Vendor Test Documents) • CSA Approval Documentation	Promec / CLIENT	AEM-IN-PRO-001 (Instrumentation Installation and Testing Procedure)	I/R				▲Third Party Document
3.2	Electrical Equipment Installation Inspection Record	Promec / CLIENT	AEM-EL-PRO-004 (Electrical Apparatus Equipment and Support Installation Procedure)	W/R				AEM-EL-ITR-001 (General Report)
3.3	Distribution Panel Inspection & Test Record	Promec / CLIENT	AEM-EL-PRO-004 (Electrical Apparatus Equipment and Support Installation Procedure)	W/R				AEM-EL-ITR-001 (General Report)
3.4	Distribution Transformer Field Inspection Test Record	Promec / CLIENT	AEM-EL-PRO-004 (Electrical Apparatus Equipment and Support Installation Procedure)	W/R				AEM-EL-ITR-001 (General Report)
3.5	PCR Installation and Inspection	Promec / CLIENT	AEM-IN-PRO-001 (Instrumentation Installation and Testing Procedure)	W/R				AEM-IN-ITR-005A (PCR Panel Report)
3.6	Heating Device Installation Record	Promec / CLIENT	AEM-EL-PRO-004 (Electrical Apparatus Equipment and Support Installation Procedure)	I/R				AEM-EL-ITR-002 (Heating Unit Report)
3.7	Cable tray Inspection Record	Promec / CLIENT	AEM-EL-PRO-003 (Cable Tray Installation Procedure)	I/R				AEM-GE-ITR-006 (Miscellaneous Field Report)
3.8	Power/Control Cables Installation Test Record	Promec / CLIENT	AEM-EL-PRO-001 (Cable Installation and Testing Procedure)	W/R				AEM-EL-ITR-003 (Megger Cable Report) AEM-EL-ITR-004 (Continuity Test Report)
3.9	Low Voltage Cable Installation Test Record	Promec / CLIENT	AEM-EL-PRO-001 (Cable Installation and Testing Procedure)	W/R				AEM-EL-ITR-003 (Megger Cable Report)

Inspection and Testing Plan

NUQSANA PROMEC MINING

AGNICO EAGLE

Contract title: Meliadine Fuel Tanks Piping Supply and Installation
Contract number: 6515-C-270-007
Promec Ref.: C22498E

Approved on : _____
Approved by: _____

Approval Signature

ITP # AEM-ITP-003
Area rankin inlet
System ALL
Discipline Electrical Instrumentation

Updated on: 2017-04-26

Legend
H - Hold
W - Witness
I - Inspect
R - Review

Activity No. and CDRL Code	Activity Description (Per Scope of Work)	Responsibility Contractor and/or Sub	Acceptance Criteria (Specifications, Drawings, Industry Code, Regulatory Authority, Manufacturers O&M manual, Controlling Procedure, Quality/Engineering Bulletins, Other/ Site Quality Plan, Contractor Quality Manuals, etc.)	Verification Point				Verification Document(s) 1. List ONLY the Form(s) applicable to installation. 2. ▲ Commissioning Required Document
				Contractor		Client		
				H W I R	Initials & Date	H W I R	Initials & Date	
3.10	Instrument Cable Installation Test Record	Promec / CLIENT	AEM-EL-PRO-001 (Cable Installation and Testing Procedure)	I/R				AEM-EL-ITR-004 (Continuity Test Report)
3.11	Grounding System (Grid & Pile Grounds) Installation Inspection and Test Record	Promec / CLIENT	AEM-EL-PRO-002 (Grounding Installation and Testing Procedure)	H/R				AEM-GE-ITR-006 (Miscellaneous Field Report)
3.12	Branch cct Test Record (Lights, Receptacles, Heaters, etc.)	Promec / CLIENT	(Instrumentation Installation and Testing Procedure)	I/R				AEM-EL-ITR-001 (General Report)
3.13	Fire Alarm Panel and Device Installation Record	Promec / CLIENT	(Instrumentation Installation and Testing Procedure)	I/R				AEM-EL-ITR-001 (General Report)
3.14	Instrumentation Installation Test Record (Powered Instruments)	Promec / CLIENT	(Instrumentation Installation and Testing Procedure)	W/I/R				AEM-IN-ITR-003A (Level Transmitter) AEM-IN-ITR-004C (Pressure Switch) AEM-IN-ITR-006A (On/Off Valve) AEM-IN-ITR-001B (Flow Switch) AEM-IN-ITR-001C (Flow Transmitter) AEM-IN-ITR-002A (Push Button Station) AEM-IN-ITR-007 (Miscellaneous Instruments)
3.15	Instrumentation Installation Test Record (Non-powered instruments)	Promec / CLIENT	AEM-IN-PRO-001 (Instrumentation Installation and Testing Procedure)	I/R				AEM-IN-ITR-004A (Pressure Indicator) AEM-IN-ITR-004B (Pressure Safety Valve)

Inspection and Testing Plan

NUQSANA PROMEC MINING

AGNICO EAGLE

Contract title: Meliadine Fuel Tanks Piping Supply and Installation
Contract number: 6515-C-270-007
Promec Ref.: C22498E

Approved on : _____
Approved by: _____

Approval Signature

ITP # AEM-ITP-003
Area rankin inlet
System ALL
Discipline Electrical / Instrumentation

Updated on: 2017-04-26

Legend
H - Hold
W - Witness
I - Inspect
R - Review

Activity No. and CDRL Code	Activity Description (Per Scope of Work)	Responsibility Contractor and/or Sub	Acceptance Criteria (Specifications, Drawings, Industry Code, Regulatory Authority, Manufacturers O&M manual, Controlling Procedure, Quality/Engineering Bulletins, Other/ Site Quality Plan, Contractor Quality Manuals, etc.)	Verification Point				Verification Document(s) 1. List ONLY the Form(s) applicable to installation. 2. ▲ Commissioning Required Document
				Contractor		Client		
				H W I R	Initials & Date	H W I R	Initials & Date	
3.16	Motor/Install/Megger/Rotation Test and Polarization Records	Promec / CLIENT	AEM-EL-PRO-004 (Electrical Apparatus Equipment and Support Installation Procedure)	W/R				AEM-EL-ITR-005 (Motor Report)
3.17	Instrument Loop Test (Pre-Commissioning / Commissioning Activity	Promec / CLIENT	(Instrumentation Installation and Testing Procedure)	I/R				AEM-GE-ITR-006 (Miscellaneous Field Report)
4.0	FINAL TURNOVER							
4.1	Construction Completion (Contractor Punchlist & Joint Walkdown Punchlist)	Promec / CLIENT	Quality Plan	H/R				▲ AEM-GE-ITR-003 (Punchlist)
4.2	Final Acceptance of Turnover Package	Promec / CLIENT	Quality Plan	H/R				Signed ITP History Docket
4.3	Declaration of Completion	Promec	Quality Plan	H/R				AEM-GE-ITR-004 (Notice of Final Completion)
4.4	As-Built Drawings	Promec	Quality Plan	H/R				All Required As-Built Drawings
END								

PROMEC's Representatives			CLIENT's Representative	
QA/QC	Project Manager			
Name	Name		Name	
Signature	Signature	Date	Signature	Date

AGNICO EAGLE

Vendor Document Status

1 ☐ Proceed to next submission and status.

2 ☐ Proceed with exceptions as noted to next submission and status.

3 ☐ Do not proceed.
Revise as noted and resubmit next submission and status.

4 ☒ Complete, no further submission required.

By: LUC SÉNÉCAL Date: 2017-07-10

Review and authorization to fabricate are only for general conformance with the design concept of the Project as expressed in the Contract Documents. Sole responsibility for the accuracy and completeness of this document, including but not limited to dimensions and quantities, remains with the Supplier/Contractor. Agnico Eagle does not warrant the accuracy or completeness of any of the information contained herein, nor does Agnico Eagle authorize or approve any construction means, methods, techniques, sequences or any safety precautions or procedures.

Agnico Eagle No. 6515-C-270-007-141-TES-0001 R: Sub002

DOCUMENT FOR INFORMATION

Agnico-Eagle Mines Ltd.

Contract no. 6515-C-270-007

Cable Installation and Testing Procedure

AEM-EL-PRO-001

Area No.: All

System No.: All

PROMEC Approvals

Prepared by:	Stéphane Doré	**Signature:**		**Date:**	2017-04-25
Verified by:	Jonathan Roy	**Signature:**		**Date:**	2017-04-25
Approved by:	Éric Poulin	**Signature:**		**Date:**	2017-04-25.

CLIENT Approvals

Verified by:		**Signature:**		**Date:**	
Approved by:		**Signature:**		**Date:**	

Table of Contents

Page

1. SCOPE 3
   1.1 Covered Sections 3
2. EXECUTION 3
   2.1 Inspection and Preparation 3
   2.2 Installation Requirements 3
   2.3 Inspection and Test Requirements 4

APPENDIX A – ALL APPLICABLE ITRs & LOG

1. SCOPE

The procedure is to establish the cable installation and testing procedure.

1.1 Covered Sections

- Medium Voltage and 1 000 V Power Cables.
- 600 V Control Cables.
- 300 V Instrumentation Cables.

2. EXECUTION

2.1 Inspection and Preparation

- Installation of raceways and supports shall be completed before installing cables.
- Conduits shall be tested for obstructions by pulling a mandrel or other approved object through the conduit. Obstructions shall be cleared with a cutting mandrel or other approved means.

2.2 Installation Requirements

- Cables shall be handled carefully when unreeling to avoid damage due to kinking or otherwise bending to radius less than the Manufacturer's or Electrical Code minimum recommended bending radius.
- Cables shall not be laid on rough ground or dragged over sharp objects.
- Cable Installation in Raceways:
  - Cable reels to be set as close as practical to the raceway entrance, and train the cable as directly as possible to the entrance with minimal bending.
  - A protector is to be used at the raceway entrance to protect the cable jacket.
  - For installation of multiple cables in a conduit, all cables are to be pulled simultaneously.
  - Cable installation to be performed so that no undue stress is placed upon the insulation and coverings when they are drawn through conduits or otherwise handled.
  - Cables to be neatly installed avoiding crosses as much as practical.
  - Cables to be supported clear of the tray lip where they exit the tray.
  - Cables to be anchored in place vertically at 1.0 m maximum intervals, and at each bend within 0.3 m of the change in direction at both sides of the bend with appropriate fasteners.
  - A barrier shall be provided to separate power and control cables for installations where they share a common cable tray. Fireproof sheeting shall be provided to separate power and control cables at tee or cross junctions.
- Installation Cables in Boxes and Cabinets:
  - Open wiring to be arranged in a neat and orderly manner.

- Groups of cables to be spaced and supported.
- Slack wire will be left in all junction boxes, pull boxes, and other places so that wires are not drawn tight against conduit and bushings or short radius corners and the insulation eventually damaged by being squeezed between conductor and other objects.

- The cable shall not be bended either temporarily during installation or permanently to a radius less than the Manufacturer's recommended minimum bending radius.
  - Cable Termination Instructions:
    - Leave each conductor of a cable long enough to reach the most distant terminal point in the equipment being installed. Loop and tie the conductors in a bundle.
    - Strip cable jackets only as far back as needed to accommodate the termination of the conductors.
    - Slack wire to be left at all terminal connections so that stress is not placed on terminal studs and other connections.
    - Control and Instrumentation Cables:
      - All shields on the shielded cables to be kept floating at the transducer and final control element ends (thermocouples, transmitters, analyzers, etc.) and to be terminated and grounded in DCS cabinets.
      - Motor terminal wiring to be bolted together with the ring tongue type terminals and tin plated bolts of the approximate size.
  - Cable Penetration Sealing: Fire stopping seal penetrations shall be in accordance with Client specifications.
  - Tagging of Cables Installations:
    - Identify all cables in accordance with attached cable tagging procedure.
    - Affix cable identification tags at each termination as close to the termination as possible, and at pull boxes, manholes or other points of access.
    - Individual conductor identification products may be slip-on, or heat shrink. Identification information to be typed or printed with indelible ink.
    - Single conductor cables shall be color coded and comply with the Canadian Electrical Code CSA C22.1-06, Article 4-036.

2.3 Inspection and Test Requirements

Installed power cables shall be inspected and tested, including continuity and insulation (Megger) of all cables, in accordance with applicable codes and standards.

Installed control shall be inspected and tested, including continuity, in accordance with applicable codes and standards.

Appendix A

ALL APPLICABLE ITRs & LOGs

AGNICO EAGLE

Vendor Document Status

1 ☐ Proceed to next submission and status.

2 ☐ Proceed with exceptions as noted to next submission and status.

3 ☐ Do not proceed.
Revise as noted and resubmit next submission and status.

4 ■ Complete, no further submission required.

By: LUC SÉNÉCAL Date: 2017-07-10

Review and authorization to fabricate are only for general conformance with the design concept of the Project as expressed in the Contract Documents. Sole responsibility for the accuracy and completeness of this document, including but not limited to dimensions and quantities, remains with the Supplier/Contractor. Agnico Eagle does not warrant the accuracy or completeness of any of the information contained herein, nor does Agnico Eagle authorize or approve any construction means, methods, techniques, sequences or any safety precautions or procedures.

Agnico Eagle No. 6515-C-270-007-141-TES-0003 R: Sub002

DOCUMENT FOR INFORMATION

Agnico-Eagle Mines Ltd.

Contract no. 6515-C-270-007

Grounding Installation and Testing Procedure

AEM-EL-PRO-002

Area No.: All

System No.: All

PROMEC Approvals

Prepared by:	Stéphane Doré	**Signature:**		**Date:**	2017-04-25
Verified by:	Jonathan Roy	**Signature:**		**Date:**	2017-04-25
Approved by:	Éric Poulin	**Signature:**		**Date:**	2017-04-25.

CLIENT Approvals

Verified by:		**Signature:**		**Date:**	
Approved by:		**Signature:**		**Date:**	

TABLE OF CONTENTS

1. GENERAL 3
   1.1 Introduction 3
   1.2 References 3
   1.3 Design requirements 4
2. PRODUCTS 4
   2.1 Materials 4
3. EXECUTION 4
   3.1 Installation 4
   3.2 Inspection and tests 7

1. GENERAL

1.1 Introduction

- The purpose of electrical ground testing is to determine the effectiveness of the grounding medium with respect to true ground (earth). Most electrical systems do not rely on the earth to carry load current (this is done by the system conductors) but earth may provide the return path for fault currents, and for safety, all electrical equipment frames are connected to ground.
- During resistance testing, precautions shall be taken to ensure personnel safety. For example the test cable area shall be barricaded and testing personnel shall wear adequate PPE when handling test probes.
- All tests shall be documented and submitted to Owner's representative.
- Weather conditions (e.g. temperature and humidity) can have a considerable effect on resistance readings. Hence, it is important that weather conditions be documented for every resistance test.
- In general, the lower the ground resistance, the safer the system is considered to be. Where the resistance is unsatisfactory, those components of the circuit causing unsatisfactory readings shall be repaired or replaced until the resistance meets the minimum requirements.

1.2 References

- Canadian and National electrical code requirements.
- IEEE Standard IEEE-80 and 81
- IEEE 142, Recommended Practice for grounding of Industrial and Commercial Power Systems.
- International Electrical Testing Association Inc. (NETA).

1.3 Design requirements

- Ground electrical equipment in accordance with ANSI/ IEEE Standard 142, IEEE Standard 80 and the requirements of this Section.
- Design shall be such that acceptable levels of step and touch potential are not exceeded either for exposure to plant personnel or for external exposure via transfer potentials.
- The grounding system consists of a number of above ground interconnected conductors to provide a network to which all equipment and metallic structures are connected, either directly or by interconnecting cables. Bond the ground system to the main plant ground grid system at places designated on the Drawings.

2. PRODUCTS

2.1 Materials

- Bare Cable: Uninsulated, stranded, tinned copper cable of adequate size for station and substation ground grids, for connection of electrical and other equipment to the grounding grid and for running along the top of underground ductbanks.
- Insulated Cable: Soft drawn copper, Class B stranding with green colored insulation (if required).
- All ground connection will be bolted or compress type.
- Furnish all connectors, clamps, anchors, fittings, etc., made of copper or copper-alloy.

3. EXECUTION

3.1 Installation

- Install products in accordance with manufacturer's instructions.
- Equipment Safety Grounding
  a. Clamp the ground conductor running on building steel to the flanges of the steel and provide access for connecting equipment ground taps.
  b. If ground conductor is installed along the cable trays as a continuous conductor, clamp the ground cable to the outside of the trays side rail with

appropriate cable tray clamps. Run the cable on the top power tray wherever possible. The cable may be run along control trays in runs that do not have power trays. Do not run ground cables on any instrument trays.

c. For motors remote from the ground grid, run a bare ground cable with the duct bank or tray connecting the motor frame to the station ground grid.

d. Provide all enclosures of electrical distribution or control equipment with a visible grounding cable connection between the enclosure and the station grounding system.

e. Provide grounding cable taps to electrical equipment not shown on the Drawings sized to meet the requirements of the CSA C.22.1-02.

f. Regardless of any regulatory body, no conductor smaller than 6 is permitted for an exposed ground circuit except for grounding instrument cases and secondary circuits of instrument transformers where 16 will be permitted.

g. For equipment requiring grounding, provide a means for attachment of a ground cable to the enclosure. The grounding means may be a tapped hole in the enclosure with a matching bolt and a appropriate lug for copper cable. Hold-down bolts are not to be used for attaching grounding cables.

h. Provide "packaged" or "skid-mounted" equipment with single-point connection to ground grid.

i. Ground all metallic conduits above ground and underground in accordance with the requirements of the CSA C.22.1-02.

j. Install the cable trays electrically continuous to meet the requirements of Article CSA C.22.1-02.. Install a bonding jumper in the gaps in the tray runs to provide continuity.

- Circuit Grounding
  a. Power circuits to include a circuit ground conductor terminated appropriately at source end ground bus connection and at the load.
  b. Size the circuit ground conductor in accordance with the CSA C.22.1-02.

- Terminal Connections:
  a. Provide connections of ground conductors to cable trays and conduit with copper clamps or straps or by grounding bushings. Remove non-conductive protective coatings such as paint, mill scales, oil, grease, oxides, or enamel

on the conduit fittings from the threads or contact surfaces before attaching grounding connection. After ground connection is attached, cover any remaining exposed bare metal with a coating matching the original coating.

b. Above grade connections to equipment to be made using compression type connectors and bolted terminals.

c. Below grade connections, cable-to-cable or cable-to-ground rods and cable-to-structural steel to be made using compression lug.

d. Ground connections to piping to be generally "U clamp".

e. Connections of ground conductors to columns and similar structures to be welded.

f. Ground all cable shielding in accordance with the manufacturer's recommendations, or as directed by Owner.

g. Provide connections of ground conductors to equipment by means of a lug which shall be compressed on the cable end. Bolt the lug to the equipment frame using holes or terminals provided by the equipment manufacturer for this purpose. Where no such provisions are made, drill suitable holes in locations designated by Owner. Hold-down bolts are not to be used for ground connections. Ground connections to motors to be bolted directly to motor frame, and not to sole plates or supporting structures. At all bolted connections, scrape the joining surfaces clean and coat with NO-OX-ID, or equal compound.

- Control Cabinets Safety Ground

a. Connect all metal control cabinets to the ground buses. Insulate wires for connections between individual devices and the ground bus. Provide individual ground connections for each device; no looping permitted.

b. Do not make ground bus splice points coincident with the bolts which support the copper ground bus. Provide connections to the copper ground bus such that it is not necessary to open neither the ground bus nor any other connection to the bus to remove any ground connection. Separate bolted connections to the ground bus from the support and joint bolts.

- Control Cabinet Instrument Ground System:
  a. Install an instrument ground system, conform to Client standard and engineering drawings
  b. Install the instrument ground system in the following manner
     I. Connect the main and branch insulated ground conductors to instrument ground bus.
     II. Clearly label the instrument ground bus.
     III. Ensure that no loops are in the instrument ground system.
  c. "Reference" Distributed Control System (DCS) dc power "common" terminations and analog I/O field wiring shields to the instrument ground bus provided in each DCS enclosure. Provide all instruments and instrument cables with shields attached to only this instrument ground. Tape or insulate shielded cable with sleeves to prevent accidental grounding or touching of shields. Do not ground field ends.

3.2 Inspection and tests

- Visual and mechanical inspection: Check and inspect the installation to ensure that the grounding system has been built as per the engineering design. Ensure all connections to electrodes and ground cable are tight and secure.
- Ground resistance testing is needed after installation of the grounding system, typically five ohms for commercial and small industrial sites and one ohm for utility & transmission substation grounds and large industrial plant substation grounds.
- Follow the recommended manufacturer or designer grounding resistance levels specified. In general – all efforts shall be targeted toward achievement of minimum grounding resistance.

AGNICO EAGLE

Vendor Document Status

1 ☐ Proceed to next submission and status.

2 ☐ Proceed with exceptions as noted to next submission and status.

3 ☐ Do not proceed.
Revise as noted and resubmit next submission and status.

4 ☒ Complete, no further submission required.

By: LUC SÉNÉCAL Date: 2017-07-10

Review and authorization to fabricate are only for general conformance with the design concept of the Project as expressed in the Contract Documents. Sole responsibility for the accuracy and completeness of this document, including but not limited to dimensions and quantities, remains with the Supplier/Contractor. Agnico Eagle does not warrant the accuracy or completeness of any of the information contained herein, nor does Agnico Eagle authorize or approve any construction means, methods, techniques, sequences or any safety precautions or procedures.

Agnico Eagle No. 6515-C-270-007-141-TES-0005 R: Sub002

DOCUMENT FOR INFORMATION

Agnico-Eagle Mines Ltd.

Contract no. 6515-C-270-007

Electrical Apparatus, Equipment & Supports Installation Procedure

AEM-EL-PRO-004

Area No.: All

System No.: All

PROMEC Approvals

Prepared by:	Stéphane Doré	**Signature:**		**Date:**	2017-04-25
Verified by:	Jonathan Roy	**Signature:**		**Date:**	2017-04-25
Approved by:	Éric Poulin	**Signature:**		**Date:**	2017-04-25.

CLIENT Approvals

Verified by:		**Signature:**		**Date:**	
Approved by:		**Signature:**		**Date:**	

Table of Contents

Page

1. PURPOSE 3
   1.1 Submittals 3
2. EXECUTION 3
   2.1 Installation 3
      2.1.1 GENERAL 3
      2.1.2 EQUIPMENT 4
   2.2 Personnel requirements 5
   2.3 Inspection and test requirements 5
   2.4 Adjustment and Cleaning 5
   2.5 Corrosion Protection/Coatings 5

APPENDIX A – ALL APPLICABLE ITRs & LOG

1. PURPOSE

The procedure is to establish the electrical apparatus, equipment and supports installation procedure.

1.1 Submittals

The following drawings, information and data will be submitted:

- As-built drawings showing final setting dimensions where different from the design drawings.
- As-built drawings of all relative installation drawings.

2. EXECUTION

2.1 Installation

2.1.1 GENERAL

- Install all equipment in a neat manner using qualified trade persons in complete accordance with the Drawings and the equipment manufacturers instructions and recommendations.
- Fabricate and install any necessary temporary steel supports, brackets and anchors required for equipment erection or installation. Design of such supports, brackets, and anchors are subject to engineers' approval. Upon completion, remove all temporary supports, sand smooth, prime and paint welds on permanent plant structures, grout temporary anchor holes left in concrete and return the area to the originally installed condition.
- Prior to setting equipment:
  - Inspect equipment foundations for correctness in location, level, location of center lines, anchor bolt omissions, and height.
  - Uniformly roughen foundation surfaces.
  - Inspect all anchor bolts for straightness and damaged threads.
  - Straighten bent anchor bolts using acceptable methods.
  - Rerun bolts with damaged threads using suitable dies.
  - Clean and oil anchor bolts.
- Install all items shipped loose with equipment.
- Mount items with appropriate hardware.
- Provide additions and modifications to structural steel, grating, or floor steel required to completely install the equipment.
- Fabricate racks and supports for miscellaneous enclosures, boxes, cabinets and housings from rolled steel shapes, bars, rods, etc. of standard section and/or from strut material with accessory members and fittings.

- Use proper and adequate handling equipment and rigging at all times and inspect such equipment frequently. Lift electronic cabinets with the use of slings; do not use lifting eyes. Obtain exact weights and dimensions from approved manufacturers drawings or manufacturers representatives to ensure the use of adequate handling equipment.
- Welding
  - Perform in accordance with welding procedure
- Do not remove protective covers on flanges, pipe, or conduit connections until these connections are to be made.
- Fabrication and placing of shims:
  - Place shims, equipment baseplate, bedplates and soleplates as required for a minimum of 25 mm of grout such that shim pack thickness is no greater than 6 mm and no less than 3 mm for shims between the equipment and the top of the mounting plate.
  - Cut down and refinish where required, the tops of baseplate, soleplates, or rough foundations to allow for grouting.
  - Install shims of the required size, thickness and quality at the appropriate locations so there will be no deflection, deformation, or strain induced into the equipment bedplate or soleplate.
  - When the supporting structural steel frame is not level, taper the bottom shims to provide a level top bearing surface. Use a minimum number of shims at all times.
  - Wherever possible, place shims while the bedplate or equipment is in a jacked-up position using jacking or levelling nuts where provided or other means as necessary. Driving of shims to achieve a level top bearing surface is not permitted.

2.1.2 EQUIPMENT

- General
  - Set stationary equipment such as switchgear, motor control centers, and skid mounted equipment in a true vertical and horizontal plane and set anchor bolts evenly as required.
  - Tighten gasketed joints evenly around the entire gasketed area to insure uniform contact pressure.
  - Install wiring in conformance with connection diagrams, including jumpers where shown on terminal blocks. Install and terminate all wiring in accordance with Promec's procedure No. AEM-EL-PRO-001.
  - Install grounding systems and lightning protection in accordance with Promec's procedure No. AEM-EL-PRO-002.
  - Install cable tray system in accordance with Promec's procedure No. AEM-EL-PRO-003.
  - Install and terminate all cable in accordance with Promec's procedure No. AEM-EL-PRO-001.
- Panel boards and Transformers
  - Mount panel boards and transformers as specified in Client standards.

- Cabinets and Free Standing Panel boards
  - Handle, assemble, and maintain cabinets and free standing panels according to manufacturer's recommended procedures and documentation requirements.
  - Place cabinets and free standing panels immediately in their final positions, as shown on the drawing's temporary storage locations shall not be considered.
  - Wire cabinets and free standing panels in accordance with electrical wiring diagrams including jumpers shown on terminal blocks.

2.2 Personnel requirements

Provide qualified manufacturer's representatives for technical assistance as required.

2.3 Inspection and test requirements

- CEM Cabinets
  - Thoroughly inspect, clean, and remove all foreign matter, dust, debris, dirt, etc. from equipment cubicles, compartments and insulators.
- Transformers
  - Megger all winding terminals (maximum 1 kV) in accordance with manufacturer's requirements and provide results to Client for review.
- Construction Checkout
  - Perform and document all inspections and test activities in accordance with manufacturer's recommendations.

2.4 Adjustment and Cleaning

Remove any protective, non-permanent coatings applied by the equipment manufacturer.

Clean external surfaces of all equipment and materials of dirt, grease, oil, loose rust.

2.5 Corrosion Protection/Coatings

Following installation, touch-up all scratched or marred areas of manufacturer's primed or finished paint. Use the same paint as manufacturer's original finish or prime paint with surface preparation and paint application in accordance with the manufacturer's requirements.

Appendix A

ALL APPLICABLE ITRs & LOGs

AGNICO EAGLE

Vendor Document Status

1 ☐ Proceed to next submission and status.

2 ☐ Proceed with exceptions as noted to next submission and status.

3 ☐ Do not proceed.
Revise as noted and resubmit next submission and status.

4 ☑ Complete, no further submission required.

By: JEAN-FRANCOIS TREMBLAY JG Date: 2017-05-16

Review and authorization to fabricate are only for general conformance with the design concept of the Project as expressed in the Contract Documents. Sole responsibility for the accuracy and completeness of this document, including but not limited to dimensions and quantities, remains with the Supplier/Contractor. Agnico Eagle does not warrant the accuracy or completeness of any of the information contained herein, nor does Agnico Eagle authorize or approve any construction means, methods, techniques, sequences or any safety precautions or procedures.

Agnico Eagle No. 6515-C-270-007-141-TES-0006 R: Sub001

DOCUMENT FOR INFORMATION

Agnico-Eagle Mines Ltd.

Contract no. 6515-C-270-007

Instrumentation Installation and Testing Procedure

AEM-IN-PRO-001

Area No.: All

System No.: All

PROMEC Approvals

Prepared by:	Stéphane Doré	**Signature:**		**Date:**	2017-04-25
Verified by:	Jonathan Roy	**Signature:**		**Date:**	2017-04-25
Approved by:	Éric Poulin	**Signature:**		**Date:**	2017-04-25

CLIENT Approvals

Verified by:		**Signature:**		**Date:**	
Approved by:		**Signature:**		**Date:**	

Table of Contents

Page

1 SCOPE 3

2 PRODUCTS 3

2.1 Materials 3

2.2 Inspection and Test Requirements 3

2.3 Cleaning 4

2.4 Corrosion Protection/Coatings 4

3 EXECUTION 4

3.1 Installation 4

3.1.1 General 4

3.1.2 Installation of Locally Mounted Equipment 4

3.1.3 Installation of Instrument Racks and Stands 5

3.1.4 Connection of Equipment and Devices 5

3.1.5 Flow Meter Tubing 5

3.2 Inspection and Test Requirements 6

3.2.1 General 6

APPENDIX A – ALL APPLICABLE ITRs & LOG

1 SCOPE

This procedure includes:

- Installation of:
  - Field instruments
  - Field instrument racks and stands
- Installation of package equipment loose instruments.
- Installation of package equipment sensing tubing up to local control panel.
- Installation of specialty instruments.

2 PRODUCTS

2.1 Materials

- Instruments: As identified in the Instrument List. The Instrument List is a listing of instruments to be installed after:
  - Promec shall furnish all materials required for complete installation of control and instrumentation devices. Provide all tools and equipment required for the installation.
  - Promec shall furnish instruments, control devices and instrument racks, stands, and enclosures.
  - Promec shall provide all calibration equipment as required in Sections 2.2 of this specification.
  - Promec shall furnish nameplates for all control and instrumentation equipment furnished or installed under these specifications, unless already provided. Nameplates shall be either of laminated phenolic (white background with black letters) or stainless steel. Engrave or stamp the nameplates with the Instrument Tag Numbers per the Instrument List. Attach phenolic type nameplates to control and instrumentation equipment by machine screws or stainless steel wire.

2.2 Inspection and Test Requirements

- Promec shall obtain the instruments from the receiving warehouse which has inspected them for obvious shipping damage and manufacturing defects. Promec will also inspect instruments for obvious shipping damage and manufacturing defects when they receive them. Each instrument will have been calibrated by the manufacturer. Vendor calibration report will be review by Promec for each instrument. The calibration of each instrument will be checked by Promec prior to installation.
- Promec shall use qualified and experienced personnel to perform adjustments and tests. Perform adjustments and tests as many times as necessary to assure proper operation of equipment and systems and quality of materials and workmanship.

2.3 Cleaning

- Promec shall clean and remove any protective non-permanent, coatings applied by manufacturers. Clean equipment and material external surfaces of all dirt, grease, oil, loose rust, and other foreign material.

2.4 Corrosion Protection/Coatings

- Following installation, Promec shall touch-up all scratched or marred areas of Manufacturer's prime or finish painting. Promec shall use paint the same as Manufacturer's original finish or prime paint with surface preparation and paint application in accordance with the Manufacturer's requirements.
- Threads shall not be painted
- Stainless steel and other corrosion-resisting surfaces: do not paint.
- Machined surfaces: do not paint.
- Omit paint at all areas: before field welding.

3 EXECUTION

3.1 Installation

3.1.1 GENERAL

- Install all controls and instrumentation in accordance with the requirements of this Section. Any installation procedures not specified herein shall be done in accordance with the manufacturer's recommendations and good engineering practice.
- Promec shall utilize experienced workers for installation of all controls and instrumentation, tubing, and piping.
- Promec shall furnish all necessary craft personnel, supervision and scheduling required for the completion of instrument installation within the Owner's schedule.

3.1.2 INSTALLATION OF LOCALLY MOUNTED EQUIPMENT

- In addition to the installation requirements indicated on the drawings, the manufacturer's submittals, and the Instrument List, the requirements specified herein apply.
- Install all instruments and associated devices shall be installed in easily accessible locations for maintenance, calibration, and replacement. Take special care to assure that indicator type instruments are easily readable from the nearest accessible floor or platform elevation.
- Solenoid valves and control loop accessories not located in enclosures or mounted on valves shall be mounted in easily accessible protected locations near the components with which they are associated.
- All pressure gages (indicators) shall be installed bear the process connections, unless otherwise on the drawings and locate where easily read.
- Pressure switches not mounted in enclosures shall be installed on a wall or building column, or on pipe stands, near the piping or duct to which they are connected and mount to permit ease of adjustment.

- All brackets, stands, supports, and other miscellaneous hardware shall be provided as required for mounting devices.
- Level transmitters, level controllers, and level switches of the displacer or float type shall be installed on vessel instrument piping columns as indicated on the piping detail drawings for that vessel. Top works of transmitters, controllers, and switches shall be provided as to positions which provide convenient access for operation and maintenance; perform prior to installation of tubing and wiring to the devices.
- Sight flow glasses shall be installed for maximum visibility.

3.1.3 INSTALLATION OF INSTRUMENT RACKS AND STANDS

- Freestanding racks, stands, and enclosures to the floor shall be attached to concrete equipment bases or supporting steel, at locations indicated on the drawings. Shim shall be provided for proper alignment before bolting to the floor or grouting.
- Non-freestanding racks and enclosures shall be mounted in accessible locations on columns and walls. Brackets shall be fabricated as required to install the racks and enclosures in a workmanlike manner.
- Rough edges and welds on all fabricated supports shall be grinded smooth; surfaces shall be finished with coating.
- Racks shall be located to provide the shortest reasonable instrument impulse line lengths for each of the instruments mounted thereupon.

3.1.4 CONNECTION OF EQUIPMENT AND DEVICES

- Design pressure and maximum process temperature shall be limited below manufacturer's specified data for all instruments.
- After flow instrument installation, Promec shall verify the high and low sides of the instrument with respect to the direction of flow.
- When reservoir tees are required, bent pipe shall be used between the root valve and the tee unless there is a space limitation. Fittings may be used if space is limited.
- Reservoir tees to be installed on vertical lines shall be mounted at or above the process line connection. These reservoir tees shall be mounted at the same elevation.
- Reservoir tees shall be provide for each reference leg for differential pressure transmitter used to measure level on the steam drums, deaerator storage tank, or any tank containing both liquid and vapour. Reservoir tees shall be provided on all steam flow and pressure applications to insure complete fill of the sensing line during operation. Reservoir tees must not be insulated. A filling connection shall be provided on the reservoir tees for initial filling of the sensing line.

3.1.5 FLOW METER TUBING

- Process sensing connections shall be provided between flow indicators, transmitters, controllers, or switches and shutoff valves on the main piping in accordance with the Drawings.
- Where tubing is run in open type trays, covers shall be installed wherever the trays pass through an open area where it is possible that the tubes can be damaged from falling objects.

3.2 Inspection and Test Requirements

3.2.1 GENERAL

- Pre-operational adjustments, material and equipment tests shall be made as specified and as required by governing codes, regulations, manufacturers' recommendations, and good construction methods.
- Instrument functional loop checkout shall be made to resolve any discrepancies and correct any field problems which arise in the scope of work.
- Assemble, test, and adjust, as required, for correct and reliable operation the control and instrument equipment (including gages, switches, thermostats, and other devices) which are a part of major equipment.

Appendix A

ALL APPLICABLE ITRs & LOGs

AGNICO EAGLE

Vendor Document Status

1 ☐ Proceed to next submission and status.

2 ☐ Proceed with exceptions as noted to next submission and status.

3 ☐ Do not proceed.
Revise as noted and resubmit next submission and status.

4 ☒ Complete, no further submission required.

By: LUC SÉNÉCAL Date: 2017-07-10

Review and authorization to fabricate are only for general conformance with the design concept of the Project as expressed in the Contract Documents. Sole responsibility for the accuracy and completeness of this document, including but not limited to dimensions and quantities, remains with the Supplier/Contractor. Agnico Eagle does not warrant the accuracy or completeness of any of the information contained herein, nor does Agnico Eagle authorize or approve any construction means, methods, techniques, sequences or any safety precautions or procedures.

Agnico Eagle No. 6515-C-270-007-141-TES-0008 R: Sub002

DOCUMENT FOR INFORMATION

NUQSANA PROMEC MINING

AGNICO EAGLE

Agnico-Eagle Mines Ltd.

Contract no. 6515-C-270-007

Cable Tray Installation Procedure

AEM-EL-PRO-003

Area No.: All

System No.: All

PROMEC Approvals

Prepared by:	Stéphane Doré	**Signature:**		**Date:**	2017-04-25
Verified by:	Jonathan Roy	**Signature:**		**Date:**	2017-04-25
Approved by:	Éric Poulin	**Signature:**		**Date:**	2017-04-25

CLIENT Approvals

Verified by:		**Signature:**		**Date:**	
Approved by:		**Signature:**		**Date:**	

Table of Contents

Page

1. GENERAL 3
   1.1 SECTION INCLUDES 3
2. EXECUTION 3
   2.1 INSPECTION AND PREPARATION 3
   2.2 INSTALLATION REQUIREMENTS 3
   2.3 INSPECTION AND TEST REQUIREMENTS 4
   2.4 CORROSION PROTECTION/COATINGS 4

1. GENERAL

1.1 Section Includes

- Cable Tray, Fittings, and Accessories.
- Hangers and Supports.

2. EXECUTION

2.1 Inspection and Preparation

- Before installation, inspect cable trays and fittings and clean off all dirt, cuttings, and other foreign material. Cut ends of the trays to be filed or ground to remove burrs and sharp edges, and coated to prevent rust.

2.2 Installation Requirements

- All Electrical Installations: in accordance with CSA Standard C22.1-06.
- In general, provide a recommended minimum vertical spacing between trays of 250 mm measured from the bottom of the upper tray to the top of the lower tray. Maintain minimum of 230 mm clearance between the top of the tray and beams, pipes, etc. for parallel runs, and 75 mm minimum for crossing runs. (Trays to be installed by others).
- Cut cable tray to size by use of a hack saw, or other approved tool. Do not flame cut trays or their accessories.
- Align cable trays carefully and level plumb and true. Secure the runs with at least two smooth head bolts at each support bracket.
- Supports for cable tray runs to be the cantilever or the trapeze type, fabricated of threaded rod, strut, and/or steel members and accessories. The support member is in contact with the cable tray and shall be approximately 75 mm longer than the width of the cable tray that it supports.
- Support cable trays at all bends, tees, dropouts, crossovers, risers, etc. as recommended by CSA Standard C22.2, No. 126.1-02.
- Fasten supports to building steel by means of beam clamps. Fasten supports to concrete by inserts or drilled-in anchors. Provide supports capable of supporting the ultimate tray loading capacity.

2.3 Inspection and Test Requirements

- Perform inspections and tests normally used either in installation, construction processes or as called for by the applicable codes and standards.
- Upon completion of cable tray installation, inspect the interior surfaces of the tray run for any burrs or rough edges that could result in cable damage during cable installation. Remove burrs and rough edges.

2.4 Corrosion Protection/Coatings

- Where the galvanizing of cable tray supports is damaged, repair by the application of appropriate galvanizing repair paints.

Control System Description

Rankin Inlet Tank Farm – 65PLC11601

AGNICO EAGLE

Vendor Document Status

1 ☐ Proceed to next submission and status.

2 ☐ Proceed with exceptions as noted to next submission and status.

3 ☐ Do not proceed. Revise as noted and resubmit next submission and status.

4 ☑ Complete, no further submission required.

Sébastien Perron Instrumentation Date: 28/09/2017

Review and authorization to fabricate are only for general conformance with the design concept of the Project as expressed in the Contract Documents. Sole responsibility for the accuracy and completeness of this document, including but not limited to dimensions and quantities, remains with the Supplier/Contractor. Agnico Eagle does not warrant the accuracy or completeness of any of the information contained herein, nor does Agnico Eagle authorize or approve any construction means, methods, techniques, sequences or any safety precautions or procedures.

Agnico Eagle No. 6515-C-270-007-280-GNS-0001 R: Sub003

DOCUMENT FOR INFORMATION

AGNICO EAGLE - MELIADINE DIVISION

Rankin Inlet, Nunavut

Project No: 591700

Prepared by: G. Gagnon, Eng.

Approved by: D. Carrier, Eng.

Document No: ULT-591700-CSD-001

Date: Sept 12, 2017

Revision: 1

REGISTERED PROFESSIONAL ENGINEER 13627 D. CARRIER LICENSEE NT/NU

Sept 12/2017

PERMIT TO PRACTICE
LE GROUPE ULTRAGEN LTÉE
Signature
Date SEP 12 2017
PERMIT NUMBER: P 1180
NT/NU Association of Professional Engineers and Geoscientists

REVISION INDEX

Rev	Prepared by	Reviewed by	Approved by	Date	Pages Revised / Remarks	Issued for
PA	G. GAGNON	E. LAROUCHE	D. CARRIER	2017/05/18		FOR REVIEW
0	G. GAGNON	E. LAROUCHE	D. CARRIER	2017/06/20		FOR CONSTRCUTION
1	D .CARRIER	E. LAROUCHE	D. CARRIER	2017/09/12		FOR START-UP

D. CARRIER, Eng. OIQ – 40308 / NAPEQ – L3627

Sept 12/2017
Date

INDEX

INDEX 3
1 Overview 4
2 PLC 4
3 I/O cards 4
4 Human-Machine Interface (HMI) 5
5 Flow controller 5
6 Ground proving and overfill prevention device 5
7 Motorized Operated Valve (MOV) 5
8 Communication 6
9 Ethernet switches 6
10 Software 6
10.1 PLC Programming 6
10.2 HMI Programming 6
10.3 PLC – Microload Controller exchange 6
11 Functional Description 7
11.1 Truck Loading 7
11.2 Main tanks loading 11
11.3 Alarms transmission 11

1 Overview

The control system at Rankin Inlet tank farm consists of the following components:

- PLC cabinet located in the operator room with a HMI touchscreen for operation.
- Flow Controller Smith Meter located in the operator room.
- A flow control kit including one flow valve, one flow meter and one temperature probe connected to the Flow Controller to measure the transferred quantity per transaction.
- Two Variable Frequency Drive (VFD), one per transfer pumps (2).
- Scully Module with plug to allow truck ground proving and truck overfill prevention.
- Radar level transmitters and temperature transmitters for monitoring the diesel tanks (2).
- Motorized Operated Valve (MOV) to allow the transfer between tanks and truck.
- E-stops (3) located in the truck area, inside the pumping station and inside the operator room.
- Strobe light on each diesel tank and one common horn on the pumping station to indicate high level tank.

2 PLC

2.1.1 One PLC for the Rankin Inlet tank farm diesel distribution.
Manufacturer: Schneider, Model: BMEP582040

3 I/O cards

3.1.1 PLC Input and outputs cards connected to field devices are as following:

Module	Manufacturer	Model
32 digital inputs module (120 Vac)	Schneider	BMXDDI3202K
32 digital outputs module	Schneider	BMXDDO3202K
8 analog inputs module (4 -20 mA)	Schneider	BMXAMI0810
Ethernet backplane card	Schneider	BMENOC0321

4 Human-Machine Interface (HMI)

4.1.1 One Touch screen HMI mounted in front of the PLC cabinet to monitor and control the transferred quantity from diesel tanks to tanker truck.
Manufacturer: Schneider, Model: HMIDT732 / HMIG3U

5 Flow controller

5.1.1 One Microload Flow controller c/w one flow meter, one digital flow valve and one RTD temperature to control the transferred quantity.

Instrument	Manufacturer	Model
Flow controller	FCM	Smith Meter ML-XP-STD-1, Microload
Flow valve (Digital pre-set valve) with two 120 Vac solenoids	TCS	OCV 115-3
Flow meter (positive displacement type)	TCS	700-40SP4DX
Pulse transmitter for flowmeter	TCS	DMP-100-3
RTD temperature sensor	FMC	TP-W-3C-2.5

6 Ground proving and overfill prevention device

6.1.1 A Scully module located beside the truck loading arm to connect to the tanker truck using a plug assembly. The 10-pins plug assembly allows the monitoring of up to 8 high level sensors and monitors the static ground verification on the tanker truck.
Manufacturer: Scully, Model: Intellitrol IC-OG, plug model: SC-8A

7 Motorized Operated Valve (MOV)

7.1.1 One MOV per vertical tank to control the tanks outlets. These valves are powered at 120 Vac and are controlled through 120 Vac output PLC cards. With one output configuration for the open command, it closes automatically when off. Open position, close position and fault status are monitored by the PLC.
Actuator Manufacturer: Rotork, Model: IQT500

Valve Manufacturer: M.A Stewart, Model: F-150-CSF-SS-FS-N

8 Communication

8.1.1 Ethernet TCP/IP is used for communication between the PLC, the HMI, the flow controller and the VFDs.

9 Ethernet switches

9.1.1 One Ethernet switch inside the PLC cabinet connected to the PLC Ethernet communication card, dedicated for the HMI and the plant Ethernet network.
Manufacturer: Schneider, Model: TCSESM083F2CSO

9.1.2 One Ethernet switch inside the PLC cabinet connected to the PLC CPU Ethernet port, dedicated for Microload controllers and VFDs.
Manufacturer: Schneider, Model: TCSESM083F1CSO

10 Software

10.1 PLC Programming

10.1.1 Schneider Unity Pro software, version 11 is the PLC programming software for the Schneider M580 PLC.

10.2 HMI Programming

10.2.1 Vijeo Designer software, version 6.2 is the HMI touch screen programming software.

10.3 PLC – Microload Controller exchange

10.3.1 The communication protocol used to transfer data between the PLC and the Microload controller is Ethernet Modbus TCP/IP (Accumulated volume, Pre-set volume, Flow rate, etc). The Microload keypad is disabled, all controls are done through the PLC.

11 Functional Description

11.1 Truck Loading

1. At the truck area

    a. Connect the Scully Intellitrol plug to the tanker truck to allow ground proving and truck overfill prevention, then attach the loading arm to the truck.

    b. Green Bar indicator is ON steady on the Scully Intellitrol Module when the plug is properly connected and the ground contact is made. Red Bar indicator ON means Scully not ready or no lights ON means no power. The Intellitrol also monitors the truck compartment levels, if one or many compartments LED are ON that indicates a faulty level sensor.

    c. The Scully Intellitrol switch interlocks the 120 Vac power to the flow control valve. In case of high level in tanker truck or loss of truck grounding contact, the 120 Vac power is removed from the flow control valve and the valve closes. The fault status is wired to PLC through interposing relay to prevent any loading operation. The running sequence is then paused and equipment are stopped and valves closed.

    d. The Scully Intellitrol can be bypassed with a bypass key held against the side of the Intellitrol for 10 to 30 seconds. When in bypassed mode, the Intellitrol Bar indicator will blink green.
        - The maximum bypass time is settable from 15 to 60 minutes.
        - Bypass operation automatically ends when the vehicle is disconnected.
        - A faulty sensor can only be bypassed at initial truck hookup.
        - A sensor wet during loading can never be bypassed.

2. At the pumping station operator room – Logging to the system

    a. Two levels of user security are available at the HMI;

        i. Operator username and PIN number 1111.

        ii. Maintenance username and PIN number 2222.

    b. At the operator security level, the truck loading sequence is fully automatic and there is no bypassed or manual mode available.

c. At the maintenance security level, the Microload controller could be bypassed and manual mode are available for the VFD and the motorized valves.

d. The security level is logout automatically after a predefined time of inactivity, to prevent the unauthorized use of the HMI.

3. Truck loading sequence

a. The HMI contents three main screens;

i. **Loading graphic screen** for visualisation including; tank levels, tank temperatures, Pumps status, MOV status, Scully status and the Microload bypass button.

ii. **Loading sequence screen** for sequence operation; Start, Pause and Stop loading sequence, tank's selection, truck load, sequence status, loading flow and load totalizer.

iii. **Alarm page** with active alarms in red and clear alarms in green. The clear all alarm button is active only with maintenance security level access.

b. To start the truck loading sequence the following actions shall be done:

i. Select one of the two main tanks. There is always one tank selected, make sure this is the right tank before starting the sequence.

ii. Enter the truck load to fill. A predefined load value is set at each transaction and could be modified as required.

iii. Verify the sequence is 'Ready to Start' in the sequence banner status. If not then other alarms texts will show the issues that need to be resolved prior to start the sequence.

iv. Press the START button to start the loading.

c. The sequence status shows 'Ready to start' if all conditions are met for the automatic loading sequence. Otherwise the status will show 'Not Ready' in red with the following alarms messages:

i. **Scully fault:** The Scully unit is faulty, ground contact or truck levels are in fault.

ii. **Equipment fault:** The pumps or the valves are not available; either in fault or in manual mode.

iii. **Tank low level:** The selected tank reached the low level.

d. There are three control buttons for the automatic sequence:

i. **START:** starts the sequence.

ii. **PAUSE:** pauses the sequence, the valves close, the pumps stop and the transaction is on hold, and wait for a restart (START) or a complete stop (STOP). This function allows the truck driver to hold the sequence to do visual checks.

iii. **STOP:** stops the sequence and ends the transaction through the Microload unit.

e. The START button starts the loading sequence and the PLC does an estimated time for the loading based on the truck load and pump flow. It generates an alarm if the time expires before the end of the sequence, meaning there is an issue with the system.

f. The sequence stops automatically once the truck load is reached. If the sequence stops on a fault, the sequence moves to the pause state, allowing the operator to clear the fault and restart or to stop the sequence. If no action is done, the sequence stops after the pause time expired.

g. The sequence starts by opening the selected tank's motorized valve and ramps up one of the VFD.

h. Pumps will run alternatively based on running hours accumulated, if both are available in auto mode before starting the sequence. The pumps have a selector AUTO/MANUAL on their HMI popup, this function is available only with the maintenance security access. If one pump does not start, a fault will be generated on the HMI and the other pump will start automatically. If one pump is in AUTO mode and the other in MAUAL mode, only the pump in AUTO mode will be used. If both pumps are in MANUAL mode, the sequence will not start. If none of the pumps start, the motorized valve closes, and the sequence goes to pause. Alarms are generated on the HMI.

i. The PLC sends a "Remote Start" to the Microload unit with the truck load. The Microload starts the loading control by opening the flow valve and monitoring the accumulated volume.

j. The truck load, the accumulated volume and flow rate are shown on the sequence screen. The data exchange with the Microload controller and the PLC is polled through Modbus link. At the end of transaction, the accumulated value and the truck load stay on the screen until a new transaction. The total of all fuel dispensed is totalized in PLC memory. This value is available and resettable in the PLC only, not on the HMI.

k. The loading sequence stops under the following conditions:

- Tanker truck is full OR;
- The estimated loading time is expired (meaning there is an issued with the truck level) OR;
- The Microload faults OR;
- Scully fault (grounding contact or high level) OR;
- MOV faults on open position OR;
- Fault on VFD pump OR;
- PAUSE or STOP buttons sequence are activated.

When the sequence stops, the pump stops, the MOV closes, the remote stop is set to Microload controller, and the flow valve closes. The status of the loading sequence is shown on the sequence screen.

l. The truck load is a pre-set value in the PLC based on one type of tanker truck. If more than one tanker truck capacity models are used, a pre-set selection could be added to facilitate trucker entries. To be defined on site.

m. The sequence could not start if there is a low low level in the main tank selected. But if the sequence is running when the low low level appears, the sequence will complete the loading. The low low level will be set to support one tanker truck load above the piping intake.

n. On the stop sequence, the pump stops first and then the motorized valve at the selected tank closes.

o. The valves positions and the pumps status are shown on the graphic screen.

p. There are three emergency push buttons, one on the PLC cabinet, one in the pump house and one at the truck area, and they are hardwired to the emergency relay inside the PLC cabinet. The emergency relay contacts stop the VFD pumps through VFD input (DIL and 24V) and remove the power to the flow valve. The emergency relay status is wired back to the PLC, to close the MOVs and set the "remote stop" command to the Microload controller.

q. Pumps interlocks – Starting conditions

- Scully contact through the truck plug (must be connected)
- Minimum level of diesel in the selected main tank (above low low level)

r. Process interlocks – Running conditions that can be bypassed

- Microload Controller ready and running. The bypass confirmation of the controller is available only through the maintenance security level. If the bypass valve is opened, it shall be confirmed on the HMI, to ensure proper functionality.

s. Safety trip conditions

- Emergency stop buttons

4. Maintenance mode

a. The maintenance mode is accessible by logging as maintenance username with the proper password.

b. The user in maintenance mode could access the motors and valves popups. The functionalities in popups allow individual control of the equipment; AUTO/MANUAL mode, START/STOP and feedback status.

c. In MANUAL mode, the user could take control of every equipment to manually operate them without interlock except for the E-Stops. The user is fully responsible of the equipment when running them in manual.

d. A maintenance mode banner is displayed in the graphic and sequence screens to identify that this mode is active.

e. The Microload bypass button is accessible in maintenance mode only.

f. The automatic loading sequence could not run in maintenance mode. Equipment left in manual mode does not return in auto mode automatically, the user is responsible to return them in auto mode to allow the automatic sequence to work properly.

11.2 Main tanks loading

1. Overfill protection of tank during refueling from the marine line
    i. Overfill alarm is composed of one strobe light on each tank and one common horn installed on the pumping container.
    ii. When 90% of a tank capacity is reached, an overfill alarm is activated, turning on the tank strobe light and the horn.
    iii. The horn stops once the alarm is acknowledged.

11.3 Alarms transmission

- At least 4 type of alarms are wired from PLC to Fire Alarm System
- Overfill alarm on tanks
- Emergency stop activated
- Temperature alarm
- Pumps and valves malfunction alarms

NO. INTERN DRAWING NO. 65-116-205-200_R2.dwg

FORMAT ARCH D

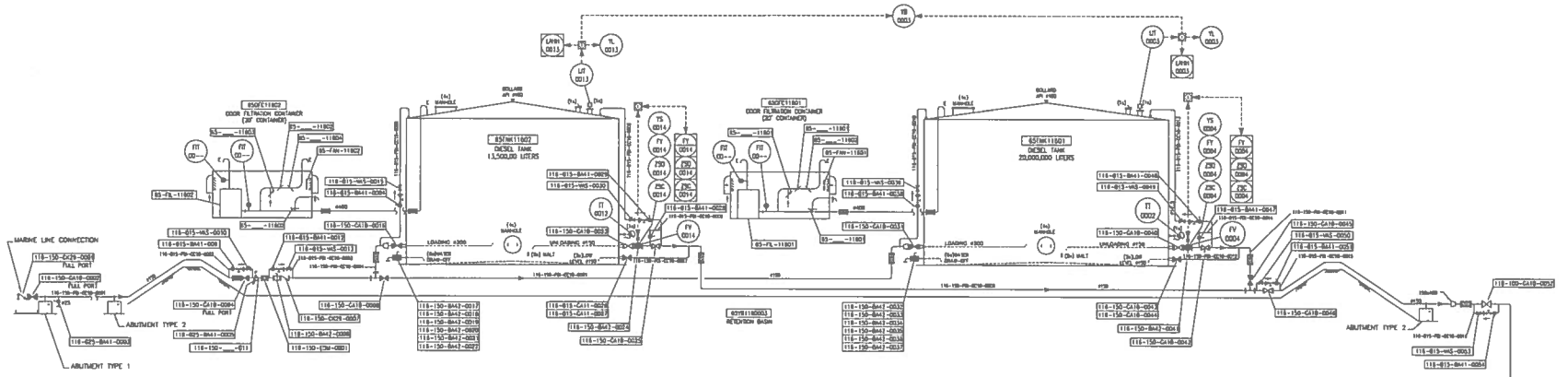

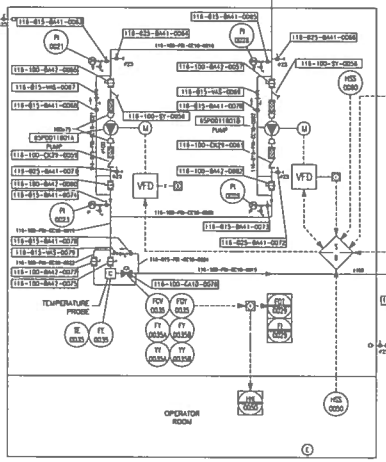

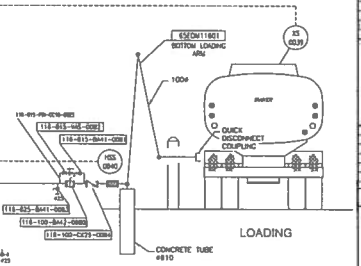

LEGEND

PIPING

FLANGED	WELDED		
		BALL VALVE	
		GATE VALVE	
		PRESSURE RELIEF VALVE	
		CONTROL VALVE	
		MOTORIZED BALL VALVE	
		CHECK VALVE	
		STRAINER	
		FLEXIBLE	
D		REDUCER	
		UNION	
		FLANGES	
		BLANK FLANGE	
	—3	CAP	
	—C	CONNECTION	

FLANGED	WELDED	
		PIG CATCHER
		FLOW INDICATOR "VISI-FLOW"
		METER c/s STRAINER & BLEEDER
		VALVE - NORMALLY OPEN
		VALVE - NORMALLY CLOSED
		PIPE DOWN
		PIPE UP
		PUMP
5 PSI		PRESSURE RELIEF VALVE KIT: PIPING #12.5 SCH. 80, PRESSURE RELIEF VALVE (ADJUSTED TO 5 PSI UNLESS OTHERWISE SPECIFIED), UNION, T WITH PLUG & BALL VALVE
V		PRESSURE GAGE TO VACUUM OF POMPE (VACUUM)
P		PRESSURE GAGE TO DISHARGE OF PUMP (POSITIVE PRESSURE)
T		TEMPERATURE PROBE

VERTICAL TANK

- OUTLET
- GAGE HATCH
- RABAR CAGE
- TEMPERATURE SENSOR (OUTLET #19)
- VENT

VENTILATION

- AIR BALANCING KEY
- AIR PRESSURE RELIEF OR BACK-DRAFT DAMPER
- MANUEL FLAP
- AIR FLOW SWITCH

GENERAL

- EXTINGUISHER 20 BC

P&ID

SEE DWG 65-500-205-207

POUR CONSTRUCTION
FOR CONSTRUCTION
AGNICO EAGLE
DATE : 2017-09-05

EN PROGRÈS
IN PROGRESS
AGNICO EAGLE
DATE : 2017-09-05

WSP

1501, De Montarville
VALLEYFIELD (QUÉBEC) CANADA J6S 6W1
TÉL. : 1-819-425-4711 | TÉLÉC. : 1-819-425-4716 | WWW.WSPGROUP.COM

Ref. 151-00440-00

NOTES GÉNÉRALES / GENERAL NOTES

1. REPLACE DRAWING : 65-103-205-200

DESSINS DE RÉFÉRENCE / REFERENCE DRAWINGS

TITRE / TITLE	# DWG

AGNICO EAGLE

#	DATE	DESCRIPTION	BY
1	2017-07-26	ISSUED FOR CONSTRUCTION	J.D.
0	2017-07-05	INFORMATION ISSUE	P.M.B.
			L.S.

REVISIONS

TITRE / TITLE
AGNICO EAGLE – MEADOWBANK DIVISION
116 – FUEL TANK FARM
205 – P&ID
FUEL DISTRIBUTION
FLOW DIAGRAM

DESSINÉ PAR DRAWN BY	CHESLANE CORMIER, tech.	2017-05-26
VÉRIFIÉ PAR VERIFIED BY	JOEL MORLIÈRE, tech.	2017-05-28
APPROUVÉ PAR APPROVED BY	DENIS THIBODEAU P. Eng.	2017-05-28
ÉCHELLE SCALE	NONE	DATE 2017-05-28

NO. INTERN DRAWING NO. 65-116-205-200

NO. PROJET PROJECT NO.	REVISION	FEUILLE / SHT
6515	2	1 / 1

FILE NO.

65-116-275-200_R0

FORMAT ARCH-D

EQUIPMENT LIST

ARTICLE NUMBER	SYMBOL	DESCRIPTION	MANUF.	TYPE	NOTE
30	XB	CONNECTION — CROSS CONNECTOR COMPRESSION CROSS CONNECTOR FOR TWO HORIZONTAL CONDUCTORS ON THE SAME PLANE. CABLE SIZE: 4/0AWG.	BURNDY	YCI-C	
31	GT	ROD AND GROUNDING ROD CONNECTION STEEL ROD COATED WITH COPPER. COMPRESSION CONNECTOR FOR GROUNDING ROD. ROD DIAM. 5/8; BURNDY ROD LENGTH: 3M CABLE SIZE: 4/0AWG.	BURNDY	YGLB-C	
32	TA	CONNECTION — TAP COMPRESSION CONNECTOR FOR GROUNDING TAP OR LAP SPLICE. CABLE SIZE: 4/0AWG.	BURNDY	YDHF-C	
33	–	GROUND ROD TAP CONNECTION — HEAVY FOR CONNECTION OF GROUNDING ROD, HEAVY DUTY. ROD SIZE: 4/0AWG CABLE SIZE: 4/0AWG	BURNDY	YGHH	
34	–	COMPRESSION CONNECTION — GROUND PLATES HEAVY DUTY, CONSTRUCTION FOR RESISTANT CABLE SIZE: 4/0AWG.	BURNDY	YGI	
35	PT	CONNECTION — PARALLEL HORIZONTAL CONNECTORS COMPRESSED CONNECTOR FOR TWO PARALLEL HORIZONTAL CONDUCTORS. CABLE SIZE: 4/0AWG TAP CABLE SIZE: 4/0AWG.	BURNDY	YDHC	
36	VS	CONNECTION — STRUCTURE CONNECTION USED FOR VERTICAL STEEL SURFACE, BEAM OR STRUCTURAL STEEL. CCRD CABLE SIZE: 4/0AWG.	BURNDY	CCRD-4W	
37	LA	CONNECTION — HEAVY DUTY TERMINALS HEAVY DUTY TERMINALS DESIGNED TO CARRY SHORT CIRCUIT LOAD AND WITHSTAND HIGH MECHANICAL STRESS. CABLE SIZE: 4/0AWG.	BURNDY	YDHA	
38	VS2	CONNECTION — STRUCTURE CONNECTION USED FOR VERTICAL STEEL SURFACE (STRUCTURAL BEAMS) CABLE SIZE: 4/0AWG.	BURNDY	YCSD	EVERY BURNDY YCSD CONNECTION (VS2) MUST BE COMBINED WITH A YDHA HEAVY DUTY TERMINAL (LA2) AND 2 NUTS OF ADEQUATE SIZE FOR THE TERMINAL.
39		GROUNDING PLATE PRETINNED COPPER GROUNDING PLATE WITH ONE PIGTAIL. WIRE QUALITY: 4/0AWG, PLATE SIZE: 610mmx610mm, THICKNESS: 6.35mm	FCDEAR	CPLCCL610X610X6	
40	CP	CONNECTION — PIPE MECHANICAL GROUNDING CONNECTOR CONDUCTOR TO PIPE CABLE SIZE: 4/0AWG.	BURNDY	GAR1RC2EU GAR3RV43U GAR1RS2EU GAR3RS6EU	1" TO 3" (32MM TO 52MM) PIPE 2"½ TO 3"½ (65MM TO 85MM) PIPE 4" TO 5" (102MM TO 127MM) PIPE 6" (150MM) PIPE
41		CABLE TAPE CONNECTION CABLE TAPE GROUNDING CLAMP FOR CABLE SIZE: 4/0AWG.	P-DAWS & BERTS	CBC2-P	
42		BONDING JUMPER PRETINNED COPPER JUMPER, FOR EXPANSION JOINTS AND ADJUSTABLE JOINTS.	P-DAWS & BERTS	PBJ(J)-1	
		POWER GROUNDING CONDUCTOR 4/0 AWG, BARE, FLEXIBLE, STRANDED, 19 STRANDS (ASTM STANDARDS B8 AND B33).	PHILLIPS CABLES		
	3#4/0	COPPER CONDUCTOR IDENTICAL CHARACTERISTICS FOR FUTURE CONNECTIONS. THE LENGTH TO RESERVE IS SPECIFIED ON THE SCHEDL.	PHILLIPS CABLES		

ELECTRICAL LEGEND

SENSORS AND DETECTORS

- FUSED SAFETY SWITCH
- TRANSFORMER
- SURFACE MOUNTED DISTRIBUTION PANEL, 120/208V
- SURFACE MOUNTED DISTRIBUTION PANEL, 347/600V
- SHEET METAL BOXES, (CAPACITY INDICATED)
- CABLE TRAY
- ELECTRIC HEATER
- 15A, 120V DUPLEX RECEPTACLE
- DOUBLE GANGBOX RECEPTACLE
- JUNCTION BOX

DETECTION & FIRE ALARM

- ADDRESSABLE SMOKE DETECTOR
- MANUAL FIRE PULL STATION
- FIRE ALARM HORN
- END OF LINE RESISTOR
- MAIN FIRE ALARM PANEL
- WALL MOUNTED HORN, FIRE ALARM AND HORN

ELECTRICAL EQUIPMENT

NO. EQUIP.	MANUFACTURER	CATALOG NUMBER	MOUNTING	DESCRIPTION
4SDP811E01	SIEMENS	3VA6240-3EF32-0AA0	SURF.	MOLDED CASE CIRCUIT BREAKER, 3-POLE, 240V, 400A, 65kA INTERRUPTING CAPACITY, ELECTRONIC TRIP UNIT, LSI FUNCTION, 400A FRAME, 400A SENSOR, 400A RATING, 65kA INTERRUPTING CAPACITY
4SDP811E02	SIEMENS	3VA6240-3EF32-0AA0	SURF.	MOLDED CASE CIRCUIT BREAKER, 3-POLE, 240V, 400A, 65kA INTERRUPTING CAPACITY, ELECTRONIC TRIP UNIT, LSI FUNCTION, 400A FRAME, 400A SENSOR, 400A RATING, 65kA INTERRUPTING CAPACITY
4SDP811E03	SIEMENS	3VA6240-3EF32-0AA0	SURF.	MOLDED CASE CIRCUIT BREAKER, 3-POLE, 240V, 400A, 65kA INTERRUPTING CAPACITY, ELECTRONIC TRIP UNIT, LSI FUNCTION, 400A FRAME, 400A SENSOR, 400A RATING, 65kA INTERRUPTING CAPACITY
4SDP811E04	SIEMENS	3VA6240-3EF32-0AA0	SURF.	MOLDED CASE CIRCUIT BREAKER, 3-POLE, 240V, 400A, 65kA INTERRUPTING CAPACITY, ELECTRONIC TRIP UNIT, LSI FUNCTION, 400A FRAME, 400A SENSOR, 400A RATING, 65kA INTERRUPTING CAPACITY
4SDP811E05	SIEMENS	3VA6240-3EF32-0AA0	SURF.	MOLDED CASE CIRCUIT BREAKER, 3-POLE, 240V, 400A, 65kA INTERRUPTING CAPACITY, ELECTRONIC TRIP UNIT, LSI FUNCTION, 400A FRAME, 400A SENSOR, 400A RATING, 65kA INTERRUPTING CAPACITY
4SDP811E06	SIEMENS	3VA6240-3EF32-0AA0	SURF.	MOLDED CASE CIRCUIT BREAKER, 3-POLE, 240V, 400A, 65kA INTERRUPTING CAPACITY, ELECTRONIC TRIP UNIT, LSI FUNCTION, 400A FRAME, 400A SENSOR, 400A RATING, 65kA INTERRUPTING CAPACITY
4SDP811E07	SIEMENS	3VA6240-3EF32-0AA0	SURF.	MOLDED CASE CIRCUIT BREAKER, 3-POLE, 240V, 400A, 65kA INTERRUPTING CAPACITY, ELECTRONIC TRIP UNIT, LSI FUNCTION, 400A FRAME, 400A SENSOR, 400A RATING, 65kA INTERRUPTING CAPACITY
4SDP811E08	SIEMENS	3VA6240-3EF32-0AA0	SURF.	MOLDED CASE CIRCUIT BREAKER, 3-POLE, 240V, 400A, 65kA INTERRUPTING CAPACITY, ELECTRONIC TRIP UNIT, LSI FUNCTION, 400A FRAME, 400A SENSOR, 400A RATING, 65kA INTERRUPTING CAPACITY
4SDP811E09	SIEMENS	3VA6240-3EF32-0AA0	SURF.	MOLDED CASE CIRCUIT BREAKER, 3-POLE, 240V, 400A, 65kA INTERRUPTING CAPACITY, ELECTRONIC TRIP UNIT, LSI FUNCTION, 400A FRAME, 400A SENSOR, 400A RATING, 65kA INTERRUPTING CAPACITY
4SDP811E10	SIEMENS	3VA6240-3EF32-0AA0	SURF.	MOLDED CASE CIRCUIT BREAKER, 3-POLE, 240V, 400A, 65kA INTERRUPTING CAPACITY, ELECTRONIC TRIP UNIT, LSI FUNCTION, 400A FRAME, 400A SENSOR, 400A RATING, 65kA INTERRUPTING CAPACITY
4SDP811E11	SIEMENS	3VA6240-3EF32-0AA0	SURF.	MOLDED CASE CIRCUIT BREAKER, 3-POLE, 240V, 400A, 65kA INTERRUPTING CAPACITY, ELECTRONIC TRIP UNIT, LSI FUNCTION, 400A FRAME, 400A SENSOR, 400A RATING, 65kA INTERRUPTING CAPACITY
4SDP811E12	SIEMENS	3VA6240-3EF32-0AA0	SURF.	MOLDED CASE CIRCUIT BREAKER, 3-POLE, 240V, 400A, 65kA INTERRUPTING CAPACITY, ELECTRONIC TRIP UNIT, LSI FUNCTION, 400A FRAME, 400A SENSOR, 400A RATING, 65kA INTERRUPTING CAPACITY
4SDP811E13	SIEMENS	3VA6240-3EF32-0AA0	SURF.	MOLDED CASE CIRCUIT BREAKER, 3-POLE, 240V, 400A, 65kA INTERRUPTING CAPACITY, ELECTRONIC TRIP UNIT, LSI FUNCTION, 400A FRAME, 400A SENSOR, 400A RATING, 65kA INTERRUPTING CAPACITY
4SDP811E14	SIEMENS	3VA6240-3EF32-0AA0	SURF.	MOLDED CASE CIRCUIT BREAKER, 3-POLE, 240V, 400A, 65kA INTERRUPTING CAPACITY, ELECTRONIC TRIP UNIT, LSI FUNCTION, 400A FRAME, 400A SENSOR, 400A RATING, 65kA INTERRUPTING CAPACITY
4SDP811E15	SIEMENS	3VA6240-3EF32-0AA0	SURF.	MOLDED CASE CIRCUIT BREAKER, 3-POLE, 240V, 400A, 65kA INTERRUPTING CAPACITY, ELECTRONIC TRIP UNIT, LSI FUNCTION, 400A FRAME, 400A SENSOR, 400A RATING, 65kA INTERRUPTING CAPACITY
4SDP811E16	SIEMENS	3VA6240-3EF32-0AA0	SURF.	MOLDED CASE CIRCUIT BREAKER, 3-POLE, 240V, 400A, 65kA INTERRUPTING CAPACITY, ELECTRONIC TRIP UNIT, LSI FUNCTION, 400A FRAME, 400A SENSOR, 400A RATING, 65kA INTERRUPTING CAPACITY
4SDP811E17	SIEMENS	3VA6240-3EF32-0AA0	SURF.	MOLDED CASE CIRCUIT BREAKER, 3-POLE, 240V, 400A, 65kA INTERRUPTING CAPACITY, ELECTRONIC TRIP UNIT, LSI FUNCTION, 400A FRAME, 400A SENSOR, 400A RATING, 65kA INTERRUPTING CAPACITY
4SDP811E18	SIEMENS	3VA6240-3EF32-0AA0	SURF.	MOLDED CASE CIRCUIT BREAKER, 3-POLE, 240V, 400A, 65kA INTERRUPTING CAPACITY, ELECTRONIC TRIP UNIT, LSI FUNCTION, 400A FRAME, 400A SENSOR, 400A RATING, 65kA INTERRUPTING CAPACITY
4SDP811E19	SIEMENS	3VA6240-3EF32-0AA0	SURF.	MOLDED CASE CIRCUIT BREAKER, 3-POLE, 240V, 400A, 65kA INTERRUPTING CAPACITY, ELECTRONIC TRIP UNIT, LSI FUNCTION, 400A FRAME, 400A SENSOR, 400A RATING, 65kA INTERRUPTING CAPACITY
4SDP811E20	SIEMENS	3VA6240-3EF32-0AA0	SURF.	MOLDED CASE CIRCUIT BREAKER, 3-POLE, 240V, 400A, 65kA INTERRUPTING CAPACITY, ELECTRONIC TRIP UNIT, LSI FUNCTION, 400A FRAME, 400A SENSOR, 400A RATING, 65kA INTERRUPTING CAPACITY
4SDP811E21	SIEMENS	3VA6240-3EF32-0AA0	SURF.	MOLDED CASE CIRCUIT BREAKER, 3-POLE, 240V, 400A, 65kA INTERRUPTING CAPACITY, ELECTRONIC TRIP UNIT, LSI FUNCTION, 400A FRAME, 400A SENSOR, 400A RATING, 65kA INTERRUPTING CAPACITY
4SDP811E22	SIEMENS	3VA6240-3EF32-0AA0	SURF.	MOLDED CASE CIRCUIT BREAKER, 3-POLE, 240V, 400A, 65kA INTERRUPTING CAPACITY, ELECTRONIC TRIP UNIT, LSI FUNCTION, 400A FRAME, 400A SENSOR, 400A RATING, 65kA INTERRUPTING CAPACITY
4SDP811E23	SIEMENS	3VA6240-3EF32-0AA0	SURF.	MOLDED CASE CIRCUIT BREAKER, 3-POLE, 240V, 400A, 65kA INTERRUPTING CAPACITY, ELECTRONIC TRIP UNIT, LSI FUNCTION, 400A FRAME, 400A SENSOR, 400A RATING, 65kA INTERRUPTING CAPACITY
4SDP811E24	SIEMENS	3VA6240-3EF32-0AA0	SURF.	MOLDED CASE CIRCUIT BREAKER, 3-POLE, 240V, 400A, 65kA INTERRUPTING CAPACITY, ELECTRONIC TRIP UNIT, LSI FUNCTION, 400A FRAME, 400A SENSOR, 400A RATING, 65kA INTERRUPTING CAPACITY
4SDP811E25	SIEMENS	3VA6240-3EF32-0AA0	SURF.	MOLDED CASE CIRCUIT BREAKER, 3-POLE, 240V, 400A, 65kA INTERRUPTING CAPACITY, ELECTRONIC TRIP UNIT, LSI FUNCTION, 400A FRAME, 400A SENSOR, 400A RATING, 65kA INTERRUPTING CAPACITY
4SDP811E26	SIEMENS	3VA6240-3EF32-0AA0	SURF.	MOLDED CASE CIRCUIT BREAKER, 3-POLE, 240V, 400A, 65kA INTERRUPTING CAPACITY, ELECTRONIC TRIP UNIT, LSI FUNCTION, 400A FRAME, 400A SENSOR, 400A RATING, 65kA INTERRUPTING CAPACITY
4SDP811E27	SIEMENS	3VA6240-3EF32-0AA0	SURF.	MOLDED CASE CIRCUIT BREAKER, 3-POLE, 240V, 400A, 65kA INTERRUPTING CAPACITY, ELECTRONIC TRIP UNIT, LSI FUNCTION, 400A FRAME, 400A SENSOR, 400A RATING, 65kA INTERRUPTING CAPACITY
4SDP811E28	SIEMENS	3VA6240-3EF32-0AA0	SURF.	MOLDED CASE CIRCUIT BREAKER, 3-POLE, 240V, 400A, 65kA INTERRUPTING CAPACITY, ELECTRONIC TRIP UNIT, LSI FUNCTION, 400A FRAME, 400A SENSOR, 400A RATING, 65kA INTERRUPTING CAPACITY
4SDP811E29	SIEMENS	3VA6240-3EF32-0AA0	SURF.	MOLDED CASE CIRCUIT BREAKER, 3-POLE, 240V, 400A, 65kA INTERRUPTING CAPACITY, ELECTRONIC TRIP UNIT, LSI FUNCTION, 400A FRAME, 400A SENSOR, 400A RATING, 65kA INTERRUPTING CAPACITY
4SDP811E30	SIEMENS	3VA6240-3EF32-0AA0	SURF.	MOLDED CASE CIRCUIT BREAKER, 3-POLE, 240V, 400A, 65kA INTERRUPTING CAPACITY, ELECTRONIC TRIP UNIT, LSI FUNCTION, 400A FRAME, 400A SENSOR, 400A RATING, 65kA INTERRUPTING CAPACITY
4SDP811E31	SIEMENS	3VA6240-3EF32-0AA0	SURF.	MOLDED CASE CIRCUIT BREAKER, 3-POLE, 240V, 400A, 65kA INTERRUPTING CAPACITY, ELECTRONIC TRIP UNIT, LSI FUNCTION, 400A FRAME, 400A SENSOR, 400A RATING, 65kA INTERRUPTING CAPACITY
4SDP811E32	SIEMENS	3VA6240-3EF32-0AA0	SURF.	MOLDED CASE CIRCUIT BREAKER, 3-POLE, 240V, 400A, 65kA INTERRUPTING CAPACITY, ELECTRONIC TRIP UNIT, LSI FUNCTION, 400A FRAME, 400A SENSOR, 400A RATING, 65kA INTERRUPTING CAPACITY
4SDP811E33	SIEMENS	3VA6240-3EF32-0AA0	SURF.	MOLDED CASE CIRCUIT BREAKER, 3-POLE, 240V, 400A, 65kA INTERRUPTING CAPACITY, ELECTRONIC TRIP UNIT, LSI FUNCTION, 400A FRAME, 400A SENSOR, 400A RATING, 65kA INTERRUPTING CAPACITY
4SDP811E34	SIEMENS	3VA6240-3EF32-0AA0	SURF.	MOLDED CASE CIRCUIT BREAKER, 3-POLE, 240V, 400A, 65kA INTERRUPTING CAPACITY, ELECTRONIC TRIP UNIT, LSI FUNCTION, 400A FRAME, 400A SENSOR, 400A RATING, 65kA INTERRUPTING CAPACITY
4SDP811E35	SIEMENS	3VA6240-3EF32-0AA0	SURF.	MOLDED CASE CIRCUIT BREAKER, 3-POLE, 240V, 400A, 65kA INTERRUPTING CAPACITY, ELECTRONIC TRIP UNIT, LSI FUNCTION, 400A FRAME, 400A SENSOR, 400A RATING, 65kA INTERRUPTING CAPACITY
4SDP811E36	SIEMENS	3VA6240-3EF32-0AA0	SURF.	MOLDED CASE CIRCUIT BREAKER, 3-POLE, 240V, 400A, 65kA INTERRUPTING CAPACITY, ELECTRONIC TRIP UNIT, LSI FUNCTION, 400A FRAME, 400A SENSOR, 400A RATING, 65kA INTERRUPTING CAPACITY
4SDP811E37	SIEMENS	3VA6240-3EF32-0AA0	SURF.	MOLDED CASE CIRCUIT BREAKER, 3-POLE, 240V, 400A, 65kA INTERRUPTING CAPACITY, ELECTRONIC TRIP UNIT, LSI FUNCTION, 400A FRAME, 400A SENSOR, 400A RATING, 65kA INTERRUPTING CAPACITY
4SDP811E38	SIEMENS	3VA6240-3EF32-0AA0	SURF.	MOLDED CASE CIRCUIT BREAKER, 3-POLE, 240V, 400A, 65kA INTERRUPTING CAPACITY, ELECTRONIC TRIP UNIT, LSI FUNCTION, 400A FRAME, 400A SENSOR, 400A RATING, 65kA INTERRUPTING CAPACITY
4SDP811E39	SIEMENS	3VA6240-3EF32-0AA0	SURF.	MOLDED CASE CIRCUIT BREAKER, 3-POLE, 240V, 400A, 65kA INTERRUPTING CAPACITY, ELECTRONIC TRIP UNIT, LSI FUNCTION, 400A FRAME, 400A SENSOR, 400A RATING, 65kA INTERRUPTING CAPACITY
4SDP811E40	SIEMENS	3VA6240-3EF32-0AA0	SURF.	MOLDED CASE CIRCUIT BREAKER, 3-POLE, 240V, 400A, 65kA INTERRUPTING CAPACITY, ELECTRONIC TRIP UNIT, LSI FUNCTION, 400A FRAME, 400A SENSOR, 400A RATING, 65kA INTERRUPTING CAPACITY
4SDP811E41	SIEMENS	3VA6240-3EF32-0AA0	SURF.	MOLDED CASE CIRCUIT BREAKER, 3-POLE, 240V, 400A, 65kA INTERRUPTING CAPACITY, ELECTRONIC TRIP UNIT, LSI FUNCTION, 400A FRAME, 400A SENSOR, 400A RATING, 65kA INTERRUPTING CAPACITY
4SDP811E42	SIEMENS	3VA6240-3EF32-0AA0	SURF.	MOLDED CASE CIRCUIT BREAKER, 3-POLE, 240V, 400A, 65kA INTERRUPTING CAPACITY, ELECTRONIC TRIP UNIT, LSI FUNCTION, 400A FRAME, 400A SENSOR, 400A RATING, 65kA INTERRUPTING CAPACITY
4SDP811E43	SIEMENS	3VA6240-3EF32-0AA0	SURF.	MOLDED CASE CIRCUIT BREAKER, 3-POLE, 240V, 400A, 65kA INTERRUPTING CAPACITY, ELECTRONIC TRIP UNIT, LSI FUNCTION, 400A FRAME, 400A SENSOR, 400A RATING, 65kA INTERRUPTING CAPACITY
4SDP811E44	SIEMENS	3VA6240-3EF32-0AA0	SURF.	MOLDED CASE CIRCUIT BREAKER, 3-POLE, 240V, 400A, 65kA INTERRUPTING CAPACITY, ELECTRONIC TRIP UNIT, LSI FUNCTION, 400A FRAME, 400A SENSOR, 400A RATING, 65kA INTERRUPTING CAPACITY
4SDP811E45	SIEMENS	3VA6240-3EF32-0AA0	SURF.	MOLDED CASE CIRCUIT BREAKER, 3-POLE, 240V, 400A, 65kA INTERRUPTING CAPACITY, ELECTRONIC TRIP UNIT, LSI FUNCTION, 400A FRAME, 400A SENSOR, 400A RATING, 65kA INTERRUPTING CAPACITY
4SDP811E46	SIEMENS	3VA6240-3EF32-0AA0	SURF.	MOLDED CASE CIRCUIT BREAKER, 3-POLE, 240V, 400A, 65kA INTERRUPTING CAPACITY, ELECTRONIC TRIP UNIT, LSI FUNCTION, 400A FRAME, 400A SENSOR, 400A RATING, 65kA INTERRUPTING CAPACITY
4SDP811E47	SIEMENS	3VA6240-3EF32-0AA0	SURF.	MOLDED CASE CIRCUIT BREAKER, 3-POLE, 240V, 400A, 65kA INTERRUPTING CAPACITY, ELECTRONIC TRIP UNIT, LSI FUNCTION, 400A FRAME, 400A SENSOR, 400A RATING, 65kA INTERRUPTING CAPACITY
4SDP811E48	SIEMENS	3VA6240-3EF32-0AA0	SURF.	MOLDED CASE CIRCUIT BREAKER, 3-POLE, 240V, 400A, 65kA INTERRUPTING CAPACITY, ELECTRONIC TRIP UNIT, LSI FUNCTION, 400A FRAME, 400A SENSOR, 400A RATING, 65kA INTERRUPTING CAPACITY
4SDP811E49	SIEMENS	3VA6240-3EF32-0AA0	SURF.	MOLDED CASE CIRCUIT BREAKER, 3-POLE, 240V, 400A, 65kA INTERRUPTING CAPACITY, ELECTRONIC TRIP UNIT, LSI FUNCTION, 400A FRAME, 400A SENSOR, 400A RATING, 65kA INTERRUPTING CAPACITY
4SDP811E50	SIEMENS	3VA6240-3EF32-0AA0	SURF.	MOLDED CASE CIRCUIT BREAKER, 3-POLE, 240V, 400A, 65kA INTERRUPTING CAPACITY, ELECTRONIC TRIP UNIT, LSI FUNCTION, 400A FRAME, 400A SENSOR, 400A RATING, 65kA INTERRUPTING CAPACITY
4SDP811E51	SIEMENS	3VA6240-3EF32-0AA0	SURF.	MOLDED CASE CIRCUIT BREAKER, 3-POLE, 240V, 400A, 65kA INTERRUPTING CAPACITY, ELECTRONIC TRIP UNIT, LSI FUNCTION, 400A FRAME, 400A SENSOR, 400A RATING, 65kA INTERRUPTING CAPACITY
4SDP811E52	SIEMENS	3VA6240-3EF32-0AA0	SURF.	MOLDED CASE CIRCUIT BREAKER, 3-POLE, 240V, 400A, 65kA INTERRUPTING CAPACITY, ELECTRONIC TRIP UNIT, LSI FUNCTION, 400A FRAME, 400A SENSOR, 400A RATING, 65kA INTERRUPTING CAPACITY
4SDP811E53	SIEMENS	3VA6240-3EF32-0AA0	SURF.	MOLDED CASE CIRCUIT BREAKER, 3-POLE, 240V, 400A, 65kA INTERRUPTING CAPACITY, ELECTRONIC TRIP UNIT, LSI FUNCTION, 400A FRAME, 400A SENSOR, 400A RATING, 65kA INTERRUPTING CAPACITY
4SDP811E54	SIEMENS	3VA6240-3EF32-0AA0	SURF.	MOLDED CASE CIRCUIT BREAKER, 3-POLE, 240V, 400A, 65kA INTERRUPTING CAPACITY, ELECTRONIC TRIP UNIT, LSI FUNCTION, 400A FRAME, 400A SENSOR, 400A RATING, 65kA INTERRUPTING CAPACITY
4SDP811E55	SIEMENS	3VA6240-3EF32-0AA0	SURF.	MOLDED CASE CIRCUIT BREAKER, 3-POLE, 240V, 400A, 65kA INTERRUPTING CAPACITY, ELECTRONIC TRIP UNIT, LSI FUNCTION, 400A FRAME, 400A SENSOR, 400A RATING, 65kA INTERRUPTING CAPACITY
4SDP811E56	SIEMENS	3VA6240-3EF32-0AA0	SURF.	MOLDED CASE CIRCUIT BREAKER, 3-POLE, 240V, 400A, 65kA INTERRUPTING CAPACITY, ELECTRONIC TRIP UNIT, LSI FUNCTION, 400A FRAME, 400A SENSOR, 400A RATING, 65kA INTERRUPTING CAPACITY
4SDP811E57	SIEMENS	3VA6240-3EF32-0AA0	SURF.	MOLDED CASE CIRCUIT BREAKER, 3-POLE, 240V, 400A, 65kA INTERRUPTING CAPACITY, ELECTRONIC TRIP UNIT, LSI FUNCTION, 400A FRAME, 400A SENSOR, 400A RATING, 65kA INTERRUPTING CAPACITY
4SDP811E58	SIEMENS	3VA6240-3EF32-0AA0	SURF.	MOLDED CASE CIRCUIT BREAKER, 3-POLE, 240V, 400A, 65kA INTERRUPTING CAPACITY, ELECTRONIC TRIP UNIT, LSI FUNCTION, 400A FRAME, 400A SENSOR, 400A RATING, 65kA INTERRUPTING CAPACITY
4SDP811E59	SIEMENS	3VA6240-3EF32-0AA0	SURF.	MOLDED CASE CIRCUIT BREAKER, 3-POLE, 240V, 400A, 65kA INTERRUPTING CAPACITY, ELECTRONIC TRIP UNIT, LSI FUNCTION, 400A FRAME, 400A SENSOR, 400A RATING, 65kA INTERRUPTING CAPACITY
4SDP811E60	SIEMENS	3VA6240-3EF32-0AA0	SURF.	MOLDED CASE CIRCUIT BREAKER, 3-POLE, 240V, 400A, 65kA INTERRUPTING CAPACITY, ELECTRONIC TRIP UNIT, LSI FUNCTION, 400A FRAME, 400A SENSOR, 400A RATING, 65kA INTERRUPTING CAPACITY
4SDP811E61	SIEMENS	3VA6240-3EF32-0AA0	SURF.	MOLDED CASE CIRCUIT BREAKER, 3-POLE, 240V, 400A, 65kA INTERRUPTING CAPACITY, ELECTRONIC TRIP UNIT, LSI FUNCTION, 400A FRAME, 400A SENSOR, 400A RATING, 65kA INTERRUPTING CAPACITY
4SDP811E62	SIEMENS	3VA6240-3EF32-0AA0	SURF.	MOLDED CASE CIRCUIT BREAKER, 3-POLE, 240V, 400A, 65kA INTERRUPTING CAPACITY, ELECTRONIC TRIP UNIT, LSI FUNCTION, 400A FRAME, 400A SENSOR, 400A RATING, 65kA INTERRUPTING CAPACITY
4SDP811E63	SIEMENS	3VA6240-3EF32-0AA0	SURF.	MOLDED CASE CIRCUIT BREAKER, 3-POLE, 240V, 400A, 65kA INTERRUPTING CAPACITY, ELECTRONIC TRIP UNIT, LSI FUNCTION, 400A FRAME, 400A SENSOR, 400A RATING, 65kA INTERRUPTING CAPACITY
4SDP811E64	SIEMENS	3VA6240-3EF32-0AA0	SURF.	MOLDED CASE CIRCUIT BREAKER, 3-POLE, 240V, 400A, 65kA INTERRUPTING CAPACITY, ELECTRONIC TRIP UNIT, LSI FUNCTION, 400A FRAME, 400A SENSOR, 400A RATING, 65kA INTERRUPTING CAPACITY
4SDP811E65	SIEMENS	3VA6240-3EF32-0AA0	SURF.	MOLDED CASE CIRCUIT BREAKER, 3-POLE, 240V, 400A, 65kA INTERRUPTING CAPACITY, ELECTRONIC TRIP UNIT, LSI FUNCTION, 400A FRAME, 400A SENSOR, 400A RATING, 65kA INTERRUPTING CAPACITY
4SDP811E66	SIEMENS	3VA6240-3EF32-0AA0	SURF.	MOLDED CASE CIRCUIT BREAKER, 3-POLE, 240V, 400A, 65kA INTERRUPTING CAPACITY, ELECTRONIC TRIP UNIT, LSI FUNCTION, 400A FRAME, 400A SENSOR, 400A RATING, 65kA INTERRUPTING CAPACITY
4SDP811E67	SIEMENS	3VA6240-3EF32-0AA0	SURF.	MOLDED CASE CIRCUIT BREAKER, 3-POLE, 240V, 400A, 65kA INTERRUPTING CAPACITY, ELECTRONIC TRIP UNIT, LSI FUNCTION, 400A FRAME, 400A SENSOR, 400A RATING, 65kA INTERRUPTING CAPACITY
4SDP811E68	SIEMENS	3VA6240-3EF32-0AA0	SURF.	MOLDED CASE CIRCUIT BREAKER, 3-POLE, 240V, 400A, 65kA INTERRUPTING CAPACITY, ELECTRONIC TRIP UNIT, LSI FUNCTION, 400A FRAME, 400A SENSOR, 400A RATING, 65kA INTERRUPTING CAPACITY
4SDP811E69	SIEMENS	3VA6240-3EF32-0AA0	SURF.	MOLDED CASE CIRCUIT BREAKER, 3-POLE, 240V, 400A, 65kA INTERRUPTING CAPACITY, ELECTRONIC TRIP UNIT, LSI FUNCTION, 400A FRAME, 400A SENSOR, 400A RATING, 65kA INTERRUPTING CAPACITY
4SDP811E70	SIEMENS	3VA6240-3EF32-0AA0	SURF.	MOLDED CASE CIRCUIT BREAKER, 3-POLE, 240V, 400A, 65kA INTERRUPTING CAPACITY, ELECTRONIC TRIP UNIT, LSI FUNCTION, 400A FRAME, 400A SENSOR, 400A RATING, 65kA INTERRUPTING CAPACITY
4SDP811E71	SIEMENS	3VA6240-3EF32-0AA0	SURF.	MOLDED CASE CIRCUIT BREAKER, 3-POLE, 240V, 400A, 65kA INTERRUPTING CAPACITY, ELECTRONIC TRIP UNIT, LSI FUNCTION, 400A FRAME, 400A SENSOR, 400A RATING, 65kA INTERRUPTING CAPACITY
4SDP811E72	SIEMENS	3VA6240-3EF32-0AA0	SURF.	MOLDED CASE CIRCUIT BREAKER, 3-POLE, 240V, 400A, 65kA INTERRUPTING CAPACITY, ELECTRONIC TRIP UNIT, LSI FUNCTION, 400A FRAME, 400A SENSOR, 400A RATING, 65kA INTERRUPTING CAPACITY
4SDP811E73	SIEMENS	3VA6240-3EF32-0AA0	SURF.	MOLDED CASE CIRCUIT BREAKER, 3-POLE, 240V, 400A, 65kA INTERRUPTING CAPACITY, ELECTRONIC TRIP UNIT, LSI FUNCTION, 400A FRAME, 400A SENSOR, 400A RATING, 65kA INTERRUPTING CAPACITY
4SDP811E74	SIEMENS	3VA6240-3EF32-0AA0	SURF.	MOLDED CASE CIRCUIT BREAKER, 3-POLE, 240V, 400A, 65kA INTERRUPTING CAPACITY, ELECTRONIC TRIP UNIT, LSI FUNCTION, 400A FRAME, 400A SENSOR, 400A RATING, 65kA INTERRUPTING CAPACITY
4SDP811E75	SIEMENS	3VA6240-3EF32-0AA0	SURF.	MOLDED CASE CIRCUIT BREAKER, 3-POLE, 240V, 400A, 65kA INTERRUPTING CAPACITY, ELECTRONIC TRIP UNIT, LSI FUNCTION, 400A FRAME, 400A SENSOR, 400A RATING, 65kA INTERRUPTING CAPACITY
4SDP811E76	SIEMENS	3VA6240-3EF32-0AA0	SURF.	MOLDED CASE CIRCUIT BREAKER, 3-POLE, 240V, 400A, 65kA INTERRUPTING CAPACITY, ELECTRONIC TRIP UNIT, LSI FUNCTION, 400A FRAME, 400A SENSOR, 400A RATING, 65kA INTERRUPTING CAPACITY
4SDP811E77	SIEMENS	3VA6240-3EF32-0AA0	SURF.	MOLDED CASE CIRCUIT BREAKER, 3-POLE, 240V, 400A, 65kA INTERRUPTING CAPACITY, ELECTRONIC TRIP UNIT, LSI FUNCTION, 400A FRAME, 400A SENSOR, 400A RATING, 65kA INTERRUPTING CAPACITY
4SDP811E78	SIEMENS	3VA6240-3EF32-0AA0	SURF.	MOLDED CASE CIRCUIT BREAKER, 3-POLE, 240V, 400A, 65kA INTERRUPTING CAPACITY, ELECTRONIC TRIP UNIT, LSI FUNCTION, 400A FRAME, 400A SENSOR, 400A RATING, 65kA INTERRUPTING CAPACITY
4SDP811E79	SIEMENS	3VA6240-3EF32-0AA0	SURF.	MOLDED CASE CIRCUIT BREAKER, 3-POLE, 240V, 400A, 65kA INTERRUPTING CAPACITY, ELECTRONIC TRIP UNIT, LSI FUNCTION, 400A FRAME, 400A SENSOR, 400A RATING, 65kA INTERRUPTING CAPACITY
4SDP811E80	SIEMENS	3VA6240-3EF32-0AA0	SURF.	MOLDED CASE CIRCUIT BREAKER, 3-POLE, 240V, 400A, 65kA INTERRUPTING CAPACITY, ELECTRONIC TRIP UNIT, LSI FUNCTION, 400A FRAME, 400A SENSOR, 400A RATING, 65kA INTERRUPTING CAPACITY
4SDP811E81	SIEMENS	3VA6240-3EF32-0AA0	SURF.	MOLDED CASE CIRCUIT BREAKER, 3-POLE, 240V, 400A, 65kA INTERRUPTING CAPACITY, ELECTRONIC TRIP UNIT, LSI FUNCTION, 400A FRAME, 400A SENSOR, 400A RATING, 65kA INTERRUPTING CAPACITY
4SDP811E82	SIEMENS	3VA6240-3EF

65-116-275-201_R0

FORMAT ARCHD

POUR CONSTRUCTION
FOR CONSTRUCTION
DATE : 2017-07-11

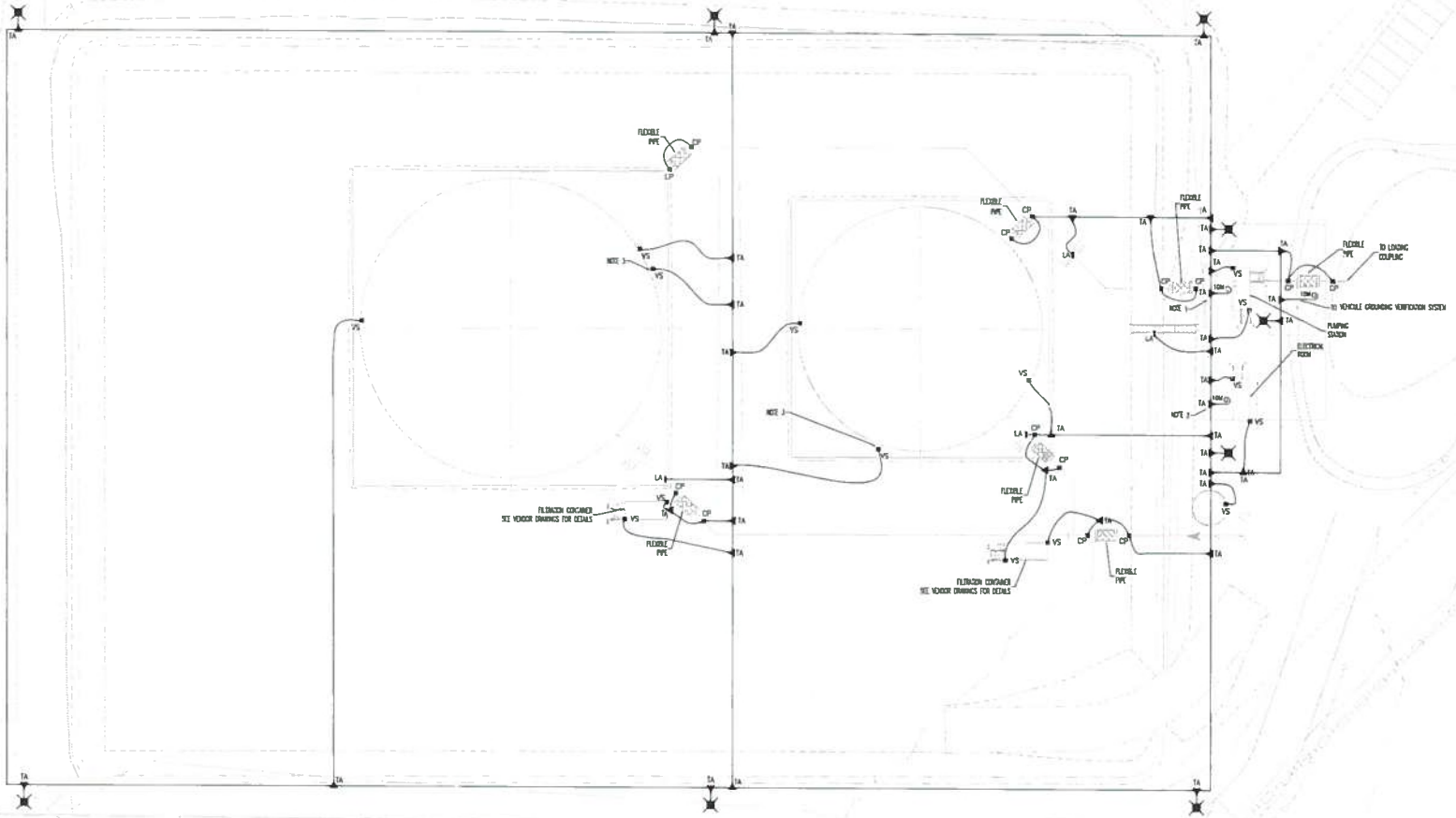

PLAN VIEW
SCL: 1:300



WSP
1075 3e AVENUE EST
VAL-D'OR (QUÉBEC) CANADA J9P 0J7
TÉL.: 819 825-4214 | TÉLÉC.: 819 824-1514 | WWW.WSPGROUP.COM

NOTES GÉNÉRALES / GENERAL NOTES

1. GROUND EQUIPMENT INSIDE THE PUMPING STATION AT THE CONNECTION POINT.
2. GROUND THE MAIN SAFETY SWITCH IN THE ELECTRICAL ROOM CONTAINER.
3. GROUND THE STAIRWELL OF THE TANK.

- GROUND ALL THE PROTECTION BOLLARDS.
- GROUND ALL METALLIC ELEMENTS IN THE RETENTION BASIN AREA AND IN TRUCK LOADING AREA.
- THE LOCATION OF THE GROUND CONNECTIONS AND CONDUCTORS ARE APROXIMATIVE AND SHALL BE COORDINATED WITH OTHER CONTRACTORS.
- THE LOCATION OF CONTAINERS SHALL BE COORDINATED WITH OTHER CONTRACTORS.

DESSINS EN RÉFÉRENCE / REFERENCE DRAWINGS

TITRE / TITLE	# DWG
GROUNDING LAYOUT	65-116-275-201
LEGEND, TABLES & DETAILS	65-116-275-200

AGNICO EAGLE

NO.	DATE	DESCRIPTION	PAR/BY	APP.	CLIENT
0	2017-07-11	ISSUED FOR CONSTRUCTION	J.BUS	L.L.	

REVISIONS

TITLE
AGNICO EAGLE – MELIADINE DIVISION
116 – FUEL TANK FARM
275 – POWER ELECTRICAL
GROUNDING LAYOUT
PLAN VIEW

DESSINÉ PAR / DRAWN BY	RÉMI HÉMAULT Tech.	DATE 2016-08-22
VÉRIFIÉ PAR / CHECKED BY	RÉMI HÉMAULT Tech.	2016-08-22
APPROUVÉ PAR / APPROVED BY	LUC SÉNÉCAL, P.Eng.	2017-07-11
ÉCHELLE / SCALE	INDICATED	DATE 2016-01-25
NO. DESSIN / DRAWING NO.	65-116-275-201	
NO. PROJET / PROJECT NO.	6515	REVISION 0 / FEUILLE / SHT 1/1

FILE NO. 65-116-275-201_R0.dwg

65-116-275-202_RD

FORMAT ARCH D

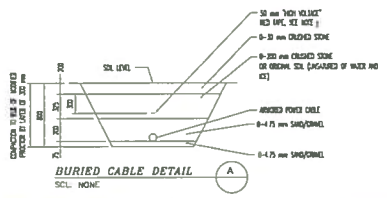

BURIED CABLE DETAIL A
SCL: NONE

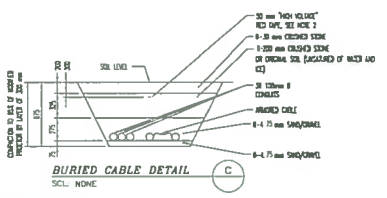

BURIED CABLE DETAIL C
SCL: NONE

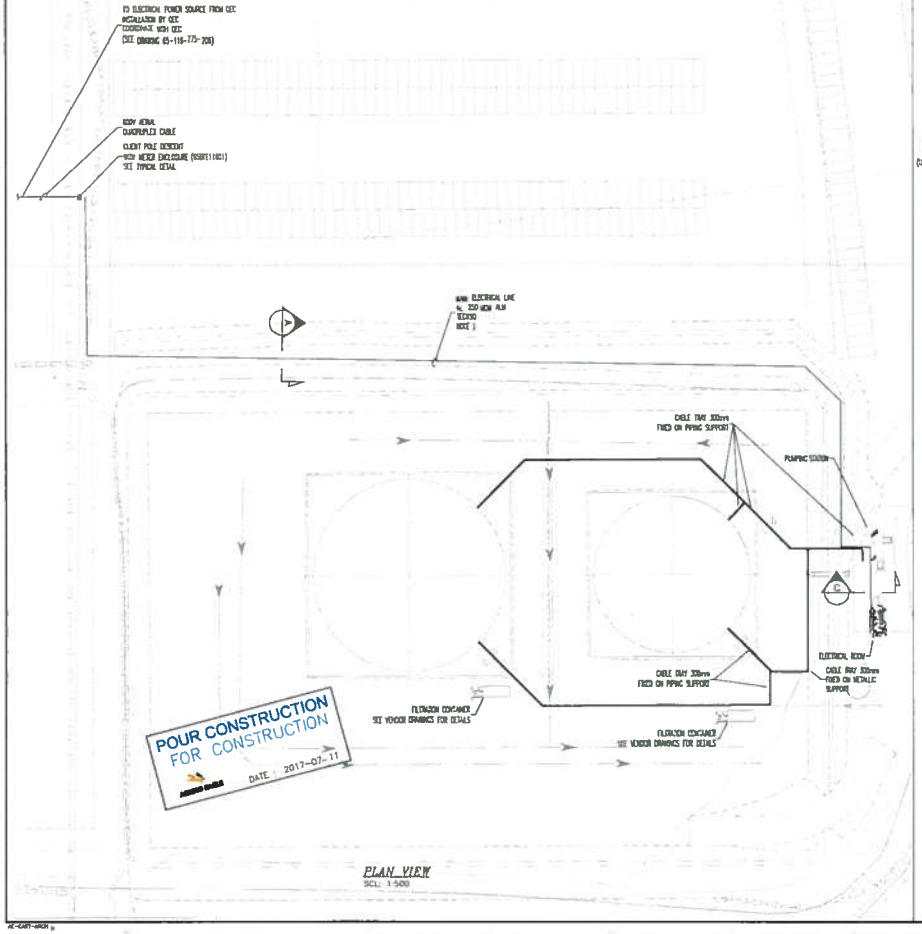

PLAN VIEW
SCL: 1:500

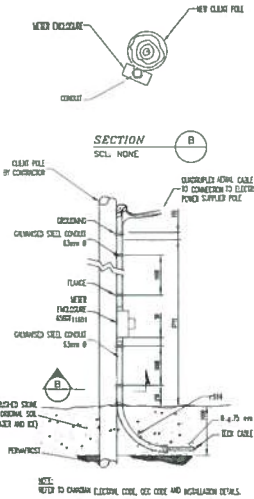

NOTE:
REFER TO CANADIAN ELECTRICAL CODE, CEC CODE AND INSTALLATION DETAILS.

TYPICAL DETAIL – POLE DESCENT
SCL: NONE

PANEL No. : 65DPS11601

Tension:	120/240 Volts
Powered by:	TRANSFORMER 300kVA
Installation:	SURFACE
Location:	ELECTRICAL ROOM CONTAINER
Type :	INDUSTRIAL

Enclosure type:	NEMA 1
Main Breaker:	-
No. of circuits:	42 CCT'S
Bars :	225 A
Capacity:	10 kA

Local and description	TYPE	CCT	WATTS	TYPE	CCT	CCT	TYPE	WATTS	CCT	Local and description
LIGHTING FIXTURE TANK #2	L	7	341		1	3		240	2	POUTLET PUMPING STATION
L. CONT CTRL FEEDER	L	1	37		3	5		540	2	POUTLET ELECTRICAL ROOM
LIGHT/EMER LIGHT PUMP STATN	L	5	715		5	7		540	2	PO ELEC ROOM/IT AREA 102
LIGHT/EMER LIGHT ELEC ROOM	L	4	180		7	9		480	1	CABINET 65PLT1601
L. FILTRATION CONTAINER TANK #1	L	3	144		9	11		1000	1	65HEA11603
LIGHTING FIXTURE TANK #1	L	7	341		11	13		888	2	VAULT OF VALVES FEEDER
	L	7	342		13	15		200	1	PO UTILITY CAB APPLE HA01
L.TANK#1 TANK #2 GROUND FLOOR	L	4	136		15	17		180	1	CONNECTION HT
	L	4	136		17	19		50	1	65VEN FLT CONTAINER TANK #1
L. OUT EL EQ ROOM/OUT PUMP STN	L	7	341		19	21		50	1	65VEN FLT CONTAINER TANK #2
L. FIL STATION CONTAINER TANK #2	L	2	144		21	23				
65HEA11603 FILTRATION	HT	1	2500	3Ø	23	25				
CONTAINER TANK #1	HT	1	2500		25	27				
65HEA11606 FILTRATION	HT	1	2500	3Ø	27	29				
CONTAINER TANK #1	HT	1	2500		29	31				
65HEA11607 FILTRATION	HT	1	2500	3Ø	31	33				
CONTAINER TANK #2	HT	1	2500		33	35				
65HEA11608 FILTRATION	HT	1	2500	3Ø	35	37				
CONTAINER TANK #2	HT	1	2500		37	39				
					39	41				
					41	43				

TYPE (REF)	Total(Watts)	Qty (ref)
(L) Lighting	3445	13
(P) Outlet	900	4
(H) Heating	23000	10
(M) Motors	900	3
(W) Water heater	0	0
(O) Others	600	2

TYPE (REF)	Qty (ref)
(S) Spare	0

	Watts	Amp
Phase A	7990	62.98
Phase B	9775	81.46
Phase C	8601	71.74
Total P	25766	214.24

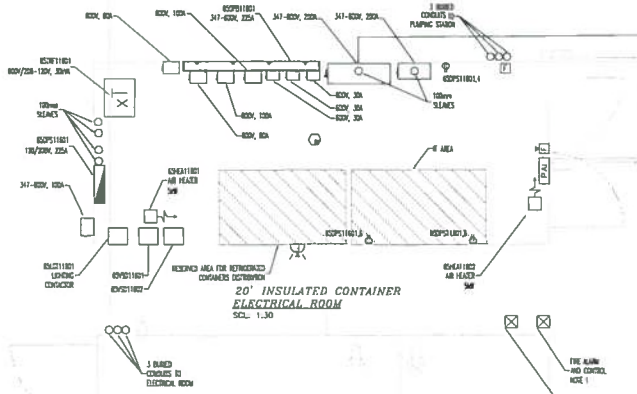

20' INSULATED CONTAINER
ELECTRICAL ROOM
SCL: 1:30

20' INSULATED CONTAINER
PUMPING STATION
SCL: 1:30



WSP
1600, 3e AVENUE EST
VAL-D'OR (QUÉBEC) CANADA J9P 6J7
TÉL.: (819) 824-4741 TÉLÉC.: (819) 824-5141 | WWW.WSPGROUP.COM

NOTES GENERALES / GENERAL NOTES

1. THE PUMPING STATION CONTAINER COMES PREWIRED WITH THOSE JONCTION BOXES. ELECTRICAL CONTRACTOR SHALL CONNECT THOSE JONCTION BOXES TO THE RIGHT SERVICES IN THE ELECTRICAL CONTAINER. ALL CABLES BETWEEN CONTAINERS SHALL BE TECK TYPE AND INSTALLED BURIED IN TRENCH. INSTALL 3X 100mm Ø CONDUITS FOR FUTURE CABLES.
2. THE RED TAPES SHALL BE INSTALLED ABOVE THE ELECTRICAL CABLES AND FOLLOW ALL THE BURIED PART OF THEM.
3. COORDINATE THE EXACT LOCATION AND DEPTH OF THE MAIN FEEDER CABLE.

4. THE LOCATION OF PIPING IS APPROXIMATE AND SHALL BE COORDINATE WITH OTHER MECHANICAL DRAWINGS.

DESSINS EN RÉFÉRENCE / REFERENCE DRAWINGS

TYPE / SUJET	# Dwg
EQUIPMENT LAYOUT, DETAILS AND SERVICES PANEL	65-103-275-202
LIGHTING	65-116-275-201
LEGEND, TABLES & DETAILS	65-116-275-200
SINGLE LINE DIAGRAM	65-116-275-203

AGNICO EAGLE

NO.	DATE	DESCRIPTION	DES./DRT.	APP.
0	2017-07-11	ISSUED FOR CONSTRUCTION	F.M.C.	L.S.

REVISIONS

SITE / FILE
AGNICO EAGLE – MEADOWBANK DIVISION
116 – FUEL TANK FARM
275 – POWER ELECTRICAL
EQUIPMENT LAYOUT, DETAILS AND SERVICES PANEL PLAN VIEW

DESIGNED AND DRAWN BY	BRIAN FILDES, Tech.	2016-06-22
REVIEWED AND CHECKED BY	RÉJEAN HÉNAULT, Tech.	2016-06-22
APPROVED AND APPROVED BY	LUC SÉNÉCAL, P.Eng.	2017-07-11
FEASIBLE SCALE	INDICATED	DATE 2016-01-25

NO. INTERN DRAWING NO.: 65-116-275-202

NO. PROJECT / PROJECT NO.	REVISION	FEUILLE / SHT
6515	0	1 / 1

AZ-CARTOUCHE

\\Servernt01\Projet_fic-0203-07\151-06440-09\03-TECH_DRAWGE\Divers\Divers_Ens\65-116-275-202_RD.dwg 2013-08-16 14:03:36

FILE NO. 65-116-275-202_RD.dwg

NO. DESSIN / DRAWING NO. 65-116-275-203_R1

FORMAT ANSI B-11x17

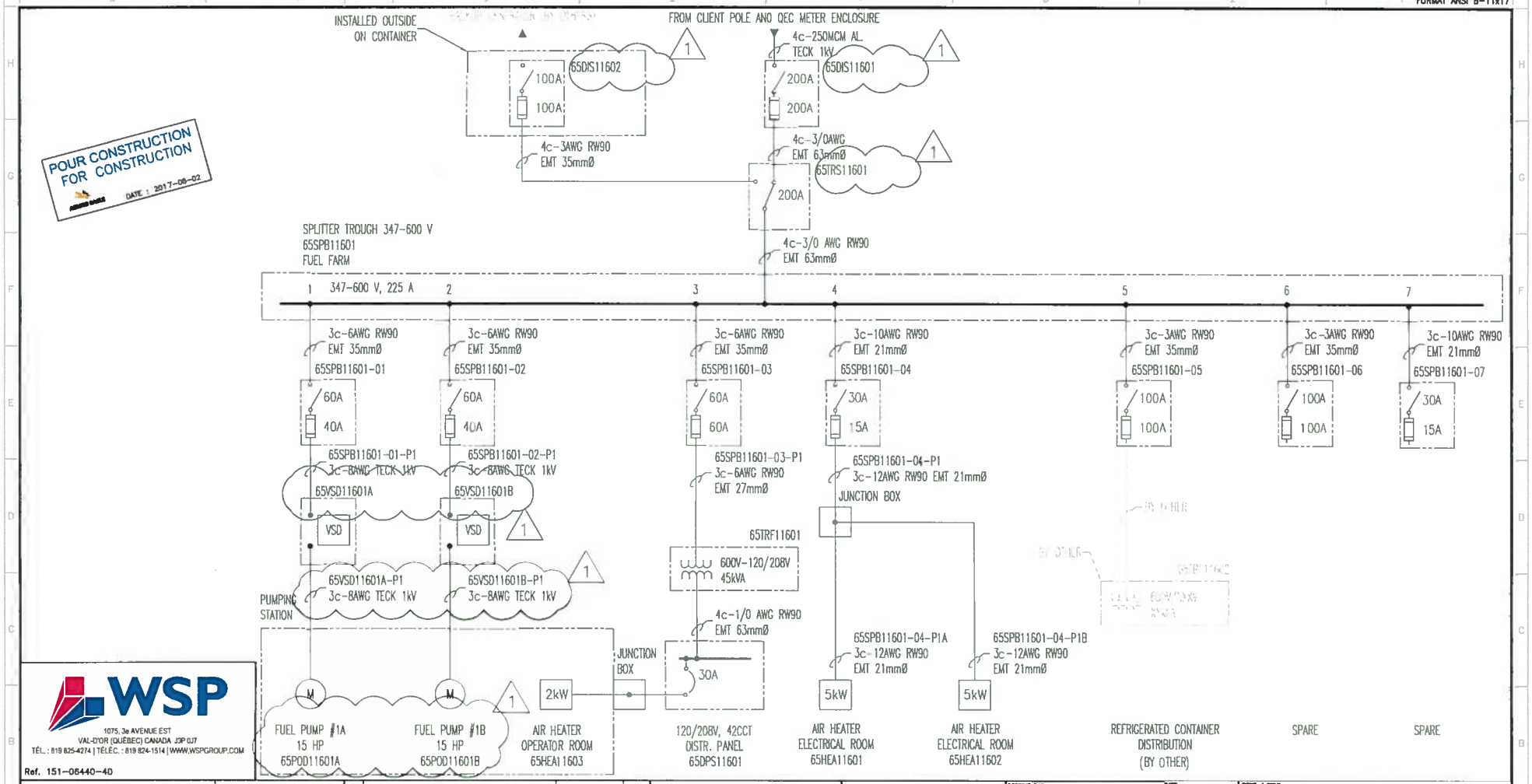

POUR CONSTRUCTION
FOR CONSTRUCTION
DATE : 2017-08-02

WSP
1075, 3e AVENUE EST
VAL-D'OR (QUÉBEC) CANADA J9P 0J7
TÉL. : 819 825-4274 | TÉLÉC. : 819 824-1514 | WWW.WSPGROUP.COM

Ref. 151-06440-40

–	–				
–	–				
–	–				
–	–	1	ISSUED FOR CONSTRUCTION	2017-08-02	R.H.
600V DISTRIBUTION PANEL SINGLE LINE DIAGRAM	65-103-275-203	0	ISSUED FOR CONSTRUCTION	2017-07-11	F.M.G.
TITRE / TITLE	# DWG	REV	DESCRIPTION	DATE	PAR BY

DESSINS EN RÉFÉRENCE / REFERENCE DRAWINGS

REVISIONS

AGNICO EAGLE

REGISTERED PROFESSIONAL ENGINEER L3514 LICENSEE 2017-08-03

DESSINÉ PAR / DRAWN BY	BRIAN FILDES, Tech.	2016-06-22
VÉRIFIÉ PAR / CHECKED BY	RÉMI HÉNAULT, Tech.	2016-06-22
APPROUVÉ PAR / APPROVED BY	LUC SÉNÉCAL, P.Eng.	2017-07-11
No. PROJET / PROJECT NO.	6515	
DATE	2015-12-15	

TITRE / TITLE
AGNICO EAGLE – MELIADINE DIVISION
116 – FUEL TANK FARM
275 – POWER ELECTRICAL
600V DISTRIBUTION PANEL
SINGLE LINE DIAGRAM

ÉCHELLE / SCALE	NONE	FICHIER / FILE	65-116-275-203_R1.DWG
No. DESSIN / DRAWING NO.	65-116-275-203	REVISION	1
		FEUILLE / SHT	1 / 1

AE-CART-ANSI B

\\CaVda1Dat01\Projet_15X-XXXX-XX\151-06440-40\01-COMM\Envoyé_AEM\WSP-AEM-151-06440-40-849 (116 and 416 changing equipment number)\65-116-275-203_R1.dwg-2017-08-03 10:21:21

65-116-275-204_R0

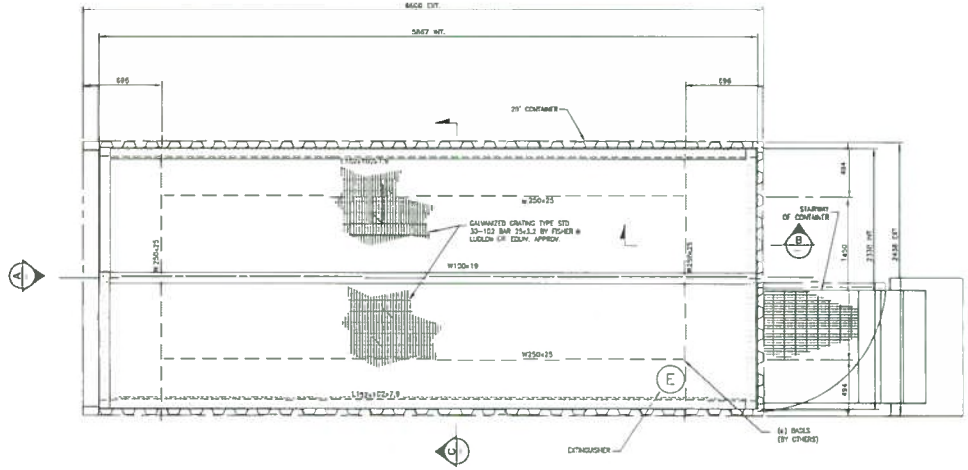

20' CONTAINER
ELECTRICAL ROOM FLOOR (1)
SCL: 1:20

- 20' STANDARD CONTAINER (WOOD FLOOR REPLACED BY STEEL BY SUPPLIER)
- GRATING IS BOLTED (WELDING IS NOT PERMITTED)
- LEVELLING SHIMS MUST BE INSTALLED ON L152x102X7.9
- GRATING SECTION 300mm LARGE (INSTALLED ON CIRCULATION AREA)
- CONTAINER FLOOR MUST HAVE A SLIGHT SLOPE TOWARDS ACCESS DOORS

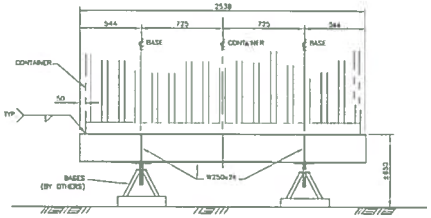

ELEVATION (A)
SCL: 1:20
(1) ARRANGEMENT ELECTRICAL ROOM

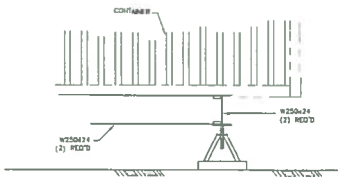

ELEVATION (B)
SCL: 1:20
(1) ARRANGEMENT ELECTRICAL ROOM

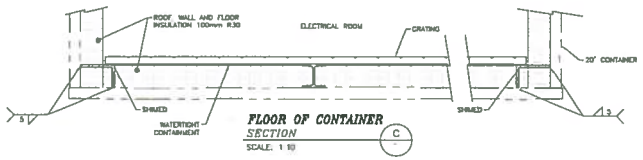

FLOOR OF CONTAINER
SECTION (C)
SCALE: 1:10

POUR CONSTRUCTION
FOR CONSTRUCTION
DATE: 2017-07-11



WSP
1615 3e AVENUE EST
VAL-D'OR (QUEBEC) CANADA J9P 0J2
TEL.: (819) 825-4274 | TEL.: (819) 824-1514 | WWW.WSPGROUP.COM
Ref.: 151-00440-40

NOTES GENERALES / GENERAL NOTES

DESSINS EN REFERENCE / REFERENCE DRAWINGS

Dwg. / Title	# Dwg.
MODIFICATIONS & ADDITIONS AT THE CONTAINERS	65-116-275-204
LIGHTING	65-116-205-201
GROUNDING LAYOUT	65-116-275-201
EQUIPMENT LAYOUT	65-116-275-202

AGNICO EAGLE

Rev.	Date	Description	Project	Dept.	Client
0	2017-07-11	ISSUED FOR CONSTRUCTION	J.M.E.	L.S.	

REVISIONS

DWG / TITLE
AGNICO EAGLE – MELIADINE DIVISION
116 – FUEL TANK FARM
275 – POWER ELECTRICAL
ELECTRICAL ROOM
MODIFICATIONS & ADDITIONS AT THE CONTAINERS

DESSINÉ PAR / DRAWN BY	RÉMI HÉNAULT, Tech.	DATE 2016-06-22
VÉRIFIÉ PAR / CHECKED BY	RÉMI HÉNAULT, Tech.	2016-06-22
APPROUVÉ PAR / APPROVED BY	LUC SENECAL, P.Eng.	2017-07-11
ÉCHELLE / SCALE	INDICATED	DATE 2016-02-02
NO. DESSIN / DRAWING NO.	65-116-275-204	
NO. PROJET / PROJECT NO.	6515	REVISION 0 / FEUILLE / SHT 1/1

FILE NO. 65-116-275-204_R0.dwg

65-116-275-206_R0

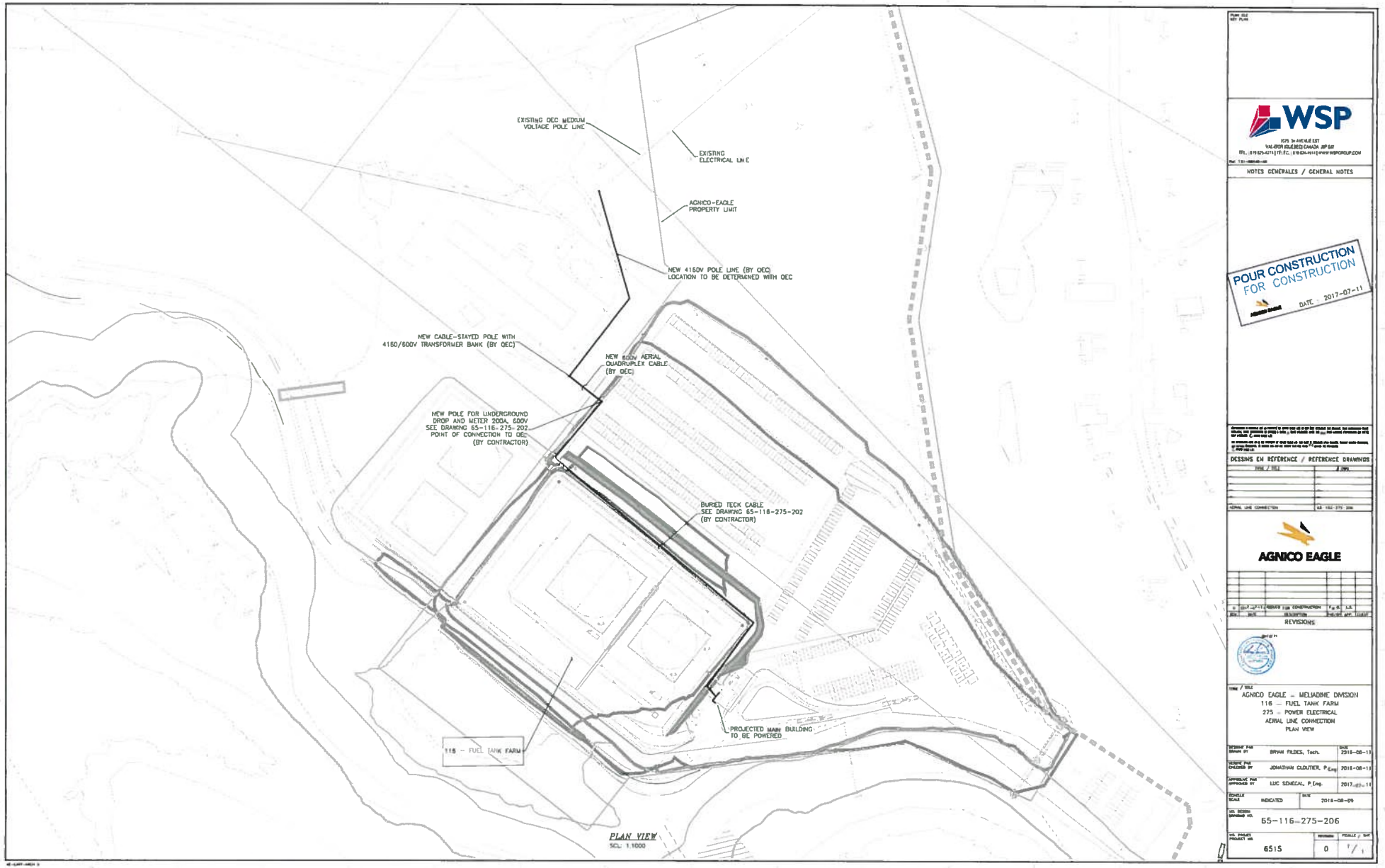

WSP
1525 3e AVENUE EST
VAL-D'OR (QUÉBEC) CANADA J9P 0J2
TEL.: 819 825-4274 | TÉLÉC.: 819 826-1414 | www.wspgroup.com

NOTES GÉNÉRALES / GENERAL NOTES

POUR CONSTRUCTION
FOR CONSTRUCTION
DATE : 2017-07-11

DESSINS EN RÉFÉRENCE / REFERENCE DRAWINGS

TYPE / TITLE	# DWG
AERIAL LINE CONNECTION	65-116-275-206

AGNICO EAGLE

REV.	DATE	DESCRIPTION	PREPARED APP. ISSUED
0	2017-07-11	ISSUED FOR CONSTRUCTION	F.G. L.S.

REVISIONS

TITLE / TITRE
AGNICO EAGLE – MEADOWBANK DIVISION
116 – FUEL TANK FARM
275 – POWER ELECTRICAL
AERIAL LINE CONNECTION
PLAN VIEW

DESIGNED FOR / DESSINÉ PAR	BRYAN FILDES, Tech.	2018-08-13
VERIFIED FOR / VÉRIFIÉ PAR	JONATHAN CLOUTIER, P.Eng.	2018-08-13
APPROVED FOR / APPROUVÉ PAR	LUC SENECAL, P.Eng.	2017-07-11
SCALE / ÉCHELLE	INDICATED	DATE 2018-08-09

NO. DESSIN / DRAWING NO.
65-116-275-206

NO. PROJET / PROJECT NO.	REVISION	FEUILLE / SHT
6515	0	1 / 1

FILE NO. 65-116-275-206_R0.dwg

65-116-285-200_R0

FORMAT ARCH D

ELECTRICAL LEGEND (DRV. 16)

LIGHTING FIXTURES

- CEILING MOUNTED LUMINAIRE (IN OR CANOPY)
- WALL MOUNTED LUMINAIRE
- EMERGENCY BATTERY UNIT (WHERE NEEDED)
- (A) INDICATES PIPE-SIZE LIGHTING STANDARD
  (B) INDICATES ELECTRICAL PANEL
  (C) INDICATES CIRCUIT NUMBER
  (D) INDICATES SWITCHING TIMECH

LIGHTING CONTROL

- S_A — (A) INDICATES FIXTURES CONTROLLED
  3A — "A" INDICATES 3 WIRE -WAY SWITCH
  4A — "A" INDICATES 4 FOUR -WAY SWITCH
- PHOTOCELL

LUMINAIRES

TYPE	MANUFACTURER	CATALOGUE NUMBER	MOUNTING TYPE	WIDTH	APPROX POWER (W)	LAMP	COLOR	VOLTAGE	DESCRIPTION
A1	DAYLIGHT	HCM3CXL 4 MCWP	SURF	NO.	97	LED	5000°K	120	OUTDOOR PERIMETER AREA LIGHT C/W ACCESSORIES
W1	LUMACELL	RGS 30W 3' LSY	SURF	220mm	430	LED	5000°K	120	EMERGENCY BATTERY UNITS COMBINE WITH 2 HEADS LIGHT
EP	PRECISION ALLO CONTROLS	TC 450P	SURF	N.C.S.	-	-	-	24	AMBIENT PHOTOELECTRIC CELL

SURF = SURFACE MOUNTED — FLUO = FLUORESCENT — WALL = MOUNTED ON PLAN
REC = RECESSED — LED = LIGHT EMITTING DIODE — NOTE: MOUNTING HEIGHT TO BE CHECK ON SITE

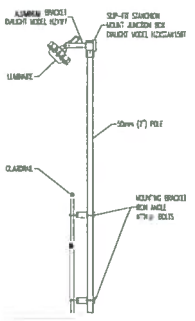

TYPICAL LUMINAIRE INSTALLATION
MOUNTED ON GUARDRAIL
SCL. NONE

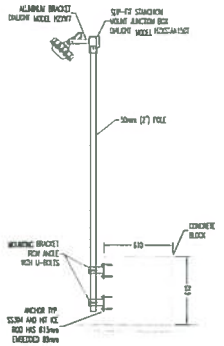

TYPICAL LUMINAIRE INSTALLATION
MOUNTED ON CONCRETE SUPPORT
SCL. NONE

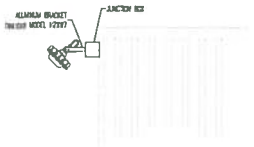

TYPICAL LUMINAIRE INSTALLATION
MOUNTED ON CONTAINER
SCL. NONE

WSP
1075, 3e A.-FYLOT EST
VAL-D'OR (QUÉBEC) CANADA J9P 6J7
TEL.: 819 826-4274 | TÉLÉC.: 819 824-1544 | WWW.WSPGROUP.CA

NOTES GENERALES / GENERAL NOTES

POUR CONSTRUCTION
FOR CONSTRUCTION
DATE : 2017-07-11

DESSINS EN REFERENCE / REFERENCE DRAWINGS

TYPE / DISC	# DWG
-	-
-	-
-	-
-	-
LIGHTING (GENERAL TABLE & INSTALLATION DETAILS)	65-116-285-200

AGNICO EAGLE

REV.	DATE	DESCRIPTION	PREPARED	APP.	CLIENT
0	2017-07-11	ISSUED FOR CONSTRUCTION	F.G.	C.S.	

REVISIONS

TYPE / DISC
AGNICO EAGLE – MEADOWE DIVISION
116 – FUEL TANK FARM
285 – LIGHTING & SERVICES
LIGHTING
LEGEND, TABLE & INSTALLATION DETAILS

DESIGNED / DESSINÉ PAR	BRIAN FILDES, Tech.	2016-08-22
CHECKED / VÉRIFIÉ PAR	REMI MENARD, Tech.	2016-08-22
APPROVED / APPROUVÉ PAR	LUC SENECAL, P.Eng.	2017-07-11
SCALE / ÉCHELLE	INDICATED	DATE 2015-12-01
DRAWING NO. / NO. DESSIN	65-116-285-200	
PROJECT NO. / NO. PROJET	6515	REVISION 0
		SHEET / FEUILLE 1 / 1

FILE NO. 65-116-285-200_R0.dwg

NO. DESIGN DRAWING NO. 65-116-285-201_R0

FORMAT ARCHO

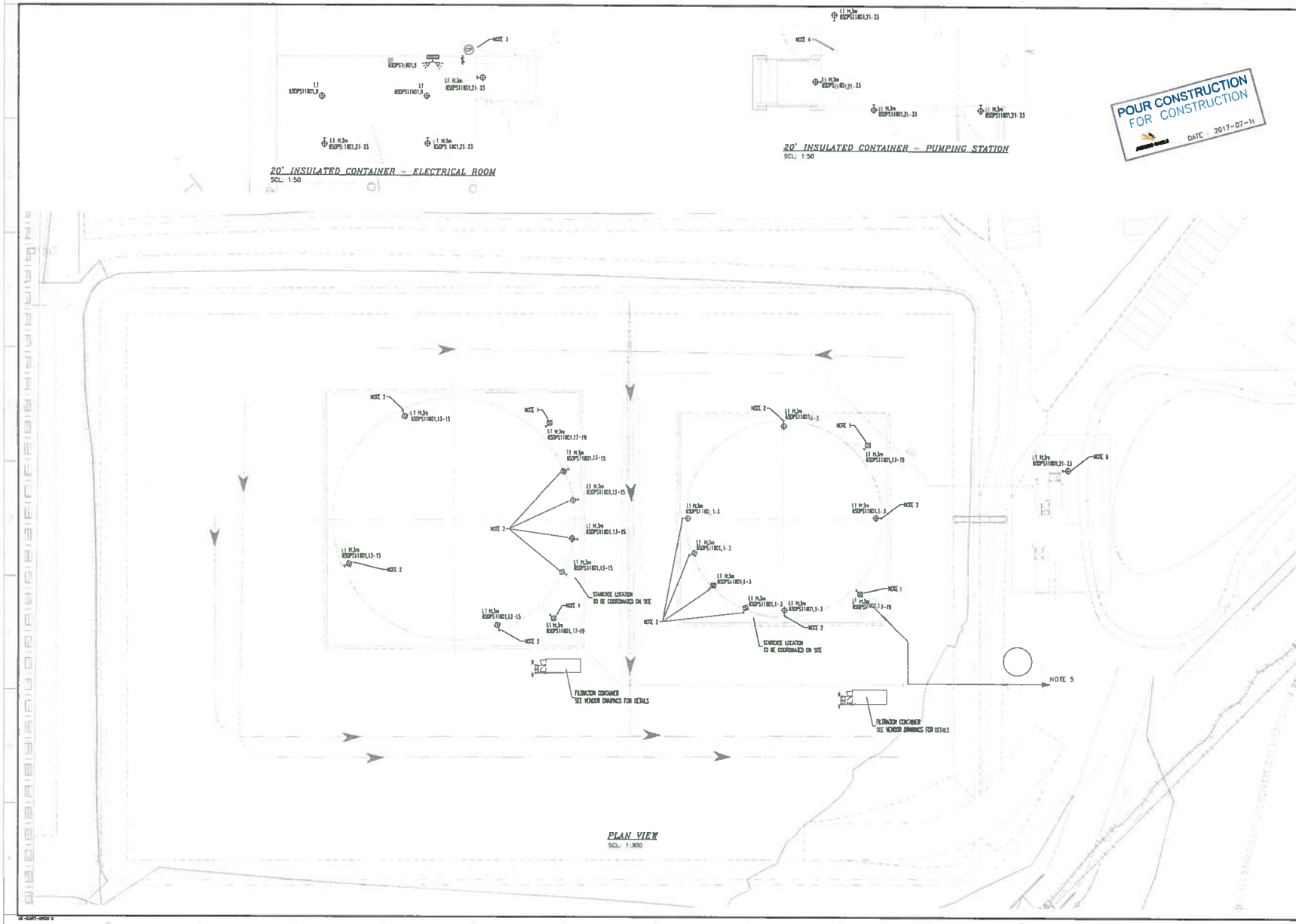



WSP

1600 3e AVENUE EST
VAL-D'OR (QUÉBEC) CANADA J9P 0J7
TEL.: 819 825-4774 | TELEC.: 819 824-1514 | WWW.WSPGROUP.COM

NOTES GENERALES / GENERAL NOTES

1. INSTALL THIS LUMINAIRE NEAR VALVES AND INSTALL THE LUMINAIRE'S POLE ON CONCRETE SUPPORT. REFER TO TYPICAL INSTALLATION ON PLAN 65-116-285-200.
2. INSTALL THE LUMINAIRE'S POLE ON THE GUARDRAIL. REFER TO TYPICAL INSTALLATION ON PLAN 65-116-285-200.
3. CONNECT THIS PHOTOELECTRIC CELL TO THE LIGHTING CONTACTOR IN ELECTRICAL ROOM. THIS LIGHTING CONTACTOR WILL CONTROL ALL OF THE LIGHTING SHOWN ON THIS DRAWING.
4. THE PUMPING STATION CONTAINER COMES PREWIRED WITH INDOOR LIGHTING AND SERVICES PREINSTALLED. SEE NOTE 1 ON PLAN 65-116-275-202.
5. INSTALL LIGHTING FIXTURE AT THE SUPPLY LINE TERMINAL 3C12AWG TECK TO LIGHTING FIXTURE, L1 TYPE ON POLE (SEE TYPICAL INSTALLATION) AT THE SUPPLY LINE TERMINAL CIRCUIT : 65DPS11601,3
6. INSTALL LUMINAIRE ON CONCRETE CLOSE TO THE LOADING ARM (50 LUX IS REQUIRED AT THE CONNECTION POINT).

DESSINS EN RÉFÉRENCE / REFERENCE DRAWINGS

TITRE / TITLE	# DWG
LIGHTING PLAN VIEW	65-116-285-201
LEGEND, TABLE & INSTALLATION DETAILS	65-116-285-200
EQUIPMENT LAYOUT, DETAILS AND PANEL	65-116-275-202

AGNICO EAGLE

REV	DATE	DESCRIPTION	PROJECT	APP	CLIENT
0	2017-07-11	ISSUED FOR CONSTRUCTION	F.R.B.	L.A.	

REVISIONS

TITRE / TITLE
AGNICO EAGLE – MELIADINE DIVISION
116 – FUEL TANK FARM
285 – LIGHTING & SERVICES
LIGHTING
PLAN VIEW

DESIGNÉ PAR / DRAWN BY	BRIAN FILDES, Tech.	DATE 2016-06-22
VÉRIFIÉ PAR / CHECKED BY	RÉMI HÉNAULT, Tech.	2016-06-22
APPROUVÉ PAR / APPROVED BY	LUC SÉNÉCAL, P.Eng.	2017-07-11
ÉCHELLE / SCALE	INDICATED	DATE 2016-02-11
NO. DESIGN / DRAWING NO.	65-116-285-201	
NO. PROJET / PROJECT NO.	6515	REVISION 0 / FEUILLE / SHT 1/1

FILE NO. 65-116-285-201_R0.dwg

65-ULT-116-EL-002

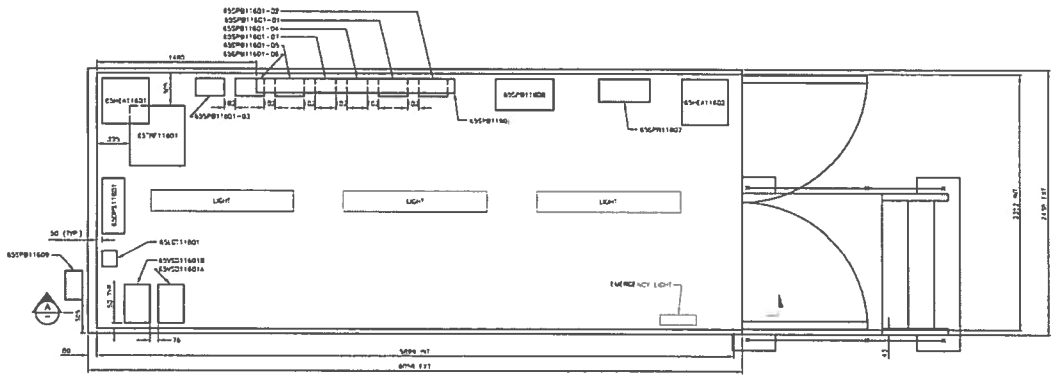

PLAN VIEW 1
SCALE: 1:20
RANKIN INLET ELECTRICAL ROOM
ELECTRICAL EQUIPMENT LAYOUT

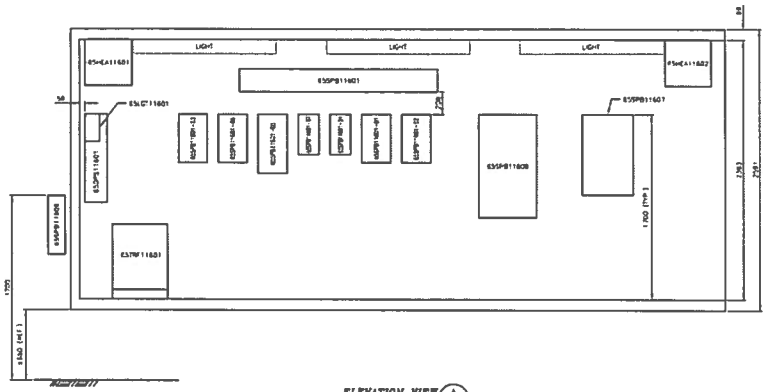

ELEVATION VIEW A
SCALE: 1:20
RANKIN INLET ELECTRICAL ROOM
ELECTRICAL EQUIPMENT LAYOUT

PERMIT TO PRACTICE
LE GROUPE ULTRAGEN LTÉE
Signature
Date SEP 2 1 2017
PERMIT NUMBER: P 1180
NT/NU Association of Professional Engineers and Geoscientists

REGISTERED PROFESSIONAL ENGINEER
13627
D CARRIER
LICENSEE
NT/NU
SEP 2 1 2017

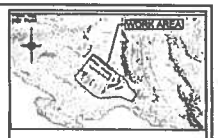

NOTES GENERALES / GENERAL NOTES

1. HEATER UNITS ARE CEILING MOUNTED.
2. FOR EQUIPMENT IDENTIFICATION REFER TO THE MATERIAL LIST.

ISSUED FOR CONSTRUCTION
ultragen

DESSINS EN REFERENCE / REFERENCE DRAWINGS

AGNICO EAGLE

REVISIONS

ultragen

AGNICO EAGLE – MELIADINE DIVISION
116 – FUEL TANK FARM
FUEL DISTRIBUTION
RANKIN INLET ELECTRICAL ROOM
ELECTRICAL EQUIPMENT LAYOUT

DESIGNED BY	RENI SHRESTHA	2017-05-04
VERIFIED BY	MARC TREMBLAY	2017-05-04
APPROVED BY	DANIEL CARRIER	2017-05-04
SCALE	1:20	2017-05-04

65-ULT-116-EL-002

6515 | 2 | 1/1

FILE NO.

65-ULT-116-EL-003

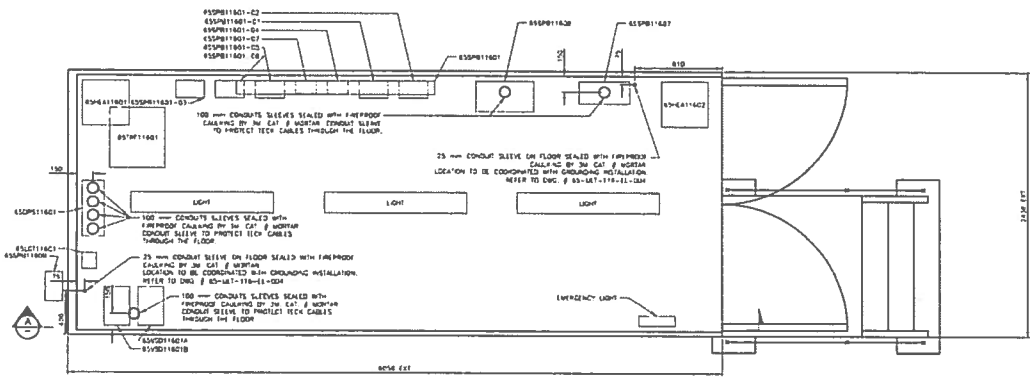

PLAN VIEW 1
SCALE: 1:20
RANKIN INLET ELECTRICAL ROOM
FLOOR OPENING

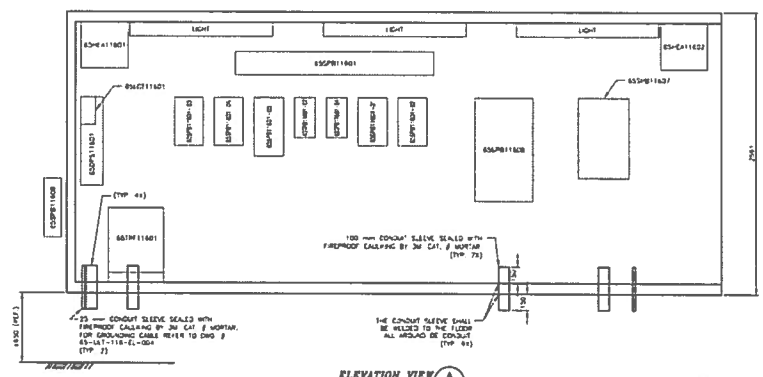

ELEVATION VIEW A
SCALE: 1:20
RANKIN INLET ELECTRICAL ROOM
FLOOR OPENING

PERMIT TO PRACTICE
LE GROUPE ULTRAGEN LTÉE
Signature
Date SEP 2 1 2017
PERMIT NUMBER: P 1180
NT/NU Association of Professional Engineers and Geoscientists

REGISTERED PROFESSIONAL ENGINEER
L3677
D. CARRIER
LICENSEE
SEP 2 1 2017

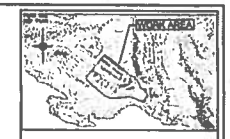

NOTES GENERALES / GENERAL NOTES

1. USE TIP AT EACH ENDS OF THE CONDUITS SLEEVES.

ISSUED FOR CONSTRUCTION
Ultragen DATE: SEPT 2017

DESSINS EN REFERENCE / REFERENCE DRAWINGS

TYPE / SIZE	# DWG
ELECTRICAL STAIRWAY LAYOUT 02-116	65-ULT-116-EL-002
GROUNDING LAYOUT 02-116	65-ULT-116-EL-004

AGNICO EAGLE

REVISIONS

ULTRAGEN

AGNICO EAGLE – MELIADINE DIVISION
116 – FUEL TANK FARM
FUEL DISTRIBUTION
RANKIN INLET ELECTRICAL ROOM
FLOOR OPENINGS

DESSINÉ PAR / DRAWN BY	REBIN SHRESTHA	2017-05-04
DESSINÉ PAR / CHECKED BY	STÉPHANE GRIMARD	2017-05-04
APPROUVÉ PAR / APPROVED BY	DANIEL CARRIER	2017-05-04
ÉCHELLE / SCALE	1:20	DATE 2017-05-04

65-ULT-116-EL-003

NO. PROJET / PROJECT NO.	REVISION	FEUILLE / SHEET
6515	2	1 / 1

FILE NO.

65-ULT-116-EL-004

FORMAT ARCH D

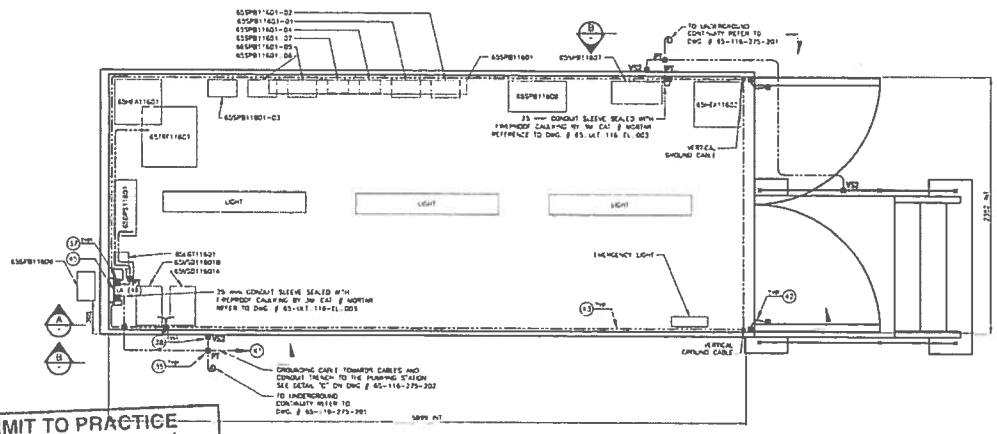

PLAN VIEW (1)
SCALE: 1:20
RANKIN INLET ELECTRICAL ROOM GROUNDING

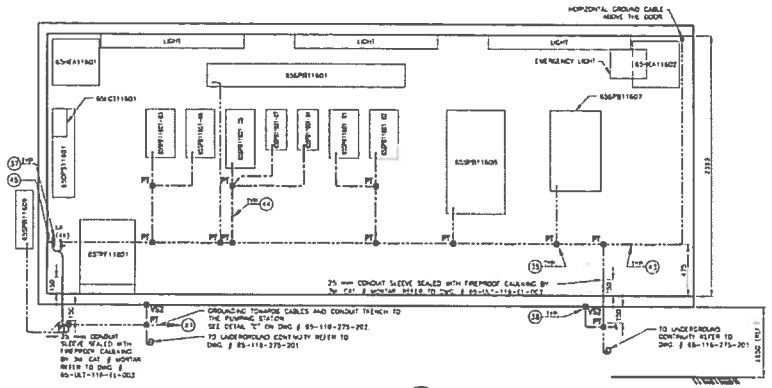

ELEVATION VIEW (A)
SCALE: 1:30
RANKIN INLET ELECTRICAL ROOM GROUNDING

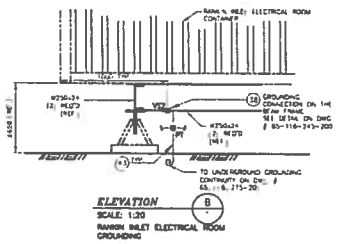

ELEVATION (B)
SCALE: 1:20
RANKIN INLET ELECTRICAL ROOM GROUNDING

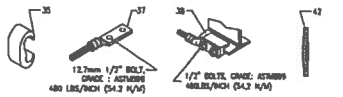

CONNECTOR TYPES - BURNDY AND THOMAS & BETTS
SCALE: NTS
CABLE TYPES MAY BE DIFFERENT THAN SHOWN ON THE

PERMIT TO PRACTICE
LE GROUPE ULTRAGEN LTÉE
Signature
Date SEP 2 1 2017
PERMIT NUMBER: P 1180
NT/NU Association of Professional Engineers and Geoscientists

EQUIPMENT LIST

ITEM / ARTICLE	SYMBOL	DESCRIPTION	MANUF.	TYPE	NOTE
35	PT	CONNECTION - PARALLEL HORIZONTAL CONDUCTORS COMPRESSED CONNECTOR FOR TWO PARALLEL HORIZONTAL CONDUCTORS. CABLE SIZE: 2/0AWG, TAP CABLE SIZE: 2/0AWG CABLE SIZE: 4/0AWG, TAP CABLE SIZE: 2/0AWG CABLE SIZE: 4/0AWG, TAP CABLE SIZE: 4/0AWG	BURNDY	YGHC26C28 YGHC26C28 YGHC29C29	
37	LA	CONNECTION - HEAVY DUTY TERMINALS HEAVY DUTY TERMINALS DESIGNED TO CARRY SHORT CIRCUIT LOAD AND WITHSTAND HIGH MECHANICAL STRESS. CABLE SIZE: 2/0AWG CABLE SIZE: 4/0 AWG COMPLETE WITH NON-CORROSIVE HARDWARE SUCH AS: BOLT, FLAT WASHER, LOCKWASHERS, NUTS AND INHIBITING COMPOUNDS TO PREVENT OXIDATION OR CORROSION.	BURNDY	YCHA26-2N YCHA28-2N	
38	VS2	CONNECTION - STRUCTURE CONNECTION USED FOR VERTICAL STEEL SURFACE (STRUCTURAL BEAMS) CABLE SIZE 4/0AWG ON CONTAINER BEAM FRAME. CABLE SIZE 4/0AWG ON CHANNEL OF CATWALK. COMPLETE WITH HARDWARE	BURNDY	YGHN28-338-2N YGHS28-400-2N TUHC-42	EVERY BURNDY YGB CONNECTO (VS2) MUST BE COMBINED WITH A YCHA HEAVY DUTY TERMINAL (LA) AND 2 NUTS OF ADEQUATE SIZE FOR THE TERMINAL.
42		BONDING JUMPER PREFABRICATED COPPER JUMPER, FOR EXPANSION JOINTS AND ADJUSTABLE JOINTS 1 BRAIDS AND 2 BOLTS HOLD BY CONNECTION.	THOMAS & BETTS	FBE12-1	
43		COPPER GROUNDING CONDUCTOR 4/0 AWG, BARE, FLEXIBLE, TINNED, 19 STRANDS (ASTM STANDARDS B8 AND B33).	PHILLIPS CABLES		
44		COPPER GROUNDING CONDUCTOR 2/0 AWG, BARE, FLEXIBLE, TINNED, 19 STRANDS (ASTM STANDARDS B8 AND B33).	PHILLIPS CABLES		
45		COPPER BUS BAR BUS BAR 25x(10") X 102(4") X 6(0.25") BRACKETS AND ISOLATORS INCLUDED	BURNDY	BBB-14410C	
	PHG	COPPER CONDUCTOR IDENTICAL CHARACTERISTICS FOR FUTURE CONNECTIONS. THE LENGTH TO RESERVE IS SPECIFIED ON THE SYMBOL.	PHILLIPS CABLES		

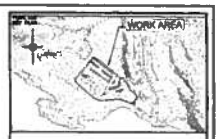

NOTES GENERALES / GENERAL NOTES

REGISTERED PROFESSIONAL ENGINEER 13627 D. CARRIER LICENSEE NT/NU SEP 21 2017

ISSUED FOR CONSTRUCTION
ultragen DATE: SEPT 2017

DESIGNS ON REFERENCE / REFERENCE DRAWINGS

DRAWING NO.	TITLE
65-116-275-204	SHOP + DISPOSAL OF PIT EXCAVATION
65-116-275-203	ENABLE LINE ENGINE
65-116-275-202	LINE TO TANK FARM - METAL WAY TERMINALS
65-116-275-201	GROUNDING CABLE PLAN VIEW
65-116-275-001	LEGEND, TABLES AND DETAILS
65-116-275-000	

AGNICO EAGLE

NO.	DESCRIPTION	BY	DATE
1	ISSUED FOR CONSTRUCTION	S.S.	D.C.
2	ISSUED FOR CONSTRUCTION	S.S.	D.C.
3	ISSUED FOR CONSTRUCTION	S.S.	D.C.
4	ISSUED FOR REVIEW	S.S.	D.C.
5	ISSUED FOR REVIEW	S.S.	D.C.
6	ISSUED FOR REVIEW	S.S.	D.C.
7	ISSUED FOR REVIEW	S.S.	D.C.

REVISIONS

ultragen
NO. PROJET PROJECT NO. 591700

AGNICO EAGLE - MEADOWBANK DIVISION
116 - FUEL TANK FARM
FUEL DISTRIBUTION
RANKIN INLET ELECTRICAL ROOM GROUNDING

DESIGNED BY / DESSINÉ PAR	ROSH SHRESTHA	2017-08-04
CHECKED BY / VÉRIFIÉ PAR	STEPHANE DRIMARD	2017-08-04
APPROVED BY / APPROUVÉ PAR	DANIEL CARRIER	2017-08-04
SCALE / ÉCHELLE	1:20	DATE 2017-08-04

NO. DESSIN / DRAWING NO. 65-ULT-116-EL-004

NO. PROJET / PROJECT NO. 8515 | Division 2 | Révision / Rev 1/1

FILE NO.

65-ULT-116-EL-005

FORMAT ARCHD

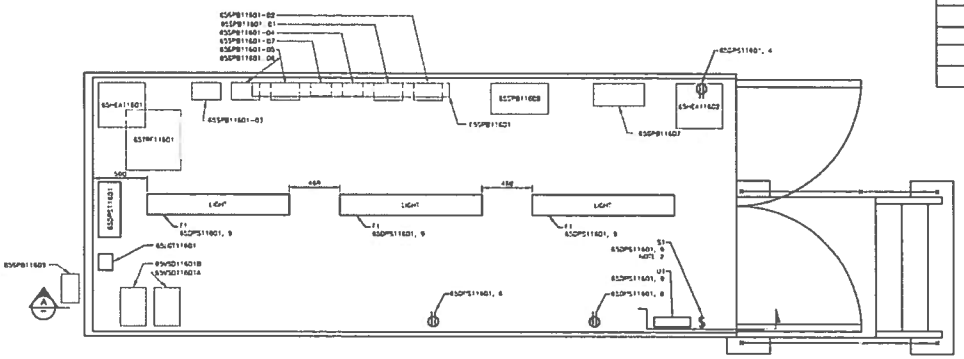

PLAN VIEW (1)
SCALE: 1:20
RANKIN INLET ELECTRICAL ROOM
LIGHTING AND SERVICES

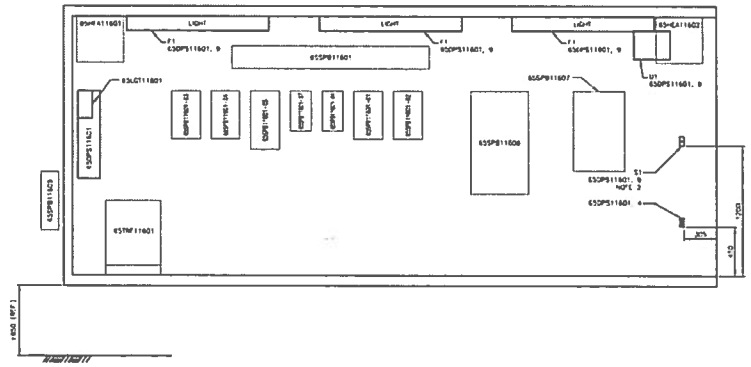

ELEVATION VIEW (A)
SCALE: 1:20
RANKIN INLET ELECTRICAL ROOM
LIGHTING AND SERVICES

MATERIAL LIST					
[illegible]	[illegible]	[illegible]	[illegible]	[illegible]	[illegible]
[illegible]	[illegible]	[illegible]	[illegible]	[illegible]	[illegible]
[illegible]	[illegible]	[illegible]	[illegible]	[illegible]	[illegible]
[illegible]	[illegible]	[illegible]	[illegible]	[illegible]	[illegible]

PERMIT TO PRACTICE
LE GROUPE ULTRAGEN LTÉE
Signature
Date SEP 2 1 2017
PERMIT NUMBER: P 1180
NT/NU Association of Professional Engineers and Geoscientists

REGISTERED PROFESSIONAL ENGINEER
L3627
D. CARRIER
LICENSEE
NT/NU
SEP 2 1 2017

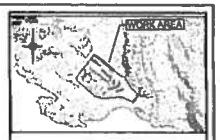

NOTES GENERALES / GENERAL NOTES

1. FOR OUTDOOR LIGHTING AND PHOTOCELL REFER TO WSP DRAWING #65-116-2102-201.
2. SWITCH FOR LIGHTING TYPE F1.

ISSUED FOR CONSTRUCTION
Ultragen

DESSINS EN REFERENCE / REFERENCE DRAWINGS

[illegible]	[illegible]
[illegible]	[illegible]
[illegible]	[illegible]

AGNICO EAGLE

[illegible]	[illegible]	[illegible]	[illegible]	[illegible]
[illegible]	[illegible]	[illegible]	[illegible]	[illegible]
[illegible]	[illegible]	[illegible]	[illegible]	[illegible]
[illegible]	[illegible]	[illegible]	[illegible]	[illegible]
[illegible]	[illegible]	[illegible]	[illegible]	[illegible]
[illegible]	[illegible]	[illegible]	[illegible]	[illegible]

REVISIONS

Ultragen
NO. PROJET / PROJECT NO. 891700

AGNICO EAGLE – MELIADINE DIVISION
116 – FUEL TANK FARM
FUEL DISTRIBUTION
RANKIN INLET ELECTRICAL ROOM
LIGHTING AND SERVICES

[illegible]	MARC TREMBLAY	2017-09-04
[illegible]	STÉPHANE GIRARD	2017-09-04
[illegible]	DANIEL CARRIER	2017-09-04
[illegible]	1:20	2017-09-04

NO. DESSIN / DRAWING NO. 65-ULT-116-EL-005

NO. PROJET / PROJECT NO.	[illegible]	FEUILLE / SHEET
6515	2	1/1

FILE NO.

65-ULT-116-EL-007

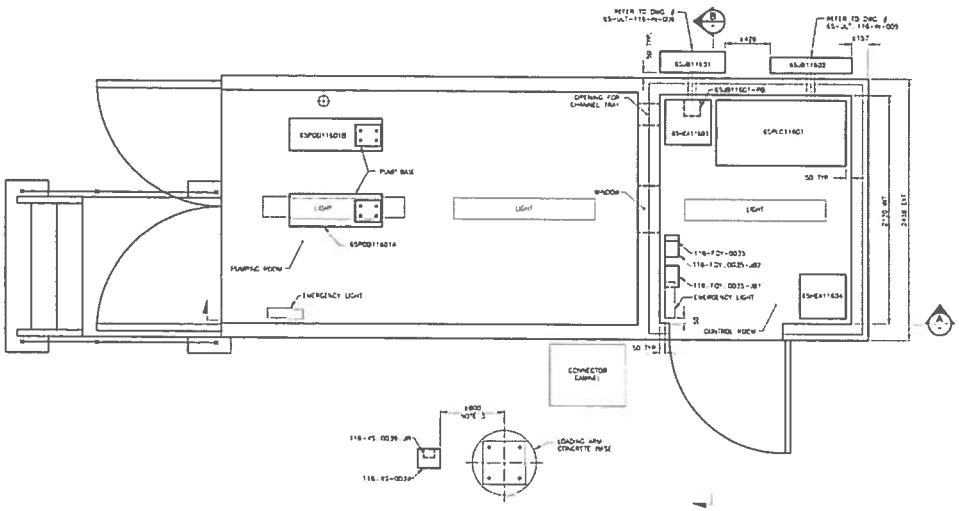

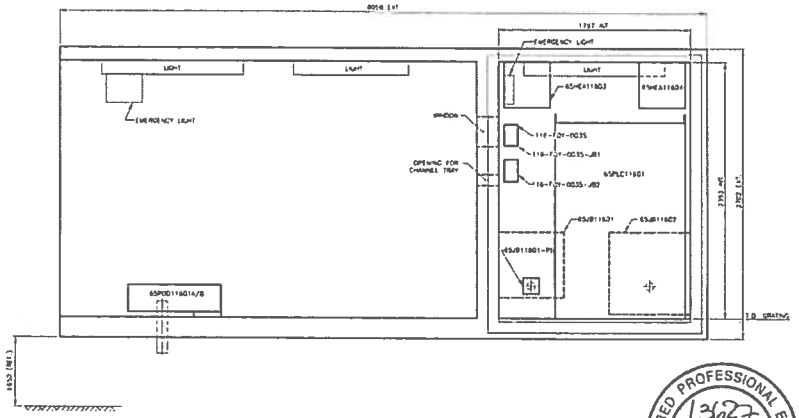

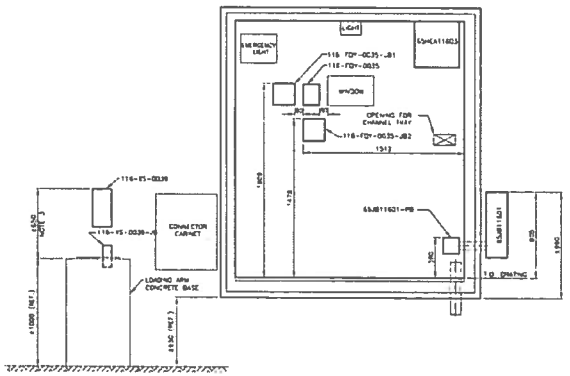

PERMIT TO PRACTICE
LE GROUPE ULTRAGEN LTÉE
Signature
Date AUG 18 2017
PERMIT NUMBER: P 1180
NT/NU Association of Professional Engineers and Geoscientists

REGISTERED PROFESSIONAL ENGINEER
L3627
D. CARRIER
LICENSEE
NT/NU
AUG 18 2017



NOTES GENERALES / GENERAL NOTES

1. HEATER UNITS ARE CEILING MOUNTED.
2. FOR EQUIPMENT IDENTIFICATION REFER TO THE MATERIAL LIST.
3. SUPPORT FOR "SCULLY" UNIT AND ITS JUNCTION BOX WITH PROFILE AT THE LOADING ARM CONCRETE BASE, TO BE "CANSTRUT" TYPE. COORDINATE THE POSITION TO AVOID INTERFERENCE WITH THE LOADING ARM MOVEMENT.

UPDATE AREA & TAG NUMBER
ultragen

DESSINS EN REFERENCE / REFERENCE DRAWINGS

AGNICO EAGLE

REVISIONS

ultragen

591700

AGNICO EAGLE – MELIADINE DIVISION
116 – COMBUSTIBLES
FUEL DISTRIBUTION
RANKIN INLET PUMPING STATION
ELECTRICAL EQUIPMENT LAYOUT

DESSINÉ PAR / DRAWN BY	RENÉ SHRESTHA	DATE 2017-08-15
VÉRIFIÉ PAR / CHECKED BY	STÉPHANE GRIMARD	2017-08-15
APPROUVÉ PAR / APPROVED BY	DANIEL CARRIER	2017-08-15
ÉCHELLE / SCALE 1:20	DATE 2017-08-15	

65-ULT-116-EL-007

NO. PROJET / PROJECT NO.	DESSIN	FEUILLE / SHT
6515	2	1/1

65-ULT-116-EL-007

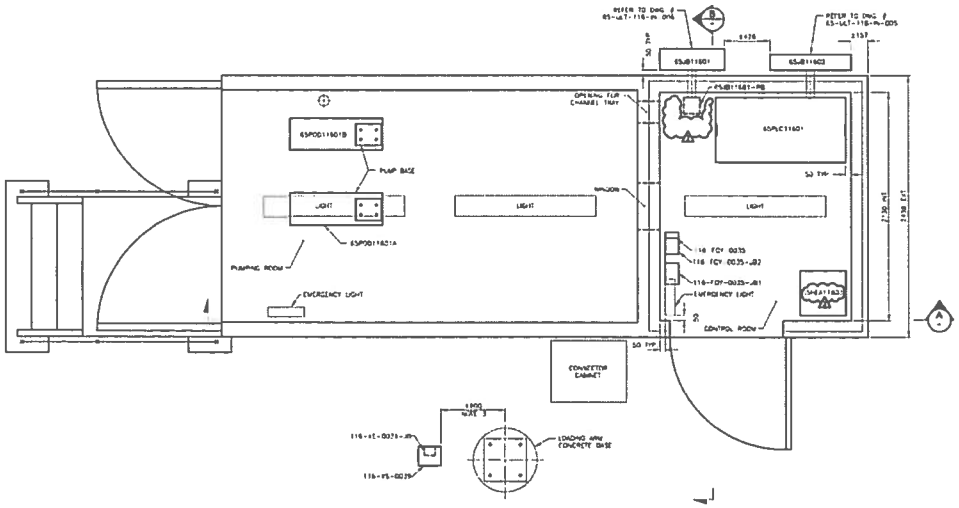

PLAN VIEW 1
SCALE: 1:20
RANKIN INLET PUMPING STATION
ELECTRICAL EQUIPMENT LAYOUT

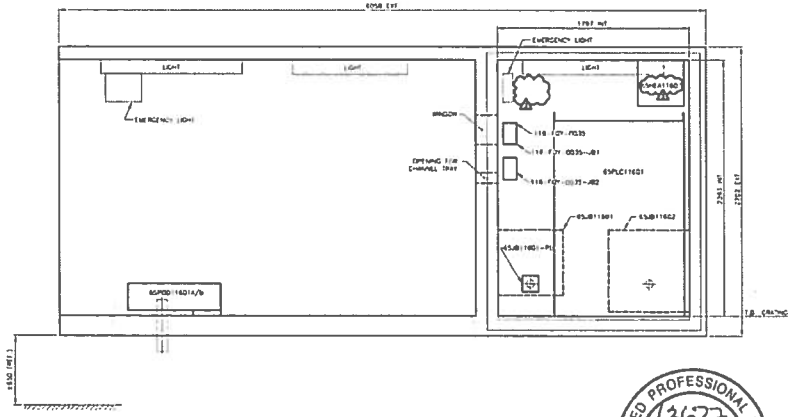

ELEVATION A
SCALE: 1:20
RANKIN INLET PUMPING STATION
ELECTRICAL EQUIPMENT LAYOUT

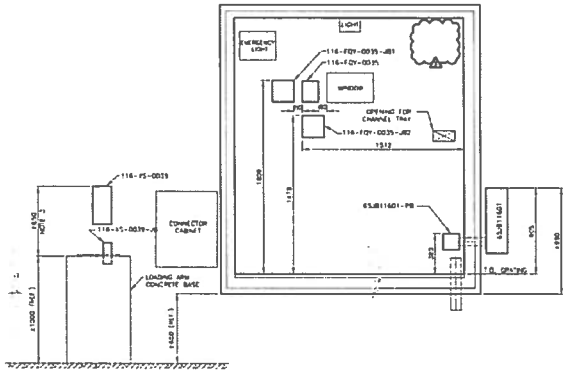

ELEVATION B
SCALE: 1:20
RANKIN INLET PUMPING STATION
ELECTRICAL EQUIPMENT LAYOUT

REGISTERED PROFESSIONAL ENGINEER
13627
D. CARRIER
LICENSEE
NT/NU
SEP 21 2017

PERMIT TO PRACTICE
LE GROUPE ULTRAGEN LTÉE
Signature
Date SEP 21 2017
PERMIT NUMBER: P 1180
NT/NU Association of Professional Engineers and Geoscientists

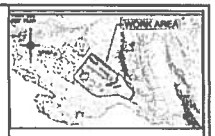

NOTES GENERALES / GENERAL NOTES

1. HEATER UNITS ARE CEILING MOUNTED.
2. FOR EQUIPMENT IDENTIFICATION REFER TO THE MATERIAL LIST.
3. SUPPORT FOR "SOULLY" UNIT AND ITS JUNCTION BOX WITH PROFILE AT THE LOADING ARM CONCRETE BASE, TO BE "CANSTRUT" TYPE. COORDINATE THE POSITION TO AVOID INTERFERENCE WITH THE LOADING ARM MOVEMENT.

ISSUED FOR CONSTRUCTION
ultragen DATE: SEPT 2017

DESSINS EN REFERENCE / REFERENCE DRAWINGS

AGNICO EAGLE

REVISIONS

NICOLAS PROVEC FYLING
ultragen
NO. PROJET PROJECT NO. 391700

TITRE / TITLE
AGNICO EAGLE – MELIADINE DIVISION
116 – FUEL TANK FARM
FUEL DISTRIBUTION
RANKIN INLET PUMPING STATION
ELECTRICAL EQUIPMENT LAYOUT

DESSINÉ PAR / DRAWN BY	RICHI SHRESTHA	DATE 2017-09-15
DESSINÉ PAR / CHECKED BY	STEPHANE GRIMARD	2017-09-15
APPROUVÉ PAR / APPROVED BY	DANIEL CARRIER	2017-09-15
ÉCHELLE / SCALE	1:20	DATE 2017-09-15

NO. DESSIN / DRAWING NO. 65-ULT-116-EL-007

NO. PROJET / PROJECT NO.	DRAWING	FEUILLE / SHT
6515	3	1/1

FILE NO.

65-ULT-116-EL-008

FORMAT ARCH D

PERMIT TO PRACTICE
LE GROUPE ULTRAGEN LTÉE
Signature
Date SEP 2-1-2017
PERMIT NUMBER: P 1180
NT/NU Association of Professional Engineers and Geoscientists

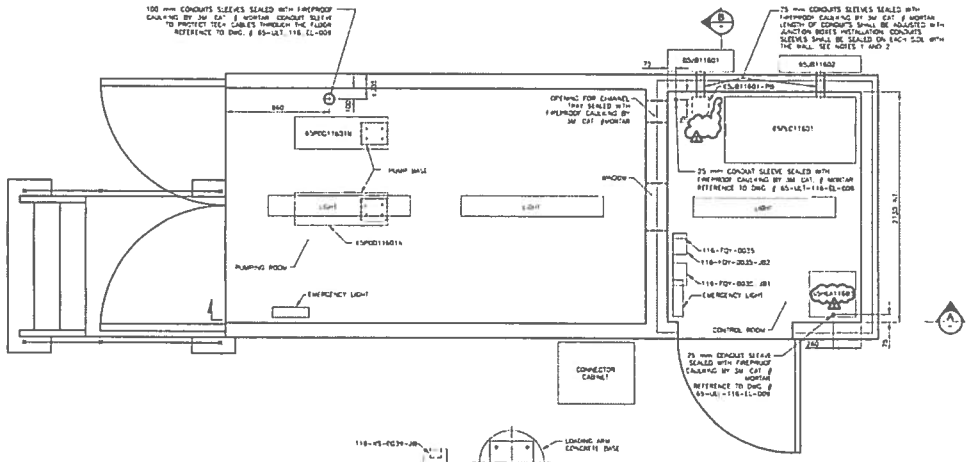

PLAN VIEW (1)
SCALE: 1:20
RANKIN INLET PUMPING STATION
FLOOR AND WALL OPENINGS

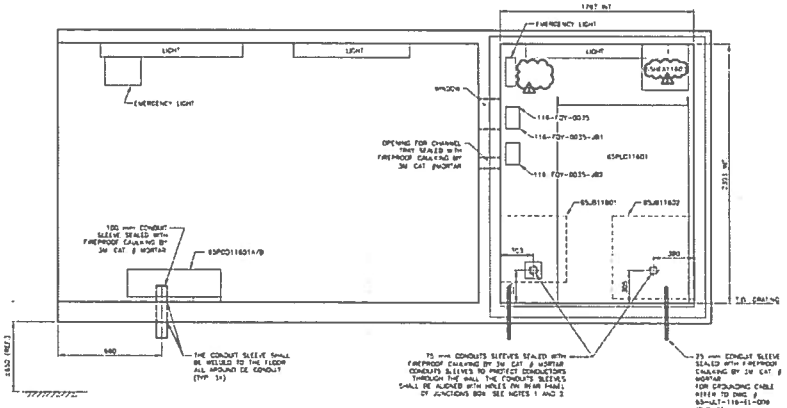

ELEVATION (A)
SCALE: 1:20
RANKIN INLET PUMPING STATION
FLOOR AND WALL OPENINGS

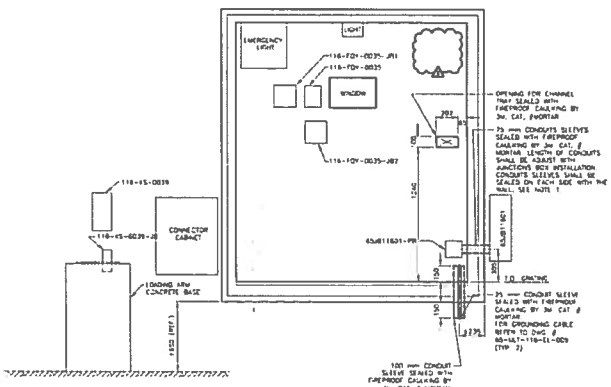

ELEVATION (B)
SCALE: 1:20
RANKIN INLET PUMPING STATION
FLOOR AND WALL OPENINGS

REGISTERED PROFESSIONAL ENGINEER
13627
D. CARRIER
LICENSEE
NT/NU
SEP 2 1 2017



NOTES GENERALES / GENERAL NOTES

1. PULL BOX 65JB11601-PB LINKED WITH CONDUIT SLEEVE TO JUNCTION BOX 65JB11601. THE CABLES INSIDE CONTROL ROOM END TO THE PULL BOX.
2. CABINET 65PLC11601 LINKED WITH CONDUIT SLEEVE TO JUNCTION BOX 65JB11602.
3. USE TIP AT EACH ENDS OF THE CONDUITS SLEEVES.

ISSUED FOR CONSTRUCTION
Ultragen DATE: SEPT 2017

DESSINS DE REFERENCE / REFERENCE DRAWINGS

TITRE / TITLE	# DWG
ELECTRICAL EQUIPMENT LAYOUT	65-ULT-116-EL-007
GROUNDING LAYOUT PUMPING STATION	65-ULT-116-EL-010

AGNICO EAGLE

2	2017-08-04	ISSUED FOR CONSTRUCTION	S.G.	S.G.
1	2017-08-04	UPDATE ADD 4 JB NUMBER	S.G.	S.G.
0	2017-08-04	ISSUED FOR CONSTRUCTION	S.G.	S.G.
PA	2017-08-04	ISSUED FOR REVIEW	S.G.	S.G.
NO.	DATE	DESCRIPTION	ISSUED APP.	CHECKED

REVISIONS

NUNAVUT PROJECT MANAGEMENT SERVICES
Ultragen
NO. PROJET / PROJECT NO. 201700

NOM / TITLE
AGNICO EAGLE – MEADOWBANK DIVISION
116 – FUEL TANK FARM A
FUEL DISTRIBUTION
RANKIN INLET PUMPING STATION
FLOOR AND WALL OPENINGS

DESSINE PAR / DRAWN BY	REMI BARIBEAU	2017-08-15
VERIFIE PAR / CHECKED BY	STEPHANE GIRARD	2017-08-15
APPROUVE PAR / APPROVED BY	DANIEL CARRIER	2017-08-15
ECHELLE / SCALE	1:20	DATE 2017-08-15

NO. DESSIN / DRAWING NO. 65-ULT-116-EL-008

NO. PROJET / PROJECT NO.	FEUILLE / SHEET	FEUILLE / OF
6515	2	1/1

FILE NO.

65-ULT-116-EL-009

FORMAT ARCH D

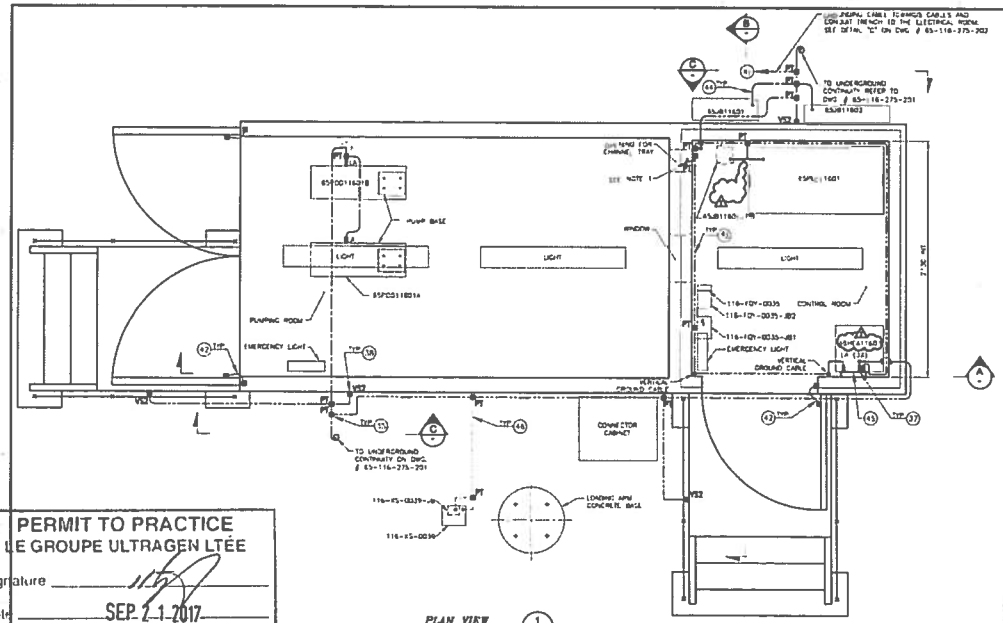

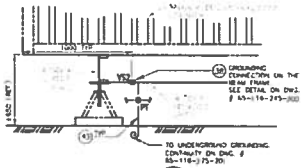

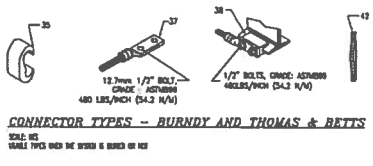

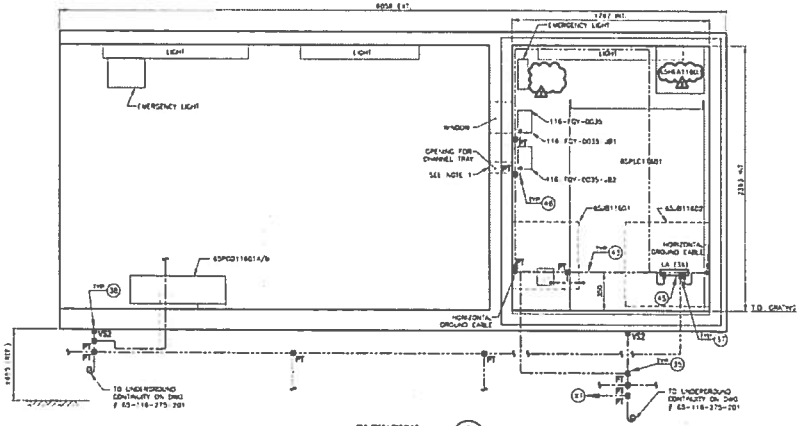

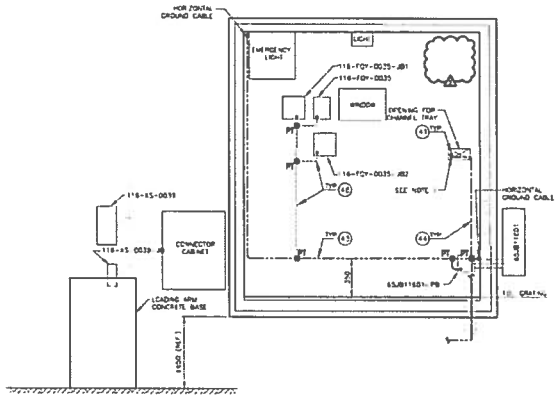

ITEM NUMBER	SYMBOL	DESCRIPTION	MAKE	TYPE	NOTE
36	PT	CONNECTION - PARALLEL HORIZONTAL CONDUCTORS COMPRESSION CONNECTOR FOR TWO PARALLEL HORIZONTAL CONDUCTORS. CABLE SIZE: 2/0AWG, TAP CABLE SIZE: 2/0AWG CABLE SIZE: 4/0AWG, TAP CABLE SIZE: 2/0AWG CABLE SIZE: 4/0AWG, TAP CABLE SIZE: 4/0AWG	BURNDY	YGHC28C28 YGHC28C38 YGHC28C58	
37	LA	CONNECTION - HEAVY DUTY TERMINALS HEAVY DUTY TERMINALS DESIGNED TO CARRY SHORT CIRCUIT LOAD AND WITHSTAND HIGH MECHANICAL STRESS. CABLE SIZE: 2/0AWG CABLE SIZE: 4/0 AWG COMPLETE WITH NON-CORROSIVE HARDWARE SUCH AS BOLT, FLAT WASHER, LOCKWASHERS, NUTS AND ANTISEIZING COMPOUNDS TO PREVENT OXIDATION OR CORROSION.	BURNDY	YGHA26-2H YGHA38-2H	
38	VS2	CONNECTION - STRUCTURE CONNECTION USED FOR VERTICAL STEEL SURFACE (STRUCTURAL BEAMS) CABLE SIZE 4/0AWG ON CONTINEER BEAM FRAME. CABLE SIZE 4/0AWG ON CHANNEL OF CATWALK. COMPLETE WITH HARDWARE	BURNDY	YGHSH28-338-2H YGHS228-400-2H YGHC-42	EVERY BURNDY YGH CONNECTION (VS2) MUST BE CRIMPED WITH A YGHA HEAVY DUTY TERMINAL (LA) AND 2 NUTS OF ABSOLUTE SIZE FOR THE TERMINAL.
41		CABLE TRAY CONNECTOR CABLE TRAY GROUNDING CLAMP. FOR CABLE SIZE 4/0AWG.	THOMAS & BETTS	STC24P	
42		BONDING JUMPER PREFABRICATED COPPER JUMPER, FOR EXPANSION JOINTS AND ADJUSTABLE JOINTS 1 BRAIDS AND 2 BOLTS HOLD BY CONNECTION.	THOMAS & BETTS	FBE12-1	
43		COPPER GROUNDING CONDUCTOR 4/0 AWG, BARE, FLEXIBLE, TINNED, 19 STRANDS (ASTM STANDARD B8 AND B33).	PHILLIPS CABLES		
44		COPPER GROUNDING CONDUCTOR 2/0 AWG, BARE, FLEXIBLE, TINNED, 19 STRANDS (ASTM STANDARD B8 AND B33).	PHILLIPS CABLES		
45		COPPER BUS BAR BUS BAR 254(10") X 102(4") X 6(0.25") BRACKETS AND GROUNDS INCLUDED	BURNDY	EBB-14418C	
46		COPPER GROUNDING CONDUCTOR 4 AWG, GREEN INSULATION, FLEXIBLE, 7 STRANDS (ASTM STANDARD B8 AND B33).	PHILLIPS CABLES		
		COPPER CONDUCTOR IDENTICAL CHARACTERISTICS FOR FUTURE CONNECTIONS. THE LENGTH TO RESERVE IS SPECIFIED ON THE SYMBOL	PHILLIPS CABLES		

PERMIT TO PRACTICE
LE GROUPE ULTRAGEN LTÉE
Signature
Date SEP 2 1 2017
PERMIT NUMBER: P 1180
NT/NU Association of Professional Engineers and Geoscientists



NOTES GENERALES / GENERAL NOTES

1. INSTALL COPPER GROUNDING CABLE 2/0 AWG, MINIMUM, BARE, FLEXIBLE, TINNED, 19 STRANDS IN EACH CHANNEL TRAY. CONNECT CABLE WITH CONNECTION TYPE "YGHC" (ARTICLE NUMBER 36). CONNECT CABLE AT EACH SECTION OF CHANNEL TRAY WITH CONNECTION TYPE "STC24P" (ARTICLE NUMBER 41). FOR CHANNEL TRAY INSTALLATION REFER TO DRAWING (65-ULT-116-EL-011.

REGISTERED PROFESSIONAL ENGINEER 13677 D CARRIER LICENSEE NT/NU

SEP 2 1 2017

ISSUED FOR CONSTRUCTION Ultragen DATE: SEPT 2017

DESIGNS IN REFERENCE / REFERENCE DRAWINGS

TITRE / TITLE	# DWG
GROUP 1 ARRANGEMENT OF THE EQUIPMENTS	65-116-275-002
CABLE LAID DRAWING	65-116-275-003
CABLE TRAY LAYOUT, METAL AND SURFACE	65-116-275-004
GROUNDING LAYOUT PLAN VIEW	65-116-275-201
LEGENDS, SYMBOLS AND DETAILS	65-116-275-202

AGNICO EAGLE

3	2017-09-15	ISSUED FOR CONSTRUCTION	S.S.	S.S.
2	2017-09-14	UPDATE PER A THE RANKIN	S.S.	S.S.
1	2017-09-12	UPDATE PER CONSTRUCTION	S.S.	S.S.
No.	2017-09-12	ISSUED FOR REVIEW	S.S.	S.S.
DWG / REV	DATE	REVISIONS	ISSUED FOR / POUR	

REVISIONS

ENGINEERING FIRM / FIRME D'INGÉNIERIE: WHISSANCE-PROJECT LIMITED
PROJECT NO. / NO. PROJET: 581700

Ultragen

TITRE / TITLE
AGNICO EAGLE – MEADOWBANK DIVISION
116 – NO. TANK FARM
FUEL DISTRIBUTION
RANKIN INLET PUMPING STATION
GROUNDING

DESIGNED BY / DESSINÉ PAR	REMI SHRESTHA	2017-09-15
REVIEWED BY / VÉRIFIÉ PAR	STEPHANE GIRARD	2017-09-15
APPROVED BY / APPROUVÉ PAR	DANIEL CARRIER	2017-09-15
SCALE / ÉCHELLE	1:20	DATE: 2017-09-15

NO. DESSIN / DRAWING NO.: 65-ULT-116-EL-009

NO. PROJET / PROJECT NO.: 6515

REVISION: 2

PAGE / SHT: 1/1

REF NO.

65-ULT-116-EL-010

FORMAT ARCH2

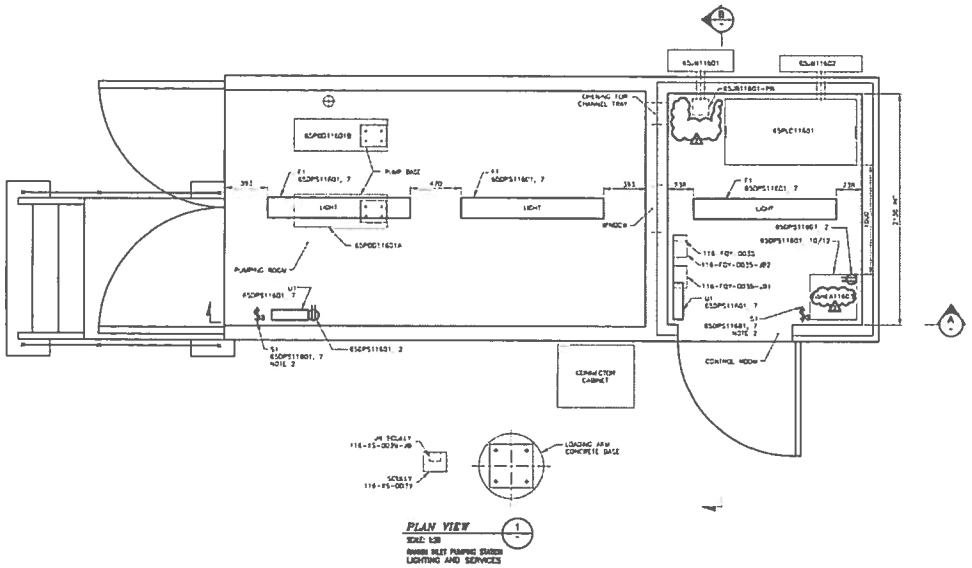

PLAN VIEW
SCALE: 1:20
RANKIN INLET PUMPING STATION
LIGHTING AND SERVICES

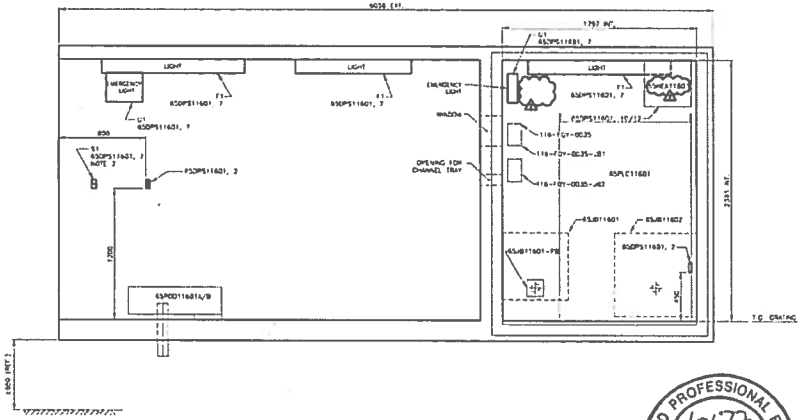

ELEVATION A
SCALE: 1:20
RANKIN INLET PUMPING STATION
ELECTRICAL EQUIPMENT LAYOUT
LIGHTING AND SERVICES

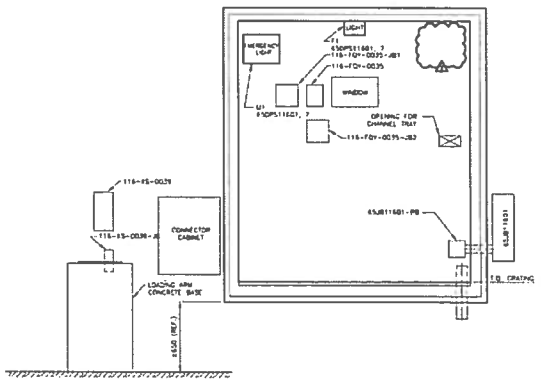

ELEVATION B
SCALE: 1:20
RANKIN INLET PUMPING STATION
LIGHTING AND SERVICES

MATERIAL LIST

TYPE	[illegible]	[illegible]	[illegible]	[illegible]	[illegible]
F1	[illegible]	[illegible]	[illegible]	[illegible]	[illegible]
[illegible]	[illegible]	[illegible]	[illegible]	[illegible]	[illegible]
[illegible]	[illegible]	[illegible]	[illegible]	[illegible]	[illegible]
$3	[illegible]	[illegible]	-	[illegible]	[illegible]

PERMIT TO PRACTICE
LE GROUPE ULTRAGEN LTÉE
Signature
Date SEP 2 1 2017
PERMIT NUMBER: P 1180
NT/NU Association of Professional Engineers and Geoscientists

REGISTERED PROFESSIONAL ENGINEER
13627
D. CARRIER
LICENSEE
NT/NU
SEP 2 1 2017



NOTES GENERALES / GENERAL NOTES

1. FOR OUTDOOR LIGHTING AND PHOTOCELL REFER TO WSP DRAWING #65-116-285-201.
2. SWITCH FOR LIGHTING TYPE F1.

ISSUED FOR CONSTRUCTION
Ultragen DATE: SEPT 2017

DESSINS EN REFERENCE / REFERENCE DRAWINGS

AGNICO EAGLE

REVISIONS

ULTRAGEN
NO. PROJET PROJECT NO. 591700

TITLE / TITLE
AGNICO EAGLE – MELIADINE DIVISION
116 – FUEL TANK FARM
FUEL DISTRIBUTION
RANKIN INLET PUMPING STATION
LIGHTING AND SERVICES

DESSINÉ PAR / DRAWN BY	REBA SHRESTHA	2017-05-15
VÉRIFIÉ PAR / CHECKED BY	STÉPHANE GIRARD	2017-05-15
APPROUVÉ PAR / APPROVED BY	DANIEL CARRIER	2017-05-15
ÉCHELLE / SCALE	1:20	2017-05-15

NO. DESSIN / DRAWING NO. 65-ULT-116-EL-010

NO. PROJET / PROJECT NO. 6515 | REVISION 2 | FEUILLE / SHT 1/1

FILE NO.

65-ULT-116-EL-011

FORMAT ARCH D

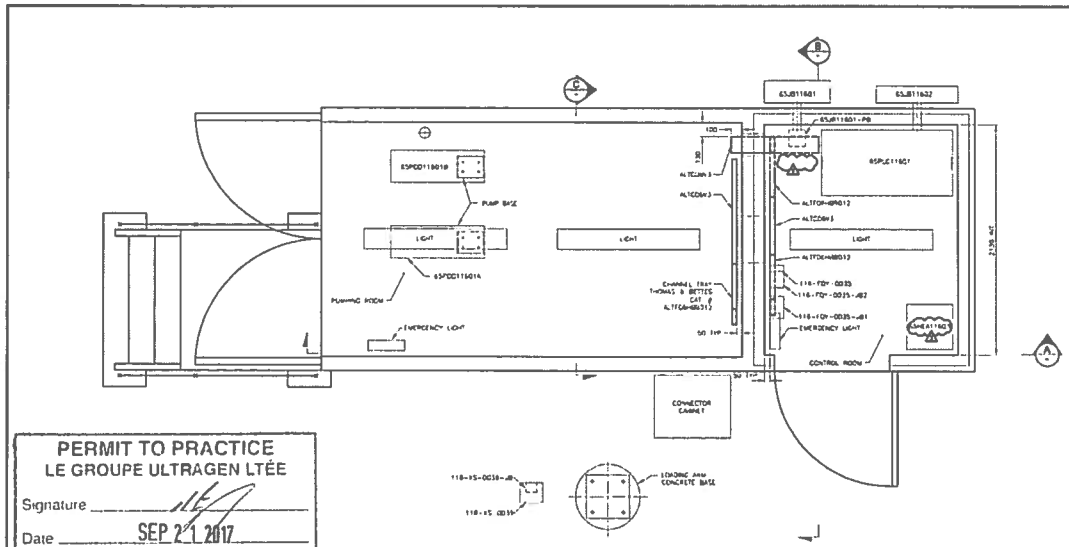

PLAN VIEW 1
SCALE: 1:20
RANKIN INLET PUMPING STATION
CHANNEL TRAY LAYOUT

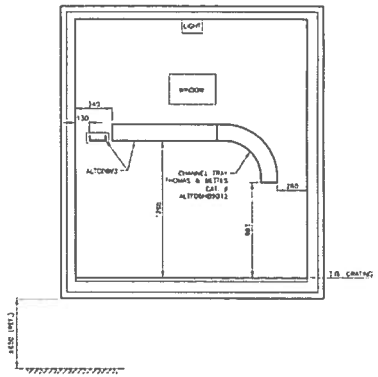

ELEVATION C
SCALE: 1:20
RANKIN INLET PUMPING STATION
CHANNEL TRAY LAYOUT

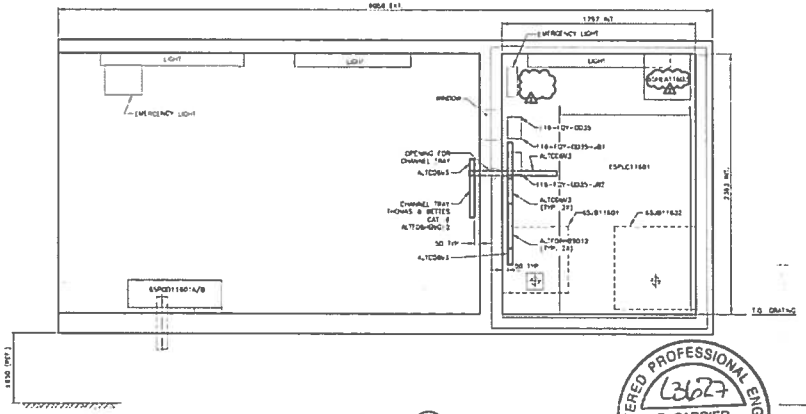

ELEVATION A
SCALE: 1:20
RANKIN INLET PUMPING STATION
CHANNEL TRAY LAYOUT

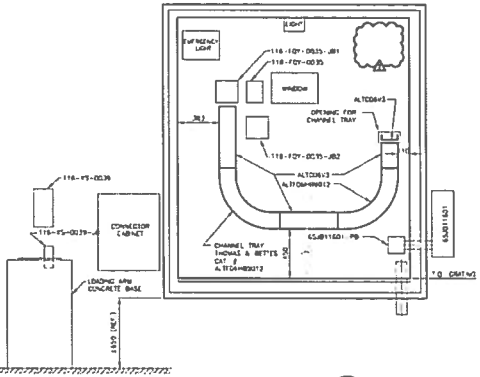

ELEVATION B
SCALE: 1:20
RANKIN INLET PUMPING STATION
CHANNEL TRAY LAYOUT

PERMIT TO PRACTICE
LE GROUPE ULTRAGEN LTÉE
Signature
Date SEP 21 2017
PERMIT NUMBER: P 1180
NT/NU Association of Professional Engineers and Geoscientists

REGISTERED PROFESSIONAL ENGINEER
13627
D. CARRIER
LICENSEE
NT/NU
SEP 21 2017

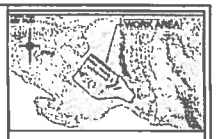

NOTES GENERALES / GENERAL NOTES

1. ALL CHANNEL TRAY ITEMS ARE IDENTIFIED WITH THOMAS & BETTS CATALOG NUMBER.
2. FOR CHANNEL TRAY GROUNDING REFER TO DRAWING 65-ULT-116-EL-009.
3. INSTALL ALL CHANNEL TRAY WITH CHANNEL PROFILE TYPE "CANSTRUT" BY THOMAS & BETTS, CAT. # A1200-AL COMPLETE WITH MISCELLANEOUS HARDWARE.

ISSUED FOR CONSTRUCTION
Ultragen DATE: SEP 2017

DESIGNS EN REFERENCE / REFERENCE DRAWINGS

TITLE / TITRE	# DWG
ELECTRICAL EQUIPMENT LAYOUT	65-ULT-116-002
GROUNDING LAYOUT RANKIN INLET	65-ULT-116-009

AGNICO EAGLE

2	2017-09-20	ISSUED FOR CONSTRUCTION	S.A.	S.A.
1	2017-09-04	UPDATE AFTER IFR COMMENTS	S.A.	S.A.
0	2017-08-18	ISSUED FOR CONSTRUCTION	S.A.	S.A.
No.	2017-08-18	ISSUED FOR REVIEW	S.A.	S.A.
ISS'D	DATE	DESCRIPTION	DRAWN	APP'D / ISSUED

REVISIONS

NICOLAS FRANCIS CARRIER
2017-09-20
ultragen
PROJECT NO. 201760

TITLE / TITRE
AGNICO EAGLE – MEADOWBANK DIVISION
116 – FUEL TANK FARM
FUEL DISTRIBUTION
RANKIN INLET PUMPING STATION
CHANNEL TRAY LAYOUT

DESIGNED AND DRAWN BY	REMI BARESPHA	2017-08-18
DRAWN AND CHECKED BY	STEPHANE GIRARD	2017-08-18
APPROVED AND AUTHORIZED BY	DANIEL CARRIER	2017-08-18
SCALE / ÉCHELLE	1:20	DATE 2017-08-18

NO. DESSIN / DRAWING NO. 65-ULT-116-EL-011

NO. PROJET / PROJECT NO.	REVISION	FEUILLE / SHT
6515	2	1 / 1

FILE NO.

PERMIT TO PRACTICE
LE GROUPE ULTRAGEN LTÉE
Signature
Date SEP 2 1 2017
PERMIT NUMBER: P 1180
NT/NU Association of Professional Engineers and Geoscientists

Source:	120	208	Volts
Feeder from / Single line diagram:	65TRF11601 / 65-116-275-203		
Mounting:	SURFACE		
Location:	ELECTRICAL ROOM 116 (RANKIN INLET)		
Manufacturer / Catalog No.:	SQUARE-D (SCHNEIDER) / NQ442L2C		
Breaker type:	QOB		

Enclosure type:	NEMA 1
Main breaker.:	NONE
No. of circuits:	42 CCTs
Bars:	225 A
Short circuit Ampacity:	10 kA
Power:	45 kVA

DESCRIPTION	CABLE AWG	TYPE REF	TYPE QTY	WATTS	BREAK. TYPE	BREAK. AMP	CT #		CT #	BREAK. AMP	BREAK. TYPE	WATTS	TYPE QTE	TYPE REF	CABLE AWG	DESCRIPTION
LIGHTING FIXTURES TANK #2	12	L	7	483		15	1	A	2	15		240	2	O	12	OUTLET PUMPING STATION & OPERATION ROOM 116
							3	B	4	15		120	1	O	12	OUTLET ELECTRICAL ROOM 116
LIGHTING CONTACTOR CONTROL FEEDER	12	L	1	37		15	5	C	6	15		240	2	O	12	OUTLET ELECTRICAL ROOM IT AREA 116
LIGHTING AND EMERGENCY LIGHTING PUMPING STATION & OPERATION ROOM 116	12	L	5	216		15	7	A	8	15		400	1	I	12	PLC/HMI/IO CARDS IN OPERATION ROOM CABINET 65PLC11601
LIGHTING AND EMERGENCY LIGHTING ELECTRICAL ROOM 116	12	L	4	180		15	9	B	10	30		2000	1	H	6	HEATING IN OPERATION ROOM 116 65HEA11603
LIGHTING IN FILTRATION CONTAINER 116 TANK #1	12	L	3	144		15	11	C	12							
LIGHTING FIXTURES TANK #1	12	L	7	483		15	13	A	14	15		888	2	I	8	MOTORIZED OPERATOR VALVES FEEDER 116-MOV-008 & 116-MOV-004 (65-ULT-116-IN-008)
							15	B	16	15		200	1	I	12	PLC CABINET 65PLC11601 OUTLET UTILITY IN OPERATION ROOM 116
LIGHTING FIXTURES TANK #1/TANK #2 GROUND FLOOR	12	L	4	276		15	17	C	18	15		100	1	I	12	INSTRUMENT (65-ULT-116-IN-008)
							19	A	20	15		50	1	M	12	VENTILATION FILTRATION CONTAINER 116 TANK #1 65FAN11601 (1/16 HP, 115V, FLA 1A)
LIGHTING FIXTURES OUTSIDE ELECTRICAL ROOM/OUTSIDE OF PUMPING STATION	10	L	7	483		15	21	B	22	15		50	1	M	12	VENTILATION FILTRATION CONTAINER 116 TANK #2 65FAN11602 (1/16 HP, 115V, FLA 1A)
							23	C	24	15		150	1	H	12	HEATING CONTACTOR CONTROL FEEDER IN FILTRATION CONTAINER TANK #1, 65HTR11601
LIGHTING IN FILTRATION CONTAINER 116 TANK #2	12	L	3	144		15	25	A	26	15		150	1	H	12	HEATING CONTACTOR CONTROL FEEDER IN FILTRATION CONTAINER TANK #2, 65HTR11602
HEATING IN FILTRATION CONTAINER 116 TANK #1 65HEA11605	3	H	1	5000		30	27	B	28	15		0	0			
							29	C	30	15		0	0			
HEATING IN FILTRATION CONTAINER 116 TANK #1 65HEA11606	3	H	1	5000		30	31	A	32	15		0	0			
							33	B	34	15		0	0			
HEATING IN FILTRATION CONTAINER 116 TANK #2 65HEA11607	4	H	1	5000		30	35	C	36	15		0	0			
							37	A	38	15		0	0			
HEATING IN FILTRATION CONTAINER 116 TANK #2 65HEA11608	4	H	1	5000		30	39	B	40	15		0	0			
							41	C	42	15		0	0			

TYPE (REF)	(W) total	Qte
(L) Lighting	2446	41
(O) Outlet	600	5
(H) Heating	22300	7
(I) Instrument	1588	5
(M) MOTOR	100	2

BREAKER TYPE	Qte (ref)
(L) SPARE	0
(S) SPACE	0
(G) DDFT BREAKER (30mA)	0

	Watts
Phase A	7709
Phase B	9774,5
Phase C	9550,5
Total	27034

REGISTERED PROFESSIONAL ENGINEER
13607
D. CARRIER
LICENSEE
NT/NU
SEP 2 1 2017

NOTES:
1. SEE LIGHTING DIAGRAM FOR DETAILS OF CABLE SIZE DWG #65-ULT-116-EL-013.

REV	DATE	DESCRIPTION	PAR	VER	APP
2	2017-09-20	ISSUED FOR CONSTRUCTION	S. GRIMARD	D.CARRIER	D.CARRIER
1	2017-08-04	UPDATE AREA & TAG NUMBER	N. SALDAN	D.CARRIER	D.CARRIER
0	2017-07-12	ISSUED FOR CONSTRUCTION	SG 111891	DC 40308	DC 40308
PC	2017-06-13	ISSUED FOR REVIEW	SG 111891	DC 40308	DC 40308
PB	2017-05-11	ISSUED FOR REVIEW	MT 5029941	SG 111891	DC 40308
PA	2017-05-08	ISSUED FOR REVIEW	MT 5029941	SG 111891	DC 40308

AGNICO EAGLE
NUNAVUT PROJECT MINING
ultragen
116 - FUEL TANK FARM
RANKIN ELECTRICAL ROOM
PANEL SCHEDULE 65DPS11601
UNITE - DATE 2017-05-08 REV 2
DESS MT 5029941
65-ULT-116-EL-012

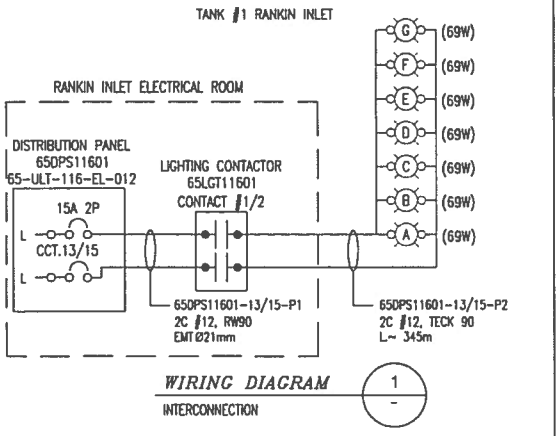

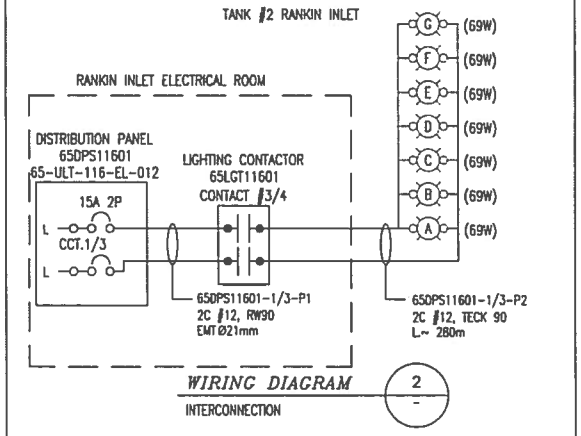

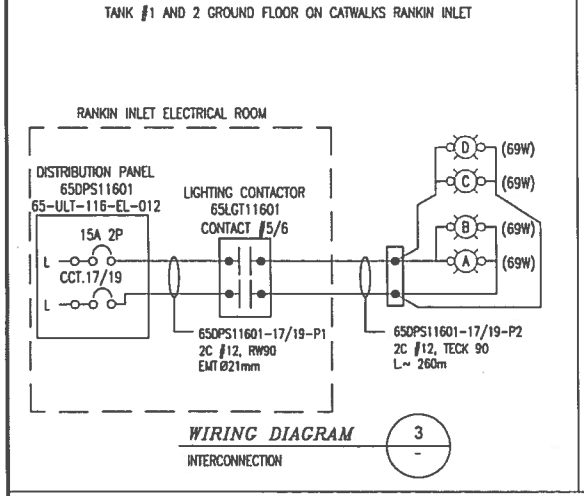

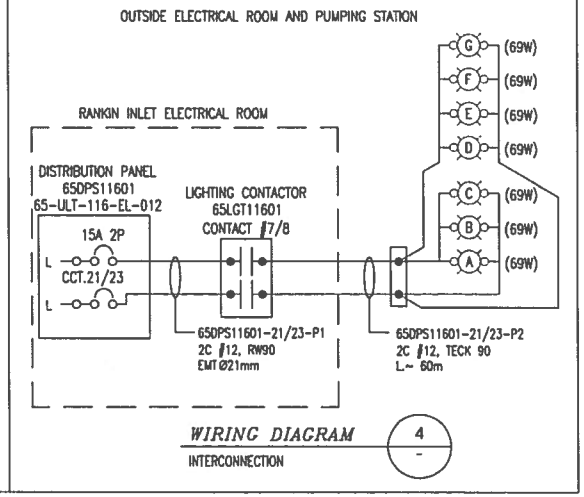

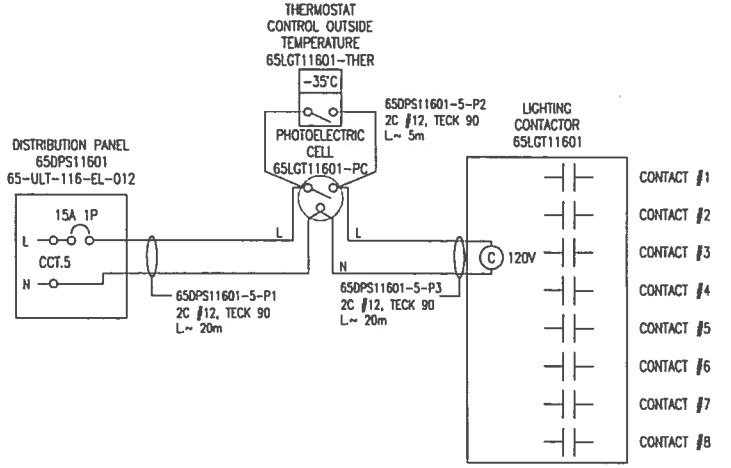

NOTES:

1. REFER TO THE DWG #65-116-285-201 FOR THE LIGHTING LAYOUT OF THE RANKIN INLET.
2. THE LIGHTING IDENTIFICATION AROUND THE TANKS ON THIS DRAWING STARTS FROM THE GROUND TO THE TOP OF THE TANK (A TO G).

No.	DATE	REVISION	BY / APP.
3	2017-09-20	ISSUED FOR CONSTRUCTION	S.G. / D.C.
2	2017-08-04	UPDATE AREA & TAG NUMBER	S.G. / D.C.
1	2017-06-12	ISSUED FOR CONSTRUCTION	S.G. / D.C.
0	2017-05-29	ISSUED FOR CONSTRUCTION	M.T. / D.C.
PB	2017-05-11	ISSUED FOR REVIEW	M.T. / D.C.
PA	2017-05-08	ISSUED FOR REVIEW	M.T. / D.C.

CLIENT: AGNICO EAGLE

NUQSANA PROMEC MINING

ultragen

CONSULTANT PROJECT NO. 591700

DESIGNED BY: MARC TREMBLAY	DATE: 2017-05-08
DRAWN BY: MARC TREMBLAY	DATE: 2017-05-08
CHECKED BY: STEPHANE GRIMARD	DATE: 2017-05-08
APPROVED BY: DANIEL CARRIER	DATE: 2017-05-08
SCALE: NONE	

PROJECT: AGNICO EAGLE – MEADOWBANK DIVISION
116 – FUEL TANK FARM (3)

TITLE: FUEL DISTRIBUTION RANKIN INLET LIGHTING DIAGRAM

PROJECT No.	DRAWING NO.	REV.
6515	65-ULT-116-EL-013	3

PERMIT TO PRACTICE
LE GROUPE ULTRAGEN LTÉE
Signature
Date SEP 21 2017
PERMIT NUMBER: P 1180
NT/NU Association of Professional Engineers and Geoscientists

REGISTERED PROFESSIONAL ENGINEER 13627 D. CARRIER LICENSEE NT/NU SEP 21 2017

ISSUED FOR CONSTRUCTION
ultragen DATE: SEPT 2017

65-ULT-116-EL-014

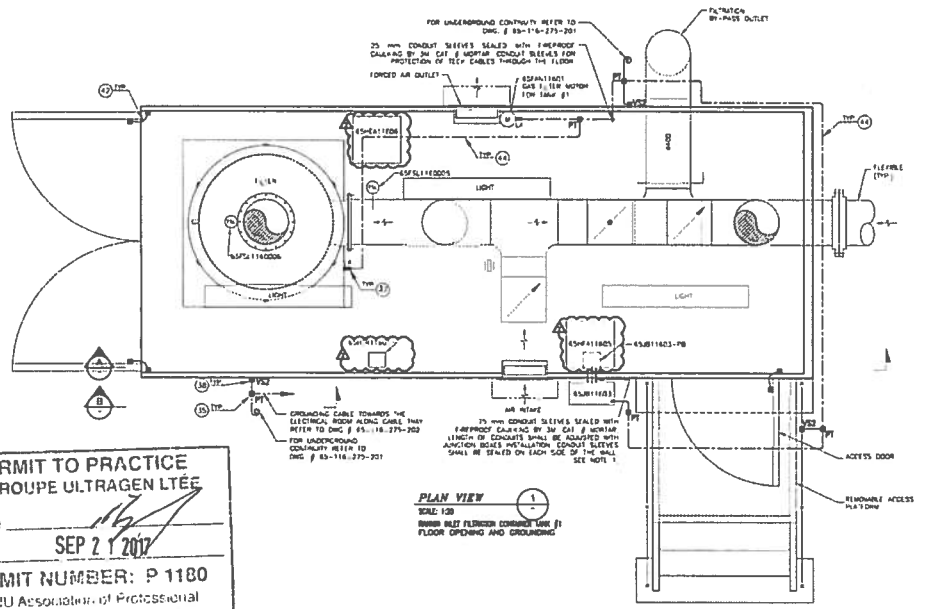

PLAN VIEW
SCALE: 1:20
RANKIN INLET FILTRATION CONTAINER TANK #1
FLOOR OPENING AND GROUNDING

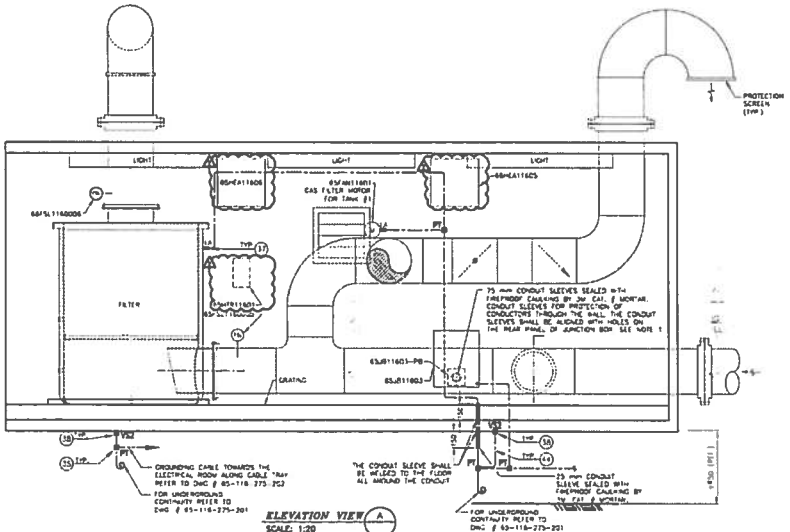

ELEVATION VIEW
SCALE: 1:20
RANKIN INLET FILTRATION CONTAINER TANK #1
FLOOR OPENING AND GROUNDING

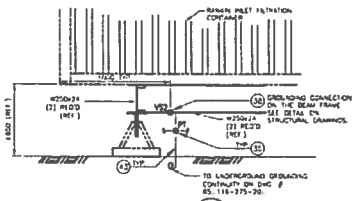

ELEVATION
SCALE: 1:20
RANKIN INLET FILTRATION CONTAINER TANK #1
FLOOR OPENING AND GROUNDING

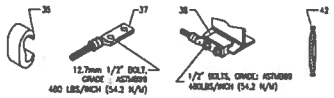

CONNECTOR TYPES – BURNDY AND THOMAS & BETTS
SCALE: NTS
DOUBLE TYPES WHEN THE SYSTEM IS GROUNDED OR NOT

ITEM NUMBER	SYMBOL	DESCRIPTION	MANU.	TYPE	NOTE
35	PT	CONNECTION – PARALLEL HORIZONTAL CONDUCTORS COMPRESSED CONNECTOR FOR TWO PARALLEL HORIZONTAL CONDUCTORS. CABLE SIZE: 4/0AWG CABLE SIZE: 2/0AWG, TAP CABLE SIZE: 2/0AWG CABLE SIZE: 4/0AWG, TAP CABLE SIZE: 2/0AWG CABLE SIZE: 4/0AWG, TAP CABLE SIZE: 4/0AWG	BURNDY	YGHC26C28 YGHC28C28 YGHC28C29	
37	LA	CONNECTION – HEAVY DUTY TERMINALS HEAVY DUTY TERMINALS DESIGNED TO CARRY SHORT CIRCUIT LOAD AND WITHSTAND HIGH MECHANICAL STRESS. CABLE SIZE: 2/0AWG CABLE SIZE: 4/0 AWG COMPLETE WITH NON-CORROSIVE HARDWARE SUCH AS: BOLT, FLAT WASHER, LOCKWASHERS, NUTS AND INHIBITING COMPOUNDS TO PREVENT OXIDATION OR CORROSION.	BURNDY	YGHA26-2N YGHA28-2N	
38	VS2	CONNECTION – STRUCTURE CONNECTION USED FOR VERTICAL STEEL SURFACE (STRUCTURAL BEAMS) CABLE SIZE: 4/0AWG COMPLETE WITH HARDWARE	BURNDY	YGBW28-338-2N THMG-42	EVERY BURNDY YGBS CONNECTION (VS2) MUST BE COMBINED WITH A YGHA HEAVY DUTY TERMINAL (LA) AND 2 NUTS OF ADEQUATE SIZE FOR THE TERMINAL.
41		CABLE TRAY CONNECTOR CABLE TRAY GROUNDING CLAMP. FOR CABLE SIZE 4/0AWG.	THOMAS & BETTS	GTC24P	
42		BONDING JUMPER PREFABRICATED COPPER JUMPER, FOR EXPANSION JOINTS AND ADJUSTABLE JOINTS 1 BRAIDS AND 2 BOLTS HOLD BY CONNECTION.	THOMAS & BETTS	FBE12-1	
43		COPPER GROUNDING CONDUCTOR. 4/0 AWG, BARE, FLEXIBLE, TINNED, 19 STRANDS (ASTM STANDARDS B8 AND B33).	PHILLIPS CABLES		
44		COPPER GROUNDING CONDUCTOR. 2/0 AWG, BARE, FLEXIBLE, TINNED, 19 STRANDS (ASTM STANDARDS B8 AND B33).	PHILLIPS CABLES		
46		COPPER GROUNDING CONDUCTOR. 8 AWG, GREEN INSULATION, FLEXIBLE, 7 STRANDS (ASTM STANDARDS B8 AND B33).	PHILLIPS CABLES		
		COPPER CONDUCTOR. IDENTICAL CHARACTERISTICS FOR FUTURE CONNECTIONS. THE LENGTH TO RESERVE IS SPECIFIED ON THE SYMBOL	PHILLIPS CABLES		

PERMIT TO PRACTICE
LE GROUPE ULTRAGEN LTÉE
Signature
Date SEP 2 1 2017
PERMIT NUMBER: P 1180
NT/NU Association of Professional Engineers and Geoscientists

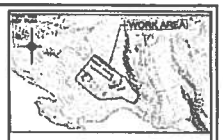

NOTES GENERALES / GENERAL NOTES

1. PULL BOX 65JB11603-PB LINKED WITH CONDUIT SLEEVE TO JUNCTION BOX 65JB11603. THE CABLES INSIDE FILTRATION CONTAINER END AT THE PULL BOX.
2. USE TIP AT EACH END OF THE CONDUIT SLEEVES.
3. INSTALL COPPER GROUNDING CABLE 2/0 AWG MINIMUM, BARE, FLEXIBLE, TINNED, 19 STRANDS IN EACH CHANNEL TRAY, CONNECT CABLE WITH CONNECTION TYPE "YGHC" (ARTICLE NUMBER 35). CONNECT CABLE AT EACH SECTION OF CHANNEL TRAY WITH CONNECTION TYPE "GTC24P" (ARTICLE NUMBER 41).

REGISTERED PROFESSIONAL ENGINEER
13627
D CARRIER
NUNAVUT
SEP 2 1 2017

ISSUED FOR CONSTRUCTION
Ultragen DATE: SEPT 2017

DESIGNS IN REFERENCE / REFERENCE DRAWINGS

TITLE / TITRE	# DWG
SINGLE LINE DIAGRAM	65-116-275-203
TANK FARM – METAL PIPE SUPPORTS	65-116-275-205
GROUNDING LAYOUT PLAN MEP	65-116-275-201
LEGEND, SYMBOLS AND DETAILS	65-116-275-200
INLET GROUP LAYOUT FILTRATION #1	65-ULT-116-EL-013

AGNICO EAGLE

3	2017-08-24	ISSUED FOR CONSTRUCTION	S.G.	S.G.
2	2017-08-13	UPDATED AFTER A DWG REVIEW	S.G.	S.G.
1	2017-08-04	UPDATED AFTER A DWG REVIEW	S.G.	S.G.
0	2017-07-12	ISSUED FOR CONSTRUCTION	S.G.	S.G.
No.	DATE	DESCRIPTION	CHKD BY	APP'D BY

REVISIONS

ROUSSEAU MINING INC. — Ultragen

NO. PROJET / PROJECT NO. 381700

TITRE / TITLE
AGNICO EAGLE – MEADOWBANK DIVISION
116 – TANK FARM
FUEL DISTRIBUTION
RANKIN INLET FILTRATION CONTAINER TANK #1
FLOOR OPENING AND GROUNDING

DESSINÉ PAR / DRAWN BY	STEPHANE GIRARD	2017-08-12
VÉRIFIÉ PAR / CHECKED BY	STEPHANE GIRARD	2017-08-12
APPROUVÉ PAR / APPROVED BY	DANIEL CARRIER	2017-08-13
ÉCHELLE / SCALE	1:20	DATE 2017-08-13

NO. DESSIN / DRAWING NO. 65-ULT-116-EL-014

NO. PROJET / PROJECT NO. 6515 — REVISION 2 — FEUILLE / SHT 1/1

65-ULT-116-EL-015

PERMIT ARCH3

MATERIAL LIST					
TYP					
F1			4		
S			-		

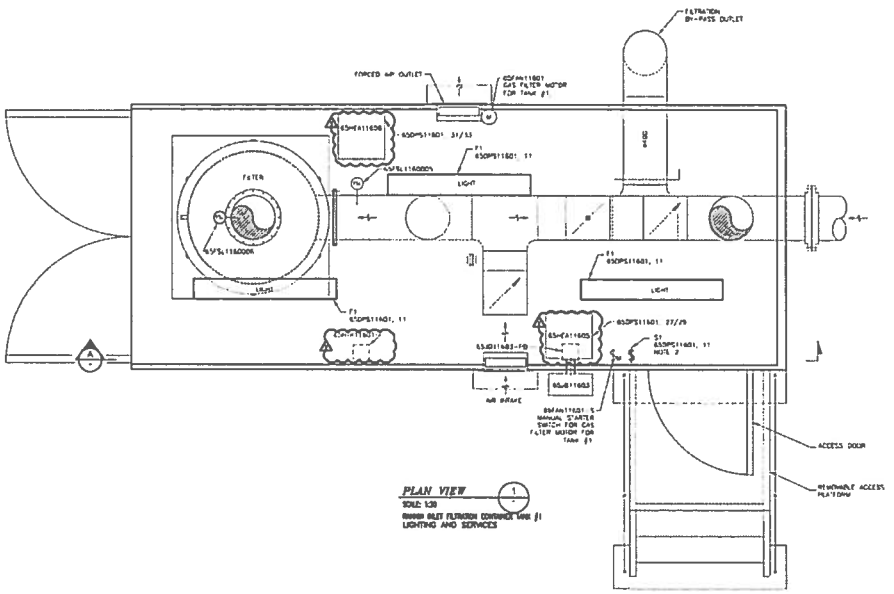

PLAN VIEW (1)
SCALE: 1:20
RANKIN INLET FILTRATION CONTAINER TANK #1
LIGHTING AND SERVICES

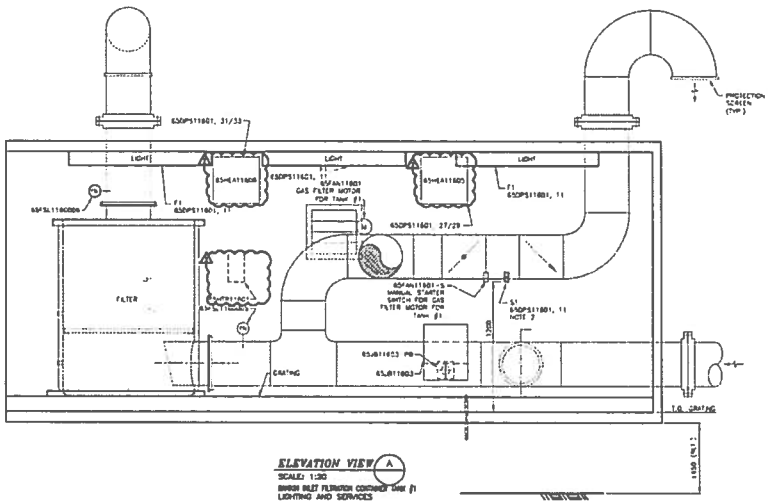

ELEVATION VIEW (A)
SCALE: 1:20
RANKIN INLET FILTRATION CONTAINER TANK #1
LIGHTING AND SERVICES

PERMIT TO PRACTICE
LE GROUPE ULTRAGEN LTÉE
Signature
Date SEP 2 1 2017
PERMIT NUMBER: P 1130
NT/NU Association of Professional Engineers and Geoscientists

REGISTERED PROFESSIONAL ENGINEER
13627
D CARRIER
LICENSEE
NT/NU
SEP 2 1 2017



NOTES GENERALES / GENERAL NOTES

1. FOR OUTDOOR LIGHTING AND PHOTOCELL REFER TO MSP DRAWING #65-116-ESS-301.
2. SWITCH FOR LIGHTING TYPE F1.

ISSUED FOR CONSTRUCTION
Ultragen DATE: SEPT 2017

DESIGNS EN REFERENCE / REFERENCE DRAWINGS

TITRE / TITLE	# DWG
SINGLE LINE DIAGRAM	65-116-ELS-300
LOCAL WIRING DIAGRAM AND SCHEDULE	65-116-ELS-301
LIGHTING, SHEDS AND DETAILS	65-116-ELS-302
SITE PLAN LAYOUT FILTRATION #1	65-ULT-116-EL-015
MATERIAL LIST	ULT-SITE01-EL-ML-001

AGNICO EAGLE

REVISIONS

2	2017-09-20	ISSUED FOR CONSTRUCTION	S.S.	D.C.
1	2017-09-06	UPDATE AREA & TAG NUMBER	S.S.	D.C.
0	2017-08-16	ISSUED FOR CONSTRUCTION	S.S.	D.C.
No.	DATE	DESCRIPTION	PREPARED	APP'D

Ultragen
NO. PROJET / PROJECT NO. 201700

TITRE / TITLE
AGNICO EAGLE – MEADOWS DIVISION
116 – NC TANK FARM
FUEL DISTRIBUTION
RANKIN INLET FILTRATION CONTAINER TANK #1
LIGHTING AND SERVICES

DESSINÉ PAR / DRAWN BY	STEPHANE GIRARD	2017-08-13
VÉRIFIÉ PAR / CHECKED BY	STEPHANE GIRARD	2017-08-13
APPROUVÉ PAR / APPROVED BY	DANIEL CARRIER	2017-08-13
ÉCHELLE / SCALE	1:20	DATE 2017-08-13

NO. DESSIN / DRAWING NO. 65-ULT-116-EL-015

NO. PROJET / PROJECT NO.	RÉVISION	FEUILLE / SHT
6515	2	1/1

FILE NO.

65-ULT-116-EL-016

FORMAT ARCHO

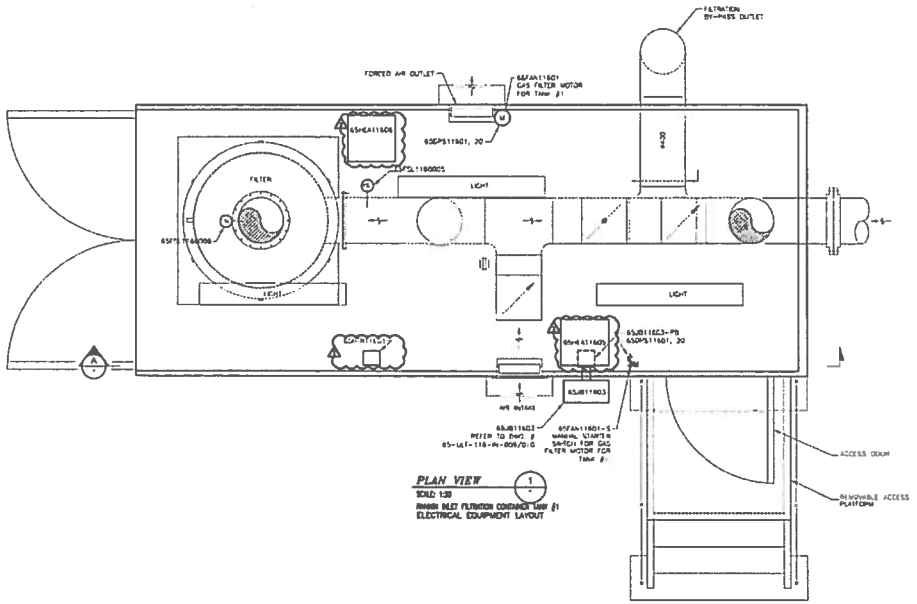

PLAN VIEW 1
SCALE: 1:20
RANKIN INLET FILTRATION CONTAINER TANK #1
ELECTRICAL EQUIPMENT LAYOUT

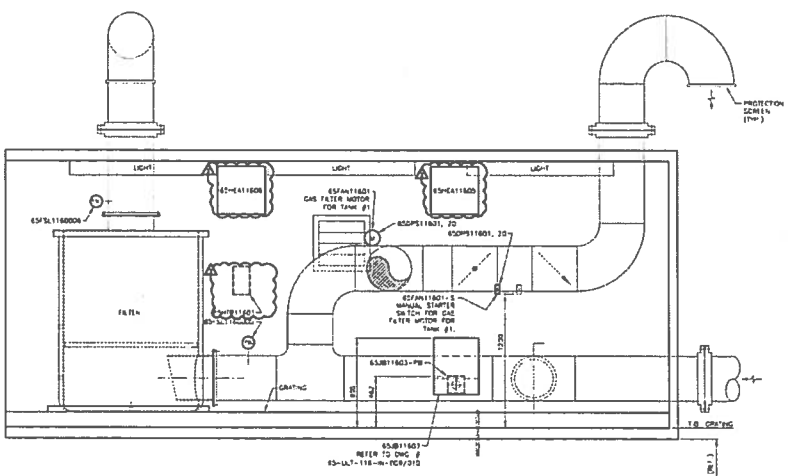

ELEVATION VIEW A
SCALE: 1:20
RANKIN INLET FILTRATION CONTAINER TANK #1
ELECTRICAL EQUIPMENT LAYOUT

MATERIAL LIST					
[illegible]	[illegible]	[illegible]	[illegible]	[illegible]	[illegible]
[illegible]	[illegible]	[illegible]	-	[illegible]	[illegible]

PERMIT TO PRACTICE
LE GROUPE ULTRAGEN LTÉE
Signature
Date SEP 2 1 2017
PERMIT NUMBER: P 1180
NT/NU Association of Professional Engineers and Geoscientists

REGISTERED PROFESSIONAL ENGINEER
13627
D. CARRIER
LICENSEE
NT/NU
SEP 2 1 2017

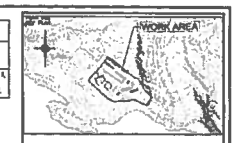

NOTES GENERALES / GENERAL NOTES

1. HEATER UNITS ARE CEILING MOUNTED.
2. FOR EQUIPMENT IDENTIFICATION REFER TO THE MATERIAL LIST.

ISSUED FOR CONSTRUCTION
ultragen DATE: SEPT 2017

DESSINS EN REFERENCE / REFERENCE DRAWINGS

Sheet / Title	# Dwg
[illegible]	[illegible]
[illegible]	[illegible]
[illegible]	[illegible]
[illegible]	[illegible]
[illegible]	[illegible]
[illegible]	[illegible]
[illegible]	[illegible]

AGNICO EAGLE

Rev.	Date	Description	Drawn	Appr.	Checked
2	[illegible]	ISSUED FOR CONSTRUCTION	S.G.	S.G.	
1	[illegible]	UPDATE AREA & TAG NUMBER	S.G.	S.G.	
0	[illegible]	ISSUED FOR CONSTRUCTION	S.G.	S.G.	
PA	[illegible]	ISSUED FOR COMMENT	S.G.	S.G.	

REVISIONS

MUSSAKIN PROJECT MANAGEMENT
ultragen
NO. PROJECT PROJECT NO. 591700

TITLE / TITLE
AGNICO EAGLE – MELIADINE DIVISION
116 – FUEL TANK FARM
FUEL DISTRIBUTION
RANKIN INLET FILTRATION CONTAINER TANK #1
ELECTRICAL EQUIPMENT LAYOUT

DESSINÉ PAR / DRAWN BY	STEPHANE GRIMARD	DATE 2017-08-13
VÉRIFIÉ PAR / CHECKED BY	STEPHANE GRIMARD	2017-08-13
APPROUVÉ PAR / APPROVED BY	DANIEL CARRIER	2017-08-13
ÉCHELLE / SCALE 1:20	DATE 2017-08-13	

NO. DESSIN / DRAWING NO. 65-ULT-116-EL-016

NO. PROJET / PROJECT NO.	REVISION	FEUILLE / SHT
6515	2	1/1

65-ULT-116-EL-017

FORMAT ARCH D

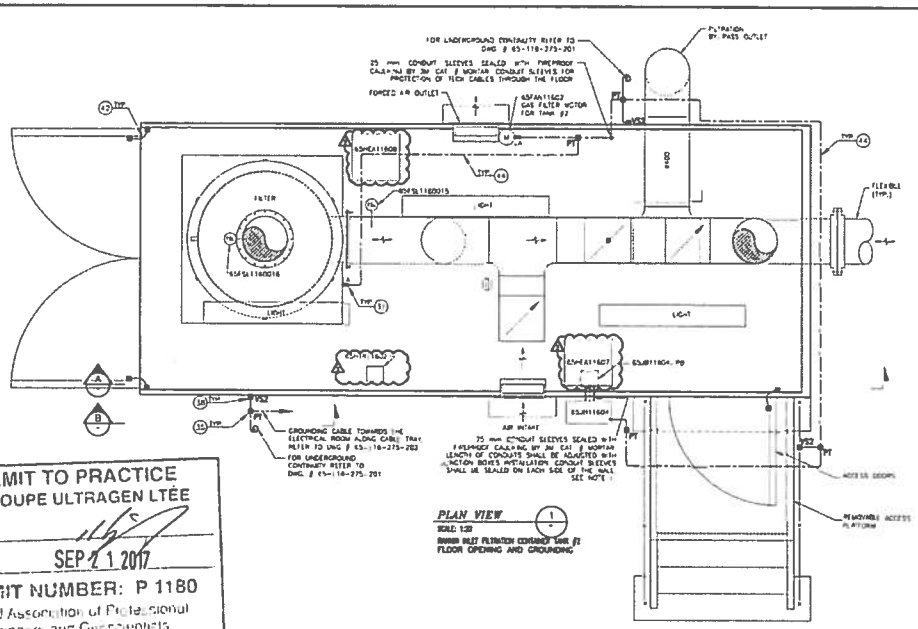

PLAN VIEW (1)
SCALE: 1:20
RANKIN INLET FILTRATION CONTAINER TANK #2
FLOOR OPENING AND GROUNDING

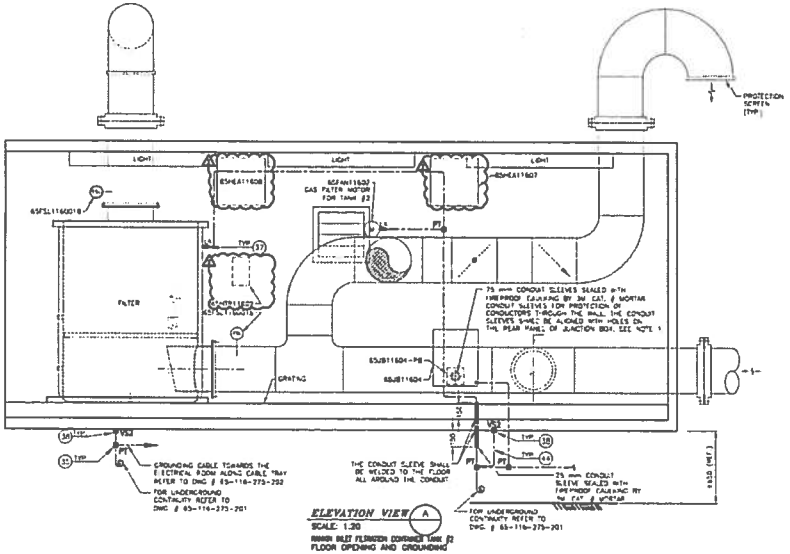

ELEVATION VIEW (A)
SCALE: 1:20
RANKIN INLET FILTRATION CONTAINER TANK #2
FLOOR OPENING AND GROUNDING

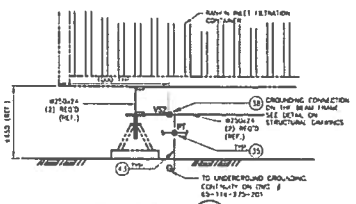

ELEVATION (B)
SCALE: 1:20
RANKIN INLET FILTRATION CONTAINER TANK #2
FLOOR OPENING AND GROUNDING

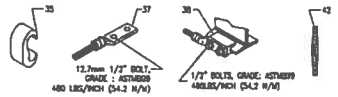

CONNECTOR TYPES – BURNDY AND THOMAS & BETTS
SCALE: NTS
USABLE TYPES MAY BE SYSTEM IS BUILT OF NOT

EQUIPMENT LIST

ANCHOR NUMBER	SYMBOL	DESCRIPTION	MANU.	TYPE	NOTE
35	PT	CONNECTION – PARALLEL HORIZONTAL CONDUCTORS COMPRESSED CONNECTOR FOR TWO PARALLEL HORIZONTAL CONDUCTIONS. CABLE SIZE: 4/0AWG CABLE SIZE: 2/0AWG, TAP CABLE SIZE: 2/0AWG CABLE SIZE: 4/0AWG, TAP CABLE SIZE: 2/0AWG CABLE SIZE: 4/0AWG, TAP CABLE SIZE: 4/0AWG	BURNDY	YGHC28C26 YGHC28C26 YGHC28C28	
37	LA	CONNECTION – HEAVY DUTY TERMINALS HEAVY DUTY TERMINALS DESIGNED TO CARRY SHORT CIRCUIT LOAD AND WITHSTAND HIGH MECHANICAL STRESS. CABLE SIZE: 2/0AWG CABLE SIZE: 4/0 AWG COMPLETE WITH NON-CORROSIVE HARDWARE SUCH AS: BOLT, FLAT WASHER, LOCKWASHERS, NUTS AND INHIBITING COMPOUNDS TO PREVENT OXIDATION OR CORROSION.	BURNDY	YGHA2S-2N YGHA28-2N	
38	VS2	CONNECTION – STRUCTURE CONNECTION USED FOR VERTICAL STEEL SURFACE (STRUCTURAL BEAMS) CABLE SIZE: 4/0AWG COMPLETE WITH HARDWARE	BURNDY	YGBW28-338-2N THHG-42	EVERY BURNDY YGB CONNECTION (VS2) MUST BE COMBINED WITH A YGHA HEAVY DUTY TERMINAL (LA) AND 2 NUTS OF ADEQUATE SIZE FOR THE TERMINAL.
41		CABLE TRAY CONNECTOR CABLE TRAY GROUNDING CLAMP. FOR CABLE SIZE 4/0AWG.	THOMAS & BETTS	GTC24P	
42		BONDING JUMPER PREFABRICATED COPPER JUMPER, FOR EXPANSION JOINTS AND ADJUSTABLE JOINTS 1 BRANDS AND 2 BOLTS HOLD BY CONNECTION.	THOMAS & BETTS	FBE12-1	
43		COPPER GROUNDING CONDUCTOR 4/0 AWG, BARE, FLEXIBLE, TINNED, 19 STRANDS (ASTM STANDARDS B8 AND B33).	PHILLIPS CABLES		
44		COPPER GROUNDING CONDUCTOR 2/0 AWG, BARE, FLEXIBLE, TINNED, 19 STRANDS (ASTM STANDARDS B8 AND B33).	PHILLIPS CABLES		
46		COPPER GROUNDING CONDUCTOR 6 AWG, GREEN INSULATION, FLEXIBLE, 7 STRANDS (ASTM STANDARDS B8 AND B33).	PHILLIPS CABLES		
	SHG	COPPER CONDUCTOR IDENTICAL CHARACTERISTICS FOR FUTURE CONNECTIONS. THE LENGTH TO RESERVE IS SPECIFIED ON THE SYMBOL	PHILLIPS CABLES		

PERMIT TO PRACTICE
LE GROUPE ULTRAGEN LTÉE
Signature
Date SEP 2 1 2017
PERMIT NUMBER: P 1180
NT/NU Association of Professional Engineers and Geoscientists

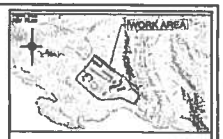

NOTES GENERALES / GENERAL NOTES

1. PULL BOX 65JB11604-PB LINKED WITH CONDUIT SLEEVE TO JUNCTION BOX 65JB11604. THE CABLES INSIDE FILTRATION CONTAINER END AT THE PULL BOX.
2. USE TIP AT EACH END OF THE CONDUIT SLEEVES.
3. INSTALL COPPER GROUNDING CABLE 2/0 AWG MINIMUM, BARE, FLEXIBLE, TINNED, 19 STRANDS IN EACH CHANNEL TRAY, CONNECT CABLE WITH CONNECTION TYPE "YGHC" (ARTICLE NUMBER 35). CONNECT CABLE AT EACH SECTION OF CHANNEL TRAY WITH CONNECTION TYPE "GTC24P" (ARTICLE NUMBER 41).

REGISTERED PROFESSIONAL ENGINEER 3677 D CARRIER LICENSEE NTNU
SEP 2 1 2017

ISSUED FOR CONSTRUCTION Ultragen DATE: SEPT 2017

DESSINS DE RÉFÉRENCE / REFERENCE DRAWINGS

TITRE / TITLE	# DWG
SINGLE LINE DIAGRAM	65-116-275-202
TERMS, SYMBOLS, ABBREVIATIONS AND NOTES	65-116-275-200
GROUNDING LAYOUT FLOOR VIEW	65-116-275-201
LOADING, TABLES AND DETAILS	65-116-275-203
FLOOR OPENING LAYOUT FILTRATION (2)	65-ULT-116-EL-015

AGNICO EAGLE

2	2017-08-30	ISSUED FOR CONSTRUCTION	S.G.	D.C.
1	2017-08-24	UPDATE AFTER A TAC REVIEW	S.G.	D.C.
B	2017-08-13	ISSUED FOR CONSTRUCTION	S.G.	D.C.
No.	2017-08-13	ISSUED FOR REVIEW	S.G.	D.C.
REV.	DATE	DESCRIPTION	DRAWN	APP.

REVISIONS

Ultragen

NO. PROJET / PROJECT NO. 591700

AGNICO EAGLE – MEADOWE DIVISION
116 – FUEL TANK FARM
FUEL DISTRIBUTION
RANKIN INLET FILTRATION CONTAINER TANK #2
FLOOR OPENINGS AND GROUNDING

DESSINÉ PAR / DRAWN BY	STEPHANE GRENARD	2017-08-13
VÉRIFIÉ PAR / CHECKED BY	STEPHANE GRENARD	2017-08-13
APPROUVÉ PAR / APPROVED BY	DANIEL CARRIER	2017-08-13
ÉCHELLE / SCALE	1:20	DATE 2017-08-13

NO. DESSIN / DRAWING NO. 65-ULT-116-EL-017

NO. PROJET / PROJECT NO.	RÉVISION	FORMAT / SHT
6515	2	1/1

65-ULT-116-EL-018

FORMAT ARCHD

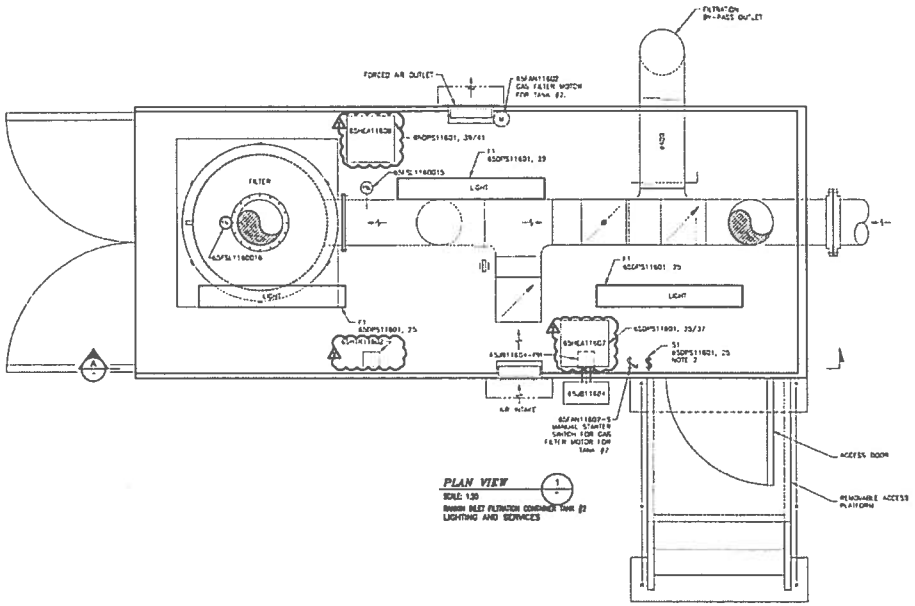

PLAN VIEW 1
SCALE: 1:20
RANKIN INLET FILTRATION CONTAINER TANK #2
LIGHTING AND SERVICES

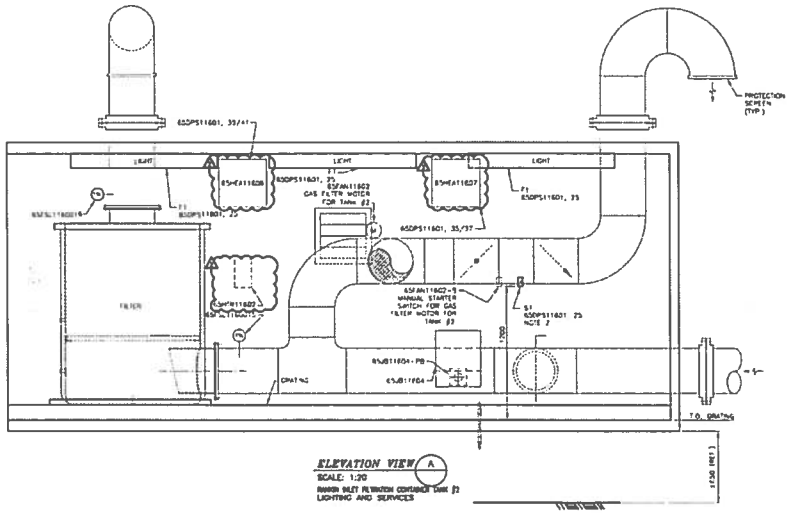

ELEVATION VIEW A
SCALE: 1:20
RANKIN INLET FILTRATION CONTAINER TANK #2
LIGHTING AND SERVICES

MATERIAL LIST					
TYPE	MANUFACTURER	CATALOGUE NUMBER	[illegible]	VOLTAGE	DESCRIPTION
F1	[illegible]	[illegible]	[illegible]	[illegible]	[illegible]
$	[illegible]	[illegible]	-	[illegible]	[illegible]

PERMIT TO PRACTICE
LE GROUPE ULTRAGEN LTÉE
Signature
Date SEP 2 1 2017
PERMIT NUMBER: P 1180
NT/NU Association of Professional Engineers and Geoscientists

REGISTERED PROFESSIONAL ENGINEER
13627
D CARRIER
LICENSEE
NT/NU
SEP 2 1 2017

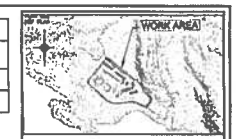

NOTES GENERALES / GENERAL NOTES

1. FOR OUTDOOR LIGHTING AND PHOTOCELL REFER TO WSP DRAWING #65-116-223-201.
2. SWITCH FOR LIGHTING TYPE F1.

ISSUED FOR CONSTRUCTION
Ultragen DATE: SEPT 2017

DESSINS EN REFERENCE / REFERENCE DRAWINGS

TITRE / TITLE	# DWG
SINGLE LINE DIAGRAM	65-116-275-203
[illegible]	65-116-275-200
LEGEND, NOTES AND DETAILS	65-116-275-200
[illegible]	65-ULT-116-EL-019
[illegible]	65-ULT-116-EL-012
MATERIAL LIST	ULT-001700-EL-EL-001

AGNICO EAGLE

2	2017-09-06	ISSUED FOR CONSTRUCTION	S.A.	S.G.
1	2017-09-04	UPDATE AREA & TAG NUMBER	S.G.	S.G.
0	2017-09-12	ISSUED FOR CONSTRUCTION	S.A.	S.G.
P0	2017-09-12	ISSUED FOR REVIEW	S.G.	S.G.
REV.	DATE	DESCRIPTION	PREPARED	APP. CLIENT

REVISIONS

MUSSANDERSHIRE, BEIRUT
ULTRAGEN
NO. PROJET PROJECT NO. 001700

TITRE / TITLE
AGNICO EAGLE – MELIADINE DIVISION
116 – FUEL TANK FARM
FUEL DISTRIBUTION
RANKIN INLET FILTRATION CONTAINER TANK #2
LIGHTING AND SERVICES

DESSINÉ PAR DRAWN BY	STEPHANE GRIMARD	DATE 2017-09-13
VÉRIFIÉ PAR CHECKED BY	STEPHANE GRIMARD	2017-09-13
APPROUVÉ PAR APPROVED BY	DANIEL CARRIER	2017-09-13
ÉCHELLE SCALE	1:20	DATE 2017-09-13

NO. DESSIN DRAWING NO. 65-ULT-116-EL-018

NO. PROJET PROJECT NO.	REVISION	FEUILLE / SHT
6515	2	1/1

65-ULT-116-EL-019

FORMAT ARCH D

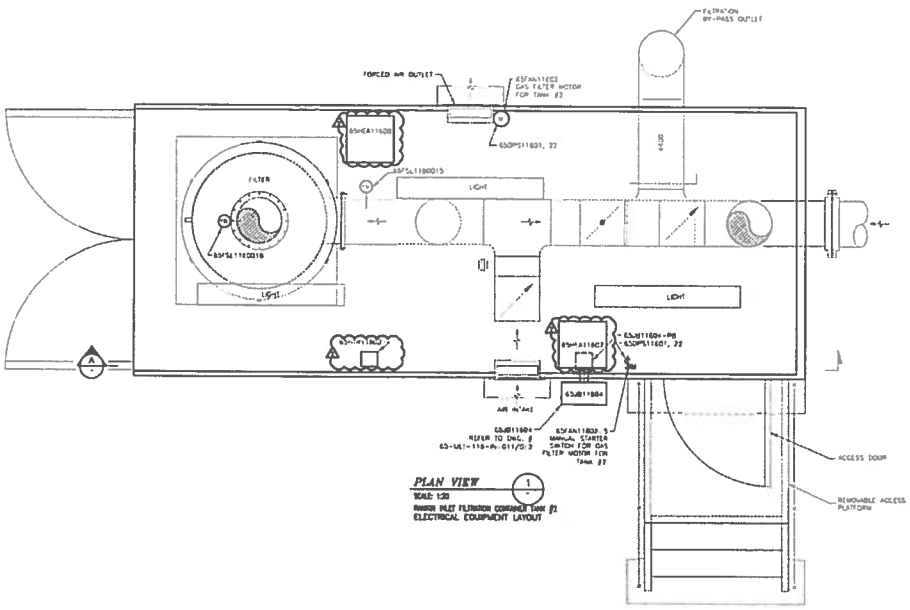

PLAN VIEW (1)
SCALE: 1:20
RANKIN INLET FILTRATION CONTAINER TANK #2
ELECTRICAL EQUIPMENT LAYOUT

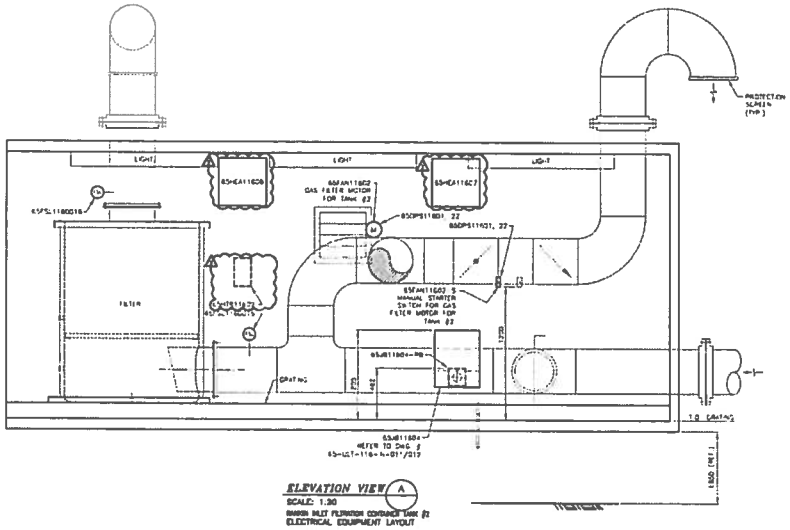

ELEVATION VIEW (A)
SCALE: 1:20
RANKIN INLET FILTRATION CONTAINER TANK #2
ELECTRICAL EQUIPMENT LAYOUT

MATERIAL LIST					
TYP.	QUANTITY	STANDARD NUMBER	SIZE AND / OR RATING	VOLTAGE	DESCRIPTION
$\frac{1}{2}$	SEE NOTE 2	PER	-	120	FACTORY MANUFACTURED HEATER, COMPLETE WITH ALL INTERNAL WIRING, FACTORY MOUNTED CONTROLS, AND ENCLOSURE.

PERMIT TO PRACTICE
LE GROUPE ULTRAGEN LTÉE
Signature _____
Date SEP 2 1 2017
PERMIT NUMBER: P 1180
NT/NU Association of Professional Engineers and Geoscientists

REGISTERED PROFESSIONAL ENGINEER
12677
D. CARRIER
LICENSEE
NT/NU
SEP 2 1 2017

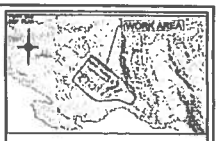

NOTES GENERALES / GENERAL NOTES

1. HEATER UNITS ARE CEILING MOUNTED.
2. FOR EQUIPMENT IDENTIFICATION REFER TO THE MATERIAL LIST.

ISSUED FOR CONSTRUCTION
Ultragen DATE: SEPT 2017

DESSINS DE RÉFÉRENCE / REFERENCE DRAWINGS

TITRE / TITLE	NUMÉRO / NUMBER
SINGLE LINE DIAGRAM	65-116-EPS-003
EQUIPMENT LAYOUT, DETAILS AND SCHEDULES	65-116-EPS-200
GENERAL PLANS AND DETAILS	65-116-EPS-200
GROUNDING/LIGHTNING PROTECTION (1)	65-ULT-116-EL-011/D10
GROUNDING PANEL SCHEDULE & SB-116	65-ULT-116-EL-013
JUNCTION BOX LAYOUT/CONNECTION	65-ULT-116-EL-011/D13
MATERIAL LIST	ULT-201700-E-65-001

AGNICO EAGLE

2	2017-09-20	ISSUED FOR CONSTRUCTION	S.S.	D.C.	
1	2017-09-06	UPDATE NOTE 2 IN THE DRAWING	S.S.	D.C.	
0	2017-07-12	ISSUED FOR CONSTRUCTION	S.S.	D.C.	
REV.	DATE	DESCRIPTION	PROJECT MGR.	ENGINEER	

REVISIONS

Ultragen

NO. PROJET / PROJECT NO. 201700

DOSSIER / FILE
AGNICO EAGLE – MEADOWBANK DIVISION
116 – FUEL TANK FARM
FUEL DISTRIBUTION
RANKIN INLET FILTRATION CONTAINER TANK #2
ELECTRICAL EQUIPMENT LAYOUT

DESSINÉ PAR / DRAWN BY	STEPHANE GRIMARD	2017-08-13
VÉRIFIÉ PAR / CHECKED BY	STEPHANE GRIMARD	2017-08-13
APPROUVÉ PAR / APPROVED BY	DANIEL CARRIER	2017-08-13
ÉCHELLE / SCALE	1:20	DATE 2017-08-13

NO. DESSIN / DRAWING NO. 65-ULT-116-EL-019

NO. PROJET / PROJECT NO. 8515 | RÉVISION / REVISION 2 | FEUILLE / SHT 1/1

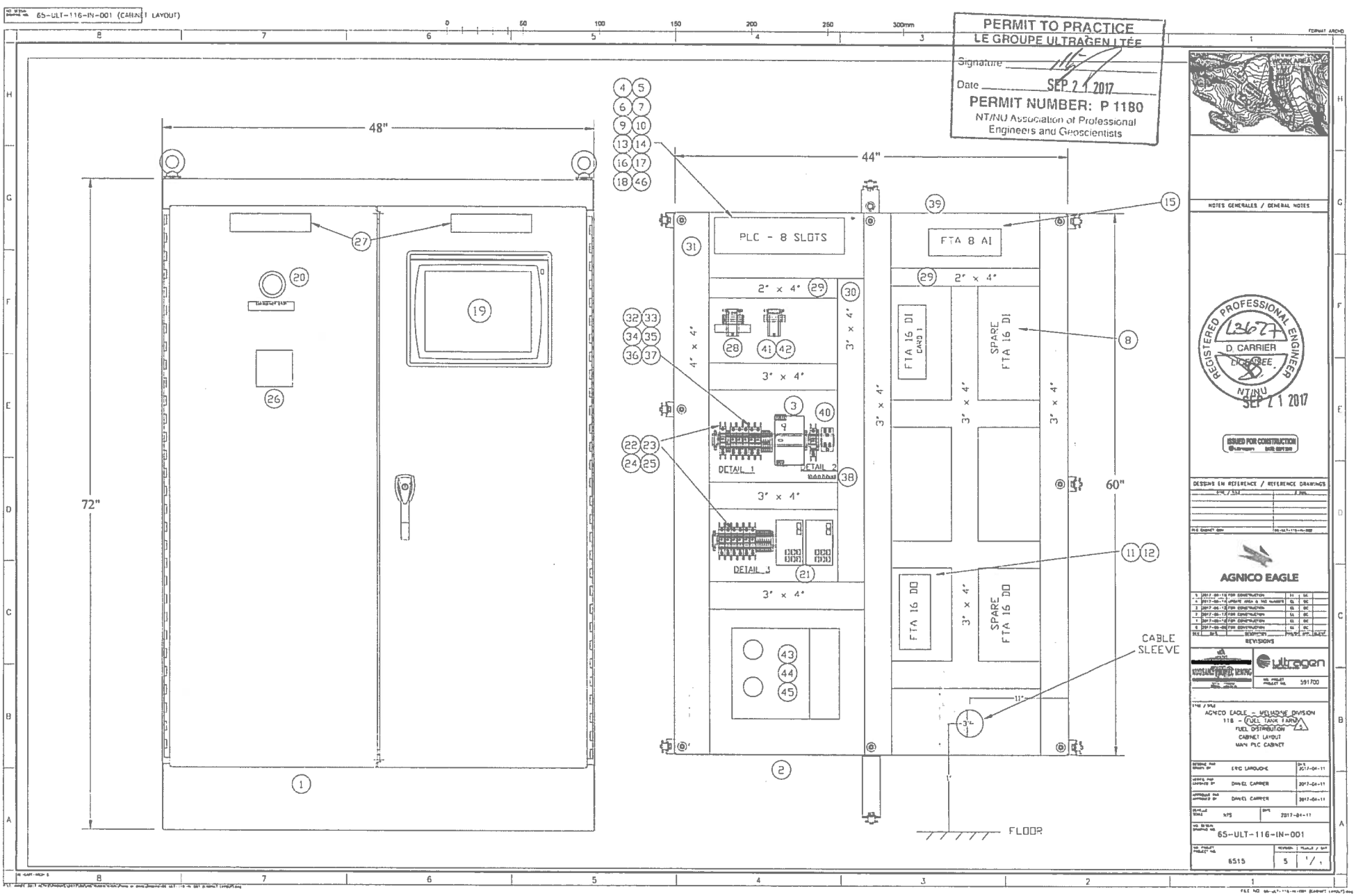
65-ULT-116-IN-001 (CABINET LAYOUT)
48"
72"
44"
60"
PLC - 8 SLOTS
FTA 8 AI
2" x 4"
3" x 4"
4" x 4"
FTA 16 DI
SPARE FTA 16 DI
FTA 16 DO
SPARE FTA 16 DO
DETAIL 1
DETAIL 2
DETAIL 3
CABLE SLEEVE
FLOOR
PERMIT TO PRACTICE
LE GROUPE ULTRAGEN LTÉE
Signature
Date SEP 2 1 2017
PERMIT NUMBER: P 1180
NT/NU Association of Professional Engineers and Geoscientists
REGISTERED PROFESSIONAL ENGINEER
12677
D. CARRIER
ELECTRICAL
NT/NU
SEP 2 1 2017
ISSUED FOR CONSTRUCTION
NOTES GENERALES / GENERAL NOTES
DESSINS EN REFERENCE / REFERENCE DRAWINGS
AGNICO EAGLE
REVISIONS
ultragen
AGNICO EAGLE - MEADOWE DIVISION
116 - FUEL TANK FARM
FUEL DISTRIBUTION
CABINET LAYOUT
MAIN PLC CABINET
ERIC LAROUCHE
DANIEL CARRIER
DANIEL CARRIER
2017-04-11
65-ULT-116-IN-001
6515
5

65-ULT-116-IN-002 (BOM)

ITEM	QUANTITY	DESCRIPTION	MANUFACTURER	MODEL
1	1	CABINET 72H, 48W, 24D NEMA 12 WITH BASE FREESTANDING	Hammond	1418ZW24
2	1	INNER MOUNTING PANEL FOR CABINET	Hammond	72ZWFW
3	1	POWER SUPPLY 24VDC 5 AMP	Schneider	ABL8RPS24050
4	1	BACKPLANE 8 SLOTS	Schneider	BMEXBP0800
5	1	POWER SUPPLY PLC	Schneider	BMXCPS3500
6	1	PLC PROCESSOR	Schneider	BMEP582040
7	1	32 DIGITAL INPUT PLC CARD	Schneider	BMXDDI3202K
8	1	FTA 16 DIGITAL INPUT	Schneider	ABE7S16E2F0
9	1	CABLE 3 METERS FOR DIGITAL INPUT CARD	Schneider	BMXFCC303
10	1	32 DIGITAL OUTPUT PLC CARD	Schneider	BMXDDO3202K
11	1	FTA 16 DIGITAL OUTPUT	Schneider	ABE7R16T210
12	16	RELAY FOR DIGITAL OUTPUT CARD	Schneider	ABR7S21
13	1	CABLE 3 METERS FOR DIGITAL OUTPUT	Schneider	BMXFCC303
14	1	8 ANALOG INPUT PLC CARD	Schneider	BMXAMI0810
15	1	FTA 8 ANALOG INPUT	Schneider	ABE7CPA31
16	1	CABLE 1.5METERS FOR ANALOG INPUT	Schneider	BMXFTA150
17	0	HIGH SPEED COUNTER MODULE	Schneider	BMXEHC0800
18	0	REMOVABLE CAGE CLAMP	Schneider	BMXFTB2000
19	1	PANEL VIEW HMI 15 INCH 24VDC WITH PREMIUM BOX	Schneider	HMIDT732 / HMIG3U
20	1	PANEL MOUNTED BUTTON	Schneider	XB4BS8444
21	2	ETHERNET TCP/IP SWITCH - 6 COPPER / 1 FIBER	Schneider	TCSESM083F1CS0
22	10	120VAC/24VDC CIRCUIT BREAKER 2A	Schneider	GB2CB07
23	1	120VAC/24VDC CIRCUIT BREAKER 5A	Schneider	GB2CB10
24	1	120VAC/24VDC CIRCUIT BREAKER 15A	Schneider	GB2CB21
25	1	120VAC/24VDC CIRCUIT BREAKER 20A	Schneider	GB2CB22
26	1	RED LAMICOID WITH WHITE LETTERS - 4" x 4"	65-ULT-116-IN-004 FOR DETAIL	-
27	2	WHITE LAMICOID WITH BLACK LETTERS - 2" x 6"	65-ULT-116-IN-004 FOR DETAIL	-
28	1	SAFETY RELAY FOR EMERGENCY STOP 120Vac	Allen-Bradley	440R-N23125
29	1	RACEWAY INSIDE CABINET 2" x 4", 6 FEET LENGTH	Panduit	G2X4LG6
30	2	RACEWAY INSIDE CABINET 3" x 4", 6 FEET LENGTH	Panduit	G3X4LG6
31	3	RACEWAY INSIDE CABINET 4" x 4", 6 FEET LENGTH	Panduit	G4X4LG6
32	1	TS-35 DIN MOUNTING RAIL, 7.5MM, 2 METERS LONG	Weidmuller	514500000
33	12	RAIL SUPPORT 1"	Weidmuller	7924270030
34	12	END COVER FOR TS-35	Weidmuller	38356
35	6	GROUP MARKER CARRIER	Weidmuller	29246
36	25	TERMINAL BLOCK WDU 4	Weidmuller	102010
37	50	MARKER	Weidmuller	051796/150772/051530
38	1	GROUNDING BAR 7 TERMINALS	Schneider	PK7GTA
39	1	120V FLUORESCENT CABINET LIGHT	Schneider	NSYLAMCU
40	1	120V 15A OUTLET DIN RAIL	Allen-Bradley	1492-REC15G
41	0	TERMINAL BLOCK 12VDC RELAY	Weidmuller	112275
42	3	TERMINAL BLOCK 120Vac RELAY	Weidmuller	112283
43	1	FIBER OPTIC PATCH PANEL 24 FIBERS	Pandult	FWME2
44	2	LC DUPLEX SINGLE MODE ADAPTER (12 FIBERS)	Pandult	FAP12WBUDLCZ
45	2	FIBER OPTIC PATCH CORD LC TO SC	Pandult	F92ERLNSNSNM002
46	1	ETHERNET MODULE M580 - 3 SUBNETS	Schneider	BMENOC0321

PERMIT TO PRACTICE
LE GROUPE ULTRAGEN LTÉE
Signature
Date SEP 2 1 2017
PERMIT NUMBER: P 1180
NT/NU Association of Professional Engineers and Geoscientists

REGISTERED PROFESSIONAL ENGINEER
13627
D. CARRIER
LICENSEE
NT/NU
SEP 2 1 2017

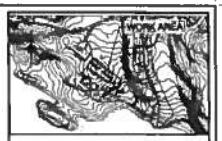

NOTES GENERALES / GENERAL NOTES

ISSUED FOR CONSTRUCTION

DESSINS EN REFERENCE / REFERENCE DRAWINGS

AGNICO EAGLE

REVISIONS

ULTRAGEN

AGNICO EAGLE – MEADOWBANK DIVISION
116 – FUEL TANK FARM
FUEL DISTRIBUTION
BILL OF MATERIAL
MAIN PLC CABINET

DESIGNED BY	ERIC LAROUCHE	2017-04-11
DRAWN BY	DANIEL CARRIER	2017-04-11
APPROVED BY	DANIEL CARRIER	2017-04-11
SCALE	NTS	2017-04-11

65-ULT-116-IN-002

6515 | 5 | 1/1

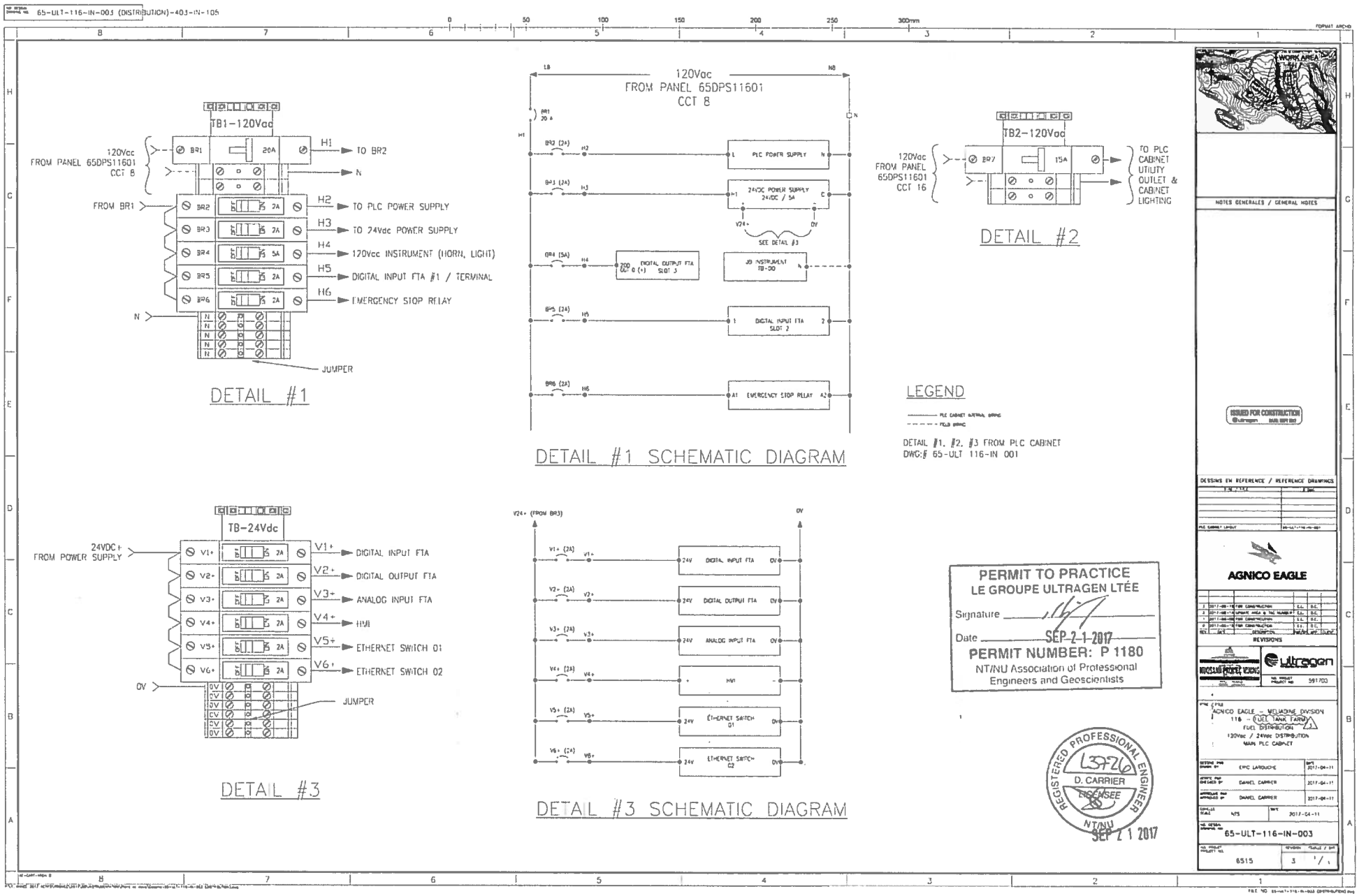

65-ULT-116-IN-003 (DISTRIBUTION)-403-IN-105
TB1-120Vac
120Vac FROM PANEL 65DPS11601 CCT 8
FROM BR1
H1 TO BR2
N
H2 TO PLC POWER SUPPLY
H3 TO 24Vdc POWER SUPPLY
H4 120Vac INSTRUMENT (HORN, LIGHT)
H5 DIGITAL INPUT FTA #1 / TERMINAL
H6 EMERGENCY STOP RELAY
JUMPER
DETAIL #1
120Vac FROM PANEL 65DPS11601 CCT 8
PLC POWER SUPPLY
24VDC POWER SUPPLY 24VDC / 5A
SEE DETAIL #3
DIGITAL OUTPUT FTA SLOT 3
JB INSTRUMENT TB-00
DIGITAL INPUT FTA SLOT 2
EMERGENCY STOP RELAY
DETAIL #1 SCHEMATIC DIAGRAM
TB2-120Vac
120Vac FROM PANEL 65DPS11601 CCT 16
TO PLC CABINET UTILITY OUTLET & CABINET LIGHTING
DETAIL #2
LEGEND
DETAIL #1, #2, #3 FROM PLC CABINET
DWG:# 65-ULT 116-IN 001
TB-24Vdc
24VDC+ FROM POWER SUPPLY
V1+ DIGITAL INPUT FTA
V2+ DIGITAL OUTPUT FTA
V3+ ANALOG INPUT FTA
V4+ HMI
V5+ ETHERNET SWITCH 01
V6+ ETHERNET SWITCH 02
JUMPER
DETAIL #3
V24+ (FROM BR3)
DIGITAL INPUT FTA
DIGITAL OUTPUT FTA
ANALOG INPUT FTA
HMI
ETHERNET SWITCH 01
ETHERNET SWITCH 02
DETAIL #3 SCHEMATIC DIAGRAM
PERMIT TO PRACTICE
LE GROUPE ULTRAGEN LTÉE
Signature
Date SEP 2 1 2017
PERMIT NUMBER: P 1180
NT/NU Association of Professional Engineers and Geoscientists
REGISTERED PROFESSIONAL ENGINEER
D. CARRIER
LICENSEE
NT/NU
SEP 2 1 2017
WORK AREA
NOTES GENERALES / GENERAL NOTES
ISSUED FOR CONSTRUCTION
DESSINS EN REFERENCE / REFERENCE DRAWINGS
AGNICO EAGLE
REVISIONS
ultragen
591700
AGNICO EAGLE - MELIADINE DIVISION
116 - FUEL TANK FARM
FUEL DISTRIBUTION
120Vac / 24Vdc DISTRIBUTION
MAIN PLC CABINET
ERIC LAROUCHE 2017-04-11
DANIEL CARRIER 2017-04-11
DANIEL CARRIER 2017-04-11
NTS 2017-04-11
65-ULT-116-IN-003
6515
3

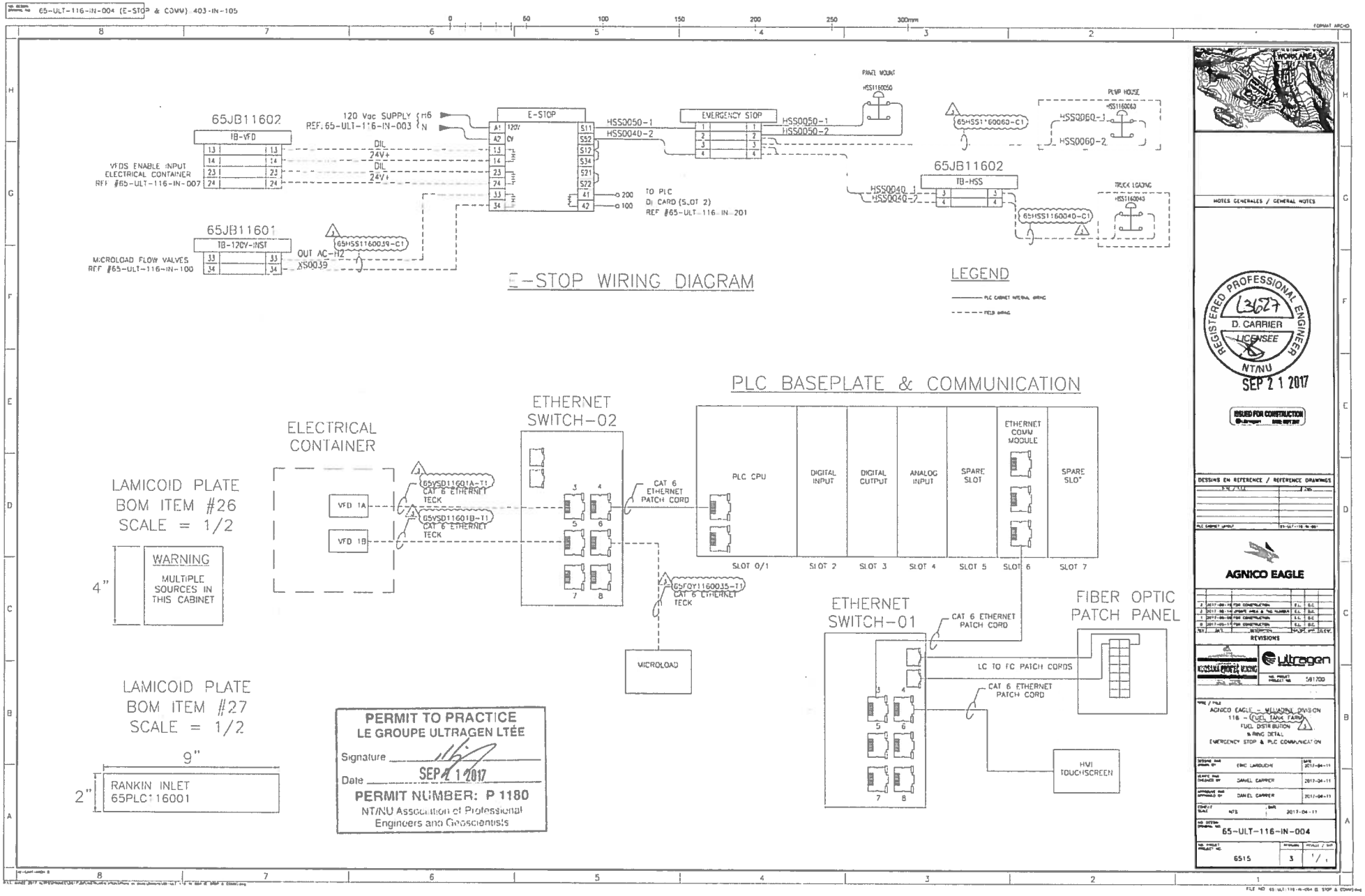

65-ULT-116-IN-004 (E-STOP & COMM) 403-IN-105
65JB11602
TB-VFD
VFDS ENABLE INPUT
ELECTRICAL CONTAINER
REF #65-ULT-116-IN-007
120 Vac SUPPLY
REF. 65-ULT-116-IN-003
H6
N
DIL
24V+
E-STOP
HSS0050-1
HSS0040-2
EMERGENCY STOP
HSS0050-1
HSS0050-2
PANEL MOUNT
HSS1160050
65HSS1160060-C1
PUMP HOUSE
HSS1160060
HSS0060-1
HSS0060-2
65JB11602
TB-HSS
HSS0040-1
HSS0040-2
65HSS1160040-C1
TRUCK LOADING
HSS1160040
TO PLC
DI CARD (SLOT 2)
REF #65-ULT-116-IN-201
65JB11601
TB-120V-INST
MICROLOAD FLOW VALVES
REF #65-ULT-116-IN-100
OUT AC-H2
XS0039
65HSS1160039-C1
E-STOP WIRING DIAGRAM
LEGEND
PLC CABINET INTERNAL WIRING
FIELD WIRING
PLC BASEPLATE & COMMUNICATION
ELECTRICAL CONTAINER
VFD 1A
VFD 1B
65VSD11601A-T1
CAT 6 ETHERNET TECK
65VSD11601B-T1
CAT 6 ETHERNET TECK
ETHERNET SWITCH-02
CAT 6 ETHERNET PATCH CORD
65FOY1160035-T1
CAT 6 ETHERNET TECK
MICROLOAD
PLC CPU
DIGITAL INPUT
DIGITAL OUTPUT
ANALOG INPUT
SPARE SLOT
ETHERNET COMM MODULE
SPARE SLOT
SLOT 0/1
SLOT 2
SLOT 3
SLOT 4
SLOT 5
SLOT 6
SLOT 7
ETHERNET SWITCH-01
CAT 6 ETHERNET PATCH CORD
LC TO FC PATCH CORDS
CAT 6 ETHERNET PATCH CORD
FIBER OPTIC PATCH PANEL
HMI TOUCHSCREEN
LAMICOID PLATE
BOM ITEM #26
SCALE = 1/2
4"
WARNING
MULTIPLE SOURCES IN THIS CABINET
LAMICOID PLATE
BOM ITEM #27
SCALE = 1/2
9"
2"
RANKIN INLET
65PLC116001
PERMIT TO PRACTICE
LE GROUPE ULTRAGEN LTÉE
Signature
Date SEP 21 2017
PERMIT NUMBER: P 1180
NT/NU Association of Professional Engineers and Geoscientists
WORK AREA
NOTES GENERALES / GENERAL NOTES
REGISTERED PROFESSIONAL ENGINEER
D. CARRIER
LICENSEE
NT/NU
SEP 21 2017
ISSUED FOR CONSTRUCTION
DESSINS EN REFERENCE / REFERENCE DRAWINGS
AGNICO EAGLE
REVISIONS
Ultragen
581700
AGNICO EAGLE - MELADINE DIVISION
116 - FUEL TANK FARM
FUEL DISTRIBUTION
WIRING DETAIL
EMERGENCY STOP & PLC COMMUNICATION
ERIC LARDUCHE
DANIEL CARRIER
DANIEL CARRIER
NTS
2017-04-11
65-ULT-116-IN-004
6515
3
1/1

65-ULT 116 IN 005 (JB INST LAYOUT)

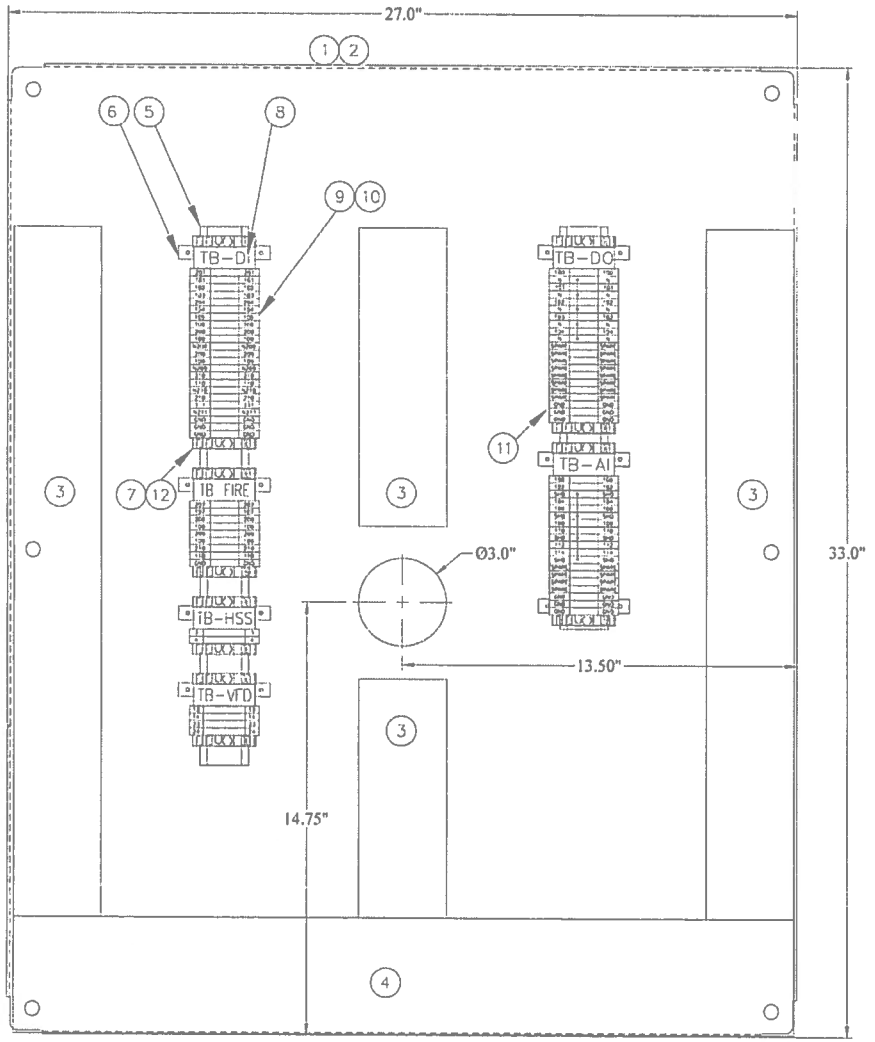

ITEM	QUANTITY PORTABL #1	DESCRIPTION	MANUFACTURER	MODEL
1	1	WALLMOUNT ENCLOSURE 30H, 30W 8D TYPE 4X ALUMINIUM	Hammond	1418N4ALM8
2	1	INNER MOUNTING PANEL FOR ENCLOSURE	Hammond	INCLUDED (ITEM 1)
3	1	RACEWAY INSIDE CABINET 3" x 4" 6 FEET LENGTH	Panduit	G3X4LG6
4	1	RACEWAY INSIDE CABINET 4" x 4" 6 FEET LENGTH	Panduit	G4X4LG6
5	1	TS-35 DIN MOUNTING RAIL, 7.5MM, 2 METERS LONG	Weidmuller	514500000
6	7	RAIL SUPPORT 1"	Weidmuller	7924270030
7	10	END COVER FOR TS-35	Weidmuller	36356
8	6	GROUP MARKER CARRIER	Weidmuller	28246
9	72	TERMINAL BLOCK WDU 4	Weidmuller	102010
10	144	MARKER	Weidmuller	051790/160770/051530
11	10	GROUND TERMINAL YELLOW/GREEN	Weidmuller	10101
12	6	END PLATE	Weidmuller	10500

PERMIT TO PRACTICE
LE GROUPE ULTRAGEN LTÉE
Signature
Date SEP 2 1 2017
PERMIT NUMBER: P 1180
NT/NU Association of Professional Engineers and Geoscientists

REGISTERED PROFESSIONAL ENGINEER
13627
D. CARRIER
LICENSEE
NT/NU
SEP 2 1 2017



NOTES GENERALES / GENERAL NOTES

ISSUED FOR CONSTRUCTION

DESSINS EN REFERENCE / REFERENCE DRAWINGS

TB-DI INTERCONNECTION	65-ULT-116-IN-201
TB-DO INTERCONNECTION	65-ULT-116-IN-200
TB-FIRE INTERCONNECTION	65-ULT-116-IN-200
TB-VFD INTERCONNECTION	65-ULT-116-IN-007
TB-HSS INTERCONNECTION	65-ULT-116-IN-004
TB-AI INTERCONNECTION	65-ULT-116-IN-202

AGNICO EAGLE

NO.	DATE	DESCRIPTION	PAR	APP	CLIENT
3	2017-10-16	FOR CONSTRUCTION	CL	SC	
2	2017-08-16	UPDATE AREA & TAG NUMBER	CL	SC	
1	2017-06-08	FOR CONSTRUCTION	CL	SC	
0	2017-05-15	FOR CONSTRUCTION	CL	SC	

REVISIONS

ACCOSANA PROJECT MANAGEMENT INC.

ultragen

NO. PROJET PROJECT NO. 591700

TITLE / TITLE
AGNICO EAGLE – MELIADINE DIVISION
116 – FUEL TANK FARM
FUEL DISTRIBUTION
JUNCTION BOX INSTRUMENTATION
65JB116C2

DESSINÉ PAR / DRAWN BY	ERIC LAROUCHE	DATE 2017-04-19
VÉRIFIÉ PAR / CHECKED BY	DANIEL CARRIER	2017-04-19
APPROUVÉ PAR / APPROVED BY	DANIEL CARRIER	2017-04-19
ÉCHELLE / SCALE NTS	DATE 2017-04-19	

NO. DESSIN / DRAWING NO. 65-ULT-116-IN-005

NO. PROJET / PROJECT NO.	REVISION	FEUILLE / SHT
6515	3	1/1

65-ULT-116-IN-006 (JB 120V LAYOUT)

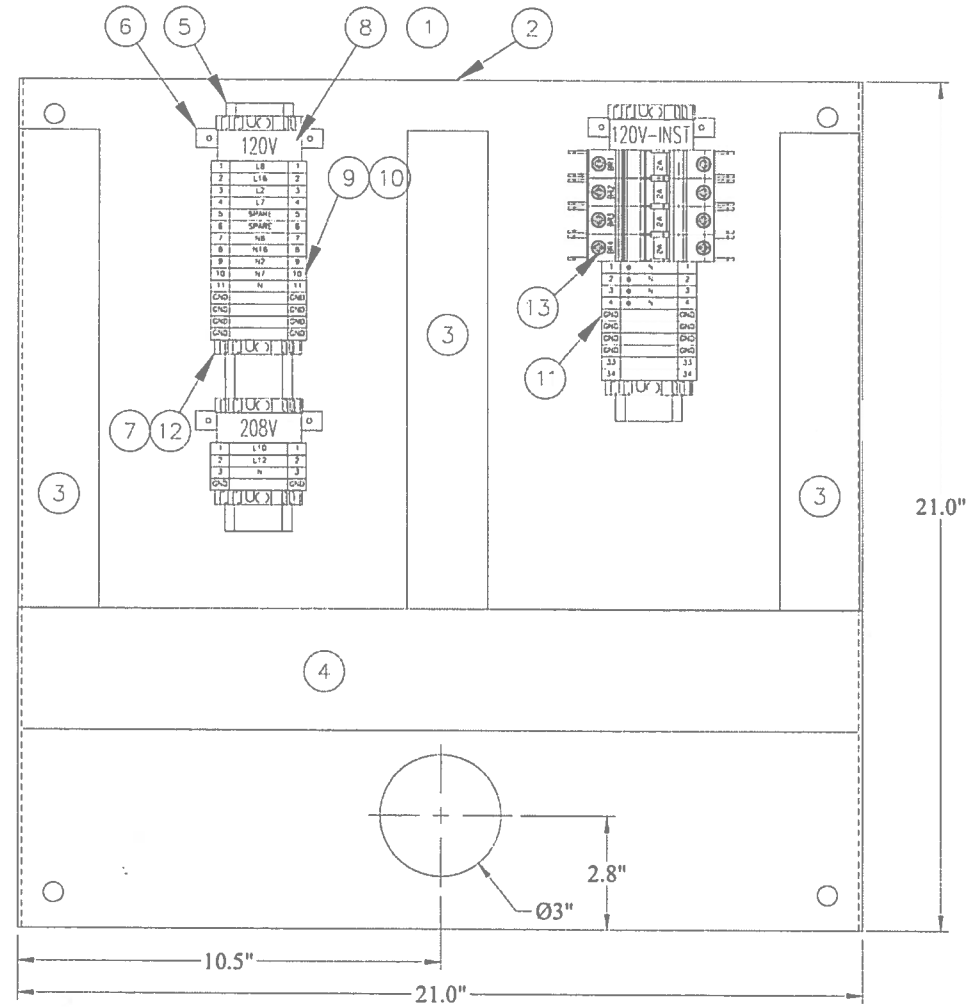

ITEM	QUANTITY	DESCRIPTION	MANUFACTURER	MODEL
1	1	WALLMOUNT ENCLOSURE 24H, 24W 8D TYPE 4X ALUMINUM	Hammond	1418N4ALJ8
2	1	INNER MOUNTING PANEL FOR ENCLOSURE	Hammond	INCLUDED ITEM 1)
3	1	RACEWAY INSIDE CABINET 2" x 4" 6 FEET LENGTH	Panduit	G24LG6
4	1	RACEWAY INSIDE CABINET 3" x 4" 6 FEET LENGTH	Panduit	G34LG6
5	1	TS-35 DIN MOUNTING RAIL, 7.5MM, 2 METERS LONG	Weidmuller	514300000
6	6	RAIL SUPPORT T	Weidmuller	7824270030
7	8	END BRACKET FOR TS-35	Weidmuller	38356
8	3	GROUP MARKER CARRIER	Weidmuller	28246
9	24	TERMINAL BLOCK WDU 6	Weidmuller	1020?
10	48	MARKER	Weidmuller	0517961607725051330
11	9	GROUND TERMINAL YELLOW/GRE N	Weidmuller	10102
12	3	END PLATE	Weidmuller	10500
13	4	120VAC/24VDC CIRCUIT BREAKER 3A	Behmeier	GB2CB07

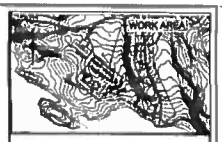

NOTES GENERALES / GENERAL NOTES

ISSUED FOR CONSTRUCTION

DESSINS EN REFERENCE / REFERENCE DRAWINGS

DWG. / DWG.	DWG.
65-ELEC-001 120Vac DISTRIBUTION	65-ULT-116-IN-005
ELECTRICAL EQUIPMENT LAYOUT	65-ULT-116-EL-007

AGNICO EAGLE

REVISIONS

No.	DATE	DESCRIPTION	PREPD BY	CHK'D BY
5	2017-09-19	ISSUED FOR CONSTRUCTION	EL	DM
3	2017-08-16	UPDATE AREA & TAG NUMBER	EL	MC
1	2017-08-09	ISSUED FOR REVIEW	EL	JC
0	2017-06-12	FOR CONSTRUCTION	EL	DM

ULTRAGEN PROJECT SERVICES

ultragen

NO. PROJET / PROJECT NO. 591700

AGNICO EAGLE – MEADOWBANK DIVISION
116 – CULT TANK FARM
FUEL DISTRIBUTION
JUNCTION BOX 120V
65.M11601

DESSINÉ PAR / DRAWN BY	ERIC LAROUCHE	2017-04-19
VÉRIFIÉ PAR / CHECKED BY	DANIEL CARRIER	2017-04-19
APPROUVÉ PAR / APPROVED BY	DANIEL CARRIER	2017-04-19
ÉCHELLE / SCALE	NTS	DATE 2017-04-19

NO. DESSIN / DRAWING NO. 65-ULT-116-IN-006

NO. PROJET / PROJECT NO.	REVISION	FEUILLE / SHT
6515	3	1 / 1

PERMIT TO PRACTICE
LE GROUPE ULTRAGEN LTÉE
Signature
Date SEP 21 2017
PERMIT NUMBER: P 1180
NT/NU Association of Professional Engineers and Geoscientists

REGISTERED PROFESSIONAL ENGINEER
13627
D CARRIER
LICENSEE
NT/NU
SEP 21 2017

FILE NO. 65-ULT-116-IN-006 (JB 120V LAYOUT).dwg

65-ULT-116-IN-007 (VFD)-403-IN-105

PLC CABINET
65PLC116001

OUTSIDE
PUMPING STATION CONTAINER

ELECTRICAL DISTRIBUTION
CONTAINER

PUMPING STATION
CONTAINER

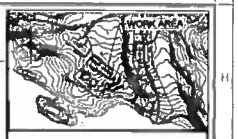

65VSD11601A

65SPB11601-01-P1

ABB VFD

65VSD11601A-P1

FROM DISCONNECT SWITCH
65SPB11601-01
REF #65-116-275-203

15 HP 65POD11601A

EMERGENCY STOP

WIRING DETAIL
REF #65-ULT 116 IN-004

65JB11602

1B-VFD

DL (VFD1)

24V+ (VFD1)

65VSD11601A-C1
3C #14 TECK

65VSD11601A-T1
CAT 6 ETHERNET TECK

ETHERNET SWITCH-02

65VSD11601B

65SPB11601-02-P1

ABB VFD

65VSD11601B-P1

FROM DISCONNECT SWITCH
65SPB11601-02
REF #65-116-275-203

15 HP 65POD11601B

EMERGENCY STOP

WIRING DETAIL
REF #65-ULT-116-IN-004

65JB11602

1D-VFD

DL (VFD2)

24V+ (VFD2)

65VSD11601B-C1
3C #14 TECK

65VSD11601B-T1
CAT 6 ETHERNET TECK

ETHERNET SWITCH-02

MOTOR SCHEMATIC

PERMIT TO PRACTICE
LE GROUPE ULTRAGEN LTÉE
Signature
Date SEP 21 2017
PERMIT NUMBER: P 1180
NT/NU Association of Professional Engineers and Geoscientists

REGISTERED PROFESSIONAL ENGINEER
13627
D CARRIER
LICENSEE
NT/NU
SEP 21 2017

NOTES GENERALES / GENERAL NOTES

ISSUED FOR CONSTRUCTION

DESSINS EN REFERENCE / REFERENCE DRAWINGS

AGNICO EAGLE

REVISIONS

ultragen

AGNICO EAGLE – MELADINE DIVISION
116 – FUEL TANK FARM
FUEL DISTRIBUTION
VFD SCHEMATIC WIRING DETAIL
65VSD116-1/65VSD116-3

65-ULT-116-IN-007

6515 2

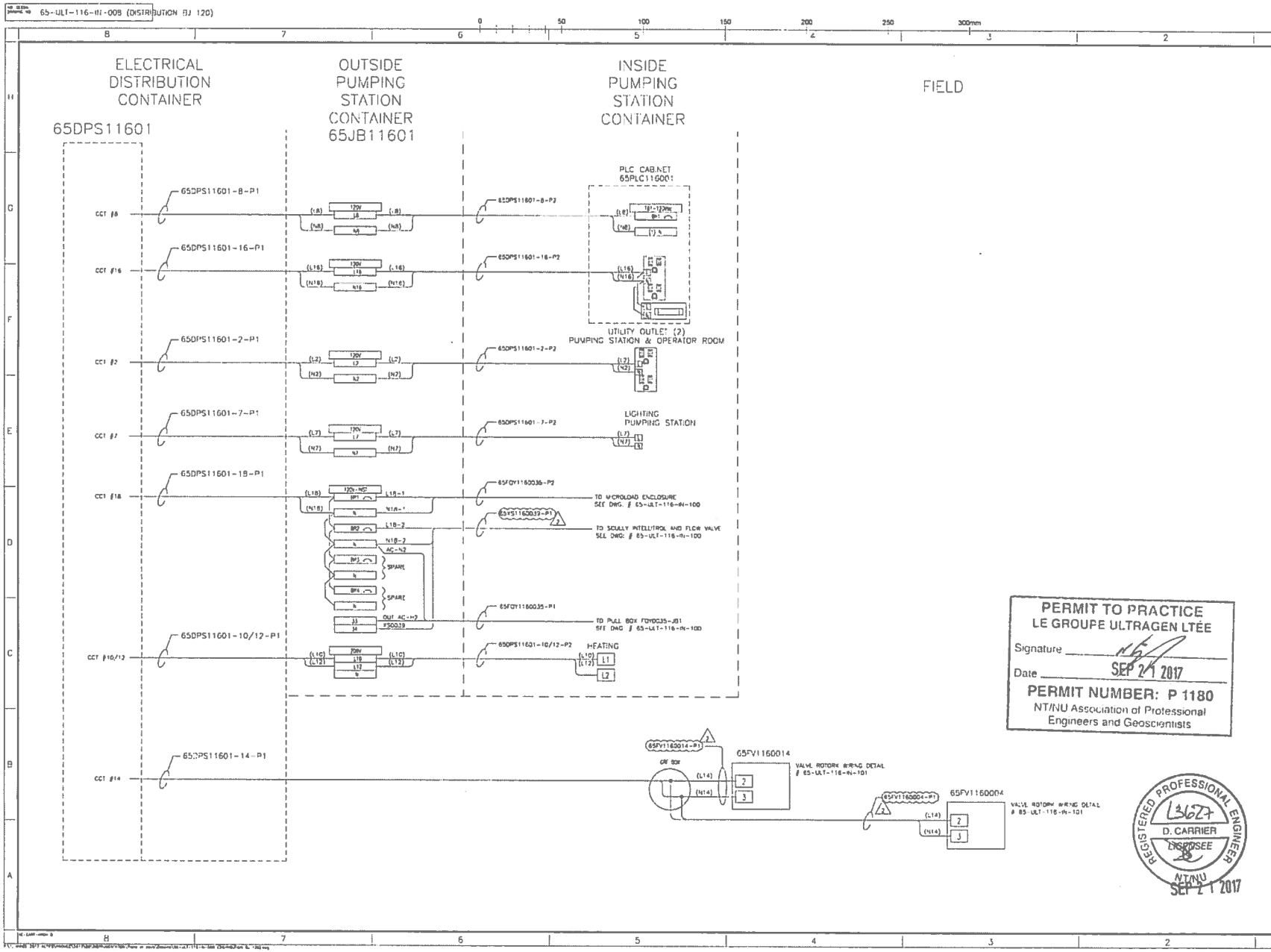

65-ULT-116-IN-008 (DISTRIBUTION BJ 120)
ELECTRICAL DISTRIBUTION CONTAINER
65DPS11601
OUTSIDE PUMPING STATION CONTAINER 65JB11601
INSIDE PUMPING STATION CONTAINER
FIELD
PLC CABINET 65PLC116001
UTILITY OUTLET (2) PUMPING STATION & OPERATOR ROOM
LIGHTING PUMPING STATION
HEATING
65DPS11601-8-P1
65DPS11601-16-P1
65DPS11601-2-P1
65DPS11601-7-P1
65DPS11601-18-P1
65DPS11601-10/12-P1
65DPS11601-14-P1
65DPS11601-8-P2
65DPS11601-16-P2
65DPS11601-2-P2
65DPS11601-7-P2
65FQY1160035-P2
65YS1160039-P1
65FQY1160035-P1
65DPS11601-10/12-P2
TO MICROLOAD ENCLOSURE SEE DWG. # 65-ULT-116-IN-100
TO SCULLY INTELLITROL AND FLOW VALVE SEE DWG: # 65-ULT-116-IN-100
TO PULL BOX FQY0035-JB1 SEE DWG # 65-ULT-116-IN-100
65FV1160014
VALVE ROTORK WIRING DETAIL # 65-ULT-116-IN-101
65FV1160004
VALVE ROTORK WIRING DETAIL # 65-ULT-116-IN-101
PERMIT TO PRACTICE
LE GROUPE ULTRAGEN LTÉE
Signature
Date SEP 21 2017
PERMIT NUMBER: P 1180
NT/NU Association of Professional Engineers and Geoscientists
REGISTERED PROFESSIONAL ENGINEER
D. CARRIER
LICENSEE
NT/NU
SEP 21 2017
NOTES GENERALES / GENERAL NOTES
ISSUED FOR CONSTRUCTION
DESSINS EN REFERENCE / REFERENCE DRAWINGS
AGNICO EAGLE
REVISIONS
ultragen
591700
AGNICO EAGLE - MEADOWE DIVISION
116 - FUEL TANK FARM
FUEL DISTRIBUTION
INTERCONNECTION
65JB11601 - 120Vac DISTRIBUTION
ERIC LAROUCHE
DANIEL CARRIER
DANIEL CARRIER
2017-04-11
NTS
65-ULT-116-IN-008
6515
2
1/1

65-ULT-116-IN-009

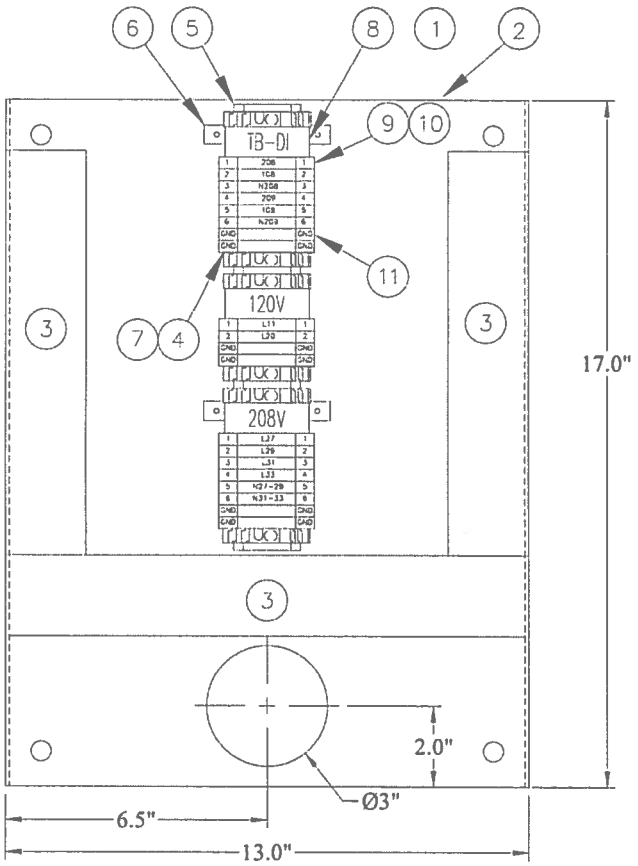

ITEM	QUANTITY	DESCRIPTION	MANUFACTURER	MODEL
1	1	WALL MOUNT ENCLOSURE 20H, 16W, 6D TYPE 4X ALUMINIUM	Hammond	1418N4ALJB
2	1	INNER MOUNTING PANEL FOR ENCLOSURE	Hammond	INCLUDED (ITEM 1)
3	1	RACEWAY INSIDE CABINET 2" x 4" 6 FEET LENGTH	Panduit	G2X4LG6
4	3	END PLATE	Weidmuller	10500
5	1	TS-35 DIN MOUNTING RAIL, 7.5MM 2 METERS LONG	Weidmuller	814500000
6	6	RAIL SUPPORT 1"	Weidmuller	7924270030
7	6	END BRACKET FOR TS-35	Weidmuller	38358
8	3	GROUP MARKER CARRIER	Weidmuller	29246
9	14	TERMINAL BLOCK WDU 6	Weidmuller	10202
10	28	MARKER	Weidmuller	051796/160772/051530
11	6	GROUND TERMINAL YELLOW/GREEN	Weidmuller	10102

PERMIT TO PRACTICE
LE GROUPE ULTRAGEN LTÉE
Signature
Date SEP 2 1 2017
PERMIT NUMBER: P 1180
NT/NU Association of Professional Engineers and Geoscientists

REGISTERED PROFESSIONAL ENGINEER
L3627
D CARRIER
LICENSEE
NT/NU
SEP 2 1 2017



NOTES GENERALES / GENERAL NOTES

ISSUED FOR CONSTRUCTION

DESSINS EN REFERENCE / REFERENCE DRAWINGS

AGNICO EAGLE

REVISIONS

ultragen

591700

AGNICO EAGLE - MELIADINE DIVISION
116 - FUEL TANK FARM
FUEL DISTRIBUTION
RANKIN INLET FILTRATION CONTAINER TANK #1
JUNCTION BOX 120-208V - LAYOUT
65J811603

DESSINÉ PAR / DRAWN BY	STÉPHANE ORMAND	DATE 2017-06-13
VÉRIFIÉ PAR / CHECKED BY	GERMAIN GAGNON	2017-06-13
APPROUVÉ PAR / APPROVED BY	DANIEL CARRIER	2017-06-13
ÉCHELLE / SCALE	NTS	DATE 2017-06-13

NO. DESSIN / DRAWING NO. 65-ULT-116-IN-009

NO. PROJET / PROJECT NO. 6515 | REVISION 2 | FEUILLE / SHT 1/1

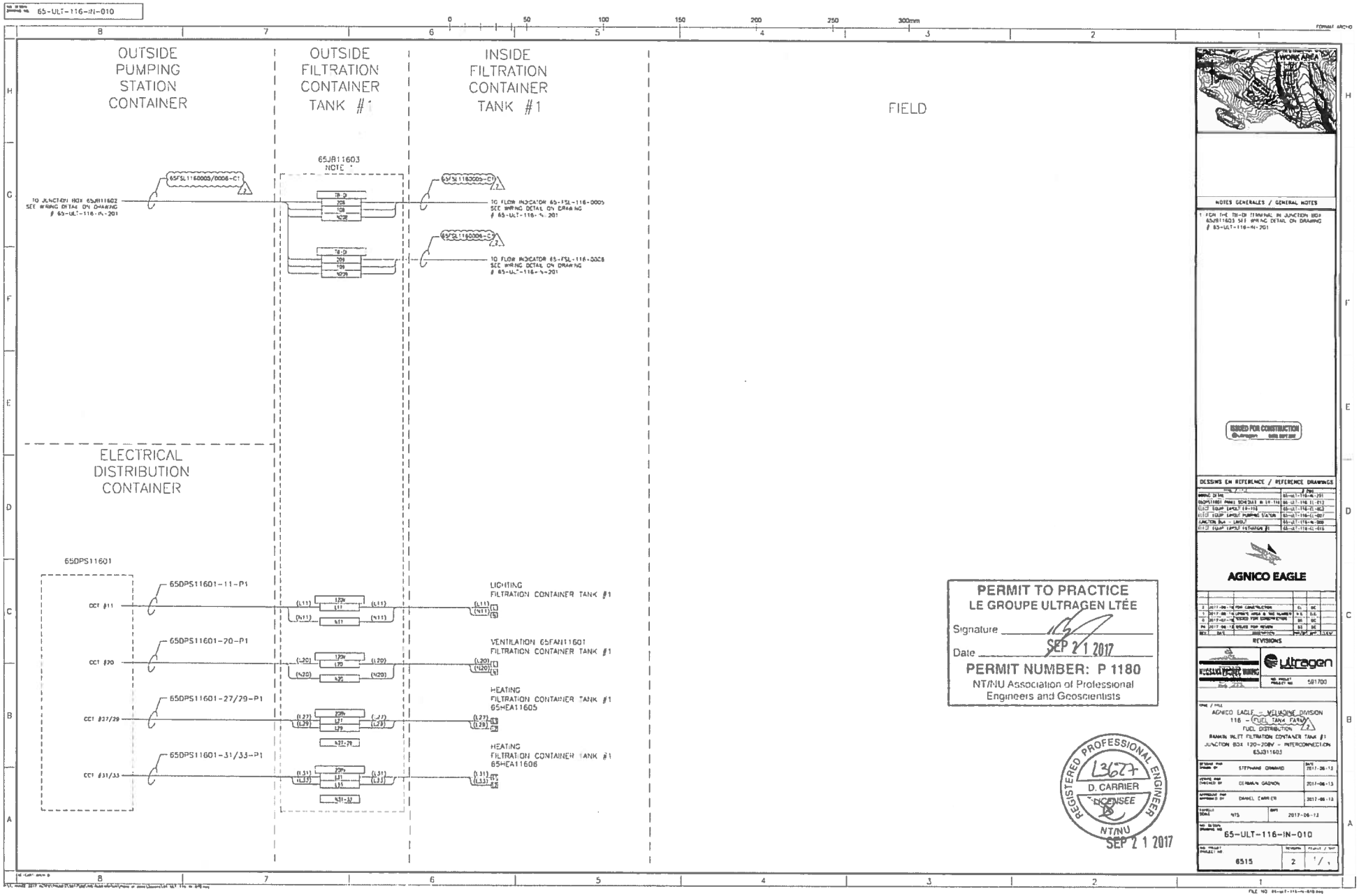
65-ULT-116-IN-010
OUTSIDE PUMPING STATION CONTAINER
OUTSIDE FILTRATION CONTAINER TANK #1
INSIDE FILTRATION CONTAINER TANK #1
FIELD
65JB11603
NOTE 1
65FSL1160005/0006-C1
TO JUNCTION BOX 65JB11602 SEE WIRING DETAIL ON DRAWING # 65-ULT-116-IN-201
65FSL1160005-C1
TO FLOW INDICATOR 65-FSL-116-0005 SEE WIRING DETAIL ON DRAWING # 65-ULT-116-IN-201
65FSL1160006-C1
TO FLOW INDICATOR 65-FSL-116-0006 SEE WIRING DETAIL ON DRAWING # 65-ULT-116-IN-201
ELECTRICAL DISTRIBUTION CONTAINER
65DPS11601
CCT #11
65DPS11601-11-P1
LIGHTING FILTRATION CONTAINER TANK #1
CCT #20
65DPS11601-20-P1
VENTILATION 65FAN11601 FILTRATION CONTAINER TANK #1
CCT #27/29
65DPS11601-27/29-P1
HEATING FILTRATION CONTAINER TANK #1 65HEA11605
CCT #31/33
65DPS11601-31/33-P1
HEATING FILTRATION CONTAINER TANK #1 65HEA11606
PERMIT TO PRACTICE
LE GROUPE ULTRAGEN LTÉE
Signature
Date SEP 2 1 2017
PERMIT NUMBER: P 1180
NT/NU Association of Professional Engineers and Geoscientists
REGISTERED PROFESSIONAL ENGINEER
D. CARRIER
LICENSEE
NT/NU
SEP 2 1 2017
NOTES GENERALES / GENERAL NOTES
1 FOR THE TB-DI TERMINAL IN JUNCTION BOX 65JB11603 SEE WIRING DETAIL ON DRAWING # 65-ULT-116-IN-201
ISSUED FOR CONSTRUCTION
DESSINS EN REFERENCE / REFERENCE DRAWINGS
AGNICO EAGLE
REVISIONS
ultragen
591700
AGNICO EAGLE - MELIADINE DIVISION
116 - FUEL TANK FARM
FUEL DISTRIBUTION
RANKIN INLET FILTRATION CONTAINER TANK #1
JUNCTION BOX 120-208V - INTERCONNECTION
65JB11603
STEPHANE GRIMARD
CERMAIN GAGNON
DANIEL CARRIER
NTS
2017-06-13
65-ULT-116-IN-010
6515
2

65-ULT-116-IN-011

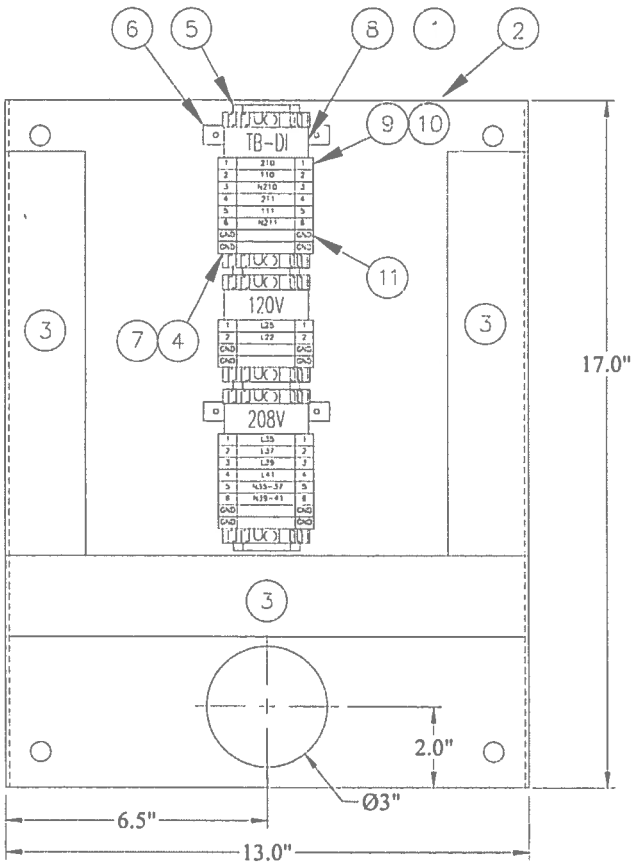

ITEM	QUANTITY	DESCRIPTION	MANUFACTURER	MODEL
1	1	WALLMOUNT ENCLOSURE 20H, 16W 8D TYPE 4X ALUMINUM	Hammond	1418N4ALJB
2	1	INNER MOUNTING PANEL FOR ENCLOSURE	Hammond	INCLUDED (ITEM 1)
3	1	RACEWAY W/SIDE CABINET 2" x 4" 6 FEET LENGTH	Panduit	G2X4LG6
4	3	END PLATE	Weidmuller	10500
5	1	TS-35 DIN MOUNTING RAIL, 7.5MM, 2 METERS LONG	Weidmuller	0145000000
6	6	RAIL SUPPORT 1"	Weidmuller	7824770030
7	6	END BRACKET FOR TS-35	Weidmuller	38356
8	3	GROUP MARKER CARRIER	Weidmuller	29246
9	14	TERMINAL BLOCK WDU 6	Weidmuller	10302
10	20	MARKER	0517961607736251530	
11	6	GROUND TERMINAL YELLOWGREEN	Weidmuller	10122

PERMIT TO PRACTICE
LE GROUPE ULTRAGEN LTÉE
Signature
Date SEP 2 1 2017
PERMIT NUMBER: P 1180
NT/NU Association of Professional Engineers and Geoscientists

REGISTERED PROFESSIONAL ENGINEER
13627
D. CARRIER
LICENSEE
NT/NU
SEP 2 1 2017

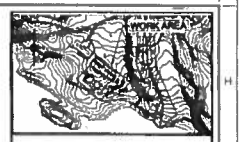

NOTES GÉNÉRALES / GENERAL NOTES

ISSUED FOR CONSTRUCTION

DESSINS EN RÉFÉRENCE / REFERENCE DRAWINGS

JUNCTION BOX – INTERCONNECTION	65-ULT-116-IN-012
FUEL EQUIP. LAYOUT ULTRA EN #2	65-ULT-116-EL-016

AGNICO EAGLE

2	2017-08-18	FOR CONSTRUCTION	SL / BC
1	2017-08-14	UPDATE WELD & TAC NUMBER	NB / BC
0	2017-07-12	ISSUED FOR CONSTRUCTION	SB / BC
No.	2017-06-12	ISSUED FOR REVIEW	BC / BC
SCO	No.	REVISION	PRD / APP / ENGR

REVISIONS

ultragen

NO. PROJET / PROJECT NO. 591700

AGNICO EAGLE – MEADOWBANK DIVISION
116 – FUEL TANK FARM
FUEL DISTRIBUTION
RANK'N ALET FILTRATION CONTAINER TANK #2
JUNCTION BOX 120-208V – LAYOUT
65J611624

DESSINÉ PAR / DRAWN BY	STEPHANE CRISANTO	2017-06-13
VÉRIFIÉ PAR / CHECKED BY	GERMAIN GAGNON	2017-06-13
APPROUVÉ PAR / APPROVED BY	DANIEL CARRIER	2017-06-13
ÉCHELLE / SCALE	NTS	DATE 2017-06-13

NO. DESSIN / DRAWING NO. 65-ULT-116-IN-011

NO. PROJET / PROJECT NO. 6515

REVISION 2

FEUILLE / SHT 1 / 1

FILE NO. 65-ULT-116-IN-011.dwg

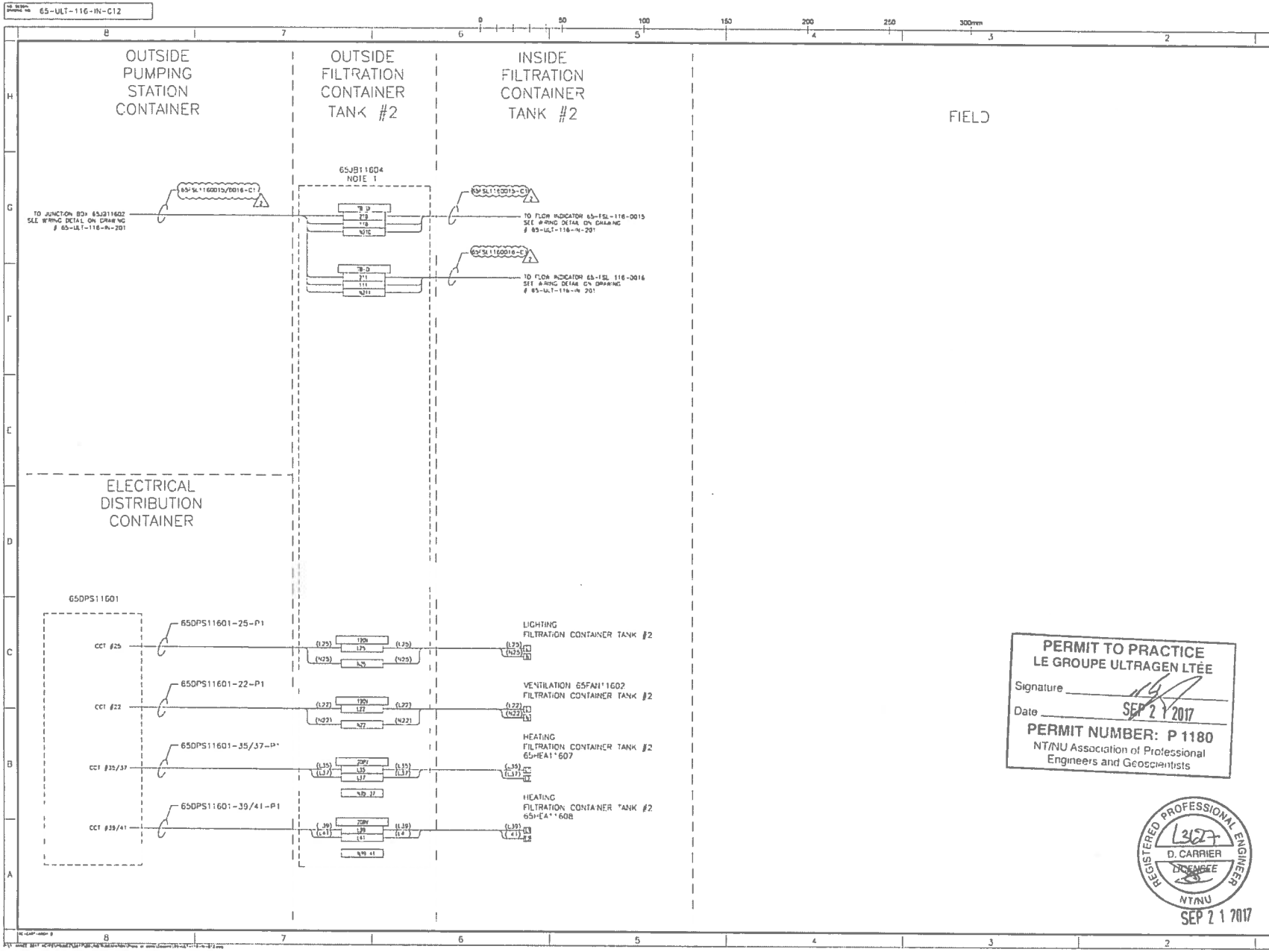

PERMIT TO PRACTICE
LE GROUPE ULTRAGEN LTÉE
Signature
Date SEP 2 1 2017
PERMIT NUMBER: P 1180
NT/NU Association of Professional Engineers and Geoscientists

REGISTERED PROFESSIONAL ENGINEER
D. CARRIER
LICENSEE
NT/NU
SEP 2 1 2017

NOTES GENERALES / GENERAL NOTES

1. FOR THE TB-01 TERMINAL IN JUNCTION BOX 65JB11604 SEE WIRING DETAIL ON DRAWING # 65-ULT-116-IN-201

ISSUED FOR CONSTRUCTION

DESSINS EN REFERENCE / REFERENCE DRAWINGS

AGNICO EAGLE

REVISIONS

NOCSAMI PROJECT MINING

ultragen

591700

AGNICO EAGLE – MELIADINE DIVISION
116 – FUEL TANK FARM
FUEL DISTRIBUTION
RANKIN INLET FILTRATION CONTAINER TANK #2
JUNCTION BOX 120-208V – INTERCONNECTION
65JB11604

DESSINÉ PAR / DRAWN BY	STÉPHANE GRAMARD	2017-06-13
VÉRIFIÉ PAR / CHECKED BY	GERMAIN GAGNON	2017-06-13
APPROUVÉ PAR / APPROVED BY	DANIEL CARRIER	2017-06-13
FORMAT / SCALE	NTS	2017-06-13

NO. DESSIN / DRAWING NO. 65-ULT-116-IN-012

NO. PROJET / PROJECT NO. 6515 | REVISION 2 | FEUILLE / SHT 1/1

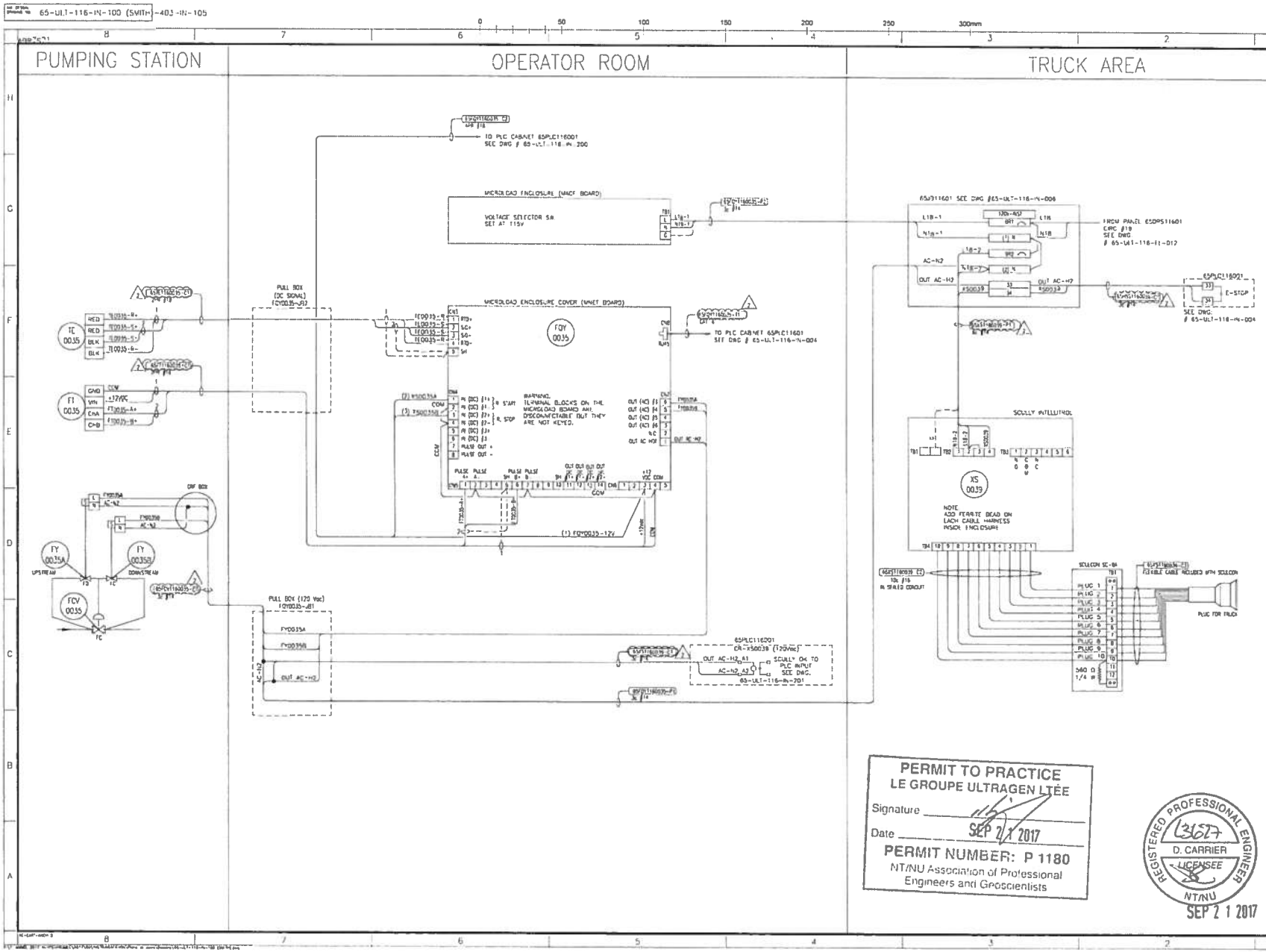

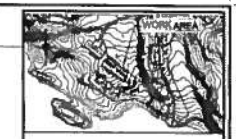

NOTES GENERALES / GENERAL NOTES

NOTES:

1. ALL AC WIRING MUST BE ROUTED INTO MICROLOAD THROUGH THE KNOCK OUT ENTRIES (2) LOCATED ON BOTH SIDE OF THE HOUSING
2. ALL ETHERNET AND DC WIRING MUST BE ROUTED INTO MICROLOAD THROUGH THE KNOCKOUT ENTRIES (2) LOCATED IN THE BOTTOM OF THE HOUSING.

ISSUED FOR CONSTRUCTION

DESSINS EN REFERENCE / REFERENCE DRAWINGS

AGNICO EAGLE

REVISIONS

ultragen

591700

AGNICO EAGLE – MELIADINE DIVISION
116 – FUEL TANK FARM
FUEL DISTRIBUTION
MICROLOAD INTERCONNECTION
65FQY11600035

DESSINÉ PAR / DRAWN BY	ERIC LAROUCHE	2017-05-18
DESSINÉ PAR / CHECKED BY	DANIEL CARRIER	2017-05-18
APPROUVÉ PAR / APPROVED BY	DANIEL CARRIER	2017-05-18
ÉCHELLE / SCALE		DATE 2017-05-18
NO. DESSIN / DRAWING NO.	65-ULT-116-IN-100	
NO. PROJET / PROJECT NO.	6515	REVISION 2 / FEUILLE / SHT 1/1

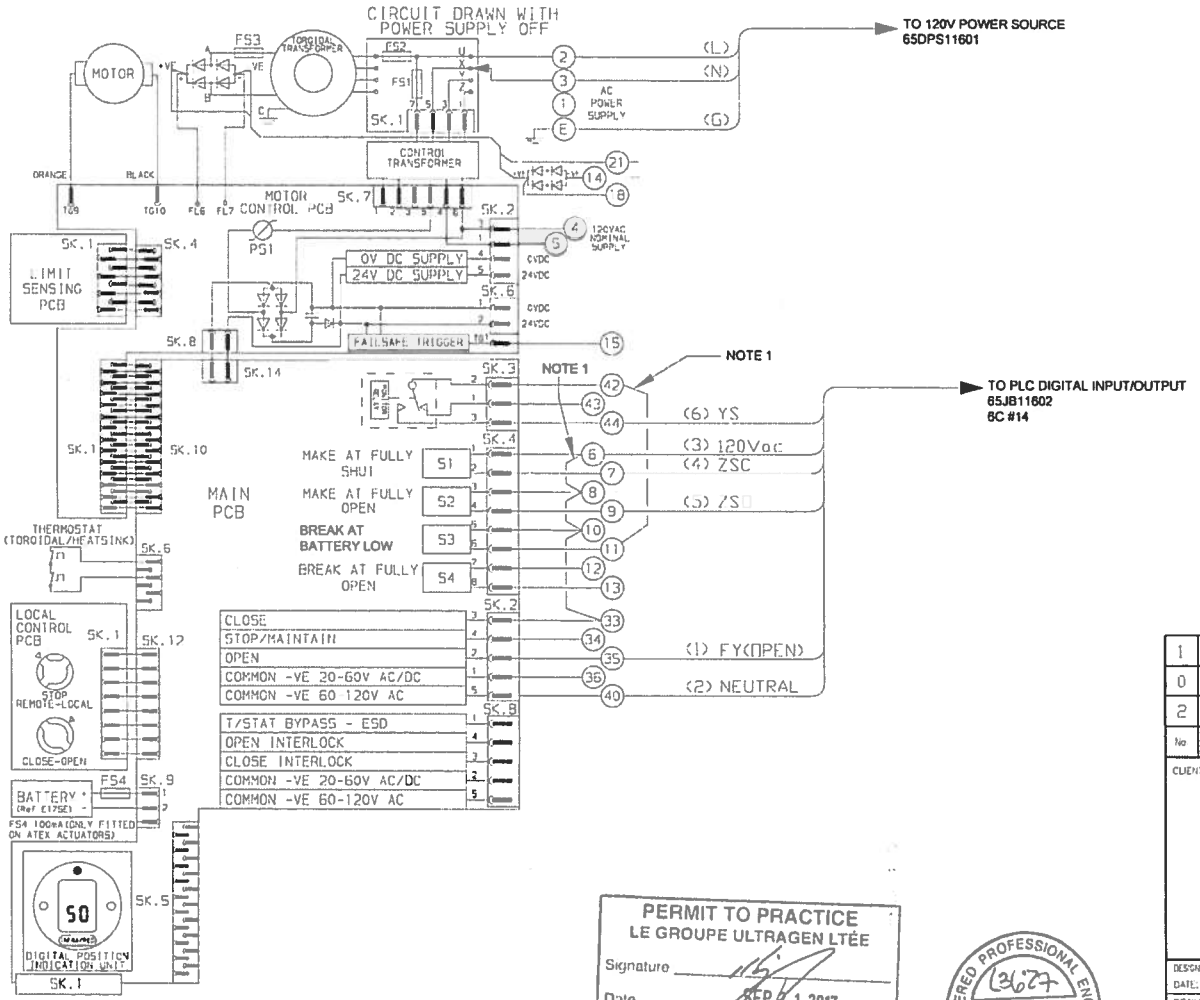

NOTE :
1. CONTRACTOR MUST INSTALL JUMPERS WIRE ON VALVE TERMINAL BLOCK

2. RELAY MONITOR SWITCH AND S3 SWITCH ARE CONNECTED IN SERIAL. THESE SWITCHES MUST BE PROGRAMMED IN FAIL SAFE MODE (CLOSED CONTACT IN NORMAL OPERATION)

3. S3 SWITCH MUST BE PROGRAMMED FOR BATTERY LOW MONITORING

4. VALVE TO BE CONFIGURED IN TWO WIRES CONTROL MODE, ENERGIZE TO OPEN, DE-ENERGIZE TO CLOSE (CONFIGURE FOR OPEN PRIORITY)

ISSUED FOR CONSTRUCTION
ultragen DATE: SEPT 2017

No	DATE	REVISON	BY / APP.
1	2017-08-14	UPDATE AREA & TAG NUMBER	EL / DC
0	2017-06-09	ISSUED FOR CONSTRUCTION	EL / DC
2	2017-09-19	ISSUED FOR CONSTRUCTION	EL / DC

CLIENT: AGNICO EAGLE

NUQSANA: PROMEC MINING

ultragen
CONSULTANT PROJECT NO. 591700

PERMIT TO PRACTICE
LE GROUPE ULTRAGEN LTÉE
Signature
Date SEP 2 1 2017
PERMIT NUMBER: P 1180
NT/NU Association of Professional Engineers and Geoscientists

REGISTERED PROFESSIONAL ENGINEER (3677) D. CARRIER LICENSEE NT/NU
SEP 2 1 2017

DESIGNED BY: E. LAROUCHE	PROJECT: AGNICO EAGLE – MEADOWBANK DIVISION 116 – FUEL TANK FARM 2
DATE: 2017.05.24	
DRAWN BY: R. SHRESTHA	
DATE: 2017.05.24	TITLE: ROTORK MOTORIZED VALVE WIRING DIAGRAM TYPICAL DRAWING FOR 65FV1160004/65FV1160014
CHECKED BY: D. CARRIER	
DATE: 2017.05.24	
APPROVED BY:	
DATE:	
SCALE: NTS	PROJECT No. 6515 / DRAWING NO. 65-ULT-116-IN-101 / REV. 2

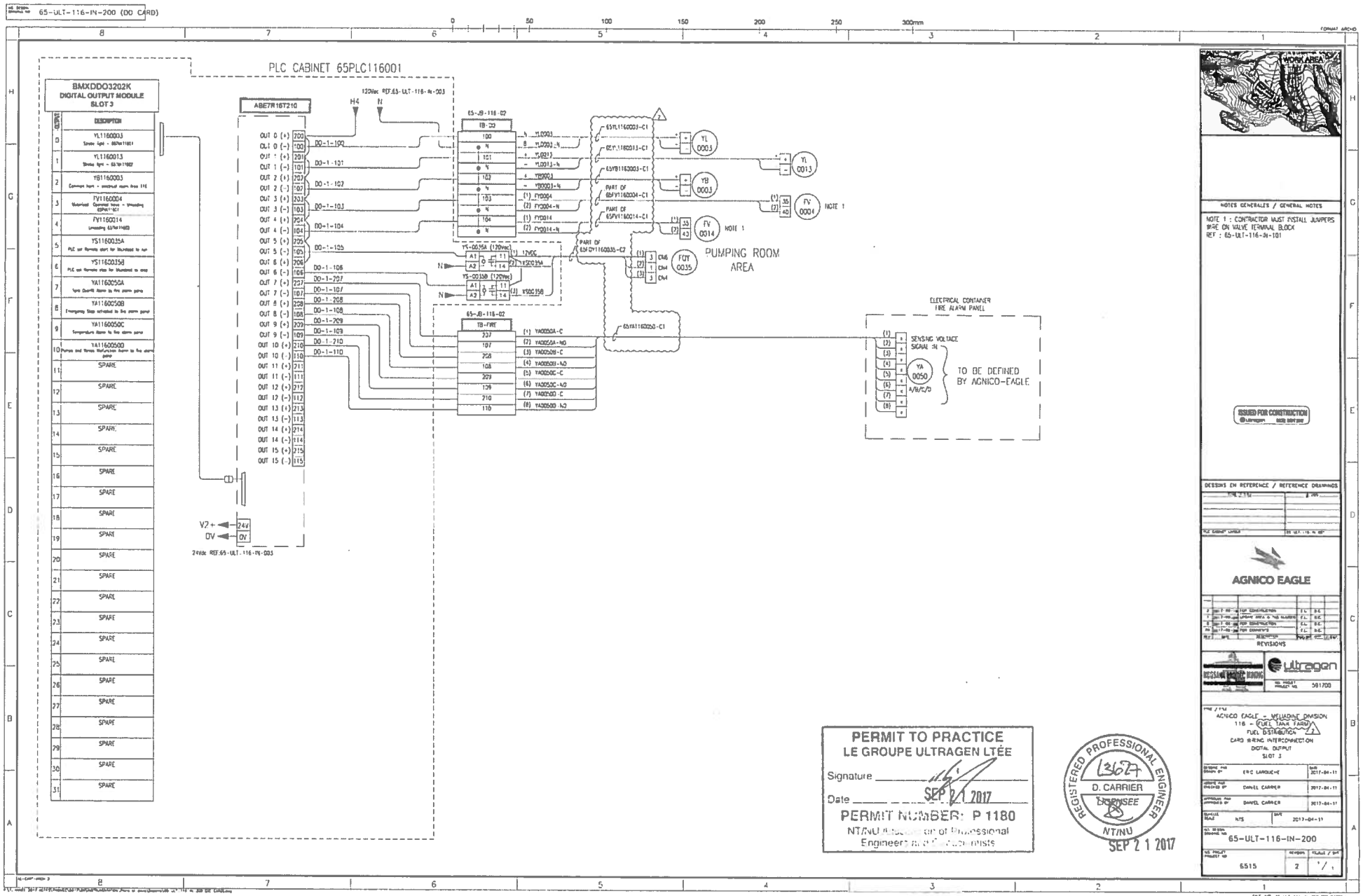

65-ULT-116-IN-200 (DO CARD)
PLC CABINET 65PLC116001
BMXDDO3202K
DIGITAL OUTPUT MODULE
SLOT 3
ABE7R16T210
120Vac REF:65-ULT-116-IN-003
H4
N
65-JB-116-02
TB-DO
TB-FIRE
PUMPING ROOM
AREA
ELECTRICAL CONTAINER
FIRE ALARM PANEL
SENSING VOLTAGE
SIGNAL IN
TO BE DEFINED
BY AGNICO-EAGLE
V2+
0V
24Vdc REF:65-ULT-116-IN-003
NOTES GENERALES / GENERAL NOTES
NOTE 1 : CONTRACTOR MUST INSTALL JUMPERS
WIRE ON VALVE TERMINAL BLOCK
REF : 65-ULT-116-IN-101
ISSUED FOR CONSTRUCTION
DESSINS EN REFERENCE / REFERENCE DRAWINGS
AGNICO EAGLE
REVISIONS
ultragen
591700
AGNICO EAGLE - MEUADINE DIVISION
116 - FUEL TANK FARM
FUEL DISTRIBUTION
CARD WIRING INTERCONNECTION
DIGITAL OUTPUT
SLOT 3
ERIC LAROUCHE
DANIEL CARRIER
NTS
65-ULT-116-IN-200
6515
2
PERMIT TO PRACTICE
LE GROUPE ULTRAGEN LTÉE
Signature
Date
SEP 21 2017
PERMIT NUMBER: P 1180
NT/NU Association of Professional
Engineers and Geoscientists
REGISTERED PROFESSIONAL ENGINEER
D. CARRIER
LICENSEE
NT/NU
SEP 21 2017

65-ULT-116-IN-201 (DI CARD)

BMXDDI3202K
DIGITAL INPUT MODULE
SLOT 2

INPUT	DESCRIPTION
0	HSS1160050
1	ZSC1160004
2	ZSO1160004
3	YS1160004
4	ZSC1160014
5	ZSO1160014
6	YS1160014
7	XS1160039
8	FSL1160005
9	FSL1160006
10	FSL1160015
11	FSL1160016
12	SPARE
13	SPARE
14	SPARE
15	SPARE
16	SPARE
17	SPARE
18	SPARE
19	SPARE
20	SPARE
21	SPARE
22	SPARE
23	SPARE
24	SPARE
25	SPARE
26	SPARE
27	SPARE
28	SPARE
29	SPARE
30	SPARE
31	SPARE

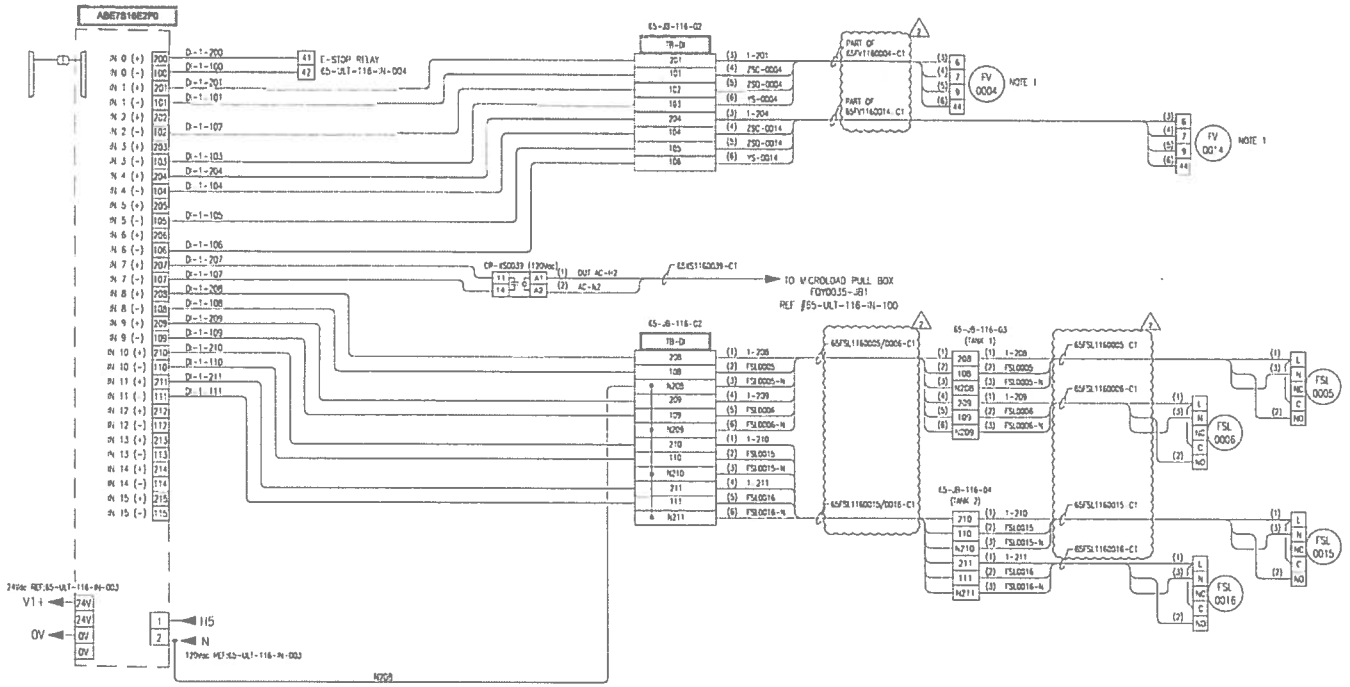

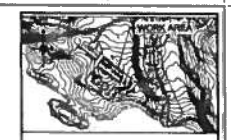

NOTES GENERALES / GENERAL NOTES

NOTE 1 : CONTRACTOR MUST INSTALL JUMPER WIRE ON VALVE TERMINAL BLOCK
REF : 65-ULT-116-IN-101

ISSUED FOR CONSTRUCTION

DESSINS EN REFERENCE / REFERENCE DRAWINGS

AGNICO EAGLE

REVISIONS

ultragen

591700

AGNICO EAGLE – MELIADINE DIVISION
116 – FUEL TANK FARM
FUEL DISTRIBUTION
CARD WIRING INTERCONNECTION
DIGITAL INPUT (120Vac)
SLOT 2

DESSINÉ PAR / DRAWN BY	ERIC LAROUCHE	2017-04-11
VÉRIFIÉ PAR / CHECKED BY	DANIEL CARRIER	2017-04-11
APPROUVÉ PAR / APPROVED BY	DANIEL CARRIER	2017-04-11
ÉCHELLE / SCALE	NTS	2017-04-11

65-ULT-116-IN-201

NO. PROJET / PROJECT NO.	REVISION	FEUILLE / SHT
6515	2	1/1

PERMIT TO PRACTICE
LE GROUPE ULTRAGEN LTÉE
Signature
Date SEP 21 2017
PERMIT NUMBER: P 1180
NT/NU Association of Professional Engineers and Geoscientists

REGISTERED PROFESSIONAL ENGINEER
D. CARRIER
LICENSEE
NT/NU
SEP 21 2017

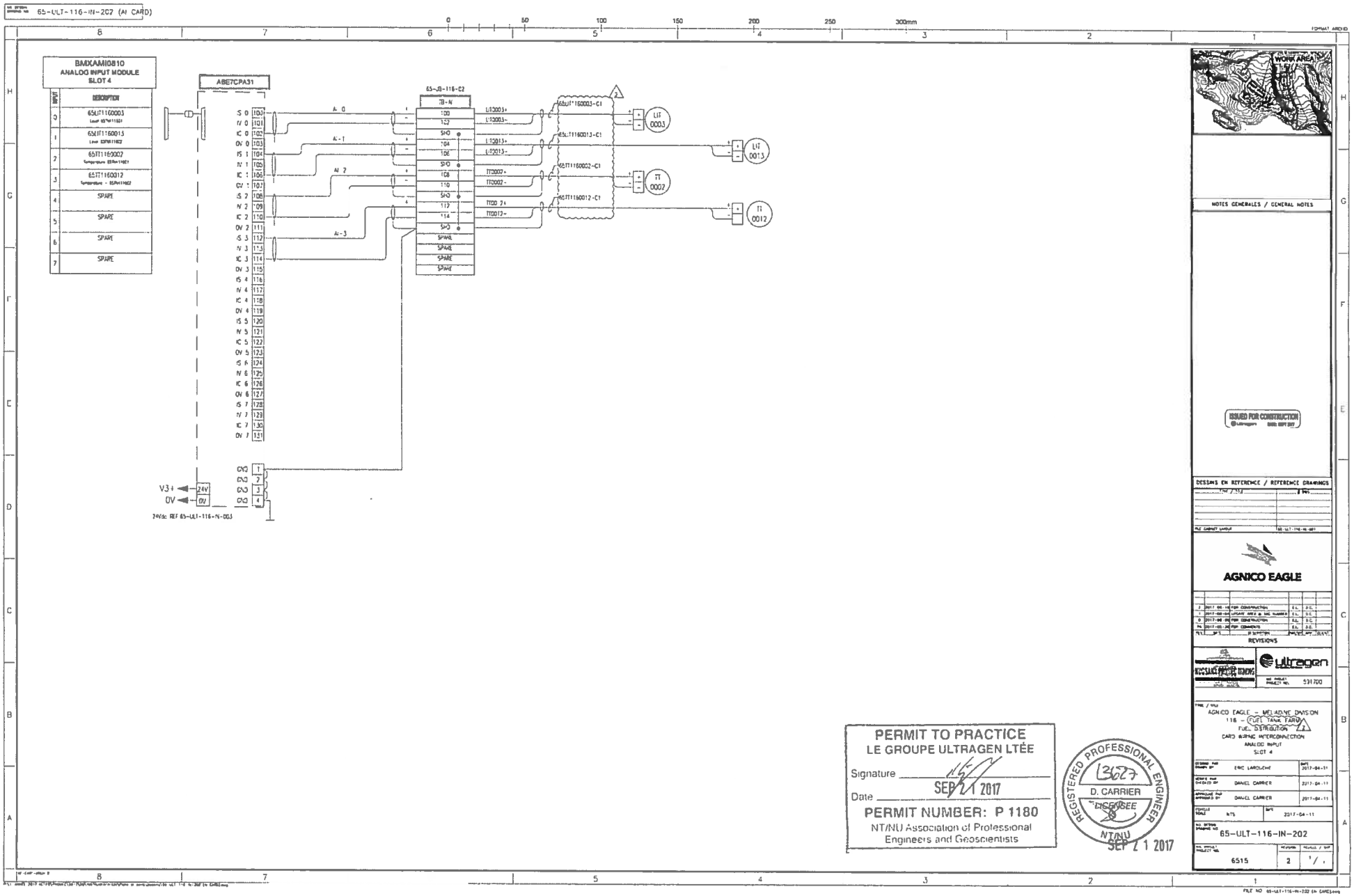
65-ULT-116-IN-202 (AI CARD)
BMXAMI0810
ANALOG INPUT MODULE
SLOT 4
INPUT
DESCRIPTION
0 65LIT1160003
1 65LIT1160013
2 65TT1160002
3 65TT1160012
4 SPARE
5 SPARE
6 SPARE
7 SPARE
ABE7CPA31
65-JB-116-C2
TB-N
AI 0
AI-1
AI 2
AI-3
LIT0003+
LIT0003-
LIT0013+
LIT0013-
TT0002+
TT0002-
TT0012+
TT0012-
65LIT1160003-C1
65LIT1160013-C1
65TT1160002-C1
65TT1160012-C1
LIT 0003
LIT 0013
TT 0002
TT 0012
V3+
0V
24V
24Vdc REF 65-ULT-116-IN-003
WORK AREA
NOTES GENERALES / GENERAL NOTES
ISSUED FOR CONSTRUCTION
DESSINS EN REFERENCE / REFERENCE DRAWINGS
AGNICO EAGLE
REVISIONS
ultragen
591700
AGNICO EAGLE - MELIADINE DIVISION
116 - FUEL TANK FARM
FUEL DISTRIBUTION
CARD WIRING INTERCONNECTION
ANALOG INPUT
SLOT 4
ERIC LAROCHE
DANIEL CARRIER
DANIEL CARRIER
NTS
2017-04-11
65-ULT-116-IN-202
6515
2
PERMIT TO PRACTICE
LE GROUPE ULTRAGEN LTÉE
Signature
Date SEP 21 2017
PERMIT NUMBER: P 1180
NT/NU Association of Professional Engineers and Geoscientists
REGISTERED PROFESSIONAL ENGINEER
13627
D. CARRIER
LICENSEE
NT/NU
SEP 21 2017

AGNICO EAGLE

Vendor Document Status

1 ☐ Proceed to next submission and status.

2 ☐ Proceed with exceptions as noted to next submission and status.

3 ☐ Do not proceed.
Revise as noted and resubmit next submission and status.

4 ☑ Complete, no further submission required.

By: Jean-Francois Tremblay Date: 2017-05-02

Review and authorization to fabricate are only for general conformance with the design concept of the Project as expressed in the Contract Documents. Sole responsibility for the accuracy and completeness of this document, including but not limited to dimensions and quantities, remains with the Supplier/Contractor. Agnico Eagle does not warrant the accuracy or completeness of any of the information contained herein, nor does Agnico Eagle authorize or approve any construction means, methods, techniques, sequences or any safety precautions or procedures.

Agnico Eagle No. 6515-C-270-007-141-TES-0014 R: Sub001

DOCUMENT FOR INFORMATION

NUQSANA PROMEC MINING

Agnico-Eagle Mines Ltd.
Non-Conformance Report

ITR Number : AEM-GE-ITR-002
Contract no. : C22466T / C22498E

AGNICO EAGLE

PART 1 – To be completed by Originator

ITR no. :	Supplier/Vendor/Manufacturer/Contractor :	Originator :	Date:

Equipment Identification:	Equipment Tag No.:

Disposition Requested:	NCR Classification:
☐ 48 Hours ☐ Other	☐ Supplier ☐ Fabrication ☐ Engineering ☐ Construction ☐

Current Status:	Potential Impact (Check appropriate box and give estimate):
☐ Work Already Done ☐ Partially Done ☐ Other ____	☐ Cost ☐ Schedule ☐ Other

Detailed Description of Non-Conformance (attach sketch, pictures, etc) :

Describe Deviation to Drawings, Specifications, Standard, Code or other Reference:

PART 2 - Disposition

* CONTRACTOR Proposed Disposition / Resolution:	Concession Request No. (if applicable):	Contractors NCR No. (if applicable):
☐ Use As Is ☐ Repair ☐ Rework ☐ Reject/Scrap		

Details of Contractor Corrective Actions Proposed / Concession Request:

* Disposition:	Dispositioning Party:	Signature:
☐ Use as Is ☐ Repair ☐ Rework ☐ Reject/Scrap		

Recommended Resolution / Actions:

PART 3 - Confirmation

Corrective Actions Completed By:	Corrective Actions Accepted by Dispositioning Party:
Name:	Name:
Date:	Date:
Signature:	Signature:
Corrective Actions Accepted by Originator:	**NCR Closed Out By (Area QA Coordinator)**
Name:	Name:
Date:	Date:
Signature:	Signature:

* ***Note:*** Dispositions are not to be construed as a change to any Contracts which may be affected. Prior to initiating any work which will impact the Contract terms, the Contractors must forward to AMEC written notice of all impacts, including but not limited to cost and schedule. Any work completed without a written instruction to proceed, if required, will be at the Contractor's risk.

6515-C-270-007

Fuel Tanks Piping Supply and Installation

Non-Conformance Log

Document Number : AEM-GE-LOG-002
Contract Number : C22466T / C22498E

Number	Company	Description	Initiator	Date Opened	Date Closed	Progress Status
NCR-001						N/A
NCR-002						N/A
NCR-003						N/A
NCR-004						N/A
NCR-005						N/A
NCR-006						N/A
NCR-007						N/A
NCR-008						N/A
NCR-009						N/A
NCR-010						N/A
NCR-011						N/A
NCR-012						N/A
NCR-013						N/A
NCR-014						N/A
NCR-015						N/A
NCR-016						N/A
NCR-017						N/A
NCR-018						N/A
NCR-019						N/A
NCR-020						N/A
NCR-021						N/A
NCR-022						N/A
NCR-023						N/A
NCR-024						N/A
NCR-025						N/A
NCR-026						N/A
NCR-027						N/A
NCR-028						N/A
NCR-029						N/A
NCR-030						N/A
NCR-031						N/A
NCR-032						N/A
NCR-033						N/A
NCR-034						N/A
NCR-035						N/A
NCR-036						N/A
NCR-037						N/A
NCR-038						N/A
NCR-039						N/A
NCR-040						N/A

AGNICO EAGLE — Vendor Document Status

1 ☐ Proceed to next submission and status.

2 ☐ Proceed with exceptions as noted to next submission and status.

3 ☐ Do not proceed.
Revise as noted and resubmit next submission and status.

4 ☑ Complete, no further submission required.

By: Jean-Francois Tremblay Date: 2017-05-02

Review and authorization to fabricate are only for general conformance with the design concept of the Project as expressed in the Contract Documents. Sole responsibility for the accuracy and completeness of this document, including but not limited to dimensions and quantities, remains with the Supplier/Contractor. Agnico Eagle does not warrant the accuracy or completeness of any of the information contained herein, nor does Agnico Eagle authorize or approve any construction means, methods, techniques, sequences or any safety precautions or procedures.

Agnico Eagle No. 6515-C-270-007-141-TES-0019 R: Sub001

DOCUMENT FOR INFORMATION

AGNICO EAGLE

Vendor Document Status

1 ☐ Proceed to next submission and status.

2 ☐ Proceed with exceptions as noted to next submission and status.

3 ☐ Do not proceed.
Revise as noted and resubmit next submission and status.

4 ☑ Complete, no further submission required.

By: Jean-Francois Tremblay Date: 2017-05-02

Review and authorization to fabricate are only for general conformance with the design concept of the Project as expressed in the Contract Documents. Sole responsibility for the accuracy and completeness of this document, including but not limited to dimensions and quantities, remains with the Supplier/Contractor. Agnico Eagle does not warrant the accuracy or completeness of any of the information contained herein, nor does Agnico Eagle authorize or approve any construction means, methods, techniques, sequences or any safety precautions or procedures.

Agnico Eagle No. 6515-C-270-007-141-TES-0018 R: Sub001

DOCUMENT FOR INFORMATION

Agnico-Eagle Mines Ltd.
Miscellaneous Field Report

ITR Number : AEM-GE-ITR-006
Contract no. : C22466T / C22498E

SYSTEM:	TAG NO. :	
LOCATION:	AREA:	UNIT:

DATE	ACTIVITY

PROMEC DESIGNATE - SIGNATURE | TITLE | DATE

CLIENT DESIGNATE - SIGNATURE | TITLE | DATE

AGNICO EAGLE

Vendor Document Status

1 ☐ Proceed to next submission and status.

2 ☐ Proceed with exceptions as noted to next submission and status.

3 ☐ Do not proceed.
Revise as noted and resubmit next submission and status.

4 ☑ Complete, no further submission required.

By: JEAN-FRANCOIS TREMBLAY Date: 2017-06-22

Review and authorization to fabricate are only for general conformance with the design concept of the Project as expressed in the Contract Documents. Sole responsibility for the accuracy and completeness of this document, including but not limited to dimensions and quantities, remains with the Supplier/Contractor. Agnico Eagle does not warrant the accuracy or completeness of any of the information contained herein, nor does Agnico Eagle authorize or approve any construction means, methods, techniques, sequences or any safety precautions or procedures.

Agnico Eagle No. 6515-C-270-007-141-TES-0030 R: Sub002

DOCUMENT FOR INFORMATION

NUQSANA PROMEC MINING

AGNICO-EAGLE MINES Ltd.
Inspection & Testing Report

ITR Number: AEM-IN-ITR-007
ITR Type: Miscellaneous Instruments
Contract No.: 6515-C-270-007

AGNICO EAGLE

Tag Number:		**Equipment/ Pipe N°:**		**System:**	
Service:		**Function:**		**Purchase Order:**	
Manufacturer:		**Model:**		**Serial Number:**	
Location Dwg :		**Reference Datasheet:**		**Installation Detail Dwg:**	
Reference Datasheet Number:					

Item N°	Inspection Points	C	NC/ NCR #	N/A	Completed By/ Date
1	INSTRUMENT TAG ATTACHED	C	NC #_____	N/A	Promec: CLIENT:
2	CABLE TAG ATTACHED	C	NC #_____	N/A	Promec: CLIENT:
3	DEVICE INSTALLED AS PER INSTALLATION DETAILS, LOCATION OR MANUFACTURER'S DRAWING	C	NC #_____	N/A	Promec: CLIENT:
4	EQUIPMENT ACCESSIBLE AND EASY TO MAINTAIN	C	NC #_____	N/A	Promec: CLIENT:
5	WIRING CORRECT AND PROPERLY LABELED	C	NC #_____	N/A	Promec: CLIENT:
6	CALIBRATION CERTIFICATE AVAILABLE	C	NC #_____	N/A	Promec: CLIENT:
7	ELECTRICAL SUPPLY COMPATIBLE WITH SOURCE	C	NC #_____	N/A	Promec: CLIENT:
8		C	NC #_____	N/A	Promec: CLIENT:
9		C	NC #_____	N/A	Promec: CLIENT:
10		C	NC #_____	N/A	Promec: CLIENT:
11		C	NC #_____	N/A	Promec: CLIENT:

Comments

Sign Off			
Promec Signature:		**CLIENT Signature:**	
Date:		**Date:**	

Legend					
C	Conformance	**NC**	Non Conformance	**N/A**	Not Applicable
NCR	Non Conformance Report				

AGNICO EAGLE

Vendor Document Status

1 ☐ Proceed to next submission and status.

2 ☐ Proceed with exceptions as noted to next submission and status.

3 ☐ Do not proceed.
Revise as noted and resubmit next submission and status.

4 ☑ Complete, no further submission required.

By: Jean-Francois Tremblay Date: 2017-05-02

Review and authorization to fabricate are only for general conformance with the design concept of the Project as expressed in the Contract Documents. Sole responsibility for the accuracy and completeness of this document, including but not limited to dimensions and quantities, remains with the Supplier/Contractor. Agnico Eagle does not warrant the accuracy or completeness of any of the information contained herein, nor does Agnico Eagle authorize or approve any construction means, methods, techniques, sequences or any safety precautions or procedures.

Agnico Eagle No. 6515-C-270-007-141-TES-0017 R: Sub001

DOCUMENT FOR INFORMATION

Agnico-Eagle Mines Ltd.
Inspection Deficiency Report

ITR Number : AEM-GE-ITR-005
Contract no. : C22466T / C22498E

AGNICO EAGLE

Area:	CWP No:
Equipment Tag No:	Inspection Deficiency Report No:
Date:	Page_____ of _____
Reference Drawings:	
Reference Photos:	
Description of Deficiency:	
Suggested Solution:	
Engineering Contact Made: Yes ☐ No ☐ Name:	
Course of Action:	
Engineering Follow-up Required: Yes ☐ No ☐ Date Required:	

Promec's Representative Print Name		Client's Representative Print Name	
Promec's Representative Signature	Date	Client's Representative Signature	Date

6515-C-270-007

Fuel Tanks Piping Supply and Installation

Inspection Deficiency Log

Document Number : AEM-GE-LOG-004
Contract Number : C22466T / C22984E

NUQSANA PROMEC MINING

AGNICO EAGLE

Number	Description	Initiator	Dept.	Date	Contract No.		Progress Status
Deficiency-001						N/A	
Deficiency-002						N/A	
Deficiency-003						N/A	
Deficiency-004						N/A	
Deficiency-005						N/A	
Deficiency-006						N/A	
Deficiency-007						N/A	
Deficiency-008						N/A	
Deficiency-009						N/A	
Deficiency-010						N/A	
Deficiency-011						N/A	
Deficiency-012						N/A	
Deficiency-013						N/A	
Deficiency-014						N/A	
Deficiency-015						N/A	
Deficiency-016						N/A	
Deficiency-017						N/A	
Deficiency-018						N/A	
Deficiency-019						N/A	
Deficiency-020						N/A	
Deficiency-021						N/A	
Deficiency-022						N/A	
Deficiency-023						N/A	
Deficiency-024						N/A	
Deficiency-025						N/A	
Deficiency-026						N/A	
Deficiency-027						N/A	
Deficiency-028						N/A	
Deficiency-029						N/A	
Deficiency-030						N/A	
Deficiency-031						N/A	
Deficiency-032						N/A	
Deficiency-033						N/A	
Deficiency-034						N/A	
Deficiency-035						N/A	
Deficiency-036						N/A	
Deficiency-037						N/A	
Deficiency-038						N/A	
Deficiency-039						N/A	
Deficiency-040						N/A	

AGNICO EAGLE

Vendor Document Status

1 ☐ Proceed to next submission and status.

2 ☐ Proceed with exceptions as noted to next submission and status.

3 ☐ Do not proceed.
Revise as noted and resubmit next submission and status.

4 ☑ Complete, no further submission required.

By: JEAN-FRANCOIS TREMBLAY Date: 2017-05-16

Review and authorization to fabricate are only for general conformance with the design concept of the Project as expressed in the Contract Documents. Sole responsibility for the accuracy and completeness of this document, including but not limited to dimensions and quantities, remains with the Supplier/Contractor. Agnico Eagle does not warrant the accuracy or completeness of any of the information contained herein, nor does Agnico Eagle authorize or approve any construction means, methods, techniques, sequences or any safety precautions or procedures.

Agnico Eagle No. 6515-C-270-007-141-TES-0020 R: Sub001

DOCUMENT FOR INFORMATION

AGNICO EAGLE

Vendor Document Status

1	☐ Proceed to next submission and status.
2	☐ Proceed with exceptions as noted to next submission and status.
3	☐ Do not proceed. Revise as noted and resubmit next submission and status.
4	☒ Complete, no further submission required.

By: 2017-05-31 Date:

Review and authorization to fabricate are only for general conformance with the design concept of the Project as expressed in the Contract Documents. Sole responsibility for the accuracy and completeness of this document, including but not limited to dimensions and quantities, remains with the Supplier/Contractor. Agnico Eagle does not warrant the accuracy or completeness of any of the information contained herein, nor does Agnico Eagle authorize or approve any construction means, methods, techniques, sequences or any safety precautions or procedures.

Agnico Eagle No. 6515-C-270-007-275-SSS-0020 R: Sub001

DOCUMENT FOR INFORMATION

VIKING
PROTECTION INCENDIE VIKING INC.
3005 | boulevard Pitfield | Saint-Laurent, Québec, Canada | H4S 1H4
Tél. **514.332.5110** Télec : 514.332.5063 info@vikingfire.ca

Shop Drawings

Prepared for:
Constr. Promec

Notifier Fire Alarm system
Purchase Order: 61116
Our Project #: TMC-XXXXX
Meliadine Fuel Farm

Prepared by: **Joëlle-Ann Forget**
Sales Représentative: Pierre Noël

May 6, 2017

1 copy by email for **APPROBATION**

	MODEL NUMBER	
1	NFS-320C	NFS-320C, 120VAC NOIR
2	ACM-24AT	ANNONCIATEUR À DEL (24)+INTERRUPTEUR
3	NFN-GW-EM-3	NFN GATEWAY EMBEDDED
4	800BAT1218	BATTERIE 12volts 18amps
6	ISO-6A	CARTE DE 6 ISOLATEURS INCORP.ULC
7	NBG-12LX	STATION MANUEL, 1 ÉTAPE, ADRESSABLE FLASHSCAN
8	SB-10	BOÎTIER DE SURFACE POUR SÉRIENBG
9	FAPT-851A	DÉTECTEUR PHOTO/THERM. FLASHSCAN (TÊTE)
10	B210LPA	BASE DE MONTAGE DE DETECTAVEC BRIDE, ULC
11	FRM-1A	MODULE ADRESSABLE (RELAIS) FLASHSCAN
12	P2RKA-B	KLX STRO.MONT MUR, 2 FILS STND, ROUGE,EXT,BILINGUE
13	HRA	KLAXON, 2 FILS 12/24 VDC. ROUGE, MURALE
14	HRKA	KLAXON, 2 FILS 12/24 VDC.ROUGE,MUR,EPP MAUV.TEMPS
15	SBBR	BOÎTIER DE SURFACE ROUGE POURHP, ET1070/ET1080,E7
16	EOL-CR	PLAQUE DE FIN DE LIGNE MÉTAL ROUGE
17	FDM-1A	MODULE ADRESSABLE DOUBLE ENTRÉES (GICLEUR).
18	NBG-12L	STATION MANUEL, 2 ÉTAPES C/A SERRURE, ROUGE
19	STI-13410FR	RED STI UNIVERSAL STOPPERSTI-13410-FR
20	CR-135MP	DÉTECT. THERM. 135°F THERMO.& FIXE/ANTI-HUMIDITÉ

PROTECTION INCENDIE VIKING INC.
3005 | boulevard Pitfield | Saint-Laurent, Québec, Canada | H4S 1H4
Tél. 514.332.5110 Télec : 514.332.5063 info@vikingfire.ca

Basic installation guide

Control panel
A maximum distance of 1728mm (5'-8") must separate the top of the control panel and the finished floor surface.

For built in panels, please refer to the following examples for the minimal distance required between the finished wall (gyproc) and the exterior box.

Fire alarm panel	Minimal distance
NFS-320C-FR	1" (25mm)
NFW-50C-FR (Firewarden)	1" (25mm)
NFW2-100C-FR (Firewarden)	1" (25mm)
SBB-A4 (NFS-640 & NFS-3030)	1" (25mm)
SBB-B4 (NFS-640 & NFS-3030)	1" (25mm)
SBB-C4 (NFS-640 & NFS-3030)	1" (25mm)
SBB-D4 (NFS-640 & NFS-3030)	1" (25mm)

There must be a minimum distance in front of the control panel, equal to the width of the control panel, left in front of it.

Manual pull station
Installation height of **1200mm (47")** from the middle of the component and the level of the finished floor **for buildings with elevators.** As requested in the CNB2010 art. 3.8.1.5 (Required by the Régie du Bâtiment)

Installation height between 1200mm (47") and 1400mm (53") from the middle of the component and the level of the finished floor for buildings without elevators

Fire fighter handset
Installation height between 1350mm (53") and 1500mm (60") from the middle of the component and the level of the finished floor.

Detectors (smoke or heat)
A minimum clearance of 450mm (18") must be provided underneath and around the detectors.

The detectors must be installed at a minimum of 450mm (18") from all electrical supply line and air discharge.

Mini horn with silence button
Installation height of **1200mm (47")** from the middle of the component and the level of the finished floor **for buildings with elevators.** As requested in the CNB2005 art. 3.8.1.5 (Required by the Régie du Bâtiment)

Installation height between 1200mm (47") and 1400mm (53") from the middle of the component and the level of the finished floor for buildings without elevators

Audible and visual device
Installation height between 2000mm and 2400mm from the middle of the component and the level of the finished floor.

NFS-320C

Intelligent Addressable Fire Alarm System

NOTIFIER® by Honeywell

Intelligent Fire Alarm Control Panels

General

The NFS-320C intelligent Fire Alarm Control Panel is part of the ONYX® Series of Fire Alarm Controls from NOTIFIER.

In stand-alone or network configurations, ONYX Series products meet virtually every application requirement.

The NFS-320C's modular design makes system planning easier. The panel can be configured with just a few devices for small building applications, or networked with many devices to protect a large campus or a high-rise office block. Simply add additional peripheral equipment to suit the application. For example, certain geographic regions such as Canada have specific LED annunciation requirements. To provide up to 48 zones/points in the same cabinet, add an optional ACM Series annunciator (sold separately).

Features

- Listed to Standard ULC-S527-99.
- Certified for seismic applications when used with the appropriate seismic mounting kit.
- Approved for Marine applications when used with listed compatible equipment. *See DN-60688.*
- One isolated intelligent Digital Communications Loop (DCL) Style 4, 6 or 7.
- Up to 159 detectors and 159 modules per SLC; 318 devices maximum.
  - Detectors can be any mix of ion, photo, thermal, or multisensor.
  - Modules include addressable pull stations, normally open contact devices, two-wire smoke detectors, notification, or relay.
- Standard 80-character display.
- Network options:
  - High-speed network for up to 200 nodes (NFS2-3030, NFS2-640, NFS-320(C), NFS-320SYS, NCA-2, DVC-EM, ONYXWorks, NFS-3030, NFS-640, and NCA).
  - Standard network for up to 103 nodes (NFS2-3030, NFS2-640, NFS-320(C), NFS-320SYS, NCA-2, DVC-EM, ONYXWorks, NCS, NFS-3030, NFS-640, NCA, AFP-200, AFP-300/400, AFP-1010, and AM2020). Up to 54 nodes when DVC-EM is used in network paging.
- 6.0 A power supply with four Class A/B built-in Notification Appliance Circuits (NAC). Selectable System Sensor, S, or Gentex strobe synchronization.
- Built-in Alarm, Trouble, Security, and Supervisory relays.
- VeriFire® Tools online or offline programming utility. Upload/Download, save, store, check, compare, and simulate panel databases. Upgrade panel firmware.
- Autoprogramming and Walk Test reports.
- Optional universal 318-point DACT.
- 80-character remote annunciators (up to 32).
- EIA-485 annunciators, including custom graphics.
- Printer interface (80-column and 40-column printers).
- History file with 800-event capacity in nonvolatile memory, plus separate 200-event alarm-only file.
- Alarm Verification selection per point, with automatic counter.
- Presignal/Positive Alarm Sequence (PAS).
- Silence inhibit and Auto Silence timer options.

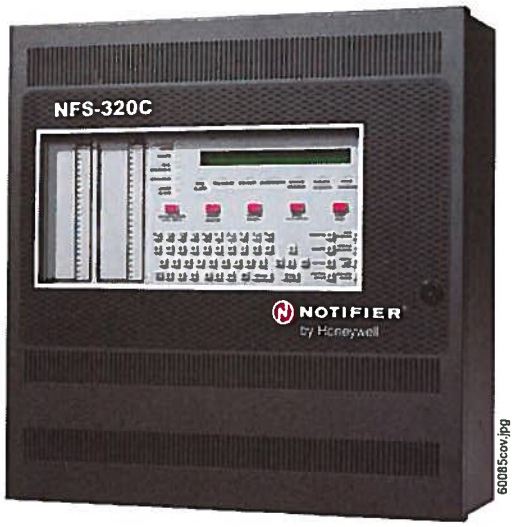

NFS-320C

- March time / temporal / Canadian two-stage coding, 20 ppm and temporal / strobe synchronization.
- Field-programmable on panel or on PC, with VeriFire Tools program check, compare, simulate.
- Full QWERTY keypad.
- Battery charger supports 18 – 200 AH batteries.
- Non-alarm points for lower priority functions.
- Remote ACK/Signal Silence/System Reset/Drill via monitor modules.
- Automatic time control functions, with holiday exceptions.
- Surface Mount Technology (SMT) electronics.
- Extensive, built-in transient protection.
- Powerful Boolean logic equations.

FLASHSCAN® INTELLIGENT FEATURES

- Polls up to 318 devices in less than two seconds.
- Activates up to 159 outputs in less than five seconds.
- Multicolor LEDs blink device address during Walk Test.
- Fully digital, high-precision protocol (U.S. Patent 5,539,389).
- Manual sensitivity adjustment — up to nine levels (see individual device information for available settings).
- Pre-alarm ONYX intelligent sensing — up to nine levels.
- Day/Night automatic sensitivity adjustment.
- Sensitivity windows:
  - **Ion –** 0.5 to 2.5%/foot obscuration.
  - **Photo –** 0.5 to 2.35%/foot obscuration.
  - **Laser (VIEW®) –** 0.02 to 2.0%/foot obscuration.
  - **Acclimate Plus™ –** 0.5 to 4.0%/foot obscuration.
  - **IntelliQuad –** 1.0 to 4.0%/foot obscuration.
  - **IntelliQuad™ PLUS –** 1.0 to 4.0%/foot obscuration
- Drift compensation (U.S. Patent 5,764,142).
- Degraded mode: In the unlikely event that the FACP's microprocessor fails, FlashScan detectors revert to degraded operation and can activate the NAC circuits and alarm relay.

Each of the four built-in panel circuits includes a Disable/Enable switch for this feature.

- Multi-detector algorithm involves nearby detectors in alarm decision (U.S. Patent 5,627,515).
- Automatic detector sensitivity testing (NFPA-72 compliant).
- Maintenance alert (two levels).
- Self-optimizing pre-alarm.

FSL-751A VIEW (VERY INTELLIGENT EARLY WARNING) SMOKE DETECTION TECHNOLOGY

- Advanced ONYX intelligent sensing algorithms differentiate between smoke and non-smoke signals (U.S. Patent 5,831,524).
- Addressable operation pinpoints the fire location.
- Early warning performance comparable to the best aspiration systems at a fraction of the lifetime cost.

FAPT-851A ACCLIMATE PLUS LOW-PROFILE INTELLIGENT MULTI-SENSOR

- Detector automatically adjusts sensitivity levels without operator intervention or programming. Sensitivity increases with heat.
- Microprocessor-based technology; combination photo and thermal technology.
- Low-temperature warning signal at 40°F ± 5°F (4.44°C ± 2.77°C).

FSC-851 INTELLIQUAD ADVANCED MULTI-CRITERIA DETECTOR

- Detects all four major elements of a fire (smoke, heat, CO, and flame).
- Automatic drift compensation of smoke sensor and CO cell.
- High nuisance-alarm immunity.

INTELLIGENT FAAST® DETECTORS FSA-5000A, FSA-8000A, AND FSA-20000A

- Connects directly to the SLC loop of compatible ONYX series panels.
- Provides five event thresholds that can be individually programmed with descriptive labels for control-by-event programming; uses five detector addresses.
- Uses patented particle separator and field-replaceable filter to remove contaminants.
- Advanced algorithms reject common nuisance conditions
- FSA-5000A covers 5,000 square feet through one pipe.
- FSA-8000A covers 8,000 square feet through one pipe.
- FSA-20000A covers 28,800 square feet through one to four pipes.

FCO-851A INTELLIQUAD™ PLUS ADVANCED MULTI-CRITERIA FIRE/CO DETECTOR

- Detects all four major elements of a fire.
- Separate signal for life-safety CO detection.
- Optional addressable sounder base for Temp-3 (fire) or Temp-4(CO) tone.
- Automatic drift compensation of smoke sensor and CO cell.
- High nuisance-alarm immunity.

RELEASING FEATURES

- Ten independent hazards.
- Sophisticated cross-zone (three options).
- Delay timer and Discharge timers (adjustable).
- Abort (four options).
- Low-pressure CO_2 listed.

Sample System Options

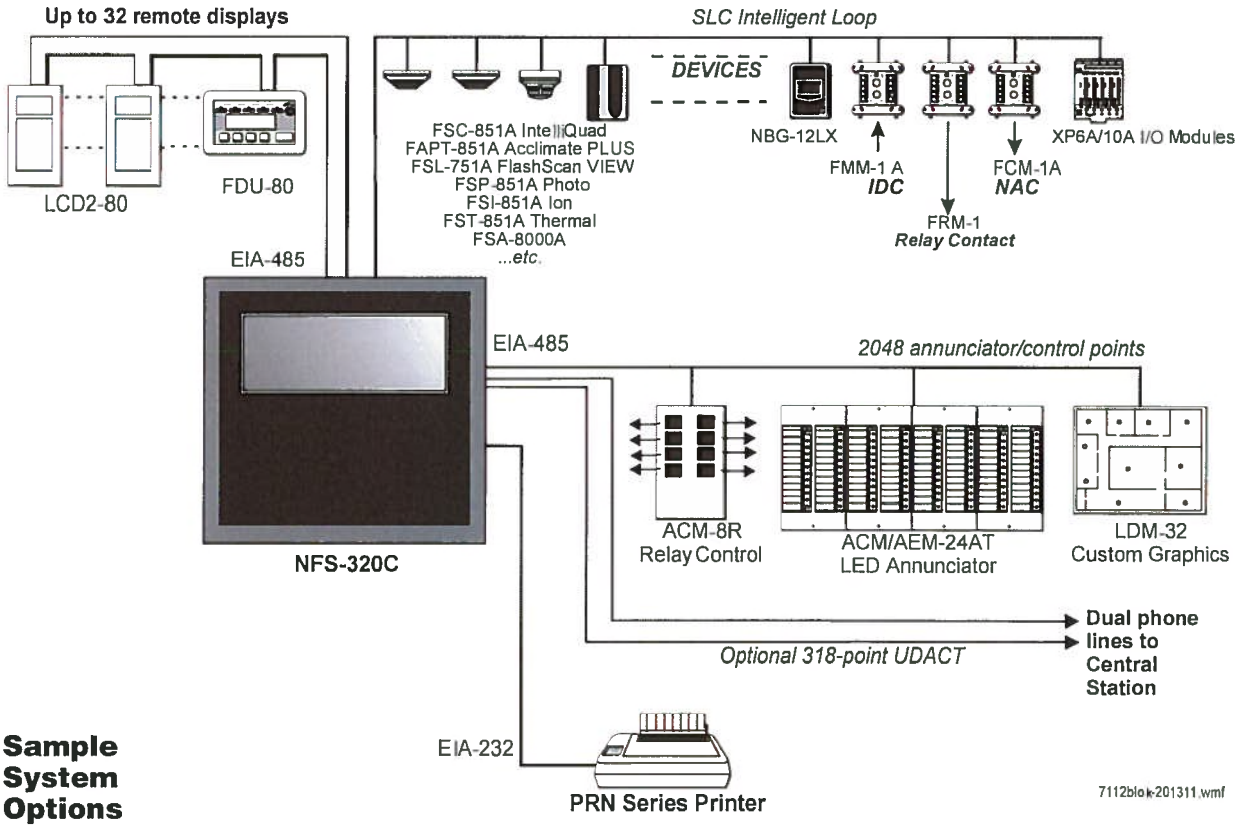

VOICE FEATURES

- Integrates with FirstCommand Series. *See DN-60772. Note: Only NFC-50/100 and NFC-LOC are approved for Canadian applications.*

HIGH-EFFICIENCY OFFLINE SWITCHING

3.0 A POWER SUPPLY (6.0 A IN ALARM)

- 120 VAC.
- Displays battery current/voltage on panel (with display).

FlashScan, Exclusive World-Leading Detector Protocol

At the heart of the NFS-320C is a set of detection devices and device protocol — FlashScan (U.S. Patent 5,539,389). FlashScan is an all-digital protocol that gives superior precision and high noise immunity.

In addition to providing quick identification of an active input device, this protocol can also activate many output devices in a fraction of the time required by competitive protocols. This high speed also allows the NFS-320C to have the largest device per loop capacity in the industry — 318 points — yet every input and output device is sampled in less than two seconds. The microprocessor-based FlashScan detectors have bicolor LEDs that can be coded to provide diagnostic information, such as device address during Walk Test.

ONYX Intelligent Sensing

Intelligent sensing is a set of software algorithms that provides the NFS-320C with industry-leading smoke detection capability. These complex algorithms require many calculations on each reading of each detector, and are made possible by the high-speed microcomputer used by the NFS-320C.

Drift Compensation and Smoothing: Drift compensation allows the detector to retain its original ability to detect actual smoke, and resist false alarms, even as dirt accumulates. It reduces maintenance requirements by allowing the system to automatically perform the periodic sensitivity measurements required by NFPA 72. Smoothing filters are also provided by software to remove transient noise signals, such as those caused by electrical interference.

Maintenance Warnings: When the drift compensation performed for a detector reaches a certain level, the performance of the detector may be compromised, and special warnings are given. There are three warning levels: (1) Low Chamber value; (2) Maintenance Alert, indicative of dust accumulation that is near but below the allowed limit; (3) Maintenance Urgent, indicative of dust accumulation above the allowed limit.

Sensitivity Adjust: Nine sensitivity levels are provided for alarm detection. These levels can be set manually, or can change automatically between day and night. Nine levels of pre-alarm sensitivity can also be selected, based on predetermined levels of alarm. Pre-alarm operation can be latching or self-restoring, and can be used to activate special control functions.

Self-Optimizing Pre-Alarm: Each detector may be set for "Self-Optimizing" pre-alarm. In this special mode, the detector "learns" its normal environment, measuring the peak analog readings over a long period of time, and setting the pre-alarm level just above these normal peaks.

Cooperating Multi-Detector Sensing: A patented feature of ONYX intelligent sensing is the ability of a smoke sensor to consider readings from nearby sensors in making alarm or pre-alarm decisions. Without statistical sacrifice in the ability to resist false alarms, it allows a sensor to increase its sensitivity to actual smoke by a factor of almost two to one.

Field Programming Options

Autoprogram is a timesaving feature. The FACP "learns" what devices are physically connected and automatically loads them in the program with default values for all parameters. Requiring less than one minute to run, this routine allows the user to have almost immediate fire protection in a new installation, even if only a portion of the detectors are installed.

Keypad Program Edit (with KDM-R2) The NFS-320C, like all NOTIFIER intelligent panels, has the exclusive feature of program creation and editing capability from the front panel keypad, ***while continuing to provide fire protection.*** The architecture of the NFS-320C software is such that each point entry carries its own program, including control-by-event links to other points. This allows the program to be entered with independent per-point segments, while the NFS-320C simultaneously monitors other (already installed) points for alarm conditions.

VeriFire® Tools is an offline programming and test utility that can greatly reduce installation programming time, and increase confidence in the site-specific software. It is Windows®-based and provides technologically advanced capabilities to aid the installer. The installer may create the entire program for the NFS-320C in the comfort of the office, test it, store a backup file, then bring it to the site and download from a laptop into the panel.

Placement of Equipment in Chassis and Cabinet

The following guidelines outline the NFS-320C's flexible system design.

Wiring: When designing the cabinet layout, consider separation of power-limited and non-power-limited wiring as discussed in the *NFS-320/C/E Installation Manual*.

It is critical that all mounting holes of the NFS-320C are secured with a screw or standoff to ensure continuity of Earth Ground.

Networking: If networking two or more control panels, each unit requires a Network Communication Module or High-Speed Network Communication Module (HS-NCM can support two nodes; see "Networking Options" on page 5). These modules can be installed in any option board position (see manual), and additional option boards can be mounted in front of them.

KDM-R2 Controls and Indicators

Program Keypad: QWERTY type (keyboard layout).

12 LED Indicators: Power; Fire Alarm; Pre-Alarm; Security; Supervisory; System Trouble; Signals Silenced; Points Disabled; Control Active; Abort; Pre-Discharge; Discharge.

Keypad Switch Controls: Acknowledge/Scroll Display; Signal Silence; Drill; System Reset; Lamp Test.

LCD Display: 80 characters (2 x 40) with long-life LED backlight.

Product Line Information

- "Configuration Guidelines" on page 4
- "Main System Components" on page 4
- "Networking Options" on page 5
- "Auxiliary Power Supplies and Batteries" on page 4
- "Audio Options" on page 4
- "Compatible Devices, EIA-232 Ports" on page 4
- "Compatible Devices, EIA-485 Ports" on page 4
- "Compatible Intelligent Devices" on page 4
- "Enclosures, Chassis, and Dress Plates" on page 5
- "Other Options" on page 5

Configuration Guidelines

The NFS-320C system ships assembled; description and some options follow. See "Enclosures, Chassis, and Dress Plates" on page 5 for information about mounting peripherals.

***NOTE:** Stand-alone and network systems require a main display. On stand-alone systems, the panel's keypad provides the required display. On network systems (two or more networked fire panel nodes), at least one NCA-2, NCS, or ONYXWorks annunciation device is required. For NCA-2, see DN-7047.*

Main System Components

NFS-320C: The standard, factory-assembled NFS-320C system includes the following components: one control panel mounted on chassis (120 V operation — ships with grounding cable, battery interconnect cables, and document kit); one integral power supply mounted to the control panel; one primary display KDM-R2 keypad/display; and one cabinet for surface or semi-flush mounting. *Purchase batteries separately. One or two option boards may be mounted to the NFS-320 cabinet, with one visible to the left of the display and one inside; additional option boards can be used in remote cabinets. See Canadian applications manual addendum 52747.*

NFS-320CR: Same as NFS-320C but in red enclosure.

NFS-320C-FR: Same as NFS-320C but in French language.

TR-320: Trim ring for the NFS-320C cabinet.

Auxiliary Power Supplies and Batteries

ACPS-610: 6.0 A or 10.0 A addressable charging power supply. *See DN-60244.*

FCPS-24S6C/8C: Remote 6 A and 8 A power supplies. See DN-6297. For use only as a NAC expander.

BAT Series: Batteries. NFS-320 uses two 12 volt, 18 to 200 AH batteries. *See DN-6933.*

Audio Options

NFC-50/100: 25 watt, 25 VRMS, emergency Voice Evacuation Control Panel (VECP) with integral commercial microphone, digital message generator, and Class A or Class B speaker circuits. *See DN-60772.*

Compatible Devices, EIA-232 Ports

PRN-6: 80-column printer. *See DN-6956.*

PRN-7: 80-column printer. *See DN-60897*

VS4095/5: Keltron printer, 40-column, 24 V. Mounted in external backbox. *See DN-3260.* (Not ULC-listed.)

DPI-232: Direct Panel Interface, specialized modem for extending serial data links to remotely located FACPs and/or peripherals; mount on NFS-320 chassis. *See DN-6870.*

Compatible Devices, EIA-485 Ports

ACM-24AT: ONYX Series ACS annunciator – up to 96 points of annunciation with Alarm or Active LED, Trouble LED, and switch per circuit. Active/Alarm LEDs can be programmed (by powered-up switch selection) by point to be red, green, or yellow; the Trouble LED is always yellow. *See DN-6862.*

AEM-24AT: Same LED and switch capabilities as ACM-24AT, expands the ACM-24AT to 48, 72, or 96 points. *See DN-6862.*

ACM-48A: ONYX Series ACS annunciator – up to 96 points of annunciation with Alarm or Active LED per circuit. Active/Alarm LEDs can be programmed (by powered-up switch selection) in groups of 24 to be red, green, or yellow. Expandable to 96 points with one AEM-48A. *See DN-6862.*

AEM-48A: Same LED capabilities as ACM-48A, expands the ACM-48A to 96 points. *See DN-6862.*

ACM-8R: Remote Relay Module with eight Form-C contacts. Can be located up to 6,000 ft. (1828.8 m) from panel on four wires. *See DN-3558.*

LCD-80: ACS mode. 80-character, backlit LCD display. Mounts up to 6,000 ft. (1828.8 m) from panel. Up to 32 per FACP. *See LCD-80/LCD-80TM (DN-3198).*

FDU-80: Terminal mode. 80-character, backlit LCD display. Mounts up to 6,000 ft. (1828.8 m) from panel. Up to 32 per FACP. Not for use as a primary display in Canada. *See FDU-80 (DN-6820).*

LCD2-80: Terminal and ACS mode. 80-character, backlit LCD display. Mounts up to 6,000 ft. (1828.8 m) from panel. Up to 32 per FACP. Not for use as primary display in Canadian applications. *See DN-60548.*

LDM: Lamp Driver Modules LDM-32, LDM-E32, and LDM-R32; remote custom driver modules. *See DN-0551.*

SCS: Smoke control stations SCS-8, SCE-8, with lamp drivers SCS-8L, SCE-8L; eight (expandable to 16) circuits (HVAC only). *See DN-4818.*

TM-4: Transmitter Module. Includes three reverse-polarity circuits and one municipal box circuit; mount on NFS-320C chassis or remotely. *See DN-6860.*

UDACT-2: Universal Digital Alarm Communicator Transmitter, 636 channel. *See DN-60686.*

UZC-256: Programmable Universal Zone Coder provides positive non-interfering successive zone coding. Microprocessor-controlled, field-programmable from IBM®-compatible PCs (requires optional programming kit). Mounts in BB-UZC or other compatible chassis (purchased separately). *See DN-3404.*

Compatible Intelligent Devices

FSA-5000A: Intelligent FAAST® XS Fire Alarm Aspiration Sensing Technology. Intelligent aspirating smoke detector for applications up to 5,000 sq.ft., with ULC listing.

FSA-8000A: Intelligent FAAST® XM Fire Alarm Aspiration Sensing Technology. Intelligent aspirating smoke detector for applications up to 8,000 sq.ft., with ULC listing. *See DN-60792.*

FSA-20000A: Intelligent FAAST® XT Fire Alarm Aspiration Sensing Technology. Intelligent aspirating smoke detector for applications up to 28,800 sq.ft., with ULC listing. *See* DN-60849.

FSB-200A: Intelligent beam smoke detector. *See DN-6985.*

FSB-200SA: Intelligent beam smoke detector with integral sensitivity test. *See DN-6895.*

FSC-851A: FlashScan IntelliQuad Advanced Multi-Criteria Detector. *See DN-60412.*

FCO-851A: FlashScan IntelliQuad PLUS Advanced Multi-Criteria Fire/CO Detector. *See DN-60689.*

FSI-851A: Low-profile FlashScan ionization detector. *See DN-6934.*

FSP-851A: Low-profile FlashScan photoelectric detector. *See DN-6935.*

FSP-851TA: Low-profile FlashScan photoelectric detector with 135°F (57°C) thermal. *See DN-6935.*

FSP-851RA: Remote-test capable photoelectric detector for use with DNR(W) duct detector housings. *See DN-6935.*

FST-851A: FlashScan thermal detector 135°F (57°C). *See DN-6936.*

FST-851RA: FlashScan thermal detector 135°F (57°C) with rate-of-rise. *See DN-6936.*

FST-851HA: FlashScan 190°F (88°C) high-temperature thermal detector. *See DN-6936.*

FAPT-851A: FlashScan Acclimate Plus low-profile multi-sensor detector. *See DN-6937.*

FSL-751A: FlashScan VIEW laser photo detector. *See DN-6886.*

DNR: InnovairFlex low-flow non-relay duct-detector housing (order FSP-851A/FSP-851RA separately). Replaces FSD-751PL/FSD-751RPL. *See DN-60429.*

DNRW: Same as above with NEMA-4 rating, watertight. *See DN-60429.*

B224RBA: Low-profile relay base. See DN-60054.

B224BIA: Isolator base for low-profile detectors. See DN-60054.

B210LPA: Low-profile base. Standard U.S. style. Replaces B710LPA. See DN-60054.

B501A: European-style, 4" (10.16 cm) base. See DN-60054.

B200SA: Intelligent programmable sounder base, capable of producing a variety of tone patterns including ANSI Temporal 3. Compatible with sychronization protocol. *See DN-60054.*

B200SCOA: Based on B200SA, with added CO detector markings in English/French.

B200SRA: Sounder base, Temporal 3 or Continuous tone. See DN-60054.

FMM-1A: FlashScan monitor module. *See DN-6720.*

FDM-1A: FlashScan dual monitor module. *See DN-6720.*

FZM-1A: FlashScan two-wire detector monitor module. *See DN-6720.*

FMM-101A: FlashScan miniature monitor module. *See DN-6720.*

FCM-1A: FlashScan control module. *See DN-6724.*

FCM-1-RELA: FlashScan releasing control module. *See DN-60390.*

FRM-1A: FlashScan relay module. *See DN-6724.*

FDRM-1A: FlashScan dual monitor/dual relay module. *See DN-60709.*

NBG-12LX: Manual pull station, addressable. *See DN-6726.*

N-MPS series: Manual pull stations, addressable and conventional. For use in Canada only. *See DN-5497.*

FM-955: Addressable pull station with two FMM-101A modules.

FM-9551: Addressable pull station with one FMM-101A module.

FM-955-20C: Addressable pull station with two open contacts.

FM-9551S20C: Addressable pull station with one open and one closed extra contacts.

ISO-XA: Isolator module. *See DN-2243.*

ISO-6A: Six Fault isolator module. *See* DN-60844.

XP6-CA: FlashScan six-circuit supervised control module. *See DN-6924.*

XP6-MAA: FlashScan six-zone interface module; connects intelligent alarm system to two-wire conventional detection zone. *See DN-6925.*

XP6-RA: FlashScan six-relay (Form-C) control module. *See DN-6926.*

XP10-MA: FlashScan ten-input monitor module. *See DN-6923.*

SLC-IM: SLC integration module, for VESDAnet detectors. *See DN-60755*

Networking Options

NCM-W, NCM-F: Standard Network Communications Modules. Wire and multi-mode fiber versions available. *See DN-6861.*

HS-NCM-W/MF/SF/WMF/WSF/MFSF: High-speed Network Communications Modules that can connect to two nodes. Wire, single-mode fiber, multi-mode fiber, and media conversion models are available. *See DN-60454.*

RPT-W, RPT-F, RPT-WF: Standard-network repeater board with wire connection (RPT-W), multi-mode fiber connection (RPT-F), or allowing a change in media type between wire and fiber (RPT-WF). Not used with high-speed networks. *See DN-6971.*

ONYXWorks: UL-listed graphics PC workstation, software, and computer hardware. *See DN-7048 for specific part numbers.*

NFN-GW-EM-3: NFN Gateway, embedded. *See DN-60499.*

NWS-3: NOTI•FIRE•NET™ Web Server. *See DN-6928.*

CAP-GW: Common Alerting Protocol Gateway. *See DN-60756.*

VESDA-HLI-GW: VESDAnet high-level interface gateway. *See DN-60753.*

LEDSIGN-GW: UL-listed sign gateway. Interfaces with classic and high-speed NOTI•FIRE•NET networks through the NFN Gateway. *See DN-60679.*

OAX2-24V: UL-listed LED sign, used with LEDSIGN-GW. *See DN-60679.*

Enclosures, Chassis, and Dress Plates

CAB-BM Marine System: Protects equipment in shipboard and waterfront applications. Also order **BB-MB** for systems using 100 AH batteries. For a full list of required and optional equipment, see *DN-60688.*

NFS-LBB: Battery Box (required for batteries over 26 AH).

NFS-LBBR: Same as above, but red.

BB-UZC: Backbox for housing the UZC-256. Required for NFS-320 applications, black. For red, order BB-UZC-R.

SEISKIT-320/B26: Seismic mounting kit. Required for seismic-certified applications with NFS-320C and BB-26. Includes battery bracket for two 26 AH batteries.

SEISKIT-LBB: Seismic kit for the NFS-LBB. Includes battery bracket for two 55 AH batteries.

Other Options

411 Series: Slave Digital Alarm Communicator Transmitters. *See DN-6619.*

IPGSM-4GC: Internet and Digital Cellular Fire Alarm Communicator. Provides selectable configurable paths: cellular only, IP only, or IP primary with cellular backup. Connects to the primary and secondary ports of a DACT. *See DH-60769.*

NFS-320-RB: Replacement board with central processing unit *NOTE: Keypad must be removed before shipping old unit out for repair.*

NFS-320-RBC-FR: Replacement board with central processing unit, Canadian French. *NOTE: Keypad must be removed before shipping old unit out for repair.*

***NOTE:** For other options including compatibility with retrofit equipment, refer to the panel's installation manual, the SLC manual (for intelligent DCL equipment), and the Device Compatibility Document.*

System Specifications

System Capacity

- Intelligent Digital Communications Loop (DCL) 1
- Intelligent detectors 159
- Addressable monitor/control modules 159
- Programmable internal hardware and output circuits 4
- Programmable software zones 99
- Special programming zones 14
- LCD annunciators per FACP 32
- ACS annunciators per FACP ..... 32 addresses x 64 points

Specifications

- Primary input power: 120 VAC, 50/60 Hz, 5.0 A.
- Current draw (standby/alarm):
  - NFS-320C board: 0.250 A. Add 0.035 A for each NAC in use.
  - KDM-R2 (Backlight on): 0.100 A.
- Total output 24 V power: 6.0 A in alarm.

***NOTE:** The power supply has a total of 6.0 A of available power. This is shared by all internal circuits.*

- Standard notification circuits (4): 1.5 A each.

- Resettable regulated 24V power: 1.25 A.
- Two non-resettable regulated 24V power outputs. One at 1.25 A and the other at 0.50 A.
- Non-resettable 5V power: 0.15 A.
- Battery charger range: 18 AH – 200 AH. Use separate cabinet for batteries over 26 AH.
- Float rate: 27.6 V.

Cabinet Specifications

- NFS-320C cabinet dimensions:
  - Backbox: 18.12 in. (46.025 cm) width; 18.12 in. (46.025 cm) height; 5.81 in. (14.76 cm) depth.
  - Door: 18.187 in. (46.195 cm) width; 18.40 in. (46.736 cm) height; 0.75 in. (1.905 cm) depth.

When using trim ring TR-320, mount backbox with at least 1 inch (2.54 cm) between wall surface and front of backbox, to allow door to open fully past the trim ring. The TR-320 molding width is 0.905 in. (2.299 cm).

Shipping Weight

- NFS-320C: 37 lb (16.78 kg) *without batteries.*

Temperature and Humidity Ranges

This system meets NFPA requirements for operation at 0 – 49°C and at a relative humidity 93% ± 2% RH (noncondensing) at 32°C ± 2°C. However, the useful life of the system's standby batteries and the electronic components may be adversely affected by extreme temperature ranges and humidity. Therefore, it is recommended that this system and its peripherals be installed in an environment with a normal room temperature of 15 – 27°C.

Agency Listings and Approvals

The listings and approvals below apply to the basic NFS-320C control panel. In some cases, certain modules may not be listed by certain approval agencies, or listing may be in process. Consult factory for latest listing status.

- **UL/ULC Listed:** S635 (UOJC).
- **FM Approved.**
- **CSFM:** 7165-0028:0243.
- **Fire Dept. of New York:** COA #6121.

Marine Applications: Marine approved systems must be configured using components itemized in this document. (See Main System Components, in "Product Line Information.) Specific connections and requirements for those components are described in the installation document, PN 54756. When these requirements are followed, systems are approved by the following agencies:

- **US Coast Guard:** 161.002/50/0, 161.002/55/0 (Standard 46 CFR and 161.002).
- **Lloyd's Register:** 11/600013 (ENV 3 category).
- **American Bureau of Shipping.**

NOTE: *For information on marine applications, see DN-60688.*

Standards

The NFS-320C complies with the following ULC Standards and NFPA 72, International Building Code (IBC), and California Building Code (CBC) Fire Alarm Systems requirements:

- **ULC-S527-99.**
- **LOCAL** (Automatic, Manual, Waterflow and Sprinkler Supervisory).
- **AUXILIARY** (Automatic, Manual and Waterflow) (requires TM-4).
- **REMOTE STATION** (Automatic, Manual, Waterflow and Sprinkler Supervisory) (requires TM-4).
- **PROPRIETARY** (Automatic, Manual, Waterflow and Sprinkler Supervisory). *Not applicable for FM.*
- **CENTRAL STATION** (Automatic, Manual, Waterflow and Sprinkler Supervisory) (requires DACT).
- **EMERGENCY VOICE/ALARM.**
- **IBC 2012, IBC 2009, IBC 2006, IBC 2003, IBC 2000** (Seismic).
- **CBC 2007** (Seismic).

NOTI•FIRE•NET™, IntelliQuad™, and **ONYXWorks™** are trademarks; and **Acclimate® Plus™, FirstCommand®, FlashScan®, Intelligent FAAST®, NOTIFIER®, ONYX®, VeriFire® Tools,** and **VIEW®** are registered trademarks of Honeywell International Inc. **Microsoft®** and **Windows®** are registered trademarks of Microsoft Corporation. **IBM®** is a registered trademark of IBM Corporation.
©2016 by Honeywell International Inc. All rights reserved. Unauthorized use of this document is strictly prohibited.

ISO 9001 CERTIFIED
ENGINEERING & MANUFACTURING QUALITY SYSTEMS

This document is not intended to be used for installation purposes. We try to keep our product information up-to-date and accurate. We cannot cover all specific applications or anticipate all requirements. All specifications are subject to change without notice.

For more information, contact Notifier.
(888) 289-1114
10 Whitmore Road
Woodbridge, Ontario LZL 7Z4
www.notifier.com

ACS Series Annunciators

ONYX® Series

ACM/~~AEM-~~24AT, ACM/AEM-48A

NOTIFIER® by Honeywell

Annunciator Control Systems

General

The ONYX® Series ACS Annunciators provide a modular line of products for annunciation and control of the NOTIFIER ONYX® Series Intelligent Fire Alarm Control Panels, Network Control Annunciators, and NOTIFIER's legacy addressable panels. The ACS line provides arrays of LEDs to indicate point status and, in some versions, switches to control the state of output circuits. These ACS units use a serial interface and may be located at distances of up to 6,000 feet (1,828.8 meters) from the panel.

Features

- Speaker control mode for use with XPIQ and the following panels: NFS2-3030, NFS2-640, NFS-320(C) and NFS-320SYS. Enables the ACS to control operation of groups of multi-channels mapped to groups of multi-speakers.
- Compatible with existing annunciators.
- Color-programmable LEDs.
- On-board end-of-line resistors can be enabled/disabled by setting a switch.
- Alarm/Circuit On and Trouble LED per-point thxoption or more dense Alarm-only option.
- Touch-pad control switch option for remote control of system relays; or silence, reset, and evacuate.
- LEDs may be programmed to display status of indicating circuits or control relays as well as system status conditions.
- System Trouble LED indicator.
- On-Line/Power LED indicator.
- Alarm and trouble resound with flash of new conditions.
- Local sounder for both alarm and trouble conditions with silence/acknowledge button (program options).
- May be powered by 24 VDC from the panel or by remote power supplies.
- Microprocessor-controlled electronics, fully supervised.
- Slip-in custom labels, lettered with standard typewriter or LabelEase program.
- Plug-in terminal blocks for ease of installation and service.

Construction

The ACS modules are provided in two basic controller modules, each with its expander module. The ACM-24AT provides 24 annunciation and control points per module, each with a red, green, or yellow Alarm/Circuit On LED, a yellow Trouble LED, and a touch-key switch. The ACM-48A provides 48 annunciation points per module, each with a red, green, or yellow Alarm/Circuit On LED (for annunciating control relays, the LED indicates ON/OFF).

On the ACM-24AT, each LED point is individually color-programmable. On ACM-48A, each column of 24 LED points can be color-configured using a DIP switch.

Temperature and humidity ranges: This system meets NFPA requirements for operation at 0°C to 49°C (32°F to 120°F); and at a relative humidity (noncondensing) of 85% at 30°C (86°F) per NFPA, and 93% ± 2% at 32°C ± 2°C (89.6°F ± 1.1°F) per ULC. However, the useful life of the system's standby batteries and the electronic components may be adversely affected by extreme temperature ranges and humidity. Therefore, it is recommended that this system and all peripherals be installed in an environment with a nominal room temperature of 15°C to 27°C (60°F to 80°F).

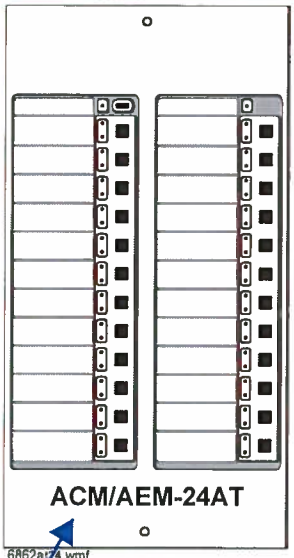

6862at24.wmf

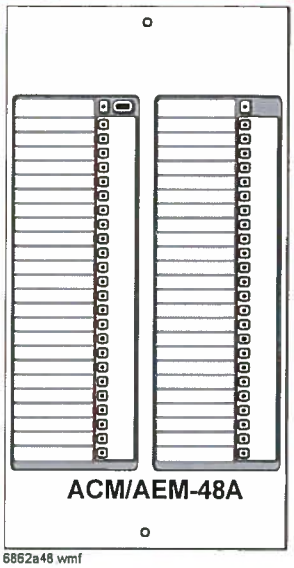

6862a48.wmf

Installation

The ACS Series annunciator and control subsystems use modular hardware assemblies which allow the custom configuration of the annunciator panel to fit the individual job requirements.

Standard backboxes and mounting hardware schemes, including special remote cabinets, allow the annunciators to be constructed and configured with other system components.

When used with the NFS2-3030, NFS2-640, NFS-320 or legacy panels, the ACS modules can be used for manual selection of speaker and telephone circuits. In this application, they are typically mounted in the main control near the microphone and telephone handset.

For remote annunciation applications, the modules are typically mounted in special ABF or ABS boxes. Control switch key locks (AKS-1B) are available.

Communication between the ACS Series annunciators and the host Fire Alarm Control Panel is made through an EIA-485 multi-drop loop, eliminating the need for costly wiring schemes. Four wires are required, two for the EIA-485 communications (twisted pair), and two for 24 VDC regulated power.

Retrofit of ACS Series annunciators into existing systems is easily accomplished. Software may require upgrading, and some legacy panels may require an interface board.

All field-wiring terminations use removable, compression-type terminal blocks for ease of installation, wiring, and circuit testing.

Operation

The ACS Series annunciator and control system provides the NOTIFIER system with up to 32 remote serially connected annunciators, each with a capacity of 96 points, for a total capacity of ***3072 points*** (subject to the capability of the FACP). The NFS2-3030 and NCA-2 are capable of using the full 96 points.

Local or remote power supplies and serial communications allow the ACS to be located virtually anywhere in the protected premises.

On NFS-320, NFS2-640, NFS2-3030, NCA-2 and the legacy panels, system alarm and/or trouble conditions may be annunciated on a per-point basis, or in a grouped or zone configuration.

Control of system operational controls, such as Signal Silence, System Reset, and local annunciation controls (such as Local Acknowledge and Lamp Test) may be accomplished through the module's rubber keypad.

Product Line Information

ACM-24AT: *(see figure)* The Annunciator Control Module-24AT contains 24 color-programmable (red/green/yellow) Active and 24 yellow Trouble LEDs, 24 momentary touch-pad switches, a System Trouble LED, an On-Line/Power LED, and a local piezo sounder with a silence/acknowledge switch for audible indication of alarm and trouble conditions. Includes instructions. 8.375" (21.27 cm) high; 4.375" (11.11 cm) wide.

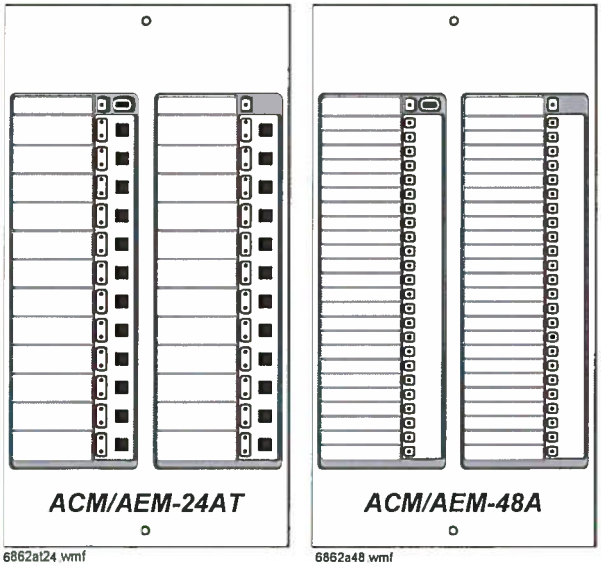

6862at24.wmf 6862a48.wmf

AEM-24AT: The Annunciator Expander Module-24AT expands the ACM-24AT by 24 system points. The AEM-24AT is identical in size and in frontal appearance to the ACM-24AT. Up to three of these expander modules can be supported by an ACM-24AT, for a maximum of 96 system points. 8.375" (21.27 cm) high; 4.375" (11.11 cm) wide. ***NOTE:*** *The AEM-24AT* ***cannot*** *be used to expand the ACM-48A.*

ACM-48A: *(see figure)* The Annunciator Control Module-48A contains 48 color-programmable (red/green/yellow) Active LEDs, a System Trouble LED, an On-Line/Power LED, and a local piezo sounder with a Silence/Acknowledge switch for audible indication of alarm and trouble conditions. Includes instructions. 8.375" (21.27 cm) high; 4.375" (11.11 cm) wide.

AEM-48A: The Annunciator Expander Module-48A expands the ACM-48A by 48 system points. The AEM-48A is identical in frontal appearance to the ACM-48A. One expander module can be supported by an ACM-48A, providing a maximum of 96 points (subject to the capability of the FACP). 8.375" (21.27 cm) high; 4.375" (11.11 cm) wide. ***NOTE:*** *The AEM-48A* ***cannot*** *be used to expand the ACM-24AT.*

ABS-1B: *(see figure)* The Annunciator Surface Box-1B (black) provides for the remote mounting of one annunciator module in a surface-mount enclosure. Knockouts are provided for use with 1/2" (1.27 cm) conduit. The annunciator mounts directly to the ABS-1B without a dress plate. 8.5" (21.59 cm) high x 4.5" (11.43 cm) wide x 2" (5.08 cm) deep. ***NOTE:*** *The ABS-1B will not support the installation of the AKS-1B Annunciator Key Switch.*

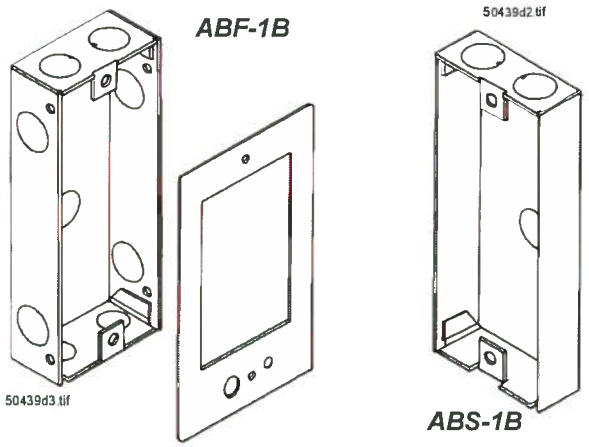

ABS-1TB: The ABS-1TB is an attractive surface-mount backbox for mounting one ACS Series Annunciator. Unlike the ABS-1B, the ABS-1TB has an increased depth that allows mounting of the AKS-1B Annunciator Key Switch. Black, 9.938" (25.24 cm) high x 4.625" (11.75 cm) wide x 2.5" (6.35 cm) deep. ***NOTE:*** *An earlier gray model, ABS-1TB, will not accommodate the ACM/AEM-24AT or ACM/AEM-48A. The slightly deeper ABS-1TB will accommodate both the ACM/AEM-24AT or ACM/AEM-48A models and the ACM-16AT/ACM-32A Series (see DN-0524).*

ABS-2B: The Annunciator Surface Box-2B (black) provides for the surface mounting of one ACM-24AT/AEM-24AT combination or one ACM-48A/AEM-48A combination. Knockouts are provided for use with 1/2" (1.27 cm) conduit. The annunciators mount directly to the ABS-2B without a dress plate. 8.5" (21.59 cm) high x 8.92" (22.66 cm) wide x 2" (5.08 cm) deep. ***NOTE:*** *The ABS-2B will not support the installation of the AKS-1B Annunciator Key Switch.*

ABF-1B: *(see figure)* The Annunciator Flush Box-1B (black) provides for the remote mounting of a single annunciator module in a flush-mount enclosure. Knockouts are provided for use with 1/2" (1.27 cm) conduit. The ABF-1B includes a painted black metal trim plate [11" (27.94 cm) high x 6.25" (15.875 cm) wide], mounting hardware, and an adhesive-backed annunciator label for the dress plate. 9.938" (25.24 cm) high x 4.625" (11.75 cm) wide x 2.5" (6.35 cm) deep.

ABF-2B: The Annunciator Flush Box-2B (black) provides for the flush mounting of two annunciator modules. Includes a painted black metal trim plate [11" (27.94 cm) high x 10.625" (26.99 cm) wide] and adhesive-backed annunciator label. 9.938" (25.24 cm) high x 9.188" (23.34 cm) wide x 3.75" (9.525 cm) deep.

ABF-4B: *(see figure)* The Annunciator Flush Box-4B (black) provides for the remote mounting of one to four annunciator modules. Knockouts are provided for use with 1/2" (1.27 cm) conduit. The flush-mounted ABF-4B includes a painted black metal trim plate [11" (27.94 cm) high x 19.375" (49.21 cm)

wide] and an annunciator label. 9.938" (25.24 cm) high x 17.75" (45.09 cm) wide x 2.5" (6.35 cm) deep.

ABF-4B

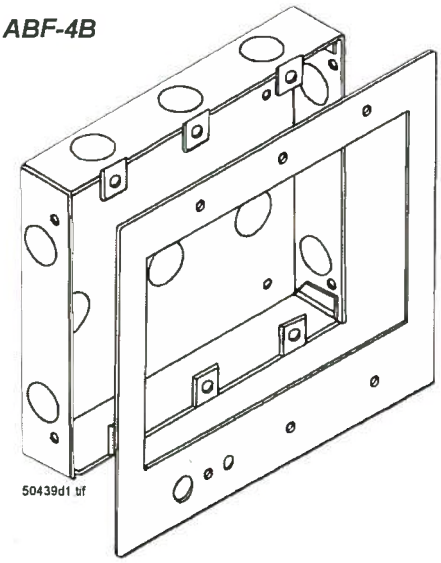

ABF-1DB, ABF-2DB, ABS-4D: The ABF-1DB, ABF-2DB and ABS-4D are semi-flush-mount backboxes for ACS Series Annunciators. The ABF-1DB mounts one annunciator module; the ABF-2DB mounts two modules; the ABS-4D mounts up to four modules. The ABS-4D Series can also accomodate the NCA-2 network annunciator, using the NCA-2 Retro Kit (NCA-2Retro); the NCA-2 is mounted in the center position with a blank plate (BMP-1) mounted on each side. Black with an attracted smoked glass door and keylock. The **ABS-4D** is hinged on the bottom for stability.

- **DIMENSIONS, ABF-1DB:** ***Box only:*** 9.938" (25.24 cm) high x 4.625" (11.75 cm) wide x 2.5" (6.35 cm) deep. ***Door:*** 11" (27.94 cm) high x 6" (15.24 cm) wide x 0.75" (1.9 cm) deep.
- **DIMENSIONS, ABF-2DB:** ***Box only:*** 9.938" (25.24 cm) high x 9.188" (23.34 cm) wide x 3.75" (9.525 cm) deep. ***Door:*** 11" (27.94 cm) high x 10.375" (26.35 cm) wide x 0.75" (1.9 cm) deep.
- **DIMENSIONS, ABS-4D:** ***Box only:*** 11.97" (30.40 cm) high x 19.87" (50.47cm) wide x 3.50" (8.89 cm) deep. ***Door:*** 11.97" (30.40 cm) high x 19.87" (50.47 cm) wide x 1.25" (3.18 cm) deep.

ADP-4B: The Annunciator Dress Panel-4B (black) provides for the cabinet mounting of one to four modules. The ADP-4B hinge-mounts to the CAB-4 Series cabinet. Modules mount directly to threaded studs on the dress panel.

DP-DISP: (see figure) The Dress Panel-Display allows one to four modules to be mounted in the ***top row*** of the CAB-4 Series backbox. Modules mount directly to threaded studs on the DP-DISP.

DP-DISP2: NFS2-640 Dress Panel accomodates up to two annunciator modules (no expanders).

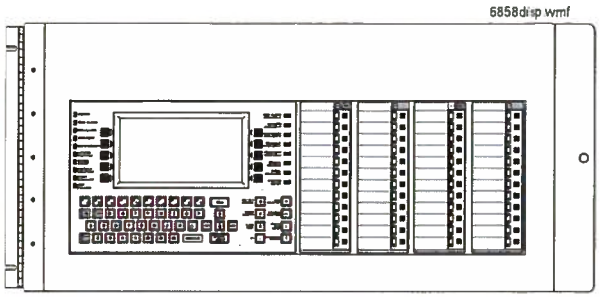

DP-DISP Dress Panel with NCA-2 Network Control Annunciator in left two positions, and two ACM-24AT Annunciators at right.

BMP-1: Annunciator Blank Module is a flat black dress plate that covers unused module positions in the annunciator back-box or in the ADP-4B. 8.375" (21.27 cm) high x 4.375" (11.11 cm) wide. Studs for a variety of module mounting options are available.

AKS-1B**:** The Annunciator Key Switch-1B (black) provides access security for the control switches on the ACM/AEM-24AT. The key switch kit includes a key and hardware for mounting to the ABF-1B. Also included is an adhesive-backed annunciator label for use with the key switch/dress plate assembly. ***NOTE:*** *The AKS-1B can only be employed with the ABS-1TB.*

Agency Listings and Approvals

The listings and approvals below apply to the ACM/AEM-24AT and the ACM/AEM-48A. In some cases, certain modules or applications may not be listed by certain approval agencies, or listing may be in process. Consult factory for latest listing status.

- **UL**: S635
- **ULC**: S635
- **FDNY:** COA #6067 (NFS2-640), COA #6065 (NFS2-3030)
- **CSFM**: 7120-0028:0156, 7165-0028:0243, 7165-0028:0224
- **FM** approved

ONYX® and **NOTIFIER®** are registered trademarks of Honeywell International Inc.
©2011 by Honeywell International Inc. All rights reserved. Unauthorized use of this document is strictly prohibited.

ISO 9001 CERTIFIED
ENGINEERING & MANUFACTURING
QUALITY SYSTEMS

This document is not intended to be used for installation purposes.
We try to keep our product information up-to-date and accurate.
We cannot cover all specific applications or anticipate all requirements.
All specifications are subject to change without notice.



Made in the U.S.A.

For more information, contact Notifier. Phone: (203) 484-7161, FAX: (203) 484-7118.
www.notifier.com

ONYXWorks® NFN

Embedded Gateway-3

NOTIFIER® by Honeywell

Network Systems

General

The NOTI•FIRE•NET™ Gateway is an intelligent gateway interface for the ONYXWorks® fire monitoring workstation. This gateway facilitates complete monitoring and control of a NOTI•FIRE•NET™ network. In addition, it supports full panel programming and network diagnostics.

The embedded gateway is a standalone version and is equipped with IP capability thus enabling ONYX® Series users to monitor multiple sites over an Ethernet network without the need for remote workstations.

Features

- Enables ONYX® Series workstation to monitor alarm, pre-alarm, trouble, disabled events, etc. for NFN fire alarm control panels.
- ONYXWorks® supports up to 50 intelligent gateways.
- Compatible with standard and high speed NOTI•FIRE•NET™ network.
- Adds acknowledge, silence, reset, enable/disable, and activate/deactivate control capability to the workstation.
- Supports fire alarm control panel programming upload/downloads and modifications.
- Embedded gateway allows remote IP connections and increases scalability of network.
- Supervised IP connections for remote workstations and gateways.
- Multiple workstations can access the gateway at the same time.
- Gateway redundancy for network survivability.

Compatibility

The NOTI•FIRE•NET™ Gateway is compatible with ONYXWorks® and ONYX FirstVision and interfaces to NOTI•FIRE•NET™ version 5.0 and higher, as well as a high speed NOTI•FIRE•NET™ network for the following panels and devices:

- ONYX Series
- AM2020/AFP1010 (version 5.0 SIB-NET)
- AFP-200 (version 5.0 NAM)
- AFP-300/AFP-400 (version 5.0 NAM)
- BACnet Gateway
- NCA-2/NCA Network Control Annunciator
- NOTI•FIRE•NET™Web Server

Specifications

- Power input: 24 VDC
- Input current: 450 mA @ 24 VDC (without NCM).
- Operating temperature: 0°C to 49°C (32°F to 120°F).
- Direct connection to NFS2-640, NFS-640, NFS-320, NFS2-3030, and NFS-3030 fire alarm control panels. NCM required for connection to NOTI•FIRE•NET™, and HS-NCM for connection to high-speed network. (See data sheets DN-6861 and DN-60454.)

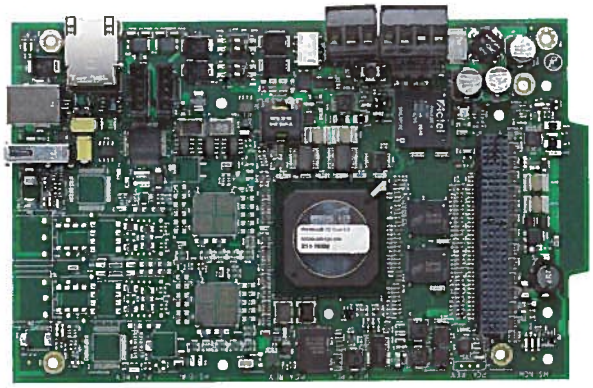

NFN-GW-EM-3

Standards and Codes

The NOTI•FIRE•NET™ Gateway complies with the following UL/ULC Standards and NFPA 72 Fire Alarm Systems requirements:

- UL 864
- UL 1076
- UL 2017
- ULC S559-04
- ULC S527-99

Listings and Approvals

These listings and approvals apply to the modules specified in this document. In some cases, certain modules or applications may not be listed by certain approval agencies, or listing may be in process. Consult factory for latest listing status.

- **UL / ULC:** S5697
- **FM Approved**
- **CSFM:** 7300-1525:103
- **MEA:** 286-07-E
- **FDNY:** COA #6041

Ordering Information

NFN-GW-EM-3: NOTI•FIRE•NET™ Gateway, embedded. Includes PC board, NUP to NUP cable (75577), USB Cable (75665) and NFN Configuration.

Additional EMBEDDED VERSION Gateway required components:

- NCM for connection to NOTI•FIRE•NET™.
- HS-NCM for connection to high speed NOTI•FIRE•NET™.
- IBM®-compatible PC with Windows® XP.
- Standard Ethernet network cable with RJ45 to RJ45 connectors.
- ONYXWorks Workstation V3.12 or above .
- NFN Network Version 5.0 or above.
- Verifire Tools Version 5.71 or above.

Remote Monitoring

NFN-GW-EM-3

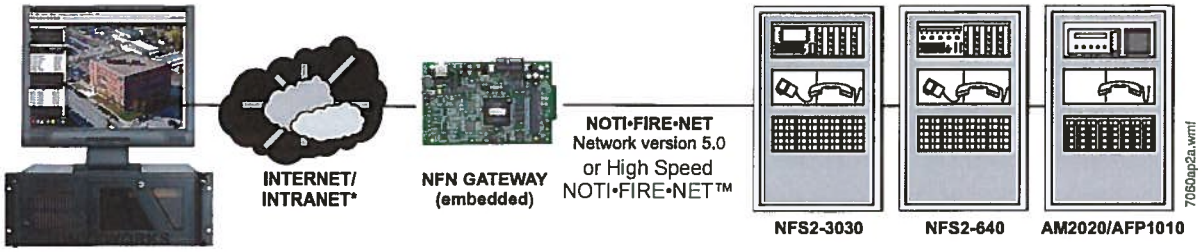

* A UL Listed ethernet (TCP/IP) switch is required between a shared-IP network and the ONYXWORKS equipment. Contemporary Control Systems, Inc. (www.ctrlink.com) has several UL864 recognized switching hubs.

Firefighters' Display

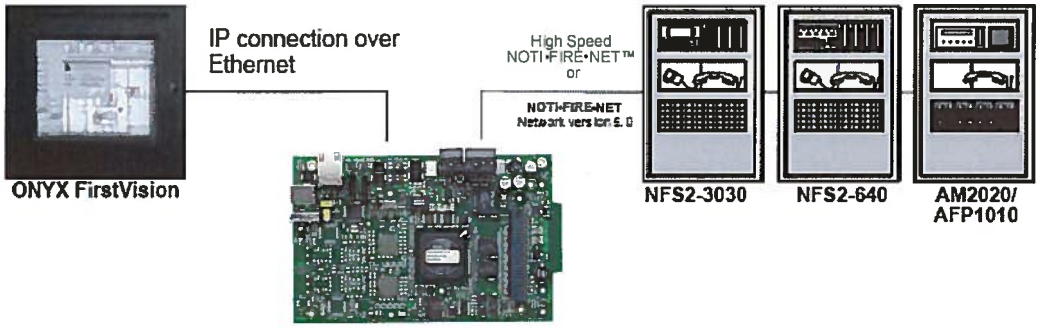

NION®, NOTIFIER®, ONYX® and ONYXWorks® are registered trademarks and NOTI•FIRE•NET™, NOTIFIY-IP™, and ONYX FirstVision™ are trademarks of Honeywell International Inc. Windows® is a registered trademark of Microsoft Corporation.
©2010 by Honeywell International Inc. All rights reserved. Unauthorized use of this document is strictly prohibited.

ISO 9001 CERTIFIED
ENGINEERING & MANUFACTURING
QUALITY SYSTEMS

This document is not intended to be used for installation purposes.
We try to keep our product information up-to-date and accurate.
We cannot cover all specific applications or anticipate all requirements.
All specifications are subject to change without notice.

Made in the U.S.A.

For more information, contact Notifier. Phone: (203) 484-7161, FAX: (203) 484-7118.
www.notifier.com

BAT Series Batteries

Sealed Lead-Acid

NOTIFIER® by Honeywell

Power Supplies

General

BAT Series Batteries are Power Sonic brand batteries. BAT Series (or Power Sonic brand) batteries are recommended for secondary power or backup power for all NOTIFIER fire alarm control equipment.

Features

- Provide secondary power for control panels.
- Sealed and maintenance-free.
- Overcharge protected.
- Easy handling with leakproof construction.
- Ruggedly constructed, high-impact case (ABS, polystyrene, or polypropylene, depending on models).
- Long service life.
- Compact design.

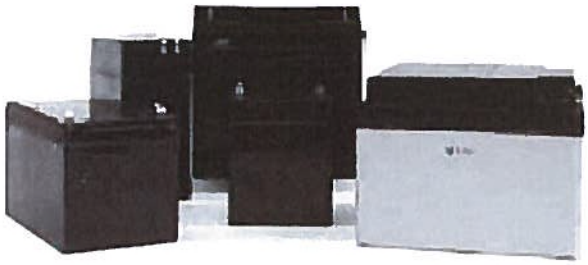

6933cov.jpg

Agency Listings and Approvals

The listings and approvals below apply to BAT Series Batteries. In some cases, certain modules may not be listed by certain approval agencies, or listing may be in process. Consult factory for latest listing status.

- **UL Recognized Components**: MH20845 *(Power-Sonic)*

Ordering Information

BAT-1250-BP: 10-unit bulk pack of BAT-1250 (12 V 5 AH)
BAT-1270-BP: 5-unit bulk pack of BAT-1270 (12 V 7 AH)
BAT-12120-BP: 4-unit bulk pack of BAT-12120 (12V 12 AH)
BAT-12180-BP: 2-unit bulk pack of BAT-12180 (12 V 18 AH)
BAT-12260-BP: 2-unit bulk pack of BAT-12260 (12 V 26 AH)
BAT-12550: single battery (12 V 55 AH)
BAT-121000: single battery (12 V 100 AH)

Part Number Reference & Specifications

Part Number	Power Sonic Part Number	Battery Description			DIMENSIONS									
		Nominal Voltage V	Nominal Capacity @ 20 hr. rate A.H.		Width		Depth		Height		Height over terminal		Weight	
					in.	mm	in.	mm	in.	mm	in.	mm	lb.	kg.
BAT-1250	PS-1250	12	5	sealed	3.54	90	2.76	70	4.02	102	4.21	107	4.1	1.9
BAT-1270	PS-1270	12	7	sealed	5.95	151	2.56	65	3.7	94	3.86	98	4.8	2.18
BAT-12120	PS-12120	12	12	sealed	5.95	151	3.86	98	3.7	94	3.94	100	7.92	3.59
BAT-12180	PS-12180	12	18	sealed	7.13	181	2.99	76	6.57	167	6.57	167	12.6	5.8
BAT-12260	PS-12260	12	26	sealed	6.56	167	6.97	177	4.92	125	4.92	125	17	7.71
BAT-12550	PS-12250	12	55	sealed	9.04	230	654	138	8.2	208	8.98	228	36	16.33
BAT-121000	PS-121000	12	100	sealed	12	305	6.6	168	8.2	208	8.98	228	68	30.84

Characteristic Discharge Curves

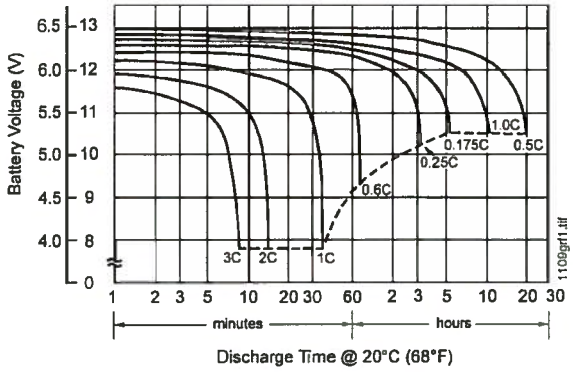

Effect of Temperature on Capacity

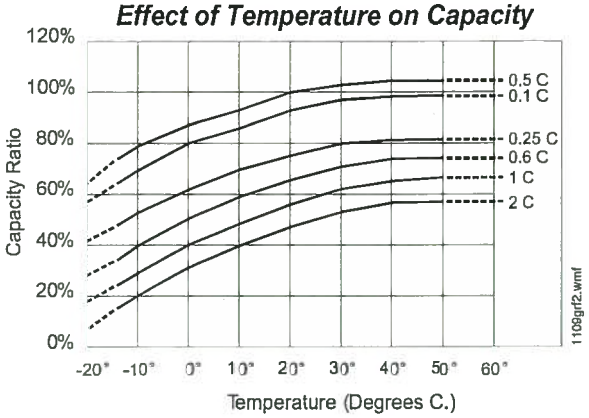

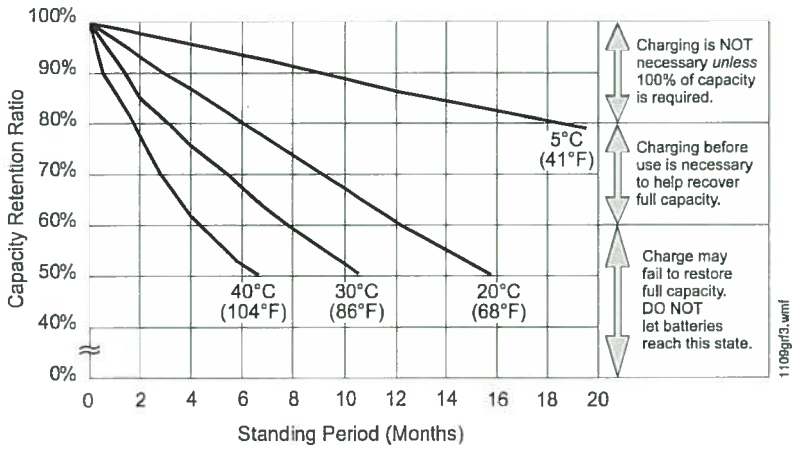

at left: PS-121000 Shelf-Life and Storage

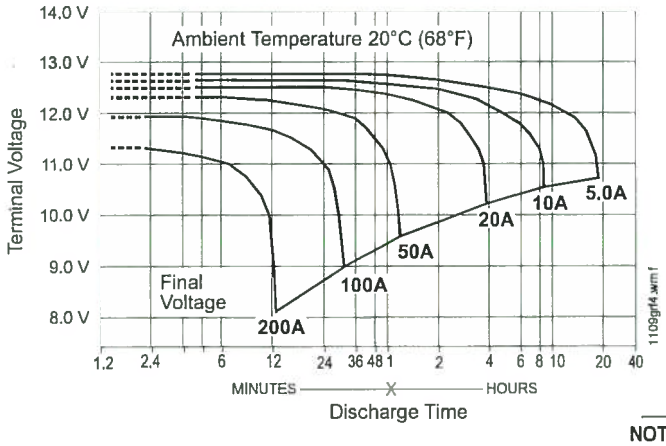

at left: PS-121000 Discharge Characteristics

NOTIFIER® is a registered trademark of Honeywell International Inc.
Batteries display trademarks of the manufacturer.
©2011 by Honeywell International Inc. All rights reserved. Unauthorized use of this document is strictly prohibited.

ISO 9001 CERTIFIED
ENGINEERING & MANUFACTURING QUALITY SYSTEMS

This document is not intended to be used for installation purposes.
We try to keep our product information up-to-date and accurate.
We cannot cover all specific applications or anticipate all requirements.
All specifications are subject to change without notice.

Made in the U.S.A.

For more information, contact Notifier. Phone: (203) 484-7161, FAX: (203) 484-7118.
www.notifier.com

ISO-6(A)

Six Fault Isolator Module

NOTIFIER® by Honeywell

Intelligent Addressable Devices

General

The ISO-6(A) Six Fault Isolator Module provides six equivalent circuits that will allow a portion of the communications loop to continue operating when a short circuit occurs on that loop. An amber LED indicator will blink in the normal state for each of the six inputs and will latch on during a short circuit condition. The module will automatically restore the communications loop to normal condition when the short circuit is removed.

The ISO-6 Six Isolator Module is an automatic switch that opens when the line voltage drops below four volts. Isolator modules should be spaced between groups of sensors or modules in a loop to protect the rest of the loop. If a short occurs between any two isolators, then both isolators immediately switch to an open circuit state and isolate the devices between them. The remaining units on the loop continue to fully operate.

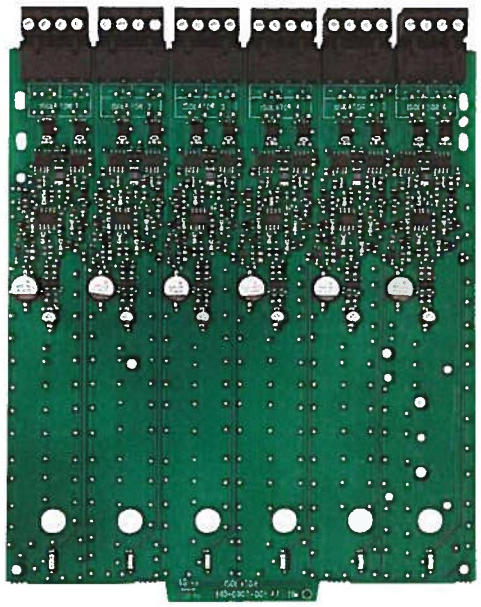

Features

- Removable 12 to 18 AWG plug-in terminal blocks.
- Individual LED status indicators.
- Six individual, Class B isolator circuits.
- Mount up to two modules in BB-XP enclosure (optional).
- Mount up to six modules on a CHS-6 chassis in a CAB-4/CAB-3 series, EQ series, or BB-25 cabinet.
- Mounting hardware included.

Applications

The ISO-6 Fault Isolator Modules should be spaced between groups of sensors in an SLC to protect the rest of the loop. Use to isolate short circuit problems within a section of a loop so that other sections can continue to operate normally. The ISO-6 supports a maximum of 25 devices between isolators.

When more than 100 Isolator Modules are connected to an SLC loop, the address capacity of the loop is reduced by two (2) addresses for every isolator device in excess of 100.

Specifications

Normal Operating Voltage: 15-32 VDC.

Stand-By Current: 450 µA per circuit, 2.7 mA all circuits.

Maximum Current Draw: 17 mA per circuit in isolation, 102 mA with all circuits in isolation.

Temperature Range: 32° F to 120° F (0° C to 49° C).

Humidity: 10% to 85% non-condensing.

Dimensions: 6.8"H x 5.8"W x 1.0"D.

Shipping weight: 1.1 lb. (0.50 kg) including packaging.

Mounting Options: CHS-6 Chassis, BB-XP Cabinet, BB-25 Cabinet, CAB-4 Series Cabinet, EQ Series Cabinet.

Wire Gauge: 12 AWG (3.31 mm²) to 18 AWG (0.821 mm²).

Compatible Devices: See the documentation for your panel, and the *Device Compatibility Document*.

Agency Listings and Approvals

The listings and approvals below apply to ISO-6 components. In some cases, certain modules or applications may not be listed by certain approval agencies, or listing may be in process. Consult factory for latest listing status.

- **UL/ULC Listed:** S3705.
- FM Approved.
- CSFM: 7300-1653-0234.

Product Line Information

ISO-6: Six Isolator Module.

ISO-6A: ULC-listed version of ISO-6.

BB-XP: Optional cabinet for one or two modules. **Door Dimensions:** 9.234" (23.454 cm) wide (9.484" [24.089 cm] including hinges), x 12.218" (31.0337 cm) high, x 0.672" (1.7068 cm) deep. **Backbox Dimensions:** 9.0" (22.860 cm) wide (9.25" [23.495 cm] including hinges), x 12.0" (30.480 cm) high x 2.75" (6.985 cm). **Chassis Dimensions** (installed): 7.150" (18.161 cm) wide overall x 7.312" (18.5725 cm) high interior overall x 2.156" (5.4762 cm) deep overall.

BB-25: Optional cabinet for up to six modules mounted on CHS-6 chassis (below). **Door Dimensions:** 24.0" (60.96 cm) wide x 12.632" (32.0852 cm) high, x 1.25" (3.175 cm) deep, hinged at bottom. **Backbox Dimensions:** 24.0" (60.96 cm) wide x 12.550" (31.877 cm) high x 5.218" (13.2537 cm) deep.

CHS-6: Chassis, mounts up to six modules in a CAB-4 Series cabinet (see DN-6857), EQ Series cabinet (see DN-60229), or BB-25 cabinet.

Notifier® is a registered trademark of Honeywell International Inc.
©2015 by Honeywell International Inc. All rights reserved. Unauthorized use of this document is strictly prohibited.

ISO 9001 CERTIFIED ENGINEERING & MANUFACTURING QUALITY SYSTEMS

This document is not intended to be used for installation purposes.
We try to keep our product information up-to-date and accurate.
We cannot cover all specific applications or anticipate all requirements.
All specifications are subject to change without notice.

For more information, contact Notifier. Phone: (203) 484-7161, FAX: (203) 484-7118.
www.notifier.com

NBG-12LX

Addressable Manual Pull Station

NOTIFIER® by Honeywell

Intelligent/Addressable Devices

General

The Notifier NBG-12LX is a state-of-the-art, dual-action (i.e., requires two motions to activate the station) pull station that includes an addressable interface for any Notifier intelligent control panel except FireWarden series panels, and the NSP-25 panel. Because the NBG-12LX is addressable, the control panel can display the exact location of the activated manual station. This leads fire personnel quickly to the location of the alarm.

Features

- Maintenance personnel can open station for inspection and address setting without causing an alarm condition.
- Built-in bicolor LED, which is visible through the handle of the station, flashes in normal operation and latches steady red when in alarm.
- Handle latches in down position and the word "ACTIVATED" appears to clearly indicate the station has been operated.
- Captive screw terminals wire-ready for easy connection to SLC loop (accepts up to 12 AWG/3.25 mm² wire).
- Can be surface mounted (with SB-10 or SB-I/O) or semi-flush mounted. Semi-flush mount to a standard single-gang, double-gang, or 4" (10.16 cm) square electrical box.
- Smooth dual-action design.
- Meets ADAAG controls and operating mechanisms guidelines (Section 4.1.3[13]); meets ADA requirement for 5 lb. maximum activation force.
- Highly visible.
- Attractive shape and textured finish.
- Key reset.
- Includes Braille text on station handle.
- Optional trim ring (BG12TR).
- Meets UL 38, Standard for Manually Actuated Signaling Boxes.
- Up to 99 NBG-12LX stations per loop on CLIP protocol loops.
- Up to 159 NBG-12LX stations per loop on FlashScan® protocol loops.
- Dual-color LED blinks green to indicate normal on FlashScan® systems.

Construction

Shell, door, and handle are molded of durable polycarbonate material with a textured finish.

Specifications

- **Shipping Weight:** 9.6 oz. (272.15 g)
- **Normal operating voltage:** 24 VDC.
- **Maximum SLC loop voltage:** 28.0 VDC.
- **Maximum SLC loop current:** 375 µA.
- **Temperature Range:** 32°F to 120°F (0°C to 49°C)
- **Relative Humidity:** 10% to 93% (noncondensing)
- **For use indoors in a dry location**



The NBG-12LX
Addressable Manual Pull Station

Installation

The NBG-12LX will mount semi-flush into a single-gang, double-gang, or standard 4" (10.16 cm) square electrical outlet box, or will surface mount to the model SB-10 or SB-I/O surface backbox. If the NBG-12LX is being semi-flush mounted, then the optional trim ring (BG12TR) may be used. The BG12TR is usually needed for semi-flush mounting with 4" (10.16 cm) or double-gang boxes (not with single-gang boxes).

Operation

Pushing in, then pulling down on the handle causes it to latch in the down/activated position. Once latched, the word "ACTIVATED" (in bright yellow) appears at the top of the handle, while a portion of the handle protrudes from the bottom of the station. To reset the station, simply unlock the station with the key and pull the door open. This action resets the handle; closing the door automatically resets the switch.

Each manual station, on command from the control panel, sends data to the panel representing the state of the manual switch. Two rotary decimal switches allow address settings (1 – 159 on FlashScan® systems, 1 – 99 on CLIP systems).

Architectural/Engineering Specifications

Manual Fire Alarm Stations shall be non-coded, with a key-operated reset lock in order that they may be tested, and so designed that after actual Emergency Operation, they cannot be restored to normal except by use of a key. An operated station shall automatically condition itself so as to be visually detected as activated. Manual stations shall be constructed of red-colored polycarbonate material with clearly visible operating instructions provided on the cover. The word FIRE shall appear on the front of the stations in white letters, 1.00 inches (2.54 cm) or larger. Stations shall be suitable for surface mounting on matching backbox SB-10 or SB-I/O; or semi-flush mounting on a standard single-gang, double-gang, or 4"

(10.16 cm) square electrical box, and shall be installed within the limits defined by the Americans with Disabilities Act (ADA) or per national/local requirements. Manual Stations shall be Underwriters Laboratories listed.

Manual stations shall connect with two wires to one of the control panel SLC loops. The manual station shall, on command from the control panel, send data to the panel representing the state of the manual switch.. Manual stations shall provide address setting by use of rotary decimal switches.

The loop poll LED shall be clearly visible through the front of the station. The LED shall flash while in the normal condition, and stay steadily illuminated when in alarm.

Product Line Information

NBG-12LX: Dual-action addressable pull station. Includes key locking feature.

SB-10: Surface backbox; metal.

SB-I/O: Surface backbox; plastic.

BG12TR: Optional trim ring.

17021: Keys, set of two.

NY-Plate: New York City trim plate

Agency Listings and Approvals

In some cases, certain modules or applications may not be listed by certain approval agencies, or listing may be in process. Consult factory for latest listing status.

- **UL / CUL Listed:** S692 (listed for Canadian and non-Canadian applications)
- **MEA:** 67-02-E
- **CSFM:** 7150-0028:0199
- **FDNY:** COA #6038 (NFS2-640), COA #6058 (NFS2-3030)
- **BSMI:** CI313066760047
- **U.S. Coast Guard:** 161.002/23/3 (AFP-200); 161.002/27/3 (AM-2020/AFP-1010; 161.002/42/1 (NFS-640)
- **Lloyd's Register:** 02/6007 (NFS-640); 94/60004 (E2) (AFP-200); 03/60011 (E1); 07/60007 (NFS2-3030)
- **FM** Approved

Patented: U.S. Patent No. D428,351; 6,380,846; 6,314,772; 6,632,108.

Notifier® and FlashScan® are a registered trademarks of Honeywell International Inc.
©2010 by Honeywell International Inc. All rights reserved. Unauthorized use of this document is strictly prohibited.

ISO 9001 CERTIFIED
ENGINEERING & MANUFACTURING QUALITY SYSTEMS

This document is not intended to be used for installation purposes.
We try to keep our product information up-to-date and accurate.
We cannot cover all specific applications or anticipate all requirements.
All specifications are subject to change without notice.

Made in the U.S.A.

For more information, contact Notifier. Phone: (203) 484-7161, FAX: (203) 484-7118.
www.notifier.com

FAPT-851(A)

Acclimate® Plus™ Multi-Sensor
Low-Profile Intelligent Detector

NOTIFIER® by Honeywell

Intelligent/Addressable Devices

General

The Notifier FAPT-851(A) Acclimate® Plus™ detector is an intelligent, addressable, multi-sensing, low-profile detector designed for use with Notifier Notifier Onyx and CLIP series Fire Alarm Control Panels (FACPs).

The Acclimate Plus detector uses a combination of photoelectric and thermal sensing technologies to increase immunity to false alarms. Unlike traditional intelligent detectors, the Acclimate Plus detector has a microprocessor in the detector head that processes alarm data. As a result, the Acclimate Plus detector adjusts its sensitivity automatically, without operator intervention or control panel programming.

Areas where the Acclimate Plus detector is especially useful include office complexes, schools, college campuses, manufacturing and industrial facilities, and anywhere else the use of a particular area may change. The Acclimate Plus detector automatically adjusts its sensitivity to the environment.

FlashScan® (U.S. Patent 5,539,389) is a communication protocol developed to greatly enhance the speed of communication between analog intelligent devices and compatible systems. Intelligent devices communicate in a grouped fashion. If one of the devices within the group has new information, the panel's CPU stops the group poll and concentrates on single points. The net effect is response speed greater than five times that of earlier designs.

Features

- Automatically adjusts sensitivity levels without operator intervention or programming. Sensitivity increases with heat.
- Microprocessor-based, combination photo and thermal technology.
- Compatible with all Notifier Onyx and CLIP series Fire Alarm Control Panels (FACPs).
- Addressable-analog communication.
- Sleek, low-profile design.
- Two-wire SLC connection.
- Rotary, decimal addressing (1-99 on CLIP systems, 1-159 on FlashScan systems).
- Addresses can be viewed and changed without electronic programmers.
- Dual bi-color LED design provides 360° viewing angle.
- LEDs lock red when in alarm. In FlashScan, LEDs flash green in standby for normal condition.
- Built-in tamper-resistant feature.
- Constructed of off-white fire-resistant plastic, designed to commercial standards, and offers an attractive appearance.
- SEMS screws for wiring of the separate base.
- Several base options, including relay, isolator, and sounder.
- Built-in functional test switch activated by external magnet.
- Listed to UL 268.
- Capable of heat-only alarm mode, enabled by a special command from the panel. Smoke alarms are ignored.
- Low-temperature signal at 45°F +/– 10°F (7.22°C +/– 5.54°C).



FAPT-851 with B210.png

FAPT-851(A) in B210LP(A) Base

Specifications

Sensitivity: *auto-adjusting levels*: 1 to 2%/ft. and 2 to 4%/ft. with classic CLIP systems; 1 to 2, 2 to 3, and 3 to 4%/ft. with systems; *fixed-sensitivity levels:* 1, 2, and 4%/ft. with classic CLIP systems; 0.5, 1, 2, 3, and 4%/ft. with FlashScan systems.

Size: 2.0" (5.3 cm) high; base determines diameter.

- **B210LP(A):** 6.1" (15.5 cm) diameter.
- **B501(A):** 4.1" (10.4 cm) diameter.
- **B200S(A):** 6.875" (17.46 cm) diameter.
- **B200SR(A):** 6.875" (17.46 cm) diameter.
- **B224RB(A):** 6.2" (15.748 cm) diameter.

Shipping weight: 5.2 oz. (147 g).

Operating temperature: 0°C to 38°C (32°F to 100°F).

UL-Listed velocity range: 0 – 4000 ft./min. (1219.2 m/min.), suitable for installation in ducts.

Relative humidity: 10% – 93% noncondensing.

Thermal sensing rating: fixed-temperature setpoint 135°F (57°C).

ELECTRICAL SPECIFICATIONS

Voltage range: 15 – 32 volts DC peak.

Standby current (max. avg.): 300 µA.

Loop resistance: 50 ohms maximum; varies according to control panel used. Refer to panel installation manuals.

LED current (max.): 6.5 mA @ 24 VDC ("ON").

Installation

The FAPT-851(A) plug-in detector uses a separate base to simplify installation, service, and maintenance. A special tool allows maintenance personnel to plug-in and remove detectors without using a ladder. Suitable mounting base boxes include:

- 4.0" (10.16 cm) square box.
- 3.5" (8.89 cm) or 4.0" (10.16 cm) octagonal box.
- Single-gang box (except relay or isolator base).

NOTE: *The FAPT-851(A) detector has the unique ability to adjust sensitivity according to the environment, based on heat and smoke levels. Avoid installing these detectors in locations that are susceptible to rapid and high temperature changes. An example of an incorrect application would be near or in line with the output of a self-contained heater.*

Agency Listings and Approvals

These listings and approvals apply to the modules specified in this. In some cases, certain modules or applications may not be listed by certain approval agencies, or listing may be in process. *Consult factory for latest listing status.*

- **UL Listed:** S1115.
- **ULC Listed:** S1115.
- **MEA Listed:** 225-02-E.
- **FM Approved.**
- **CSFM:** 7272-0028:0206.
- **U.S. Coast Guard:** 161.002/42/1 (NFS-640); 161.002/50/0 (NFS2-640/NFS-320/NFS-320C, excluding B210LP(A)).
- **Lloyd's Register:** 11/600013 (NFS2-640, NFS-320/NFS-320C, excluding B210LP(A)).
- **Maryland State Fire Marshal:** Permit # 2122.

Ordering Information

NOTE: *"A" suffix indicates ULC Listed model.*

FAPT-851: Low-profile intelligent multi-sensor detector.

FAPT-851A: Same as FAPT-851 but with ULC Listing.

INTELLIGENT BASES

NOTE: *"A" suffix indicates ULC Listed model.*

NOTE: *For details about intelligent bases and their mounting, see DN-60054.*

B210LP(A): Plug-in detector base; standard U.S. flanged low-profile mounting base.

B210LPBP: Bulk pack of B210LP; package contains 10.

B501(A): Flangeless mounting base.

B501BP: Bulk pack of B501; package contains 10.

B200S(A): Intelligent, programmable sounder base capable of producing sound output in high or low volume with ANSI Temporal 3, ANSI Temporal 4, continuous tone, marching tone, and custom tone.

B200SR(A): Intelligent sounder base capable of producing sound output with ANSI Temporal 3 or continuous tone. Replaces B501BH series bases in retrofit applications.

B224RB(A): Relay base Screw terminals: up to 14 AWG (2.0 mm^2). Relay type Form-C. Rating: 2.0 A @ 30 VDC resistive; 0.3 A @ 110 VDC inductive; 1.0 A @ 30 VDC inductive.

B224BI(A): Isolator base. Maximum: 25 devices between isolator bases.

ACCESSORIES

F110: Retrofit flange to convert B210LP to match the B710LP profile, or to convert older high-profile bases to low-profile.

F110BP: Bulk pack of F110; package contains 15.

F210: Replacement flange for B210LP(A) base.

RA100Z(A): Remote LED annunciator. 3 – 32 VDC. Fits U.S. single-gang electrical box. Supported by B210LP(A) and B501(A) bases only.

SMB600: Surface mounting kit for use with B210LP(A).

M02-04-00: Test magnet.

M02-09-00: Test magnet with telescoping handle.

XR2B: Detector removal tool. Allows installation and/or removal of FlashScan® Series detector heads from base in high ceiling installations.

T55-127-010: Detector removal tool without pole.

XP-4: Extension pole for XR2B. Comes in three 5-foot (1.524 m) sections.

Notifier®, ONYX®, FlashScan®, and Acclimate® are registered trademarks and Acclimate Plus™ is a trademark of Honeywell International Inc.
©2011 by Honeywell International Inc. All rights reserved. Unauthorized use of this document is strictly prohibited.

ISO 9001 CERTIFIED
ENGINEERING & MANUFACTURING QUALITY SYSTEMS

This document is not intended to be used for installation purposes.
We try to keep our product information up-to-date and accurate.
We cannot cover all specific applications or anticipate all requirements.
All specifications are subject to change without notice.

Made in the U.S.A.

For more information, contact Notifier. Phone: (203) 484-7161, FAX: (203) 484-7118.
www.notifier.com

FST-851(A) Series

Intelligent Thermal (Heat) Detectors with FlashScan®

NOTIFIER® by Honeywell

Intelligent / Addressable Devices

General

Notifier FST-851(A) Series intelligent plug-in thermal detectors with integral communication has features that surpass conventional detectors. Point ID capability allows each detector's address to be set with rotary, decimal address switches, providing exact detector locations. FST-851(A) Series thermal detectors use an innovative thermistor sensing circuit to produce 135°F/57°C fixed-temperature (FST-851/A) and rate-of-rise thermal detection (FST-851R/A) in a low-profile package. FST-851H(A) provides fixed high-temperature detection at 190°F/88°C. These thermal detectors provide effective, intelligent property protection in a variety of applications. FST-851(A) Series detectors are compatible with Notifier Onyx and CLIP series Fire Alarm Control Panels (FACPs).

FlashScan® (U.S. Patent 5,539,389) is a communication protocol developed by Notifier Engineering that greatly enhances the speed of communication between analog intelligent devices and certain NOTIFIER systems. Intelligent devices communicate in a grouped fashion. If one of the devices within the group has new information, the panel's CPU stops the group poll and concentrates on single points. The net effect is response speed greater than five times that of earlier designs.

Features

- Sleek, low-profile, stylish design.
- State-of-the-art thermistor technology for fast response.
- Rate-of-rise model (FST-851R/A), 15°F (8.3°C) per minute.
- Factory preset fixed temperature at 135°F (57°C); high-temperature model fixed at 190°F (88°C).
- Addressable by device.
- Compatible with FlashScan® and CLIP protocol systems.
- Rotary, decimal addressing (1-99 on CLIP systems, 1-159 on FlashScan systems).
- Two-wire SLC connection.
- Visible LEDs "blink" every time the unit is addressed.
- 360°-field viewing angle of the visual alarm indicators (two bi-color LEDs). LEDs blink green in Normal condition and turn on steady red in Alarm.
- Integral communications and built-in device-type identification.
- Remote test feature from the panel.
- Built-in functional test switch activated by external magnet.
- Walk test with address display (an address of 121 will blink the detector LED 12-(pause)-1).
- Low standby current.
- Backward-compatible.
- Built-in tamper-resistant feature.
- Designed for direct-surface or electrical-box mounting.
- Sealed against back pressure.
- Plugs into separate base for ease of installation and maintenance. Separate base allows interchange of photoelectric, ionization and thermal sensors.
- SEMS screws for wiring of the separate base.
- Constructed of off-white fire-resistant plastic, designed to commercial standards, and offers an attractive appearance.



B210-2251.jpg

FST-851(A) in B210LP(A) Base

- 94-5V plastic flammability rating.
- Remote LED output connection to optional RA100Z(A) remote LED annunciator.
- Optional sounder, relay, and isolator bases.
- Optional flanced surface mounting kit.

Specifications

Size: 2.1" (5.3 cm) high; base determines diameter.

- **B210LP(A):** 6.1" (15.5 cm) diameter.
- **B501(A):** 4.1" (10.4 cm) diameter.
- **B200S(A):** 6.875" (17.46 cm) diameter.
- **B200SR(A):** 6.875" (17.46 cm) diameter.
- **B224RB(A):** 6.2" (15.748 cm) diameter.
- **B224BI(A):** 6.2" (15.748 cm) diameter.

Shipping weight: 4.8 oz. (137 g).

Operating temperature range: FST-851(A) Series, FST-851R(A): –20°C to 38°C (–4°F to 100°F); FST-851H(A): –20°C to 66°C (–4°F to 150°F).

Detector spacing: UL approved for 50 ft. (15.24 m) center to center. FM approved for 25 x 25 ft. (7.62 x 7.62 m) spacing.

Relative humidity: 10% – 93% noncondensing.

Thermal ratings: fixed-temperature setpoint 135°F (57°C), rate-of-rise detection 15°F (8.3°C) per minute, high temperature heat 190°F (88°C).

ELECTRICAL SPECIFICATIONS

Voltage range: 15 - 32 volts DC peak.

Standby current (max. avg.): 300 µA @ 24 VDC (one communication every 5 seconds with LED enabled).

LED current (max.): 6.5 mA @ 24 VDC ("ON").

Applications

Use thermal detectors for protection of property. For further information, go to systemsensor.com for manual I56-407-00, Applications Manual for System Smoke Detectors, which provides detailed information on detector spacing, placement, zoning, wiring, and special applications.

Installation

The FST Series plug-in intelligent thermal detectors use a separate base to simplify installation, service, and maintenance. Installation instructions are shipped with each detector. A special tool allows maintenance personnel to plug in and remove detectors without using a ladder

Mount base (all base types) on an electrical backbox which is at least 1.5" (3.81 cm) deep. For a chart of compatible junction boxes, see *DN-60054*.

***NOTE:** 1) Because of the inherent supervision provided by the SLC loop, end-of-line resistors are not required. Wiring "T-taps" or branches are permitted for Style 4 (Class "B") wiring. **2)** When using relay or sounder bases, consult the ISO-X(A) installation sheet I56-1380 for device limitations between isolator modules and isolator bases.*

Agency Listings and Approvals

These listings and approvals apply to the modules specified in this document.In some cases, certain modules or applications may not be listed by certain approval agencies, or listing may be in process. *Consult factory for latest listing status.*

- **UL Listed:** S747.
- **ULC Listed:** S6978.
- **MEA Listed:** 383-02-E.
- **FM Approved.**
- **CSFM:** 7270-0028:0196.
- **BSMI:** CI313066760025.
- **CCCF:** Certif. # 2004081801000018.
- **U.S. Coast Guard:** 161.002/42/1 (NFS-640); 161.002/50/0 (NFS2-640/NFS-320/NFS-320C, excluding B210LP(A)).
- **Lloyd's Register:** 11/600013 (NFS2-640/NFS-320/NFS-320C, excluding B210LP(A)).

Product Line Information

***NOTE:** "A" suffix indicates ULC Listed model.*

FST-851: Intelligent thermal detector. Must be mounted to one of the bases listed below.

FST-851A: Same as FST-851 but with ULC Listing.

FST-851R: Intelligent thermal detector with rate-of-rise feature.

FST-851RA: Same as FST-851R but with ULC Listing.

FST-851H: Intelligent high-temperature thermal detector.

FST-851HA: Same as FST-851H but with ULC Listing.

INTELLIGENT BASES

***NOTE:** "A" suffix indicates ULC Listed model.*

***NOTE:** For details about intelligent bases and their mounting, see DN-60054.*

B210LP(A): Standard U.S. flanged low-profile mounting base.

B210LPBP: Bulk pack of B210LP; package contains 10.

B501(A): Standard European flangeless mounting base.

B501BP: Bulk pack of B501; package contains 10.

B200S(A): Addressable Intelligent, programmable sounder base capable of producing sound output in high or low volume with ANSI Temporal 3, ANSI Temporal 4, continuous tone, marching tone, and custom tone.

B200SR(A): Intelligent sounder base capable of producing sound output with ANSI Temporal 3 or continuous tone. Replaces B501BH series bases in retrofit applications.

B224RB(A): Intelligent relay base. Screw terminals: up to 14 AWG (2.0 mm²). Relay type: Form-C. Rating: 2.0 A @ 30 VDC resistive; 0.3 A @ 110 VDC inductive; 1.0 A @ 30 VDC inductive.

B224BI(A): Intelligent isolator base. Isolates SLC from loop shorts. Maximum: 25 devices between isolator bases; see Note 2 under Installation.

ACCESSORIES

F110: Retrofit flange to convert B210LP(A) to match the B710LP(A) profile, or to convert older high-profile bases to low-profile.

F110BP: Bulk pack of F110; package contains 15.

F210: Replacement flange for B210LP(A) base.

RA100Z(A): Remote LED annunciator. 3 – 32 VDC. Fits U.S. single-gang electrical box. Supported by B210LP(A) and B501(A) bases only.

SMB600: Surface mounting kit, flanged.

M02-04-00: Test magnet.

M02-09-00: Test magnet with telescoping handle.

XR2B: Detector removal tool. Allows installation and/or removal of FlashScan® Series detector heads from base in high ceiling installations. Includes T55-127-010.

T55-127-010: Detector removal tool without pole.

XP-4: Extension pole for XR2B. Comes in three 5-foot (1.524 m) sections.

Notifier® and FlashScan® are registered trademarks of Honeywell International Inc.
©2011 by Honeywell International Inc. All rights reserved. Unauthorized use of this document is strictly prohibited.

ISO 9001 CERTIFIED
ENGINEERING & MANUFACTURING QUALITY SYSTEMS

This document is not intended to be used for installation purposes.
We try to keep our product information up-to-date and accurate.
We cannot cover all specific applications or anticipate all requirements.
All specifications are subject to change without notice.

Made in the U.S.A.

For more information, contact Notifier. Phone: (203) 484-7161, FAX: (203) 484-7118.
www.notifier.com

FCM-1(A) & FRM-1(A) Series

Control and Relay Modules

NOTIFIER® by Honeywell

Intelligent / Addressable Devices

General

FCM-1(A) Control Module: The FCM-1(A) Addressable Control Module provides Notifier intelligent fire alarm control panels a circuit for Notification Appliances (horns, strobes, speakers, etc.). Addressability allows the FCM-1(A) to be activated, either manually or through panel programming, on a select (zone or area of coverage) basis.

FRM-1(A) Relay Module: The FRM-1(A) Addressable Relay Module provides the system with a dry-contact output for activating a variety of auxiliary devices, such as fans, dampers, control equipment, etc. Addressability allows the dry contact to be activated, either manually or through panel programming, on a select basis.

FlashScan® (U.S. Patent 5,539,389) is a communication protocol developed by NOTIFIER Engineering that greatly enhances the speed of communication between analog intelligent devices. Intelligent devices communicate in a grouped fashion. If one of the devices within the group has new information, the panel CPU stops the group poll and concentrates on single points. The net effect is response speed greater than five times that of other designs.

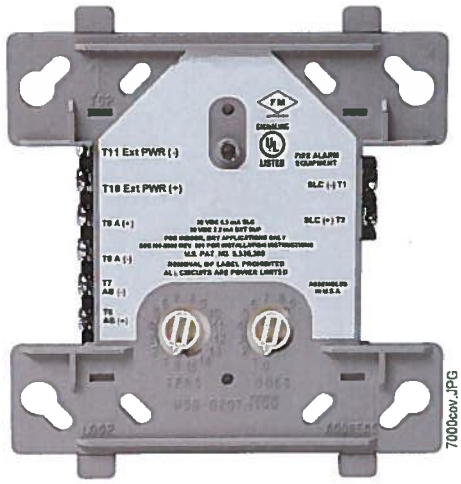

FCM-1(A)

Features

- Built-in type identification automatically identifies these devices to the control panel.
- Internal circuitry and relay powered directly by two-wire SLC loop. The FCM-1(A) module requires power (for horns, strobes, etc.), or audio (for speakers).
- Integral LED "blinks" green each time a communication is received from the control panel and turns on in steady red when activated.
- LED blink may be deselected globally (affects all devices).
- High noise immunity (EMF/RFI).
- The FCM-1(A) may be used to switch 24-volt NAC power, audio (up to 70.7 Vrms).
- Wide viewing angle of LED.
- SEMS screws with clamping plates for wiring ease.
- Direct-dial entry of address 01– 159 for FlashScan loops, 01 – 99 for CLIP mode loops.
- Speaker, and audible/visual applications may be wired for Class B or A (Style Y or Z).

Applications

The FCM-1(A) is used to switch 24 VDC audible/visual power, high-level audio (speakers). The FRM-1(A) may be programmed to operate dry contacts for applications such as door holders or Air Handling Unit shutdown, and to reset four-wire smoke detector power.

NOTE: *Refer to the SLC Manual (PN 51253) for details regarding releasing applications with the FCM-1(A). Refer to the FCM-1-REL datasheet (DN-60390) for new FlashScan® releasing applications.*

Construction

- The face plate is made of off-white heat-resistant plastic.
- Controls include two rotary switches for direct-dial entry of address (01-159).
- The FCM-1(A) is configured for a single Class B (Style Y) or Class A (Style Z) Notification Appliance Circuit.
- The FRM-1(A) provides two Form-C dry contacts that switch together.

Operation

Each FCM-1(A) or FRM-1(A) uses one of 159 possible module addresses on a SLC loop (99 on CLIP loops). It responds to regular polls from the control panel and reports its type and status, including the open/normal/short status of its Notification Appliance Circuit (NAC). The LED blinks with each poll received. On command, it activates its internal relay. The FCM-1(A) supervises Class B (Style Y) or Class A (Style Z) notification or control circuits.

Upon code command from the panel, the FCM-1(A) will disconnect the supervision and connect the external power supply in the proper polarity across the load device. The disconnection of the supervision provides a positive indication to the panel that the control relay actually turned ON. The external power supply is always relay isolated from the communication loop so that a trouble condition on the external power supply will never interfere with the rest of the system.

Rotary switches set a unique address for each module. The address may be set before or after mounting. The built-in TYPE CODE (not settable) will identify the module to the control panel, so as to differentiate between a module and a sensor address.

Specifications for FCM-1(A)

Normal operating voltage: 15 to 32 VDC.

Maximum current draw: 6.5 mA (LED on).

Average operating current: 350 µA direct poll, 375 µA group poll with LED flashing, 485 µA Max. (LED flashing, NAC shorted.)

Maximum NAC Line Loss: 4 VDC.

External supply voltage (between Terminals T10 and T11): Maximum (NAC): Regulated 24 VDC; Maximum (Speakers): 70.7 V RMS, 50W.

Drain on external supply: 1.7 mA maximum using 24 VDC supply; 2.2 mA Maximum using 80 VRMS supply.

Max NAC Current Ratings: For class B wiring system, the current rating is 3A; For class A wiring system, the current rating is 2A.

Temperature range: 32°F to 120°F (0°C to 49°C).

Humidity range: 10% to 93% non-condensing.

Dimensions: 4.5" (114.3 mm) high x 4" (101.6 mm) wide x 1.25" (31.75 mm) deep. Mounts to a 4" (101.6 mm) square x 2.125" (53.975 mm) deep box.

Accessories: SMB500 Electrical Box; CB500 Barrier

Specifications for FRM-1(A)

Normal operating voltage: 15 to 32 VDC.

Maximum current draw: 6.5 mA (LED on).

Average operating current: 230 µA direct poll; 255 µA group poll.

EOL resistance: not used.

Temperature range: 32°F to 120°F (0°C to 49°C).

Humidity range: 10% to 93% non-condensing.

Dimensions: 4.5" (114.3 mm) high x 4" (101.6 mm) wide x 1.25" (31.75 mm) deep. Mounts to a 4" (101.6 mm) square x 2.125" (53.975 mm) deep box.

Accessories: SMB500 Electrical Box; CB500 Barrier

Agency Listings and Approvals

In some cases, certain modules may not be listed by certain approval agencies, or listing may be in process. Consult factory for latest listing status.

- **UL:** S635
- **ULC:** S3705 (A version only)
- **FM Approved**
- **CSFM:** 7300-0028:0219
- **MEA:** 14-00-E
- **FDNY:** COA #6067, #6065

Contact Ratings for FRM-1(A)

Current Rating	Maximum Voltage	Load Description	Application
3 A	30 VDC	Resistive	Non-Coded
2 A	30 VDC	Resistive	Coded
.9 A	110 VDC	Resistive	Non-Coded
.9 A	125 VDC	Resistive	Non-Coded
.5 A	30 VDC	Inductive (L/R=5ms)	Coded
1 A	30 VDC	Inductive (L/R=2ms)	Coded
.3 A	125 VAC	Inductive (PF=0.35)	Non-Coded
1.5 A	25 VAC	Inductive (PF=0.35)	Non-Coded
.7 A	70.7 VAC	Inductive (PF=0.35)	Non-Coded
2 A	25 VAC	Inductive (PF=0.35)	Non-Coded

***NOTE:** Maximum (Speakers): 70.7 V RMS, 50 W*

Product Line Information

***NOTE:** "A" suffix indicates ULC Listed model.*

FCM-1(A): Intelligent Addressable Control Module.

FRM-1(A): Intelligent Addressable Relay Module.

A2143-20: Capacitor, required for Class A (Style Z) operation of speakers.

SMB500: Optional Surface-Mount Backbox.

CB500: Control Module Barrier — required by UL for separating power-limited and non-power limited wiring in the same junction box as FCM-1(A).

***NOTE:** For installation instructions, see the following documents:*

- *FCM-1(A) Installation document I56-1169.*
- *FRM-1(A) Installation document I56-3502.*
- *Notifier SLC Wiring Manual, document 51253.*

Notifier® and **FlashScan®** are registered trademarks of Honeywell International Inc.
©2011 by Honeywell International Inc. All rights reserved. Unauthorized use of this document is strictly prohibited.

ISO 9001 CERTIFIED ENGINEERING & MANUFACTURING QUALITY SYSTEMS

This document is not intended to be used for installation purposes.
We try to keep our product information up-to-date and accurate.
We cannot cover all specific applications or anticipate all requirements.
All specifications are subject to change without notice.

Made in the U.S.A.

For more information, contact Notifier. Phone: (203) 484-7161, FAX: (203) 484-7118.
www.notifier.com

SpectrAlert® Advance

Selectable Output Notification Appliances

NOTIFIER® by Honeywell

Audio/Visual Devices

General

SpectrAlert® Advance selectable-output horns, strobes and horn/strobes are rich with features guaranteed to cut installation times and maximize profits. The SpectrAlert Advance series of notification appliances is designed to simplify your installations, with features such as: plug-in designs, instant feedback messages to ensure correct installation of individual devices, and eleven field-selectable candela settings for wall and ceiling strobes and horn/strobes.

More specifically, when installing Advance products, first attach a universal mounting plate to a four-inch square, four-inch octagon, or double-gang junction box. The two-wire mounting plate attaches to a single-gang junction box.

Then, connect the notification appliance circuit wiring to the SEMS terminals on the mounting plate.

Finally, attach the horn, strobe, or horn/strobe to the mounting plate by inserting the product's tabs in the mounting plate's grooves. The device will rotate into position, locking the product's pins into the mounting plate's terminals. The device will temporarily hold in place with a catch until it is secured with a captured mounting screw.

SpectrAlert Advance products allow you to choose:

- 12 or 24 volts.
- 15, 15/75, 30, 75, 95, 110, 115, 135, 150, 177, or 185 candela by way of a rear-mounted slide switch and front viewing window.
- Horn tones and volume by way of a rotary switch.

The SpectrAlert Advance series includes outdoor notification appliances. Outdoor strobes and horn/strobes (two-wire and four-wire) are available for wall or ceiling. Outdoor horns are available for wall only. All System Sensor outdoor products are rated between –40°C and 66°C in wet or dry applications.

Models available:

- Indoor wall-mount: horn, strobe, 2-wire horn/strobe, 4-wire horn/strobe.
- Indoor ceiling-mount: strobe, 2-wire horn/strobe, 4-wire horn/strobe.
- Outdoor wall-mount: horn, strobe, 2-wire horn/strobe, 4-wire horn/strobe.
- Outdoor ceiling-mount: strobe, 2-wire horn/strobe, 4-wire horn/strobe.

Features

- Plug-in design.
- Same mounting plate for wall- and ceiling-mount units.
- Shorting spring on mounting plate for continuity check before installation.
- Captive mounting screw.
- Tamper-resistance capability.
- Field-selectable candela settings on wall and ceiling units: 15, 15/75, 30, 75, 95, 110, 115, 135, 150, 177, 185.
- Automatic selection of 12 or 24 volt operation at 15 and 15/75 candela.
- Outdoor wall and ceiling products.
- Outdoor products rated from –40°C and 66°C.



Indoor Ceiling Horn/Strobe



Outdoor Ceiling Strobe



Indoor Wall Horn/Strobe



Indoor Ceiling Strobe



Indoor Wall Horn



Outdoor Wall Strobe

- Outdoor products rainproof per UL50 (NEMA 3R) and weatherproof per NEMA 4X, IP56
- Minimal intrusion into the backbox.
- Horn rated at 88+ dbA at 16 volts.
- Rotary switch for tone selection.
- Three horn volume settings.
- Electrically compatible with existing SpectrAlert products.

Engineering Specifications

SpectrAlert Advance horns, strobes, and horn/strobes mount to a standard 10.16 x 10.16 x 3.81 cm backbox, 10.16 cm octagonal backbox, or a double-gang backbox. Two-wire products mount to a single-gang 5.08 x 10.16 x 4.763 cm backbox. A universal mounting plate shall be used for mounting ceiling and wall products. The notification appliance circuit wiring shall terminate at the universal mounting plate. Also, SpectrAlert Advance products, when used with the Sync•Circuit™ Module accessory, shall be powered from a non-coded notification appliance circuit output and shall operate on a nominal 12 or 24 volts. When used with the Sync•Circuit Module, 12-volt rated notification appliance circuit outputs shall operate between 9 and 17.5 volts; 24-volt rated notification appliance circuit outputs shall operate between 17 and 33 volts. Indoor SpectrAlert Advance products shall operate between 0°C and 49°C from a regulated DC, or full-wave-rectified, unfiltered power supply. Strobes and horn/strobes shall have field-selectable candela settings including 15, 15/75, 30, 75, 95, 110, 115, 135, 150, 177, 185.

STROBE

The strobe shall be a System Sensor SpectrAlert Advance Model _____ listed to CAN/ULC S5512 and shall be approved for fire protective service. The strobe shall be wired

as a primary-signaling notification appliance and comply with the Americans with Disabilities Act requirements for visible signaling appliances, flashing at 1 Hz over the strobe's entire operating voltage range. The strobe light shall consist of a xenon flash tube and associated lens/reflector system.

HORN/STROBE COMBINATION

The horn/strobe shall be a System Sensor SpectrAlert Advance Model _____ listed to CAN/ULC S5512 and shall be approved for fire protective service. The horn/strobe shall be wired as a primary-signaling notification appliance and comply with the Americans with Disabilities Act requirements for visible signaling appliances, flashing at 1 Hz over the strobe's entire operating voltage range. The strobe light shall consist of a xenon flash tube and associated lens/reflector system. The horn shall have three audibility options and an option to switch between a Temporal 3 pattern and a Non-Temporal (continuous) pattern. These options are set by a multiple position switch. On four-wire products, the strobe shall be powered independently of the sounder. The horn on horn/strobe models shall operate on a coded or non-coded power supply.

OUTDOOR PRODUCTS

SpectrAlert Advance outdoor horns, strobes and horn/strobes shall be listed for outdoor use by ULC and shall operate between –40°C and 66°C. The products shall be listed for use with a System Sensor outdoor/weatherproof backbox with half-inch and three-fourths-inch conduit entries.

SYNCHRONIZATION MODULE

The module shall be a System Sensor Sync•Circuit MDL3RA or MDL3WA listed to ULC and shall be approved for fire protective service. The module shall synchronize SpectrAlert strobes at 1 Hz and horns at Temporal 3. Also, while operating the strobes, the module shall silence the horns on horn/strobe models over a single pair of wires. The module shall mount to a 11.906 x 11.906 x 5.398 cm backbox. The module shall also control two Style Y (class B) circuits or one Style Z (Class A) circuit. The module shall synchronize multiple zones. Daisy-chaining two or more synchronization modules together will synchronize all the zones they control. The module shall not operate on a coded power supply.

Operating Specifications

- **Standard operating temperature:** 0°C to 49°C.
- **K Series operating temperature:** –40°C to 66°C.
- **Humidity range:** 10% to 93% non-condensing (indoor products).
- **Strobe flash rate:** 1 flash per second.
- **Nominal voltage:** regulated 12 VDC/FWR or regulated 24 VDC/FWR. ***NOTE:*** *Full Wave Rectified (FWR) voltage is a non-regulated, time-varying power source that is used on some power supply and panel outputs.*
- **Operating voltage range:** 8 V to 17.5 V (12 V nominal); or 16 V to 33 V (24 V nominal). ***NOTE:*** *P, S, PC, and SC products will operate at 12 V nominal only for 15 cd and 15/75 cd.*
- **Input terminal wire gauge:** 12 to 18 AWG (3.31 to 0.821 mm²).
- **Ceiling-mount dimensions (including lens):** 17.3 cm diameter x 6.4 cm deep.
- **Wall-mount dimensions (including lens):** 14.2 cm H x 11.9 cm W x 6.4 cm D.
- **Horn dimensions:** 14.2 cm H x 11.9 cm W x 3.3 cm D.

Agency Listings and Approvals

The listings and approvals below apply to SpectrAlert Advance Selectable Output Notification Devices. In some cases, certain modules may not be listed by certain approval agencies, or listing may be in process. Consult factory for latest listing status.

- **UL Listed:** S4011
- **ULC Listed:** S5512
- **FM Approved**
- **MEA:** 452-05-E
- **CSFM:** 7125-1653:0186 (indoor strobes); 7125-1653:0188 (horn strobes, chime strobes); 7135-1653:0189 (horns, chimes)

Strobe Current Draw, ULC Maximum (mA RMS)

Candela		8 – 17.5 V		16 – 33 V	
		DC	FWR	DC	FWR
Standard Candela Range	15	123	128	66	71
	15/75	142	148	77	81
	30	NA	N/A	94	96
	75	NA	NA	158	153
	95	NA	NA	181	176
	110	NA	NA	202	195
	115	NA	NA	210	205
High Candela Range	135	NA	NA	228	207
	150	NA	NA	246	220
	177	NA	NA	281	251
	185	NA	NA	286	258

Horn Current Draw, ULC Maximum (mA RMS)

Sound Pattern	dB	8 – 17.5 V		16 – 33 V	
		DC	FWR	DC	FWR
Temporal	High	57	55	69	75
Temporal	Medium	44	49	58	69
Temporal	Low	38	44	44	48
Non-temporal	High	57	56	69	75
Non-temporal	Medium	42	50	60	69
Non-temporal	Low	41	44	50	50
Coded	High	57	55	69	75
Coded	Medium	44	51	56	69
Coded	Low	40	46	52	50

Horn and Horn/Strobe Rotary Switch Setting

Setting	Repetition Rate	dB Level
1	Temporal horn	High
2	Temporal horn	Medium
3	Temporal horn	Low
4	Normal horn	High
5	Normal horn	Medium
6	Normal horn	Low
7*	Externally coded	High
8*	Externally coded	Medium
9*	Externally coded	Low

**NOTE: Settings 7, 8, and 9 are not available on 2-wire horn/strobe.*

Horn and Horn/Strobe Output (dBA)

Switch Position	Sound Pattern	dB	8 – 17.5 V		16 – 33 V	
			DC	FWR	DC	FWR
1	Temporal	High	96	93	101	99
2	Temporal	Medium	89	89	95	95
3	Temporal	Low	86	87	91	92
4	Non-temporal	High	90	86	96	93
5	Non-temporal	Medium	82	82	90	89
6	Non-temporal	Low	79	80	86	86
7*	Coded	High	90	87	96	93
8*	Coded	Medium	82	82	90	89
9*	Coded	Low	78	80	86	86

**NOTE: Settings 7, 8, and 9 are not available on 2-wire horn/strobe.*

Two-Wire Horn/Strobe, *STANDARD* Candela Range (15 – 115 cd), ULC Maximum Current Draw (mA RMS)

Input, Sound Pattern, dB Level	8 – 17.5 V		16 – 33 V						
	15	15/75	15	15/75	30	75	95	110	115
Input, Temporal, High	137	147	79	90	107	176	194	212	218
Input, Temporal, Medium	132	144	69	80	97	157	182	201	210
Input, Temporal, Low	132	143	66	77	93	154	179	198	207
Input, Non-temporal, High	141	152	91	100	116	176	201	221	229
Input, Non-temporal, Medium	133	145	75	85	102	163	187	207	216
Input, Non-temporal, Low	131	144	68	79	96	156	182	201	210
Input, Temporal, High	136	155	88	97	112	168	190	210	218
Input, Temporal, Medium	129	152	78	88	103	160	184	202	206
Input, Temporal, Low	129	151	76	86	101	160	184	194	201
Input, Non-temporal, High	142	161	103	112	126	181	203	221	229
Input, Non-temporal, Medium	134	155	85	95	110	166	189	208	216
Input, Non-temporal, Low	132	154	80	90	105	161	184	202	211

Two-Wire Horn/Strobe, *HIGH* Candela Range (135 – 185 cd), ULC Maximum Current Draw (mA RMS)

Input	16 – 33 V				Input	16 – 33 V			
	135	150	177	185		135	150	177	185
Temporal, High	245	259	290	297	Temporal, High	215	231	258	265
Temporal, Medium	235	253	288	297	Temporal, Medium	209	224	250	258
Temporal, Low	232	251	282	292	Temporal, Low	207	221	248	256
Non-temporal, High	255	270	303	309	Non-temporal, High	233	248	275	281
Non-temporal, Medium	242	259	293	299	Non-temporal, Medium	219	232	262	267
Non-temporal, Low	238	254	291	295	Non-temporal, Low	214	229	256	262

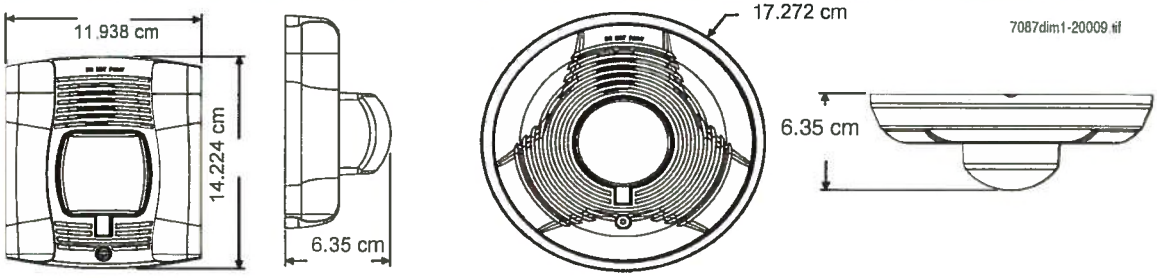

Ordering Information

Model	Description	Model	Description
WALL HORN/STROBES		*CEILING HORN/STROBES*	
P2RA	2-wire horn/strobe, standard cd, red.	PC2RKA	2-wire horn/strobe, standard cd, red, outdoor.
P2RHA	2-wire horn/strobe, high cd, red.	PC2RHKA	2-wire horn/strobe, high cd, red, outdoor.
P2RKA	2-wire horn/strobe, standard cd, red, outdoor	PC2WA	2-wire horn/strobe, standard cd, white.
P2RHKA	2-wire horn/strobe, high cd, red, outdoor.	PC2WHA	2-wire horn/strobe, high cd, white.
P2WA	2-wire horn/strobe, standard cd, white.	PC4RKA	4-wire horn/strobe, standard cd, red, outdoor.
P2WHA	2-wire horn/strobe, high cd, white.	PC4RHKA	4-wire horn/strobe, high cd, red, outdoor.
P4RA	4-wire horn/strobe, standard cd, red.	PC4WA	4-wire horn/strobe, standard cd, white.
P4RHA	4-wire horn/strobe, high cd, red.	PC4WHA	4-wire horn/strobe, high cd, white.
P4RKA	4-wire horn/strobe, standard cd, red, outdoor.	*HORNS*	
P4RHKA	4-wire horn/strobe, high cd, red, outdoor.	HRA	Horn, red.
P4WA	4-wire horn/strobe, standard cd, white.	HRKA	Horn, red, outdoor.
P4WHA	4-wire horn/strobe, high cd, white.	HWA	Horn, white.
ACCESSORIES		*WALL STROBES*	
BBS-2A	Backbox skirt, wall, red.	SRA	Strobe, standard cd, red.
BBSW-2A	Backbox skirt, wall, white.	SRHA	Strobe, high cd, red.
BBSC-2A	Backbox skirt, ceiling, red.	SRKA	Strobe, standard cd, red, outdoor.
BBSCW-2A	Backbox skirt, ceiling, white.	SRHKA	Strobe, high cd, red, outdoor.
WTPA	Flush mount, weatherproof plate, red	SWA	Strobe, standard cd, white.
WTPWA	Flush mount, weatherproof plate, white	SWHA	Strobe, high cd, white.
TR-HSA	Trim Ring, Red, package of 5	*CEILING STROBES*	
TRW-HSA	Trim Ring, White, package of 5	SCRKA	Strobe, standard cd, red, outdoor.
TRC-HSA	Trim Ring Ceiling, Red, package of 5	SCRHKA	Strobe, high cd, red, outdoor.
TRCW-HSA	Trim Ring Ceiling, White, package of 5	SCWA	Strobe, standard cd, white.
		SCWHA	Strobe, high cd, white.

NOTE: *For strobes and horn/strobes, add suffix "-F" for French or "-B" for Bilingual.*

NOTE: **"High cd" refers to strobes that include 135, 150, 177, and 185 candela settings. "Standard cd" refers to strobes that include 15, 15/75, 30, 75, 95, 110, and 115 candela settings.*

NOTE: *All outdoor models ("K(A)" suffix) include a plastic weatherproof backbox.*

NOTE: *Add "-R" to models for weatherproof replacement device (no back box included). Only for use with weatherproof outdoor flush mounting plate, WTPA and WTPWA.*

NOTE: *Add "P" to model for plain housing (No "FIRE" marking on the cover.)*

Sync•Circuit™ is a trademark and NOTIFIER® and SpectrAlert® are registered trademarks of Honeywell International Inc.
©2011 by Honeywell International Inc. All rights reserved. Unauthorized use of this document is strictly prohibited.

ISO 9001 CERTIFIED
ENGINEERING & MANUFACTURING QUALITY SYSTEMS

This document is not intended to be used for installation purposes. We try to keep our product information up-to-date and accurate. We cannot cover all specific applications or anticipate all requirements. All specifications are subject to change without notice.

For more information, contact Notifier.
(888) 289-1114
10 Whitmore Road
Woodbridge, Ontario L4L 7Z4
www.notifier.com

Audible Visible Accessories

System Sensor offers a wide range of Audible Visible (AV) accessories to enable you to meet a variety of application requirements.



Features

MP120K Mounting Plate

- Designed for both indoor and outdoor use
- Plug-in design eliminates ground faults
- Power supply that converts 120 VAC to nominal 24 V FWR
- Compatible with all two-wire SpectrAlert Advance® devices

Color Lens Attachments

- Easily turns any device into a strobe for ECS, severe weather, sprinkler activation and more
- Outdoor rated from –35°F to 151°F
- Wall- or ceiling-mount lenses available
- UL 1638 listed

WTP Weatherproof Plates

- Enables flush mounting of outdoor devices to brick, ceramic tile, concrete, and masonry brick
- Weatherproof per NEMA 3R
- For use in both indoor and outdoor applications
- For use with all K series (outdoor) products replacement -R models
- Universal mounting plate easily attaches to the weatherproof plate

Agency Listings

LISTED S4011 S3593 — 7300-1653 195 7300-1653 204 7300-1653 0222 — MEA approved 582-06-E

The **MP120K Mounting Plate** is designed to use 120 VAC to power SpectrAlert Advance horns, strobes, horn strobes, chimes, and chime strobes.

Color Lens Attachments install easily on any indoor or outdoor SpectrAlert Advance strobe devices to provide distinctive visual signaling.

WTP Series Weatherproof Plates enable installers to flush mount outdoor horns, strobes, horn strobes, speakers, and speaker strobes to a variety of wall surfaces, including brick, ceramic tile, concrete, and masonry brick. These NEMA 3R-rated plates come in red and white to suit aesthetic and functional requirements. They may be used indoors or outdoors (with outdoor devices), as required by conditions. They easily attach to the SpectrAlert Advance universal mounting plate.

Trim Rings for speakers and speaker strobes allow for additional space within the backbox. Trim rings for horns, strobes, and horn strobes allow 4-wire devices to mount to a single-gang back box.

SpectrAlert Advance Outdoor Back Boxes ensure a NEMA 4X watertight listing for AV devices. In locations where you have a hard surface to mount to, **Surface Mount Back boxes** are the best solution. If you have an exposed junction box, the **Back Box Skirts** offer an attractive solution to mask the junction box exposure. **Retrofit Plates** cover paint outlines on the wall when replacing legacy SpectrAlert Advance products.

SpectrAlert Advance DECALS are for use on our non-pad printed wall- and ceiling-mount devices. Each decal comes with AGENT, EVAC, ALERT, or FIRE label options. The **Sync•Circuit Module** synchronizes SpectrAlert Advance strobes at 1 Hz and horns and chimes at temporal 3 over a single pair of wires. Patented module technology also allows the silencing of horns or chimes on horn strobe and chime strobe models over a pair of wires. See Datasheet *A05-1007-005* for more information.

Specifications

MP120K

120 VAC mounting plate model MP120K shall be listed to UL 464 for fire protective signaling systems. The mounting plate shall power a two-wire SpectrAlert® Advance horn, strobe, horn strobe, chime or chime strobe from a 120 VAC supply converted to nominal 24 V FWR. For indoor applications, the mounting plate shall be installed in a 4x4x2 1/8 -inch junction box. For outdoor applications, the mounting plate shall be installed using the proper SpectrAlert Advance outdoor weatherproof back box and outdoor listed notification appliance.

Compatibility

MP120K may be used with any of the following products at all horn and strobe settings: P2R, P2RH, P2RK, P2RHK, P2W, P2WH, SR, SRH, SRK, SRHK, SW, SWH, PC2R, PC2RH, PC2RK, PC2RHK, PC2W, PC2WH, SCR, SCRH, SCRK, SCRHK, SCW, SCWH, HR, HRK, HW, SR-P, SW-P, SRH-P, SWH-P, P2R-P, P2W-P, P2RH-P, P2WH-P, SCR-P, SCW-P, SCRH-P, SCWH-P, PC2R-P, PC2W-P, PC2RH-P, PC2WH-P, SR-SP, SRH-SP, P2R-SP, P2RH-SP, SCW-SP, SCWH-SP, PC2W-SP, PC2WH-SP, CHR, CHW, CHSR, CHSW.

Physical/Operating Specifications

Standard Operating Temperature	–40°F to 151°F (–40°C to 66°C)
Humidity Range	10 to 93% non-condensing (indoor products)
Nominal Voltage	Regulated 120 VAC
Operating Voltage Range	96–132 VAC
Current Draw From AC Line	150 mA max.

WTP Weatherproof Plates

The SpectrAlert Advance weatherproof plate for horns, strobes, and horn strobes shall mount to 4x4x1 1/4-inch and 2x4x1 1/2-inch back boxes. The weatherproof plate for speakers and speaker strobes shall mount to 4x4x2 1/8-inch back boxes. The weatherproof plate may be installed on brick, concrete, ceramic tile, and masonry brick and must be used with System Sensor "K" series outdoor replacement models (-R). Outdoor SpectrAlert Advance products shall operate between -40°F and 151°F.

Physical Specifications

Speaker Strobe	7.25" L x 6.26" W x 3.00" D (including speaker and lens)
Speaker	7.25" L x 6.26" W x 1.30" D (including speaker)
Horn Strobe	6.90" L x 5.90" W x 2.80" D (including strobe lens)
Horn	6.90" L x 5.90" W x 1.60" D (including horn)

Note: WTP and WTPW are compatible with 4x4x11/4-inch and 2x4x11/2-inch back boxes. (Compatible with outdoor horns, horn strobes and strobes)
WTP-SP and WTP-SPW are compatible with 4x4x21/8-inch back boxes. (Compatible with outdoor speakers and speaker strobes)

Models Available for Use with the Watertight Plates:

WTP/WTPW	HRK-R
WTP/WTPW	SRK-R, SRHK-R, SWK-R, SWHK-R
WTP/WTPW	P2RK-R, P2RHK-R, P4RK-R, P2WK-R, P2WHK-R
WTP-SP	SPRK-R, SPWK-R
WTP-SPW	SPSRK-R

Note: -R models ship without the outdoor back box. The weatherproof mounting plates are designed to be used only with -R replacement models.

Specifications

Color Lens Attachments

The System Sensor SpectrAlert Advance color lens attachments shall be approved for fire protective service as listed in UL 1638. The lens attachments shall only be used with non-FIRE-printed System Sensor strobe devices. The lens shall mount to any wall- or ceiling-mount strobes and shall be rated from –35°F to 151°F.

Compatibility

Color lens attachments may be used with the following System Sensor plain (non-FIRE-printed) indoor or outdoor strobe models: SR-P, SRH-P, SW-P, SWH-P, P2R-P, P2W-P, P2WH-P, P2RK-P, P2RHK-P, SCW-P, PC2R-P, PC2W-P, PC2WH-P, SPSW-P, SPSR-P, SPSWH-P, SPSRH-P, SPSWV-P, SPSRV-P, SPSCW-P, SPSCWH-P, SPSCWV-P, SPSCWVH-P, SRK-P, SRHK-P, SWK-P, SWHK-P, P2WK-P, P2WHK-P, SPSWK-P, SPSRK-P, SW-CLR-ALERT, SCW-CLR-ALERT, SPSCW-CLRALERT.

Color Lens Installation

Installation to Wall-Mount Strobe

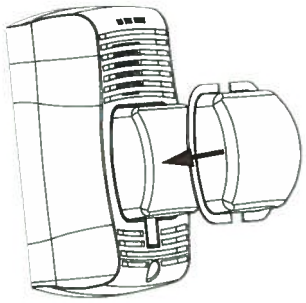

Installation to Ceiling-Mount Strobe

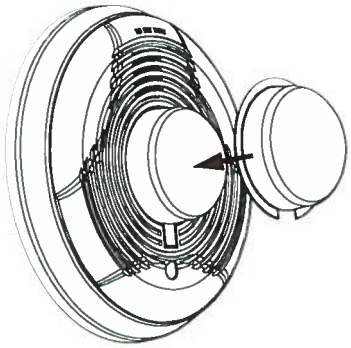

Candela Rating for UL 1638

Light output of color lenses is measured per UL 1638, on axis, and is not derated.

Strobe Output (cd)	
Candela Switch Setting	**On-Axis Candela Rating (UL1638) – All Colors**
15	15
15/75*	NA
30	30
75	75
95	95
110	110
115	115
135	135
150	150
177	177
185	185

*15/75 Candela setting not to be used with color lenses

Ordering Information

Part No.	Description
Metal Weatherproof Backboxes	
MWBBW	white, wall-mount, compatible with: SPWK-R, SPWK, SPSWK-R, SPSWK-P, SPSWK
MWBB	red, wall-mount, compatible with: SPRK-R, SPRK
MWBBCW	white, ceiling-mount, compatible with: SPCWK, SPSCWK,SPCWK-R, SPSCWK, SPSCWK-R, SPSCWHK, SPSCWHK-R
SA-WBBW	white, wall-mount, compatible with: P2WK, P2WHK, P2WHK-P, P2WK-P, SWK, SWK-P,P2WHK-R, P2WK-R, SWHK-R
SA-WBB	red, wall-mount, compatible with: P2RK, P2RK-P, P2RK-R, SRK, SRK-P, SRK-R P2RHK, P4RK, P4RHK, SRHK, HRK, P2RHK-R, P2RK-R, HRK-R, P4RHK-R, P4RK-R, SRHK-R
SA-WBBCW	white, ceiling-mount, compatible with: PC2WK, SCWK
SA-WBBW	white, wall-mount, compatible with: P2WK, P2WHK, P2WHK-P, P2WK-P, SWK, SWK-P,P2WHK-R, P2WK-R, SWHK-R

Ordering Information (continued)

Part No.	Description
Surface Mount Back Box	
SBBR	red, wall-mount, compatible with: HR, CHR, SR, SR-SP, SRH, P2R, P2R-SP, P2RH, P4R, P4RH, CHSR, P2R-P, SR-P, SRH-P
SBBW	white, wall-mount, compatible with:HW, CHW, SW, SWH, P2W, P2WH, P4W, P4W-P, CHSW, P2W-P, P2WH-P, SW-P, SWH-P, SW-ALERT, SWH-ALERT
SBBSPR	red, wall-mount, compatible with: SPR, SPRV, SPSR, SPSRH, SPSRV, SPSR-P, SPSRH-P, SPSRV-P
SBBSPW	white, wall-mount, compatible with: SPW, SPWV, SPSW, SPSWH, SPSWV, SPSW-P, SPSWH-P, SPSWV-P, SPSW-ALERT, SPSW-CLR-ALERT
SBBCR	red, ceiling-mount compatible with: SCR, SCRH, PC2R, PC2RH, PC4R, PC4RH, SPCR, SPCRV, SPSCR, SPSCRH, SPSCRV, SPSCRVH, PC2R-P
SBBCW	white, ceiling-mount, compatible with: SCW, SCWH, PC2W, PC2W-SP, PC2WH, PC4W, SPCW, SPCWV, SPSCW, SPSCWH, SPSCWV, SPSCWVH, PC2W-P, PC2WH-P, SCW-P, SPSCW-P, SPSCWH-P, SPSCWHK-P, SPSCWV-P, SPSCWVH-P, SPSCW-CLR-ALERT, SCW-CLR-ALERT
Back Box Skirts	
BBS-2	red, wall-mount, compatible with: P2R, SR, HR, CHSR, CHR, P2RH, P4R, P4RH, SRH, P2R-P, P2RH-P, P4R-P, P4RH-P, SR-P, SRH-P, SR-SP, SRH-SP, P2R-SP, P2RH-SP
BBS-SP201W	Surface-mount back-box skirt for the PF24V (ExitPoint™ Directional Sounder with Voice Messaging)
SPBBS	red, wall-mount, compatible with: SPR, SPSR, SPRV,SPSR-P,SPSRH,SPSRH-P
Colored Lenses	
LENS-B	Wall-mount, blue
LENS-R	Wall-mount, red
LENS-G	Wall-mount, green
LENS-A	Wall-mount, amber
LENS-BC	Ceiling-mount, blue
LENS-RC	Ceiling-mount, red
LENS-GC	Ceiling-mount, green
LENS-AC	Ceiling-mount, amber

Part No.	Description
Decals	
DECAL-R	red, used for non-pad-printed wall-mount devices. (10 total decals per box for 5 devices)*
DECAL-RC	red, used for non-pad-printed ceiling-mount devices. (15 total decals per box for 5 devices)*
DECAL-W	white, used for non-pad-printed wall-mount devices. (10 total decals per box) for 5 devices*
DECAL-WC	white, used for non-pad-printed ceiling-mount devices. (15 total decals per box for 5 devices)*
*All Decals include Labels: "AGENT, EVAC, ALERT & FIRE"	
Retrofit Plates (For use with horn strobe & speaker strobe devices)	
RFPW	9.5" x 7" white
RFP	9.5" x 7" red
Mounting Plate	
MP120K	120 VAC Adapter Mounting Plate
Sync Modules	
MDL3W	white, 12/24 volt Sync-Circuit module.
MDL3R	red 12/24 volt Sync-Circuit module
Trim Rings	
TR	red, wall-mount for use with speaker devices
TRC	red, ceiling-mount for use with speaker devices
TRC-HS	red, ceiling-mount for use with horn strobe devices
TRCW	white, ceiling-mount for use with speaker devices
TRCW-HS	red, ceiling-mount for use with horn strobe devices
TR-HS	red, wall-mount for use with horn strobes devices
TRW	white, wall-mount for use with speaker devices
TRW-HS	white, wall-mount for use with horn strobe devices
Watertight Plates	
WTPW	white, for use with horn, strobes & horn strobe devices
WTP	red, for use with horn, strobes & horn strobe devices
WTP-SPW	white, for use with speaker devices
WTP-SP	red, for use with speaker devices

SYSTEM SENSOR

3825 Ohio Avenue • St. Charles, IL 60174
Phone: 800-SENSOR2 • Fax: 630-377-6495
www.systemsensor.com

©2013 System Sensor.
Product specifications subject to change without notice. Visit systemsensor.com for current product information, including the latest version of this data sheet.
AVDS00403 • 7/13

EOL-CR, EOL-CW

Universal End-of-Line Device Mounting Plates

NOTIFIER® by Honeywell

Miscellaneous

General

The EOL-CR and EOL-CW Universal End-of-Line Device Mounting Plates are used, when required, to place the end-of-line device at an accessible height. The EOL-CR/-CW consists of a terminal strip mounted on a heavy gauge metallic single-gang faceplate, finished in red or white baked enamel; it fits on a standard single-gang electrical box. The end-of-line device is included with the corresponding module in the central equipment.

Architectural/Engineering Specifications

The End-of-Line Device Mounting Plate shall be model EOL-CR/-CW. It shall consist of a terminal strip, mounted on a single-gang faceplate, made of heavy-gauge metal, finished in red (EOL-CR) or white (EOL-CW), and shall fit on a standard single-gang electrical box.

Agency Listings and Approvals

The listings and approvals below apply to the EOL-CR and EOL-CW Mounting Plates for End-of-Line Devices. In some cases, certain modules or applications may not be listed by certain approval agencies, or listing may be in progress. Consult factory for latest listing status.

- **ULC Listed:** File S7547

Ordering Information

EOL-CR: End-of-line device mounting plate (red). Shipping weight 0.17 kg (6 oz.).

EOL-CW: End-of-line device mounting plate (white). Shipping weight 0.17 kg (6 oz.).



EOL-CR

©2009 by Honeywell International Inc. All rights reserved. Unauthorized use of this document is strictly prohibited.

ISO 9001 CERTIFIED
ENGINEERING & MANUFACTURING QUALITY SYSTEMS

This document is not intended to be used for installation purposes. We try to keep our product information up-to-date and accurate. We cannot cover all specific applications or anticipate all requirements. All specifications are subject to change without notice.

For more information, contact Notifier.
(888) 289-1114
10 Whitmore Road
Woodbridge, Ontario L4L 7Z4
www.notifier.com

FMM-1(A), FMM-101(A), FZM-1(A) & FDM-1(A)

Monitor Modules with FlashScan®

NOTIFIER® by Honeywell

Intelligent/Addressable Devices

General

Four different monitor modules are available for Notifier's intelligent control panels for a variety of applications. Monitor modules supervise a circuit of dry-contact input devices, such as conventional heat detectors and pull stations, or monitor and power a circuit of two-wire smoke detectors (FZM-1(A)).

FMM-1(A) is a standard-sized module (typically mounts to a 4" [10.16 cm] square box) that supervises either a Style D (Class A) or Style B (Class B) circuit of dry-contact input devices.

FMM-101(A) is a miniature monitor module a mere 1.3" (3.302 cm) H x 2.75" (6.985 cm) W x 0.5" (1.270 cm) D that supervises a Style B (Class B) circuit of dry-contact input devices. Its compact design allows the FMM-101(A) to be mounted in a single-gang box behind the device it monitors.

FZM-1(A) is a standard-sized module that monitors and supervises compatible two-wire, 24 volt, smoke detectors on a Style D (Class A) or Style B (Class B) circuit.

FDM-1(A) is a standard-sized dual monitor module that monitors and supervises two independent two-wire Style B (Class B) dry-contact initiating device circuits (IDCs) at two separate, consecutive addresses in intelligent, two-wire systems.

FlashScan® (U.S. Patent 5,539,389) is a communication protocol developed by NOTIFIER that greatly increases the speed of communication between analog intelligent devices. Intelligent devices communicate in a grouped fashion. If one of the devices within the group has new information, the panel CPU stops the group poll and concentrates on single points. The net effect is response speed greater than five times that of other designs.

FMM-1(A) Monitor Module

- Built-in type identification automatically identifies this device as a monitor module to the control panel.
- Powered directly by two-wire SLC loop. No additional power required.
- High noise (EMF/RFI) immunity.
- SEMS screws with clamping plates for ease of wiring.
- Direct-dial entry of address: 01 – 159 on FlashScan loops; 01 – 99 on CLIP loops.
- LED flashes green during normal operation (this is a programmable option) and latches on steady red to indicate alarm.

The FMM-1(A) Monitor Module is intended for use in intelligent, two-wire systems, where the individual address of each module is selected using the built-in rotary switches. It provides either a two-wire or four-wire fault-tolerant Initiating Device Circuit (IDC) for normally-open-contact fire alarm and supervisory devices. The module has a panel-controlled LED indicator. The FMM-1(A) can be used to replace MMX-1(A) modules in existing systems.

FMM-1(A) APPLICATIONS

Use to monitor a zone of four-wire smoke detectors, manual fire alarm pull stations, waterflow devices, or other normally-open dry-contact alarm activation devices. May also be used to monitor normally-open supervisory devices with special supervisory indication at the control panel. Monitored circuit may be wired as an NFPA Style B (Class B) or Style D (Class A) Initiating Device Circuit. A 47K ohm End-of-Line Resistor (provided) terminates the Style B circuit. No resistor is required for supervision of the Style D circuit.

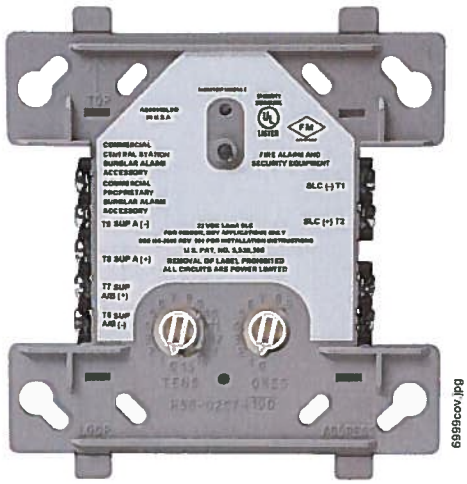

FMM-1(A) (Type H)

FMM-1(A) OPERATION

Each FMM-1(A) uses one of the available module addresses on an SLC loop. It responds to regular polls from the control panel and reports its type and the status (open/normal/short) of its Initiating Device Circuit (IDC). A flashing LED indicates that the module is in communication with the control panel. The LED latches steady on alarm (subject to current limitations on the loop).

FMM-1(A) SPECIFICATIONS

Nominal operating voltage: 15 to 32 VDC.

Maximum current draw: 5.0 mA (LED on).

Average operating current: 350 µA (LED flashing), 1 communication every 5 seconds, 47k EOL.

Maximum IDC wiring resistance: 40 ohms.

EOL resistance: 47K ohms.

Temperature range: 32°F to 120°F (0°C to 49°C).

Humidity range: 10% to 93% noncondensing.

Dimensions: 4.5" (11.43 cm) high x 4" (10.16 cm) wide x 1.25" (3.175 cm) deep. Mounts to a 4" (10.16 cm) square x 2.125" (5.398 cm) deep box.

FMM-101(A) Mini Monitor Module

- Built-in type identification automatically identifies this device as a monitor module to the panel.
- Powered directly by two-wire SLC loop. No additional power required.
- High noise (EMF/RFI) immunity.
- Tinned, stripped leads for ease of wiring.
- Direct-dial entry of address: 01 – 159 on FlashScan loops; 01 – 99 on CLIP loops.

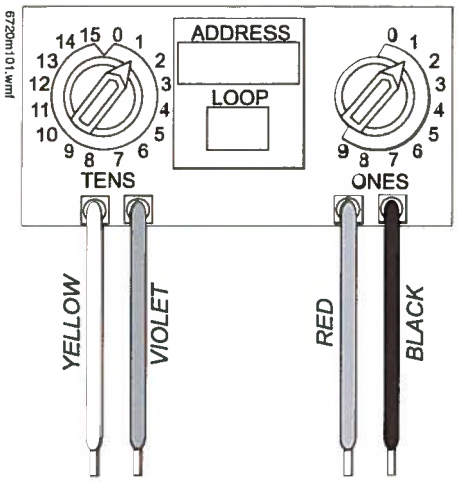

The FMM-101(A) Mini Monitor Module can be installed in a single-gang junction directly behind the monitored unit. Its small size and light weight allow it to be installed without rigid mounting. The FMM-101(A) is intended for use in intelligent, two-wire systems where the individual address of each module is selected using rotary switches. It provides a two-wire initiating device circuit for normally-open-contact fire alarm and security devices. The FMM-101(A) can be used to replace MMX-101(A) modules in existing systems.

FMM-101(A) APPLICATIONS

Use to monitor a single device or a zone of four-wire smoke detectors, manual fire alarm pull stations, waterflow devices, or other normally-open dry-contact devices. May also be used to monitor normally-open supervisory devices with special supervisory indication at the control panel. Monitored circuit/device is wired as an NFPA Style B (Class B) Initiating Device Circuit. A 47K ohm End-of-Line Resistor (provided) terminates the circuit.

FMM-101(A) OPERATION

Each FMM-101(A) uses one of the available module addresses on an SLC loop. It responds to regular polls from the control panel and reports its type and the status (open/normal/short) of its Initiating Device Circuit (IDC).

FMM-101(A) SPECIFICATIONS

Nominal operating voltage: 15 to 32 VDC.

Average operating current: 350 µA, 1 communication every 5 seconds, 47k EOL; 600 µA Max. (Communicating, IDC Shorted).

Maximum IDC wiring resistance: 40 ohms.

Maximum IDC Voltage: 11 Volts.

Maximum IDC Current: 400 µA.

EOL resistance: 47K ohms.

Temperature range: 32°F to 120°F (0°C to 49°C).

Humidity range: 10% to 93% noncondensing.

Dimensions: 1.3" (3.302 cm) high x 2.75" (6.985 cm) wide x 0.65" (1.651 cm) deep.

Wire length: 6" (15.24 cm) minimum.

FZM-1(A) Interface Module

- Supports compatible two-wire smoke detectors.
- Supervises IDC wiring and connection of external power source.
- High noise (EMF/RFI) immunity.
- SEMS screws with clamping plates for ease of wiring.
- Direct-dial entry of address: 01 – 159 on FlashScan loops, 01 – 99 on CLIP loops.
- LED flashes during normal operation; this is a programmable option.
- LED latches steady to indicate alarm on command from control panel.

The FZM-1(A) Interface Module is intended for use in intelligent, addressable systems, where the individual address of each module is selected using built-in rotary switches. This module allows intelligent panels to interface and monitor two-wire conventional smoke detectors. It transmits the status (normal, open, or alarm) of one full zone of conventional detectors back to the control panel. All two-wire detectors being monitored must be UL compatible with the module. The FZM-1(A) can be used to replace MMX-2(A) modules in existing systems.

FZM-1(A) APPLICATIONS

Use the FZM-1(A) to monitor a zone of two-wire smoke detectors. The monitored circuit may be wired as an NFPA Style B (Class B) or Style D (Class A) Initiating Device Circuit. A 3.9 K ohm End-of-Line Resistor (provided) terminates the end of the Style B or D (class B or A) circuit (maximum IDC loop resistance is 25 ohms). Install ELR across terminals 8 and 9 for Style D application.

FZM-1(A) OPERATION

Each FZM-1(A) uses one of the available module addresses on an SLC loop. It responds to regular polls from the control panel and reports its type and the status (open/normal/short) of its Initiating Device Circuit (IDC). A flashing LED indicates that the module is in communication with the control panel. The LED latches steady on alarm (subject to current limitations on the loop).

FZM-1(A) SPECIFICATIONS

Nominal operating voltage: 15 to 32 VDC.

Maximum current draw: 5.1 mA (LED on).

Maximum IDC wiring resistance: 25 ohms.

Average operating current: 300 µA, 1 communication and 1 LED flash every 5 seconds, 3.9k eol.

EOL resistance: 3.9K ohms.

External supply voltage (between Terminals T3 and T4): DC voltage: 24 volts power limited. Ripple voltage: 0.1 Vrms maximum. Current: 90 mA per module maximum.

Temperature range: 32°F to 120°F (0°C to 49°C).

Humidity range: 10% to 93% noncondensing.

Dimensions: 4.5" (11.43 cm) high x 4" (10.16 cm) wide x 1.25" (3.175 cm) deep. Mounts to a 4" (10.16 cm) square x 2.125" (5.398 cm) deep box.

FDM1(A) Dual Monitor Module

The FDM-1(A) Dual Monitor Module is intended for use in intelligent, two-wire systems. It provides two independent two-wire initiating device circuits (IDCs) at two separate, consecutive addresses. It is capable of monitoring normally open contact fire alarm and supervisory devices; or either normally open or normally closed security devices. The module has a single panel-controlled LED.

***NOTE:** The FDM-1(A) provides two Style B (Class B) IDC circuits ONLY. Style D (Class A) IDC circuits are NOT supported in any application.*

FDM-1(A) SPECIFICATIONS

Normal operating voltage range: 15 to 32 VDC.

Maximum current draw: 6.4 mA (LED on).

Average operating current: 750 µA (LED flashing).

Maximum IDC wiring resistance: 1,500 ohms.

Maximum IDC Voltage: 11 Volts.

Maximum IDC Current: 240 µA

EOL resistance: 47K ohms.

Maximum SLC Wiring resistance: 40 Ohms.

Temperature range: 32° to 120°F (0° to 49°C).

Humidity range: 10% to 93% (non-condensing).

Dimensions: 4.5" (11.43 cm) high x 4" (10.16 cm) wide x 2.125" (5.398 cm) deep.

FDM-1(A) AUTOMATIC ADDRESSING

The FDM-1(A) automatically assigns itself to two addressable points, starting with the original address. For example, if the FDM-1(A) is set to address "26", then it will automatically assign itself to addresses "26" and "27".

***NOTE:** "Ones" addresses on the FDM-1(A) are 0, 2, 4, 6, or 8 only. Terminals 6 and 7 use the first address, and terminals 8 and 9 use the second address.*

CAUTION:
Avoid duplicating addresses on the system.

Installation

FMM-1(A), FZM-1(A), and FDM-1(A) modules mount directly to a standard 4" (10.16 cm) square, 2.125" (5.398 cm) deep, electrical box. They may also be mounted to the SMB500 surface-mount box. Mounting hardware and installation instructions are provided with each module. All wiring must conform to applicable local codes, ordinances, and regulations. These modules are intended for power-limited wiring only.

The FMM-101(A) module is intended to be wired and mounted without rigid connections inside a standard electrical box. All wiring must conform to applicable local codes, ordinances, and regulations.

Agency Listings and Approvals

In some cases, certain modules may not be listed by certain approval agencies, or listing may be in process. Consult factory for latest listing status.

- **UL:** S635
- **ULC:** S635
- **FM Approved**
- **CSFM:** 7300-0028:0219
- **MEA:** 457-99-E
- **U.S. Coast Guard:**
  - 161.002/23/3 *(AFP-200: FMM-1/-101, FZM-1)*
  - 161.002/42/1 *(NFS-640: FMM-1/-101)*
- **Lloyd's Register:**
  - 03/60011/E1 *(FMM-1/-101, FZM-1)*
  - 94/60004/E2 *(AFP-200: except FDM-1)*
  - 02/60007 *(NFS-640: FDM-1)*
- **FDNY:** COA #6038 (NFS2-640, NFS-320), COA# 6058 (NFS2-3030)

Product Line Information

***NOTE:** "A" suffix indicates ULC-listed model.*

FMM-1(A): Monitor module.

FMM-101(A): Monitor module, miniature.

FZM-1(A): Monitor module, two-wire detectors.

FDM-1(A): Monitor module, dual, two independent Class B circuits.

SMB500: Optional surface-mount backbox.

***NOTE:** See installation instructions and refer to the SLC Wiring Manual, PN 51253.*

FlashScan® and NOTIFIER® are registered trademarks and FireWatch™ is a trademark of Honeywell International Inc.
©2010 by Honeywell International Inc. All rights reserved. Unauthorized use of this document is strictly prohibited.

ISO 9001 CERTIFIED
ENGINEERING & MANUFACTURING
QUALITY SYSTEMS

This document is not intended to be used for installation purposes.
We try to keep our product information up-to-date and accurate.
We cannot cover all specific applications or anticipate all requirements.
All specifications are subject to change without notice.

Made in the U.S. A.

For more information, contact Notifier. Phone: (203) 484-7161, FAX: (203) 484-7118.
www.notifier.com

NBG-12 Series

Non-Coded Conventional Manual Fire Alarm Pull Stations

NOTIFIER® by Honeywell

Conventional Initiating Devices

General

The NOTIFIER **NBG-12 Series** is a cost-effective, feature-packed series of non-coded manual fire alarm pull stations. It was designed to meet multiple applications with the installer and end-user in mind. The NBG-12 Series features a variety of models including single- and dual-action versions.

The NBG-12 Series provides an alarm initiating input signal to conventional fire alarm control panels (FACPs) such as the SFP Series, and to XP Transponders. Its innovative design, durable construction, and multiple mounting options make the NBG-12 Series simple to install, maintain, and operate.

Features

- Aesthetically pleasing, highly visible design and color.
- Attractive contoured shape and light textured finish.
- Meets ADA 5 lb. maximum pull-force.
- Meets UL 38, Standard for Manually Actuated Signaling Boxes.
- Easily operated (single- or dual-action, model dependent), yet designed to prevent false alarms when bumped, shaken, or jarred.
- PUSH IN/PULL DOWN handle latches in the down position to clearly indicate the station has been operated.
- The word "ACTIVATED" appears on top of the handle in bright yellow, further indicating operation of the station.
- Operation handle features white arrows showing basic operation direction for non-English-speaking persons.
- Braille text included on finger-hold area of operation handle and across top of handle.
- Multiple hex- and key-lock models available.
- U.S. patented hex-lock needs only a quarter-turn to lock/unlock.
- Station can be opened for inspection and maintenance without initiating an alarm.
- Product ID label viewable by simply opening the cover; label is made of a durable long-life material.
- The words "NORMAL" and "ACTIVATED" are molded into the plastic adjacent to the alarm switch (located inside).
- Four-position terminal strip molded into backplate.
- Terminal strip includes Phillips combination-head captive 8/32 screws for easy connection to Initiating Device Circuit (IDC).
- Terminal screws backed-out at factory and shipped ready to accept field wiring (up to 12 AWG/3.1 mm²).
- Terminal numbers are molded into the backplate, eliminating the need for labels.
- Switch contacts are normally open.
- Can be surface-mounted (with **SB-10** or **SB-I/O**) or semi-flush mounted. Semi-flush mount to a standard single-gang, double-gang, or 4" (10.16 cm) square electrical box.
- Backplate is large enough to overlap a single-gang backbox cutout by 1/2" (1.27 cm).
- Optional trim ring (**BG12TR**).
- Spanish versions *(FUEGO)* available (**NBG-12LSP, NBG-12LPSP**).
- Designed to replace the legacy **NBG-10** Series.
- Models packaged in attractive, clear plastic (PVC), clam-shell-style, Point-of-Purchase packages. Packaging includes a cutaway dust/paint cover in shape of pull station.



6643cov.jpg

Construction

- Cover, backplate and operation handle are all molded of durable polycarbonate material.
- Cover features white lettering and trim.
- Red color matches System Sensor's popular SpectrAlert® Advance horn/strobe series.

Operation

The NBG-12 manual pull stations provide a textured finger-hold area that includes Braille text. In addition to PUSH IN and PULL DOWN text, there are arrows indicating how to operate the station, provided for non-English-speaking people.

Pushing in and then pulling down on the handle activates the normally-open alarm switch. Once latched in the down position, the word "ACTIVATED" appears at the top in bright yellow, with a portion of the handle protruding at the bottom as a visible flag. Resetting the station is simple: insert the key or hex (model dependent), twist one quarter-turn, then open the station's front cover, causing the spring-loaded operation handle to return to its original position. The alarm switch can then be reset to its normal (non-alarm) position manually (by hand) or by closing the station's front cover, which automatically resets the switch.

Specifications

PHYSICAL SPECIFICATIONS:

pull station		SB-10	SB-I/O	WBB	WP-10
H	5.500 in. (13.97 cm)	5.500 in. (13.97 cm)	5.601 in. (14.23 cm)	4.25 in. (10.79 cm)	6.000 in. (15.24 cm)
W	4.121 in. (10.467 cm)	4.125 in. (10.478 cm)	4.222 in. (10.72 cm)	4.25 in. (10.79 cm)	4.690 in. (11.913 cm)
D	1.390 in. (3.531 cm)	1.375 in. (3.493 cm)	1.439 in. (3.66 cm)	1.75 in. (4.445 cm)	2.000 in. (5.08 cm)

6643dim2.tbl

ELECTRICAL SPECIFICATIONS:

Switch contact ratings: gold-plated; rating 0.25 A @ 30 VAC or VDC. **Auxiliary contact circuit** (Terminals 3 & 4, NBG-12LA): rated to 3.0 A @ 30 VAC or VDC.

ENGINEERING/ARCHITECTURAL SPECIFICATIONS

Manual Fire Alarm Stations shall be non-code, with a key- or hex-operated reset lock in order that they may be tested, and so designed that after actual Emergency Operation, they cannot be restored to normal except by use of a key or hex. An operated station shall automatically condition itself so as to be visually detected as activated. Manual stations shall be constructed of red colored LEXAN (or polycarbonate equivalent) with clearly visible operating instructions provided on the cover. The word **FIRE** shall appear on the front of the stations in white letters, 1.00 inches (2.54 cm) or larger.* Stations shall be suitable for surface mounting on matching backbox SB-10 or SB-I/O; or semi-flush mounting on a standard single-gang, double-gang, or 4" (10.16 cm) square electrical box, and shall be installed within the limits defined by the Americans with Disabilities Act (ADA) or per national/local requirements. Manual Stations shall be Underwriters Laboratories listed.

*NOTE: *The words "FIRE/FUEGO" on the NBG-12LSP and NBG-12LPSP shall appear on the front of the station in white letters, approximately 3/4" (1.905 cm) high.*

Pre-Signal Models

The **NBG-12LPS** and **NBG-12LPSP** pull stations are non-coded manual pull stations which provide a FACP with two normally open alarm initiating input signals. "Pre-signal" input is activated by pushing in, then pulling down, the dual-action handle. A "general" alarm input signal can be manually activated via a momentary rocker switch mounted inside the unit. This general alarm switch can only be accessed by opening the cover with the supplied key/lock. *See diagram at right.*

Agency Listings and Approvals

The listings and approvals below apply to the NBG-12 Series pull stations. In some cases, certain modules may not be listed by certain approval agencies, or listing may be in process. Consult factory for latest listing status.

- **C(UL)US** Listed: file S692.
- **CSFM** approved: file 7150-0028:199.
- **FM** approved *(except NBG-12LPS, NBG-12LPSP).*
- **MEA** approved: file 67-02-E *(NBG-12, NBG-12L, NBG-12LOB, NBG-12LA).*
- **Lloyd's Register** type approved: file 93/60141 (E3) *(NBG-12, NBG-12L, NBG-12LA, NBG-12LOB, NBG-12S).*
- **U.S. Coast Guard** approved: files 161.002/23/3 *(AFP-200 with NBG-12, NBG-12L, NBG-12S)*; 161.002/42/1 *(NFS-640 with NBG-12, NBG-12L, NBG-12S)*; 161.002/27/3 *(AFP1010/AM2020 with NBG-12, NBG-12L, NBG-12S).*
- **Patented:** U.S. Patent No. D428,351; 6,380,846; 6,314,772; 6,632,108.

Product Line Information

NBG-12S: Single-action pull station with pigtail connections, hex lock.

NBG-12: Dual-action pull station with SPST N/O switch, screw terminal connections, ***hex lock***.

NBG-12L: Dual-action pull station with SPST N/O switch, screw terminal connections, ***key lock***.

NBG-12LSP: Same as NBG-12L with English/Spanish *(FIRE/FUEGO)* labeling.

NBG-12LPS: Dual-action pull station with pre-signal option.

NBG-12LPSP: Same as NBG-12LPS with English/Spanish *(FIRE/FUEGO)* labeling.

NBG-12LOB: Dual-action pull station with key lock, outdoor applications listings (**NBG-12LO**), and backbox. Includes **SB-I/O** indoor/outdoor backbox, and sealing gasket. Model will also mount to **WP-10** weatherproof backbox in retrofit applications.

***NOTE:** NBG-12LO not available separately;*
NBG-12LO + approved backbox = NBG-12LOB.
Outdoor applications listings apply to NBG-12LOB combination.

NBG-12LA: Dual-action pull station with key lock and annunciator contacts.

SB-10: Surface-mount backbox, metal.

SB-I/O: Surface-mount backbox, plastic. *(Included with NBG-12LOB.)*

BG12TR: Optional trim ring for semi-flush mounting.

WP-10: Outdoor use backbox.

17021: Keys, set of two. (Included with key-lock pull stations.)

17007: Hex key, 9/64". (Included with hex-lock pull stations.)

***NOTE:** For addressable NBG-12LX models, see data sheet DN-6726.*

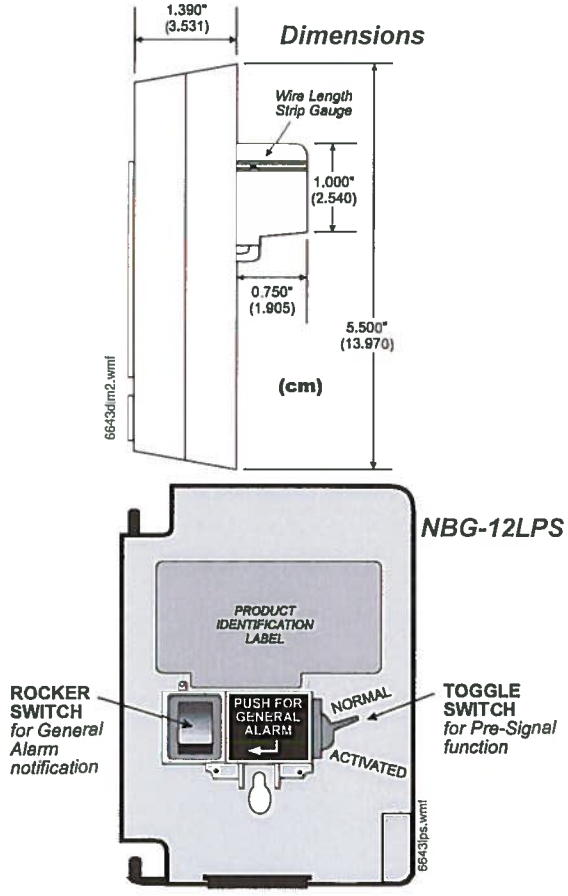

NOTIFIER®, **SpectrAlert® Advance**, and **System Sensor®** are registered trademarks of Honeywell International Inc.
©2008 by Honeywell International Inc. All rights reserved. Unauthorized use of this document is strictly prohibited.

ISO 9001 CERTIFIED
ENGINEERING & MANUFACTURING
QUALITY SYSTEMS

This document is not intended to be used for installation purposes.
We try to keep our product information up-to-date and accurate.
We cannot cover all specific applications or anticipate all requirements.
All specifications are subject to change without notice.

Made in the U.S. A.

For more information, contact Notifier. Phone: (203) 484-7161, FAX: (203) 484-7118.
www.notifier.com

polycarbonate products

STI Universal Stopper®





Shown with waterproof back box



Indoor/Outdoor

ADA Compliant
See Reverse For Details

PRODUCT OVERVIEW

These indoor/outdoor low profile or dome polycarbonate covers protect devices such as dual action pull stations, keypads for entry systems, intercom stations, emergency buttons, electrical light switches, duplex plugs, etc., without restricting legitimate operation. The versatile cover offers excellent protection against physical damage (both accidental and intentional), dust and grime as well as severe environments inside and out.

Cover options: Dome or Low Profile, with or without horn, flush mount, surface mount or waterproof back box models. Maximum protrusion is 4 inches deep. Cover has the same footprint as the Mini Stopper® but accommodates most dual action pull stations.

FEATURES

- Protects against vandalism, accidental damage, dust and grime and severe environments inside and outside.
- Protects pull stations, keypads, intercom stations, emergency buttons, electrical light switches or duplex plugs.
- Cover is molded from thick, tough polycarbonate material.
- Cover available in low profile or dome shape.
- Flush frame, surface frame or waterproof back box (with sealed or open internal mounting plate), enclosed flush back box.
- Top and bottom of waterproof back box are threaded for 3/4" NPT rigid conduit.
- Sized to fit most pull stations.
- High strength continuous hinge.
- Dome models have optional relay output with 12-24 VDC power input.
- Gaskets included.
- ADA Compliant.
- Locking tab (not for use with fire pull stations).
- Dome models available with or without 105 dB horn.
- Dome models available with red, green, blue, yellow, white or black label hood/horn housing with custom or no label.
- Available for red units "In Case of Fire..." label.
- UV-stabilized to keep cover clear.
- Typical working properties of polycarbonate are -40° to 250°F (-40° to 121°C).
- No charge for custom label. (See reverse for details.)
- Three year guarantee against breakage of polycarbonate in normal use (one year on electro mechanical and electronic components).

STI Universal Stopper®

Dimensions and Technical Information

BUILD YOUR MODEL

STI-1 _ _ _ _ _

Cover Options

3 = Dome Cover
4 = Low Profile Cover*

*Only available with Hood/Horn option "0"

Mounting Options

0 = Flush Mount
2 = Surface Mount
3 = Enclosed Flush Back Box
4 = Enclosed Back Box & Sealed Mounting Plate**
5 = Enclosed Back Box & Opened Mounting Plate**
8 = Enclosed Back Box & European Sealed Mounting Plate**
9 = Enclosed Back Box & European Open Mounting Plate**

**all colors except NC

Hood/Horn

0 = No Label Hood (Label must start with 'N.' If Hood/Horn Option = 0 and Mounting Option = 0 or 3, the label must be NC)
1 = Label Hood without Horn**
2 = Label Hood with Horn**
3 = Label Hood with Horn & Relay**

**all colors except NC

Special Electronics

0 = None
1 = Heat (available with Mounting Options 4, 5, 8 & 9)**

**Coming soon

Housing/Horn Color & Label

Fire label	Free Custom label*
FR = Red – Fire label	CK = Black*
No label	CB = Blue*
NK = Black	CG = Green*
NB = Blue	CR = Red*
NC = Clear	CW = White*
NG = Green	CY = Yellow*
NR = Red	*must provide custom label wording (2 lines, 20 characters per line including spaces)
NW = White	
NY = Yellow	

COVER OPTIONS - SIDE VIEW



Dome



Low Profile

MOUNTING OPTIONS



FLUSH



SURFACE



BACK BOX
Enclosed Flush



BACK BOX
With Sealed Mounting Plate



BACK BOX
With Opened Mounting Plate



BACK BOX
With European Sealed Mounting Plate



BACK BOX
With European Opened Mounting Plate

APPROVAL & WARRANTY

TESTING

· ADA Compliant

Cover option '3' only has been tested and approved or listed by:

· UL/cUL Listed No. S2466 (Type rating pending). Excludes mounting options 8 and 9.

Flush, Surface or Back Box with opened Mounting Plate
· IP Rating 56

Back Box with sealed Mounting Plate
· IP Rating 66

WARRANTY

Three year guarantee against breakage of polycarbonate in normal use (one year on electro mechanical and electronic components).

IMPORTANT NOTICE

When used on fire systems, Universal Stopper is intended for areas where the incidence of false fire alarms from manual pull stations is high or has proven to be a serious problem. Any disadvantage of the device is more than balanced when one considers the consequences of false fire alarms, especially if fire service personnel and equipment are responding to a false fire alarm when they are needed for a real fire somewhere else. Add to this the disruption to the facility when false alarms occur. If you have, or may have, a problem with false fire alarms or physical/weather damage to your fire alarm activation devices, the Universal Stopper could prove invaluable.

STI Safety Technology International, Inc.

2306 Airport Road
Waterford, Michigan
48327, USA

Tel: 248-673-9898
Fax: 248-673-1246
Toll-free: 800-888-4784
info@sti-usa.com
www.sti-usa.com

Unit 49G Pipers Road
Park Farm Industrial Estate
Redditch, Worcestershire
B98 0HU England

Tel: 44 (0) 1527 520 999
Fax: 44 (0) 1527 501 999
Free: 0800 085 1678 (UK)
www.sti-europe.com

Printed in U.S.A., © 2009 Safety Technology International, Inc.

Subject to change without notice.

Fire Detection Devices
CR/CF-MP Series
Moisture-Proof Heat Detectors



Features

- Dual Action Rate of Rise & Fixed Temperature
- Detects Rate of Ambient temperature rise of 8°C (15°F)
- Detectors operating on fixed temperatures are only available in two settings of 135°F (57°C) or 200°F (93°C)
- Clear-anodized aluminium finish

Description

The CR and CF-MP Series Moisture Proof Detectors are designed for hazardous locations and Moisture Proof applications. Each Moisture Proof detector is available in single or multiple circuits with open and/or closed contact configurations, and any of the fixed temperature settings including 135, 165, 200 and 285 degrees Farenheit.

The Moisture Proof detector is characterized by a black phenol-plastic seal plate and black and white pigtail connections. It is specified for use in high humidity environments and areas that are subject to corrosive elements or spray washing. The suffix "MP" denotes "Moisture Proof".

CR-135MP

The Model CR-135MP is a combination Rate-of-Rise and Fixed Temperature detector. A set of normally open contacts will close when the ceiling temperature increases at a (minimum) rate of 8.4°C (15°F) per minute. Closing the contacts initiates the fire alarm sequence. Independent of the rate-of-rise operation, the fixed temperature portion consists of a spring-loaded plunger retained by a fusible alloy that releases when the ceiling temperature reaches 135°F (57°C). When released, the plunger strikes the contacts and holds them closed. Spacing on an uninterrupted ceiling is 70 ft. (21.3m) for the rate-of-rise; 40 ft. (12.2m) for the fixed temperature portion.

CF-135MP

The Model CF-135MP is a Fixed Temperature Only detector. The fixed temperature portion consists of a spring-loaded plunger retained by a fusible alloy that releases when the ceiling temperature reaches 135°F (57°C). When released, the plunger strikes a normally open set of contacts and holds them closed. Spacing on an uninterrupted ceiling is 40 ft. (21.3m). The CF-135MP is identified by a black dot on its heat collector fin.

CR-200MP

The Model CR-200MP is a combination Rate-of-Rise and Fixed Temperature detector that operates in the same way as the CR-135MP, with the exception that the fixed temperature portion releases when the ceiling temperature reaches 200°F (93°C). Spacing on an uninterrupted ceiling is 70 ft. (21.3) for the rate-of-rise, and 25 ft.(7.6m) for the fixed temperature portion (a reduced spacing parameter from the CF-135MP). The CR-200MP is identified by a white dot on its heat collector fin.

CF-200MP

The Model CF-200MP is a Fixed Temperature Only detector. The fixed temperature portion releases when the ceiling temperature reaches 200°F (93°C). Spacing is 25 ft., (7.6m). The CF-200MP is identified by a black dot and a white dot on the heat collector fin.

Canada 25 Interchange Way, Vaughan (Toronto), Ontario L4K 5W3 Telephone: (905) 695-3549 Fax: (905) 660-4113 • **Web Page:** www.summit-st.net
U.S.A. 4575 Witmer Industrial Estates, Niagara Falls, NY 14305 Telephone: (866) 786-6480 Fax: (888) 660-4113 • **E-mail:** mail@summit-st.net
Catalog Number 400 • Not to be used for installation purposes.

Contact Configurations

Any Detector in the Moisture Proof Series is available in Normally Open (by far the most common) or Normally Closed, or Multiple Circuit configurations. The Model Number does not reflect the Normally Open configuration, however the letter "C" denotes Normally Closed. For example: "CR 135 C MP" describes a rate-of-rise / fixed temperature detector, fusing at 135°F., with Normally Closed contacts, assembled with the moisture proof seal plate.

Engineering Specifications

The CR & CF Series Moisture Proof detectors shall be installed in areas where corrosive elements exist or washing of walls and ceiling surfaces is commonplace. The fixed temperature portion and the rate-of-rise operation shall be determined by the ambient temperature. The Moisture Proof detectors shall be installed in areas where environmental conditions including dust, vapours, insects, etc., would cause an ionization or photoelectric type detector to initiate a false alarm.

Specifications

Contact Rating
3A @ 125 VAC 1A @ 28 VDC 0.3A @ 125 VDC 0.1A @ 250 VDC

Dimensions	
Diameter	5.25" (13.4 cm)
Height	2.0" (4.85 cm)
Weight	
0.41 lb. (330 gm)	

Ordering Information

Model Number	Description
CR-135MP	Rate of Rise & Fixed Temperature to 135°F (57°C) Moisture Proof Heat Detector
CR-200MP	Rate of Rise & Fixed Temperature to 200°F (93°C) Moisture Proof Heat Detector
CF-135MP	Fixed Temperature 135°F (57°C) Moisture Proof Heat Detector
CF-200MP	Fixed Temperature 200°F (93°C) Moisture Proof Heat Detector

Summit reserves the right to make changes at any time without notice in prices, colors, materials, components, equipment, specifications and models and also to discontinue models.
ISO 9001:2000 REGISTERED

AGNICO EAGLE

Vendor Document Status

1 ☐ Proceed to next submission and status.

2 ☐ Proceed with exceptions as noted to next submission and status.

3 ☐ Do not proceed.
Revise as noted and resubmit next submission and status.

4 ☑ Complete, no further submission required.

By: Joël Morliere Date: 2017-06-12

Review and authorization to fabricate are only for general conformance with the design concept of the Project as expressed in the Contract Documents. Sole responsibility for the accuracy and completeness of this document, including but not limited to dimensions and quantities, remains with the Supplier/Contractor. Agnico Eagle does not warrant the accuracy or completeness of any of the information contained herein, nor does Agnico Eagle authorize or approve any construction means, methods, techniques, sequences or any safety precautions or procedures.

Agnico Eagle No. 6515-C-270-007-265-SPD-0001 R: Sub001

DOCUMENT FOR INFORMATION

WSP

SHOP DRAWING
DATA SHEET

Affixing this stamp confirms that an administrative approval and/or a verification of compliance with shop drawings or specifications was made, but does not entail the liability of the author of the work or its owner with regards to this shop drawing or data sheet, for which the contractor is the sole responsible.

☑ Reviewed ☐ Reviewed as noted

☐ Rejected ☐ Filed for records

The contractor, supplier and/or sub-contractor is responsible for: comfirming and coordinating all quantities and dimensions; selecting fabrication processes and techniques of construction; coordinating his or her work with that of all other trades and performing all work in a safe and satisfactory manner.

By: J. Morliere Date: 2017/06/12

Project # 151-06440-40

Tracé par: "BOURJ26", 2017-05-05 14:46:09 (Lts: 0.25 ; Mes: 1)
P:\300-RN\643812\0000\4-Ingenierie\D-Dessins maitres\43-ST\643812-0000-43DD-0001-0.dwg
Format: Lettre/Légal Ver.: 4.2 2016-01-26

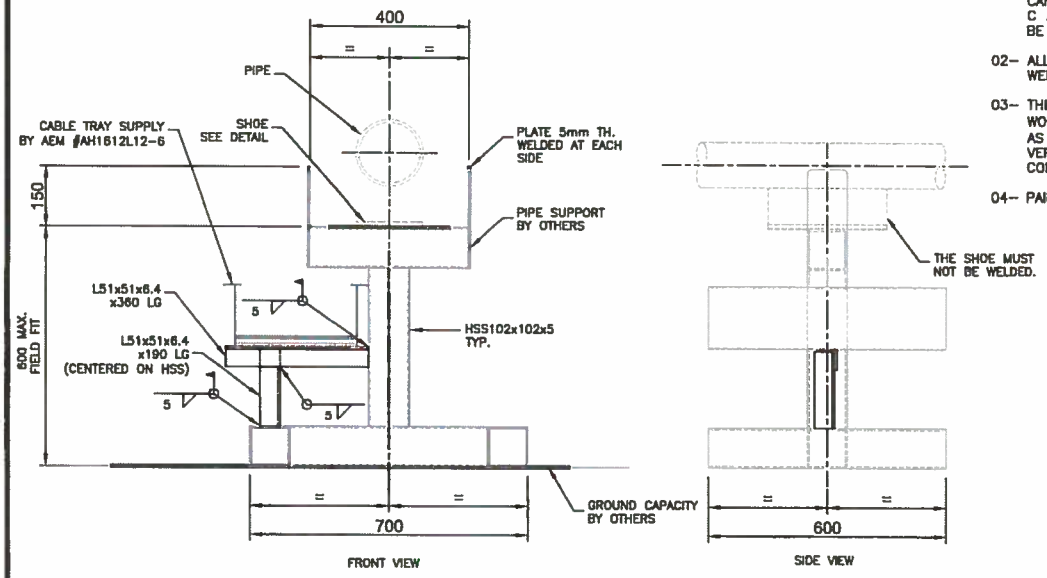

CABLE TRAY SUPPORT 1

ÉCHELLE : 1 : 15

GENERAL NOTES

01– STRUCTURAL STEEL MUST RESPECT CRITERIA LISTED IN CAN/CSA–G40.20 AND CAN/CSA–G40.21, GRADE 350 W WITH EXCEPTION OF C AND L PROFILES WHICH ARE TOBE OF GRADE 300 W. HSS PROFILES TO BE OF ASTM 500 TYPE C GRADE 345 W.

02– ALL STRUCTURAL MEMBERS MUST BE CLEANED BY GRINDING PRIOR TO ALL WELDING WORKS.

03– THE CONTRACTOR OR SUB–CONTRACTOR MUST PROCEED WITH ALL WELDING WORKS IN ACCORDANCE WITH W59–03(R2008). HE MUST ALSO BE CERTIFIED AS PER W47.1–09(R2014). THE ENGINEER/OWNER RESERVES THE RIGHT TO VERIFY THESE CERTIFICATIONS BEFORE AS WELL AS AFTER THE PROJECT COMMENCEMENT.

04– PAINT BY OTHERS

REGISTERED PROFESSIONAL ENGINEERS
M.Y DIALLO
LICENSEE
NT/NU
2017-05-05

POUR CONSTRUCTION
FOR CONSTRUCTION
SNC·LAVALIN
2017-05-05

REV.	DATE	ISSUES	BY	CHK	APP.
0	2017-05-05	ISSUED FOR CONSTRUCTION	M.LAN	M.DIA	B.CHA
A	2017-05-04	ISSUED FOR APPROVAL	M.LAN	M.DIA	B.CHA

SNC·LAVALIN
SNC-Lavalin Stavibel Inc.
150, rue Gamble Ouest
Rouyn-Noranda (Québec) J9X 2R7
Tel. : 819 764-5161 Fax : 819 797-0158
www.snclavalin.com

Client / Project :	AGNICO EAGLE - MELIADINE DIVISION
Title :	103 - COMBUSTIBLES SUPPORT SECTION

Drawn by : Michel Lanthier, tech.	Verified by : Mohamed Diallo, ing.	Project manager : Dany Lambert, ing.	Project # : 643812-0000	
Designed by : Mohamed Diallo, ing.	Approved by : Mohamed Diallo, ing.	Org. Date : 2017-05-04	Reference : -	Scale : INDICATED
				Drawing # : 643812-0000-43DD-0001
				Rev. : 0

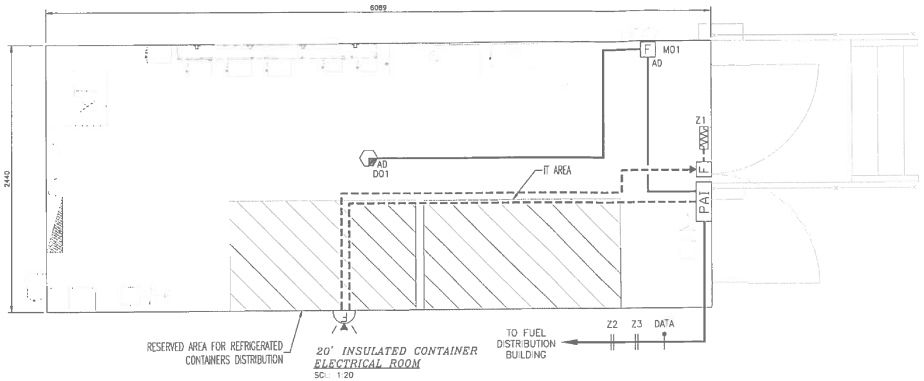

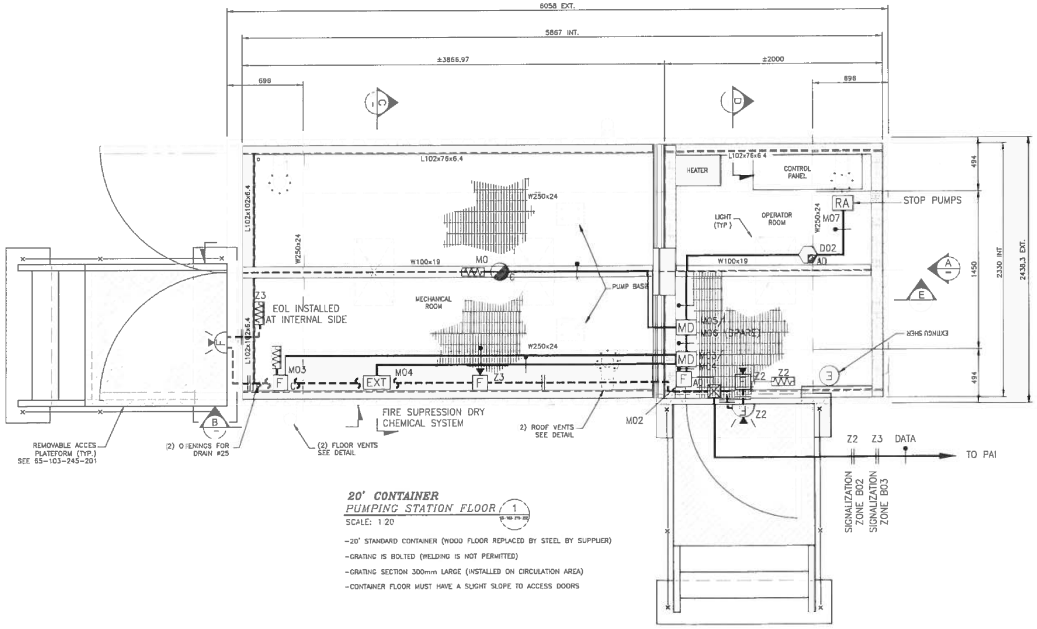

20' CONTAINER
PUMPING STATION FLOOR / 1
SCALE: 1:20

- 20' STANDARD CONTAINER (WOOD FLOOR REPLACED BY STEEL BY SUPPLIER)
- GRATING IS BOLTED (WELDING IS NOT PERMITTED)
- GRATING SECTION 300mm LARGE (INSTALLED ON CIRCULATION AREA)
- CONTAINER FLOOR MUST HAVE A SLIGHT SLOPE TO ACCESS DOORS

IMPORTANT !
THIS DRAWING IS THE PROPERTY OF VIKING FIRE PROTECTION INC. AND IS ATTACHED TO BE USED FOR PURPOSES OF THIS PROJECT. THE DISTRIBUTION OR REPRODUCTION IS PROHIBITED UNLESS EXPLICITLY AUTHORIZED.

NOTES

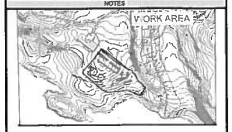

LEGEND

PAI FIRE ALARM CONTROL PANEL, MODÈLE IRP3-3202

F ADDRESSABLE MANUAL PULL STATION / MBS-132A, C/W FLUSH MOUNTED BACKBOX / SB-10, INSTALLATION AT 1200mm TOP.

F1 SEMI MANUAL PULL STATION / MBS-12A, C/W FLUSH MOUNTED BACKBOX / SB-10 & PROTECTION / ETS-12AWPS, INSTALLATION AT 1200mm TOP.

ADDRESSABLE COMBINED SMOKE / THERMIC DETECTOR / FAPT-851A, C/W BASE MOUNTED ON OCTAGONAL BACKBOX

RA ADDRESSABLE RELAY MODULE / FRM-1A, MOUNTED ON BOX 4 x 4 x 2 1/8

SAD ADDRESSABLE SUPERVISORY DOUBLE MODULE / FDM-1A, MOUNTED ON BOX 4 x 4 x 2 1/8

ADDITIONAL THERMIC DETECTOR, MODEL FAPT851 TR-135RF, C/W BASE MOUNTED ON OCTAGONAL BACKBOX

FIRE ALARM RED HORN / HRA CEILING MOUNTED ON BOX 4 x 4 x 2 1/2

CHANGE OVER ALARM RED MONITORISE / FSMA-6 CEILING MOUNTED C/W BACKBOX

DOUBLE LINE RED PLATE / ESE-12L MOUNTED ON ONE GANG BACKBOX

EXT FIRE SUPRESSION DRY CHEMICAL SYSTEM

JUNCTION BOX

2 #18 AWG FOR ADDRESSABLE LOOP, FAS 774

2 #14 AWG #14W SOLID FOR SIGNALIZATION

REQUIREMENTS & APPROVALS

APPLICABLE CODES & STANDARDS				DESIGN ACCORDING TO	
☐ N.F.P.A. 72	☐ N.F.P.A. 16	☒ S.E.C.-B.E.N.		☐ N.F.P.A. 72	
☐ N.F.P.A. 14	☐ N.F.P.A. 20	☐ -		☐ F.M.	
☐ N.F.P.A. 15	☐ N.F.P.A. 24	☐ -		☒ CSA-S2030	

APPROVED BY	ISSUED	APPROVAL

ENGINEER STAMP

REVISIONS

REV.#	DESCRIPTION	BY	DATE
A	ISSUE FOR INFORMATION	R.B.	2017-06-13

MONTREAL 3020 Pitfield Blvd. St-Laurent (Quebec) H4S 1H4 Tel.: (514) 333-8113 Fax: (514) 333-0266

VIKING FIRE PROTECTION INC

DATE: 2017-06-13	AUNCO EAGLE - MELIADINE DIVISION	
DRAWN BY: R. BASSAL	101 COMBUSTIBLE RANKIN	
CHECKED BY: P. NOEL	PROJECT: MONTREAL - QUÉBEC	
	SECTION: SCHÉMA UNIFILAIRE D'ALARME INCENDIE	
	CONTRACT WITH:	
CONTRACT NO.: TAC16774	SCALE: N/A	SHEET NO.: 1 de 1
		DRAWING NO.: T1077401A

AGNICO EAGLE

Vendor Document Status

1 ☐ Proceed to next submission and status.

2 ☐ Proceed with exceptions as noted to next submission and status.

3 ☐ Do not proceed.
Revise as noted and resubmit next submission and status.

4 ☑ Complete, no further submission required.

By: JEAN-FRANCOIS TREMBLAY Date: 2017-06-29

Review and authorization to fabricate are only for general conformance with the design concept of the Project as expressed in the Contract Documents. Sole responsibility for the accuracy and completeness of this document, including but not limited to dimensions and quantities, remains with the Supplier/Contractor. Agnico Eagle does not warrant the accuracy or completeness of any of the information contained herein, nor does Agnico Eagle authorize or approve any construction means, methods, techniques, sequences or any safety precautions or procedures.

Agnico Eagle No. 6515-C-270-007-141-TES-0002 R: Sub002

DOCUMENT FOR INFORMATION

NUQSANA PROMEC MINING

AGNICO-EAGLE MINES Ltd.
Inspection & Testing Report

ITR Number: AEM-EL-ITR-001
ITR Type: GENERAL
Contract No.: 6515-C-270-007

AGNICO EAGLE

Tag Number:		**Equipment/ Pipe N°:**		**System:**	
Service:		**Function:**		**Purchase Order:**	
Manufacturer:		**Model:**		**Serial Number:**	
Location Dwg :		**Reference Datasheet:**		**Installation Detail Dwg:**	
Reference Datasheet Number:					

Item N°	Inspection Points	C	NC/ NCR #	N/A	Completed By/ Date
1	DEVICE INSTALLED AS PER INSTALLATION DETAILS, LOCATION OR MANUFACTURERS DRAWINGS	C	NC #_____	N/A	Promec: CLIENT:
2	EQUIPMENT ACESSIBLE AND EASY TO MAINTAIN	C	NC #_____	N/A	Promec: CLIENT:
3	EQUIPMENT RACK OR CLAMPING DEVICE ADEQUATE (HEIGHT, SOLIDITY ETC.)	C	NC #_____	N/A	Promec: CLIENT:
4	GROUNDING INSTALLED AND CONNECTED	C	NC #_____	N/A	Promec: CLIENT:
5	TERMINAL CONNECTION CONNECTED AND TORQUED	C	NC #_____	N/A	Promec: CLIENT:
6	BREAKER CONNECTIONS CONNECTED AND TORQUED	C	NC #_____	N/A	Promec: CLIENT:
7	LUG BOLT TORQUE	C	NC #_____	N/A	Promec: CLIENT:
8	POWER BUS BAR BOLTED AND TORQUED	C	NC #_____	N/A	Promec: CLIENT:
9	GROUND BUS BAR BOLTED AND TORQUED	C	NC #_____	N/A	Promec: CLIENT:
10	MEGGER EQUIPMENT	C	NC #_____	N/A	Promec: CLIENT:
11	MEGGER CABLES	C	NC #_____	N/A	Promec: CLIENT:
12	HI-POT TEST	C	NC #_____	N/A	Promec: CLIENT:
13	PANELS IDENTIFIED	C	NC #_____	N/A	Promec: CLIENT:
14	UNIT DRAWER IDENTIFIED	C	NC #_____	N/A	Promec: CLIENT:
15	BREAKERS IDENTIFIED	C	NC #_____	N/A	Promec: CLIENT:
16	CABLES IDENTIFIED	C	NC #_____	N/A	Promec: CLIENT:
17	SEAL O RING INSTALLED (IF APPLICABLE)	C	NC #_____	N/A	Promec: CLIENT:
18	FUSES INSTALLED AND OF ADEQUATE SIZE	C	NC #_____	N/A	Promec: CLIENT:
18	VISUAL INSPECTION	C	NC #_____	N/A	Promec: CLIENT:
20	CLEAN / VACUUMED	C	NC #_____	N/A	Promec: CLIENT:

NUQSANA PROMEC MINING

AGNICO-EAGLE MINES Ltd.
Inspection & Testing Report

ITR Number: AEM-EL-ITR-001
ITR Type: GENERAL
Contract No.: 6515-C-270-007

AGNICO EAGLE

Tag Number:		Equipment/ Pipe N°:		System:	
Service:		Function:		Purchase Order:	
Manufacturer:		Model:		Serial Number:	
Location Dwg :		Reference Datasheet:		Installation Detail Dwg:	
Reference Datasheet Number:					

Item N°	Inspection Points	C	NC/ NCR #	N/A	Completed By/ Date
21	PANEL AND DOOR CLOSED AND BOLTED	C	NC #_____	N/A	Promec: CLIENT:

Comments

Sign Off			
Promec Signature:		CLIENT Signature:	
Date:		Date:	

Legend					
C	Conformance	NC	Non Conformance	N/A	Not Applicable
NCR	Non Conformance Report				

AGNICO EAGLE

Vendor Document Status

1 ☐ Proceed to next submission and status.

2 ☐ Proceed with exceptions as noted to next submission and status.

3 ☐ Do not proceed.
Revise as noted and resubmit next submission and status.

4 ☑ Complete, no further submission required.

By: JEAN-FRANCOIS TREMBLAY Date: 2017-06-29

Review and authorization to fabricate are only for general conformance with the design concept of the Project as expressed in the Contract Documents. Sole responsibility for the accuracy and completeness of this document, including but not limited to dimensions and quantities, remains with the Supplier/Contractor. Agnico Eagle does not warrant the accuracy or completeness of any of the information contained herein, nor does Agnico Eagle authorize or approve any construction means, methods, techniques, sequences or any safety precautions or procedures.

Agnico Eagle No. 6515-C-270-007-141-TES-0002 R: Sub002

DOCUMENT FOR INFORMATION

NUQSANA-PROMEC MINING

AGNICO-EAGLE MINES Ltd.
Inspection & Testing Report

ITR Number: AEM-EL-ITR-001
ITR Type: GENERAL
Contract No.: 6515-C-270-007

AGNICO EAGLE

Tag Number:		**Equipment/ Pipe N°:**		**System:**	
Service:		**Function:**		**Purchase Order:**	
Manufacturer:		**Model:**		**Serial Number:**	
Location Dwg :		**Reference Datasheet:**		**Installation Detail Dwg:**	
Reference Datasheet Number:					

Item N°	Inspection Points	C	NC/ NCR #	N/A	Completed By/ Date
1	DEVICE INSTALLED AS PER INSTALLATION DETAILS, LOCATION OR MANUFACTURERS DRAWINGS	C	NC #_____	N/A	Promec: CLIENT:
2	EQUIPMENT ACESSIBLE AND EASY TO MAINTAIN	C	NC #_____	N/A	Promec: CLIENT:
3	EQUIPMENT RACK OR CLAMPING DEVICE ADEQUATE (HEIGHT, SOLIDITY ETC.)	C	NC #_____	N/A	Promec: CLIENT:
4	GROUNDING INSTALLED AND CONNECTED	C	NC #_____	N/A	Promec: CLIENT:
5	TERMINAL CONNECTION CONNECTED AND TORQUED	C	NC #_____	N/A	Promec: CLIENT:
6	BREAKER CONNECTIONS CONNECTED AND TORQUED	C	NC #_____	N/A	Promec: CLIENT:
7	LUG BOLT TORQUE	C	NC #_____	N/A	Promec: CLIENT:
8	POWER BUS BAR BOLTED AND TORQUED	C	NC #_____	N/A	Promec: CLIENT:
9	GROUND BUS BAR BOLTED AND TORQUED	C	NC #_____	N/A	Promec: CLIENT:
10	MEGGER EQUIPMENT	C	NC #_____	N/A	Promec: CLIENT:
11	MEGGER CABLES	C	NC #_____	N/A	Promec: CLIENT:
12	HI-POT TEST	C	NC #_____	N/A	Promec: CLIENT:
13	PANELS IDENTIFIED	C	NC #_____	N/A	Promec: CLIENT:
14	UNIT DRAWER IDENTIFIED	C	NC #_____	N/A	Promec: CLIENT:
15	BREAKERS IDENTIFIED	C	NC #_____	N/A	Promec: CLIENT:
16	CABLES IDENTIFIED	C	NC #_____	N/A	Promec: CLIENT:
17	SEAL O RING INSTALLED (IF APPLICABLE)	C	NC #_____	N/A	Promec: CLIENT:
18	FUSES INSTALLED AND OF ADEQUATE SIZE	C	NC #_____	N/A	Promec: CLIENT:
18	VISUAL INSPECTION	C	NC #_____	N/A	Promec: CLIENT:
20	CLEAN / VACUUMED	C	NC #_____	N/A	Promec: CLIENT:

NUQSANA-PROMEC MINING

AGNICO-EAGLE MINES Ltd.
Inspection & Testing Report

ITR Number: AEM-EL-ITR-001
ITR Type: GENERAL
Contract No.: 6515-C-270-007

AGNICO EAGLE

Tag Number:		Equipment/ Pipe N°:		System:	
Service:		Function:		Purchase Order:	
Manufacturer:		Model:		Serial Number:	
Location Dwg :		Reference Datasheet:		Installation Detail Dwg:	
Reference Datasheet Number:					

Item N°	Inspection Points	C	NC/ NCR #	N/A	Completed By/ Date
21	PANEL AND DOOR CLOSED AND BOLTED	C	NC #_____	N/A	Promec: CLIENT:

Comments

Sign Off			
Promec Signature:		CLIENT Signature:	
Date:		Date:	

Legend					
C	Conformance	NC	Non Conformance	N/A	Not Applicable
NCR	Non Conformance Report				

AGNICO EAGLE

Vendor Document Status

1 ☐ Proceed to next submission and status.

2 ☐ Proceed with exceptions as noted to next submission and status.

3 ☐ Do not proceed.
Revise as noted and resubmit next submission and status.

4 ☑ Complete, no further submission required.

By: JEAN-FRANCOIS TREMBLAY Date: 2017-06-29

Review and authorization to fabricate are only for general conformance with the design concept of the Project as expressed in the Contract Documents. Sole responsibility for the accuracy and completeness of this document, including but not limited to dimensions and quantities, remains with the Supplier/Contractor. Agnico Eagle does not warrant the accuracy or completeness of any of the information contained herein, nor does Agnico Eagle authorize or approve any construction means, methods, techniques, sequences or any safety precautions or procedures.

Agnico Eagle No. 6515-C-270-007-141-TES-0002 R: Sub002

DOCUMENT FOR INFORMATION

NUQSANA PROMEC MINING

AGNICO-EAGLE MINES Ltd.
Inspection & Testing Report

ITR Number: AEM-EL-ITR-001
ITR Type: GENERAL
Contract No.: 6515-C-270-007

AGNICO EAGLE

Tag Number:		**Equipment/ Pipe N°:**		**System:**	
Service:		**Function:**		**Purchase Order:**	
Manufacturer:		**Model:**		**Serial Number:**	
Location Dwg :		**Reference Datasheet:**		**Installation Detail Dwg:**	
Reference Datasheet Number:					

Item N°	Inspection Points	C	NC/ NCR #	N/A	Completed By/ Date
1	DEVICE INSTALLED AS PER INSTALLATION DETAILS, LOCATION OR MANUFACTURERS DRAWINGS	C	NC #_____	N/A	Promec: CLIENT:
2	EQUIPMENT ACESSIBLE AND EASY TO MAINTAIN	C	NC #_____	N/A	Promec: CLIENT:
3	EQUIPMENT RACK OR CLAMPING DEVICE ADEQUATE (HEIGHT, SOLIDITY ETC.)	C	NC #_____	N/A	Promec: CLIENT:
4	GROUNDING INSTALLED AND CONNECTED	C	NC #_____	N/A	Promec: CLIENT:
5	TERMINAL CONNECTION CONNECTED AND TORQUED	C	NC #_____	N/A	Promec: CLIENT:
6	BREAKER CONNECTIONS CONNECTED AND TORQUED	C	NC #_____	N/A	Promec: CLIENT:
7	LUG BOLT TORQUE	C	NC #_____	N/A	Promec: CLIENT:
8	POWER BUS BAR BOLTED AND TORQUED	C	NC #_____	N/A	Promec: CLIENT:
9	GROUND BUS BAR BOLTED AND TORQUED	C	NC #_____	N/A	Promec: CLIENT:
10	MEGGER EQUIPMENT	C	NC #_____	N/A	Promec: CLIENT:
11	MEGGER CABLES	C	NC #_____	N/A	Promec: CLIENT:
12	HI-POT TEST	C	NC #_____	N/A	Promec: CLIENT:
13	PANELS IDENTIFIED	C	NC #_____	N/A	Promec: CLIENT:
14	UNIT DRAWER IDENTIFIED	C	NC #_____	N/A	Promec: CLIENT:
15	BREAKERS IDENTIFIED	C	NC #_____	N/A	Promec: CLIENT:
16	CABLES IDENTIFIED	C	NC #_____	N/A	Promec: CLIENT:
17	SEAL O RING INSTALLED (IF APPLICABLE)	C	NC #_____	N/A	Promec: CLIENT:
18	FUSES INSTALLED AND OF ADEQUATE SIZE	C	NC #_____	N/A	Promec: CLIENT:
18	VISUAL INSPECTION	C	NC #_____	N/A	Promec: CLIENT:
20	CLEAN / VACUUMED	C	NC #_____	N/A	Promec: CLIENT:

NUQSANA PROMEC MINING

AGNICO-EAGLE MINES Ltd.
Inspection & Testing Report

ITR Number: AEM-EL-ITR-001
ITR Type: GENERAL
Contract No.: 6515-C-270-007

AGNICO EAGLE

Tag Number:		Equipment/ Pipe N°:		System:	
Service:		Function:		Purchase Order:	
Manufacturer:		Model:		Serial Number:	
Location Dwg :		Reference Datasheet:		Installation Detail Dwg:	
Reference Datasheet Number:					

Item N°	Inspection Points	C	NC/ NCR #	N/A	Completed By/ Date
21	PANEL AND DOOR CLOSED AND BOLTED	C	NC #_____	N/A	Promec: CLIENT:

Comments

Sign Off			
Promec Signature:		CLIENT Signature:	
Date:		Date:	

Legend					
C	Conformance	NC	Non Conformance	N/A	Not Applicable
NCR	Non Conformance Report				

AGNICO EAGLE

Vendor Document Status

1 ☐ Proceed to next submission and status.

2 ☐ Proceed with exceptions as noted to next submission and status.

3 ☐ Do not proceed.
Revise as noted and resubmit next submission and status.

4 ☑ Complete, no further submission required.

By: Jean-Francois Tremblay Date: 2017-05-02

Review and authorization to fabricate are only for general conformance with the design concept of the Project as expressed in the Contract Documents. Sole responsibility for the accuracy and completeness of this document, including but not limited to dimensions and quantities, remains with the Supplier/Contractor. Agnico Eagle does not warrant the accuracy or completeness of any of the information contained herein, nor does Agnico Eagle authorize or approve any construction means, methods, techniques, sequences or any safety precautions or procedures.

Agnico Eagle No. 6515-C-270-007-141-TES-0013 R: Sub001

DOCUMENT FOR INFORMATION

AGNICO-EAGLE MINES Ltd.
Inspection and Testing Report
(C22498E)

Contract Title:	Fuel Tanks Piping Supply and Installation	**Contract No.:**	6515-C-270-007
Subject:	**Equipment Torque**	**ITR No.:**	**AEM-EL-ITR-006**

Torque #: _____ Calibration due Date: _____

Date: _____ By: _____

Equipment #	Power Bus Bar Torque (lbf·ft)	Ground Bus Bar Torque (lbf·ft)	Lug Torque (lbf·ft)	Photos (If applicable)

Promec's Representative Signature _____ Date _____ Client's Representative Signature _____ Date _____

AGNICO EAGLE

Vendor Document Status

1 ☐ Proceed to next submission and status.

2 ☐ Proceed with exceptions as noted to next submission and status.

3 ☐ Do not proceed.
Revise as noted and resubmit next submission and status.

4 ☑ Complete, no further submission required.

By: JEAN-FRANCOIS TREMBLAY Date: 2017-06-22

Review and authorization to fabricate are only for general conformance with the design concept of the Project as expressed in the Contract Documents. Sole responsibility for the accuracy and completeness of this document, including but not limited to dimensions and quantities, remains with the Supplier/Contractor. Agnico Eagle does not warrant the accuracy or completeness of any of the information contained herein, nor does Agnico Eagle authorize or approve any construction means, methods, techniques, sequences or any safety precautions or procedures.

Agnico Eagle No. 6515-C-270-007-141-TES-0028 R: Sub002

DOCUMENT FOR INFORMATION

NUQSANA PROMEC MINING

AGNICO-EAGLE MINES Ltd.
Inspection & Testing Report

ITR Number: AEM-IN-ITR-005A
ITR Type: PCR PANEL
Contract No.: 6515-C-270-007

AGNICO EAGLE

Tag Number:		**Equipment/ Pipe N°:**		**System:**	
Service:		**Function:**		**Purchase Order:**	
Manufacturer:		**Model:**		**Serial Number:**	
Location Dwg :		**Reference Datasheet:**		**Installation Detail Dwg:**	
Reference Datasheet Number:					

Item N°	Inspection Points	C	NC/ NCR #	N/A	Completed By/ Date
1	INSTRUMENT TAG ATTACHED	C	NC #_____	N/A	Promec: CLIENT:
2	CABLE TAG ATTACHED	C	NC #_____	N/A	Promec: CLIENT:
3	DEVICE INSTALLED AS PER INSTALLATION DETAILS, LOCATION OR MANUFACTURER'S DRAWING	C	NC #_____	N/A	Promec: CLIENT:
4	EQUIPMENT ACCESSIBLE AND EASY TO MAINTAIN	C	NC #_____	N/A	Promec: CLIENT:
5	EQUIPMENT RACK OR CLAMPING DEVICE ADEQUATE (HEIGHT, SOLIDITY ETC.)	C	NC #_____	N/A	Promec: CLIENT:
6	WIRING CORRECT AND PROPERLY LABELED	C	NC #_____	N/A	Promec: CLIENT:
7	GROUNDING INSTALLED AND CONNECTED	C	NC #_____	N/A	Promec: CLIENT:
8	CLEAN OUT ENCLOSURE	C	NC #_____	N/A	Promec: CLIENT:
9	OPENING DOOR ADEQUATE	C	NC #_____	N/A	Promec: CLIENT:
10	CALIBRATION CERTIFICATE AVAILABLE	C	NC #_____	N/A	Promec: CLIENT:
11	ELECTRICAL SUPPLY COMPATIBLE WITH SOURCE	C	NC #_____	N/A	Promec: CLIENT:

Comments

Sign Off			
Promec Signature:		**CLIENT Signature:**	
Date:		**Date:**	

Legend					
C	Conformance	**NC**	Non Conformance	**N/A**	Not Applicable
NCR	Non Conformance Report				

AGNICO EAGLE

Vendor Document Status

1 ☐ Proceed to next submission and status.

2 ☐ Proceed with exceptions as noted to next submission and status.

3 ☐ Do not proceed.
Revise as noted and resubmit next submission and status.

4 ☒ Complete, no further submission required.

By: LUC SÉNÉCAL Date: 2017-07-10

Review and authorization to fabricate are only for general conformance with the design concept of the Project as expressed in the Contract Documents. Sole responsibility for the accuracy and completeness of this document, including but not limited to dimensions and quantities, remains with the Supplier/Contractor. Agnico Eagle does not warrant the accuracy or completeness of any of the information contained herein, nor does Agnico Eagle authorize or approve any construction means, methods, techniques, sequences or any safety precautions or procedures.

Agnico Eagle No. 6515-C-270-007-141-TES-0009 R: Sub002

DOCUMENT FOR INFORMATION

NUQSANA PROMEC MINING

AGNICO-EAGLE MINES Ltd.
Inspection & Testing Report

ITR Number: AEM-EL-ITR-002
ITR Type: HEATING UNIT
Contract No.: 6515-C-270-007

AGNICO EAGLE

Tag Number:		**Equipment/ Pipe N°:**		**System:**	
Service:		**Function:**		**Purchase Order:**	
Manufacturer:		**Model:**		**Serial Number:**	
Location Dwg :		**Reference Datasheet:**		**Installation Detail Dwg:**	
Reference Datasheet Number:					

Item N°	Inspection Points	C	NC/ NCR #	N/A	Completed By/ Date
1	CHECK FOR PROPER SIZE OF CIRCUIT BREAKERS IN DISTRIBUTION PANEL	C	NC #_____	N/A	Promec: CLIENT:
2	CHECK FOR PROPER TAGGING AND LABELLING OF ALL PARTS AS SHOWN ON THE DRAWINGS	C	NC #_____	N/A	Promec: CLIENT:
3	CHECK FOR PROPER OPERATION OF THERMOSTATS AND/OR TEMPERATURE CONTROLLERS	C	NC #_____	N/A	Promec: CLIENT:
4	FINAL INSPECTION COMPLETE. DEFICIENCY LIST ITEMS CLEARED	C	NC #_____	N/A	Promec: CLIENT:

Comments

Sign Off			
Promec Signature:		**CLIENT Signature:**	
Date:		**Date:**	

Legend					
C	Conformance	**NC**	Non Conformance	**N/A**	Not Applicable
NCR	Non Conformance Report				

AGNICO EAGLE

Vendor Document Status

1 ☐ Proceed to next submission and status.

2 ☐ Proceed with exceptions as noted to next submission and status.

3 ☐ Do not proceed.
Revise as noted and resubmit next submission and status.

4 ☑ Complete, no further submission required.

By: Jean-Francois Tremblay Date: 2017-05-02

Review and authorization to fabricate are only for general conformance with the design concept of the Project as expressed in the Contract Documents. Sole responsibility for the accuracy and completeness of this document, including but not limited to dimensions and quantities, remains with the Supplier/Contractor. Agnico Eagle does not warrant the accuracy or completeness of any of the information contained herein, nor does Agnico Eagle authorize or approve any construction means, methods, techniques, sequences or any safety precautions or procedures.

Agnico Eagle No. 6515-C-270-007-141-TES-0018 R: Sub001

DOCUMENT FOR INFORMATION

Agnico-Eagle Mines Ltd.
Miscellaneous Field Report

ITR Number : AEM-GE-ITR-006
Contract no. : C22466T / C22498E

SYSTEM:	TAG NO. :	
LOCATION:	AREA:	UNIT:

DATE	ACTIVITY

PROMEC DESIGNATE - SIGNATURE _____ TITLE _____ DATE _____

CLIENT DESIGNATE - SIGNATURE _____ TITLE _____ DATE _____

NUQSANA PROMEC MINING

AGNICO-EAGLE MINES Ltd.
Inspection and Testing Report
(C22498E)

AGNICO EAGLE

Contract Title: Fuel Tanks Piping Supply and Installation
Contract No.: 6515-C-270-007
Subject: Cable to Meg
ITR No.: AEM-EL-ITR-003

Tester #: MtP 4055 (SN 170617552)
Calibration due Date: 05-07-2018
Date: 15-07-2017
By: TRESCAL
Megger ?/Volts: 1000 Volts

Cable ID	Origin / Destination	Phase 1/Phase 2	Phase 2/Phase 3	Phase 1/Phase 3	Phase 1 /GND	Phase 2/GND	Phase 3/GND
65 SPb 10301-09-P1		OL	OL	OL	OL	OL	OL
65 SPb 11601-08-P1		OL	OL	OL	OL	OL	OL
65 SPb 11601-10-P1		N/A	N/A	N/A			
65 SPb 11601-P1		OL	OL	OL	OL	OL	OL
65 SPb 11601-P2		OL	OL	OL	OL	OL	OL
65 SPb 11601-P3		OL	OL	OL	OL	OL	OL
65 SPb 11601-P4		OL	OL	OL	OL	OL	OL
65 SPb 11601-P5		OL	OL	OL	OL	OL	OL
65 SPb 11601-P6		OL	OL	OL	OL	OL	OL
65 SPb 11601-P7		OL	OL	OL	OL	OL	OL
65 SPb 11601-01-P1		OL	OL	OL	OL	OL	OL
65 SPb 11601-02-P1		OL	OL	OL	OL	OL	OL
65 SPb 11601-03-P1		OL	OL	OL	OL	OL	OL

Promec's Representative Signature — Date: 15-07-2017

Client's Representative Signature — Date

NUQSANA PROMEC MINING

AGNICO-EAGLE MINES Ltd.

Inspection and Testing Report

(C22498E)

AGNICO EAGLE

Contract Title: Fuel Tanks Piping Supply and Installation
Contract No.: 6515-C-270-007
Subject: Cable to Meg
ITR No.: AEM-EL-ITR-003

Tester #: Mtp 4055 (SN 170617552)
Date: 15-07-2017
Megger ?/Volts: 1000 Volts

Calibration due Date: 05-07-2018
By: TRESCAL

Cable ID	Origin / Destination	Phase 1/Phase 2	Phase 2/Phase 3	Phase 1/Phase 3	Phase 1 /GND	Phase 2/GND	Phase 3/GND
65 DPS 11601 -16-P1		OL			OL	OL	
65 DPS 11601-16-P2		OL			OL	OL	
65 DPS 11601- 2- P1		OL			OL	OL	
65 DPS 11601- 2 -P2		OL			OL	OL	
65 DPS 11601- 7-P1		OL			OL	OL	
65 DPS 11601- 7-P2		OL			OL	OL	
65 DPS 11601- 18-P1		OL			OL	OL	
65 DPS 11601- 10/12 P1		OL			OL	OL	
65 DPS 11601- 10/12 P1		OL			OL	OL	Just Heating 65HEA11603
65 DPS 11601- 14 - P1		OL			OL	OL	

Promec's Representative Signature — Date: 2-10-2017

Client's Representative Signature — Date

NUQSANA-PROMEC MINING

AGNICO-EAGLE MINES Ltd.
Inspection and Testing Report
(C22498E)

AGNICO EAGLE

Contract Title: Fuel Tanks Piping Supply and Installation
Contract No.: 6515-C-270-007
Subject: Cable to Meg
ITR No.: AEM-EL-ITR-003

Tester #: Mt P 4055 (N.S 170617552
Date: 2-10-2017
Megger ?/Volts: 1000Volts
Calibration due Date: 05-07-2018
By: TRESCAL

Cable ID	Origin / Destination	Phase 1/Phase 2	Phase 2/Phase 3	Phase 1/Phase 3	Phase 1 /GND	Phase 2/GND	Phase 3/GND
65VSD11601 - P1		0,003	0,003	0,003	OL	OL	OL
65VSD11602 - P1		0,003	0,003	0,003	OL	OL	OL
65DPS11601-4-P1		OL			OL	OL	
65DPS11601-5-P1		OL			OL	OL	
65DPS11601-6-P1		OL			OL	OL	
65DPS11601-1/3-P2		OL			OL	OL	
65DPS11601-17/19-P2		OL			OL	OL	
65DPS11601-21/23-P2		OL			OL	OL	
65DPS11601-5-P1		OL			OL	OL	
65DPS11601-5-P2		OL			OL	OL	
65DPS11601-5-P3		OL			OL	OL	
65DPS11602-8-P1		OL			OL	OL	
65DPS11602-8-P2		OL			OL	OL	

TESTER avec moteur

Promec's Representative Signature — Date: 2-10-2017
Client's Representative Signature — Date

NUQSANA PROMEC MINING

AGNICO-EAGLE MINES Ltd.
Inspection and Testing Report
(C22498E)

AGNICO EAGLE

Contract Title:	Fuel Tanks Piping Supply and Installation	**Contract No.:**	6515-C-270-007
Subject:	Cable to Meg	**ITR No.:**	AEM-EL-ITR-003

Tester #: MTP 4055 (SN170617552)
Date: 15-07-2017
Megger ?/Volts: 1000 Volts

Calibration due Date: 05-07-2018
By: tRESCAL

Cable ID	Origin / Destination	Phase 1/Phase 2	Phase 2/Phase 3	Phase 1/Phase 3	Phase 1 /GND	Phase 2/GND	Phase 3/GND
65tRF11601-P1		OL	OL	OL	OL	OL	OL
65 SPb 11601-04-P1		OL	OL	OL	OL	OL	OL
65 SPb 11601-04-P1A		OL	OL	OL	OL	OL	OL
65 SPb 11601-04-P1b		OL	OL	OL	OL	OL	OL

Promec's Representative Signature — Date: 15-07-2017

Client's Representative Signature — Date

AGNICO EAGLE

Vendor Document Status

1 ☐ Proceed to next submission and status.

2 ☐ Proceed with exceptions as noted to next submission and status.

3 ☐ Do not proceed.
Revise as noted and resubmit next submission and status.

4 ☑ Complete, no further submission required.

By: Jean-Francois Tremblay Date: 2017-05-02

Review and authorization to fabricate are only for general conformance with the design concept of the Project as expressed in the Contract Documents. Sole responsibility for the accuracy and completeness of this document, including but not limited to dimensions and quantities, remains with the Supplier/Contractor. Agnico Eagle does not warrant the accuracy or completeness of any of the information contained herein, nor does Agnico Eagle authorize or approve any construction means, methods, techniques, sequences or any safety precautions or procedures.

Agnico Eagle No. 6515-C-270-007-141-TES-0010 R: Sub001

DOCUMENT FOR INFORMATION

NUQSANA PROMEC MINING

AGNICO-EAGLE MINES Ltd.
Inspection and Testing Report
(C22498E)

AGNICO EAGLE

Contract Title:	Fuel Tanks Piping Supply and Installation	**Contract No.:**	6515-C-270-007
Subject:	Cable to Meg	**ITR No.:**	AEM-EL-ITR-003

Tester #: _____ Calibration due Date: _____

Date: _____ By: _____

Megger ?/Volts: _____

Cable ID	Origin / Destination	Phase 1/Phase 2	Phase 2/Phase 3	Phase 1/Phase 3	Phase 1 /GND	Phase 2/GND	Phase 3/GND

Promec's Representative Signature _____ Date _____

Client's Representative Signature _____ Date _____

Contract Title:	Fuel Tanks Piping Supply and Installation	**Contract No.:**	6515-C-270-007
Subject:	Cable to Meg	**ITR No.:**	AEM-EL-ITR-003

AGNICO EAGLE

Vendor Document Status

1 ☐ Proceed to next submission and status.

2 ☐ Proceed with exceptions as noted to next submission and status.

3 ☐ Do not proceed.
Revise as noted and resubmit next submission and status.

4 ☑ Complete, no further submission required.

By: Jean-Francois Tremblay Date: 2017-05-02

Review and authorization to fabricate are only for general conformance with the design concept of the Project as expressed in the Contract Documents. Sole responsibility for the accuracy and completeness of this document, including but not limited to dimensions and quantities, remains with the Supplier/Contractor. Agnico Eagle does not warrant the accuracy or completeness of any of the information contained herein, nor does Agnico Eagle authorize or approve any construction means, methods, techniques, sequences or any safety precautions or procedures.

Agnico Eagle No. 6515-C-270-007-141-TES-0011 R: Sub001

DOCUMENT FOR INFORMATION

NUQSANA PROMEC MINING

AGNICO-EAGLE MINES Ltd.
Inspection and Testing Report
(C22498E)

AGNICO EAGLE

Contract Title: Fuel Tanks Piping Supply and Installation **Contract No.:** 6515-C-270-007

Subject: Continuity Test **ITR No.:** AEM-EL-ITR-004

Cable ID	Description	Continuity	Visual	Ident. Origin	Ident. Destination	Same	Date	By

Promec's Representative Signature Date Client's Representative Signature Date

AGNICO EAGLE

Vendor Document Status

1 ☐ Proceed to next submission and status.

2 ☐ Proceed with exceptions as noted to next submission and status.

3 ☐ Do not proceed.
Revise as noted and resubmit next submission and status.

4 ☑ Complete, no further submission required.

By: Jean-Francois Tremblay Date: 2017-05-02

Review and authorization to fabricate are only for general conformance with the design concept of the Project as expressed in the Contract Documents. Sole responsibility for the accuracy and completeness of this document, including but not limited to dimensions and quantities, remains with the Supplier/Contractor. Agnico Eagle does not warrant the accuracy or completeness of any of the information contained herein, nor does Agnico Eagle authorize or approve any construction means, methods, techniques, sequences or any safety precautions or procedures.

Agnico Eagle No. 6515-C-270-007-141-TES-0010 R: Sub001

DOCUMENT FOR INFORMATION

NUQSANA PROMEC MINING

AGNICO-EAGLE MINES Ltd.
Inspection and Testing Report
(C22498E)

AGNICO EAGLE

Contract Title: Fuel Tanks Piping Supply and Installation
Contract No.: 6515-C-270-007
Subject: Cable to Meg
ITR No.: AEM-EL-ITR-003

Tester #: _____
Date: _____
Megger ?/Volts: _____

Calibration due Date: _____
By: _____

Cable ID	Origin / Destination	Phase 1/Phase 2	Phase 2/Phase 3	Phase 1/Phase 3	Phase 1 /GND	Phase 2/GND	Phase 3/GND

Promec's Representative Signature _____ Date _____

Client's Representative Signature _____ Date _____

Contract Title:	Fuel Tanks Piping Supply and Installation	**Contract No.:**	6515-C-270-007
Subject:	Cable to Meg	**ITR No.:**	AEM-EL-ITR-003

AGNICO EAGLE

Vendor Document Status

1 ☐ Proceed to next submission and status.

2 ☐ Proceed with exceptions as noted to next submission and status.

3 ☐ Do not proceed.
Revise as noted and resubmit next submission and status.

4 ☑ Complete, no further submission required.

By: Jean-Francois Tremblay Date: 2017-05-02

Review and authorization to fabricate are only for general conformance with the design concept of the Project as expressed in the Contract Documents. Sole responsibility for the accuracy and completeness of this document, including but not limited to dimensions and quantities, remains with the Supplier/Contractor. Agnico Eagle does not warrant the accuracy or completeness of any of the information contained herein, nor does Agnico Eagle authorize or approve any construction means, methods, techniques, sequences or any safety precautions or procedures.

Agnico Eagle No. 6515-C-270-007-141-TES-0011 R: Sub001

DOCUMENT FOR INFORMATION

AGNICO-EAGLE MINES Ltd.
Inspection and Testing Report
(C22498E)

NUQSANA PROMEC MINING

AGNICO EAGLE

Contract Title: Fuel Tanks Piping Supply and Installation
Contract No.: 6515-C-270-007
Subject: Continuity Test
ITR No.: AEM-EL-ITR-004

Cable ID	Description	Continuity	Visual	Ident. Origin	Ident. Destination	Same	Date	By

Promec's Representative Signature | Date | Client's Representative Signature | Date

AGNICO EAGLE

Vendor Document Status

1 ☐ Proceed to next submission and status.

2 ☐ Proceed with exceptions as noted to next submission and status.

3 ☐ Do not proceed.
Revise as noted and resubmit next submission and status.

4 ☑ Complete, no further submission required.

By: Jean-Francois Tremblay Date: 2017-05-02

Review and authorization to fabricate are only for general conformance with the design concept of the Project as expressed in the Contract Documents. Sole responsibility for the accuracy and completeness of this document, including but not limited to dimensions and quantities, remains with the Supplier/Contractor. Agnico Eagle does not warrant the accuracy or completeness of any of the information contained herein, nor does Agnico Eagle authorize or approve any construction means, methods, techniques, sequences or any safety precautions or procedures.

Agnico Eagle No. 6515-C-270-007-141-TES-0010 R: Sub001

DOCUMENT FOR INFORMATION

AGNICO-EAGLE MINES Ltd.
Inspection and Testing Report
(C22498E)

Contract Title:	Fuel Tanks Piping Supply and Installation	**Contract No.:**	6515-C-270-007
Subject:	Cable to Meg	**ITR No.:**	AEM-EL-ITR-003

Tester #: _____ Calibration due Date: _____

Date: _____ By: _____

Megger ?/Volts: _____

Cable ID	Origin / Destination	Phase 1/Phase 2	Phase 2/Phase 3	Phase 1/Phase 3	Phase 1 /GND	Phase 2/GND	Phase 3/GND

Promec's Representative Signature _____ Date _____ Client's Representative Signature _____ Date _____

Contract Title:	Fuel Tanks Piping Supply and Installation	**Contract No.:**	6515-C-270-007
Subject:	**Cable to Meg**	**ITR No.:**	**AEM-EL-ITR-003**

NUQSANA PROMEC MINING

AGNICO-EAGLE MINES Ltd.
Inspection and Testing Report
(C22498E)

AGNICO EAGLE

Contract Title: Fuel Tanks Piping Supply and Installation Contract No.: 6515-C-270-007

Subject: Continuity Test ITR No.: AEM-EL-ITR-004

Cable ID	Description	Continuity	Visual	Ident. Origin	Ident. Destination	Same	Date	By
116-FQICO14C2	4PR 18	OL	OK	PLC 11601	MICROLOAD		2-10-2017	Alex Chevalier
116-FQICO14-COM	Ethernet cat 6	N/A	OK	PLC 11601	MICROLOAD		2-10-2017	" "
116-FQICO14-P1	3c 14	OL	OK	65JB116 01	MICRO LOAD		2-10-2017	" "
116-FQICO14-P2	3c - 14	OL	OK	65JB116-01	MICRO LOAD		2-10-2017	" "
116-FSL022/023C	6c - 14	OL	OK	65JB11602	FILTRATION		2-10-2017	" "
116-FSL022-C	3c - 14	OL	OK	65JB11604	103-FSL022-C		2-10-2017	" "
116-FSL023-C	3c - 14	OL	OK	65JB11604	116-FSL023-C		3-10-2017	" "
116-FT014-1	2p - 18	OL	OK	116-FT-014	MICRO LOAD		3-10-2017	" "
116-FV014-C	3c - 14	OL	OK	116-FV-014	MICROLOAD (120V)		3-10-2017	" "
116-GSO1602	10c - 14	OL	OK	116-GS-016	SCULCON		3-10-2017	" "
116-GS016-P	6c - 14	OL	OK	65JB11601	116-GS-016		3-10-2017	" "
116-HSS-0171C	6c - 14	OL	OK	65JB11602	116-HSS-0171		3-10-2017	" "
116-HSS-0172C	6c - 14	OL	OK	PLC 11601	116-HSS-0173		3-10-2017	" "
116-LAH06-C	3c - 14	OL	OK	65JB11602	116-LAH-006		3-10-2017	" "
116-LT05-C	1PR - 16	OL	OK	65JB11603	116-LT-005		3-10-2017	" "
116-MOV08-C	6c - 14	OL	OK	65JB11602	116-MOV-008		3-10-2017	" "

Promec's Representative Signature	Date	Client's Representative Signature	Date
	3-10-2017		

NUQSANA PROMEC MINING

AGNICO-EAGLE MINES Ltd.
Inspection and Testing Report
(C22498E)

AGNICO EAGLE

Contract Title: Fuel Tanks Piping Supply and Installation **Contract No.:** 6515-C-270-007

Subject: Continuity Test **ITR No.:** AEM-EL-ITR-004

Cable ID	Description	Continuity	Visual	Ident. Origin	Ident. Destination	Same	Date	By
116-MOV08P	3c/8	OL	OK	MOV-GRP-box	116-MOV-008		3-10-2017	Alex chevalier
116-TT-007-C	1p-16	OL	OK	65JB11602	116-TT-007		3-10-2017	" "
116-XA019-C	10c/14	OL	OK	65JB11602	~~116-XA~~ FIRE PANEL		3-10-2017	" "
65VSD1161-C1	3c/14	OL	OK	65JB11602	65VSD1161		3-10-2017	" "
65VSD1162-C1	3c/14	OL	OK	65JB11602	65VSD1162		3-10-2017	" "

Promec's Representative Signature | Date: 3-10-2017 | Client's Representative Signature | Date

AGNICO EAGLE

Vendor Document Status

1 ☐ Proceed to next submission and status.

2 ☐ Proceed with exceptions as noted to next submission and status.

3 ☐ Do not proceed.
Revise as noted and resubmit next submission and status.

4 ☑ Complete, no further submission required.

By: Jean-Francois Tremblay Date: 2017-05-02

Review and authorization to fabricate are only for general conformance with the design concept of the Project as expressed in the Contract Documents. Sole responsibility for the accuracy and completeness of this document, including but not limited to dimensions and quantities, remains with the Supplier/Contractor. Agnico Eagle does not warrant the accuracy or completeness of any of the information contained herein, nor does Agnico Eagle authorize or approve any construction means, methods, techniques, sequences or any safety precautions or procedures.

Agnico Eagle No. 6515-C-270-007-141-TES-0011 R: Sub001

DOCUMENT FOR INFORMATION

AGNICO-EAGLE MINES Ltd.
Inspection and Testing Report
(C22498E)

Contract Title: Fuel Tanks Piping Supply and Installation
Contract No.: 6515-C-270-007
Subject: Continuity Test
ITR No.: AEM-EL-ITR-004

Cable ID	Description	Continuity	Visual	Ident. Origin	Ident. Destination	Same	Date	By

Promec's Representative Signature | Date | Client's Representative Signature | Date

AGNICO EAGLE

Vendor Document Status

1 ☐ Proceed to next submission and status.

2 ☐ Proceed with exceptions as noted to next submission and status.

3 ☐ Do not proceed.
Revise as noted and resubmit next submission and status.

4 ☑ Complete, no further submission required.

By: Jean-Francois Tremblay Date: 2017-05-02

Review and authorization to fabricate are only for general conformance with the design concept of the Project as expressed in the Contract Documents. Sole responsibility for the accuracy and completeness of this document, including but not limited to dimensions and quantities, remains with the Supplier/Contractor. Agnico Eagle does not warrant the accuracy or completeness of any of the information contained herein, nor does Agnico Eagle authorize or approve any construction means, methods, techniques, sequences or any safety precautions or procedures.

Agnico Eagle No. 6515-C-270-007-141-TES-0011 R: Sub001

DOCUMENT FOR INFORMATION

NUQSANA PROMEC MINING

AGNICO-EAGLE MINES Ltd.
Inspection and Testing Report
(C22498E)

AGNICO EAGLE

Contract Title: Fuel Tanks Piping Supply and Installation **Contract No.:** 6515-C-270-007

Subject: Continuity Test **ITR No.:** AEM-EL-ITR-004

Cable ID	Description	Continuity	Visual	Ident. Origin	Ident. Destination	Same	Date	By

Promec's Representative Signature Date Client's Representative Signature Date

AGNICO EAGLE

Vendor Document Status

1 ☐ Proceed to next submission and status.

2 ☐ Proceed with exceptions as noted to next submission and status.

3 ☐ Do not proceed.
Revise as noted and resubmit next submission and status.

4 ☑ Complete, no further submission required.

By: Jean-Francois Tremblay Date: 2017-05-02

Review and authorization to fabricate are only for general conformance with the design concept of the Project as expressed in the Contract Documents. Sole responsibility for the accuracy and completeness of this document, including but not limited to dimensions and quantities, remains with the Supplier/Contractor. Agnico Eagle does not warrant the accuracy or completeness of any of the information contained herein, nor does Agnico Eagle authorize or approve any construction means, methods, techniques, sequences or any safety precautions or procedures.

Agnico Eagle No. 6515-C-270-007-141-TES-0018 R: Sub001

DOCUMENT FOR INFORMATION

Agnico-Eagle Mines Ltd.
Miscellaneous Field Report

ITR Number : AEM-GE-ITR-006
Contract no. : C22466T / C22498E

SYSTEM:	TAG NO. :	
LOCATION:	AREA:	UNIT:

DATE	ACTIVITY

PROMEC DESIGNATE - SIGNATURE | TITLE | DATE

CLIENT DESIGNATE - SIGNATURE | TITLE | DATE

AGNICO EAGLE

Vendor Document Status

1 ☐ Proceed to next submission and status.

2 ☐ Proceed with exceptions as noted to next submission and status.

3 ☐ Do not proceed.
Revise as noted and resubmit next submission and status.

4 ☑ Complete, no further submission required.

By: Jean-Francois Tremblay Date: 2017-05-02

Review and authorization to fabricate are only for general conformance with the design concept of the Project as expressed in the Contract Documents. Sole responsibility for the accuracy and completeness of this document, including but not limited to dimensions and quantities, remains with the Supplier/Contractor. Agnico Eagle does not warrant the accuracy or completeness of any of the information contained herein, nor does Agnico Eagle authorize or approve any construction means, methods, techniques, sequences or any safety precautions or procedures.

Agnico Eagle No. 6515-C-270-007-141-TES-0002 R: Sub001

DOCUMENT FOR INFORMATION

NUQSANA PROMEC MINING

AGNICO-EAGLE MINES Ltd.
Inspection & Testing Report

ITR Number: AEM-EL-ITR-001
ITR Type: GENERAL
Contract No.: 6515-C-270-007

AGNICO EAGLE

Tag Number:		**Equipment/ Pipe N°:**		**System:**	
Service:		**Function:**		**Purchase Order:**	
Manufacturer:		**Model:**		**Serial Number:**	
Location Dwg :		**Reference Datasheet:**		**Installation Detail Dwg:**	
Reference Datasheet Number:					

Item N°	Inspection Points	C	NC/ NCR #	N/A	Completed By/ Date
1	DEVICE INSTALLED AS PER INSTALLATION DETAILS, LOCATION OR MANUFACTURERS DRAWINGS	C	NC #_____	N/A	Promec: CLIENT:
2	EQUIPMENT ACESSIBLE AND EASY TO MAINTAIN	C	NC #_____	N/A	Promec: CLIENT:
3	EQUIPMENT RACK OR CLAMPING DEVICE ADEQUATE (HEIGHT, SOLIDITY ETC.)	C	NC #_____	N/A	Promec: CLIENT:
4	GROUNDING INSTALLED AND CONNECTED	C	NC #_____	N/A	Promec: CLIENT:
5	TERMINAL CONNECTION CONNECTED AND TORQUED	C	NC #_____	N/A	Promec: CLIENT:
6	BREAKER CONNECTIONS CONNECTED AND TORQUED	C	NC #_____	N/A	Promec: CLIENT:
7	LUG BOLT TORQUE	C	NC #_____	N/A	Promec: CLIENT:
8	POWER BUS BAR BOLTED AND TORQUED	C	NC #_____	N/A	Promec: CLIENT:
9	GROUND BUS BAR BOLTED AND TORQUED	C	NC #_____	N/A	Promec: CLIENT:
10	MEGGER EQUIPMENT	C	NC #_____	N/A	Promec: CLIENT:
11	MEGGER CABLES	C	NC #_____	N/A	Promec: CLIENT:
12	HI-POT TEST	C	NC #_____	N/A	Promec: CLIENT:
13	PANELS IDENTIFIED	C	NC #_____	N/A	Promec: CLIENT:
14	UNIT DRAWER IDENTIFIED	C	NC #_____	N/A	Promec: CLIENT:
15	BREAKERS IDENTIFIED	C	NC #_____	N/A	Promec: CLIENT:
16	CABLES IDENTIFIED	C	NC #_____	N/A	Promec: CLIENT:
17	SEAL O RING INSTALLED (IF APPLICABLE)	C	NC #_____	N/A	Promec: CLIENT:
18	FUSES INSTALLED AND OF ADEQUATE SIZE	C	NC #_____	N/A	Promec: CLIENT:
18	VISUAL INSPECTION	C	NC #_____	N/A	Promec: CLIENT:
20	CLEAN / VACUUMED	C	NC #_____	N/A	Promec: CLIENT:

NUQSANA PROMEC MINING

AGNICO-EAGLE MINES Ltd.
Inspection & Testing Report

ITR Number: AEM-EL-ITR-001
ITR Type: GENERAL
Contract No.: 6515-C-270-007

AGNICO EAGLE

Tag Number:		Equipment/ Pipe N°:		System:	
Service:		Function:		Purchase Order:	
Manufacturer:		Model:		Serial Number:	
Location Dwg :		Reference Datasheet:		Installation Detail Dwg:	
Reference Datasheet Number:					

Item N°	Inspection Points	C	NC/ NCR #	N/A	Completed By/ Date
21	PANEL AND DOOR CLOSED AND BOLTED	C	NC #_____	N/A	Promec: CLIENT:

Comments

Sign Off			
Promec Signature:		CLIENT Signature:	
Date:		Date:	

Legend					
C	Conformance	NC	Non Conformance	N/A	Not Applicable
NCR	Non Conformance Report				

AGNICO EAGLE

Vendor Document Status

1 ☐ Proceed to next submission and status.

2 ☐ Proceed with exceptions as noted to next submission and status.

3 ☐ Do not proceed.
Revise as noted and resubmit next submission and status.

4 ☑ Complete, no further submission required.

By: Jean-Francois Tremblay Date: 2017-05-02

Review and authorization to fabricate are only for general conformance with the design concept of the Project as expressed in the Contract Documents. Sole responsibility for the accuracy and completeness of this document, including but not limited to dimensions and quantities, remains with the Supplier/Contractor. Agnico Eagle does not warrant the accuracy or completeness of any of the information contained herein, nor does Agnico Eagle authorize or approve any construction means, methods, techniques, sequences or any safety precautions or procedures.

Agnico Eagle No. 6515-C-270-007-141-TES-0002 R: Sub001

DOCUMENT FOR INFORMATION

AGNICO-EAGLE MINES Ltd.
Inspection & Testing Report

NUQSANA PROMEC MINING

ITR Number: AEM-EL-ITR-001
ITR Type: GENERAL
Contract No.: 6515-C-270-007

AGNICO EAGLE

Tag Number:		**Equipment/ Pipe N°:**		**System:**	
Service:		**Function:**		**Purchase Order:**	
Manufacturer:		**Model:**		**Serial Number:**	
Location Dwg :		**Reference Datasheet:**		**Installation Detail Dwg:**	
Reference Datasheet Number:					

Item N°	Inspection Points	C	NC/ NCR #	N/A	Completed By/ Date
1	DEVICE INSTALLED AS PER INSTALLATION DETAILS, LOCATION OR MANUFACTURERS DRAWINGS	C	NC #_____	N/A	Promec: CLIENT:
2	EQUIPMENT ACESSIBLE AND EASY TO MAINTAIN	C	NC #_____	N/A	Promec: CLIENT:
3	EQUIPMENT RACK OR CLAMPING DEVICE ADEQUATE (HEIGHT, SOLIDITY ETC.)	C	NC #_____	N/A	Promec: CLIENT:
4	GROUNDING INSTALLED AND CONNECTED	C	NC #_____	N/A	Promec: CLIENT:
5	TERMINAL CONNECTION CONNECTED AND TORQUED	C	NC #_____	N/A	Promec: CLIENT:
6	BREAKER CONNECTIONS CONNECTED AND TORQUED	C	NC #_____	N/A	Promec: CLIENT:
7	LUG BOLT TORQUE	C	NC #_____	N/A	Promec: CLIENT:
8	POWER BUS BAR BOLTED AND TORQUED	C	NC #_____	N/A	Promec: CLIENT:
9	GROUND BUS BAR BOLTED AND TORQUED	C	NC #_____	N/A	Promec: CLIENT:
10	MEGGER EQUIPMENT	C	NC #_____	N/A	Promec: CLIENT:
11	MEGGER CABLES	C	NC #_____	N/A	Promec: CLIENT:
12	HI-POT TEST	C	NC #_____	N/A	Promec: CLIENT:
13	PANELS IDENTIFIED	C	NC #_____	N/A	Promec: CLIENT:
14	UNIT DRAWER IDENTIFIED	C	NC #_____	N/A	Promec: CLIENT:
15	BREAKERS IDENTIFIED	C	NC #_____	N/A	Promec: CLIENT:
16	CABLES IDENTIFIED	C	NC #_____	N/A	Promec: CLIENT:
17	SEAL O RING INSTALLED (IF APPLICABLE)	C	NC #_____	N/A	Promec: CLIENT:
18	FUSES INSTALLED AND OF ADEQUATE SIZE	C	NC #_____	N/A	Promec: CLIENT:
18	VISUAL INSPECTION	C	NC #_____	N/A	Promec: CLIENT:
20	CLEAN / VACUUMED	C	NC #_____	N/A	Promec: CLIENT:

NUQSANA PROMEC MINING

AGNICO-EAGLE MINES Ltd.
Inspection & Testing Report

ITR Number: AEM-EL-ITR-001
ITR Type: GENERAL
Contract No.: 6515-C-270-007

AGNICO EAGLE

Tag Number:		Equipment/ Pipe N°:		System:	
Service:		Function:		Purchase Order:	
Manufacturer:		Model:		Serial Number:	
Location Dwg :		Reference Datasheet:		Installation Detail Dwg:	
Reference Datasheet Number:					

Item N°	Inspection Points	C	NC/ NCR #	N/A	Completed By/ Date
21	PANEL AND DOOR CLOSED AND BOLTED	C	NC #_____	N/A	Promec: CLIENT:

Comments

Sign Off			
Promec Signature:		CLIENT Signature:	
Date:		Date:	

Legend					
C	Conformance	NC	Non Conformance	N/A	Not Applicable
NCR	Non Conformance Report				

AGNICO EAGLE

Vendor Document Status

1 ☐ Proceed to next submission and status.

2 ☐ Proceed with exceptions as noted to next submission and status.

3 ☐ Do not proceed.
Revise as noted and resubmit next submission and status.

4 ☑ Complete, no further submission required.

By: JEAN-FRANCOIS TREMBLAY Date: 2017-06-22

Review and authorization to fabricate are only for general conformance with the design concept of the Project as expressed in the Contract Documents. Sole responsibility for the accuracy and completeness of this document, including but not limited to dimensions and quantities, remains with the Supplier/Contractor. Agnico Eagle does not warrant the accuracy or completeness of any of the information contained herein, nor does Agnico Eagle authorize or approve any construction means, methods, techniques, sequences or any safety precautions or procedures.

Agnico Eagle No. 6515-C-270-007-141-TES-0021 R: Sub002

DOCUMENT FOR INFORMATION

AGNICO-EAGLE MINES Ltd.
Inspection & Testing Report

ITR Number: AEM-IN-ITR-001B
ITR Type: FLOW SWITCH
Contract No.: 6515-C-270-007

NUQSANA PROMEC MINING

AGNICO EAGLE

Tag Number:		**Equipment/ Pipe N°:**		**System:**	
Service:		**Function:**		**Purchase Order:**	
Manufacturer:		**Model:**		**Serial Number:**	
Location Dwg :		**Reference Datasheet:**		**Installation Detail Dwg:**	
Reference Datasheet Number:					

Item N°	Inspection Points	C	NC/ NCR #	N/A	Completed By/ Date
1	INSTRUMENT TAG ATTACHED	C	NC #_____	N/A	Promec: CLIENT:
2	CABLE TAG ATTACHED	C	NC #_____	N/A	Promec: CLIENT:
3	DEVICE INSTALLED AS PER INSTALLATION DETAILS, LOCATION OR MANUFACTURER'S DRAWING	C	NC #_____	N/A	Promec: CLIENT:
4	EQUIPMENT ACCESSIBLE AND EASY TO MAINTAIN	C	NC #_____	N/A	Promec: CLIENT:
5	WIRING CORRECT AND PROPERLY LABELED	C	NC #_____	N/A	Promec: CLIENT:
6	FLOW ARROW OR ORIENTATION MATCHES PROCESS FLOW	C	NC #_____	N/A	Promec: CLIENT:
7	PROCESS CONNECTION ADEQUATE (SCREWED OR FLANGED)	C	NC #_____	N/A	Promec: CLIENT:
8	CALIBRATION CERTIFICATE AVAILABLE	C	NC #_____	N/A	Promec: CLIENT:
9	ELECTRICAL SUPPLY COMPATIBLE WITH SOURCE	C	NC #_____	N/A	Promec: CLIENT:
10		C	NC #_____	N/A	Promec: CLIENT:
11		C	NC #_____	N/A	Promec: CLIENT:

Comments

Sign Off			
Promec Signature:		**CLIENT Signature:**	
Date:		**Date:**	

Legend					
C	Conformance	**NC**	Non Conformance	**N/A**	Not Applicable
NCR	Non Conformance Report				

AGNICO EAGLE

Vendor Document Status

1 ☐ Proceed to next submission and status.

2 ☐ Proceed with exceptions as noted to next submission and status.

3 ☐ Do not proceed.
Revise as noted and resubmit next submission and status.

4 ☑ Complete, no further submission required.

By: JEAN-FRANCOIS TREMBLAY Date: 2017-06-22

Review and authorization to fabricate are only for general conformance with the design concept of the Project as expressed in the Contract Documents. Sole responsibility for the accuracy and completeness of this document, including but not limited to dimensions and quantities, remains with the Supplier/Contractor. Agnico Eagle does not warrant the accuracy or completeness of any of the information contained herein, nor does Agnico Eagle authorize or approve any construction means, methods, techniques, sequences or any safety precautions or procedures.

Agnico Eagle No. 6515-C-270-007-141-TES-0022 R: Sub002

DOCUMENT FOR INFORMATION

NUQSANA PROMEC MINING

AGNICO-EAGLE MINES Ltd.
Inspection & Testing Report

ITR Number: AEM-IN-ITR-001C
ITR Type: FLOW TRANSMITTER
Contract No.: 6515-C-270-007

AGNICO EAGLE

Tag Number:		**Equipment/ Pipe N°:**		**System:**	
Service:		**Function:**		**Purchase Order:**	
Manufacturer:		**Model:**		**Serial Number:**	
Location Dwg :		**Reference Datasheet:**		**Installation Detail Dwg:**	
Reference Datasheet Number:					

Item N°	Inspection Points	C	NC/ NCR #	N/A	Completed By/ Date
1	INSTRUMENT TAG ATTACHED	C	NC #_____	N/A	Promec: CLIENT:
2	CABLE TAG ATTACHED	C	NC #_____	N/A	Promec: CLIENT:
3	DEVICE INSTALLED AS PER INSTALLATION DETAILS, LOCATION OR MANUFACTURER'S DRAWING	C	NC #_____	N/A	Promec: CLIENT:
4	EQUIPMENT ACESSIBLE AND EASY TO MAINTAIN	C	NC #_____	N/A	Promec: CLIENT:
5	EQUIPMENT RACK OR CLAMPING DEVICE ADEQUATE (HEIGHT, SOLIDITY ETC.)	C	NC #_____	N/A	Promec: CLIENT:
6	WIRING CORRECT AND PROPERLY LABELED	C	NC #_____	N/A	Promec: CLIENT:
7	MINIMUM STRAIGHT PIPE LENGHT UPSTREAM AND DOWNSTREAM REQUIREMENT	C	NC #_____	N/A	Promec: CLIENT:
8	GROUNDING OF DEVICE	C	NC #_____	N/A	Promec: CLIENT:
9	FLOW ARROW OR ORIENTATION MATCHES PROCESS FLOW	C	NC #_____	N/A	Promec: CLIENT:
10	DISPLAY VISIBLE	C	NC #_____	N/A	Promec: CLIENT:
11	PROCESS CONNECTION ADEQUATE (SCREWED OR FLANGED)	C	NC #_____	N/A	Promec: CLIENT:
12	CALIBRATION CERTIFICATE AVAILABLE	C	NC #_____	N/A	Promec: CLIENT:
13	ELECTRICAL SUPPLY COMPATIBLE WITH SOURCE	C	NC #_____	N/A	Promec: CLIENT:

Comments

Sign Off			
Promec Signature:		**CLIENT Signature:**	
Date:		**Date:**	

Legend					
C	Conformance	**NC**	Non Conformance	**N/A**	Not Applicable
NCR	Non Conformance Report				

NUQSANA PROMEC MINING

AGNICO-EAGLE MINES Ltd.
Inspection & Testing Report

ITR Number: AEM-IN-ITR-002A
ITR Type: PUSH BUTTON STATION
Contract No.: 6515-C-270-007

Vendor Document Status
AGNICO EAGLE
1 ☐ Proceed to next submission and status.
2 ☐ Proceed with exceptions as noted to next submission and status.
3 ☐ Do not proceed, ... noted and resubmit next submission and status.
4 ☑ Complete, no further submission required.
By: JEAN-FRANCOIS TREMBLAY Date: 2017-06-29
Review and authorization to fabricate only for general conformance with the design concept of the Proposal as noted in the Contract Documents. Sole responsibility for the accuracy and completeness of this document, including but not limited to dimensions and quantities, remains with the Supplier/Contractor. Agnico Eagle does not warrant the accuracy or completeness of any of the information contained herein, nor does Agnico Eagle authorize or approve any construction means, methods, techniques, sequences or any safety precautions or procedures.
Agnico Eagle No: 6515-C-270-007-141-TES-0023 • Sub002
DOCUMENT FOR INFORMATION

AGNICO EAGLE

Tag Number:		**Equipment/ Pipe N°:**		**System:**	
Service:		**Function:**		**Purchase Order:**	
Manufacturer:		**Model:**		**Serial Number:**	
Location Dwg :		**Reference Datasheet:**		**Installation Detail Dwg:**	
Reference Datasheet Number:					

Item N°	Inspection Points	C	NC/ NCR #	N/A	Completed By/ Date
1	INSTRUMENT TAG ATTACHED	C	NC #	N/A	Promec: CLIENT:
2	CABLE TAG ATTACHED	C	NC #	N/A	Promec: CLIENT:
3	DEVICE INSTALLED AS PER INSTALLATION DETAILS, LOCATION OR MANUFACTURER'S DRAWING	C	NC #	N/A	Promec: CLIENT:
4	EQUIPMENT ACCESSIBLE AND EASY TO MAINTAIN / OPERATE	C	NC #	N/A	Promec: CLIENT:
5	EQUIPMENT RACK OR CLAMPING DEVICE ADEQUATE (HEIGHT, SOLIDITY ETC.)	C	NC #	N/A	Promec: CLIENT:
6	WIRING CORRECT AND PROPERLY LABELED	C	NC #	N/A	Promec: CLIENT:
7		C	NC #	N/A	Promec: CLIENT:
8		C	NC #	N/A	Promec: CLIENT:
9		C	NC #	N/A	Promec: CLIENT:
10		C	NC #	N/A	Promec: CLIENT:
11		C	NC #	N/A	Promec: CLIENT:

Comments

Sign Off			
Promec Signature:		**CLIENT Signature:**	
Date:		**Date:**	

Legend					
C	Conformance	NC	Non Conformance	N/A	Not Applicable
NCR	Non Conformance Report				

AGNICO EAGLE

Vendor Document Status

1 ☐ Proceed to next submission and status.

2 ☐ Proceed with exceptions as noted to next submission and status.

3 ☐ Do not proceed.
Revise as noted and resubmit next submission and status.

4 ☑ Complete, no further submission required.

By: JEAN-FRANCOIS TREMBLAY Date: 2017-06-22

Review and authorization to fabricate are only for general conformance with the design concept of the Project as expressed in the Contract Documents. Sole responsibility for the accuracy and completeness of this document, including but not limited to dimensions and quantities, remains with the Supplier/Contractor. Agnico Eagle does not warrant the accuracy or completeness of any of the information contained herein, nor does Agnico Eagle authorize or approve any construction means, methods, techniques, sequences or any safety precautions or procedures.

Agnico Eagle No. 6515-C-270-007-141-TES-0024 R: Sub002

DOCUMENT FOR INFORMATION

NUQSANA PROMEC MINING

AGNICO-EAGLE MINES Ltd.
Inspection & Testing Report

ITR Number: AEM-IN-ITR-003A
ITR Type: LEVEL TRANSMITTER
Contract No.: 6515-C-270-007

AGNICO EAGLE

Tag Number:		**Equipment/ Pipe N°:**		**System:**	
Service:		**Function:**		**Purchase Order:**	
Manufacturer:		**Model:**		**Serial Number:**	
Location Dwg :		**Reference Datasheet:**		**Installation Detail Dwg:**	
Reference Datasheet Number:					

Item N°	Inspection Points	C	NC/ NCR #	N/A	Completed By/ Date
1	INSTRUMENT TAG ATTACHED	C	NC #_____	N/A	Promec: CLIENT:
2	CABLE TAG ATTACHED	C	NC #_____	N/A	Promec: CLIENT:
3	DEVICE INSTALLED AS PER INSTALLATION DETAILS, LOCATION OR MANUFACTURER'S DRAWING	C	NC #_____	N/A	Promec: CLIENT:
4	EQUIPMENT ACCESSIBLE AND EASY TO MAINTAIN	C	NC #_____	N/A	Promec: CLIENT:
5	EQUIPMENT RACK OR CLAMPING DEVICE ADEQUATE (HEIGHT, SOLIDITY ETC.)	C	NC #_____	N/A	Promec: CLIENT:
6	WIRING CORRECT AND PROPERLY LABELED	C	NC #_____	N/A	Promec: CLIENT:
7	NOZZLE IS UNOBSTRUCTED OR ADEQUATE	C	NC #_____	N/A	Promec: CLIENT:
8	DISPLAY VISIBLE	C	NC #_____	N/A	Promec: CLIENT:
9	PROCESS CONNECTION ADEQUATE (SCREWED OR FLANGED)	C	NC #_____	N/A	Promec: CLIENT:
10	CALIBRATION CERTIFICATE AVAILABLE	C	NC #_____	N/A	Promec: CLIENT:
11	ELECTRICAL SUPPLY COMPATIBLE WITH SOURCE	C	NC #_____	N/A	Promec: CLIENT:

Comments

Sign Off			
Promec Signature:		**CLIENT Signature:**	
Date:		**Date:**	

Legend					
C	Conformance	NC	Non Conformance	N/A	Not Applicable
NCR	Non Conformance Report				

AGNICO EAGLE

Vendor Document Status

1 ☐ Proceed to next submission and status.

2 ☐ Proceed with exceptions as noted to next submission and status.

3 ☐ Do not proceed.
Revise as noted and resubmit next submission and status.

4 ☑ Complete, no further submission required.

By: JEAN-FRANCOIS TREMBLAY Date: 2017-06-22

Review and authorization to fabricate are only for general conformance with the design concept of the Project as expressed in the Contract Documents. Sole responsibility for the accuracy and completeness of this document, including but not limited to dimensions and quantities, remains with the Supplier/Contractor. Agnico Eagle does not warrant the accuracy or completeness of any of the information contained herein, nor does Agnico Eagle authorize or approve any construction means, methods, techniques, sequences or any safety precautions or procedures.

Agnico Eagle No. 6515-C-270-007-141-TES-0027 R: Sub002

DOCUMENT FOR INFORMATION

AGNICO-EAGLE MINES Ltd.
Inspection & Testing Report

ITR Number: AEM-IN-ITR-004C
ITR Type: PRESSURE SWITCH
Contract No.: 6515-C-270-007

NUQSANA PROMEC MINING

AGNICO EAGLE

Tag Number:		**Equipment/ Pipe N°:**		**System:**	
Service:		**Function:**		**Purchase Order:**	
Manufacturer:		**Model:**		**Serial Number:**	
Location Dwg :		**Reference Datasheet:**		**Installation Detail Dwg:**	
Reference Datasheet Number:					

Item N°	Inspection Points	C	NC/ NCR #	N/A	Completed By/ Date
1	INSTRUMENT TAG ATTACHED	C	NC #_____	N/A	Promec: CLIENT:
2	CABLE TAG ATTACHED	C	NC #_____	N/A	Promec: CLIENT:
3	DEVICE INSTALLED AS PER INSTALLATION DETAILS, LOCATION OR MANUFACTURER'S DRAWING	C	NC #_____	N/A	Promec: CLIENT:
4	EQUIPMENT ACCESSIBLE AND EASY TO MAINTAIN	C	NC #_____	N/A	Promec: CLIENT:
5	WIRING CORRECT AND PROPERLY LABELED	C	NC #_____	N/A	Promec: CLIENT:
6	BLOCK AND BLEED VALVE	C	NC #_____	N/A	Promec: CLIENT:
7	PROCESS CONNECTION ADEQUATE (SCREWED OR FLANGED)	C	NC #_____	N/A	Promec: CLIENT:
8	CALIBRATION CERTIFICATE AVAILABLE	C	NC #_____	N/A	Promec: CLIENT:
9	ELECTRICAL SUPPLY COMPATIBLE WITH SOURCE	C	NC #_____	N/A	Promec: CLIENT:
10		C	NC #_____	N/A	Promec: CLIENT:
11		C	NC #_____	N/A	Promec: CLIENT:

Comments

Sign Off			
Promec Signature:		**CLIENT Signature:**	
Date:		**Date:**	

Legend					
C	Conformance	**NC**	Non Conformance	**N/A**	Not Applicable
NCR	Non Conformance Report				

AGNICO EAGLE

Vendor Document Status

1 ☐ Proceed to next submission and status.

2 ☐ Proceed with exceptions as noted to next submission and status.

3 ☐ Do not proceed.
Revise as noted and resubmit next submission and status.

4 ☑ Complete, no further submission required.

By: JEAN-FRANCOIS TREMBLAY Date: 2017-06-22

Review and authorization to fabricate are only for general conformance with the design concept of the Project as expressed in the Contract Documents. Sole responsibility for the accuracy and completeness of this document, including but not limited to dimensions and quantities, remains with the Supplier/Contractor. Agnico Eagle does not warrant the accuracy or completeness of any of the information contained herein, nor does Agnico Eagle authorize or approve any construction means, methods, techniques, sequences or any safety precautions or procedures.

Agnico Eagle No. 6515-C-270-007-141-TES-0029 R: Sub002

DOCUMENT FOR INFORMATION

NUQSANA PROMEC MINING

AGNICO-EAGLE MINES Ltd.
Inspection & Testing Report

ITR Number: AEM-IN-ITR-006A
ITR Type: On / OFF VALVE
Contract No.: 6515-C-270-007

AGNICO EAGLE

Tag Number:		**Equipment/ Pipe N°:**		**System:**	
Service:		**Function:**		**Purchase Order:**	
Manufacturer:		**Model:**		**Serial Number:**	
Location Dwg :		**Reference Datasheet:**		**Installation Detail Dwg:**	
Reference Datasheet Number:					

Item N°	Inspection Points	C	NC/ NCR #	N/A	Completed By/ Date
1	INSTRUMENT TAG ATTACHED	C	NC #_____	N/A	Promec: CLIENT:
2	CABLE TAG ATTACHED	C	NC #_____	N/A	Promec: CLIENT:
3	DEVICE INSTALLED AS PER INSTALLATION DETAILS, LOCATION OR MANUFACTURER'S DRAWING	C	NC #_____	N/A	Promec: CLIENT:
4	EQUIPMENT ACCESSIBLE AND EASY TO MAINTAIN	C	NC #_____	N/A	Promec: CLIENT:
5	WIRING CORRECT AND PROPERLY LABELED	C	NC #_____	N/A	Promec: CLIENT:
6	SS AIR SUPPLY TUBING MINIMUM 3/8"	C	NC #_____	N/A	Promec: CLIENT:
7	MINIMUM STRAIGHT PIPE LENGHT UPSTREAM AND DOWNSTREAM REQUIREMENT	C	NC #_____	N/A	Promec: CLIENT:
8	POSITIONER, SOLENOID OR LIMIT SWITCH IS UNDAMAGED	C	NC #_____	N/A	Promec: CLIENT:
9	FLOW ARROW OR ORIENTATION MATCHES PROCESS FLOW	C	NC #_____	N/A	Promec: CLIENT:
10	OPERATION BLOCK IN VALVE	C	NC #_____	N/A	Promec: CLIENT:
11	PROCESS CONNECTION ADEQUATE (SCREWED OR FLANGED)	C	NC #_____	N/A	Promec: CLIENT:
12	CALIBRATION CERTIFICATE AVAILABLE	C	NC #_____	N/A	Promec: CLIENT:
13	ELECTRICAL SUPPLY COMPATIBLE WITH SOURCE	C	NC #_____	N/A	Promec: CLIENT:

Comments

Sign Off			
Promec Signature:		**CLIENT Signature:**	
Date:		**Date:**	

Legend					
C	Conformance	**NC**	Non Conformance	**N/A**	Not Applicable
NCR	Non Conformance Report				

AGNICO EAGLE

Vendor Document Status

1 ☐ Proceed to next submission and status.

2 ☐ Proceed with exceptions as noted to next submission and status.

3 ☐ Do not proceed.
Revise as noted and resubmit next submission and status.

4 ☑ Complete, no further submission required.

By: JEAN-FRANCOIS TREMBLAY Date: 2017-06-22

Review and authorization to fabricate are only for general conformance with the design concept of the Project as expressed in the Contract Documents. Sole responsibility for the accuracy and completeness of this document, including but not limited to dimensions and quantities, remains with the Supplier/Contractor. Agnico Eagle does not warrant the accuracy or completeness of any of the information contained herein, nor does Agnico Eagle authorize or approve any construction means, methods, techniques, sequences or any safety precautions or procedures.

Agnico Eagle No. 6515-C-270-007-141-TES-0056 R: Sub001

DOCUMENT FOR INFORMATION

NUQSANA PROMEC MINING

AGNICO-EAGLE MINES Ltd.
Inspection & Testing Report

ITR Number: AEM-IN-ITR-001A
ITR Type: FLOW ELEMENT
Contract No.: 6515-C-270-007

AGNICO EAGLE

Tag Number:		**Equipment/ Pipe N°:**		**System:**	
Service:		**Function:**		**Purchase Order:**	
Manufacturer:		**Model:**		**Serial Number:**	
Location Dwg :		**Reference Datasheet:**		**Installation Detail Dwg:**	
Reference Datasheet Number:					

Item N°	Inspection Points	C	NC/ NCR #	N/A	Completed By/ Date
1	INSTRUMENT TAG ATTACHED	C	NC #_____	N/A	Promec: CLIENT:
2	CABLE TAG ATTACHED	C	NC #_____	N/A	Promec: CLIENT:
3	DEVICE INSTALLED AS PER INSTALLATION DETAILS, LOCATION OR MANUFACTURER'S DRAWING	C	NC #_____	N/A	Promec: CLIENT:
4	EQUIPMENT ACCESSIBLE AND EASY TO MAINTAIN	C	NC #_____	N/A	Promec: CLIENT:
5	EQUIPMENT RACK OR CLAMPING DEVICE ADEQUATE (HEIGHT, SOLIDITY ETC.)	C	NC #_____	N/A	Promec: CLIENT:
6	WIRING CORRECT AND PROPERLY LABELED	C	NC #_____	N/A	Promec: CLIENT:
7	MINIMUM STRAIGHT PIPE LENGHT UPSTREAM AND DOWNSTREAM REQUIREMENT	C	NC #_____	N/A	Promec: CLIENT:
8	GROUNDING OF DEVICE	C	NC #_____	N/A	Promec: CLIENT:
9	FLOW ARROW OR ORIENTATION MATCHES PROCESS FLOW	C	NC #_____	N/A	Promec: CLIENT:
10	PROCESS CONNECTION ADEQUATE (SCREWED OR FLANGED)	C	NC #_____	N/A	Promec: CLIENT:
11	DEFICIENCY LIST ITEMS CLEARED	C	NC #_____	N/A	Promec: CLIENT:
12	CALIBRATION CERTIFICATE AVAILABLE	C	NC #_____	N/A	Promec: CLIENT:
13	ELECTRICAL SUPPLY COMPATIBLE WITH SOURCE	C	NC #_____	N/A	Promec: CLIENT:

Comments

Sign Off			
Promec Signature:		**CLIENT Signature:**	
Date:		**Date:**	

Legend					
C	Conformance	NC	Non Conformance	N/A	Not Applicable
NCR	Non Conformance Report				

AGNICO EAGLE

Vendor Document Status

1 ☐ Proceed to next submission and status.

2 ☐ Proceed with exceptions as noted to next submission and status.

3 ☐ Do not proceed.
Revise as noted and resubmit next submission and status.

4 ☑ Complete, no further submission required.

By: JEAN-FRANCOIS TREMBLAY Date: 2017-06-22

Review and authorization to fabricate are only for general conformance with the design concept of the Project as expressed in the Contract Documents. Sole responsibility for the accuracy and completeness of this document, including but not limited to dimensions and quantities, remains with the Supplier/Contractor. Agnico Eagle does not warrant the accuracy or completeness of any of the information contained herein, nor does Agnico Eagle authorize or approve any construction means, methods, techniques, sequences or any safety precautions or procedures.

Agnico Eagle No. 6515-C-270-007-141-TES-0025 R: Sub002

DOCUMENT FOR INFORMATION

AGNICO-EAGLE MINES Ltd.
Inspection & Testing Report

ITR Number: AEM-IN-ITR-004A
ITR Type: PRESSURE INDICATOR
Contract No.: 6515-C-270-007

Tag Number:		**Equipment/ Pipe N°:**		**System:**	
Service:		**Function:**		**Purchase Order:**	
Manufacturer:		**Model:**		**Serial Number:**	
Location Dwg :		**Reference Datasheet:**		**Installation Detail Dwg:**	
Reference Datasheet Number:					

Item N°	Inspection Points	C	NC/ NCR #	N/A	Completed By/ Date
1	INSTRUMENT TAG ATTACHED	C	NC #_____	N/A	Promec: CLIENT:
2	DEVICE INSTALLED AS PER INSTALLATION DETAILS, LOCATION OR MANUFACTURER'S DRAWING	C	NC #_____	N/A	Promec: CLIENT:
3	EQUIPMENT ACCESSIBLE AND EASY TO MAINTAIN	C	NC #_____	N/A	Promec: CLIENT:
4	PROCESS CONNECTION ADEQUATE (SCREWED OR FLANGED)	C	NC #_____	N/A	Promec: CLIENT:
5	OPERATION BLOCK IN VALVE	C	NC #_____	N/A	Promec: CLIENT:
6	READING VISIBLE	C	NC #_____	N/A	Promec: CLIENT:
7	CALIBRATION CERTIFICATE AVAILABLE	C	NC #_____	N/A	Promec: CLIENT:
8	ELECTRICAL SUPPLY COMPATIBLE WITH SOURCE	C	NC #_____	N/A	Promec: CLIENT:
9		C	NC #_____	N/A	Promec: CLIENT:
10		C	NC #_____	N/A	Promec: CLIENT:
11		C	NC #_____	N/A	Promec: CLIENT:

Comments

Sign Off			
Promec Signature:		**CLIENT Signature:**	
Date:		**Date:**	

Legend					
C	Conformance	**NC**	Non Conformance	**N/A**	Not Applicable
NCR	Non Conformance Report				

AGNICO EAGLE

Vendor Document Status

1 ☐ Proceed to next submission and status.

2 ☐ Proceed with exceptions as noted to next submission and status.

3 ☐ Do not proceed.
Revise as noted and resubmit next submission and status.

4 ☑ Complete, no further submission required.

By: JEAN-FRANCOIS TREMBLAY Date: 2017-06-22

Review and authorization to fabricate are only for general conformance with the design concept of the Project as expressed in the Contract Documents. Sole responsibility for the accuracy and completeness of this document, including but not limited to dimensions and quantities, remains with the Supplier/Contractor. Agnico Eagle does not warrant the accuracy or completeness of any of the information contained herein, nor does Agnico Eagle authorize or approve any construction means, methods, techniques, sequences or any safety precautions or procedures.

Agnico Eagle No. 6515-C-270-007-141-TES-0026 R: Sub002

DOCUMENT FOR INFORMATION

NUQSANA PROMEC MINING

AGNICO-EAGLE MINES Ltd.
Inspection & Testing Report

ITR Number: AEM-IN-ITR-004B
ITR Type: PRESSURE SAFETY VALVE
Contract No.: 6515-C-270-007

AGNICO EAGLE

Tag Number:		**Equipment/ Pipe N°:**		**System:**	
Service:		**Function:**		**Purchase Order:**	
Manufacturer:		**Model:**		**Serial Number:**	
Location Dwg :		**Reference Datasheet:**		**Installation Detail Dwg:**	
Reference Datasheet Number:					

Item N°	Inspection Points	C	NC/ NCR #	N/A	Completed By/ Date
1	INSTRUMENT TAG ATTACHED	C	NC #	N/A	Promec: CLIENT:
2	DEVICE INSTALLED AS PER INSTALLATION DETAILS, LOCATION OR MANUFACTURER'S DRAWING	C	NC #	N/A	Promec: CLIENT:
3	EQUIPMENT ACCESSIBLE AND EASY TO MAINTAIN	C	NC #	N/A	Promec: CLIENT:
4	FLOW ARROW ON SENSOR OR ORIENTATION MATCHES PROCESS FLOW	C	NC #	N/A	Promec: CLIENT:
5	PROCESS CONNECTION ADEQUATE (SCREWED OR FLANGED)	C	NC #	N/A	Promec: CLIENT:
6	CALIBRATION CERTIFICATE AVAILABLE	C	NC #	N/A	Promec: CLIENT:
7	ELECTRICAL SUPPLY COMPATIBLE WITH SOURCE	C	NC #	N/A	Promec: CLIENT:
8		C	NC #	N/A	Promec: CLIENT:
9		C	NC #	N/A	Promec: CLIENT:
10		C	NC #	N/A	Promec: CLIENT:
11		C	NC #	N/A	Promec: CLIENT:

Comments

Sign Off			
Promec Signature:		**CLIENT Signature:**	
Date:		**Date:**	

Legend					
C	Conformance	**NC**	Non Conformance	**N/A**	Not Applicable
NCR	Non Conformance Report				

NUQSANA PROMEC MINING

AGNICO-EAGLE MINES Ltd.
Inspection & Testing Report

ITR Number: AEM-IN-ITR-003B
ITR Type: LEVEL GAUGE GLASS
Contract No.: 6515-C-270-007

AGNICO EAGLE — Vendor Document Status

1 ☐ Proceed to next submission and status.
2 ☐ Proceed with exceptions as noted to next submission and status
3 ☐ Do not proceed. Revise as noted and resubmit next submission and status.
4 ☑ Complete, no further submission required.

By: JEAN-FRANCOIS TREMBLAY Date: 2017-06-29

Review and authorization to fabrication only for general conformance with the design concept of the Project and compliance in the Contract Documents. Sole responsibility for the accuracy and completeness of this document, including but not limited to dimensions and quantities, remains with the Supplier/Contractor. Agnico Eagle does not warrant the accuracy or completeness of any of the information contained herein, nor does Agnico Eagle authorize or approve any construction means, methods, techniques, sequences or any safety precautions or procedures.

Agnico Eagle no. 6515-C-270-007-141-TES-0057 #: Sub002

DOCUMENT FOR INFORMATION

AGNICO EAGLE

Tag Number:		**Equipment/ Pipe N°:**		**System:**	
Service:		**Function:**		**Purchase Order:**	
Manufacturer:		**Model:**		**Serial Number:**	
Location Dwg :		**Reference Datasheet:**		**Installation Detail Dwg:**	
Reference Datasheet Number:					

Item N°	Inspection Points	C	NC/ NCR #	N/A	Completed By/ Date
1	INSTRUMENT TAG ATTACHED	C	NC #_____	N/A	Promec: CLIENT:
2	DEVICE INSTALLED AS PER INSTALLATION DETAILS, LOCATION OR MANUFACTURER'S DRAWING	C	NC #_____	N/A	Promec: CLIENT:
3	EQUIPMENT ACCESSIBLE AND EASY TO MAINTAIN	C	NC #_____	N/A	Promec: CLIENT:
4	PROCESS CONNECTION ADEQUATE (SCREWED OR FLANGED)	C	NC #_____	N/A	Promec: CLIENT:
5	HAVE OPERATION BLOCK IN VALVE	C	NC #_____	N/A	Promec: CLIENT:
6	READING VISIBLE	C	NC #_____	N/A	Promec: CLIENT:
7	CALIBRATION CERTIFICATE AVAILABLE	C	NC #_____	N/A	Promec: CLIENT:
8	ELECTRICAL SUPPLY COMPATIBLE WITH SOURCE	C	NC #_____	N/A	Promec: CLIENT:
9		C	NC #_____	N/A	Promec: CLIENT:
10		C	NC #_____	N/A	Promec: CLIENT:
11		C	NC #_____	N/A	Promec: CLIENT:

Comments

Sign Off			
Promec Signature:		**CLIENT Signature:**	
Date:		**Date:**	

Legend					
C	Conformance	**NC**	Non Conformance	**N/A**	Not Applicable
NCR	Non Conformance Report				

AGNICO EAGLE

Vendor Document Status

1 ☐ Proceed to next submission and status.

2 ☐ Proceed with exceptions as noted to next submission and status.

3 ☐ Do not proceed.
Revise as noted and resubmit next submission and status.

4 ☑ Complete, no further submission required.

By: Jean-Francois Tremblay Date: 2017-05-02

Review and authorization to fabricate are only for general conformance with the design concept of the Project as expressed in the Contract Documents. Sole responsibility for the accuracy and completeness of this document, including but not limited to dimensions and quantities, remains with the Supplier/Contractor. Agnico Eagle does not warrant the accuracy or completeness of any of the information contained herein, nor does Agnico Eagle authorize or approve any construction means, methods, techniques, sequences or any safety precautions or procedures.

Agnico Eagle No. 6515-C-270-007-141-TES-0012 R: Sub001

DOCUMENT FOR INFORMATION

NUQSANA PROMEC MINING

AGNICO-EAGLE MINES Ltd.
Inspection & Testing Report

ITR Number: AEM-EL-ITR-005
ITR Type: MOTOR
Contract No.: 6515-C-270-007

AGNICO EAGLE

Tag Number:		**Equipment/ Pipe N°:**		**System:**	
Service:		**Function:**		**Purchase Order:**	
Manufacturer:		**Model:**		**Serial Number:**	
Location Dwg :		**Reference Datasheet:**		**Installation Detail Dwg:**	
Reference Datasheet Number:					

Item N°	Inspection Points	C	NC/ NCR #	N/A	Completed By/ Date
1	EQUIPEMENT ACCESSIBLE AND EASY TO MAINTAIN	C	NC #_____	N/A	Promec: CLIENT:
2	NAME PLATE DATA AGREES WITH MOTOR DATA SHEET	C	NC #_____	N/A	Promec: CLIENT:
3	MOTOR ENCLOSURE TYPE IS SUITABLE FOR USE IN AREA CLASSIFICATION	C	NC #_____	N/A	Promec: CLIENT:
4	GROUNDING CONDUCTORS INSTALLED AND CONNECTED (4/ 0 for motor over 100 HP)	C	NC #_____	N/A	Promec: CLIENT:
5	MOTOR HAS BEEN INSULATION RESISTANCE TESTED (Megger)	C	NC #_____	N/A	Promec: CLIENT:
6	MOTOR TERMINATIONS HAVE BEEN PROPERLY MADE UP	C	NC #_____	N/A	Promec: CLIENT:
7	ROTATION CHECKED	C	NC #_____	N/A	Promec: CLIENT:
8	DEFICIENCY LIST ITEMS CLEARED	C	NC #_____	N/A	Promec: CLIENT:

Comments

Sign Off			
Promec Signature:		**CLIENT Signature:**	
Date:		**Date:**	

Legend					
C	Conformance	**NC**	Non Conformance	**N/A**	Not Applicable
NCR	Non Conformance Report				

AGNICO EAGLE

Vendor Document Status

1 ☐ Proceed to next submission and status.

2 ☐ Proceed with exceptions as noted to next submission and status.

3 ☐ Do not proceed.
Revise as noted and resubmit next submission and status.

4 ☑ Complete, no further submission required.

By: Jean-Francois Tremblay Date: 2017-05-02

Review and authorization to fabricate are only for general conformance with the design concept of the Project as expressed in the Contract Documents. Sole responsibility for the accuracy and completeness of this document, including but not limited to dimensions and quantities, remains with the Supplier/Contractor. Agnico Eagle does not warrant the accuracy or completeness of any of the information contained herein, nor does Agnico Eagle authorize or approve any construction means, methods, techniques, sequences or any safety precautions or procedures.

Agnico Eagle No. 6515-C-270-007-141-TES-0018 R: Sub001

DOCUMENT FOR INFORMATION

Agnico-Eagle Mines Ltd.
Miscellaneous Field Report

ITR Number : AEM-GE-ITR-006
Contract no. : C22466T / C22498E

SYSTEM:	TAG NO. :	
LOCATION:	AREA:	UNIT:

DATE	ACTIVITY

PROMEC DESIGNATE - SIGNATURE | TITLE | DATE

CLIENT DESIGNATE - SIGNATURE | TITLE | DATE

AGNICO EAGLE

Vendor Document Status

1 ☐ Proceed to next submission and status.

2 ☐ Proceed with exceptions as noted to next submission and status.

3 ☐ Do not proceed.
Revise as noted and resubmit next submission and status.

4 ☑ Complete, no further submission required.

By: Jean-Francois Tremblay Date: 2017-05-02

Review and authorization to fabricate are only for general conformance with the design concept of the Project as expressed in the Contract Documents. Sole responsibility for the accuracy and completeness of this document, including but not limited to dimensions and quantities, remains with the Supplier/Contractor. Agnico Eagle does not warrant the accuracy or completeness of any of the information contained herein, nor does Agnico Eagle authorize or approve any construction means, methods, techniques, sequences or any safety precautions or procedures.

Agnico Eagle No. 6515-C-270-007-141-TES-0015 R: Sub001

DOCUMENT FOR INFORMATION

Fuel Tanks Piping

Supply and Installation

Punchlist

Document Number : AEM-GE-ITR-003

Contract Number : C22466T / C22498E

Equipment/System description:

ITEM No	DESCRIPTION	CAT 1	CAT 2	CAT 3	COMMENTS	COMPLETED
1						
2						
3						
4						
5						
6						
7						
8						
9						
10						
11						
12						
13						
14						
15						
16						
17						
18						
19						
20						

CAT 1 = Effects commissioning

CAT 2 = Effects operation

CAT 3 = Post operation

AGNICO EAGLE

Vendor Document Status

1 ☐ Proceed to next submission and status.

2 ☐ Proceed with exceptions as noted to next submission and status.

3 ☐ Do not proceed.
Revise as noted and resubmit next submission and status.

4 ☑ Complete, no further submission required.

By: Jean-Francois Tremblay Date: 2017-05-02

Review and authorization to fabricate are only for general conformance with the design concept of the Project as expressed in the Contract Documents. Sole responsibility for the accuracy and completeness of this document, including but not limited to dimensions and quantities, remains with the Supplier/Contractor. Agnico Eagle does not warrant the accuracy or completeness of any of the information contained herein, nor does Agnico Eagle authorize or approve any construction means, methods, techniques, sequences or any safety precautions or procedures.

Agnico Eagle No. 6515-C-270-007-141-TES-0016 R: Sub001

DOCUMENT FOR INFORMATION

Date: _____

To: _____

Project No: _____

Contract No: _____

Contract Title: _____

Contractor: _____

We, _____ (Contractor's Name), the Contractor for the above described contract, hereby certify that we have reviewed the Contract Documents pertaining to:

Contract No.: _____

Contract Name: _____

Partial Completion Certificates: _____

and having physically inspected the Work performed, do hereby file claim for a notice of Final Completion.

I do declare that I am, _____ (Responsible's Name), HAVING AUTHORITY FROM MY COMPANY TO PETITION FOR THE ABOVE REFERRED TO FINAL COMPLETION NOTICE.

Signature: _____

Name: _____

Title: _____

NO. DESSIN DRAWING NO. 65-116-275-201_R0

FORMAT ARCH D

PROMEC
AS-BUILT
Signature:
Date: 2017-10-04

POUR CONSTRUCTION
FOR CONSTRUCTION
AGNICO EAGLE
DATE : 2017-07-11

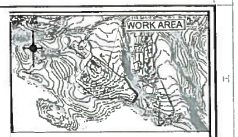

WSP
1075, 3e AVENUE EST
VAL-D'OR (QUÉBEC) CANADA J9P 0J7
TÉL. : 819 825-4274 | TÉLÉC. : 819 824-1341 | WWW.WSPGROUP.COM

Ref. 151-06440-40

NOTES GÉNÉRALES / GENERAL NOTES

1. GROUND EQUIPMENT INSIDE THE PUMPING STATION AT THE CONNECTION POINT.
2. GROUND THE MAIN SAFETY SWITCH IN THE ELECTRICAL ROOM CONTAINER.
3. GROUND THE STAIRWELL OF THE TANK.

- GROUND ALL THE PROTECTION BOLLARDS.
- GROUND ALL METALLIC ELEMENTS IN THE RETENTION BASIN AREA AND IN TRUCK LOADING AREA.
- THE LOCATION OF THE GROUND CONNECTIONS AND CONDUCTORS ARE APROXIMATIVE AND SHALL BE COORDINATED WITH OTHER CONTRACTORS.
- THE LOCATION OF CONTAINERS SHALL BE COORDINATED WITH OTHER CONTRACTORS.

CE DESSIN EST LA PROPRIÉTÉ DE AGNICO EAGLE LTÉE ET NE DOIT PAS ÊTRE REPRODUIT, EN TOUT OU EN PARTIE, SANS AUTORISATION ÉCRITE PRÉALABLE. THIS DRAWING IS THE PROPERTY OF AGNICO EAGLE LTD AND SHALL NOT BE REPRODUCED IN WHOLE OR IN PART WITHOUT PRIOR WRITTEN PERMISSION. © AGNICO EAGLE LTD

DESSINS EN RÉFÉRENCE / REFERENCE DRAWINGS

TYPE / TITLE	# DWG
GROUNDING LAYOUT	65-103-275-201
LEGEND, TABLES & DETAILS	65-116-275-200

AGNICO EAGLE

REV.	DATE	DESCRIPTION	DRAWN / APP.	CHECKED
B	2017-07-11	ISSUED FOR CONSTRUCTION	F.MUL	L.S.

REVISIONS

2017-07-11

TYPE / TITLE
AGNICO EAGLE – MELIADINE DIVISION
116 – FUEL TANK FARM
275 – POWER ELECTRICAL
GROUNDING LAYOUT
PLAN VIEW

DESSINÉ PAR DRAWN BY	RÉMI HÉNAULT, Tech.	2016-06-22
VÉRIFIÉ PAR CHECKED BY	RÉMI HÉNAULT, Tech.	2016-06-22
APPROUVÉ PAR APPROVED BY	LUC SÉNÉCAL, P.Eng.	2017-07-11
ÉCHELLE SCALE	INDICATED	DATE 2016-01-25

NO. DESSIN DRAWING NO. 65-116-275-201

NO. PROJET PROJECT NO.	REVISION	FEUILLE / SHT
6515	0	1 / 1

PLAN VIEW
SC : 1:300

FILE NO. 65-116-275-201_R0.dwg

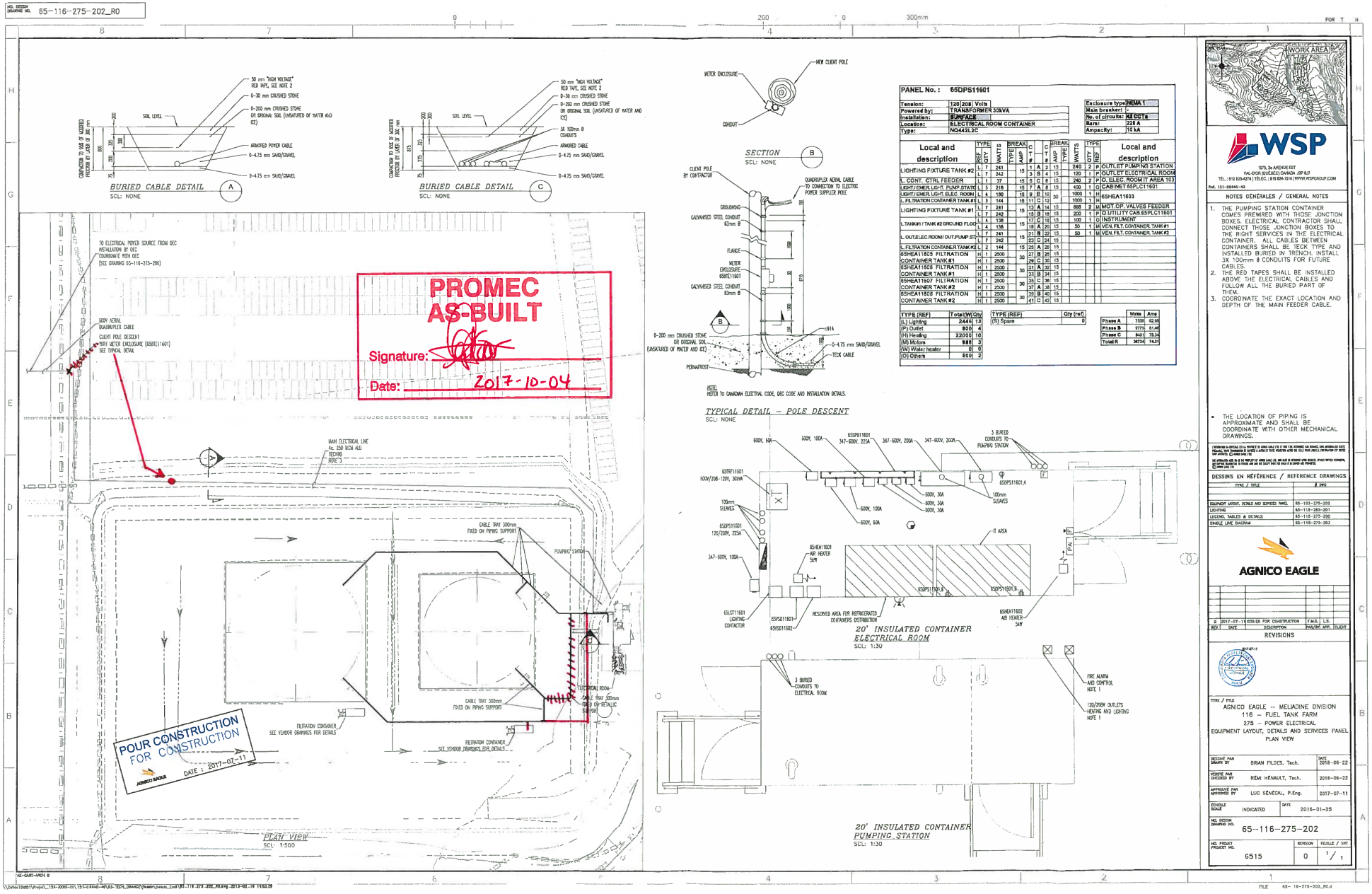

PANEL No. : 65DPS11601	
Tension:	120/208 Volts
Powered by:	TRANSFORMER 30kVA
Installation:	SURFACE
Location:	ELECTRICAL ROOM CONTAINER
Type:	NQ442L2C

Enclosure type:	NEMA 1
Main breaker:	-
No. of circuits:	42 DCTs
Bars:	225 A
Ampacity:	10 kA

Local and description	REF	QTY	WATTS	TYPE	BREAK AMP	P	C	#	O T	#	BREAK AMP	TYPE	WATTS	QTY	REF	Local and description
LIGHTING FIXTURE TANK #2	L	7	241	15	1	A	2	15					240	2	P	OUTLET PUMPING STATION
	L	7	242		3	B	4	15					120	1	P	OUTLET ELECTRICAL ROOM
L. CONT. CTRL FEEDER	L	1	37	15	5	C	6	15					240	2	P	O. ELEC. ROOM ITY AREA 103
LIGHT/ EMER.LIGHT, PUMP.STATN	L	5	216	15	7	A	8	15					400	1	O	CABINET 65PLC11601
LIGHT/ EMER.LIGHT ELEC. ROOM	L	4	180	15	9	B	10				30		1000	1	H	65HEA11603
L. FILTRATION CONTAINER TANK #1	L	3	144	15	11	C	12						1000	1	H	
LIGHTING FIXTURE TANK #1	L	7	241	15	13	A	14	15					888	2	M	MOT.OP. VALVES FEEDER
	L	7	242		15	B	16	15					200	1	P	O. UTILITY CAB.65PLC11601
L.TANK#1 / TANK #2 GROUND FLOOR	L	4	138	15	17	C	18	15					100	1	O	INSTRUMENT
	L	4	138		19	A	20	15					50	1	M	VEN. FILT. CONTAINER. TANK #1
L. OUTLET.EL.ROOM/ OUT.PUMP.STT	L	7	241	15	21	B	22	15					50	1	M	VEN. FILT. CONTAINER. TANK #2
	L	7	242		23	C	24	15								
L. FILTRATION CONTAINER TANK #2	L	2	144	15	25	A	26	15								
65HEA11605 FILTRATION	H	1	2500	30	27	B	28	15								
CONTAINER TANK #1	H	1	2500		29	C	30	15								
65HEA11606 FILTRATION	H	1	2500	30	31	A	32	15								
CONTAINER TANK #1	H	1	2500		33	B	34	15								
65HEAT1607 FILTRATION	H	1	2500	30	35	C	36	15								
CONTAINER TANK #2	H	1	2500		37	A	38	15								
65HEA11608 FILTRATION	H	1	2500	30	39	B	40	15								
CONTAINER TANK #2	H	1	2500		41	C	42	15								

TYPE (REF)	Total(W)	Qty
(L) Lighting	2446	13
(P) Outlet	800	4
(H) Heating	22000	10
(M) Motors	980	3
(W) Water heater	0	0
(O) Others	800	2

TYPE (REF)	Qty (ref)
(S) Spare	0

	Watts	Amp
Phase A	7596	62.66
Phase B	9775	81.46
Phase C	8401	78.34
Total R	26734	74.21

REV.	DATE	DESCRIPTION	DRAWN BY	APP.	SIGNAT
0	2017-07-11	ISSUED FOR CONSTRUCTION	T.MEL	L.S.	

TITLE	# DWG
EQUIPMENT LAYOUT, DETAILS AND SERVICES PANEL	65-116-275-202
LIGHTING	65-116-283-201
LEGEND, TABLES & DETAILS	65-116-275-200
SINGLE LINE DIAGRAM	65-119-275-203

APPENDIX M

Inspection Reports – Non-Compliance Reports

AGNICO EAGLE

NON-CONFORMANCE/CORRECTIVE ACTION REPORT

Document Control Code: 6515-C-260-002-NCR-001

AEM SUPERVISOR - INSPECTOR

FROM SUPPLIER	FROM SITE	☑ NRC N°:	1	REV :	0
		☐ CAR N°:			

PROJECT :	MELIADINE	AEM PROJECT N°:	6515
CONTRACTOR:	INUKSHUK	CONTRACT N°:	6515-C-260-002
EQUIPMENT :		SUBCONTRACTOR:	SUB ARC WELDING

☑ NON-COMPLIANCE DESCRIPTION ☐ CORRECTIVE ACTION DESCRIPTION

Leak issue on the fuelling tank nozzle on tank no 2, 13.5ML
Fuel coming out from pressure test port on fuelling nozzle neck reinforcement plate.
How this leak happened ?
How permanent repair on the leak can be done in summer 2018 ?
What is the procedure and action plan ?

AEM BY	SIGNATURE	DATE
Bruno Roy		

SUPPLIER OR CONTRACTOR (VENDOR)

☐ PROPOSAL FOR CORRECTION (VENDOR) ☐ CAUSE DESCRIPTION (*ANNEX ADDITIONAL SHEETS TO THE DOCUMENT IF NOT ENOUGH SPACE*)

VENDOR BY : SIGNATURE DATE

AEM Package or resident engineer

TREATMENT TO BE APPLIED TO NON-COMPLIANCE IS (*ANNEX ADDITIONAL SHEETS TO THE DOCUMENT IF NOT ENOUGH SPACE*)

ACCEPT AS IS — COMMENTS

REDO TO MEET REQUIREMENTS

CORRECT WITH OR WITHOUT REQUEST FOR CONCESSION

PROPOSAL REJECTED; CORRECT ACCORDING TO COMMENTS

REJECTED

RETURN TO SUBCONTRACTOR

AEM BY : SIGNATURE DATE

CLIENT BY : SIGNATURE DATE

AEM Supervisor - Inspector

TREATMENT VERIFICATION

CORRECTED ➢ WITH REQUEST FOR CONCESSION
➢ WITHOUT REQUEST FOR CONCESSION

CORRECTED TO MEET THE REQUIREMENTS

ACCEPTED AS IS

DROPPED FOR OTHER APPLICATIONS

REJECTED

RETURNED TO SUBCONTRACTOR

RESULT : ACCEPTED REJECTED NEW TREATMENT REQUIRED

CORRECTIVE ACTION REQUIRED Yes ☐ No ☐

Comments :

COSTS :

HOURS :

PROJECT MANAGER SIGNATURE DATE

CLIENT SIGNATURE (IF REQUIRED) DATE

AEM QAQC

REPORT CLOSED BY : Signature Date

AGNICO EAGLE

NON-CONFORMANCE/CORRECTIVE ACTION REPORT

Document Control Code: 6515-C-260-002-NCR-002

AEM SUPERVISOR - INSPECTOR

FROM SUPPLIER	FROM SITE	☑ NRC N°:	2	REV :	0
		☐ CAR N°:			

PROJECT :	MELIADINE	AEM PROJECT N°:	6515
CONTRACTOR:	INUKSHUK	CONTRACT N°:	6515-C-260-002
EQUIPMENT :		SUBCONTRACTOR:	

☑ NON-COMPLIANCE DESCRIPTION ☐ CORRECTIVE ACTION DESCRIPTION

Leak was observed between Man hole welding joint to reinforcement plate. on tank no 2, 13.5ML
How this leak happened ?
How permanent repair on the leak can be done in summer 2018 ?
What is the procedure and action plan ?

AEM BY	SIGNATURE	DATE
Bruno Roy		

SUPPLIER OR CONTRACTOR (VENDOR)

☐ PROPOSAL FOR CORRECTION (VENDOR) ☐ CAUSE DESCRIPTION (*ANNEX ADDITIONAL SHEETS TO THE DOCUMENT IF NOT ENOUGH SPACE*)

VENDOR BY : SIGNATURE DATE

AEM Package or resident engineer

TREATMENT TO BE APPLIED TO NON-COMPLIANCE IS (*ANNEX ADDITIONAL SHEETS TO THE DOCUMENT IF NOT ENOUGH SPACE*)

ACCEPT AS IS — COMMENTS

REDO TO MEET REQUIREMENTS

CORRECT WITH OR WITHOUT REQUEST FOR CONCESSION

PROPOSAL REJECTED; CORRECT ACCORDING TO COMMENTS

REJECTED

RETURN TO SUBCONTRACTOR

AEM BY : SIGNATURE DATE

CLIENT BY : SIGNATURE DATE

AEM Supervisor - Inspector

TREATMENT VERIFICATION

CORRECTED ➢ WITH REQUEST FOR CONCESSION ➢ WITHOUT REQUEST FOR CONCESSION

CORRECTED TO MEET THE REQUIREMENTS

ACCEPTED AS IS

DROPPED FOR OTHER APPLICATIONS

REJECTED

RETURNED TO SUBCONTRACTOR

RESULT : ACCEPTED REJECTED NEW TREATMENT REQUIRED

CORRECTIVE ACTION REQUIRED Yes ☐ No ☐

Comments :

COSTS :

HOURS :

PROJECT MANAGER SIGNATURE DATE

CLIENT SIGNATURE (IF REQUIRED) DATE

AEM QAQC

REPORT CLOSED BY : Signature Date

AGNICO EAGLE
MELIADINE

NON-CONFORMANCE REPORT

Document Control Code: 6515-C-270-007-NCR-001

AEM SUPERVISOR - INSPECTOR

FROM SUPPLIER	FROM SITE AEM	NRC N°:	001
PROJECT :	Fuel Modules Incl.Piping (Supply&Instal.)	AEM PROJECT N°:	6515
CONTRACTOR :	Nuqsana PROMEC Mining Services	CONTRACT N°:	6515-C-270-007
EQUIPMENT :	Diesel Marine Line (Double wall pipe)	SUBCONTRACTOR:	

NON-COMPLIANCE DESCRIPTION

Diesel Marine Line double wall section not conform as per Federal regulation and dwg
the contractor must redo the work and ensure that everything is in accordance with Federal regulations and or AEM spec

- Monitoring gage and ball valve must be accessible.
- Double wall pipe section must be visible both end.

STEPHANE DUBOIS	Stephane Dubois	OCTOBER 27TH 2017
AEM BY	SIGNATURE	DATE

SUPPLIER OR CONTRACTOR (VENDOR)

PROPOSAL FOR CORRECTION (VENDOR) *(ANNEX ADDITIONAL SHEETS TO THE DOCUMENT IF NOT ENOUGH SPACE)*

At the "tank" side of the road crossing: excavate and add corrugated steel pipe section around the under-ground transition to make the end of the double wall visible. At the "boat" side: install a spool with an elbow and vertical section of double wall pipe so that the end of double wall is visible (see dwg by Permapipe).

Jean-Sébastieb Leblanc		2018-09-18
VENDOR BY :	SIGNATURE	DATE

AEM Package or resident engineer

TREATMENT TO BE APPLIED TO NON-COMPLIANCE IS

	COMMENTS
ACCEPT AS IS	X
REDO TO MEET REQUIREMENTS	
CORRECT WITH OR WITHOUT REQUEST FOR CONCESSION	
PROPOSAL REJECTED; CORRECT ACCORDING TO COMMENTS	
REJECTED	
RETURN TO SUBCONTRACTOR	

AEM BY :	SIGNATURE	DATE
CLIENT BY :	SIGNATURE	DATE

AEM Supervisor - Inspector

TREATMENT VERIFICATION

CORRECTED
- CORRECTED TO MEET THE REQUIREMENTS
  - ➢ WITH REQUEST FOR CONCESSION
  - ➢ WITHOUT REQUEST FOR CONCESSION
- ACCEPTED AS IS
- DROPPED FOR OTHER APPLICATIONS
- REJECTED
- RETURNED TO SUBCONTRACTOR

RESULT : ACCEPTED REJECTED NEW TREATMENT REQUIRED

CORRECTIVE ACTION REQUIRED Yes ☐ No ☐

Comments :

COSTS :

PROJECT MANAGER SIGNATURE DATE

HOURS :

CLIENT SIGNATURE (IF REQUIRED) DATE

AEM QAQC

REPORT CLOSED BY : Signature Date





GENERAL NOTES
DOUBLE PIPE™ STEEL CONTAINMENT
(STEEL SERVICE PIPE)

1.0 GENERAL

1.1 THE SCALE SHOWN ON THE DRAWINGS IS FOR REFERENCE PURPOSES ONLY. DO NOT SCALE THE DRAWINGS, USE THE DIMENSIONS SHOWN.

1.2 THE EXACT LOCATIONS AND QUANTITY OF FIELD JOINTS WILL BE SHOWN ON THE PART DRAWING LAYOUT (PDL) – SEE NOTE 5.0

1.3 THE PURCHASER MUST FURNISH AND/OR VERIFY THE FOLLOWING INFORMATION BEFORE MANUFACTURING OF THE SYSTEM CAN BEGIN:

1.3.1 FIELD MEASUREMENTS – THE ACCURACY OF FIELD MEASUREMENTS, INCLUDING WALL THICKNESS AT ALL POINTS OF ENTRY, ARE THE RESPONSIBILITY OF THE PURCHASER.

1.3.2 DESIGN CONDITIONS – THE DESIGN PRESSURE AND TEMPERATURE MUST BE VERIFIED BY THE PURCHASER.

1.3.3 SLOPE OF THE SYSTEM – THE SYSTEM SLOPE IS SHOWN ON THE DRAWINGS WHERE APPLICABLE. THE SYSTEM SLOPE MUST BE VERIFIED BY THE PURCHASER.

2.0 PRODUCT DESCRIPTION

2.1 DOUBLE PIPE IS A DRAINABLE, DRYABLE AND PRESSURE TESTABLE STEEL CONTAINMENT SYSTEM CONSISTING OF A SERVICE PIPE, AIR GAP AND PRESSURE TESTABLE STEEL CONTAINMENT.

2.2 DOUBLE PIPE IS FABRICATED TO FIELD DIMENSIONS IN 20 FT DOUBLE RANDOM LENGTHS.

3.0 DESIGN CONDITIONS/CRITERIA

3.1 SERVICE PRESSURE AND TEMPERATURE:

SERVICE	PRESSURE (PSIG)	TEMPERATURE (DEG. F)
FUEL[FO]	150 PSIG	AMBIENT

3.2 THE SERVICE PIPING IS DESIGNED AND MANUFACTURED IN ACCORDANCE WITH Z662 LATEST EDITION.

3.3 THE PIPING SYSTEM IS DESIGNED FOR THE ABOVE DESIGN CONDITIONS. IT IS THE PURCHASER'S RESPONSIBILITY TO VERIFY THIS INFORMATION IS CORRECT AND OPERATE THE SYSTEM WITHIN THE CONDITIONS DESIGNED FOR.

4.0 MATERIAL

DOUBLE PIPE MATERIAL		
ITEM	SIZE	MATERIAL
SERVICE PIPE	6" SCH 40	ASTM A333, GR. 6, SMLS W/ ACTUAL MILL CERTS & TRACEABILITY
SERVICE PIPE FITTINGS	2 1/2" & ABOVE (B)	ASME B16.9 SMLS(BUTTWELD) ASTM A420, WPL6 W/ ACTUAL MILL CERTS & TRACEABILITY
CONTAINMENT	10" SCH 40	ASTM A333, GRADE 6, SMLS WITH ACTUAL MILL CERTS & TRACEABILITY
CONTAINMENT COATING EXTERIOR	ALL	ULTRA, 100 MILS FRP CLADDING
END PLATES	ALL	ASTM A36
SUPPORTS	ALL	CARBON STEEL, ASTM A36

5.0 INSTALLATION

5.1 ALL PIPING SHALL BE INSTALLED AND TESTED IN ACCORDANCE WITH PERMA-PIPE'S INSTALLATION INSTRUCTION MANUAL FOR THIS PRODUCT.

5.2 A PART DRAWING LAYOUT (PDL) SHALL BE FORWARDED FROM PERMA-PIPE'S FACTORY WITH EACH SHIPMENT. THE PDL INDICATES THE LOCATION OF THE FIELD JOINTS AND THE PART NUMBER OF EACH FACTORY FABRICATED PIECE. THE PDL SHALL BE USED FOR FIELD ASSEMBLY OF THE PIPING SYSTEM.

5.3 PERMA-PIPE STRONGLY RECOMMENDS THAT ALL FIELD JOINTS REMAIN UNCOVERED AND EXPOSED FOR TESTING PURPOSES.

PERMA-PIPE DOES NOT RECOMMEND BACKFILLING PRIOR TO FIELD JOINT TESTING. VIOLATION OF THIS RECOMMENDATION MAY RESULT IN RE-EXCAVATION, REPAIRS AND RE-BACKFILLING AND WILL BE DONE AT THE INSTALLER'S COST AND RISK.

PERMA-PIPE WILL MAKE AVAILABLE, UPON REQUEST, TEST CAPS FOR CONTAINMENT TESTING.

5.4 FACTORY FABRICATED ASSEMBLIES ARE SHIPPED WITH A SHIPPING BAR ATTACHED TO THE SERVICE PIPE AND CONTAINMENT. REMOVE ALL SHIPPING BARS PRIOR TO ASSEMBLY. REMOVAL OF SHIPPING BARS IS THE RESPONSIBILITY OF THE INSTALLER.

6.0 FACTORY TESTING AND INSPECTION

6.1 THE SERVICE PIPE SHALL BE HYDROSTATICALLY OR NDE TESTED BY THE PIPE MANUFACTUER IN ACCORDANCE WITH ITS RESPECTIVE ASTM DESIGNATION.

6.2 SERVICE PIPE NDE IN ACCORDANCE WITH Z662 LATEST EDITION.

6.3 ALL FACTORY CONTAINMENT WELDS SHALL BE PNEUMATICALLY (AIR) TESTED TO 10 PSIG.

6.4 HOLIDAY TEST CONTAINMENT COATING TO 35,000 VOLTS (ULTRA).

7.0 WELDING AND FABRICATION

7.1 ALL PIPE WELDING SHALL BE IN ACCORDANCE WITH Z662 LATEST EDITION AND ASME SECTION IX.

8.0 SPECIAL REQUIREMENTS

8.1 THIS PROJECT REQUIRES ACTUAL CERTIFIED MATERIAL TEST REPORTS (CMTR'S) WITH TRACEABILITY FOR THE FOLLOWING MATERIAL:

☒ SERVICE PIPE AND FITTINGS

☒ CONTAINMENT PIPE AND FITTINGS

8.2 IF PERMA-PIPE WILL HAVE ANY FACTORY SERVICE PIPE WELDS, THE FOLLOWING TESTING WILL APPLY:

A. 10% X-RAY OF CIRCUMFERENTIAL BUTT WELDS IN ACCORDANCE WITH Z662 LATEST EDITION.

B. 100% VISUAL EXAMINATION IN ACCORDANCE WITH Z662 LATEST EDITION.

C. 10% DYE PENETRANT OF SOCKET WELDS AND FILLET WELDS IN ACCORDANCE WITH Z662 LATEST EDITION.

D. 100% FACTORY HYDROSTATIC TEST ON CARRIER PIPE WELDS TO 1.5 TIMES DESIGN PRESSURE.

8.3 IDENTIFY EACH FACTORY WELD WITH WELDERS IDENTIFICATION.

8.4 THIS PROJECT REQUIRES A MAXIMUM SPAN OF 10 FT FOR INTERNAL SUPPORTS.

8.5 ALL ENDS OF SERVICE PIPE SHALL BE FACTORY CAPPED WITH PLASTIC CAPS SECURED WITH A DOUBLE WRAP OF VINYL TAPE. CONTAINMENT PIPE ENDS TO BE SECURELY BAGGED FOR PROTECTION DURING SHIPPING.

8.6 PLANT TO AFFIX UNION LABELS ON EACH PIECE.

8.7 CRN DOCUMENTS FOR ALL FITTINGS FOR THE PROVINCE OF NUNAVUT.

(B) 8.8 PERMA-PIPE MAY BEND THE PIPE IN ACCORDANCE WITH Z662 LATEST EDITION IN PLACE OF WELDED FITTINGS. IF FITTINGS ARE USED THEN CANADIEN REGISTRATION NUMBERS(CRN'S) FOR THE PROVINCE OF NUNAVUT WILL BE OBTAINED FOR ALL FITTINGS WITH MTR'S AND WILL BE PROVIDED TO CUSTOMER.

(D) **8.9 IN ADDITION TO THE MATERIAL SHOWN ON SHT 3, PERMA-PIPE WILL SUPPLY ONE PIPING SPOOL PER DETAIL 1A ON THIS SHEET. THIS ADDITIONAL SPOOL (3'-0" x 4'-6") WILL BE RELEASED PER ECN NO. 2.**

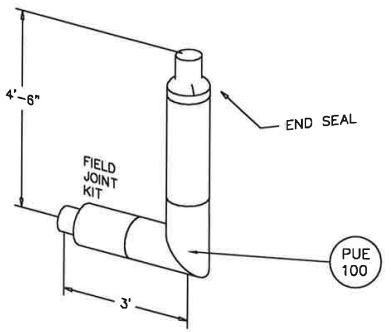

DETAIL 1A
(D) ONE PIPE SPOOL ASSEMBLY

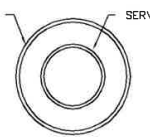

DOUBLE PIPE CROSS SECTION		
SERVICE	SERVICE PIPE	CONTAINMENT PIPE OD
6" FUEL	6" SCH 40 A333 GR. 6, SMLS C.S.	10 3/4"

NOTICE

THIS DRAWING, AND THE INFORMATION CONTAINED AND/OR ILLUSTRATED THEREIN, IS THE PROPERTY OF 8410 WEST HOWARD STREET, NILES, ILLINOIS PERMA-PIPE, INC. 60714, AND IS SUBMITTED AND FURNISHED IN CONFIDENCE WITH THE UNDERSTANDING THAT THE RECIPIENT SHALL NOT REPRODUCE, COPY, LOAN, DISPOSE OF, OR DISCLOSE TO ANYONE OUTSIDE RECIPIENT'S ORGANIZATION, DIRECTLY OR INDIRECTLY, OR USE FOR ANY PURPOSE OTHER THAN THAT FOR WHICH IT IS FURNISHED AND SUBMITTED, AND THAT RECIPIENT SHALL RETURN THE SAME TO PERMA-PIPE WHEN REQUESTED.

REV	DATE	REVISION	BY	APPR.
D	4-21-17	INITIAL ISSUE	RJ	MD
A	5-8-17	ADDED NOTE 8.7, CRN'S REQUIRED.	JC	JC
B	06-05-17	ADDED NOTE 8.8; ADDED SERV FIT. 4.0	DK	MD
C	05-16-18	ADDED DETAIL 1A AND NOTE 8.9	DK	MD
D	05-22-18	REVISED DETAIL 1A	RJ	MD
E	6/1/18	ADD PIECE MARK PUE100	CJ	CJ

PERMA-PIPE®
PERMA-PIPE, INC.
A SUBSIDIARY OF MPRI, INC.
8410 WEST HOWARD STREET NILES, IL 60714
MANUFACTURING FACILITY
1310 QUARLES DRIVE LEBANON, TN 37087

ENERGY DISTRIBUTION SYSTEM
FOR
22466 FUEL MODULE MELIADINE

JOB NUMBER: E7964
DRAWING NO.: 17-151-BE
SCALE: NTS
SHEET 1 OF 3
CUSTOMER: GROUPE PROMEC INC.

Plot: H:\Permapip\Project Files\2017\E7964\V2_ Acad File\E7964
PRINTED: 6/6/17 2:24 PM
PLOTTED BY: dave kotsko

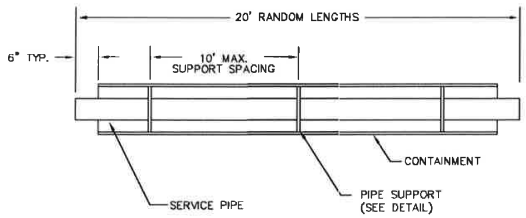

NOTES:

1. FOR 2 1/2" AND LARGER STEEL PIPE: BEVELED ENDS

DETAIL 1
DOUBLE PIPE, STEEL CONTAINMENT
STEEL SERVICE PIPE
STRAIGHT ASSEMBLY

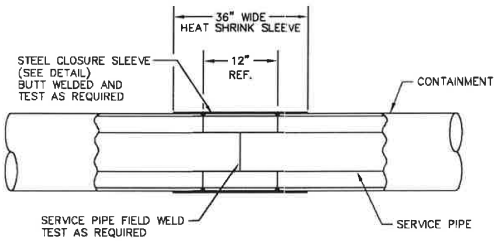

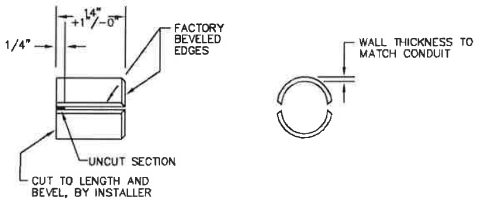

STEEL CLOSURE SLEEVE

NOTE:
1. SOCKETWELD COUPLINGS, IF REQUIRED, SUPPLIED BY INSTALLER

DETAIL 2
DOUBLE PIPE, STEEL CONTAINMENT
STEEL SERVICE PIPE
FIELD JOINT ASSEMBLY
BUTT WELDED SLEEVE & HEAT SHRINK SLEEVE

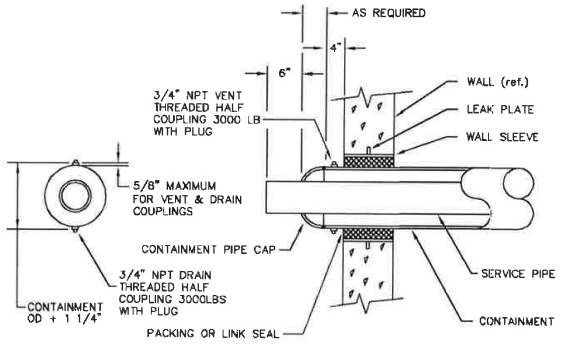

NOTES:
1) WALL SLEEVES AND LEAK PLATES BY OTHERS
2) PACKING OR LINK SEALS BY OTHERS

DETAIL 3
DOUBLE PIPE, STEEL CONTAINMENT
STEEL SERVICE PIPE
FULL PENETRATION WELDED CONTAINMENT
END SEAL ASSEMBLY

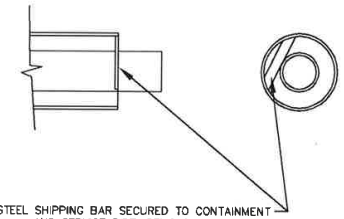

STEEL SHIPPING BAR SECURED TO CONTAINMENT AND SERVICE PIPE, REMOVE ALL SHIPPING BARS PRIOR TO ASSEMBLY

DETAIL 4
DOUBLE PIPE, STEEL CONTAINMENT
STEEL SERVICE PIPE
SHIPPING BAR

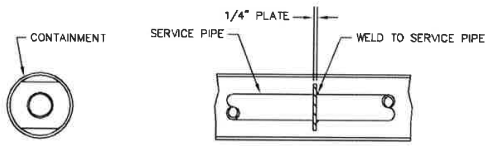

DETAIL 5
DOUBLE PIPE, STEEL CONTAINMENT
STEEL SERVICE PIPE
PLATE SUPPORT

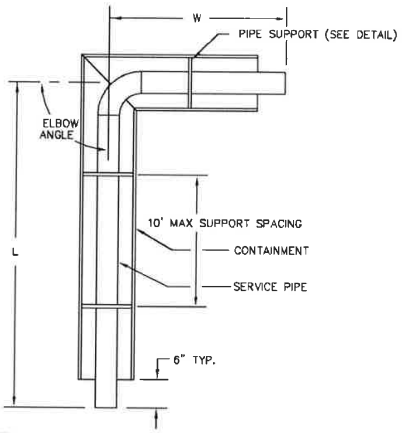

NOTES:

1) FOR 2 1/2" AND LARGER STEEL PIPE: BEVELED ENDS BUTTWELD FITTINGS
2) PIPE BENDING IN PLACE OF WELDED ELBOWS MAY BE USED

DETAIL 6
DOUBLE PIPE, STEEL CONTAINMENT
STEEL SERVICE PIPE
ELBOW ASSEMBLY

NOTICE

THIS DRAWING, AND THE INFORMATION CONTAINED AND/OR ILLUSTRATED THEREIN, IS THE PROPERTY OF 6410 WEST HOWARD STREET, NILES, ILLINOIS PERMA-PIPE, INC. 60714, AND IS SUBMITTED AND FURNISHED IN CONFIDENCE WITH THE UNDERSTANDING THAT THE RECIPIENT SHALL NOT REPRODUCE, COPY, LOAN, DISPOSE OF, OR DISCLOSE TO ANYONE OUTSIDE RECIPIENT'S ORGANIZATION, DIRECTLY OR INDIRECTLY, OR USE FOR ANY PURPOSE OTHER THAN THAT FOR WHICH IT IS FURNISHED AND SUBMITTED, AND THAT RECIPIENT SHALL RETURN THE SAME TO PERMA-PIPE WHEN REQUESTED.

REV	DATE	REVISION	BY	APPR.
0	4-21-17	INITIAL ISSUE	RJ	MD
A	06-05-17	ADDED ELBOW DETAIL	DK	MD

PERMA-PIPE®

PERMA-PIPE, INC.
A SUBSIDIARY OF MFRI, INC.
6410 WEST HOWARD STREET NILES, IL 60714

MANUFACTURING FACILITY
1310 QUARLES DRIVE LEBANON, TN 37087

ENERGY DISTRIBUTION SYSTEM

FOR

22466 FUEL MODULE MELIADINE

JOB NUMBER	DRAWING NO.
E7964	17-151-BA
SCALE: NTS	SHEET 2 OF 3

CUSTOMER: GROUPE PROMEC INC.

PLOTTED BY: dave kozlar
PRINTED: 6/5/17 2:24 PM
FROM: H:\Permapipe\Project Files\2017\E7900_17\E7964\2_Acad File\E7964

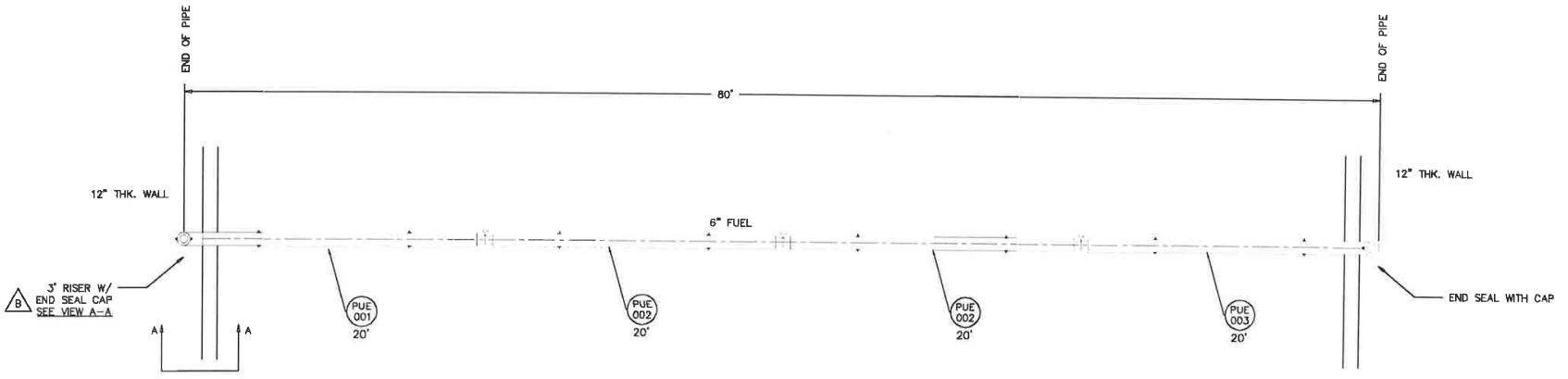

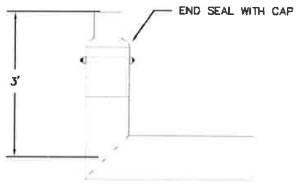

B VIEW A-A

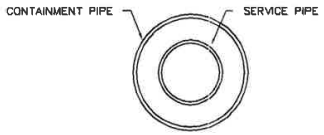

DOUBLE PIPE CROSS SECTION		
SERVICE	SERVICE PIPE	CONTAINMENT PIPE OD
6" FUEL	6" SCH 40 A333 GR. 6, SMLS C.S.	10 3/4"

DOUBLE PIPE PIPING SYMBOL LEGEND	
SYMBOL	DESCRIPTION
	OVAL SUPPORTS
	MOMENT GUIDE
	END SEAL
	GLAND SEAL
	ANCHOR W/ ANCHOR BLOCK
	ANCHOR ELBOW W/ ANCHOR BLOCK
	INTERNAL ANCHOR
	FIELD JOINT
OS	OVERSIZED CONTAINMENT
CS	COLD SPRING
E	ECCENTRIC CONTAINMENT REDUCER
C	CONCENTRIC CONTAINMENT REDUCER

NOTICE

THIS DRAWING, AND THE INFORMATION CONTAINED AND/OR ILLUSTRATED THEREIN, IS THE PROPERTY OF 8410 WEST HOWARD STREET, NILES, ILLINOIS PERMA-PIPE, INC. 60714, AND IS SUBMITTED AND FURNISHED IN CONFIDENCE WITH THE UNDERSTANDING THAT THE RECIPIENT SHALL NOT REPRODUCE, COPY, LOAN, DISPOSE OF, OR DISCLOSE TO ANYONE OUTSIDE RECIPIENT'S ORGANIZATION, DIRECTLY OR INDIRECTLY, OR USE FOR ANY PURPOSE OTHER THAN THAT FOR WHICH IT IS FURNISHED AND SUBMITTED, AND THAT RECIPIENT SHALL RETURN THE SAME TO PERMA-PIPE WHEN REQUESTED.

REV	DATE	REVISION	BY	APPR.
0	4-21-17	INITIAL ISSUE	RJ	MD
A	5-30-17	ADDED PDL FOR PUE-001~003	KM	KM
B	06-05-17	ADDED RISER TO LAYOUT	DK	MD

PERMA-PIPE®

PERMA-PIPE, INC.
A SUBSIDIARY OF MFRI, INC.
8410 WEST HOWARD STREET NILES, IL 60714
MANUFACTURING FACILITY
1310 QUARLES DRIVE LEBANON, TN 37087

ENERGY DISTRIBUTION SYSTEM

FOR

22466 FUEL MODULE MELIADINE

JOB NUMBER	DRAWING NO.
E7964	17-151-BB
SCALE: NTS	SHEET 3 OF 3

CUSTOMER: GROUPE PROMEC INC.

PLOTTED BY: dave kocior
PLOTTED: 6/5/17 2:24 PM
FILE: H:\Permaply\Project Files\2017\E7900_17\E7964\2_ Acad Files\E7964

APPENDIX N

Construction Summary for Rankin Inlet Itivia Site fuel storage and containment facility

TETRA TECH

Civil Earthworks Construction Summary – Rankin Inlet Tank Farm

- Construction management and quality assurance performed by Agnico Eagle Construction
- Primary civil construction contractor was MTKSL
- Subcontractors included: Texel Geosol for liner installation and liner QC; Glacier Blasting and Shoring for drill/blast operations
- Crushing operations at Itivia Quarry contracted to Inukshuk Contracting Ltd.
- All survey conducted by Hamel Arpentage
- Explotech conducted pre-and post-inspection surveys of infrastructure surrounding the tank farm and quarry sites. Explotech also installed/monitored four (4) seismographs located in representative areas around the Tank Farm blasting area, with the closest located at the Department of National Defense barracks, in order to perform monitoring of every blast.

1. Site Preparation (April 25 to May 2)

- Multiple discussions held with airport authority, community and Department of National Defense stakeholders prior to project commencement
- Temporary access road to tank farm area constructed of overburden from first blasts and later built up with rock from Itivia Quarry
- Snow cleared from tank farm footprint in advance of drill/blast operations
- OG surveyed of tank farm footprint

2. Drill/Blast (April 27 to June 6)

- All blast patterns designed by MTKSL and reviewed/accepted by Explotech
- Glacier drill/blast contractor – all explosive products supplied by AEM
- Controlled blasting procedures (all blasts were matted) were used for all blasts to control flyrock and limit overpressures (dBL, noise nuisance)
- Between 2 and 3 blasts per day were conducted within the tank farm footprint, for a total of 88 blasts
- Pre-shear blasting was conducted along both the north and west walls to control the rock quality of the high walls
- Additional drilling was required to remove bedrock “tights” within the pedestal and adjacent floor areas of the 20 ML tank (July 3)

3. Excavation (May 1 to June 25)

- Design assumed bedrock depth within the Tank Farm footprint to be approximately 2 m below the ground surface – construction planning and scheduling was therefore based on having an essentially balanced cut/fill operation, with the blasted bedrock to be used to produce the granular fill materials, in addition to providing a sufficient source of feed for creation of the laydown area
- However, as discussed in RFI’s 05, 06 and 08, bedrock was significantly deeper than anticipated over most of the containment area
- The actual quantities of overburden removed from the footprint area were more than triple the design estimated quantities (43,445 m3 actual vs 14,300 m3 design)

- Shortage of bedrock within the footprint area required use of alternative sources of feed material to produce the needed granular fill
- In addition, much of the overburden within the footprint area was assessed as being ice-rich silt till and was deemed unsuitable for backfill material within the planned laydown area. Disposal of this material occurred either within the designated waste dump area north of the laydown or within "deep" fills (greater than 1.5 m) within the laydown 3 area.
- Additional excavation efforts were therefore required to reach either a competent bedrock surface (13.5 ML tank pedestal) or a minimum 1.5 m additional depth below the design depth and backfilled with 0-200 mm material within the affected containment area in order to minimize thaw settlement which could potentially impact the liner

4. Rock Face Scaling (June 19 – June 22)

- As excavation progressed in depth, the north and west rock walls were exposed
- Although pre-shear blasting controlled some of the end product of the walls, the final high walls required cleaning/scaling due to the blocky nature of the rock
- Inspections of the free face were conducted by AEM Engineering personnel on three occasions: pre-scaling (June 19), post-scaling (June 22) and a final inspection on June 29
- 2 large rock blocks identified defined by sub-horizontal faults filled with ice-rich silt gouge
- Faulting largely covered with the containment berm which is expected to provide both a buttressing effect and some thermal protection
- Survey monuments to be installed to monitor movements

5. Overburden Pushback and Protection Berm (July 15 to August 1)

- Overburden removed from bedrock for a distance of 3 m from the edge of the north high wall
- In those areas where bedrock was either not encountered or was a lower elevation than expected from design n the high wall (RFI 09), the overburden was sloped back at a 2H:1V angle and protected with a fillet of thaw-stable 0-600 mm minus blast rock material.
- The 600 mm minus tied into both the containment berm and the protection berm around the excavation area
- Protection berm consisted of till removed from the tank farm excavation and the core covered with 0-600 mm minus blast rock material.

6. Under Liner Material Placement (June 10 to September 26)

7.1 Floor

- To compensate for the lack of bedrock, protect the underlying permafrost and provide a trafficable surface for haul traffic, placement of 600 mm minus blast rock began in the southwest and southern areas of the containment area
- Material placement closely followed the additional excavation of this area to avoid unnecessary disturbance of the thermal regime
- The 600 mm minus was placed in controlled lifts and compacted with the 10-tonne vibratory compactor
- Backfill within the tank pedestals consisted of placement of 0-200 mm material directly on bedrock – 0-200 mm was placed in controlled lifts and compacted with the 10-tonne vibratory compactor

- Within the tank pedestals and the 13.5 ML tank containment area, 30 mm minus under liner was placed on either the 0-600 mm material (containment area) or 0-200 mm (pedestals). The 0-30 mm material was placed in controlled lifts and compacted with the 10-tonne vibratory compactor
- Under liner material placement in the containment area around the 20 ML tank was revised as per RFI 12, with 100 mm of the 30 mm minus under liner bedding being replaced with sand
- As RFI 12 was released during placement of 30 mm minus under liner material, 100 mm was removed and replaced with sand.

6.2 Containment Berm (June 24 to September 26)

- The 600 mm minus core was placed in controlled, compacted lifts, then the 30 mm minus placed with an excavator on top and bucket tamped into place.

7. Liner System Installation (July 14 to October 6)

- Solmax Textured 60 mil HDPE installed throughout and 540 g/m2 geotextile
- Full order was purchased by AEM in 2015 and was stored outside in MTKSL's equipment yard prior to installation - approximately 15% of this order was discovered to have been damaged and was unusable due to improper storage and handling procedures
- Installation of the liner system occurred in two phases in order to facilitate full construction of the 13.5 ML tank and partial construction of the 20 ML tank in 2017
- Liner on the tank pedestal footprints was completed first (July 14 to July 16), the 13.5 ML tank and first three rings of the 20 ML tank were erected, then liner installation proceeded throughout the remainder of the containment area (September 12 to October 6)
- Liner on the tank pedestals was protected with plywood after installation and before the remaining liner was installed
- Liner installation QA was carried out by AEM and quality control testing by Texel

8. Tank Erection (July 29 to September 8)

- Civil earthworks within the Tank Farm area was generally suspended during erection of the 13.5 ML tank and partial erection of the 20 ML tank

9. Over Liner Material Placement (July 16 to October 9)

- Over liner material placement on the tank pedestals and in the 13.5 ML tank containment area followed the original design specification of placement of 30 mm minus placed on geotextile placed on HDPE
- Sand directly under the tank footprints was placed by Inukshuk July 27 to August 1. As per ECN-02 and RFI-13, the 1V:120H slope under the tanks was backfilled entirely with sand.
- Following RFI 12 however, within the 20 ML tank containment area, 100 mm of sand was placed directly on the HDPE, covered with geotextile, then covered with 200 mm of 30 mm minus

Equipment Used for Construction (MTKSL):

- CAT D8 Bulldozer
- CAT D6 Bulldozer
- CAT 330L Excavator
- CAT 345C Excavator
- CAT 320 Excavator
- CAT 980 Loader
- CAT IT62
- CAT skid steers
- CAT 740 articulated haul trucks
- CAT CS56 10-ton vibratory drum compactor
- HAMM 5-ton vibratory drum compactor
- Various small hand-pushed compactors

QA/QC Summary

1. Bedrock conditions under the tank pedestal areas were verified by AEM.

2. Suitability of overburden material for use as laydown backfill/waste was assessed by AEM. When deemed unsuitable for use as laydown backfill, the overburden was hauled to the overburden waste disposal area immediately south of the Laydown 3 area.

3. 600 mm minus and 200 mm minus was placed according to the Technical Specifications for Civil Earthworks Revision 3 (6515-GNS-014, June 6, 2017). Compaction efforts consisted of a minimum number (4) of passes with a 10-tonne vibratory compactor. Suitability for placement and compaction efforts were assessed visually and approved by AEM.

4. 30 mm minus was placed and compacted (under liner) according to the Technical Specifications for Civil Earthworks (6515-GNS-014, June 6, 2017). Compaction efforts consisted of a minimum number (4) of passes with a 10-tonne vibratory compactor and were visually assessed and approved by AEM.

5. A total of thirty (30) samples of 30 mm minus crushed material were tested for moisture content and particle size analysis (results attached). Due to the nature of the feed material (blasted quarry rock), the material was generally low on particles sized between 0.63 mm and 14 mm with a low average moisture content (0.7%)

6. Texel Geosol was responsible for all quality control of the liner installation process.

APPENDIX O

Particle Size Summary – 30 mm minus

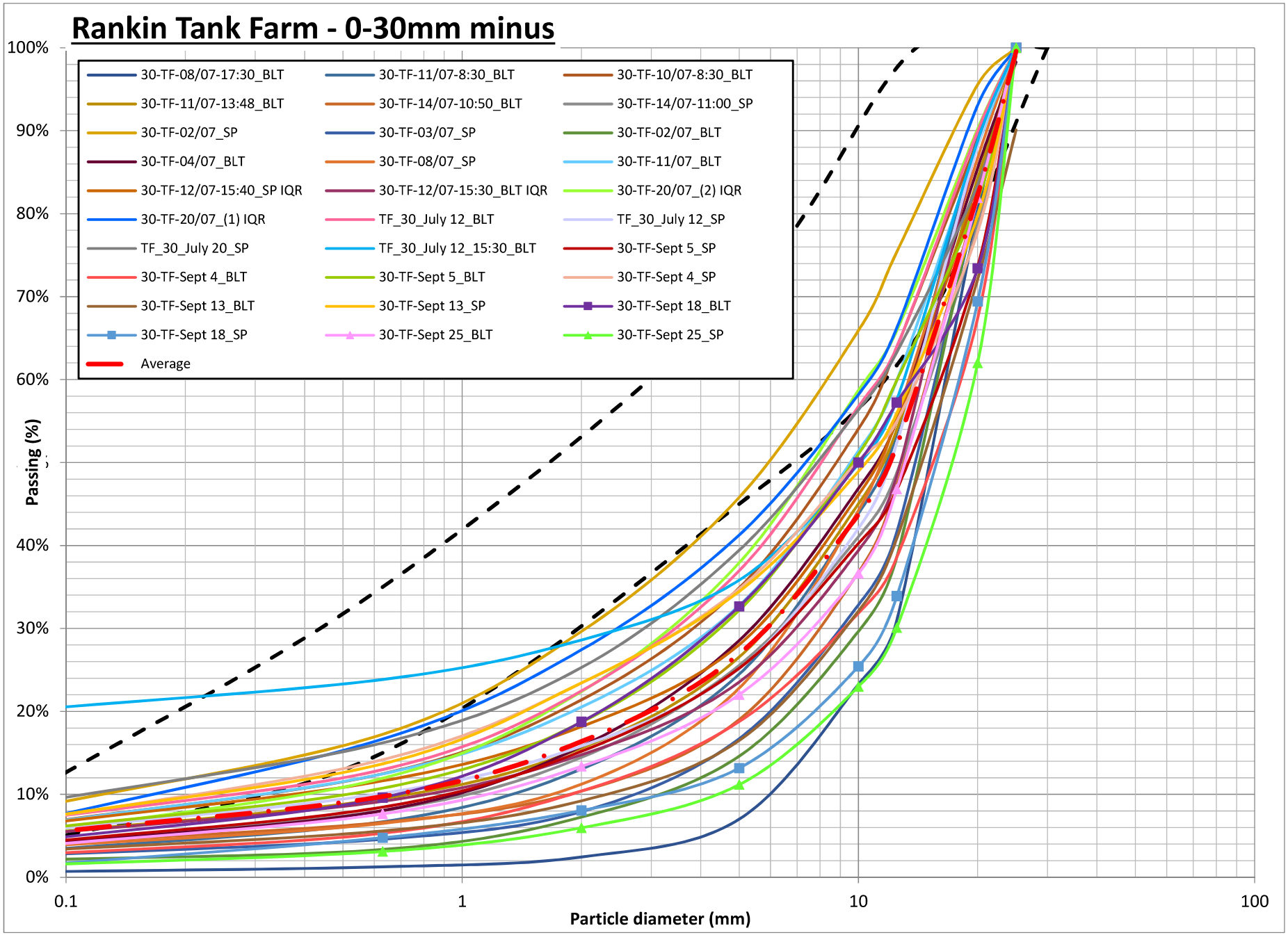
Rankin Tank Farm - 0-30mm minus
100%
90%
80%
70%
60%
40%
30%
20%
10%
0%
Passing (%)
0.1
1
10
100
Particle diameter (mm)
30-TF-08/07-17:30_BLT
30-TF-11/07-8:30_BLT
30-TF-10/07-8:30_BLT
30-TF-11/07-13:48_BLT
30-TF-14/07-10:50_BLT
30-TF-14/07-11:00_SP
30-TF-02/07_SP
30-TF-03/07_SP
30-TF-02/07_BLT
30-TF-04/07_BLT
30-TF-08/07_SP
30-TF-11/07_BLT
30-TF-12/07-15:40_SP IQR
30-TF-12/07-15:30_BLT IQR
30-TF-20/07_(2) IQR
30-TF-20/07_(1) IQR
TF_30_July 12_BLT
TF_30_July 12_SP
TF_30_July 20_SP
TF_30_July 12_15:30_BLT
30-TF-Sept 5_SP
30-TF-Sept 4_BLT
30-TF-Sept 5_BLT
30-TF-Sept 4_SP
30-TF-Sept 13_BLT
30-TF-Sept 13_SP
30-TF-Sept 18_BLT
30-TF-Sept 18_SP
30-TF-Sept 25_BLT
30-TF-Sept 25_SP
Average

Table 1: Summary of Particle Size Analysis Results - 30 mm minus Rankin Inlet Tank Farm

No.	Sample ID	Sieve Size (mm)								Moisture Content
		25.00	20.00	12.50	10.00	5.00	2.00	0.63	0.08	
1	30-TF-02/07_SP	100.0%	95.6%	75.4%	65.9%	45.8%	29.6%	17.2%	8.2%	0.34%
2	30-TF-03/07_SP	100.0%	81.6%	41.7%	32.8%	16.7%	7.9%	4.6%	2.6%	0.10%
3	30-TF-02/07_BLT	98.9%	82.3%	38.6%	29.7%	14.6%	7.2%	3.4%	2.1%	0.10%
4	30-TF-04/07_BLT	98.3%	85.5%	55.1%	46.9%	28.5%	15.8%	8.0%	3.8%	1.08%
5	30-TF-08/07_SP	100.0%	86.7%	55.5%	44.2%	22.8%	11.2%	6.5%	3.6%	0.22%
6	30-TF-11/07_BLT	100.0%	88.2%	59.9%	51.4%	32.8%	20.5%	12.5%	6.2%	0.29%
7	30-TF-08/07-17:30_BLT	100.0%	80.2%	31.0%	23.3%	7.0%	2.4%	1.3%	0.6%	0.65%
8	30-TF-11/07-8:30_BLT	100.0%	89.4%	53.5%	43.8%	24.5%	13.1%	6.7%	3.1%	0.49%
9	30-TF-10/07-8:30_BLT	100.0%	88.8%	63.9%	54.1%	34.9%	21.4%	12.5%	6.3%	0.71%
10	30-TF-11/07-13:48_BLT	100.0%	84.3%	53.9%	45.0%	26.5%	15.6%	9.5%	5.1%	0.38%
11	30-TF-14/07-10:50_BLT	100.0%	82.1%	47.3%	36.8%	19.0%	10.4%	6.6%	4.0%	0.48%
12	30-TF-14/07-11:00_SP	100.0%	78.6%	48.8%	41.0%	25.6%	14.5%	8.0%	4.0%	0.43%
13	30-TF-12/07-15:40_SP IQR	100.0%	83.2%	55.1%	46.1%	28.0%	18.2%	11.6%	6.2%	0.39%
14	30-TF-12/07-15:30_BLT IQR	100.0%	88.5%	48.4%	39.4%	23.5%	14.8%	9.2%	5.1%	0.44%
15	30-TF-20/07_(1) IQR	100.0%	93.1%	66.2%	58.2%	41.3%	27.4%	16.7%	6.7%	0.73%
16	30-TF-20/07_(2) IQR	100.0%	90.2%	65.9%	58.7%	37.9%	22.4%	11.9%	5.2%	0.73%
17	TF_30_July 12_BLT	100.0%	89.9%	63.9%	56.7%	37.0%	22.5%	13.0%	6.8%	0.80%
18	TF_30_July 12_SP	100.0%	88.2%	52.3%	42.1%	25.2%	15.8%	10.1%	5.5%	0.27%
19	TF_30_July 20_SP	100.0%	83.5%	63.3%	56.4%	39.4%	25.3%	16.2%	8.9%	0.71%
20	TF_30_July 12_15:30_BLT	100.0%	88.8%	57.6%	49.8%	35.8%	28.6%	23.8%	20.2%	0.31%
21	30-TF-Sept 5_SP	100.0%	73.6%	46.7%	40.2%	25.2%	15.2%	8.5%	4.0%	0.34%
22	30-TF-Sept 4_BLT	100.0%	67.4%	38.6%	31.8%	18.8%	10.4%	5.3%	2.7%	0.22%
23	30-TF-Sept 5_BLT	100.0%	81.6%	59.9%	51.0%	32.2%	18.7%	10.7%	5.7%	0.48%
24	30-TF-Sept 4_SP	100.0%	77.8%	55.0%	50.2%	34.8%	23.4%	14.2%	6.8%	1.07%
25	30-TF-Sept 13_BLT	90.1%	72.1%	40.9%	32.1%	16.5%	9.2%	5.6%	3.2%	0.75%
26	30-TF-Sept 13_SP	100.0%	79.8%	56.0%	48.9%	34.5%	23.4%	13.7%	6.9%	0.97%
27	30-TF-Sept 18_BLT	100.0%	73.4%	57.2%	50.0%	32.6%	18.7%	9.6%	4.3%	0.96%
28	30-TF-Sept 18_SP	100.0%	69.4%	33.9%	25.4%	13.2%	8.0%	4.8%	1.4%	3.08%
29	30-TF-Sept 25_BLT	100.0%	81.9%	46.8%	36.6%	22.0%	13.4%	7.6%	3.7%	1.39%
30	30-TF-Sept 25_SP	100.0%	62.0%	30.1%	23.0%	11.2%	6.0%	3.1%	1.4%	1.25%
Average		**99.6%**	**82.3%**	**52.1%**	**43.7%**	**26.9%**	**16.4%**	**9.7%**	**5.1%**	**0.7%**

Required Test Frequency (1/XX)=	500	m3
Design Quantity =	9545	m3
No. Tests Required =	19	

APPENDIX P

Inspection Reports – Visit Reports for Final Wall Inspection

RANKIN TANK FARM – FINAL WALL - VISIT REPORT

Date: June 21st, 2017

From: Vanessa Smith

To: Jack Dutil, Mark Long, Stephane Gionest,

Cc: Éric Côté, Philemon Desrochers Gagnon, Philippe Lapointe, Véronique Falmagne, Christopher Penna.

THIS REPORT IS A SUMMARY OF THE RECOMMENDATION MADE TO SUPPORT THE TANK FARM AREA FINAL WALL AS REQUESTED BY THE RANKIN CONSTRUCTION TEAM.

The Rankin fuel tank farm laydown area was visited on Monday June 19, 2017 by Veronique Falmagne, Senior Mining Advisor, Vanessa Smith, Mine Engineer, and Philippe Lapointe, Engineering Superintendent. We were met on site by Stephane Gionet and inspected the northeast wall area. The northwest wall and corner were not cleaned out and were not as visible.

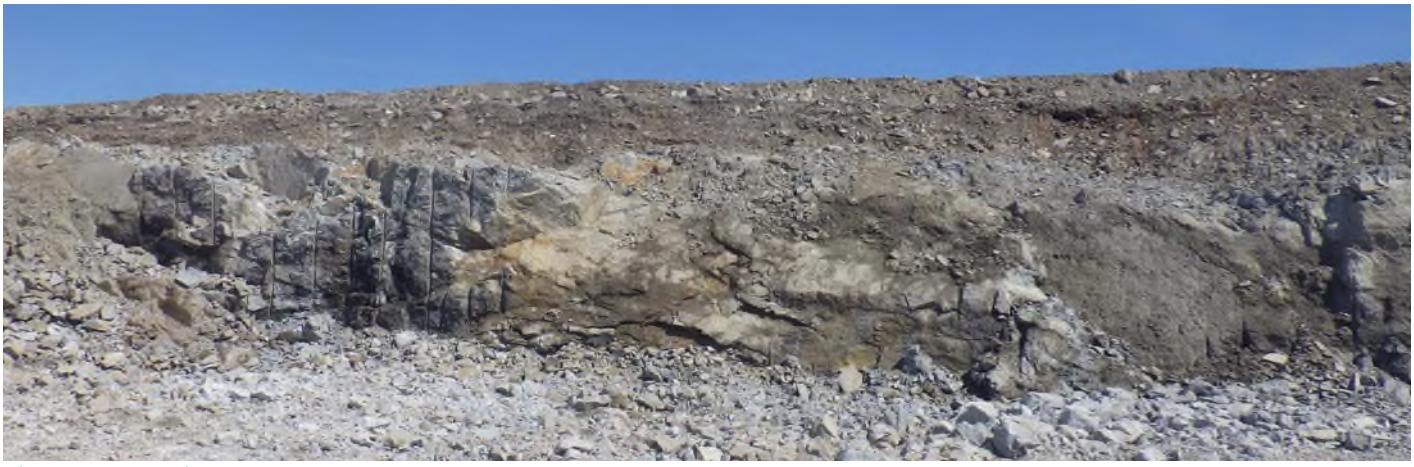

Figure 1 - Inspection area

From what could be observed, the rock quality is good on the northwest wall except near the north corner where a fault zone can be seen. The fault zone seems to be trending Southeast-Northwest approximately parallel to the northwest wall. The corner area appears to be in bad ground and will require further assessment once the blast has been cleared out.

Elsewhere the rock is good and half barrels are clearly visible along the northwest wall and part of the Northeast wall that was exposed. Large blocks will have to be scaled down and at least one area on the northeast wall may require re-blasting.

Recommendations provided during the visit include:

- Scrape and push back overburden at least 5 m from the crest then sloped to 1V:3H as indicated on the plan and covered with rock to maintain long term stability.

- The northwest corner will break back farther due to the fault zone and looks lower than the rest of the wall. In this area it will be necessary to clean out the blast and remove, then slope the broken / weak fault material. The overburden will need to be scraped back and sloped from the final crest location. Therefore it may need to be done in two passes.

- The face should be screened and bolted as a preventive measure to reduce long term deterioration from freeze/thaw action and mitigate liability of loose falling on bystanders. Regardless of the plan to fence the area, the easy accessibility of the site and location within the community puts the area at high risk of trespassing.

A follow-up inspection will be carried out tomorrow, June 22, 2017 to assess the scaling which has been carried out over the past days.

Should you have any question, do not hesitate to contact the Engineering department,

Regards,

Vanessa Smith, P. Eng.
Mine Engineer
Meliadine Project

RANKIN TANK FARM – FINAL WALL INSPECTION #2 - VISIT REPORT

Date: June 29th, 2017

From: Vanessa Smith

To: Jack Dutil, Mark Long, Stephane Gionest,

Cc: Éric Côté, Philemon Desrochers Gagnon, Philippe Lapointe, Véronique Falmagne, Christopher Penna.

THIS REPORT IS A SUMMARY OF THE SECONE INSPECTION CONDUCTED ON JUNE 22ND ONCE SCALING ACTIVIITES WERE COMPLETED IN THE TANK FARM AREA FINAL WALL AS REQUESTED BY THE RANKIN CONSTRUCTION TEAM.

The Rankin fuel tank farm laydown area was visited for a second inspection on Thursday June 22, 2017 following the requested scaling of the final wall area. Stephane Gionet was present for the second inspection of the northeast wall area. The northwest wall and corner were completely cleaned out and visible for this second inspection.



Figure 1 - Inspection area after scaling



Figure 2 - Inspection area after scaling – showing fault

Figure 2 shows some smaller rocks which should be removed as part of the final scaling. The rock quality is good on the northwest wall except near the north corner where a fault zone can be seen. The fault zone seems to be trending Southeast-Northwest approximately parallel to the northwest wall. This area continues to be of concern for the long term stability of the area. This structure has up to 6-inches of frozen gauge within (Figure 3).



Figure 3 – Fault Gauge – measured thickness (Photo taken by J. Pyliuk, Tetratech)



Figure 4 - Inspection area after scaling

Figure 4 shows the size of the blocks which were scaled since the previous inspection allowing for a proper inspection of the area. Figure 5 also shows the amount of scaling conducted; the drill rod was uncovered in the lasted area. The half barrels are clearly visible along the northwest wall and part of the Northeast wall that are fully exposed.



Figure 5 - Inspection area after scaling – corner area

Recommendations provided during the visit include:

- Final scaling for smaller blocks remains to be done.
- Scrape and push back overburden at least 5 m from the crest then sloped to 1V:3H as indicated on the plan and covered with rock to maintain long term stability.
- Screened and bolting of the final wall area remains to the discretion of the construction department and Tetratech. Following the removal of the larger blocks in the area the condition of the area has improved. The area which remains of concern due to deterioration from freeze/thaw action is the fault area. A proposal to create a thermal cap in this area was discussed with Tetratech. This area would have to be cleaned of any loose/melted gauge (pressure washer or other). Then a form would be built to retain the grout within/along the fault area to act as a thermal seal and infill for the open fault.

Should you have any question, do not hesitate to contact the Engineering department,

Regards,

Vanessa Smith, P. Eng.
Mine Engineer
Meliadine Project

APPENDIX Q

Inspection Report – Blasting Operation, Survey and Monotoring

EXPLOTECH

Specialists in Explosives, Blasting and Vibration
Consulting Engineers

October 6, 2017

Agnico Eagle Mines Ltd.
Meliadine Project
Rankin Inlet, Nunavut, Canada
X0C 0G0

Attention: Mr. Mark Long

Re: Department of National Defence Personal Accommodation Building
Final Report for Blasting Operations for Laydown Yard/Tank Farm and Itivia Pit Quarry
Rankin Inlet, Nunavut
April 25, 2017 to September 28, 2017

Dear Mr. Long,

Please accept this report as a comprehensive synopsis of all actions and items corresponding to the undertaken Blasting Operations for the Laydown Yard/Tank Farm and Itivia Pit Quarry as it directly relates to the Department of National Defence (DND) Personal Accommodation Building located in Rankin Inlet, Nunavut.

As a brief summary, a pre-blast inspection survey of the DND Personal Accommodation Building was completed on April 25, 2017 prior to the start of blasting at the Laydown Yard/Tank Farm. Following the completion of that blasting campaign, a post-blast survey was completed on June 15, 2017. Details on the comparative review between the pre and post blast surveys for the DND Personal Accommodation Building has been included in this report. This report also details the results of the vibration monitoring program developed and implemented in response to the blasting operations for the Laydown Yard/Tank Farm and Itivia Pit Quarry Project in Rankin Inlet, Nunavut. A comprehensive vibration monitoring program involving seismographs installed at representative locations around the blasting areas was in place from April 25, 2017 through September 28, 2017, which included a seismograph specifically installed at the DND property in question from April 25, 2017 to June 15, 2017. This program was implemented to measure vibrations adjacent to the blasting operations in order to guard against possible adverse impacts on the surrounding structure.

Historically, blasting operations attract a great deal of attention from occupants of buildings immediately adjacent to the project. Blasting tends to be highly visible, often noisy and occasionally a disruptive imposition on the day-to-day activities of the local community. Inhabitants of buildings close to the blasting may feel vibrations from the operation and as a result, become much more conscious of many of the previously unnoticed cracks, water stains, and similar defects in their homes and offices. Though there is an intuitive belief by most occupants that if they can feel the blast vibrations they must be damaging, these vibrations typically induce far lower strains on building components than the day-to-day environmental stresses that maintain every structure in a dynamic state. The combination of low particle velocities and frequencies beyond the natural frequencies of most structures generated by blasting and construction equipment are typically not damaging.

Pre-blast inspection surveys are often performed as a means of alleviating concerns expressed by building owners in close proximity to construction and blasting operations and to provide a baseline for assessing and evaluating complaints of damage following the completion of construction operations. With regards to the pre and post blast surveys completed at the DND Personal Accommodation Building, a visual inspection of all rooms located on the first floor of the structure was conducted, with all documented observations recorded by hand in a log book due to security concerns. Pre-existing defects that were observed and recorded were primarily cosmetic cracks in the drywall adjacent to windows, corners, door jams and plaster joints. In addition to the numerous drywall cracks, several screws protruding through the drywall (screw pops) were commonly noted throughout the structure.

During the interim period between the pre and post-blasting inspection surveys, the plumbing located in the North West wing of the building had frozen and subsequently burst creating flooding in a large portion of the main floor area. At the time of the June 15, 2017 post-blast inspection survey, many access points had been cut into the drywall to accommodate the extensive plumbing repairs required. These changes were excluded from the post-blast inspection survey as they were deemed to be external

influences not related to the blasting operations. For the remainder of the building that was unaffected by the plumbing repairs, no notable changes were observed relating to the blasting or construction operations.

A full time on-site Vibration Monitoring Program was implemented to delineate vibration intensities experienced at specific structures in the vicinity of the work. Vibration monitoring sensors listed below were installed at the nearest properties prior to the commencement and during the progression of both listed blasting operations on site:

Laydown Yard/Tank Farm Blasting Operations - April 2017 to June 2017

- **BE9028:** Nuna Logistics – Geophone sandbagged on ground at the Northwest corner of the trailer on Itivia Street. Linear Microphone installed in the direction of the blasting.
- **BE15860:** DND Barracks – Geophone sandbagged on carpet inside Room 166 in the Southern corner of the DND Personal Accommodation Building (Barracks). No Linear Microphone installed.
- **BE18909:** Old Ila Apartment – Geophone sandbagged on ground underneath the South end of the apartment building. Linear Microphone installed on the outside of the wooden plywood enclosure in the direction of the blasting.
- **BE21127:** Nunavut Excavating (Trailer) – Geophone sandbagged on ground at the Southwest corner of the trailer on Itivia Street. Linear Microphone installed in the direction of the blasting.

Itivia Pit Quarry - June 2017 to September 2017

- **BE9028:** Nuna Logistics – Geophone sandbagged on ground at the Northwest corner of the trailer on Itivia Street. Linear Microphone installed in the direction of the blasting.
- **BE18909:** Old Ila Apartment – Geophone sandbagged on ground underneath the South end of the apartment building. Linear Microphone installed on the outside of the wooden plywood enclosure in the direction of the blasting.
- **BE21127:** Nunavut Excavating (Trailer) – Geophone sandbagged on ground at the Southwest corner of the trailer on Itivia Street. Linear Microphone installed in the direction of the blasting.
- **BE8446:** Nunavut Excavating (Shop) – Geophone sandbagged on ground along the South side of the new shop. Linear Microphone installed in the direction of the blasting.
- **BE7369:** Muster Point Itivia – Geophone sandbagged on the ground under the steel base of the temporary electrical service at the muster point on Itivia Street.

The monitoring instruments installed consisted of Instantel tri-directional digital seismographs capable of measuring ground vibration intensities up to 254mm/s and air overpressures up to 148dB(L) at a frequency response of 2 – 250Hz. The units were programmed to measure all vibration levels continuously at a sampling rate of 1024 samples per second. Following each five or fifteen minute interval, the units reviewed the 307,200 or 921,600 measured vibrations and permanently recorded the peak particle velocity for that time interval while deleting all subordinate vibration intensities. This process was repeated for all subsequent five or fifteen minute time intervals thereby providing maximum vibration intensities experienced at the structure throughout the day. Such a configuration permits continuous monitoring of vibration levels and provides complete coverage of all vibrations, construction induced or otherwise, experienced at the monitor locations. Events recorded under this program mode are marked by an “H” on the enclosed vibration summary report.

As an additional analytical tool, the seismographs were configured to record a more detailed waveform in the event that vibration intensities exceeded a pre-set trigger level set at 2 mm/s or 5mm/s depending on the installation location. This feature permits advanced analysis in the event that elevated readings are recorded. Events recorded under this program mode are marked by a “W” on the enclosed vibration summary report.

Particle velocity is the descriptor of choice when dealing with vibrations because of its superior correlation with the appearance of cosmetic cracking. While particle velocities provide one measurement statistic, structural response to varied frequency necessitates the inclusion of frequency analysis in all vibration measurement. As such, the United States Bureau of Mines developed a set of criteria utilizing a graded scale incorporating reduced permissible particle velocities at reduced dominant frequencies (Refer to Figure 1). This set of criteria is now almost universally accepted as the basis for controlling blast and construction induced vibrations. This is not to say that damage automatically occurs once these levels are breached and, in fact, threshold damage would not occur in the average residence until ground vibrations reached significantly higher intensities than those listed. Damage as a result of transient vibrations at particle intensities below the above noted USBM threshold limits has never been scientifically observed.

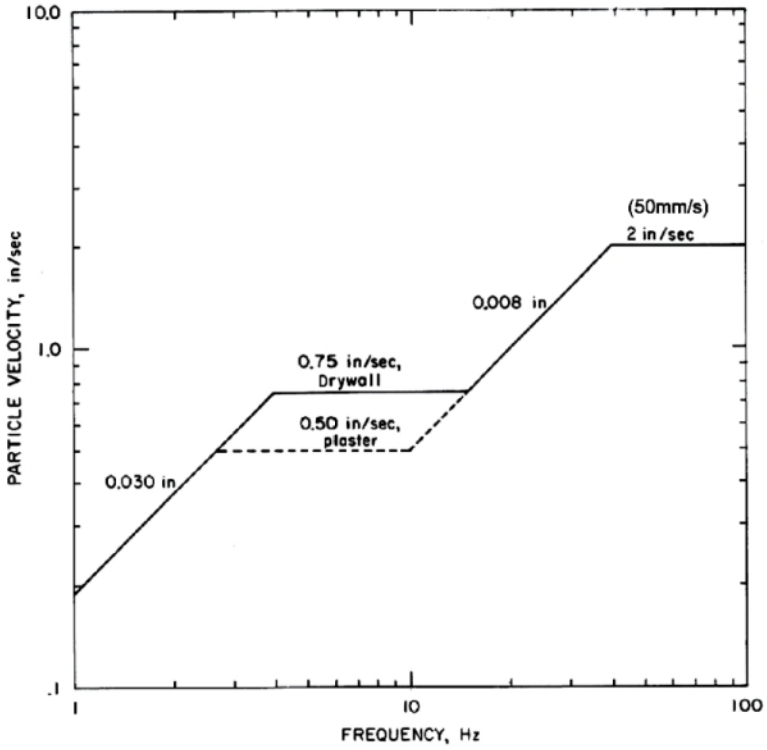

Figure 1 – USBM Z-Curve

It is an intrinsic nature of blast induced vibrations that these vibrations decrease with increasing distance. Under typical conditions, the vibration intensity decreases by two thirds of its previous value for every doubling of distance. That is to say that a peak particle velocity measurement of 100mm/s at a distance of 100 m from the blast location will have decreased to 33.3mm/s at a separation distance of 200m and 11.1 mm/s at a separation distance of 400m. While the nature of the transmitting medium (rock, earth, water) and presence of joint sets, fractures, faults and shear zones will all impact the rate of decay of the ground vibrations, the fact that within consistent media, intensities diminish with distance is unavoidable.

In regards to the blasting operations as part of the Laydown Yard/Tank Farm and Itivia Pit Project, Explotech Engineering recommended that Ontario Provincial Standard Specification (OPSS) 120, *General Specification for the Use of Explosives,* was implemented. This specification is merely a simplification of the aforementioned USBM Z-Curve and limits ground vibrations to 50mm/s for frequencies at or above 40Hz and

20mm/s for frequencies below 40Hz. Damage as a result of transient vibrations at particle intensities below these threshold limits have never been scientifically observed.

A review of the data collected on the project confirms that all of the recorded or predictable vibrations attributable to the blasting or construction operations resided below 11mm/s. The maximum vibration reading recorded at the DND Personal Accommodation Building during the Laydown Yard/Tank Farm blasting operations was a 10.67mm/s at a dominant frequency of 28.75Hz, recorded on May 19, 2017 at 17:52.

Following the completion of the blasting operations for the Laydown Yard/Tank Farm, operations were relocated to the Itivia Pit Quarry, situated approximately 700m removed from the DND Personal Accommodation Building. In order to ensure the closest structures to the blasting were monitored at all times, the seismograph located at the Personal Accommodation Building was relocated to the Muster Point on Itivia Street. This location served as the new closest point to quarry blasting (approximately 200m) and was situated directly in between the Personal Accommodation Building and quarry blasting. The maximum vibration recorded at the Muster Point on Itivia Street was a 5.842mm/s at a dominant frequency of 39.25Hz on July 6, 2017 at 7:59. With consideration for the attenuation of the vibrations over the additional 500m to the DND Personal Accommodation Building, the vibrations induced on the property would have resided below 3mm/s.

Vibration induced damage associated with blasting operations has never been observed at the measured and predictable intensities experienced at the subject property and consequently, attribution of any physical defects to the blasting operations is scientifically unjustifiable. While vibrations of this intensity would be clearly perceptible and may cause minor excitation in some items, knick-knacks and wall hangings, they would be insufficient to initiate damage in even historical or unusual structures.

Based on our inspections and subsequent comparison, as well as the vibration monitoring data measured and predicted throughout both blasting campaigns, it is our

opinion that the blasting operations undertaken in Rankin Inlet have not initiated any changes to the property located at Department of National Defence (DND) Personal Accommodation Building. We trust this information will prove beneficial and will assist in alleviating any concerns of damage to the building as a result of the blasting operations. Should you or the property representatives have any questions or additional concerns related to this brief report, we welcome the opportunity to address these at your leisure.

Kindest regards,

Brent McClelland, B.Eng.
Explotech Engineering Ltd.

Mitch Malcomson, P.Eng. (ON)
Explotech Engineering Ltd.

Rankin Inlet Laydown Yard/Tank Farm
M7704A - Nuna Logistics
April 25, 2017 to June 15, 2017

Event Report: Event List - z:\7. monitoring data\archived seismo readings\m77xx\m7704a - nunalogistics - rankin

Type	Serial No.	Date/Time	Trigger	Tran Peak (mm/s)	Vert Peak (mm/s)	Long Peak (mm/s)	PVS1 (mm/s)	Description
H	BE15860	Apr 25 /17 12:39:26	Manual	0.635	1.270	0.508	1.374	DND Barracks, Rankin Inlet, Nunavut
H	BE15860	Apr 26 /17 06:51:29	Manual	0.508	0.635	0.381	0.660	DND Barracks, Rankin Inlet, Nunavut
H	BE15860	Apr 27 /17 06:02:54	Manual	0.889	1.143	0.762	1.198	DND Barracks, Rankin Inlet, Nunavut
H	BE15860	Apr 27 /17 13:57:55	Manual	0.508	1.397	0.508	1.470	DND Barracks, Rankin Inlet, Nunavut
H	BE15860	Apr 28 /17 06:02:52	Manual	0.889	1.778	0.889	1.836	DND Barracks, Rankin Inlet, Nunavut
H	BE15860	Apr 29 /17 06:02:36	Manual	0.762	2.032	1.016	2.083	DND Barracks, Rankin Inlet, Nunavut
W	BE15860	Apr 29 /17 12:58:47	Vert	0.762	2.032	1.016	2.083	DND Barracks, Rankin Inlet, Nunavut
H	BE15860	Apr 29 /17 13:02:03	Manual	0.635	2.159	0.762	2.178	DND Barracks, Rankin Inlet, Nunavut
W	BE15860	Apr 29 /17 17:00:59	Vert	0.635	2.159	0.762	2.178	DND Barracks, Rankin Inlet, Nunavut
H	BE15860	Apr 29 /17 17:05:01	Manual	0.254	0.381	0.254	0.475	DND Barracks, Rankin Inlet, Nunavut
H	BE15860	Apr 30 /17 06:02:37	Manual	0.889	2.159	1.143	2.225	DND Barracks, Rankin Inlet, Nunavut
W	BE15860	Apr 30 /17 12:59:34	Vert	0.889	2.159	1.143	2.225	DND Barracks, Rankin Inlet, Nunavut
H	BE15860	Apr 30 /17 13:02:51	Manual	0.889	1.778	1.143	1.955	DND Barracks, Rankin Inlet, Nunavut
H	BE15860	May 1 /17 06:02:36	Manual	0.889	2.032	1.143	2.110	DND Barracks, Rankin Inlet, Nunavut
W	BE15860	May 1 /17 13:29:51	Vert	0.889	2.032	0.889	2.110	DND Barracks, Rankin Inlet, Nunavut
H	BE15860	May 1 /17 13:33:04	Manual	0.762	1.778	0.889	1.823	DND Barracks, Rankin Inlet, Nunavut
H	BE15860	May 2 /17 06:02:35	Manual	0.762	2.032	0.889	2.083	DND Barracks, Rankin Inlet, Nunavut
W	BE15860	May 2 /17 08:07:47	Vert	0.762	2.032	0.889	2.083	DND Barracks, Rankin Inlet, Nunavut
H	BE15860	May 2 /17 08:11:01	Manual	1.651	3.175	1.778	3.248	DND Barracks, Rankin Inlet, Nunavut
W	BE15860	May 2 /17 13:31:13	Vert	1.651	3.175	1.778	3.248	DND Barracks, Rankin Inlet, Nunavut
H	BE15860	May 2 /17 13:34:30	Manual	1.397	2.667	1.905	2.715	DND Barracks, Rankin Inlet, Nunavut
W	BE15860	May 2 /17 18:00:12	Vert	1.397	2.667	1.905	2.715	DND Barracks, Rankin Inlet, Nunavut
H	BE15860	May 2 /17 18:03:30	Manual	0.254	0.635	0.254	0.648	DND Barracks, Rankin Inlet, Nunavut
H	BE15860	May 3 /17 06:02:36	Manual	1.651	7.112	1.905	7.140	DND Barracks, Rankin Inlet, Nunavut
W	BE15860	May 3 /17 08:08:13	Vert	1.651	7.112	1.905	7.140	DND Barracks, Rankin Inlet, Nunavut
H	BE15860	May 3 /17 08:11:27	Manual	1.524	4.445	2.159	4.461	DND Barracks, Rankin Inlet, Nunavut
W	BE15860	May 3 /17 13:29:51	Vert	1.524	4.445	2.159	4.461	DND Barracks, Rankin Inlet, Nunavut
H	BE15860	May 3 /17 13:33:07	Manual	2.413	5.207	2.540	5.511	DND Barracks, Rankin Inlet, Nunavut
W	BE15860	May 3 /17 18:00:24	Vert	2.413	5.207	2.540	5.511	DND Barracks, Rankin Inlet, Nunavut
H	BE15860	May 3 /17 18:03:40	Manual	1.016	1.016	0.762	1.397	DND Barracks, Rankin Inlet, Nunavut
H	BE15860	May 4 /17 06:02:34	Manual	1.143	2.413	1.143	2.446	DND Barracks, Rankin Inlet, Nunavut
W	BE15860	May 4 /17 08:00:53	Vert	1.143	2.413	1.143	2.446	DND Barracks, Rankin Inlet, Nunavut
H	BE15860	May 4 /17 08:04:08	Manual	2.032	5.969	2.286	5.982	DND Barracks, Rankin Inlet, Nunavut
W	BE15860	May 4 /17 13:31:52	Vert	2.032	5.969	2.286	5.982	DND Barracks, Rankin Inlet, Nunavut
H	BE15860	May 4 /17 13:35:58	Manual	1.270	3.175	1.905	3.343	DND Barracks, Rankin Inlet, Nunavut
W	BE15860	May 4 /17 18:01:10	Vert	1.270	3.175	1.905	3.343	DND Barracks, Rankin Inlet, Nunavut
H	BE15860	May 4 /17 18:04:29	Manual	0.635	2.159	0.508	2.163	DND Barracks, Rankin Inlet, Nunavut
W	BE15860	May 4 /17 20:08:23	Vert	0.381	2.159	0.508	2.163	DND Barracks, Rankin Inlet, Nunavut
H	BE15860	May 4 /17 20:11:40	Manual	0.635	0.635	0.508	0.823	DND Barracks, Rankin Inlet, Nunavut
H	BE15860	May 5 /17 06:02:36	Manual	1.524	3.429	1.905	3.508	DND Barracks, Rankin Inlet, Nunavut
W	BE15860	May 5 /17 08:00:03	Vert	1.524	3.429	1.905	3.508	DND Barracks, Rankin Inlet, Nunavut
H	BE15860	May 5 /17 08:03:19	Manual	1.143	3.048	1.905	3.093	DND Barracks, Rankin Inlet, Nunavut
W	BE15860	May 5 /17 13:30:58	Vert	1.143	3.048	1.905	3.093	DND Barracks, Rankin Inlet, Nunavut
H	BE15860	May 5 /17 13:34:17	Manual	0.889	1.778	1.270	1.818	DND Barracks, Rankin Inlet, Nunavut
H	BE15860	May 6 /17 06:02:36	Manual	2.286	4.191	2.540	4.581	DND Barracks, Rankin Inlet, Nunavut
W	BE15860	May 6 /17 08:00:04	Vert	2.286	4.191	2.540	4.581	DND Barracks, Rankin Inlet, Nunavut
H	BE15860	May 6 /17 08:03:17	Manual	1.143	3.683	1.905	3.953	DND Barracks, Rankin Inlet, Nunavut
W	BE15860	May 6 /17 13:30:36	Vert	1.143	3.683	1.905	3.953	DND Barracks, Rankin Inlet, Nunavut
H	BE15860	May 6 /17 13:34:01	Manual	1.651	4.572	2.032	4.752	DND Barracks, Rankin Inlet, Nunavut
W	BE15860	May 6 /17 18:00:56	Vert	1.651	4.572	2.032	4.752	DND Barracks, Rankin Inlet, Nunavut
H	BE15860	May 6 /17 18:06:24	Manual	0.635	0.635	0.635	0.907	DND Barracks, Rankin Inlet, Nunavut
H	BE15860	May 7 /17 06:03:22	Manual	2.032	3.556	2.286	3.772	DND Barracks, Rankin Inlet, Nunavut
W	BE15860	May 7 /17 07:59:55	Vert	2.032	3.556	2.286	3.772	DND Barracks, Rankin Inlet, Nunavut
H	BE15860	May 7 /17 08:03:07	Manual	1.651	3.810	2.413	3.921	DND Barracks, Rankin Inlet, Nunavut
W	BE15860	May 7 /17 13:29:52	Vert	1.651	3.810	2.413	3.921	DND Barracks, Rankin Inlet, Nunavut
H	BE15860	May 7 /17 13:33:13	Manual	1.905	4.191	2.540	4.798	DND Barracks, Rankin Inlet, Nunavut
W	BE15860	May 7 /17 18:14:54	Vert	1.905	4.191	2.540	4.798	DND Barracks, Rankin Inlet, Nunavut
H	BE15860	May 7 /17 18:25:12	Manual	0.254	0.508	0.254	0.508	DND Barracks, Rankin Inlet, Nunavut
H	BE15860	May 8 /17 06:02:35	Manual	2.159	4.953	3.302	5.134	DND Barracks, Rankin Inlet, Nunavut
W	BE15860	May 8 /17 07:59:44	Vert	2.159	4.953	3.302	5.134	DND Barracks, Rankin Inlet, Nunavut
H	BE15860	May 8 /17 08:03:40	Manual	1.143	2.413	1.143	2.469	DND Barracks, Rankin Inlet, Nunavut
W	BE15860	May 8 /17 10:47:52	Vert	1.143	2.413	1.016	2.469	DND Barracks, Rankin Inlet, Nunavut
H	BE15860	May 8 /17 10:52:33	Manual	2.667	5.207	3.175	5.464	DND Barracks, Rankin Inlet, Nunavut
W	BE15860	May 8 /17 17:58:03	Vert	2.667	5.207	3.175	5.464	DND Barracks, Rankin Inlet, Nunavut

Rankin Inlet Laydown Yard/Tank Farm
M7704A - Nuna Logistics
April 25, 2017 to June 15, 2017

Event Report: Event List - z:\7. monitoring data\archived seismo readings\m77xx\m7704a - nunalogistics - rankin

Type	Serial No.	Date/Time	Trigger	Tran Peak (mm/s)	Vert Peak (mm/s)	Long Peak (mm/s)	PVS1 (mm/s)	Description
H	BE15860	May 8 /17 18:01:17	Manual	1.016	2.032	0.762	2.048	DND Barracks, Rankin Inlet, Nunavut
W	BE15860	May 8 /17 22:27:36	Vert	0.508	2.032	0.635	2.048	DND Barracks, Rankin Inlet, Nunavut
H	BE15860	May 8 /17 22:31:00	Manual	1.143	1.524	1.016	2.036	DND Barracks, Rankin Inlet, Nunavut
H	BE15860	May 9 /17 06:02:33	Manual	1.905	3.937	2.667	4.154	DND Barracks, Rankin Inlet, Nunavut
W	BE15860	May 9 /17 07:59:38	Vert	1.905	3.937	2.667	4.154	DND Barracks, Rankin Inlet, Nunavut
H	BE15860	May 9 /17 08:05:10	Manual	1.143	2.921	1.016	2.989	DND Barracks, Rankin Inlet, Nunavut
W	BE15860	May 9 /17 11:15:49	Vert	1.143	2.921	0.889	2.989	DND Barracks, Rankin Inlet, Nunavut
H	BE15860	May 9 /17 11:19:03	Manual	2.032	4.953	2.413	5.058	DND Barracks, Rankin Inlet, Nunavut
W	BE15860	May 9 /17 13:29:37	Vert	2.032	4.953	2.413	5.058	DND Barracks, Rankin Inlet, Nunavut
H	BE15860	May 9 /17 13:33:38	Manual	1.524	3.683	1.778	3.797	DND Barracks, Rankin Inlet, Nunavut
W	BE15860	May 9 /17 17:56:43	Vert	1.524	3.683	1.778	3.797	DND Barracks, Rankin Inlet, Nunavut
H	BE15860	May 9 /17 18:00:02	Manual	0.254	0.508	0.254	0.524	DND Barracks, Rankin Inlet, Nunavut
H	BE15860	May 10 /17 06:02:35	Manual	2.032	3.302	2.413	3.389	DND Barracks, Rankin Inlet, Nunavut
W	BE15860	May 10 /17 07:59:26	Vert	2.032	3.302	2.413	3.389	DND Barracks, Rankin Inlet, Nunavut
H	BE15860	May 10 /17 08:03:23	Manual	1.778	4.318	2.286	4.731	DND Barracks, Rankin Inlet, Nunavut
W	BE15860	May 10 /17 17:59:35	Vert	1.778	4.318	2.286	4.731	DND Barracks, Rankin Inlet, Nunavut
H	BE15860	May 10 /17 18:03:00	Manual	0.254	0.635	0.381	0.660	DND Barracks, Rankin Inlet, Nunavut
H	BE15860	May 12 /17 06:29:25	Manual	2.921	4.572	2.286	4.728	DND Barracks, Rankin Inlet, Nunavut
W	BE15860	May 12 /17 17:59:07	Vert	2.921	4.572	2.286	4.728	DND Barracks, Rankin Inlet, Nunavut
H	BE15860	May 12 /17 18:02:22	Manual	0.381	0.762	0.381	0.783	DND Barracks, Rankin Inlet, Nunavut
H	BE15860	May 13 /17 06:02:34	Manual	1.778	3.937	1.778	4.117	DND Barracks, Rankin Inlet, Nunavut
W	BE15860	May 13 /17 13:30:00	Vert	1.778	3.937	1.778	4.117	DND Barracks, Rankin Inlet, Nunavut
H	BE15860	May 13 /17 13:33:17	Manual	2.921	4.064	2.667	4.327	DND Barracks, Rankin Inlet, Nunavut
W	BE15860	May 13 /17 17:52:00	Vert	2.921	4.064	2.667	4.327	DND Barracks, Rankin Inlet, Nunavut
H	BE15860	May 13 /17 17:55:20	Manual	0.254	0.381	0.254	0.381	DND Barracks, Rankin Inlet, Nunavut
H	BE15860	May 14 /17 06:02:34	Manual	2.286	4.699	3.429	5.127	DND Barracks, Rankin Inlet, Nunavut
W	BE15860	May 14 /17 07:59:56	Vert	2.286	4.699	3.429	5.127	DND Barracks, Rankin Inlet, Nunavut
H	BE15860	May 14 /17 08:03:07	Manual	2.159	8.509	2.540	8.548	DND Barracks, Rankin Inlet, Nunavut
W	BE15860	May 14 /17 17:27:39	Vert	2.159	8.509	2.540	8.548	DND Barracks, Rankin Inlet, Nunavut
H	BE15860	May 14 /17 17:30:58	Manual	0.254	0.635	0.254	0.648	DND Barracks, Rankin Inlet, Nunavut
H	BE15860	May 15 /17 06:02:34	Manual	2.159	4.572	2.667	4.665	DND Barracks, Rankin Inlet, Nunavut
W	BE15860	May 15 /17 07:59:51	Long	2.159	4.572	2.667	4.665	DND Barracks, Rankin Inlet, Nunavut
H	BE15860	May 15 /17 08:06:47	Manual	1.270	1.651	1.397	1.955	DND Barracks, Rankin Inlet, Nunavut
H	BE15860	May 16 /17 06:02:39	Manual	1.397	2.159	1.270	2.389	DND Barracks, Rankin Inlet, Nunavut
W	BE15860	May 16 /17 08:00:04	Vert	1.397	2.159	1.270	2.389	DND Barracks, Rankin Inlet, Nunavut
H	BE15860	May 16 /17 08:03:18	Manual	1.778	3.302	2.159	3.377	DND Barracks, Rankin Inlet, Nunavut
W	BE15860	May 16 /17 17:56:54	Vert	1.778	3.302	2.159	3.377	DND Barracks, Rankin Inlet, Nunavut
H	BE15860	May 16 /17 18:00:12	Manual	0.254	0.762	0.381	0.783	DND Barracks, Rankin Inlet, Nunavut
H	BE15860	May 17 /17 06:02:34	Manual	1.651	4.953	1.778	4.981	DND Barracks, Rankin Inlet, Nunavut
W	BE15860	May 17 /17 07:59:46	Vert	1.651	4.953	1.778	4.981	DND Barracks, Rankin Inlet, Nunavut
H	BE15860	May 17 /17 08:03:06	Manual	2.413	5.334	2.540	5.496	DND Barracks, Rankin Inlet, Nunavut
W	BE15860	May 17 /17 17:52:25	Vert	2.413	5.334	2.540	5.496	DND Barracks, Rankin Inlet, Nunavut
H	BE15860	May 17 /17 17:55:47	Manual	0.254	0.508	0.254	0.524	DND Barracks, Rankin Inlet, Nunavut
H	BE15860	May 18 /17 06:02:36	Manual	2.032	5.461	2.921	5.692	DND Barracks, Rankin Inlet, Nunavut
W	BE15860	May 18 /17 07:56:39	Vert	2.032	5.461	2.921	5.692	DND Barracks, Rankin Inlet, Nunavut
H	BE15860	May 18 /17 07:59:58	Manual	2.921	5.334	3.048	5.515	DND Barracks, Rankin Inlet, Nunavut
W	BE15860	May 18 /17 17:52:56	Vert	2.921	5.334	3.048	5.515	DND Barracks, Rankin Inlet, Nunavut
H	BE15860	May 18 /17 17:56:17	Manual	0.254	0.254	0.254	0.381	DND Barracks, Rankin Inlet, Nunavut
H	BE15860	May 19 /17 06:02:34	Manual	2.286	4.953	2.540	5.149	DND Barracks, Rankin Inlet, Nunavut
W	BE15860	May 19 /17 07:59:33	Vert	2.286	4.953	2.540	5.149	DND Barracks, Rankin Inlet, Nunavut
H	BE15860	May 19 /17 08:02:46	Manual	2.159	10.67	3.048	10.84	DND Barracks, Rankin Inlet, Nunavut
W	BE15860	May 19 /17 17:52:37	Vert	2.159	10.67	3.048	10.84	DND Barracks, Rankin Inlet, Nunavut
H	BE15860	May 19 /17 17:55:54	Manual	0.254	0.635	0.254	0.648	DND Barracks, Rankin Inlet, Nunavut
H	BE15860	May 20 /17 06:02:34	Manual	1.651	4.064	1.778	4.080	DND Barracks, Rankin Inlet, Nunavut
W	BE15860	May 20 /17 07:59:49	Vert	1.651	4.064	1.778	4.080	DND Barracks, Rankin Inlet, Nunavut
H	BE15860	May 20 /17 08:03:02	Manual	1.905	4.064	2.413	4.533	DND Barracks, Rankin Inlet, Nunavut
W	BE15860	May 20 /17 17:58:27	Vert	1.905	4.064	2.413	4.533	DND Barracks, Rankin Inlet, Nunavut
H	BE15860	May 20 /17 18:01:45	Manual	0.254	0.381	0.254	0.381	DND Barracks, Rankin Inlet, Nunavut
H	BE15860	May 21 /17 06:02:34	Manual	1.524	3.429	1.778	3.524	DND Barracks, Rankin Inlet, Nunavut
W	BE15860	May 21 /17 07:59:27	Vert	1.524	3.429	1.778	3.524	DND Barracks, Rankin Inlet, Nunavut
H	BE15860	May 21 /17 08:02:40	Manual	1.397	2.540	1.270	2.753	DND Barracks, Rankin Inlet, Nunavut
W	BE15860	May 21 /17 17:48:33	Vert	1.397	2.540	1.270	2.753	DND Barracks, Rankin Inlet, Nunavut
H	BE15860	May 21 /17 17:51:49	Manual	0.254	0.254	0.254	0.381	DND Barracks, Rankin Inlet, Nunavut
H	BE15860	May 22 /17 06:02:34	Manual	1.397	3.302	1.524	3.494	DND Barracks, Rankin Inlet, Nunavut

Rankin Inlet Laydown Yard/Tank Farm
M7704A - Nuna Logistics
April 25, 2017 to June 15, 2017

Event Report: Event List - z:\7. monitoring data\archived seismo readings\m77xx\m7704a - nunalogistics - rankin

Type	Serial No.	Date/Time	Trigger	Tran Peak (mm/s)	Vert Peak (mm/s)	Long Peak (mm/s)	PVS1 (mm/s)	Description
W	BE15860	May 22 /17 07:59:22	Vert	1.397	3.302	1.524	3.494	DND Barracks, Rankin Inlet, Nunavut
H	BE15860	May 22 /17 08:02:40	Manual	1.651	6.350	2.413	6.356	DND Barracks, Rankin Inlet, Nunavut
W	BE15860	May 22 /17 17:59:16	Vert	1.651	6.350	2.413	6.356	DND Barracks, Rankin Inlet, Nunavut
H	BE15860	May 22 /17 18:02:36	Manual	0.254	0.889	0.381	0.898	DND Barracks, Rankin Inlet, Nunavut
H	BE15860	May 23 /17 06:02:41	Manual	1.524	3.048	1.651	3.137	DND Barracks, Rankin Inlet, Nunavut
W	BE15860	May 23 /17 07:54:35	Vert	1.524	3.048	1.651	3.137	DND Barracks, Rankin Inlet, Nunavut
H	BE15860	May 23 /17 07:57:52	Manual	1.651	2.667	1.397	2.706	DND Barracks, Rankin Inlet, Nunavut
W	BE15860	May 23 /17 17:59:38	Vert	1.651	2.667	1.397	2.706	DND Barracks, Rankin Inlet, Nunavut
H	BE15860	May 23 /17 18:02:54	Manual	0.254	0.254	0.254	0.381	DND Barracks, Rankin Inlet, Nunavut
H	BE15860	May 24 /17 06:02:35	Manual	2.159	5.334	3.175	5.816	DND Barracks, Rankin Inlet, Nunavut
W	BE15860	May 24 /17 07:59:27	Vert	2.159	5.334	3.175	5.816	DND Barracks, Rankin Inlet, Nunavut
H	BE15860	May 24 /17 08:02:43	Manual	1.016	3.429	1.016	3.497	DND Barracks, Rankin Inlet, Nunavut
W	BE15860	May 24 /17 10:50:13	Vert	1.016	3.429	0.889	3.497	DND Barracks, Rankin Inlet, Nunavut
H	BE15860	May 24 /17 10:57:11	Manual	2.159	9.779	2.667	9.918	DND Barracks, Rankin Inlet, Nunavut
W	BE15860	May 24 /17 17:58:25	Vert	2.159	9.779	2.667	9.918	DND Barracks, Rankin Inlet, Nunavut
H	BE15860	May 24 /17 18:01:44	Manual	0.254	0.254	0.254	0.381	DND Barracks, Rankin Inlet, Nunavut
H	BE15860	May 25 /17 06:04:00	Manual	1.270	3.175	1.397	3.218	DND Barracks, Rankin Inlet, Nunavut
W	BE15860	May 25 /17 07:58:23	Vert	1.270	3.175	1.397	3.218	DND Barracks, Rankin Inlet, Nunavut
H	BE15860	May 25 /17 08:02:24	Manual	2.540	5.969	3.683	6.592	DND Barracks, Rankin Inlet, Nunavut
W	BE15860	May 25 /17 17:59:14	Vert	2.540	5.969	3.683	6.592	DND Barracks, Rankin Inlet, Nunavut
H	BE15860	May 25 /17 18:02:36	Manual	0.254	0.381	0.254	0.421	DND Barracks, Rankin Inlet, Nunavut
H	BE15860	May 26 /17 06:02:34	Manual	0.762	4.191	0.889	4.216	DND Barracks, Rankin Inlet, Nunavut
W	BE15860	May 26 /17 07:59:42	Vert	0.635	4.191	0.762	4.216	DND Barracks, Rankin Inlet, Nunavut
H	BE15860	May 26 /17 08:02:57	Manual	0.508	1.270	0.762	1.283	DND Barracks, Rankin Inlet, Nunavut
H	BE15860	May 27 /17 06:02:41	Manual	1.397	1.524	1.397	2.020	DND Barracks, Rankin Inlet, Nunavut
H	BE15860	May 28 /17 06:02:36	Manual	1.270	2.794	1.651	2.843	DND Barracks, Rankin Inlet, Nunavut
W	BE15860	May 28 /17 07:58:50	Vert	1.270	2.794	1.651	2.843	DND Barracks, Rankin Inlet, Nunavut
H	BE15860	May 28 /17 08:02:05	Manual	1.397	3.302	1.524	3.372	DND Barracks, Rankin Inlet, Nunavut
W	BE15860	May 28 /17 17:58:57	Vert	1.397	3.302	1.524	3.372	DND Barracks, Rankin Inlet, Nunavut
H	BE15860	May 28 /17 18:02:13	Manual	0.381	0.889	0.381	0.907	DND Barracks, Rankin Inlet, Nunavut
H	BE15860	May 29 /17 06:02:34	Manual	1.651	2.540	1.524	2.646	DND Barracks, Rankin Inlet, Nunavut
W	BE15860	May 29 /17 07:59:45	Vert	1.651	2.540	1.524	2.646	DND Barracks, Rankin Inlet, Nunavut
H	BE15860	May 29 /17 08:03:42	Manual	1.016	1.524	0.889	1.591	DND Barracks, Rankin Inlet, Nunavut
H	BE15860	May 30 /17 06:02:36	Manual	0.889	2.794	1.905	2.794	DND Barracks, Rankin Inlet, Nunavut
W	BE15860	May 30 /17 13:29:34	Vert	0.889	2.794	1.905	2.794	DND Barracks, Rankin Inlet, Nunavut
H	BE15860	May 30 /17 13:32:52	Manual	2.159	4.064	1.778	4.229	DND Barracks, Rankin Inlet, Nunavut
W	BE15860	May 30 /17 17:57:35	Vert	2.159	4.064	1.778	4.229	DND Barracks, Rankin Inlet, Nunavut
H	BE15860	May 30 /17 18:00:54	Manual	0.381	0.889	0.381	0.889	DND Barracks, Rankin Inlet, Nunavut
H	BE15860	May 31 /17 06:02:36	Manual	1.524	3.302	1.397	3.312	DND Barracks, Rankin Inlet, Nunavut
W	BE15860	May 31 /17 07:58:32	Vert	1.524	3.302	1.397	3.312	DND Barracks, Rankin Inlet, Nunavut
H	BE15860	May 31 /17 08:01:50	Manual	1.397	3.937	2.286	3.996	DND Barracks, Rankin Inlet, Nunavut
W	BE15860	May 31 /17 13:31:32	Vert	1.397	3.937	2.286	3.996	DND Barracks, Rankin Inlet, Nunavut
H	BE15860	May 31 /17 13:35:38	Manual	0.381	1.143	0.381	1.150	DND Barracks, Rankin Inlet, Nunavut
H	BE15860	Jun 1 /17 06:02:36	Manual	1.778	5.969	3.302	6.409	DND Barracks, Rankin Inlet, Nunavut
W	BE15860	Jun 1 /17 07:58:30	Vert	1.778	5.969	3.302	6.409	DND Barracks, Rankin Inlet, Nunavut
H	BE15860	Jun 1 /17 08:02:40	Manual	1.905	5.842	3.302	5.922	DND Barracks, Rankin Inlet, Nunavut
W	BE15860	Jun 1 /17 13:29:20	Vert	1.905	5.842	3.302	5.922	DND Barracks, Rankin Inlet, Nunavut
H	BE15860	Jun 1 /17 13:32:42	Manual	1.143	2.159	1.016	2.338	DND Barracks, Rankin Inlet, Nunavut
W	BE15860	Jun 1 /17 17:58:18	Vert	1.143	2.159	1.016	2.338	DND Barracks, Rankin Inlet, Nunavut
H	BE15860	Jun 1 /17 18:01:41	Manual	0.254	0.508	0.254	0.524	DND Barracks, Rankin Inlet, Nunavut
H	BE15860	Jun 2 /17 06:03:18	Manual	1.270	3.810	1.905	3.976	DND Barracks, Rankin Inlet, Nunavut
W	BE15860	Jun 2 /17 07:59:25	Vert	1.270	3.810	1.905	3.976	DND Barracks, Rankin Inlet, Nunavut
H	BE15860	Jun 2 /17 08:02:41	Manual	1.016	1.778	1.270	1.778	DND Barracks, Rankin Inlet, Nunavut
H	BE15860	Jun 3 /17 06:02:36	Manual	0.635	1.778	0.889	1.778	DND Barracks, Rankin Inlet, Nunavut
H	BE15860	Jun 4 /17 06:02:37	Manual	0.889	2.413	1.143	2.609	DND Barracks, Rankin Inlet, Nunavut
W	BE15860	Jun 4 /17 13:29:16	Vert	0.889	2.413	1.143	2.609	DND Barracks, Rankin Inlet, Nunavut
H	BE15860	Jun 4 /17 13:32:35	Manual	0.889	2.794	0.889	2.910	DND Barracks, Rankin Inlet, Nunavut
W	BE15860	Jun 4 /17 17:58:17	Vert	0.889	2.794	0.889	2.910	DND Barracks, Rankin Inlet, Nunavut
H	BE15860	Jun 4 /17 18:01:33	Manual	0.254	0.381	0.254	0.402	DND Barracks, Rankin Inlet, Nunavut
H	BE15860	Jun 5 /17 06:02:34	Manual	0.762	1.397	0.889	1.540	DND Barracks, Rankin Inlet, Nunavut
H	BE15860	Jun 6 /17 06:02:36	Manual	0.635	0.889	0.635	1.040	DND Barracks, Rankin Inlet, Nunavut
H	BE15860	Jun 7 /17 06:02:38	Manual	0.635	1.143	0.635	1.314	DND Barracks, Rankin Inlet, Nunavut
H	BE15860	Jun 8 /17 06:02:36	Manual	0.381	1.016	0.381	1.085	DND Barracks, Rankin Inlet, Nunavut
H	BE15860	Jun 9 /17 06:02:43	Manual	1.143	1.651	0.635	1.901	DND Barracks, Rankin Inlet, Nunavut

Rankin Inlet Laydown Yard/Tank Farm
M7704A - Nuna Logistics
April 25, 2017 to June 15, 2017

Event Report: Event List - z:\7. monitoring data\archived seismo readings\m77xx\m7704a - nunalogistics - rankin

Type	Serial No.	Date/Time	Trigger	Tran Peak (mm/s)	Vert Peak (mm/s)	Long Peak (mm/s)	PVS1 (mm/s)	Description
H	BE15860	Jun 10 /17 06:02:36	Manual	0.381	0.508	0.254	0.582	DND Barracks, Rankin Inlet, Nunavut
H	BE15860	Jun 11 /17 06:02:37	Manual	0.254	0.635	0.381	0.696	DND Barracks, Rankin Inlet, Nunavut
H	BE15860	Jun 12 /17 06:02:39	Manual	0.381	0.762	0.381	0.773	DND Barracks, Rankin Inlet, Nunavut
H	BE15860	Jun 13 /17 06:02:37	Manual	0.381	0.889	0.381	0.933	DND Barracks, Rankin Inlet, Nunavut
H	BE15860	Jun 15 /17 06:55:13	Manual	0.254	0.254	0.254	0.440	DND Barracks, Rankin Inlet, Nunavut

APPENDIX R

Inspection Report – Quality Control Final Report for Geomembrane Installation

RANKIN INLET TANK FARM
AGNICO EAGLE MINES LIMITED
Rankin Inlet, Nunavut
Texel Geosol Project No. C-15152

QUALITY CONTROL FINAL REPORT BY TEXEL GEOSOL INC.

Prepared for:

NUNA KIVALLIQ EARTHWORKS INC

By:

Texel GEOSOL

December, 2017

RANKIN INLET TANK FARM
AGNICO EAGLE MINES LIMITED
Rankin Inlet, Nunavut
Texel Geosol Project No. C-15152

QUALITY CONTROL FINAL REPORT BY TEXEL GEOSOL INC.

Prepared for:

NUNA KIVALLIQ EARTHWORKS INC
NUNA SERVICES LTD

9839-31 Avenue
Edmonton, Alberta
T6N 1C5

By:

TEXEL GEOSOL INC.
1300, 2e Rue, Parc industriel
Sainte-Marie, Québec, Canada
G6E 1G8

December, 2017

TABLE OF CONTENTS

1. INTRODUCTION 4
2. HUMAN RESOURCES 4
3. GEOMEMBRANE INSTALLATION 4
3.1. DESCRIPTION OF THE WORK 4
3.2. INSTALLATION PROCEDURES 5
3.3. GEOMEMBRANE QUALITY CONTROLS 5
3.3.1. On-site geomembrane installation 5
3.3.1.1 Welding trial tests 5,6
3.3.1.2 On-site non-destructive testing 6,7
3.3.1.3 On-site destructive tests 7
3.4. REPAIR PROCEDURES 8
3.5. RECORD DRAWING 8
4. GEOTEXTILE QUALITY CONTROL 8
5. CERTIFICATION 9

LIST OF APPENDICES

- APPENDIX I - Quality control test results obtained on site by Texel Geosol Inc
- APPENDIX II - Field Memos and Communications
- APPENDIX III - US-EPA Classification for Types of Break
- APPENDIX IV - Record drawing

LIST OF FIGURES

FIGURE 1 - DOUBLE -TRACK GEOMEMBRANE WELD 5
FIGURE 2 - FILLET-EXTRUDED GEOMEMBRANE WELD 5
FIGURE 3 - PEEL ADHESION TEST 6
FIGURE 4 - SHEAR STRENGTH TEST 6
FIGURE 5 - AIR-PRESSURE TEST 6
FIGURE 6 - VACUUM-BOX TEST 7

1. INTRODUCTION

The following report was prepared by Texel Geosol, for Nuna Kivalliq Earthworks Inc.

This report contains a description as well as a certification of all work conducted by Texel Geosol, installer of the geosynthetics. It also contains the record drawing of the geomembrane installation for the Rankin Inlet tank farm. All installation work conducted on the geosynthetics took place between July 14 and October 6, 2017.

2. HUMAN RESOURCES

The following list identifies the key personnel involved with the physical realization of this project

TEXEL GEOSOL INC. (Geosynthetic Installer)

- Mr. François Thivierge, Construction and project Manager
- Mr. Jacques St-Gelais, Operation Manager
- Mr. Eric Black and Simon Jodoin, Site Foreman
- Mr. Michael Gilbert and Anthony Michon-Duquette, Field QC Inspector
- Mr. Simon-Carl Marcoux, Kléber Nault, Olivier Belval, Phillipe Allie and David Beaulieu, Technicians

NUNA KIVALLIQ EARTHWORKS INC (General Contractor - Client)

- Mr. Matt Gallant, Project Manager

AGNICO EAGLE CONSTRUCTION (Quality Assurance)

3. GEOMEMBRANE INSTALLATION

This section includes a description of the work and the installation procedures used during the deployment of the geomembrane. Also, the construction quality control procedures are detailed in this section

3.1. Description of the work

The scope of the installation was to completely cover the Rankin Inlet Tank Farm with a geosynthetic lining system. Texel Geosol installed approximately 15959 sm of 60 mil HDPE textured geomembrane and 805 sm of 60 mil HDPE smooth . All the installation, seaming and repair procedures were conducted according to the project plans and specifications, and manufacturer's recommendations.

3.2. Installation Procedures

The geomembrane rolls were later deployed and installed by Texel Geosol as prescribed in the specifications. Panels were placed to minimize seams across the side slope and the tie-in seams. The panels were overlapped about 125 to 150 mm, allowing adequate double fusion welding and leaving enough material to perform peel and shear tests on seam samples (see section 3.3.2.1 for a description of these tests).

All seams between panels were made using an automated polymer fusion process, the fusion being obtained through a double hot wedge. These parallel welds create an air channel which allow air-pressure testing of the continuity of the seam (see Fig. 1).

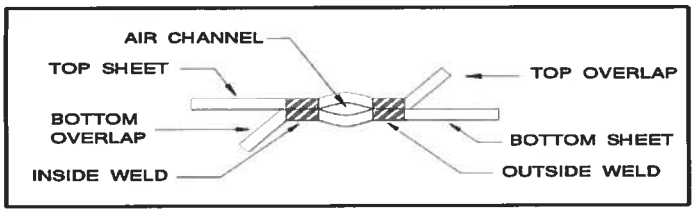

***Figure 1* - Double -Track Geomembrane Weld**

In restrictive areas where this process could not be adequately applied, such as corners, repair work and pipe penetrations, a manual extrusion fillet welding was employed (see Fig. 2).

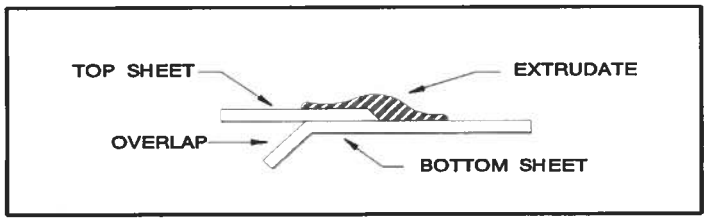

***Figure 2* - Fillet-Extruded Geomembrane Weld**

3.3. Geomembrane quality control

3.3.1. On-site geomembrane installation

3.3.1.1 Welding trial tests

Trial tests were performed prior to any on-site seaming in order to quantify the calibration of the welding equipment. On each sample, four peel tests and one shear tests were performed. A peel adhesion test is conducted by submitting a one inch-wide seam specimen to a tensile effort on a calibrated, portable tensiometer and trying to "peel", or open the seam (see Fig. 3). A shear strength test is similar, but the tension is applied in the plane of the seam (see Fig. 4). The peel test gives an indication of the quality of the seam while the shear test demonstrates the actual behavior of the seam in service.

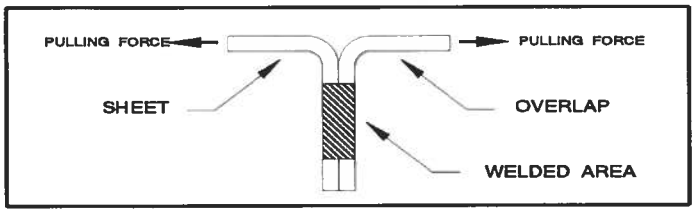

Figure 3 **- Peel Adhesion Test**

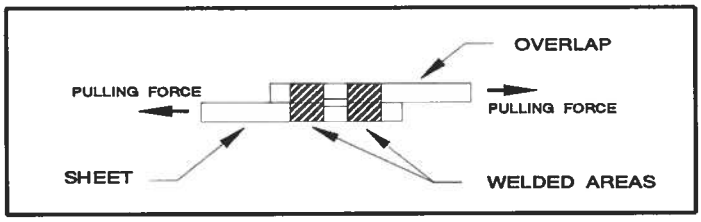

Figure 4 **- Shear Strength Test**

For each trial test, the QC Inspector recorded the date, time, ambient and operating temperatures, equipment number, speed setting, operator's initials, peel and shear values and corresponding type of break. The only type of break acceptable is designated as "FTB", as per the US-EPA classification for types of breaks, available in appendix III. The seams were made only after a satisfactory trial test had been obtained. All the results of these tests are also included in appendix I.

3.3.1.2 On-site non-destructive testing

The continuity of all seams (100%) was verified by non-destructive methods. These methods include the air-pressure test and the vacuum-box test. Any seam that failed one of these tests was rebuilt or repaired until a satisfactory result was obtained. All the results of these tests are included in Appendix I of this report.

a) Air-Pressure Testing

Air-pressure testing was employed as the primary test method. This non-destructive test method consists of injecting air at a predetermined pressure in the center air channel of fusion-welded seams (see Fig. 5). If the seam is continuous there will be very little or no drop of pressure. If a leak is present within the area under pressure, it is located and repaired. This type of non-destructive test is faster than the vacuum-box test, less observer-dependent and represents a supplementary mechanical resistance test since the geomembrane sheets are pulled away from each other by the air pressure in the channel.

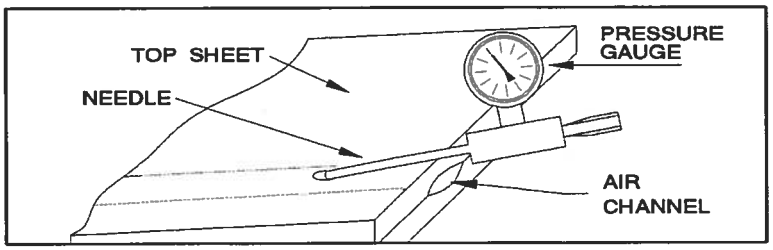

Figure 5 **- Air-Pressure Test**

b) Vacuum-box test

Wherever the air-pressure test could not be used, the vacuum-box test was employed. In this test, a film of soapy water is sprinkled over the area to be tested. A box fitted with a transparent upper cover and a neoprene lower rim is placed over that same area and connected to a vacuum pump; a negative pressure of 5 psi is then applied (see Fig. 6). If there is a puncture or discontinuous seam within this area, bubbles will appear and be detected by the observer.

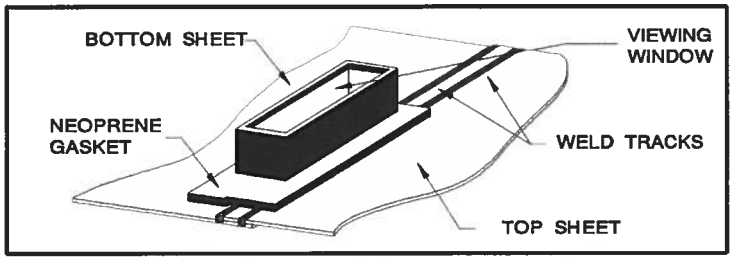

***Figure 6* - Vacuum-Box Test**

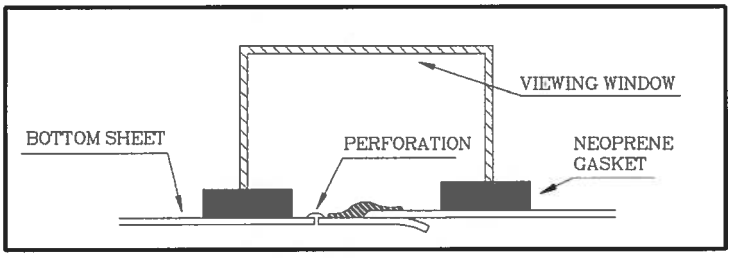

***Figure 7* - Vacuum-Box Test**

3.3.1.3 On-site destructive tests

Finally, a destructive testing program was applied, where seam samples taken from the installed geomembrane were tested for peel adhesion and shear strength on a calibrated, portable tensiometer. On each sample, four peel tests and one shear tests were performed. All the results from these tests are included in Appendix I of this report.

3.4. Repair Procedures

All materials were visually inspected for blemishes, punctures and other defects or damages that may have occurred during transport or panel placement. Any defect or damage was repaired as per the procedures described in this section.

Demobilization was not authorized until Texel Geosol, Nuna Kivalliq Earthworks Inc and Agnico Eagle Construction completed a last visual inspection of the installation work. Any defect revealed by any step of the Quality Control Program was repaired and verified according to the prescribed procedures:

- All pockmarks, pinholes, T-seams, etc., smaller than the tip of the extruder were covered with an extrusion bead;
- All punctures, holes, tears, etc., wider than the tip of the extruder were repaired with extrusion-welded patches;
- Any seam revealed as defective by the CQC or CQA Programs was entirely rebuilt through a fusion and/or extrusion seaming process.

Prior to any fillet extrusion welding, the geomembrane was buffed to insure better adhesion of the extruded material. All repairs were visually inspected and verified by a non-destructive testing method, as described in section 3.3.2.2.

3.5. Record Drawing

The record drawing of the geomembrane installation, showing all panels, panel identification, pipe penetrations, repairs and destructive test locations, is included in Appendix IV of this report.

4. GEOTEXTILE QUALITY CONTROL

Approximately 33 527 sm of non-woven geotextile was installed by Texel Geosol according to the project plans and specifications. The geotextile panels were overlapped approximately 100 to 150 mm and thermally bonding (hot air or wedge) or sewing in order to ensure the continuity of the cushion layer.

Any holes or tears in the geotextile were repaired according to the project specifications. All geotextile materials were installed by Texel Geosol.

5. CERTIFICATION

Texel Geosol certifies having installed all geosynthetic materials according to the project plans and specifications provided by the consultant Tetra Tech, for Nuna Kivalliq Earthworks Inc. All installation work conducted by Texel Geosol meets or exceeds the standards of the geosynthetic industry.

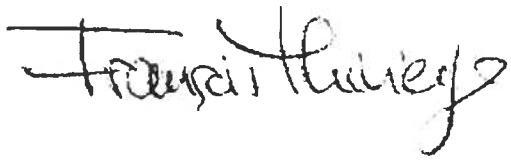

12-07-17

François Thivierge, P.Eng., MBA
Construction Director
TEXEL GEOSOL INC.

Date

(mm-dd-yy)

APPENDIX I

QUALITY CONTROL PROCEDURES CONDUCTED ON SITE BY TEXEL GEOSOL INC.

Texel
GEOSOL

Fusion Trial Tests
Calibration par Fusion

Project Name / Nom de Projet: **Rankin Inlet Tank Farm**

Project No. / No. de Projet: **C-15152**

QC Inspector / Inspecteur CQ: **Anthony Duquette-Michon**

Trial Test No. No. de Calibration	Date (mm/dd/yy)	Time Heure	Ambient Temp. Temp. Ambiante	Equipment No. No. Équipement	Equipment Temp. Temp. Équipement	Equipment Speed Vitesse Équipement	Peel Resistance Résistance Pelage "A" (ppi)	Peel Type of Break Type de Brisure	Peel Resistance Résistance Pelage "B" (ppi)	Peel Type of Break Type de Brisure	Shear Resistance Résist. Cisaillement (ppi)	Shear Type of Break Type de Brisure	Tech.-Welder Soudeur	Tensiometer No. No. Tensiomètre
F-1	07-18-17	09:45	13 °C	MD 007	860 °F	500	120	SE1	117	SE1	173	BRK	D.B	T-9709
"	"	"	"	"	"	"	142	SE1	120	SE1	N/A	N/A	"	"
"	"	"	"	"	"	"	132	SE1	119	SE1	N/A	N/A	"	"
"	"	"	"	"	"	"	121	SE1	122	SE1	N/A	N/A	"	"
F-2	07-16-17	08:30	17 °C	MD 007	860 °F	500	112	SE1	119	SE1	157	BRK	D.B	T-9709
"	"	"	"	"	"	"	119	SE1	120	SE1	N/A	N/A	"	"
"	"	"	"	"	"	"	119	SE1	121	SE1	N/A	N/A	"	"
"	"	"	"	"	"	"	112	SE1	118	SE1	N/A	N/A	"	"
F-3	07-16-17	08:30	17 °C	MD 007	860 °F	425	121	SE1	135	SE1	166	BRK	D.B	T-9709
"	"	"	"	"	"	"	131	SE1	128	SE1	N/A	N/A	"	"
"	"	"	"	"	"	"	139	SE1	133	SE1	N/A	N/A	"	"
"	"	"	"	"	"	"	132	SE1	130	SE1	N/A	N/A	"	"
F-4	09-12-17	16:15	-2 °C	MD 007	860 °F	350	135	SE1	139	SE1	186	BRK	K.N	T-9709
"	"	"	"	"	"	"	136	SE1	134	SE1	N/A	N/A	"	"
"	"	"	"	"	"	"	126	SE1	133	SE1	N/A	N/A	"	"
"	"	"	"	"	"	"	123	SE1	142	SE1	N/A	N/A	"	"
F-5	09-13-17	07:10	0 °C	MD 007	860 °F	350	141	SE1	150	SE1	200	BRK	K.N	T-9709
"	"	"	"	"	"	"	137	SE1	150	SE1	N/A	N/A	"	"
"	"	"	"	"	"	"	146	SE1	136	SE1	N/A	N/A	"	"
"	"	"	"	"	"	"	144	SE1	153	SE1	N/A	N/A	"	"
F-6	09-13-17	09:30	0 °C	M9858	750 °F	300	157	SE1	143	SE1	205	BRK	K.N	T-9709
"	"	"	"	"	"	"	156	SE1	142	SE1	N/A	N/A	"	"
"	"	"	"	"	"	"	170	SE1	156	SE1	N/A	N/A	"	"
"	"	"	"	"	"	"	155	SE1	149	SE1	N/A	N/A	"	"

Texel GEOSOL

Fusion Trial Tests
Calibration par Fusion

Project Name / Nom de Projet: **Rankin Inlet Tank Farm**

Project No. / No. de Projet: **C-15152**

QC Inspector / Inspecteur CQ: **Anthony Duquette-Michon**

Trial Test No. No. de Calibration	Date (mm/dd/yy)	Time Heure	Ambient Temp. Temp. Ambiante	Equipment No. No. Équipement	Equipment Temp. Temp. Équipement	Equipment Speed Vitesse Équipement	Peel Resistance Résistance Pelage "A" (ppi)	Peel Type of Break Type de Brisure	Peel Resistance Résistance Pelage "B" (ppi)	Peel Type of Break Type de Brisure	Shear Resistance Résist. Cisaillement (ppi)	Shear Type of Break Type de Brisure	Tech.-Welder Soudeur	Tensiometer No. No. Tensiomètre
F-7	09-13-17	13:30	2 °C	MD 007	860 °F	500	113	SE1	123	SE1	167	BRK	K.N	T-9709
"	"	"	"	"	"	"	113	SE1	124	SE1	N/A	N/A	"	"
"	"	"	"	"	"	"	118	SE1	126	SE1	N/A	N/A	"	"
"	"	"	"	"	"	"	124	SE1	130	SE1	N/A	N/A	"	"
F-8	09-14-17	07:15	-2 °C	MD 007	860 °F	450	121	SE1	138	SE1	194	BRK	K.N	T-9709
"	"	"	"	"	"	"	119	SE1	142	SE1	N/A	N/A	"	"
"	"	"	"	"	"	"	120	SE1	160	SE1	N/A	N/A	"	"
"	"	"	"	"	"	"	129	SE1	153	SE1	N/A	N/A	"	"
F-9	09-14-17	07:15	-2 °C	M9858	750 °F	300	133	SE1	131	SE1	208	BRK	K.N	T-9709
"	"	"	"	"	"	"	129	SE1	153	SE1	N/A	N/A	"	"
"	"	"	"	"	"	"	135	SE1	149	SE1	N/A	N/A	"	"
"	"	"	"	"	"	"	137	SE1	144	SE1	N/A	N/A	"	"
F-10	09-14-17	12:00	2 °C	MD 007	860 °F	450	120	SE1	122	SE1	169	BRK	K.N	T-9709
"	"	"	"	"	"	"	128	SE1	117	SE1	N/A	N/A	"	"
"	"	"	"	"	"	"	126	SE1	126	SE1	N/A	N/A	"	"
"	"	"	"	"	"	"	129	SE1	117	SE1	N/A	N/A	"	"
F-11	09-14-17	12:00	2 °C	M9858	750 °F	300	128	SE1	137	SE1	182	BRK	K.N	T-9709
"	"	"	"	"	"	"	137	SE1	141	SE1	N/A	N/A	"	"
"	"	"	"	"	"	"	141	SE1	137	SE1	N/A	N/A	"	"
"	"	"	"	"	"	"	152	SE1	138	SE1	N/A	N/A	"	"
F-12	09-15-17	06:45	0 °C	M9858	750 °F	300	145	SE1	157	SE1	216	BRK	K.N	T-9709
"	"	"	"	"	"	"	146	SE1	143	SE1	N/A	N/A	"	"
"	"	"	"	"	"	"	146	SE1	166	SE1	N/A	N/A	"	"
"	"	"	"	"	"	"	153	SE1	139	SE1	N/A	N/A	"	"

Texel
GEOSOL

Fusion Trial Tests
Calibration par Fusion

Project Name / Nom de Projet: **Rankin Inlet Tank Farm**

Project No. / No. de Projet: **C-15152**

QC Inspector / Inspecteur CQ: **Anthony Duquette-Michon**

Trial Test No. No. de Calibration	Date (mm/dd/yy)	Time Heure	Ambient Temp. Temp. Ambiante	Equipment No. No. Équipement	Equipment Temp. Temp. Équipement	Equipment Speed Vitesse Équipement	Peel Resistance Résistance Pelage "A" (ppi)	Peel Type of Break Type de Brisure	Peel Resistance Résistance Pelage "B" (ppi)	Peel Type of Break Type de Brisure	Shear Resistance Résist. Cisaillement (ppi)	Shear Type of Break Type de Brisure	Tech.-Welder Soudeur	Tensiometer No. No. Tensiomètre
F-13	09-15-17	11:40	2 °C	MD 007	860 °F	450	128	SE1	124	SE1	176	BRK	K.N	T-9709
"	"	"	"	"	"	"	142	SE1	128	SE1	N/A	N/A	"	"
"	"	"	"	"	"	"	125	SE1	129	SE1	N/A	N/A	"	"
"	"	"	"	"	"	"	144	SE1	130	SE1	N/A	N/A	"	"
F-14	09-17-17	16:00	5 °C	MD 007	860 °F	450	134	SE1	128	SE1	179	BRK	K.N	T-9709
"	"	"	"	"	"	"	134	SE1	116	SE1	N/A	N/A	"	"
"	"	"	"	"	"	"	136	SE1	133	SE1	N/A	N/A	"	"
"	"	"	"	"	"	"	120	SE1	138	SE1	N/A	N/A	"	"

Texel GEOSOL

Fusion Trial Tests
Calibration par Fusion

Project Name / Nom de Projet: **Rankin Inlet Tank Farm**

Project No. / No. de Projet: **C-15152**

QC Inspector / Inspecteur CQ: **Anthony Duquette-Michon**

Trial Test No. No. de Calibration	Date (mm/dd/yy)	Time Heure	Ambient Temp. Temp. Ambiante	Equipment No. No. Équipement	Equipment Temp. Temp. Équipement	Equipment Speed Vitesse Équipement	Peel Resistance Résistance Pelage "A" (ppi)	Peel Type of Break Type de Brisure	Peel Resistance Résistance Pelage "B" (ppi)	Peel Type of Break Type de Brisure	Shear Resistance Résist. Cisaillement (ppi)	Shear Type of Break Type de Brisure	Tech.-Welder Soudeur	Tensiometer No. No. Tensiomètre
F-15	09-18-17	07:00	4 °C	MD 007	860 °F	450	136	SE1	128	SE1	190	BRK	K.N	T-9709
"	"	"	"	"	"	"	130	SE1	126	SE1	N/A	N/A	"	"
"	"	"	"	"	"	"	130	SE1	135	SE1	N/A	N/A	"	"
"	"	"	"	"	"	"	131	SE1	129	SE1	N/A	N/A	"	"
F-16	09-18-17	08:15	4 °C	MD 007	860 °F	300	175	SE1	168	SE1	216	BRK	K.N	T-9709
"	"	"	"	"	"	"	187	SE1	185	SE1	N/A	N/A	"	"
"	"	"	"	"	"	"	174	SE1	176	SE1	N/A	N/A	"	"
"	"	"	"	"	"	"	187	SE1	184	SE1	N/A	N/A	"	"
F-17	09-18-17	12:00	4 °C	M9858	750 °F	300	147	SE1	166	SE1	202	BRK	K.N	T-9709
"	"	"	"	"	"	"	149	SE1	163	SE1	N/A	N/A	"	"
"	"	"	"	"	"	"	146	SE1	153	SE1	N/A	N/A	"	"
"	"	"	"	"	"	"	146	SE1	161	SE1	N/A	N/A	"	"
F-18	09-18-17	13:30	4 °C	MD 007	860 °F	300	153	SE1	166	SE1	197	BRK	K.N	T-9709
"	"	"	"	"	"	"	169	SE1	171	SE1	N/A	N/A	"	"
"	"	"	"	"	"	"	175	SE1	174	SE1	N/A	N/A	"	"
"	"	"	"	"	"	"	172	SE1	171	SE1	N/A	N/A	"	"

Texel GEOSOL

Fusion Trial Tests
Calibration par Fusion

Project Name / Nom de Projet: **Rankin Inlet Tank Farm**

Project No. / No. de Projet: **C-15152**

QC Inspector / Inspecteur CQ: **Anthony Duquette-Michon**

Trial Test No. No. de Calibration	Date (mm/dd/yy)	Time Heure	Ambient Temp. Temp. Ambiante	Equipment No. No. Équipement	Equipment Temp. Temp. Équipement	Equipment Speed Vitesse Équipement	Peel Resistance Résistance Pelage "A" (ppi)	Peel Type of Break Type de Brisure	Peel Resistance Résistance Pelage "B" (ppi)	Peel Type of Break Type de Brisure	Shear Resistance Résist. Cisaillement (ppi)	Shear Type of Break Type de Brisure	Tech.-Welder Soudeur	Tensiometer No. No. Tensiomètre
F-19	09-19-17	06:45	6 °C	MD 007	860 °F	450	118	SE1	126	SE1	184	BRK	K.N	T-9709
"	"	"	"	"	"	"	132	SE1	123	SE1	N/A	N/A	"	"
"	"	"	"	"	"	"	134	SE1	121	SE1	N/A	N/A	"	"
"	"	"	"	"	"	"	145	SE1	127	SE1	N/A	N/A	"	"
F-20	09-19-17	11:45	7 °C	MD 007	860 °F	450	121	SE1	140	SE1	172	BRK	K.N	T-9709
"	"	"	"	"	"	"	125	SE1	138	SE1	N/A	N/A	"	"
"	"	"	"	"	"	"	113	SE1	134	SE1	N/A	N/A	"	"
"	"	"	"	"	"	"	142	SE1	130	SE1	N/A	N/A	"	"
F-21	09-19-17	15:00	7 °C	MD 007	860 °F	450	188	SE1	179	SE1	181	BRK	K.N	T-9709
"	"	"	"	"	"	"	168	SE1	172	SE1	N/A	N/A	"	"
"	"	"	"	"	"	"	172	SE1	165	SE1	N/A	N/A	"	"
"	"	"	"	"	"	"	170	SE1	177	SE1	N/A	N/A	"	"
F-22	09-20-17	07:00	3 °C	MD 007	860 °F	300	146	SE1	137	SE1	177	BRK	K.N	T-9709
"	"	"	"	"	"	"	148	SE1	129	SE1	N/A	N/A	"	"
"	"	"	"	"	"	"	146	SE1	124	SE1	N/A	N/A	"	"
"	"	"	"	"	"	"	149	SE1	130	SE1	N/A	N/A	"	"
F-23	09-20-17	13:30	7 °C	MD 007	860 °F	550	125	SE1	131	SE1	180	BRK	K.N	T-9709
"	"	"	"	"	"	"	127	SE1	134	SE1	N/A	N/A	"	"
"	"	"	"	"	"	"	132	SE1	134	SE1	N/A	N/A	"	"
"	"	"	"	"	"	"	120	SE1	132	SE1	N/A	N/A	"	"

Texel GEOSOL

Fusion Trial Tests
Calibration par Fusion

Project Name / Nom de Projet: **Rankin Inlet Tank Farm**

Project No. / No. de Projet: **C-15152**

QC Inspector / Inspecteur CQ: **Anthony Duquette-Michon**

Trial Test No. No. de Calibration	Date (mm/dd/yy)	Time Heure	Ambient Temp. Temp. Ambiante	Equipment No. No. Équipement	Equipment Temp. Temp. Équipement	Equipment Speed Vitesse Équipement	Peel Resistance Résistance Pelage "A" (ppi)	Peel Type of Break Type de Brisure	Peel Resistance Résistance Pelage "B" (ppi)	Peel Type of Break Type de Brisure	Shear Resistance Résist. Cisaillement (ppi)	Shear Type of Break Type de Brisure	Tech.-Welder Soudeur	Tensiometer No. No. Tensiomètre
F-24	09-20-17	16:00	6 °C	MD 007	860 °F	300	160	SE1	169	SE1	200	BRK	K.N	T-9709
"	"	"	"	"	"	"	172	SE1	174	SE1	N/A	N/A	"	"
"	"	"	"	"	"	"	171	SE1	170	SE1	N/A	N/A	"	"
"	"	"	"	"	"	"	184	SE1	177	SE1	N/A	N/A	"	"
F-25	09-22-17	14:20	6 °C	MD 007	860 °F	550	142	SE1	134	SE1	182	BRK	K.N	T-9709
"	"	"	"	"	"	"	137	SE1	134	SE1	N/A	N/A	"	"
"	"	"	"	"	"	"	137	SE1	137	SE1	N/A	N/A	"	"
"	"	"	"	"	"	"	129	SE1	125	SE1	N/A	N/A	"	"
F-26	09-23-17	07:30	-2 °C	MD 007	860 °F	550	152	SE1	140	SE1	211	BRK	K.N	T-9709
"	"	"	"	"	"	"	160	SE1	143	SE1	N/A	N/A	"	"
"	"	"	"	"	"	"	153	SE1	152	SE1	N/A	N/A	"	"
"	"	"	"	"	"	"	148	SE1	140	SE1	N/A	N/A	"	"
F-27	09-23-17	07:30	-2 °C	MD 007	860 °F	350	136	SE1	186	SE1	214	BRK	K.N	T-9709
"	"	"	"	"	"	"	127	SE1	182	SE1	N/A	N/A	"	"
"	"	"	"	"	"	"	127	SE1	182	SE1	N/A	N/A	"	"
"	"	"	"	"	"	"	133	SE1	187	SE1	N/A	N/A	"	"
F-28	09-23-17	07:30	-2 °C	MD 007	860 °F	300	161	SE1	175	SE1	211	BRK	K.N	T-9709
"	"	"	"	"	"	"	188	SE1	186	SE1	N/A	N/A	"	"
"	"	"	"	"	"	"	174	SE1	191	SE1	N/A	N/A	"	"
"	"	"	"	"	"	"	190	SE1	179	SE1	N/A	N/A	"	"
F-29	09-23-17	13:00	5 °C	MD 007	860 °F	600	129	SE1	131	SE1	175	BRK	K.N	T-9709
"	"	"	"	"	"	"	124	SE1	128	SE1	N/A	N/A	"	"
"	"	"	"	"	"	"	104	SE1	119	SE1	N/A	N/A	"	"
"	"	"	"	"	"	"	128	SE1	130	SE1	N/A	N/A	"	"

Texel
GEOSOL

Fusion Trial Tests
Calibration par Fusion

Project Name / Nom de Projet: **Rankin Inlet Tank Farm**

Project No. / No. de Projet: **C-15152**

QC Inspector / Inspecteur CQ: **Anthony Duquette-Michon**

Trial Test No. No. de Calibration	Date (mm/dd/yy)	Time Heure	Ambient Temp. Temp. Ambiante	Equipment No. No. Équipement	Equipment Temp. Temp. Équipement	Equipment Speed Vitesse Équipement	Peel Resistance Résistance Pelage "A" (ppi)	Peel Type of Break Type de Brisure	Peel Resistance Résistance Pelage "B" (ppi)	Peel Type of Break Type de Brisure	Shear Resistance Résist. Cisaillement (ppi)	Shear Type of Break Type de Brisure	Tech.-Welder Soudeur	Tensiometer No. No. Tensiomètre
F-30	09-23-17	14:30	5 °C	MD 007	860 °F	300	129	SE1	146	SE1	161	BRK	K.N	T-9709
"	"	"	"	"	"	"	141	SE1	137	SE1	N/A	N/A	"	"
"	"	"	"	"	"	"	135	SE1	146	SE1	N/A	N/A	"	"
"	"	"	"	"	"	"	143	SE1	145	SE1	N/A	N/A	"	"
F-31	09-24-17	07:00	0 °C	MD 007	860 °F	350	172	SE1	166	SE1	206	BRK	K.N	T-9709
"	"	"	"	"	"	"	125	SE1	168	SE1	N/A	N/A	"	"
"	"	"	"	"	"	"	153	SE1	169	SE1	N/A	N/A	"	"
"	"	"	"	"	"	"	145	SE1	151	SE1	N/A	N/A	"	"
F-32	09-24-17	07:00	0 °C	MD 007	860 °F	600	141	SE1	143	SE1	204	BRK	K.N	T-9709
"	"	"	"	"	"	"	141	SE1	149	SE1	N/A	N/A	"	"
"	"	"	"	"	"	"	141	SE1	157	SE1	N/A	N/A	"	"
"	"	"	"	"	"	"	142	SE1	147	SE1	N/A	N/A	"	"
F-33	09-24-17	07:00	0 °C	MD 007	860 °F	300	173	SE1	167	SE1	205	BRK	K.N	T-9709
"	"	"	"	"	"	"	171	SE1	165	SE1	N/A	N/A	"	"
"	"	"	"	"	"	"	162	SE1	172	SE1	N/A	N/A	"	"
"	"	"	"	"	"	"	173	SE1	173	SE1	N/A	N/A	"	"
F-34	09-24-17	11:45	1 °C	MD 007	860 °F	600	134	SE1	130	SE1	190	BRK	K.N	T-9709
"	"	"	"	"	"	"	131	SE1	143	SE1	N/A	N/A	"	"
"	"	"	"	"	"	"	132	SE1	142	SE1	N/A	N/A	"	"
"	"	"	"	"	"	"	145	SE1	135	SE1	N/A	N/A	"	"

Texel GEOSOL

Fusion Trial Tests
Calibration par Fusion

Project Name / Nom de Projet: **Rankin Inlet Tank Farm**

Project No. / No. de Projet: **C-15152**

QC Inspector / Inspecteur CQ: **Anthony Duquette-Michon**

Trial Test No. No. de Calibration	Date (mm/dd/yy)	Time Heure	Ambient Temp. Temp. Ambiante	Equipment No. No. Équipement	Equipment Temp. Temp. Équipement	Equipment Speed Vitesse Équipement	Peel Resistance Résistance Pelage "A" (ppi)	Peel Type of Break Type de Brisure	Peel Resistance Résistance Pelage "B" (ppi)	Peel Type of Break Type de Brisure	Shear Resistance Résist. Cisaillement (ppi)	Shear Type of Break Type de Brisure	Tech.-Welder Soudeur	Tensiometer No. No. Tensiomètre
F-35	09-24-17	11:45	1 °C	MD 007	860 °F	350	175	SE1	166	SE1	200	BRK	K.N	T-9709
"	"	"	"	"	"	"	175	SE1	169	SE1	N/A	N/A	"	"
"	"	"	"	"	"	"	177	SE1	178	SE1	N/A	N/A	"	"
"	"	"	"	"	"	"	177	SE1	174	SE1	N/A	N/A	"	"
F-36	09-25-17	09:30	5 °C	MD 007	860 °F	600	128	SE1	123	SE1	183	BRK	K.N	T-9709
"	"	"	"	"	"	"	130	SE1	135	SE1	N/A	N/A	"	"
"	"	"	"	"	"	"	137	SE1	133	SE1	N/A	N/A	"	"
"	"	"	"	"	"	"	132	SE1	128	SE1	N/A	N/A	"	"
F-37	09-25-17	09:30	5 °C	MD 007	860 °F	350	117	SE1	122	SE1	194	BRK	K.N	T-9709
"	"	"	"	"	"	"	121	SE1	125	SE1	N/A	N/A	"	"
"	"	"	"	"	"	"	117	SE1	126	SE1	N/A	N/A	"	"
"	"	"	"	"	"	"	117	SE1	168	SE1	N/A	N/A	"	"
F-38	09-25-17	09:30	5 °C	MD 007	860 °F	300	170	SE1	168	SE1	197	BRK	K.N	T-9709
"	"	"	"	"	"	"	164	SE1	160	SE1	N/A	N/A	"	"
"	"	"	"	"	"	"	163	SE1	164	SE1	N/A	N/A	"	"
"	"	"	"	"	"	"	173	SE1	165	SE1	N/A	N/A	"	"
F-39	09-27-17	12:00	-2 °C	MD 007	860 °F	600	134	SE1	133	SE1	182	BRK	K.N	T-9709
"	"	"	"	"	"	"	132	SE1	127	SE1	N/A	N/A	"	"
"	"	"	"	"	"	"	132	SE1	135	SE1	N/A	N/A	"	"
"	"	"	"	"	"	"	136	SE1	131	SE1	N/A	N/A	"	"

Texel GEOSOL

Fusion Trial Tests
Calibration par Fusion

Project Name / Nom de Projet: **Rankin Inlet Tank Farm**

Project No. / No. de Projet: **C-15152**

QC Inspector / Inspecteur CQ: **Anthony Duquette-Michon**

Trial Test No. No. de Calibration	Date (mm/dd/yy)	Time Heure	Ambient Temp. Temp. Ambiante	Equipment No. No. Équipement	Equipment Temp. Temp. Équipement	Equipment Speed Vitesse Équipement	Peel Resistance Résistance Pelage "A" (ppi)	Peel Type of Break Type de Brisure	Peel Resistance Résistance Pelage "B" (ppi)	Peel Type of Break Type de Brisure	Shear Resistance Résist. Cisaillement (ppi)	Shear Type of Break Type de Brisure	Tech.-Welder Soudeur	Tensiometer No. No. Tensiomètre
F-40	09-27-17	12:00	-2 °C	MD 007	860 °F	350	127	SE1	123	SE1	178	BRK	K.N	T-9709
"	"	"	"	"	"	"	124	SE1	127	SE1	N/A	N/A	"	"
"	"	"	"	"	"	"	129	SE1	129	SE1	N/A	N/A	"	"
"	"	"	"	"	"	"	127	SE1	132	SE1	N/A	N/A	"	"
F-41	09-27-17	12:00	-2 °C	MD 007	860 °F	300	165	SE1	166	SE1	203	BRK	K.N	T-9709
"	"	"	"	"	"	"	171	SE1	165	SE1	N/A	N/A	"	"
"	"	"	"	"	"	"	153	SE1	160	SE1	N/A	N/A	"	"
"	"	"	"	"	"	"	157	SE1	166	SE1	N/A	N/A	"	"
F-42	10-04-17	07:00	-3 °C	MD 007	860 °F	500	148	SE1	136	SE1	196	BRK	K.N	T-9709
"	"	"	"	"	"	"	169	SE1	168	SE1	N/A	N/A	"	"
"	"	"	"	"	"	"	146	SE1	142	SE1	N/A	N/A	"	"
"	"	"	"	"	"	"	169	SE1	146	SE1	N/A	N/A	"	"
F-43	10-06-17	10:45	-3 °C	MD 007	860 °F	500	121	SE1	124	SE1	171	BRK	K.N	T-9709
"	"	"	"	"	"	"	127	SE1	120	SE1	N/A	N/A	"	"
"	"	"	"	"	"	"	127	SE1	118	SE1	N/A	N/A	"	"
"	"	"	"	"	"		114	SE1	122	SE1	N/A	N/A	"	"

Texel GEOSOL

Extrusion Trial Tests
Calibration par Extrusion

Project Name / Nom de Projet: **Rankin Inlet Tank Farm**

Project No. / No. de Projet: **C-15152**

QC Inspector / Inspecteur CQ: **Anthony Duquette-Michon**

Trial Test No. No. de Calibration	Date (mm/dd/yy)	Time Heure	Ambient Temp. Temp. Ambiante	Equipment No. No. Équipement	Equipment Temp. Temp. Équipement	Pre-Heat Temp. Temp. Pré-Chauf.	Peel Resistance Résistance Pelage (ppi)	Peel Type of Break Type de Brisure	Shear Resistance Résist. Cisaillement (ppi)	Shear Type of Break Type de Brisure	Tech.-Welder Soudeur	Tensiometer No. No. Tensiomètre
E-1	07-15-17	13:00	16 °C	EX-E	250 °C	250 °C	124	SE3	161	BRK	E.B	T-9709
"	"	"	"	"	"	"	133	SE3	N/A	N/A	"	"
"	"	"	"	"	"	"	128	SE3	N/A	N/A	"	"
"	"	"	"	"	"	"	128	SE3	N/A	N/A	"	"
E-2	07-16-17	12:30	20 °C	EX-E	250 °C	250 °C	119	SE3	157	BRK	E.B	T-9709
"	"	"	"	"	"	"	119	SE3	N/A	N/A	"	"
"	"	"	"	"	"	"	119	SE3	N/A	N/A	"	"
"	"	"	"	"	"	"	116	SE3	N/A	N/A	"	"
E-3	09-13-17	11:00	0 °C	EX-E	260 °C	260 °C	160	SE3	176	BRK	S.M	T-9709
"	"	"	"	"	"	"	166	SE3	N/A	N/A	"	"
"	"	"	"	"	"	"	145	SE3	N/A	N/A	"	"
"	"	"	"	"	"	"	149	SE3	N/A	N/A	"	"
E-4	09-14-17	09:50	0 °C	EX-E	260 °C	260 °C	113	SE3	187	BRK	S.M	T-9709
"	"	"	"	"	"	"	121	SE3	N/A	N/A	"	"
"	"	"	"	"	"	"	140	SE3	N/A	N/A	"	"
"	"	"	"	"	"	"	148	SE3	N/A	N/A	"	"
E-5	09-15-17	07:00	0 °C	EX-E	260 °C	260 °C	92	SE3	199	BRK	K.N	T-9709
"	"	"	"	"	"	"	122	SE3	N/A	N/A	"	"
"	"	"	"	"	"	"	110	SE3	N/A	N/A	"	"
"	"	"	"	"	"	"	107	SE3	N/A	N/A	"	"

Texel GEOSOL

Extrusion Trial Tests
Calibration par Extrusion

Project Name / Nom de Projet: **Rankin Inlet Tank Farm**

Project No. / No. de Projet: **C-15152**

QC Inspector / Inspecteur CQ: **Anthony Duquette-Michon**

Trial Test No. No. de Calibration	Date (mm/dd/yy)	Time Heure	Ambient Temp. Temp. Ambiante	Equipment No. No. Équipement	Equipment Temp. Temp. Équipement	Pre-Heat Temp. Temp. Pré-Chauf.	Peel Resistance Résistance Pelage (ppi)	Peel Type of Break Type de Brisure	Shear Resistance Résist. Cisaillement (ppi)	Shear Type of Break Type de Brisure	Tech.-Welder Soudeur	Tensiometer No. No. Tensiomètre
E-6	09-18-17	13:30	4 °C	EX-E	260 °C	260 °C	152	SE3	186	BRK	S.M	T-9709
"	"	"	"	"	"	"	160	SE3	N/A	N/A	"	"
"	"	"	"	"	"	"	169	SE3	N/A	N/A	"	"
"	"	"	"	"	"	"	155	SE3	N/A	N/A	"	"
E-7	09-20-17	07:00	3 °C	EX-E	260 °C	260 °C	130	SE3	194	BRK	S.M	T-9709
"	"	"	"	"	"	"	129	SE3	N/A	N/A	"	"
"	"	"	"	"	"	"	122	SE3	N/A	N/A	"	"
"	"	"	"	"	"	"	131	SE3	N/A	N/A	"	"
E-8	09-20-17	16:00	6 °C	EX-E	260 °C	260 °C	132	SE3	185	BRK	S.M	T-9709
"	"	"	"	"	"	"	120	SE3	N/A	N/A	"	"
"	"	"	"	"	"	"	133	SE3	N/A	N/A	"	"
"	"	"	"	"	"	"	130	SE3	N/A	N/A	"	"
E-9	09-23-17	10:00	2 °C	EX-E	260 °C	260 °C	107	SE3	198	BRK	S.M	T-9709
"	"	"	"	"	"	"	131	SE3	N/A	N/A	"	"
"	"	"	"	"	"	"	137	SE3	N/A	N/A	"	"
"	"	"	"	"	"	"	142	SE3	N/A	N/A	"	"
E-10	09-24-17	14:00	5 °C	EX-E	260 °C	260 °C	92	SE3	188	BRK	S.M	T-9709
"	"	"	"	"	"	"	98	SE3	N/A	N/A	"	"
"	"	"	"	"	"	"	95	SE3	N/A	N/A	"	"
"	"	"	"	"	"	"	99	SE3	N/A	N/A	"	"

Texel GEOSOL

Extrusion Trial Tests
Calibration par Extrusion

Project Name / Nom de Projet: **Rankin Inlet Tank Farm**

Project No. / No. de Projet: **C-15152**

QC Inspector / Inspecteur CQ: **Anthony Duquette-Michon**

Trial Test No. No. de Calibration	Date (mm/dd/yy)	Time Heure	Ambient Temp. Temp. Ambiante	Equipment No. No. Équipement	Equipment Temp. Temp. Équipement	Pre-Heat Temp. Temp. Pré-Chauf.	Peel Resistance Résistance Pelage (ppi)	Peel Type of Break Type de Brisure	Shear Resistance Résist. Cisaillement (ppi)	Shear Type of Break Type de Brisure	Tech.-Welder Soudeur	Tensiometer No. No. Tensiomètre
E-11	09-25-17	15:45	7 °C	EX-E	255 °C	255 °C	100	SE3	172	BRK	S.M	T-9709
"	"	"	"	"	"	"	116	SE3	N/A	N/A	"	"
"	"	"	"	"	"	"	106	SE3	N/A	N/A	"	"
"	"	"	"	"	"	"	93	SE3	N/A	N/A	"	"
E-12	09-27-17	16:40	3 °C	EX-E	255 °C	255 °C	154	SE3	194	BRK	S.M	T-9709
"	"	"	"	"	"	"	108	SE3	N/A	N/A	"	"
"	"	"	"	"	"	"	157	SE3	N/A	N/A	"	"
"	"	"	"	"	"	"	121	SE3	N/A	N/A	"	"
E-13	10-03-17	10:00	-2 °C	EX-E	275 °C	275 °C	93	SE3	192	BRK	S.M	T-9709
"	"	"	"	"	"	"	120	SE3	N/A	N/A	"	"
"	"	"	"	"	"	"	127	SE3	N/A	N/A	"	"
"	"	"	"	"	"	"	123	SE3	N/A	N/A	"	"
E-14	10-04-17	10:45	-3 °C	EX-E	280 °C	280 °C	118	SE3	208	BRK	S.M	T-9709
"	"	"	"	"	"	"	88	SE3	N/A	N/A	"	"
"	"	"	"	"	"	"	109	SE3	N/A	N/A	"	"
"	"	"	"	"	"	"	120	SE3	N/A	N/A	"	"
E-15	10-06-17	13:40	-2 °C	EX-E	280 °C	285 °C	112	SE3	197	BRK	P.A	T-9709
"	"	"	"	"	"	"	121	SE3	N/A	N/A	"	"
"	"	"	"	"	"	"	118	SE3	N/A	N/A	"	"
"	"	"	"	"	"	"	120	SE3	N/A	N/A	"	"

Texel GEOSOL

Seaming Procedures
Procédures de Soudures

Project Name / Nom de Projet: **Rankin Inlet Tank Farm**

Project No. / No. de Projet: **C-15152**

QC Inspector / Inspecteur CQ: **Anthony Duquette-Michon**

Seaming Procedures / Procédures de Soudures						Non-Destructive Testing / Essai Non-Destructif							
Seam No. No. de Soudure	Date of Seaming Date de Soudure (mm/dd/yy)	Time of Seaming Heure de Soudure	Seam Length Longueur Soudure (m)	Trial Test No. No. Calibration	Technician-Welder Soudeur	Test Date Date de l'essai (mm/dd/yy)	Time Heure	Air-Pressure Pressurisation	Vacuum Box Boîte à Vide	Starting Pressure Pression Départ (psi)	Ending Pressure Pression Fin (psi)	Testing Details/Location Détails de l'essai/Localisation	Approved (Yes/No) Approuvé (Oui/Non)
1-2	07-15-17	10:00	38.9	F-1	D.B	07-15-17	10:22	X	-	31	31	Full seam	O
2-3	07-15-17	10:18	39	F-1	D.B	07-15-17	10:38	X	-	31	31	Full seam	O
3-4	07-15-17	10:40	39	F-1	D.B	07-15-17	11:40	X	-	30	30	Full seam	O
4-5	07-15-17	12:05	39.6	F-1	D.B	07-15-17	12:42	X	-	31	31	Full seam	O
5-6	07-15-17	12:40	39.4	F-1	D.B	07-15-17	13:02	X	-	31	31	Full seam	O
8-9	07-16-17	08:50	6.65	F-3	D.B	07-16-17	09:25	X	-	28	28	Full seam	O
9-10	07-16-17	09:39	6.65	F-3	D.B	07-16-17	09:46	X	-	31	30	Full seam	O
7-8	07-16-17	09:52	31.9	F-2	D.B	07-16-17	10:13	X	-	30	30	Full seam	O
7-9	07-16-17	09:52	4.5	F-2	D.B	07-16-17	10:13	X	-	30	30	Full seam	O
7-10	07-16-17	09:52	12.8	F-2	D.B	07-16-17	10:13	X	-	30	30	Full seam	O
10-11	07-16-17	10:13	12.4	F-2	D.B	07-16-17	10:38	X	-	31	31	Full seam	O
9-11	07-16-17	10:13	4.5	F-2	D.B	07-16-17	10:38	X	-	31	31	Full seam	O
8-11	07-16-17	10:13	31.9	F-2	D.B	07-16-17	10:38	X	-	31	31	Full seam	O

Texel
GEOSOL

Seaming Procedures
Procédures de Soudures

Project Name / Nom de Projet: **Rankin Inlet Tank Farm**

Project No. / No. de Projet: **C-15152**

QC Inspector / Inspecteur CQ: **Anthony Duquette-Michon**

Seaming Procedures / Procédures de Soudures						Non-Destructive Testing / Essai Non-Destructif							
Seam No. No. de Soudure	Date of Seaming Date de Soudure (mm/dd/yy)	Time of Seaming Heure de Soudure	Seam Length Longueur Soudure (m)	Trial Test No. No. Calibration	Technician-Welder Soudeur	Test Date Date de l'essai (mm/dd/yy)	Time Heure	Air-Pressure Pressurisation	Vacuum Box Boîte à Vide	Starting Pressure Pression Départ (psi)	Ending Pressure Pression Fin (psi)	Testing Details/Location Détails de l'essai/Localisation	Approved (Yes/No) Approuvé (Oui/Non)
11-12	07-16-17	10:38	48.2	F-2	D.B	07-16-17	11:37	X	-	32	31	Full seam	O
12-13	07-16-17	11:39	49	F-2	D.B	07-16-17	12:08	X	-	31	30.5	Full seam	O
13-14	07-16-17	12:02	49.2	F-2	D.B	07-16-17	12:23	X	-	30	30	Full seam	O
14-15	07-16-17	12:25	49.2	F-2	D.B	07-16-17	12:45	X	-	32	31	Full seam	O
15-16	07-16-17	13:08	16.2	F-2	D.B	07-16-17	13:30	X	-	30	30	Full seam	O
15-17	07-16-17	13:08	16.8	F-2	D.B	07-16-17	13:30	X	-	30	30	Full seam	O
15-18	07-16-17	13:08	16.3	F-2	D.B	07-16-17	13:30	X	-	30	30	Full seam	O
16-17	07-16-17	12:45	2.1	F-3	D.B	07-16-17	12:56	X	-	27	26	Full seam	O
17-18	07-16-17	12:51	2.1	F-3	D.B	07-16-17	13:09	X	-	32	31	Full seam	O
19-20	09-12-17	16:35	16.7	F-4	K.N	09-12-17	16:52	X	-	30.5	30	Full seam	O
20-21	09-12-17	17:05	16.8	F-4	K.N	09-12-17	17:26	X	-	32	31	Full seam	O
21-22	09-13-17	07:20	16.5	F-5	K.N	09-13-17	07:33	X	-	31	30.5	Full seam	O
22-23	09-13-17	07:34	16.6	F-5	K.N	09-13-17	07:51	X	-	31	30.5	Full seam	O

Texel GEOSOL

Seaming Procedures
Procédures de Soudures

Project Name / Nom de Projet: **Rankin Inlet Tank Farm**

Project No. / No. de Projet: **C-15152**

QC Inspector / Inspecteur CQ: **Anthony Duquette-Michon**

Seaming Procedures / Procédures de Soudures						Non-Destructive Testing / Essai Non-Destructif							
Seam No. No. de Soudure	Date of Seaming Date de Soudure (mm/dd/yy)	Time of Seaming Heure de Soudure	Seam Length Longueur Soudure (m)	Trial Test No. No. Calibration	Technician-Welder Soudeur	Test Date Date de l'essai (mm/dd/yy)	Time Heure	Air-Pressure Pressurisation	Vacuum Box Boîte à Vide	Starting Pressure Pression Départ (psi)	Ending Pressure Pression Fin (psi)	Testing Details/Location Détails de l'essai/Localisation	Approved (Yes/No) Approuvé (Oui/Non)
23-24	09-13-17	07:52	15.8	F-5	K.N	09-13-17	08:04	X	-	30	29	Full seam	O
24-25	09-13-17	08:05	16.6	F-5	K.N	09-13-17	08:17	X	-	31	30	Full seam	O
25-26	09-13-17	08:16	16.6	F-5	K.N	09-13-17	08:29	X	-	31	30.5	Full seam	O
26-27	09-13-17	08:30	16.4	F-5	K.N	09-13-17	08:42	X	-	30.5	30	Full seam	O
1-20	09-13-17	09:40	0.9	F-6	K.N	09-13-17	AM	-	X	-	-	Full seam	O
1-21	09-13-17	09:40	5.8	F-6	K.N	09-13-17	10:33	X	-	30	30	Full seam	O
2-21	09-13-17	09:40	0.9	F-6	K.N	09-13-17	AM	-	X	-	-	Full seam	O
2-22	09-13-17	09:40	5.8	F-6	K.N	09-13-17	10:39	X	-	33	33	Full seam	O
3-22	09-13-17	09:40	0.9	F-6	K.N	09-13-17	10:39	X	-	33	33	Full seam	O
3-23	09-13-17	09:40	5.8	F-6	K.N	09-13-17	10:39	X	-	33	33	From North 0m to 4m	O
"	"	"	"	"	"	09-13-17	10:14	X	-	33	31	4m to 5.8m	O
4-23	09-13-17	09:40	0.9	F-6	K.N	09-13-17	10:14	X	-	33	31	Full seam	O
4-24	09-13-17	09:40	5.8	F-6	K.N	09-13-17	10:14	X	-	33	31	Full seam	O

Texel GEOSOL

Seaming Procedures
Procédures de Soudures

Project Name / Nom de Projet: **Rankin Inlet Tank Farm**

Project No. / No. de Projet: **C-15152**

QC Inspector / Inspecteur CQ: **Anthony Duquette-Michon**

Seaming Procedures / Procédures de Soudures						Non-Destructive Testing / Essai Non-Destructif							
Seam No. No. de Soudure	Date of Seaming Date de Soudure (mm/dd/yy)	Time of Seaming Heure de Soudure	Seam Length Longueur Soudure (m)	Trial Test No. No. Calibration	Technician-Welder Soudeur	Test Date Date de l'essai (mm/dd/yy)	Time Heure	Air-Pressure Pressurisation	Vacuum Box Boîte à Vide	Starting Pressure Pression Départ (psi)	Ending Pressure Pression Fin (psi)	Testing Details/Location Détails de l'essai/Localisation	Approved (Yes/No) Approuvé (Oui/Non)
5-24	09-13-17	09:40	0.9	F-6	K.N	09-13-17	10:14	X	-	33	31	Full seam	O
5-25	09-13-17	09:40	5.8	F-6	K.N	09-13-17	10:14	X	-	33	31	Full seam	O
6-25	09-13-17	09:40	0.9	F-6	K.N	09-13-17	10:11	X	-	30	30	Full seam	O
6-26	09-13-17	09:40	5.8	F-6	K.N	09-13-17	10:11	X	-	30	30	Full seam	O
27-28	09-13-17	14:00	15.7	F-7	K.N	09-13-17	08:42	X	-	31	30	Full seam	O
19-29	09-13-17	16:23	9.4	F-7	K.N	09-13-17	14:13	X	-	30	29	Full seam	O
30-31	09-13-17	16:30	5.2	F-7	K.N	09-13-17	16:31	X	-	31	31	Full seam	O
29-30	09-13-17	16:40	6.1	F-6	K.N	09-13-17	16:36	X	-	28	27	Full seam	O
29-31	09-13-17	16:40	3.2	F-6	K.N	09-13-17	17:11	X	-	28	27	Full seam	O
29-32	09-13-17	16:50	3.4	F-6	K.N	09-13-17	17:11	X	-	28	27	Full seam	O
31-32	09-13-17	16:55	2	F-6	K.N	09-13-17	16:57	X	-	27	26	Full seam	O
19-30	09-13-17	17:00	3.4	F-6	K.N	09-13-17	17:02	X	-	31	31	Full seam	O
30-35	09-14-17	12:20	10.8	F-10	K.N	09-14-17	12:34	X	-	31	30.5	Full seam	O

Texel GEOSOL

Seaming Procedures
Procédures de Soudures

Project Name / Nom de Projet: **Rankin Inlet Tank Farm**

Project No. / No. de Projet: **C-15152**

QC Inspector / Inspecteur CQ: **Anthony Duquette-Michon**

Seaming Procedures / Procédures de Soudures						Non-Destructive Testing / Essai Non-Destructif							
Seam No. No. de Soudure	Date of Seaming Date de Soudure (mm/dd/yy)	Time of Seaming Heure de Soudure	Seam Length Longueur Soudure (m)	Trial Test No. No. Calibration	Technician-Welder Soudeur	Test Date Date de l'essai (mm/dd/yy)	Time Heure	Air-Pressure Pressurisation	Vacuum Box Boîte à Vide	Starting Pressure Pression Départ (psi)	Ending Pressure Pression Fin (psi)	Testing Details/Location Détails de l'essai/Localisation	Approved (Yes/No) Approuvé (Oui/Non)
6-33	09-14-17	08:24	40.3	F-8	K.N	09-14-17	08:48	X	-	31.5	31.5	Full seam	O
33-34	09-14-17	09:00	40.3	F-8	K.N	09-14-17	09:41	X	-	31	31	Full seam	O
26-33	09-14-17	09:28	0.8	F-9	K.N	09-14-17	10:01	X	-	31	30	Full seam	O
27-33	09-14-17	09:28	5.9	F-9	K.N	09-14-17	10:01	X	-	31	30	Full seam	O
27-34	09-14-17	09:28	0.8	F-9	K.N	09-14-17	10:01	X	-	31	30	Full seam	O
28-34	09-14-17	09:28	5.9	F-9	K.N	09-14-17	10:01	X	-	31	30	Full seam	O
19-35	09-14-17	12:26	5.3	F-11	K.N	09-14-17	12:34	X	-	30.5	29	Full seam	O
35-36	09-14-17	12:34	10.1	F-10	K.N	09-14-17	12:50	X	-	32	31	Full seam	O
36-37	09-14-17	12:52	9.8	F-10	K.N	09-14-17	13:05	X	-	29.5	29.5	Full seam	O
37-38	09-14-17	13:02	9.6	F-10	K.N	09-14-17	13:14	X	-	30	30	Full seam	O
38-39	09-14-17	13:20	9.1	F-10	K.N	09-14-17	13:26	X	-	31	30	Full seam	O
39-40	09-14-17	13:35	9.5	F-10	K.N	09-14-17	13:47	X	-	30	30	Full seam	O
1-41	09-14-17	16:25	39.2	F-10	K.N	09-14-17	17:11	X	-	32	32	From West 0m to 8.4m	O

Texel
GEOSOL

Seaming Procedures
Procédures de Soudures

Project Name / Nom de Projet: **Rankin Inlet Tank Farm**

QC Inspector / Inspecteur CQ: **Anthony Duquette-Michon**

Project No. / No. de Projet: **C-15152**

Seaming Procedures / Procédures de Soudures						Non-Destructive Testing / Essai Non-Destructif							
Seam No. No. de Soudure	Date of Seaming Date de Soudure (mm/dd/yy)	Time of Seaming Heure de Soudure	Seam Length Longueur Soudure (m)	Trial Test No. No. Calibration	Technician-Welder Soudeur	Test Date Date de l'essai (mm/dd/yy)	Time Heure	Air-Pressure Pressurisation	Vacuum Box Boîte à Vide	Starting Pressure Pression Départ (psi)	Ending Pressure Pression Fin (psi)	Testing Details/Location Détails de l'essai/Localisation	Approved (Yes/No) Approuvé (Oui/Non)
"	"	"	"	"	"	09-14-17	17:13	X	-	31	30	8.4m to 39.2m	O
41-42	09-14-17	17:03	39.3	F-10	K.N	09-15-17	06:41	X	-	32	32	Full seam	O
20-41	09-15-17	07:05	5.9	F-12	K.N	09-15-17	07:29	X	-	32	32	Full seam	O
19-41	09-15-17	07:05	0.8	F-12	K.N	09-15-17	07:29	X	-	32	32	Full seam	O
19-42	09-15-17	07:05	5.9	F-12	K.N	09-15-17	07:29	X	-	32	32	Full seam	O
35-42	09-15-17	07:20	1.9	F-12	K.N	09-15-17	08:17	X	-	28	27	Full seam	O
36-42	09-15-17	07:20	6.65	F-12	K.N	09-15-17	08:17	X	-	28	27	Full seam	O
37-42	09-15-17	07:20	6.65	F-12	K.N	09-15-17	08:17	X	-	28	27	Full seam	O
38-42	09-15-17	07:20	6.65	F-12	K.N	09-15-17	08:17	X	-	28	27	Full seam	O
39-42	09-15-17	07:20	6.65	F-12	K.N	09-15-17	08:17	X	-	28	27	Full seam	O
40-42	09-15-17	07:20	6.65	F-12	K.N	09-15-17	08:17	X	-	28	27	Full seam	O
40-43	09-15-17	12:00	9.6	F-13	K.N	09-15-17	12:06	X	-	31	30	Full seam	O
43-44	09-15-17	12:07	11.2	F-13	K.N	09-15-17	12:15	X	-	31	30	Full seam	O

Texel GEOSOL

Seaming Procedures
Procédures de Soudures

Project Name / Nom de Projet: **Rankin Inlet Tank Farm**

QC Inspector / Inspecteur CQ: **Anthony Duquette-Michon**

Project No. / No. de Projet: **C-15152**

Seaming Procedures / Procédures de Soudures						Non-Destructive Testing / Essai Non-Destructif							
Seam No. No. de Soudure	Date of Seaming Date de Soudure (mm/dd/yy)	Time of Seaming Heure de Soudure	Seam Length Longueur Soudure (m)	Trial Test No. No. Calibration	Technician-Welder Soudeur	Test Date Date de l'essai (mm/dd/yy)	Time Heure	Air-Pressure Pressurisation	Vacuum Box Boîte à Vide	Starting Pressure Pression Départ (psi)	Ending Pressure Pression Fin (psi)	Testing Details/Location Détails de l'essai/Localisation	Approved (Yes/No) Approuvé (Oui/Non)
44-45	09-15-17	12:15	10.8	F-13	K.N	09-15-17	12:29	X	-	31	29	Full seam	O
45-46	09-15-17	12:22	10.6	F-13	K.N	09-15-17	12:34	X	-	29	29	Full seam	O
46-47	09-15-17	12:29	10.5	F-13	K.N	09-15-17	12:43	X	-	30.5	30	Full seam	O
47-48	09-15-17	14:17	10.5	F-13	K.N	09-15-17	14:22	X	-	30.5	29	Full seam	O
42-43	09-15-17	12:35	3.8	F-12	K.N	09-15-17	13:58	X	-	28	28	Full seam	O
48-49	09-15-17	14:30	10.7	F-13	K.N	09-15-17	14:38	X	-	27	26	Full seam	O
49-50	09-15-17	14:47	10.7	F-13	K.N	09-15-17	15:58	X	-	32	32	Full seam	O
50-51	09-17-17	16:12	10.7	F-14	K.N	09-17-17	16:21	X	-	30.5	30.5	Full seam	O
51-52	09-17-17	16:18	10.7	F-14	K.N	09-17-17	16:26	X	-	31	30	Full seam	O
52-53	09-17-17	16:25	11	F-14	K.N	09-17-17	16:36	X	-	31	30	Full seam	O
53-54	09-17-17	16:35	11	F-14	K.N	09-17-17	16:48	X	-	32	31	Full seam	O
54-55	09-17-17	16:45	11.2	F-14	K.N	09-17-17	16:56	X	-	29.5	28	Full seam	O
55-56	09-17-17	17:03	11.1	F-14	K.N	09-17-17	17:30	X	-	30	30	Full seam	O

Texel GEOSOL

Seaming Procedures
Procédures de Soudures

Project Name / Nom de Projet: **Rankin Inlet Tank Farm**

Project No. / No. de Projet: **C-15152**

QC Inspector / Inspecteur CQ: **Anthony Duquette-Michon**

Seaming Procedures / Procédures de Soudures						Non-Destructive Testing / Essai Non-Destructif							
Seam No. No. de Soudure	Date of Seaming Date de Soudure (mm/dd/yy)	Time of Seaming Heure de Soudure	Seam Length Longueur Soudure (m)	Trial Test No. No. Calibration	Technician-Welder Soudeur	Test Date Date de l'essai (mm/dd/yy)	Time Heure	Air-Pressure Pressurisation	Vacuum Box Boîte à Vide	Starting Pressure Pression Départ (psi)	Ending Pressure Pression Fin (psi)	Testing Details/Location Détails de l'essai/Localisation	Approved (Yes/No) Approuvé (Oui/Non)
56-57	09-17-17	17:09	11.3	F-14	K.N	09-17-17	17:32	X	-	30.5	30.5	Full seam	O
57-58	09-18-17	08:25	5.7	F-15	K.N	09-18-17	08:30	X	-	30.5	30	Full seam	O
16-59	09-18-17	10:50	16.7	F-16	K.N	09-18-17	11:49	X	-	31.5	31.5	Full seam	O
45-59	09-18-17	14:24	3.7	F-18	K.N	09-18-17	14:36	X	-	30	30	Full seam	O
46-59	09-18-17	14:24	6.65	F-18	K.N	09-18-17	14:47	X	-	33	32	Full seam	O
47-59	09-18-17	14:24	6.65	F-18	K.N	09-18-17	14:47	X	-	33	32	From East 0m to 2m	O
"	"	"	"	"	"	09-18-17	15:54	X	-	31	30	2m to 6.65m	O
48-59	09-18-17	14:24	0.5	F-18	K.N	09-18-17	15:54	X	-	31	30	Full seam	O
48-60	09-18-17	14:24	6.2	F-18	K.N	09-18-17	15:54	X	-	31	30	Full seam	O
49-60	09-18-17	14:24	6.65	F-18	K.N	09-18-17	15:47	X	-	32	32	Full seam	O
50-60	09-18-17	14:24	6.65	F-18	K.N	09-18-17	15:47	X	-	32	32	Full seam	O
51-60	09-18-17	14:24	6.65	F-18	K.N	09-18-17	16:12	X	-	30.5	29	Full seam	O
52-60	09-18-17	14:24	6.65	F-18	K.N	09-18-17	16:10	X	-	30	29.5	Full seam	O

Texel GEOSOL

Seaming Procedures
Procédures de Soudures

Project Name / Nom de Projet: **Rankin Inlet Tank Farm**

QC Inspector / Inspecteur CQ: **Anthony Duquette-Michon**

Project No. / No. de Projet: **C-15152**

Seaming Procedures / Procédures de Soudures						Non-Destructive Testing / Essai Non-Destructif							
Seam No. No. de Soudure	Date of Seaming Date de Soudure (mm/dd/yy)	Time of Seaming Heure de Soudure	Seam Length Longueur Soudure (m)	Trial Test No. No. Calibration	Technician-Welder Soudeur	Test Date Date de l'essai (mm/dd/yy)	Time Heure	Air-Pressure Pressurisation	Vacuum Box Boîte à Vide	Starting Pressure Pression Départ (psi)	Ending Pressure Pression Fin (psi)	Testing Details/Location Détails de l'essai/Localisation	Approved (Yes/No) Approuvé (Oui/Non)
17-60	09-18-17	12:15	16.7	F-17	K.N	09-18-17	12:49	X	-	30	29	Full seam	O
18-60	09-18-17	12:15	16.5	F-17	K.N	09-18-17	12:49	X	-	30	29	Full seam	O
41-59	09-18-17	13:05	2.2	F-17	K.N	09-18-17	13:15	X	-	32	31	Full seam	O
42-59	09-18-17	13:05	4.5	F-17	K.N	09-18-17	13:15	X	-	32	31	Full seam	O
59-60	09-18-17	12:50	6.65	F-17	K.N	09-18-17	13:00	X	-	30.5	29.5	Full seam	O
Patch-59	09-18-17	13:40	12.9	F-18	K.N	09-18-17	13:51	X	-	32	30.5	Full seam	O
Patch-43	09-18-17	14:00	3.2	F-18	K.N	09-18-17	14:13	X	-	30.5	29.5	Full seam	O
Patch-44	09-18-17	14:00	6.65	F-18	K.N	09-18-17	14:13	X	-	30.5	29.5	Full seam	O
Patch-45	09-18-17	14:00	3.2	F-18	K.N	09-18-17	14:13	X	-	30.5	29.5	Full seam	O
Patch-42	09-18-17	PM	0.8	E-6	S.M	09-18-17	PM	-	X	-	-	Full seam	O
61-62	09-19-17	07:37	10	F-19	K.N	09-19-17	07:45	X	-	33.5	33.5	Full seam	O
62-63	09-19-17	07:45	4.9	F-19	K.N	09-19-17	07:51	X	-	30.5	29.5	Full seam	O
66-67	09-19-17	12:35	38.4	F-20	K.N	09-19-17	12:56	X	-	30.5	30	Full seam	O

Texel GEOSOL

Seaming Procedures
Procédures de Soudures

Project Name / Nom de Projet: **Rankin Inlet Tank Farm**

Project No. / No. de Projet: **C-15152**

QC Inspector / Inspecteur CQ: **Anthony Duquette-Michon**

Seaming Procedures / Procédures de Soudures						Non-Destructive Testing / Essai Non-Destructif							
Seam No. No. de Soudure	Date of Seaming Date de Soudure (mm/dd/yy)	Time of Seaming Heure de Soudure	Seam Length Longueur Soudure (m)	Trial Test No. No. Calibration	Technician-Welder Soudeur	Test Date Date de l'essai (mm/dd/yy)	Time Heure	Air-Pressure Pressurisation	Vacuum Box Boîte à Vide	Starting Pressure Pression Départ (psi)	Ending Pressure Pression Fin (psi)	Testing Details/Location Détails de l'essai/Localisation	Approved (Yes/No) Approuvé (Oui/Non)
61-64	09-19-17	08:47	38.8	F-19	K.N	09-19-17	09:10	X	-	32	31.5	Full seam	O
64-65	09-19-17	10:22	38.4	F-19	K.N	09-19-17	10:42	X	-	31	30.5	Full seam	O
65-66	09-19-17	12:12	38.4	F-20	K.N	09-19-17	12:33	X	-	32	31.5	Full seam	O
53-61	09-19-17	17:11	6.65	F-21	K.N	09-19-17	07:29	X	-	30	29	Full seam	O
54-61	09-19-17	17:11	6.65	F-21	K.N	09-19-17	07:36	X	-	30.5	30.5	Full seam	O
55-61	09-19-17	17:11	6.65	F-21	K.N	09-19-17	07:36	X	-	30.5	30.5	Full seam	O
56-61	09-19-17	17:11	6.65	F-21	K.N	09-19-17	07:36	X	-	30.5	30.5	Full seam	O
57-61	09-19-17	17:11	2.5	F-21	K.N	09-19-17	07:42	X	-	30.5	30.5	Full seam	O
57-62	09-19-17	17:11	7.1	F-21	K.N	09-19-17	07:42	X	-	30.5	30.5	Full seam	O
58-62	09-19-17	17:11	1.3	F-21	K.N	09-19-17	AM	-	X	-	-	Full seam	O
58-63	09-19-17	17:11	4.9	F-21	K.N	09-19-17	07:19	X	-	30	29	Full seam	O
67-68	09-19-17	13:27	38.3	F-20	K.N	09-19-17	13:47	X	-	31.5	30	Full seam	O
34-69	09-19-17	16:25	41	F-20	K.N	09-19-17	16:46	X	-	31	31	Full seam	O

Texel GEOSOL

Seaming Procedures
Procédures de Soudures

Project Name / Nom de Projet: **Rankin Inlet Tank Farm**

Project No. / No. de Projet: **C-15152**

QC Inspector / Inspecteur CQ: **Anthony Duquette-Michon**

Seaming Procedures / Procédures de Soudures						Non-Destructive Testing / Essai Non-Destructif							
Seam No. No. de Soudure	Date of Seaming Date de Soudure (mm/dd/yy)	Time of Seaming Heure de Soudure	Seam Length Longueur Soudure (m)	Trial Test No. No. Calibration	Technician-Welder Soudeur	Test Date Date de l'essai (mm/dd/yy)	Time Heure	Air-Pressure Pressurisation	Vacuum Box Boîte à Vide	Starting Pressure Pression Départ (psi)	Ending Pressure Pression Fin (psi)	Testing Details/Location Détails de l'essai/Localisation	Approved (Yes/No) Approuvé (Oui/Non)
68-70	09-20-17	13:55	38.6	F-23	K.N	09-20-17	14:14	X	-	30	30	Full seam	O
70-71	09-20-17	14:52	39.5	F-23	K.N	09-20-17	15:58	X	-	30	29	Full seam	O
7-71	09-20-17	16:32	4,7	F-24	K.N	09-20-17	16:45	X	-	30	30	Full seam	O
10-71	09-20-17	16:32	2	F-24	K.N	09-20-17	16:45	X	-	30	30	Full seam	O
10-70	09-20-17	16:32	4,7	F-24	K.N	09-20-17	16:45	X	-	30	30	Full seam	O
11-70	09-20-17	16:32	2	F-24	K.N	09-20-17	16:45	X	-	30	30	Full seam	O
60-61	09-20-17	09:12	6.65	F-22	K.N	09-20-17	10:01	X	-	30	30	Full seam	O
18-64	09-20-17	09:12	2	F-22	K.N	09-20-17	10:00	X	-	31	30	Full seam	O
15-64	09-20-17	09:12	4.7	F-22	K.N	09-20-17	10:00	X	-	31	30	Full seam	O
15-65	09-20-17	09:12	2	F-22	K.N	09-20-17	10:00	X	-	31	30	Full seam	O
14-65	09-20-17	09:12	4.7	F-22	K.N	09-20-17	09:52	X	-	30	28	Full seam	O
14-66	09-20-17	09:12	2	F-22	K.N	09-20-17	09:52	X	-	30	28	Full seam	O
13-66	09-20-17	09:12	4.7	F-22	K.N	09-20-17	09:52	X	-	30	28	Full seam	O

Texel GEOSOL

Seaming Procedures
Procédures de Soudures

Project Name / Nom de Projet: **Rankin Inlet Tank Farm**

Project No. / No. de Projet: **C-15152**

QC Inspector / Inspecteur CQ: **Anthony Duquette-Michon**

Seaming Procedures / Procédures de Soudures						Non-Destructive Testing / Essai Non-Destructif							
Seam No. No. de Soudure	Date of Seaming Date de Soudure (mm/dd/yy)	Time of Seaming Heure de Soudure	Seam Length Longueur Soudure (m)	Trial Test No. No. Calibration	Technician-Welder Soudeur	Test Date Date de l'essai (mm/dd/yy)	Time Heure	Air-Pressure Pressurisation	Vacuum Box Boîte à Vide	Starting Pressure Pression Départ (psi)	Ending Pressure Pression Fin (psi)	Testing Details/Location Détails de l'essai/Localisation	Approved (Yes/No) Approuvé (Oui/Non)
13-67	09-20-17	09:12	2	F-22	K.N	09-20-17	09:55	X	-	25	25	Full seam	O
12-67	09-20-17	09:12	4.7	F-22	K.N	09-20-17	09:55	X	-	25	25	Full seam	O
12-68	09-20-17	09:12	2	F-22	K.N	09-20-17	09:55	X	-	25	25	Full seam	O
11-68	09-20-17	09:12	4.7	F-22	K.N	09-20-17	09:55	X	-	25	25	Full seam	O
71-72	09-22-17	14:30	39.5	F-25	K.N	09-22-17	15:32	X	-	33	33	Full seam	O
72-73	09-22-17	15:45	39.6	F-25	K.N	09-22-17	16:04	X	-	33	32.5	Full seam	O
73-74	09-22-17	16:01	40	F-25	K.N	09-22-17	16:21	X	-	30.5	30.5	Full seam	O
74-75	09-22-17	16:20	39.8	F-25	K.N	09-22-17	16:47	X	-	31	31	Full seam	O
75-76	09-22-17	16:45	40.1	F-25	K.N	09-22-17	07:04	X	-	32.5	32	Full seam	O
76-77	09-23-17	07:45	10	F-26	K.N	09-23-17	08:04	X	-	31	30.5	Full seam	O
78-79	09-23-17	08:21	7.3	F-26	K.N	09-23-17	08:26	X	-	30.5	30.5	Full seam	O
78-80	09-23-17	08:50	10.7	F-26	K.N	09-23-17	09:05	X	-	31	31	Full seam	O
80-81	09-23-17	08:55	11.1	F-26	K.N	09-23-17	09:10	X	-	31	30.5	Full seam	O

Texel GEOSOL

Seaming Procedures
Procédures de Soudures

Project Name / Nom de Projet: **Rankin Inlet Tank Farm**

Project No. / No. de Projet: **C-15152**

QC Inspector / Inspecteur CQ: **Anthony Duquette-Michon**

Seaming Procedures / Procédures de Soudures						Non-Destructive Testing / Essai Non-Destructif							
Seam No. No. de Soudure	Date of Seaming Date de Soudure (mm/dd/yy)	Time of Seaming Heure de Soudure	Seam Length Longueur Soudure (m)	Trial Test No. No. Calibration	Technician-Welder Soudeur	Test Date Date de l'essai (mm/dd/yy)	Time Heure	Air-Pressure Pressurisation	Vacuum Box Boîte à Vide	Starting Pressure Pression Départ (psi)	Ending Pressure Pression Fin (psi)	Testing Details/Location Détails de l'essai/Localisation	Approved (Yes/No) Approuvé (Oui/Non)
81-82	09-23-17	09:05	11.3	F-26	K.N	09-23-17	09:17	X	-	30.5	30.5	Full seam	O
82-83	09-23-17	09:15	11.6	F-26	K.N	09-23-17	09:23	X	-	30.5	30	Full seam	O
76-83	09-23-17	09:45	6.2	F-27	K.N	09-23-17	10:04	X	-	25	25	Full seam	O
76-82	09-23-17	09:45	6.65	F-27	K.N	09-23-17	10:04	X	-	25	25	Full seam	O
76-81	09-23-17	09:45	6.65	F-27	K.N	09-23-17	10:04	X	-	25	25	Full seam	O
76-80	09-23-17	09:45	6.65	F-27	K.N	09-23-17	10:04	X	-	25	25	Full seam	O
76-78	09-23-17	09:45	4	F-27	K.N	09-23-17	10:04	X	-	25	25	Full seam	O
77-78	09-23-17	09:45	3.9	F-28	K.N	09-23-17	10:11	X	-	30.5	30.5	Full seam	O
77-79	09-23-17	09:45	8	F-28	K.N	09-23-17	10:11	X	-	30.5	30.5	From North 0m to 4.5m	O
"	"	"	"	"	"	09-23-17	10:15	X	-	29	29	4.5m to 8m	O
7-84	09-23-17	13:43	49	F-29	K.N	09-23-17	14:06	X	-	32	32	Full seam	O
84-85	09-23-17	14:06	37.2	F-29	K.N	09-23-17	14:24	X	-	32	30	Full seam	O
84-86	09-23-17	14:24	12	F-29	K.N	09-23-17	14:36	X	-	30.5	30.5	Full seam	O

Texel GEOSOL

Seaming Procedures
Procédures de Soudures

Project Name / Nom de Projet: **Rankin Inlet Tank Farm**

Project No. / No. de Projet: **C-15152**

QC Inspector / Inspecteur CQ: **Anthony Duquette-Michon**

Seaming Procedures / Procédures de Soudures						Non-Destructive Testing / Essai Non-Destructif							
Seam No. No. de Soudure	Date of Seaming Date de Soudure (mm/dd/yy)	Time of Seaming Heure de Soudure	Seam Length Longueur Soudure (m)	Trial Test No. No. Calibration	Technician-Welder Soudeur	Test Date Date de l'essai (mm/dd/yy)	Time Heure	Air-Pressure Pressurisation	Vacuum Box Boîte à Vide	Starting Pressure Pression Départ (psi)	Ending Pressure Pression Fin (psi)	Testing Details/Location Détails de l'essai/Localisation	Approved (Yes/No) Approuvé (Oui/Non)
85-86	09-23-17	14:35	6.65	F-29	K.N	09-23-17	14:42	X	-	32	32	Full seam	O
7-72	09-23-17	15:40	2	F-30	K.N	09-23-17	15:59	X	-	31	31	Full seam	O
84-72	09-23-17	15:40	4.7	F-30	K.N	09-23-17	15:59	X	-	31	31	Full seam	O
84-73	09-23-17	15:40	2	F-30	K.N	09-23-17	15:59	X	-	31	31	Full seam	O
85-73	09-23-17	15:40	4.7	F-30	K.N	09-23-17	15:59	X	-	31	31	Full seam	O
85-74	09-23-17	15:40	2	F-30	K.N	09-23-17	15:59	X	-	31	31	Full seam	O
83-87	09-24-17	09:15	11.6	F-31	K.N	09-24-17	09:40	X	-	31.5	31.5	Full seam	O
76-87	09-24-17	09:15	6.65	F-31	K.N	09-24-17	09:40	X	-	31.5	31.5	Full seam	O
75-87	09-24-17	09:15	6.65	F-31	K.N	09-24-17	09:40	X	-	31.5	31.5	Full seam	O
74-87	09-24-17	09:15	4.7	F-31	K.N	09-24-17	09:40	X	-	31.5	31.5	Full seam	O
87-88	09-24-17	09:52	29.6	F-32	K.N	09-24-17	10:06	X	-	31.5	31	Full seam	O
88-89	09-24-17	10:15	30	F-32	K.N	09-24-17	10:38	X	-	27	26	Full seam	O
89-90	09-24-17	10:38	30.1	F-32	K.N	09-24-17	10:52	X	-	30.5	30.5	Full seam	O

Texel GEOSOL

Seaming Procedures
Procédures de Soudures

Project Name / Nom de Projet: **Rankin Inlet Tank Farm**

Project No. / No. de Projet: **C-15152**

QC Inspector / Inspecteur CQ: **Anthony Duquette-Michon**

Seaming Procedures / Procédures de Soudures						Non-Destructive Testing / Essai Non-Destructif							
Seam No. No. de Soudure	Date of Seaming Date de Soudure (mm/dd/yy)	Time of Seaming Heure de Soudure	Seam Length Longueur Soudure (m)	Trial Test No. No. Calibration	Technician-Welder Soudeur	Test Date Date de l'essai (mm/dd/yy)	Time Heure	Air-Pressure Pressurisation	Vacuum Box Boîte à Vide	Starting Pressure Pression Départ (psi)	Ending Pressure Pression Fin (psi)	Testing Details/Location Détails de l'essai/Localisation	Approved (Yes/No) Approuvé (Oui/Non)
90-91	09-24-17	12:09	29.9	F-33	K.N	09-24-17	12:28	X	-	30	30	Full seam	O
91-92	09-24-17	12:28	29.8	F-33	K.N	09-24-17	12:43	X	-	30	30	Full seam	O
92-93	09-24-17	13:01	29.4	F-33	K.N	09-24-17	13:15	X	-	34	34	Full seam	O
85-87	09-24-17	13:23	6.65	F-34	K.N	09-24-17	13:49	X	-	32	32	Full seam	O
85-88	09-24-17	13:23	6.65	F-34	K.N	09-24-17	13:49	X	-	32	32	From West 0m to 3.5m	O
"	"	"	"	"	"	09-24-17	14:00	X	-	33	33	3.5m to 6.65m	O
85-89	09-24-17	13:23	6.65	F-34	K.N	09-24-17	14:00	X	-	33	33	Full seam	O
85-90	09-24-17	13:23	6.65	F-34	K.N	09-24-17	14:00	X	-	33	33	Full seam	O
85-91	09-24-17	13:23	6.65	F-34	K.N	09-24-17	14:00	X	-	33	33	Full seam	O
85-92	09-24-17	13:23	3.7	F-34	K.N	09-24-17	14:00	X	-	33	33	Full seam	O
86-92	09-24-17	13:23	3	F-34	K.N	09-24-17	14:00	X	-	33	33	Full seam	O
86-93	09-24-17	13:23	6.65	F-34	K.N	09-24-17	14:00	X	-	33	33	Full seam	O
94-95	09-25-17	12:31	63.7	F-35	K.N	09-25-17	12:58	X	-	33	33	Full seam	O

Texel GEOSOL

Seaming Procedures
Procédures de Soudures

Project Name / Nom de Projet: **Rankin Inlet Tank Farm**

Project No. / No. de Projet: **C-15152**

QC Inspector / Inspecteur CQ: **Anthony Duquette-Michon**

Seaming Procedures / Procédures de Soudures						Non-Destructive Testing / Essai Non-Destructif							
Seam No. No. de Soudure	Date of Seaming Date de Soudure (mm/dd/yy)	Time of Seaming Heure de Soudure	Seam Length Longueur Soudure (m)	Trial Test No. No. Calibration	Technician-Welder Soudeur	Test Date Date de l'essai (mm/dd/yy)	Time Heure	Air-Pressure Pressurisation	Vacuum Box Boîte à Vide	Starting Pressure Pression Départ (psi)	Ending Pressure Pression Fin (psi)	Testing Details/Location Détails de l'essai/Localisation	Approved (Yes/No) Approuvé (Oui/Non)
96-97	09-25-17	12:52	1.8	F-37	K.N	09-25-17	13:02	X	-	32	31	Full seam	O
95-96	09-25-17	13:07	35.5	F-37	K.N	09-25-17	14:01	X	-	29	28	From North 0m to 12m	O
"	"	"	"	"	"	09-25-17	13:48	X	-	33	32	12m to 35.5m	O
95-97	09-25-17	13:07	27.3	F-36	K.N	09-25-17	13:48	X	-	33	32	Full seam	O
69-94	09-25-17	11:35	6.65	F-37	K.N	09-25-17	12:51	X	-	34	34	Full seam	O
34-94	09-25-17	11:35	6.65	F-37	K.N	09-25-17	12:51	X	-	34	34	Full seam	O
33-94	09-25-17	11:35	6.65	F-37	K.N	09-25-17	12:51	X	-	34	34	Full seam	O
6-94	09-25-17	11:35	6.65	F-37	K.N	09-25-17	12:51	X	-	34	34	Full seam	O
5-94	09-25-17	11:35	6.65	F-37	K.N	09-25-17	12:51	X	-	34	34	Full seam	O
4-94	09-25-17	11:35	6.65	F-37	K.N	09-25-17	12:51	X	-	34	34	Full seam	O
3-94	09-25-17	11:35	6.65	F-37	K.N	09-25-17	12:51	X	-	34	34	Full seam	O
2-94	09-25-17	11:35	6.65	F-37	K.N	09-25-17	12:51	X	-	34	34	Full seam	O
1-94	09-25-17	11:35	6.65	F-37	K.N	09-25-17	12:37	X	-	28	28	Full seam	O

Texel GEOSOL

Seaming Procedures
Procédures de Soudures

Project Name / Nom de Projet: **Rankin Inlet Tank Farm**

Project No. / No. de Projet: **C-15152**

QC Inspector / Inspecteur CQ: **Anthony Duquette-Michon**

Seaming Procedures / Procédures de Soudures						Non-Destructive Testing / Essai Non-Destructif							
Seam No. No. de Soudure	Date of Seaming Date de Soudure (mm/dd/yy)	Time of Seaming Heure de Soudure	Seam Length Longueur Soudure (m)	Trial Test No. No. Calibration	Technician-Welder Soudeur	Test Date Date de l'essai (mm/dd/yy)	Time Heure	Air-Pressure Pressurisation	Vacuum Box Boîte à Vide	Starting Pressure Pression Départ (psi)	Ending Pressure Pression Fin (psi)	Testing Details/Location Détails de l'essai/Localisation	Approved (Yes/No) Approuvé (Oui/Non)
41-94	09-25-17	11:35	4.4	F-37	K.N	09-25-17	12:40	X	-	31.5	31.5	Full seam	O
59-94	09-25-17	16:00	6.65	F-36	K.N	09-25-17	16:07	X	-	30.5	30	Full seam	O
59-95	09-25-17	16:00	6.1	F-36	K.N	09-25-17	16:07	X	-	30.5	30	Full seam	O
59-96	09-25-17	16:00	1.8	F-36	K.N	09-25-17	16:07	X	-	30.5	30	Full seam	O
16-96	09-25-17	14:17	2.2	F-37	K.N	09-25-17	14:27	X	-	31	30	Full seam	O
15-96	09-25-17	14:17	6.65	F-37	K.N	09-25-17	14:27	X	-	31	30	From North 0m to 5.8m	O
"	"	"	"	"	"	09-25-17	14:32	X	-	31	31	5.8m to 6.65m	O
14-96	09-25-17	14:17	6.65	F-37	K.N	09-25-17	14:32	X	-	31	31	From North 0m to 4.8m	O
"	"	"	"	"	"	09-25-17	14:49	X	-	34	34	4.8m to 6.65m	O
13-96	09-25-17	14:17	6.65	F-37	K.N	09-25-17	14:49	X	-	34	34	Full seam	O
12-96	09-25-17	14:17	6.65	F-37	K.N	09-25-17	14:49	X	-	34	34	From North 0m to 4m	O
"	"	"	"	"	"	09-25-17	14:45	X	-	30.5	30	4m to 6.65m	O
11-96	09-25-17	14:17	6.65	F-37	K.N	09-25-17	15:51	X	-	30.5	30.5	Full seam	O

Texel GEOSOL

Seaming Procedures
Procédures de Soudures

Project Name / Nom de Projet: **Rankin Inlet Tank Farm**

Project No. / No. de Projet: **C-15152**

QC Inspector / Inspecteur CQ: **Anthony Duquette-Michon**

Seaming Procedures / Procédures de Soudures						Non-Destructive Testing / Essai Non-Destructif							
Seam No. No. de Soudure	Date of Seaming Date de Soudure (mm/dd/yy)	Time of Seaming Heure de Soudure	Seam Length Longueur Soudure (m)	Trial Test No. No. Calibration	Technician-Welder Soudeur	Test Date Date de l'essai (mm/dd/yy)	Time Heure	Air-Pressure Pressurisation	Vacuum Box Boîte à Vide	Starting Pressure Pression Départ (psi)	Ending Pressure Pression Fin (psi)	Testing Details/Location Détails de l'essai/Localisation	Approved (Yes/No) Approuvé (Oui/Non)
8-97	09-25-17	14:17	6.65	F-37	K.N	09-25-17	15:51	X	-	30.5	30.5	Full seam	O
7-97	09-25-17	14:17	6.65	F-37	K.N	09-25-17	15:51	X	-	30.5	30.5	Full seam	O
84-97	09-25-17	14:17	6.65	F-37	K.N	09-25-17	15:51	X	-	30.5	30.5	Full seam	O
86-97	09-25-17	14:17	6.65	F-37	K.N	09-25-17	15:51	X	-	30.5	30.5	Full seam	O
93-98	09-27-17	12:16	28.7	F-38	K.N	09-27-17	12:55	X	-	29	29	From North 0m to 3.5m	O
"	"	"	"	"	"	09-27-17	12:55	X	-	31	30.5	3.5m to 28.7m	O
98-99	09-27-17	12:46	27.3	F-38	K.N	09-27-17	13:12	X	-	32	32	Full seam	O
99-100	09-27-17	13:00	26.5	F-38	K.N	09-27-17	13:16	X	-	31	31	Full seam	O
100-101	09-27-17	13:13	26.6	F-38	K.N	09-27-17	13:23	X	-	32	32	Full seam	O
101-102	09-27-17	13:24	26.4	F-38	K.N	09-27-17	13:36	X	-	33	32	Full seam	O
102-103	09-27-17	13:38	26.4	F-38	K.N	09-27-17	13:52	X	-	34	34	Full seam	O
103-104	09-27-17	13:51	26.7	F-38	K.N	09-27-17	14:04	X	-	32	31	Full seam	O
104-105	09-27-17	14:08	26.7	F-38	K.N	09-27-17	14:21	X	-	30	30	Full seam	O

Texel GEOSOL

Seaming Procedures
Procédures de Soudures

Project Name / Nom de Projet: **Rankin Inlet Tank Farm**

Project No. / No. de Projet: **C-15152**

QC Inspector / Inspecteur CQ: **Anthony Duquette-Michon**

Seaming Procedures / Procédures de Soudures						Non-Destructive Testing / Essai Non-Destructif							
Seam No. No. de Soudure	Date of Seaming Date de Soudure (mm/dd/yy)	Time of Seaming Heure de Soudure	Seam Length Longueur Soudure (m)	Trial Test No. No. Calibration	Technician-Welder Soudeur	Test Date Date de l'essai (mm/dd/yy)	Time Heure	Air-Pressure Pressurisation	Vacuum Box Boîte à Vide	Starting Pressure Pression Départ (psi)	Ending Pressure Pression Fin (psi)	Testing Details/Location Détails de l'essai/Localisation	Approved (Yes/No) Approuvé (Oui/Non)
105-106	09-27-17	14:21	26.7	F-38	K.N	09-27-17	14:32	X	-	31.5	30.5	Full seam	O
86-98	09-27-17	15:45	3	F-39	K.N	09-27-17	16:26	X	-	30	28	Full seam	O
97-98	09-27-17	15:45	1.7	F-40	K.N	09-27-17	16:26	X	-	30	28	Full seam	O
95-98	09-27-17	15:45	2.3	F-40	K.N	09-27-17	16:26	X	-	30	28	Full seam	O
95-99	09-27-17	15:45	3.6	F-40	K.N	09-27-17	16:26	X	-	30	28	Full seam	O
94-99	09-27-17	15:45	3.2	F-40	K.N	09-27-17	16:26	X	-	30	28	Full seam	O
94-100	09-27-17	15:45	3	F-40	K.N	09-27-17	16:26	X	-	30	28	Full seam	O
69-100	09-27-17	15:45	3.8	F-39	K.N	09-27-17	16:26	X	-	30	28	Full seam	O
69-101	09-27-17	15:45	6.65	F-39	K.N	09-27-17	16:26	X	-	30	28	Full seam	O
69-102	09-27-17	15:45	6.65	F-39	K.N	09-27-17	16:26	X	-	30	28	Full seam	O
69-103	09-27-17	15:45	6.65	F-39	K.N	09-27-17	16:26	X	-	30	28	Full seam	O
69-104	09-27-17	15:45	6.65	F-39	K.N	09-27-17	16:26	X	-	30	28	Full seam	O
69-105	09-27-17	15:45	6.65	F-38	K.N	09-27-17	16:26	X	-	30	28	Full seam	O

Texel GEOSOL

Seaming Procedures
Procédures de Soudures

Project Name / Nom de Projet: **Rankin Inlet Tank Farm**

Project No. / No. de Projet: **C-15152**

QC Inspector / Inspecteur CQ: **Anthony Duquette-Michon**

Seaming Procedures / Procédures de Soudures						Non-Destructive Testing / Essai Non-Destructif							
Seam No. No. de Soudure	Date of Seaming Date de Soudure (mm/dd/yy)	Time of Seaming Heure de Soudure	Seam Length Longueur Soudure (m)	Trial Test No. No. Calibration	Technician-Welder Soudeur	Test Date Date de l'essai (mm/dd/yy)	Time Heure	Air-Pressure Pressurisation	Vacuum Box Boîte à Vide	Starting Pressure Pression Départ (psi)	Ending Pressure Pression Fin (psi)	Testing Details/Location Détails de l'essai/Localisation	Approved (Yes/No) Approuvé (Oui/Non)
69-106	09-27-17	15:45	5	F-38	K.N	09-27-17	16:26	X	-	30	28	Full seam	O
106-107	09-27-17	16:30	12	F-38	K.N	09-27-17	16:35	X	-	31	30	Full seam	O
28-108	10-04-17	08:14	14.1	F-41	K.N	10-04-17	08:48	X	-	31	30	From West 0m to 4m	O
"	"	"	"	"	"	10-04-17	PM	-	X	-	-	4m to 8m	O
"	"	"	"	"	"	10-04-17	08:42	X	-	35	35	8m to 14.1m	O
69-108	10-04-17	08:35	5.9	F-41	K.N	10-04-17	08:50	X	-	34	3	From North 0m to 1.2m	O
"	"	"	"	"	"	10-04-17	08:52	X	-	33	33	1.2m to 5.9m	O
108-109	10-06-17	11:25	14.7	F-42	K.N	10-06-17	11:35	X	-	30	30	Full seam	O
109-110	10-06-17	11:40	14.7	F-42	K.N	10-06-17	11:45	X	-	32	32	Full seam	O
110-111	10-06-17	12:05	13.8	F-42	K.N	10-06-17	12:15	X	-	32	32	Full seam	O
111-106	10-06-17	12:36	2.2	F-42	K.N	10-06-17	12:45	X	-	32	31	Full seam	O
110-106	10-06-17	12:36	6.65	F-42	K.N	10-06-17	12:45	X	-	32	31	Full seam	O
109-106	10-06-17	12:36	5.2	F-42	K.N	10-06-17	12:45	X	-	32	31	Full seam	O

Texel GEOSOL

Seaming Procedures
Procédures de Soudures

Project Name / Nom de Projet: **Rankin Inlet Tank Farm**

Project No. / No. de Projet: **C-15152**

QC Inspector / Inspecteur CQ: **Anthony Duquette-Michon**

Seaming Procedures / Procédures de Soudures						Non-Destructive Testing / Essai Non-Destructif							
Seam No. No. de Soudure	Date of Seaming Date de Soudure (mm/dd/yy)	Time of Seaming Heure de Soudure	Seam Length Longueur Soudure (m)	Trial Test No. No. Calibration	Technician-Welder Soudeur	Test Date Date de l'essai (mm/dd/yy)	Time Heure	Air-Pressure Pressurisation	Vacuum Box Boîte à Vide	Starting Pressure Pression Départ (psi)	Ending Pressure Pression Fin (psi)	Testing Details/Location Détails de l'essai/Localisation	Approved (Yes/No) Approuvé (Oui/Non)
111-112	10-06-17	12:57	5.2	F-42	K.N	10-06-17	13:10	X	-	33	32	Full seam	O
112-113	10-06-17	13:05	4.1	F-42	K.N	10-06-17	13:15	X	-	30	30	Full seam	O
111-107	10-06-17	13:30	7.8	F-42	K.N	10-06-17	13:40	X	-	30	29	Full seam	O
112-107	10-06-17	13:30	2.3	F-42	K.N	10-06-17	13:40	X	-	30	29	Full seam	O
113-107	10-06-17	13:30	3.1	F-42	K.N	10-06-17	13:40	X	-	30	29	Full seam	O

Texel GEOSOL

Destructive Testing
Essai Destructif

Project Name / Nom de Projet: **Rankin Inlet Tank Farm**

Project No. / No. de Projet: **C-15152**

QC Inspector / Inspecteur CQ: **Anthony Duquette-Michon**

Destructive Test No. No. Essai Destructif	Seam No. No. de Soudure	Date (mm/dd/yy)	Sample Location Localisation de l'échantillon	Peel Resistance Résistance Pelage (ppi)	Peel Type of Break Type de Brisure	Peel Resistance Résistance Pelage (ppi)	Peel Type of Break Type de Brisure	Shear Resistance Résist. Cisaillement (ppi)	Shear Type of Break Type de Brisure	Date Repaired Date Réparée (mm/dd/yy)	Date Repair Verified Date Réparée Vérifiée (mm/dd/yy)	Lab. Testing (P/F) Lab. Indép. (A/R)	Tensiometer No. No. Tensiomètre
DT-1	5-6	07-15-17	At 10m from WEOS	123	SE1	124	SE1	159	BRK	07-15-17	07-15-17	P	T-9709
"	"	"	"	115	SE1	120	SE1	N/A	N/A	"	"	"	"
"	"	"	"	120	SE1	120	SE1	N/A	N/A	"	"	"	"
"	"	"	"	120	SE1	120	SE1	N/A	N/A	"	"	"	"
DT-2	7-10	07-16-17	At 1,3m from EEOS	112	SE1	119	SE1	141	BRK	07-16-17	07-16-17	P	T-9709
"	"	"	"	108	SE1	107	SE1	N/A	N/A	"	"	"	"
"	"	"	"	108	SE1	107	SE1	N/A	N/A	"	"	"	"
"	"	"	"	109	SE1	116	SE1	N/A	N/A	"	"	"	"
DT-3	14-15	07-16-17	At 16,2m from WEOS	108	SE1	96	SE1	135	BRK	07-16-17	07-16-17	P	T-9709
"	"	"	"	105	SE1	103	SE1	N/A	N/A	"	"	"	"
"	"	"	"	101	SE1	99	SE1	N/A	N/A	"	"	"	"
"	"	"	"	105	SE1	98	SE1	N/A	N/A	"	"	"	"
DT-4	25-26	09-13-17	At 1m from WEOS	156	SE1	118	SE1	185	BRK	09-13-17	09-13-17	P	T-9709
"	"	"	"	138	SE1	108	SE1	N/A	N/A	"	"	"	"
"	"	"	"	140	SE1	113	SE1	N/A	N/A	"	"	"	"
"	"	"	"	140	SE1	111	SE1	N/A	N/A	"	"	"	"
DT-5	33-34	09-14-17	At 1m from WEOS	114	SE1	132	SE1	182	BRK	09-14-17	09-14-17	P	T-9709
"	"	"	"	123	SE1	133	SE1	N/A	N/A	"	"	"	"
"	"	"	"	115	SE1	118	SE1	N/A	N/A	"	"	"	"
"	"	"	"	121	SE1	135	SE1	N/A	N/A	"	"	"	"
DT-6	41-42	09-15-17	At 2m from EEOS	132	SE1	128	SE1	187	BRK	09-15-17	09-15-17	P	T-9709
"	"	"	"	125	SE1	142	SE1	N/A	N/A	"	"	"	"
"	"	"	"	124	SE1	125	SE1	N/A	N/A	"	"	"	"
"	"	"	"	132	SE1	133	SE1	N/A	N/A	"	"	"	"

Texel GEOSOL

Destructive Testing
Essai Destructif

Project Name / Nom de Projet: **Rankin Inlet Tank Farm**

Project No. / No. de Projet: **C-15152**

QC Inspector / Inspecteur CQ: **Anthony Duquette-Michon**

Destructive Test No. No. Essai Destructif	Seam No. No. de Soudure	Date (mm/dd/yy)	Sample Location Localisation de l'échantillon	Peel Resistance Résistance Pelage (ppi)	Peel Type of Break Type de Brisure	Peel Resistance Résistance Pelage (ppi)	Peel Type of Break Type de Brisure	Shear Resistance Résist. Cisaillement (ppi)	Shear Type of Break Type de Brisure	Date Repaired Date Réparée (mm/dd/yy)	Date Repair Verified Date Réparée Vérifiée (mm/dd/yy)	Lab. Testing (P/F) Lab. Indép. (A/R)	Tensiometer No. No. Tensiomètre
DT-7	56-57	09-19-17	At 0,2m from SEOS	147	SE1	142	SE1	209	BRK	09-20-17	09-20-17	P	T-9709
"	"	"	"	148	SE1	145	SE1	N/A	N/A	"	"	"	"
"	"	"	"	145	SE1	140	SE1	N/A	N/A	"	"	"	"
"	"	"	"	144	SE1	164	SE1	N/A	N/A	"	"	"	"
DT-8	61-62	09-19-17	At 1,5m from EEOS	135	SE1	128	SE1	178	BRK	09-20-17	09-20-17	P	T-9709
"	"	"	"	145	SE1	125	SE1	N/A	N/A	"	"	"	"
"	"	"	"	140	SE1	137	SE1	N/A	N/A	"	"	"	"
"	"	"	"	145	SE1	132	SE1	N/A	N/A	"	"	"	"
DT-9	65-66	09-19-17	At 3m from EEOS	143	SE1	125	SE1	186	BRK	09-20-17	09-20-17	P	T-9709
"	"	"	"	144	SE1	120	SE1	N/A	N/A	"	"	"	"
"	"	"	"	136	SE1	131	SE1	N/A	N/A	"	"	"	"
"	"	"	"	127	SE1	127	SE1	N/A	N/A	"	"	"	"
DT-10	67-68	09-19-17	At 12m from EEOS	139	SE1	125	SE1	182	BRK	09-20-17	09-20-17	P	T-9709
"	"	"	"	126	SE1	124	SE1	N/A	N/A	"	"	"	"
"	"	"	"	134	SE1	132	SE1	N/A	N/A	"	"	"	"
"	"	"	"	125	SE1	128	SE1	N/A	N/A	"	"	"	"
DT-11	72-73	09-23-17	At 4,5m from WEOS	155	SE1	144	SE1	200	BRK	09-23-17	09-23-17	P	T-9709
"	"	"	"	146	SE1	156	SE1	N/A	N/A	"	"	"	"
"	"	"	"	148	SE1	136	SE1	N/A	N/A	"	"	"	"
"	"	"	"	145	SE1	147	SE1	N/A	N/A	"	"	"	"
DT-12	78-80	09-23-17	At 2,7m from NEOS	134	SE1	134	SE1	194	BRK	09-23-17	09-23-17	P	T-9709
"	"	"	"	131	SE1	134	SE1	N/A	N/A	"	"	"	"
"	"	"	"	107	SE1	121	SE1	N/A	N/A	"	"	"	"
"	"	"	"	122	SE1	107	SE1	N/A	N/A	"	"	"	"

Texel GEOSOL

Destructive Testing
Essai Destructif

Project Name / Nom de Projet: **Rankin Inlet Tank Farm**

Project No. / No. de Projet: **C-15152**

QC Inspector / Inspecteur CQ: **Anthony Duquette-Michon**

Destructive Test No. No. Essai Destructif	Seam No. No. de Soudure	Date (mm/dd/yy)	Sample Location Localisation de l'échantillon	Peel Resistance Résistance Pelage (ppi)	Peel Type of Break Type de Brisure	Peel Resistance Résistance Pelage (ppi)	Peel Type of Break Type de Brisure	Shear Resistance Résist. Cisaillement (ppi)	Shear Type of Break Type de Brisure	Date Repaired Date Réparée (mm/dd/yy)	Date Repair Verified Date Réparée Vérifiée (mm/dd/yy)	Lab. Testing (P/F) Lab. Indép. (A/R)	Tensiometer No. No. Tensiomètre
DT-13	84-85	09-23-17	At 2m from WEOS	112	SE1	120	SE1	199	BRK	09-23-17	09-23-17	P	T-9709
"	"	"	"	119	SE1	105	SE1	N/A	N/A	"	"	"	"
"	"	"	"	116	SE1	121	SE1	N/A	N/A	"	"	"	"
"	"	"	"	106	SE1	119	SE1	N/A	N/A	"	"	"	"
DT-14	88-89	09-24-17	At 3m from NEOS	150	SE1	145	SE1	195	BRK	09-24-17	09-24-17	P	T-9709
"	"	"	"	156	SE1	146	SE1	N/A	N/A	"	"	"	"
"	"	"	"	136	SE1	146	SE1	N/A	N/A	"	"	"	"
"	"	"	"	151	SE1	149	SE1	N/A	N/A	"	"	"	"
DT-15	92-93	09-24-17	At 3m from NEOS	144	SE1	130	SE1	181	BRK	09-24-17	09-24-17	P	T-9709
"	"	"	"	140	SE1	131	SE1	N/A	N/A	"	"	"	"
"	"	"	"	128	SE1	130	SE1	N/A	N/A	"	"	"	"
"	"	"	"	142	SE1	143	SE1	N/A	N/A	"	"	"	"
DT-16	94-95	09-25-17	At 5m from SEOS	119	SE1	128	SE1	169	BRK	09-25-17	09-25-17	P	T-9709
"	"	"	"	118	SE1	128	SE1	N/A	N/A	"	"	"	"
"	"	"	"	125	SE1	121	SE1	N/A	N/A	"	"	"	"
"	"	"	"	131	SE1	133	SE1	N/A	N/A	"	"	"	"
DT-17	101-102	09-27-17	South trench	133	SE1	127	SE1	209	BRK	N/A	N/A	P	T-9709
"	"	"	"	139	SE1	137	SE1	N/A	N/A	"	"	"	"
"	"	"	"	142	SE1	157	SE1	N/A	N/A	"	"	"	"
"	"	"	"	144	SE1	146	SE1	N/A	N/A	"	"	"	"
DT-18	109-110	10-06-17	East trench	125	SE1	126	SE1	157	BRK	N/A	N/A	P	T-9709
"	"	"	"	122	SE1	123	SE1	N/A	N/A	"	"	"	"
"	"	"	"	119	SE1	113	SE1	N/A	N/A	"	"	"	"
"	"	"	"	117	SE1	114	SE1	N/A	N/A	"	"	"	"

Texel GEOSOL

Repair Report
Rapport de Réparation

Project Name / Nom de Projet: **Rankin Inlet Tank Farm**

Project No. / No. de Projet: **C-15152**

QC Inspector / Inspecteur CQ: **Anthony Duquette-Michon**

Repair No. No. Réparation	Type & Dimensions Type et Dimensions			Location of Repair Localisation de la Réparation				Date Repaired Date Réparée (mm/dd/yy)	Date Repair Verified Date Réparée Vérifiée (mm/dd/yy)	Approved (Yes/No) Approuvé (Oui/Non)
	Patch Empiècement	Extrusion Weld or Bead Soudure Extrusion	Pipe Boot Manchon d'étanchéité	On Panel No. Sur Panneau No.	On Seam No. Sur Soudure No.	Intersection of Panels Intersection des Panneaux	Sample Location Localisation de l'échantillon			
R-1	P2			1			At 2.3m of SEOP and 1.4m of EEOP	07-15-17	07-15-17	O
R-2	P2			1			At 2.3m of SEOP and 3.6m of EEOP	07-15-17	07-15-17	O
R-3	P2			1			At 2.3m of SEOP and 5.9m of EEOP	07-15-17	07-15-17	O
R-4	P1			1			At 4.2m of SEOP and 1.8m of EEOP	07-15-17	07-15-17	O
R-5	P1			1			At 4.2m of SEOP and 4.1m of EEOP	07-15-17	07-15-17	O
R-6	P1			1			At 4.2m of SEOP and 6.4m of EEOP	07-15-17	07-15-17	O
R-7		E				7-8-9		07-16-17	07-16-17	O
R-8		E				7-9-10		07-16-17	07-16-17	O
R-9		E				8-9-11		07-16-17	07-16-17	O
R-10		E				9-10-11		07-16-17	07-16-17	O
R-11	P1			14			At 2.8m of SEOS and 1.7m of EEOS	07-16-17	07-16-17	O
R-12		E				15-16-17		07-16-17	07-16-17	O
R-13		E				15-17-18		07-16-17	07-16-17	O
R-14	P1					1-20-21		09-13-17	09-13-17	O
R-15	P1					1-2-21		09-13-17	09-13-17	O
R-16	P1					2-21-22		09-13-17	09-13-17	O
R-17		E				2-3-22		09-13-17	09-13-17	O
R-18		E				3-22-23		09-13-17	09-13-17	O
R-19		E				3-4-23		09-13-17	09-13-17	O
R-20		E				4-23-24		09-13-17	09-13-17	O
R-21		E				4-5-24		09-13-17	09-13-17	O
R-22		E				5-24-25		09-13-17	09-13-17	O

Texel GEOSOL

Repair Report
Rapport de Réparation

Project Name / Nom de Projet: **Rankin Inlet Tank Farm**

Project No. / No. de Projet: **C-15152**

QC Inspector / Inspecteur CQ: **Anthony Duquette-Michon**

Repair No. / No. Réparation	Type & Dimensions / Type et Dimensions			Location of Repair / Localisation de la Réparation				Date Repaired / Date Réparée (mm/dd/yy)	Date Repair Verified / Date Réparée Vérifiée (mm/dd/yy)	Approved (Yes/No) / Approuvé (Oui/Non)
	Patch / Empiècement	Extrusion Weld or Bead / Soudure Extrusion	Pipe Boot / Manchon d'étanchéité	On Panel No. / Sur Panneau No.	On Seam No. / Sur Soudure No.	Intersection of Panels / Intersection des Panneaux	Sample Location / Localisation de l'échantillon			
R-23		E				5-6-25		09-13-17	09-13-17	O
R-24		E				6-25-26		09-13-17	09-13-17	O
R-25	P1				3-23		At 4m of NEOS	09-13-17	09-13-17	O
R-26		DB			1-20		Full seam	09-13-17	09-13-17	O
R-27		DB			2-21		Full seam	09-13-17	09-13-17	O
R-28	P2			28			At 1m of WEOP and 2,5m of SEOP	09-13-17	09-13-17	O
R-29	P2			28			At 2,8m of WEOP and 2,5m of SEOP	09-13-17	09-13-17	O
R-30	P2					19-29-30		09-13-17	09-13-17	O
R-31		E				29-30-31		09-13-17	09-13-17	O
R-32	P2					29-31-32		09-13-17	09-13-17	O
R-33	P2					6-26-33		09-14-17	09-14-17	O
R-34		E				26-27-33		09-14-17	09-14-17	O
R-35		E				27-33-34		09-14-17	09-14-17	O
R-36		E				27-28-34		09-14-17	09-14-17	O
R-37	P2			39			At 3m from P-38 and 2.6m from NEOP	09-14-17	09-14-17	O
R-38	P1			39			At 3m from P-38 and 1m from NEOP	09-14-17	09-14-17	O
R-40	P1					19-30-35		09-14-17	09-14-17	O
R-41	P2					1-20-41		09-15-17	09-15-17	O
R-42		E				19-20-41		09-15-17	09-15-17	O
R-43		E				19-41-42		09-15-17	09-15-17	O
R-44	P1					19-35-42		09-15-17	09-15-17	O
R-45		E				35-36-42		09-15-17	09-15-17	O

Texel GEOSOL

Repair Report
Rapport de Réparation

Project Name / Nom de Projet: **Rankin Inlet Tank Farm**

Project No. / No. de Projet: **C-15152**

QC Inspector / Inspecteur CQ: **Anthony Duquette-Michon**

Repair No. No. Réparation	Type & Dimensions Type et Dimensions			Location of Repair Localisation de la Réparation				Date Repaired Date Réparée (mm/dd/yy)	Date Repair Verified Date Réparée Vérifiée (mm/dd/yy)	Approved (Yes/No) Approuvé (Oui/Non)
	Patch Empiècement	Extrusion Weld or Bead Soudure Extrusion	Pipe Boot Manchon d'étanchéité	On Panel No. Sur Panneau No.	On Seam No. Sur Soudure No.	Intersection of Panels Intersection des Panneaux	Sample Location Localisation de l'échantillon			
R-46		E				36-37-42		09-15-17	09-15-17	O
R-47		E				37-38-42		09-15-17	09-15-17	O
R-48		E				38-39-42		09-15-17	09-15-17	O
R-49		E				39-40-42		09-15-17	09-15-17	O
R-50	P1				1-41		At 8.4m from WEOS	09-15-17	09-15-17	O
R-51	P2					40-42-43		09-15-17	09-15-17	O
R-52	P1			48			At 1.2m from NEOS and 0.6m of P-47	09-15-17	09-15-17	O
R-53	P1			48			At 1.2m from NEOS and 5m of P-47	09-15-17	09-15-17	O
R-54	P1			48			At 3.2m from NEOS and 0.6m of P-47	09-15-17	09-15-17	O
R-55	P1					16-17-59-60		09-18-17	09-18-17	O
R-56		E				41-42-59		09-18-17	09-18-17	O
R-57	P2					42-43-59-Patch		09-18-17	09-18-17	O
R-58		E				Patch-43-44		09-18-17	09-18-17	O
R-59		E				Patch-44-45		09-18-17	09-18-17	O
R-60	P2					Patch-45-59		09-18-17	09-18-17	O
R-61	P3					45-46-59		09-18-17	09-18-17	O
R-62		E				46-47-59		09-18-17	09-18-17	O
R-63		E				47-48-59-60		09-18-17	09-18-17	O
R-64	P1					48-49-60		09-18-17	09-18-17	O
R-65		E				49-50-60		09-18-17	09-18-17	O
R-66	P1					50-51-60		09-18-17	09-18-17	O
R-67		E				51-52-60		09-18-17	09-18-17	O

Texel GEOSOL

Repair Report
Rapport de Réparation

Project Name / Nom de Projet: **Rankin Inlet Tank Farm**

Project No. / No. de Projet: **C-15152**

QC Inspector / Inspecteur CQ: **Anthony Duquette-Michon**

Repair No. / No. Réparation	Type & Dimensions / Type et Dimensions			Location of Repair / Localisation de la Réparation				Date Repaired / Date Réparée (mm/dd/yy)	Date Repair Verified / Date Réparée Vérifiée (mm/dd/yy)	Approved (Yes/No) / Approuvé (Oui/Non)
	Patch / Empiècement	Extrusion Weld or Bead / Soudure Extrusion	Pipe Boot / Manchon d'étanchéité	On Panel No. / Sur Panneau No.	On Seam No. / Sur Soudure No.	Intersection of Panels / Intersection des Panneaux	Sample Location / Localisation de l'échantillon			
R-68		E				17-18-60		09-18-17	09-18-17	O
R-69	P1				47-59		At 2m from EEOS	09-18-17	09-18-17	O
R-70	P1					18-60-61-64		09-20-17	09-20-17	O
R-71	P2					52-53-60-61		09-20-17	09-20-17	O
R-72	P1					53-54-61		09-20-17	09-20-17	O
R-73		E				54-55-61		09-20-17	09-20-17	O
R-74		E				55-56-61		09-20-17	09-20-17	O
R-75	P1					56-57-61		09-20-17	09-20-17	O
R-76		E				57-61-62		09-20-17	09-20-17	O
R-77	P1					57-58-62		09-20-17	09-20-17	O
R-78	P1					58-62-63		09-20-17	09-20-17	O
R-79	P1			69			At 0.4m from East and 1.7m of P-34	09-20-17	09-20-17	O
R-80	P1			69			At 2.7m from East and 1.7m of P-34	09-20-17	09-20-17	O
R-81	P1			69			At 4.8m from East and 1.7m of P-34	09-20-17	09-20-17	O
R-82	P1			69			At 7m from East and 1.7m of P-34	09-20-17	09-20-17	O
R-83	P1			69			At 9.2m from East and 1.7m of P-34	09-20-17	09-20-17	O
R-84	P1			69			At 11.4m from East and 1.7m of P-34	09-20-17	09-20-17	O
R-85	P1			69			At 13.5m from East and 1.7m of P-34	09-20-17	09-20-17	O
R-86	P1			69			At 15.7m from East and 1.7m of P-34	09-20-17	09-20-17	O
R-87	P1			69			At 17.8m from East and 1.7m of P-34	09-20-17	09-20-17	O
R-88	P1			69			At 20m from East and 1.7m of P-34	09-20-17	09-20-17	O
R-89	P1			69			At 22m from East and 1.7m of P-34	09-20-17	09-20-17	O

Texel GEOSOL

Repair Report
Rapport de Réparation

Project Name / Nom de Projet: **Rankin Inlet Tank Farm**

Project No. / No. de Projet: **C-15152**

QC Inspector / Inspecteur CQ: **Anthony Duquette-Michon**

Repair No. / No. Réparation	Type & Dimensions / Type et Dimensions			Location of Repair / Localisation de la Réparation				Date Repaired / Date Réparée (mm/dd/yy)	Date Repair Verified / Date Réparée Vérifiée (mm/dd/yy)	Approved (Yes/No) / Approuvé (Oui/Non)
	Patch / Empiècement	Extrusion Weld or Bead / Soudure Extrusion	Pipe Boot / Manchon d'étanchéité	On Panel No. / Sur Panneau No.	On Seam No. / Sur Soudure No.	Intersection of Panels / Intersection des Panneaux	Sample Location / Localisation de l'échantillon			
R-90	P1			69			At 24.2m from East and 1.7m of P-34	09-20-17	09-20-17	O
R-91	P1			69			At 26.2m from East and 1.7m of P-34	09-20-17	09-20-17	O
R-92	P1			69			At 28.3m from East and 1.7m of P-34	09-20-17	09-20-17	O
R-93	P1			69			At 30.3m from East and 1.7m of P-34	09-20-17	09-20-17	O
R-94	P1			69			At 32.3m from East and 1.7m of P-34	09-20-17	09-20-17	O
R-95		DB			58-62		Full seam	09-20-17	09-20-17	O
R-96		E				76-82-83		09-23-17	09-23-17	O
R-97		E				76-81-82		09-23-17	09-23-17	O
R-98		E				76-80-81		09-23-17	09-23-17	O
R-99		E				76-78-80		09-23-17	09-23-17	O
R-100	P1					76-77-78		09-23-17	09-23-17	O
R-101		E				77-78-79		09-23-17	09-23-17	O
R-102	P1				77-79		At 4.5m from NEOS	09-23-17	09-23-17	O
R-103	P1					7-71-72		09-23-17	09-23-17	O
R-104		E				7-72-84		09-23-17	09-23-17	O
R-105		E				72-73-84		09-23-17	09-23-17	O
R-106		E				73-84-85		09-23-17	09-23-17	O
R-107		E				73-74-85		09-23-17	09-23-17	O
R-108		E				76-83-87		09-24-17	09-24-17	O
R-109		E				75-76-87		09-24-17	09-24-17	O
R-110		E				74-75-87		09-24-17	09-24-17	O
R-111	P3					74-85-87		09-24-17	09-24-17	O

Texel GEOSOL

Repair Report
Rapport de Réparation

Project Name / Nom de Projet: **Rankin Inlet Tank Farm**

Project No. / No. de Projet: **C-15152**

QC Inspector / Inspecteur CQ: **Anthony Duquette-Michon**

Repair No. / No. Réparation	Type & Dimensions / Type et Dimensions			Location of Repair / Localisation de la Réparation				Date Repaired / Date Réparée (mm/dd/yy)	Date Repair Verified / Date Réparée Vérifiée (mm/dd/yy)	Approved (Yes/No) / Approuvé (Oui/Non)
	Patch / Empiècement	Extrusion Weld or Bead / Soudure Extrusion	Pipe Boot / Manchon d'étanchéité	On Panel No. / Sur Panneau No.	On Seam No. / Sur Soudure No.	Intersection of Panels / Intersection des Panneaux	Sample Location / Localisation de l'échantillon			
R-112		E				85-87-88		09-24-17	09-24-17	O
R-113		E				85-88-89		09-24-17	09-24-17	O
R-114		E				85-89-90		09-24-17	09-24-17	O
R-115		E				85-90-91		09-24-17	09-24-17	O
R-116		E				85-91-92		09-24-17	09-24-17	O
R-117		E				85-86-92		09-24-17	09-24-17	O
R-118		E				86-92-93		09-24-17	09-24-17	O
R-119	P1				85-88		At 3.5m from WEOS	09-24-17	09-24-17	O
R-120		E				34-69-94		09-25-17	09-25-17	O
R-121		E				33-34-94		09-25-17	09-25-17	O
R-122		E				6-33-94		09-25-17	09-25-17	O
R-123		E				5-6-94		09-25-17	09-25-17	O
R-124		E				4-5-94		09-25-17	09-25-17	O
R-125		E				3-4-94		09-25-17	09-25-17	O
R-126		E				2-3-94		09-25-17	09-25-17	O
R-127	P1					1-2-94		09-25-17	09-25-17	O
R-128	P1					1-41-94		09-25-17	09-25-17	O
R-129	P2					41-59-94		09-25-17	09-25-17	O
R-130	P1				95-97		At 12m from NEOS	09-25-17	09-25-17	O
R-131	P2					16-59-96		09-25-17	09-25-17	O
R-132		E				15-16-96		09-25-17	09-25-17	O
R-133		E				14-15-96		09-25-17	09-25-17	O

Texel GEOSOL

Repair Report
Rapport de Réparation

Project Name / Nom de Projet: **Rankin Inlet Tank Farm**

Project No. / No. de Projet: **C-15152**

QC Inspector / Inspecteur CQ: **Anthony Duquette-Michon**

Repair No. / No. Réparation	Type & Dimensions / Type et Dimensions			Location of Repair / Localisation de la Réparation				Date Repaired / Date Réparée (mm/dd/yy)	Date Repair Verified / Date Réparée Vérifiée (mm/dd/yy)	Approved (Yes/No) / Approuvé (Oui/Non)
	Patch / Empiècement	Extrusion Weld or Bead / Soudure Extrusion	Pipe Boot / Manchon d'étanchéité	On Panel No. / Sur Panneau No.	On Seam No. / Sur Soudure No.	Intersection of Panels / Intersection des Panneaux	Sample Location / Localisation de l'échantillon			
R-134		E				13-14-96		09-25-17	09-25-17	O
R-135		E				12-13-96		09-25-17	09-25-17	O
R-136	P1					11-12-96		09-25-17	09-25-17	O
R-137	P1					8-11-96-97		09-25-17	09-25-17	O
R-138	P1					8-7-97		09-25-17	09-25-17	O
R-139	P1					7-84-97		09-25-17	09-25-17	O
R-140	P1					84-86-97		09-25-17	09-25-17	O
R-141	P1					59-94-95		09-25-17	09-25-17	O
R-142	P1					59-95-96		09-25-17	09-25-17	O
R-143	P1				15-96		At 5.8m from NEOS	09-25-17	09-25-17	O
R-144	P1				14-96		At 4.8m from NEOS	09-25-17	09-25-17	O
R-145	P1				12-96		At 4m from NEOS	09-25-17	09-25-17	O
R-146	P1				93-98		At 3.5m from NEOS	09-28-17	09-28-17	O
R-147	P2					86-93-98		09-28-17	09-28-17	O
R-148		E				86-97-98		09-28-17	09-28-17	O
R-149		E				95-97-98		09-28-17	09-28-17	O
R-150		E				95-98-99		09-28-17	09-28-17	O
R-151		E				94-95-99		09-28-17	09-28-17	O
R-152		E				94-99-100		09-28-17	09-28-17	O
R-153		E				69-94-100		09-28-17	09-28-17	O
R-154		E				69-100-101		09-28-17	09-28-17	O
R-155		E				69-101-102		09-28-17	09-28-17	O

Texel GEOSOL

Repair Report
Rapport de Réparation

Project Name / Nom de Projet: **Rankin Inlet Tank Farm**

Project No. / No. de Projet: **C-15152**

QC Inspector / Inspecteur CQ: **Anthony Duquette-Michon**

Repair No. / No. Réparation	Type & Dimensions / Type et Dimensions			Location of Repair / Localisation de la Réparation				Date Repaired / Date Réparée (mm/dd/yy)	Date Repair Verified / Date Réparée Vérifiée (mm/dd/yy)	Approved (Yes/No) / Approuvé (Oui/Non)
	Patch / Empiècement	Extrusion Weld or Bead / Soudure Extrusion	Pipe Boot / Manchon d'étanchéité	On Panel No. / Sur Panneau No.	On Seam No. / Sur Soudure No.	Intersection of Panels / Intersection des Panneaux	Sample Location / Localisation de l'échantillon			
R-156		E				69-102-103		09-28-17	09-28-17	O
R-157		E				69-103-104		09-28-17	09-28-17	O
R-158		E				69-104-105		09-28-17	09-28-17	O
R-159		E				69-105-106		09-28-17	09-28-17	O
R-160	P1				28-108		At 4m from WEOS	10-04-17	10-04-17	O
R-161	P1				28-108		At 8m from WEOS	10-04-17	10-04-17	O
R-162		DB			28-108		Between R-160 and R-161	10-04-17	10-04-17	O
R-163	P1				69-108		At 1.2m from NEOS	10-04-17	10-04-17	O
R-164	P3					106-107-111		10-06-17	10-06-17	O
R-165		E				106-110-111		10-06-17	10-06-17	O
R-166		E				106-109-110		10-06-17	10-06-17	O
R-167	P3					106-108-109		10-06-17	10-06-17	O
R-168	P2					69-106-108		10-06-17	10-06-17	O
R-169	P3				106-109		At 5.2m from int.106-109-110	10-06-17	10-06-17	O
R-170	P3			106			At 3m from int.69-106-108	10-06-17	10-06-17	O

CHARTE/CHART : Empièvement/Patch (**P1** 0.3m à/to 0.6m; **P2** 0.6m à/to 1m; **P3** over 1m et plus), Extrusion (**E**), Embout/Pipe Boot (**B**), Cap strip (**CS**), Doublure/Reinforcement (**DB**) et/and Reconstruction

APPENDIX III

US-EPA CLASSIFICATION FOR TYPES OF BREAK

DOUBLE–TRACK GEOMEMBRANE WELD

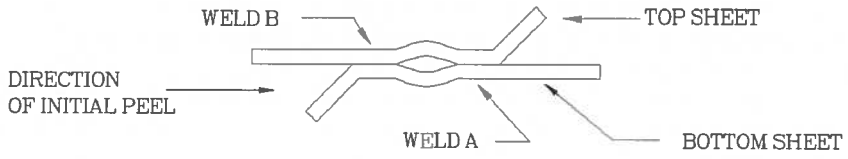

TYPES OF BREAK	CODE	BREAK DESCRIPTION	CLASSI–FICATION [a]
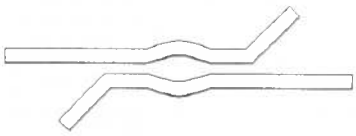	AD	ADHESION FAILURE	NON–FTB
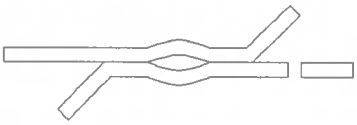	BRK	BREAK IN SHEETING. BREAK CAN BE IN EITHER TOP OR BOTTOM SHEET.	FTB
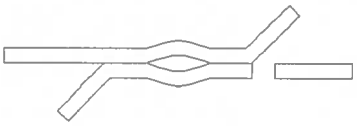	SE1	BREAK AT OUTHER EDGE OF SEAM. BREAK CAN BE IN EITHER TOP OR BOTTOM SHEET.	FTB
	SE2	BREAK AT INNER EDGE OF SEAM THROUGH BOTH SHEETS	FTB
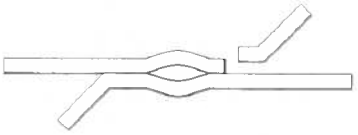	AD–BRK	BREAK IN FIRST SEAM AFTER SOME ADHESION FAILURE. BREAK CAN BE IN EITHER THE TOP OR BOTTOM SHEET.	FTB

[a] FTB="FILM–TEAR BOND."

FILLET–EXTRUDED GEOMEMBRANE WELD

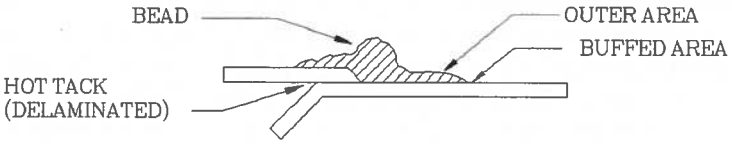

TYPES OF BREAKS	CODE	BREAK DESCRIPTION	CLASSIFICATION [a]
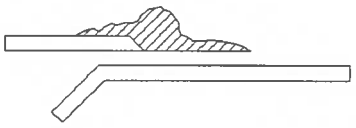	AD1	FAILURE IN ADHESION. SPECIMENS MAY ALSO DELAMINATE UNDER THE BEAD AND BREAK THROUGH THE THIN EXTRUDED MATERIAL IN THE OUTER AREA.	NON–FTB
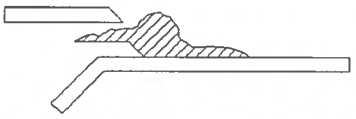	AD2	FAILURE IN ADHESION.	NON–FTB
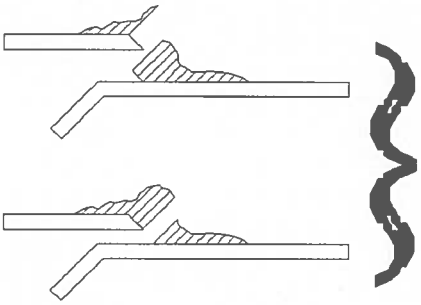	AD–WLD	BREAK THROUGH THE FILLET. BREAKS THROUGH THE FILLET RANGE FROM BREAKS STARTING AT THE EDGE OF THE TOP SHEET TO BREAKS THROUGH THE FILLET AFTER SOME ADHESION FAILURE BETWEEN THE FILLET AND THE BOTTOM SHEET.	NON–FTB [b]
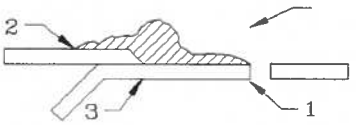	SE	BREAK AT SEAM EDGE. INDICATE LOCATION BY 1,2 OR 3	FTB
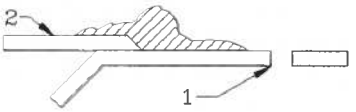	BRK	BREAK IN THE SHEET. USE 1 TO INDICATE BOTTOM SHEET AND 2 TO INDICATE TOP SHEET. IF BREAK IS IN BUFFED AREA, INDICATE WITH "(B)".	FTB
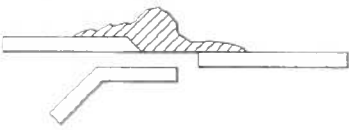	AD–BRK	BREAK IN THE BOTTOM SHEETING AFTER SOME ADHESION FAILURE BETWEEN THE FILLET AND THE BOTTOM SHEET. (APPLICABLE TO PEEL ONLY).	FTB
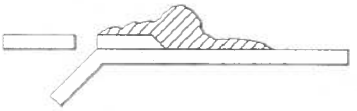	HT	BREAK AT THE EDGE OF THE HOT TACK FOR SPECIMENS WHICH COULD NOT BE DELAMINATED IN THE HOT TACK.	NO TEST

[a] FTB="FILM–TEAR BOND."

[b] ACCEPTANCE OF AD–WLD BREAKS MAY DEPEND ON WHETHER TEST VALUES MEET A MINIMUM SPECIFICATION VALUE AND NOT ON CLASSIFICATION AS A FTB OR NON–FTB BREAK.

APPENDIX IV

RECORD DRAWING

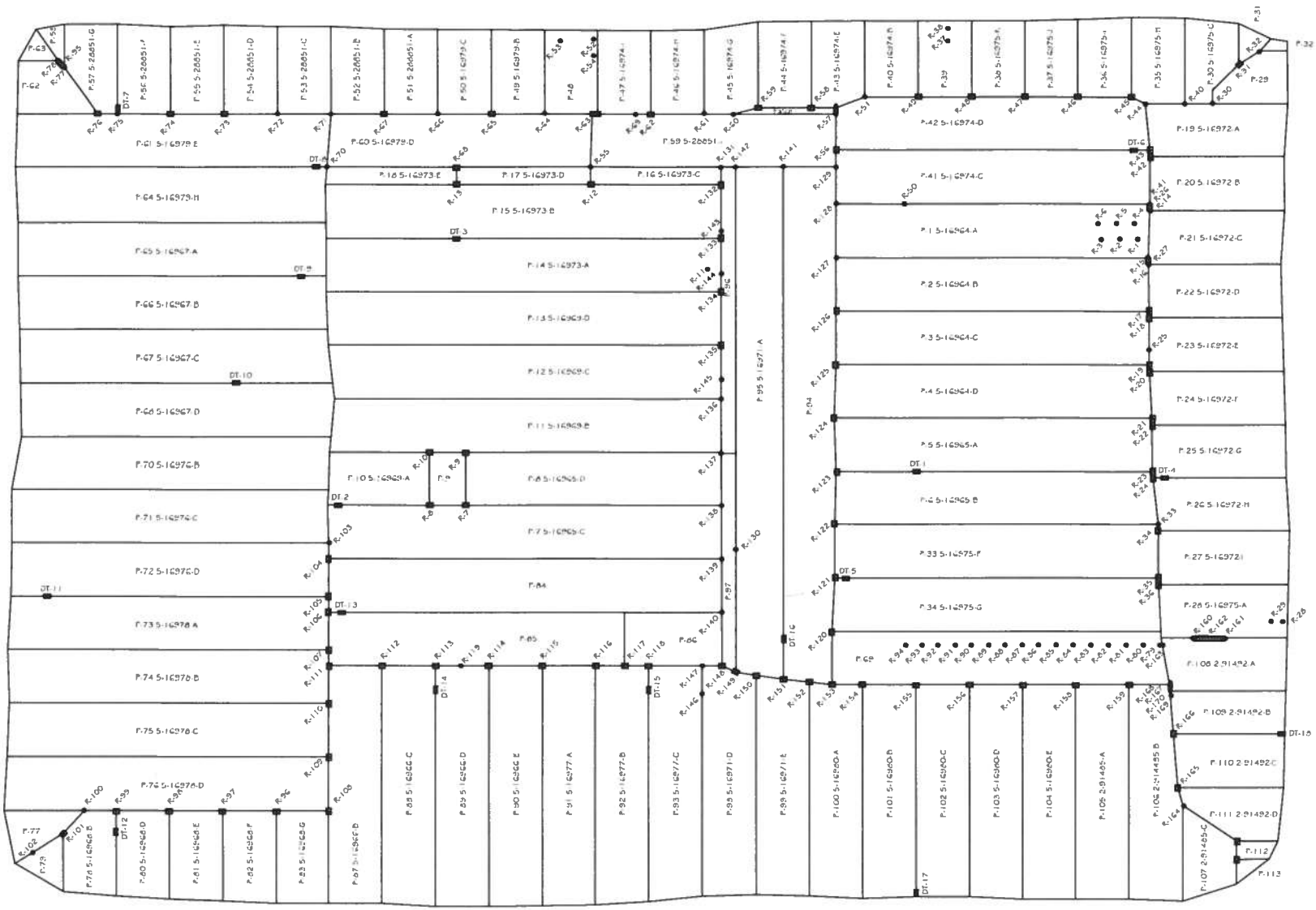

0 25 50m

NO PANNEAU / PANEL NO	ROULEAU NO / ROLL NO	
P-9	5-16964	E
P-29	5-16975	B
P-31	5-16975	D

NO PANNEAU / PANEL NO	ROULEAU NO / ROLL NO	
P-32	5-16975	E
P-39	5-16974	A
P-48	5-16978	A

NO PANNEAU / PANEL NO	ROULEAU NO / ROLL NO	
P-58	5-28851	H
P-62	5-16979	F
P-63	5-16979	G

NO PANNEAU / PANEL NO	ROULEAU NO / ROLL NO	
P-69	5-16976	A
P-77	5-16966	A
P-79	5-16966	C

NO PANNEAU / PANEL NO	ROULEAU NO / ROLL NO	
P-86	5-16966	A
P-84	5-16977	D
P-96	5-16971	B

NO PANNEAU / PANEL NO	ROULEAU NO / ROLL NO	
P-97	5-16971	C
P-112	2-91492	E
P-113	2-91492	F

INGÉNIEUR / ENGINEER:

AGNICO EAGLE CONSTRUCTION

LÉGENDE / LEGEND:

- EMPIÈCEMENT / PATCH
- MANCHON TUYAU / PIPE BOOT
- DESTRUCTIF / DESTRUCTIVE
- SOUDURE EXTRUSION / EXTRUSION WELD
- 1 PANNEAU NO. / PANEL NO.
- 1-30474 ROULEAU NO. / ROLL NO.
- ANCRAGE MECANIQUE / MECHANICAL ANCHORAGE
- SOUDURE EXISTANTE / EXISTING SEAM

CLIENT / CUSTOMER:

NUNA KIVALLIQ EARTHWORKS INC

TYPE DE PRODUIT INSTALLÉ / PRODUCT TYPE INSTALLED:

GEOTEXTILE 160E - HDPE 60 MIL TEXTURED GEOTEXTILE 160E

TYPE DE PROJET / PROJECT TYPE:

RANKIN INLET TANK FARM LINING AS-BUILT

NOM DU PROJET / PROJECT NAME:

RANKIN INLET TANK FARM

Texel GEOSOL

1300, 2e Rue, Parc industriel
Sainte-Marie, QC, Canada
G1V 4T2

NO. PROJET / PROJECT NO:	C-15152
FICHIER AUTOCAD: AUTOCAD FILE:	C-15152rcf.dwg
DATE (yy-mm-aa): DATE (dd-mm-yy):	17/11/17
DESSINÉ PAR / DRAWN BY:	E.B.
VÉRIFIÉ PAR / VERIFIED BY:	E.B.
APPROUVÉ PAR / APPROVED BY:	F.T.
ÉCHELLE / SCALE:	1:500
DESSIN NO / DRAWING NO:	1/1

APPENDIX S

Construction Summary of Rankin Inlet Itivia Laydown Area Culvert

Construction Summary – Rankin Laydown Culverts

- Construction management and quality assurance performed by Agnico Eagle Construction
- Contractors: Inukshuk Contracting Ltd.
- Drawing preparation by Hamel Arpentage – as-built drawings to be completed for submission of the final report (following completion of the 20 ML tank).

1. **Site Preparation (November 17)**

- Ice/snow removed from upstream and downstream of culvert location.
- Hauled appropriate bedding material to Rankin from Char River quarry.

2. **Excavation (November 18)**

- The laydown access road was excavated with a CAT 345 excavator.
- The temporary culverts previously installed in May 2017 were removed.
- Original ground was excavated underlying the road per design for installation of the bedding material and riprap.

3. **Culvert Placement and Backfill (November 19 to November 20)**

- Culvert bedding material consisted of 20 mm minus crushing reject material, which was placed in controlled lifts and compacted with either a 5-tonne vibratory drum roller (under culverts) or a small walk-behind tamper (beside and over culverts).
- Design specified two 900 mm diameter culverts were installed to design length of 30 m. The culverts were installed to the invert locations of the previously installed temporary culverts, as these positions were demonstrated to be effective during the 2017 freshet. Survey support was not available during the installation process and an as-built of the install will be completed once construction activities resume in 2018.
- The culvert sections were assembled near the installation location and placed with an excavator.
- 20 mm minus backfill material was placed on/near the installed culverts with an excavator, spread and placed by laborers with rakes, then compacted.
- Previously removed road material was then placed on top of the 20 mm minus bedding to reestablish a trafficable road surface. If required, additional cover material will be added once construction activities resume in the summer of 2018.

4. **Rip Rap Placement and Road Sloping (November 20)**

- Re-sloping of the laydown access road and placement of rip rap material on the upstream and downstream was completed with the CAT 345 Excavator.

Equipment Used for Construction:

- CAT 345 Excavator
- CAT 735 Haul Truck
- Tandem Trucks
- CAT 5-tonne Vibratory Drum Roller
- Walk-behind plate tamper

QA/QC

Particle size analysis conducted on three samples of the 20 mm minus material used as bedding material (attached). The results indicate that the material generally falls within specification (Technical Specifications for Civil Earthworks Rev 3 (6515-GNS-014, June 6, 2017)).

APPENDIX T

Particle Size Summary – 20 mm minus

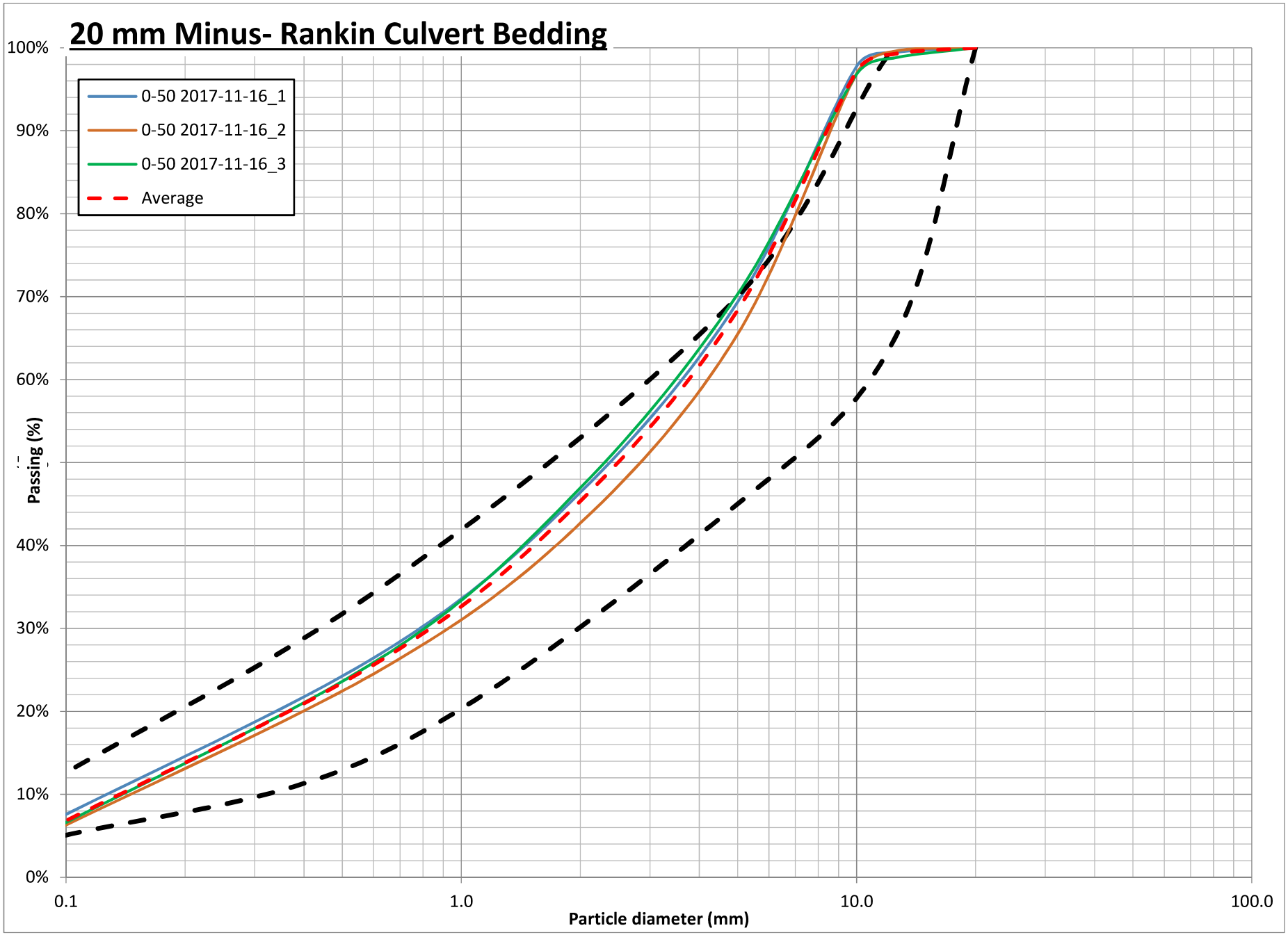
20 mm Minus- Rankin Culvert Bedding
0-50 2017-11-16_1
0-50 2017-11-16_2
0-50 2017-11-16_3
Average
100%
90%
80%
70%
60%
40%
30%
20%
10%
0%
Passing (%)
0.1
1.0
10.0
100.0
Particle diameter (mm)

Table 1: Summary of Particle Size Analysis Results - 20 mm minus Culvert Bedding Rankin

No.	Sample ID	Sieve Size (mm)							Moisture Content
		20.00	12.50	10.00	5.00	2.00	0.63	0.08	
1	0-50 2017-11-16_1	100.0%	99.4%	97.8%	69.3%	46.4%	27.1%	5.3%	3.0%
2	0-50 2017-11-16_2	100.0%	99.6%	96.9%	65.5%	42.7%	25.1%	4.0%	4.2%
3	0-50 2017-11-16_3	100.0%	98.8%	96.8%	70.3%	46.9%	26.5%	4.2%	4.1%
Average		**100.0%**	**99.3%**	**97.1%**	**68.4%**	**45.3%**	**26.2%**	**4.5%**	**3.8%**

APPENDIX U

Photographs of Corrective Measure for Double Wall Underground Pipe

Rankin Inlet Fuel Farm
Photographs of corrective measures on piping under road, between Fuel Farm and Melvin Bay Shore (Nov. 2018)



Photo 1a New double-wall elbow and vertical section on the East side of the road



Photo 1b New double-wall elbow and vertical section on the East side of the road

Rankin Inlet Fuel Farm
Photographs of corrective measures on piping under road, between Fuel Farm and Melvin Bay Shore (Nov. 2018)



Photo 1c New double-wall elbow and vertical section on the East side of the road



Rankin Inlet Fuel Farm
Photographs of corrective measures on piping under road, between Fuel Farm and Melvin Bay Shore (Nov. 2018)

Photo 2a Single-wall above-ground pipe in a corrugated steel (manhole 'regards') pipe to ensure pipe is visible on the edge of the 'Fuel Farm' side of road



Photo 2b Single-wall pipe and manhole pipe in a corrugated steel pipe to ensure pipe is visible on the edge of the 'Fuel Farm' side of road

APPENDIX V
Request for Information

AGNICO EAGLE

Request For Information

Project No: 6515 Contract No: C-005 RFI No: 6515-C-230-005_001 Rev: 0
Meliadine Project
Site RFI Initiator: Matt Gallant Date: Mar 19, 2017

1. REFERENCE DOCUMENTS :

Title(s):	Number:	Revision:
Rankin Fuel Farm and Laydown Area	65-131-230-201	H

2. DESCRIPTION , JUSTIFICATION OF THE RFI AND PROPOSED SOLUTION :

1. The typical HDPE liner specifies an above liner thickness of 200 mm for the Fuel Farm Floor, and 150mm for the dike slopes.
    a. Please clarify the minimum lift thickness for equipment operating over liner, our proposed methode of placement over the liner is with a Cat D5 dozer.
2. The Dike and Tank Pad Fill Detail specifies that 30mm minus granular fill material placed in lifts with a maximum thickness of 150mm nad compacted to 98%
    a. Please confirm. the overliner lift and compaction requirements. Can the overliner be placed in one lift?
3. We recommend that the 30mm Minus Above the liner be increased to > 300mm thick to facilitate constructability.

Prepared by: Matt Gallant Signature: Matt Gallant Date: Mar 19, 2017

3. TECHNICAL RESPONSE FROM ENGINEERING AND/OR VALIDATION OF PROPOSED SOLUTION :

The use of CAT D5 Dozer equipment for granular fill placement over the liner requires a minimum fill thickness of 300 mm to protect it. We recommend to increase the thickness of this layer and place 300 mm of 0-30 mm granular fill material over the liner in one lift and compact it by track packing only, with the CAT D5 Dozer in the entire fuel tank farm area. In addition, the remaining 0-30 mm granular fill layer for the tanks foundation will be placed in 200 mm thick lifts and compacted to 98% Standard Proctor Maximum Dry Density.

To avoid increasing the total required material quantities, the thickness of 0-30 mm granular fill material layer underneath the liner will be reduced accordingly and will be compacted to 98% Standard Proctor Maximum Dry Density. Under the liner system, the particle size of the top 300 mm of the 0-600 mm granular fill layer should not exceed Ø 200 mm.

For any equipment yielding heavier loads than a CAT D5 Dozer, the fill thickness above the liner shall be increased to allow for circulation. For a 10 ton packer, 500 mm is the minimum required fill thickness. For any other equipment, a specific request shall be submitted for the Engineer's approval.

Engineering : Rene Panazan Signature: Date: Mar 22, 2017

4. IF NOT TECHNICAL RFI VALIDATION OF PROPOSED SOLUTION BY SITE SUPERVISION

Deviation Request: ☐ No ☐ Yes

	Name	Signature	Date
Superintendent:			
c.c. Contract Administrator:			

AGNICO EAGLE

Request For Information

Project No: 6515 | Contract No: C-230-005 | RFI No: 007 | Rev: 0

Meliadine Project

Rankin Tank Farm

Site RFI Initiator: Mike Price | Date: May 31, 2017

1. Reference Documents :

Title(s):	Number:	Revision:
Rankin Fuel Tank Farm and Laydown Area Cross-Sections and Details	65-131-230-201	1

2. Description , Justification of the RFI and Contractor's Proposed Solution :

The Fuel Tank Farm design calls for 300mm of 200mm material placed above the CL.A / 0-600mm material and extending up the berms slopes. It has been noted in the weekly project meetings that this material may be removed from the design and replaced with CL.A / 0-600mm material.

Please confirm if there is a design change pending for the removal of the 200mm material outside of the pedestal fill under the tanks and associated updated quantities to allow for updated planning and contract changes.

Prepared by: Mike Price Signature Mike Price Date: May 31, 2017

3. Technical Response from Engineering and/or Validation of Proposed Solution :

Within the tank pedestal areas, placement/compaction of 200 mm minus material is to proceed as per design. Outside of the tank pedestal footprints, 200 mm minus has been removed from the design and is to be replaced with 0-600 mm minus material. Placement/compaction of 30 mm minus material is to proceed as per design specifications.

Engineering : Jennifer Pyliuk Signature: Jennifer Pyliuk Date: 06/27/2017

4. If not Technical RFI Validation of Proposed Solution by Site Supervision

Deviation Request: ☐ No ☐ Yes

	Name	Signature	Date
Superintendent:			
c.c. Contract Administrator:			

AGNICO EAGLE

Request For Information

Project No: 6515	Contract No: C-230-005	RFI No: 012	Rev: 0
Meliadine Project;			
Civil Works – Rankin Laydown			
Site RFI Initiator: Jennifer Pyliuk		Date: July 19, 2017	

1. Reference Documents :

Title(s):	Number:	Revision:
Rankin Fuel Tank Farm and Laydown Area Finished Grade Elevation	65-131-230-200	1
Rankin Fuel Tank Farm and Laydown Area Cross Sections and Details	65-131-230-201	1
Rankin Fuel Tank Farm and Laydown Area Points Table	65-131-230-206	1

2. Description , Justification of the RFI and Contractor's Proposed Solution :

Currently, all under liner material has been placed to design grade throughout the entire containment area, including both tank pedestals. Due to contractor concerns regarding trafficking of the 50t crane to be used for tank erection on the liner system as currently designed and the potential for damage to occur, the liner system has presently been installed on the tank pedestals only, with the intent of completing the liner installation process following tank erection. However, time and schedule constraints have dictated that erection and filling of the 13.5 ML tank at the Rankin Inlet Fuel Farm will be completed in 2017, while erection and filling of the 20 ML tank will be completed in 2018. Therefore, in order to complete the containment facility to remain in regulatory compliance after the 13.5 ML tank is filled in 2017 and still be able to complete erection of the 20 ML tank in 2018, the following design revisions are requested:

1. Substitution of 30 mm minus with sand, 100 mm both under and over the liner system (see detail below)
2. The above substitution will apply only within the 20 ML tank containment area (excluding the 20 ML tank pedestal) (see detail below)

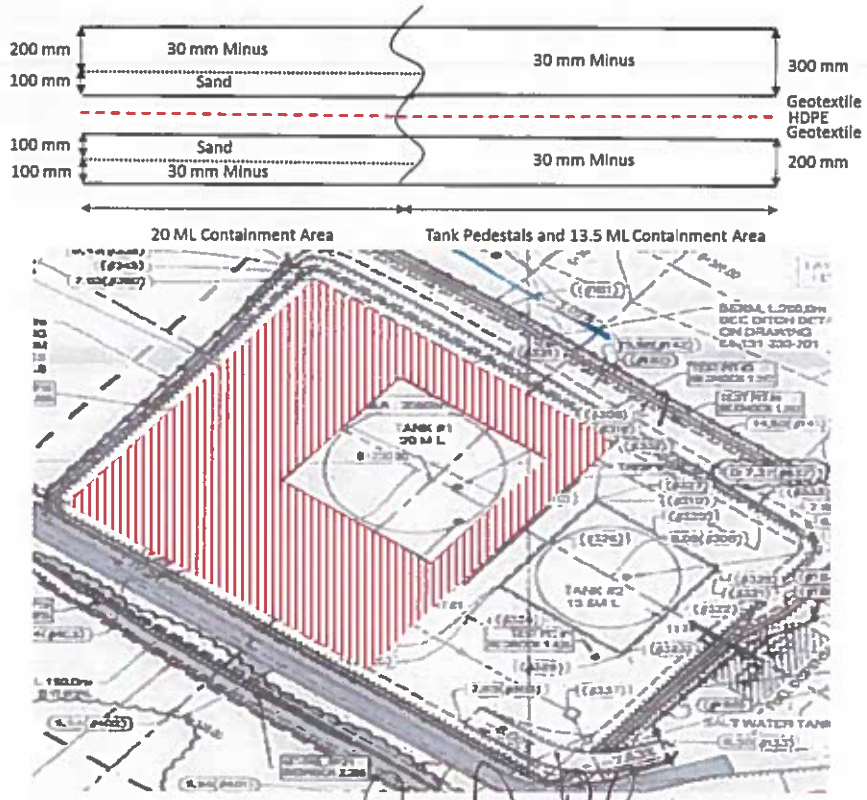

Prepared by: Jennifer Pyliuk Signature Jennifer Pyliuk Date: July 19, 2017

AGNICO EAGLE

Request For Information

3. TECHNICAL RESPONSE FROM ENGINEERING AND/OR VALIDATION OF PROPOSED SOLUTION :

The substitution is acceptable. However, to prevent migration of fine particles, the geotextile should be placed at the sand and 30mm Minus material interface both above and under the liner.

Engineering : JOSÉE ALARIE Signature: Josee Alarie Date: July, 20 2017

4. IF NOT TECHNICAL RFI VALIDATION OF PROPOSED SOLUTION BY SITE SUPERVISION

Deviation Request: ☐ No ☐ Yes

	Name	Signature	Date
Superintendent:			
c.c. Contract Administrator:			