NO. DESSIN (drawing) NO. 65-116-205-200_R2.dwg

FORMAT ARCHO

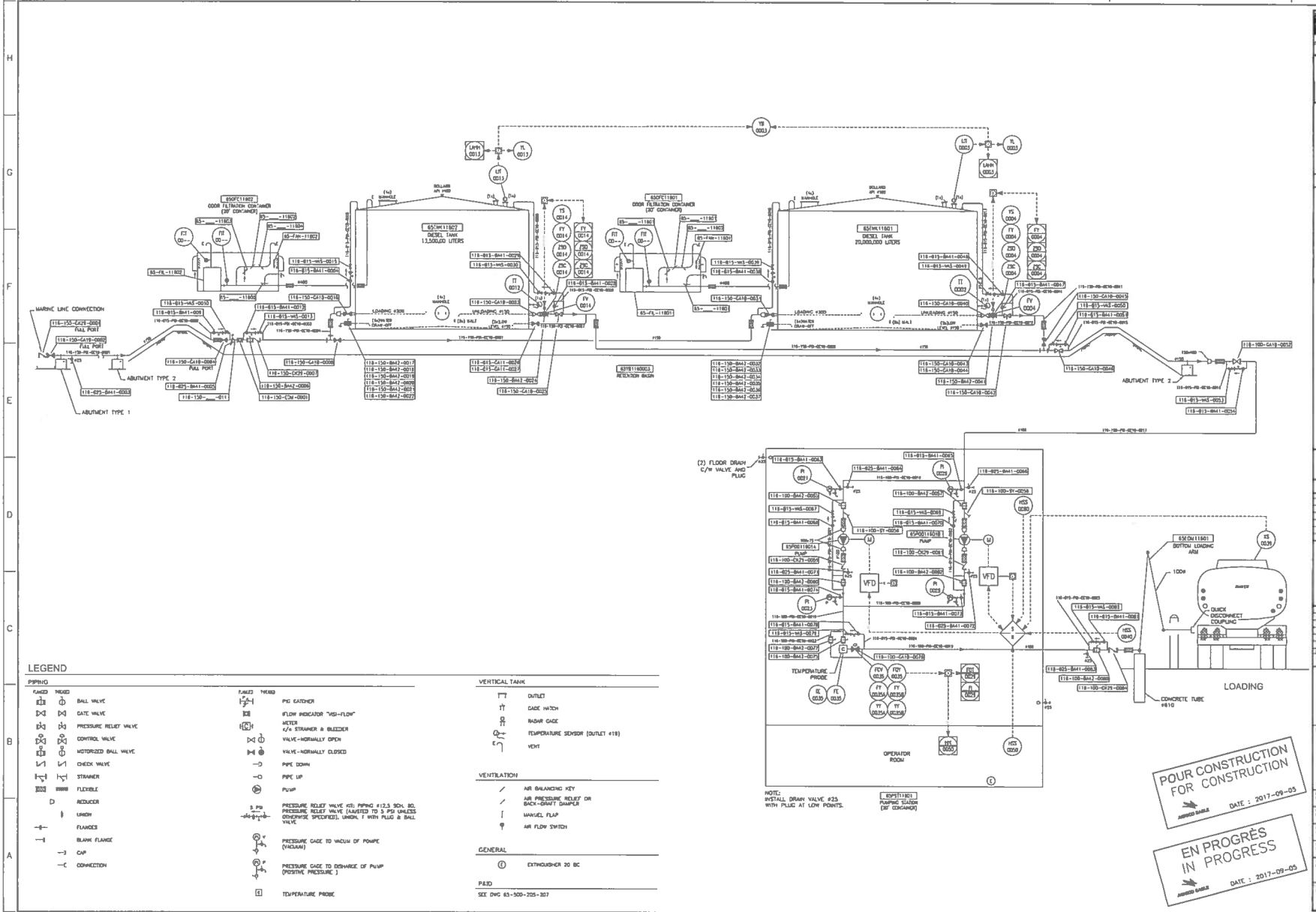

LEGEND

PIPING

FLANGED	THREADED	
		BALL VALVE
		GATE VALVE
		PRESSURE RELIEF VALVE
		CONTROL VALVE
		MOTORIZED BALL VALVE
		CHECK VALVE
		STRAINER
		FLEXIBLE
		REDUCER
		UNION
		FLANGES
		BLANK FLANGE
		CAP
		CONNECTION
		PIG CATCHER
		FLOW INDICATOR "VISI-FLOW"
		METER c/w STRAINER & BLEEDER
		VALVE-NORMALLY OPEN
		VALVE-NORMALLY CLOSED
		PIPE DOWN
		PIPE UP
		PUMP
		PRESSURE RELIEF VALVE KS: PIPING #12.5 SCH. 80, PRESSURE RELIEF VALVE (ADJUSTED TO 3 PSI UNLESS OTHERWISE SPECIFIED), UNION, F WITH PLUG & BALL VALVE
		PRESSURE GAGE TO VACUUM OF POMPE (VACUUM)
		PRESSURE GAGE TO DISCHARGE OF PUMP (POSITIVE PRESSURE)
		TEMPERATURE PROBE

VERTICAL TANK

- OUTLET
- GAGE HATCH
- RADAR GAGE
- TEMPERATURE SENSOR (OUTLET #19)
- VENT

VENTILATION

- AIR BALANCING KEY
- AIR PRESSURE RELIEF OR BACK-DRAFT DAMPER
- MANUEL FLAP
- AIR FLOW SWITCH

GENERAL

- EXTINGUISHER 20 BC

PAID

SEE DWG 65-500-205-207

POUR CONSTRUCTION
FOR CONSTRUCTION
AGNICO EAGLE DATE : 2017-09-05

EN PROGRÈS
IN PROGRESS
AGNICO EAGLE DATE : 2017-09-05

WSP

1075, 3e AVENUE O
VALDOR (QUÉBEC) CANADA J9P 1W1
TÉL.: 1-819-825-2111 | FÉLÉC.: 1-819-825-7175 | WWW.WSPGROUP.COM
Rev. 151-00A00-00

NOTES GÉNÉRALES / GENERAL NOTES

1. REPLACE DRAWING : 65-103-205-200

DESSINS EN RÉFÉRENCE / REFERENCE DRAWINGS

TYPE / FILE	# DWG

AGNICO EAGLE

REV.	DATE	DESCRIPTION	PREPARÉ BY	CHECKED
3	2017-09-06	MODIFICATION OF EQUIPMENT	J.G.	G.T.
1	2017-07-18	INFORMATION ADDED	F.H.G.	L.S.
0	2017-05-26	ISSUED FOR CONSTRUCTION	J.G.	G.T.

REVISIONS

NAME / TITLE
AGNICO EAGLE – MELIADINE DIVISION
116 – FUEL TANK FARM
205 – PAID
FUEL DISTRIBUTION
FLOW DIAGRAM

DESSINÉ PAR drawn by	DANIELANNE CORNUT, tech.	2017-05-26
VÉRIFIÉ PAR CHECKED BY	JOËL MORIÈRE, tech.	2017-05-26
APPROUVÉ PAR APPROVED BY	DENIS THIBODEAU, P. Eng.	2017-05-26
ÉCHELLE SCALE	NONE	DATE 2017-05-26

NO. DESSIN DRAWING NO. 65-116-205-200

NO. PROJET PROJECT NO.	REVISION	FEUILLE / SHT
6515	2	1/1

HE-CAD1-ARCH B

FILE NO.

NO. DESSIN DRAWING NO. 65-116-210-200

FORMAT ARCHD

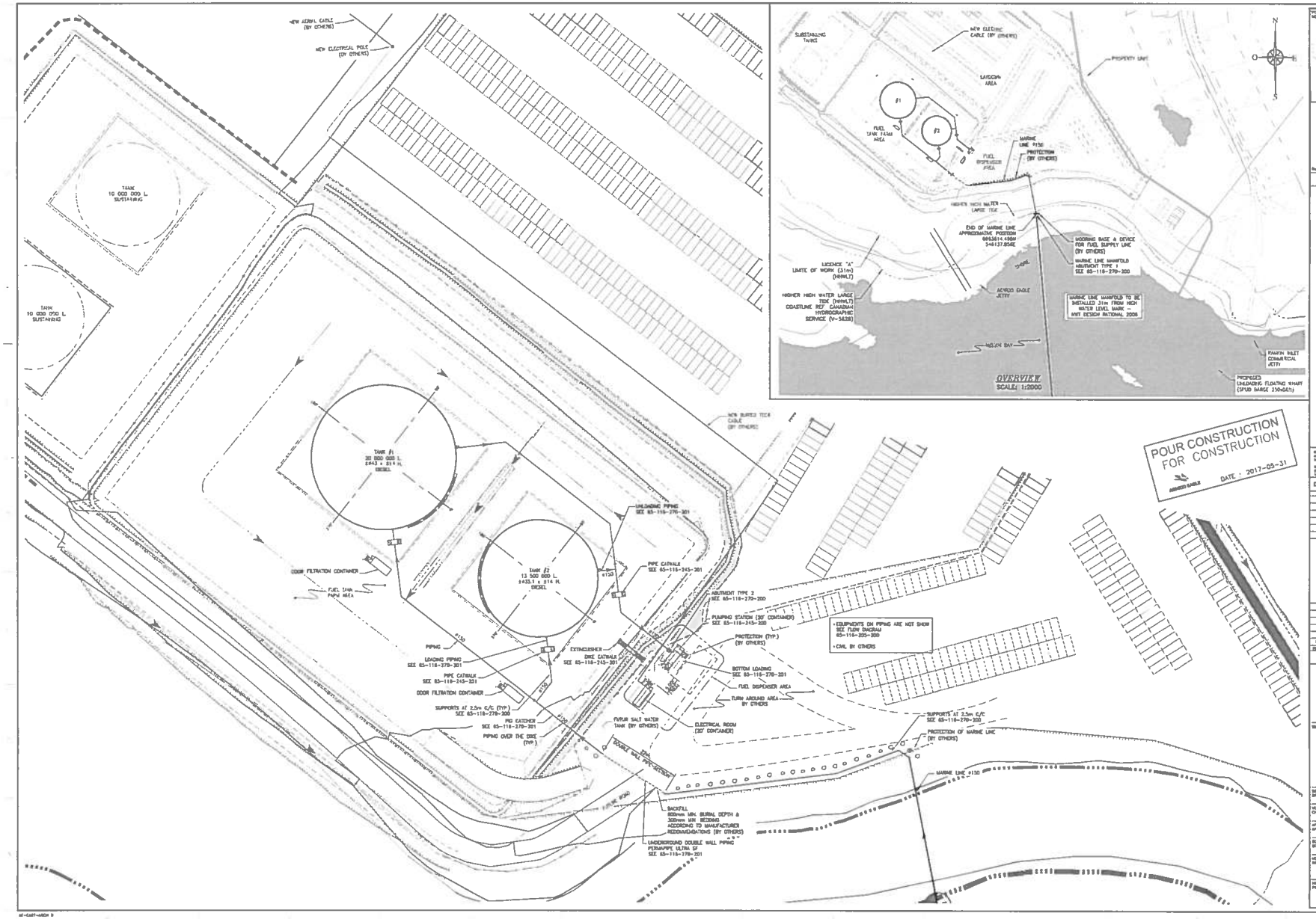
NEW AERIAL CABLE (BY OTHERS)
NEW ELECTRICAL POLE (BY OTHERS)
TANK 10 000 000 L SUSTAINING
TANK 10 000 000 L SUSTAINING
TANK #1 30 000 000 L ø43.1 x ø14 H. CIRCEL
TANK #2 13 500 000 L ø33.1 x ø14 H. CIRCEL
DOOR FILTRATION CONTAINER
FUEL TANK FARM AREA
PIPING
LOADING PIPING SEE 65-116-279-201
PIPE CATWALK SEE 65-116-243-201
DOOR FILTRATION CONTAINER
SUPPORTS AT 2.5m C/C (TYP.) SEE 65-116-279-200
PIG CATCHER SEE 65-116-279-201
PIPING OVER THE DIKE (TYP.)
UNLOADING PIPING SEE 65-116-276-201
PIPE CATWALK SEE 65-116-243-201
EXTINGUISHER
DIKE CATWALK SEE 65-116-243-201
FUTUR SALT WATER TANK (BY OTHERS)
DOUBLE WALL PIPE SECTION
ABUTMENT TYPE 2 SEE 65-116-279-200
PUMPING STATION (20' CONTAINER) SEE 65-116-245-200
PROTECTION (TYP.) (BY OTHERS)
BOTTOM LOADING SEE 65-116-279-201
FUEL DISPENSER AREA
TURN AROUND AREA BY OTHERS
ELECTRICAL ROOM (20' CONTAINER)
• EQUIPMENTS ON PIPING ARE NOT SHOW SEE FLOW DIAGRAM 65-116-205-200
• CIVIL BY OTHERS
SUPPORTS AT 2.5m C/C SEE 65-116-279-200
PROTECTION OF MARINE LINE (BY OTHERS)
MARINE LINE ø150
BACKFILL 600mm MIN. BURIAL DEPTH & 300mm MIN BEDDING ACCORDING TO MANUFACTURER RECOMMENDATIONS (BY OTHERS)
UNDERGROUND DOUBLE WALL PIPING PERMAPIPE ULTRA SF SEE 65-116-279-201
NEW BURIED TELE CABLE (BY OTHERS)
POUR CONSTRUCTION FOR CONSTRUCTION
DATE : 2017-05-31
SUBSTANTIAL TANKS
NEW ELECTRIC CABLE (BY OTHERS)
PROPERTY LINE
LAYDOWN AREA
FUEL TANK FARM AREA
FUEL DISPENSER AREA
MARINE LINE ø150
PROTECTION (BY OTHERS)
HIGHER HIGH WATER LARGE TIDE
END OF MARINE LINE APPROXIMATE POSITION 6063614.456M 348137.854E
MOORING BASE & DEVICE FOR FUEL SUPPLY LINE (BY OTHERS)
MARINE LINE MANIFOLD ABUTMENT TYPE 1 SEE 65-116-279-200
LICENCE "A" LIMITE OF WORK (31m) (NAD83)
HIGHER HIGH WATER LARGE TIDE (NAD83) COASTLINE REF CANADIAN HYDROGRAPHIC SERVICE (V-5638)
AGNICO EAGLE JETTY
MARINE LINE MANIFOLD TO BE INSTALLED 31m FROM HIGH WATER LEVEL MARK - MNT DESIGN RATIONAL 2008
NELSON BAY
KAMPIN INLET COMMERCIAL JETTY
PROPOSED UNLOADING FLOATING WHARF (BARGE 150x24)
OVERVIEW
SCALE: 1:2000
N
O
E
S
WORK AREA
WSP
1075, 3e AVENUE EST
VAL-D'OR (QUÉBEC) CANADA J9P 0J7
TÉL.: (819) 825-4214 | TÉLÉC.: (819) 824-1514 | WWW.WSPGROUP.COM
Ref. 151-00440-40
NOTES GÉNÉRALES / GENERAL NOTES
1. TANK DIMENSIONS ADJUSTED ACCORDING TO INFORMATION PROVIDED BY CONTRACTOR
2. REPLACE DRAWING : 65-103-210-200
DESSINS EN RÉFÉRENCE / REFERENCE DRAWINGS
FICHE / FILE
FICHE / FILE
AGNICO EAGLE
0 2017-05-31 ISSUED FOR CONSTRUCTION J.M. D.T.
REV. DATE DESCRIPTION PAR/BY APP. CLIENT
REVISIONS
AGNICO EAGLE – MELIADINE DIVISION
116 – FUEL TANK FARM
210 – GENERAL ARRANGEMENT
FUEL DISTRIBUTION
PLAN VIEWS
DESSINÉ PAR DRAWN BY G. CORMAUT DATE 2017-05-29
VERIFIÉ PAR CHECKED BY J. MORLIERE, tech. 2017-05-29
APPROUVÉ PAR APPROVED BY G. THIBODEAU, P. Eng. 2017-05-29
ÉCHELLE SCALE INDICATED DATE 2017-05-29
NO. DESSIN DRAWING NO. 65-116-210-200
NO. PROJET PROJECT NO. 6515 REVISION 0 FEUILLE / SHEET 1 / 1
FILE NO. 65-116-210-200_00.dwg

NO. DESIGN DRAWING NO. 65-116-245-200

FORMAT ARCHD

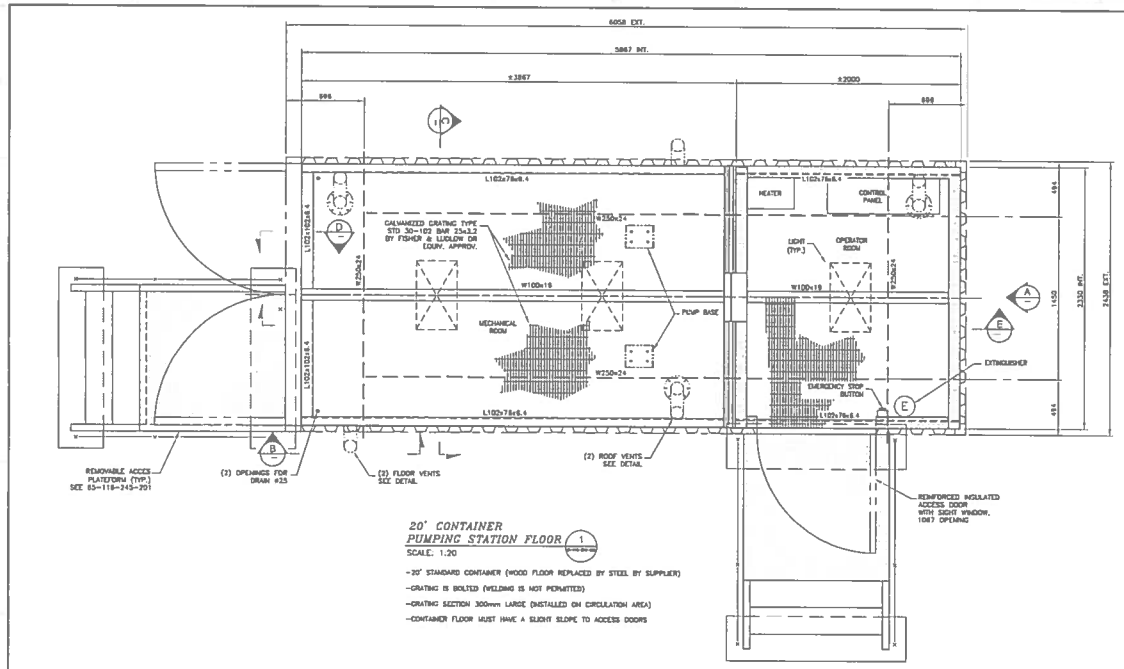

20' CONTAINER PUMPING STATION FLOOR (1)

SCALE: 1:20

- 20' STANDARD CONTAINER (WOOD FLOOR REPLACED BY STEEL BY SUPPLIER)
- GRATING IS BOLTED (WELDING IS NOT PERMITTED)
- GRATING SECTION 300mm LARGE (INSTALLED ON CIRCULATION AREA)
- CONTAINER FLOOR MUST HAVE A SLIGHT SLOPE TO ACCESS DOORS

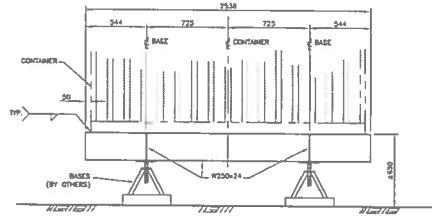

ELEVATION (A)

SCALE: 1:20

(1) ARRANGEMENT PUMPING STATION

POUR CONSTRUCTION FOR CONSTRUCTION

AGNICO EAGLE

DATE : 2017-05-31

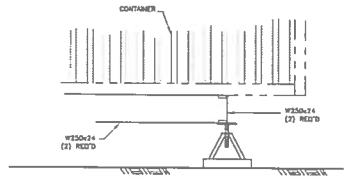

ELEVATION (B)

SCALE: 1:20

(1) ARRANGEMENT PUMPING STATION

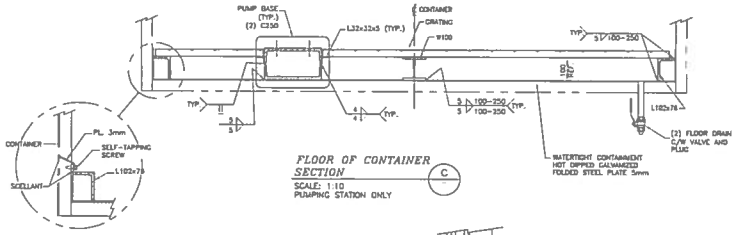

FLOOR OF CONTAINER SECTION (C)

SCALE: 1:10

PUMPING STATION ONLY

WATERTIGHT CONTAINMENT

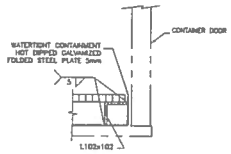

SECTION (D)

SCALE: 1:10

PUMPING STATION ONLY

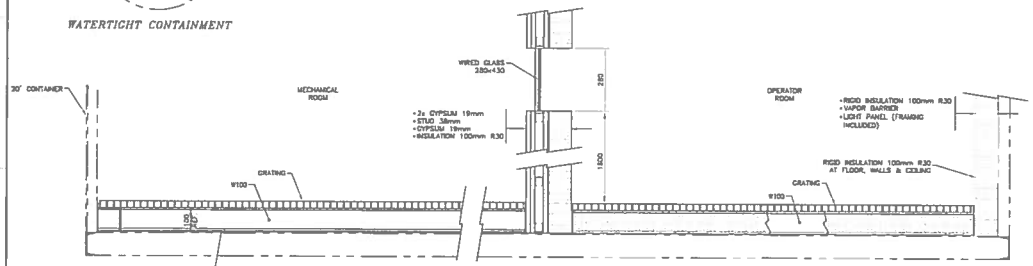

FLOOR OF CONTAINER SECTION (E)

SCALE: 1:10

PUMPING STATION ONLY

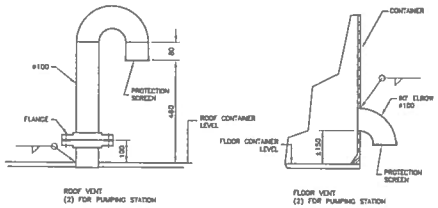

ROOF VENT (2) FOR PUMPING STATION

FLOOR VENT (2) FOR PUMPING STATION

VENT FOR CONTAINER (3)

SCALE: 1:10

PUMPING STATION ONLY

WSP

NOTES GENERALES / GENERAL NOTES

1. REPLACE DRAWING : 65-103-245-200

DESSINS EN REFERENCE / REFERENCE DRAWINGS

TYPE / TITLE	# DWG

AGNICO EAGLE

REV.	DATE	DESCRIPTION	DES.	DR.	APP.	CHKD
0	2017-05-31	ISSUED FOR CONSTRUCTION	J.M.	B.T.		

REVISIONS

TITLE / TRAME

AGNICO EAGLE – MELIADINE DIVISION
116 – FUEL TANK FARM
245 – STRUCTURAL STEEL
FUEL DISTRIBUTION
MODIFICATIONS & ADDITIONS AT THE CONTAINERS

DESIGNED PAR DESSINÉ PAR	E. CORMUT	DATE 2017-05-29
WSP'S PAR CONÇU PAR	J. MORLIERE, tech.	2017-05-29
APPROVED PAR APPROUVÉ PAR	D. THIBODEAU, P. Eng.	2017-05-29
SCALE ÉCHELLE	INDICATED	DATE 2017-05-29
NO. DESSIN DRAWING NO.	65-116-245-200	
NO. PROJET PROJECT NO.	6515	REVISION 0 / FEUILLE / SHT 1 / 1

FILE NO. 65-116-245-200_REV.dwg

NO. DESIGN DRAWING NO. 65-116-245-201

FORMAT ARCHD

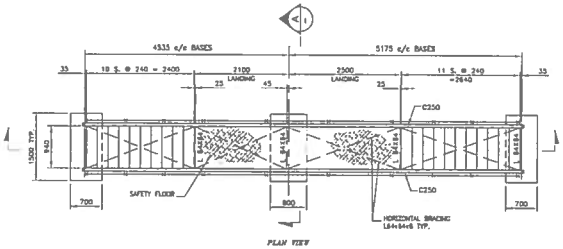

PLAN VIEW

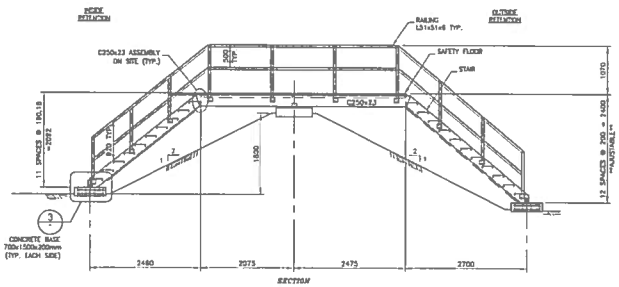

SECTION

DIKE CATWALK (1)

SCALE: 1:50
QTY: 1

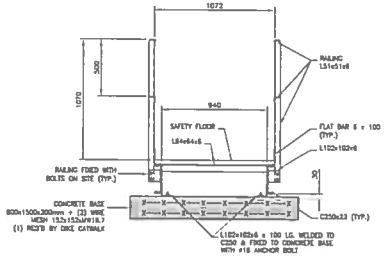

SECTION (A)

SCALE: 1.20

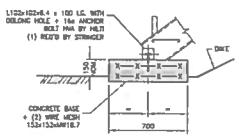

DETAIL (3)

SCALE: 1:20

NOTES:

CATWALK, RAILINGS AND STAIRS ARE ASSEMBLED AND BOLTED ON SITE.

DEAD LOAD = 0.5 Kpa
LIVE LOAD = 4.8 Kpa
MAXIMUM ARROW = L/300

MATERIAL

GRATING OF LANDING

GRIP SPAN SAFETY GRATING, GALVANIZED STEEL, (D-51215-G, 5 DIAMONDS, Ga 2.7mm, 38.1mm DEEP) BY FISHER LUDLOW OR APPROVED EQUIVALENT, MAX. 300mm WIDTH EXCEPT WHEN INDICATED DIFFERENTLY.

STAIR

GRIP SPAN SAFETY GRATING, GALVANIZED STEEL, (D-41215-G, 4 DIAMONDS, Ga 2.7mm, 38.1mm DEEP) BY FISHER LUDLOW OR APPROVED EQUIVALENT, MAX. 241mm WIDTH EXCEPT WHEN INDICATED DIFFERENTLY.

POUR CONSTRUCTION FOR CONSTRUCTION
AGNICO EAGLE
DATE : 2017-05-31

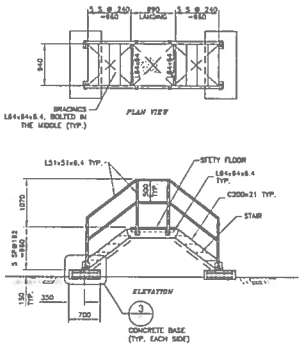

PIPE CATWALK (2)

SCALE: 1:50
QTY: 3

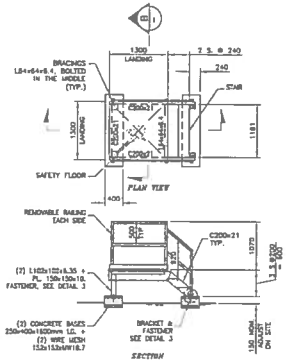

CONTAINER CATWALK (2)

SCALE: 1:50
(2) PUMPING STATION

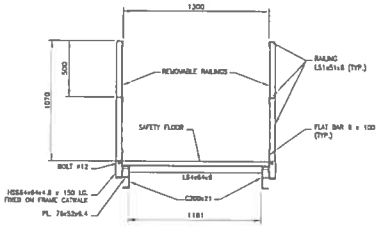

SECTION (B)

SCALE: 1.20

WSP

1075, 3e AVENUE EST
VAL D'OR (QUÉBEC) CANADA J9P 1J7
TEL : 819 824-4274 | TELEC. : 819 824-1844 | www.wspgroup.com
Ref. 191-06640-00

NOTES GENERALES / GENERAL NOTES

SEE SPECIFICATIONS

1. REPLACE DRAWING 65-103-245-201

DESIGNS EN REFERENCE / REFERENCE DRAWINGS

FILE / DWG	DWG

AGNICO EAGLE

NO.	DATE	DESCRIPTION	PRE. BY	APP.	CHECK
0	2017-05-31	ISSUED FOR CONSTRUCTION	J.G.	B.T.	

REVISIONS

AGNICO EAGLE – MEQUADINE DIVISION
116 – FUEL TANK FARM
245 – STRUCTURAL STEEL
FUEL DISTRIBUTION
DIKE, PIPE & CONTAINERS CATWALKS

DESIGNED PAR DRAWN BY	G. CORMUT	DATE 2017-05-29
REVIEWED PAR CHECKED BY	J. MORLIERE, Tech.	2017-05-29
APPROUVE PAR APPROVED BY	B. THEODEAU, P. Eng.	2017-05-29
ECHELLE SCALE	INDICATED	DATE 2017-05-29
NO. DESSIN DRAWING NO.	65-116-245-201	
NO. PROJET PROJECT NO.	6515	REVISION 0 / FEUILLE / SHEET 1 / 1

SF-CART-ARCH B

\\CANTE10A38\Projets\2018\P\151-06640-00\Data Input\Dwg\65-116-245-201_RO.dwg

FILE NO. 65-116-245-201_RO.dwg

NO. DESSIN DRAWING NO. 65-116-260-200

FORMAT ARCHD

NEW TANK #1 - DIESEL

SPECIFICATIONS:
NOMINAL DIAMETER (METERS) ±43m
ORIGINAL NOMINALE HEIGHT (METERS): ±14m
NOMINAL CAPACITY: 20,000,000 liters

NO.	QTY	DESCRIPTION	REMARKS
1	4	#600 ROOF MANHOLE	TO API 650 STANDARDS
2	4	#600 SHELL MANHOLE	TO API 650 STANDARDS
3	1	#100 PAINTER SCAFFOLD CABLE SUPPORT	TO API 650 STANDARDS
4	4	SHELL NOZZLE – INLET/OUTLET	TO API 650 STANDARDS
5	–	VENT OPENING	TO API 2000 & 650 STANDARDS, DIAMETER & QTY TO BE DETERMINE BY THE MANUFACTURER, SEE DETAIL
6	6	WATER DRAIN-OFF	TO API 650 STANDARDS, SEE DETAIL
7	2	ROOF PRESSURE RELIEF LINE CONNECTION, HALF COUPLING #25 (THREADED)	TO API 650 STANDARDS & MBC
8	1	ROOF #150 GAUGE HATCH	TO API 650 STANDARDS, SEE DETAIL
9	1	FRICD PIPE – TANK LOADING #200 x 14.3m LG.	TO API 650 STANDARDS
10			
11			
12	2	SHELL BRACKET FOR PIPING & CONDUIT	SEE DETAIL
13			
14	1	ROOF INSPECTION FRAME	TO API 650 STANDARDS
15	1	ROOF GUARDRAIL	TO API 650 STANDARDS & MBC
16	1	SPIRAL STAIRWAY, GUARDRAIL & HANDRAIL	TO API 650 STANDARDS & MBC
17	1	FRICD PIPE – TANK UNLOADING #150 x 14.3m LG.	TO API 650 STANDARDS
18	2	PUMPING LOW LEVEL #150	TO API 650 STANDARDS, SEE DETAIL
19	8	GROUNDING LUG	TO API 650 STANDARDS, SEE DETAIL
20	1	ROOF NOZZLE #200 FOR OVERFILL PROTECTION	TO API 650 STANDARDS, SEE DETAIL

NOTE:

1. APPROXIMATIVE STAIRWAY LOCATION: CONTRACTOR HAVE TO ENSURE A MINIMUM CLEARANCE OF 1000mm IN ELEVATION BETWEEN STAIRS AND ANY SHELL CONNECTION

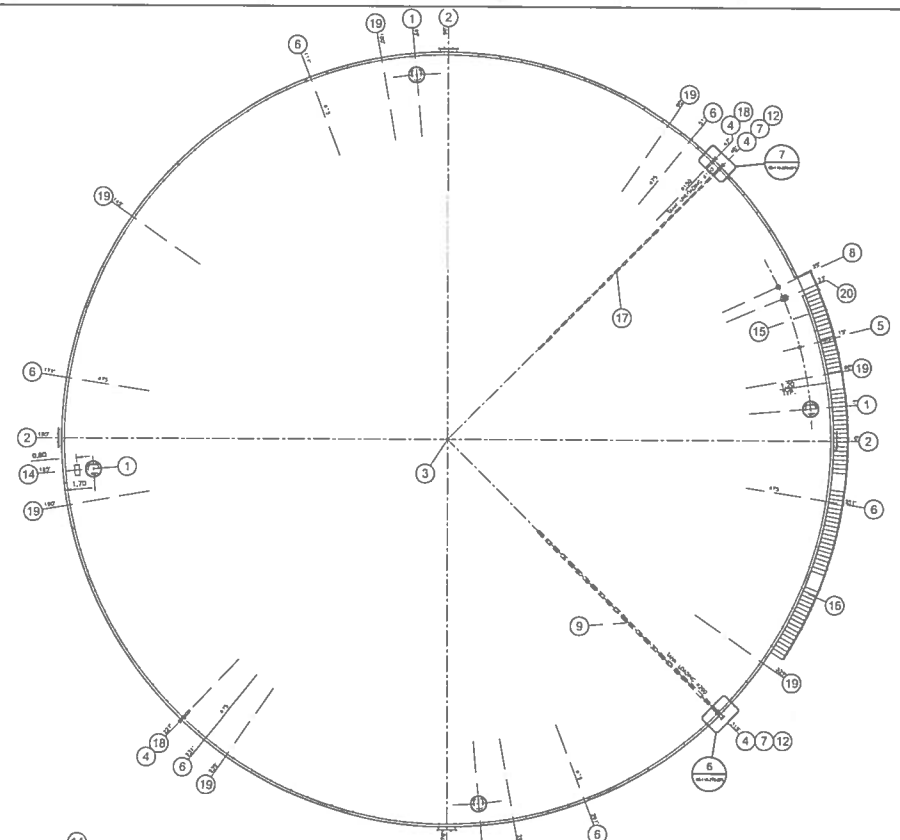

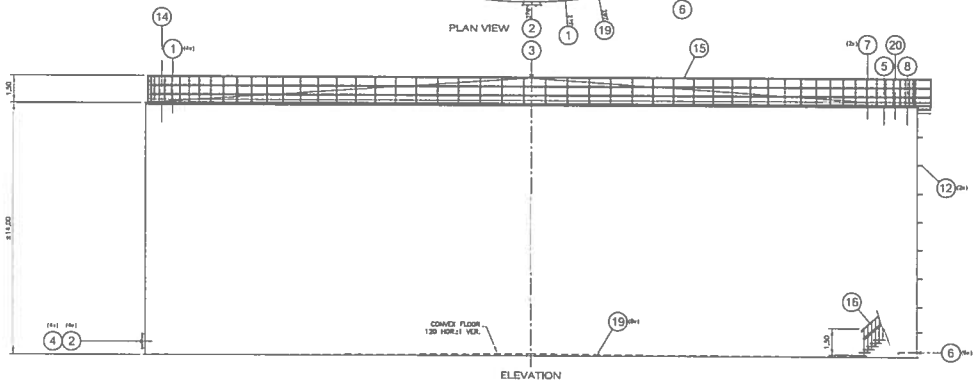

POUR CONSTRUCTION
FOR CONSTRUCTION
AGNICO EAGLE
DATE : 2017-05-31

WSP
1075 Av AVENUE EST
VAL D'OR (QUÉBEC) CANADA J9P 0J7
TEL.: 819 825-8214 | FILLE.: 1 819 824-1214 | WWW.WSPGROUP.COM
Ref. 181-05440-00

NOTES GÉNÉRALES / GENERAL NOTES

1. TANK DIMENSIONS ADJUSTED ACCORDING TO INFORMATION PROVIDED BY CONTRACTOR
2. REPLACE DRAWING : 65-103-260-200

DESSINS EN RÉFÉRENCE / REFERENCE DRAWINGS

TITRE / TITLE	# DWG

AGNICO EAGLE

REV.	DATE	DESCRIPTION	PREP. BY	APP.	CLIENT
0	2017-05-31	ISSUED FOR CONSTRUCTION	J.G.	G.T.	

REVISIONS

TITRE / TITLE
AGNICO EAGLE – MELIADINE DIVISION
116 – FUEL TANK FARM
260 – PLATEWORK
TANK #1 – 20,000,000 liters
±43m x 14m H.
GENERAL ARRANGEMENT

DESSINÉ PAR Drawn BY	GHISLAINE CORMUT	DATE 2017-05-29
VERIFIÉ PAR CHECKED BY	JOEL MORLIERE, tech.	2017-05-29
APPROUVÉ PAR APPROVED BY	DENIS THEODEAU, Ing.	2017-05-29
ÉCHELLE SCALE 1:125	DATE 2017-05-28	

NO. DESSIN DRAWING NO. 65-116-260-200

NO. PROJET PROJECT NO.	REVISION	FEUILLE / SHT
5515	0	1 / 1

M-CAMT-MECH 0

\\CAMTL1DATA01\projets\2019\1181-05440-00\Dwnt Montreal\Dwg\65-116-260-200-RE.dwg-2017-05-19 14:03:26

FILE NO. 65-116-260-200-RE.dwg

NO. DESIGN DRAWING NO. 65-116-260-201

FORMAT ARCHD

NEW TANK #2 - DIESEL

SPECIFICATIONS:
NOMINAL DIAMETER (METERS) ±35.1m
ORIGINAL NOMINALE HEIGHT (METERS): ±14m
NOMINAL CAPACITY: 13,500,000 liters

No.	QTY	DESCRIPTION	REMARKS
1	4	ø600 ROOF MANHOLE	TO API 650 STANDARDS
2	4	ø900 SHELL MANHOLE	TO API 650 STANDARDS
3	1	ø100 PAINTER SCAFFOLD CABLE SUPPORT	TO API 650 STANDARDS
4	4	SHELL NOZZLE – INLET/OUTLET	TO API 650 STANDARDS
5	-	VENT OPENING	TO API 2000 & 650 STANDARDS. DIAMETER & QTY TO BE DETERMINE BY THE MANUFACTURER, SEE DETAIL
6	6	WATER DRAIN-OFF	TO API 650 STANDARDS, SEE DETAIL
7	2	ROOF PRESSURE RELIEF LINE CONNECTION, HALF COUPLING #25 (THREADED)	TO API 650 STANDARDS & NBC
8	1	ROOF #150 GAUGE HATCH	TO API 650 STANDARDS, SEE DETAIL
9	1	FIXED PIPE – TANK LOADING #200 x 11.7m LG.	TO API 650 STANDARDS
10			
11			
12	2	SHELL BRACKET FOR PIPING & CONDUIT	SEE DETAIL
13			
14	1	ROOF INSPECTION FRAME	TO API 650 STANDARDS
15	1	ROOF GUARDRAIL	TO API 650 STANDARDS & NBC
16	1	SPIRAL STAIRWAY, GUARDRAIL & HANDRAIL	TO API 650 STANDARDS & NBC
17	1	FIXED PIPE – TANK UNLOADING #150 x 11.7m LG.	TO API 650 STANDARDS
18	2	PUMPING LOW LEVEL #150	TO API 650 STANDARDS, SEE DETAIL
19	8	GROUNDING LUG	TO API 650 STANDARDS, SEE DETAIL
20	1	ROOF NOZZLE #200 FOR OVERFILL PROTECTION	TO API 650 STANDARDS, SEE DETAIL

NOTE:

1. APPROXIMATIVE STAIRWAY LOCATION: CONTRACTOR HAVE TO ENSURE A MINIMUM CLEARANCE OF 1000mm IN ELEVATION BETWEEN STAIRS AND ANY SHELL CONNECTION

POUR CONSTRUCTION FOR CONSTRUCTION
AGNICO EAGLE DATE : 2017-05-31

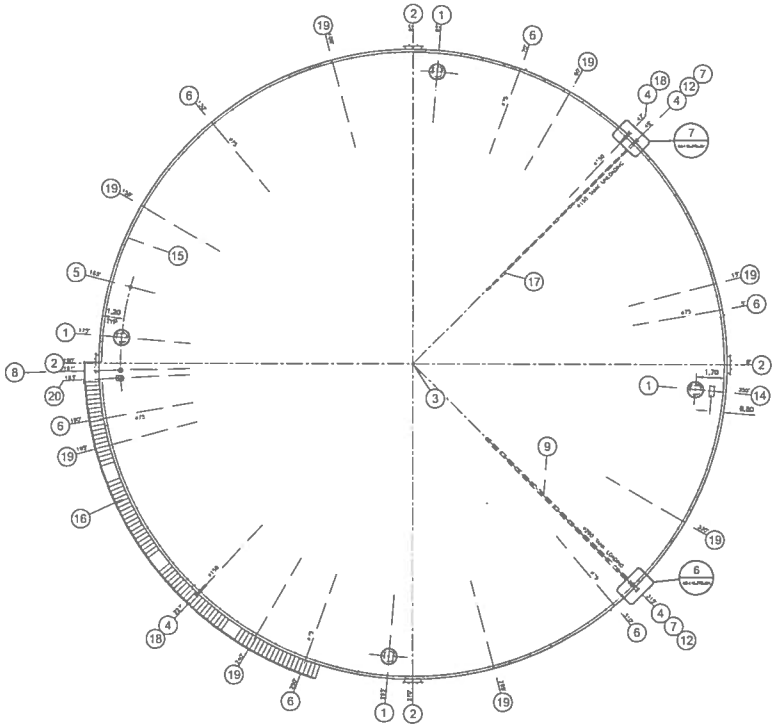

PLAN VIEW

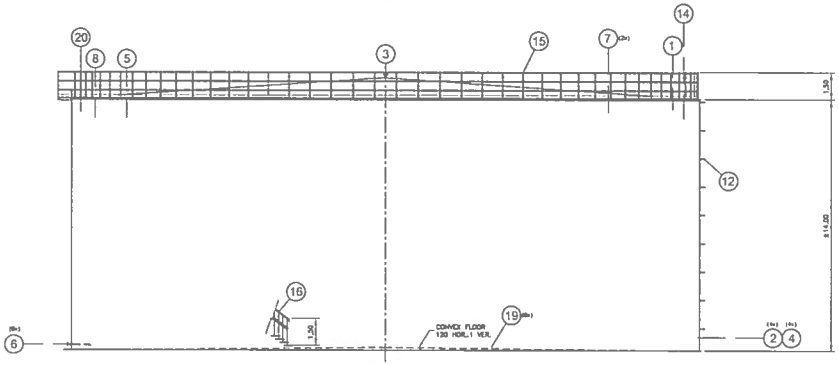

ELEVATION

WSP
1275, 3e AVENUE EST
VAL-D'OR (QUÉBEC) CANADA J9P 6J7
TÉL.: (819) 824-4214 | TÉLÉC.: (819) 824-1944 | WWW.WSPGROUP.COM
Ref. 191-00640-00

NOTES GÉNÉRALES / GENERAL NOTES

1. TANK DIMENSIONS ADJUSTED ACCORDING TO INFORMATION PROVIDED BY CONTRACTOR
2. REPLACE DRAWING : 65-163-260-201

DESSINS EN RÉFÉRENCE / REFERENCE DRAWINGS

NUMÉRO / TITLE	# DWG.

AGNICO EAGLE

REV.	DATE	DESCRIPTION	PREP. BY	APP.	CLIENT
0	2017-05-31	ISSUED FOR CONSTRUCTION	J.G.	G.T.	

REVISIONS

TITRE / TITLE
AGNICO EAGLE – MELIADINE DIVISION
116 – FUEL TANK FARM
260 – PLATEWORK
TANK #2 – 13 500 000 liters
ø35.1m x 14m H.
GENERAL ARRANGEMENT

DESSINÉ PAR / Drawn BY	GHISLAINE CORMIER	DATE 2017-05-29
VÉRIFIÉ PAR / CHECKED BY	JOËL MORLIERE, tech.	2017-05-29
APPROUVÉ PAR / APPROVED BY	DENIS THIBODEAU, ing.	2017-05-29
ÉCHELLE / SCALE	INDICATED	DATE 2017-05-29

NO. DESSIN / DRAWING NO. 65-116-260-201

NO. PROJET / PROJECT NO.	REVISION	FEUILLE / SHEET
6515	0	1 / 1

AF-CADT-ARCH B

\\ZAIRTL116ZAIRT\projets\2017\191-00640-00\Dessin Nombreux\Dwg\65-116-260-201-RG.dwg=2017-05-19 14:03:28

FILE NO. 65-116-260-201-RG.dwg

NO. DESSIN / DRAWING NO. 65-116-260-202

FORMAT ARCHD

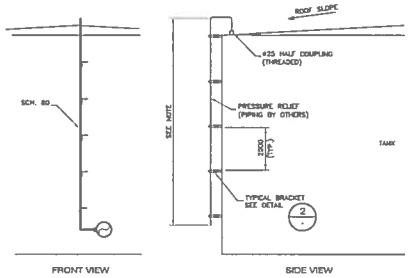

NOTE:
WELDED JOINTS & TESTED ON THIS SECTION (NOT THREADED JOINTS)

1 - PRESSURE RELIEF LINE
Detail NTS

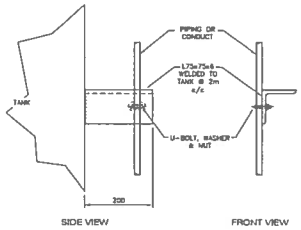

NOTE: FOR ITEMS 8 & 13

2 - BRACKET FOR PIPING OR ELECTRICAL CONDUIT TO THE SHELL TANK
Detail scale 1:5

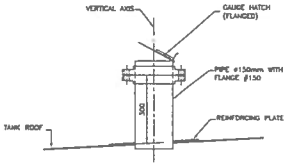

3 - GAUGE HATCH
Detail scale 1:10

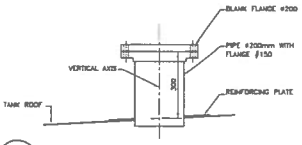

4 - NOZZLE Ø200
Detail scale 1:10

POUR CONSTRUCTION
FOR CONSTRUCTION
AGNICO EAGLE
DATE : 2017-05-31

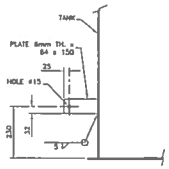

6 - GROUNDING LUG
Detail scale 1:10

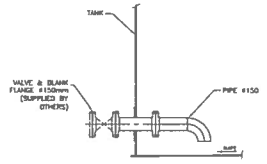

7 - PUMPING LOW LEVEL
Detail scale 1:20

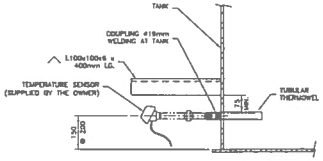

8 - TEMPERATURE SENSOR ON SHELL TANK
Detail scale 1:10

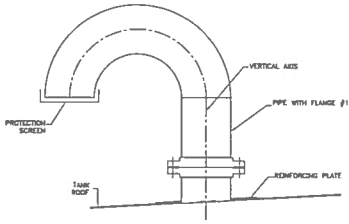

5 - VENT
Typical detail scale 1:10

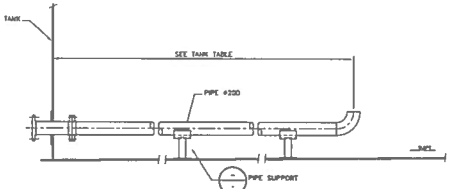

11 - FIXED PIPE - TANK LOADING
Detail scale 1:20

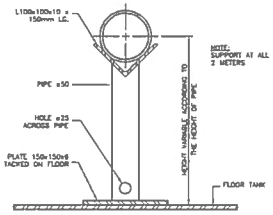

9 - PIPE SUPPORT
Detail scale 1:5

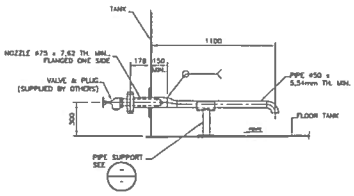

10 - WATER DRAW-OFF
Detail scale 1:20

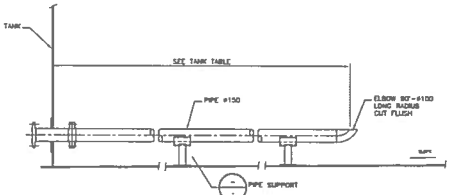

12 - FIXED PIPE - TANK UNLOADING
Detail scale 1:20

WSP

NOTES GÉNÉRALES / GENERAL NOTES

1. REPLACE DRAWING : 65-103-260-202

DESSINS EN RÉFÉRENCE / REFERENCE DRAWINGS

TYPE / TITLE	# DWG

AGNICO EAGLE

REV.	DATE	DESCRIPTION	PREP. BY	APP.	CHECK
0	2017-05-31	ISSUED FOR CONSTRUCTION	J.M.	G.F.	

REVISIONS

TYPE / TITLE
AGNICO EAGLE – HELIADINE DIVISION
116 – FUEL TANK FARM
260 – PLATEWORK
TANK ø1 ø6
DETAILS

DESSINÉ PAR / DRAWN BY	GHISLAINE CORMUT	DATE 2017-05-29
VÉRIFIÉ PAR / CHECKED BY	JOËL MORLIÈRE, tech.	2017-05-29
APPROUVÉ PAR / APPROVED BY	DENIS THIBODEAU, Ing.	2017-05-29
ÉCHELLE / SCALE	INDICATED	DATE 2017-05-29

NO. DESSIN / DRAWING NO. 65-116-260-202

NO. PROJET / PROJECT NO.	REVISION	FEUILLE / SHEET
6515	0	1/1

AI-CART-ARCH B

\\Cart1.tbo.lan\projets\1819\1\151-06440-00\data tardique\dwg\65-116-260-202-RE.dwg-2013-05-15 14:08:38

FILE NO. 65-116-260-202-RE.dwg

NO. DESSIN / DRAWING NO. 65-116-270-200

FORMAT ARCHD

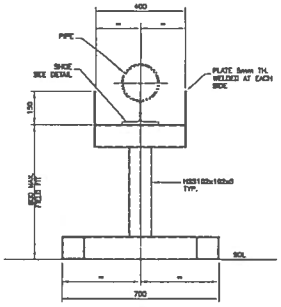

FRONT VIEW

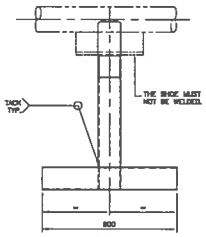

SIDE VIEW

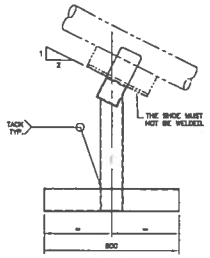

SIDE VIEW ON DECK

NOTE:
1. GROUND FOR THE SUPPORT TO BE FLAT AND STABLE. PAD WITH NATURAL GRANULAR BACKFILL IF NEEDED.

PIPING SUPPORT (1)
SCALE: 1:10

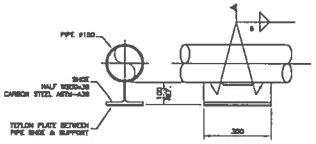

PIPE SHOE (2)
SCALE: 1:10

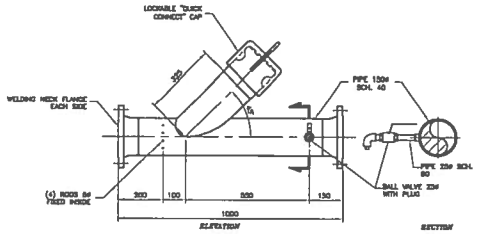

PIC CATCHER (8)
SCALE: 1:10

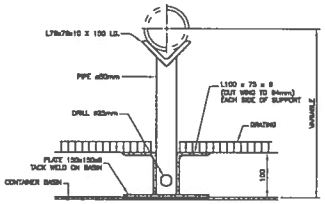

NOTE:
GRATING CUT ON SITE AROUND SUPPORT

SUPPORT INSIDE PUMPING STATION (9)
SCALE: 1:3

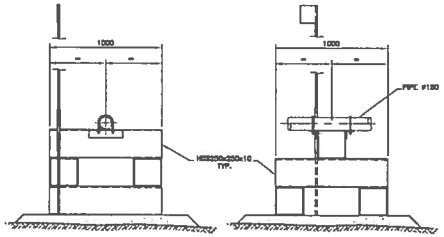

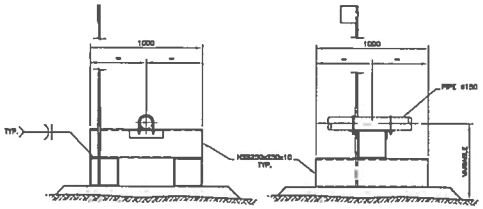

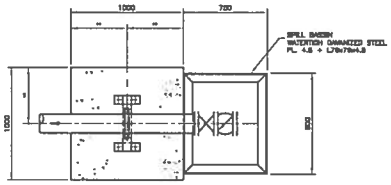

PLAN

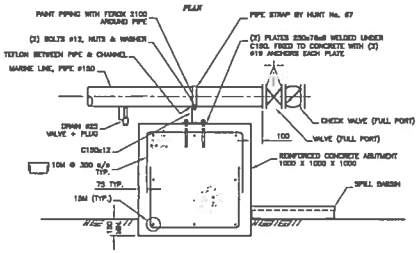

ELEVATION

MARINE LINE MANIFOLD ABUTMENT-TYPE 1 (4)
SCALE: 1:20
QTY: 1

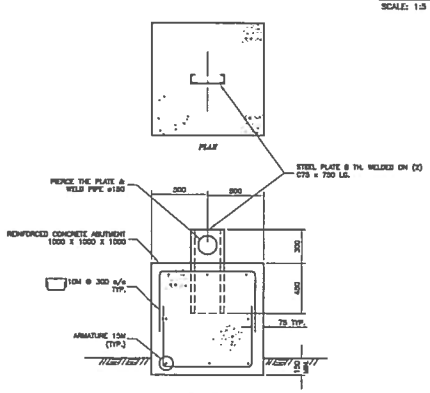

ELEVATION

ABUTMENT-TYPE 2 (5)
SCALE: 1:20
QTY: 1

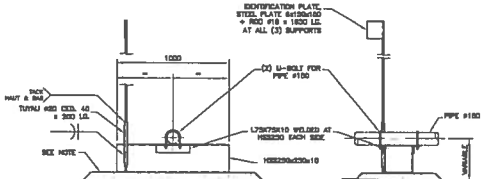

NOTE:
1. GROUND FOR THE SUPPORT TO BE FLAT AND STABLE. PAD WITH NATURAL GRANULAR BACKFILL IF NEEDED.

MARINE LINE SUPPORT (3)
SCALE: 1:20

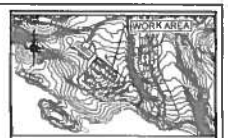

WSP
1075 3e AVENUE EST
VAL-D'OR (QUÉBEC) CANADA J9P 5J7
TEL.: 819 824-2174 | TÉLÉC.: 819 824-1514 | WWW.WSPGROUP.CA

NOTES GÉNÉRALES / GENERAL NOTES

1. REPLACE DRAWING : 65-103-270-300

POUR CONSTRUCTION
FOR CONSTRUCTION
DATE : 2017-05-31

DESSINS EN RÉFÉRENCE / REFERENCE DRAWINGS

TITRE / TITLE	#

AGNICO EAGLE

0	2017-05-31	ISSUED FOR CONSTRUCTION	J.G.	G.C.
REV.	DATE	DESCRIPTION	VÉRIFIÉ PAR	APPR.

REVISIONS

TITRE / TITLE
AGNICO EAGLE – MELADINE DIVISION
116 – FUEL TANK FARM
270 – PIPING
FUEL DISTRIBUTION
DETAILS

DESSINÉ PAR / DRAWN BY	G. CORNUT	DATE 2017-05-29
VÉRIFIÉ PAR / CHECKED BY	J. MORIJÉRE, Ingénieur	2017-05-29
APPROUVÉ PAR / APPROVED BY	D. THIBODEAU P. Eng.	2017-05-29
ÉCHELLE / SCALE	INDICATED	DATE 2017-05-29

NO. DESSIN / DRAWING NO.
65-116-270-200

NO. PROJET / PROJECT NO.	REVISION	FEUILLE / SHEET
8515	0	1/1

FILE NO. 65-116-270-200_R0.dwg

NO. DESIGN DRAWING NO. 65-116-270-201

FORMAT ARCHD

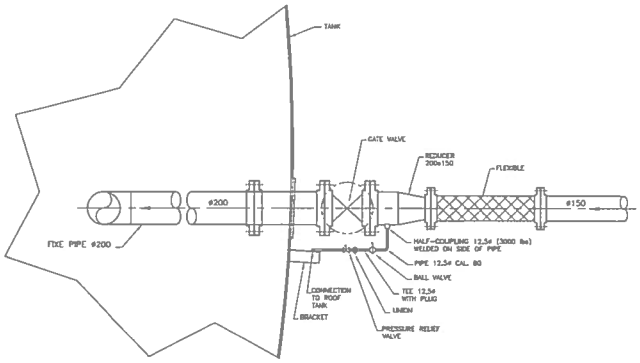

LOADING TANK PIPING 6
SCALE: 1:15

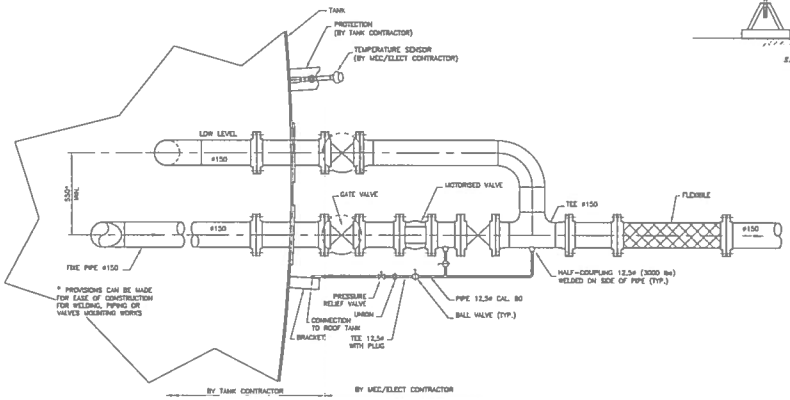

UNLOADING TANK PIPING 7
SCALE: 1:15

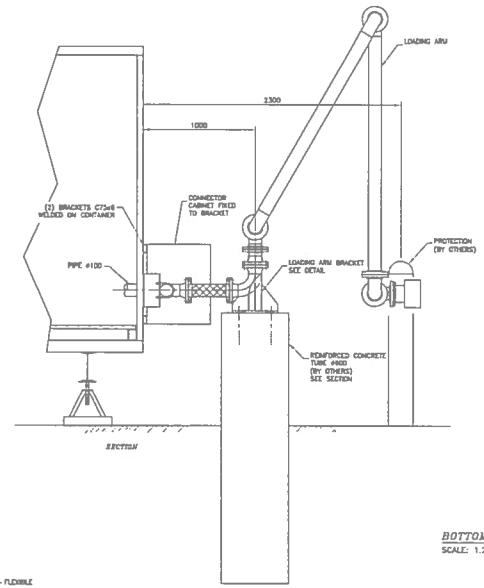

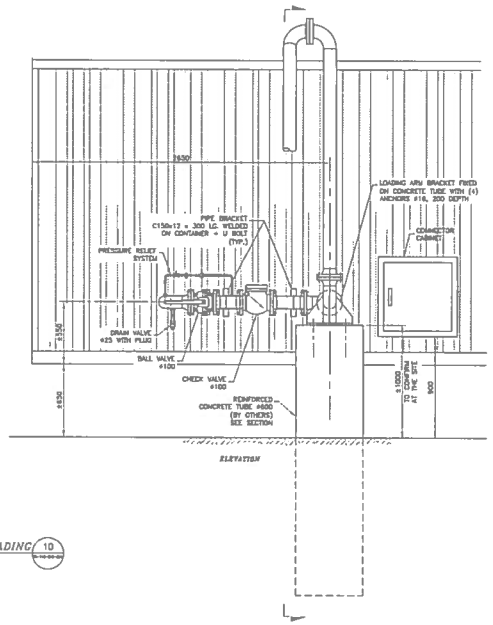

BOTTOM LOADING 10
SCALE: 1:20

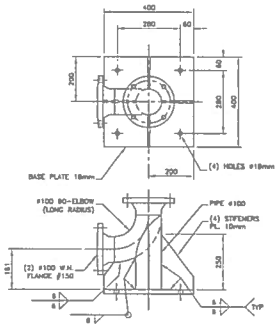

LOADING ARM BRACKET 11
SCALE: 1:10

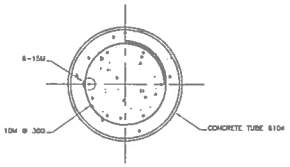

CONCRETE TUBE SECTION 12
SCALE: 1:10

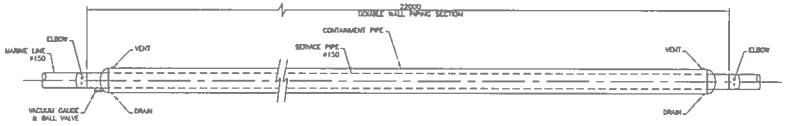

UNDERGROUND PIPING 13
SCALE: 1:25

WSP
1075, 3e AVENUE EST
VAL-D'OR (QUÉBEC) CANADA J9P 5J2
TÉL.: 819 825-4274 | TÉLÉC.: 819 824-1341 | WWW.WSPGROUP.COM
Ref. 191-00440-40

NOTES GÉNÉRALES / GENERAL NOTES

1. REPLACE DRAWING : 65-103-270-201

POUR CONSTRUCTION
FOR CONSTRUCTION
AGNICO EAGLE
DATE : 2017-05-31

DESSINS EN RÉFÉRENCE / REFERENCE DRAWINGS

FOR / POUR	# DWG

AGNICO EAGLE

NO.	DATE	DESCRIPTION	PRE/DR	APP.	CLIENT
0	2017-05-31	ISSUED FOR CONSTRUCTION	J.M	S.C.	

REVISIONS

TITLE / TITRE
AGNICO EAGLE – MELIADINE DIVISION
116 – FUEL TANK FARM
270 – PIPING
FUEL DISTRIBUTION
DETAILS

DESIGNED PAR DRAWN BY	C. CORMUT	DATE 2017-05-25
VERIFIED PAR CHECKED BY	J. MORLIERE, tech.	2017-05-25
APPROUVÉ PAR APPROVED BY	D. THIBODEAU, P. Eng.	2017-05-25
ÉCHELLE SCALE	INDICATED	DATE 2017-05-25
NO. DESSIN DRAWING NO.	65-116-270-201	
NO. PROJET PROJECT NO. 6515	REVISION 0	FEUILLE / SHT 1 / 1

AF-CADT-ARCH B

\\EAWFIL\DATA\Projets\2019\P\131-06440-40\Data Handique\Dwg\65-116-270-201_R0.dwg

FILE NO. 65-116-270-201_R0.dwg

65-ULT-116-WP-001

FORMAT ARCHD

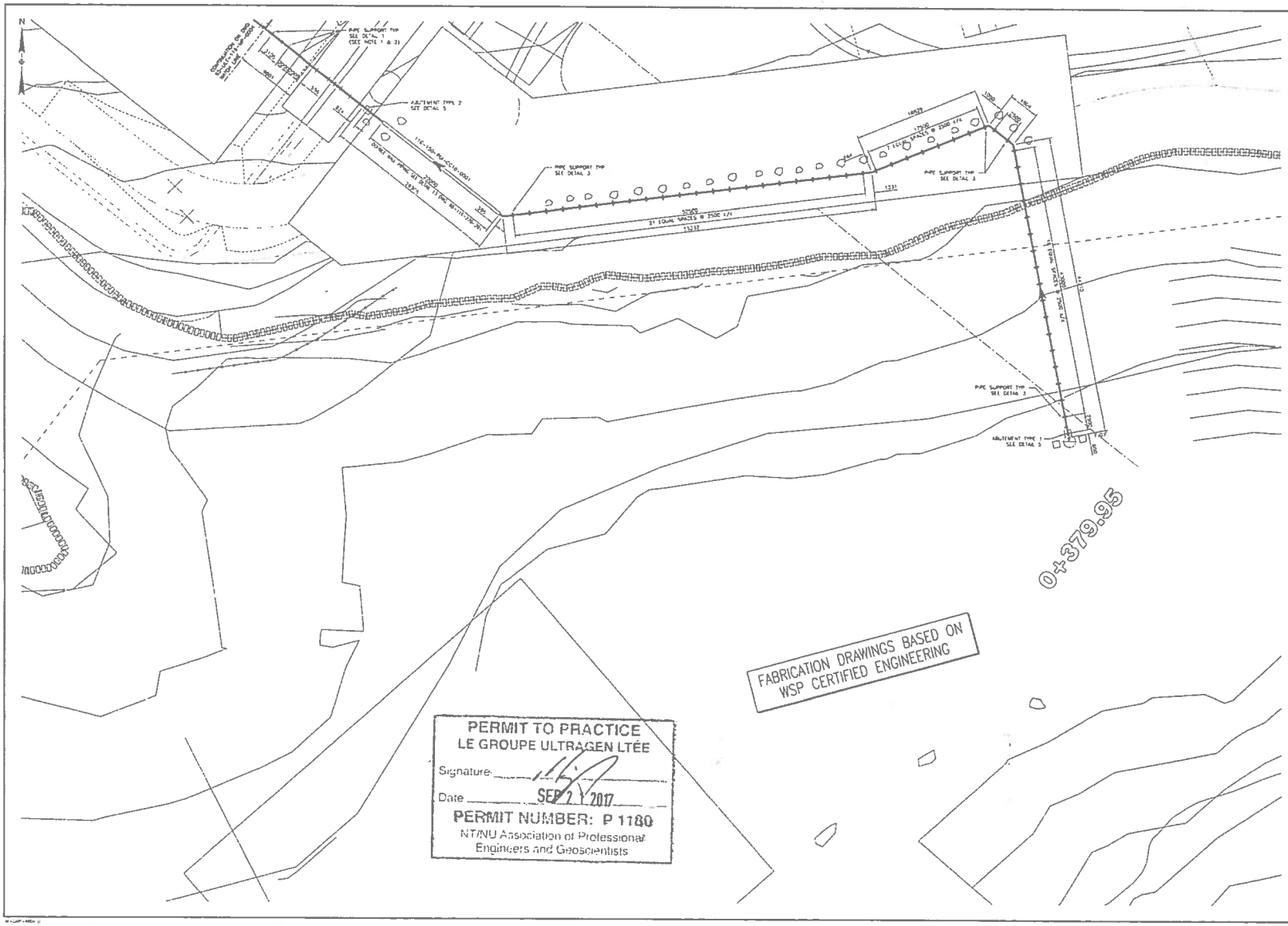

PERMIT TO PRACTICE
LE GROUPE ULTRAGEN LTÉE
Signature
Date SEP 2 1 2017
PERMIT NUMBER: P 1180
NT/NU Association of Professional Engineers and Geoscientists

NOTES GENERALES / GENERAL NOTES

1. Guides shall be placed at least 40 to 50 mm from expansion joints or changes in direction.
2. In general, guides are to be on 100 mm and supports are on 150 mm. Guides are to be spaced and on 100 mm and larger 6" 150 mm. Pipe support.

REGISTERED PROFESSIONAL ENGINEER
D TRUONG
LICENSEE
NT/NU
2017/09/21

DESSINS EN REFERENCE / REFERENCE DRAWINGS

TITRE / TITLE	# DWG
GENERAL ARRANGEMENT – PLAN VIEW	65-ULT-116-WP-002
GENERAL ARRANGEMENT – PLAN VIEW	65-ULT-116-WP-003
FUEL DISTRIBUTION – FLOW DIAGRAM	65-116-201-240
PIPING & PIPE SUPPORT DETAILS	65-116-270-250
PIPING DETAILS	65-116-270-251

AGNICO EAGLE

2	2017-09-21	PROJECT TITLE REVISED	MWF
1	2017-05-19	LINE NUMBERING REVISED	TMG
0	2017-05-19	ISSUED FOR CONSTRUCTION	A.M.
REV.	DATE	DESCRIPTION	PROJ. APPROVAL

REVISIONS

NUNAVUT TUNGGAVIK INC.

ultragen

NO. PROJET / PROJECT NO. 591700

TITRE / TITLE
AGNICO EAGLE – MELIADINE DIVISION
116 – FUEL TANK FARM
FUEL DISTRIBUTION
GENERAL ARRANGEMENT
PLAN VIEW

DESSINE PAR DRAWN BY	A. MEBERT	DATE 2017-03-10
VERIFIE PAR CHECKED BY	-	-
APPROUVE PAR APPROVED BY	-	-
FORMAT SCALE	1 = 200	DATE 2017-04-28

NO. DESSIN DRAWING NO. 65-ULT-116-WP-001

NO. PROJET PROJECT NO. 6515 | REVISION 2 | FEUILLE / SHEET 1 / 1

FILE NO 65-ULT-116-WP-001.dwg

65-ULT-116-MP-002

FORMAT ARCH D

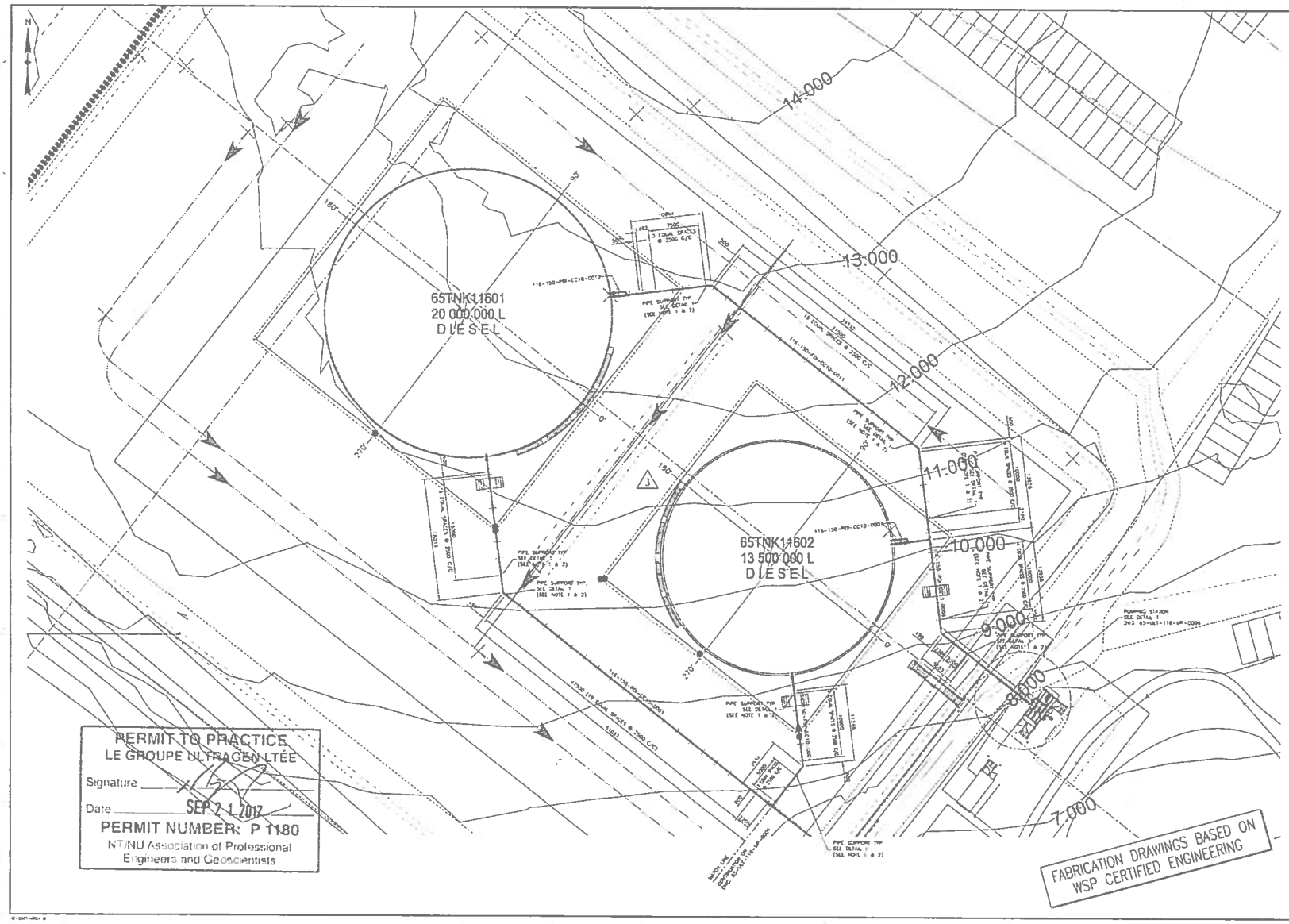

NOTES GENERALES / GENERAL NOTES

1. GUIDES SHALL BE PLACED AT LEAST NS 10 DN PIPE DIAMETERS AWAY FROM PIPE EXPANSION LOOPS OR CHANGES IN DIRECTION.
2. IN GENERAL, GUIDES ARE ALSO ON LINES ON TOP AND BOTTOM AND LOCATED AT EACH OTHER PIPE SUPPORT AND ON LINES ON THE NEXT LEVEL OF EACH THREE SUPPORT

REGISTERED PROFESSIONAL ENGINEER
D TRUONG
LICENSEE
NT/NU
2017/09/21

DESSINS EN REFERENCE / REFERENCE DRAWINGS

TYPE / TITLE	NO.
GENERAL ARRANGEMENT - PLAN VIEWS	65-ULT-116-MP-0001
GENERAL ARRANGEMENT - PLAN VIEWS	65-ULT-116-MP-0002
FUEL DISTRIBUTION - FLOW DIAGRAM	65-116-PID-001
GENERAL & PIPE SUPPORT DETAILS	65-116-PID-002
PIPING DETAILS	65-116-PID-003
GROUP & ARRANGEMENT OF PIPE CONTAINING	65-116-PID-004

AGNICO EAGLE

REV.	DATE	DESCRIPTION	PROJECT MGR.	CHECKED
2	2017-09-21	PROJECT STAL REVISED	SMV	
1	2017-09-15	PIPE NUMBERING REVISED	TRU	
0	2017-04-28	ISSUED FOR CONSTRUCTION	SMV	

REVISIONS

ultragen

NT/NU ASSOCIATION OF PROFESSIONAL ENGINEERS

NO. PROJET / PROJECT NO. 591700

TITRE / TITLE
AGNICO EAGLE - MELIADINE DIVISION
116 - FUEL TANK FARM
FUEL DISTRIBUTION
GENERAL ARRANGEMENT
PLAN VIEW

DESSINÉ PAR / DRAWN BY	A. HEBERT	DATE 2017-04-18
VÉRIFIÉ PAR / CHECKED BY	-	
APPROUVÉ PAR / APPROVED BY		
ÉCHELLE / SCALE	1 = 250	DATE 2017-04-28

NO. DU DESSIN / DRAWING NO. 65-ULT-116-MP-002

NO. PROJET / PROJECT NO. 6515

REVISION 2 FEUILLE / SHEET 1 / 1

PERMIT TO PRACTICE
LE GROUPE ULTRAGEN LTÉE
Signature
Date SEP 21 2017
PERMIT NUMBER: P 1180
NT/NU Association of Professional Engineers and Geoscientists

FABRICATION DRAWINGS BASED ON WSP CERTIFIED ENGINEERING

NO. DESIGN DRAWING NO. 65-ULT-116-MP-003

FORMAT ARCHD

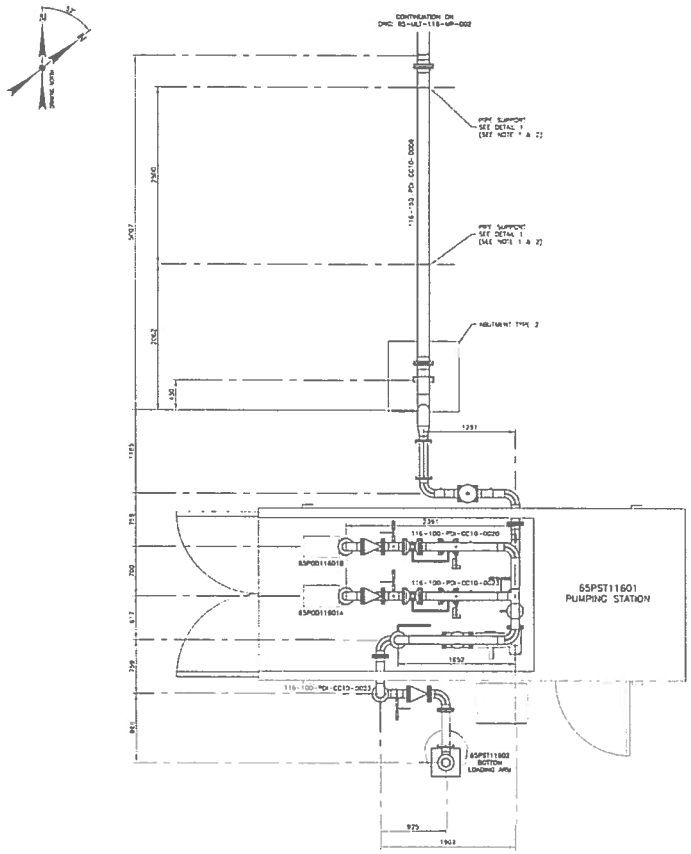

PUMPING STATION – DETAIL 1
SCALE 1=30

NOTES GENERALES / GENERAL NOTES

1. GUIDES SHALL BE PLACED AT LEAST 45 TO 90 PIPE DIAMETERS AWAY FROM PIPE EXPANSION JOINTS OR CHANGES IN DIRECTION.
2. AS GENERAL GUIDES SHALL BE USED ON LINES 20 THE AND SMALLER AND LOCATED AT 14.0m SPACE PIPE SUPPORT AND ON LINES ON THE AND LARGER AT 6.0m PIPE SUPPORT.

REGISTERED PROFESSIONAL ENGINEER
D. TRUONG
LICENSEE
NT/NU
2019/09/21

DESSINS EN REFERENCE / REFERENCE DRAWINGS

GENERAL ARRANGEMENT – PLAN VIEWS	65-ULT-116-MP-001
GENERAL ARRANGEMENT – PLAN VIEWS	65-ULT-116-MP-002
FUEL DISTRIBUTION – P&ID DIAGRAM	65-116-PD1-200
PIPING & PIPE SUPPORT DETAILS	65-116-STD-200
PIPING DETAILS	65-116-STD-201
HOW & OPERATIONS OF THE CONTROLS	65-116-SYS-200

AGNICO EAGLE

NO.	DATE	DESCRIPTION	DRAWN BY	APPD. BY
2	2017-09-21	PROJECT TITLE REVISED	SPW	
1	2017-09-15	LINE NUMBERS REVISED	Dng	
0	2017-05-29	ISSUED FOR CONSTRUCTION	SPW	

REVISIONS

ultragen

NO. PROJET / PROJECT NO. 581700

TITRE / TITLE
AGNICO EAGLE – MEADOWBANK DIVISION
116 – FUEL TANK FARM
FUEL DISTRIBUTION
GENERAL ARRANGEMENT
DETAILS

DESSINE PAR / DRAWN BY	A. HEBERT	2017-05-19
VERIFIE PAR / CHECKED BY	–	–
APPROUVE PAR / APPROVED BY	–	–
ECHELLE / SCALE	1 = 30	DATE 2017-05-19

NO. DESSIN / DRAWING NO.
65-ULT-116-MP-003

NO. PROJET / PROJECT NO. 6515

REVISION 2 FEUILLE / SHEET 1 / 1

PERMIT TO PRACTICE
LE GROUPE ULTRAGEN LTÉE
Signature
Date SEP 21 2017
PERMIT NUMBER: P 1180
NT/NU Association of Professional Engineers and Geoscientists

FABRICATION DRAWINGS BASED ON WSP CERTIFIED ENGINEERING

FILE NO. 65-ULT-116-MP-003.dwg

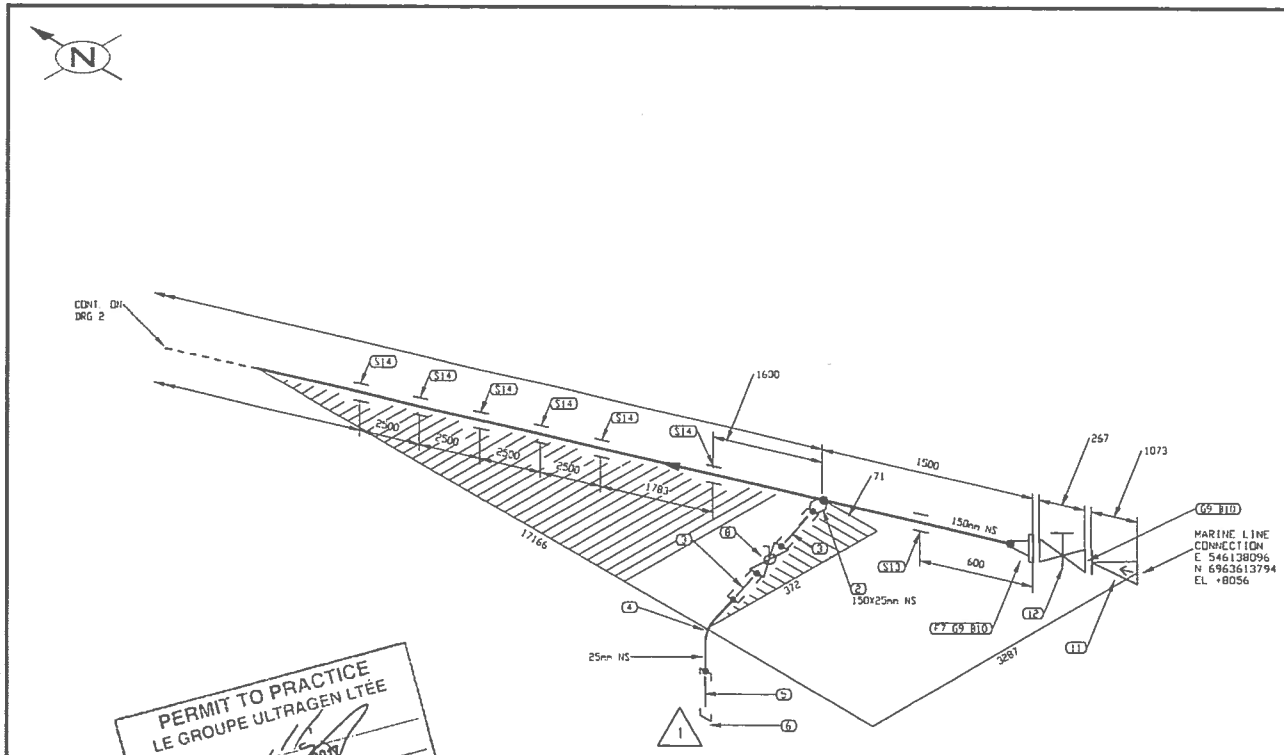

PERMIT TO PRACTICE
LE GROUPE ULTRAGEN LTÉE
Signature
Date SEP 21 2017
PERMIT NUMBER: P 1180
NT/NU Association of Professional Engineers and Geoscientists

FABRICATION DRAWINGS BASED ON WSP CERTIFIED ENGINEERING

LISTE DE MATERIEL

No	QTE	DIA	MATERIEL/CATALOGUE	DESCRIPTION
1	16045 MM	150	A 333 Gr. 6	SCH STD, SMLS PIPE
2	1	150x25	A 350 Gr. LF2	CL 3000, SOCKOLET
3	2	25	A 333 Gr. 6	SCH 80, NIPPLE x 75mm LG PBE
4	1	25	A 350 Gr. LF2	CL 3000, SW 90 DEG ELBOW
5	1	25	A 333 Gr. 6	SCH 80, NIPPLE x 75mm LG POE x TOE
6	1	25	A 350 Gr. LF2	CL 3000, THRD CAP
7	1	150	A 350 Gr. LF2	CL 150, SCH STD, RF, WN FLANGE
8	1	25	BA-29	CL 600, SW, BALL VALVE
9	2	150	ASME B16.20	CL 150, GARLOCK 5500, RING TYPE GASKET 1/8" THK
10	16	19	A 193 B7/A 194 2H	CL 150, 8 - 19.05 X 100 STUD BOLTS c/w TWO HEAVY HEX NUTS
11	1	150	CK-29	CL 150, RF, SWING CHECK VALVE
12	1	150	GA-10	CL 150, RF, GATE VALVE
13		150		PIPE GUIDE AS PER DETAIL 4, DWG: 65-116-270-200
14	6	150		PIPE SUPPORT AS PER DETAIL 3, DWG: 65-116-270-200

No.	DATE	REVISION	PAR / APP.
3	2017/09/21	PROJECT TITLE REVISED	KHV
2	2017/09/11	LINE NUMBERS REVISED	OVN
1	2017/06/30	DRAIN REVISED AS PER CLIENT COMMENTS	OVN
0	2017/05/15	ISSUED FOR CONSTRUCTION	KHV

CLIENT:

AGNICO EAGLE

NUOSANA PROMEC MINING

ultragen

CONSULTANT PROJECT NO. 591700

NO. DE CONDUITE		SPECIFICATION	PRODUIT	SYSTEME REVETEMENT	CODE DE COULEUR	ISOLATION ET TRACAGE	EPAISS. D'ISOLATION		
116-150-PDI-CC10-0001		CC10	PDI					65-116-270-200	PIPE SUPPORT DETAILS
PRESSION D'OPERATION	TEMPERATURE D'OPERATION	PRESSION DE CONCEPTION	TEMPERATURE DE CONCEPTION	PRESSION D'ESSAI	CLASSE D'INSPECTION	CODE DE SERVICE	TRAITEMENT THERMIQUE	65-116-205-200	P&ID
PSIG	°F	PSIG	°F	PSIG				No. DESSIN	DESSINS DE REFERENCE

REGISTERED PROFESSIONAL ENGINEER
D. TRUONG
LICENSEE
NT/NU
2017/09/21

CONC.: KHV
DATE: 2017/04/25
DESSINÉ PAR: KVC
DATE: 2017/04/25
VER. PAR: -
DATE: -
APP.: -
DATE: -
ÉCHELLE: AUCUNE

PROJET:
AGNICO EAGLE - MELIADINE DIVISION
116 - FUEL TANK FARM

TITRE:
RANKIN INLET
FABRICATION ISOMETRIC
MARINE LINE TO 65TNK11601 & 65TNK11602

No PROJET	No DESSIN	PAGES	REV.
6515	116-150-PDI-CC10-0001	1/13	3

116-MN-01, TEMP-01

FICHIER: N:\Agnico Eagle\Meliadine\591700 (Fuel Farm)\02. Design\02. Isometric\02. Isometric\116-150-PDI-CC10-0001.DWG

MARDI LE: Sep 20, 2017, 2:43pm

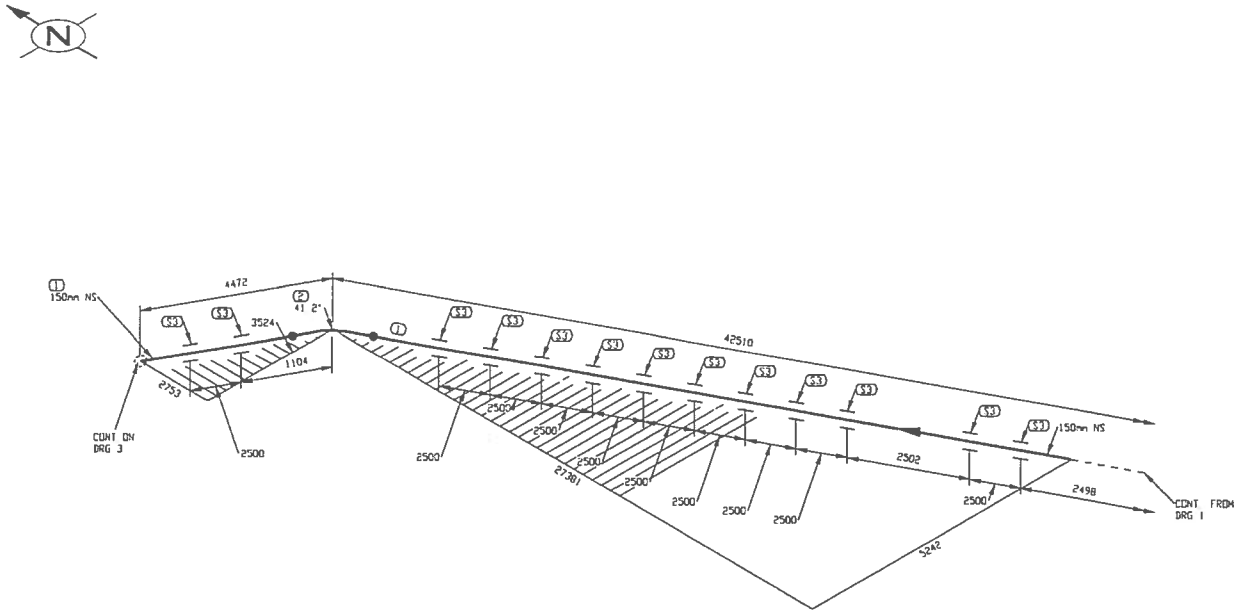

PERMIT TO PRACTICE
LE GROUPE ULTRAGEN LTÉE
Signature
Date SEP 2 1 2017
PERMIT NUMBER: P 1180
NT/NU Association of Professional Engineers and Geoscientists

FABRICATION DRAWINGS BASED ON WSP CERTIFIED ENGINEERING

LISTE DE MATERIEL

No	QTE	DIA	MATERIEL/CATALOGUE	DESCRIPTION
1	32178 MM	150	A 333 Gr. 6	SCH STD. SMLS PIPE
2	1	150	A 420 Gr. WPL6	SCH STD. BW LR 45 DEG ELBOW TRIM TO 41.16
3	13	150		PIPE SUPPORT AS PER DETAIL 3, DWG. 65-116-270-200

No.	DATE	REVISION	PAR / APP.
2	2017/09/21	PROJECT TITLE REVISED	KHV
1	2017/09/11	LINE NUMBERS REVISED	KHV
0	2017/05/15	ISSUED FOR CONSTRUCTION	KHV

CLIENT: AGNICO EAGLE

NUQSANA-PROMEC MINING

ultragen

CONSULTANT PROJECT NO. 591700

NO. DE CONDUITE		SPECIFICATION	PRODUIT	SYSTEME REVETEMENT	CODE DE COULEUR	ISOLATION ET TRACAGE	EPAISS. D'ISOLATION		
116-150-PDI-CC10-0001		CC10	PDI		-			65-116-270-200	PIPE SUPPORT DETAILS
PRESSION D'OPERATION	TEMPERATURE D'OPERATION	PRESSION DE CONCEPTION	TEMPERATURE DE CONCEPTION	PRESSION D'ESSAI	CLASSE D'INSPECTION	CODE DE SERVICE	TRAITEMENT THERMIQUE	65-116-205-200	P&ID
PSIG	°F	PSIG	°F	PSIG				No. DESSIN	DESSINS DE REFERENCE

REGISTERED PROFESSIONAL ENGINEER
D TRUONG
LICENSEE
NT/NU
2017/09/21

CONC.: KHV
DATE: 2017/04/25
DESSINÉ PAR: KVE
DATE: 2017/04/25
VER. PAR: -
DATE: -
APP.: -
DATE: -
ÉCHELLE: AUCUNE

PROJET: AGNICO EAGLE - MELIADINE DIVISION
116 - FUEL TANK FARM

TITRE: RANKIN INLET
FABRICATION ISOMETRIC
MARINE LINE TO 65TNK11601 & 65TNK11602

No PROJET	No DESSIN	PAGES	REV.
6515	116-150-PDI-CC10-0001	2/13	2

116-MN-01

ISOVIS: e:\Agnico Eagle\Meliadine\591700 (Fuel Distributor)\05. Dessins\02. Isometriques\01. Rankin Inlet\116-150-PDI-CC10-0001-2.DWG

AUTOCAD LE. Sep 23, 2017, 2:43pm

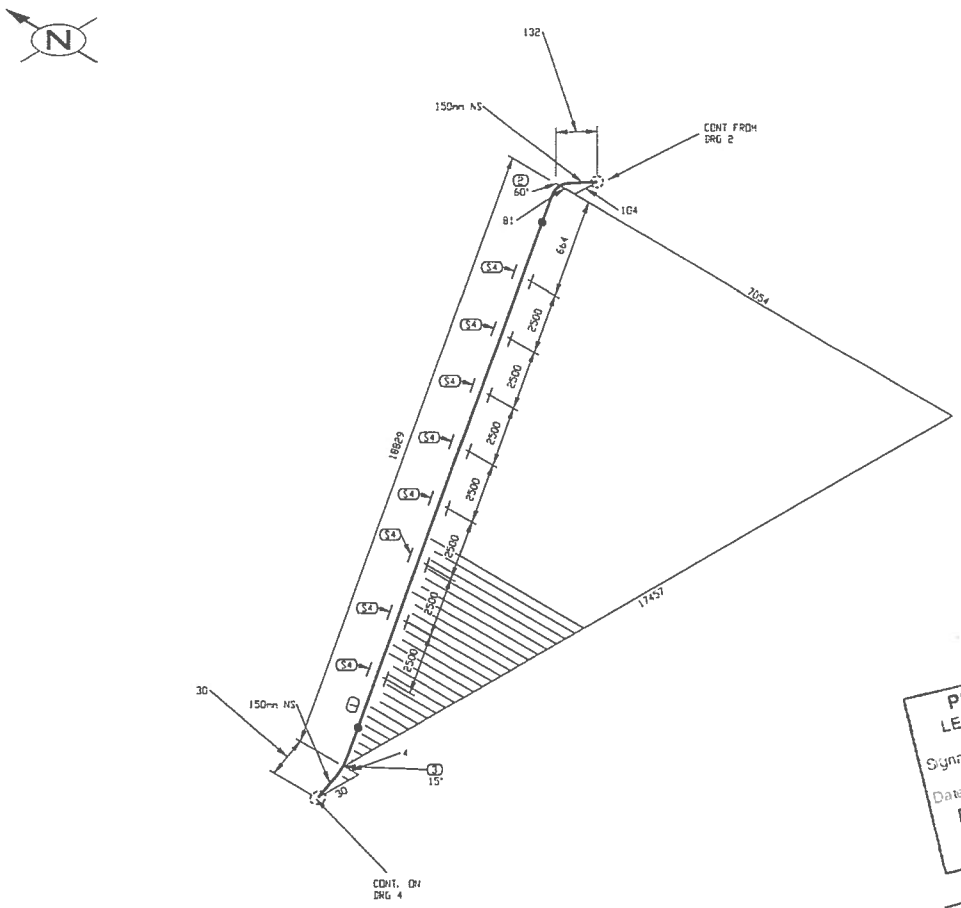

PERMIT TO PRACTICE
LE GROUPE ULTRAGEN LTÉE
Signature
Date SEP 21 2017
PERMIT NUMBER: P 1180
NT/NU Association of Professional Engineers and Geoscientists

FABRICATION DRAWINGS BASED ON WSP CERTIFIED ENGINEERING

LISTE DE MATERIEL

No	QTE	DIA	MATERIEL/CATALOGUE	DESCRIPTION
1	18667 MM	150	A 333 Gr 6	SCH STD, SMLS PIPE
2	1	150	A 420 Gr WPL6	SCH STD, BV LR 90 DEG ELBOW TRIM TO 60.00
3	1	150	A 420 Gr WPL6	SCH STD, BV LR 90 DEG ELBOW TRIM TO 15.00
4	8	150		PIPE SUPPORT AS PER DETAIL 3, DWG# 65-116-270-200

No.	DATE	REVISION	PAR / APP
2	2017/09/21	PROJECT TITLE REVISED	KHV
1	2017/09/11	LINE NUMBERS REVISED	KHV
0	2017/05/15	ISSUED FOR CONSTRUCTION	KHV

CLIENT: AGNICO EAGLE

NUQSANA-PROMEC MINING

ultragen

CONSULTANT PROJECT NO. 591700

NO. DE CONDUITE		SPECIFICATION	PRODUIT	SYSTEME REVETEMENT	CODE DE COULEUR	ISOLATION ET TRACAGE	EPAISS. D'ISOLATION		
116-150-PDI-CC10-0001		CC10	PDI		-			65-116-270-200	PIPE SUPPORT DETAILS
PRESSION D'OPERATION	TEMPERATURE D'OPERATION	PRESSION DE CONCEPTION	TEMPERATURE DE CONCEPTION	PRESSION D'ESSAI	CLASSE D'INSPECTION	CODE DE SERVICE	TRAITEMENT THERMIQUE	65-116-205-200	P&ID
PSIG	°F	PSIG	°F	PSIG				No. DESSIN	DESSINS DE REFERENCE

REGISTERED PROFESSIONAL ENGINEER
D TRUONG
LICENSEE
NT/NU
2017/09/21

CONC.: KHV
DATE: 2017/04/25
DESSINÉ PAR: KVE
DATE: 2017/04/25
VÉR. PAR: -
DATE: -
APP.: -
DATE: -
ÉCHELLE: AUCUNE

PROJET: AGNICO EAGLE - MELIADINE DIVISION
116 - FUEL TANK FARM

TITRE: RANKIN INLET
FABRICATION ISOMETRIC
MARINE LINE TO 65TNK11601 & 65TNK11602

No PROJET	No DESSIN	PAGES	REV.
6515	116-150-PDI-CC10-0001	3/13	2

116-MN-01

MODIFIÉ LE Sep 20, 2017, 2:44pm

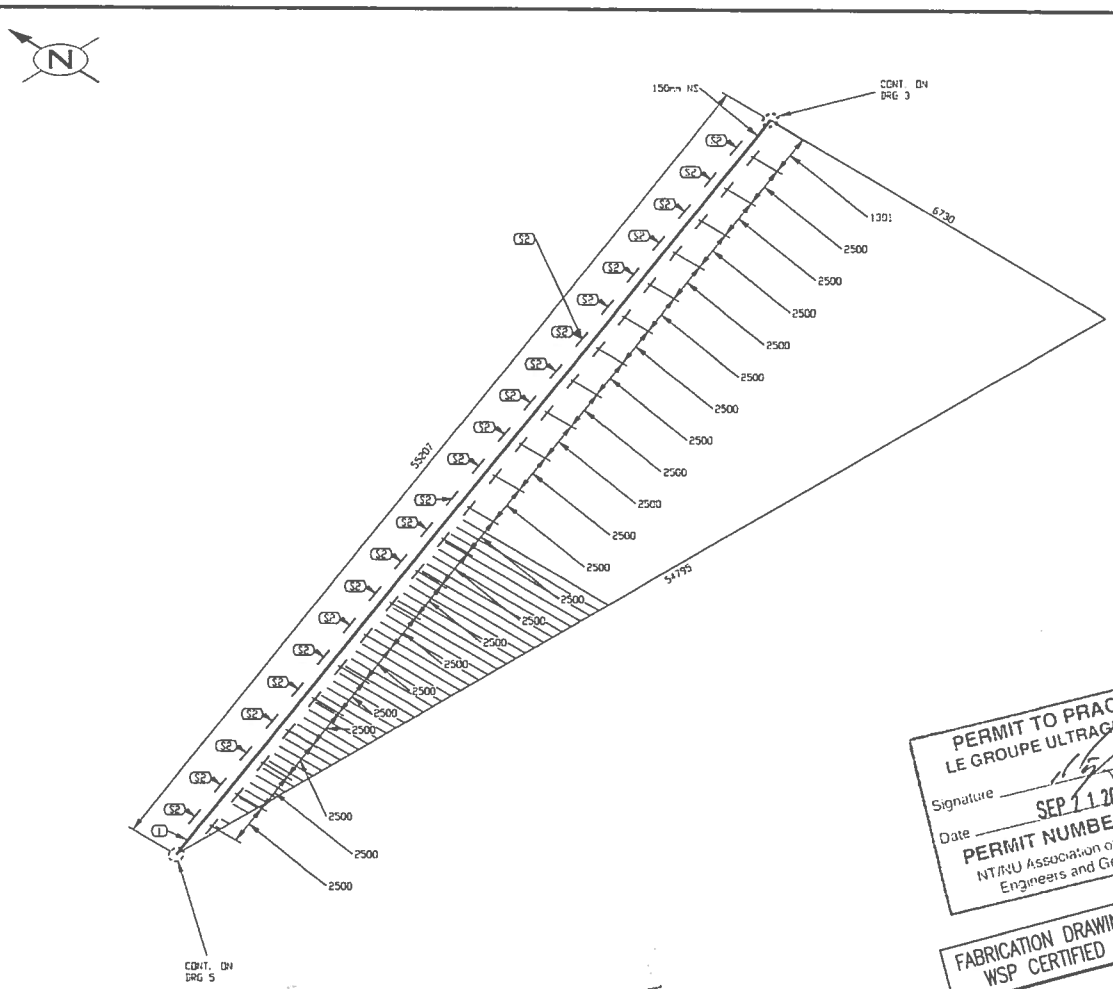

PERMIT TO PRACTICE
LE GROUPE ULTRAGEN LTÉE
Signature
Date SEP 1 1 2017
PERMIT NUMBER: P 1180
NT/NU Association of Professional Engineers and Geoscientists

FABRICATION DRAWINGS BASED ON WSP CERTIFIED ENGINEERING

LISTE DE MATERIEL

No	QTE	DIA	MATERIEL/CATALOGUE	DESCRIPTION
1	55207 MM	150	A 333 Gr. 6	SCH STD, SMLS PIPE
2	23	150		PIPE SUPPORT AS PER DETAIL 3, DWG 65-116-270-200

No.	DATE	REVISION	PAR / APP.
2	2017/09/21	PROJECT TITLE REVISED	KHV
1	2017/09/11	LINE NUMBERS REVISED	KHV
0	2017/05/15	ISSUED FOR CONSTRUCTION	KHV

CLIENT:

AGNICO EAGLE

NUQSANA-PROMEC MINING

ultragen

CONSULTANT PROJECT NO. 591700

NO. DE CONDUITE		SPECIFICATION	PRODUIT	SYSTEME REVETEMENT	CODE DE COULEUR	ISOLATION ET TRACAGE	EPAISS. D'ISOLATION		
116-150-PDI-CC10-0001		CC10	PDI		–			65-116-270-200	PIPE SUPPORT DETAILS
PRESSION D'OPERATION	TEMPERATURE D'OPERATION	PRESSION DE CONCEPTION	TEMPERATURE DE CONCEPTION	PRESSION D'ESSAI	CLASSE D'INSPECTION	CODE DE SERVICE	TRAITEMENT THERMIQUE	65-116-205-200	P&ID
PSIG	°F	PSIG	°F	PSIG				No. DESSIN	DESSINS DE REFERENCE

SCEAU PROFESSIONNEL
REGISTERED PROFESSIONAL ENGINEER
D TRUONG
LICENSEE
NT/NU
2017/09/21

CONC.: KHV
DATE: 2017/04/25
DESSINE PAR: KVE
DATE: 2017/04/25
VER. PAR: -
DATE: -
APP.: -
DATE: -
ÉCHELLE: AUCUNE

PROJET:
AGNICO EAGLE - MELIADINE DIVISION
116 - FUEL TANK FARM

TITRE:
RANKIN INLET
FABRICATION ISOMETRIC
MARINE LINE TO 65TNK11601 & 65TNK11602

No PROJET	No DESSIN	PAGES	REV.
6515	116-150-PDI-CC10-0001	4/13	2

116-MN-01

FICHIER: W:\Agnico Eagle\Meliadine\116 (Fuel Distribution)\05. Design\02. Isometrics\01. Rankin Inlet\116-150-PDI-CC10-0001-1.DWG

WPBME LE Sep 20, 2017, 2:44pm

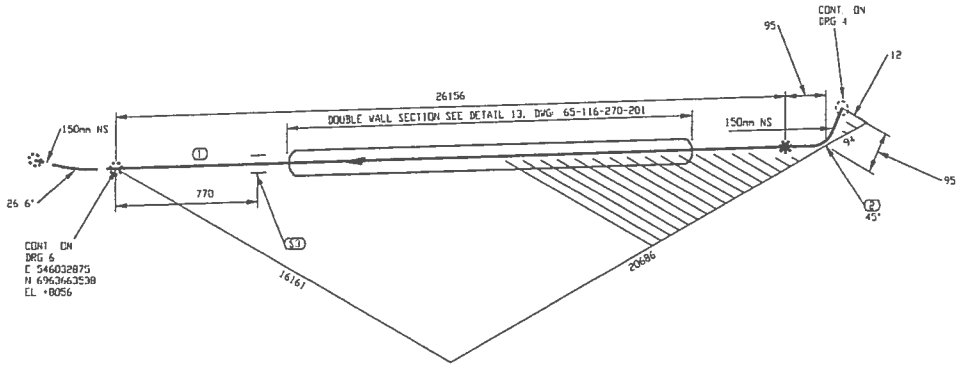

LISTE DE MATERIEL

No	QTE	DIA	MATERIEL/CATALOGUE	DESCRIPTION
1	26156 MM	150	A 333 Gr. 6	SCH STD, SMLS PIPE
2	1	150	A 420 Gr. WPL6	SCH STD, BV LR 45 DEG ELBOW
3	1	150		ABUTEMENT TYPE 2 AS PER DETAIL 5, DWG: 65-116-270-200

No.	DATE	REVISION	PAR / APP.
2	2017/09/21	PROJECT TITLE REVISED	KHV
1	2017/09/11	LINE NUMBERS REVISED	KHV
0	2017/05/15	ISSUED FOR CONSTRUCTION	KHV

PERMIT TO PRACTICE
LE GROUPE ULTRAGEN LTÉE
Signature
Date SEP 21 2017
PERMIT NUMBER: P 1180
NT/NU Association of Professional Engineers and Geoscientists

FABRICATION DRAWINGS BASED ON WSP CERTIFIED ENGINEERING

CLIENT: AGNICO EAGLE

NUOSANA-PROMEC MINING

ultragen

CONSULTANT PROJECT NO. 591700

NO. DE CONDUITE		SPECIFICATION	PRODUIT	SYSTEME REVETEMENT	CODE DE COULEUR	ISOLATION ET TRACAGE	EPAISS. D'ISOLATION		
116-150-PDI-CC10-0001		CC10	PDI		-			65-116-270-200	PIPE SUPPORT DETAILS
PRESSION D'OPERATION	TEMPERATURE D'OPERATION	PRESSION DE CONCEPTION	TEMPERATURE DE CONCEPTION	PRESSION D'ESSAI	CLASSE D'INSPECTION	CODE DE SERVICE	TRAITEMENT THERMIQUE	65-116-205-200	P&ID
PSIG	°F	PSIG	°F	PSIG				No. DESSIN	DESSINS DE REFERENCE

SCEAU PROFESSIONNEL
REGISTERED PROFESSIONAL ENGINEER
D TRUONG
LICENSEE
NT/NU
2017/09/21

CONC.: KHV
DATE: 2017/04/25
DESSINE PAR: KVE
DATE: 2017/04/25
VER. PAR: -
DATE: -
APP.: -
DATE: -
ECHELLE: AUCUNE

PROJET: AGNICO EAGLE - MELIADINE DIVISION
116 - FUEL TANK FARM

TITRE: RANKIN INLET
FABRICATION ISOMETRIC
MARINE LINE TO 65TNK11601 & 65TNK11602

No PROJET	No DESSIN	PAGES	REV.
6515	116-150-PDI-CC10-0001	5/13	2

116-MN-01

FICHIER: K:\Agnico Eagle\Meliadine\591720 (Fuel Distribution)\05 Drawing\02 Isometrics\01 Rankin Inlet\116-150-PDI-CC10-0001-5.DWG

NUPRIME LE. Sep 20, 2017, 2:44pm

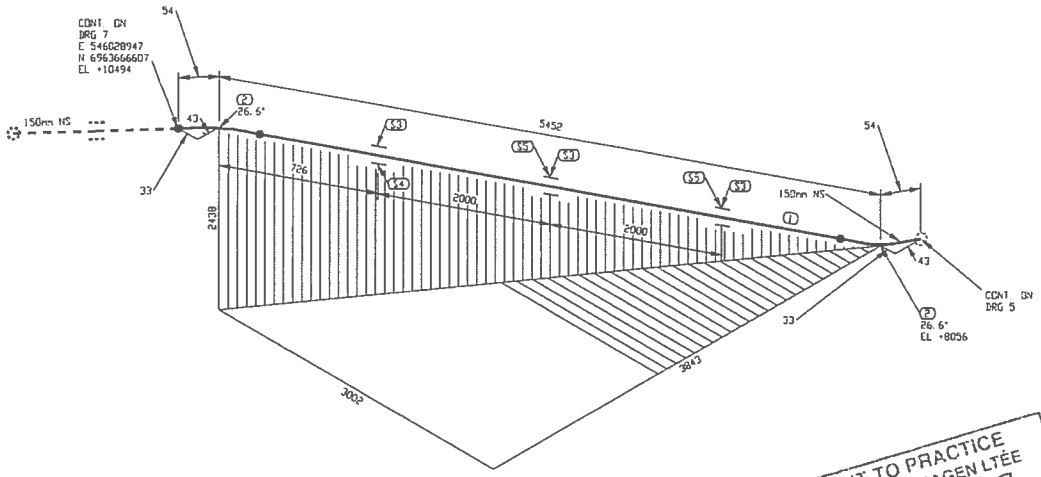

PERMIT TO PRACTICE
LE GROUPE ULTRAGEN LTÉE
Signature
Date SEP 21 2017
PERMIT NUMBER: P 1180
NT/NU Association of Professional Engineers and Geoscientists

FABRICATION DRAWINGS BASED ON WSP CERTIFIED ENGINEERING

LISTE DE MATERIEL

No	QTE	DIA	MATERIEL/CATALOGUE	DESCRIPTION
1	5344 MM	150	A 333 Gr. 6	SCH STD, SMLS PIPE
2	2	150	A 420 Gr. WPL6	SCH STD, BV LR 45 DEG ELBOW TRIM TO 26.57
3	3	150		PIPE SUPPORT AS DETAIL 1, DWG 65-116-270-200
4	1	150		PIPE SHOE AS PER DETAIL 2, DWG 65-116-270-200
5	2	150		PIPE SHOE AS PER DETAIL 2, DWG 65-116-270-200

No.	DATE	REVISION	PAR / APP
2	2017/09/21	PROJECT TITLE REVISED	KHV
1	2017/09/11	LINE NUMBERS REVISED	KHV
0	2017/05/15	ISSUED FOR CONSTRUCTION	KHV

CLIENT:

AGNICO EAGLE

NUOSANA-PROMEC MINING

ultragen

CONSULTANT PROJECT NO. 591700

NO. DE CONDUITE		SPECIFICATION	PRODUIT	SYSTEME REVETEMENT	CODE DE COULEUR	ISOLATION ET TRACAGE	EPAISS. D'ISOLATION		
116-150-PDI-CC10-0001		CC10	PDI		–			65-116-270-200	PIPE SUPPORT DETAILS
PRESSION D'OPERATION	TEMPERATURE D'OPERATION	PRESSION DE CONCEPTION	TEMPERATURE DE CONCEPTION	PRESSION D'ESSAI	CLASSE D'INSPECTION	CODE DE SERVICE	TRAITEMENT THERMIQUE	65-116-205-200	P&ID
PSIG	°F	PSIG	°F	PSIG				No. DESSIN	DESSINS DE REFERENCE

SCEAU PROFESSIONNEL
REGISTERED PROFESSIONAL ENGINEER
D. TRUONG
LICENSEE
NT/NU

CONC.: KHV
DATE: 2017/04/25
DESSINE PAR: KVE
DATE: 2017/04/25
VER. PAR: -
DATE: -
APP.: -
DATE: -
ECHELLE: AUCUNE

PROJET:
AGNICO EAGLE - MELIADINE DIVISION
116 - FUEL TANK FARM

TITRE:
RANKIN INLET
FABRICATION ISOMETRIC
MARINE LINE TO 65TNK11601 & 65TNK11602

No PROJET	No DESSIN	PAGES	REV.
6515	116-150-PDI-CC10-0001	6/13	2

116-MN-01

ICONES: W:\Agnico Eagle\V4-Gabriel\591700 (Fuel Distribution)\05 Design\02 Isometrics\01 Fabrication\F-150-PDI-CC10-0001-6.DWG

IMPRIME LE: Sep 20, 2017, 2:44pm

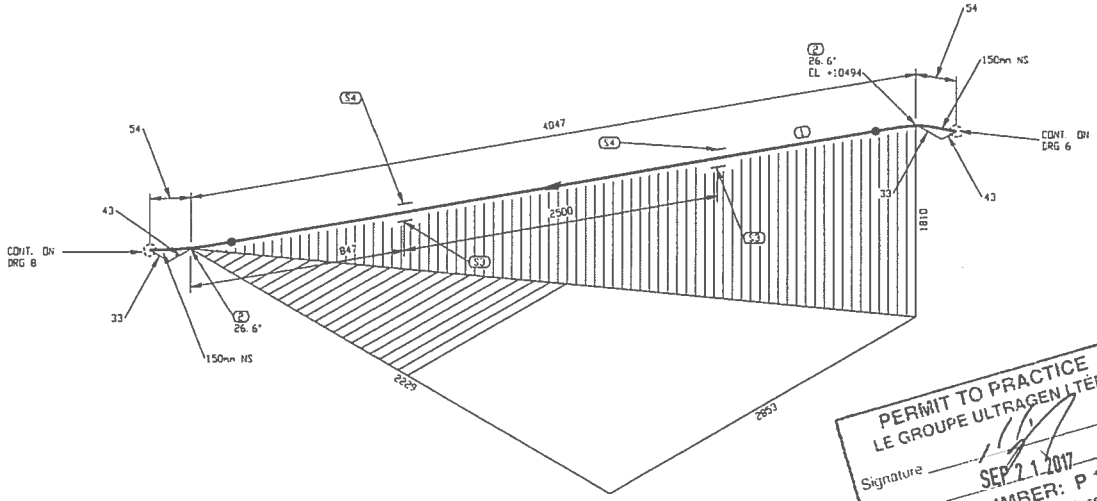

PERMIT TO PRACTICE
LE GROUPE ULTRAGEN LTÉE
Signature
Date SEP 21 2017
PERMIT NUMBER: P 1180
NT/NU Association of Professional Engineers and Geoscientists

FABRICATION DRAWINGS BASED ON WSP CERTIFIED ENGINEERING

LISTE DE MATERIEL

No	QTE	DIA	MATERIEL/CATALOGUE	DESCRIPTION
1	3939 MM	150	A 333 Gr. 6	SCH STD, SMLS PIPE
2	2	150	A 420 Gr WPL6	SCH STD, BV LR 45 DEG ELBOW TRIM TO 26.57
3	2	150		PIPE SUPPORT AS PER DETAIL 1, DWG 65-116-270-200
4	2	150		PIPE SHOE AS PER DETAIL 2, DWG 65-116-270-200

No.	DATE	REVISION	PAR / APP.
2	2017/09/21	PROJECT TITLE REVISED	KHV
1	2017/09/11	LINE NUMBERS REVISED	KHV
0	2017/05/15	ISSUED FOR CONSTRUCTION	KHV

CLIENT: AGNICO EAGLE

NUOSANA-PROMEC MINING

ultragen

CONSULTANT PROJECT NO. 591700

NO. DE CONDUITE		SPECIFICATION	PRODUIT	SYSTEME REVETEMENT	CODE DE COULEUR	ISOLATION ET TRACAGE	EPAISS. D'ISOLATION		
116-150-PDI-CC10-0001		CC10	PDI		-			65-116-270-200	PIPE SUPPORT DETAILS
PRESSION D'OPERATION	TEMPERATURE D'OPERATION	PRESSION DE CONCEPTION	TEMPERATURE DE CONCEPTION	PRESSION D'ESSAI	CLASSE D'INSPECTION	CODE DE SERVICE	TRAITEMENT THERMIQUE	65-116-205-200	P&ID
PSIG	°F	PSIG	°F	PSIG				No. DESSIN	DESSINS DE REFERENCE

REGISTERED PROFESSIONAL ENGINEER
D TRUONG
LICENSEE
NT/NU
2017/09/21

CONC.: KHV
DATE: 2017/04/25
DESSINE PAR: KVC
DATE: 2017/04/25
VER. PAR: -
DATE: -
APP.: -
DATE: -
ECHELLE: AUCUNE

PROJET: AGNICO EAGLE - MELIADINE DIVISION
116 - FUEL TANK FARM

TITRE: RANKIN INLET
FABRICATION ISOMETRIC
MARINE LINE TO 65TNK11601 & 65TNK11602

No PROJET	No DESSIN	PAGES	REV.
6515	116-150-PDI-CC10-0001	7/13	2

116-MN-01

FICHIER: W:\Agnico Eagle\Meliadine\591700 (For Detailed)\05 Design\02. Isometrics\01 Rankin Inlet\116-150-PDI-CC10-0001-7.DWG

MARIEVE LE. Sep 20, 2017, 2:44pm

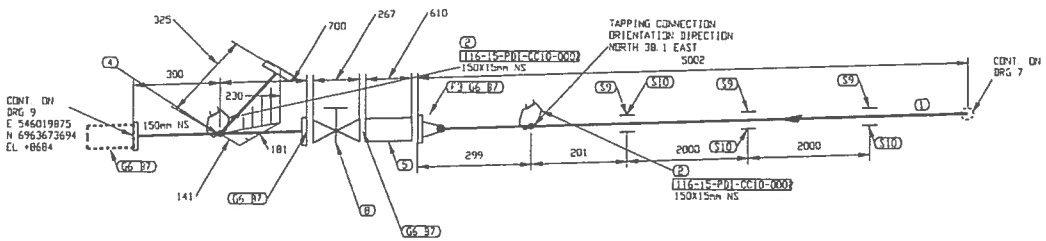

LISTE DE MATERIEL

No	QTE	DIA	MATERIEL/CATALOGUE	DESCRIPTION
1	4914 MM	150	A 333 Gr 6	SCH STD, SMLS PIPE
2	2	150X15	A 350 Gr LF2	CL 3000, THREDOLET
3	1	150	A 350 Gr LF2	CL 150, SCH STD, RF, WN FLANGE
4	1	150X150		CL 150, PIG CATCHER AS PER DETAIL B, DWG: 65-116-270-200
5	1	150		CL 150, SINGLE BRAIDED HOSE ASSEMBLY
6	4	150	ASME B16 20	CL 150, GARLOCK 5500, RING TYPE GASKET 1/8" THK
7	32	19	A 193 B7/A 194 2H	CL 150, 8 - 19 05 X 100 STUD BOLTS c/w TWO HEAVY HEX NUTS
8	1	150	GA-10	CL 150, RF, CS, FULL PORT GATE VALVE
9	3	150		PIPE SUPPORT AS PER DETAIL 1, DWG: 65-116-270-200
10	3	150		PIPE SHOE AS PER DETAIL 2, DWG: 65-116-270-200

No.	DATE	REVISION	PAR / APP
2	2017/09/21	PROJECT TITLE REVISED	KHV
1	2017/09/11	LINE NUMBERS REVISED	KHV
0	2017/05/15	ISSUED FOR CONSTRUCTION	KHV

PERMIT TO PRACTICE
LE GROUPE ULTRAGEN LTÉE
Signature
Date SEP 21 2017
PERMIT NUMBER: P 1180
NT/NU Association of Professional Engineers and Geoscientists

FABRICATION DRAWINGS BASED ON WSP CERTIFIED ENGINEERING

CLIENT:

AGNICO EAGLE

NUOSANA-PROMEC MINING

ultragen

CONSULTANT PROJECT NO. 591700

REGISTERED PROFESSIONAL ENGINEER
D TRUONG
LICENSEE
NT/NU
2017/09/21

CONC.: KHV
DATE: 2017/04/25
DESSINE PAR: KVE
DATE: 2017/04/25
VER. PAR: -
DATE: -
APP.: -
DATE: -
ECHELLE: AUCUNE

PROJET: AGNICO EAGLE - MELIADINE DIVISION
116 - FUEL TANK FARM

TITRE: RANKIN INLET
FABRICATION ISOMETRIC
MARINE LINE TO 65TNK11601 & 65TNK11602

No PROJET	No DESSIN	PAGES	REV.
6515	116-150-PDI-CC10-0001	8/13	2

NO. DE CONDUITE		SPECIFICATION	PRODUIT	SYSTEME REVETEMENT	CODE DE COULEUR	ISOLATION ET TRACAGE	EPAISS. D'ISOLATION		
116-150-PDI-CC10-0001		CC10	PDI		-			65-116-270-200	PIPE SUPPORT DETAILS
PRESSION D'OPERATION	TEMPERATURE D'OPERATION	PRESSION DE CONCEPTION	TEMPERATURE DE CONCEPTION	PRESSION D'ESSAI	CLASSE D'INSPECTION	CODE DE SERVICE	TRAITEMENT THERMIQUE	65-116-205-200	P&ID
		PSIG	°F	PSIG				No. DESSIN	DESSINS DE REFERENCE

116-MN-01

FICHIER: W:\Agnico Eagle\Meliadine\591700 (Last Checkpoint)\03. Design\02. Isometrics\01. Marine Work\116-150-PDI-CC10-0001-B.DWG

RAPPORT LE: Sep 20, 2017, 2:44pm

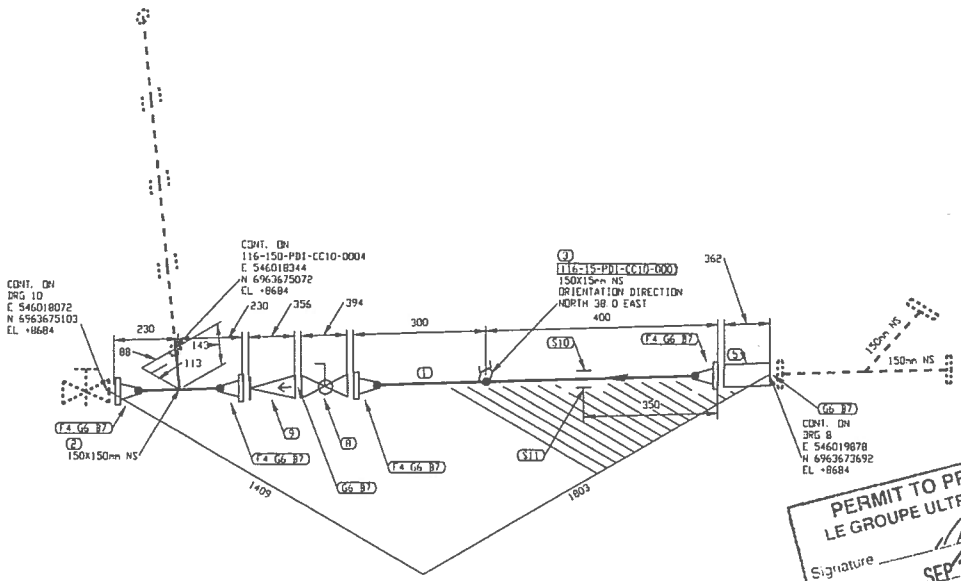

PERMIT TO PRACTICE
LE GROUPE ULTRAGEN LTEE
Signature
Date SEP 21 2017
PERMIT NUMBER: P 1180
NT/NU Association of Professional Engineers and Geoscientists

FABRICATION DRAWINGS BASED ON WSP CERTIFIED ENGINEERING

LISTE DE MATERIEL

No	QTE	DA	MATERIEL/CATALOGUE	DESCRIPTION
1	525 MM	150	A 333 Gr. 6	SCH STD, SMLS PIPE
2	1	150X150	A 420 Gr. WPL6	SCH STD, BW STRAIGHT TEE
3	1	150X15	A 350 Gr. LF2	CL 3000, THREEOLET
4	4	150	A 350 Gr. LF2	CL 150, SCH STD, RF, WN FLANGE
5	1	150		CL 150, IFLOW INDICATOR 'VISI-FLO'
6	6	150	ASME B16.20	CL 150, GARLOCK 3500, RING TYPE GASKET 1/8" THK
7	48	19	A 193 B7/A 194 2H	CL 150, 8 - 19.05 x 100 STUD BOLTS c/w TWO HEAVY HEX NUTS
8	1	150	BA-31	CL 150, RF, BALL VALVE
9	1	150	CK-29	CL 150, RF, SWING CHECK VALVE
10	1	150		PIPE SUPPORT AS PER DETAIL 1, DWG 65-116-270-200
11	1	150		PIPE SHOE AS PER DETAIL 2, DWG 65-116-270-200

No.	DATE	REVISION	PAR / APP
2	2017/09/21	PROJECT TITLE REVISED	KHV
1	2017/09/11	LINE NUMBERS REVISED	KHV
0	2017/05/15	ISSUED FOR CONSTRUCTION	KHV

CLIENT:

AGNICO EAGLE

NUQSANA-PROMEC MINING

ultragen

CONSULTANT PROJECT NO. 591700

NO. DE CONDUITE		SPECIFICATION	PRODUIT	SYSTEME REVETEMENT	CODE DE COULEUR	ISOLATION ET TRACAGE	EPAISS. D'ISOLATION		
116-150-PDI-CC10-0001		CC10	PDI		-			65-116-270-200	PIPE SUPPORT DETAILS
PRESSION D'OPERATION	TEMPERATURE D'OPERATION	PRESSION DE CONCEPTION	TEMPERATURE DE CONCEPTION	PRESSION D'ESSAI	CLASSE D'INSPECTION	CODE DE SERVICE	TRAITEMENT THERMIQUE	65-116-205-200	P&ID
PSIG	°F	PSIG	°F	PSIG				No. DESSIN	DESSINS DE REFERENCE

SCEAU PROFESSIONNEL
REGISTERED PROFESSIONAL ENGINEER
D TRUONG
LICENSEE
NWT/NU

CONC.: KHV
DATE: 2017/04/25
DESSINE PAR: KVC
DATE: 2017/04/25
VER. PAR: -
DATE: -
APP.: -
DATE: -
ECHELLE: AUCUNE

PROJET:
AGNICO EAGLE - MELIADINE DIVISION
116 - FUEL TANK FARM

TITRE:
RANKIN INLET
FABRICATION ISOMETRIC
MARINE LINE TO 65TNK11601 & 65TNK11602

No PROJET	No DESSIN	PAGES	REV.
6515	116-150-PDI-CC10-0001	9/13	2

116-MN-01

TC4D: M:\Agnico Eagle\Meadow\591700 (Fuel Distribution)\05 Drawings\03 Isometrics\01 Rankin Inlet\116-150-PDI-CC10-0001-0.DWG

IMPRIMÉ LE: Sep 20, 2017, 2:44pm

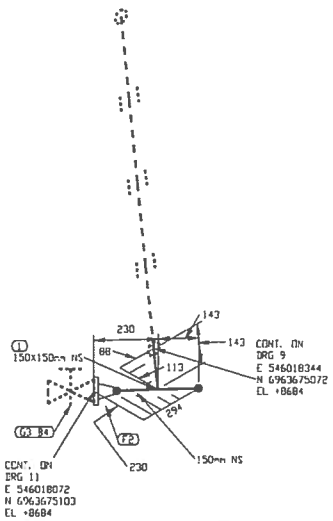

PERMIT TO PRACTICE
LE GROUPE ULTRAGEN LTÉE
Signature
Date SEP 21 2017
PERMIT NUMBER: P 1180
NT/NU Association of Professional Engineers and Geoscientists

FABRICATION DRAWINGS BASED ON WSP CERTIFIED ENGINEERING

LISTE DE MATERIEL

No	Q'TE	DIA	MATERIEL/CATALOGUE	DESCRIPTION
1	1	150X150	A 420 Gr. WPL6	SCH STD, BW STRAIGHT TEE
2	1	150	A 350 Gr LF2	CL 150, SCH STD, RF, WN FLANGE
3	1	150	ASME B16.20	CL 150, GARLOCK 5500, RING TYPE GASKET 1/8" THK
4	8	19	A 193 B7/A 194 2H	CL 150, 8 - 19.05 X 100 STUD BOLTS c/w TWO HEAVY HEX NUTS

No.	DATE	REVISION	PAR / APP
2	2017/09/21	PROJECT TITLE REVISED	KHV
1	2017/09/11	LINE NUMBERS REVISED	KHV
0	2017/05/15	ISSUED FOR CONSTRUCTION	KHV

CLIENT: AGNICO EAGLE

NUQSANA-PROMEC MINING

ultragen

CONSULTANT PROJECT NO. 591700

NO. DE CONDUITE		SPECIFICATION	PRODUIT	SYSTEME REVETEMENT	CODE DE COULEUR	ISOLATION ET TRACAGE	EPAISS. D'ISOLATION		
116-150-PDI-CC10-0001		CC10	PDI		-			65-116-270-200	PIPE SUPPORT DETAILS
PRESSION D'OPERATION	TEMPERATURE D'OPERATION	PRESSION DE CONCEPTION	TEMPERATURE DE CONCEPTION	PRESSION D'ESSAI	CLASSE D'INSPECTION	CODE DE SERVICE	TRAITEMENT THERMIQUE	65-116-205-200	P&ID
PSIG	°F	PSIG	°F	PSIG				No. DESSIN	DESSINS DE REFERENCE

REGISTERED PROFESSIONAL ENGINEER
D TRUONG
LICENSEE
NT/NU
2017/09/21

CONC.: KHV
DATE: 2017/04/25
DESSINE PAR: KVE
DATE: 2017/04/25
VER. PAR: -
DATE: -
APP.: -
DATE: -
ECHELLE: AUCUNE

PROJET: AGNICO EAGLE - MELIADINE DIVISION
116 - FUEL TANK FARM

TITRE: RANKIN INLET
FABRICATION ISOMETRIC
MARINE LINE TO 65TNK11601 & 65TNK11602

No PROJET	No DESSIN	PAGES	REV.
6515	116-150-PDI-CC10-0001	10/13	2

116-MN-01

FICHIER: H:\Agnico Eagle\Meliadine\591700 (Fuel Distribution)\05 Design\03 Isometrics\01 Marine Line\116-150-PDI-CC10-0001-10.DWG

AFFICHE LE Sep 20, 2017 2:44pm

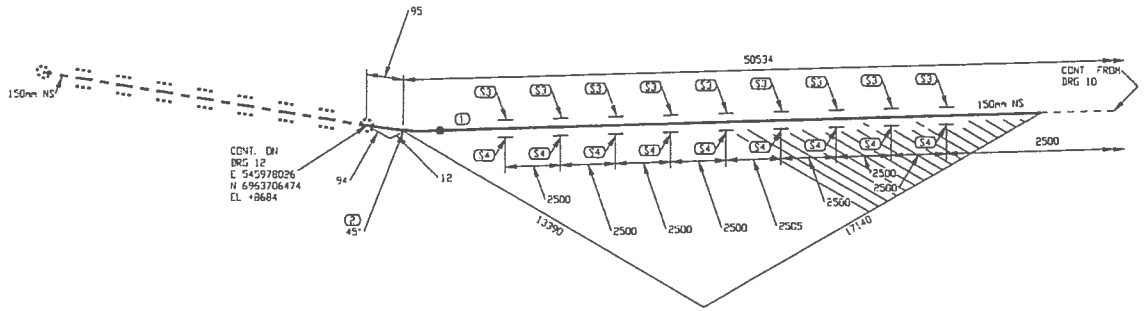

PERMIT TO PRACTICE
LE GROUPE ULTRAGEN LTÉE
Signature
Date SEP 21 2017
PERMIT NUMBER: P 1180
NT/NU Association of Professional Engineers and Geoscientists

FABRICATION DRAWINGS BASED ON WSP CERTIFIED ENGINEERING

LISTE DE MATERIEL

No	QTE	DIA	MATERIEL/CATALOGUE	DESCRIPTION
1	21655 MM	150	A 333 Gr 6	SCH STD, SMLS PIPE
2	1	150	A 420 Gr WPL6	SCH STD, BW LR 45 DEG ELBOW
3	9	150		PIPE SUPPORT AS PER DETAIL 1, DWG 65-116-270-200
4	9	150		PIPE SHOE AS PER DETAIL 2, DWG 65-116-270-200

No.	DATE	REVISION	PAR	APP.
2	2017/09/21	PROJECT TITLE REVISED	KHV	
1	2017/09/11	LINE NUMBERS REVISED	KHV	
0	2017/05/15	ISSUED FOR CONSTRUCTION	KHV	

CLIENT: AGNICO EAGLE

NUOSANA-PROMEC MINING

ultragen

CONSULTANT PROJECT NO. 591700

NO. DE CONDUITE		SPECIFICATION	PRODUIT	SYSTEME REVETEMENT	CODE DE COULEUR	ISOLATION ET TRACAGE	EPAISS. D'ISOLATION		
116-150-PDI-CC10-0001		CC10	PDI		-			65-116-270-200	PIPE SUPPORT DETAILS
PRESSION D'OPERATION	TEMPERATURE D'OPERATION	PRESSION DE CONCEPTION	TEMPERATURE DE CONCEPTION	PRESSION D'ESSAI	CLASSE D'INSPECTION	CODE DE SERVICE	TRAITEMENT THERMIQUE	65-116-205-200	P&ID
PSIG	°F	PSIG	°F	PSIG				No. DESSIN	DESSINS DE REFERENCE

SCEAU PROFESSIONNEL
REGISTERED PROFESSIONAL ENGINEER
D. TRUONG
LICENSEE
NT/NU
2017/09/21

CONC.: KHV
DATE: 2017/04/25
DESSINÉ PAR: KVE
DATE: 2017/04/25
VER. PAR: -
DATE: -
APP.: -
DATE: -
ÉCHELLE: AUCUNE

PROJET: AGNICO EAGLE - MELIADINE DIVISION
116 - FUEL TANK FARM

TITRE: RANKIN INLET
FABRICATION ISOMETRIC
MARINE LINE TO 65TNK11601 & 65TNK11602

No PROJET	No DESSIN	PAGES	REV.
6515	116-150-PDI-CC10-0001	11/13	2

116-MN-01

FICHIER: m:\Agnico Eagle\Meliadine\591700 (Fuel Distribution)\05 Dessins\02 Tuyauterie\02 Isometriques\01 Rankin Inet\116-150-PDI-CC10-0001-11.DWG

IMPRIMÉ LE Sep 20, 2017 2:44pm

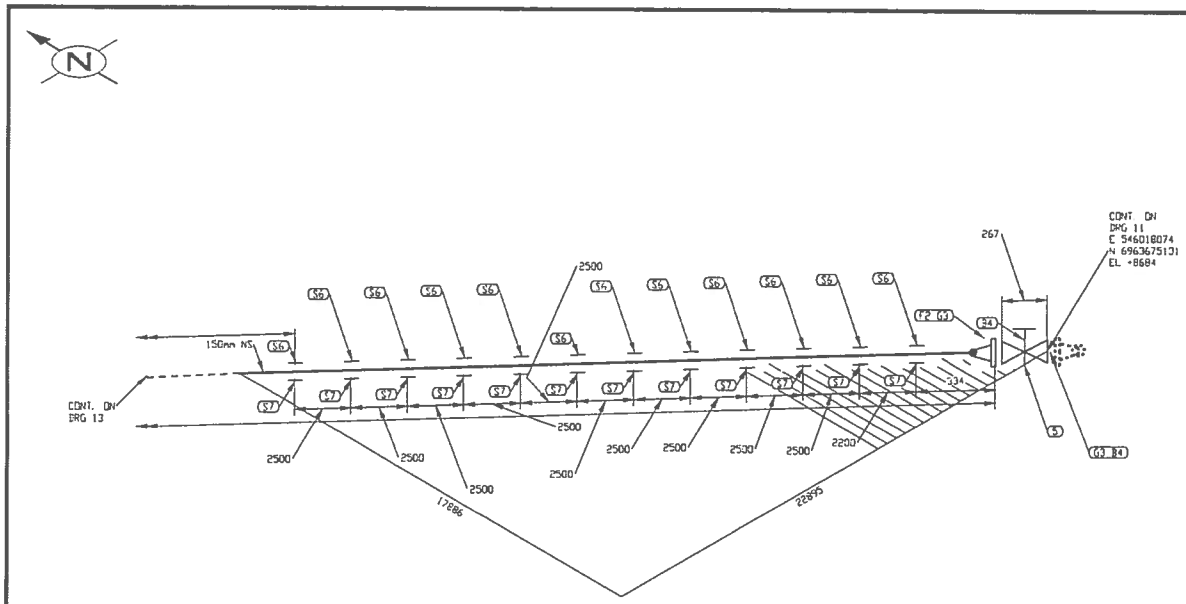

PERMIT TO PRACTICE
LE GROUPE ULTRAGEN LTÉE
Signature
Date SEP 21 2017
PERMIT NUMBER: P 1180
NT/NU Association of Professional Engineers and Geoscientists

FABRICATION DRAWINGS BASED ON WSP CERTIFIED ENGINEERING

LISTE DE MATERIEL

No	QTE	DIA	MATERIEL/CATALOGUE	DESCRIPTION
1	28696 MM	150	A 333 Gr 6	SCH STD, SMLS PIPE
2	1	150	A 350 Gr LF2	CL 150, SCH STD, RF, WN FLANGE
3	2	150	ASME B16.20	CL 150, GARLOCK 5500, RING TYPE GASKET 1/8" THK
4	16	19	A 193 B7/A 194 2H	CL 150, 8 - 19.05 X 100 STUD BOLTS c/w TWO HEAVY HEX NUTS
5	1	150	GA-10	CL 150, RF, CS, GATE VALVE
6	12	150		PIPE SUPPORT AS PER DETAIL 1, DWG 65-116-270-200
7	12	150		PIPE SHOE AS PER DETAIL 2, DWG 65-116-270-200

No.	DATE	REVISION	PAR / APP.
2	2017/09/21	PROJECT TITLE REVISED	KHV
1	2017/09/11	LINE NUMBERS REVISED	KHV
0	2017/05/15	ISSUED FOR CONSTRUCTION	KHV

CLIENT: AGNICO EAGLE

NUQSANA-PROMEC MINING

ultragen

CONSULTANT PROJECT NO. 591700

NO. DE CONDUITE		SPECIFICATION	PRODUIT	SYSTEME REVETEMENT	CODE DE COULEUR	ISOLATION ET TRACAGE	EPAISS. D'ISOLATION		
116-150-PDI-CC10-0001		CC10	PDI		-			65-116-270-200	PIPE SUPPORT DETAILS
PRESSION D'OPERATION	TEMPERATURE D'OPERATION	PRESSION DE CONCEPTION	TEMPERATURE DE CONCEPTION	PRESSION D'ESSAI	CLASSE D'INSPECTION	CODE DE SERVICE	TRAITEMENT THERMIQUE	65-116-205-200	P&ID
PSIG	°F	PSIG	°F	PSIG				No. DESSIN	DESSINS DE REFERENCE

SCEAU PROFESSIONNEL
REGISTERED PROFESSIONAL ENGINEER
D. TRUONG
LICENSEE
NT/NU
2017/09/21

CONC.: KHV
DATE: 2017/04/25
DESSINÉ PAR: KVE
DATE: 2017/04/25
VER. PAR: -
DATE: -
APP.: -
DATE: -
ÉCHELLE: AUCUNE

PROJET: AGNICO EAGLE - MELIADINE DIVISION
116 - FUEL TANK FARM

TITRE: RANKIN INLET
FABRICATION ISOMETRIC
MARINE LINE TO 65TNK11601 & 65TNK11602

No PROJET	No DESSIN	PAGES	REV.
6515	116-150-PDI-CC10-0001	12/13	2

116-MN-01

FICHIER: W:\Agnico Eagle\Meliadine\591700 (Fuel Distribution)\05. Dessins\02. Isometriques\01. Rankin Inlet\116-150-PDI-CC10-0001-12.DWG

APPROVE LE Sep 20, 2017 2:44pm

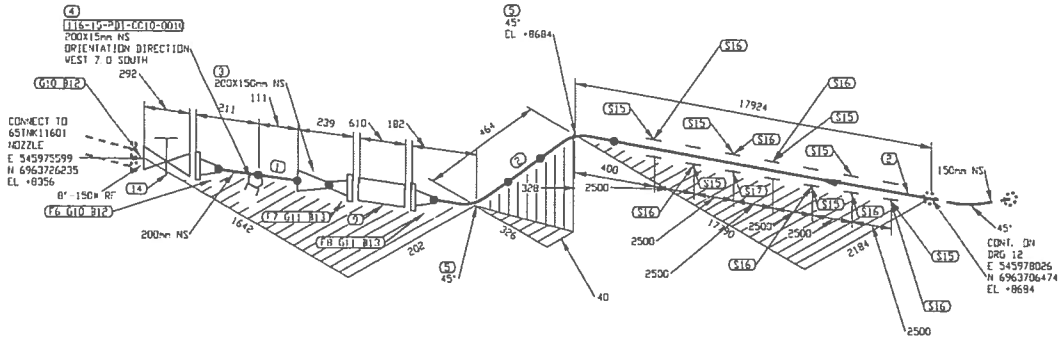

LISTE DE MATERIEL

No	QTE	DIA	MATERIEL/CATALOGUE	DESCRIPTION
1	222 MM	200	A 333 Gr 6	SCH STD, SMLS PIPE
2	18103 MM	150	A 333 Gr 6	SCH STD, SMLS PIPE
3	1	200X150	A 420 Gr WPL6	SCH STD, BW CONC RED
4	1	200X15	A 350 Gr LF2	CL 3000, THREDOLET
5	2	150	A 420 Gr WPL6	SCH STD, BW LR 45 DEG ELBOW
6	1	200	A 350 Gr LF2	CL 150, SCH STD, RF, WN FLANGE
7	1	150	A 350 Gr LF2	CL 150, SCH STD, RF, WN FLANGE
8	1	150	A 350 Gr LF2	CL 150, SCH STD, RF, WN FLANGE
9	1	150		CL 150, SINGLE BRAIDED HOSE ASSEMBLY
10	2	200	ASME B16.20	CL 150, GARLOCK 5500, RING TYPE GASKET 1/8" THK
11	2	150	ASME B16.20	CL 150, GARLOCK 5500, RING TYPE GASKET 1/8" THK
12	16	19	A 193 B7/A 194 2H	CL 150, 8 - 19.05 X 110 STUD BOLTS c/w TWO HEAVY HEX NUTS
13	16	19	A 193 B7/A 194 2H	CL 150, 8 - 19.05 X 100 STUD BOLTS c/w TWO HEAVY HEX NUTS
14	1	200	GA-10	CL 150, RF, CS, FULL PORT GATE VALVE
15	7	150		PIPE SUPPORT AS PER DETAIL 1, DWG 65-116-270-2C0
16	7	150		PIPE SHOE AS PER DETAIL 2, DWG 65-116-270-2C0
17	1	150		PIPE SHOE AS PER DETAIL 2, DWG 65-116-270-2C0

PERMIT TO PRACTICE
LE GROUPE ULTRAGEN LTÉE
Signature
Date SEP 21 2017
PERMIT NUMBER: P 1180
NT/NU Association of Professional Engineers and Geoscientists

FABRICATION DRAWINGS BASED ON WSP CERTIFIED ENGINEERING

No.	DATE	REVISION	PAR	APP.
2	2017/09/21	PROJECT TITLE REVISED	KHV	
1	2017/09/11	LINE NUMBERS REVISED	KHV	
0	2017/05/15	ISSUED FOR CONSTRUCTION	KHV	

CLIENT: AGNICO EAGLE

NUQSANA-PROMEC MINING

ultragen

CONSULTANT PROJECT NO. 591700

NO. DE CONDUITE		SPECIFICATION	PRODUIT	SYSTEME REVETEMENT	CODE DE COULEUR	ISOLATION ET TRACAGE	EPAISS. D'ISOLATION		
116-150-PDI-CC10-0001		CC10	PDI		-			65-116-270-200	PIPE SUPPORT DETAILS
PRESSION D'OPERATION	TEMPERATURE D'OPERATION	PRESSION DE CONCEPTION	TEMPERATURE DE CONCEPTION	PRESSION D'ESSAI	CLASSE D'INSPECTION	CODE DE SERVICE	TRAITEMENT THERMIQUE	65-116-205-200	P&ID
PSIG	°F	PSIG	°F	PSIG				No. DESSIN	DESSINS DE REFERENCE

SCEAU PROFESSIONNEL
REGISTERED PROFESSIONAL ENGINEER
D TRUONG
LICENSEE
NT/NU
2017/09/21

CONC.: KHV
DATE: 2017/04/25
DESSINE PAR: KVE
DATE: 2017/04/25
VER. PAR: -
DATE: -
APP.: -
DATE: -
ECHELLE: AUCUNE

PROJET: AGNICO EAGLE - MELIADINE DIVISION
116 - FUEL TANK FARM

TITRE: RANKIN INLET
FABRICATION ISOMETRIC
MARINE LINE TO 65TNK11601 & 65TNK11602

No PROJET	No DESSIN	PAGES	REV.
6515	116-150-PDI-CC10-0001	13/13	2

116-MN-01

FICHIER: H:\Agnico Eagle\Meliadine\591700 (Fuel Distribution)\05 Design\C2 Tank\Fuel\02 Isometrique\01 Rankin Inlet\116-150-PDI-CC10-0001-13.DWG

IMPRIME LE: Sep 20, 2017, 2:44pm

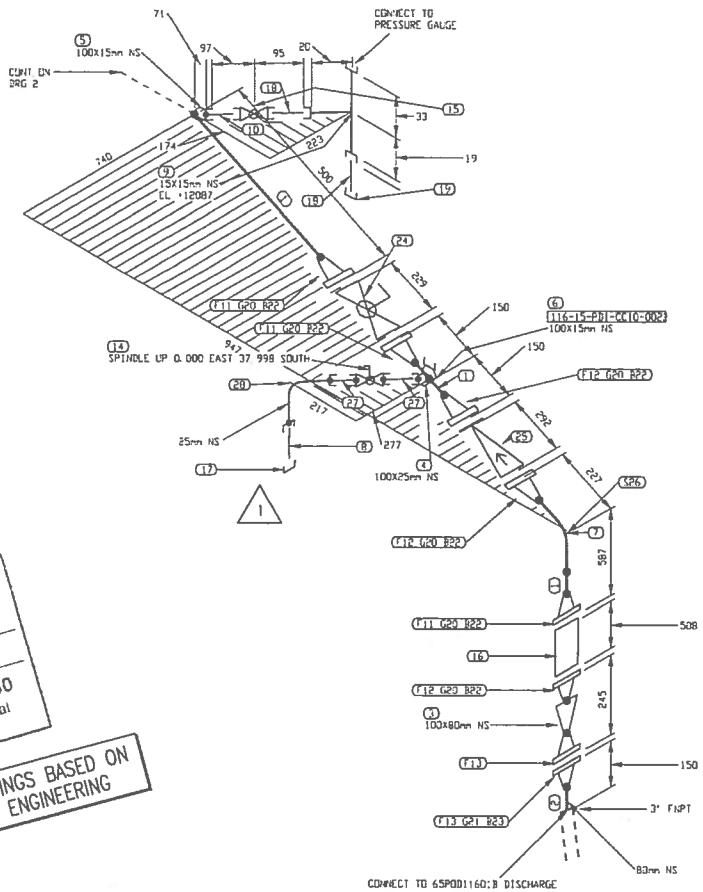

LISTE DE MATERIEL

No	QTE	DIA	MATERIEL/CATALOGUE	DESCRIPTION
1	577 MM	100	A 333 Gr 6	SCH STD, SMLS PIPE
2	82 MM	80	A 333 Gr 6	SCH STD, SMLS PIPE PDE×TDE
3	1	100X80	A 420 Gr WPL6	SCH STD, BW CONC RED
4	1	100X25	A 350 Gr LF2	CL 3000, SOCKOLET
5	1	100X15	A 350 Gr LF2	CL 3000, SOCKOLET
6	1	100X15	A 350 Gr LF2	CL 3000, THREDOLET
7	1	100	A 420 Gr WPL6	SCH STD, BW LR 90 DEG ELBOW
8	1	25	A 333 Gr 6	SCH 80, NIPPLE × 75mm LG PDE×TDE
9	1	15X15	A 350 Gr LF2	CL 3000, THRD STRAIGHT TEE
10	1	15	A 333 Gr 6	SCH 80, NIPPLE × 75mm LG PDE×TDE
11	3	100	A 350 Gr LF2	CL 150, SCH STD, RF, WN FLANGE
12	3	100	A 350 Gr LF2	CL 150, SCH STD, RF, WN FLANGE
13	2	80	A 350 Gr LF2	CL 150, SCH STD, RF, WN FLANGE
14	1	25	BA-29	CL 600,VS BALL VALVE
15	1	15	BA-32	CL 600, THRD, BALL VALVE
16	1	100		CL 150, SINGLE BRAIDED HOSE ASSEMBLY
17	1	25	A 350 Gr LF2	CL 3000, THRD CAP
18	2	15	A 333 Gr 6	SCH 80, NIPPLE × 75mm LG TBE
19	1	15	A 350 Gr LF2	CL 150, GARLOCK 5500, RING TYPE GASKET 1/8"
20	6	100	ASME B16.20	CLK150, GARLOCK 5500, RING TYPE GASKET 1/8"
21	1	80	ASME B16.20	CLK150, 8 - 15.875 x 90 STUD BOLTS c/w TWO
22	48	16	A 193 B7/A 194 2H	BEARSONEX NUTS.875 x 90 STUD BOLTS c/w TWO
23	4	16	A 193 B7/A 194 2H	HEAVY HEX NUTS
24	1	100	BA-31	CL 150, RF, BALL VALVE
25	1	100	CK-29	CL 150, RF, SWING CHECK VALVE
26	1	100		PIPE SUPPORT BY CONTRACTOR
27	2	25	A 333 Gr 6	SCH 80, NIPPLE × 75mm LG PBE
28	1	25	A 350 Gr LF2	CL 3000, SW 90 DEG ELBOW

No.	DATE	REVISION	PAR / APP
3	2017/09/21	PROJECT TITLE REVISED	TNg
2	2017/09/11	LINE NUMBERS REVISED	KHV
1	2017/06/30	DRAIN REVISED AS PER CLIENT COMMENTS	OVN
0	2017/05/15	ISSUED FOR CONSTRUCTION	KHV

CLIENT: AGNICO EAGLE

NUQSANA-PROMEC MINING

ultragen

CONSULTANT PROJECT NO. 591700

PERMIT TO PRACTICE
LE GROUPE ULTRAGEN LTÉE
Signature
Date SEP 21 2017
PERMIT NUMBER: P 1180
NT/NU Association of Professional Engineers and Geoscientists

FABRICATION DRAWINGS BASED ON WSP CERTIFIED ENGINEERING

SCEAU PROFESSIONNEL
REGISTERED PROFESSIONAL ENGINEER
D TRUONG
LICENSEE
2017/09/21

CONC.: KHV
DATE: 2017/04/25
DESSINÉ PAR: KVE
DATE: 2017/04/25
VER. PAR: -
DATE: -
APP.: -
DATE: -
ÉCHELLE: AUCUNE

PROJET: AGNICO EAGLE - MELIADINE DIVISION
116 - FUEL TANK FARM

TITRE: RANKIN INLET
FABRICATION ISOMETRIC
DIESEL FROM 65PDD11601B TO BOTTOM LOADING ARM 65EQM11601

No PROJET	No DESSIN	PAGES	REV.
6515	116-100-PDI-CC10-0020	1/2	3

116-MN-01

NO. DE CONDUITE		SPECIFICATION	PRODUIT	SYSTEME REVETEMENT	CODE DE COULEUR	ISOLATION ET TRACAGE	EPAISS. D'ISOLATION		
116-100-PDI-CC10-0020		CC10	PDI					65-116-270-200	PIPE SUPPORT DETAILS
PRESSION D'OPERATION	TEMPERATURE D'OPERATION	PRESSION DE CONCEPTION	TEMPERATURE DE CONCEPTION	PRESSION D'ESSAI	CLASSE D'INSPECTION	CODE DE SERVICE	TRAITEMENT THERMIQUE	65-116-205-200	P&ID
PSIG	°F	PSIG	°F	PSIG				No. DESSIN	DESSINS DE REFERENCE

IMPRIMÉ LE: Sep 25, 2017, 2:43pm

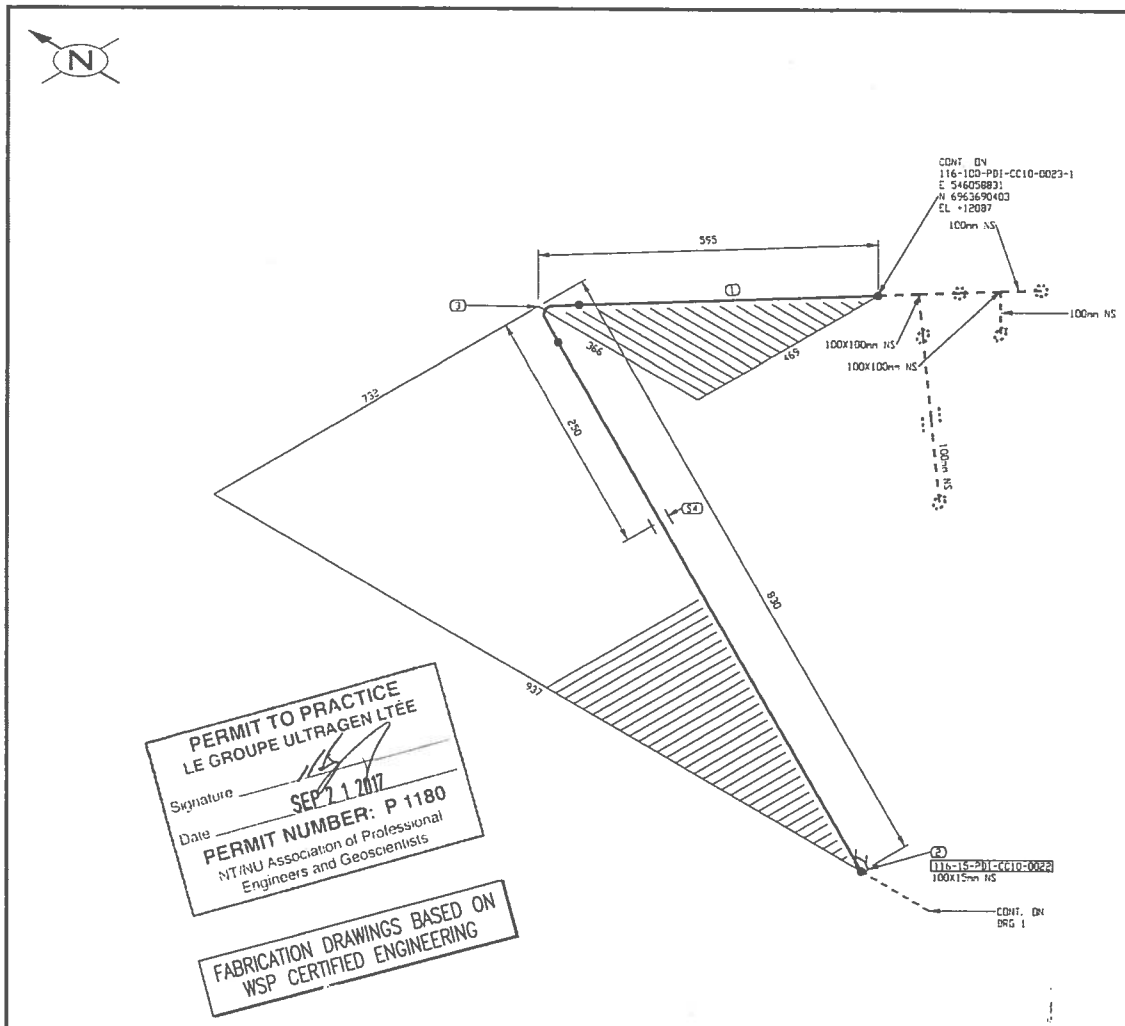

PERMIT TO PRACTICE
LE GROUPE ULTRAGEN LTÉE
Signature
Date SEP 2 1 2017
PERMIT NUMBER: P 1180
NT/NU Association of Professional Engineers and Geoscientists

FABRICATION DRAWINGS BASED ON WSP CERTIFIED ENGINEERING

LISTE DE MATERIEL

No	QTE	DIA	MATERIEL/CATALOGUE	DESCRIPTION
1	1480 MM	100	A 333 Gr 6	SCH STD, SMLS PIPE
2	1	100X15	A 350 Gr LF2	CL 3000, THREDOLET
3	1	100	A 420 Gr WPL6	SCH STD, BW LR 90 DEG ELBOW
4	1	100		PIPE SUPPORT BY CONTRACTOR

No.	DATE	REVISION	PAR / APP.
2	2017/09/21	PROJECT TITLE REVISED	KHV
1	2017/09/11	LINE NUMBERS REVISED	KHV
0	2017/05/15	ISSUED FOR CONSTRUCTION	KHV

CLIENT: AGNICO EAGLE

NUOSANA PROMEC MINING

ultragen

CONSULTANT PROJECT NO. 591700

NO. DE CONDUITE		SPECIFICATION	PRODUIT	SYSTEME REVETEMENT	CODE DE COULEUR	ISOLATION ET TRACAGE	EPAISS. D'ISOLATION		
116-100-PDI-CC10-0020		CC10	PDI					65-116-270-200	PIPE SUPPORT DETAILS
PRESSION D'OPERATION	TEMPERATURE D'OPERATION	PRESSION DE CONCEPTION	TEMPERATURE DE CONCEPTION	PRESSION D'ESSAI	CLASSE D'INSPECTION	CODE DE SERVICE	TRAITEMENT THERMIQUE	65-116-205-200	P&ID
PSIG	°F	PSIG	°F	PSIG				No. DESSIN	DESSINS DE REFERENCE

SCEAU PROFESSIONNEL
REGISTERED PROFESSIONAL ENGINEER
D TRUONG
LICENSEE
2017/09/21

CONC.: KHV
DATE: 2017/04/25
DESSINÉ PAR: KVE
DATE: 2017/04/25
VER. PAR: -
DATE: -
APP.: -
DATE: -
ÉCHELLE: AUCUNE

PROJET: AGNICO EAGLE - MELIADINE DIVISION
116 - FUEL TANK FARM

TITRE: RANKIN INLET
FABRICATION ISOMETRIC
DIESEL FROM 6SPDD11601B TO BOTTOM LOADING ARM 6SEQM11601

No PROJET	No DESSIN	PAGES	REV.
6515	116-100-PDI-CC10-0020	2/2	2

116-MN-01

FICHIER: W:\Agnico Eagle\Meliadine\591700 (Fuel Distribution)\05 Devices\02 Isometrics\01 Rankin Inlet\116-100-PDI-CC10-0020-2.DWG

IMPRIMÉ LE: Sep 22, 2017, 2:43pm

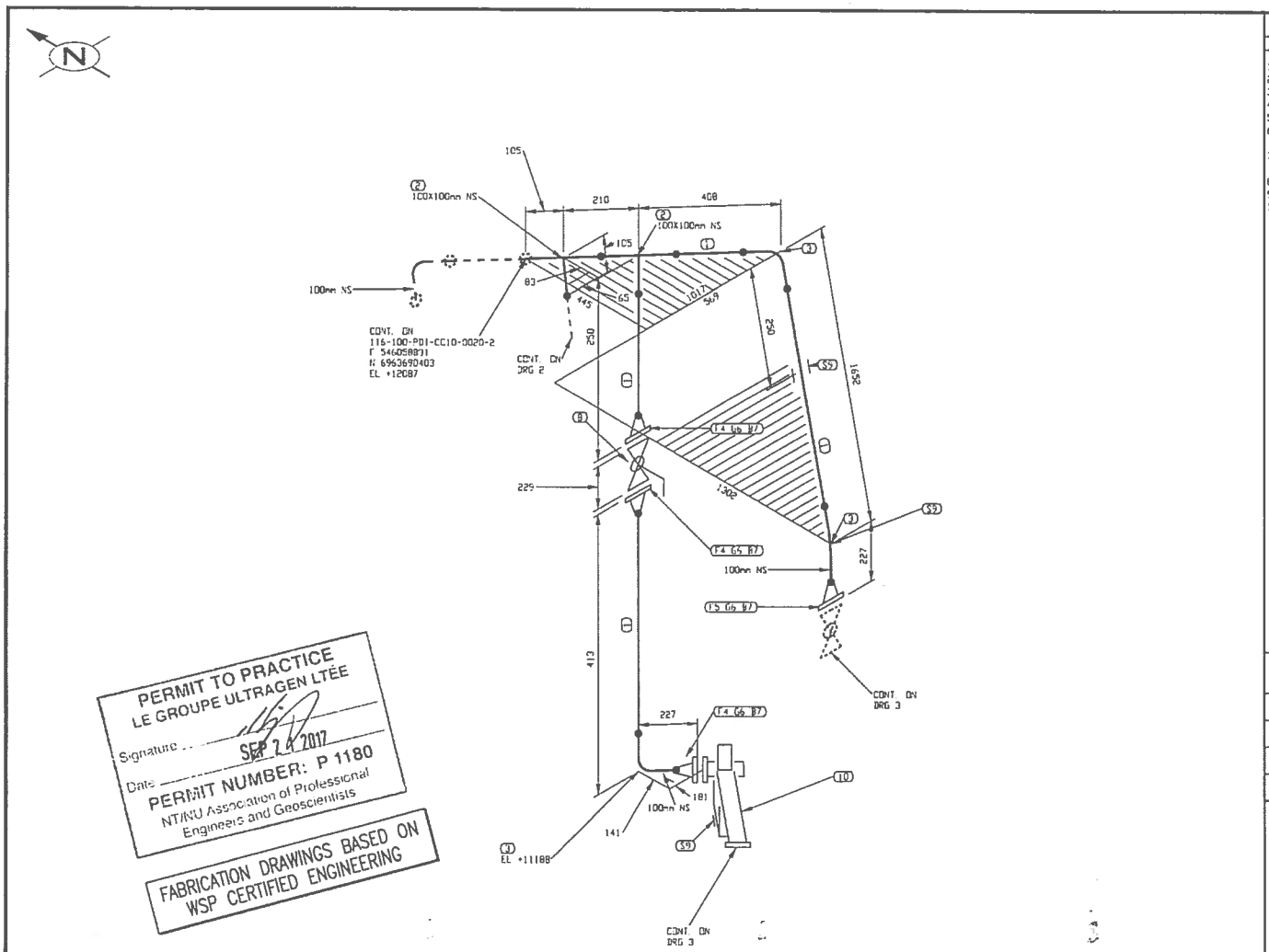

PERMIT TO PRACTICE
LE GROUPE ULTRAGEN LTÉE
Signature
Date SEP 2 4 2017
PERMIT NUMBER: P 1180
NT/NU Association of Professional Engineers and Geoscientists

FABRICATION DRAWINGS BASED ON WSP CERTIFIED ENGINEERING

LISTE DE MATERIEL

No	QTE	DIA	MATERIEL/CATALOGUE	DESCRIPTION
1	1755 MM	100	A 333 Gr. 6	SCH STD, SMLS PIPE
2	2	100x100	A 420 Gr. WPL6	SCH STD, BW STRAIGHT TEE
3	3	100	A 420 Gr. WPL6	SCH STD, BW LR 90 DEG ELBOW
4	3	100	A 350 Gr. LF2	CL 150, SCH STD, RF, WN FLANGE
5	1	100	A 350 Gr. LF2	CL 150, SCH STD, RF, WN FLANGE
6	4	100	ASME B16.20	CL 150, GARLOCK 5500, RING TYPE GASKET 1/8" THK
7	32	16	A 193 B7/A 194 2H	CL 150, A - 15 875 x 90 STUD BOLTS c/w TWO HEAVY HEX NUTS
8	1	100	BA-31	CL 150, RF, BALL VALVE
9	3	100		PIPE SUPPORT BY CONTRACTOR
10	1	100		TCS METER UNIT

No.	DATE	REVISION	PAR	APP
2	2017/09/21	PROJECT TITLE REVISED	KHV	
1	2017/09/11	LINE NUMBERS REVISED	KHV	
0	2017/05/15	ISSUED FOR CONSTRUCTION	KHV	

CLIENT:

AGNICO EAGLE

NUQSANA PROMEC MINING

ultragen

CONSULTANT PROJECT NO. 591700

NO. DE CONDUITE		SPECIFICATION	PRODUIT	SYSTEME REVETEMENT	CODE DE COULEUR	ISOLATION ET TRACAGE	EPAISS. D'ISOLATION		
116-100-PDI-CC10-0023		CC10	PDI		–			65-116-270-200	PIPE SUPPORT DETAILS
PRESSION D'OPERATION	TEMPERATURE D'OPERATION	PRESSION DE CONCEPTION	TEMPERATURE DE CONCEPTION	PRESSION D'ESSAI	CLASSE D'INSPECTION	CODE DE SERVICE	TRAITEMENT THERMIQUE	65-116-205-200	P&ID
PSIG	°F	PSIG	°F	PSIG				No. DESSIN	DESSINS DE REFERENCE

SCEAU PROFESSIONNEL
REGISTERED PROFESSIONAL ENGINEER
D. TRUONG
LICENSEE
2017/09/21

CONC.: KHV
DATE: 2017/04/25
DESSINE PAR: KVE
DATE: 2017/04/25
VER. PAR: –
DATE: –
APP.: –
DATE: –
ECHELLE: AUCUNE

PROJET:
AGNICO EAGLE - MELIADINE DIVISION
116 - FUEL TANK FARM

TITRE:
RANKIN INLET
FABRICATION ISOMETRIC
DIESEL FROM 65PUD11601A TO BOTTOM LOADING ARM 65EQM11601

No PROJET	No DESSIN	PAGES	REV.
6515	116-100-PDI-CC10-0023	1/4	2

116-MN-01

ICHER: K:\Cycos tage\Vancouver\591700 (Fuel Dispenser)\05. Design\02 Isometrics\02. Rankin Inlet\116-100-PDI-CC10-0023-1.DWG

IMPRIMÉ LE: Sep 20, 2017, 2:43pm

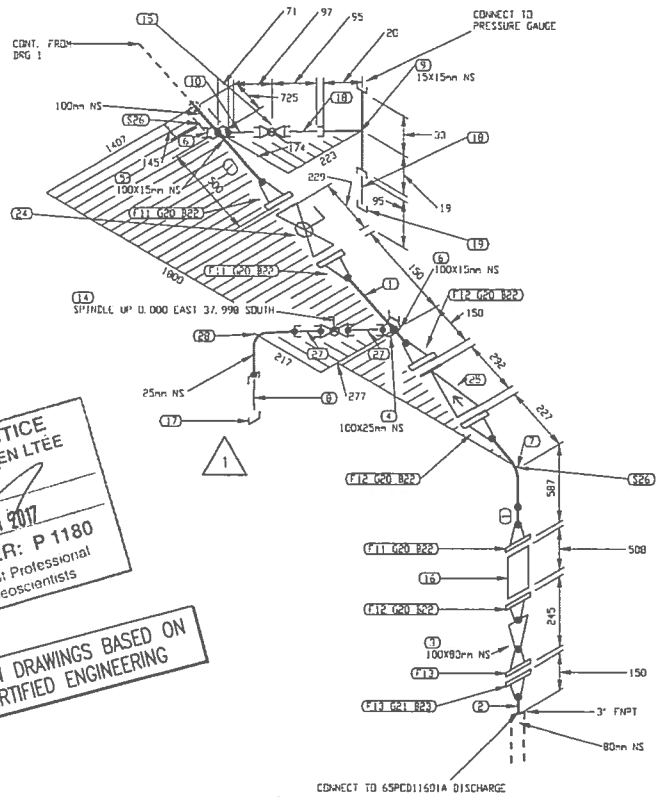

LISTE DE MATERIEL

No	QTE	DIA	MATERIEL/CATALOGUE	DESCRIPTION
1	1660 MM	100	A 333 Gr. 6	SCH STD, SMLS PIPE
2	82 MM	80	A 333 Gr. 6	SCH STD, SMLS PIPE PDE×TDE
3	1	100X80	A 420 Gr. WPL6	SCH STD, BW CONC RED
4	1	100X25	A 350 Gr. LF2	CL 3000, SOCKOLET
5	1	100X15	A 350 Gr. LF2	CL 3000, SOCKOLET
6	2	100X15	A 350 Gr. LF2	CL 3000, THREDOLET
7	1	100	A 420 Gr. WPL6	SCH STD, BW LR 90 DEG ELBOW
8	1	25	A 333 Gr. 6	SCH 80, NIPPLE × 75mm LG PDE×TDE
9	1	15X15	A 350 Gr. LF2	CL 3000, THRD STRAIGHT TEE
10	1	15	A 333 Gr. 6	SCH 80, NIPPLE × 75mm LG PDE×TDE
11	3	100	A 350 Gr. LF2	CL 150, SCH STD, RF, WN FLANGE
12	3	100	A 350 Gr. LF2	CL 150, SCH STD, RF, WN FLANGE
13	2	80	A 350 Gr. LF2	CL 150, SCH STD, RF, WN FLANGE
14	1	25	BA 29	CL 600, SW BALL VALVE
15	1	15	BA-32	CL 600, THRD, BALL VALVE
16	1	100		CL 150, SINGLE BRAIDED HOSE ASSEMBLY
17	1	25	A 350 Gr. LF2	CL 3000, THRD CAP
18	2	15	A 333 Gr. 6	SCH 80, NIPPLE × 75mm LG TBE
19	1	15	A 350 Gr. LF2	CL 150, GARLOCK 5500, RING TYPE GASKET 1/8"
20	6	100	ASME B16.20	CLK150, GARLOCK 5500, RING TYPE GASKET 1/8"
21	1	80	ASME B16.20	CLK150, 8 - 15.875 X 90 STUD BOLTS c/w TWO
22	48	16	A 193 B7/A 194 2H	HEAVY HEX NUTS.875 X 90 STUD BOLTS c/w TWO
23	4	16	A 193 B7/A 194 2H	HEAVY HEX NUTS
24	1	100	BA-31	CL 150, RF, BALL VALVE
25	1	100	CK-29	CL 150, RF, SWING CHECK VALVE
26	2	100		PIPE SUPPORT BY CONTRACTOR
27	2	25	A 333 Gr. 6	SCH 80, NIPPLE × 75mm LG PBE
28	1	25	A 350 Gr. LF2	CL 3000, SW 90 DEG ELBOW

No.	DATE	REVISION	PAR / APP.
3	2017/09/21	PROJECT TITLE REVISED	KHV
2	2017/09/11	LINE NUMBERS REVISED	KHV
1	2017/06/30	DRAIN REVISED AS PER CLIENT COMMENTS	OVN
0	2017/05/15	ISSUED FOR CONSTRUCTION	KHV

CLIENT: AGNICO EAGLE

NUOSANA-PROMEC MINING

ultragen

CONSULTANT PROJECT NO. 591700

PERMIT TO PRACTICE
LE GROUPE ULTRAGEN LTEE
Signature
Date SEP 21 2017
PERMIT NUMBER: P 1180
NT/NU Association of Professional Engineers and Geoscientists

FABRICATION DRAWINGS BASED ON WSP CERTIFIED ENGINEERING

SCEAU PROFESSIONNEL
REGISTERED PROFESSIONAL ENGINEER
D. TRUONG
LICENSEE
2017/09/21

CONC.: KHV	DATE: 2017/04/25
DESSINE PAR: KVE	DATE: 2017/04/25
VERI. PAR: -	DATE: -
APP.: -	DATE: -
ECHELLE: AUCUNE	

PROJET: AGNICO EAGLE - MELIADINE DIVISION
116 - FUEL TANK FARM

TITRE: RANKIN INLET
FABRICATION ISOMETRIC
DIESEL FROM 65PCD11601A TO BOTTOM LOADING ARM 65EQM11601

No PROJET	No DESSIN	PAGES	REV.
6515	116-100-PDI-CC10-0023	2/4	3

NO. DE CONDUITE		SPECIFICATION	PRODUIT	SYSTEME REVETEMENT	CODE DE COULEUR	ISOLATION ET TRACAGE	EPAISS D'ISOLATION		
116-100-PDI-CC10-0023		CC10	PDI					65-116-270-200	PIPE SUPPORT DETAILS
PRESSION D'OPERATION	TEMPERATURE D'OPERATION	PRESSION DE CONCEPTION	TEMPERATURE DE CONCEPTION	PRESSION D'ESSAI	CLASSE D'INSPECTION	CODE DE SERVICE	TRAITEMENT THERMIQUE	65-116-205-200	P&ID
PSIG	°F	PSIG	°F	PSIG				No. DESSIN	DESSINS DE REFERENCE

116-MN-01

FICHIER = V:\Agnico Eagle\Meliadine\116 Fuel Distribution\05. Dessin\02. Isometriques\01. Rankin Inet\116-100-PDI-CC10-0023-2.DWG

IMPRIMÉ LE Sep 20, 2017, 2:43pm

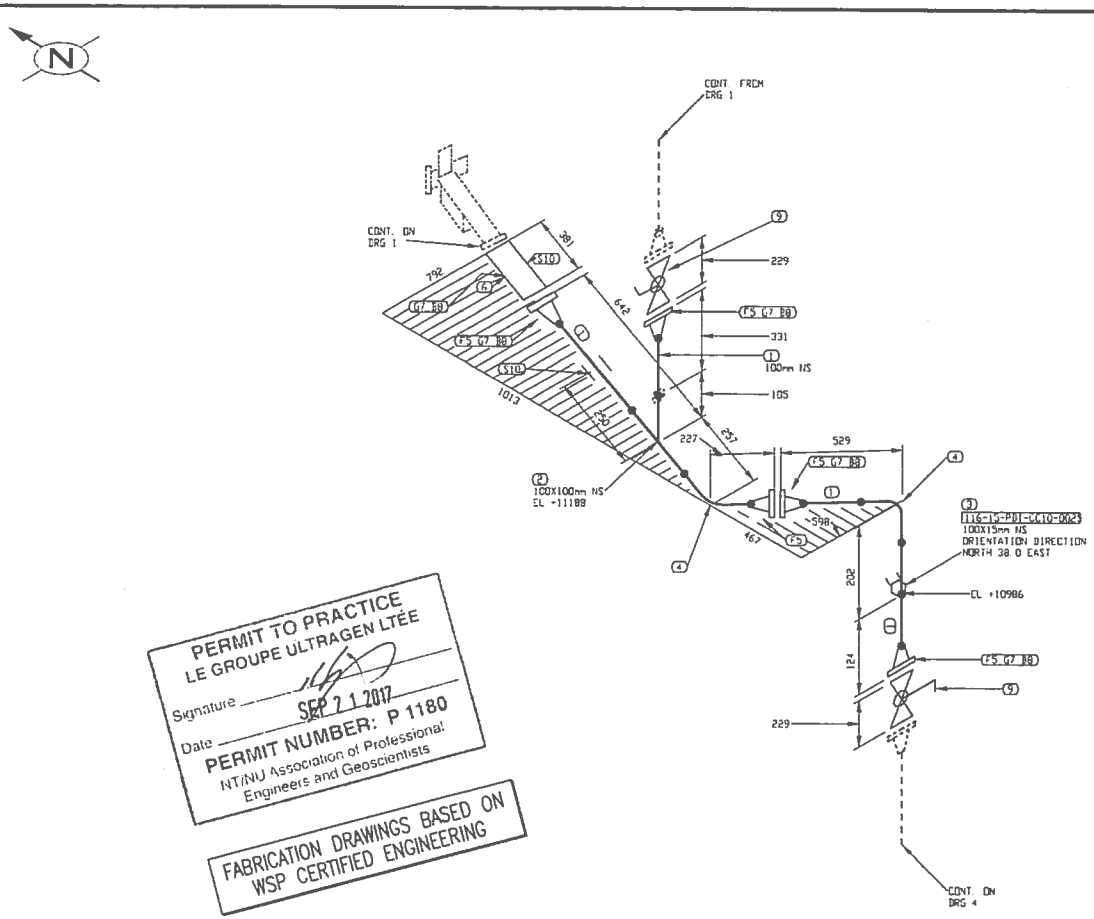

PERMIT TO PRACTICE
LE GROUPE ULTRAGEN LTÉE
Signature
Date SEP 21 2017
PERMIT NUMBER: P 1180
NT/NU Association of Professional Engineers and Geoscientists

FABRICATION DRAWINGS BASED ON WSP CERTIFIED ENGINEERING

LISTE DE MATERIEL

No	QTT	DIA	MATERIEL/CATALOGUE	DESCRIPTION
1	1120 MM	100	A 333 Gr 6	SCH STD, SMLS PIPE
2	1	100X100	A 420 Gr WPL6	SCH STD, BW STRAIGHT TEE
3	1	100X15	A 350 Gr LF2	CL 3000, THREDOLET
4	2	100	A 420 Gr WPL6	SCH STD, BW LR 90 DEG ELBOW
5	5	100	A 350 Gr LF2	CL 150, SCH STD, RF, WN FLANGE
6	1	100	DCV #115-3	CL 150, FLOW CONTROL VALVE
7	5	100	ASME B16.20	CL 150, GARLOCK 3500, RING TYPE GASKET 1/8" THK
8	40	16	A 193 B7/A 194 2H	CL 150, 8 - 15.875 X 90 STUD BOLTS c/w TWO HEAVY HEX NUTS
9	2	100	BA-31	CL 150, RF, BALL VALVE
10	2	100		PIPE SUPPORT AS PER DETAIL 9, DWG: 65-116-270-200

No.	DATE	REVISION	PAR / APP.
2	2017/09/21	PROJECT TITLE REVISED	KHV
1	2017/09/11	LINE NUMBERS REVISED	KHV
0	2017/05/15	ISSUED FOR CONSTRUCTION	KHV

CLIENT: AGNICO EAGLE

NUOSANA PROMEC MINING

ultragen

CONSULTANT PROJECT NO. 591700

NO. DE CONDUITE		SPECIFICATION	PRODUIT	SYSTEME REVETEMENT	CODE DE COULEUR	ISOLATION ET TRACAGE	EPAISS. D'ISOLATION		
116-100-PDI-CC10-0023		CC10	PDI					65-116-270-200	PIPE SUPPORT DETAILS
PRESSION D'OPERATION	TEMPERATURE D'OPERATION	PRESSION DE CONCEPTION	TEMPERATURE DE CONCEPTION	PRESSION D'ESSAI	CLASSE D'INSPECTION	CODE DE SERVICE	TRAITEMENT THERMIQUE	65-116-205-200	P&ID
PSIG	°F	PSIG	°F	PSIG				No. DESSIN	DESSINS DE REFERENCE

SCEAU PROFESSIONNEL
REGISTERED PROFESSIONAL ENGINEER
D TRUONG
LICENSEE
NT/NU
2017/09/21

CONC.: KHV
DATE: 2017/04/25
DESSINE PAR: KVE
DATE: 2017/04/25
VER. PAR: -
DATE: -
APP.: -
DATE: -
ECHELLE: AUCUNE

PROJET: AGNICO EAGLE - MELIADINE DIVISION
116 - FUEL TANK FARM

TITRE: RANKIN INLET
FABRICATION ISOMETRIC
DIESEL FROM 65PDD11601A TO BOTTOM LOADING ARM 65EQM11601

No PROJET	No DESSIN	PAGES	REV.
6515	116-100-PDI-CC10-0023	3/4	2

116-MN-01

APPROUVE LE: Sep 20, 2017, 2:43pm

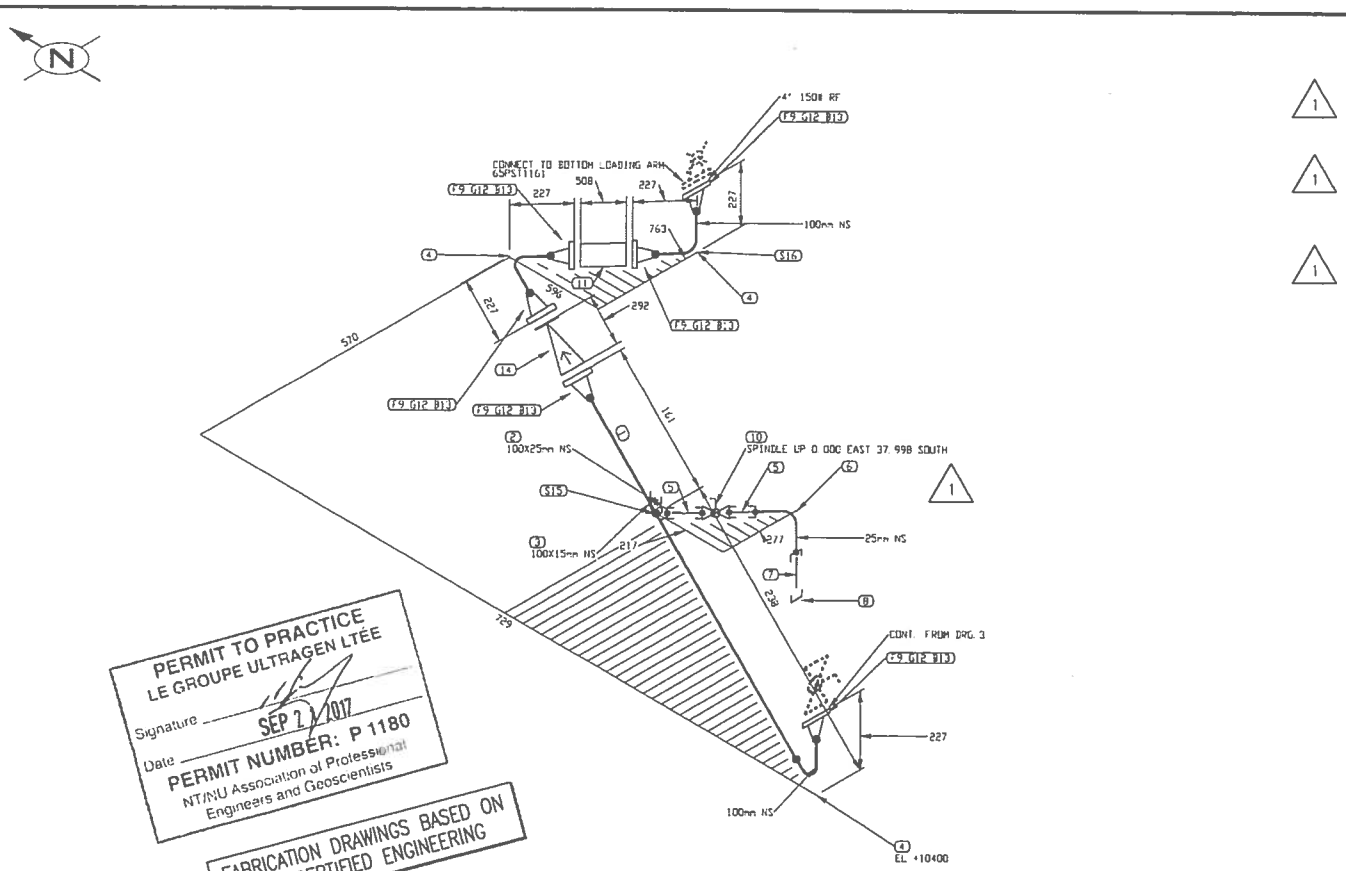

PERMIT TO PRACTICE
LE GROUPE ULTRAGEN LTÉE
Signature
Date SEP 21 2017
PERMIT NUMBER: P 1180
NT/NU Association of Professional Engineers and Geoscientists

FABRICATION DRAWINGS BASED ON WSP CERTIFIED ENGINEERING

LISTE DE MATERIEL

No	QTE	DIA	MATERIEL/CATALOGUE	DESCRIPTION
1	172 MM	100	A 333 Gr. 6	SCH STD, SMLS PIPE
2	1	100X25	A 350 Gr. LF2	CL 3000, SOCKOLET
3	1	100X15	A 350 Gr. LF2	CL 3000, SOCKOLET
4	3	100	A 420 Gr. WPL6	SCH STD, BW LR 90 DEG ELBOW
5	2	25	A 333 Gr. 6	SCH 80, NIPPLE x 75mm LG PBE
6	1	25	A 350 Gr. LF2	CL 3000, SW 90 DEG ELBOW
7	1	25	A 333 Gr. 6	SCH 80, NIPPLE x 75mm LG PDExTCE
8	1	25	A 350 Gr. LF2	CL 3000, THRD CAP
9	6	100	A 350 Gr. LF2	CL 150, SCH STD, RF, WN FLANGE
10	1	25	34-29	CL 600, SW, BALL VALVE
11	1	100		CL 150, FLEXIBLE (FLEXONICS)
12	6	100	ASME B16.20	CL 150, GARLOCK 5500, RING TYPE GASKET 1/8" THK
13	48	16	A 193 B7/A 194 2H	CL 150, 8 - 15.875 x 90 STUD BOLTS c/w 2"VO HEAVY HEX NUTS
14	1	100	CK-29	CL 150, RF, SWING CHECK VALVE
15	1	100		PIPE BRACKET C150x12x300 WELDED TO CONTAINER C/W U-BOLT
16	1	100		LOADING ARM BRACKET AS PER DETAIL 11, DWG 65-116-270-201

No.	DATE	REVISION	PAR / APP.
3	2017/09/21	PROJECT TITLE REVISED	KHV
2	2017/09/11	LINE NUMBERS REVISED	KHV
1	2017/06/30	DRAIN REVISED AS PER CLIENT COMMENTS	OVN
0	2017/05/15	ISSUED FOR CONSTRUCTION	KHV

CLIENT: AGNICO EAGLE

NUOSANA-PROMEC MINING

ultragen

CONSULTANT PROJECT NO. 591700

NO. DE CONDUITE		SPECIFICATION	PRODUIT	SYSTEME REVETEMENT	CODE DE COULEUR	ISOLATION ET TRACAGE	EPASS. D'ISOLATION		
116-100-PDI-CC10-0023		CC10	PDI					65-116-270-200	PIPE SUPPORT DETAILS
PRESSION D'OPERATION	TEMPERATURE D'OPERATION	PRESSION DE CONCEPTION	TEMPERATURE DE CONCEPTION	PRESSION D'ESSAI	CLASSE D'INSPECTION	CODE DE SERVICE	TRAITEMENT THERMIQUE	65-116-205-200	P&ID
PSIG	°F	PSIG	°F	PSIG				No. DESSIN	DESSINS DE REFERENCE

SCEAU PROFESSIONNEL
REGISTERED PROFESSIONAL ENGINEER
D. TRUONG
LICENSEE
NT/NU
2017/09/21

CONC.: KHV
DATE: 2017/04/25
DESSINE PAR: KVE
DATE: 2017/04/25
VER. PAR: -
DATE: -
APP.: -
DATE: -
ÉCHELLE: AUCUNE

PROJET: AGNICO EAGLE - MELIADINE DIVISION
116 - FUEL TANK FARM

TITRE: RANKIN INLET
FABRICATION ISOMETRIC
DIESEL FROM 65POD11601A TO BOTTOM LOADING ARM 65EQM11601

No PROJET	No DESSIN	PAGES	REV.
6515	116-100-PDI-CC10-0023	4/4	3

116-MN-01

FICHIER: #:\Agnico Eagle\Meliadine\591700 (Fuel Distribution)\05. Design\07. Tuyauterie\02 Isometriques\01 Rankin Inlet\116-100-PDI-CC10-0023.DWG

IMPRIMÉ LE: Sep 13, 2017, 2:43pm

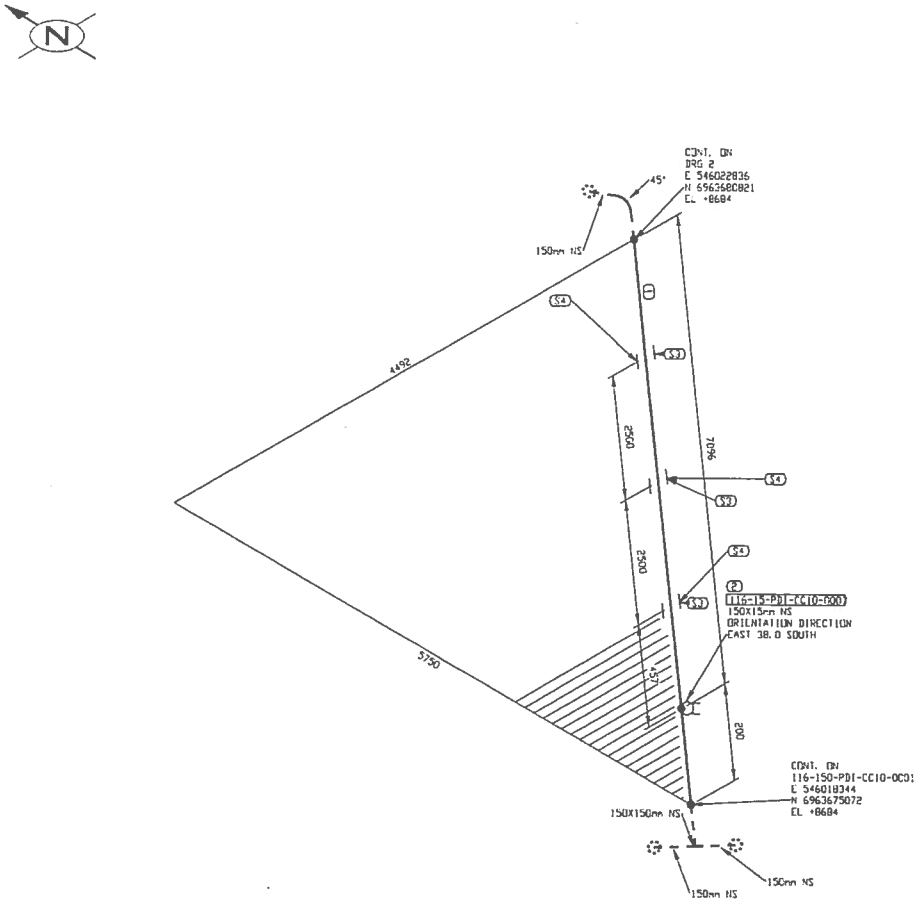

PERMIT TO PRACTICE
LE GROUPE ULTRAGEN LTÉE
Signature
Date SEP 21 2017
PERMIT NUMBER: P 1180
NT/NU Association of Professional Engineers and Geoscientists

FABRICATION DRAWINGS BASED ON WSP CERTIFIED ENGINEERING

LISTE DE MATERIEL

No	QTÉ	DIA	MATERIEL/CATALOGUE	DESCRIPTION
1	7296 MM	150	A 333 Gr. 6	SCH STD, SMLS PIPE
2	1	150X15	A 350 Gr. LF2	CL 3000, THREDOLET
3	3	150		PIPE SUPPORT AS PER DETAIL 1, DWG 65-116-270-200
4	3	150		PIPE SHOE AS PER DETAIL 2, DWG 65-116-270-200

No.	DATE	REVISION	PAR / APP.
2	2017/09/21	PROJECT TITLE REVISED	KHV
1	2017/09/11	LINE NUMBERS REVISED	KHV
0	2017/05/15	ISSUED FOR CONSTRUCTION	KHV

CLIENT:

AGNICO EAGLE

NUQSANA-PROMEC MINING

ultragen

CONSULTANT PROJECT NO. 591700

NO. DE CONDUITE		SPECIFICATION	PRODUIT	SYSTEME REVETEMENT	CODE DE COULEUR	ISOLATION ET TRACAGE	EPAISS. D'ISOLATION		
116-150-PDI-CC10-0004		CC10	PDI		-			65-116-270-200	PIPE SUPPORT DETAILS
PRESSION D'OPERATION	TEMPERATURE D'OPERATION	PRESSION DE CONCEPTION	TEMPERATURE DE CONCEPTION	PRESSION D'ESSAI	CLASSE D'INSPECTION	CODE DE SERVICE	TRAITEMENT THERMIQUE	65-116-205-200	P&ID
		PSIG	°F	PSIG				No. DESSIN	DESSINS DE REFERENCE

SCEAU PROFESSIONNEL
REGISTERED PROFESSIONAL ENGINEER
D. TRUONG
LICENSEE
2017/09/21

CONC.: KHV
DATE: 2017/04/25
DESSINE PAR: KVE
DATE: 2017/04/25
VER. PAR: -
DATE: -
APP.: -
DATE: -
ÉCHELLE: AUCUNE

PROJET:
AGNICO EAGLE - MELIADINE DIVISION
116 - FUEL TANK FARM

TITRE:
RANKIN INLET
FABRICATION ISOMETRIC
MARINE LINE TO 65TNK11602

No PROJET	No DESSIN	PAGES	REV.
6515	116-150-PDI-CC10-0004	1/3	2

116-VN-01

ICACHER M:\Agnico Eagle\Meliadine\591700 (Fuel Distribution)\03 Drawings\122. Isometrics\01 Rankin Inst\116-150-PDI-CC10-0004-1.DWG

SAVEDAVE LE Sep 20, 2017, 2:44pm

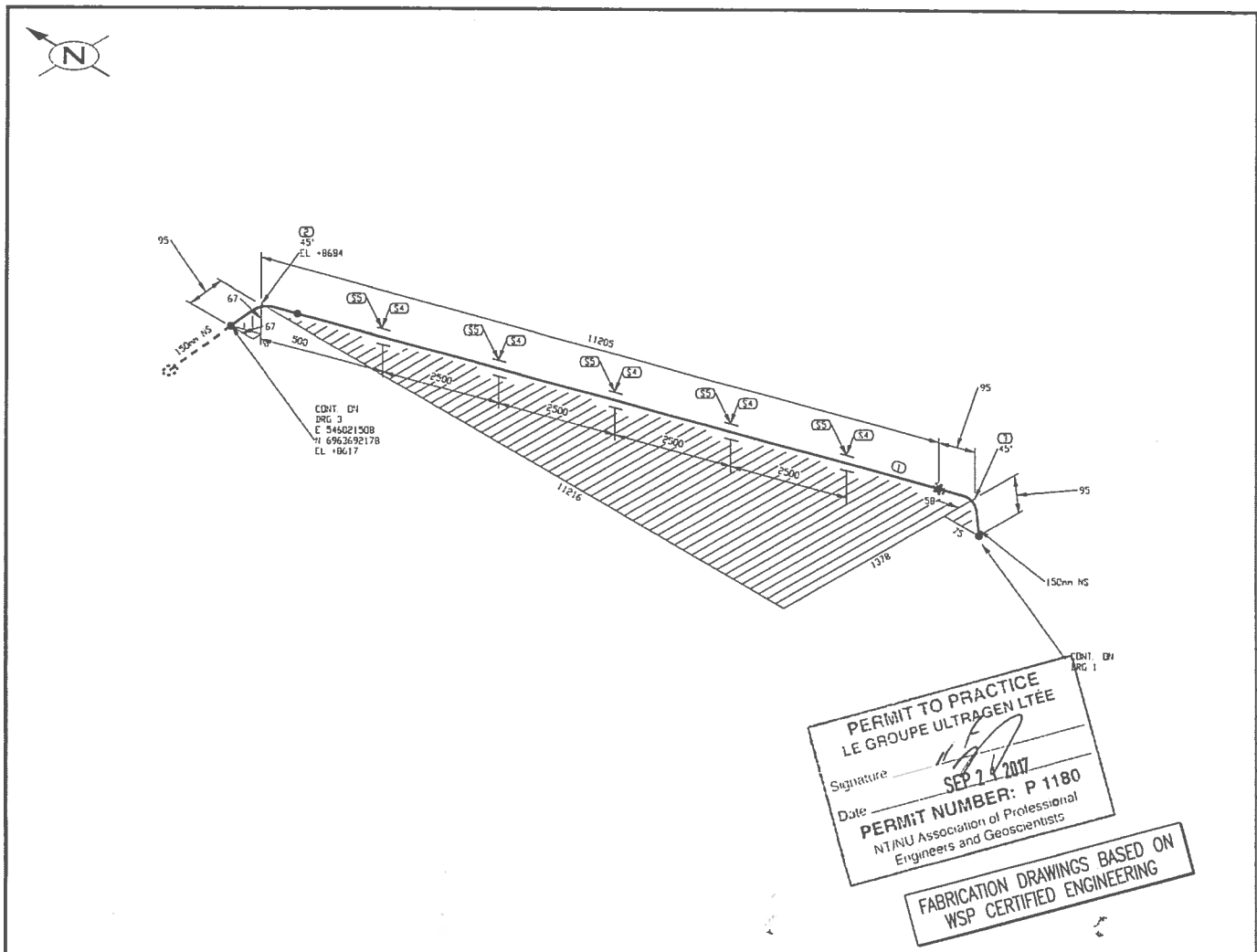

PERMIT TO PRACTICE
LE GROUPE ULTRAGEN LTÉE
Signature
Date SEP 2 4 2017
PERMIT NUMBER: P 1180
NT/NU Association of Professional Engineers and Geoscientists

FABRICATION DRAWINGS BASED ON WSP CERTIFIED ENGINEERING

LISTE DE MATERIEL

No	QTI	DIA	MATERIEL/CATALOGUE	DESCRIPTION
1	11110 MM	150	A 333 Gr. 6	SCH STD, SMLS PIPE
2	1	150	A 420 Gr. WPL6	SCH STD, BW LR 45 DEG ELBOW
3	1	150	A 420 Gr. WPL6	SCH STD, BW LR 90 DEG ELBOW TRIM TO 45.00
4	5	150		PIPE SUPPORT AS PER DETAIL 1, DWG 65-116-270-200
5	5	150		PIPE SHOE AS PER DETAIL 2, DWG 65-116-270-200

No.	DATE	REVISION	PAR / APP.
2	2017/09/21	PROJECT TITLE REVISED	KHV
1	2017/09/11	LINE NUMBERS REVISED	KHV
0	2017/05/15	ISSUED FOR CONSTRUCTION	KHV

CLIENT: AGNICO EAGLE

NUQSANA PROMEC MINING

ultragen

CONSULTANT PROJECT NO. 591700

NO. DE CONDUITE		SPECIFICATION	PRODUIT	SYSTEME REVETEMENT	CODE DE COULEUR	ISOLATION ET TRACAGE	EPAISS. D'ISOLATION		
116-150-PDI-CC10-0004		CC10	PDI		-			65-116-270-200	PIPE SUPPORT DETAILS
PRESSION D'OPERATION	TEMPERATURE D'OPERATION	PRESSION DE CONCEPTION	TEMPERATURE DE CONCEPTION	PRESSION D'ESSAI	CLASSE D'INSPECTION	CODE DE SERVICE	TRAITEMENT THERMIQUE	65-116-205-200	P&ID
PSIG	°F	PSIG	°F	PSIG				No. DESSIN	DESSINS DE REFERENCE

SCEAU PROFESSIONNEL
REGISTERED PROFESSIONAL ENGINEER
D TRUONG
LICENSEE
NT/NU
2017/09/21

CONC.: KHV
DATE: 2017/04/25
DESSINÉ PAR: KVE
DATE: 2017/04/25
VER. PAR: -
DATE: -
APP.: -
DATE: -
ÉCHELLE: AUCUNE

PROJET: AGNICO EAGLE - MELIADINE DIVISION
116 - FUEL TANK FARM

TITRE: RANKIN INLET
FABRICATION ISOMETRIC
MARINE LINE TO 65TNK11602

No PROJET	No DESSIN	PAGES	REV.
6515	116-150-PDI-CC10-0004	2/3	2

116-NN-01

FICHIER: H:\Agnico Eagle\Meliadine\591700 (Fuel Tank)\05 Drafting\02. Isometrics\1. Rankin Inlet\116-150-PDI-CC10-0004-2.DWG

IMPRIMÉ LE: Sep 20, 2017, 2:45pm

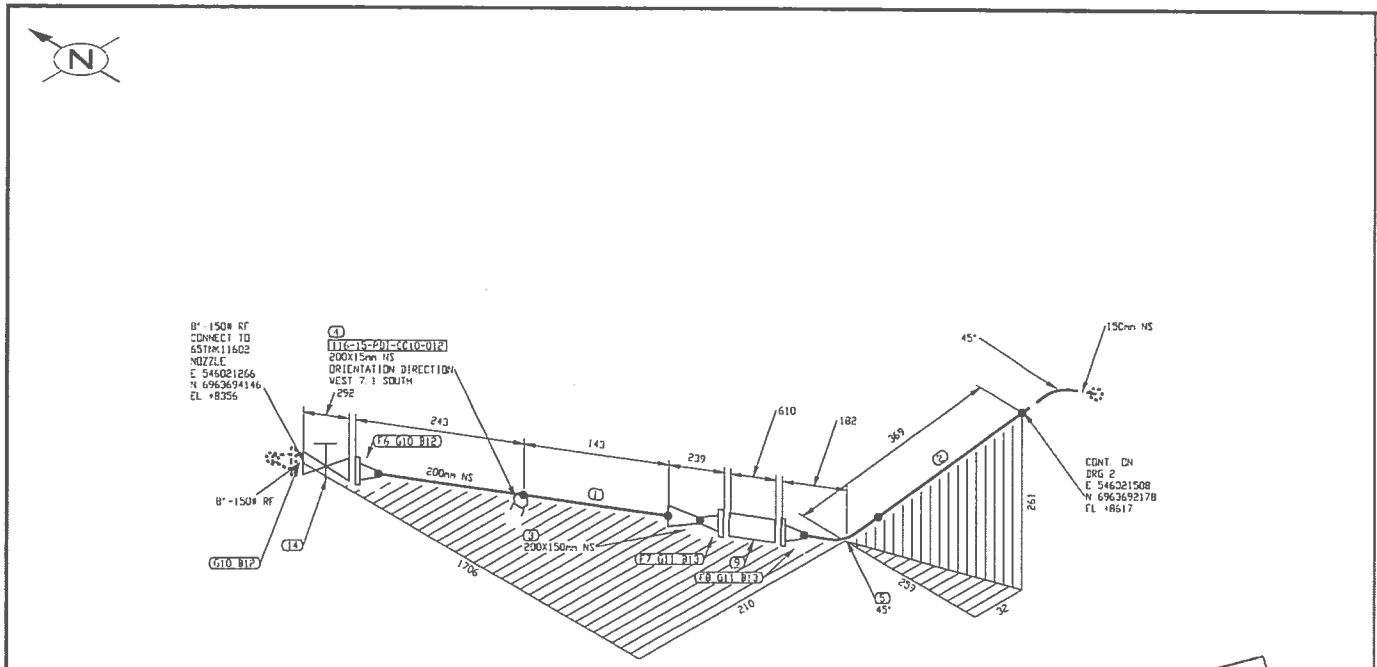

PERMIT TO PRACTICE
LE GROUPE ULTRAGEN LTEE
Signature
Date SEP 2 X 2017
PERMIT NUMBER: P 1180
NT/NU Association of Professional Engineers and Geoscientists

FABRICATION DRAWINGS BASED ON WSP CERTIFIED ENGINEERING

LISTE DE MATERIEL

No	QTE	DIA	MATERIEL/CATALOGUE	DESCRIPTION
1	286 MM	200	A 333 Gr. 6	SCH STD, SMLS PIPE
2	274 MM	150	A 333 Gr. 6	SCH STD, SMLS PIPE
3	1	200X150	A 420 Gr. WPL6	SCH STD, BW CONC RED
4	1	200X15	A 350 Gr. LF2	CL 3000, THREDOLET
5	1	150	A 420 Gr. WPL6	SCH STD, BW LR 45 DEG ELBOW
6	1	200	A 350 Gr. LF2	CL 150, SCH STD, RF, WN FLANGE
7	1	150	A 350 Gr. LF2	CL 150, SCH STD, RF, WN FLANGE
8	1	150	A 350 Gr. LF2	CL 150, SCH STD, RF, WN FLANGE
9	1	150		CL 150, SINGLE BRAIDED HOSE ASSEMBLY
10	2	200	ASME B16.20	CL 150, GARLOCK 5500, RING TYPE GASKET 1/8" THK
11	2	150	ASME B16.20	CL 150, GARLOCK 5500, RING TYPE GASKET 1/8" THK
12	16	19	A 193 B7/A 194 2H	CL 150, 8 - 19.05 X 110 STUD BOLTS c/w TWO HEAVY HEX NUTS
13	16	19	A 193 B7/A 194 2H	CL 150, 8 - 19.05 X 100 STUD BOLTS c/w TWO HEAVY HEX NUTS
14	1	200	GA-10	CL 150, RF, GATE VALVE

No.	DATE	REVISION	PAR / APP.
2	2017/09/21	PROJECT TITLE REVISED	KHV
1	2017/09/11	LINE NUMBERS REVISED	KHV
0	2017/05/15	ISSUED FOR CONSTRUCTION	KHV

CLIENT:

AGNICO EAGLE

NUOSANG PROJECT MINING

ultragen

CONSULTANT PROJECT NO. 591700

NO. DE CONDUITE		SPECIFICATION	PRODUIT	SYSTEME REVETEMENT	CODE DE COULEUR	ISOLATION ET TRACAGE	EPAISS. D'ISOLATION		
116-150-PDI-CC10-0004		CC10	PDI		-			65-116-270-200	PIPE SUPPORT DETAILS
PRESSION D'OPERATION	TEMPERATURE D'OPERATION	PRESSION DE CONCEPTION	TEMPERATURE DE CONCEPTION	PRESSION D'ESSAI	CLASSE D'INSPECTION	CODE DE SERVICE	TRAITEMENT THERMIQUE	65-116-205-200	P&ID
PSIG	°F	PSIG	°F	PSIG				No. DESSIN	DESSINS DE REFERENCE

SCEAU PROFESSIONNEL
REGISTERED PROFESSIONAL ENGINEER
D TRUONG
LICENSEE
2017/09/21

CONC.: KHV
DATE: 2017/04/25
DESSINÉ PAR: KVE
DATE: 2017/04/25
VER. PAR: -
DATE: -
APP.: -
DATE: -
ÉCHELLE: AUCUNE

PROJET: AGNICO EAGLE - MELIADINE DIVISION
116 - FUEL TANK FARM

TITRE: RANKIN INLET
FABRICATION ISOMETRIC
MARINE LINE TO 65TNK11602

No PROJET	No DESSIN	PAGES	REV.
6515	116-150-PDI-CC10-0004	3/3	2

116-MN-01

(FORME # \Agnico Eagle\Meadowbank\591700 (Fuel Distribution)\05 Design\02 Topsides\02 Isometrique\01 Rankin Inlet\116-150-PDI-CC10-0004-3.DWG

MARINE LE. Sep 20, 2017, 2:45pm

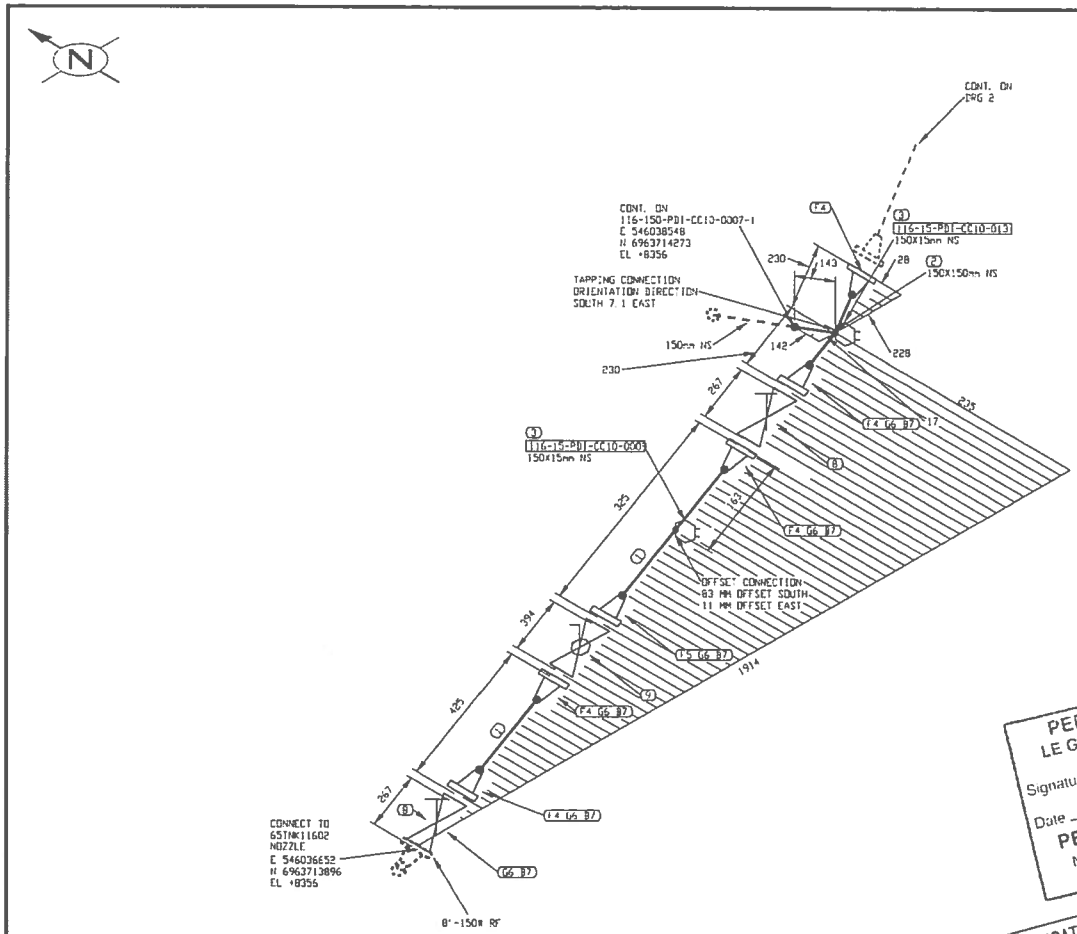

PERMIT TO PRACTICE
LE GROUPE ULTRAGEN LTÉE
Signature
Date SEP 2 1 2017
PERMIT NUMBER: P 1180
NT/NU Association of Professional Engineers and Geoscientists

FABRICATION DRAWINGS BASED ON WSP CERTIFIED ENGINEERING

LISTE DE MATERIEL

No	QTE	DIA	MATERIEL/CATALOGUE	DESCRIPTION
1	402 MM	150	A 333 Gr. 6	SCH STD, SMLS PIPE
2	1	150X150	A 420 Gr. WPL6	SCH STD, BW STRAIGHT TEE
3	2	150X15	A 350 Gr. LF2	CL 3000, THREDOLET
4	5	150	A 350 Gr. LF2	CL 150, SCH STD, RF, WN FLANGE
5	1	150	A 350 Gr. LF2	CL 150, SCH STD, RF, WN FLANGE
6	6	150	ASME B16.20	CL 150, GARLOCK 5500, RING TYPE GASKET 1/8" THK
7	48	19	A 193 B7/A 194 2H	CL 150, 8 - 19.05 X 100 STUD BOLTS c/w TWO HEAVY HEX NUTS
8	2	150	GA-10	CL 150, RF, GATE VALVE
9	1	150	BA-31	CL 150, RF, BALL VALVE

No.	DATE	REVISION	PAR / APP
2	2017/09/21	PROJECT TITLE REVISED	KHV
1	2017/09/11	LINE NUMBERS REVISED	KHV
0	2017/05/15	ISSUED FOR CONSTRUCTION	KHV

CLIENT:

AGNICO EAGLE

NUQSANA PROMEC MINING

ultragen

CONSULTANT PROJECT NO. 591700

NO. DE CONDUITE		SPECIFICATION	PRODUIT	SYSTEME REVETEMENT	CODE DE COULEUR	ISOLATION ET TRACAGE	EPAISS. D'ISOLATION		
116-150-PDI-CC10-0006		CC10	PDI		-			65-116-270-200	PIPE SUPPORT DETAILS
PRESSION D'OPERATION	TEMPERATURE D'OPERATION	PRESSION DE CONCEPTION	TEMPERATURE DE CONCEPTION	PRESSION D'ESSAI	CLASSE D'INSPECTION	CODE DE SERVICE	TRAITEMENT THERMIQUE	65-116-205-200	P&ID
PSIG	°F	PSIG	°F	PSIG				No. DESSIN	DESSINS DE REFERENCE

SCEAU PROFESSIONNEL
REGISTERED PROFESSIONAL ENGINEER
D. TRUONG
LICENSEE
NT/NU
2017/09/21

CONC.: KHV
DATE: 2017/04/25
DESSINE PAR: KVE
DATE: 2017/04/25
VÉR. PAR: -
DATE: -
APP.: -
DATE: -
ÉCHELLE: AUCUNE

PROJET:
AGNICO EAGLE - MELIADINE DIVISION
116 - FUEL TANK FARM

TITRE:
RANKIN INLET
FABRICATION ISOMETRIC
DIESEL FROM 65TNK11601 & 65TNK11602 TO PUMPING STATION

No PROJET	No DESSIN	PAGES	RÉV.
6515	116-150-PDI-CC10-0006	1/12	2

116-MN-01

FICHIER: N:\Agnico Eagle\Meliadine\591700 (Fuel Distribution)\NS Drawings\03. Isometrics\01. Rankin Inlet\116-150-PDI-CC10-0006-1.DWG

IMPRIMÉ LE: Sep 20, 2017, 2:45pm

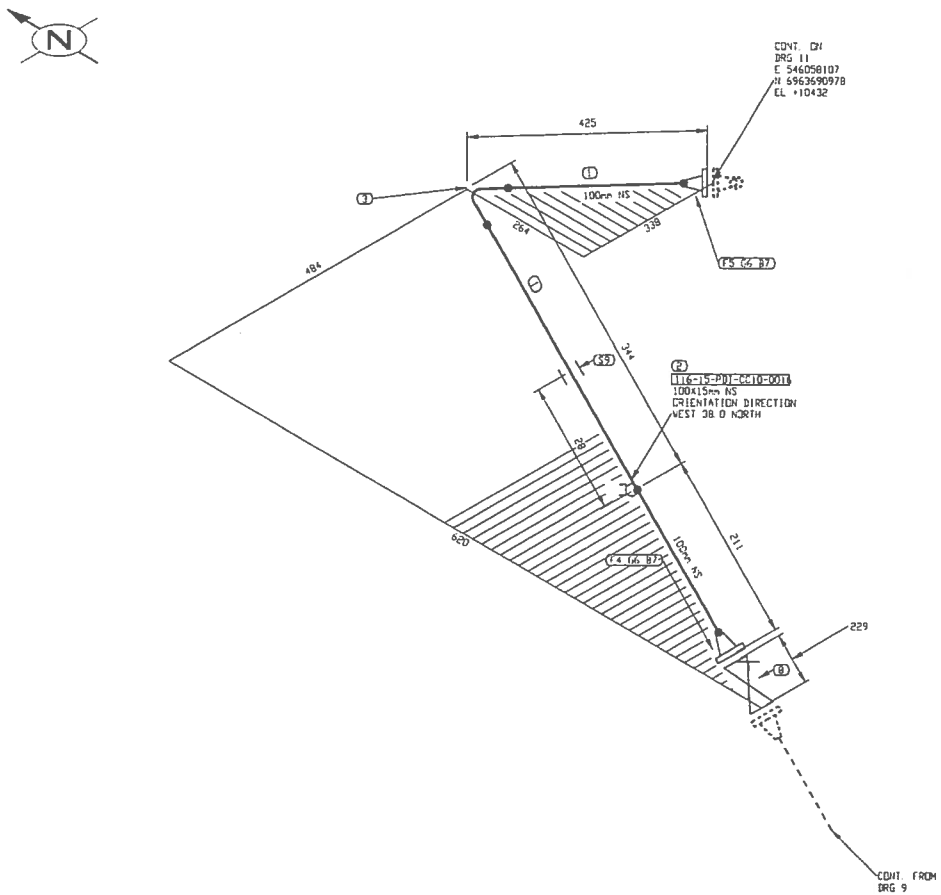

PERMIT TO PRACTICE
LE GROUPE ULTRAGEN LTÉE
Signature
Date SEP 2 2 2017
PERMIT NUMBER: P 1180
NT/NU Association of Professional Engineers and Geoscientists

FABRICATION DRAWINGS BASED ON WSP CERTIFIED ENGINEERING

LISTE DE MATERIEL

No	QTE	DN	MATERIEL/CATALOGUE	DESCRIPTION
1	527 MM	100	A 333 Gr. 6	SCH STD, SMLS PIPE
2	1	100X15	A 350 Gr. LF2	CL 3000, THREDOLET
3	1	100	A 420 Gr. WPL6	SCH STD, BW LR 90 DEG ELBOW
4	1	100	A 350 Gr. LF2	CL 150, SCH STD, RF, WN FLANGE
5	1	100	A 350 Gr. LF2	CL 150, SCH STD, RF, WN FLANGE
6	2	100	ASME B16.20	CL 150, GARLOCK 5500, RING TYPE GASKET 1/8" THK
7	16	16	A 193 B7/A 194 2H	CL 150, 8 - 15.875 X 90 STUD BOLTS c/w TWO HEAVY HEX NUTS
8	1	100	GA-10	CL 150, RF, GATE VALVE
9	1	100		PIPE BRACKET C150x12x300 WELDED TO CONTAINER C/W U-BOLT

No.	DATE	REVISION	PAR / APP
2	2017/09/21	PROJECT TITLE REVISED	KHV
1	2017/09/11	LINE NUMBERS REVISED	KHV
0	2017/05/15	ISSUED FOR CONSTRUCTION	KHV

CLIENT:

AGNICO EAGLE

NUQSANA PROJECT MINING

ultragen

CONSULTANT PROJECT NO. 591700

NO. DE CONDUITE		SPECIFICATION	PRODUIT	SYSTEME REVETEMENT	CODE DE COULEUR	ISOLATION ET TRACAGE	EPAISS. D'ISOLATION		
116-150-PDI-CC10-0006		CC10	PDI		-			65-116-270-200	PIPE SUPPORT DETAILS
PRESSION D'OPERATION	TEMPERATURE D'OPERATION	PRESSION DE CONCEPTION	TEMPERATURE DE CONCEPTION	PRESSION D'ESSAI	CLASSE D'INSPECTION	CODE DE SERVICE	TRAITEMENT THERMIQUE	65-116-205-200	P&ID
PSIG	°F	PSIG	°F	PSIG				No. DESSIN	DESSINS DE REFERENCE

SCEAU PROFESSIONNEL
REGISTERED PROFESSIONAL ENGINEER
D. TRUONG
LICENSEE
NT/NU
2017/09/21

CONC.: KHV
DATE: 2017/04/25
DESSINÉ PAR: KVE
DATE: 2017/04/25
VÉR. PAR: -
DATE: -
APP.: -
DATE: -
ÉCHELLE: AUCUNE

PROJET:
AGNICO EAGLE - MELIADINE DIVISION
116 - FUEL TANK FARM

TITRE:
RANKIN INLET
FABRICATION ISOMETRIC
DIESEL FROM 65TNK11601 & 65TNK11602 TO PUMPING STATION

No PROJET	No DESSIN	PAGES	REV.
6515	116-150-PDI-CC10-0006	10/12	2

116-MN-01

FICHIER N:\Agnico Eagle\Meliadine\591700 (Fuel Distribution)\05. Dessin\07. Isometrique\02. Isometriques\01. Rankin Inc\116-150-PDI-CC10-0006-10.DWG

IMPRIMÉ LE: Sep 20, 2017, 2:45pm

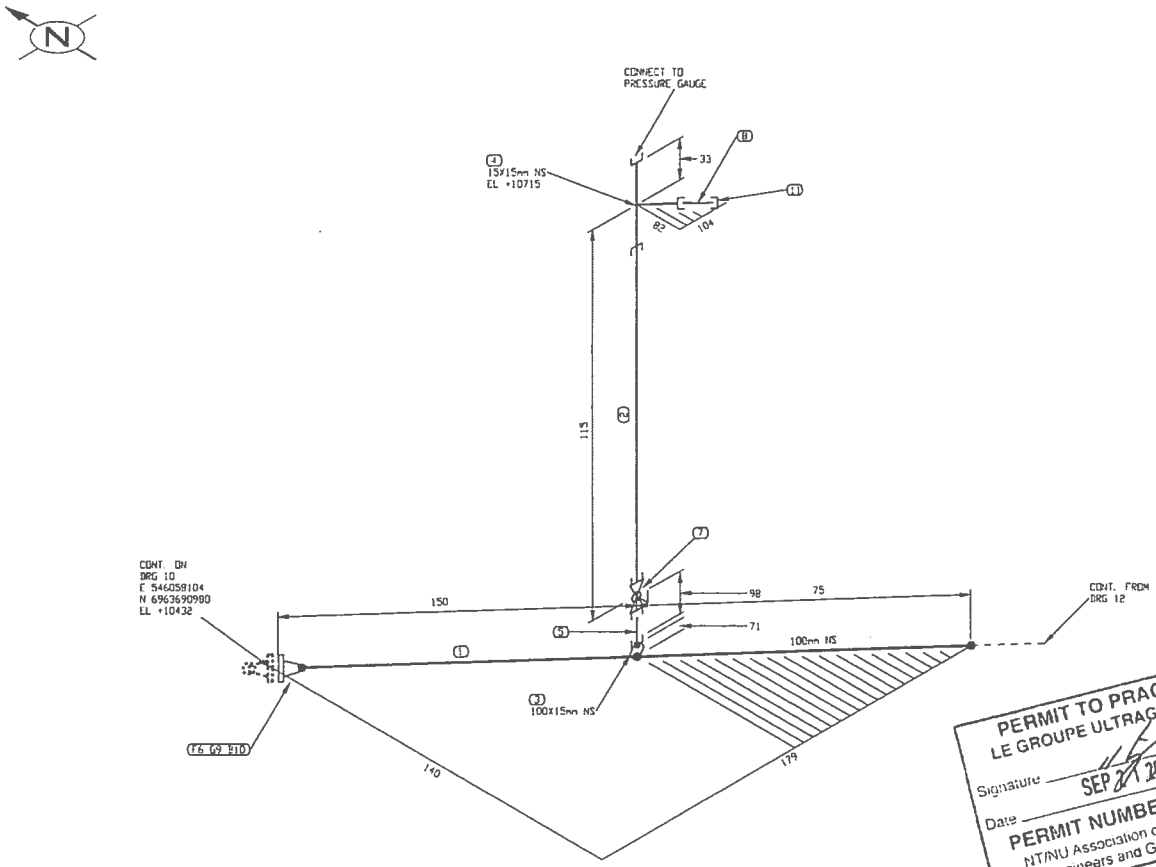

PERMIT TO PRACTICE
LE GROUPE ULTRAGEN LTÉE
Signature
Date SEP 21 2017
PERMIT NUMBER: P 1180
NT/NU Association of Professional Engineers and Geoscientists

FABRICATION DRAWINGS BASED ON WSP CERTIFIED ENGINEERING

LISTE DE MATERIEL

No	QTE	DIA	MATERIEL/CATALOGUE	DESCRIPTION
1	150 MM	100	A 333 Gr. 6	SCH STD, SMLS PIPE
2	74 MM	15	A 333 Gr. 6	SCH 80, SMLS PIPE
3	1	100X15	A 350 Gr. LF2	CL 3000, SOCKOLET
4	1	15X15	A 350 Gr. LF2	CL 3000, THRD STRAIGHT TEE
5	1	15	A 333 Gr. 6	SCH 80, NIPPLE x 75mm LG POE*TOE
6	1	100	A 350 Gr. LF2	CL 150, SCH STD, RF, WN FLANGE
7	1	15	BA-32	CL 600, THRD, BALL VALVE
8	1	15	A 333 Gr. 6	SCH 80, NIPPLE x 75mm LG TBE
9	1	100	ASME B16.20	CL 150, GARLOCK 5500, RING TYPE GASKET 1/8" THK
10	8	16	A 193 B7/A 194 2H	CL 150, 8 - 15.875 X 90 STUD BOLTS c/w TWO HEAVY HEX NUTS
11	1	15	A 350 Gr. LF2	CL 3000, THRD CAP

No.	DATE	REVISION	PAR / APP.
2	2017/09/21	PROJECT TITLE REVISED	KHV
1	2017/09/11	LINE NUMBERS REVISED	KHV
0	2017/05/15	ISSUED FOR CONSTRUCTION	KHV

CLIENT:

AGNICO EAGLE

NUQSANA PROMEC MINING

ultragen.

CONSULTANT PROJECT NO. 591700

NO. DE CONDUITE		SPECIFICATION	PRODUIT	SYSTEME REVETEMENT	CODE DE COULEUR	ISOLATION ET TRACAGE	EPAISS. D'ISOLATION		
116-150-PDI-CC10-0006		CC10	PDI		-			65-116-270-200	PIPE SUPPORT DETAILS
PRESSION D'OPERATION	TEMPERATURE D'OPERATION	PRESSION DE CONCEPTION	TEMPERATURE DE CONCEPTION	PRESSION D'ESSAI	CLASSE D'INSPECTION	CODE DE SERVICE	TRAITEMENT THERMIQUE	65-116-205-200	P&ID
PSIG	°F	PSIG	°F	PSIG				No. DESSIN	DESSINS DE REFERENCE

SCEAU PROFESSIONNEL
REGISTERED PROFESSIONAL ENGINEER
D TRUONG
LICENSEE
2017/09/21

CONC.: KHV
DATE: 2017/04/25
DESSINE PAR: KVE
DATE: 2017/04/25
VER. PAR: -
DATE: -
APP.: -
DATE: -
ECHELLE: AUCUNE

PROJET: AGNICO EAGLE - MELIADINE DIVISION
116 - FUEL TANK FARM

TITRE: RANKIN INLET
FABRICATION ISOMETRIC
DIESEL FROM 65TNK11601 & 65TNK11602 TO PUMPING STATION

No PROJET	No DESSIN	PAGES	REV.
6515	116-150-PDI-CC10-0006	11/12	2

116-MN-01

FICHIER: W:\Agnico Eagle\Work-Order\591700 (Fuel Distribution)\05. Drawing\02. Isometrics\01. Rankin Inlet\116-150-PDI-CC10-0006-11.DWG

IMPRIMÉ LE: Sep 20, 2017, 2:46pm

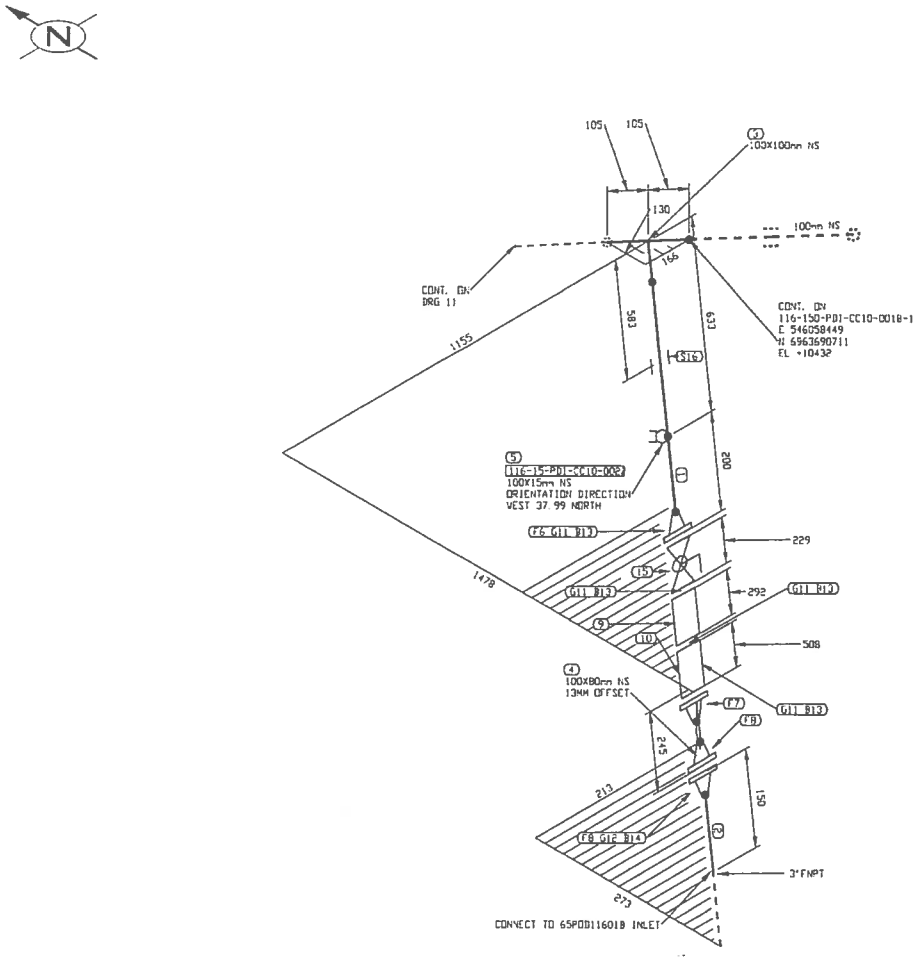

PERMIT TO PRACTICE
LE GROUPE ULTRAGEN LTÉE
Signature
Date SEP 21 2017
PERMIT NUMBER: P 1180
N.T./N.U. Association of Professional Engineers and Geoscientists

FABRICATION DRAWINGS BASED ON WSP CERTIFIED ENGINEERING

LISTE DE MATERIEL

No	QTE	DA	MATERIEL/CATALOGUE	DESCRIPTION
1	653 MM	100	A 333 Gr. 6	SCH STD, SMLS PIPE
2	81 MM	80	A 333 Gr. 6	SCH STD, SMLS PIPE POE×TOE
3	1	100X100	A 420 Gr. WPL6	SCH STD, BW STRAIGHT TEE
4	1	100X80	A 420 Gr. WPL6	SCH STD, BW ECC RED
5	1	100X15	A 350 Gr. LF2	CL 3000, THREDOLET
6	1	100	A 350 Gr. LF2	CL 150, SCH STD, RF, WN FLANGE
7	1	100	A 350 Gr. LF2	CL 150, SCH STD, RF, WN FLANGE
8	2	80	A 350 Gr. LF2	CL 150, SCH STD, RF, WN FLANGE
9	1	100		CL 150, BASKET STRAINER
10	1	100		CL 150, SINGLE BRAIDED HOSE ASSEMBLY
11	4	100	ASME B16.20	CL 150, GARLOCK 5500, RING TYPE GASKET 1/8" THK
12	1	80	ASME B16.20	CL 150, GARLOCK 5500, RING TYPE GASKET 1/8" THK
13	32	16	A 193 B7/A 194 2H	CL 150, 8 - 15.875 X 90 STUD BOLTS c/w TWO HEAVY HEX NUTS
14	4	16	A 193 B7/A 194 2H	CL 150, 4 - 15.875 X 90 STUD BOLTS c/w TWO HEAVY HEX NUTS
15	1	100	BA-31	CL 150, M, BALL VALVE
16	1	100		PIPE SUPPORT AS PER DETAIL 9, DWG 65-116-270-200

No.	DATE	REVISION	PAR / APP.
2	2017/09/21	PROJECT TITLE REVISED	KHV
1	2017/09/11	LINE NUMBERS REVISED	KHV
0	2017/05/15	ISSUED FOR CONSTRUCTION	KHV

CLIENT:

AGNICO EAGLE

NUQSANA PROMEC MINING

ultragen

CONSULTANT PROJECT NO. 591700

NO. DE CONDUITE		SPECIFICATION	PRODUIT	SYSTEME REVETEMENT	CODE DE COULEUR	ISOLATION ET TRACAGE	EPAISS. D'ISOLATION		
116-150-PDI-CC10-0006		CC10	PDI		-			65-116-270-200	PIPE SUPORT DETAILS
PRESSION D'OPERATION	TEMPERATURE D'OPERATION	PRESSION DE CONCEPTION	TEMPERATURE DE CONCEPTION	PRESSION D'ESSAI	CLASSE D'INSPECTION	CODE DE SERVICE	TRAITEMENT THERMIQUE	65-116-205-200	P&ID
PSIG	°F	PSIG	°F	PSIG				No. DESSIN	DESSINS DE REFERENCE

SCEAU PROFESSIONNEL
REGISTERED PROFESSIONAL ENGINEER
D. TRUONG
LICENSEE
26/MAY/09

CONC.: KHV
DATE: 2017/04/25
DESSINE PAR: KVE
DATE: 2017/04/25
VER. PAR: -
DATE: -
APP.: -
DATE: -
ÉCHELLE: AUCUNE

PROJET: AGNICO EAGLE - MELIADINE DIVISION
116 - FUEL TANK FARM

TITRE: RANKIN INLET
FABRICATION ISOMETRIC
DIESEL FROM 65TNK11601 & 65TNK11602 TO PUMPING STATION

No PROJET	No DESSIN	PAGES	REV.
6515	116-150-PDI-CC10-0006	12/12	2

116-MA-01

FORM: N:\Agnico Eagle\Meliadine\591700 (Fuel Decantation)\02. Dwgs\03. Isometrics\01 Rankin Inc\116-150-PDI-CC10-0006-12.DWG

APPROVE LE Sep 20, 2017, 2:41pm

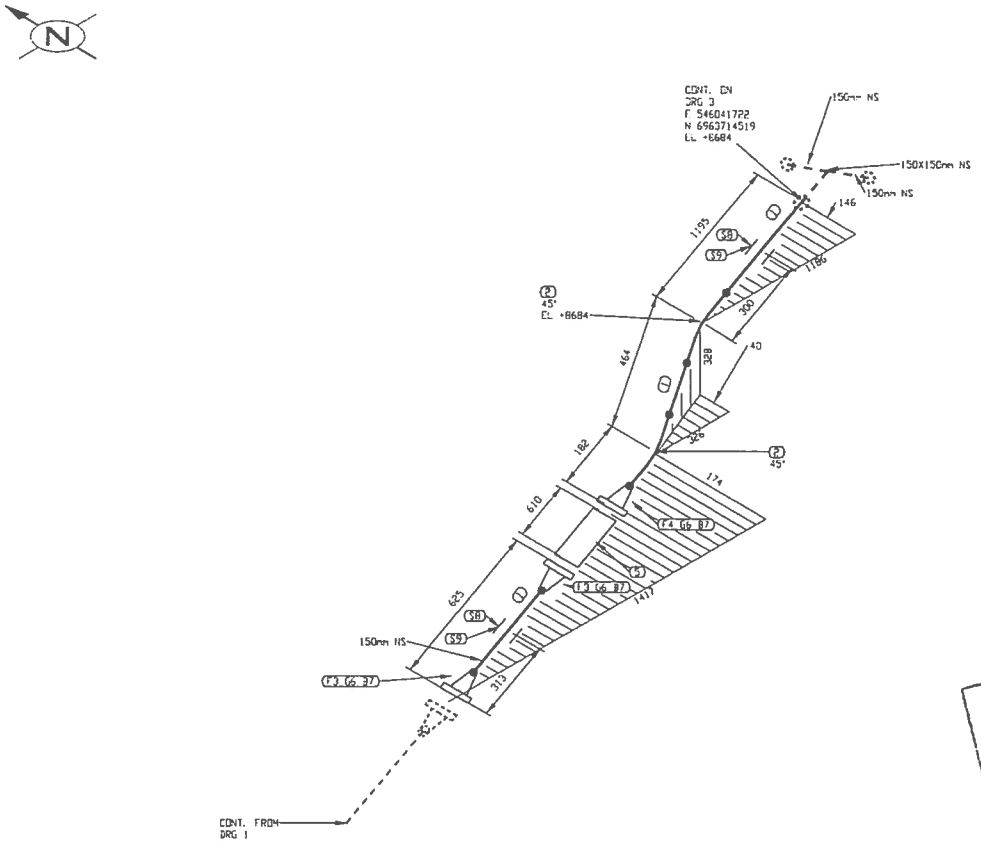

PERMIT TO PRACTICE
LE GROUPE ULTRAGEN LTÉE
Signature
Date SEP 1 1 2017
PERMIT NUMBER: P 1180
NT/NU Association of Professional Engineers and Geoscientists

FABRICATION DRAWINGS BASED ON WSP CERTIFIED ENGINEERING

LISTE DE MATERIEL

No	QTE	DIA	MATERIEL/CATALOGUE	DESCRIPTION
1	1825 MM	150	A 333 Gr. 6	SCH STD, SMLS PIPE
2	2	150	A 420 Gr. WPL6	SCH STD, BV LR 45 DEG ELBOW
3	2	150	A 350 Gr. LF2	CL 150, SCH STD, RF, WN FLANGE
4	1	150	A 350 Gr. LF2	CL 150, SCH STD, RF, WN FLANGE
5	1	150		CL 150, SINGLE BRAIDED HOSE ASSEMBLY
6	3	150	ASME B16.20	CL 150, GARLOCK 5500, RING TYPE GASKET 1/8" THK
7	24	19	A 193 B7/A 194 2H	CL 150, 8 - 19.05 X 100 STUD BOLTS c/w TWO HEAVY HEX NUTS
8	2	150		PIPE SUPPORT AS PER DETAIL 1, DWG: 65-116-270-200
9	2	150		PIPE SHOE AS PER DETAIL 2, DWG: 65-116-270-200

No.	DATE	REVISION	PAR / APP.
2	2017/09/21	PROJECT TITLE REVISED	KHV
1	2017/09/11	LINE NUMBERS REVISED	KHV
0	2017/05/15	ISSUED FOR CONSTRUCTION	KHV

CLIENT:

AGNICO EAGLE

NUQSANA PROMEC MINING

ultragen

CONSULTANT PROJECT NO. 591700

NO. DE CONDUITE		SPECIFICATION	PRODUIT	SYSTEME REVETEMENT	CODE DE COULEUR	ISOLATION ET TRACAGE	EPAISS. D'ISOLATION		
116-150-PDI-CC10-0006		CC10	PDI		-			65-116-270-200	PIPE SUPPORT DETAILS
PRESSION D'OPERATION	TEMPERATURE D'OPERATION	PRESSION DE CONCEPTION	TEMPERATURE DE CONCEPTION	PRESSION D'ESSAI	CLASSE D'INSPECTION	CODE DE SERVICE	TRAITEMENT THERMIQUE	65-116-205-200	P&ID
PSIG	°F	PSIG	°F	PSIG				No. DESSIN	DESSINS DE REFERENCE

SCEAU PROFESSIONNEL
REGISTERED PROFESSIONAL ENGINEER
D. TRUONG
LICENSEE

CONC.: KHV
DATE: 2017/04/25
DESSINE PAR: KVE
DATE: 2017/04/25
VER. PAR: -
DATE: -
APP.: -
DATE: -
ÉCHELLE: AUCUNE

PROJET:
AGNICO EAGLE - MELIADINE DIVISION
116 - FUEL TANK FARM

TITRE:
RANKIN INLET
FABRICATION ISOMETRIC
DIESEL FROM 65TNK11601 & 65TNK11602 TO PUMPING STATION

No PROJET	No DESSIN	PAGES	REV.
6515	116-150-PDI-CC10-0006	2/12	2

116-MN-01

IMPRIMÉ LE: Sep 20, 2017, 2:45pm

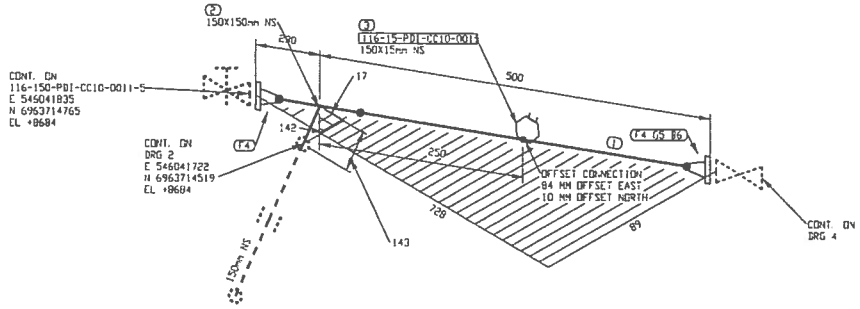

LISTE DE MATERIEL

No	QTE	DIA	MATERIEL/CATALOGUE	DESCRIPTION
1	270 MM	150	A 333 Gr. 6	SCH STD, SMLS PIPE
2	1	150X150	A 420 Gr. WPL6	SCH STD, BW STRAIGHT TEE
3	1	150X15	A 350 Gr. LF2	CL 3000, THREDOLET
4	2	150	A 350 Gr. LF2	CL 150, SCH STD, RF, WN FLANGE
5	1	150	ASME B16.20	CL 150, GARLOCK 5500, RING TYPE GASKET 1/8" THK
6	8	19	A 193 B7/A 194 2H	CL 150, 8 - 19.05 X 100 STUD BOLTS c/w TWO HEAVY HEX NUTS

No.	DATE	REVISION	PAR / APP
2	2017/09/21	PROJECT TITLE REVISED	KHV
1	2017/09/11	LINE NUMBERS REVISED	KHV
0	2017/05/15	ISSUED FOR CONSTRUCTION	KHV

PERMIT TO PRACTICE
LE GROUPE ULTRAGEN LTÉE
Signature
Date SEP 21 2017
PERMIT NUMBER: P 1180
NT/NU Association of Professional Engineers and Geoscientists

FABRICATION DRAWINGS BASED ON WSP CERTIFIED ENGINEERING

CLIENT:

AGNICO EAGLE

NUQSANA-PROMEC MINING

ultragen

CONSULTANT PROJECT NO. 591700

SCEAU PROFESSIONNEL
REGISTERED PROFESSIONAL ENGINEER
D. TRUONG
LICENSEE
NT/NU
2017/09/21

CONC.: KHV	
DATE: 2017/04/23	
DESSINÉ PAR: KVE	
DATE: 2017/04/23	
VÉR. PAR: -	
DATE: -	
APP.: -	
DATE: -	
ÉCHELLE: AUCUNE	

PROJET: AGNICO EAGLE - MELIADINE DIVISION
116 - FUEL TANK FARM

TITRE: RANKIN INLET
FABRICATION ISOMETRIC
DIESEL FROM 65TNK11601 & 65TNK11602 TO PUMPING STATION

No PROJET	No DESSIN	PAGES	REV.
6515	116-150-PDI-CC10-0006	3/12	2

NO. DE CONDUITE		SPECIFICATION	PRODUIT	SYSTEME REVETEMENT	CODE DE COULEUR	ISOLATION ET TRACAGE	EPAISS. D'ISOLATION		
116-150-PDI-CC10-0006		CC10	PDI		-			65-116-270-200	PIPE SUPPORT DETAILS
PRESSION D'OPERATION	TEMPERATURE D'OPERATION	PRESSION DE CONCEPTION	TEMPERATURE DE CONCEPTION	PRESSION D'ESSAI	CLASSE D'INSPECTION	CODE DE SERVICE	TRAITEMENT THERMIQUE	65-116-205-200	P&ID
PSIG	°F	PSIG	°F	PSIG				No. DESSIN	DESSINS DE REFERENCE

116-MN-01

F:\CADD\ W\Agnico Eagle\Meliadine\591700 (Fuel Distribution)\05 Design\123. Tank Farm\02 Isometrics\01 Rankin Inlet\116-150-PDI-CC10-0006-1.DWG

APPROVE LE: Sep 20, 2017, 2:45pm

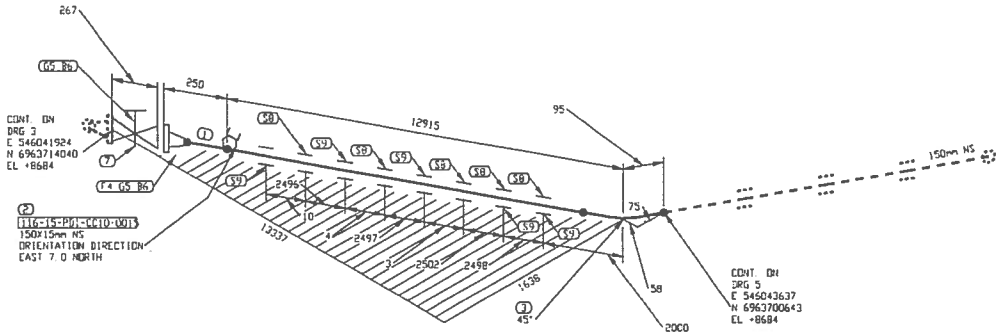

LISTE DE MATERIEL

No	QTE	DIA	MATERIEL/CATALOGUE	DESCRIPTION
1	12983 MM	150	A 333 Gr 6	SCH STD, SMLS PIPE
2	1	150X15	A 350 Gr LF2	CL 3000, THREDOLET
3	1	150	A 420 Gr WPL6	SCH STD, BW LR 45 DEG ELBOW
4	1	150	A 350 Gr LF2	CL 150, SCH STD, RF, WN FLANGE
5	2	150	ASME B16.20	CL 150, GARLOCK 5500, RING TYPE GASKET 1/8" THK
6	16	19	A 193 B7/A 194 2H	CL 150, 8 - 19.05 x 100 STUD BOLTS c/w TWO HEAVY HEX NUTS
7	1	150	GA-10	CL 150, RF, GATE VALVE
8	5	150		PIPE SUPPORT AS PER DETAIL 1, DWG 65-116-270-200
9	5	150		PIPE SHOE AS PER DETAIL 2, DWG 65-116-270-200

No.	DATE	REVISION	PAR / APP.
2	2017/09/21	PROJECT TITLE REVISED	KHV
1	2017/09/11	LINE NUMBERS REVISED	KHV
0	2017/05/15	ISSUED FOR CONSTRUCTION	KHV

PERMIT TO PRACTICE
LE GROUPE ULTRAGEN LTÉE
Signature
Date SEP 21 2017
PERMIT NUMBER: P 1180
NT/NU Association of Professional Engineers and Geoscientists

FABRICATION DRAWINGS BASED ON WSP CERTIFIED ENGINEERING

CLIENT:

AGNICO EAGLE

NUQSANA PROMEC MINING

ultragen

CONSULTANT PROJECT NO. 591700

NO. DE CONDUITE		SPECIFICATION	PRODUIT	SYSTEME REVETEMENT	CODE DE COULEUR	ISOLATION ET TRACAGE	EPAISS. D'ISOLATION		
116-150-PDI-CC10-0006		CC10	PDI		–			65-116-270-200	PIPE SUPPORT DETAILS
PRESSION D'OPERATION	TEMPERATURE D'OPERATION	PRESSION DE CONCEPTION	TEMPERATURE DE CONCEPTION	PRESSION D'ESSAI	CLASSE D'INSPECTION	CODE DE SERVICE	TRAITEMENT THERMIQUE	65-116-205-200	P&ID
PSIG	°F	PSIG	°F	PSIG				No. DESSIN	DESSINS DE REFERENCE

SCEAU PROFESSIONNEL
REGISTERED PROFESSIONAL ENGINEER
D. TRUONG
LICENSED
NT/NU
2017/09/21

CONC.: KHV
DATE: 2017/04/25
DESSINE PAR: KVE
DATE: 2017/04/25
VER. PAR: –
DATE: –
APP.: –
DATE: –
ECHELLE: AUCUNE

PROJET: AGNICO EAGLE - MELIADINE DIVISION
116 - FUEL TANK FARM

TITRE: RANKIN INLET
FABRICATION ISOMETRIC
DIESEL FROM 65TNK11601 & 65TNK11602 TO PUMPING STATION

No PROJET	No DESSIN	PAGES	REV.
6515	116-150-PDI-CC10-0006	4/12	2

116-MN-01

FICHIER: N:\Agnico Eagle\Meliadine\591700 (Fuel Distribution)\05. Dessins\02. Isometriques\01. Rankin Inlet\116-150-PDI-CC10-2006-4.DWG

IMPRIME LE: Sep 20, 2017, 2:41pm

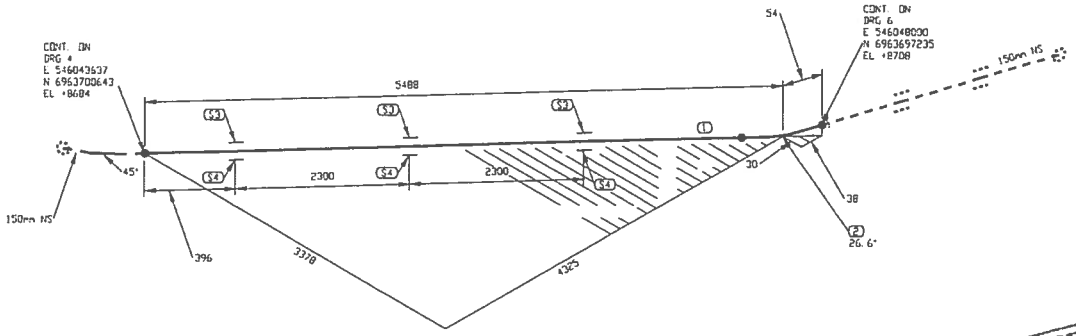

PERMIT TO PRACTICE
LE GROUPE ULTRAGEN LTÉE
Signature
Date SEP 21 2017
PERMIT NUMBER: P 1180
NT/NU Association of Professional Engineers and Geoscientists

FABRICATION DRAWINGS BASED ON WSP CERTIFIED ENGINEERING

LISTE DE MATERIEL

No	QTE	DIA	MATERIEL/CATALOGUE	DESCRIPTION
1	5434 MM	150	A 333 Gr. 6	SCH STD, SMLS PIPE
2	1	150	A 420 Gr. WPL6	SCH STD, BV LR 90 DEG ELBOW TRIM TO 26 57
3	3	150		PIPE SUPPORT AS PER DETAIL 1, DWG: 65-116-270-200
4	3	150		PIPE SHOE AS PER DETAIL 2, DWG: 65-116-270-200

No.	DATE	REVISION	PAR / APP
2	2017/09/21	PROJECT TITLE REVISED	KHV
1	2017/09/11	LINE NUMBERS REVISED	KHV
0	2017/05/15	ISSUED FOR CONSTRUCTION	KHV

CLIENT:

AGNICO EAGLE

NUQSANA-PROMEC MINING

ultragen

CONSULTANT PROJECT NO. 591700

NO. DE CONDUITE		SPECIFICATION	PRODUIT	SYSTEME REVETEMENT	CODE DE COULEUR	ISOLATION ET TRACAGE	EPAISS. D'ISOLATION		
116-150-PDI-CC10-0006		CC10	PDI		-			65-116-270-200	PIPE SUPPORT DETAILS
PRESSION D'OPERATION	TEMPERATURE D'OPERATION	PRESSION DE CONCEPTION	TEMPERATURE DE CONCEPTION	PRESSION D'ESSAI	CLASSE D'INSPECTION	CODE DE SERVICE	TRAITEMENT THERMIQUE	65-116-205-200	P&ID
PSIG	°F	PSIG	°F	PSIG				No. DESSIN	DESSINS DE REFERENCE

SCEAU PROFESSIONNEL
REGISTERED PROFESSIONAL ENGINEER
D. TRUONG
LICENSEE
NUNAVUT
2017/09/21

CONC.: KHV
DATE: 2017/04/25
DESSINE PAR: KVE
DATE: 2017/04/25
VER. PAR: -
DATE: -
APP.: -
DATE: -
ECHELLE: AUCUNE

PROJET:
AGNICO EAGLE - MELIADINE DIVISION
116 - FUEL TANK FARM

TITRE:
RANKIN INLET
FABRICATION ISOMETRIC
DIESEL FROM 65TNK11601 & 65TNK11602 TO PUMPING STATION

No PROJET	No DESSIN	PAGES	REV.
6515	116-150-PDI-CC10-0006	5/12	2

116-NM-011

HOME: W:\Agnico Eagle\Meadow\591700 Fuel Distribution\05. Design\02. Isometrics\01 Design Files\116-150-PDI-CC10-0006-5.DWG

IMPRIMÉ LE: Sep 20, 2017, 2:45pm

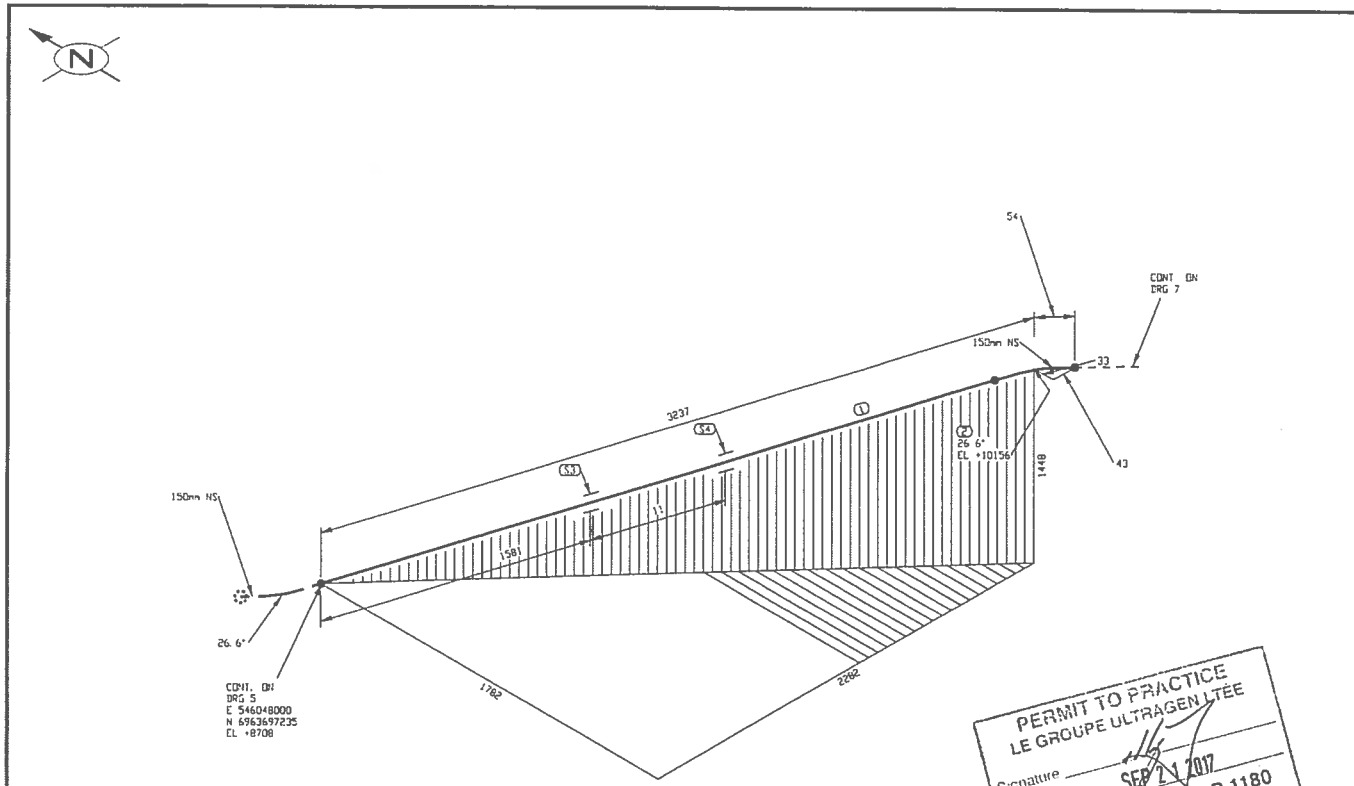

PERMIT TO PRACTICE
LE GROUPE ULTRAGEN LTÉE
Signature
Date SEP 21 2017
PERMIT NUMBER: P 1180
NTANU Association of Professional Engineers and Geoscientists

FABRICATION DRAWINGS BASED ON WSP CERTIFIED ENGINEERING

LISTE DE MATERIEL

No	QTE	DIA	MATERIEL/CATALOGUE	DESCRIPTION
1	3183 MM	150	A 333 Gr. 6	SCH STD, SMLS PIPE
2	1	150	A 420 Gr. WPL6	SCH STD, BV LR 90 DEG ELBOW TRIM TO 26 57
3	1	150		PIPE SUPPORT AS PER DETAIL 1, DWG: 65-116-270-200
4	1	150		PIPE SHOE AS PER DETAIL 2, DWG: 65-116-270-200

No.	DATE	REVISION	PAR APP.
2	2017/09/21	PROJECT TITLE REVISED	KHV
1	2017/09/11	LINE NUMBERS REVISED	KHV
0	2017/05/15	ISSUED FOR CONSTRUCTION	KHV

CLIENT:

AGNICO EAGLE

NUQSANA-PROMEC MINING

ultragen

CONSULTANT PROJECT NO. 591700

NO. DE CONDUITE		SPECIFICATION	PRODUIT	SYSTEME REVETEMENT	CODE DE COULEUR	ISOLATION ET TRACAGE	EPAISS. D'ISOLATION		
116-150-PDI-CC10-0006		CC10	PDI		-			65-116-270-200	PIPE SUPPORT DETAILS
PRESSION D'OPERATION	TEMPERATURE D'OPERATION	PRESSION DE CONCEPTION	TEMPERATURE DE CONCEPTION	PRESSION D'ESSAI	CLASSE D'INSPECTION	CODE DE SERVICE	TRAITEMENT THERMIQUE	65-116-205-200	P&ID
PSIG	°F	PSIG	°F	PSIG				No. DESSIN	DESSINS DE REFERENCE

SCEAU PROFESSIONNEL
REGISTERED PROFESSIONAL ENGINEER
D TRUONG
LICENSEE
2017/09/21

CONC.: KHV
DATE: 2017/04/25
DESSINE PAR: KVE
DATE: 2017/04/25
VER. PAR: -
DATE: -
APP.: -
DATE: -
ECHELLE: AUCUNE

PROJET:
AGNICO EAGLE - MELIADINE DIVISION
116 - FUEL TANK FARM

TITRE:
RANKIN INLET
FABRICATION ISOMETRIC
DIESEL FROM 65TNK11601 & 65TNK11602 TO PUMPING STATION

No PROJET	No DESSIN	PAGES	REV.
6515	116-150-PDI-CC10-0006	6/12	2

116 NW 01

FICHIER W:\Agnico Eagle\Meliadine\591700 (Fuel Distribution)\05. Dessins\03. Tuyauterie\02. Isometriques\01. Rankin Inlet\116-150-PDI-CC10-0006-B.DWG

IMPRIMÉ LE: Sep 20, 2017, 2:43pm

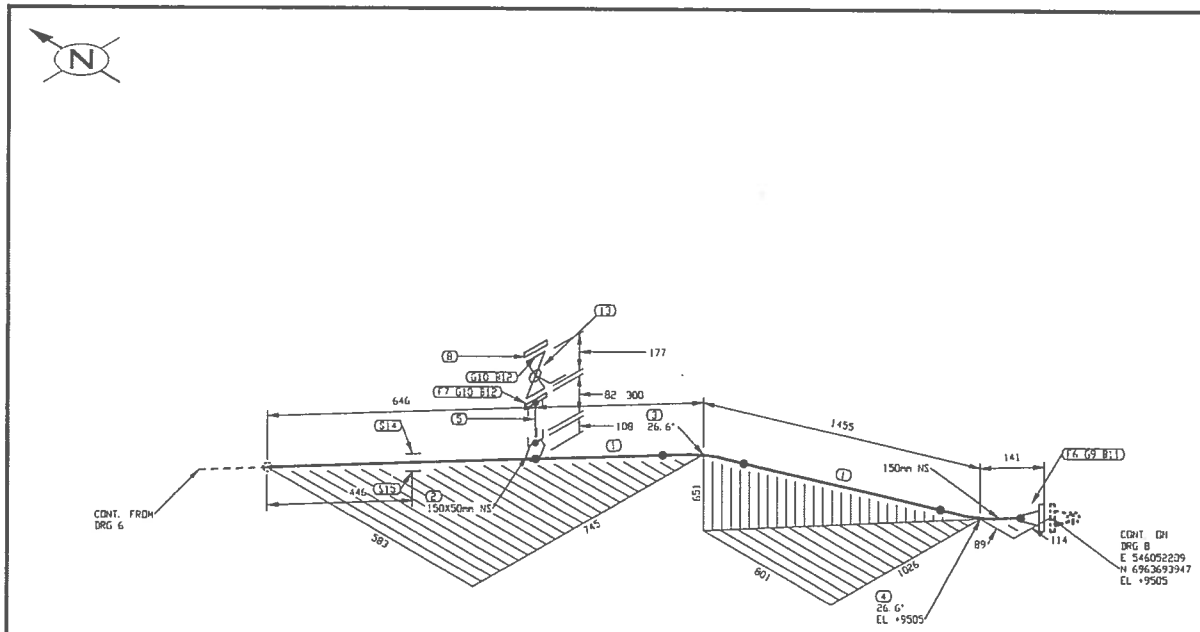

PERMIT TO PRACTICE
LE GROUPE ULTRAGEN LTÉE
Signature
Date SEP 1 1 2017
PERMIT NUMBER: P 1180
NT/NU Association of Professional Engineers and Geoscientists

FABRICATION DRAWINGS BASED ON WSP CERTIFIED ENGINEERING

LISTE DE MATERIEL

No	QTE	DIA	MATERIEL/CATALOGUE	DESCRIPTION
1	2239 MM	150	A 333 Gr 6	SCH STD, SMLS PIPE
2	1	150x50	A 350 Gr LF2	CL 3000, SOCKOLET
3	1	150	A 420 Gr WPL6	SCH STD, BW LR 45 DEG ELBOW TRIM TO 26.57
4	1	150	A 420 Gr WPL6	SCH STD, BW LR 90 DEG ELBOW TRIM TO 26.57
5	1	50	A 333 Gr 6	SCH 80, NIPPLE x 75mm LG PBE
6	1	150	A 350 Gr LF2	CL 150, SCH STD, RF, WN FLANGE
7	1	50	A 350 Gr LF2	CL 150, SCH 80, RF, SW FLANGE
8	1	50	A 350 Gr LF2	CL 150, RF, BLIND FLANGE
9	1	150	ASME B16.20	CL 150, GARLOCK 5500, RING TYPE GASKET 1/8" THK
10	2	50	ASME B16.20	CL 150, GARLOCK 5500, RING TYPE GASKET 1/8" THK
11	8	19	A 193 B7/A 194 2H	CL 150, 8 - 19.05 X 100 STUD BOLTS c/w TWO HEAVY HEX NUTS
12	8	16	A 193 B7/A 194 2H	CL 150, 4 - 15.875 X 85 STUD BOLTS c/w TWO HEAVY HEX NUTS
13	1	50	BA-30	CL 150, RF, BALL VALVE
14	1	150		PIPE SUPPORT AS PER DETAIL 1, DWG: 65-116-270-200
15	1	150		PIPE SHOE AS PER DETAIL 2, DWG 65-116-270-200

No.	DATE	REVISION	PAR / APP
2	2017/09/21	PROJECT TITLE REVISED	KHV
1	2017/09/11	LINE NUMBERS REVISED	KHV
0	2017/05/15	ISSUED FOR CONSTRUCTION	KHV

CLIENT: AGNICO EAGLE

NUQSANA PROJEC MINING

ultragen

CONSULTANT PROJECT NO 591700

NO. DE CONDUITE		SPECIFICATION	PRODUIT	SYSTEME REVETEMENT	CODE DE COULEUR	ISOLATION ET TRACAGE	EPAISS. D'ISOLATION		
116-150-PDI-CC10-0006		CC10	PDI		–			65-116-270-200	PIPE SUPPORT DETAILS
PRESSION D'OPERATION	TEMPERATURE D'OPERATION	PRESSION DE CONCEPTION	TEMPERATURE DE CONCEPTION	PRESSION D'ESSAI	CLASSE D'INSPECTION	CODE DE SERVICE	TRAITEMENT THERMIQUE	65-116-205-200	P&ID
PSIG	°F	PSIG	°F	PSIG				No. DESSIN	DESSINS DE REFERENCE

SCEAU PROFESSIONNEL
REGISTERED PROFESSIONAL ENGINEER
D TRUONG
LICENSEE
NT/NU
2017/09/21

CONC.: KHV
DATE: 2017/04/23
DESSINE PAR: KVE
DATE: 2017/04/23
VER. PAR: –
DATE: –
APP.: –
DATE: –
ÉCHELLE: AUCUNE

PROJET: AGNICO EAGLE - MELIADINE DIVISION
116 - FUEL TANK FARM

TITRE: RANKIN INLET
FABRICATION ISOMETRIC
DIESEL FROM 65TNK11601 & 65TNK11602 TO PUMPING STATION

No PROJET	No DESSIN	PAGES	REV.
6515	116-150-PDI-CC10-0006	7/12	2

116-MN-01

I:\E:\K. M\Agnico Eagle\Meliadine\591700 (Fuel Distribution)\Dessin\02. Isometrics\02. Isometrics\01. Rankin Inlet\116-150-PDI-CC10-0006-2.DWG

SAMBRUE LE Sep 20, 2017, 2:45pm

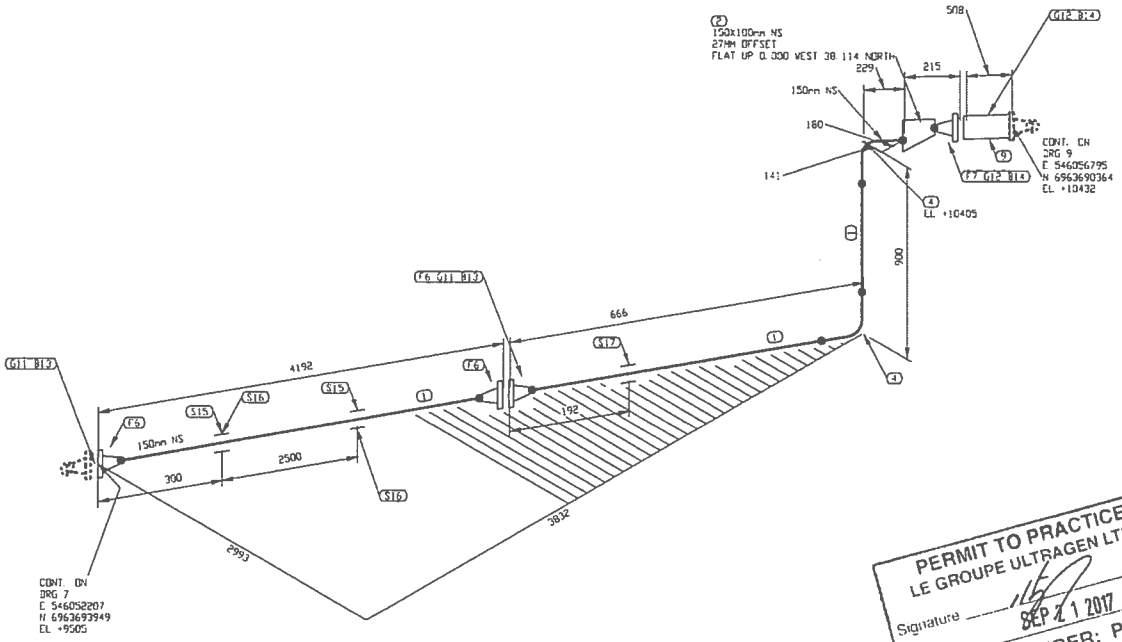

PERMIT TO PRACTICE
LE GROUPE ULTRAGEN LTÉE
Signature
Date SEP 21 2017
PERMIT NUMBER: P 1180
NT/NU Association of Professional Engineers and Geoscientists

FABRICATION DRAWINGS BASED ON WSP CERTIFIED ENGINEERING

LISTE DE MATERIEL

No	QTE	DIA	MATERIEL/CATALOGUE	DESCRIPTION
1	4810 MM	150	A 333 Gr. 6	SCH STD, SMLS PIPE
2	1	150X100	A 420 Gr. WPL6	SCH STD, BW CCC RED
3				
4	2	150	A 420 Gr. WPL6	SCH STD, BW LR 90 DEG ELBOW
5				
6	3	150	A 350 Gr. LF2	CL 150, SCH STD, RF, WN FLANGE
7	1	100	A 350 Gr. LF2	CL 150, SCH STD, RF, WN FLANGE
8				
9	1	100		TCS METER UNIT
10				
11	2	150	ASME B16.20	CL 150, GARLOCK 5500, RING TYPE GASKET 1/8" THK
12	2	100	ASME B16.20	CL 150, GARLOCK 5500, RING TYPE GASKET 1/8" THK
13	16	19	A 193 B7/A 194 2H	CL 150, 8 - 19.05 x 100 STUD BOLTS c/w TWO HEAVY HEX NUTS
14	16	16	A 193 B7/A 194 2H	CL 150, 8 - 15.875 x 90 STUD BOLTS c/w TWO HEAVY HEX NUTS
15	2	150		PIPE SHOE AS PER DETAIL 2, DWG: 65-116-270-200
16	2	150		PIPE SUPPORT AS PER DETAIL 1, DWG: 65-116-270-200
17	1	150		ABUTEMENT TYPE 2 AS PER DETAIL 5, DWG: 65-116-270-200

No.	DATE	REVISION	PAR / APP.
2	2017/09/21	PROJECT TITLE REVISED	KHV
1	2017/09/11	LINE NUMBERS REVISED	KHV
0	2017/05/15	ISSUED FOR CONSTRUCTION	KHV

CLIENT:

AGNICO EAGLE

NUQSANA PROMEC MINING

ultragen

CONSULTANT PROJECT NO. 591700

NO. DE CONDUITE		SPECIFICATION	PRODUIT	SYSTEME REVETEMENT	CODE DE COULEUR	ISOLATION ET TRACAGE	EPAISS. D'ISOLATION		
116-150-PDI-CC10-0006		CC10	PDI		-			65-116-270-200	PIPE SUPPORT DETAILS
PRESSION D'OPERATION	TEMPERATURE D'OPERATION	PRESSION DE CONCEPTION	TEMPERATURE DE CONCEPTION	PRESSION D'ESSAI	CLASSE D'INSPECTION	CODE DE SERVICE	TRAITEMENT THERMIQUE	65-116-205-200	P&ID
PSIG	°F	PSIG	°F	PSIG				No. DESSIN	DESSINS DE REFERENCE

SCEAU PROFESSIONNEL
REGISTERED PROFESSIONAL ENGINEER
D TRUONG
LICENSED
NT/NU
2017/09/21

CONC.: KHV
DATE: 2017/04/25
DESSINÉ PAR: KVE
DATE: 2017/04/25
VÉR. PAR: -
DATE: -
APP.: -
DATE: -
ÉCHELLE: AUCUNE

PROJET: AGNICO EAGLE - MELIADINE DIVISION
116 - FUEL TANK FARM

TITRE: RANKIN INLET
FABRICATION ISOMETRIC
DIESEL FROM 65TNK11601 & 65TNK11602 TO PUMPING STATION

No PROJET	No DESSIN	PAGES	REV.
6515	116-150-PDI-CC10-0006	8/12	2

116-MN-01

IMPRIMÉ LE: Sep 20, 2017, 2:41pm

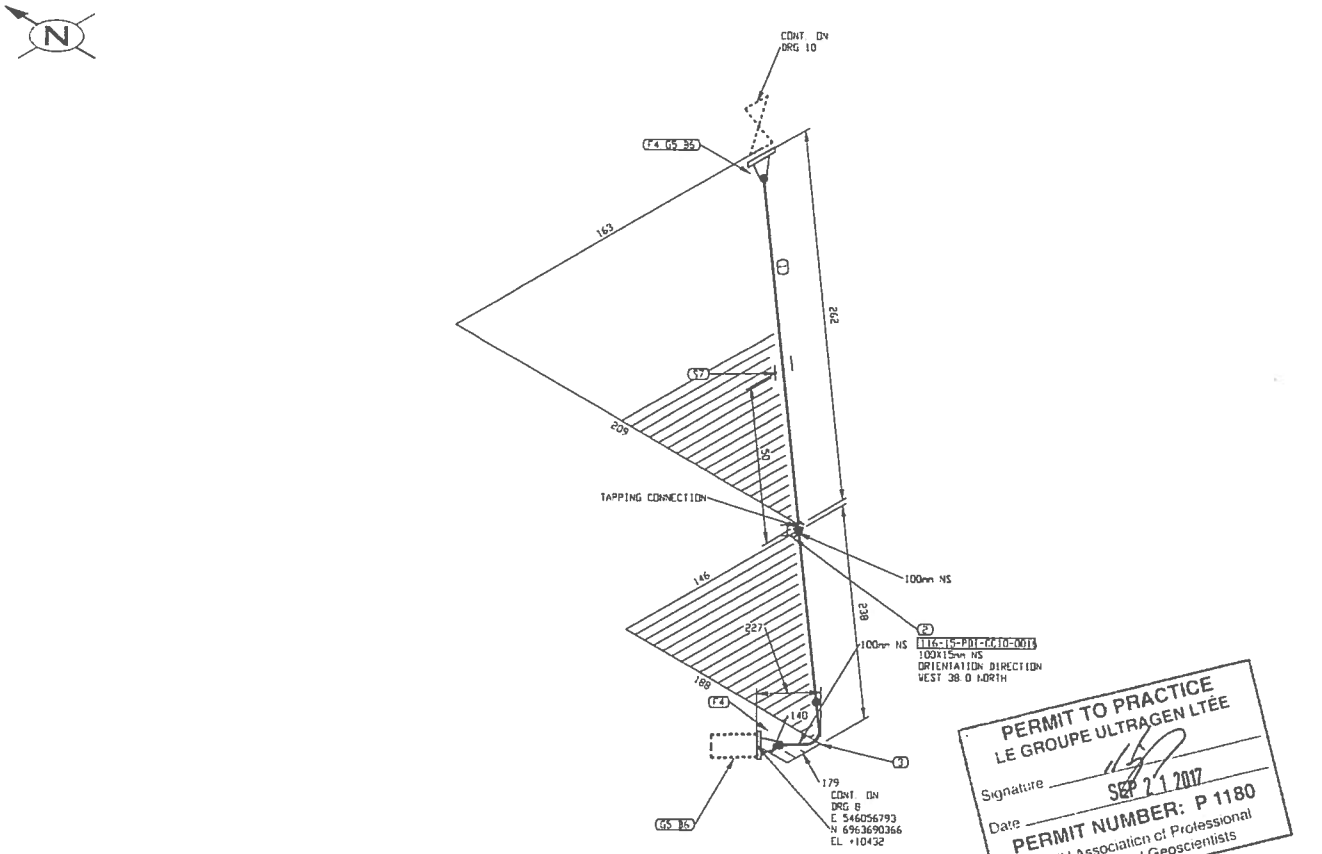

PERMIT TO PRACTICE
LE GROUPE ULTRAGEN LTÉE
Signature
Date SEP 21 2017
PERMIT NUMBER: P 1180
NT/NU Association of Professional Engineers and Geoscientists

FABRICATION DRAWINGS BASED ON WSP CERTIFIED ENGINEERING

LISTE DE MATERIEL

No	QTE	DIA	MATERIEL/CATALOGUE	DESCRIPTION
1	272 MM	100	A 333 Gr. 6	SCH STD, SMLS PIPE
2	1	100X15	A 350 Gr LF2	CL 3000, THREDOLET
3	1	100	A 420 Gr WPL6	SCH STD, BW LR 90 DEG ELBOW
4	2	100	A 350 Gr LF2	CL 150, SCH STD, RF, WN FLANGE
5	2	100	ASME B16.20	CL 150, GARLOCK 5500, RING TYPE GASKET 1/8' THK
6	16	16	A 193 B7/A 194 2H	CL 150, B - 15.075 X 90 STUD BOLTS c/w TWO HEAVY HEX NUTS
7	1	100		PIPE BRACKET C150x12x300 WELDED TO CONTAINER C/W U-BOLT

No.	DATE	REVISION	PAR APP.
2	2017/09/21	PROJECT TITLE REVISED	KHV
1	2017/09/11	LINE NUMBERS REVISED	KHV
0	2017/05/15	ISSUED FOR CONSTRUCTION	KHV

CLIENT: AGNICO EAGLE

NUQSANA PROMEC MINING

ultragen

CONSULTANT PROJECT NO. 591700

NO. DE CONDUITE		SPECIFICATION	PRODUIT	SYSTEME REVETEMENT	CODE DE COULEUR	ISOLATION ET TRACAGE	EPAISS. D'ISOLATION		
116-150-PDI-CC10-0006		CC10	PDI		-			65-116-270-200	PIPE SUPPORT DETAILS
PRESSION D'OPERATION	TEMPERATURE D'OPERATION	PRESSION DE CONCEPTION	TEMPERATURE DE CONCEPTION	PRESSION D'ESSAI	CLASSE D'INSPECTION	CODE DE SERVICE	TRAITEMENT THERMIQUE	65-116-205-200	P&ID
PSIG	°F	PSIG	°F	PSIG				No. DESSIN	DESSINS DE REFERENCE

SCEAU PROFESSIONNEL
REGISTERED PROFESSIONAL ENGINEER
D TRUONG
LICENSEE
2017/09/21

CONC.: KHV
DATE: 2017/04/25
DESSINE PAR: KVE
DATE: 2017/04/25
VER. PAR: -
DATE: -
APP.: -
DATE: -
ECHELLE: AUCUNE

PROJET: AGNICO EAGLE - MELIADINE DIVISION
116 - FUEL TANK FARM

TITRE: RANKIN INLET
FABRICATION ISOMETRIC
DIESEL FROM 65TNK11601 & 65TNK11602 TO PUMPING STATION

No PROJET	No DESSIN	PAGES	REV.
6515	116-150-PDI-CC10-0006	9/12	2

116-MN-01

TIMER: N:\Agnico Eagle\Meliadine\591700 (Fuel Distribution)\DS Drawing\02 Isometrics\P1 Rankin Inet\116-150-PD-CC10-0006-3.DWG

IMPRIME LE: Sep 20, 2017, 2:45pm

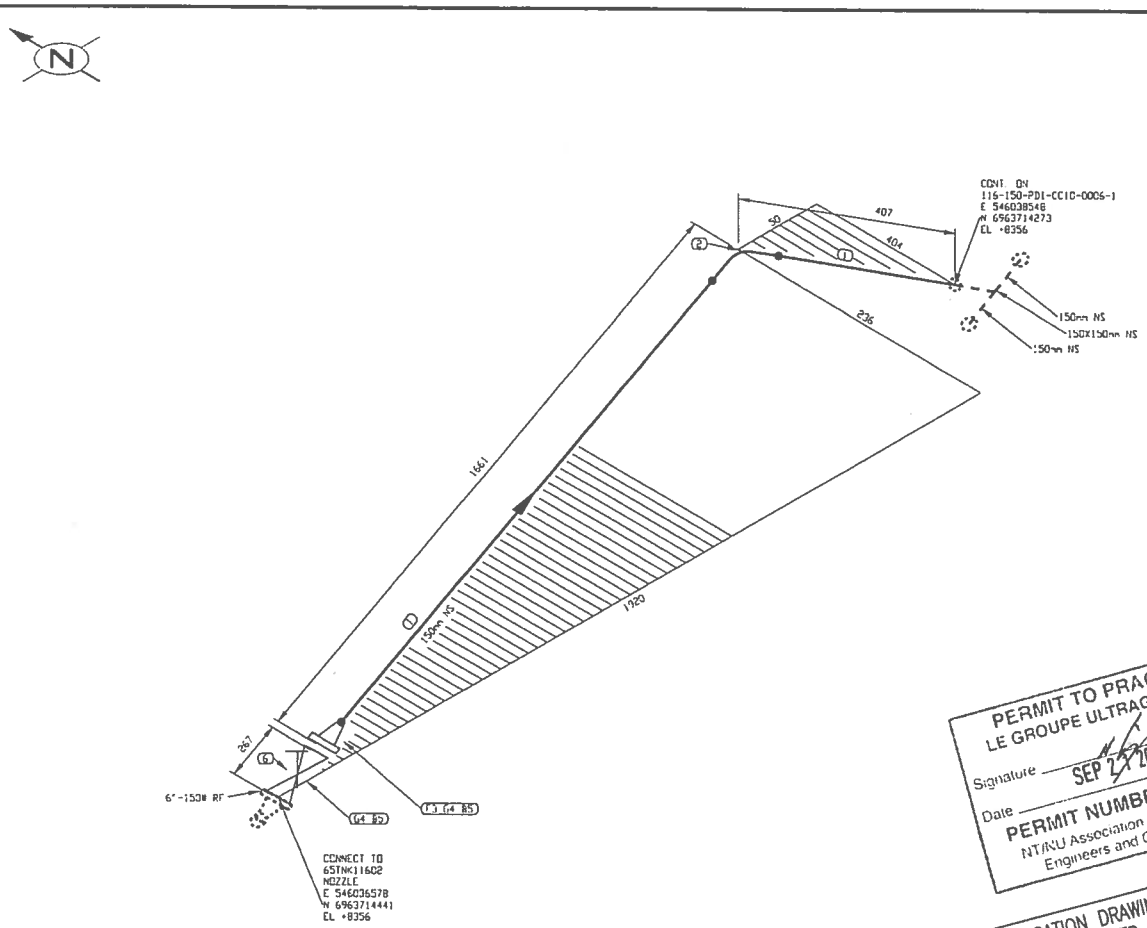

PERMIT TO PRACTICE
LE GROUPE ULTRAGEN LTÉE
Signature SEP 21 2017
Date
PERMIT NUMBER: P 1180
NT/NU Association of Professional Engineers and Geoscientists

FABRICATION DRAWINGS BASED ON WSP CERTIFIED ENGINEERING

LISTE DE MATERIEL

No	Q'T	DIA	MATERIEL/CATALOGUE	DESCRIPTION
1	1523 MM	150	A 333 Gr 6	SCH STD, SMLS PIPE
2	1	150	A 420 Gr WPL6	SCH STD, BW LR 90 DEG ELBOW
3	1	150	A 350 Gr LF2	CL 150, SCH STD, RF, WN FLANGE
4	2	150	ASME B16.20	CL 150, GARLOCK 3500, RING TYPE GASKET 1/8" THK
5	16	19	A 193 B7/A 194 2H	CL 150, 8 - 19.05 X 100 STUD BOLTS c/w TWO HEAVY HEX NUTS
6	1	150	GA-10	CL 150, RF, GATE VALVE

No.	DATE	REVISION	PAR	APP.
2	2017/09/21	PROJECT TITLE REVISED	KHV	
1	2017/09/11	LINE NUMBERS REVISED	KHV	
0	2017/05/15	ISSUED FOR CONSTRUCTION	KHV	

CLIENT: AGNICO EAGLE

NUQSANA-PROMEC MINING

ultragen

CONSULTANT PROJECT NO. 591700

NO. DE CONDUITE		SPECIFICATION	PRODUIT	SYSTEME REVETEMENT	CODE DE COULEUR	ISOLATION ET TRACAGE	EPAISS. D'ISOLATION		
116-150-PDI-CC10-0007		CC10	PDI					65-116-270-200	PIPE SUPPORT DETAILS
PRESSION D'OPERATION	TEMPERATURE D'OPERATION	PRESSION DE CONCEPTION	TEMPERATURE DE CONCEPTION	PRESSION D'ESSAI	CLASSE D'INSPECTION	CODE DE SERVICE	TRAITEMENT THERMIQUE	65-116-205-200	P&ID
PSIG	°F	PSIG	°F	PSIG				No. DESSIN	DESSINS DE REFERENCE

SCEAU PROFESSIONNEL
REGISTERED PROFESSIONAL ENGINEER
D. TRUONG
LICENSEE
2017/09/21

CONC.: KHV
DATE: 2017/04/25
DESSINE PAR: KVE
DATE: 2017/04/25
VOL PAR: -
DATE: -
APP.: -
DATE: -
ÉCHELLE: AUCUNE

PROJET: AGNICO EAGLE - MELIADINE DIVISION
116 - FUEL TANK FARM

TITRE: RANKIN INLET
FABRICATION ISOMETRIC
DIESEL FROM 65TNK11602 TO PUMPING STATION

No PROJET	No DESSIN	PAGES	REV.
6515	116-150-PDI-CC10-0007	1/1	2

116-MN-01

FICHIER: N:\Agnico Eagle\Meliadine\591700 (Fuel Distribution)\05. Design\03. Isometrics\01. Rankin Inlet\116-150-PDI-CC10-0007-1.DWG

APPROVE LE: Sep 22, 2017, 2:46pm

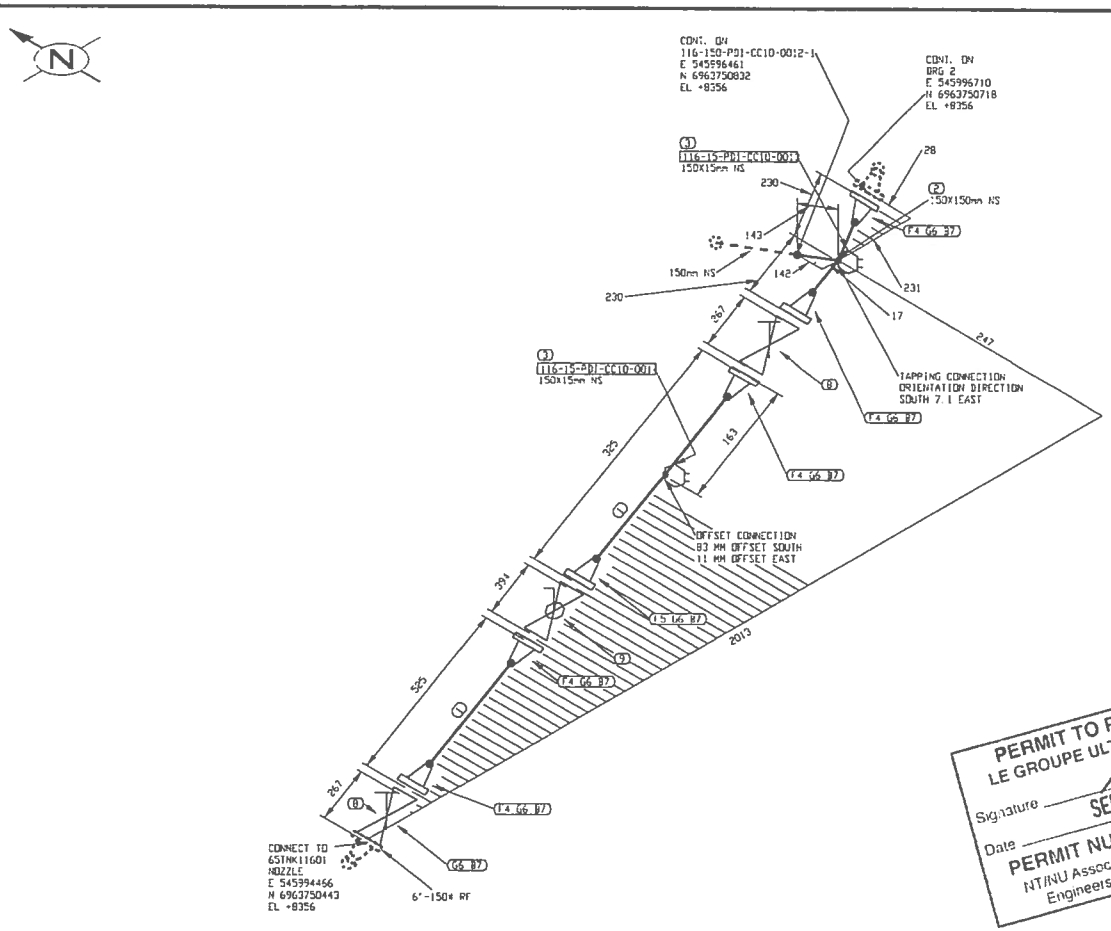

PERMIT TO PRACTICE
LE GROUPE ULTRAGEN LTEE
Signature
Date SEP 21 2017
PERMIT NUMBER: P 1180
NT/NU Association of Professional Engineers and Geoscientists

FABRICATION DRAWINGS BASED ON WSP CERTIFIED ENGINEERING

LISTE DE MATERIEL

No	QTE	DIA	MATERIEL/CATALOGUE	DESCRIPTION
1	502 MM	150	A 333 Gr. 6	SCH STD. SMLS PIPE
2	1	150X150	A 420 Gr. WPL6	SCH STD. BW STRAIGHT TEE
3	2	150X15	A 350 Gr. LF2	CL 3000. THREDOLET
4	5	150	A 350 Gr. LF2	CL 150, SCH STD, RF, WN FLANGE
5	1	150	A 350 Gr. LF2	CL 150, SCH STD, RF, WN FLANGE
6	7	150	ASME B16.20	CL 150, GARLOCK 5500, RING TYPE GASKET 1/8" THK
7	56	19	A 193 B7/A 194 2H	CL 150, 8 - 19.05 x 100 STUD BOLTS c/w TWO HEAVY HEX NUTS
8	2	150	GA-10	CL 150, RF, GATE VALVE
9	1	150	BA-31	CL 150, RF, BALL VALVE

No.	DATE	REVISION	PAR / APP
2	2017/09/21	PROJECT TITLE REVISED	KHV
1	2017/09/11	LINE NUMBERS REVISED	KHV
0	2017/05/15	ISSUED FOR CONSTRUCTION	KHV

CLIENT:

AGNICO EAGLE

NUQSANA-PROJEC MINING

ultragen

CONSULTANT PROJECT NO. 591700

SCEAU PROFESSIONNEL
REGISTERED PROFESSIONAL ENGINEER
D. TRUONG
LICENSEE

CONC.: KHV
DATE: 2017/04/25
DESSINE PAR: KVE
DATE: 2017/04/25
VER. PAR: -
DATE: -
APP.: -
DATE: -
ÉCHELLE: AUCUNE

PROJET:
AGNICO EAGLE - MELIADINE DIVISION
116 - FUEL TANK FARM

TITRE:
RANKIN INLET
FABRICATION ISOMETRIC
DIESEL FROM 65TNK11601 TO PUMPING STATION

No PROJET	No DESSIN	PAGES	REV.
6515	116-150-PDI-CC10-0011	1/5	2

NO. DE CONDUITE		SPECIFICATION	PRODUIT	SYSTEME REVETEMENT	CODE DE COULEUR	ISOLATION ET TRACAGE	EPAISS. D'ISOLATION		
116-150-PDI-CC10-0011		CC10	PDI		-			65-116-270-200	PIPE SUPPORT DETAILS
PRESSION D'OPERATION	TEMPERATURE D'OPERATION	PRESSION DE CONCEPTION	TEMPERATURE DE CONCEPTION	PRESSION D'ESSAI	CLASSE D'INSPECTION	CODE DE SERVICE	TRAITEMENT THERMIQUE	65-116-205-200	P&ID
PSIG	°F	PSIG	°F	PSIG				No. DESSIN	DESSINS DE REFERENCE

116-MN-01

IC:\ER P:\Agnico Eagle\Meliadine\591700 (Fuel Distribution)\05. Design\03. Isometrics\02. Isometrics\01. Rankin Inlet\116-150-PDI-CC10-0011-1.DWG
AMPRINT LE Sep 26, 2017, 2:46pm

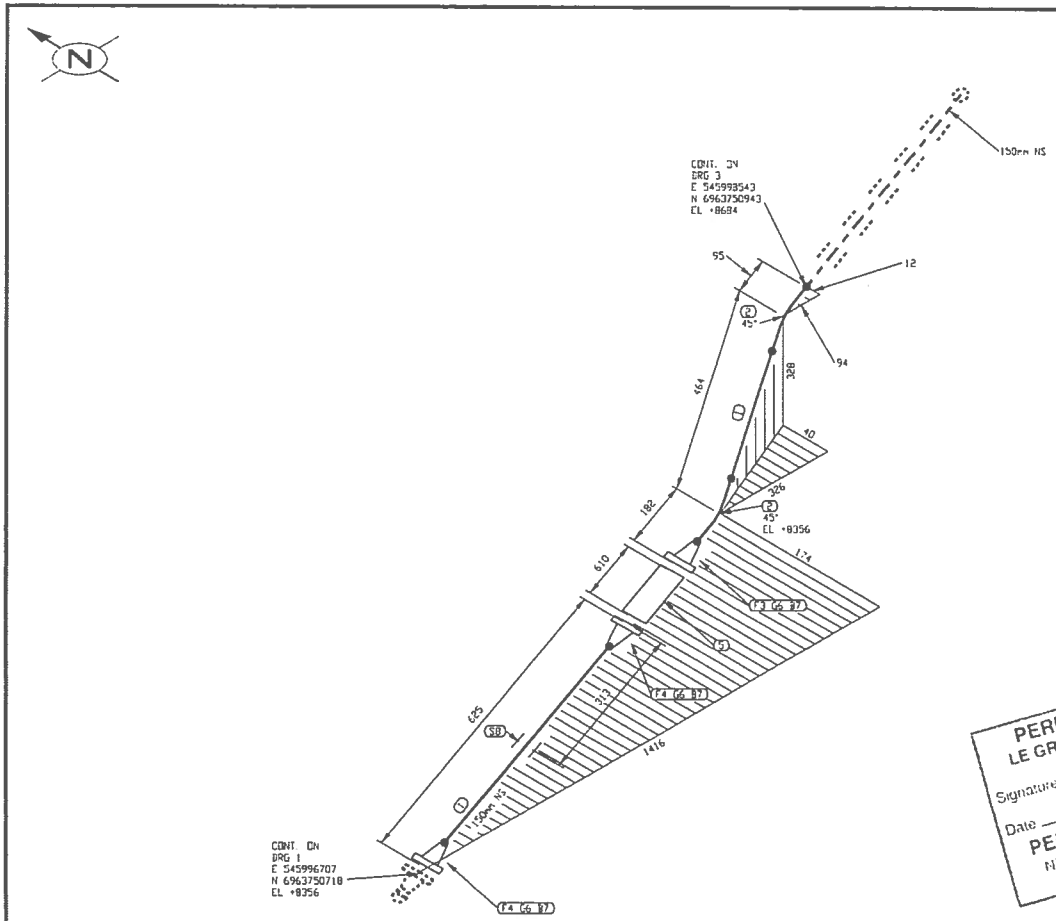

PERMIT TO PRACTICE
LE GROUPE ULTRAGEN LTÉE
Signature
Date SEP 21 2017
PERMIT NUMBER: P 1180
NT/NU Association of Professional Engineers and Geoscientists

FABRICATION DRAWINGS BASED ON WSP CERTIFIED ENGINEERING

LISTE DE MATERIEL

No	QTE	DIA	MATERIEL/CATALOGUE	DESCRIPTION
1	725 MM	150	A 333 Gr. 6	SCH STD, SMLS PIPE
2	2	150	A 420 Gr. WPL6	SCH STD, BW LR 45 DEG ELBOW
3	1	150	A 350 Gr. LF2	CL 150, SCH STD, RF, WN FLANGE
4	2	150	A 350 Gr. LF2	CL 150, SCH STD, RF, WN FLANGE
5	1	150		CL 150, SINGLE BRAIDED HOSE ASSEMBLY
6	3	150	ASME B16.20	CL 150, GARLOCK 5500, RING TYPE GASKET 1/8" THK
7	24	19	A 193 B7/A 194 2H	CL 150, 8 - 19.05 X 100 STUD BOLTS c/w 1WD HEAVY HEX NUTS
8	1	150		PIPE SHOE AS PER DETAIL 2, DWG 65-116-270-200

No.	DATE	REVISION	PAR / APP
2	2017/09/21	PROJECT TITLE REVISED	KHV
1	2017/09/11	LINE NUMBERS REVISED	KHV
0	2017/05/15	ISSUED FOR CONSTRUCTION	KHV

CLIENT:

AGNICO EAGLE

NUOSANA PROMEC MINING

ultragen

CONSULTANT PROJECT NO. 591700

NO. DE CONDUITE		SPECIFICATION	PRODUIT	SYSTEME REVETEMENT	CODE DE COULEUR	ISOLATION ET TRACAGE	EPAISS. D'ISOLATION		
116-150-PDI-CC10-0011		CC10	PDI		-			65-116-270-200	PIPE SUPPORT DETAILS
PRESSION D'OPERATION	TEMPERATURE D'OPERATION	PRESSION DE CONCEPTION	TEMPERATURE DE CONCEPTION	PRESSION D'ESSAI	CLASSE D'INSPECTION	CODE DE SERVICE	TRAITEMENT THERMIQUE	65-116-205-200	P&ID
PSIG	°F	PSIG	°F	PSIG				No. DESSIN	DESSINS DE REFERENCE

SCEAU PROFESSIONNEL
REGISTERED PROFESSIONAL ENGINEER
D TRUONG
LICENSEE
NT/NU
2017/09/21

CONC.: KHV
DATE: 2017/04/25
DESSINÉ PAR: KVE
DATE: 2017/04/25
VER. PAR: -
DATE: -
APP.: -
DATE: -
ÉCHELLE: AUCUNE

PROJET:
AGNICO EAGLE - MELIADINE DIVISION
116 - FUEL TANK FARM

TITRE:
RANKIN INLET
FABRICATION ISOMETRIC
DIESEL FROM 65TNK11601 TO PUMPING STATION

No PROJET	No DESSIN	PAGES	REV.
6515	116-150-PDI-CC10-0011	2/5	2

116-MN-01

FICHIER: N:\Agnico Eagle\Meliadine\591700 (Fuel Distribution)\05. Design\02 Isometrics\02 Isometrics\01 Parts Not\116-150-PDI-CC10-0011-2.DWG

IMPRIMÉ LE: Sep 20, 2017, 2:46pm

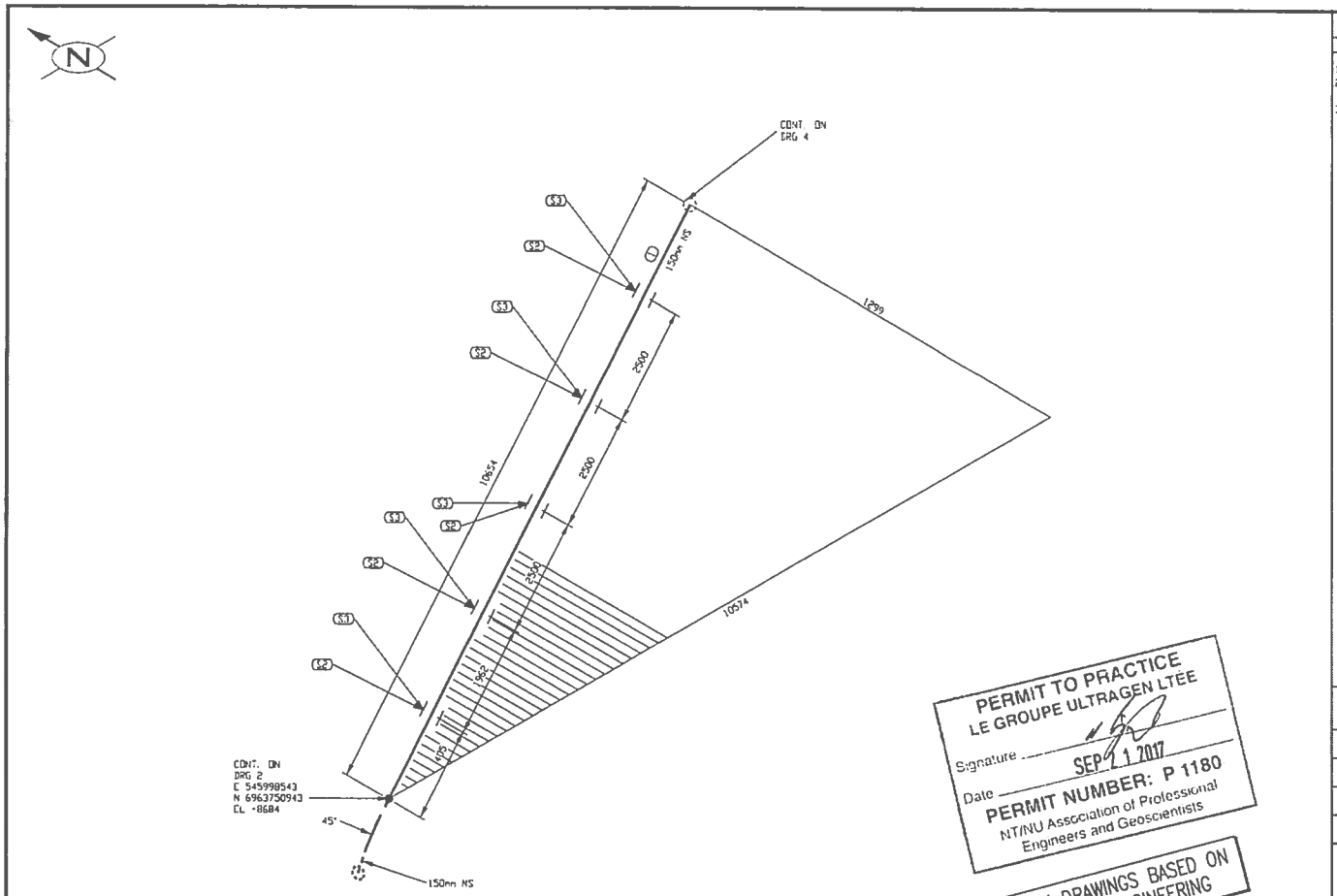

PERMIT TO PRACTICE
LE GROUPE ULTRAGEN LTÉE
Signature
Date SEP 21 2017
PERMIT NUMBER: P 1180
NT/NU Association of Professional Engineers and Geoscientists

FABRICATION DRAWINGS BASED ON WSP CERTIFIED ENGINEERING

LISTE DE MATERIEL

No	QTE	DIA	MATERIEL/CATALOGUE	DESCRIPTION
1	10654 MM	150	A 333 Gr 6	SCH STD, SMLS PIPE
2	5	150		PIPE SUPPORT AS PER DETAIL 1, DWG 65-116-270-200
3	5	150		PIPE SHOE AS PER DETAIL 2, DWG 65-116-270-200

No.	DATE	REVISION	PAR / APP.
2	2017/09/21	PROJECT TITLE REVISED	KHV
1	2017/09/11	LINE NUMBERS REVISED	KHV
0	2017/05/15	ISSUED FOR CONSTRUCTION	KHV

CLIENT: AGNICO EAGLE

NUOSANA PROJECT MINING

ultragen

CONSULTANT PROJECT NO. 591700

SCEAU PROFESSIONNEL: REGISTERED PROFESSIONAL ENGINEER — D TRUONG — LICENSEE

CONC.: KHV DATE: 2017/04/25
DESSINÉ PAR: KVE DATE: 2017/04/25
VOL. PAR: - DATE: -
APP.: - DATE: -
ÉCHELLE: AUCUNE

PROJET: AGNICO EAGLE - MELIADINE DIVISION
116 - FUEL TANK FARM

TITRE: RANKIN INLET
FABRICATION ISOMETRIC
DIESEL FROM 65TNK11601 TO PUMPING STATION

No PROJET	No DESSIN	PAGES	REV.
6515	116-150-PDI-CC10-0011	3/5	2

NO. DE CONDUITE		SPECIFICATION	PRODUIT	SYSTEME REVETEMENT	CODE DE COULEUR	ISOLATION ET TRACAGE	EPAISS. D'ISOLATION		
116-150-PDI-CC10-0011		CC10	PDI		—			65-116-270-200	PIPE SUPPORT DETAILS
PRESSION D'OPERATION	TEMPERATURE D'OPERATION	PRESSION DE CONCEPTION	TEMPERATURE DE CONCEPTION	PRESSION D'ESSAI	CLASSE D'INSPECTION	CODE DE SERVICE	TRAITEMENT THERMIQUE	65-116-205-200	P&ID
PSIG	°F	PSIG	°F	PSIG				No. DESSIN	DESSINS DE REFERENCE

116-MN-01

FICHIER N:\Projets Eagle\Meliadine\591700 (Fuel Distribution)\02. Contrôle\02. Tuyauterie\01. Parties Iso\116-150-PDI-CC10-0011-3.DWG

MIS À JOUR LE: Sep 20, 2017 2:46pm

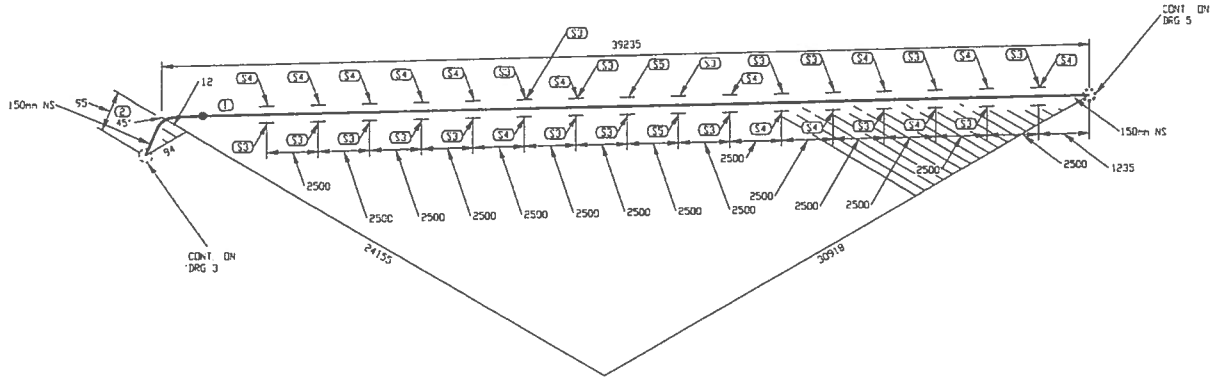

LISTE DE MATERIEL

No	DTE	DA	MATERIEL/CATALOGUE	DESCRIPTION
1	39140 MM	150	A 333 Gr 6	SCH STD, SMLS PIPE
2	1	150	A 420 Gr WPL6	SCH STD, BW LR 45 DEG ELBOW
3	18	150		PIPE SHOE AS PER DETAIL 2, DWG 65-116-270-200
4	14	150		PIPE SUPPORT AS PER DETAIL 1, DWG 65-116-270-200
5	2	150		PIPE SUPPORT AS PER DETAIL 3, DWG 65-116-270-200

No.	DATE	REVISION	PAR / APP.
2	2017/09/21	PROJECT TITLE REVISED	KHV
1	2017/09/11	LINE NUMBERS REVISED	KHV
0	2017/05/15	ISSUED FOR CONSTRUCTION	KHV

PERMIT TO PRACTICE
LE GROUPE ULTRAGEN LTÉE
Signature
Date SEP 21 2017
PERMIT NUMBER: P 1180
NT/NU Association of Professional Engineers and Geoscientists

FABRICATION DRAWINGS BASED ON WSP CERTIFIED ENGINEERING

CLIENT:

AGNICO EAGLE

NUOSANA-PROMEC MINING

ultragen

CONSULTANT PROJECT NO. 591700

SCEAU PROFESSIONNEL
REGISTERED PROFESSIONAL ENGINEER
D. TRUONG
LICENSEE
2017/09/21

CONC.: KHV
DATE: 2017/04/25
DESSINÉ PAR: KVE
DATE: 2017/04/25
VER. PAR: -
DATE: -
APP.: -
DATE: -
ÉCHELLE: AUCUNE

PROJET: AGNICO EAGLE - MELIADINE DIVISION
116 - FUEL TANK FARM

TITRE: RANKIN INLET
FABRICATION ISOMETRIC
DIESEL FROM 65TNK11601 TO PUMPING STATION

No PROJET	No DESSIN	PAGES	REV.
6515	116-150-PDI-CC10-0011	4/5	2

NO. DE CONDUITE		SPECIFICATION	PRODUIT	SYSTEME REVETEMENT	CODE DE COULEUR	ISOLATION ET TRACAGE	EPAISS. D'ISOLATION		
116-150-PDI-CC10-0011		CC10	PDI		-			65-116-270-200	PIPE SUPPORT DETAILS
PRESSION D'OPERATION	TEMPERATURE D'OPERATION	PRESSION DE CONCEPTION	TEMPERATURE DE CONCEPTION	PRESSION D'ESSAI	CLASSE D'INSPECTION	CODE DE SERVICE	TRAITEMENT THERMIQUE	65-116-205-200	P&ID
PSIG	°F	PSIG	°F	PSIG				No. DESSIN	DESSINS DE REFERENCE

TRACER: N:\Agnico Eagle\Meliadine\591700 (Fuel Distribution)\05. Drawing\07. Isometric\02. Manufacture\01. Rankin Inet\116-150-PDI-CC10-0011-1.DWG

IMPRIMÉ LE: Sep 20, 2017, 2:48pm

116-MN-01

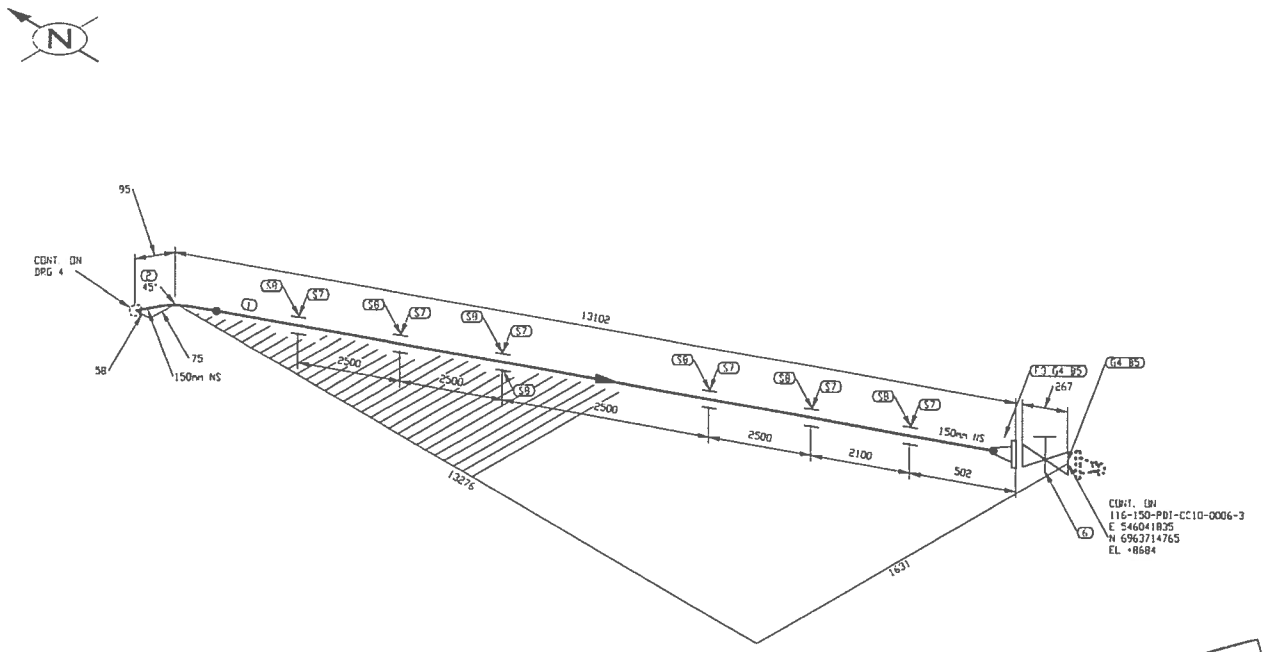

PERMIT TO PRACTICE
LE GROUPE ULTRAGEN LTÉE
Signature
Date SEP 21 2017
PERMIT NUMBER: P 1180
NT/NU Association of Professional Engineers and Geoscientists

FABRICATION DRAWINGS BASED ON WSP CERTIFIED ENGINEERING

LISTE DE MATERIEL

No	QTE	DIA	MATERIEL/CATALOGUE	DESCRIPTION
1	12919 MM	150	A 333 Gr. 6	SCH STD, SMLS PIPE
2	1	150	A 420 Gr. WPL6	SCH STD, BW LR 45 DEG ELBOW
3	1	150	A 350 Gr. LF2	CL 150, SCH STD, RF, WN FLANGE
4	2	150	ASME B16.20	CL 150, GARLOCK 5500, RING TYPE GASKET 1/8" THK
5	16	19	A 193 B7/A 194 2H	CL 150, 8 - 19.05 X 100 STUD BOLTS c/w TWO HEAVY HEX NUTS
6	1	150	GA-10	CL 150, RF, GATE VALVE
7	6	150		PIPE SUPPORT AS PER DETAIL 1, DWG 65-116-270-200
8	7	150		PIPE SHOE AS PER DETAIL 2, DWG 65-116-270-200

No.	DATE	REVISION	PAR / APP.
2	2017/09/21	PROJECT TITLE REVISED	KHV
1	2017/09/11	LINE NUMBERS REVISED	KHV
0	2017/05/15	ISSUED FOR CONSTRUCTION	KHV

CLIENT:

AGNICO EAGLE

NUOSANA PROMEC MINING

ultragen

CONSULTANT PROJECT NO. 591700

NO. DE CONDUITE		SPECIFICATION	PRODUIT	SYSTEME REVETEMENT	CODE DE COULEUR	ISOLATION ET TRACAGE	EPAISS. D'ISOLATION		
116-150-PDI-CC10-0011		CC10	PDI		-			65-116-270-200	PIPE SUPPORT DETAILS
PRESSION D'OPERATION	TEMPERATURE D'OPERATION	PRESSION DE CONCEPTION	TEMPERATURE DE CONCEPTION	PRESSION D'ESSAI	CLASSE D'INSPECTION	CODE DE SERVICE	TRAITEMENT THERMIQUE	65-116-205-200	P&ID
PSIG	°F	PSIG	°F	PSIG				No. DESSIN	DESSINS DE REFERENCE

SCEAU PROFESSIONNEL
REGISTERED PROFESSIONAL ENGINEER
D. TRUONG
LICENSEE
2017/09/21

CONC.: KHV
DATE: 2017/04/25
DESSINÉ PAR: KVE
DATE: 2017/04/25
VER. PAR: -
DATE: -
APP.: -
DATE: -
ÉCHELLE: AUCUNE

PROJET: AGNICO EAGLE - MELIADINE DIVISION
116 - FUEL TANK FARM

TITRE: RANKIN INLET
FABRICATION ISOMETRIC
DIESEL FROM 65TNK11601 TO PUMPING STATION

No PROJET	No DESSIN	PAGES	REV.
6515	116-150-PDI-CC10-0011	5/5	2

116-MN-01

FICHIER: W:\Agnico Eagle\Meliadine\591700 (Fuel Dispensing)\03 Dessin\02 Tuyauterie\03 Isometriques\01 Rankin Inst\116-150-PDI-CC10-0011-5.DWG

IMPRIMÉ LE: Sep 20, 2017, 2:46pm

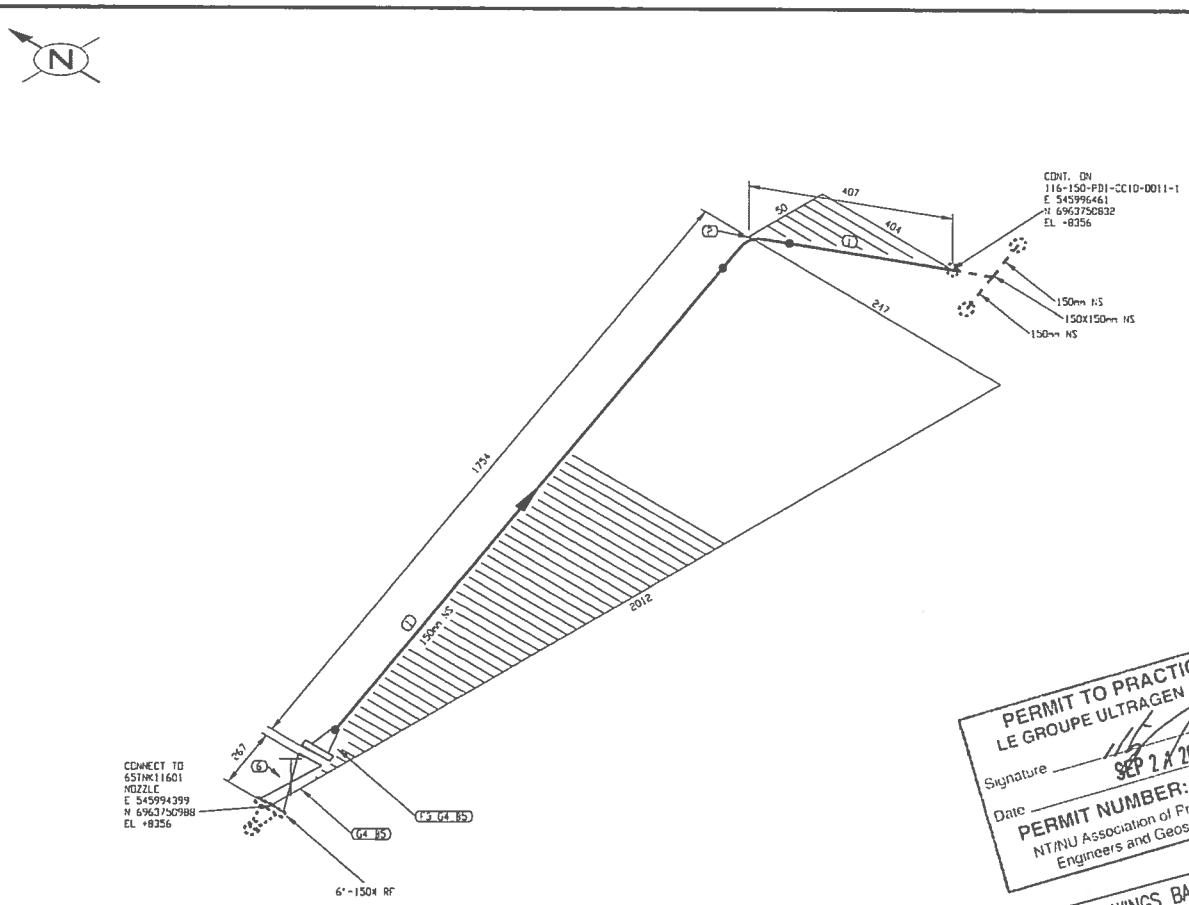

PERMIT TO PRACTICE
LE GROUPE ULTRAGEN LTÉE
Signature
Date SEP 2 X 2017
PERMIT NUMBER: P 1180
NT/NU Association of Professional Engineers and Geoscientists

FABRICATION DRAWINGS BASED ON WSP CERTIFIED ENGINEERING

LISTE DE MATERIEL

No	Q'T.	DIA	MATERIEL/CATALOGUE	DESCRIPTION
1	1616 MM	150	A 333 Gr. 6	SCH STD, SMLS PIPE
2	1	150	A 420 Gr. WPL6	SCH STD, BW LR 90 DEG ELBOW
3	1	150	A 350 Gr. LF2	CL 150, SCH STD, RF, WN FLANGE
4	2	150	ASME B16.20	CL 150, GARLOCK 5500, RING TYPE GASKET 1/8" THK
5	16	19	A 193 B7/A 194 2H	CL 150, 8 - 19.05 X 100 STUD BOLTS c/w TWO HEAVY HEX NUTS
6	1	150	GA-10	CL 150, RF, GATE VALVE

No.	DATE	REVISION	PAR / APP
2	2017/09/21	PROJECT TITLE REVISED	KHV
1	2017/09/11	LINE NUMBERS REVISED	KHV
0	2017/05/15	ISSUED FOR CONSTRUCTION	KHV

CLIENT: AGNICO EAGLE

NUQSANA PROMEC MINING

ultragen

CONSULTANT PROJECT NO. 591700

NO. DE CONDUITE		SPECIFICATION	PRODUIT	SYSTEME REVETEMENT	CODE DE COULEUR	ISOLATION ET TRACAGE	EPAISS. D'ISOLATION		
116-150-PDI-CC10-0012		CC10	PDI		-			65-116-270-200	PIPE SUPPORT DETAILS
PRESSION D'OPERATION	TEMPERATURE D'OPERATION	PRESSION DE CONCEPTION	TEMPERATURE DE CONCEPTION	PRESSION D'ESSAI	CLASSE D'INSPECTION	CODE DE SERVICE	TRAITEMENT THERMIQUE	65-116-205-200	P&ID
PSIG	°F	PSIG	°F	PSIG				No. DESSIN	DESSINS DE REFERENCE

SCEAU PROFESSIONNEL
REGISTERED PROFESSIONAL ENGINEER
D TRUONG
LICENSEE

CONC.: KHV
DATE: 2017/04/25
DESSINÉ PAR: KVE
DATE: 2017/04/25
VER. PAR: -
DATE: -
APP.: -
DATE: -
ÉCHELLE: AUCUNE

PROJET: AGNICO EAGLE - MELIADINE DIVISION
116 - FUEL TANK FARM

TITRE: RANKIN INLET
FABRICATION ISOMETRIC
DIESEL FROM 65TNK11601 TO PUMPING STATION

No PROJET	No DESSIN	PAGES	REV.
6515	116-150-PDI-CC10-0012	1/1	2

116-MN-01

FICHIER: W:\Agnico Eagle\Meliadine\591700\Dwl Data\dwg\DIS Generic\02. Isometric\02. Non-Metallic\01 Series Inch\116-150-PDI-CC10-0012-1.DWG

SUPRAM LE Sep 20, 2017, 2:44pm

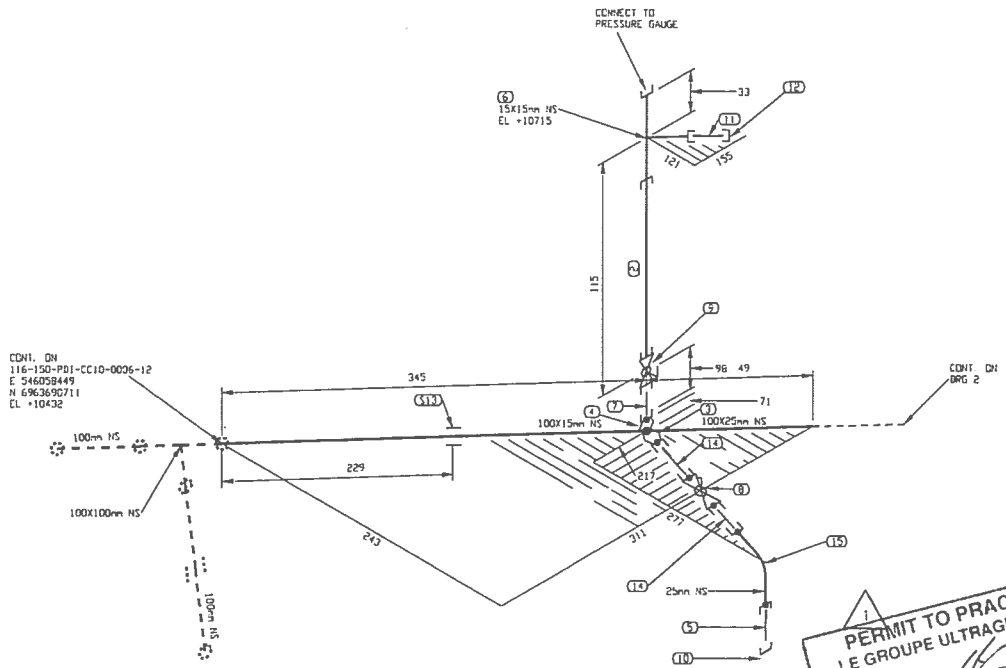

PERMIT TO PRACTICE
LE GROUPE ULTRAGEN LTÉE
Signature
Date SEP 21 2017
PERMIT NUMBER: P 1180
NT/NU Association of Professional Engineers and Geoscientists

FABRICATION DRAWINGS BASED ON WSP CERTIFIED ENGINEERING

LISTE DE MATERIEL

No	QTE	DIA	MATERIEL/CATALOGUE	DESCRIPTION
1	394 MM	100	A 333 Gr. 6	SCH STD, SMLS PIPE
2	73 MM	15	A 333 Gr. 6	SCH 80, SMLS PIPE
3	1	100x25	A 350 Gr. LF2	CL 3000, SOCKOLET
4	1	100x15	A 350 Gr. LF2	CL 3000, SOCKOLET
5	1	25	A 333 Gr. 6	SCH 80, NIPPLE x 75mm LG PDExTCE
6	1	15X15	A 350 Gr. LF2	CL 3000, THRD STRAIGHT TEE
7	1	15	A 333 Gr. 6	SCH 80, NIPPLE x 75mm LG PDExTCE
8	1	25	BA-29	CL 600, SW, BALL VALVE
9	1	15	BA-32	CL 600, THRD, BALL VALVE
10	1	25	A 350 Gr. LF2	CL 3000, THRD CAP
11	1	15	A 333 Gr. 6	SCH 80, NIPPLE x 75mm LG TBE
12	1	15	A 350 Gr. LF2	CL 3000, THRD CAP
13	1	100		PIPE SUPPORT AS PER DETAIL 9, DWG 65-116-270-200
14	2	25	A 333 Gr. 6	SCH 80, NIPPLE x 75mm LG PBE
15	1	25	A 350 Gr. LF2	CL 3000, SW 90 DEG ELBOW

No	DATE	REVISION	PAR / APP.
3	2017/09/21	PROJECT TITLE REVISED	KHV
2	2017/09/11	LINE NUMBERS REVISED	KHV
1	2017/06/30	DRAIN REVISED AS PER CLIENT COMMENTS	QVN
0	2017/05/15	ISSUED FOR CONSTRUCTION	KHV

CLIENT: AGNICO EAGLE

NUQSANA-PROMEC MINING

ultragen

CONSULTANT PROJECT NO 591700

NO. DE CONDUITE		SPECIFICATION	PRODUIT	SYSTEME REVETEMENT	CODE DE COULEUR	ISOLATION ET TRACAGE	EPAISS. D'ISOLATION		
116-150-PDI-CC10-0018		CC10	PDI					65-116-270-200	PIPE SUPPORT DETAILS
PRESSION D'OPERATION	TEMPERATURE D'OPERATION	PRESSION DE CONCEPTION	TEMPERATURE DE CONCEPTION	PRESSION D'ESSAI	CLASSE D'INSPECTION	CODE DE SERVICE	TRAITEMENT THERMIQUE	65-116-205-200	P&ID
PSIG	°F	PSIG	°F	PSIG				No DESSIN	DESSINS DE REFERENCE

SCEAU PROFESSIONNEL
REGISTERED PROFESSIONAL ENGINEER
D TRUONG
LICENSEE
2017/09/21
NT/NU

CONC.: KHV
DATE: 2017/04/25
DESSINÉ PAR: KVE
DATE: 2017/04/25
VER. PAR: -
DATE: -
APP.: -
DATE: -
ÉCHELLE: AUCUNE

PROJET: AGNICO EAGLE - MELIADINE DIVISION
116 - FUEL TANK FARM

TITRE: RANKIN INLET
FABRICATION ISOMETRIC
DIESEL FROM 65TNK11601 & 65TNK11602 TO 65POD11601A

No PROJET	No DESSIN	PAGES	REV.
6515	116-150-PDI-CC10-0018	1/2	3

116-MN-01

FICHIER: N:\Agnico Eagle\Meliadine\591700 Fuel Distribution\05. Dessin\03 Tuyauterie\02. Isometriques\01 Pompe vers\116 150 PDI-CC10-0018-1.DWG

IMPRIMÉ LE: Sep 20, 2017 2:46pm

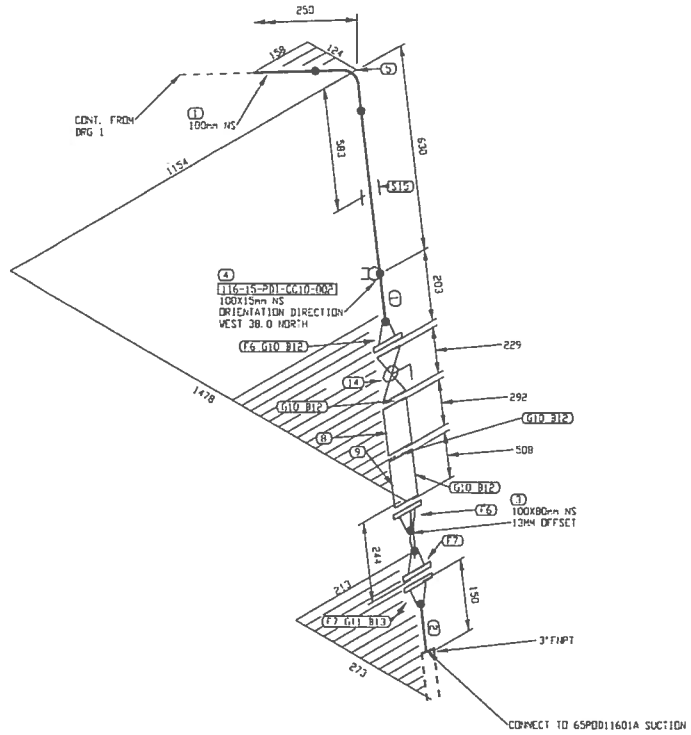

PERMIT TO PRACTICE
LE GROUPE ULTRAGEN LTÉE
Signature
Date SEP 1 1 2017
PERMIT NUMBER: P 1180
NT/NU Association of Professional Engineers and Geoscientists

FABRICATION DRAWINGS BASED ON WSP CERTIFIED ENGINEERING

LISTE DE MATERIEL

No	QTE	DIA	MATERIEL/CATALOGUE	DESCRIPTION
1	655 MM	100	A 333 Gr. 6	SCH STD, SMLS PIPE
2	81 MM	80	A 333 Gr. 6	SCH STD, SMLS PIPE POExTOE
3	1	100X80	A 420 Gr. WPL6	SCH STD, BW ECC RED
4	1	100X15	A 350 Gr. LF2	CL 3000, THREDOLET
5	1	100	A 420 Gr. WPL6	SCH STD, BW LR 90 DEG ELBOW
6	2	100	A 350 Gr. LF2	CL 150, SCH STD, RF, WN FLANGE
7	2	80	A 350 Gr. LF2	CL 150, SCH STD, RF, WN FLANGE
8	1	100		CL 150, BASKET STRAINER
9	1	100		CL 150, SINGLE BRAIDED HOSE ASSEMBLY
10	4	100	ASME B16.20	CL 150, GARLOCK 3500, RING TYPE GASKET 1/8" THK
11	1	80	ASME B16.20	CL 150, GARLOCK 3500, RING TYPE GASKET 1/8" THK
12	32	16	A 193 B7/A 194 2H	CL 150, 8 - 15.875 X 90 STUD BOLTS c/w TWO HEAVY HEX NUTS
13	4	16	A 193 B7/A 194 2H	CL 150, 4 - 15.875 X 90 STUD BOLTS c/w TWO HEAVY HEX NUTS
14	1	100	BA-31	CL 150, RF, BALL VALVE
15	1	100		PIPE SUPPORT AS PER DETAIL 9, DWG: 65-116-270-200

No.	DATE	REVISION	PAR APP.
2	2017/09/21	PROJECT TITLE REVISED	KHV
1	2017/09/11	LINE NUMBERS REVISED	KHV
0	2017/05/15	ISSUED FOR CONSTRUCTION	KHV

CLIENT:

AGNICO EAGLE

NUOSANG-PROMEC MINING

ultragen

CONSULTANT PROJECT NO. 591700

NO. DE CONDUITE		SPECIFICATION	PRODUIT	SYSTEME REVETEMENT	CODE DE COULEUR	ISOLATION ET TRACAGE	EPAISS. D'ISOLATION		
116-150-PDI-CC10-0018		CC10	PDI		-			65-116-270-200	PIPE SUPPORT DETAILS
PRESSION D'OPERATION	TEMPERATURE D'OPERATION	PRESSION DE CONCEPTION	TEMPERATURE DE CONCEPTION	PRESSION D'ESSAI	CLASSE D'INSPECTION	CODE DE SERVICE	TRAITEMENT THERMIQUE	65-116-205-200	P&ID
PSIG	°F	PSIG	°F	PSIG				No DESSIN	DESSINS DE REFERENCE

SCEAU PROFESSIONNEL
REGISTERED PROFESSIONAL ENGINEER
D TRUONG
LICENSEE
2017/09/21

CONC.: KHV
DATE: 2017/04/25
DESSINÉ PAR: KVE
DATE: 2017/04/25
VER. PAR: -
DATE: -
APP.: -
DATE: -
ÉCHELLE: AUCUNE

PROJET: AGNICO EAGLE - MELIADINE DIVISION
116 - FUEL TANK FARM

TITRE: RANKIN INLET
FABRICATION ISOMETRIC
DIESEL FROM 65TNK11601 & 65TNK11602 TO 65PDD11601A

No PROJET	No DESSIN	PAGES	REV.
6515	116-150-PDI-CC10-0018	2/2	2

116-MN-01

FICHIER: H:\Agnico Eagle\Modeles\591720 Fuel Distribution\05 Bases\02 Fabrication\01 Rankin Inlet\116-150-PD-CC10-0018.DWG

IMPRIMÉ LE: Sep 23, 2017, 2:43pm

AGNICO EAGLE

Vendor Document Status

1 ☐ Proceed to next submission and status.

2 ☐ Proceed with exceptions as noted to next submission and status.

3 ☐ Do not proceed.
Revise as noted and resubmit next submission and status.

4 ☑ Complete, no further submission required.

By: Jean-Francois Tremblay Date: 2017-05-02

Review and authorization to fabricate are only for general conformance with the design concept of the Project as expressed in the Contract Documents. Sole responsibility for the accuracy and completeness of this document, including but not limited to dimensions and quantities, remains with the Supplier/Contractor. Agnico Eagle does not warrant the accuracy or completeness of any of the information contained herein, nor does Agnico Eagle authorize or approve any construction means, methods, techniques, sequences or any safety precautions or procedures.

Agnico Eagle No. 6515-C-270-007-141-TES-0014 R: Sub001

DOCUMENT FOR INFORMATION

NUQSANA-PROMEC MINING

Agnico-Eagle Mines Ltd.
Non-Conformance Report

ITR Number : AEM-GE-ITR-002
Contract no. : C22466T / C22498E

AGNICO EAGLE

PART 1 – To be completed by Originator

ITR no. :	Supplier/Vendor/Manufacturer/Contractor :	Originator :	Date:

Equipment Identification:	Equipment Tag No.:

Disposition Requested:	NCR Classification:
☐ 48 Hours ☐ Other	☐ Supplier ☐ Fabrication ☐ Engineering ☐ Construction ☐

Current Status:	Potential Impact (Check appropriate box and give estimate):
☐ Work Already Done ☐ Partially Done ☐ Other _____	☐ Cost ☐ Schedule ☐ Other

Detailed Description of Non-Conformance (attach sketch, pictures, etc) :

Describe Deviation to Drawings, Specifications, Standard, Code or other Reference:

PART 2 - Disposition

* CONTRACTOR Proposed Disposition / Resolution:	Concession Request No. (if applicable):	Contractors NCR No. (if applicable):
☐ Use As Is ☐ Repair ☐ Rework ☐ Reject/Scrap		

Details of Contractor Corrective Actions Proposed / Concession Request:

* Disposition:	Dispositioning Party:	Signature:
☐ Use as Is ☐ Repair ☐ Rework ☐ Reject/Scrap		

Recommended Resolution / Actions:

PART 3 - Confirmation

Corrective Actions Completed By:	Corrective Actions Accepted by Dispositioning Party:
Name:	Name:
Date:	Date:
Signature:	Signature:
Corrective Actions Accepted by Originator:	**NCR Closed Out By (Area QA Coordinator)**
Name:	Name:
Date:	Date:
Signature:	Signature:

** Note:* Dispositions are not to be construed as a change to any Contracts which may be affected. Prior to initiating any work which will impact the Contract terms, the Contractors must forward to AMEC written notice of all impacts, including but not limited to cost and schedule. Any work completed without a written instruction to proceed, if required, will be at the Contractor's risk.

6515-C-270-007

Fuel Tanks Piping Supply and Installation

Non-Conformance Log

Document Number : AEM-GE-LOG-002
Contract Number : C22466T / C22498E

Number	Company	Description	Initiator	Date Opened	Date Closed	Progress Status
NCR-001						N/A
NCR-002						N/A
NCR-003						N/A
NCR-004						N/A
NCR-005						N/A
NCR-006						N/A
NCR-007						N/A
NCR-008						N/A
NCR-009						N/A
NCR-010						N/A
NCR-011						N/A
NCR-012						N/A
NCR-013						N/A
NCR-014						N/A
NCR-015						N/A
NCR-016						N/A
NCR-017						N/A
NCR-018						N/A
NCR-019						N/A
NCR-020						N/A
NCR-021						N/A
NCR-022						N/A
NCR-023						N/A
NCR-024						N/A
NCR-025						N/A
NCR-026						N/A
NCR-027						N/A
NCR-028						N/A
NCR-029						N/A
NCR-030						N/A
NCR-031						N/A
NCR-032						N/A
NCR-033						N/A
NCR-034						N/A
NCR-035						N/A
NCR-036						N/A
NCR-037						N/A
NCR-038						N/A
NCR-039						N/A
NCR-040						N/A

AGNICO EAGLE

Vendor Document Status

1 ☐ Proceed to next submission and status.

2 ☐ Proceed with exceptions as noted to next submission and status.

3 ☐ Do not proceed.
Revise as noted and resubmit next submission and status.

4 ☑ Complete, no further submission required.

By: Jean-Francois Tremblay Date: 2017-05-02

Review and authorization to fabricate are only for general conformance with the design concept of the Project as expressed in the Contract Documents. Sole responsibility for the accuracy and completeness of this document, including but not limited to dimensions and quantities, remains with the Supplier/Contractor. Agnico Eagle does not warrant the accuracy or completeness of any of the information contained herein, nor does Agnico Eagle authorize or approve any construction means, methods, techniques, sequences or any safety precautions or procedures.

Agnico Eagle No. 6515-C-270-007-141-TES-0019 R: Sub001

DOCUMENT FOR INFORMATION

AGNICO EAGLE

Vendor Document Status

1 ☐ Proceed to next submission and status.

2 ☐ Proceed with exceptions as noted to next submission and status.

3 ☐ Do not proceed.
Revise as noted and resubmit next submission and status.

4 ☑ Complete, no further submission required.

By: JEAN-FRANCOIS TREMBLAY Date: 2017-05-02

Review and authorization to fabricate are only for general conformance with the design concept of the Project as expressed in the Contract Documents. Sole responsibility for the accuracy and completeness of this document, including but not limited to dimensions and quantities, remains with the Supplier/Contractor. Agnico Eagle does not warrant the accuracy or completeness of any of the information contained herein, nor does Agnico Eagle authorize or approve any construction means, methods, techniques, sequences or any safety precautions or procedures.

Agnico Eagle No. 6515-C-270-007-141-TES-0038 R: Sub001

DOCUMENT FOR INFORMATION

Agnico-Eagle Mines Ltd.

Contract no. 6515-C-270-007

Welding Control Procedure

AEM-WE-PRO-001

Area No.: All

System No.: All

PROMEC Approvals

Prepared by:	Stéphane Doré	**Signature:**		**Date:**	2017-04-26
Verified by:	Jérémy Duval	**Signature:**		**Date:**	2017-04-26
Approved by:	Éric Poulin	**Signature:**		**Date:**	2017-04-26

CLIENT Approvals

Verified by:		**Signature:**		**Date:**	
Approved by:		**Signature:**		**Date:**	

TABLE OF CONTENTS

Page

1. SCOPE 3
2. REFERENCES 3
3. WELDING PROCEDURES 3
4. WELDER PERFORMANCE QUALIFICATION 3
5. WELDING MATERIAL CONTROL 4
6. FIT-UP AND WELDING 4
7. RADIOGRAPHIC INSPECTION 5

APPENDIX A – ALL APPLICABLE ITRs & LOGs

1. Scope

- This procedure describes the system for maintaining control of all production welding to the requirements of the applicable engineering specifications, codes and standards.

2. References

- ASME, Section IX - Welding and Brazing Qualifications
- ANSI, B-31.3 - Petroleum Refinery Piping
- ANSI, B-31.1 - Power Piping
- AWS, American Welding Society

3. Welding Procedures

- All welding performed on site will comply with applicable qualified welding procedures as specified in the Standard S40 05 13.
- Prime contractor's welders will be qualified to weld procedures in accordance with contract specifications. Prime contractor is responsible for certifying their own welders.
- Copies of the qualified welding procedures approved for that project shall be maintained on site by the Welding Foreman and Site Q/C Representative for reference and permanent retention.

4. Welder Performance Qualification

- It is the responsibility of the Site Q/C Representative to conduct or supervise the Welder Performance Qualification tests. At the discretion of the Corporate Quality Control Manager, a Welding Foreman or other qualified site supervisor may conduct these tests.
- Records attesting to the Welder Performance Qualification tests shall be generated and maintained by the Site Q/C Representative and the Welding Foreman.
- The Site Q/C Representative and the Welding Foreman shall maintain a complete listing of welders and welding operators employed. The form, Welder Qualification Log, is to be updated and reissued on a monthly basis and is to be distributed as required.

5. Welding Material Control

- The Site Q/C Representative and Welding Foreman shall make certain that the welding material used conforms to that of the welding procedure. No substitutions for the specified material will be made without written approval from the client.

6. Fit-Up and Welding

- Visual surveillance shall be performed to establish compliance to welding procedures. The inspection parameters listed below are recommended as guidelines
  - ✓ Inspect end preparation and joint configuration as established by applicable weld procedures and engineering specifications.
  - ✓ Inspect internal alignment and root opening prior to welding.
  - ✓ Check tack welds that are to be incorporated into the final weld, and be assured of proper blend grinding and absence of visual defects.
  - ✓ Check for proper welding materials and other essential variables of applicable weld procedures.
  - ✓ Check visually root pass for cracks, porosity, slag, fusion lines and quality workmanship (if required use LP).
  - ✓ Inspect completed welds for proper reinforcement. All welds should blend smoothly into the base metal and be free of cold lap or fusion at the toe.
  - ✓ Inspect weld for surface discontinuities such as undercut. Surface porosity is to be considered as an injurious defect and shall be repaired.
  - ✓ All repairs are to be made in accordance with approved procedures.
  - ✓ Each welder shall be responsible for stamping his assigned symbol immediately after completion of the weld. A smooth, flat spot shall be ground or filed on the reinforcement cap. The welder shall stamp his/hers identifying mark upon this spot.
- For ferrous material less than 1/4" (1/2" for nonferrous), the welder's symbol shall be recorded on the base metal by use of a halogen-free paint marker, or recorded on isometric drawings by the welding supervisor which shall be available to the Quality Control Inspector.

7. Radiographic Inspection

- The Site Q/C Representative or Welding Foreman will schedule radiographic inspections.
- Radiographic requirements shall be determined by the client standard to assure compliance to contract Codes and specifications.
- Welds requiring radiography will be flagged by a suitable means which will be consistent through contract completion.
- The Site Q/C Representative will complete the Radiographic Inspection Status Record, to indicate status of radio graphically-inspected welds. This form will be forwarded to appropriate supervision for distribution.
- In addition to the records generated under this procedure, marked-up isometric and orthographic drawings will be used as weld maps to indicate completion of radiographic inspection. This will allow a progressive record and give system status.

PREMIÈRE PASSE E-6011 , 3/32
SMAW
REMPLISSAGE E-7018 , 1/8-5/32
SMAW
<u>ACIER AU CARBONE</u>
Procédure : P-1 , PR-1

et de la Protection du consommateur
Inspection des installations de tuyauterie
Division des appareils sous pression

DE SOUDAGE (DMS)
ding Procedure Specification (WPS)

Note: les titres désignent également les hommes et les femmes.

(2) Enregistrement provincial / *Provincial Registration*	MS / *WP* 8814.6

Entreprise/*Company*

Nom: Construction Promec

Adresse/*Address*: 369 rue Murdoch

Rouyn-Noranda (Québec)

(819) 797-3456 — Code postal: J 9 X 1 G 4

(3) Désignation de la méthode/*Procedure Identification*

DMS N° / *WPS No.*: P1 — Révision N° / *Revision No.*: 0

RMS N° / *PQR No.*: PR1

Section du code / *Code section*:

(4) Procédé(s) de soudage / *Welding Process(es)*

1	SMAW	Manuel/*Manual* [X]	Semi-auto. [ ]	Auto. [ ]
2		Manuel/*Manual* [ ]	Semi-auto. [ ]	Auto. [ ]
3		Manuel/*Manual* [ ]	Semi-auto. [ ]	Auto. [ ]

(5) Joints/*Joints* (QW-402)

Genre/*Design*: VW Fillet — Chan Frein Simple — ~~Chan Frein Double~~

Soulien / *Backing*: Oui / *Yes* [X] — Non / *No* [X]

Matériau de soulien / *Backing material*: P1 ou soudure

Autre / *Other*:

Croquis/*Sketch*

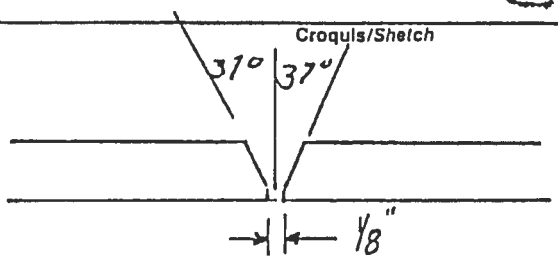

(6) Métaux de base/*Base Metals* (QW-403)

P N°/*No.*: P1 — Gr N°/*No.*: — à/*to* P N°/*No.*: P1 — Gr N°/*No.*:

ou Spécifications type et grade / *or Specifications type and grade*: à/*to*

Anal. chimique et prop. méc. / *Chemical Analysis and Mech. Prop.*: F3 à/*to* F4

Gamme des épaisseurs qualifiées / *Thickness Range Qualified*: Total 3/16" à 1½" — 1 ¼" — 2 1¼" — 3

Autre / *Other*:

(7) Métaux d'apport/*Filler Metals* (QW-404)

AWS N°/*No.*	E6011	SFA	5.1	*F-No.*	3	*A-No.*	1	Dia. 3/32-1/8-5/32
AWS N°/*No.*	E7018	SFA	5.1	*F-No.*	4	*A-No.*	1	Dia. 3/32-1/8-5/32
AWS N°/*No.*		SFA		*F-No.*		*A-No.*		Dia.

Marque de commerce du flux / *Flux Tradename*: — Classification du flux-électrode / *Electrode-Flux Classification*:

Pièce insérée consumable / *Consumable Insert*: — Autre / *Other*:

(8) Positions/*Positions* (QW-405)

Position(s) du chanfrein / *Position(s) of Groove*: Toute position

Progression du soudage / *Welding Progression*: Montant / *Up* [X] — Descendant / *Down* [X]

Position(s) de l'angle / *Position(s) of Fillet*: Toute position

Autre / *Other*:

(9) Préchauffage/*Preheat* (QW-406)

Température de préchauffage / *Preheat Temperature*: Min. 60°F

Température de l'interpasse / *Interpass Temperature*: Max.

Maintien du préchauffage / *Preheat Maintenance*:

Autre / *Other*:

(10) Traitement thermique postsoudage/ *Postweld Heat Treatment* (QW-407)

Gamme de températures / *Temperature Range*: Aucun

Gamme de durée / *Time Range*:

Autre / *Other*:

(11) Gaz/*Gas* (QW-408)

Composition du gaz de protection / *Shielding Gas Composition*:

Débit du gaz / *Gas Flow Rate*:

Composition du gaz de soutien / *Shielding Gas Composition*:

Débit du gaz / *Gas Flow Rate*:

Composition du gaz de protection trainant / *Trailing Shielding Gas Composition*:

Caractéristiques électriques et t[illegible]niques/Electrical Characteristics and Tec[illegible]ue (QW-409) + (QW-410)

[illegible]ucho(s) de soudure [illegible]ver(s)	Procédé Process	Métal d'apport Filler Metal		Courant Current				Gamme de vitesse Travel Speed Range
		Classification Classification	Diamètre Diameter	Type Type	Polarité Polarity	Gamme d'ampérage Amp Range	Gamme de voltage Volt Range	
[illegible]è	SHAW	E6011	1/8" à 5/32"	DC	Inversé	75 - 85	26-30	--
[illegible]tres	SHAW	E7018	1/8" à 5/32"	DC	Inversé	105 -110	26-30	--

[illegible]sseur et type d'électrode de tungstène
[illegible]gsten Electrode Size and Type --

[illegible]e de transfert du métal pour GMAW
[illegible]e of Metal Transfer for GMAW --

[illegible]ion droit ou oscillant
[illegible]g or Weave Bead Droit et oscillant

[illegible]édé de gougeage arrière
[illegible]od of Back Gouging Arc Air

[illegible]oyage initial et entre les passes (brossage, meulage, etc.)
[illegible]l and Interpass Cleaning (Brushing, Grinding, etc.) Brossage ou meulage

[illegible]mètre de la tuyère à gaz
[illegible]e or Gas Cup Size --

[illegible]llation Largeur
[illegible]llation Width -- Fréquence Frequency

[illegible]nce entre tuyère & pièce
[illegible] to Work Distance --

[illegible] ou multiple (par côté)
[illegible]ingle Pass (per Side) --

[illegible]rode unique ou multiple
[illegible]ple or Single Electrode --

[illegible]me de vitesse d'alimentation de l'électrode
[illegible]rode Wire feed speed range --

Pas de martelage

Autres commentaires/Supplementary Comments

[illegible]gnature du représentant de l'entreprise
[illegible]mpany Representative's Signature

Date
Date 15 janv. 88

16

QC MINISTÈRE DU TRAVAIL ET DE LA MAIN-D'OEUVRE
APPROUVÉ
SELON LA LOI [illegible] APPAREILS SOUS PRESSION [illegible]
VÉRIFIÉ PAR .....
DATE 88 01 25

[illegible]

Réservé au ministère/Department use only

[illegible]par Date: [illegible] 20

N° [illegible]

Gouvernement du Québec
Ministère de l'Habitation
et de la Protection du consommateur
Division des appareils sous pression

RÉSULTAT DE LA MÉTHODE DE SOUDAGE (RMS)
Procedure Qualification Record (PQR)

...ltres désignent également les hommes et les femmes.

(Référence: ASME Section IX)

1 Entreprise/Company

Nom/Name: Construction Promec

Adresse/Address: 369 rue Murdoch

Rouyn-Noranda (Québec)

819-797-3456 — Code postal: J 9 X 1 G 4

2 Enregistrement provincial / Provincial Registration: MS / WP 88/4.6

3 Désignation du résultat/Record Identification

RMS N° / POR No.: PR-1

DMS N° / WPS No.: P -1

4 Procédé(s) de soudage/Welding Process(es)

SMAW — Type: Manuel

Type:

Type:

5

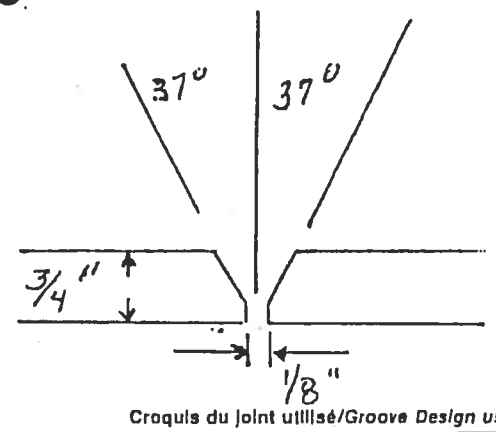

Croquis du joint utilisé/Groove Design used

6 Métaux de base/Base Metals (QW-403)

No. 1 — Gr No. — à/to — P No. 1 — Gr No.

Spécification/Specification: SA - 516 - 70 — Tension/Tensile: 70 000

Épaisseur/Thickness: 3/4" — Diamètre/Diameter:

Autre/Other:

7 Métaux d'apport/Filler Metals (QW-404)

Classification (AWS)	SFA - No.	F - No.	A - No.
E-6011	5.1	3	1
E-7018	5.1	4	1

Autre/Other:

8 Positions/Positions (QW-405)

Position(s) du joint / Position(s) of Groove: 1 - G

Progression du soudage / Welding Progression: Montant / Up ☐ Descendant / Down ☐

Autre/Other:

9 Préchauffage/Preheat (QW-406)

Température de préchauffage / Preheat Temperature: 60°F

Température de l'interpasse / Interpass Temperature:

Autre/Other:

10 Traitement thermique postsoudage/Postweld Heat Treatment (QW-407)

Température / Temperature: aucun

Durée / Time:

Autre / Other:

11 Gaz/Gas (QW-408)

Composition du gaz de protection / Shielding Gas Composition: --

Débit du gaz / Gas Flow Rate:

Composition du gaz de soutien / Backing Gas Composition:

Débit du gaz / Gas Flow Rate:

Autre / Other:

12 Technique/Technique (QW-410)

Cordon droit ou oscillant / String or Weave Bead: droit

Oscillation / Oscillation:

Passe unique ou multiple (par côté) / Multipass or Single Pass (Per Side): multiple

Électrode unique ou multiple / Single or Multiple Electrode: unique

Autre / Other:

13 Caractéristiques électriques et techniques/Electrical Characteristics and Technique (QW-409) + (QW-410)

Couche(s) de métal / Weld Layer(s)	Procédé / Process	Métal d'apport / Filler Metal: Classification / Classification	Métal d'apport: Diamètre / Diameter	Courant / Current: Type / Type	Polarité / Polarity	Ampérage / Amp	Voltage / Volt	Vitesse / Travel Speed
Première	SMAW	E-6011	1/8	DC	Inversé	85	26-30	-
Autres	SMAW	E-7018	1/8	DC	Inversé	105	26-30	-

(14) Essais à la traction/Tensile Tests

Éprouvette Specimen	Dimensions Dimensions Largeur Width	Épaisseur Thickness	Surface Area	Charge limite Ultimate Total Load	Traine limite Ultimate Unit Stress	Nature et endroit de la rupture Character and Location of Failure
(i) G-1	.781	.810	.6326	51800	81,884	matériel
G-6	.785	.829	.6508	54300	83,436	matériel

(15) Essais de pliage guidé/Guided Bend Tests — Référence:

Éprouvette Specimen	Face Face	Racine Root	Côté Side	Résultat Result	Éprouvette Specimen	Face Face	Racine Root	Côté Side	Résultat Result
(i) G-2		X		Accepté	(i) G-3	X			Accepté
(i) G-4		X		Accepté	(i) G-5	X			Accepté

(16) Essais de résilience/Toughness Tests — Référence:

Éprouvette Specimen	Endroit de l'entaille Notch Location	Forme de l'entaille Notch Type	Température de l'éprouvette Specimen Temperature	Énergie de rupture Impact Value	Expansion latérale Lateral Expansion % cisaillement/shear	Milièmes Mills	Essai en chute libre Drop Weight Cassé Break	Non cassé No Break

(17) Essai de soudure d'angle/Fillet Weld Test — Référence:

Résultat satisfaisant Result-Satisfactory: Oui Yes ☐ Non No ☐

Pénétration dans métal adjacent Penetration into Parent Metal: Oui Yes ☐ Non No ☐

Résultats Macroscopiques Micro-Results:

(18) Autres essais/Other Tests — Référence:

Reviewed and accepted by Construction Promec Inc. QC Manager
Date: March 29, 2007 Signed: Jean-Guy Bisson
Jean-Guy Bisson, ing

(19) Nom du soudeur Welder's Name: Serge Gagné — Symbole Stamp No.: G

Essais effectués par Tests conducted by: Megualtech — Essai de laboratoire No. Laboratory Test No.: 88-078

Nous certifions que les renseignements concernant ce résultat sont exacts et que les essais de soudage ont été préparés, soudés et exécutés conformément aux exigences de la section IX du Code ASME.

We certify that the statements in this record are correct and that the test welds were prepared, welded and tested in accordance with the requirements of section IX of the ASME Code.

(20) Signature du représentant de l'entreprise Company Representative's Signature: [signature] Date Date: 15 janvier 1988

MINISTÈRE DU TRAVAIL ET DE LA MAIN-D'ŒUVRE
APPROUVÉ
SELON LA LOI SUR LES APPAREILS SOUS PRESSION R.L.R.Q.
VÉRIFIÉ PAR
DATE

Réservé au Ministère/Department Use Only 8814.6

Pièces soudées le Welded on: 14 janvier 88 — Inspecteur Inspector: Yvon Viau

Résultats vérifiés le Record Verified on: 880125 — Inspecteur Inspector: [signature]

Caractéristiques électriques et t niques/*Electrical Characteristics and Tec ue* (QW-409) + (QW-410)

ucho(s) de soudure / ld Layer(s)	Procédé / Process	Métal d'apport / Filler Metal: Classification / Classification	Métal d'apport / Filler Metal: Diamètre / Diameter	Courant / Current: Type / Type	Courant / Current: Polarité / Polarity	Courant / Current: Gamme d'ampérage / Amp Range	Courant / Current: Gamme de voltage / Volt Range	Gamme de vitesse / Travel Speed Range
.e	SHAW	E6011	$\frac{1}{8}$" à $\frac{5}{32}$"	DC	Inversé	75 - 85	26-30	--
tres	SHAW	E7018	$\frac{1}{8}$" à $\frac{5}{32}$"	DC	Inversé	105 -110	26-30	--

sseur et type d'électrode de tungstène / gsten Electrode Size and Type	--
le de transfert du métal pour GMAW / le of Metal Transfer for GMAW	--
ion droit ou oscillant / g or Weave Bead	Droit et oscillant
édé de gougeage arrière / nod of Back Gouging	Arc Air
oyage initial et entre les passes (brossage, meulage, etc.) / l and Interpass Cleaning (Brushing, Grinding, etc.)	Brossage ou meulage
nètre de la tuyère à gaz / ce or Gas Cup Size	--
illation / illation — Largeur / Width	-- — Fréquence / Frequency
ance entre tuyère & pièce / ta... to Work Distance	--
s... ou multiple (par côté) / tiple ... ingle Pass (per Side)	--
trode unique ou multiple / iple or Single Electrode	--
nme de vitesse d'alimentation de l'électrode / trode Wire feed speed range	--
e / er	Pas de martelage

Autres commentaires/*Supplementary Comments*

INGÉNIEUR - ENGINEER
Jean-Guy Bisson
111343
QUÉBEC

Reviewed and accepted by Construction Promec Inc. QC Hangar
Date: March 29, 2007 Signed: Jean-Guy Bisson
Jean-Guy Bisson, eng

Signature du représentant de l'entreprise / *Company Representative's Signature*: Donald Ratel

Date / *Date*: 15 janv. 88

(16)
QC MINISTÈRE DU TRAVAIL ET DE LA MAIN-D'OEUVRE
APPROUVÉ
SELON LA LOI ... APPAREILS SOUS PRESSION L.R.Q.
VÉRIFIÉ PAR .....
DATE 88 01 25

Réservé au ministère/*Department use only*

...é par ..... Date: ...
...ure N° ...