Saltworks

SALINE WATER TREATMENT PLANT
ENGINEERING DOCUMENT PACKAGE

DATE: 16-Aug-2018
CONFIDENTIAL

Client: Agnico Eagle Mines

Project: SaltMaker SM-AEM-01

The following engineering document package contains work completed under the guidance and supervision of professional engineers, P.Eng..

The package includes:

1) AEM Integration PFD Revision 3, dated 30-Oct-2017
2) Solids Extraction:

   Infographic Revision B, dated 13-Mar-2018

   Solids Extra Extraction System – Simplified Revision A, dated 23-Nov-2017
3) SW_EN_AEM-01_GAD SaltMaker GAD Revision F, dated 13-Jul-2018
4) Agnico Eagle Minds P&ID Drawing Package Revision N, dated 06-Jul-2018
5) System 100: Post Treatment RO P&ID Revision 3, Project Number 17041-100D, Nav Number: 49-0462, dated 23-Jan-2018

REGISTERED PROFESSIONAL ENGINEER
K.K.H. TSIN
LICENSEE
NT/NU

Aug 16, 2018

PERMIT TO PRACTICE
SALTWORKS TECHNOLOGIES INC.
Signature
Date Aug 16, 2018
PERMIT NUMBER: P 1239
NT/NU Association of Professional Engineers and Geoscientists

REGISTERED PROFESSIONAL ENGINEER
B.S. SPARROW
LICENSEE
NT/NU

Aug 16, 2018

AGNICO EAGLE MINES
P&ID DRAWING PACKAGE

SALTMAKER 2 (SM2)
REVISION N

Saltworks
13800 Steveston Hwy
Richmond, BC, Canada, V6W 1A8
Tel: 604.628.6508 Fax: 604.676.2463
www.saltworkstech.com

DRAWING STATUS: FACTORY AS BUILT

THIS DOCUMENT EMBODIES DESIGNS AND INFORMATION THAT ARE PROPRIETARY TO SALTWORKS. IT IS TO BE USED ONLY FOR THE PURPOSE AND BY THE ENTITY FOR WHICH IT WAS ORIGINALLY SUPPLIED. THE DOCUMENT MAY NOT BE DUPLICATED OR DISCLOSED TO OTHER PERSON OR ENTITY, OR USED FOR MANUFACTURE OF THE ITEM IN PART OR IN WHOLE WITHOUT THE PRIOR WRITTEN PERMISSION OF SALTWORKS.

DO NOT SCALE DRAWING

LTR	DATE	DESCRIPTION	REV. BY:
L	22-DEC-2017	NO CHANGES	–
M	20-APR-2018	AS MARKED BY REVISION CLOUDS	JLAU
N	06-JUL-2018	AS MARKED BY REVISION CLOUDS	JLAU
K	23-FEB-2018	NO CHANGES	–

TITLE: COVER SHEET

PROJECT: SALTMAKER GEN III

CUSTOMER: AGNICO EAGLE MINES

REVISION: N

PREPARED BY:	JLAU	DATE:	1-SEP-2017
CHECKED BY:	MLOW	DATE:	5-SEP-2017
APPROVED BY:	APPROVED BY	DATE:	APPROVED DATE

DWG. NO: COVER SHEET

JOB/CO NO: (JOB NO.)

SHEET: # OF #

DRAWING LIST 1

SHEET NO.	DRAWING NO.	DESCRIPTION
		COVER SHEET
		DRAWING LIST 1
		DRAWING LIST 2
		LEGEND
		COMMON
1	SW_EN_SM_AEM-01_PID_COMMON_DWG_000	MASTER PFD
2	SW_EN_SM_AEM-01_PID_COMMON_DWG_010	PROCESS FLOW DIAGRAM
3	SW_EN_SM_AEM-01_PID_COMMON_DWG_020	CONTAINER LAYOUT
4	SW_EN_SM_AEM-01_PID_COMMON_DWG_030	MODULES LAYOUT
5	SW_EN_SM_AEM-01_PID_COMMON_DWG_040	PLANT FEED TANKS
6	SW_EN_SM_AEM-01_PID_COMMON_DWG_041	PLANT FEED PUMP SKIDS
7	SW_EN_SM_AEM-01_PID_COMMON_DWG_050	CLEAN RESERVE AND BLOWDOWN SYSTEMS
8	SW_EN_SM_AEM-01_PID_COMMON_DWG_060	ACID DOSING SYSTEM
9	SW_EN_SM_AEM-01_PID_COMMON_DWG_061	BASE DOSING SYSTEM
10	SW_EN_SM_AEM-01_PID_COMMON_DWG_062	BIOCIDE DOSING SYSTEM
11	SW_EN_SM_AEM-01_PID_COMMON_DWG_063	ANTIFOAM DOSING SYSTEM
12	SW_EN_SM_AEM-01_PID_COMMON_DWG_064	ANTISCALANT DOSING SYSTEM
13	SW_EN_SM_AEM-01_PID_COMMON_DWG_070	UTILITY WATER DISTRIBUTION
		SALTMAKER 1 (SM1)
14	SW_EN_SM_AEM-01_PID_SM1_DWG_110	THERMAL SOURCE PRIMARY HEAT EXCHANGERS
15	SW_EN_SM_AEM-01_PID_SM1_DWG_120	CONDENSED WATER SYSTEM
16	SW_EN_SM_AEM-01_PID_SM1_DWG_130	FEED DISTRIBUTION
17	SW_EN_SM_AEM-01_PID_SM1_DWG_150	CIP TANKS
18	SW_EN_SM_AEM-01_PID_SM1_DWG_151	CIP PUMP SKID
19	SW_EN_SM_AEM-01_PID_SM1_DWG_160	EFFECT HOLD 1
20	SW_EN_SM_AEM-01_PID_SM1_DWG_161	EFFECT HOLD 2
21	SW_EN_SM_AEM-01_PID_SM1_DWG_162	SYSTEM HOLD
22	SW_EN_SM_AEM-01_PID_SM1_DWG_163	CALCIUM EXTRACTION
23	SW_EN_SM_AEM-01_PID_SM1_DWG_164	EH1 SOLIDS EXTRACTION
24	SW_EN_SM_AEM-01_PID_SM1_DWG_165	EH2 SOLIDS EXTRACTION
25	SW_EN_SM_AEM-01_PID_SM1_DWG_180	DRIP TRAYS
26	SW_EN_SM_AEM-01_PID_SM1_DWG_210	EFFECT 1 TANK AND PUMPS
27	SW_EN_SM_AEM-01_PID_SM1_DWG_211	EFFECT 1 MODULES
28	SW_EN_SM_AEM-01_PID_SM1_DWG_213	EFFECT 1 PUMP SEAL FLUSH
29	SW_EN_SM_AEM-01_PID_SM1_DWG_214	EFFECT 1 AIR SEALS
30	SW_EN_SM_AEM-01_PID_SM1_DWG_220	EFFECT 2 TANK AND PUMPS
31	SW_EN_SM_AEM-01_PID_SM1_DWG_221	EFFECT 2 MODULES
32	SW_EN_SM_AEM-01_PID_SM1_DWG_222	EFFECT 2 SOLIDS EXTRACTION
33	SW_EN_SM_AEM-01_PID_SM1_DWG_223	EFFECT 2 PUMP SEAL FLUSH
34	SW_EN_SM_AEM-01_PID_SM1_DWG_224	EFFECT 2 AIR SEALS
35	SW_EN_SM_AEM-01_PID_SM1_DWG_230	EFFECT 3 TANK AND PUMPS
36	SW_EN_SM_AEM-01_PID_SM1_DWG_231	EFFECT 3 MODULES
37	SW_EN_SM_AEM-01_PID_SM1_DWG_232	EFFECT 3 SOLIDS EXTRACTION
38	SW_EN_SM_AEM-01_PID_SM1_DWG_233	EFFECT 3 PUMP SEAL FLUSH
39	SW_EN_SM_AEM-01_PID_SM1_DWG_234	EFFECT 3 AIR SEALS
40	SW_EN_SM_AEM-01_PID_SM1_DWG_240	EFFECT 4 TANK AND PUMPS
41	SW_EN_SM_AEM-01_PID_SM1_DWG_241	EFFECT 4 MODULES
42	SW_EN_SM_AEM-01_PID_SM1_DWG_243	EFFECT 4 PUMP SEAL FLUSH
43	SW_EN_SM_AEM-01_PID_SM1_DWG_244	EFFECT 4 AIR SEALS
44	SW_EN_SM_AEM-01_PID_SM1_DWG_250	EFFECT 5 TANK AND PUMPS
45	SW_EN_SM_AEM-01_PID_SM1_DWG_251	EFFECT 5 MODULES
46	SW_EN_SM_AEM-01_PID_SM1_DWG_253	EFFECT 5 PUMP SEAL FLUSH
47	SW_EN_SM_AEM-01_PID_SM1_DWG_254	EFFECT 5 AIR SEALS
		THERMAL SYSTEM
48	SW_EN_SM_AEM-01_PID_DWG_310	THERMAL SKID: WATER LOOP
49	SW_EN_SM_AEM-01_PID_DWG_311	THERMAL SKID: WATER LOOP
50	SW_EN_SM_AEM-01_PID_DWG_312	THERMAL SKID: GYLCOL LOOP
		POST TREATMENT
51	SW_EN_SM_AEM-01_PID_COMMON_DWG_320	NITRITE DESTRUCTION AND RO PC SYSTEM
52	SW_EN_SM_AEM-01_PID_COMMON_DWG_321	AMMONIA DESTRUCTION SYSTEM
53	SW_EN_SM_AEM-01_PID_COMMON_DWG_322	RO BRINE FLUSH TANK
54	SW_EN_SM_AEM-01_PID_COMMON_DWG_323	TREATED WATER TANK
		COMPRESSED AIR-COMMON PACKAGE
55	SW_EN_SM_AEM-01_PID_COMPRESSED AIR-COMMON_DWG_400	COMPRESSED AIR SYSTEM
56	SW_EN_SM_AEM-01_PID_COMPRESSED AIR-COMMON_DWG_401	AMMONIA DES, BRINE BLOWDOWN AND PLANT FEED AIR
57	SW_EN_SM_AEM-01_PID_COMPRESSED AIR-COMMON_DWG_402	CHEMICAL DOSING AND ANCILLARY STAND PIPE AIR
58	SW_EN_SM_AEM-01_PID_COMPRESSED AIR-COMMON_DWG_403	COMMON AND POST TREATMENT AIR BANK 1
59	SW_EN_SM_AEM-01_PID_COMPRESSED AIR-COMMON_DWG_404	COMMON AND POST TREATMENT AIR BANK 2
		COMPRESSED AIR-SM1
60	SW_EN_SM_AEM-01_PID_COMPRESSED AIR-SM1_DWG_410	SM INSTRUMENT AND PROCESS AIR
61	SW_EN_SM_AEM-01_PID_COMPRESSED AIR-SM1_DWG_411	EH1/EH2 EXTRACT AND CIP AIR

Saltworks
13800 Steveston Hwy
Richmond, BC, Canada, V6W 1A8
Tel: 604.628.6508 Fax: 604.676.2463
www.saltworkstech.com

DRAWING STATUS: FACTORY AS BUILT

THIS DOCUMENT EMBODIES DESIGNS AND INFORMATION THAT ARE PROPRIETARY TO SALTWORKS. IT IS TO BE USED ONLY FOR THE PURPOSE AND BY THE ENTITY FOR WHICH IT WAS ORIGINALLY SUPPLIED. THE DOCUMENT MAY NOT BE DUPLICATED OR DISCLOSED TO OTHER PERSON OR ENTITY, OR USED FOR MANUFACTURE OF THE ITEM IN PART OR IN WHOLE WITHOUT THE PRIOR WRITTEN PERMISSION OF SALTWORKS.

DO NOT SCALE DRAWING

LTR	DATE	DESCRIPTION	REV. BY:
L	22-DEC-2017	NO CHANGES	–
M	20-APR-2018	NO CHANGES	–
N	06-JUL-2018	NO CHANGES	–
K	23-FEB-2018	NO CHANGES	–

TITLE: DRAWING LIST 1

PROJECT: SALTMAKER GEN III

CUSTOMER: AGNICO EAGLE MINES

REVISION: N

PREPARED BY:	JLAU	DATE:	01-SEP-2017
CHECKED BY:	MLOW	DATE:	05-SEP-2017
APPROVED BY:	APPROVED BY	DATE:	APPROVED DATE

DWG. NO: DRAWING LIST 1

JOB/CO NO: (JOB NO.)

SHEET: # OF #

DRAWING LIST 2

SHEET NO.	DRAWING NO.	DESCRIPTION
62	SW_EN_SM_AEM-01_PID_COMPRESSED AIR-SM1_DWG_412	EH1/EH2 EXTRACT AND CIP AIR
63	SW_EN_SM_AEM-01_PID_COMPRESSED AIR-SM1_DWG_413	PLUG PREVENTION PUMP AIR
64	SW_EN_SM_AEM-01_PID_COMPRESSED AIR-SM1_DWG_414	AIR SEAL, STAND PIPE AND E2/E3 SE AIR
65	SW_EN_SM_AEM-01_PID_COMPRESSED AIR-SM1_DWG_415	UTILITY AIR
66	SW_EN_SM_AEM-01_PID_COMPRESSED AIR-SM1_DWG_416	BOP1 AIR SOLENOID BANK
67	SW_EN_SM_AEM-01_PID_COMPRESSED AIR-SM1_DWG_417	E2/E3 SE AIR SOLENOID BANK
68	SW_EN_SM_AEM-01_PID_COMPRESSED AIR-SM1_DWG_418	BOP2 AIR SOLENOID BANK
69	SW_EN_SM_AEM-01_PID_COMPRESSED AIR-SM1_DWG_419	BOP3 AIR SOLENOID BANK
70	SW_EN_SM_AEM-01_PID_COMPRESSED AIR-SM1_DWG_420	CIP, EH/SY AIR SOLENOID BANK
71	SW_EN_SM_AEM-01_PID_COMPRESSED AIR-SM1_DWG_421	H1/H2 SE AIR SOLENOID BANK
		COMPRESSED AIR-SM2
72	SW_EN_SM_AEM-01_PID_COMPRESSED AIR-SM2_DWG_450	SM INSTRUMENT AND PROCESS AIR
73	SW_EN_SM_AEM-01_PID_COMPRESSED AIR-SM2_DWG_451	EH1/EH2 EXTRACT AND CIP AIR
74	SW_EN_SM_AEM-01_PID_COMPRESSED AIR-SM2_DWG_452	EFFECT/SYSTEM HOLD AND CAL EXTRACTION AIR
75	SW_EN_SM_AEM-01_PID_COMPRESSED AIR-SM2_DWG_453	PLUG PREVENTION PUMP AIR
76	SW_EN_SM_AEM-01_PID_COMPRESSED AIR-SM2_DWG_454	AIR SEAL, STAND PIPE AND E2/E3 SE AIR
77	SW_EN_SM_AEM-01_PID_COMPRESSED AIR-SM2_DWG_455	UTILITY AIR
78	SW_EN_SM_AEM-01_PID_COMPRESSED AIR-SM2_DWG_456	BOP1 AIR SOLENOID BANK
79	SW_EN_SM_AEM-01_PID_COMPRESSED AIR-SM2_DWG_457	E2/E3 SE AIR SOLENOID BANK
80	SW_EN_SM_AEM-01_PID_COMPRESSED AIR-SM2_DWG_458	BOP2 AIR SOLENOID BANK
81	SW_EN_SM_AEM-01_PID_COMPRESSED AIR-SM2_DWG_459	BOP3 AIR SOLENOID BANK
82	SW_EN_SM_AEM-01_PID_COMPRESSED AIR-SM2_DWG_460	CIP, EH/SY AIR SOLENOID BANK
83	SW_EN_SM_AEM-01_PID_COMPRESSED AIR-SM2_DWG_461	H1/H2 SE AIR SOLENOID BANK

SHEET NO.	DRAWING NO.	DESCRIPTION
		SALTMAKER 2 (SM2)
84	SW_EN_SM_AEM-01_PID_SM2_DWG_510	THERMAL SOURCE PRIMARY HEAT EXCHANGERS
85	SW_EN_SM_AEM-01_PID_SM2_DWG_520	CONDENSED WATER SYSTEM
86	SW_EN_SM_AEM-01_PID_SM2_DWG_530	FEED DISTRIBUTION
87	SW_EN_SM_AEM-01_PID_SM2_DWG_550	CIP TANKS
88	SW_EN_SM_AEM-01_PID_SM2_DWG_551	CIP PUMP SKID
89	SW_EN_SM_AEM-01_PID_SM2_DWG_560	EFFECT HOLD 1
90	SW_EN_SM_AEM-01_PID_SM2_DWG_561	EFFECT HOLD 2
91	SW_EN_SM_AEM-01_PID_SM2_DWG_562	SYSTEM HOLD
92	SW_EN_SM_AEM-01_PID_SM2_DWG_563	CALCIUM EXTRACTION
93	SW_EN_SM_AEM-01_PID_SM2_DWG_564	EH1 SOLIDS EXTRACTION
94	SW_EN_SM_AEM-01_PID_SM2_DWG_565	EH2 SOLIDS EXTRACTION
95	SW_EN_SM_AEM-01_PID_SM2_DWG_580	DRIP TRAYS
96	SW_EN_SM_AEM-01_PID_SM2_DWG_610	EFFECT 1 TANK AND PUMPS
97	SW_EN_SM_AEM-01_PID_SM2_DWG_611	EFFECT 1 MODULES
98	SW_EN_SM_AEM-01_PID_SM2_DWG_613	EFFECT 1 PUMP SEAL FLUSH
99	SW_EN_SM_AEM-01_PID_SM2_DWG_614	EFFECT 1 AIR SEALS
100	SW_EN_SM_AEM-01_PID_SM2_DWG_620	EFFECT 2 TANK AND PUMPS
101	SW_EN_SM_AEM-01_PID_SM2_DWG_621	EFFECT 2 MODULES
102	SW_EN_SM_AEM-01_PID_SM2_DWG_622	EFFECT 2 SOLIDS EXTRACTION
103	SW_EN_SM_AEM-01_PID_SM2_DWG_623	EFFECT 2 PUMP SEAL FLUSH
104	SW_EN_SM_AEM-01_PID_SM2_DWG_624	EFFECT 2 AIR SEALS
105	SW_EN_SM_AEM-01_PID_SM2_DWG_630	EFFECT 3 TANK AND PUMPS
106	SW_EN_SM_AEM-01_PID_SM2_DWG_631	EFFECT 3 MODULES
107	SW_EN_SM_AEM-01_PID_SM2_DWG_632	EFFECT 3 SOLIDS EXTRACTION
108	SW_EN_SM_AEM-01_PID_SM2_DWG_633	EFFECT 3 PUMP SEAL FLUSH
109	SW_EN_SM_AEM-01_PID_SM2_DWG_634	EFFECT 3 AIR SEALS
110	SW_EN_SM_AEM-01_PID_SM2_DWG_640	EFFECT 4 TANK AND PUMPS
111	SW_EN_SM_AEM-01_PID_SM2_DWG_641	EFFECT 4 MODULES
112	SW_EN_SM_AEM-01_PID_SM2_DWG_643	EFFECT 4 PUMP SEAL FLUSH
113	SW_EN_SM_AEM-01_PID_SM2_DWG_644	EFFECT 4 AIR SEALS
114	SW_EN_SM_AEM-01_PID_SM2_DWG_650	EFFECT 5 TANK AND PUMPS
115	SW_EN_SM_AEM-01_PID_SM2_DWG_651	EFFECT 5 MODULES
116	SW_EN_SM_AEM-01_PID_SM2_DWG_653	EFFECT 5 PUMP SEAL FLUSH
117	SW_EN_SM_AEM-01_PID_SM2_DWG_654	EFFECT 5 AIR SEALS
		VENDOR DRAWINGS
	USW_17041_100D	POST TREATMENT RO

Saltworks
13800 Steveston Hwy
Richmond, BC, Canada, V6W 1A8
Tel: 604.628.6508 Fax: 604.676.2463
www.saltworkstech.com

DRAWING STATUS: FACTORY AS BUILT

THIS DOCUMENT EMBODIES DESIGNS AND INFORMATION THAT ARE PROPRIETARY TO SALTWORKS. IT IS TO BE USED ONLY FOR THE PURPOSE AND BY THE ENTITY FOR WHICH IT WAS ORIGINALLY SUPPLIED. THE DOCUMENT MAY NOT BE DUPLICATED OR DISCLOSED TO OTHER PERSON OR ENTITY, OR USED FOR MANUFACTURE OF THE ITEM IN PART OR IN WHOLE WITHOUT THE PRIOR WRITTEN PERMISSION OF SALTWORKS.

DO NOT SCALE DRAWING

LTR	DATE	DESCRIPTION	REV. BY:
L	22-DEC-2017	NO CHANGES	–
M	20-APR-2018	NO CHANGES	–
N	06-JUL-2018	NO CHANGES	–
K	23-FEB-2018	NO CHANGES	–

TITLE: DRAWING LIST 2

PROJECT: SALTMAKER GEN III
CUSTOMER: AGNICO EAGLE MINES
REVISION: N

PREPARED BY: JLAU DATE: 01-SEP-2017
CHECKED BY: MLOW DATE: 05-SEP-2017
APPROVED BY: APPROVED BY DATE: APPROVED DATE

DWG. NO: DRAWING LIST 2
JOB/CO NO: (JOB NO.)
SHEET: # OF #

VALVES

- MANUAL BALL (MBV) – NORMALLY CLOSED
- MANUAL BALL (MBV) – NORMALLY OPEN
- CHECK (CV)
- GATE (GV)
- BUTTERFLY (BFV)
- PRESSURE RELIEF VALVE (PRV)
- FLOAT VALVE (FV)
- DIAPHRAGM (DV)
- NEEDLE (NV)
- 3–WAY
- 3–WAY SOLENOID
- 4–WAY SOLENOID
- 4–FUNCTION VALVE
- FOOT VALVE

N.O. – NORMALLY OPEN
N.C. – NORMALLY CLOSED

CONTROL VALVES/ACTUATORS

- PRESSURE CONTROL VALVE (PCV) WITH PRESSURE GAUGE
- DOUBLE ACTING ACTUATED BALL VALVE (ABV) – NORMALLY CLOSED
- DOUBLE ACTING ACTUATED BALL VALVE (ABV) – NORMALLY OPEN
- DOUBLE ACTING ACTUATED BALL VALVE (ABV) – NORMALLY OPEN WITH PINCH VALVES
- SOLENOID VALVE (SV)
- SOLENOID VALVE (SV)
- MOTORIZED ACTUATOR
- MOTORIZED ACTUATOR WITH MANUAL OVERRIDE
- DOUBLE ACTING DIAPHRAGM ACTUATOR WITH LIMIT STOP
- DOUBLE ACTING DIAPHRAGM ACTUATOR WITH SPRING TO CLOSE
- DOUBLE ACTING DIAPHRAGM ACTUATOR WITH SPRING TO OPEN
- AIR OPERATOR W/POSITIONER

EQUIPMENT SYMBOL

- MIXER OR AGITATOR (MX)
- INLINE STATIC MIXER
- HEATER (HE)
- ELECTRIC HEATER (EH)
- INJECTION QUILL
- EDUCTOR/EJECTOR (ED)
- POSITIVE DISPLACEMENT PUMP W/MANUAL STROKE ADJUSTMENT (MP)
- POSITIVE DISPLACEMENT PUMP W/ELECTRIC STROKE ADJUSTMENT (MP)
- ROTARY COMPRESSER OR BLOWER
- AIR FILTER
- BLOWER OR FAN (BW OR FN)
- VACUUM PUMP (VP)
- DIAPHRAGM PUMP (P)
- CENTRIFUGAL PUMP (P)
- HIGH PRESSURE PUMP (P)
- DESICCANT BREATHER
- VENT PIPE
- Y–STRAINER
- RUPTURE DISC
- DIAPHRAGM SEAL
- STANDPIPE (SP)
- CALIBRATION COLUMN (CC)
- AIR COMPRESSOR (AC)
- PNEUMATIC VIBRATOR (VIB)

- RO/UF MODULE
- FILTER – BASKET (BAF)
- FILTER (F) HOUSING
- CLOSED TOP TANK (TK)
- CONE BOTTOM TANK (TK)
- OPEN TOP TANK (TK) WITH COVER
- PLATE HEAT EXCHANGER (HX)
- SHELL AND TUBE HEAT EXCHANGER (HX)
- CONE CONSTRAINER (CSTR)
- PERISTALTIC HOSE PUMP (P)
- FLEXIBLE CONNECTION

MISCELLANEOUS SYMBOLS

- LINE, EQUIPMENT OR PRODUCT REFERENCES INTO OR LEAVING DWG.
- TIE IN TO PIPING BY OTHERS
- 304 | CPVC — PIPING MATERIAL SPEC. BREAK

SOLENOID VALVE OPERATION

3–WAY: FAIL OPEN TO PATH A–C

4–WAY: FAIL OPEN TO PATHS A–C AND D–B

- AIR SUPPLY
- NITROGEN SUPPLY
- CONCENTRIC REDUCING
- ECCENTRIC REDUCING
- ENCLOSURE (CAP)
- FLANGE
- END CLOSURE (BLIND FLANGE)
- END CLOSURE (VIC PLUG)
- QUICK DISCONNECT
- UNION
- SANITARY CONNECTION
- FLOOR DRAIN OR SUMP
- BULKHEAD
- EXPANSION JOINT

FILL SYMBOLS

- SPLASH FILL
- FILM FILL
- NET FILL

INSTRUMENT LINE SYMBOLS

- PNEUMATIC SIGNAL (ANALOG)
- PNEUMATIC SIGNAL (DIGITAL)
- ELECTRICAL SIGNAL (ANALOG – 4–20mA OR 1–10 VDC)
- ELECTRICAL SIGNAL (FREQUENCY OR PULSE)
- CAPILLARY TUBING (FILLED TUBING)
- CONNECTION TO PROCESS, OR INSTRUMENT SUPPLY

FLUID LINE SYMBOLS

- EFFECT 1 BRINE (90°C)
- EFFECT 2 BRINE (75°C)
- EFFECT 3 BRINE (60°C)
- EFFECT 4 BRINE (45°C)
- EFFECT 5 BRINE (30°C)
- CIP
- RAW FEED
- CONDENSED WATER (70°C – 40°C)
- THERMAL LOOP (GYLCOL)
- EVAPORATE
- COMPRESSED AIR LINE
- ACID DOSING
- BASE DOSING
- ANTIFOAM
- BIOFILM TREATMENT SOLUTION

MISCELLANEOUS LINE SYMBOLS

- SYSTEM BOUNDARY

INSTRUMENT SYMBOLS

- LOCALLY MOUNTED
- PANEL MOUNTED (MAIN OR REMOTE)
- SHARED DISPLAY (CRT) AND/OR SHARED CONTROL

CONTROL SYMBOLS

- DI — DISCRETE INPUT TO PLC
- DO — DISCRETE OUTPUT FROM PLC
- AI — ANALOG INPUT TO PLC
- AO — ANALOG OUTPUT FROM PLC

EQUIPMENT IDENTIFICATION

M – MOTOR
AS – AIR SEAL
VFD – VARIABLE FREQUENCY DRIVE
DRY – DRYER

MODULE IDENTIFICATION

EVP – EVAPORATOR MODULE
RAD – RADIATOR MODULE
FAN – FAN MODULE

MATERIAL ABBREVIATIONS

PP – POLYPROPYLENE
PVC – POLYVINYL CHLORIDE
UPVC – POLYVINYL CHLORIDE
P – POLYVINYL CHLORIDE (IN LINE NUMBER)
CPVC – CHLORINATED POLYVINYL CHLORIDE
C – CHLORINATED POLYVINYL CHLORIDE (IN LINE NUMBER)
HDPE – HIGH DENSITY POLYETHYLENE
PVDF – POLYVINYLIDENE FLUORIDE
PVFB – PVDF BEADLESS & CREVICE FREE
PVFL – PVDF LINED
PTFE – TEFLON
304 – 304 STAINLESS STEEL
304L – 304L STAINLESS STEEL
316 – 316 STAINLESS STEEL
316L – 316L STAINLESS STEEL

INSTRUMENT IDENTIFICATION

PARAMETER (1ST LETTER)

P – PRESSURE
F – FLOW
T – TEMPERATURE
C – CONDUCTIVITY
D – DENSITY
Z – POSITION
A – ANALYTICAL (SEE NOTES)

TYPE (2ND AND 3RD LETTER)

I – INDICATING/INDICATOR
T – TRANSMITTER
E – ELEMENT/PROBE
A – ALARM
S – SWITCH

NOTES:

1. THE DESCRIPTION OF AN ANALYTICAL VARIABLE FUNCTION (pH, SiO_2, O, ETC.) SHALL BE SHOWN OUTSIDE THE INSTRUMENT SYMBOL. EXAMPLE: AIT pH
2. ADD THE SUFFIX L (LOW), LL (LOW–LOW), H (HIGH), HH (HIGH–HIGH), HL (HIGH–LOW), AS REQUIRED. EXAMPLE: PSL FAL

LINE NUMBERING

E1BR4–001–P80

FLUID — SIZE — SEQUENTIAL NUMBER — MATERIAL — SCHEDULE

VALVE NUMBERING

681–015–BA17–0001

AREA CODE — VALVE SIZE — VALVE TYPE — SEQUENTIAL NUMBER

VALVE SIZE CONVERSION

MM	INCH
008	1/4
015	1/2
025	1
050	2
100	4
150	6

VALVE TYPE CONVERSION

BA17	BALL VALVE
BA99	TOUGH BALL VALVE
BF99	TOUGH BUTTERFLY VALVE (EXCEPT THOSE NOTED "NON TOUGH")
CK99	CHECK VALVE
GA99	GATE VALVE

Saltworks
13800 Steveston Hwy
Richmond, BC, Canada, V6W 1A8
Tel: 604.628.6508 Fax: 604.676.2463
www.saltworkstech.com

DRAWING STATUS: FACTORY AS BUILT

THIS DOCUMENT EMBODIES DESIGNS AND INFORMATION THAT ARE PROPRIETARY TO SALTWORKS. IT IS TO BE USED ONLY FOR THE PURPOSE AND BY THE ENTITY FOR WHICH IT WAS ORIGINALLY SUPPLIED. THE DOCUMENT MAY NOT BE DUPLICATED OR DISCLOSED TO OTHER PERSON OR ENTITY, OR USED FOR MANUFACTURE OF THE ITEM IN PART OR IN WHOLE WITHOUT THE PRIOR WRITTEN PERMISSION OF SALTWORKS.

DO NOT SCALE DRAWING

LTR	DATE	DESCRIPTION	REV. BY:
L	22–DEC–2017	NO CHANGES	–
M	20–APR–2018	NO CHANGES	–
N	06–JUL–2018	PINCH VALVE LEGEND ADDED	JLAU
K	23–FEB–2018	NO CHANGES	–

TITLE: LEGEND

PROJECT:	SALTMAKER GEN III	CUSTOMER:	AGNICO EAGLE MINES
REVISION	N		
PREPARED BY:	JLAU	DATE:	01–SEP–2017
DWG. NO:	LEGEND		
CHECKED BY:	MLOW	DATE:	05–SEP–2017
JOB/CO NO:	(JOB NO.)		
APPROVED BY:	APPROVED BY	DATE:	APPROVED DATE
SHEET:	# OF #		

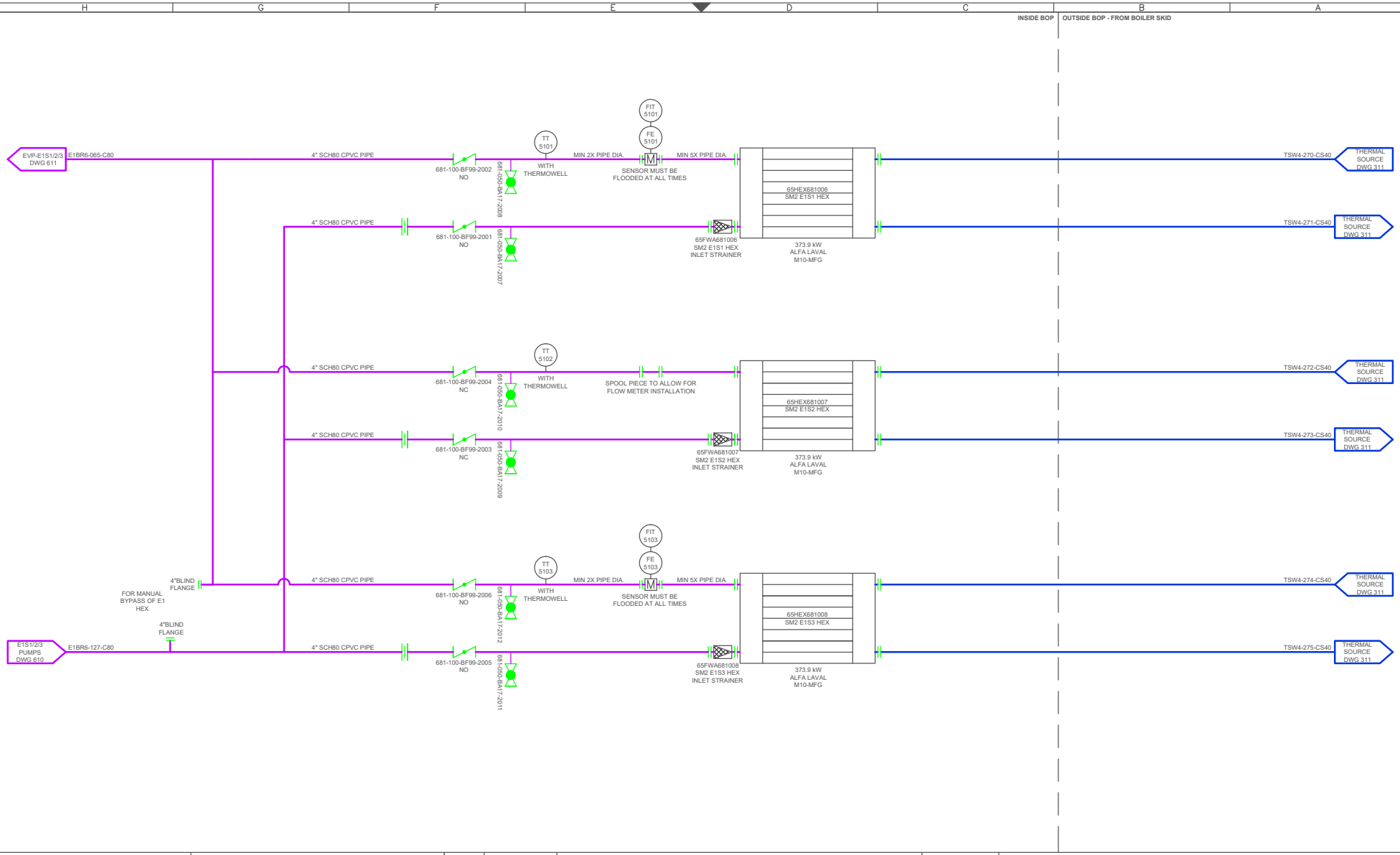

Saltworks
13800 Steveston Hwy
Richmond, BC, Canada, V6W 1A8
Tel: 604.628.6508 Fax: 604.676.2463
www.saltworkstech.com

DRAWING STATUS: FACTORY AS BUILT

THIS DOCUMENT EMBODIES DESIGNS AND INFORMATION THAT ARE PROPRIETARY TO SALTWORKS. IT IS TO BE USED ONLY FOR THE PURPOSE AND BY THE ENTITY FOR WHICH IT WAS ORIGINALLY SUPPLIED. THE DOCUMENT MAY NOT BE DUPLICATED OR DISCLOSED TO OTHER PERSON OR ENTITY, OR USED FOR MANUFACTURE OF THE ITEM IN PART OR IN WHOLE WITHOUT THE PRIOR WRITTEN PERMISSION OF SALTWORKS.

DO NOT SCALE DRAWING

LTR	DATE	DESCRIPTION	REV. BY:
L	22–DEC–2017	NO CHANGES	–
M	20–APR–2018	NO CHANGES	–
N	06–JUL–2018	NO CHANGES	–
K	23–FEB–2018	TAGS UPDATED PER AEM MARK UP	JLAU

TITLE: (SM2) 510: THERMAL SOURCE PRIMARY HEAT EXCHANGER

PROJECT: SALTMAKER GEN III		CUSTOMER: AGNICO EAGLE MINES	REVISION N
PREPARED BY: PH	DATE: 01–SEP–2017	DWG. NO: SW_EN_SM_AEM–01_PID_SM2_DWG_510	
CHECKED BY: MLOW	DATE: 05–SEP–2017	JOB/CO NO: (JOB NO.)	
APPROVED BY: APPROVED BY	DATE: APPROVED DATE	SHEET: 84 OF117	

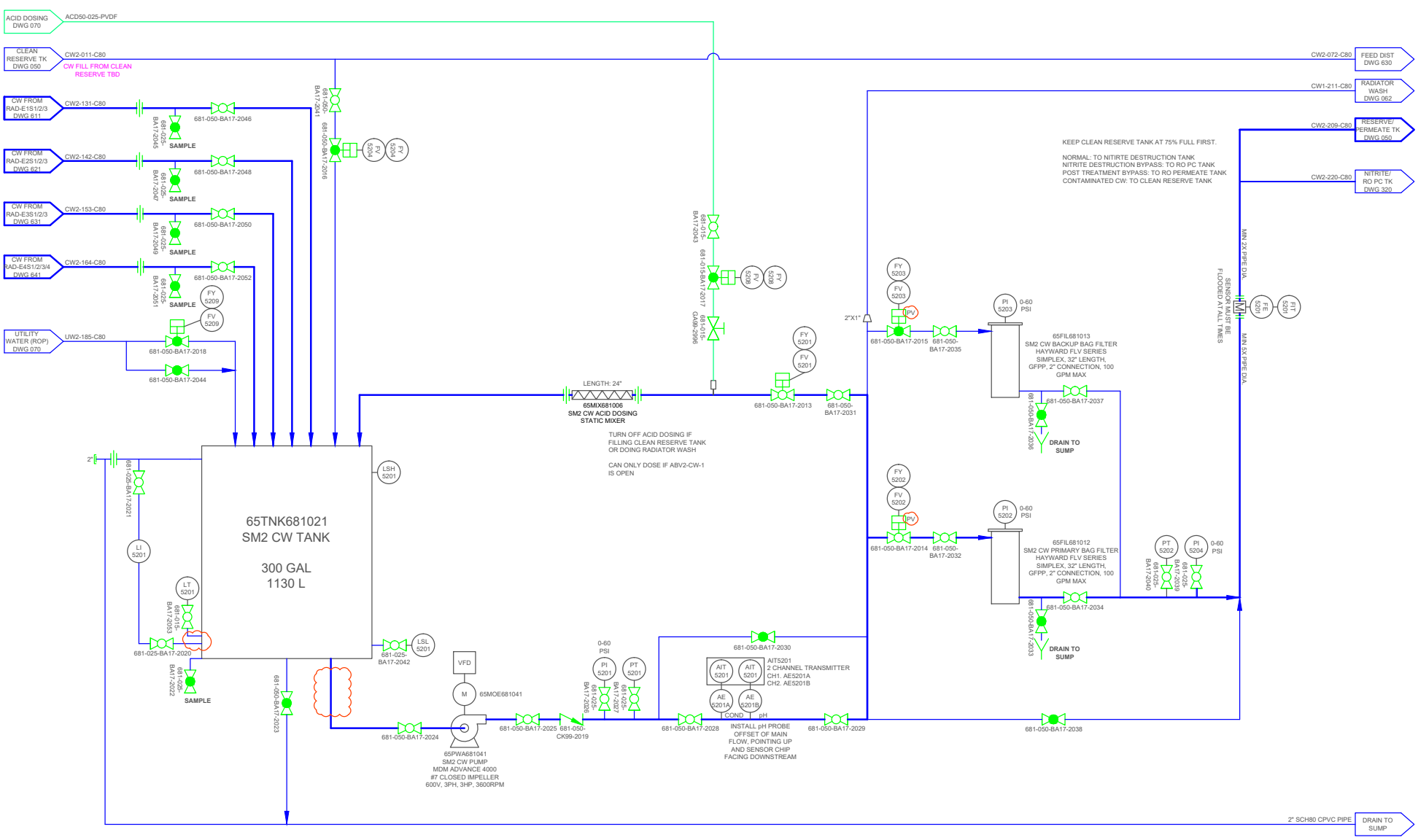

Saltworks
13800 Steveston Hwy
Richmond, BC, Canada, V6W 1A8
Tel: 604.628.6508 Fax: 604.676.2463
www.saltworkstech.com

DRAWING STATUS: FACTORY AS BUILT

THIS DOCUMENT EMBODIES DESIGNS AND INFORMATION THAT ARE PROPRIETARY TO SALTWORKS. IT IS TO BE USED ONLY FOR THE PURPOSE AND BY THE ENTITY FOR WHICH IT WAS ORIGINALLY SUPPLIED. THE DOCUMENT MAY NOT BE DUPLICATED OR DISCLOSED TO OTHER PERSON OR ENTITY, OR USED FOR MANUFACTURE OF THE ITEM IN PART OR IN WHOLE WITHOUT THE PRIOR WRITTEN PERMISSION OF SALTWORKS.

DO NOT SCALE DRAWING

LTR	DATE	DESCRIPTION	REV. BY:
L	22-DEC-2017	NO CHANGES	–
M	20-APR-2018	GATE VALVE ADDED	JLAU
N	06-JUL-2018	PINCH VALVES ADDED, AS BUILT UPDATES	JLAU
K	23-FEB-2018	TAG UPDATED PER AEM MARK UP	JLAU

TITLE: (SM2) 520: CONDENSED WATER SYSTEM

PROJECT: SALTMAKER GEN III		CUSTOMER: AGNICO EAGLE MINES	REVISION N
PREPARED BY: JLAU	DATE: 01-SEP-2017	DWG. NO: SW_EN_SM_AEM-01_PID_SM2_DWG_520	
CHECKED BY: MLOW	DATE: 05-SEP-2017	JOB/CO NO: (JOB NO.)	
APPROVED BY: APPROVED BY	DATE: APPROVED DATE	SHEET: 85 OF117	

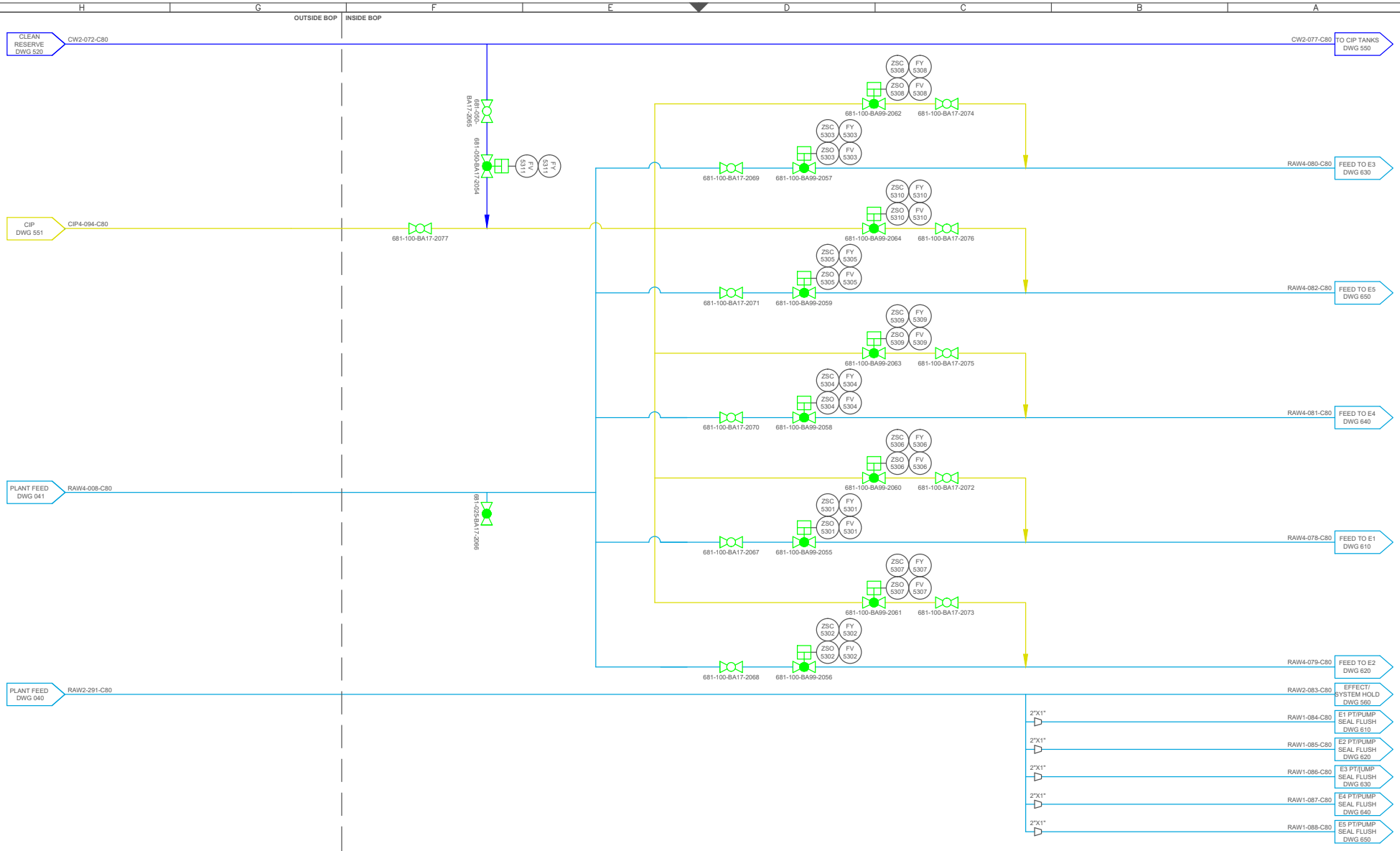

Saltworks
13800 Steveston Hwy
Richmond, BC, Canada, V6W 1A8
Tel: 604.628.6508 Fax: 604.676.2463
www.saltworkstech.com

DRAWING STATUS: FACTORY AS BUILT

THIS DOCUMENT EMBODIES DESIGNS AND INFORMATION THAT ARE PROPRIETARY TO SALTWORKS. IT IS TO BE USED ONLY FOR THE PURPOSE AND BY THE ENTITY FOR WHICH IT WAS ORIGINALLY SUPPLIED. THE DOCUMENT MAY NOT BE DUPLICATED OR DISCLOSED TO OTHER PERSON OR ENTITY, OR USED FOR MANUFACTURE OF THE ITEM IN PART OR IN WHOLE WITHOUT THE PRIOR WRITTEN PERMISSION OF SALTWORKS.

DO NOT SCALE DRAWING

LTR	DATE	DESCRIPTION	REV. BY:
L	22-DEC-2017	NO CHANGES	–
M	20-APR-2018	NO CHANGES	–
N	06-JUL-2018	NO CHANGES	–
K	23-FEB-2018	NO CHANGES	–

TITLE: (SM2) 530: FEED DISTRIBUTION

PROJECT: SALTMAKER GEN III		CUSTOMER: AGNICO EAGLE MINES	REVISION N
PREPARED BY: JLAU	DATE: 01-SEP-2017	DWG. NO: SW_EN_SM_AEM-01_PID_SM2_DWG_530	
CHECKED BY: MLOW	DATE: 05-SEP-2017	JOB/CO NO: (JOB NO.)	
APPROVED BY: APPROVED BY	DATE: APPROVED DATE	SHEET: 86 OF117	

Saltworks

SALINE WATER TREATMENT PLANT
ENGINEERING DOCUMENT PACKAGE

DATE: 16-Aug-2018
CONFIDENTIAL

Client: Agnico Eagle Mines

Project: SaltMaker SM-AEM-01

The following engineering document package contains work completed under the guidance and supervision of professional engineers, P.Eng..

The package includes:

1) AEM Integration PFD Revision 3, dated 30-Oct-2017
2) Solids Extraction:

   Infographic Revision B, dated 13-Mar-2018

   Solids Extra Extraction System – Simplified Revision A, dated 23-Nov-2017
3) SW_EN_AEM-01_GAD SaltMaker GAD Revision F, dated 13-Jul-2018
4) Agnico Eagle Minds P&ID Drawing Package Revision N, dated 06-Jul-2018
5) System 100: Post Treatment RO P&ID Revision 3, Project Number 17041-100D, Nav Number: 49-0462, dated 23-Jan-2018

REGISTERED PROFESSIONAL ENGINEER
K.K.H. TSIN
LICENSEE
NT/NU

Aug 16, 2018

PERMIT TO PRACTICE
SALTWORKS TECHNOLOGIES INC.
Signature
Date Aug 16, 2018
PERMIT NUMBER: P 1239
NT/NU Association of Professional Engineers and Geoscientists

REGISTERED PROFESSIONAL ENGINEER
B.S. SPARROW
LICENSEE
NT/NU

Aug 16, 2018

AGNICO EAGLE MINES
P&ID DRAWING PACKAGE

THERMAL SOURCE
REVISION N

Saltworks
13800 Steveston Hwy
Richmond, BC, Canada, V6W 1A8
Tel: 604.628.6508 Fax: 604.676.2463
www.saltworkstech.com

DRAWING STATUS: FACTORY AS BUILT

THIS DOCUMENT EMBODIES DESIGNS AND INFORMATION THAT ARE PROPRIETARY TO SALTWORKS. IT IS TO BE USED ONLY FOR THE PURPOSE AND BY THE ENTITY FOR WHICH IT WAS ORIGINALLY SUPPLIED. THE DOCUMENT MAY NOT BE DUPLICATED OR DISCLOSED TO OTHER PERSON OR ENTITY, OR USED FOR MANUFACTURE OF THE ITEM IN PART OR IN WHOLE WITHOUT THE PRIOR WRITTEN PERMISSION OF SALTWORKS.

DO NOT SCALE DRAWING

LTR	DATE	DESCRIPTION	REV. BY:
N	06–JUL–2018	NO CHANGES	–
K	23–FEB–2018	NO CHANGES	–
L	23–MAR–2018	DRAIN VALVE SIZE AND UTILITY WATER FILL LAYOUT UPDATE	PH
M	09–MAY–2018	BUILDING HEATERS TIE–IN UPDATE	DKAO

TITLE: COVER SHEET

PROJECT: SALTMAKER GEN III

CUSTOMER: AGNICO EAGLE MINES

REVISION: N

PREPARED BY: DKAO DATE: 09–MAY–2018

CHECKED BY: DATE:

APPROVED BY: APPROVED BY DATE: APPROVED DATE

DWG. NO: COVER SHEET

JOB/CO NO: (JOB NO.)

SHEET: # OF #

DRAWING LIST 2

SHEET NO.	DRAWING NO.	DESCRIPTION
61	SW_EN_SM_AEM-01_PID_COMPRESSED AIR-SM1_DWG_412	EH1/EH2 EXTRACT AND CIP AIR
62	SW_EN_SM_AEM-01_PID_COMPRESSED AIR-SM1_DWG_413	PLUG PREVENTION PUMP AIR
63	SW_EN_SM_AEM-01_PID_COMPRESSED AIR-SM1_DWG_414	AIR SEAL, STAND PIPE AND E2/E3 SE AIR
64	SW_EN_SM_AEM-01_PID_COMPRESSED AIR-SM1_DWG_415	UTILITY AIR
65	SW_EN_SM_AEM-01_PID_COMPRESSED AIR-SM1_DWG_416	BOP1 AIR SOLENOID BANK
66	SW_EN_SM_AEM-01_PID_COMPRESSED AIR-SM1_DWG_417	E2/E3 SE AIR SOLENOID BANK
67	SW_EN_SM_AEM-01_PID_COMPRESSED AIR-SM1_DWG_418	BOP2 AIR SOLENOID BANK
68	SW_EN_SM_AEM-01_PID_COMPRESSED AIR-SM1_DWG_419	BOP3 AIR SOLENOID BANK
69	SW_EN_SM_AEM-01_PID_COMPRESSED AIR-SM1_DWG_420	CIP, EH/SY AIR SOLENOID BANK
70	SW_EN_SM_AEM-01_PID_COMPRESSED AIR-SM1_DWG_421	H1/H2 SE AIR SOLENOID BANK
		COMPRESSED AIR-SM2
71	SW_EN_SM_AEM-01_PID_COMPRESSED AIR-SM2_DWG_450	SM INSTRUMENT AND PROCESS AIR
72	SW_EN_SM_AEM-01_PID_COMPRESSED AIR-SM2_DWG_451	EH1/EH2 EXTRACT AND CIP AIR
73	SW_EN_SM_AEM-01_PID_COMPRESSED AIR-SM2_DWG_452	EFFECT/SYSTEM HOLD AND CAL EXTRACTION AIR
74	SW_EN_SM_AEM-01_PID_COMPRESSED AIR-SM2_DWG_453	PLUG PREVENTION PUMP AIR
75	SW_EN_SM_AEM-01_PID_COMPRESSED AIR-SM2_DWG_454	AIR SEAL, STAND PIPE AND E2/E3 SE AIR
76	SW_EN_SM_AEM-01_PID_COMPRESSED AIR-SM2_DWG_455	UTILITY AIR
77	SW_EN_SM_AEM-01_PID_COMPRESSED AIR-SM2_DWG_456	BOP1 AIR SOLENOID BANK
78	SW_EN_SM_AEM-01_PID_COMPRESSED AIR-SM2_DWG_457	E2/E3 SE AIR SOLENOID BANK
79	SW_EN_SM_AEM-01_PID_COMPRESSED AIR-SM2_DWG_458	BOP2 AIR SOLENOID BANK
80	SW_EN_SM_AEM-01_PID_COMPRESSED AIR-SM2_DWG_459	BOP3 AIR SOLENOID BANK
81	SW_EN_SM_AEM-01_PID_COMPRESSED AIR-SM2_DWG_460	CIP, EH/SY AIR SOLENOID BANK
82	SW_EN_SM_AEM-01_PID_COMPRESSED AIR-SM2_DWG_461	H1/H2 SE AIR SOLENOID BANK

SHEET NO.	DRAWING NO.	DESCRIPTION
		SALTMAKER 2 (SM2)
83	SW_EN_SM_AEM-01_PID_SM2_DWG_510	THERMAL SOURCE PRIMARY HEAT EXCHANGERS
84	SW_EN_SM_AEM-01_PID_SM2_DWG_520	CONDENSED WATER SYSTEM
85	SW_EN_SM_AEM-01_PID_SM2_DWG_530	FEED DISTRIBUTION
86	SW_EN_SM_AEM-01_PID_SM2_DWG_550	CIP TANKS
87	SW_EN_SM_AEM-01_PID_SM2_DWG_551	CIP PUMP SKID
88	SW_EN_SM_AEM-01_PID_SM2_DWG_560	EFFECT HOLD 1
89	SW_EN_SM_AEM-01_PID_SM2_DWG_561	EFFECT HOLD 2
90	SW_EN_SM_AEM-01_PID_SM2_DWG_562	SYSTEM HOLD
91	SW_EN_SM_AEM-01_PID_SM2_DWG_563	CALCIUM EXTRACTION
92	SW_EN_SM_AEM-01_PID_SM2_DWG_564	EH1 SOLIDS EXTRACTION
93	SW_EN_SM_AEM-01_PID_SM2_DWG_565	EH2 SOLIDS EXTRACTION
94	SW_EN_SM_AEM-01_PID_SM2_DWG_580	DRIP TRAYS
95	SW_EN_SM_AEM-01_PID_SM2_DWG_610	EFFECT 1 TANK AND PUMPS
96	SW_EN_SM_AEM-01_PID_SM2_DWG_611	EFFECT 1 MODULES
97	SW_EN_SM_AEM-01_PID_SM2_DWG_613	EFFECT 1 PUMP SEAL FLUSH
98	SW_EN_SM_AEM-01_PID_SM2_DWG_614	EFFECT 1 AIR SEALS
99	SW_EN_SM_AEM-01_PID_SM2_DWG_620	EFFECT 2 TANK AND PUMPS
100	SW_EN_SM_AEM-01_PID_SM2_DWG_621	EFFECT 2 MODULES
101	SW_EN_SM_AEM-01_PID_SM2_DWG_622	EFFECT 2 SOLIDS EXTRACTION
102	SW_EN_SM_AEM-01_PID_SM2_DWG_623	EFFECT 2 PUMP SEAL FLUSH
103	SW_EN_SM_AEM-01_PID_SM2_DWG_624	EFFECT 2 AIR SEALS
104	SW_EN_SM_AEM-01_PID_SM2_DWG_630	EFFECT 3 TANK AND PUMPS
105	SW_EN_SM_AEM-01_PID_SM2_DWG_631	EFFECT 3 MODULES
106	SW_EN_SM_AEM-01_PID_SM2_DWG_632	EFFECT 3 SOLIDS EXTRACTION
107	SW_EN_SM_AEM-01_PID_SM2_DWG_633	EFFECT 3 PUMP SEAL FLUSH
108	SW_EN_SM_AEM-01_PID_SM2_DWG_634	EFFECT 3 AIR SEALS
109	SW_EN_SM_AEM-01_PID_SM2_DWG_640	EFFECT 4 TANK AND PUMPS
110	SW_EN_SM_AEM-01_PID_SM2_DWG_641	EFFECT 4 MODULES
111	SW_EN_SM_AEM-01_PID_SM2_DWG_643	EFFECT 4 PUMP SEAL FLUSH
112	SW_EN_SM_AEM-01_PID_SM2_DWG_644	EFFECT 4 AIR SEALS
113	SW_EN_SM_AEM-01_PID_SM2_DWG_650	EFFECT 5 TANK AND PUMPS
114	SW_EN_SM_AEM-01_PID_SM2_DWG_651	EFFECT 5 MODULES
115	SW_EN_SM_AEM-01_PID_SM2_DWG_653	EFFECT 5 PUMP SEAL FLUSH
116	SW_EN_SM_AEM-01_PID_SM2_DWG_654	EFFECT 5 AIR SEALS
		VENDOR DRAWINGS
	USW_17041_100D	POST TREATMENT RO

Saltworks
13800 Steveston Hwy
Richmond, BC, Canada, V6W 1A8
Tel: 604.628.6508 Fax: 604.676.2463
www.saltworkstech.com

DRAWING STATUS: FACTORY AS BUILT

THIS DOCUMENT EMBODIES DESIGNS AND INFORMATION THAT ARE PROPRIETARY TO SALTWORKS. IT IS TO BE USED ONLY FOR THE PURPOSE AND BY THE ENTITY FOR WHICH IT WAS ORIGINALLY SUPPLIED. THE DOCUMENT MAY NOT BE DUPLICATED OR DISCLOSED TO OTHER PERSON OR ENTITY, OR USED FOR MANUFACTURE OF THE ITEM IN PART OR IN WHOLE WITHOUT THE PRIOR WRITTEN PERMISSION OF SALTWORKS.

DO NOT SCALE DRAWING

LTR	DATE	DESCRIPTION	REV. BY:
N	06–JUL–2018	NO CHANGES	–
K	23–FEB–2018	NO CHANGES	–
L	23–MAR–2018	DRAIN VALVE SIZE AND UTILITY WATER FILL LAYOUT UPDATE	PH
M	09–MAY–2018	BUILDING HEATERS TIE–IN UPDATE	DKAO

TITLE: DRAWING LIST 2

PROJECT: SALTMAKER GEN III
CUSTOMER: AGNICO EAGLE MINES
REVISION: N

PREPARED BY: DKAO DATE: 09–MAY–2018
DWG. NO: DRAWING LIST 2
CHECKED BY: DATE:
JOB/CO NO: (JOB NO.)
APPROVED BY: APPROVED BY DATE: APPROVED DATE
SHEET: # OF #

DRAWING LIST 1

SHEET NO.	DRAWING NO.	DESCRIPTION
		COVER SHEET
		DRAWING LIST 1
		DRAWING LIST 2
		LEGEND
		COMMON
1	SW_EN_SM_AEM-01_PID_COMMON_DWG_000	MASTER PFD
2	SW_EN_SM_AEM-01_PID_COMMON_DWG_010	PROCESS FLOW DIAGRAM
3	SW_EN_SM_AEM-01_PID_COMMON_DWG_020	CONTAINER LAYOUT
4	SW_EN_SM_AEM-01_PID_COMMON_DWG_030	MODULES LAYOUT
5	SW_EN_SM_AEM-01_PID_COMMON_DWG_040	PLANT FEED TANKS
6	SW_EN_SM_AEM-01_PID_COMMON_DWG_041	PLANT FEED PUMP SKIDS
7	SW_EN_SM_AEM-01_PID_COMMON_DWG_050	CLEAN RESERVE AND BLOWDOWN SYSTEMS
8	SW_EN_SM_AEM-01_PID_COMMON_DWG_060	ACID DOSING SYSTEM
9	SW_EN_SM_AEM-01_PID_COMMON_DWG_061	BASE DOSING SYSTEM
10	SW_EN_SM_AEM-01_PID_COMMON_DWG_062	BIOCIDE DOSING SYSTEM
11	SW_EN_SM_AEM-01_PID_COMMON_DWG_063	ANTIFOAM DOSING SYSTEM
12	SW_EN_SM_AEM-01_PID_COMMON_DWG_064	ANTISCALANT DOSING SYSTEM
13	SW_EN_SM_AEM-01_PID_COMMON_DWG_070	UTILITY WATER DISTRIBUTION
		SALTMAKER 1 (SM1)
14	SW_EN_SM_AEM-01_PID_SM1_DWG_110	THERMAL SOURCE PRIMARY HEAT EXCHANGERS
15	SW_EN_SM_AEM-01_PID_SM1_DWG_120	CONDENSED WATER SYSTEM
16	SW_EN_SM_AEM-01_PID_SM1_DWG_130	FEED DISTRIBUTION
17	SW_EN_SM_AEM-01_PID_SM1_DWG_150	CIP TANKS
18	SW_EN_SM_AEM-01_PID_SM1_DWG_151	CIP PUMP SKID
19	SW_EN_SM_AEM-01_PID_SM1_DWG_160	EFFECT HOLD 1
20	SW_EN_SM_AEM-01_PID_SM1_DWG_161	EFFECT HOLD 2
21	SW_EN_SM_AEM-01_PID_SM1_DWG_162	SYSTEM HOLD
22	SW_EN_SM_AEM-01_PID_SM1_DWG_163	CALCIUM EXTRACTION
23	SW_EN_SM_AEM-01_PID_SM1_DWG_164	EH1 SOLIDS EXTRACTION
24	SW_EN_SM_AEM-01_PID_SM1_DWG_165	EH2 SOLIDS EXTRACTION
25	SW_EN_SM_AEM-01_PID_SM1_DWG_180	DRIP TRAYS
26	SW_EN_SM_AEM-01_PID_SM1_DWG_210	EFFECT 1 TANK AND PUMPS
27	SW_EN_SM_AEM-01_PID_SM1_DWG_211	EFFECT 1 MODULES
28	SW_EN_SM_AEM-01_PID_SM1_DWG_213	EFFECT 1 PUMP SEAL FLUSH
29	SW_EN_SM_AEM-01_PID_SM1_DWG_214	EFFECT 1 AIR SEALS
30	SW_EN_SM_AEM-01_PID_SM1_DWG_220	EFFECT 2 TANK AND PUMPS
31	SW_EN_SM_AEM-01_PID_SM1_DWG_221	EFFECT 2 MODULES
32	SW_EN_SM_AEM-01_PID_SM1_DWG_222	EFFECT 2 SOLIDS EXTRACTION
33	SW_EN_SM_AEM-01_PID_SM1_DWG_223	EFFECT 2 PUMP SEAL FLUSH
34	SW_EN_SM_AEM-01_PID_SM1_DWG_224	EFFECT 2 AIR SEALS
35	SW_EN_SM_AEM-01_PID_SM1_DWG_230	EFFECT 3 TANK AND PUMPS
36	SW_EN_SM_AEM-01_PID_SM1_DWG_231	EFFECT 3 MODULES
37	SW_EN_SM_AEM-01_PID_SM1_DWG_232	EFFECT 3 SOLIDS EXTRACTION
38	SW_EN_SM_AEM-01_PID_SM1_DWG_233	EFFECT 3 PUMP SEAL FLUSH
39	SW_EN_SM_AEM-01_PID_SM1_DWG_234	EFFECT 3 AIR SEALS
40	SW_EN_SM_AEM-01_PID_SM1_DWG_240	EFFECT 4 TANK AND PUMPS
41	SW_EN_SM_AEM-01_PID_SM1_DWG_241	EFFECT 4 MODULES
42	SW_EN_SM_AEM-01_PID_SM1_DWG_243	EFFECT 4 PUMP SEAL FLUSH
43	SW_EN_SM_AEM-01_PID_SM1_DWG_244	EFFECT 4 AIR SEALS
44	SW_EN_SM_AEM-01_PID_SM1_DWG_250	EFFECT 5 TANK AND PUMPS
45	SW_EN_SM_AEM-01_PID_SM1_DWG_251	EFFECT 5 MODULES
46	SW_EN_SM_AEM-01_PID_SM1_DWG_253	EFFECT 5 PUMP SEAL FLUSH
47	SW_EN_SM_AEM-01_PID_SM1_DWG_254	EFFECT 5 AIR SEALS
		THERMAL SYSTEM
48	SW_EN_SM_AEM-01_PID_DWG_310	THERMAL SKID: WATER LOOP
49	SW_EN_SM_AEM-01_PID_DWG_311	THERMAL SKID: WATER LOOP
50	SW_EN_SM_AEM-01_PID_DWG_312	THERMAL SKID: GYLCOL LOOP
		POST TREATMENT
51	SW_EN_SM_AEM-01_PID_COMMON_DWG_320	NITRITE DESTRUCTION AND RO PC SYSTEM
52	SW_EN_SM_AEM-01_PID_COMMON_DWG_321	AMMONIA DESTRUCTION SYSTEM
53	SW_EN_SM_AEM-01_PID_COMMON_DWG_322	RO BRINE FLUSH TANK
54	SW_EN_SM_AEM-01_PID_COMMON_DWG_323	TREATED WATER TANK
		COMPRESSED AIR-COMMON PACKAGE
55	SW_EN_SM_AEM-01_PID_COMPRESSED AIR-COMMON_DWG_400	COMPRESSED AIR SYSTEM
56	SW_EN_SM_AEM-01_PID_COMPRESSED AIR-COMMON_DWG_401	AMMONIA DES, BRINE BLOWDOWN AND PLANT FEED AIR
57	SW_EN_SM_AEM-01_PID_COMPRESSED AIR-COMMON_DWG_402	CHEMICAL DOSING AND ANCILLARY STAND PIPE AIR
58	SW_EN_SM_AEM-01_PID_COMPRESSED AIR-COMMON_DWG_403	COMMON AND POST TREATMENT AIR BANK
		COMPRESSED AIR-SM1
59	SW_EN_SM_AEM-01_PID_COMPRESSED AIR-SM1_DWG_410	SM INSTRUMENT AND PROCESS AIR
60	SW_EN_SM_AEM-01_PID_COMPRESSED AIR-SM1_DWG_411	EH1/EH2 EXTRACT AND CIP AIR

Saltworks
13800 Steveston Hwy
Richmond, BC, Canada, V6W 1A8
Tel: 604.628.6508 Fax: 604.676.2463
www.saltworkstech.com

DRAWING STATUS: FACTORY AS BUILT

THIS DOCUMENT EMBODIES DESIGNS AND INFORMATION THAT ARE PROPRIETARY TO SALTWORKS. IT IS TO BE USED ONLY FOR THE PURPOSE AND BY THE ENTITY FOR WHICH IT WAS ORIGINALLY SUPPLIED. THE DOCUMENT MAY NOT BE DUPLICATED OR DISCLOSED TO OTHER PERSON OR ENTITY, OR USED FOR MANUFACTURE OF THE ITEM IN PART OR IN WHOLE WITHOUT THE PRIOR WRITTEN PERMISSION OF SALTWORKS.

DO NOT SCALE DRAWING

LTR	DATE	DESCRIPTION	REV. BY:
N	06–JUL–2018	NO CHANGES	–
K	23–FEB–2018	NO CHANGES	–
L	23–MAR–2018	DRAIN VALVE SIZE AND UTILITY WATER FILL LAYOUT UPDATE	PH
M	09–MAY–2018	BUILDING HEATERS TIE–IN UPDATE	DKAO

TITLE: DRAWING LIST 1

PROJECT: SALTMAKER GEN III

CUSTOMER: AGNICO EAGLE MINES

REVISION: N

PREPARED BY: DKAO DATE: 09–MAY–2018

DWG. NO: DRAWING LIST 1

CHECKED BY: DATE:

JOB/CO NO: (JOB NO.)

APPROVED BY: APPROVED BY DATE: APPROVED DATE

SHEET: # OF #

VALVES

- MANUAL BALL (MBV) – NORMALLY CLOSED
- MANUAL BALL (MBV) – NORMALLY OPEN
- CHECK (CV)
- GATE (GV)
- BUTTERFLY (BFV)
- PRESSURE RELIEF VALVE (PRV)
- FLOAT VALVE (FV)
- DIAPHRAGM (DV)
- NEEDLE (NV)
- 3–WAY
- 3–WAY SOLENOID
- 4–WAY SOLENOID
- 4–FUNCTION VALVE
- FOOT VALVE

N.O. – NORMALLY OPEN
N.C. – NORMALLY CLOSED

CONTROL VALVES/ACTUATORS

- PRESSURE CONTROL VALVE (PCV) WITH PRESSURE GAUGE
- DOUBLE ACTING ACTUATED BALL VALVE (ABV) – NORMALLY CLOSED
- DOUBLE ACTING ACTUATED BALL VALVE (ABV) – NORMALLY OPEN
- – NORMALLY OPEN WITH PINCH VALVES
- SOLENOID VALVE (SV)
- SOLENOID VALVE (SV)
- MOTORIZED ACTUATOR
- MOTORIZED ACTUATOR WITH MANUAL OVERRIDE
- DOUBLE ACTING DIAPHRAGM ACTUATOR WITH LIMIT STOP
- DOUBLE ACTING DIAPHRAGM ACTUATOR WITH SPRING TO CLOSE
- DOUBLE ACTING DIAPHRAGM ACTUATOR WITH SPRING TO OPEN
- A/S – AIR OPERATOR W/POSITIONER

EQUIPMENT SYMBOL

- MIXER OR AGITATOR (MX)
- INLINE STATIC MIXER
- HEATER (HE)
- ELECTRIC HEATER (EH)
- INJECTION QUILL
- EDUCTOR/EJECTOR (ED)
- POSITIVE DISPLACEMENT PUMP W/MANUAL STROKE ADJUSTMENT (MP)
- POSITIVE DISPLACEMENT PUMP W/ELECTRIC STROKE ADJUSTMENT (MP)
- ROTARY COMPRESSER OR BLOWER
- AIR FILTER
- BLOWER OR FAN (BW OR FN)
- VACUUM PUMP (VP)
- DIAPHRAGM PUMP (P)
- CENTRIFUGAL PUMP (P)
- HIGH PRESSURE PUMP (P)
- DESICCANT BREATHER
- VENT PIPE
- Y–STRAINER
- RUPTURE DISC
- DIAPHRAGM SEAL
- STANDPIPE (SP)
- CALIBRATION COLUMN (CC)
- AIR COMPRESSOR (AC)
- PNEUMATIC VIBRATOR (VIB)

- RO/UF MODULE
- FILTER – BASKET (BAF)
- FILTER (F) HOUSING
- CLOSED TOP TANK (TK)
- CONE BOTTOM TANK (TK)
- OPEN TOP TANK (TK) WITH COVER
- PLATE HEAT EXCHANGER (HX)
- SHELL AND TUBE HEAT EXCHANGER (HX)
- CONE CONSTRAINER (CSTR)
- PERISTALTIC HOSE PUMP (P)
- FLEXIBLE CONNECTION

MISCELLANEOUS SYMBOLS

- LINE, EQUIPMENT OR PRODUCT REFERENCES INTO OR LEAVING DWG.
- TIE – TIE IN TO PIPING BY OTHERS
- 304 | CPVC – PIPING MATERIAL SPEC. BREAK

SOLENOID VALVE OPERATION

3–WAY: FAIL OPEN TO PATH A–C

4–WAY: FAIL OPEN TO PATHS A–C AND D–B

- A/S – AIR SUPPLY
- N/S – NITROGEN SUPPLY
- CONCENTRIC REDUCING
- ECCENTRIC REDUCING
- ENCLOSURE (CAP)
- FLANGE
- END CLOSURE (BLIND FLANGE)
- END CLOSURE (VIC PLUG)
- QUICK DISCONNECT
- UNION
- SANITARY CONNECTION
- FLOOR DRAIN OR SUMP
- BULKHEAD
- EXPANSION JOINT

FILL SYMBOLS

- SPLASH FILL
- FILM FILL
- NET FILL

INSTRUMENT LINE SYMBOLS

- PNEUMATIC SIGNAL (ANALOG)
- PNEUMATIC SIGNAL (DIGITAL)
- ELECTRICAL SIGNAL (ANALOG – 4–20mA OR 1–10 VDC)
- ELECTRICAL SIGNAL (FREQUENCY OR PULSE)
- CAPILLARY TUBING (FILLED TUBING)
- CONNECTION TO PROCESS, OR INSTRUMENT SUPPLY

FLUID LINE SYMBOLS

- EFFECT 1 BRINE (90°C)
- EFFECT 2 BRINE (75°C)
- EFFECT 3 BRINE (60°C)
- EFFECT 4 BRINE (45°C)
- EFFECT 5 BRINE (30°C)
- CIP
- RAW FEED
- CONDENSED WATER (70°C – 40°C)
- THERMAL LOOP (GYLCOL)
- EVAPORATE
- COMPRESSED AIR LINE
- ACID DOSING
- BASE DOSING
- ANTIFOAM
- BIOFILM TREATMENT SOLUTION

MISCELLANEOUS LINE SYMBOLS

- SYSTEM BOUNDARY

INSTRUMENT SYMBOLS

- LOCALLY MOUNTED
- PANEL MOUNTED (MAIN OR REMOTE)
- SHARED DISPLAY (CRT) AND/OR SHARED CONTROL

CONTROL SYMBOLS

- DI – DISCRETE INPUT TO PLC
- DO – DISCRETE OUTPUT FROM PLC
- AI – ANALOG INPUT TO PLC
- AO – ANALOG OUTPUT FROM PLC

EQUIPMENT IDENTIFICATION

M – MOTOR
AS – AIR SEAL
VFD – VARIABLE FREQUENCY DRIVE
DRY – DRYER

MODULE IDENTIFICATION

EVP – EVAPORATOR MODULE
RAD – RADIATOR MODULE
FAN – FAN MODULE

MATERIAL ABBREVIATIONS

PP – POLYPROPYLENE
PVC – POLYVINYL CHLORIDE
UPVC – POLYVINYL CHLORIDE
P – POLYVINYL CHLORIDE (IN LINE NUMBER)
CPVC – CHLORINATED POLYVINYL CHLORIDE
C – CHLORINATED POLYVINYL CHLORIDE (IN LINE NUMBER)
HDPE – HIGH DENSITY POLYETHYLENE
PVDF – POLYVINYLIDENE FLUORIDE
PVFB – PVDF BEADLESS & CREVICE FREE
PVFL – PVDF LINED
PTFE – TEFLON
304 – 304 STAINLESS STEEL
304L – 304L STAINLESS STEEL
316 – 316 STAINLESS STEEL
316L – 316L STAINLESS STEEL

INSTRUMENT IDENTIFICATION

PARAMETER (1ST LETTER)

P – PRESSURE
F – FLOW
T – TEMPERATURE
C – CONDUCTIVITY
D – DENSITY
Z – POSITION
A – ANALYTICAL (SEE NOTES)

TYPE (2ND AND 3RD LETTER)

I – INDICATING/INDICATOR
T – TRANSMITTER
E – ELEMENT/PROBE
A – ALARM
S – SWITCH

NOTES:

1. THE DESCRIPTION OF AN ANALYTICAL VARIABLE FUNCTION (pH, SiO_2, O, ETC.) SHALL BE SHOWN OUTSIDE THE INSTRUMENT SYMBOL. EXAMPLE: AIT pH
2. ADD THE SUFFIX L (LOW), LL (LOW–LOW), H (HIGH), HH (HIGH–HIGH), HL (HIGH–LOW), AS REQUIRED. EXAMPLE: PSL FAL

LINE NUMBERING

E1BR4–001–P80

FLUID | SIZE | SEQUENTIAL NUMBER | MATERIAL | SCHEDULE

VALVE NUMBERING

681–015–BA17–0001

AREA CODE | VALVE SIZE | VALVE TYPE | SEQUENTIAL NUMBER

VALVE SIZE CONVERSION

MM	INCH
008	1/4
015	1/2
025	1
050	2
100	4
150	6

VALVE TYPE CONVERSION

- BA17 – BALL VALVE
- BA99 – TOUGH BALL VALVE
- BF99 – TOUGH BUTTERFLY VALVE (EXCEPT THOSE NOTED "NON TOUGH")
- CK99 – CHECK VALVE
- GA99 – GATE VALVE

Saltworks
13800 Steveston Hwy
Richmond, BC, Canada, V6W 1A8
Tel: 604.628.6508 Fax: 604.676.2463
www.saltworkstech.com

DRAWING STATUS: FACTORY AS BUILT

THIS DOCUMENT EMBODIES DESIGNS AND INFORMATION THAT ARE PROPRIETARY TO SALTWORKS. IT IS TO BE USED ONLY FOR THE PURPOSE AND BY THE ENTITY FOR WHICH IT WAS ORIGINALLY SUPPLIED. THE DOCUMENT MAY NOT BE DUPLICATED OR DISCLOSED TO OTHER PERSON OR ENTITY, OR USED FOR MANUFACTURE OF THE ITEM IN PART OR IN WHOLE WITHOUT THE PRIOR WRITTEN PERMISSION OF SALTWORKS.

DO NOT SCALE DRAWING

LTR	DATE	DESCRIPTION	REV. BY:
N	06–JUL–2018	NO CHANGES	–
K	23–FEB–2018	NO CHANGES	–
L	23–MAR–2018	DRAIN VALVE SIZE AND UTILITY WATER FILL LAYOUT UPDATE	PH
M	09–MAY–2018	BUILDING HEATERS TIE–IN UPDATE	DKAO

TITLE: LEGEND

PROJECT: SALTMAKER GEN III
CUSTOMER: AGNICO EAGLE MINES
REVISION: N
PREPARED BY: DKAO DATE: 09–MAY–2018
DWG. NO: LEGEND
CHECKED BY: DATE:
JOB/CO NO: (JOB NO.)
APPROVED BY: APPROVED BY DATE: APPROVED DATE
SHEET: # OF #

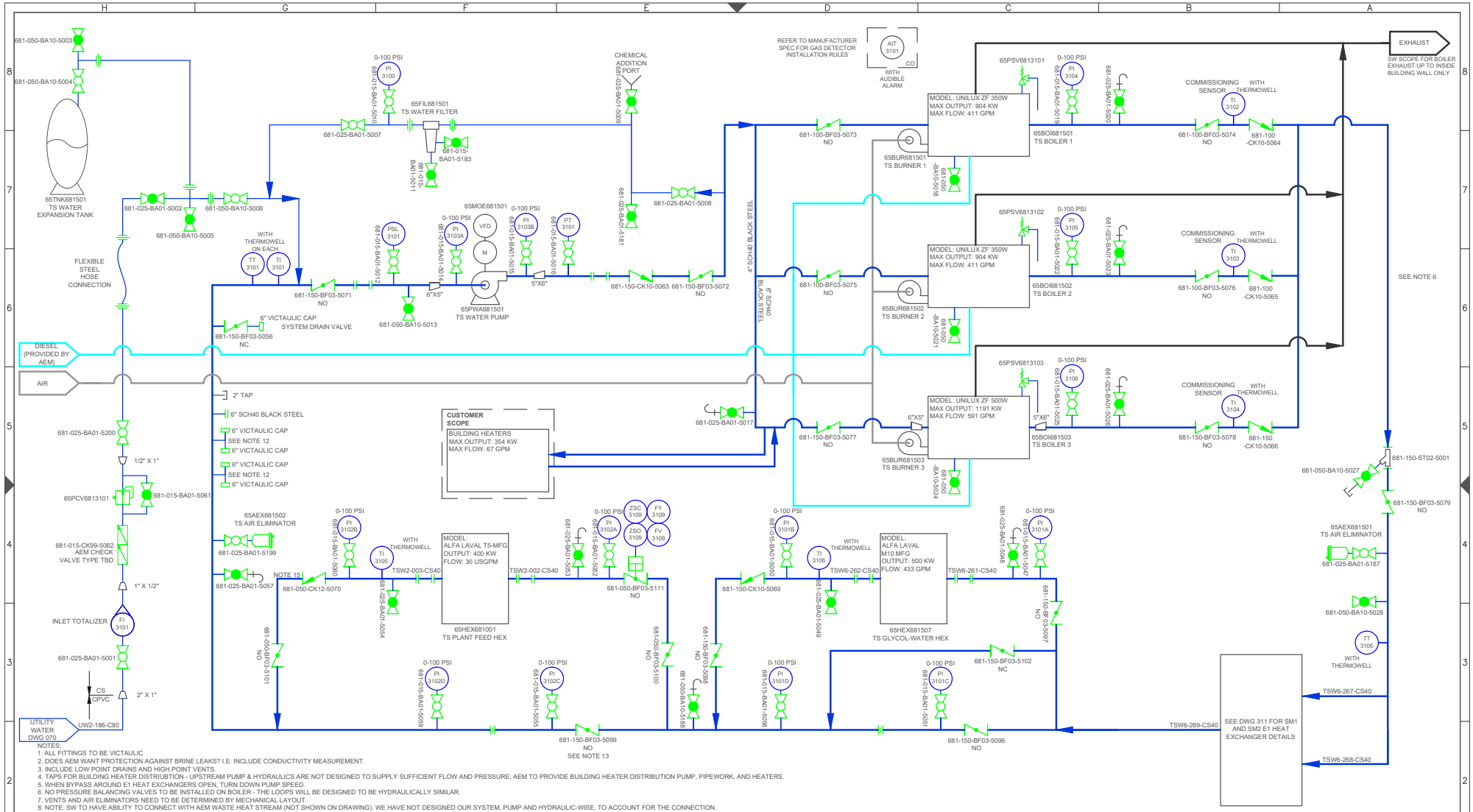

NOTES:
1. ALL FITTINGS TO BE VICTAULIC
2. DOES AEM WANT PROTECTION AGAINST BRINE LEAKS? I.E. INCLUDE CONDUCTIVITY MEASUREMENT.
3. INCLUDE LOW POINT DRAINS AND HIGH POINT VENTS.
4. TAPS FOR BUILDING HEATER DISTRIUBTION - UPSTREAM PUMP & HYDRAULICS ARE NOT DESIGNED TO SUPPLY SUFFICIENT FLOW AND PRESSURE; AEM TO PROVIDE BUILDING HEATER DISTRIBUTION PUMP, PIPEWORK, AND HEATERS.
5. WHEN BYPASS AROUND E1 HEAT EXCHANGERS OPEN, TURN DOWN PUMP SPEED.
6. NO PRESSURE BALANCING VALVES TO BE INSTALLED ON BOILER - THE LOOPS WILL BE DESIGNED TO BE HYDRAULICALLY SIMILAR.
7. VENTS AND AIR ELIMINATORS NEED TO BE DETERMINED BY MECHANICAL LAYOUT.
8. NOTE: SW TO HAVE ABILITY TO CONNECT WITH AEM WASTE HEAT STREAM (NOT SHOWN ON DRAWING). WE HAVE NOT DESIGNED OUR SYSTEM, PUMP AND HYDRAULIC-WISE, TO ACCOUNT FOR THE CONNECTION.
9. THERE WILL BE AN UPSTREAM AND DOWNSTREAM PIPING REQUIREMENT AROUND THE PRESSURE BALANCING VALVES.
10. BOILER WATER QUALITY REQUIREMENTS:
11. NOTE: FLOW TO E5 RADS WILL BE CONTROLLED BY TT IN E5 MODULE MEASURING AIR TEMPERATURE.
12. 1 STUB WITH BLIND FLANGE, 2 TEES WITH VICTUALIC PLUGS - THESE ARE FOR POTENTIAL CONNECTION TO AEM'S THERMAL SOURCE AND BUILDING HEATERS.
13. NOTE: FLOW TO FEED HEAT EXCHANGER WILL BE ON/OFF BASED ON INLET ABFV OPENING/CLOSING.
14. NOTE: SM2 GRAYED-OUT UNTIL SECOND PO FROM AEM CONFIRMED.
15. NOTE: VENT VALVE TO BE IN CLOSEST PIPE RACK HIGH POINT TO THERMAL SYSTEM PUMP.
16. NOTE: BYPASS AROUND GLYCOL-WATER HEX TO BE USED DURING MAINTENANCE OR PROLONGED OPERATION WITHOUT E5 RADIATORS (E.G. SUMMER).

Saltworks
13800 Steveston Hwy
Richmond, BC, Canada, V6W 1A8
Tel: 604.628.6508 Fax: 604.676.2463
www.saltworkstech.com

DRAWING STATUS: FACTORY AS BUILT

THIS DOCUMENT EMBODIES DESIGNS AND INFORMATION THAT ARE PROPRIETARY TO SALTWORKS. IT IS TO BE USED ONLY FOR THE PURPOSE AND BY THE ENTITY FOR WHICH IT WAS ORIGINALLY SUPPLIED. THE DOCUMENT MAY NOT BE DUPLICATED OR DISCLOSED TO OTHER PERSON OR ENTITY, OR USED FOR MANUFACTURE OF THE ITEM IN PART OR IN WHOLE WITHOUT THE PRIOR WRITTEN PERMISSION OF SALTWORKS.

DO NOT SCALE DRAWING

LTR	DATE	DESCRIPTION	REV. BY:
N	06-JUL-2018	NO CHANGES	–
K	23-FEB-2018	NO CHANGES	–
L	23-MAR-2018	DRAIN VALVE SIZE AND UTILITY WATER FILL LAYOUT UPDATE	PH
M	09-MAY-2018	BUILDING HEATERS TIE-IN UPDATE	DKAO

TITLE: 310: THERMAL SKID – WATER LOOP

PROJECT: SALTMAKER GEN III		CUSTOMER: AGNICO EAGLE MINES	REVISION: N
PREPARED BY: DKAO	DATE: 09-MAY-2018	DWG. NO: SW_EN_SM_GEN III_PID_DWG_310	
CHECKED BY:	DATE:	JOB/CO NO: (JOB NO.)	
APPROVED BY: APPROVED BY	DATE: APPROVED DATE	SHEET: 48 OF117	

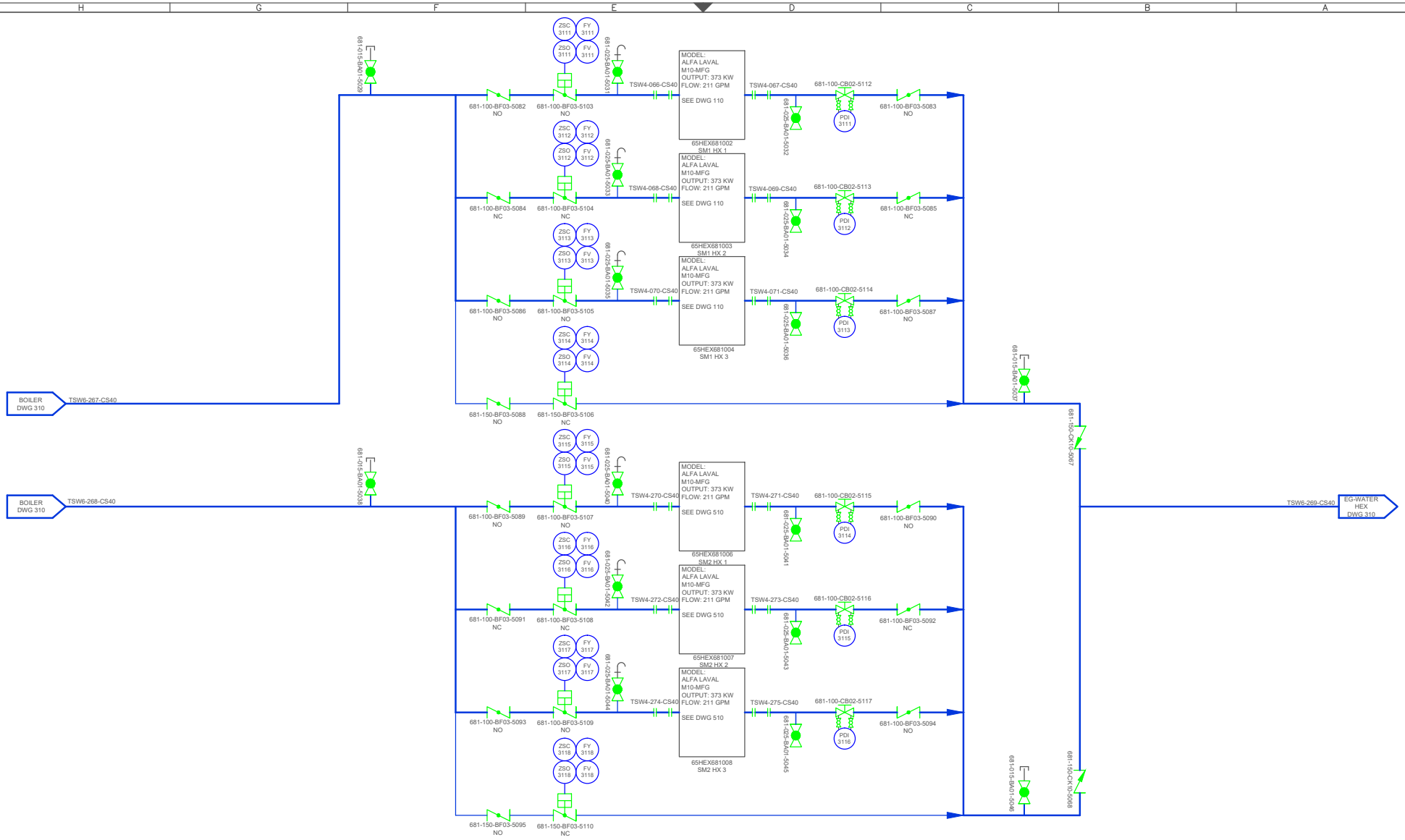

Saltworks
13800 Steveston Hwy
Richmond, BC, Canada, V6W 1A8
Tel: 604.628.6508 Fax: 604.676.2463
www.saltworkstech.com

DRAWING STATUS: FACTORY AS BUILT

THIS DOCUMENT EMBODIES DESIGNS AND INFORMATION THAT ARE PROPRIETARY TO SALTWORKS. IT IS TO BE USED ONLY FOR THE PURPOSE AND BY THE ENTITY FOR WHICH IT WAS ORIGINALLY SUPPLIED. THE DOCUMENT MAY NOT BE DUPLICATED OR DISCLOSED TO OTHER PERSON OR ENTITY, OR USED FOR MANUFACTURE OF THE ITEM IN PART OR IN WHOLE WITHOUT THE PRIOR WRITTEN PERMISSION OF SALTWORKS.

DO NOT SCALE DRAWING

LTR	DATE	DESCRIPTION	REV. BY:
N	06–JUL–2018	NO CHANGES	–
K	23–FEB–2018	NO CHANGES	–
L	23–MAR–2018	DRAIN VALVE SIZE AND UTILITY WATER FILL LAYOUT UPDATE	PH
M	09–MAY–2018	BUILDING HEATERS TIE–IN UPDATE	DKAO

TITLE: 311: THERMAL SKID – WATER LOOP

PROJECT: SALTMAKER GEN III		CUSTOMER: AGNICO EAGLE MINES	REVISION N
PREPARED BY: DKAO	DATE: 09–MAY–2018	DWG. NO: SW_EN_SM_GEN III_PID_DWG_311	
CHECKED BY:	DATE:	JOB/CO NO: (JOB NO.)	
APPROVED BY: APPROVED BY	DATE: APPROVED DATE	SHEET: 49 OF117	

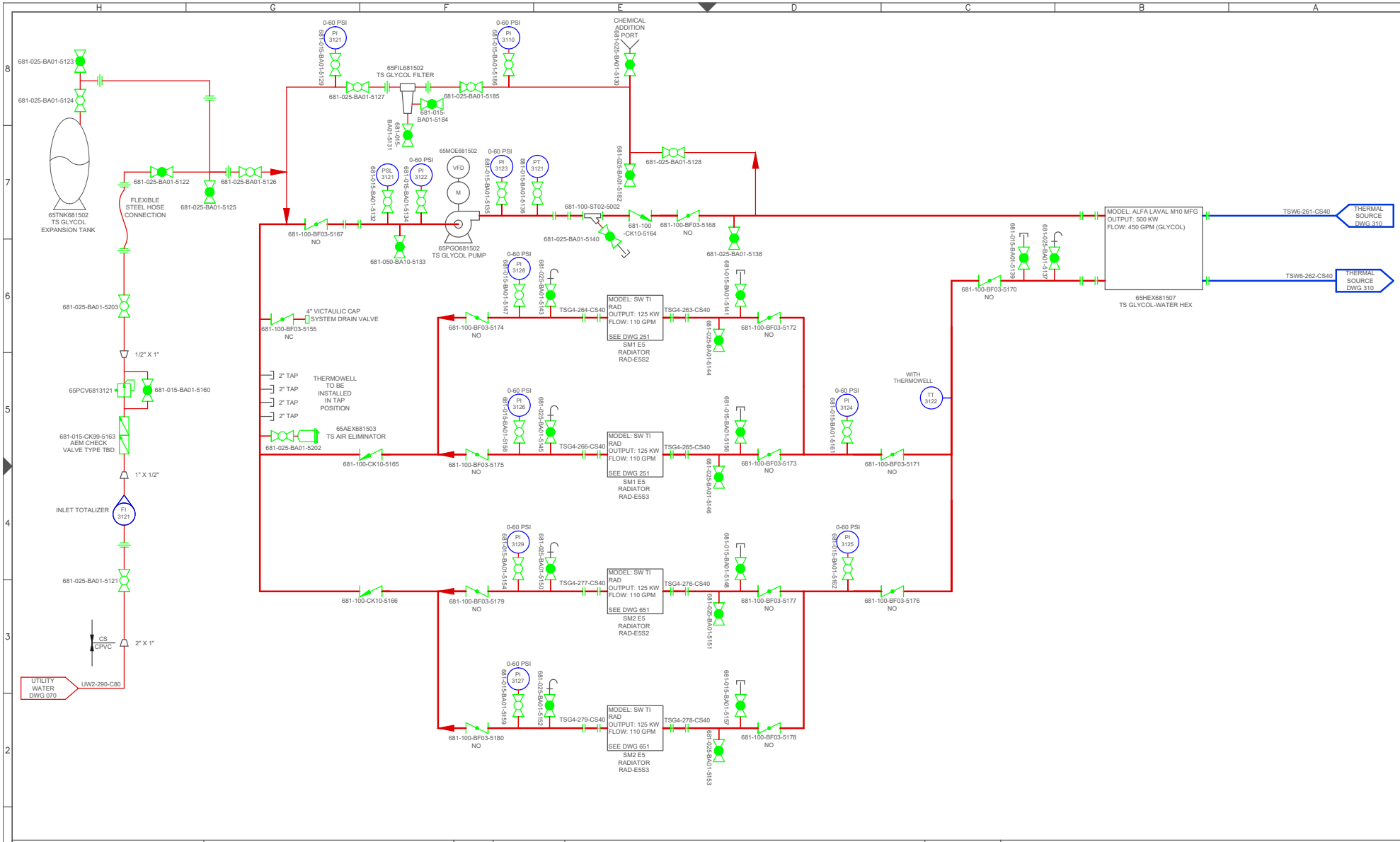

Saltworks
13800 Steveston Hwy
Richmond, BC, Canada, V6W 1A8
Tel: 604.628.6508 Fax: 604.676.2463
www.saltworkstech.com

DRAWING STATUS: FACTORY AS BUILT

THIS DOCUMENT EMBODIES DESIGNS AND INFORMATION THAT ARE PROPRIETARY TO SALTWORKS. IT IS TO BE USED ONLY FOR THE PURPOSE AND BY THE ENTITY FOR WHICH IT WAS ORIGINALLY SUPPLIED. THE DOCUMENT MAY NOT BE DUPLICATED OR DISCLOSED TO OTHER PERSON OR ENTITY, OR USED FOR MANUFACTURE OF THE ITEM IN PART OR IN WHOLE WITHOUT THE PRIOR WRITTEN PERMISSION OF SALTWORKS.

DO NOT SCALE DRAWING

LTR	DATE	DESCRIPTION	REV. BY:
N	06–JUL–2018	NO CHANGES	–
K	23–FEB–2018	NO CHANGES	–
L	23–MAR–2018	DRAIN VALVE SIZE AND UTILITY WATER FILL LAYOUT UPDATE	PH
M	09–MAY–2018	BUILDING HEATERS TIE–IN UPDATE	DKAO

TITLE: 312: THERMAL SKID – GLYCOL LOOP

PROJECT: SALTMAKER GEN III		CUSTOMER: AGNICO EAGLE MINES	REVISION N
PREPARED BY: DKAO	DATE: 09–MAY–2018	DWG. NO: SW_EN_SM_GEN III_PID_DWG_312	
CHECKED BY:	DATE:	JOB/CO NO: (JOB NO.)	
APPROVED BY: APPROVED BY	DATE: APPROVED DATE	SHEET: 50 OF117	

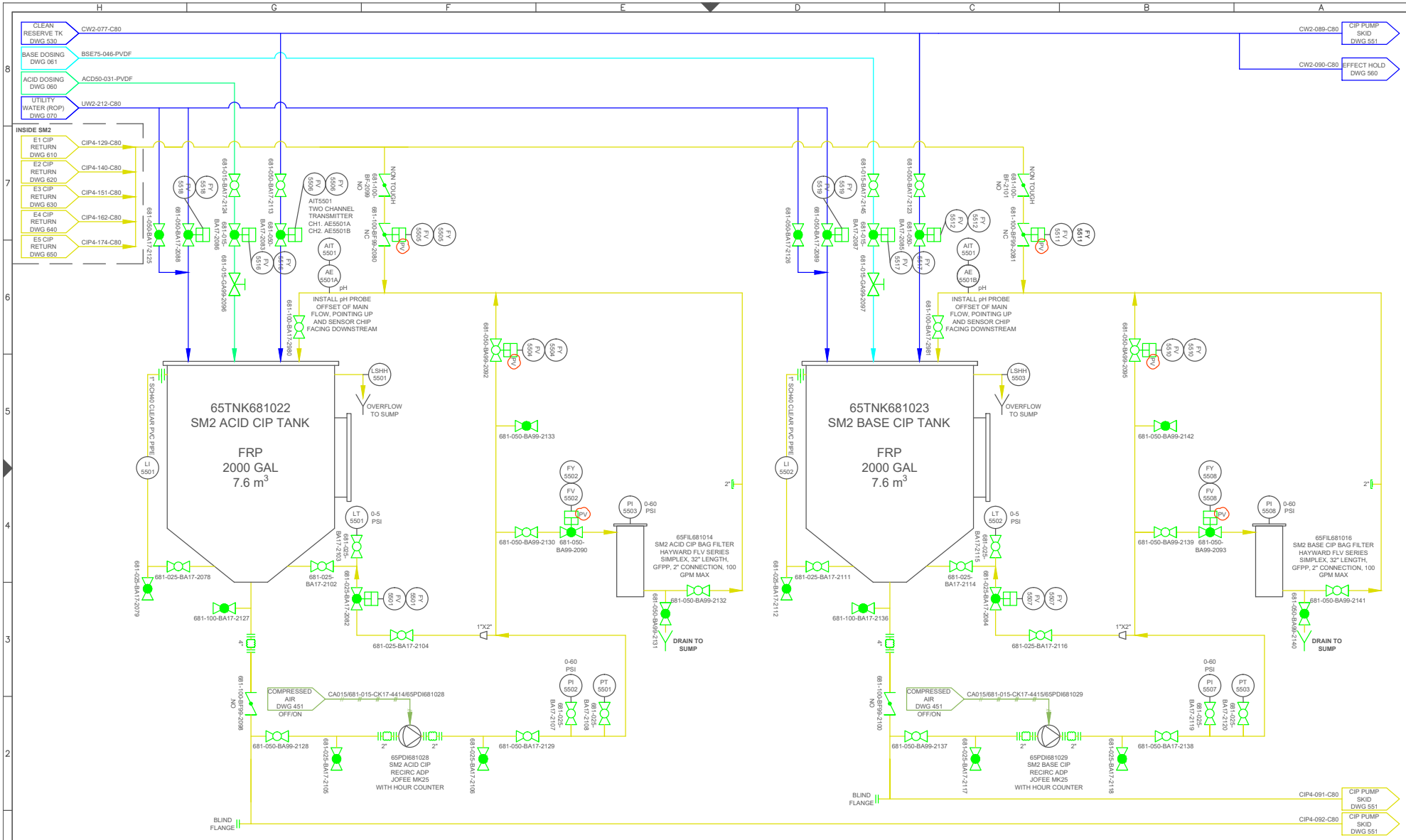

Saltworks
13800 Steveston Hwy
Richmond, BC, Canada, V6W 1A8
Tel: 604.628.6508 Fax: 604.676.2463
www.saltworkstech.com

DRAWING STATUS: FACTORY AS BUILT

THIS DOCUMENT EMBODIES DESIGNS AND INFORMATION THAT ARE PROPRIETARY TO SALTWORKS. IT IS TO BE USED ONLY FOR THE PURPOSE AND BY THE ENTITY FOR WHICH IT WAS ORIGINALLY SUPPLIED. THE DOCUMENT MAY NOT BE DUPLICATED OR DISCLOSED TO OTHER PERSON OR ENTITY, OR USED FOR MANUFACTURE OF THE ITEM IN PART OR IN WHOLE WITHOUT THE PRIOR WRITTEN PERMISSION OF SALTWORKS.

DO NOT SCALE DRAWING

LTR	DATE	DESCRIPTION	REV. BY:
L	22-DEC-2017	RECIRC VALVES CHANGED TO NO	JLAU
M	20-APR-2018	MECHANICAL UPDATES	JLAU
N	06-JUL-2018	PINCH VALVES ADDED	JLAU
K	23-FEB-2018	NO CHANGES	–

TITLE: (SM2) 550: CIP TANKS

PROJECT: SALTMAKER GEN III		CUSTOMER: AGNICO EAGLE MINES	REVISION N
PREPARED BY: JLAU	DATE: 01-SEP-2017	DWG. NO: SW_EN_SM_AEM-01_PID_SM2_DWG_550	
CHECKED BY: MLOW	DATE: 05-SEP-2017	JOB/CO NO: (JOB NO.)	
APPROVED BY: APPROVED BY	DATE: APPROVED DATE	SHEET: 87 OF117	

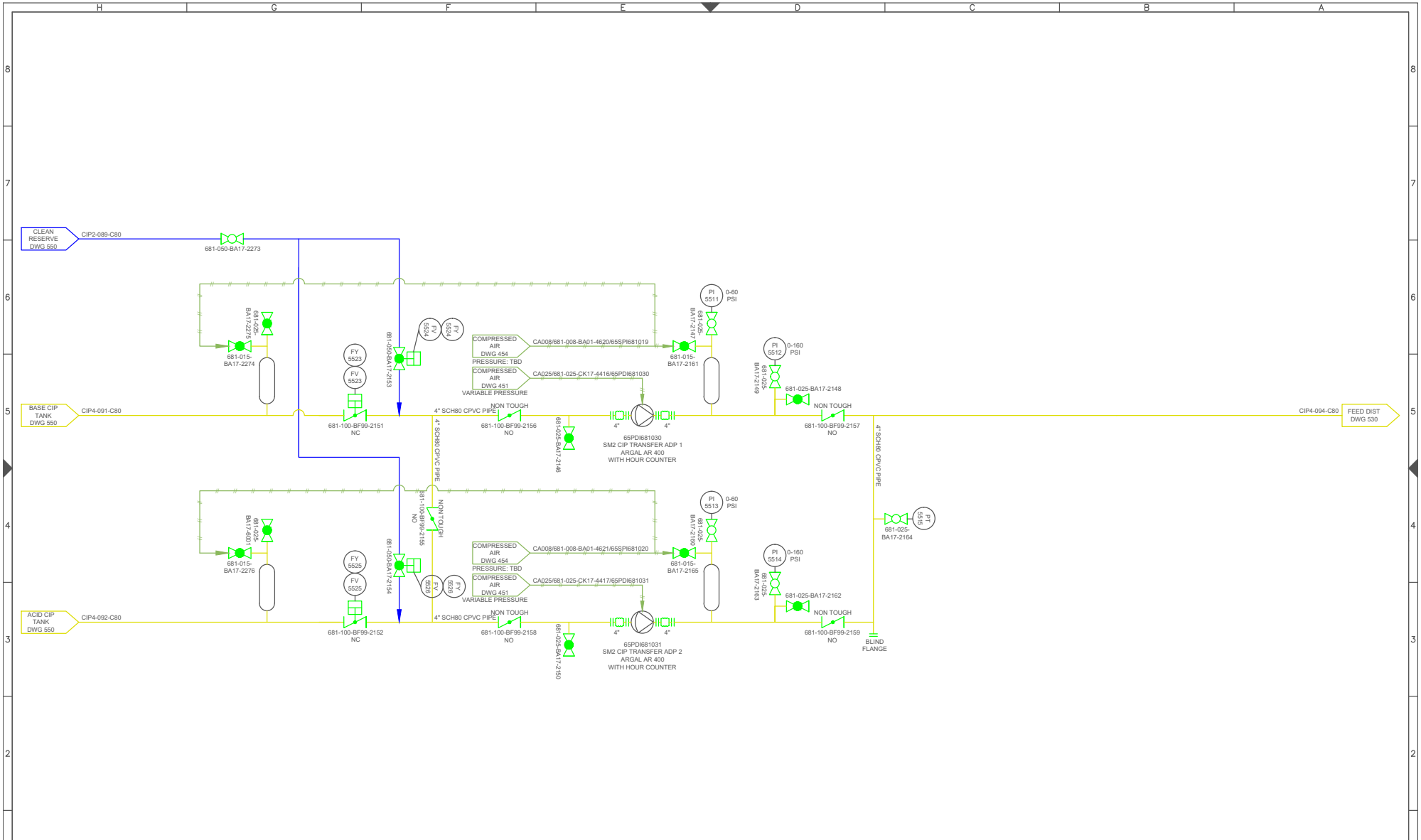

Saltworks
13800 Steveston Hwy
Richmond, BC, Canada, V6W 1A8
Tel: 604.628.6508 Fax: 604.676.2463
www.saltworkstech.com

DRAWING STATUS: FACTORY AS BUILT

THIS DOCUMENT EMBODIES DESIGNS AND INFORMATION THAT ARE PROPRIETARY TO SALTWORKS. IT IS TO BE USED ONLY FOR THE PURPOSE AND BY THE ENTITY FOR WHICH IT WAS ORIGINALLY SUPPLIED. THE DOCUMENT MAY NOT BE DUPLICATED OR DISCLOSED TO OTHER PERSON OR ENTITY, OR USED FOR MANUFACTURE OF THE ITEM IN PART OR IN WHOLE WITHOUT THE PRIOR WRITTEN PERMISSION OF SALTWORKS.

DO NOT SCALE DRAWING

LTR	DATE	DESCRIPTION	REV. BY:
L	22–DEC–2017	ADDED BLIND FLANGE TO PUMP INLETS	JLAU
M	20–APR–2018	MECHANICAL UPDATES, ADDED INLET STANDPIPES	JLAU
N	06–JUL–2018	NO CHANGES	–
K	23–FEB–2018	NO CHANGES	–

TITLE: (SM2) 551: CIP PUMP SKID

PROJECT: SALTMAKER GEN III

CUSTOMER: AGNICO EAGLE MINES

REVISION: N

PREPARED BY:	JLAU	DATE:	01–SEP–2017
CHECKED BY:	MLOW	DATE:	05–SEP–2017
APPROVED BY:	APPROVED BY	DATE:	APPROVED DATE

DWG. NO: SW_EN_SM_AEM–01_PID_SM2_DWG_551

JOB/CO NO: (JOB NO.)

SHEET: 88 OF117

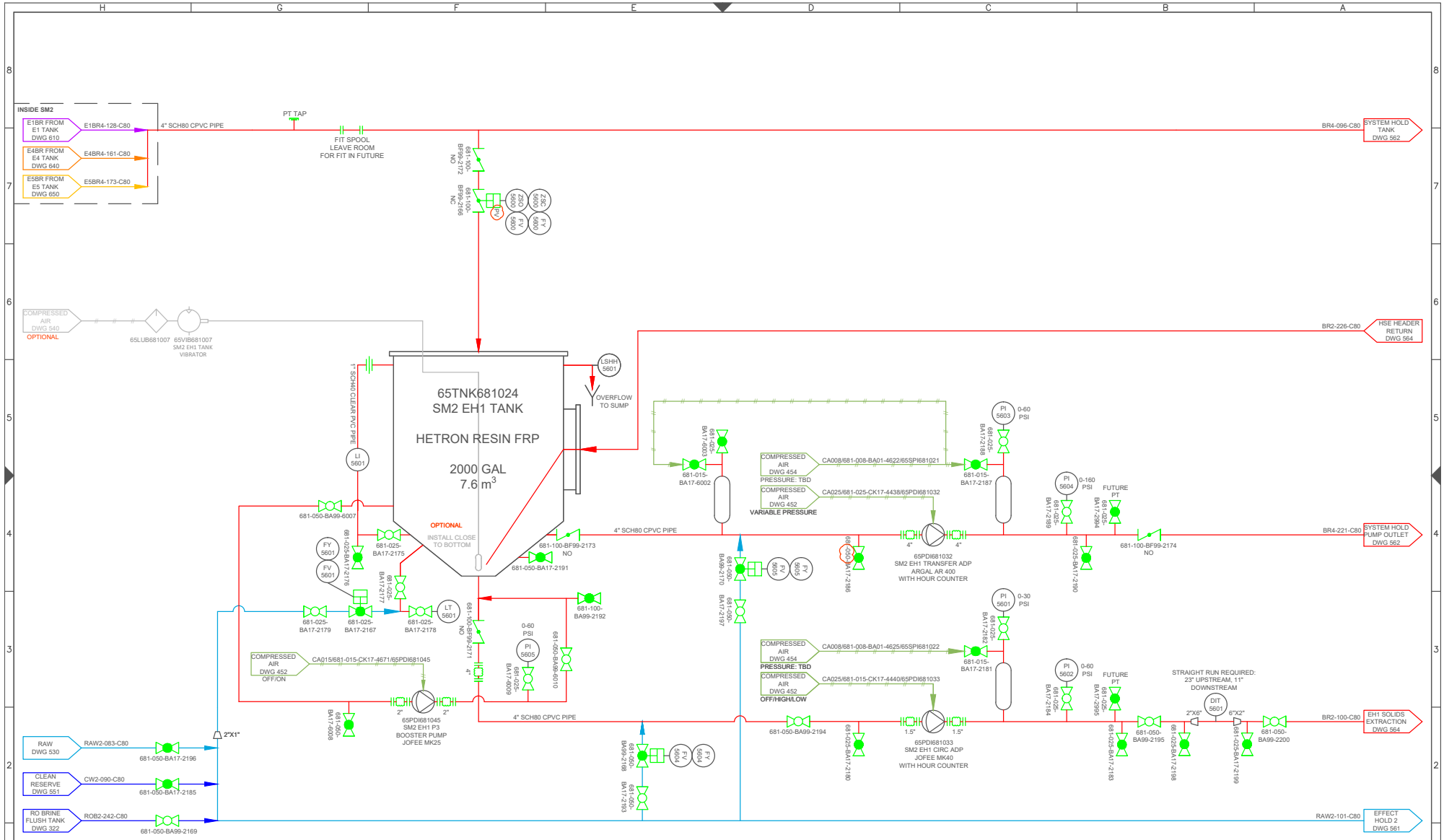

Saltworks
13800 Steveston Hwy
Richmond, BC, Canada, V6W 1A8
Tel: 604.628.6508 Fax: 604.676.2463
www.saltworkstech.com

DRAWING STATUS: FACTORY AS BUILT

THIS DOCUMENT EMBODIES DESIGNS AND INFORMATION THAT ARE PROPRIETARY TO SALTWORKS. IT IS TO BE USED ONLY FOR THE PURPOSE AND BY THE ENTITY FOR WHICH IT WAS ORIGINALLY SUPPLIED. THE DOCUMENT MAY NOT BE DUPLICATED OR DISCLOSED TO OTHER PERSON OR ENTITY, OR USED FOR MANUFACTURE OF THE ITEM IN PART OR IN WHOLE WITHOUT THE PRIOR WRITTEN PERMISSION OF SALTWORKS.

DO NOT SCALE DRAWING

LTR	DATE	DESCRIPTION	REV. BY:
L	22-DEC-2017	NO CHANGES	–
M	20-APR-2018	ADDED INLET STANDPIPE, ADDED P3 BOOSTER PUMP, UPDATED TO MATCH SM1	JLAU
N	06-JUL-2018	PINCH VALVES ADDED, AS BUILT UPDATES	JLAU
K	23-FEB-2018	NO CHANGES	–

TITLE: (SM2) 560: EFFECT HOLD 1

PROJECT: SALTMAKER GEN III
CUSTOMER: AGNICO EAGLE MINES
REVISION: N

PREPARED BY:	JLAU	DATE:	01-SEP-2017
CHECKED BY:	MLOW	DATE:	05-SEP-2017
APPROVED BY:	APPROVED BY	DATE:	APPROVED DATE

DWG. NO: SW_EN_SM_AEM-01_PID_SM2_DWG_560
JOB/CO NO: (JOB NO.)
SHEET: 89 OF117

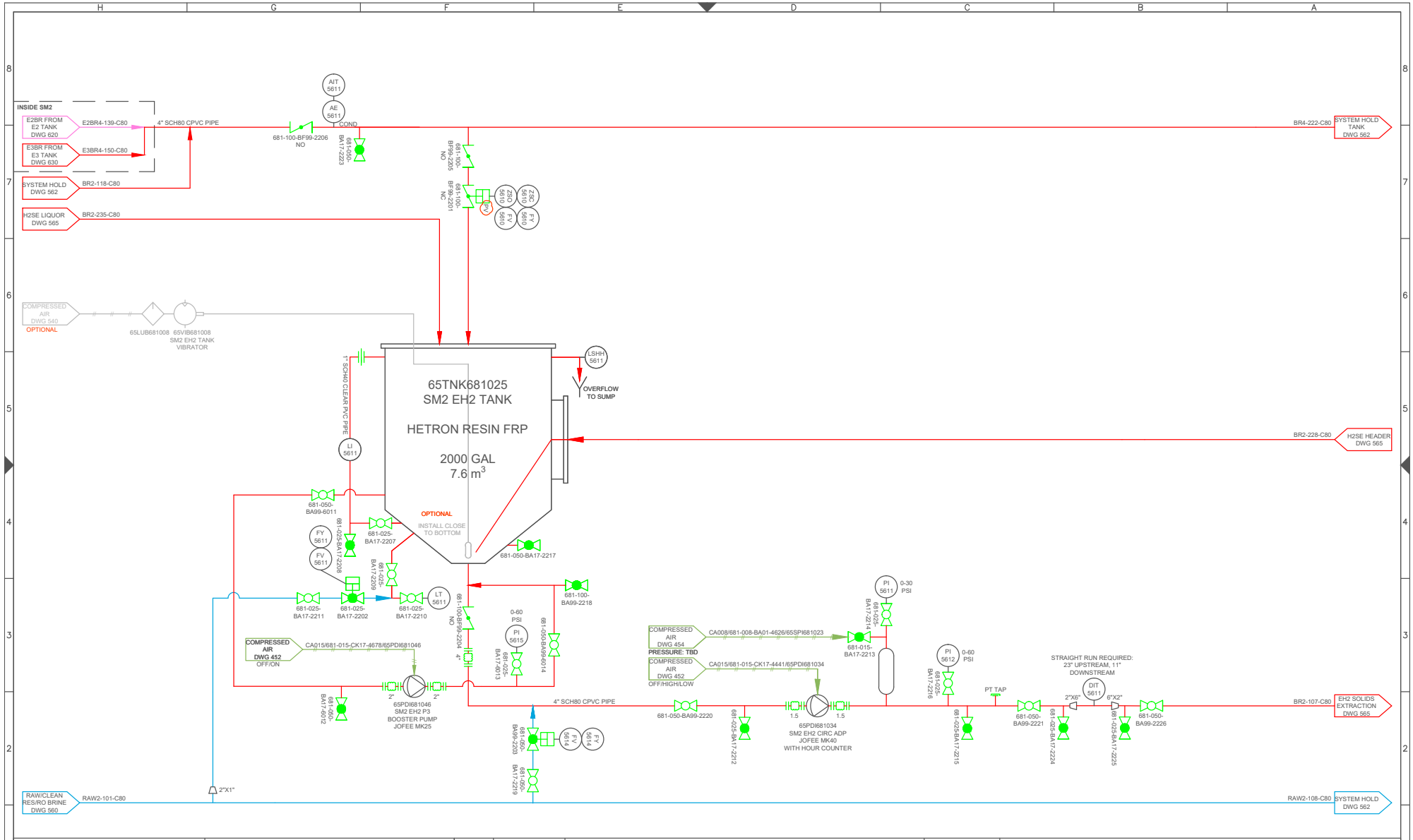

Saltworks
13800 Steveston Hwy
Richmond, BC, Canada, V6W 1A8
Tel: 604.628.6508 Fax: 604.676.2463
www.saltworkstech.com

DRAWING STATUS: FACTORY AS BUILT

THIS DOCUMENT EMBODIES DESIGNS AND INFORMATION THAT ARE PROPRIETARY TO SALTWORKS. IT IS TO BE USED ONLY FOR THE PURPOSE AND BY THE ENTITY FOR WHICH IT WAS ORIGINALLY SUPPLIED. THE DOCUMENT MAY NOT BE DUPLICATED OR DISCLOSED TO OTHER PERSON OR ENTITY, OR USED FOR MANUFACTURE OF THE ITEM IN PART OR IN WHOLE WITHOUT THE PRIOR WRITTEN PERMISSION OF SALTWORKS.

DO NOT SCALE DRAWING

LTR	DATE	DESCRIPTION	REV. BY:
L	22-DEC-2017	NO CHANGES	–
M	20-APR-2018	ADDED P3 BOOSTER PUMP	JLAU
N	06-JUL-2018	PINCH VALVES ADDED	JLAU
K	23-FEB-2018	NO CHANGES	–

TITLE: (SM2) 561: EFFECT HOLD 2

PROJECT: SALTMAKER GEN III		CUSTOMER: AGNICO EAGLE MINES	REVISION N
PREPARED BY: JLAU	DATE: 01-SEP-2017	DWG. NO: SW_EN_SM_AEM-01_PID_SM2_DWG_562	
CHECKED BY: MLOW	DATE: 05-SEP-2017	JOB/CO NO: (JOB NO.)	
APPROVED BY: APPROVED BY	DATE: APPROVED DATE	SHEET: 90 OF117	

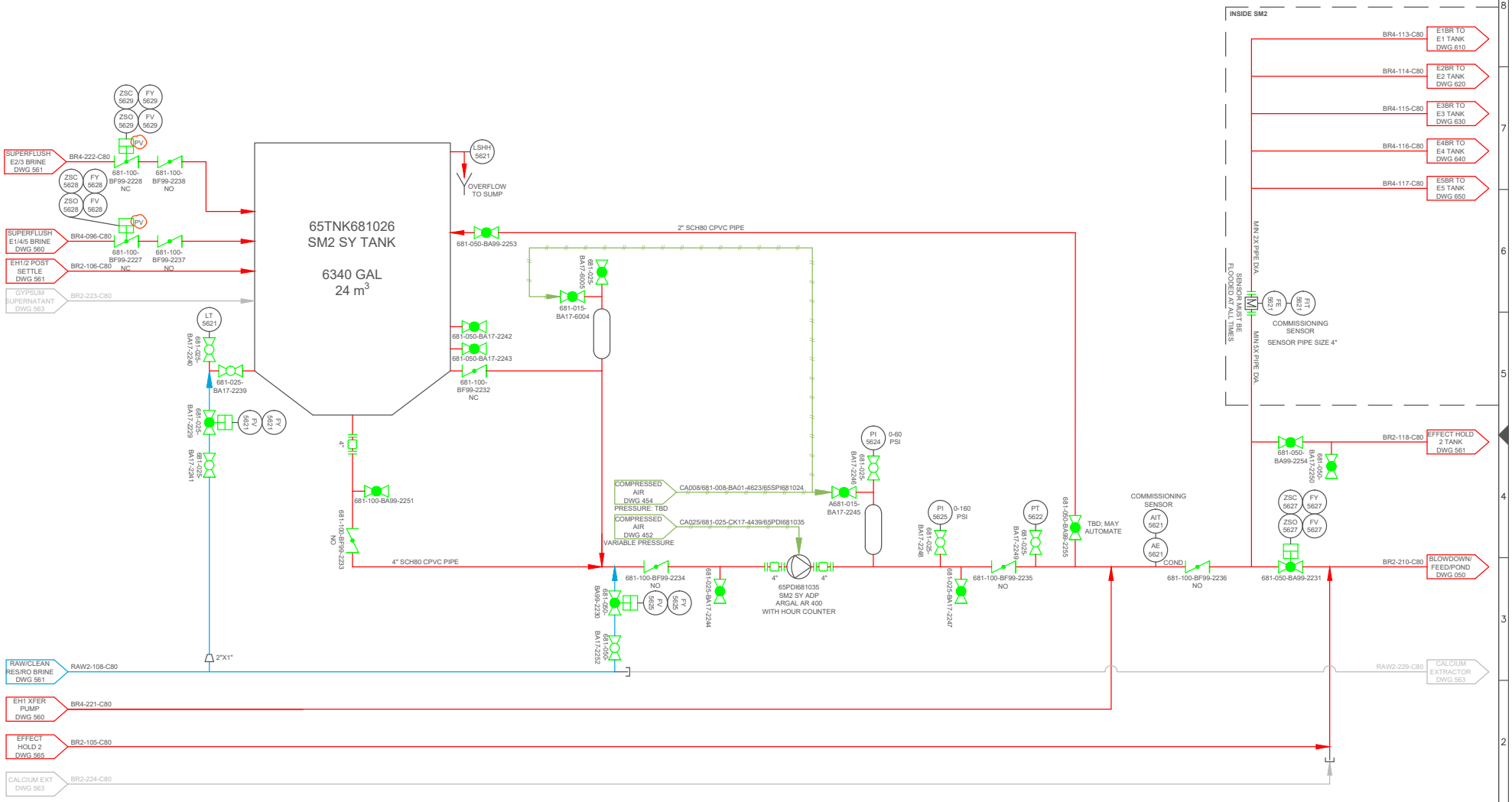

Saltworks
13800 Steveston Hwy
Richmond, BC, Canada, V6W 1A8
Tel: 604.628.6508 Fax: 604.676.2463
www.saltworkstech.com

DRAWING STATUS: FACTORY AS BUILT

THIS DOCUMENT EMBODIES DESIGNS AND INFORMATION THAT ARE PROPRIETARY TO SALTWORKS. IT IS TO BE USED ONLY FOR THE PURPOSE AND BY THE ENTITY FOR WHICH IT WAS ORIGINALLY SUPPLIED. THE DOCUMENT MAY NOT BE DUPLICATED OR DISCLOSED TO OTHER PERSON OR ENTITY, OR USED FOR MANUFACTURE OF THE ITEM IN PART OR IN WHOLE WITHOUT THE PRIOR WRITTEN PERMISSION OF SALTWORKS.

DO NOT SCALE DRAWING

LTR	DATE	DESCRIPTION	REV. BY:
L	22-DEC-2017	NO CHANGES	–
M	20-APR-2018	ADDED INLET STANDPIPE	JLAU
N	06-JUL-2018	PINCH VALVES ADDED	JLAU
K	23-FEB-2018	TAG UPDATED PER MARK UP	JLAU

TITLE: (SM2) 562: SYSTEM HOLD

PROJECT: SALTMAKER GEN III

CUSTOMER: AGNICO EAGLE MINES

REVISION: N

PREPARED BY: JLAU DATE: 01-SEP-2017

CHECKED BY: MLOW DATE: 05-SEP-2017

APPROVED BY: APPROVED BY DATE: APPROVED DATE

DWG. NO: SW_EN_SM_AEM-01_PID_SM2_DWG_562

JOB/CO NO: (JOB NO.)

SHEET: 91 OF117

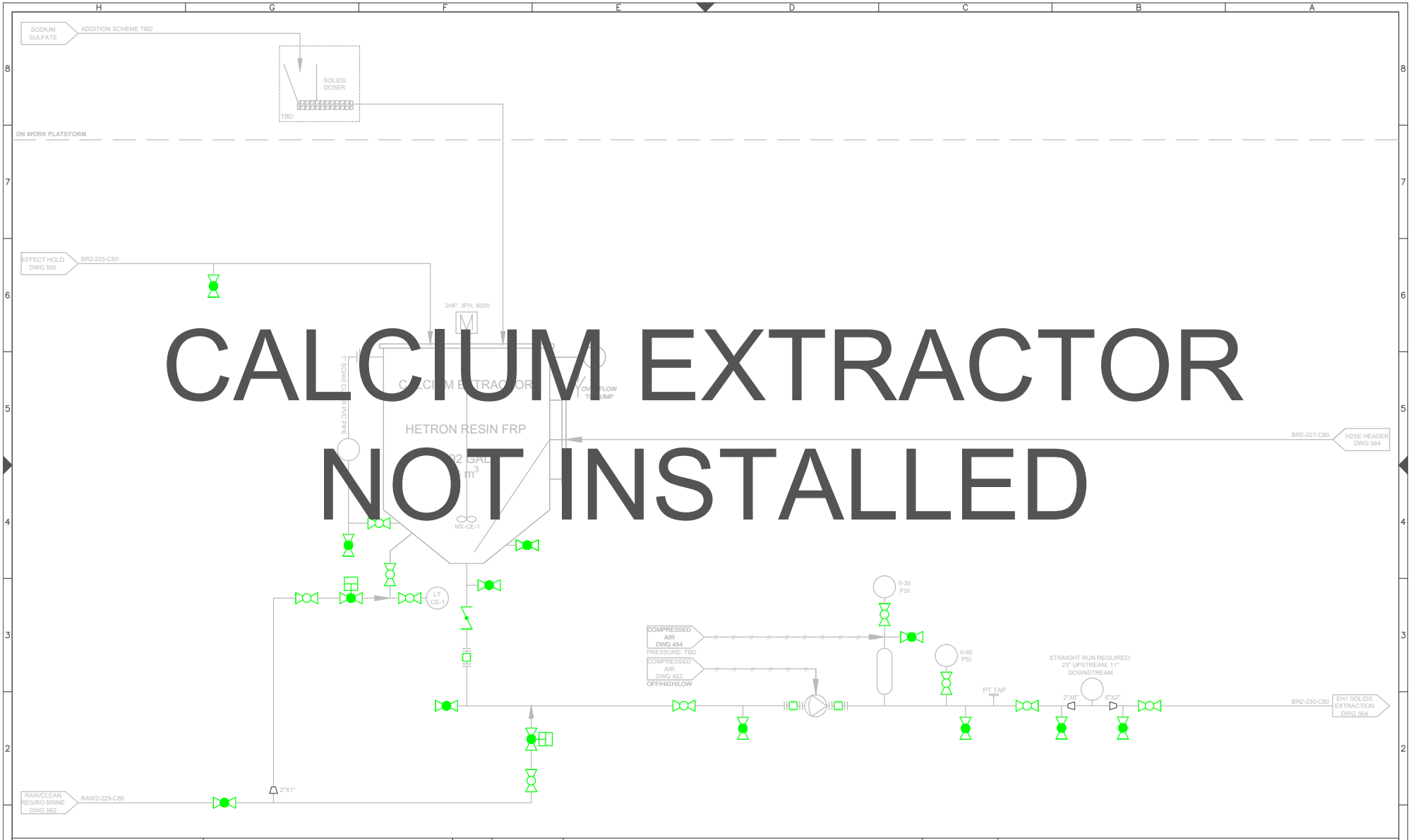

CALCIUM EXTRACTOR NOT INSTALLED

Saltworks
13800 Steveston Hwy
Richmond, BC, Canada, V6W 1A8
Tel: 604.628.6508 Fax: 604.676.2463
www.saltworkstech.com

DRAWING STATUS: FACTORY AS BUILT

THIS DOCUMENT EMBODIES DESIGNS AND INFORMATION THAT ARE PROPRIETARY TO SALTWORKS. IT IS TO BE USED ONLY FOR THE PURPOSE AND BY THE ENTITY FOR WHICH IT WAS ORIGINALLY SUPPLIED. THE DOCUMENT MAY NOT BE DUPLICATED OR DISCLOSED TO OTHER PERSON OR ENTITY, OR USED FOR MANUFACTURE OF THE ITEM IN PART OR IN WHOLE WITHOUT THE PRIOR WRITTEN PERMISSION OF SALTWORKS.

DO NOT SCALE DRAWING

LTR	DATE	DESCRIPTION	REV. BY:
L	22-DEC-2017	NO CHANGES	–
M	20-APR-2018	NO CHANGES	–
N	06-JUL-2018	NO CHANGES	–
K	23-FEB-2018	NO CHANGES	–

TITLE: (SM2) 563: CALCIUM EXTRACTOR

PROJECT: SALTMAKER GEN III		CUSTOMER: AGNICO EAGLE MINES	REVISION N
PREPARED BY: JLAU	DATE: 01-SEP-2017	DWG. NO: SW_EN_SM_AEM-01_PID_SM2_DWG163	
CHECKED BY: MLOW	DATE: 05-SEP-2017	JOB/CO NO: (JOB NO.)	
APPROVED BY: APPROVED BY	DATE: APPROVED DATE	SHEET: 92 OF117	

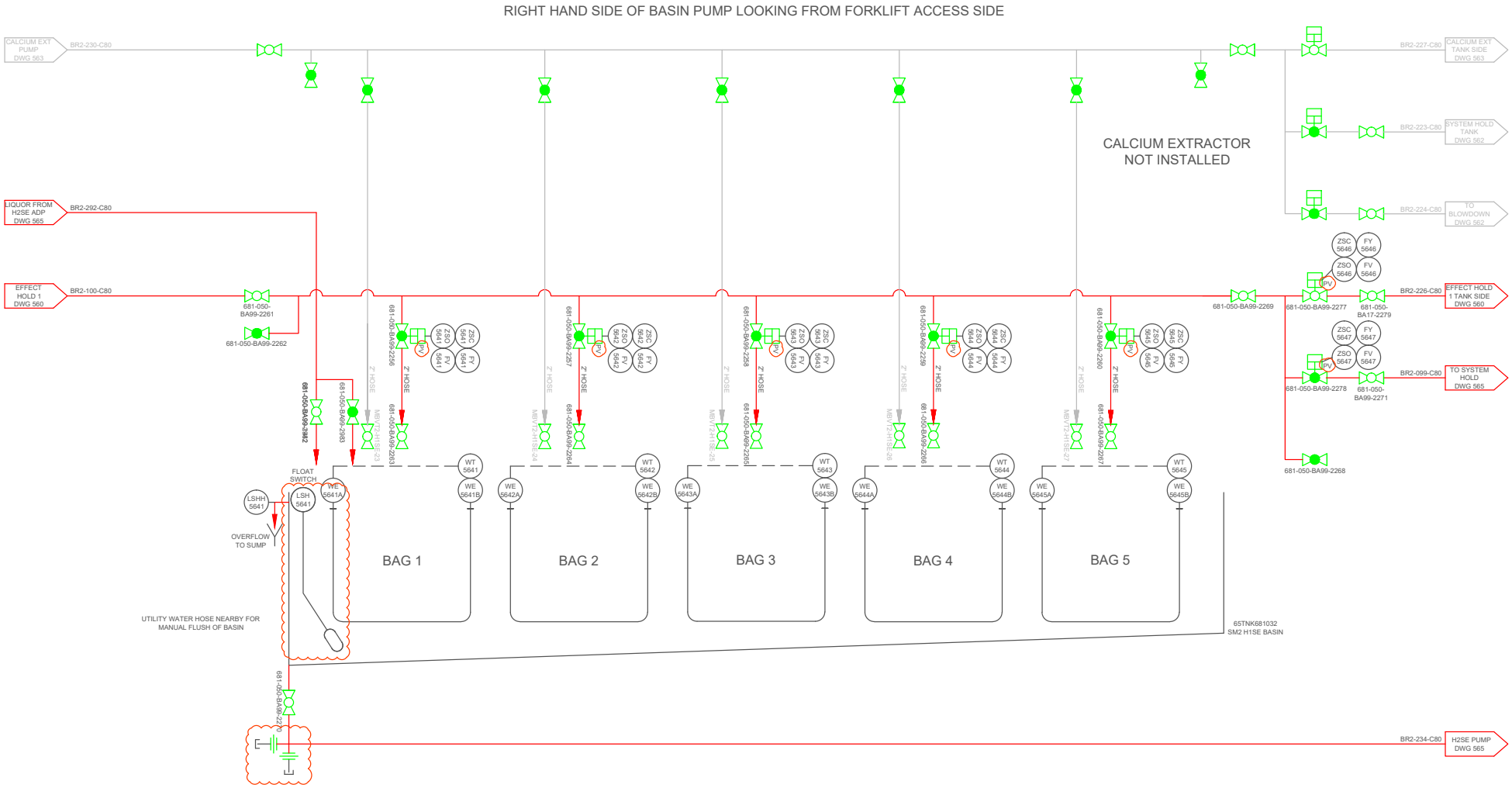

Saltworks
13800 Steveston Hwy
Richmond, BC, Canada, V6W 1A8
Tel: 604.628.6508 Fax: 604.676.2463
www.saltworkstech.com

DRAWING STATUS: FACTORY AS BUILT

THIS DOCUMENT EMBODIES DESIGNS AND INFORMATION THAT ARE PROPRIETARY TO SALTWORKS. IT IS TO BE USED ONLY FOR THE PURPOSE AND BY THE ENTITY FOR WHICH IT WAS ORIGINALLY SUPPLIED. THE DOCUMENT MAY NOT BE DUPLICATED OR DISCLOSED TO OTHER PERSON OR ENTITY, OR USED FOR MANUFACTURE OF THE ITEM IN PART OR IN WHOLE WITHOUT THE PRIOR WRITTEN PERMISSION OF SALTWORKS.

DO NOT SCALE DRAWING

LTR	DATE	DESCRIPTION	REV. BY:
L	22-DEC-2017	NO CHANGES	–
M	20-APR-2018	UPDATED TO MATCH SM1	–
N	06-JUL-2018	PINCH VALVES ADDED, AS BUILT UPDATES	JLAU
K	23-FEB-2018	NO CHANGES	–

TITLE: (SM2) 564: EH1 SOLIDS EXTRACTION

PROJECT: SALTMAKER GEN III

CUSTOMER: AGNICO EAGLE MINES

REVISION: N

PREPARED BY:	JLAU	DATE:	01-SEP-2017
CHECKED BY:	MLOW	DATE:	05-SEP-2017
APPROVED BY:	APPROVED BY	DATE:	APPROVED DATE

DWG. NO: SW_EN_SM_AEM-01_PID_SM2_DWG_564

JOB/CO NO: (JOB NO.)

SHEET: 93 OF117

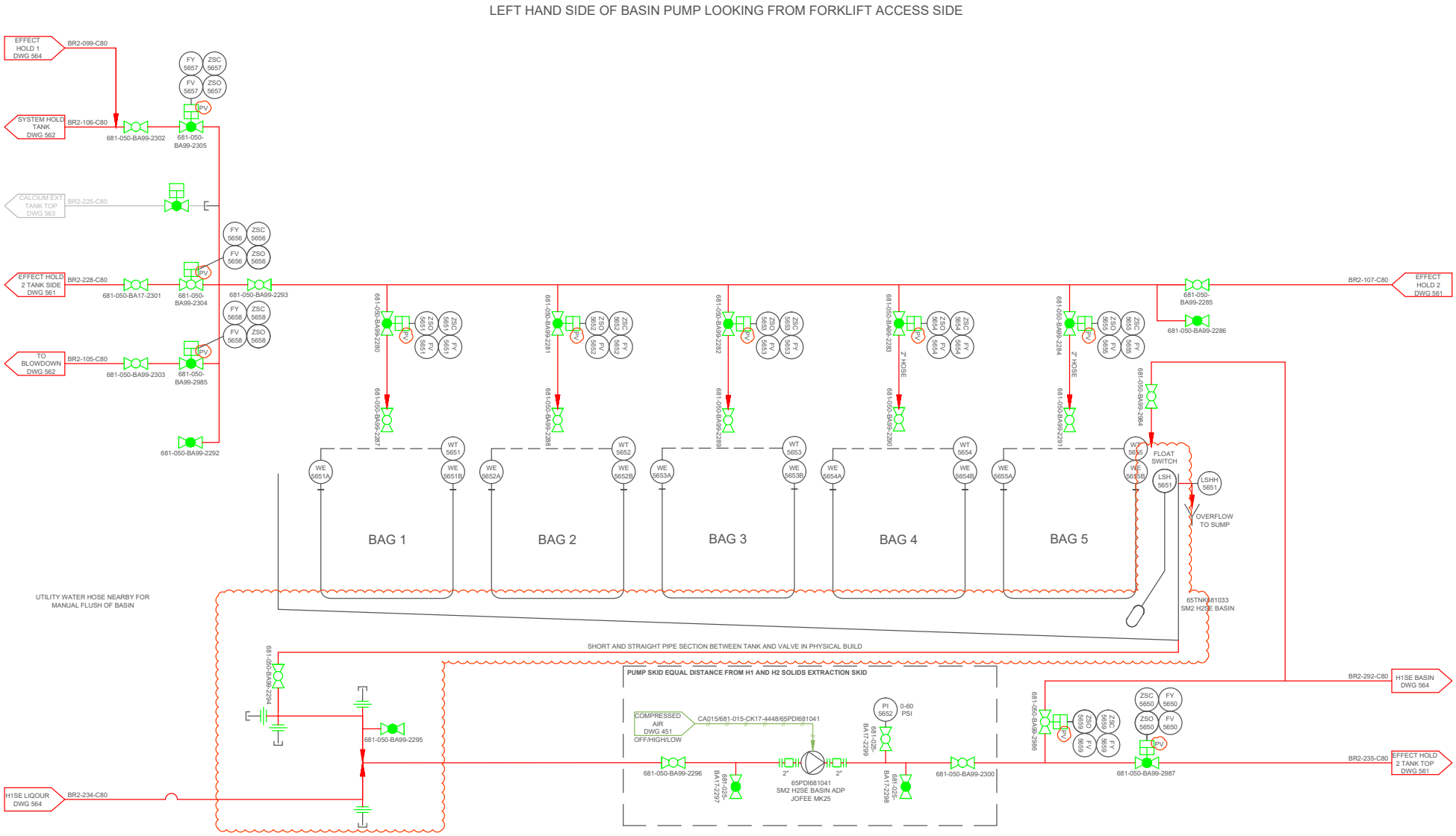

Saltworks
13800 Steveston Hwy
Richmond, BC, Canada, V6W 1A8
Tel: 604.628.6508 Fax: 604.676.2463
www.saltworkstech.com

DRAWING STATUS: FACTORY AS BUILT

THIS DOCUMENT EMBODIES DESIGNS AND INFORMATION THAT ARE PROPRIETARY TO SALTWORKS. IT IS TO BE USED ONLY FOR THE PURPOSE AND BY THE ENTITY FOR WHICH IT WAS ORIGINALLY SUPPLIED. THE DOCUMENT MAY NOT BE DUPLICATED OR DISCLOSED TO OTHER PERSON OR ENTITY, OR USED FOR MANUFACTURE OF THE ITEM IN PART OR IN WHOLE WITHOUT THE PRIOR WRITTEN PERMISSION OF SALTWORKS.

DO NOT SCALE DRAWING

LTR	DATE	DESCRIPTION	REV. BY:
L	22-DEC-2017	NO CHANGES	–
M	20-APR-2018	UPDATED TO MATCH SM1	–
N	06-JUL-2018	PINCH VALVES ADDED, AS BUILT UPDATES	JLAU
K	23-FEB-2018	NO CHANGES	–

TITLE: (SM2) 565: EH2 SOLIDS EXTRACTION

PROJECT: SALTMAKER GEN III		CUSTOMER: AGNICO EAGLE MINES	REVISION N
PREPARED BY: JLAU	DATE: 01-SEP-2017	DWG. NO: SW_EN_SM_AEM-01_PID_SM2_DWG_565	
CHECKED BY: MLOW	DATE: 05-SEP-2017	JOB/CO NO: (JOB NO.)	
APPROVED BY: APPROVED BY	DATE: APPROVED DATE	SHEET: 94 OF117	

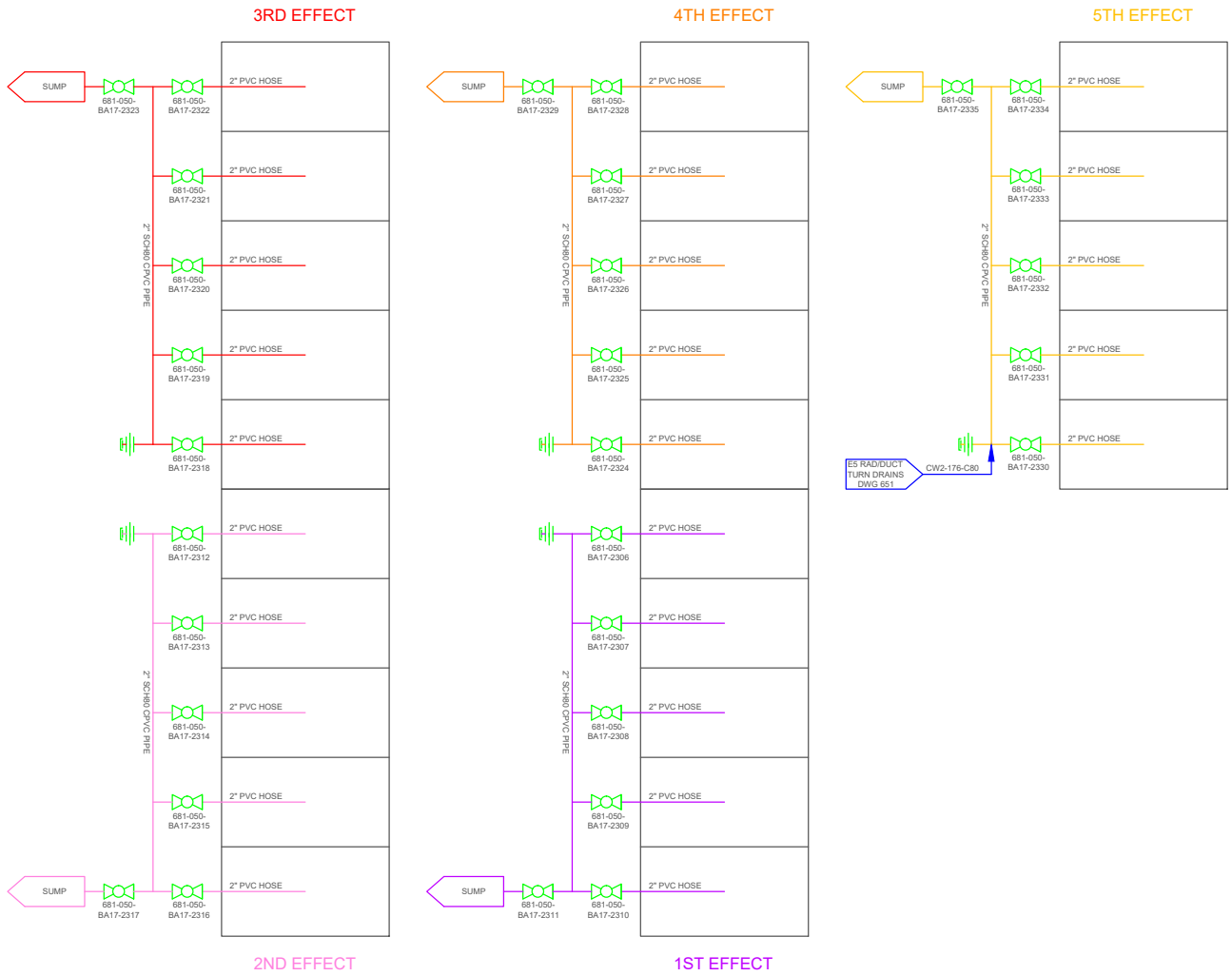

Saltworks
13800 Steveston Hwy
Richmond, BC, Canada, V6W 1A8
Tel: 604.628.6508 Fax: 604.676.2463
www.saltworkstech.com

DRAWING STATUS: FACTORY AS BUILT

THIS DOCUMENT EMBODIES DESIGNS AND INFORMATION THAT ARE PROPRIETARY TO SALTWORKS. IT IS TO BE USED ONLY FOR THE PURPOSE AND BY THE ENTITY FOR WHICH IT WAS ORIGINALLY SUPPLIED. THE DOCUMENT MAY NOT BE DUPLICATED OR DISCLOSED TO OTHER PERSON OR ENTITY, OR USED FOR MANUFACTURE OF THE ITEM IN PART OR IN WHOLE WITHOUT THE PRIOR WRITTEN PERMISSION OF SALTWORKS.

DO NOT SCALE DRAWING

LTR	DATE	DESCRIPTION	REV. BY:
L	22-DEC-2017	NO CHANGES	–
M	20-APR-2018	NO CHANGES	–
N	06-JUL-2018	NO CHANGES	–
K	23-FEB-2018	NO CHANGES	–

TITLE: (SM2) 580: DRIP TRAY

PROJECT: SALTMAKER GEN III

CUSTOMER: AGNICO EAGLE MINES

REVISION: N

PREPARED BY:	JLAU	DATE:	01-SEP-2017
CHECKED BY:	MLOW	DATE:	05-SEP-2017
APPROVED BY:	APPROVED BY	DATE:	APPROVED DATE

DWG. NO: SW_EN_SM_AEM-01_PID_SM2_DWG_580

JOB/CO NO: (JOB NO.)

SHEET: 95 OF117

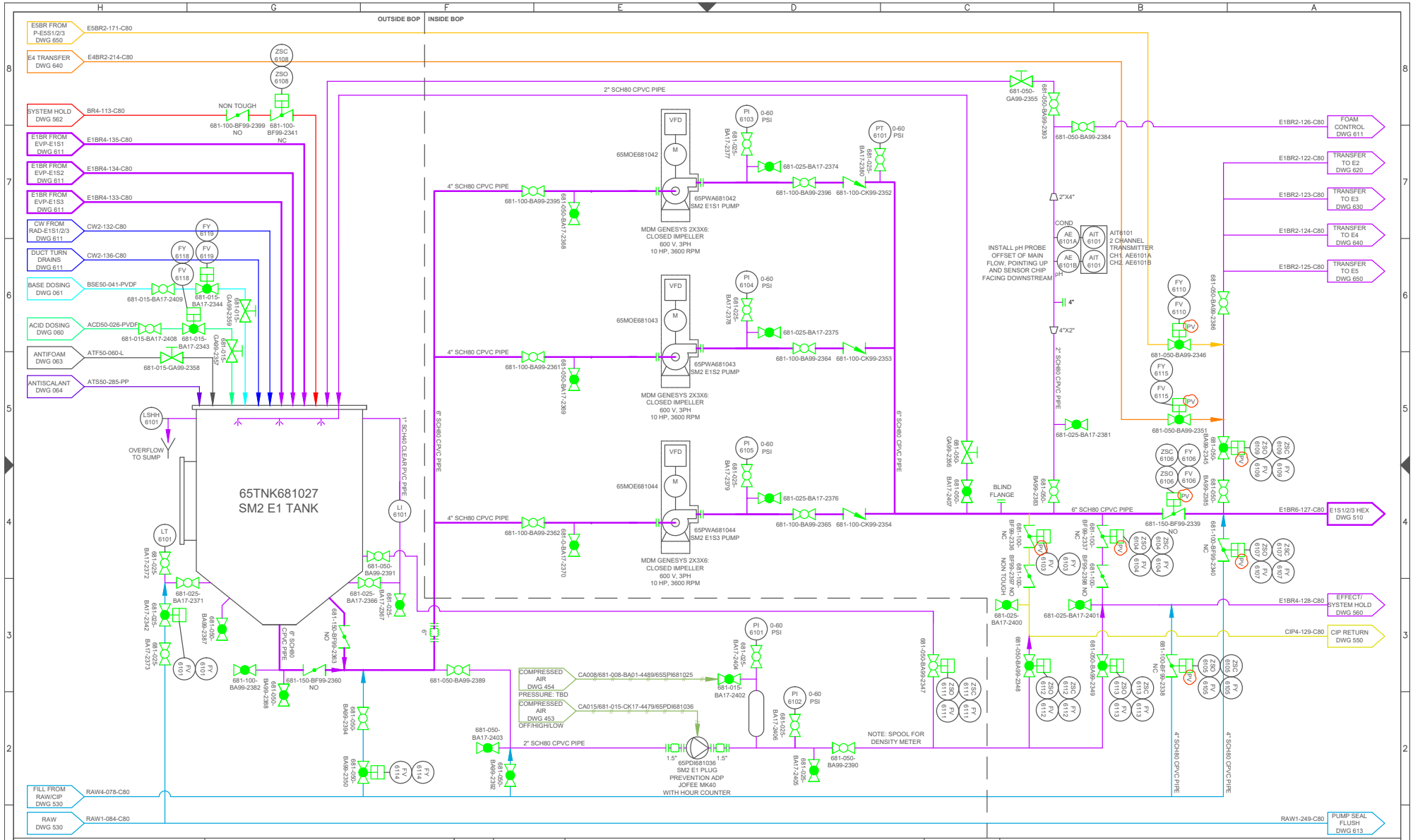

Saltworks
13800 Steveston Hwy
Richmond, BC, Canada, V6W 1A8
Tel: 604.628.6508 Fax: 604.676.2463
www.saltworkstech.com

DRAWING STATUS: FACTORY AS BUILT

THIS DOCUMENT EMBODIES DESIGNS AND INFORMATION THAT ARE PROPRIETARY TO SALTWORKS. IT IS TO BE USED ONLY FOR THE PURPOSE AND BY THE ENTITY FOR WHICH IT WAS ORIGINALLY SUPPLIED. THE DOCUMENT MAY NOT BE DUPLICATED OR DISCLOSED TO OTHER PERSON OR ENTITY, OR USED FOR MANUFACTURE OF THE ITEM IN PART OR IN WHOLE WITHOUT THE PRIOR WRITTEN PERMISSION OF SALTWORKS.

DO NOT SCALE DRAWING

LTR	DATE	DESCRIPTION	REV. BY:
L	16–MAR–2018	TANK BOTTOM PUMP INLET VALVE, P3 RECIRC VALVE CHANGED TO NO	JLAU
M	20–APR–2018	P3 INLET UPDATED	JLAU
N	06–JUL–2018	PINCH VALVES ADDED	JLAU
K	23–FEB–2018	NO CHANGES	–

TITLE: (SM2) 610: EFFECT 1 TANK AND PUMPS

PROJECT: SALTMAKER GEN III		CUSTOMER: AGNICO EAGLE MINES	REVISION N
PREPARED BY: JLAU	DATE: 01–SEP–2017	DWG. NO: SW_EN_SM_AEM–01_PID_SM2_DWG_610	
CHECKED BY: MLOW	DATE: 05–SEP–2017	JOB/CO NO: (JOB NO.)	
APPROVED BY: APPROVED BY	DATE: APPROVED DATE	SHEET: 96 OF117	

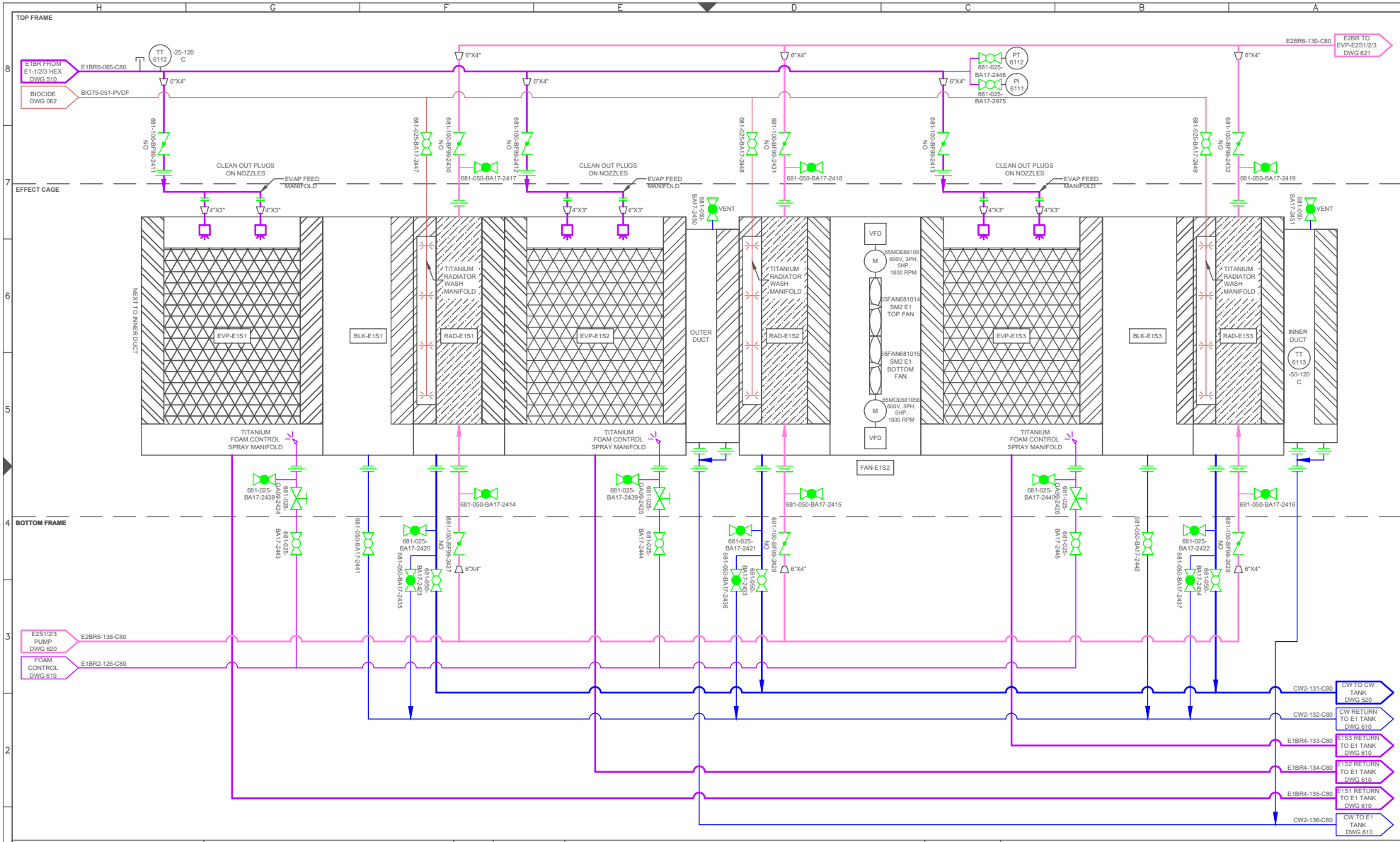

Saltworks
13800 Steveston Hwy
Richmond, BC, Canada, V6W 1A8
Tel: 604.628.6508 Fax: 604.676.2463
www.saltworkstech.com

DRAWING STATUS: FACTORY AS BUILT

THIS DOCUMENT EMBODIES DESIGNS AND INFORMATION THAT ARE PROPRIETARY TO SALTWORKS. IT IS TO BE USED ONLY FOR THE PURPOSE AND BY THE ENTITY FOR WHICH IT WAS ORIGINALLY SUPPLIED. THE DOCUMENT MAY NOT BE DUPLICATED OR DISCLOSED TO OTHER PERSON OR ENTITY, OR USED FOR MANUFACTURE OF THE ITEM IN PART OR IN WHOLE WITHOUT THE PRIOR WRITTEN PERMISSION OF SALTWORKS.

DO NOT SCALE DRAWING

LTR	DATE	DESCRIPTION	REV. BY:
L	16-MAR-2018	NO CHANGES	–
M	20-APR-2018	NO CHANGES	–
N	06-JUL-2018	NO CHANGES	–
K	23-FEB-2018	NO CHANGES	–

TITLE: (SM2) 611: EFFECT 1 MODULES

PROJECT: SALTMAKER GEN III		CUSTOMER: AGNICO EAGLE MINES	REVISION N
PREPARED BY: JLAU	DATE: 01-SEP-2017	DWG. NO: SW_EN_SM_AEM-01_PID_SM2_DWG_611	
CHECKED BY: MLOW	DATE: 05-SEP-2017	JOB/CO NO: (JOB NO.)	
APPROVED BY: APPROVED BY	DATE: APPROVED DATE	SHEET: 97 OF117	

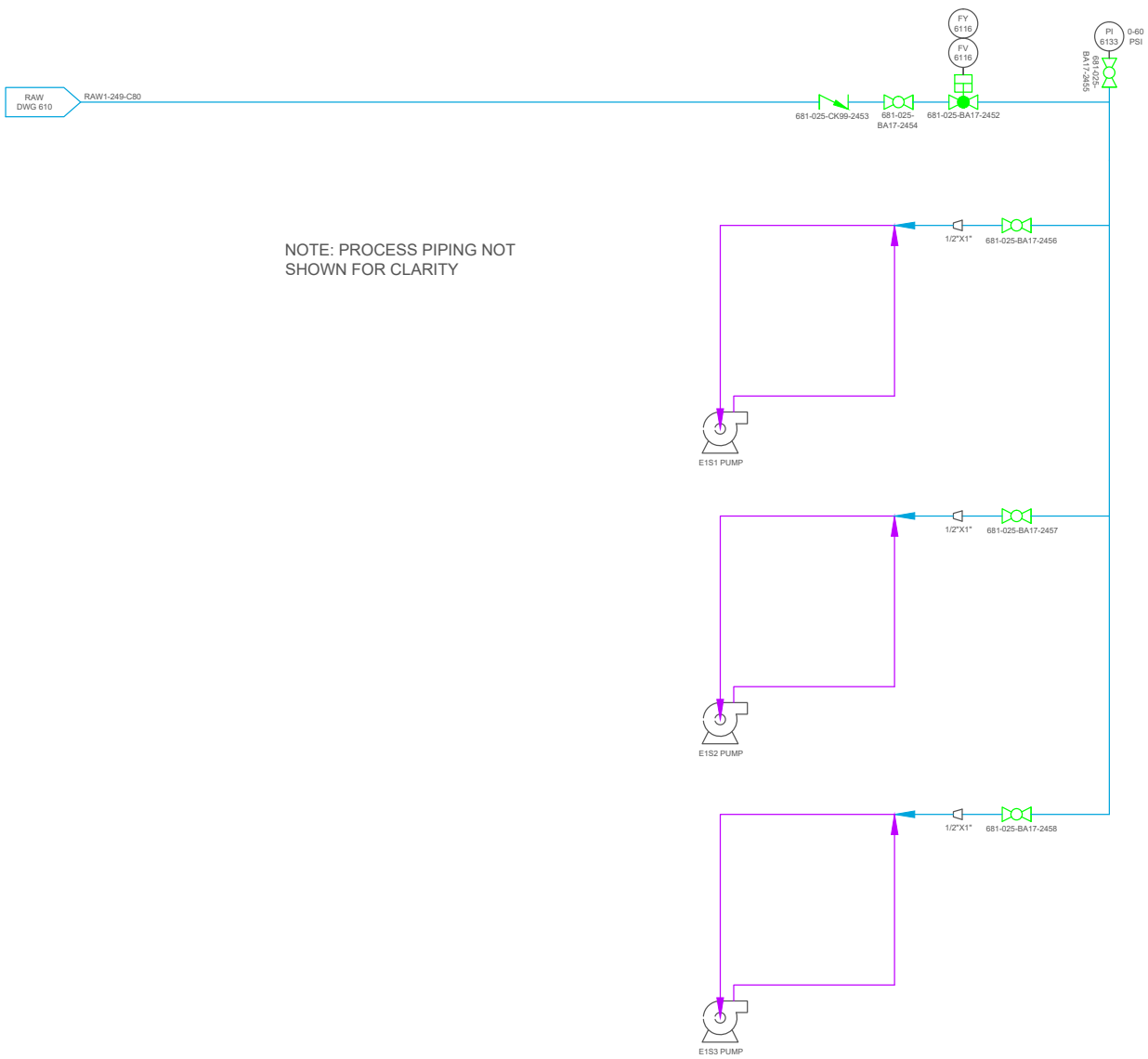

Saltworks
13800 Steveston Hwy
Richmond, BC, Canada, V6W 1A8
Tel: 604.628.6508 Fax: 604.676.2463
www.saltworkstech.com

DRAWING STATUS: FACTORY AS BUILT

THIS DOCUMENT EMBODIES DESIGNS AND INFORMATION THAT ARE PROPRIETARY TO SALTWORKS. IT IS TO BE USED ONLY FOR THE PURPOSE AND BY THE ENTITY FOR WHICH IT WAS ORIGINALLY SUPPLIED. THE DOCUMENT MAY NOT BE DUPLICATED OR DISCLOSED TO OTHER PERSON OR ENTITY, OR USED FOR MANUFACTURE OF THE ITEM IN PART OR IN WHOLE WITHOUT THE PRIOR WRITTEN PERMISSION OF SALTWORKS.

DO NOT SCALE DRAWING

LTR	DATE	DESCRIPTION	REV. BY:
L	16–MAR–2018	NO CHANGES	–
M	20–APR–2018	NO CHANGES	–
N	06–JUL–2018	NO CHANGES	–
K	23–FEB–2018	NO CHANGES	–

TITLE: (SM2) 613: EFFECT 1 PUMP SEAL FLUSH

PROJECT: SALTMAKER GEN III		CUSTOMER: AGNICO EAGLE MINES	REVISION N
PREPARED BY: JLAU	DATE: 01–SEP–2017	DWG. NO: SW_EN_SM_AEM–01_PID_SM2_DWG_613	
CHECKED BY: MLOW	DATE: 05–SEP–2017	JOB/CO NO: (JOB NO.)	
APPROVED BY: APPROVED BY	DATE: APPROVED DATE	SHEET: 98 OF117	

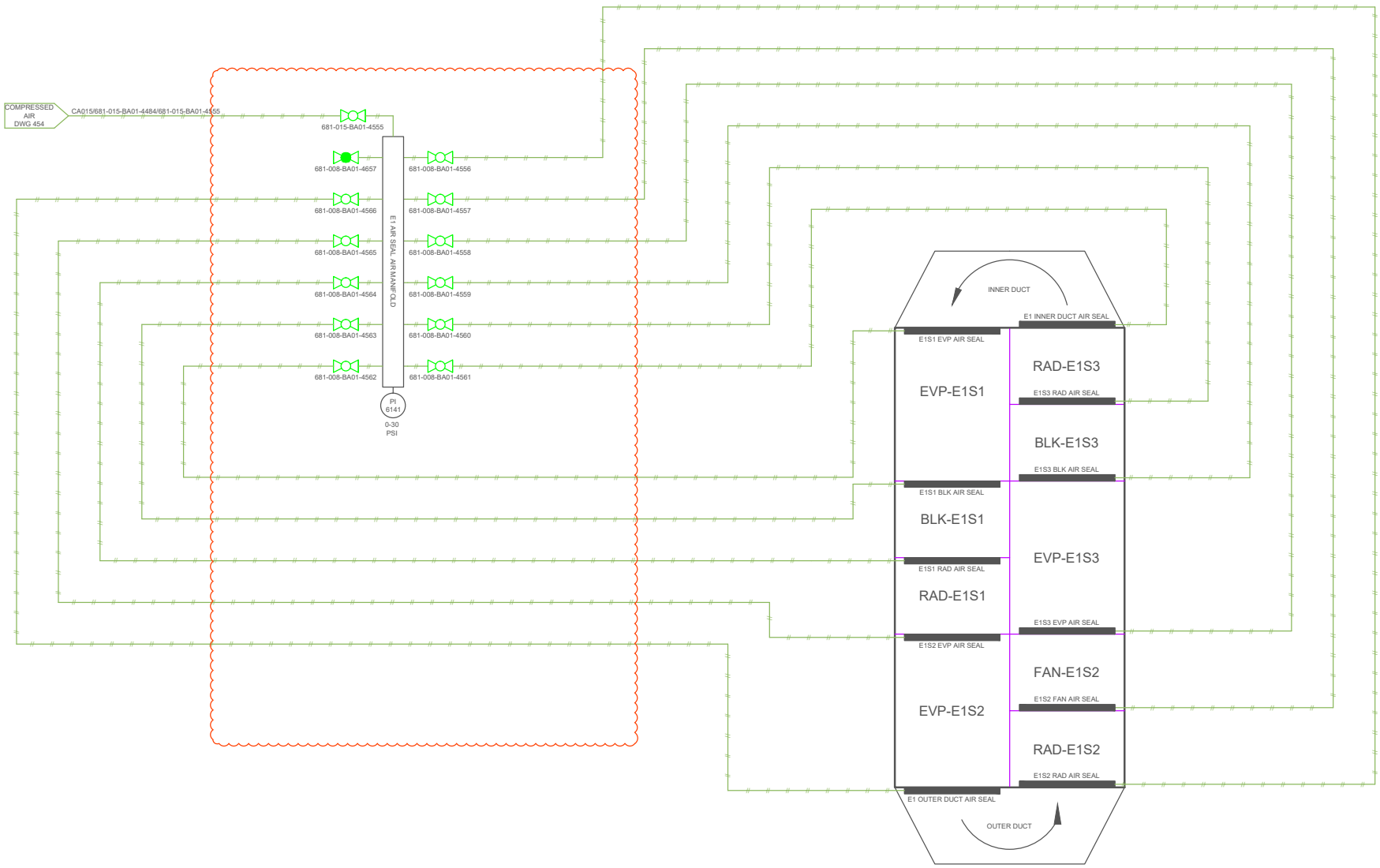

Saltworks
13800 Steveston Hwy
Richmond, BC, Canada, V6W 1A8
Tel: 604.628.6508 Fax: 604.676.2463
www.saltworkstech.com

DRAWING STATUS: FACTORY AS BUILT

THIS DOCUMENT EMBODIES DESIGNS AND INFORMATION THAT ARE PROPRIETARY TO SALTWORKS. IT IS TO BE USED ONLY FOR THE PURPOSE AND BY THE ENTITY FOR WHICH IT WAS ORIGINALLY SUPPLIED. THE DOCUMENT MAY NOT BE DUPLICATED OR DISCLOSED TO OTHER PERSON OR ENTITY, OR USED FOR MANUFACTURE OF THE ITEM IN PART OR IN WHOLE WITHOUT THE PRIOR WRITTEN PERMISSION OF SALTWORKS.

DO NOT SCALE DRAWING

LTR	DATE	DESCRIPTION	REV. BY:
L	16–MAR–2018	NO CHANGES	–
M	20–APR–2018	NO CHANGES	–
N	06–JUL–2018	UPDATED MANIFOLD	JLAU
K	23–FEB–2018	NO CHANGES	–

TITLE: (SM2) 614: EFFECT 1 AIR SEALS

PROJECT: SALTMAKER GEN III		CUSTOMER: AGNICO EAGLE MINES	REVISION N
PREPARED BY: JLAU	DATE: 01–SEP–2017	DWG. NO: SW_EN_SM_AEM–01_PID_SM2_DWG_614	
CHECKED BY: MLOW	DATE: 05–SEP–2017	JOB/CO NO: (JOB NO.)	
APPROVED BY: APPROVED BY	DATE: APPROVED DATE	SHEET: 99 OF117	

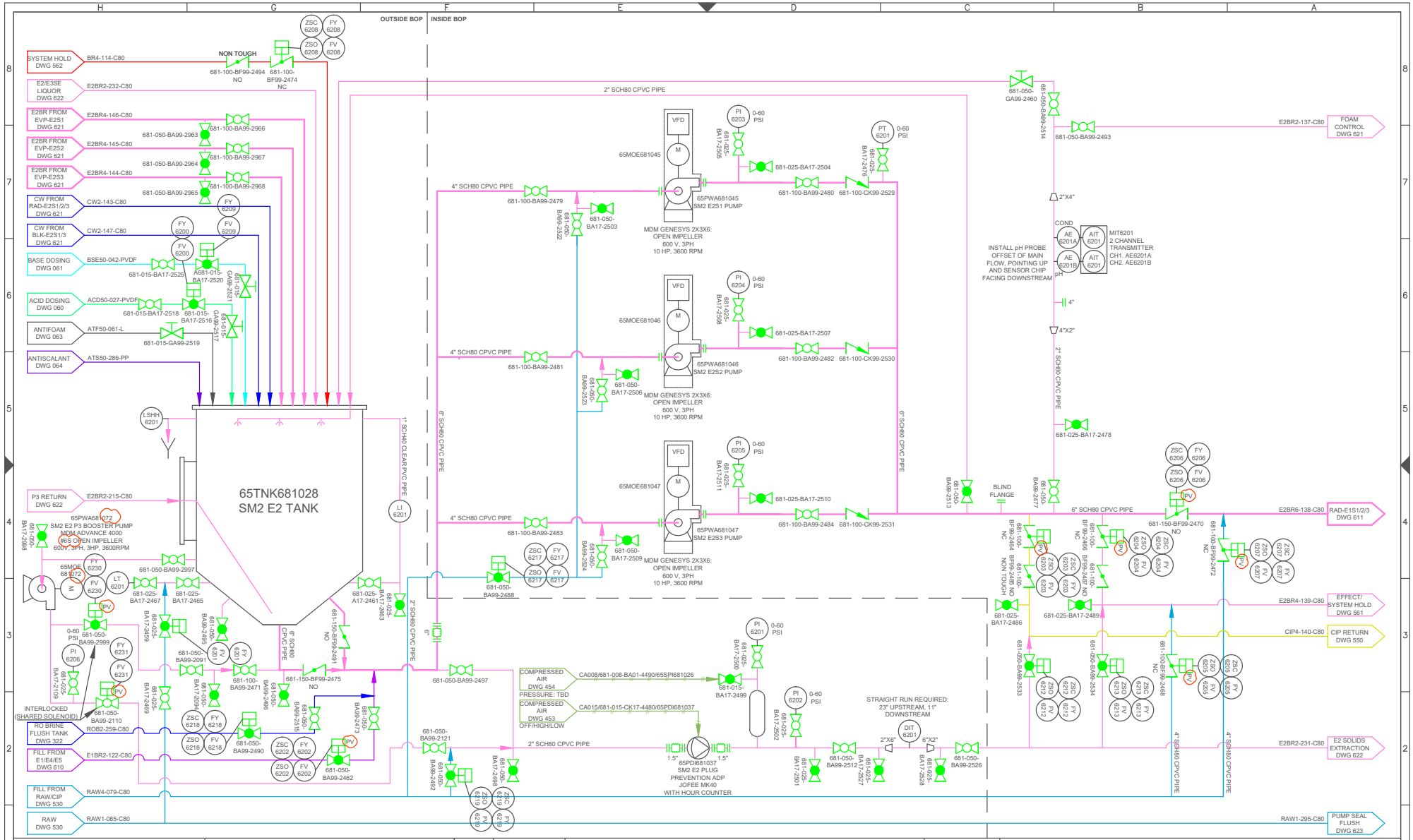

Saltworks
13800 Steveston Hwy
Richmond, BC, Canada, V6W 1A8
Tel: 604.628.6508 Fax: 604.676.2463
www.saltworkstech.com

DRAWING STATUS: FACTORY AS BUILT

THIS DOCUMENT EMBODIES DESIGNS AND INFORMATION THAT ARE PROPRIETARY TO SALTWORKS. IT IS TO BE USED ONLY FOR THE PURPOSE AND BY THE ENTITY FOR WHICH IT WAS ORIGINALLY SUPPLIED. THE DOCUMENT MAY NOT BE DUPLICATED OR DISCLOSED TO OTHER PERSON OR ENTITY, OR USED FOR MANUFACTURE OF THE ITEM IN PART OR IN WHOLE WITHOUT THE PRIOR WRITTEN PERMISSION OF SALTWORKS.

DO NOT SCALE DRAWING

LTR	DATE	DESCRIPTION	REV. BY:
L	16-MAR-2018	TANK SIDE PUMP INLET CHANGED TO NO	JLAU
M	20-APR-2018	P3 INLET UPDATED AND P3 BOOSTER PUMP ADDED	JLAU
N	06-JUL-2018	PINCH VALVES ADDED, P3 BOOSTER TAGS UPDATED	JLAU
K	23-FEB-2018	NO CHANGES	–

TITLE: (SM2) 620: EFFECT 2 TANK AND PUMPS

PROJECT: SALTMAKER GEN III		CUSTOMER: AGNICO EAGLE MINES	REVISION N
PREPARED BY: JLAU	DATE: 01-SEP-2017	DWG. NO: SW_EN_SM_AEM-01_PID_SM2_DWG_620	
CHECKED BY: MLOW	DATE: 05-SEP-2017	JOB/CO NO: (JOB NO.)	
APPROVED BY: APPROVED BY	DATE: APPROVED DATE	SHEET: 1 OOF 117	

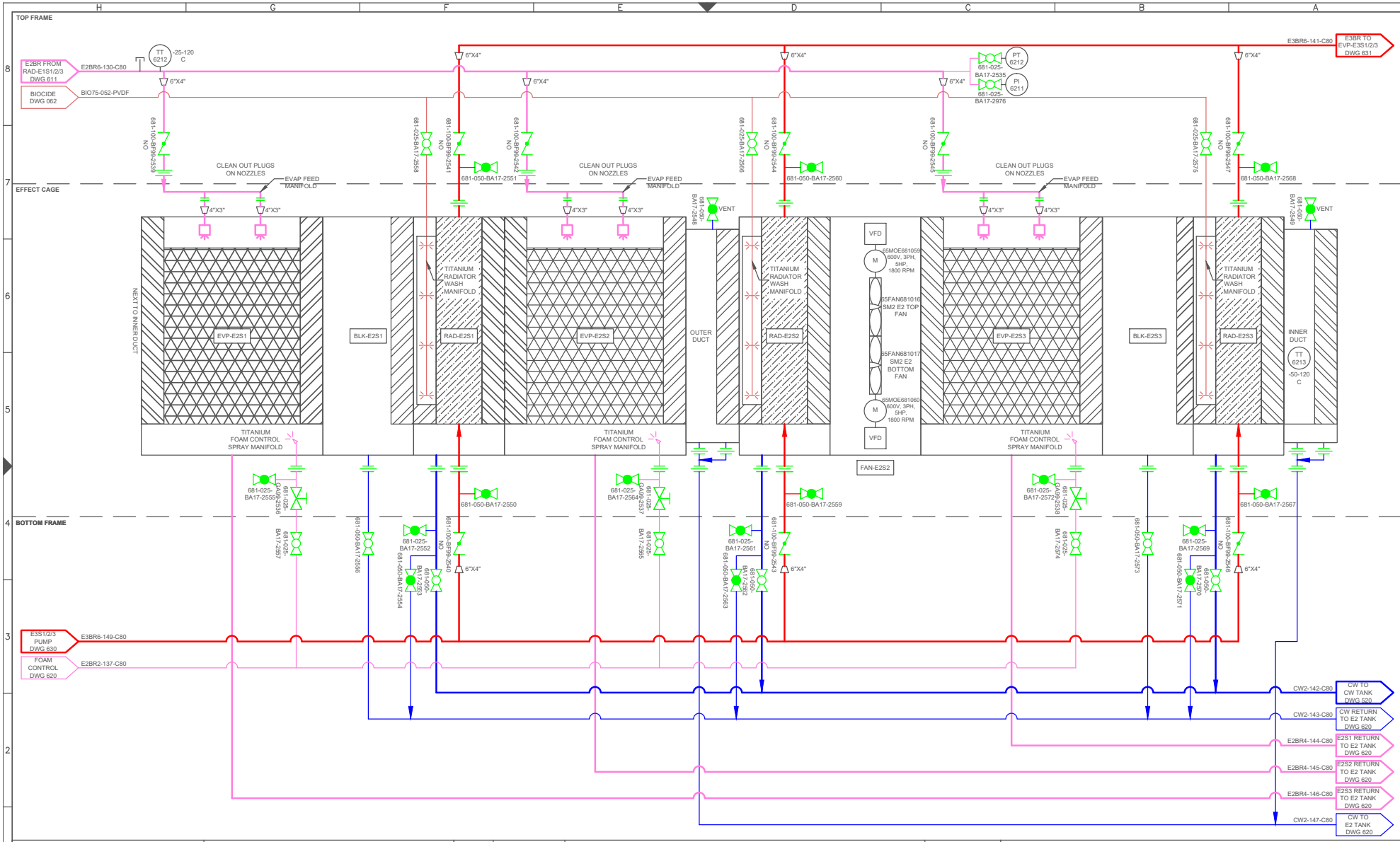

Saltworks
13800 Steveston Hwy
Richmond, BC, Canada, V6W 1A8
Tel: 604.628.6508 Fax: 604.676.2463
www.saltworkstech.com

DRAWING STATUS: FACTORY AS BUILT

THIS DOCUMENT EMBODIES DESIGNS AND INFORMATION THAT ARE PROPRIETARY TO SALTWORKS. IT IS TO BE USED ONLY FOR THE PURPOSE AND BY THE ENTITY FOR WHICH IT WAS ORIGINALLY SUPPLIED. THE DOCUMENT MAY NOT BE DUPLICATED OR DISCLOSED TO OTHER PERSON OR ENTITY, OR USED FOR MANUFACTURE OF THE ITEM IN PART OR IN WHOLE WITHOUT THE PRIOR WRITTEN PERMISSION OF SALTWORKS.

DO NOT SCALE DRAWING

LTR	DATE	DESCRIPTION	REV. BY:
L	16–MAR–2018	NO CHANGES	–
M	20–APR–2018	NO CHANGES	–
N	06–JUL–2018	NO CHANGES	–
K	23–FEB–2018	NO CHANGES	–

TITLE: (SM2) 621: EFFECT 2 MODULES

PROJECT: SALTMAKER GEN III		CUSTOMER: AGNICO EAGLE MINES	REVISION N
PREPARED BY: JLAU	DATE: 01–SEP–2017	DWG. NO: SW_EN_SM_AEM–01_PID_SM2_DWG_621	
CHECKED BY: MLOW	DATE: 05–SEP–2017	JOB/CO NO: (JOB NO.)	
APPROVED BY: APPROVED BY	DATE: APPROVED DATE	SHEET: 1 OF 1	17

RIGHT HAND SIDE OF BASIN PUMP LOOKING FROM FORKLIFT ACCESS SIDE

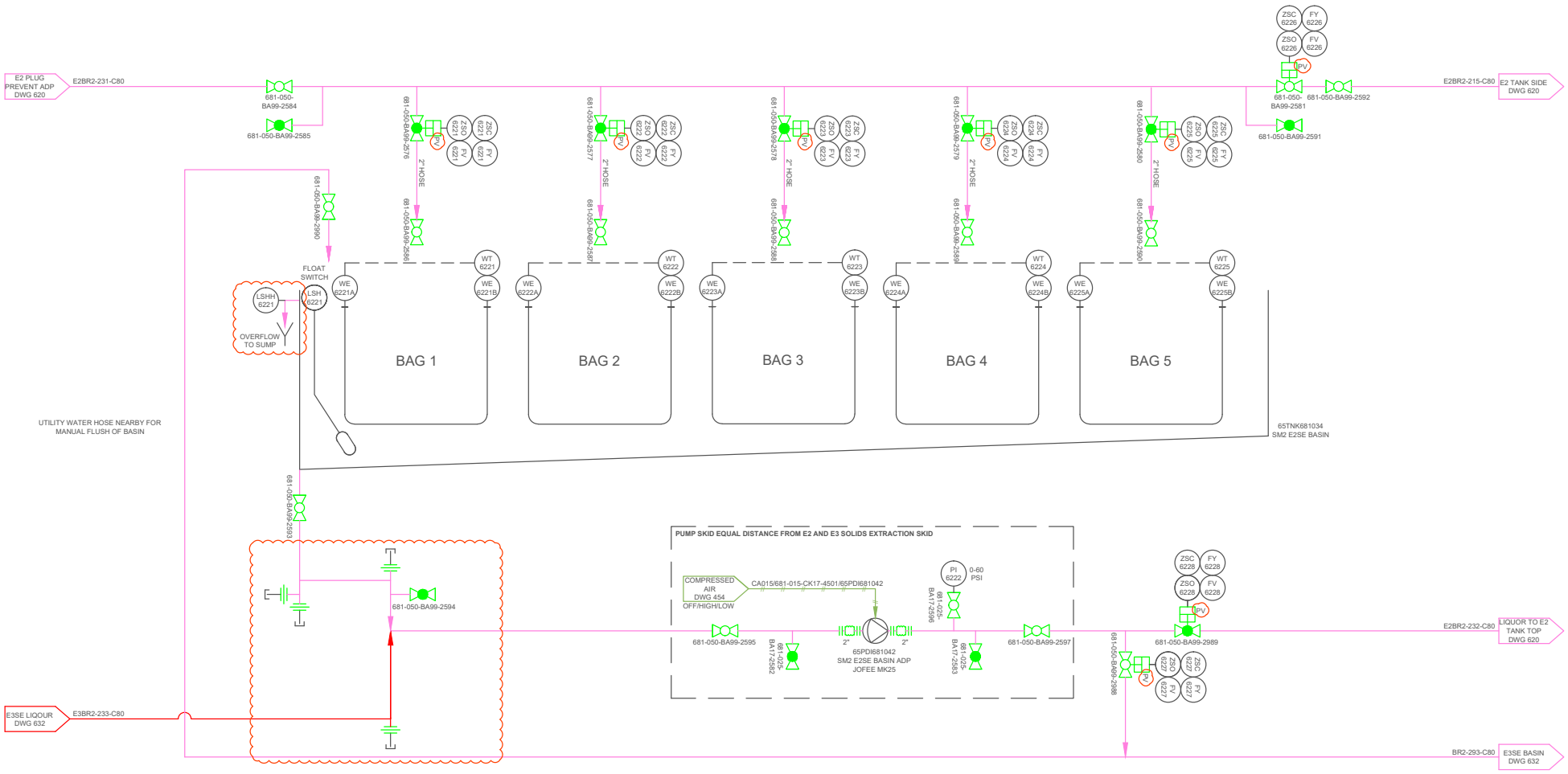

Saltworks
13800 Steveston Hwy
Richmond, BC, Canada, V6W 1A8
Tel: 604.628.6508 Fax: 604.676.2463
www.saltworkstech.com

DRAWING STATUS: FACTORY AS BUILT

THIS DOCUMENT EMBODIES DESIGNS AND INFORMATION THAT ARE PROPRIETARY TO SALTWORKS. IT IS TO BE USED ONLY FOR THE PURPOSE AND BY THE ENTITY FOR WHICH IT WAS ORIGINALLY SUPPLIED. THE DOCUMENT MAY NOT BE DUPLICATED OR DISCLOSED TO OTHER PERSON OR ENTITY, OR USED FOR MANUFACTURE OF THE ITEM IN PART OR IN WHOLE WITHOUT THE PRIOR WRITTEN PERMISSION OF SALTWORKS.

DO NOT SCALE DRAWING

LTR	DATE	DESCRIPTION	REV. BY:
L	16–MAR–2018	NO CHANGES	–
M	20–APR–2018	NO CHANGES	–
N	06–JUL–2018	PINCH VALVES ADDED, AS BUILT UPDATES	JLAU
K	23–FEB–2018	NO CHANGES	–

TITLE: (SM2) 622: EFFECT 2 SOLIDS EXTRACTION

PROJECT: SALTMAKER GEN III

CUSTOMER: AGNICO EAGLE MINES

REVISION: N

PREPARED BY:	JLAU	DATE:	01–SEP–2017
CHECKED BY:	MLOW	DATE:	05–SEP–2017
APPROVED BY:	APPROVED BY	DATE:	APPROVED DATE

DWG. NO: SW_EN_SM_AEM–01_PID_SM2_DWG_622

JOB/CO NO: (JOB NO.)

SHEET: 102OF117

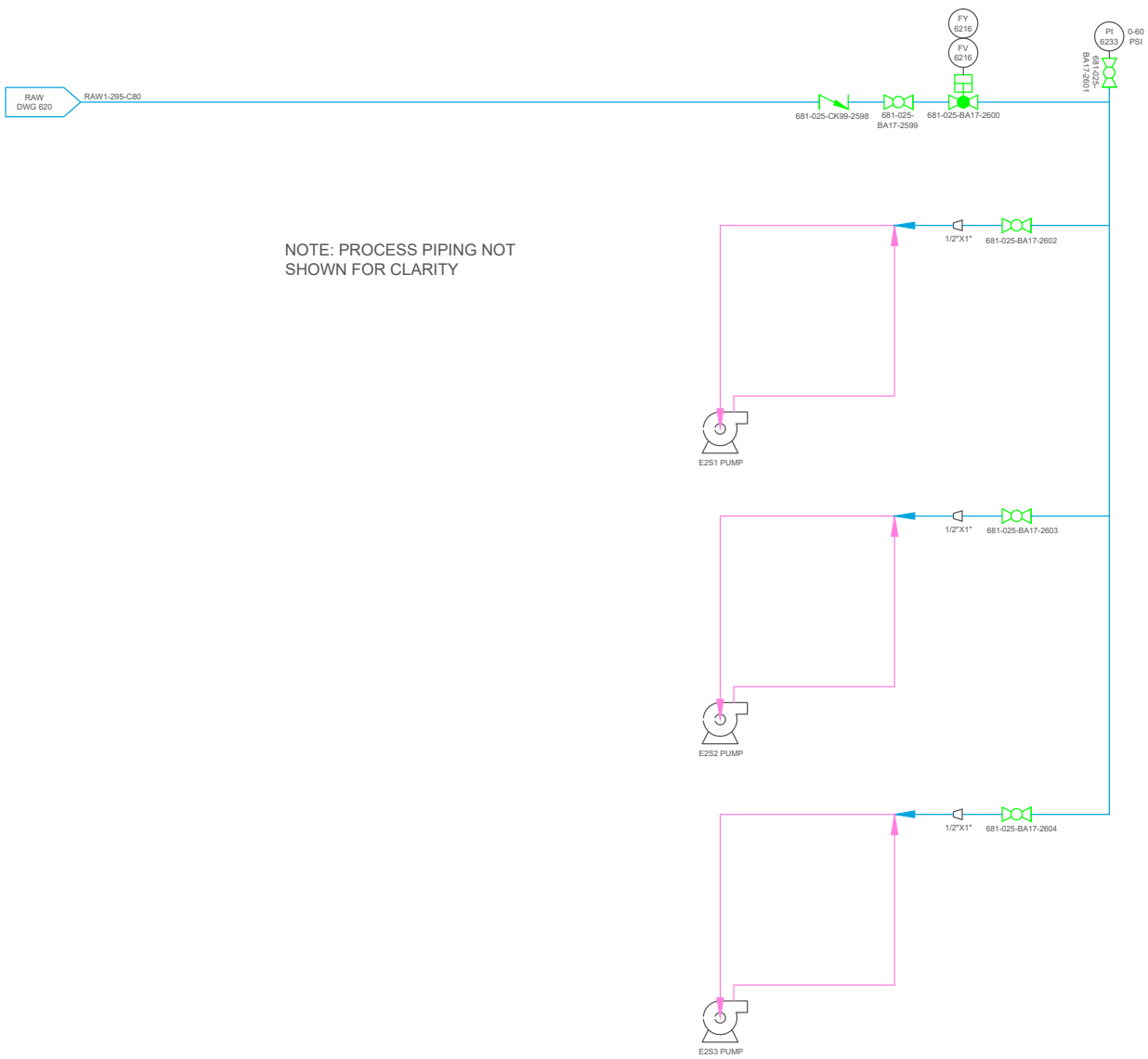

Saltworks
13800 Steveston Hwy
Richmond, BC, Canada, V6W 1A8
Tel: 604.628.6508 Fax: 604.676.2463
www.saltworkstech.com

DRAWING STATUS: FACTORY AS BUILT

THIS DOCUMENT EMBODIES DESIGNS AND INFORMATION THAT ARE PROPRIETARY TO SALTWORKS. IT IS TO BE USED ONLY FOR THE PURPOSE AND BY THE ENTITY FOR WHICH IT WAS ORIGINALLY SUPPLIED. THE DOCUMENT MAY NOT BE DUPLICATED OR DISCLOSED TO OTHER PERSON OR ENTITY, OR USED FOR MANUFACTURE OF THE ITEM IN PART OR IN WHOLE WITHOUT THE PRIOR WRITTEN PERMISSION OF SALTWORKS.

DO NOT SCALE DRAWING

LTR	DATE	DESCRIPTION	REV. BY:
L	16–MAR–2018	NO CHANGES	–
M	20–APR–2018	NO CHANGES	–
N	06–JUL–2018	NO CHANGES	–
K	23–FEB–2018	NO CHANGES	–

TITLE: (SM2) 623: EFFECT 2 PUMP SEAL FLUSH

PROJECT: SALTMAKER GEN III		CUSTOMER: AGNICO EAGLE MINES	REVISION N
PREPARED BY: JLAU	DATE: 01–SEP–2017	DWG. NO: SW_EN_SM_AEM–01_PID_SM2_DWG_623	
CHECKED BY: MLOW	DATE: 05–SEP–2017	JOB/CO NO: (JOB NO.)	
APPROVED BY: APPROVED BY	DATE: APPROVED DATE	SHEET: 103OF117	

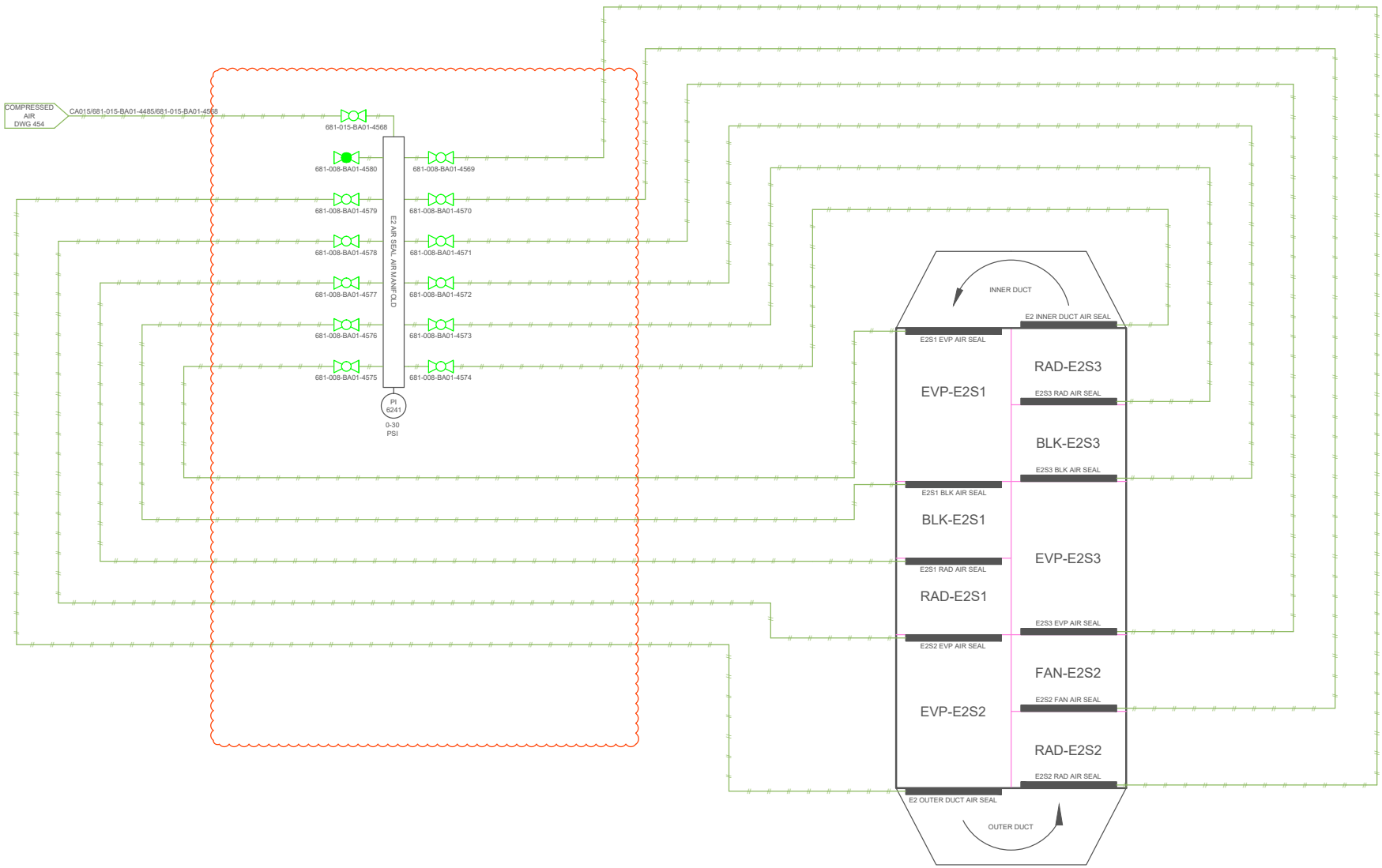

Saltworks
13800 Steveston Hwy
Richmond, BC, Canada, V6W 1A8
Tel: 604.628.6508 Fax: 604.676.2463
www.saltworkstech.com

DRAWING STATUS: FACTORY AS BUILT

THIS DOCUMENT EMBODIES DESIGNS AND INFORMATION THAT ARE PROPRIETARY TO SALTWORKS. IT IS TO BE USED ONLY FOR THE PURPOSE AND BY THE ENTITY FOR WHICH IT WAS ORIGINALLY SUPPLIED. THE DOCUMENT MAY NOT BE DUPLICATED OR DISCLOSED TO OTHER PERSON OR ENTITY, OR USED FOR MANUFACTURE OF THE ITEM IN PART OR IN WHOLE WITHOUT THE PRIOR WRITTEN PERMISSION OF SALTWORKS.

DO NOT SCALE DRAWING

LTR	DATE	DESCRIPTION	REV. BY:
L	16–MAR–2018	NO CHANGES	–
M	20–APR–2018	NO CHANGES	–
N	06–JUL–2018	UPDATED MANIFOLD	JLAU
K	23–FEB–2018	NO CHANGES	–

TITLE: (SM2) 624: EFFECT 2 AIR SEALS

PROJECT: SALTMAKER GEN III		CUSTOMER: AGNICO EAGLE MINES	REVISION N
PREPARED BY: JLAU	DATE: 01–SEP–2017	DWG. NO: SW_EN_SM_AEM–01_PID_SM2_DWG_624	
CHECKED BY: MLOW	DATE: 05–SEP–2017	JOB/CO NO: (JOB NO.)	
APPROVED BY: APPROVED BY	DATE: APPROVED DATE	SHEET: 104OF117	

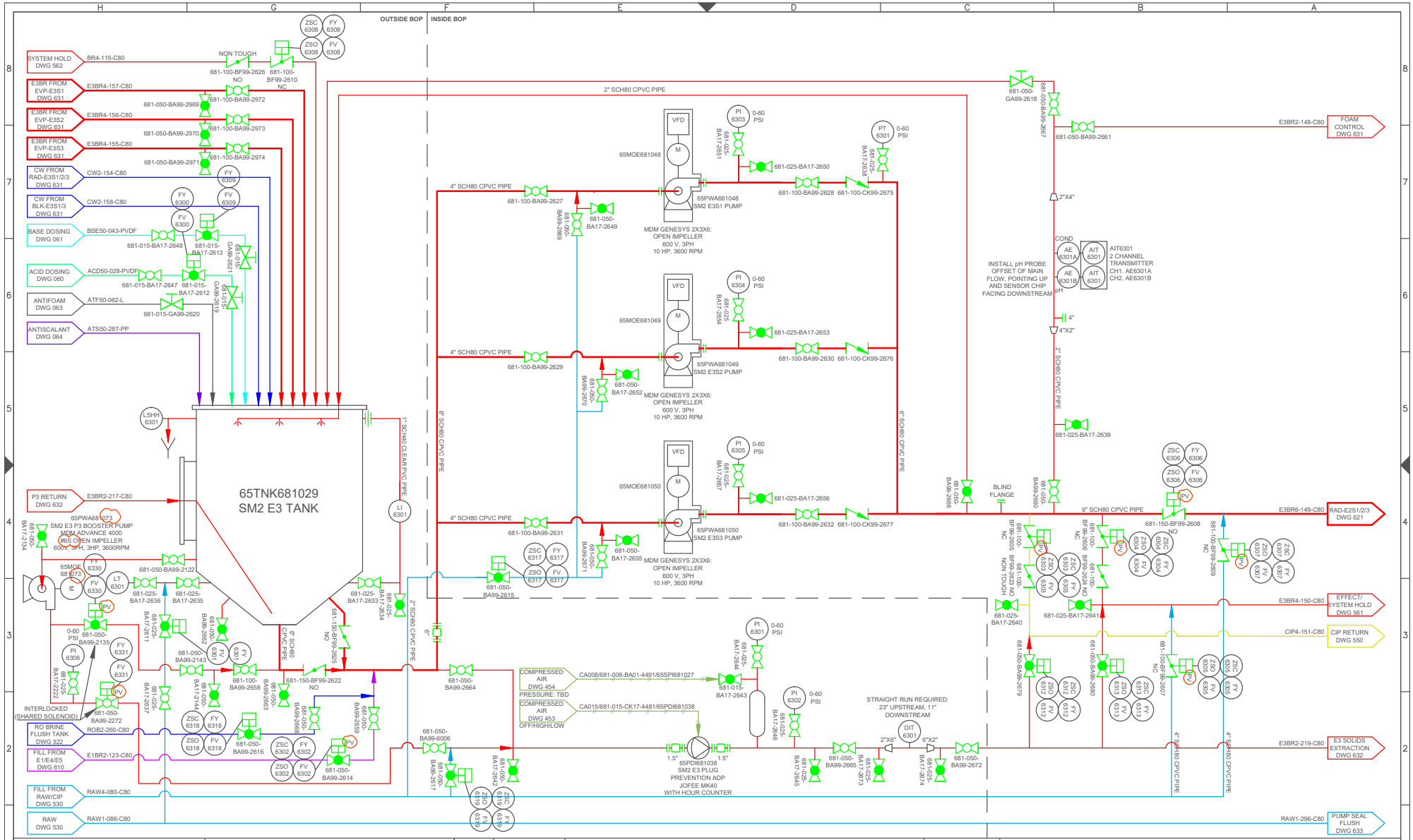

Saltworks
13800 Steveston Hwy
Richmond, BC, Canada, V6W 1A8
Tel: 604.628.6508 Fax: 604.676.2463
www.saltworkstech.com

DRAWING STATUS: FACTORY AS BUILT

THIS DOCUMENT EMBODIES DESIGNS AND INFORMATION THAT ARE PROPRIETARY TO SALTWORKS. IT IS TO BE USED ONLY FOR THE PURPOSE AND BY THE ENTITY FOR WHICH IT WAS ORIGINALLY SUPPLIED. THE DOCUMENT MAY NOT BE DUPLICATED OR DISCLOSED TO OTHER PERSON OR ENTITY, OR USED FOR MANUFACTURE OF THE ITEM IN PART OR IN WHOLE WITHOUT THE PRIOR WRITTEN PERMISSION OF SALTWORKS.

DO NOT SCALE DRAWING

LTR	DATE	DESCRIPTION	REV. BY:
L	16-MAR-2018	TANK SIDE PUMP INLET CHANGED TO NO	JLAU
M	20-APR-2018	P3 INLET UPDATED AND P3 BOOSTER PUMP ADDED	JLAU
N	06-JUL-2018	PINCH VALVES ADDED, P3 BOOSTER TAGS UPDATED	JLAU
K	23-FEB-2018	NO CHANGES	–

TITLE: (SM2) 630: EFFECT 3 TANK AND PUMPS

PROJECT: SALTMAKER GEN III		CUSTOMER: AGNICO EAGLE MINES	REVISION N
PREPARED BY: JLAU	DATE: 01-SEP-2017	DWG. NO: SW_EN_SM_AEM-01_PID_SM2_DWG_630	
CHECKED BY: MLOW	DATE: 05-SEP-2017	JOB/CO NO: (JOB NO.)	
APPROVED BY: APPROVED BY	DATE: APPROVED DATE	SHEET: 105OF117	

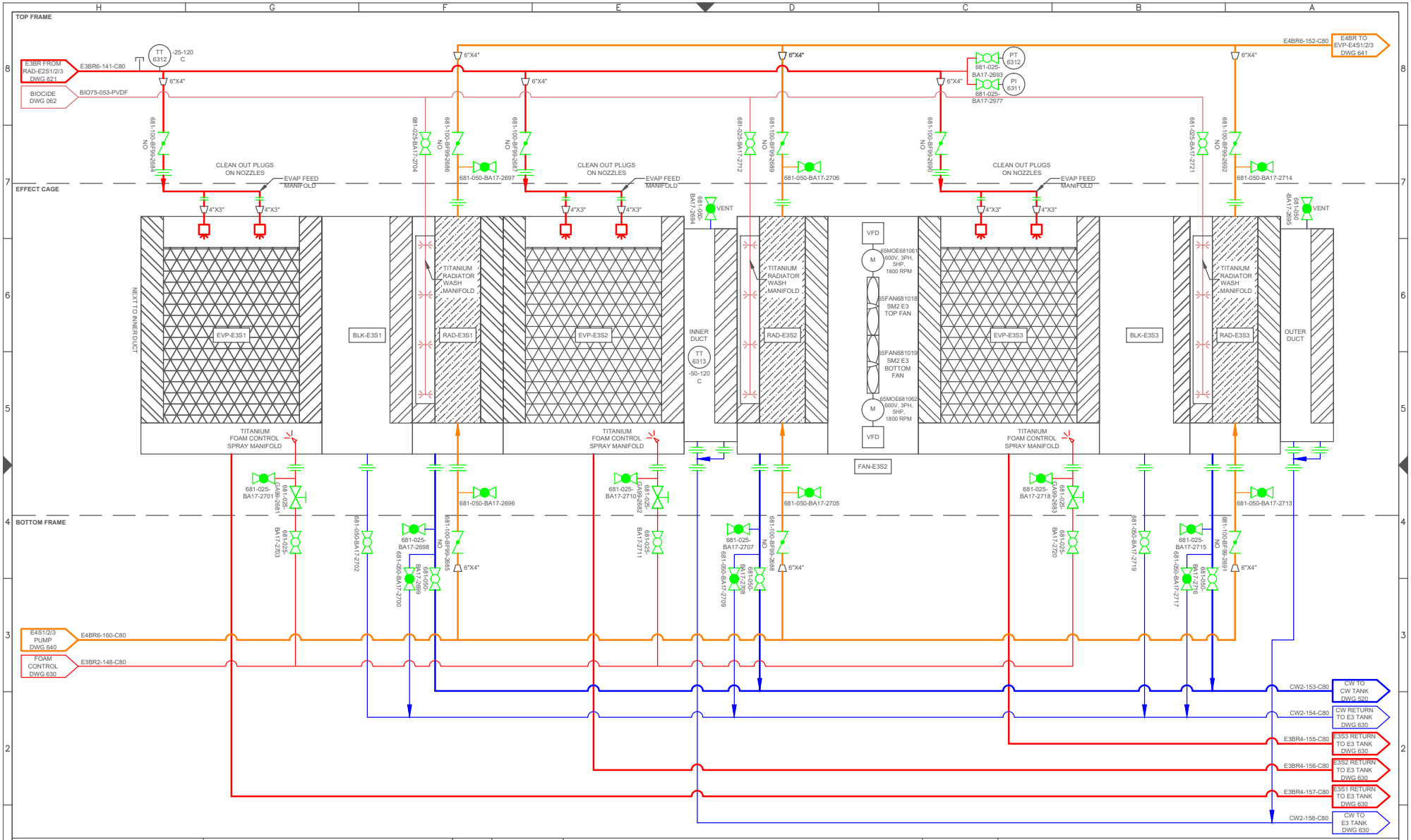

Saltworks
13800 Steveston Hwy
Richmond, BC, Canada, V6W 1A8
Tel: 604.628.6508 Fax: 604.676.2463
www.saltworkstech.com

DRAWING STATUS: FACTORY AS BUILT

THIS DOCUMENT EMBODIES DESIGNS AND INFORMATION THAT ARE PROPRIETARY TO SALTWORKS. IT IS TO BE USED ONLY FOR THE PURPOSE AND BY THE ENTITY FOR WHICH IT WAS ORIGINALLY SUPPLIED. THE DOCUMENT MAY NOT BE DUPLICATED OR DISCLOSED TO OTHER PERSON OR ENTITY, OR USED FOR MANUFACTURE OF THE ITEM IN PART OR IN WHOLE WITHOUT THE PRIOR WRITTEN PERMISSION OF SALTWORKS.

DO NOT SCALE DRAWING

LTR	DATE	DESCRIPTION	REV. BY:
L	16-MAR-2018	NO CHANGES	–
M	20-APR-2018	NO CHANGES	–
N	06-JUL-2018	NO CHANGES	–
K	23-FEB-2018	NO CHANGES	–

TITLE: (SM2) 631: EFFECT 3 MODULES

PROJECT: SALTMAKER GEN III		CUSTOMER: AGNICO EAGLE MINES	REVISION N
PREPARED BY: JLAU	DATE: 01-SEP-2017	DWG. NO: SW_EN_SM_AEM-01_PID_SM2_DWG_631	
CHECKED BY: MLOW	DATE: 05-SEP-2017	JOB/CO NO: (JOB NO.)	
APPROVED BY: APPROVED BY	DATE: APPROVED DATE	SHEET: 106OF117	

LEFT HAND SIDE OF BASIN PUMP LOOKING FROM FORKLIFT ACCESS SIDE

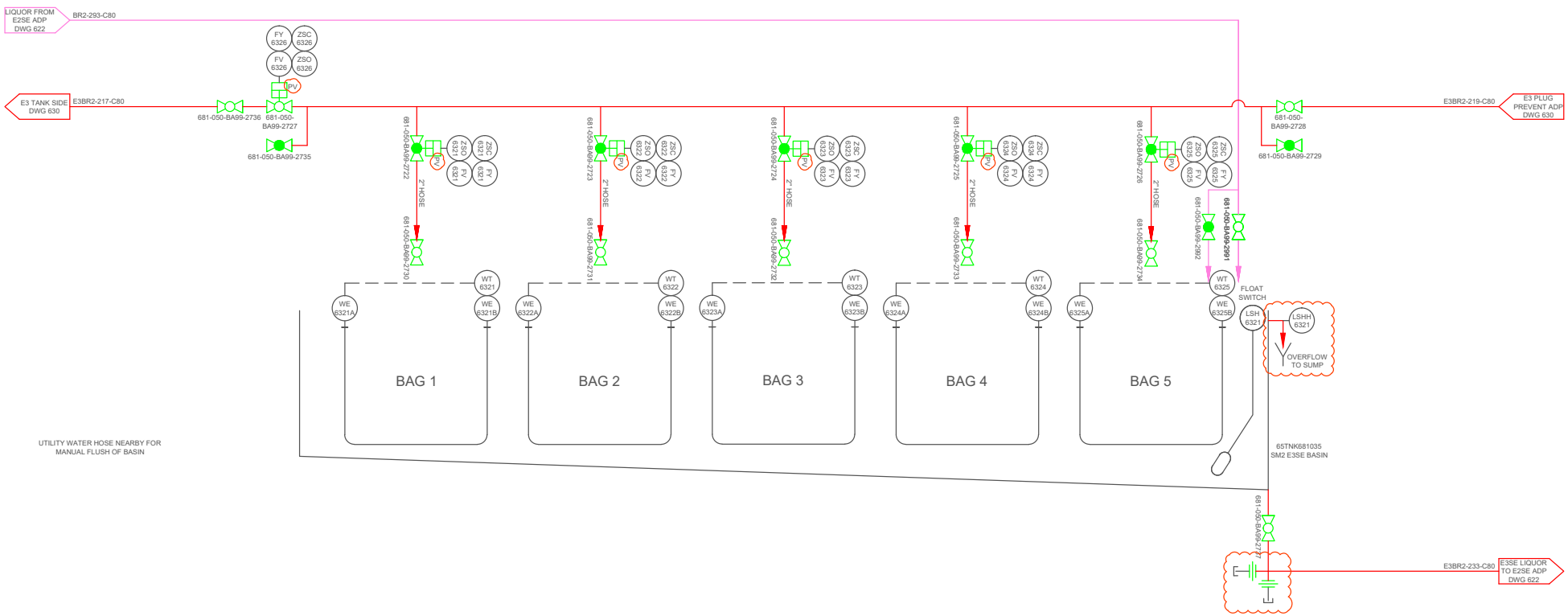

Saltworks
13800 Steveston Hwy
Richmond, BC, Canada, V6W 1A8
Tel: 604.628.6508 Fax: 604.676.2463
www.saltworkstech.com

DRAWING STATUS: FACTORY AS BUILT

THIS DOCUMENT EMBODIES DESIGNS AND INFORMATION THAT ARE PROPRIETARY TO SALTWORKS. IT IS TO BE USED ONLY FOR THE PURPOSE AND BY THE ENTITY FOR WHICH IT WAS ORIGINALLY SUPPLIED. THE DOCUMENT MAY NOT BE DUPLICATED OR DISCLOSED TO OTHER PERSON OR ENTITY, OR USED FOR MANUFACTURE OF THE ITEM IN PART OR IN WHOLE WITHOUT THE PRIOR WRITTEN PERMISSION OF SALTWORKS.

DO NOT SCALE DRAWING

LTR	DATE	DESCRIPTION	REV. BY:
L	16-MAR-2018	NO CHANGES	–
M	20-APR-2018	UPDATED TO MATCH SM1	–
N	06-JUL-2018	PINCH VALVES ADDED, AS BUILT UPDATES	JLAU
K	23-FEB-2018	NO CHANGES	–

TITLE: (SM2) 632: EFFECT 3 SOLIDS EXTRACTION

PROJECT: SALTMAKER GEN III		CUSTOMER: AGNICO EAGLE MINES	REVISION N
PREPARED BY: JLAU	DATE: 01-SEP-2017	DWG. NO: SW_EN_SM_AEM-01_PID_SM2_DWG_632	
CHECKED BY: MLOW	DATE: 05-SEP-2017	JOB/CO NO: (JOB NO.)	
APPROVED BY: APPROVED BY	DATE: APPROVED DATE	SHEET: 107OF117	

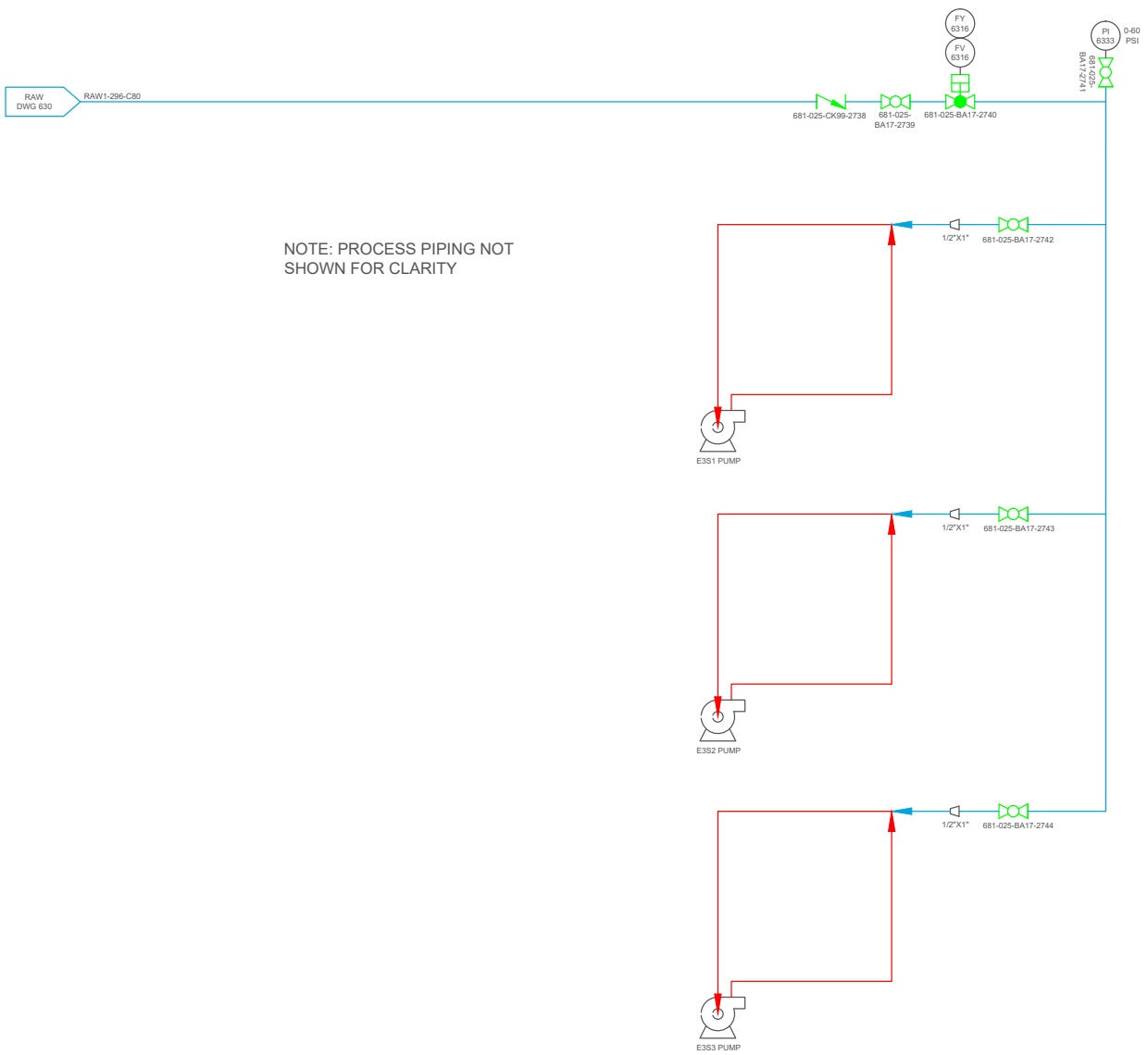

Saltworks
13800 Steveston Hwy
Richmond, BC, Canada, V6W 1A8
Tel: 604.628.6508 Fax: 604.676.2463
www.saltworkstech.com

DRAWING STATUS: FACTORY AS BUILT

THIS DOCUMENT EMBODIES DESIGNS AND INFORMATION THAT ARE PROPRIETARY TO SALTWORKS. IT IS TO BE USED ONLY FOR THE PURPOSE AND BY THE ENTITY FOR WHICH IT WAS ORIGINALLY SUPPLIED. THE DOCUMENT MAY NOT BE DUPLICATED OR DISCLOSED TO OTHER PERSON OR ENTITY, OR USED FOR MANUFACTURE OF THE ITEM IN PART OR IN WHOLE WITHOUT THE PRIOR WRITTEN PERMISSION OF SALTWORKS.

DO NOT SCALE DRAWING

LTR	DATE	DESCRIPTION	REV. BY:
L	16–MAR–2018	NO CHANGES	–
M	20–APR–2018	NO CHANGES	–
N	06–JUL–2018	NO CHANGES	–
K	23–FEB–2018	NO CHANGES	–

TITLE: (SM2) 633: EFFECT 3 PUMP SEAL FLUSH

PROJECT: SALTMAKER GEN III		CUSTOMER: AGNICO EAGLE MINES	REVISION N
PREPARED BY: JLAU	DATE: 01–SEP–2017	DWG. NO: SW_EN_SM_AEM–01_PID_SM2_DWG_633	
CHECKED BY: MLOW	DATE: 05–SEP–2017	JOB/CO NO: (JOB NO.)	
APPROVED BY: APPROVED BY	DATE: APPROVED DATE	SHEET: 108OF117	

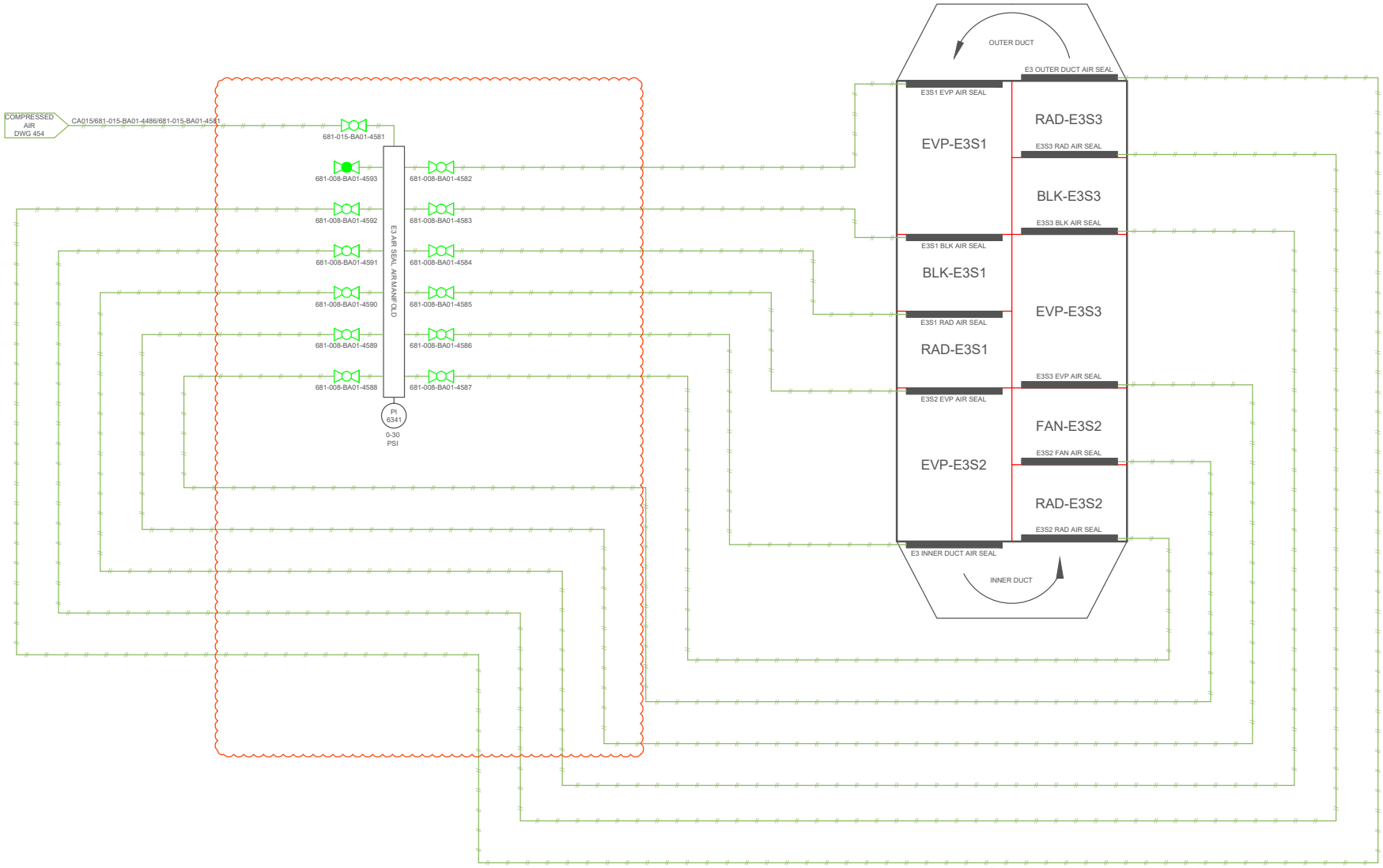

Saltworks
13800 Steveston Hwy
Richmond, BC, Canada, V6W 1A8
Tel: 604.628.6508 Fax: 604.676.2463
www.saltworkstech.com

DRAWING STATUS: FACTORY AS BUILT

THIS DOCUMENT EMBODIES DESIGNS AND INFORMATION THAT ARE PROPRIETARY TO SALTWORKS. IT IS TO BE USED ONLY FOR THE PURPOSE AND BY THE ENTITY FOR WHICH IT WAS ORIGINALLY SUPPLIED. THE DOCUMENT MAY NOT BE DUPLICATED OR DISCLOSED TO OTHER PERSON OR ENTITY, OR USED FOR MANUFACTURE OF THE ITEM IN PART OR IN WHOLE WITHOUT THE PRIOR WRITTEN PERMISSION OF SALTWORKS.

DO NOT SCALE DRAWING

LTR	DATE	DESCRIPTION	REV. BY:
L	16–MAR–2018	NO CHANGES	–
M	20–APR–2018	NO CHANGES	–
N	06–JUL–2018	UPDATED MANIFOLD	JLAU
K	23–FEB–2018	NO CHANGES	–

TITLE: (SM2) 634: EFFECT 3 AIR SEALS

PROJECT: SALTMAKER GEN III		CUSTOMER: AGNICO EAGLE MINES	REVISION N
PREPARED BY: JLAU	DATE: 01–SEP–2017	DWG. NO: SW_EN_SM_AEM–01_PID_SM2_DWG_634	
CHECKED BY: MLOW	DATE: 05–SEP–2017	JOB/CO NO: (JOB NO.)	
APPROVED BY: APPROVED BY	DATE: APPROVED DATE	SHEET: 109OF117	

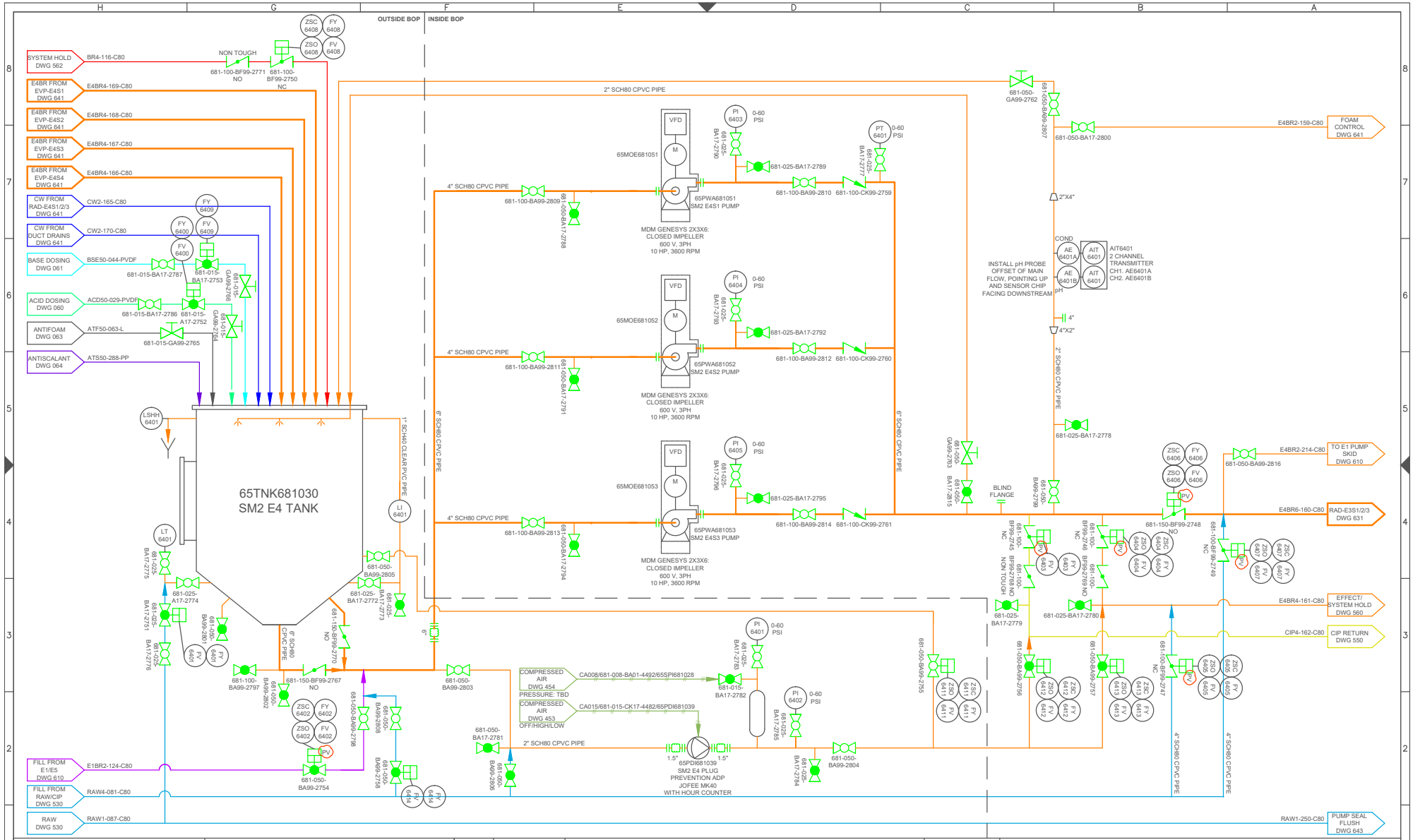

Saltworks
13800 Steveston Hwy
Richmond, BC, Canada, V6W 1A8
Tel: 604.628.6508 Fax: 604.676.2463
www.saltworkstech.com

DRAWING STATUS: FACTORY AS BUILT

THIS DOCUMENT EMBODIES DESIGNS AND INFORMATION THAT ARE PROPRIETARY TO SALTWORKS. IT IS TO BE USED ONLY FOR THE PURPOSE AND BY THE ENTITY FOR WHICH IT WAS ORIGINALLY SUPPLIED. THE DOCUMENT MAY NOT BE DUPLICATED OR DISCLOSED TO OTHER PERSON OR ENTITY, OR USED FOR MANUFACTURE OF THE ITEM IN PART OR IN WHOLE WITHOUT THE PRIOR WRITTEN PERMISSION OF SALTWORKS.

DO NOT SCALE DRAWING

LTR	DATE	DESCRIPTION	REV. BY:
L	16–MAR–2018	TANK BOTTOM PUMP INLET VALVE, P3 RECIRC VALVE CHANGED TO NO	JLAU
M	20–APR–2018	P3 INLET UPDATED	JLAU
N	06–JUL–2018	PINCH VALVES ADDED	JLAU
K	23–FEB–2018	NO CHANGES	–

TITLE: (SM2) 640: EFFECT 4 TANK AND PUMPS

PROJECT: SALTMAKER GEN III		CUSTOMER: AGNICO EAGLE MINES	REVISION N
PREPARED BY: JLAU	DATE: 01–SEP–2017	DWG. NO: SW_EN_SM_AEM–01_PID_SM2_DWG_640	
CHECKED BY: MLOW	DATE: 05–SEP–2017	JOB/CO NO: (JOB NO.)	
APPROVED BY: APPROVED BY	DATE: APPROVED DATE	SHEET: 1100F117	

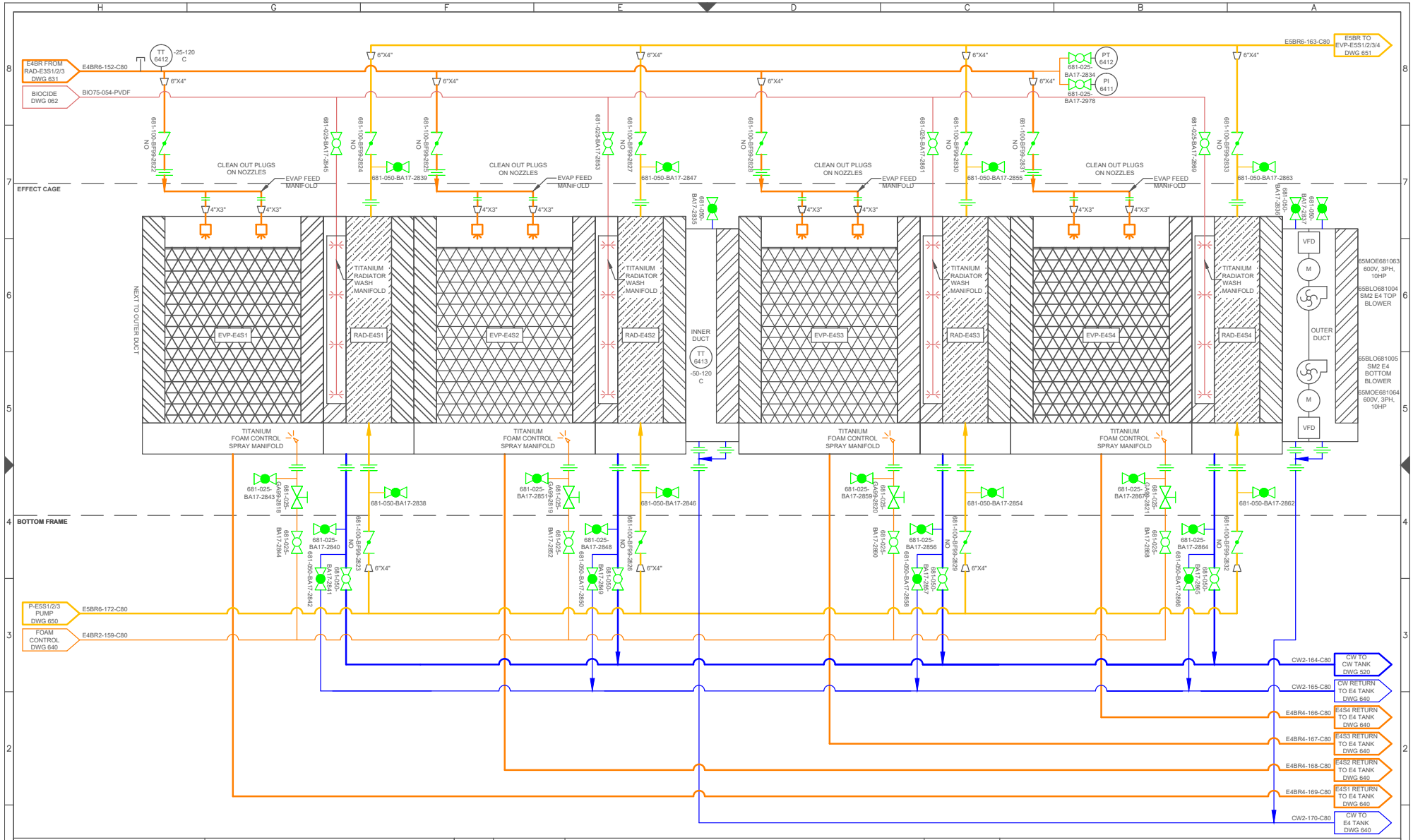

Saltworks
13800 Steveston Hwy
Richmond, BC, Canada, V6W 1A8
Tel: 604.628.6508 Fax: 604.676.2463
www.saltworkstech.com

DRAWING STATUS: FACTORY AS BUILT

THIS DOCUMENT EMBODIES DESIGNS AND INFORMATION THAT ARE PROPRIETARY TO SALTWORKS. IT IS TO BE USED ONLY FOR THE PURPOSE AND BY THE ENTITY FOR WHICH IT WAS ORIGINALLY SUPPLIED. THE DOCUMENT MAY NOT BE DUPLICATED OR DISCLOSED TO OTHER PERSON OR ENTITY, OR USED FOR MANUFACTURE OF THE ITEM IN PART OR IN WHOLE WITHOUT THE PRIOR WRITTEN PERMISSION OF SALTWORKS.

DO NOT SCALE DRAWING

LTR	DATE	DESCRIPTION	REV. BY:
L	16-MAR-2018	NO CHANGES	–
M	20-APR-2018	NO CHANGES	–
N	06-JUL-2018	NO CHANGES	–
K	23-FEB-2018	NO CHANGES	–

TITLE: (SM2) 641: EFFECT 4 MODULES

PROJECT: SALTMAKER GEN III		CUSTOMER: AGNICO EAGLE MINES	REVISION N
PREPARED BY: JLAU	DATE: 01-SEP-2017	DWG. NO: SW_EN_SM_AEM-01_PID_SM2_DWG_641	
CHECKED BY: MLOW	DATE: 05-SEP-2017	JOB/CO NO: (JOB NO.)	
APPROVED BY: APPROVED BY	DATE: APPROVED DATE	SHEET: 111OF117	

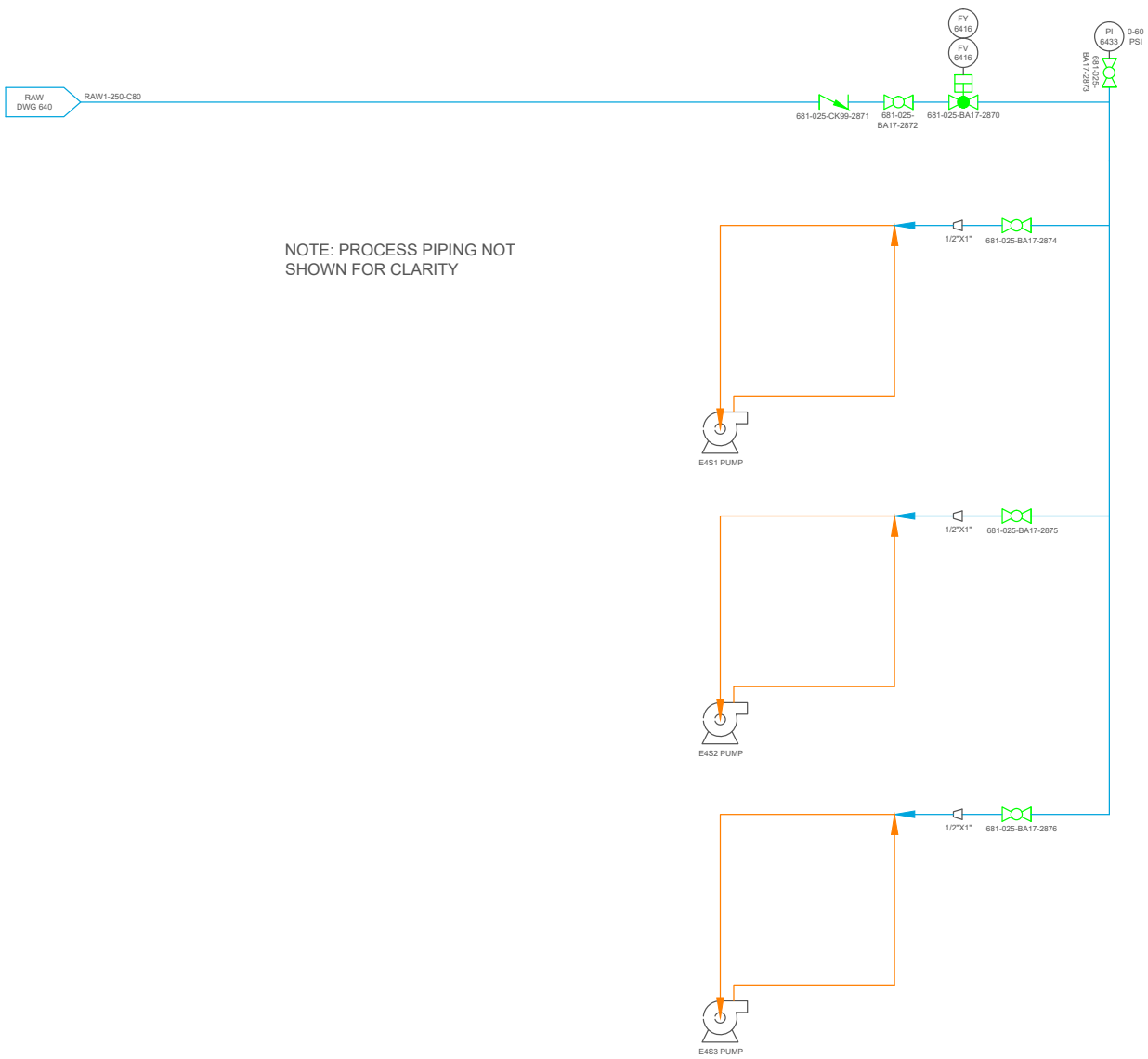

Saltworks
13800 Steveston Hwy
Richmond, BC, Canada, V6W 1A8
Tel: 604.628.6508 Fax: 604.676.2463
www.saltworkstech.com

DRAWING STATUS: FACTORY AS BUILT

THIS DOCUMENT EMBODIES DESIGNS AND INFORMATION THAT ARE PROPRIETARY TO SALTWORKS. IT IS TO BE USED ONLY FOR THE PURPOSE AND BY THE ENTITY FOR WHICH IT WAS ORIGINALLY SUPPLIED. THE DOCUMENT MAY NOT BE DUPLICATED OR DISCLOSED TO OTHER PERSON OR ENTITY, OR USED FOR MANUFACTURE OF THE ITEM IN PART OR IN WHOLE WITHOUT THE PRIOR WRITTEN PERMISSION OF SALTWORKS.

DO NOT SCALE DRAWING

LTR	DATE	DESCRIPTION	REV. BY:
L	16–MAR–2018	NO CHANGES	–
M	20–APR–2018	NO CHANGES	–
N	06–JUL–2018	NO CHANGES	–
K	23–FEB–2018	NO CHANGES	–

TITLE: (SM2) 643: EFFECT 4 PUMP SEAL FLUSH

PROJECT: SALTMAKER GEN III		CUSTOMER: AGNICO EAGLE MINES	REVISION N
PREPARED BY: JLAU	DATE: 01–SEP–2017	DWG. NO: SW_EN_SM_AEM–01_PID_SM2_DWG_643	
CHECKED BY: MLOW	DATE: 05–SEP–2017	JOB/CO NO: (JOB NO.)	
APPROVED BY: APPROVED BY	DATE: APPROVED DATE	SHEET: 1120F117	

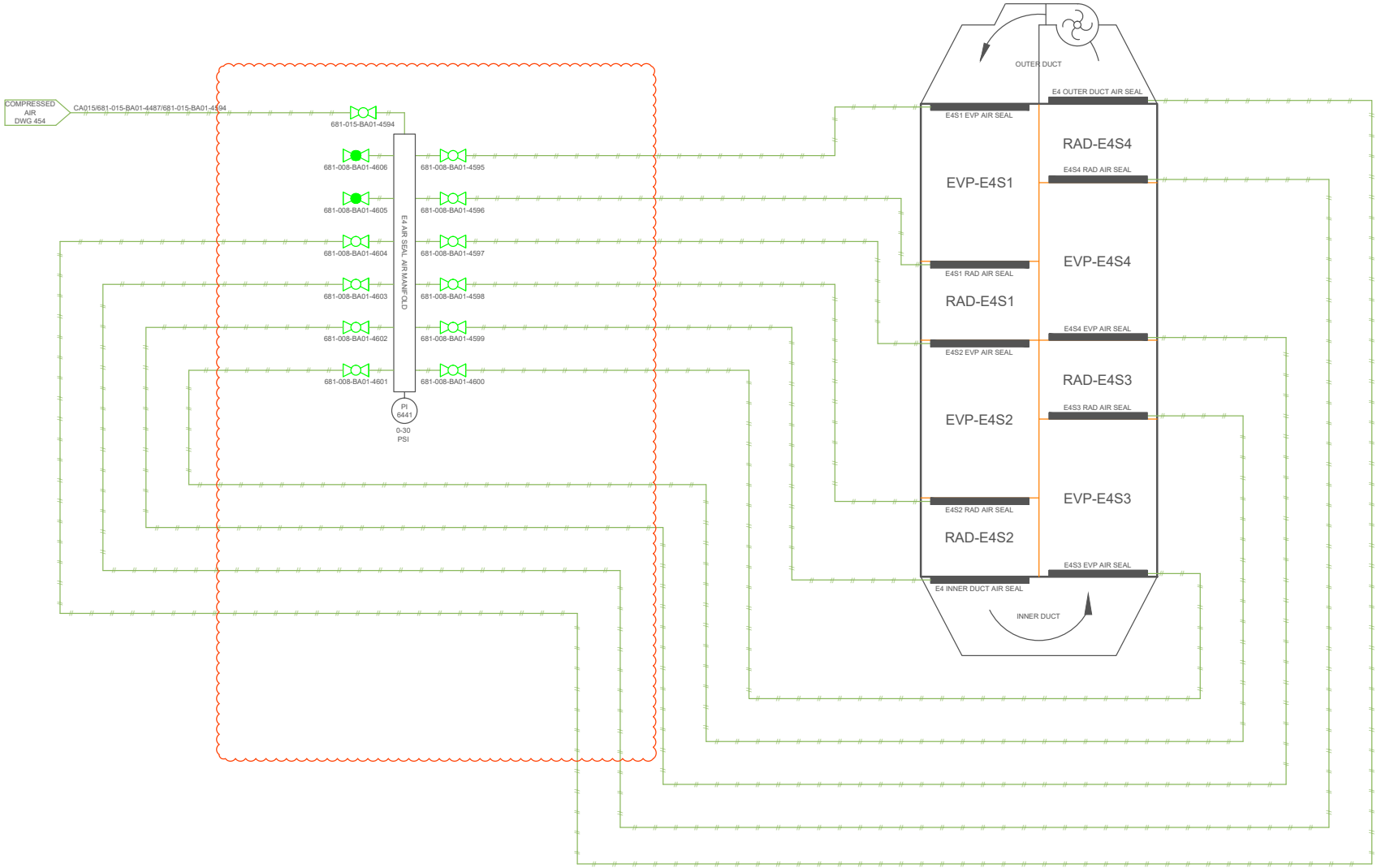

Saltworks
13800 Steveston Hwy
Richmond, BC, Canada, V6W 1A8
Tel: 604.628.6508 Fax: 604.676.2463
www.saltworkstech.com

DRAWING STATUS: FACTORY AS BUILT

THIS DOCUMENT EMBODIES DESIGNS AND INFORMATION THAT ARE PROPRIETARY TO SALTWORKS. IT IS TO BE USED ONLY FOR THE PURPOSE AND BY THE ENTITY FOR WHICH IT WAS ORIGINALLY SUPPLIED. THE DOCUMENT MAY NOT BE DUPLICATED OR DISCLOSED TO OTHER PERSON OR ENTITY, OR USED FOR MANUFACTURE OF THE ITEM IN PART OR IN WHOLE WITHOUT THE PRIOR WRITTEN PERMISSION OF SALTWORKS.

DO NOT SCALE DRAWING

LTR	DATE	DESCRIPTION	REV. BY:
L	16–MAR–2018	NO CHANGES	–
M	20–APR–2018	NO CHANGES	–
N	06–JUL–2018	UPDATED MANIFOLD	JLAU
K	23–FEB–2018	NO CHANGES	–

TITLE: (SM2) 644: EFFECT 4 AIR SEALS

PROJECT: SALTMAKER GEN III		CUSTOMER: AGNICO EAGLE MINES	REVISION N
PREPARED BY: JLAU	DATE: 01–SEP–2017	DWG. NO: SW_EN_SM_AEM–01_PID_SM2_DWG_644	
CHECKED BY: MLOW	DATE: 05–SEP–2017	JOB/CO NO: (JOB NO.)	
APPROVED BY: APPROVED BY	DATE: APPROVED DATE	SHEET: 113OF117	

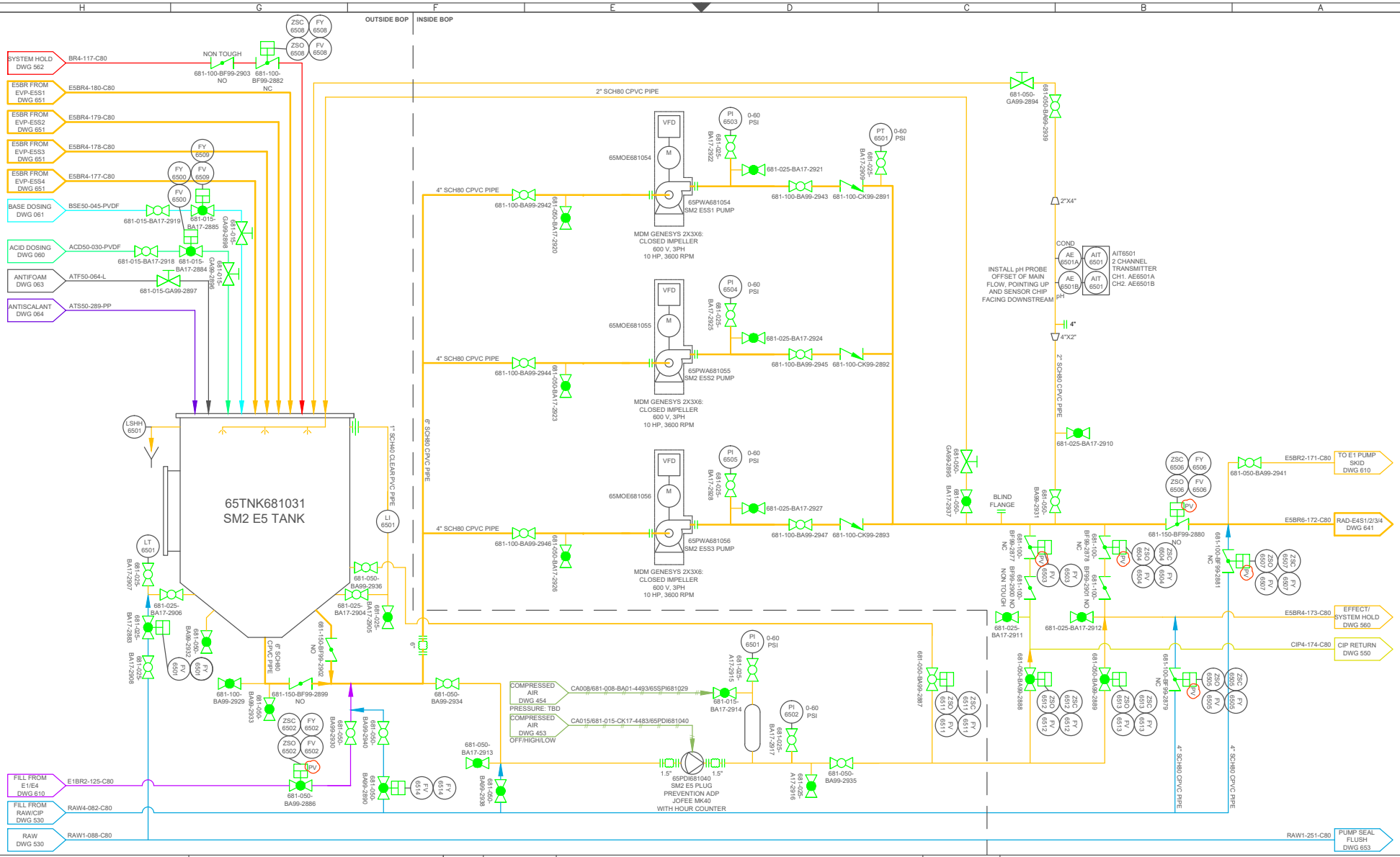

Saltworks
13800 Steveston Hwy
Richmond, BC, Canada, V6W 1A8
Tel: 604.628.6508 Fax: 604.676.2463
www.saltworkstech.com

DRAWING STATUS: FACTORY AS BUILT

THIS DOCUMENT EMBODIES DESIGNS AND INFORMATION THAT ARE PROPRIETARY TO SALTWORKS. IT IS TO BE USED ONLY FOR THE PURPOSE AND BY THE ENTITY FOR WHICH IT WAS ORIGINALLY SUPPLIED. THE DOCUMENT MAY NOT BE DUPLICATED OR DISCLOSED TO OTHER PERSON OR ENTITY, OR USED FOR MANUFACTURE OF THE ITEM IN PART OR IN WHOLE WITHOUT THE PRIOR WRITTEN PERMISSION OF SALTWORKS.

DO NOT SCALE DRAWING

LTR	DATE	DESCRIPTION	REV. BY:
L	16–MAR–2018	TANK BOTTOM PUMP INLET VALVE, P3 RECIRC VALVE CHANGED TO NO	JLAU
M	20–APR–2018	P3 INLET UPDATED	JLAU
N	06–JUL–2018	PINCH VALVES ADDED	JLAU
K	23–FEB–2018	NO CHANGES	–

TITLE: (SM2) 650: EFFECT 5 TANK AND PUMPS

PROJECT: SALTMAKER GEN III		CUSTOMER: AGNICO EAGLE MINES	REVISION N
PREPARED BY: JLAU	DATE: 01–SEP–2017	DWG. NO: SW_EN_SM_AEM–01_PID_SM2_DWG_650	
CHECKED BY: MLOW	DATE: 05–SEP–2017	JOB/CO NO: (JOB NO.)	
APPROVED BY: APPROVED BY	DATE: APPROVED DATE	SHEET: 114OF117	

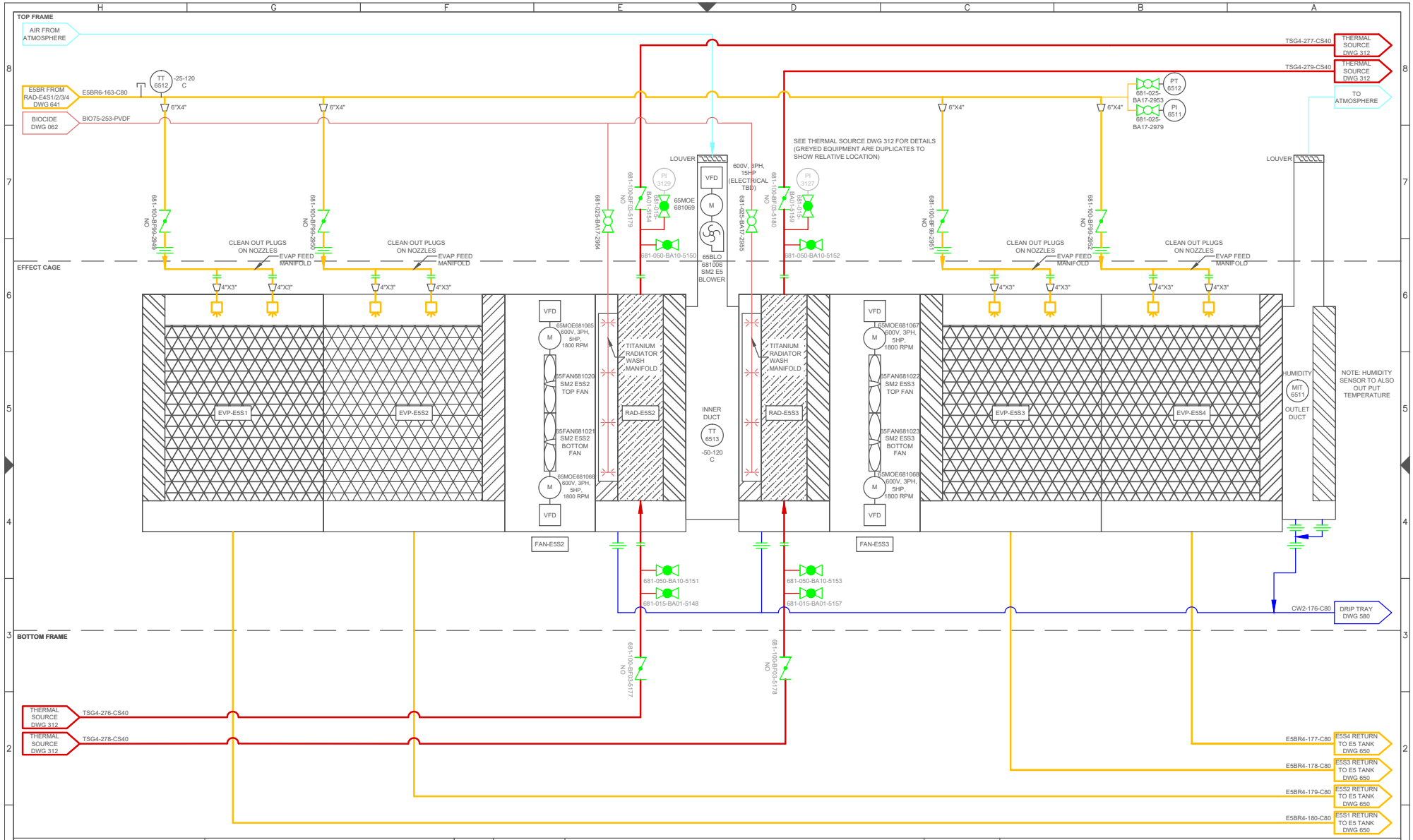

Saltworks
13800 Steveston Hwy
Richmond, BC, Canada, V6W 1A8
Tel: 604.628.6508 Fax: 604.676.2463
www.saltworkstech.com

DRAWING STATUS: FACTORY AS BUILT

THIS DOCUMENT EMBODIES DESIGNS AND INFORMATION THAT ARE PROPRIETARY TO SALTWORKS. IT IS TO BE USED ONLY FOR THE PURPOSE AND BY THE ENTITY FOR WHICH IT WAS ORIGINALLY SUPPLIED. THE DOCUMENT MAY NOT BE DUPLICATED OR DISCLOSED TO OTHER PERSON OR ENTITY, OR USED FOR MANUFACTURE OF THE ITEM IN PART OR IN WHOLE WITHOUT THE PRIOR WRITTEN PERMISSION OF SALTWORKS.

DO NOT SCALE DRAWING

LTR	DATE	DESCRIPTION	REV. BY:
L	16-MAR-2018	NO CHANGES	–
M	20-APR-2018	NO CHANGES	–
N	06-JUL-2018	NO CHANGES	–
K	23-FEB-2018	NO CHANGES	–

TITLE: (SM2) 651: EFFECT 5 MODULES

PROJECT: SALTMAKER GEN III		CUSTOMER: AGNICO EAGLE MINES	REVISION N
PREPARED BY: JLAU	DATE: 01-SEP-2017	DWG. NO: SW_EN_SM_AEM-01_PID_SM2_DWG_651	
CHECKED BY: MLOW	DATE: 05-SEP-2017	JOB/CO NO: (JOB NO.)	
APPROVED BY: APPROVED BY	DATE: APPROVED DATE	SHEET: 115OF117	

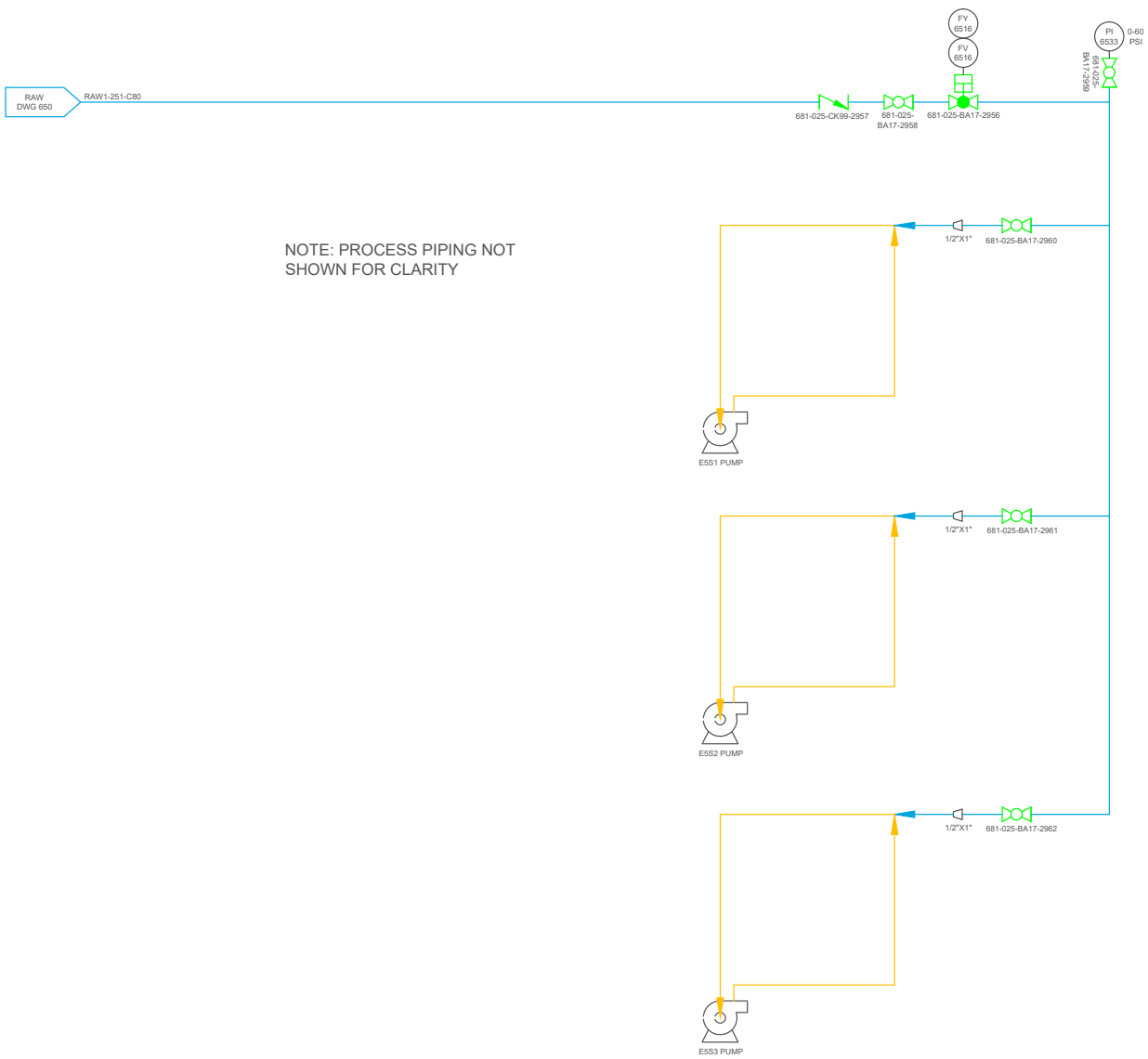

Saltworks
13800 Steveston Hwy
Richmond, BC, Canada, V6W 1A8
Tel: 604.628.6508 Fax: 604.676.2463
www.saltworkstech.com

DRAWING STATUS: FACTORY AS BUILT

THIS DOCUMENT EMBODIES DESIGNS AND INFORMATION THAT ARE PROPRIETARY TO SALTWORKS. IT IS TO BE USED ONLY FOR THE PURPOSE AND BY THE ENTITY FOR WHICH IT WAS ORIGINALLY SUPPLIED. THE DOCUMENT MAY NOT BE DUPLICATED OR DISCLOSED TO OTHER PERSON OR ENTITY, OR USED FOR MANUFACTURE OF THE ITEM IN PART OR IN WHOLE WITHOUT THE PRIOR WRITTEN PERMISSION OF SALTWORKS.

DO NOT SCALE DRAWING

LTR	DATE	DESCRIPTION	REV. BY:
L	16–MAR–2018	NO CHANGES	–
M	20–APR–2018	NO CHANGES	–
N	06–JUL–2018	NO CHANGES	–
K	23–FEB–2018	NO CHANGES	–

TITLE: (SM2) 653: EFFECT 5 PUMP SEAL FLUSH

PROJECT: SALTMAKER GEN III		CUSTOMER: AGNICO EAGLE MINES	REVISION N
PREPARED BY: JLAU	DATE: 01–SEP–2017	DWG. NO: SW_EN_SM_AEM–01_PID_SM2_DWG_653	
CHECKED BY: MLOW	DATE: 05–SEP–2017	JOB/CO NO: (JOB NO.)	
APPROVED BY: APPROVED BY	DATE: APPROVED DATE	SHEET: 116OF117	

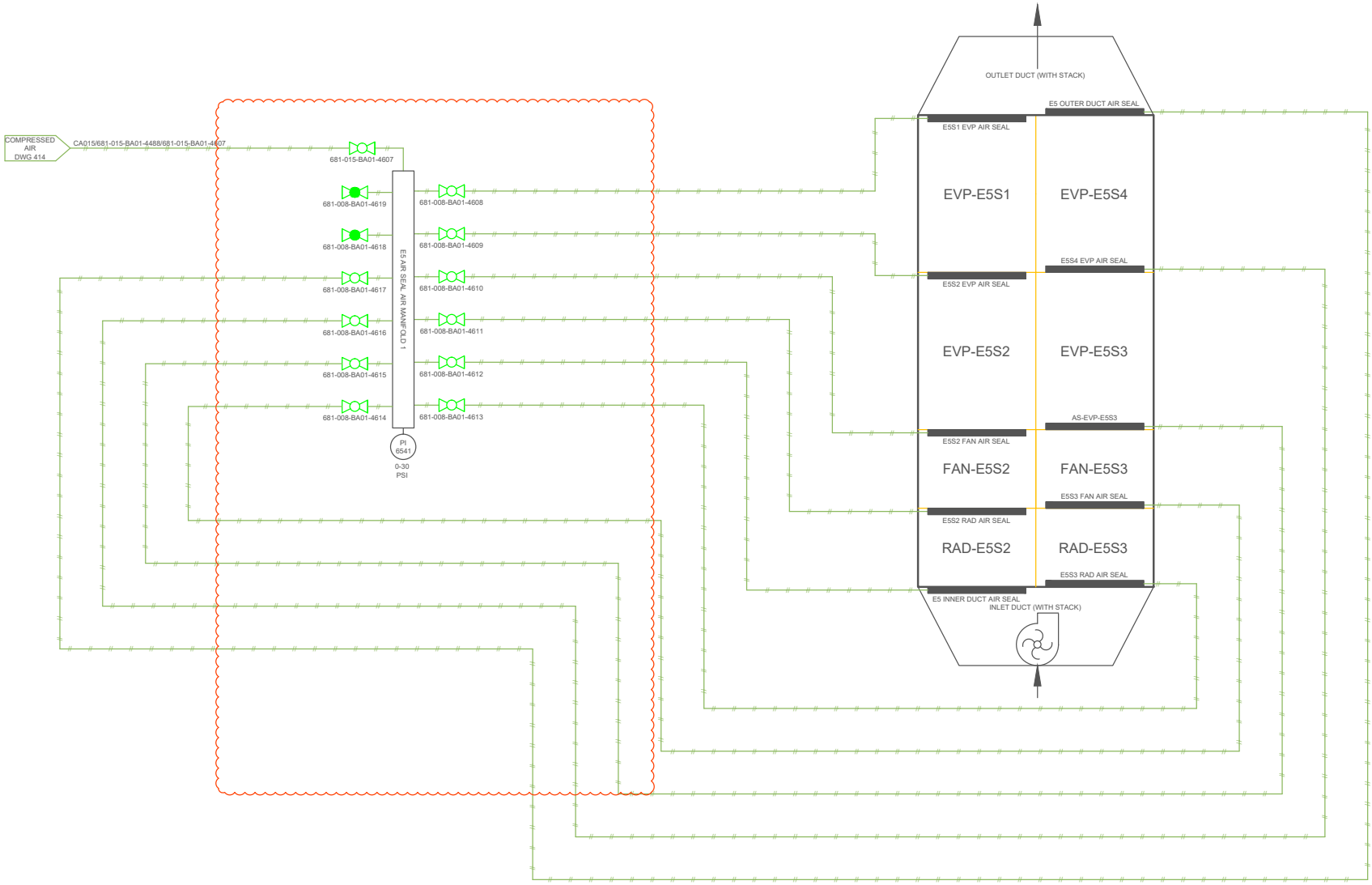

Saltworks
13800 Steveston Hwy
Richmond, BC, Canada, V6W 1A8
Tel: 604.628.6508 Fax: 604.676.2463
www.saltworkstech.com

DRAWING STATUS: FACTORY AS BUILT

THIS DOCUMENT EMBODIES DESIGNS AND INFORMATION THAT ARE PROPRIETARY TO SALTWORKS. IT IS TO BE USED ONLY FOR THE PURPOSE AND BY THE ENTITY FOR WHICH IT WAS ORIGINALLY SUPPLIED. THE DOCUMENT MAY NOT BE DUPLICATED OR DISCLOSED TO OTHER PERSON OR ENTITY, OR USED FOR MANUFACTURE OF THE ITEM IN PART OR IN WHOLE WITHOUT THE PRIOR WRITTEN PERMISSION OF SALTWORKS.

DO NOT SCALE DRAWING

LTR	DATE	DESCRIPTION	REV. BY:
L	16–MAR–2018	NO CHANGES	–
M	20–APR–2018	NO CHANGES	–
N	06–JUL–2018	UPDATED MANIFOLD	JLAU
K	23–FEB–2018	NO CHANGES	–

TITLE: (SM2) 654: EFFECT 5 AIR SEALS

PROJECT: SALTMAKER GEN III		CUSTOMER: AGNICO EAGLE MINES	REVISION N
PREPARED BY: JLAU	DATE: 01–SEP–2017	DWG. NO: SW_EN_SM_AEM–01_PID_SM2_DWG_654	
CHECKED BY: MLOW	DATE: 05–SEP–2017	JOB/CO NO: (JOB NO.)	
APPROVED BY: APPROVED BY	DATE: APPROVED DATE	SHEET: 117OF117	