Saltworks

SALINE WATER TREATMENT PLANT
ENGINEERING DOCUMENT PACKAGE

DATE: 16-Aug-2018
CONFIDENTIAL

Client: Agnico Eagle Mines

Project: SaltMaker SM-AEM-01

The following engineering document package contains work completed under the guidance and supervision of professional engineers, P.Eng..

The package includes:

1) AEM Integration PFD Revision 3, dated 30-Oct-2017
2) Solids Extraction:

   Infographic Revision B, dated 13-Mar-2018

   Solids Extra Extraction System – Simplified Revision A, dated 23-Nov-2017
3) SW_EN_AEM-01_GAD SaltMaker GAD Revision F, dated 13-Jul-2018
4) Agnico Eagle Minds P&ID Drawing Package Revision N, dated 06-Jul-2018
5) System 100: Post Treatment RO P&ID Revision 3, Project Number 17041-100D, Nav Number: 49-0462, dated 23-Jan-2018

REGISTERED PROFESSIONAL ENGINEER
K.K.H. TSIN
LICENSEE
NT/NU

Aug 16, 2018

PERMIT TO PRACTICE
SALTWORKS TECHNOLOGIES INC.
Signature
Date Aug 16, 2018
PERMIT NUMBER: P 1239
NT/NU Association of Professional Engineers and Geoscientists

REGISTERED PROFESSIONAL ENGINEER
B.S. SPARROW
LICENSEE
NT/NU

Aug 16, 2018

AGNICO EAGLE MINES
P&ID DRAWING PACKAGE

COMPRESSED AIR - COMMON
REVISION N

Saltworks
13800 Steveston Hwy
Richmond, BC, Canada, V6W 1A8
Tel: 604.628.6508 Fax: 604.676.2463
www.saltworkstech.com

DRAWING STATUS: FACTORY AS BUILT

THIS DOCUMENT EMBODIES DESIGNS AND INFORMATION THAT ARE PROPRIETARY TO SALTWORKS. IT IS TO BE USED ONLY FOR THE PURPOSE AND BY THE ENTITY FOR WHICH IT WAS ORIGINALLY SUPPLIED. THE DOCUMENT MAY NOT BE DUPLICATED OR DISCLOSED TO OTHER PERSON OR ENTITY, OR USED FOR MANUFACTURE OF THE ITEM IN PART OR IN WHOLE WITHOUT THE PRIOR WRITTEN PERMISSION OF SALTWORKS.

DO NOT SCALE DRAWING

LTR	DATE	DESCRIPTION	REV. BY:
N	06-JUL-2018	AS MARKED BY REVISION CLOUDS	JLAU
K	26-FEB-2018	PROCESS UPDATE	SNOW
L	16-MAR-2018	AS MARKED BY REVISION CLOUDS	JLAU
M	08-MAY-2018	AS MARKED BY REVISION CLOUDS	JLAU

TITLE: COVER SHEET

PROJECT: SALTMAKER GEN III

CUSTOMER: AGNICO EAGLE MINES

REVISION: N

PREPARED BY: SNOW DATE: 22-FEB-2018

CHECKED BY: XXIAO DATE: 23-FEB-2018

APPROVED BY: APPROVED BY DATE: APPROVED DATE

DWG. NO: COVER SHEET

JOB/CO NO: (JOB NO.)

SHEET: # OF #

DRAWING LIST 1

SHEET NO.	DRAWING NO.	DESCRIPTION
		COVER SHEET
		DRAWING LIST 1
		DRAWING LIST 2
		LEGEND
		COMMON
1	SW_EN_SM_AEM-01_PID_COMMON_DWG_000	MASTER PFD
2	SW_EN_SM_AEM-01_PID_COMMON_DWG_010	PROCESS FLOW DIAGRAM
3	SW_EN_SM_AEM-01_PID_COMMON_DWG_020	CONTAINER LAYOUT
4	SW_EN_SM_AEM-01_PID_COMMON_DWG_030	MODULES LAYOUT
5	SW_EN_SM_AEM-01_PID_COMMON_DWG_040	PLANT FEED TANKS
6	SW_EN_SM_AEM-01_PID_COMMON_DWG_041	PLANT FEED PUMP SKIDS
7	SW_EN_SM_AEM-01_PID_COMMON_DWG_050	CLEAN RESERVE AND BLOWDOWN SYSTEMS
8	SW_EN_SM_AEM-01_PID_COMMON_DWG_060	ACID DOSING SYSTEM
9	SW_EN_SM_AEM-01_PID_COMMON_DWG_061	BASE DOSING SYSTEM
10	SW_EN_SM_AEM-01_PID_COMMON_DWG_062	BIOCIDE DOSING SYSTEM
11	SW_EN_SM_AEM-01_PID_COMMON_DWG_063	ANTIFOAM DOSING SYSTEM
12	SW_EN_SM_AEM-01_PID_COMMON_DWG_064	ANTISCALANT DOSING SYSTEM
13	SW_EN_SM_AEM-01_PID_COMMON_DWG_070	UTILITY WATER DISTRIBUTION
		SALTMAKER 1 (SM1)
14	SW_EN_SM_AEM-01_PID_SM1_DWG_110	THERMAL SOURCE PRIMARY HEAT EXCHANGERS
15	SW_EN_SM_AEM-01_PID_SM1_DWG_120	CONDENSED WATER SYSTEM
16	SW_EN_SM_AEM-01_PID_SM1_DWG_130	FEED DISTRIBUTION
17	SW_EN_SM_AEM-01_PID_SM1_DWG_150	CIP TANKS
18	SW_EN_SM_AEM-01_PID_SM1_DWG_151	CIP PUMP SKID
19	SW_EN_SM_AEM-01_PID_SM1_DWG_160	EFFECT HOLD 1
20	SW_EN_SM_AEM-01_PID_SM1_DWG_161	EFFECT HOLD 2
21	SW_EN_SM_AEM-01_PID_SM1_DWG_162	SYSTEM HOLD
22	SW_EN_SM_AEM-01_PID_SM1_DWG_163	CALCIUM EXTRACTION
23	SW_EN_SM_AEM-01_PID_SM1_DWG_164	EH1 SOLIDS EXTRACTION
24	SW_EN_SM_AEM-01_PID_SM1_DWG_165	EH2 SOLIDS EXTRACTION
25	SW_EN_SM_AEM-01_PID_SM1_DWG_180	DRIP TRAYS
26	SW_EN_SM_AEM-01_PID_SM1_DWG_210	EFFECT 1 TANK AND PUMPS
27	SW_EN_SM_AEM-01_PID_SM1_DWG_211	EFFECT 1 MODULES
28	SW_EN_SM_AEM-01_PID_SM1_DWG_213	EFFECT 1 PUMP SEAL FLUSH
29	SW_EN_SM_AEM-01_PID_SM1_DWG_214	EFFECT 1 AIR SEALS
30	SW_EN_SM_AEM-01_PID_SM1_DWG_220	EFFECT 2 TANK AND PUMPS
31	SW_EN_SM_AEM-01_PID_SM1_DWG_221	EFFECT 2 MODULES
32	SW_EN_SM_AEM-01_PID_SM1_DWG_222	EFFECT 2 SOLIDS EXTRACTION
33	SW_EN_SM_AEM-01_PID_SM1_DWG_223	EFFECT 2 PUMP SEAL FLUSH
34	SW_EN_SM_AEM-01_PID_SM1_DWG_224	EFFECT 2 AIR SEALS
35	SW_EN_SM_AEM-01_PID_SM1_DWG_230	EFFECT 3 TANK AND PUMPS
36	SW_EN_SM_AEM-01_PID_SM1_DWG_231	EFFECT 3 MODULES
37	SW_EN_SM_AEM-01_PID_SM1_DWG_232	EFFECT 3 SOLIDS EXTRACTION
38	SW_EN_SM_AEM-01_PID_SM1_DWG_233	EFFECT 3 PUMP SEAL FLUSH
39	SW_EN_SM_AEM-01_PID_SM1_DWG_234	EFFECT 3 AIR SEALS
40	SW_EN_SM_AEM-01_PID_SM1_DWG_240	EFFECT 4 TANK AND PUMPS
41	SW_EN_SM_AEM-01_PID_SM1_DWG_241	EFFECT 4 MODULES
42	SW_EN_SM_AEM-01_PID_SM1_DWG_243	EFFECT 4 PUMP SEAL FLUSH
43	SW_EN_SM_AEM-01_PID_SM1_DWG_244	EFFECT 4 AIR SEALS
44	SW_EN_SM_AEM-01_PID_SM1_DWG_250	EFFECT 5 TANK AND PUMPS
45	SW_EN_SM_AEM-01_PID_SM1_DWG_251	EFFECT 5 MODULES
46	SW_EN_SM_AEM-01_PID_SM1_DWG_253	EFFECT 5 PUMP SEAL FLUSH
47	SW_EN_SM_AEM-01_PID_SM1_DWG_254	EFFECT 5 AIR SEALS
		THERMAL SYSTEM
48	SW_EN_SM_AEM-01_PID_DWG_310	THERMAL SKID: WATER LOOP
49	SW_EN_SM_AEM-01_PID_DWG_311	THERMAL SKID: WATER LOOP
50	SW_EN_SM_AEM-01_PID_DWG_312	THERMAL SKID: GYLCOL LOOP
		POST TREATMENT
51	SW_EN_SM_AEM-01_PID_COMMON_DWG_320	NITRITE DESTRUCTION AND RO PC SYSTEM
52	SW_EN_SM_AEM-01_PID_COMMON_DWG_321	AMMONIA DESTRUCTION SYSTEM
53	SW_EN_SM_AEM-01_PID_COMMON_DWG_322	RO BRINE FLUSH TANK
54	SW_EN_SM_AEM-01_PID_COMMON_DWG_323	RO PERMEATE TANK
		COMPRESSED AIR-COMMON PACKAGE
55	SW_EN_SM_AEM-01_PID_COMPRESSED AIR-COMMON_DWG_400	COMPRESSED AIR SYSTEM
56	SW_EN_SM_AEM-01_PID_COMPRESSED AIR-COMMON_DWG_401	AMMONIA DES, BRINE BLOWDOWN AND PLANT FEED AIR
57	SW_EN_SM_AEM-01_PID_COMPRESSED AIR-COMMON_DWG_402	CHEMICAL DOSING AND ANCILLARY STAND PIPE AIR
58	SW_EN_SM_AEM-01_PID_COMPRESSED AIR-COMMON_DWG_403	COMMON AND POST TREATMENT AIR BANK 1
59	SW_EN_SM_AEM-01_PID_COMPRESSED AIR-COMMON_DWG_404	COMMON AND POST TREATMENT AIR BANK 2
		COMPRESSED AIR-SM1
60	SW_EN_SM_AEM-01_PID_COMPRESSED AIR-SM1_DWG_410	SM INSTRUMENT AND PROCESS AIR
61	SW_EN_SM_AEM-01_PID_COMPRESSED AIR-SM1_DWG_411	EH1/EH2 EXTRACT AND CIP AIR

Saltworks
13800 Steveston Hwy
Richmond, BC, Canada, V6W 1A8
Tel: 604.628.6508 Fax: 604.676.2463
www.saltworkstech.com

DRAWING STATUS: FACTORY AS BUILT

THIS DOCUMENT EMBODIES DESIGNS AND INFORMATION THAT ARE PROPRIETARY TO SALTWORKS. IT IS TO BE USED ONLY FOR THE PURPOSE AND BY THE ENTITY FOR WHICH IT WAS ORIGINALLY SUPPLIED. THE DOCUMENT MAY NOT BE DUPLICATED OR DISCLOSED TO OTHER PERSON OR ENTITY, OR USED FOR MANUFACTURE OF THE ITEM IN PART OR IN WHOLE WITHOUT THE PRIOR WRITTEN PERMISSION OF SALTWORKS.

DO NOT SCALE DRAWING

LTR	DATE	DESCRIPTION	REV. BY:
N	06-JUL-2018	NO CHANGES	–
K	26-FEB-2018	NO CHANGES	–
L	16-MAR-2018	NO CHANGES	–
M	08-MAY-2018	NO CHANGES	–

TITLE: DRAWING LIST 1

PROJECT: SALTMAKER GEN III

CUSTOMER: AGNICO EAGLE MINES

REVISION: N

PREPARED BY:	SNOW	DATE:	22-FEB-2018
CHECKED BY:	XXIAO	DATE:	23-FEB-2018
APPROVED BY:	APPROVED BY	DATE:	APPROVED DATE

DWG. NO: DRAWING LIST 1

JOB/CO NO: (JOB NO.)

SHEET: # OF #

DRAWING LIST 2

SHEET NO.	DRAWING NO.	DESCRIPTION
62	SW_EN_SM_AEM-01_PID_COMPRESSED AIR-SM1_DWG_412	EH1/EH2 EXTRACT AND CIP AIR
63	SW_EN_SM_AEM-01_PID_COMPRESSED AIR-SM1_DWG_413	PLUG PREVENTION PUMP AIR
64	SW_EN_SM_AEM-01_PID_COMPRESSED AIR-SM1_DWG_414	AIR SEAL, STAND PIPE AND E2/E3 SE AIR
65	SW_EN_SM_AEM-01_PID_COMPRESSED AIR-SM1_DWG_415	UTILITY AIR
66	SW_EN_SM_AEM-01_PID_COMPRESSED AIR-SM1_DWG_416	BOP1 AIR SOLENOID BANK
67	SW_EN_SM_AEM-01_PID_COMPRESSED AIR-SM1_DWG_417	E2/E3 SE AIR SOLENOID BANK
68	SW_EN_SM_AEM-01_PID_COMPRESSED AIR-SM1_DWG_418	BOP2 AIR SOLENOID BANK
69	SW_EN_SM_AEM-01_PID_COMPRESSED AIR-SM1_DWG_419	BOP3 AIR SOLENOID BANK
70	SW_EN_SM_AEM-01_PID_COMPRESSED AIR-SM1_DWG_420	CIP, EH/SY AIR SOLENOID BANK
	SW_EN_SM_AEM-01_PID_COMPRESSED AIR-SM1_DWG_421	H1/H2 SE AIR SOLENOID BANK
71		
		COMPRESSED AIR-SM2
72	SW_EN_SM_AEM-01_PID_COMPRESSED AIR-SM2_DWG_450	SM INSTRUMENT AND PROCESS AIR
73	SW_EN_SM_AEM-01_PID_COMPRESSED AIR-SM2_DWG_451	EH1/EH2 EXTRACT AND CIP AIR
74	SW_EN_SM_AEM-01_PID_COMPRESSED AIR-SM2_DWG_452	EFFECT/SYSTEM HOLD AND CAL EXTRACTION AIR
75	SW_EN_SM_AEM-01_PID_COMPRESSED AIR-SM2_DWG_453	PLUG PREVENTION PUMP AIR
76	SW_EN_SM_AEM-01_PID_COMPRESSED AIR-SM2_DWG_454	AIR SEAL, STAND PIPE AND E2/E3 SE AIR
77	SW_EN_SM_AEM-01_PID_COMPRESSED AIR-SM2_DWG_455	UTILITY AIR
78	SW_EN_SM_AEM-01_PID_COMPRESSED AIR-SM2_DWG_456	BOP1 AIR SOLENOID BANK
79	SW_EN_SM_AEM-01_PID_COMPRESSED AIR-SM2_DWG_457	E2/E3 SE AIR SOLENOID BANK
80	SW_EN_SM_AEM-01_PID_COMPRESSED AIR-SM2_DWG_458	BOP2 AIR SOLENOID BANK
81	SW_EN_SM_AEM-01_PID_COMPRESSED AIR-SM2_DWG_459	BOP3 AIR SOLENOID BANK
82	SW_EN_SM_AEM-01_PID_COMPRESSED AIR-SM2_DWG_460	CIP, EH/SY AIR SOLENOID BANK
83	SW_EN_SM_AEM-01_PID_COMPRESSED AIR-SM2_DWG_461	H1/H2 SE AIR SOLENOID BANK

SHEET NO.	DRAWING NO.	DESCRIPTION
		SALTMAKER 2 (SM2)
84	SW_EN_SM_AEM-01_PID_SM2_DWG_510	THERMAL SOURCE PRIMARY HEAT EXCHANGERS
85	SW_EN_SM_AEM-01_PID_SM2_DWG_520	CONDENSED WATER SYSTEM
86	SW_EN_SM_AEM-01_PID_SM2_DWG_530	FEED DISTRIBUTION
87	SW_EN_SM_AEM-01_PID_SM2_DWG_550	CIP TANKS
88	SW_EN_SM_AEM-01_PID_SM2_DWG_551	CIP PUMP SKID
89	SW_EN_SM_AEM-01_PID_SM2_DWG_560	EFFECT HOLD 1
90	SW_EN_SM_AEM-01_PID_SM2_DWG_561	EFFECT HOLD 2
91	SW_EN_SM_AEM-01_PID_SM2_DWG_562	SYSTEM HOLD
92	SW_EN_SM_AEM-01_PID_SM2_DWG_563	CALCIUM EXTRACTION
93	SW_EN_SM_AEM-01_PID_SM2_DWG_564	EH1 SOLIDS EXTRACTION
94	SW_EN_SM_AEM-01_PID_SM2_DWG_565	EH2 SOLIDS EXTRACTION
	SW_EN_SM_AEM-01_PID_SM2_DWG_580	DRIP TRAYS
95		
96	SW_EN_SM_AEM-01_PID_SM2_DWG_610	EFFECT 1 TANK AND PUMPS
97	SW_EN_SM_AEM-01_PID_SM2_DWG_611	EFFECT 1 MODULES
98	SW_EN_SM_AEM-01_PID_SM2_DWG_613	EFFECT 1 PUMP SEAL FLUSH
	SW_EN_SM_AEM-01_PID_SM2_DWG_614	EFFECT 1 AIR SEALS
99		
100	SW_EN_SM_AEM-01_PID_SM2_DWG_620	EFFECT 2 TANK AND PUMPS
101	SW_EN_SM_AEM-01_PID_SM2_DWG_621	EFFECT 2 MODULES
102	SW_EN_SM_AEM-01_PID_SM2_DWG_622	EFFECT 2 SOLIDS EXTRACTION
103	SW_EN_SM_AEM-01_PID_SM2_DWG_623	EFFECT 2 PUMP SEAL FLUSH
	SW_EN_SM_AEM-01_PID_SM2_DWG_624	EFFECT 2 AIR SEALS
104		
105	SW_EN_SM_AEM-01_PID_SM2_DWG_630	EFFECT 3 TANK AND PUMPS
106	SW_EN_SM_AEM-01_PID_SM2_DWG_631	EFFECT 3 MODULES
107	SW_EN_SM_AEM-01_PID_SM2_DWG_632	EFFECT 3 SOLIDS EXTRACTION
108	SW_EN_SM_AEM-01_PID_SM2_DWG_633	EFFECT 3 PUMP SEAL FLUSH
	SW_EN_SM_AEM-01_PID_SM2_DWG_634	EFFECT 3 AIR SEALS
109		
110	SW_EN_SM_AEM-01_PID_SM2_DWG_640	EFFECT 4 TANK AND PUMPS
111	SW_EN_SM_AEM-01_PID_SM2_DWG_641	EFFECT 4 MODULES
112	SW_EN_SM_AEM-01_PID_SM2_DWG_643	EFFECT 4 PUMP SEAL FLUSH
	SW_EN_SM_AEM-01_PID_SM2_DWG_644	EFFECT 4 AIR SEALS
113		
114	SW_EN_SM_AEM-01_PID_SM2_DWG_650	EFFECT 5 TANK AND PUMPS
115	SW_EN_SM_AEM-01_PID_SM2_DWG_651	EFFECT 5 MODULES
116	SW_EN_SM_AEM-01_PID_SM2_DWG_653	EFFECT 5 PUMP SEAL FLUSH
117	SW_EN_SM_AEM-01_PID_SM2_DWG_654	EFFECT 5 AIR SEALS
		VENDOR DRAWINGS
	USW_17041_100D	POST TREATMENT RO

Saltworks
13800 Steveston Hwy
Richmond, BC, Canada, V6W 1A8
Tel: 604.628.6508 Fax: 604.676.2463
www.saltworkstech.com

DRAWING STATUS: FACTORY AS BUILT

THIS DOCUMENT EMBODIES DESIGNS AND INFORMATION THAT ARE PROPRIETARY TO SALTWORKS. IT IS TO BE USED ONLY FOR THE PURPOSE AND BY THE ENTITY FOR WHICH IT WAS ORIGINALLY SUPPLIED. THE DOCUMENT MAY NOT BE DUPLICATED OR DISCLOSED TO OTHER PERSON OR ENTITY, OR USED FOR MANUFACTURE OF THE ITEM IN PART OR IN WHOLE WITHOUT THE PRIOR WRITTEN PERMISSION OF SALTWORKS.

DO NOT SCALE DRAWING

LTR	DATE	DESCRIPTION	REV. BY:
N	06-JUL-2018	NO CHANGES	–
K	26-FEB-2018	NO CHANGES	–
L	16-MAR-2018	NO CHANGES	–
M	08-MAY-2018	NO CHANGES	–

TITLE: DRAWING LIST 2

PROJECT: SALTMAKER GEN III		CUSTOMER: AGNICO EAGLE MINES	REVISION N
PREPARED BY: SNOW	DATE: 22-FEB-2018	DWG. NO: DRAWING LIST 2	
CHECKED BY: XXIAO	DATE: 23-FEB-2018	JOB/CO NO: (JOB NO.)	
APPROVED BY: APPROVED BY	DATE: APPROVED DATE	SHEET: # OF #	

VALVES

- MANUAL BALL (MBV) – NORMALLY CLOSED
- MANUAL BALL (MBV) – NORMALLY OPEN
- CHECK (CV)
- GATE (GV)
- BUTTERFLY (BFV)
- PRESSURE RELIEF VALVE (PRV)
- FLOAT VALVE (FV)
- DIAPHRAGM (DV)
- NEEDLE (NV)
- 3–WAY
- 3–WAY SOLENOID
- 4–WAY SOLENOID
- 4–FUNCTION VALVE
- FOOT VALVE

N.O. – NORMALLY OPEN
N.C. – NORMALLY CLOSED

CONTROL VALVES/ACTUATORS

- PRESSURE CONTROL VALVE (PCV) WITH PRESSURE GAUGE
- DOUBLE ACTING ACTUATED BALL VALVE (ABV) – NORMALLY CLOSED
- DOUBLE ACTING ACTUATED BALL VALVE (ABV) – NORMALLY OPEN
- DOUBLE ACTING ACTUATED BALL VALVE (ABV) – NORMALLY OPEN WITH PINCH VALVES
- SOLENOID VALVE (SV)
- SOLENOID VALVE (SV)
- MOTORIZED ACTUATOR
- MOTORIZED ACTUATOR WITH MANUAL OVERRIDE
- DOUBLE ACTING DIAPHRAGM ACTUATOR WITH LIMIT STOP
- DOUBLE ACTING DIAPHRAGM ACTUATOR WITH SPRING TO CLOSE
- DOUBLE ACTING DIAPHRAGM ACTUATOR WITH SPRING TO OPEN
- AIR OPERATOR W/POSITIONER

EQUIPMENT SYMBOL

- MIXER OR AGITATOR (MX)
- INLINE STATIC MIXER
- HEATER (HE)
- ELECTRIC HEATER (EH)
- INJECTION QUILL
- EDUCTOR/EJECTOR (ED)
- POSITIVE DISPLACEMENT PUMP W/MANUAL STROKE ADJUSTMENT (MP)
- POSITIVE DISPLACEMENT PUMP W/ELECTRIC STROKE ADJUSTMENT (MP)
- ROTARY COMPRESSER OR BLOWER
- AIR FILTER
- BLOWER OR FAN (BW OR FN)
- VACUUM PUMP (VP)
- DIAPHRAGM PUMP (P)
- CENTRIFUGAL PUMP (P)
- HIGH PRESSURE PUMP (P)
- DESICCANT BREATHER
- VENT PIPE
- Y–STRAINER
- RUPTURE DISC
- DIAPHRAGM SEAL
- STANDPIPE (SP)
- CALIBRATION COLUMN (CC)
- AIR COMPRESSOR (AC)
- PNEUMATIC VIBRATOR (VIB)

- RO/UF MODULE
- FILTER – BASKET (BAF)
- FILTER (F) HOUSING
- CLOSED TOP TANK (TK)
- CONE BOTTOM TANK (TK)
- OPEN TOP TANK (TK) WITH COVER
- PLATE HEAT EXCHANGER (HX)
- SHELL AND TUBE HEAT EXCHANGER (HX)
- CONE CONSTRAINER (CSTR)
- PERISTALTIC HOSE PUMP (P)
- FLEXIBLE CONNECTION

MISCELLANEOUS SYMBOLS

- LINE, EQUIPMENT OR PRODUCT REFERENCES INTO OR LEAVING DWG.
- TIE IN TO PIPING BY OTHERS
- 304 | CPVC — PIPING MATERIAL SPEC. BREAK

SOLENOID VALVE OPERATION

3–WAY: FAIL OPEN TO PATH A–C

4–WAY: FAIL OPEN TO PATHS A–C AND D–B

- AIR SUPPLY
- NITROGEN SUPPLY
- CONCENTRIC REDUCING
- ECCENTRIC REDUCING
- ENCLOSURE (CAP)
- FLANGE
- END CLOSURE (BLIND FLANGE)
- END CLOSURE (VIC PLUG)
- QUICK DISCONNECT
- UNION
- SANITARY CONNECTION
- FLOOR DRAIN OR SUMP
- BULKHEAD
- EXPANSION JOINT

FILL SYMBOLS

- SPLASH FILL
- FILM FILL
- NET FILL

INSTRUMENT LINE SYMBOLS

- PNEUMATIC SIGNAL (ANALOG)
- PNEUMATIC SIGNAL (DIGITAL)
- ELECTRICAL SIGNAL (ANALOG – 4–20mA OR 1–10 VDC)
- ELECTRICAL SIGNAL (FREQUENCY OR PULSE)
- CAPILLARY TUBING (FILLED TUBING)
- CONNECTION TO PROCESS, OR INSTRUMENT SUPPLY

FLUID LINE SYMBOLS

- EFFECT 1 BRINE (90°C)
- EFFECT 2 BRINE (75°C)
- EFFECT 3 BRINE (60°C)
- EFFECT 4 BRINE (45°C)
- EFFECT 5 BRINE (30°C)
- CIP
- RAW FEED
- CONDENSED WATER (70°C – 40°C)
- THERMAL LOOP (GYLCOL)
- EVAPORATE
- COMPRESSED AIR LINE
- ACID DOSING
- BASE DOSING
- ANTIFOAM
- BIOFILM TREATMENT SOLUTION

MISCELLANEOUS LINE SYMBOLS

- SYSTEM BOUNDARY

INSTRUMENT SYMBOLS

- LOCALLY MOUNTED
- PANEL MOUNTED (MAIN OR REMOTE)
- SHARED DISPLAY (CRT) AND/OR SHARED CONTROL

CONTROL SYMBOLS

- DI — DISCRETE INPUT TO PLC
- DO — DISCRETE OUTPUT FROM PLC
- AI — ANALOG INPUT TO PLC
- AO — ANALOG OUTPUT FROM PLC

EQUIPMENT IDENTIFICATION

M – MOTOR
AS – AIR SEAL
VFD – VARIABLE FREQUENCY DRIVE
DRY – DRYER

MODULE IDENTIFICATION

EVP – EVAPORATOR MODULE
RAD – RADIATOR MODULE
FAN – FAN MODULE

MATERIAL ABBREVIATIONS

PP – POLYPROPYLENE
PVC – POLYVINYL CHLORIDE
UPVC – POLYVINYL CHLORIDE
P – POLYVINYL CHLORIDE (IN LINE NUMBER)
CPVC – CHLORINATED POLYVINYL CHLORIDE
C – CHLORINATED POLYVINYL CHLORIDE (IN LINE NUMBER)
HDPE – HIGH DENSITY POLYETHYLENE
PVDF – POLYVINYLIDENE FLUORIDE
PVFB – PVDF BEADLESS & CREVICE FREE
PVFL – PVDF LINED
PTFE – TEFLON
304 – 304 STAINLESS STEEL
304L – 304L STAINLESS STEEL
316 – 316 STAINLESS STEEL
316L – 316L STAINLESS STEEL

INSTRUMENT IDENTIFICATION

PARAMETER (1ST LETTER)

P – PRESSURE
F – FLOW
T – TEMPERATURE
C – CONDUCTIVITY
D – DENSITY
Z – POSITION
A – ANALYTICAL (SEE NOTES)

TYPE (2ND AND 3RD LETTER)

I – INDICATING/INDICATOR
T – TRANSMITTER
E – ELEMENT/PROBE
A – ALARM
S – SWITCH

NOTES:

1. THE DESCRIPTION OF AN ANALYTICAL VARIABLE FUNCTION (pH, SiO_2, O, ETC.) SHALL BE SHOWN OUTSIDE THE INSTRUMENT SYMBOL. EXAMPLE: AIT pH
2. ADD THE SUFFIX L (LOW), LL (LOW–LOW), H (HIGH), HH (HIGH–HIGH), HL (HIGH–LOW), AS REQUIRED. EXAMPLE: PSL FAL

LINE NUMBERING

E1BR4–001–P80

FLUID — SIZE — SEQUENCE NUMBER — MATERIAL — SCHEDULE

VALVE NUMBERING

681–015–BA17–0001

AREA CODE — VALVE SIZE — VALVE TYPE — SEQUENTIAL NUMBER

VALVE SIZE CONVERSION

MM		INCH
008	-	1/4
015	-	1/2
025	-	1
050	-	2
100	-	4
150	-	6

VALVE TYPE CONVERSION

BA17	-	BALL VALVE
BA99	-	TOUGH BALL VALVE
BF99	-	TOUGH BUTTERFLY VALVE (EXCEPT THOSE NOTED "NON TOUGH")
CK99	-	CHECK VALVE
GA99	-	GATE VALVE

Saltworks
13800 Steveston Hwy
Richmond, BC, Canada, V6W 1A8
Tel: 604.628.6508 Fax: 604.676.2463
www.saltworkstech.com

DRAWING STATUS: FACTORY AS BUILT

THIS DOCUMENT EMBODIES DESIGNS AND INFORMATION THAT ARE PROPRIETARY TO SALTWORKS. IT IS TO BE USED ONLY FOR THE PURPOSE AND BY THE ENTITY FOR WHICH IT WAS ORIGINALLY SUPPLIED. THE DOCUMENT MAY NOT BE DUPLICATED OR DISCLOSED TO OTHER PERSON OR ENTITY, OR USED FOR MANUFACTURE OF THE ITEM IN PART OR IN WHOLE WITHOUT THE PRIOR WRITTEN PERMISSION OF SALTWORKS.

DO NOT SCALE DRAWING

LTR	DATE	DESCRIPTION	REV. BY:
N	06–JUL–2018	NO CHANGES	–
K	26–FEB–2018	NO CHANGES	–
L	16–MAR–2018	NO CHANGES	–
M	08–MAY–2018	NO CHANGES	–

TITLE: LEGEND

PROJECT: SALTMAKER GEN III

CUSTOMER: AGNICO EAGLE MINES

REVISION: N

PREPARED BY:	SNOW	DATE:	22–FEB–2018
CHECKED BY:	XXIAO	DATE:	23–FEB–2018
APPROVED BY:	APPROVED BY	DATE:	APPROVED DATE

DWG. NO: LEGEND

JOB/CO NO: (JOB NO.)

SHEET: # OF #

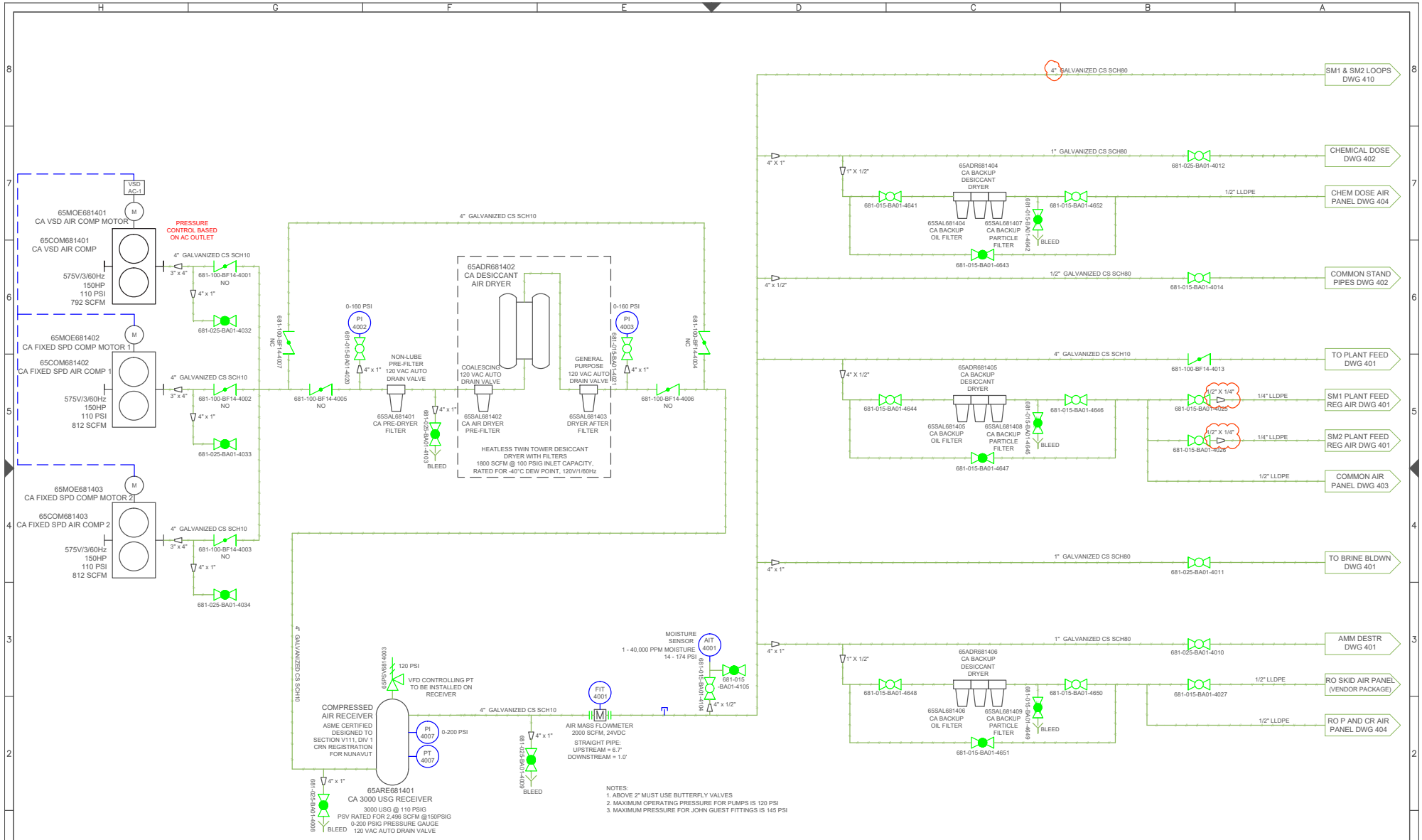

NOTES:
1. ABOVE 2" MUST USE BUTTERFLY VALVES
2. MAXIMUM OPERATING PRESSURE FOR PUMPS IS 120 PSI
3. MAXIMUM PRESSURE FOR JOHN GUEST FITTINGS IS 145 PSI

Saltworks
13800 Steveston Hwy
Richmond, BC, Canada, V6W 1A8
Tel: 604.628.6508 Fax: 604.676.2463
www.saltworkstech.com

DRAWING STATUS: FACTORY AS BUILT

THIS DOCUMENT EMBODIES DESIGNS AND INFORMATION THAT ARE PROPRIETARY TO SALTWORKS. IT IS TO BE USED ONLY FOR THE PURPOSE AND BY THE ENTITY FOR WHICH IT WAS ORIGINALLY SUPPLIED. THE DOCUMENT MAY NOT BE DUPLICATED OR DISCLOSED TO OTHER PERSON OR ENTITY, OR USED FOR MANUFACTURE OF THE ITEM IN PART OR IN WHOLE WITHOUT THE PRIOR WRITTEN PERMISSION OF SALTWORKS.

DO NOT SCALE DRAWING

LTR	DATE	DESCRIPTION	REV. BY:
N	06–JUL–2018	UPDATED LINE SIZE	JLAU
K	26–FEB–2018	NO CHANGES	–
L	16–MAR–2018	PENDING NEW DESICANT AIR DRYER	JLAU
M	08–MAY–2018	DESICANT SYSTEM UPDATED, BACK UP FILTER TRAIN ADDED	JLAU

TITLE: (COMMON) 400: COMPRESSED AIR SYSTEM

PROJECT: SALTMAKER GEN III		CUSTOMER: AGNICO EAGLE MINES	REVISION: N
PREPARED BY: PH	DATE: 19–JAN–2018	DWG. NO: SW_EN_SM_GEN III_PID_DWG_400	
CHECKED BY: XXIAO	DATE: 23–JAN–2018	JOB/CO NO: (JOB NO.)	
APPROVED BY: APPROVED BY	DATE: APPROVED DATE	SHEET: 55 OF117	

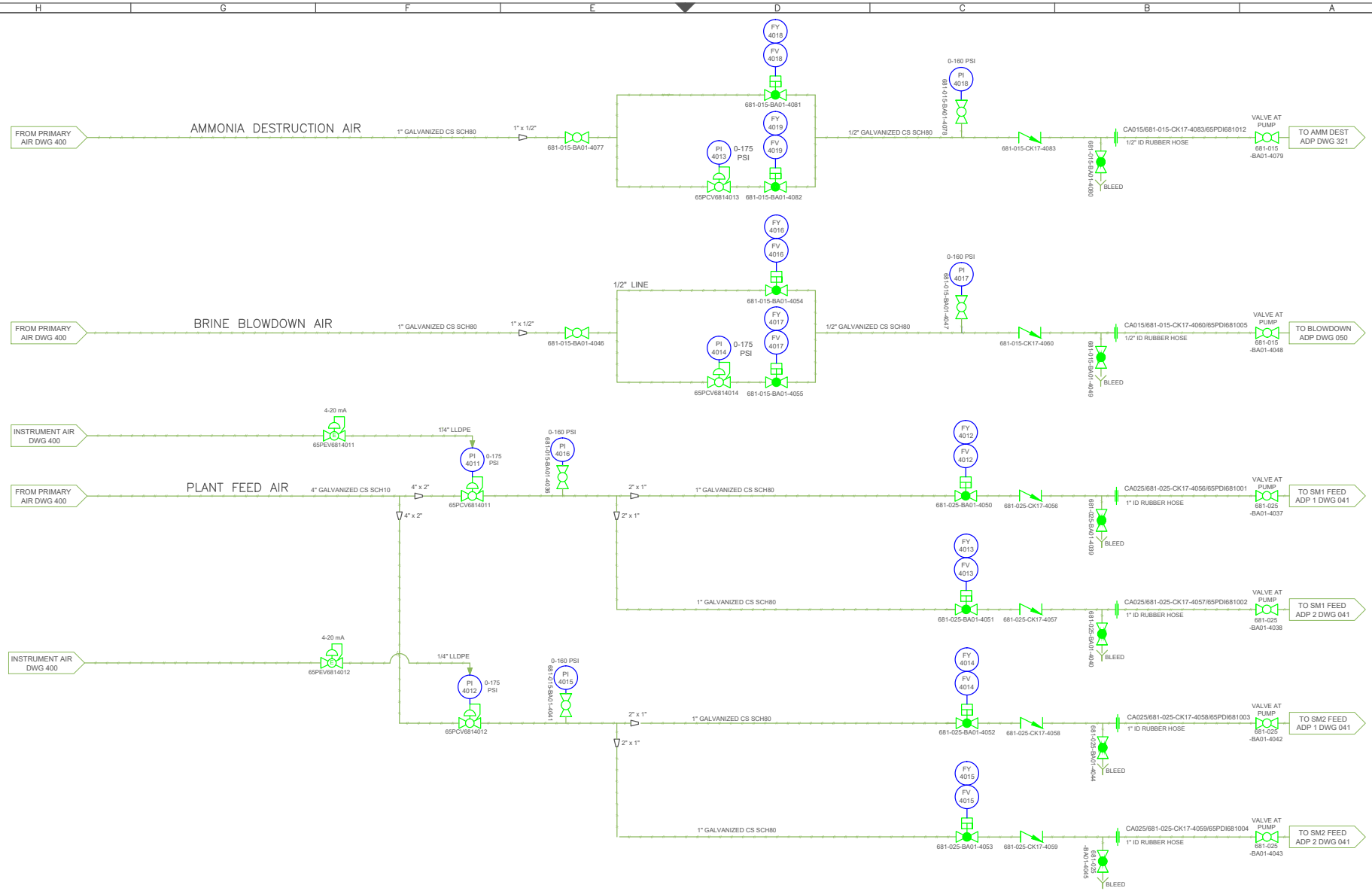

Saltworks
13800 Steveston Hwy
Richmond, BC, Canada, V6W 1A8
Tel: 604.628.6508 Fax: 604.676.2463
www.saltworkstech.com

DRAWING STATUS: FACTORY AS BUILT

THIS DOCUMENT EMBODIES DESIGNS AND INFORMATION THAT ARE PROPRIETARY TO SALTWORKS. IT IS TO BE USED ONLY FOR THE PURPOSE AND BY THE ENTITY FOR WHICH IT WAS ORIGINALLY SUPPLIED. THE DOCUMENT MAY NOT BE DUPLICATED OR DISCLOSED TO OTHER PERSON OR ENTITY, OR USED FOR MANUFACTURE OF THE ITEM IN PART OR IN WHOLE WITHOUT THE PRIOR WRITTEN PERMISSION OF SALTWORKS.

DO NOT SCALE DRAWING

LTR	DATE	DESCRIPTION	REV. BY:
N	06–JUL–2018	NO CHANGES	–
K	26–FEB–2018	UPDATED LINE LABELS	SNOW
L	16–MAR–2018	NO CHANGES	–
M	08–MAY–2018	NO CHANGES	–

TITLE: (COMMON) 401: AMM DESTR, BRINE BLOWDOWN, AND PLANT FEED AIR

PROJECT: SALTMAKER GEN III		CUSTOMER: AGNICO EAGLE MINES	REVISION N
PREPARED BY: SNOW	DATE: 22–FEB–2018	DWG. NO: SW_EN_SM_GEN III_PID_DWG_401	
CHECKED BY: XXIAO	DATE: 23–FEB–2018	JOB/CO NO: (JOB NO.)	
APPROVED BY: APPROVED BY	DATE: APPROVED DATE	SHEET: 56 OF117	

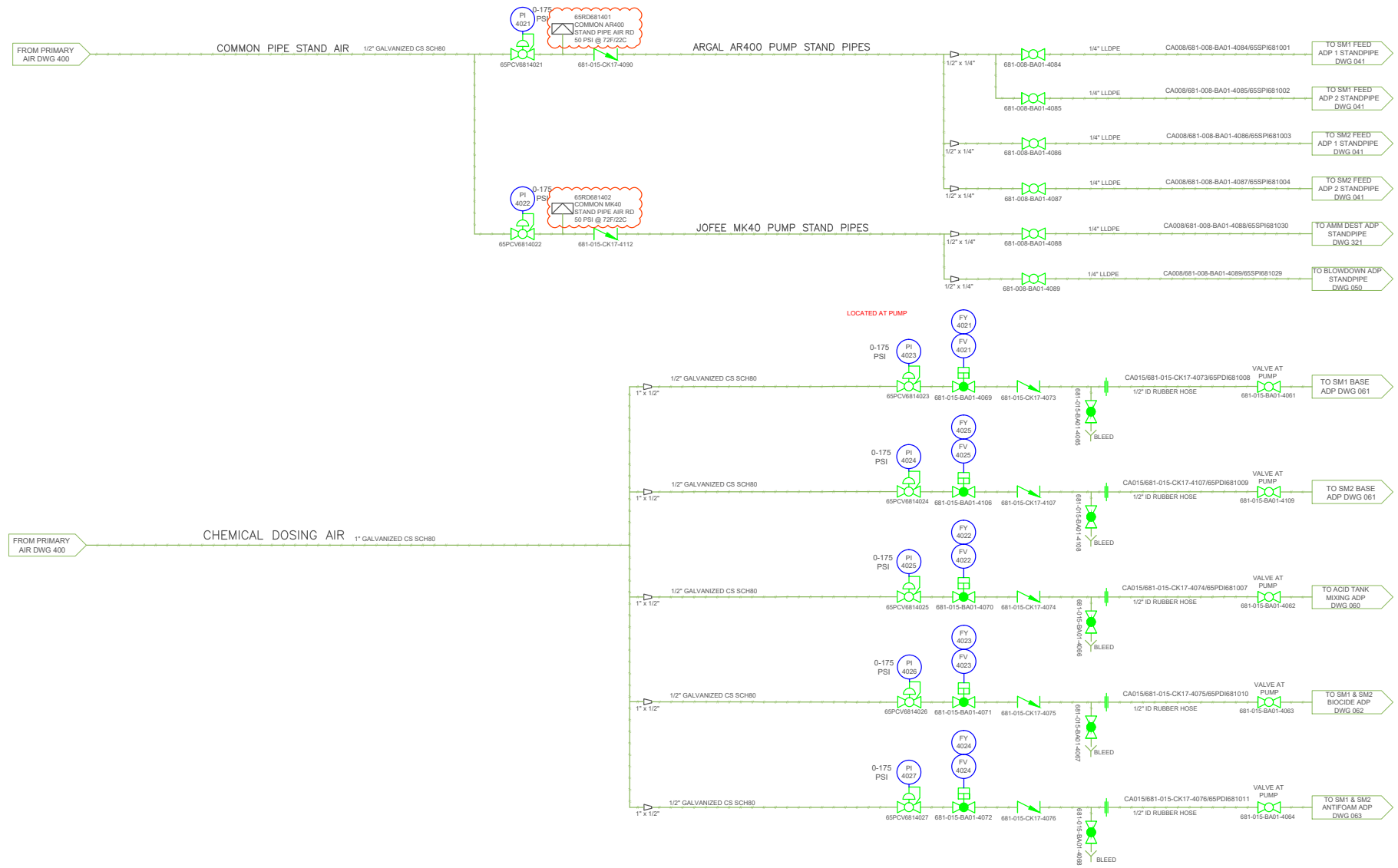

Saltworks
13800 Steveston Hwy
Richmond, BC, Canada, V6W 1A8
Tel: 604.628.6508 Fax: 604.676.2463
www.saltworkstech.com

DRAWING STATUS: FACTORY AS BUILT

THIS DOCUMENT EMBODIES DESIGNS AND INFORMATION THAT ARE PROPRIETARY TO SALTWORKS. IT IS TO BE USED ONLY FOR THE PURPOSE AND BY THE ENTITY FOR WHICH IT WAS ORIGINALLY SUPPLIED. THE DOCUMENT MAY NOT BE DUPLICATED OR DISCLOSED TO OTHER PERSON OR ENTITY, OR USED FOR MANUFACTURE OF THE ITEM IN PART OR IN WHOLE WITHOUT THE PRIOR WRITTEN PERMISSION OF SALTWORKS.

DO NOT SCALE DRAWING

LTR	DATE	DESCRIPTION	REV. BY:
N	06–JUL–2018	RUPTURE DISK CONFIRMED	JLAU
K	26–FEB–2018	UPDATED LINE LABELS	SNOW
L	16–MAR–2018	NO CHANGES	–
M	08–MAY–2018	NO CHANGES	–

TITLE: (COMMON) 402: CHEMICAL DOSING AND AMMOSNIA DESTRUCTION AIR

PROJECT: SALTMAKER GEN III		CUSTOMER: AGNICO EAGLE MINES	REVISION N
PREPARED BY: SNOW	DATE: 22–FEB–2018	DWG. NO: SW_EN_SM_GEN III_PID_DWG_402	
CHECKED BY: XXIAO	DATE: 23–FEB–2018	JOB/CO NO: (JOB NO.)	
APPROVED BY: APPROVED BY	DATE: APPROVED DATE	SHEET: 57 OF117	

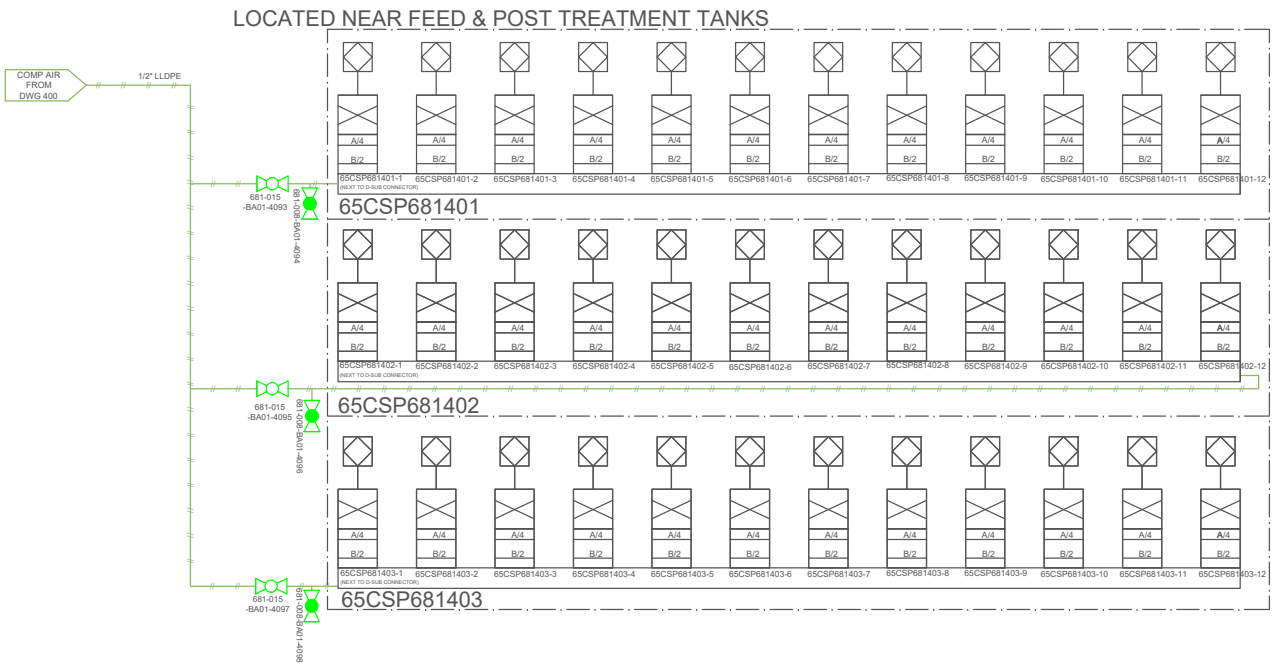

65CSP681401

SOLENOID	ABV	CONTROL LINE A	CONTROL LINE B	SYSTEM/DWG	NO/NC
65CSP681401-1	65FV6810401	65CSP681401-1/65FV6810401/A	65CSP681401-1/65FV6810401/B	PF/040	NC
65CSP681401-2	65FV6810402	65CSP681401-2/65FV6810402/A	65CSP681401-2/65FV6810402/B	PF/040	NC
65CSP681401-3	65FV6810409	65CSP681401-3/65FV6810409/A	65CSP681401-3/65FV6810409/B	PF-ACD/040	NC
65CSP681401-4	65FV6810406	65CSP681401-4/65FV6810406/A	65CSP681401-4/65FV6810406/B	PF/040	NC
65CSP681401-5	65FV6810403	65CSP681401-5/65FV6810403/A	65CSP681401-5/65FV6810403/B	PF/040	NO
65CSP681401-6	65FV6810413	65CSP681401-6/65FV6810413/A	65CSP681401-6/65FV6810413/B	PF/041	NO
65CSP681401-7	65FV6810414	65CSP681401-7/65FV6810414/A	65CSP681401-7/65FV6810414/B	PF/041	NC
65CSP681401-8	65FV6810415	65CSP681401-8/65FV6810415/A	65CSP681401-8/65FV6810415/B	PF/041	NC
65CSP681401-9	65FV6810417	65CSP681401-9/65FV6810417/A	65CSP681401-9/65FV6810417/B	PF/041	NC
65CSP681401-10	65FV6810418	65CSP681401-10/65FV6810418/A	65CSP681401-10/65FV6810418/B	PF/041	NC
65CSP681401-11	65FV6814012	65CSP681401-11/65FV6814012/A	65CSP681401-11/65FV6814012/B	CA-PF/401	NC
65CSP681401-12	65FV6814013	65CSP681401-12/65FV6814013/A	65CSP681401-12/65FV6814013/B	CA-PF/401	NC

65CSP681402

SOLENOID	ABV	CONTROL LINE A	CONTROL LINE B	SYSTEM/DWG	NO/NC
65CSP681402-1	65FV6810420	65CSP681402-1/65FV6810420/A	65CSP681402-1/65FV6810420/B	PF/041	NO
65CSP681402-2	65FV6810419	65CSP681402-2/65FV6810419/A	65CSP681402-2/65FV6810419/B	PF/041	NC
65CSP681402-3	65FV6810410	65CSP681402-3/65FV6810410/A	65CSP681402-3/65FV6810410/B	PF/041	NC
65CSP681402-4	65FV6810412	65CSP681402-4/65FV6810412/A	65CSP681402-4/65FV6810412/B	PF/041	NC
65CSP681402-5	65FV6814014	65CSP681402-5/65FV6814014/A	65CSP681402-5/65FV6814014/B	CA-PF/401	NC
65CSP681402-6	65FV6814015	65CSP681402-6/65FV6814015/A	65CSP681402-6/65FV6814015/B	CA-PF/401	NC
65CSP681402-7	65FV6810702	65CSP681402-7/65FV6810702/A	65CSP681402-7/65FV6810702/B	UW/070 (PENDING MECH LAYOUT)	NC
65CSP681402-8	SPARE				
65CSP681402-9	SPARE				
65CSP681402-10	SPARE				
65CSP681402-11	SPARE				
65CSP681402-12	SPARE				

65CSP681403

SOLENOID	ABV	CONTROL LINE A	CONTROL LINE B	SYSTEM/DWG	NO/NC
65CSP681403-1	65FV6813201	65CSP681403-1/65FV6813201/A	65CSP681403-1/65FV6813201/B	ND/320	NO
65CSP681403-2	65FV6813202	65CSP681403-2/65FV6813202/A	65CSP681403-2/65FV6813202/B	ND/320	NC
65CSP681403-3	65FV6813203	65CSP681403-3/65FV6813203/A	65CSP681403-3/65FV6813203/B	ND/320	NC
65CSP681403-4	65FV6813204	65CSP681403-4/65FV6813204/A	65CSP681403-4/65FV6813204/B	ND/320	NC
65CSP681403-5	65FV6813209	65CSP681403-5/65FV6813209/A	65CSP681403-5/65FV6813209/B	ND-ACD/320	NC
65CSP681403-6	65FV6813221	65CSP681403-6/65FV6813221/A	65CSP681403-6/65FV6813221/B	PC/320	NC
65CSP681403-7	65FV6813222	65CSP681403-7/65FV6813222/A	65CSP681403-7/65FV6813222/B	PC/320	NC
65CSP681403-8	65FV6813223	65CSP681403-8/65FV6813223/A	65CSP681403-8/65FV6813223/B	PC/320	NC
65CSP681403-9	65FV6813224	65CSP681403-9/65FV6813224/A	65CSP681403-9/65FV6813224/B	PC/320	NC
65CSP681403-10	65FV6813229	65CSP681403-10/65FV6813229/A	65CSP681403-10/65FV6813229/B	PC-BSE/320	NC
65CSP681403-11	65FV6813109	65CSP681403-11/65FV6813109/A	65CSP681403-11/65FV6813109/B	TSW/310	NC
65CSP681403-12	SPARE				

1. ALL ABV SUPPLIED IN NC CONFIGURATION
2. CONTROL LINE A ALWAYS START FROM SOLENOID A PORT
3. CONTROL LINE B ALWAYS START FROM SOLENOID B PORT
4. FOR NC ABV
   a. CONTROL LINE A TERMINATES AT ABV LEFT PORT
   b. CONTROL LINE B TERMINATES AT ABV RIGHT PORT
5. FOR NO ABV
   a. CONTROL LINE A TERMINATES AT ABV RIGHT PORT
   b. CONTROL LINE B TERMINATES AT ABV LEFT PORT

NOTE: ORIENTATION OF AIR PANEL AND AIRLINE FEEDING PANEL PENDING MECHANICAL LAYOUT. ALL SOLENOID VALVE POSITION 1 STARTS IMMEDIATELY ADJACENT TO D-SUB CONNECTOR

Saltworks
13800 Steveston Hwy
Richmond, BC, Canada, V6W 1A8
Tel: 604.628.6508 Fax: 604.676.2463
www.saltworkstech.com

DRAWING STATUS: FACTORY AS BUILT

THIS DOCUMENT EMBODIES DESIGNS AND INFORMATION THAT ARE PROPRIETARY TO SALTWORKS. IT IS TO BE USED ONLY FOR THE PURPOSE AND BY THE ENTITY FOR WHICH IT WAS ORIGINALLY SUPPLIED. THE DOCUMENT MAY NOT BE DUPLICATED OR DISCLOSED TO OTHER PERSON OR ENTITY, OR USED FOR MANUFACTURE OF THE ITEM IN PART OR IN WHOLE WITHOUT THE PRIOR WRITTEN PERMISSION OF SALTWORKS.

DO NOT SCALE DRAWING

LTR	DATE	DESCRIPTION	REV. BY:
N	06-JUL-2018	NO CHANGES	–
K	26-FEB-2018	SOLENOID TABLE SYSTEM/DWG	SNOW
L	16-MAR-2018	UPDATED SOLENOID TABLE	JLAU
M	08-MAY-2018	NO CHANGES	–

TITLE: (COMMON) 403: COMMON & POST TREATMENT AIR BANKS 1

PROJECT: SALTMAKER GEN III

CUSTOMER: AGNICO EAGLE MINES

REVISION: N

PREPARED BY: SNOW DATE: 22-FEB-2018

CHECKED BY: XXIAO DATE: 23-FEB-2018

APPROVED BY: APPROVED BY DATE: APPROVED DATE

DWG. NO:

JOB/CO NO: (JOB NO.)

SHEET: 58 OF117

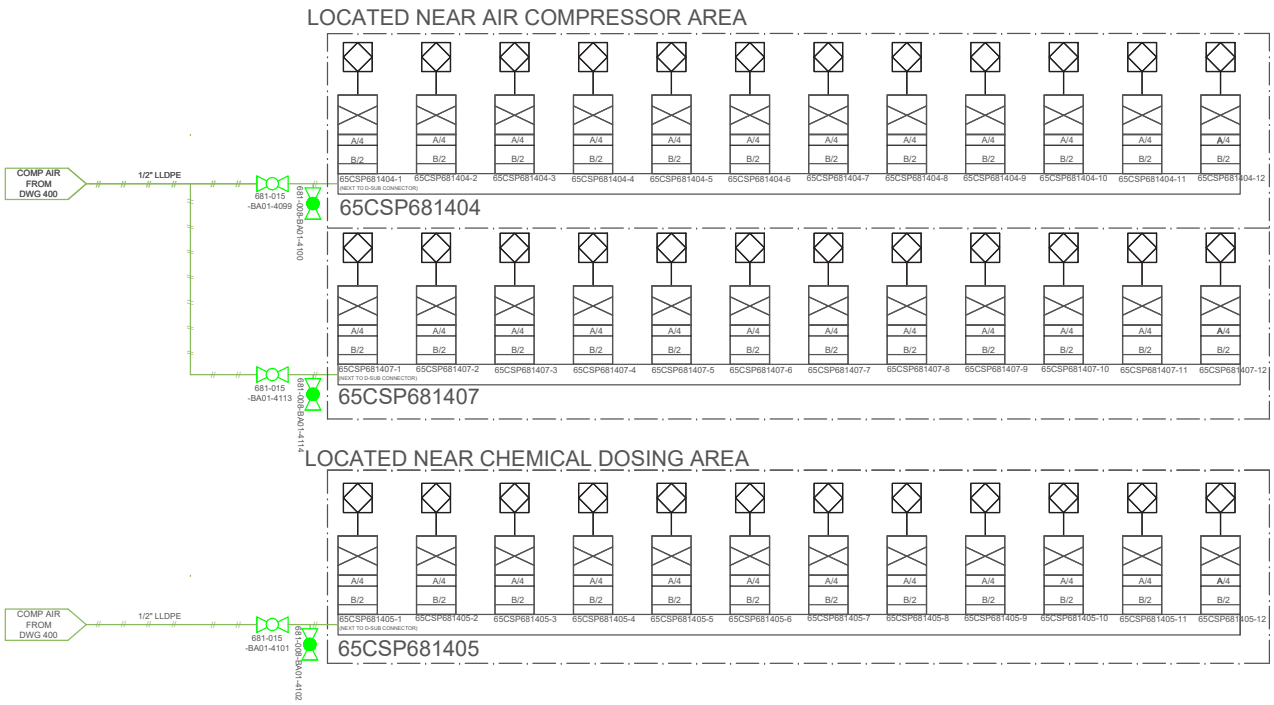

65CSP681404

SOLENOID	ABV	CONTROL LINE A	CONTROL LINE B	SYSTEM/DWG	NO/NC
65CSP681404-1	65FV6813211	65CSP681404-1/65FV6813211/A	65CSP681404-1/65FV6813211/B	AD/321	NC
65CSP681404-2	65FV6813212	65CSP681404-2/65FV6813212/A	65CSP681404-2/65FV6813212/B	AD/321	NC
65CSP681404-3	65FV6813213	65CSP681404-3/65FV6813213/A	65CSP681404-3/65FV6813213/B	AD/321	NC
65CSP681404-4	65FV6813214	65CSP681404-4/65FV6813214/A	65CSP681404-4/65FV6813214/B	AD/321	NO
65CSP681404-5	65FV6813215	65CSP681404-5/65FV6813215/A	65CSP681404-5/65FV6813215/B	AD/321	NC
65CSP681404-6	65FV6813216	65CSP681404-6/65FV6813216/A	65CSP681404-6/65FV6813216/B	AD/321	NO
65CSP681404-7	65FV6813219	65CSP681404-7/65FV6813219/A	65CSP681404-7/65FV6813219/B	AD-BSE/321	NC
65CSP681404-8	65FV6814018	65CSP681404-8/65FV6814018/A	65CSP681404-8/65FV6814018/B	CA-AD/401	NC
65CSP681404-9	65FV6814019	65CSP681404-9/65FV6814019/A	65CSP681404-9/65FV6814019/B	CA-AD/401	NC
65CSP681404-10	65FV6814016	65CSP681404-10/65FV6814016/A	65CSP681404-10/65FV6814016/B	CA-BD/401	NC
65CSP681404-11	65FV6814017	65CSP681404-11/65FV6814017/A	65CSP681404-11/65FV6814017/B	CA-BD/401	NC
65CSP681404-12	SPARE				

65CSP681407

SOLENOID	ABV	CONTROL LINE A	CONTROL LINE B	SYSTEM/DWG	NO/NC
65CSP681407-1	65FV6810503	65CSP681407-1/65FV6810503/A	65CSP681407-1/65FV6810503/B	CR/050	NC
65CSP681407-2	65FV6810511	65CSP681407-2/65FV6810511/A	65CSP681407-2/65FV6810511/B	CR/050	NC
65CSP681407-3	65FV6810512	65CSP681407-3/65FV6810512/A	65CSP681407-3/65FV6810512/B	CR/050	NC
65CSP681407-4	65FV6810504	65CSP681407-4/65FV6810504/A	65CSP681407-4/65FV6810504/B	CR/050	NC
65CSP681407-5	65FV6810411	65CSP681407-5/65FV6810411/A	65CSP681407-5/65FV6810411/B	PF/041	NC
65CSP681407-6	65FV6813239	65CSP681407-6/65FV6813239/A	65CSP681407-6/65FV6813239/B	PE-BSE/323	NC
65CSP681407-7	65FV6813232	65CSP681407-7/65FV6813232/A	65CSP681407-7/65FV6813232/B	PE/323	NO
65CSP681407-8	65FV6813231	65CSP681407-8/65FV6813231/A	65CSP681407-8/65FV6813231/B	PE/323	NC
65CSP681407-9	65FV6810416	65CSP681407-9/65FV6810416/A	65CSP681407-9/65FV6810416/B	PF/041	NC
65CSP681407-10	SPARE				
65CSP681407-11	SPARE				
65CSP681407-12	SPARE				

65CSP681405

SOLENOID	ABV	CONTROL LINE A	CONTROL LINE B	SYSTEM/DWG	NO/NC
65CSP681405-1	65FV6814021	65CSP681405-1/65FV6814021/A	65CSP681405-1/65FV6814021/B	CA-BSE/402	NC
65CSP681405-2	65FV6814025	65CSP681405-2/65FV6814025/A	65CSP681405-2/65FV6814025/B	CA-BSE/402	NC
65CSP681405-3	65FV6814022	65CSP681405-3/65FV6814022/A	65CSP681405-3/65FV6814022/B	CA-ACD/402	NC
65CSP681405-4	65FV6814023	65CSP681405-4/65FV6814023/A	65CSP681405-4/65FV6814023/B	CA-BIO/402	NC
65CSP681405-5	65FV6814024	65CSP681405-5/65FV6814024/A	65CSP681405-5/65FV6814024/B	CA-ATF/402	NC
65CSP681405-6	65FV6810621/65FV6810622	65CSP681405-6/65FV6810621/65FV6810622/A	65CSP681405-6/65FV6810621/65FV6810622/B	BIO/062	NO/NC
65CSP681405-7	65FV6810601	65CSP681405-7/65FV6810601/A	65CSP681405-7/65FV6810601/B	ACD/060	NC
65CSP681405-8	65FV6810641	65CSP681405-8/65FV6810641/A	65CSP681405-8/65FV6810641/B	ATS/064	NC
65CSP681405-9	SPARE				
65CSP681405-10	SPARE				
65CSP681405-11	SPARE				
65CSP681405-12	SPARE				

1. ALL ABV SUPPLIED IN NC CONFIGURATION
2. CONTROL LINE A ALWAYS START FROM SOLENOID A PORT
3. CONTROL LINE B ALWAYS START FROM SOLENOID B PORT
4. FOR NC ABV
   a. CONTROL LINE A TERMINATES AT ABV LEFT PORT
   b. CONTROL LINE B TERMINATES AT ABV RIGHT PORT
5. FOR NO ABV
   a. CONTROL LINE A TERMINATES AT ABV RIGHT PORT
   b. CONTROL LINE B TERMINATES AT ABV LEFT PORT

NOTE: ORIENTATION OF AIR PANEL AND AIRLINE FEEDING PANEL PENDING MECHANICAL LAYOUT. ALL SOLENOID VALVE POSITION 1 STARTS IMMEDIATELY ADJACENT TO D-SUB CONNECTOR

Saltworks
13800 Steveston Hwy
Richmond, BC, Canada, V6W 1A8
Tel: 604.628.6508 Fax: 604.676.2463
www.saltworkstech.com

DRAWING STATUS: FACTORY AS BUILT

THIS DOCUMENT EMBODIES DESIGNS AND INFORMATION THAT ARE PROPRIETARY TO SALTWORKS. IT IS TO BE USED ONLY FOR THE PURPOSE AND BY THE ENTITY FOR WHICH IT WAS ORIGINALLY SUPPLIED. THE DOCUMENT MAY NOT BE DUPLICATED OR DISCLOSED TO OTHER PERSON OR ENTITY, OR USED FOR MANUFACTURE OF THE ITEM IN PART OR IN WHOLE WITHOUT THE PRIOR WRITTEN PERMISSION OF SALTWORKS.

DO NOT SCALE DRAWING

LTR	DATE	DESCRIPTION	REV. BY:
N	06-JUL-2018	NO CHANGES	–
K	26-FEB-2018	UPDATED SYSTEM/DWG, SOLENOID, VALVE NAMES	SNOW
L	16-MAR-2018	UPDATED SOLNEOID TABLE	JLAU
M	08-MAY-2018	NO CHANGES	–

TITLE: (COMMON) 404: COMMON & POST TREATMENT AIR BANKS 2

PROJECT: SALTMAKER GEN III		CUSTOMER: AGNICO EAGLE MINES	REVISION N
PREPARED BY: SNOW	DATE: 22-FEB-2018	DWG. NO: SW_EN_SM_GEN III_PID_DWG_404	
CHECKED BY: XXIAO	DATE: 23-FEB-2018	JOB/CO NO: (JOB NO.)	
APPROVED BY: APPROVED BY	DATE: APPROVED DATE	SHEET: 59 OF117	

AGNICO EAGLE MINES
P&ID DRAWING PACKAGE

COMPRESSED AIR - SM1
REVISION N

Saltworks
13800 Steveston Hwy
Richmond, BC, Canada, V6W 1A8
Tel: 604.628.6508 Fax: 604.676.2463
www.saltworkstech.com

DRAWING STATUS: FACTORY AS BUILT

THIS DOCUMENT EMBODIES DESIGNS AND INFORMATION THAT ARE PROPRIETARY TO SALTWORKS. IT IS TO BE USED ONLY FOR THE PURPOSE AND BY THE ENTITY FOR WHICH IT WAS ORIGINALLY SUPPLIED. THE DOCUMENT MAY NOT BE DUPLICATED OR DISCLOSED TO OTHER PERSON OR ENTITY, OR USED FOR MANUFACTURE OF THE ITEM IN PART OR IN WHOLE WITHOUT THE PRIOR WRITTEN PERMISSION OF SALTWORKS.

DO NOT SCALE DRAWING

LTR	DATE	DESCRIPTION	REV. BY:
N	06-JUL-2018	AS MARKED BY REVISION CLOUDS	–
K	26-FEB-2018	LINE LABELS, UPDATE SOLENOID TABLE	SN
L	16-MAR-2018	UPDATED SOLENOID TABLES	JLAU
M	08-MAY-2018	AS MARKED BY REVISION CLOUDS	JLAU

TITLE: COVER SHEET

PROJECT: SALTMAKER GEN III		CUSTOMER: AGNICO EAGLE MINES	REVISION N
PREPARED BY: SN	DATE: 22-FEB-2018	DWG. NO: COVER SHEET	
CHECKED BY: XXIAO	DATE: 23-FEB-2018	JOB/CO NO: (JOB NO.)	
APPROVED BY: APPROVED BY	DATE: APPROVED DATE	SHEET: # OF #	

DRAWING LIST 1

SHEET NO.	DRAWING NO.	DESCRIPTION
		COVER SHEET
		DRAWING LIST 1
		DRAWING LIST 2
		LEGEND
		COMMON
1	SW_EN_SM_AEM-01_PID_COMMON_DWG_000	MASTER PFD
2	SW_EN_SM_AEM-01_PID_COMMON_DWG_010	PROCESS FLOW DIAGRAM
3	SW_EN_SM_AEM-01_PID_COMMON_DWG_020	CONTAINER LAYOUT
4	SW_EN_SM_AEM-01_PID_COMMON_DWG_030	MODULES LAYOUT
5	SW_EN_SM_AEM-01_PID_COMMON_DWG_040	PLANT FEED TANKS
6	SW_EN_SM_AEM-01_PID_COMMON_DWG_041	PLANT FEED PUMP SKIDS
7	SW_EN_SM_AEM-01_PID_COMMON_DWG_050	CLEAN RESERVE AND BLOWDOWN SYSTEMS
8	SW_EN_SM_AEM-01_PID_COMMON_DWG_060	ACID DOSING SYSTEM
9	SW_EN_SM_AEM-01_PID_COMMON_DWG_061	BASE DOSING SYSTEM
10	SW_EN_SM_AEM-01_PID_COMMON_DWG_062	BIOCIDE DOSING SYSTEM
11	SW_EN_SM_AEM-01_PID_COMMON_DWG_063	ANTIFOAM DOSING SYSTEM
12	SW_EN_SM_AEM-01_PID_COMMON_DWG_064	ANTISCALANT DOSING SYSTEM
13	SW_EN_SM_AEM-01_PID_COMMON_DWG_070	UTILITY WATER DISTRIBUTION
		SALTMAKER 1 (SM1)
14	SW_EN_SM_AEM-01_PID_SM1_DWG_110	THERMAL SOURCE PRIMARY HEAT EXCHANGERS
15	SW_EN_SM_AEM-01_PID_SM1_DWG_120	CONDENSED WATER SYSTEM
16	SW_EN_SM_AEM-01_PID_SM1_DWG_130	FEED DISTRIBUTION
17	SW_EN_SM_AEM-01_PID_SM1_DWG_150	CIP TANKS
18	SW_EN_SM_AEM-01_PID_SM1_DWG_151	CIP PUMP SKID
19	SW_EN_SM_AEM-01_PID_SM1_DWG_160	EFFECT HOLD 1
20	SW_EN_SM_AEM-01_PID_SM1_DWG_161	EFFECT HOLD 2
21	SW_EN_SM_AEM-01_PID_SM1_DWG_162	SYSTEM HOLD
22	SW_EN_SM_AEM-01_PID_SM1_DWG_163	CALCIUM EXTRACTION
23	SW_EN_SM_AEM-01_PID_SM1_DWG_164	EH1 SOLIDS EXTRACTION
24	SW_EN_SM_AEM-01_PID_SM1_DWG_165	EH2 SOLIDS EXTRACTION
25	SW_EN_SM_AEM-01_PID_SM1_DWG_180	DRIP TRAYS
26	SW_EN_SM_AEM-01_PID_SM1_DWG_210	EFFECT 1 TANK AND PUMPS
27	SW_EN_SM_AEM-01_PID_SM1_DWG_211	EFFECT 1 MODULES
28	SW_EN_SM_AEM-01_PID_SM1_DWG_213	EFFECT 1 PUMP SEAL FLUSH
29	SW_EN_SM_AEM-01_PID_SM1_DWG_214	EFFECT 1 AIR SEALS
30	SW_EN_SM_AEM-01_PID_SM1_DWG_220	EFFECT 2 TANK AND PUMPS
31	SW_EN_SM_AEM-01_PID_SM1_DWG_221	EFFECT 2 MODULES
32	SW_EN_SM_AEM-01_PID_SM1_DWG_222	EFFECT 2 SOLIDS EXTRACTION
33	SW_EN_SM_AEM-01_PID_SM1_DWG_223	EFFECT 2 PUMP SEAL FLUSH
34	SW_EN_SM_AEM-01_PID_SM1_DWG_224	EFFECT 2 AIR SEALS
35	SW_EN_SM_AEM-01_PID_SM1_DWG_230	EFFECT 3 TANK AND PUMPS
36	SW_EN_SM_AEM-01_PID_SM1_DWG_231	EFFECT 3 MODULES
37	SW_EN_SM_AEM-01_PID_SM1_DWG_232	EFFECT 3 SOLIDS EXTRACTION
38	SW_EN_SM_AEM-01_PID_SM1_DWG_233	EFFECT 3 PUMP SEAL FLUSH
39	SW_EN_SM_AEM-01_PID_SM1_DWG_234	EFFECT 3 AIR SEALS
40	SW_EN_SM_AEM-01_PID_SM1_DWG_240	EFFECT 4 TANK AND PUMPS
41	SW_EN_SM_AEM-01_PID_SM1_DWG_241	EFFECT 4 MODULES
42	SW_EN_SM_AEM-01_PID_SM1_DWG_243	EFFECT 4 PUMP SEAL FLUSH
43	SW_EN_SM_AEM-01_PID_SM1_DWG_244	EFFECT 4 AIR SEALS
44	SW_EN_SM_AEM-01_PID_SM1_DWG_250	EFFECT 5 TANK AND PUMPS
45	SW_EN_SM_AEM-01_PID_SM1_DWG_251	EFFECT 5 MODULES
46	SW_EN_SM_AEM-01_PID_SM1_DWG_253	EFFECT 5 PUMP SEAL FLUSH
47	SW_EN_SM_AEM-01_PID_SM1_DWG_254	EFFECT 5 AIR SEALS
		THERMAL SYSTEM
48	SW_EN_SM_AEM-01_PID_DWG_310	THERMAL SKID: WATER LOOP
49	SW_EN_SM_AEM-01_PID_DWG_311	THERMAL SKID: WATER LOOP
50	SW_EN_SM_AEM-01_PID_DWG_312	THERMAL SKID: GYLCOL LOOP
		POST TREATMENT
51	SW_EN_SM_AEM-01_PID_COMMON_DWG_320	NITRITE DESTRUCTION AND RO PC SYSTEM
52	SW_EN_SM_AEM-01_PID_COMMON_DWG_321	AMMONIA DESTRUCTION SYSTEM
53	SW_EN_SM_AEM-01_PID_COMMON_DWG_322	RO BRINE FLUSH TANK
54	SW_EN_SM_AEM-01_PID_COMMON_DWG_323	RO PERMEATE TANK
		COMPRESSED AIR-COMMON PACKAGE
55	SW_EN_SM_AEM-01_PID_COMPRESSED AIR-COMMON_DWG_400	COMPRESSED AIR SYSTEM
56	SW_EN_SM_AEM-01_PID_COMPRESSED AIR-COMMON_DWG_401	AMMONIA DES, BRINE BLOWDOWN AND PLANT FEED AIR
57	SW_EN_SM_AEM-01_PID_COMPRESSED AIR-COMMON_DWG_402	CHEMICAL DOSING AND ANCILLARY STAND PIPE AIR
58	SW_EN_SM_AEM-01_PID_COMPRESSED AIR-COMMON_DWG_403	COMMON AND POST TREATMENT AIR BANK 1
59	SW_EN_SM_AEM-01_PID_COMPRESSED AIR-COMMON_DWG_404	COMMON AND POST TREATMENT AIR BANK 2
		COMPRESSED AIR-SM1
60	SW_EN_SM_AEM-01_PID_COMPRESSED AIR-SM1_DWG_410	SM INSTRUMENT AND PROCESS AIR
61	SW_EN_SM_AEM-01_PID_COMPRESSED AIR-SM1_DWG_411	EH1/EH2 EXTRACT AND CIP AIR

Saltworks
13800 Steveston Hwy
Richmond, BC, Canada, V6W 1A8
Tel: 604.628.6508 Fax: 604.676.2463
www.saltworkstech.com

DRAWING STATUS: FACTORY AS BUILT

THIS DOCUMENT EMBODIES DESIGNS AND INFORMATION THAT ARE PROPRIETARY TO SALTWORKS. IT IS TO BE USED ONLY FOR THE PURPOSE AND BY THE ENTITY FOR WHICH IT WAS ORIGINALLY SUPPLIED. THE DOCUMENT MAY NOT BE DUPLICATED OR DISCLOSED TO OTHER PERSON OR ENTITY, OR USED FOR MANUFACTURE OF THE ITEM IN PART OR IN WHOLE WITHOUT THE PRIOR WRITTEN PERMISSION OF SALTWORKS.

DO NOT SCALE DRAWING

LTR	DATE	DESCRIPTION	REV. BY:
N	06-JUL-2018	NO CHANGES	–
K	26-FEB-2018	NO CHANGES	–
L	16-MAR-2018	NO CHANGES	–
M	08-MAY-2018	NO CHANGES	–

TITLE: DRAWING LIST 1

PROJECT: SALTMAKER GEN III

CUSTOMER: AGNICO EAGLE MINES

REVISION: N

PREPARED BY:	SN	DATE:	22-FEB-2018
CHECKED BY:	XXIAO	DATE:	23-FEB-2018
APPROVED BY:	APPROVED BY	DATE:	APPROVED DATE

DWG. NO: DRAWING LIST 1

JOB/CO NO: (JOB NO.)

SHEET: # OF #

DRAWING LIST 2

SHEET NO.	DRAWING NO.	DESCRIPTION
62	SW_EN_SM_AEM-01_PID_COMPRESSED AIR-SM1_DWG_412	EH1/EH2 EXTRACT AND CIP AIR
63	SW_EN_SM_AEM-01_PID_COMPRESSED AIR-SM1_DWG_413	PLUG PREVENTION PUMP AIR
64	SW_EN_SM_AEM-01_PID_COMPRESSED AIR-SM1_DWG_414	AIR SEAL, STAND PIPE AND E2/E3 SE AIR
65	SW_EN_SM_AEM-01_PID_COMPRESSED AIR-SM1_DWG_415	UTILITY AIR
66	SW_EN_SM_AEM-01_PID_COMPRESSED AIR-SM1_DWG_416	BOP1 AIR SOLENOID BANK
67	SW_EN_SM_AEM-01_PID_COMPRESSED AIR-SM1_DWG_417	E2/E3 SE AIR SOLENOID BANK
68	SW_EN_SM_AEM-01_PID_COMPRESSED AIR-SM1_DWG_418	BOP2 AIR SOLENOID BANK
69	SW_EN_SM_AEM-01_PID_COMPRESSED AIR-SM1_DWG_419	BOP3 AIR SOLENOID BANK
70	SW_EN_SM_AEM-01_PID_COMPRESSED AIR-SM1_DWG_420	CIP, EH/SY AIR SOLENOID BANK
71	SW_EN_SM_AEM-01_PID_COMPRESSED AIR-SM1_DWG_421	H1/H2 SE AIR SOLENOID BANK
		COMPRESSED AIR-SM2
72	SW_EN_SM_AEM-01_PID_COMPRESSED AIR-SM2_DWG_450	SM INSTRUMENT AND PROCESS AIR
73	SW_EN_SM_AEM-01_PID_COMPRESSED AIR-SM2_DWG_451	EH1/EH2 EXTRACT AND CIP AIR
74	SW_EN_SM_AEM-01_PID_COMPRESSED AIR-SM2_DWG_452	EFFECT/SYSTEM HOLD AND CAL EXTRACTION AIR
75	SW_EN_SM_AEM-01_PID_COMPRESSED AIR-SM2_DWG_453	PLUG PREVENTION PUMP AIR
76	SW_EN_SM_AEM-01_PID_COMPRESSED AIR-SM2_DWG_454	AIR SEAL, STAND PIPE AND E2/E3 SE AIR
77	SW_EN_SM_AEM-01_PID_COMPRESSED AIR-SM2_DWG_455	UTILITY AIR
78	SW_EN_SM_AEM-01_PID_COMPRESSED AIR-SM2_DWG_456	BOP1 AIR SOLENOID BANK
79	SW_EN_SM_AEM-01_PID_COMPRESSED AIR-SM2_DWG_457	E2/E3 SE AIR SOLENOID BANK
80	SW_EN_SM_AEM-01_PID_COMPRESSED AIR-SM2_DWG_458	BOP2 AIR SOLENOID BANK
81	SW_EN_SM_AEM-01_PID_COMPRESSED AIR-SM2_DWG_459	BOP3 AIR SOLENOID BANK
82	SW_EN_SM_AEM-01_PID_COMPRESSED AIR-SM2_DWG_460	CIP, EH/SY AIR SOLENOID BANK
83	SW_EN_SM_AEM-01_PID_COMPRESSED AIR-SM2_DWG_461	H1/H2 SE AIR SOLENOID BANK

SHEET NO.	DRAWING NO.	DESCRIPTION
		SALTMAKER 2 (SM2)
84	SW_EN_SM_AEM-01_PID_SM2_DWG_510	THERMAL SOURCE PRIMARY HEAT EXCHANGERS
85	SW_EN_SM_AEM-01_PID_SM2_DWG_520	CONDENSED WATER SYSTEM
86	SW_EN_SM_AEM-01_PID_SM2_DWG_530	FEED DISTRIBUTION
87	SW_EN_SM_AEM-01_PID_SM2_DWG_550	CIP TANKS
88	SW_EN_SM_AEM-01_PID_SM2_DWG_551	CIP PUMP SKID
89	SW_EN_SM_AEM-01_PID_SM2_DWG_560	EFFECT HOLD 1
90	SW_EN_SM_AEM-01_PID_SM2_DWG_561	EFFECT HOLD 2
91	SW_EN_SM_AEM-01_PID_SM2_DWG_562	SYSTEM HOLD
92	SW_EN_SM_AEM-01_PID_SM2_DWG_563	CALCIUM EXTRACTION
93	SW_EN_SM_AEM-01_PID_SM2_DWG_564	EH1 SOLIDS EXTRACTION
94	SW_EN_SM_AEM-01_PID_SM2_DWG_565	EH2 SOLIDS EXTRACTION
	SW_EN_SM_AEM-01_PID_SM2_DWG_580	DRIP TRAYS
95		
96	SW_EN_SM_AEM-01_PID_SM2_DWG_610	EFFECT 1 TANK AND PUMPS
97	SW_EN_SM_AEM-01_PID_SM2_DWG_611	EFFECT 1 MODULES
98	SW_EN_SM_AEM-01_PID_SM2_DWG_613	EFFECT 1 PUMP SEAL FLUSH
	SW_EN_SM_AEM-01_PID_SM2_DWG_614	EFFECT 1 AIR SEALS
99		
100	SW_EN_SM_AEM-01_PID_SM2_DWG_620	EFFECT 2 TANK AND PUMPS
101	SW_EN_SM_AEM-01_PID_SM2_DWG_621	EFFECT 2 MODULES
102	SW_EN_SM_AEM-01_PID_SM2_DWG_622	EFFECT 2 SOLIDS EXTRACTION
103	SW_EN_SM_AEM-01_PID_SM2_DWG_623	EFFECT 2 PUMP SEAL FLUSH
	SW_EN_SM_AEM-01_PID_SM2_DWG_624	EFFECT 2 AIR SEALS
104		
105	SW_EN_SM_AEM-01_PID_SM2_DWG_630	EFFECT 3 TANK AND PUMPS
106	SW_EN_SM_AEM-01_PID_SM2_DWG_631	EFFECT 3 MODULES
107	SW_EN_SM_AEM-01_PID_SM2_DWG_632	EFFECT 3 SOLIDS EXTRACTION
108	SW_EN_SM_AEM-01_PID_SM2_DWG_633	EFFECT 3 PUMP SEAL FLUSH
	SW_EN_SM_AEM-01_PID_SM2_DWG_634	EFFECT 3 AIR SEALS
109		
110	SW_EN_SM_AEM-01_PID_SM2_DWG_640	EFFECT 4 TANK AND PUMPS
111	SW_EN_SM_AEM-01_PID_SM2_DWG_641	EFFECT 4 MODULES
112	SW_EN_SM_AEM-01_PID_SM2_DWG_643	EFFECT 4 PUMP SEAL FLUSH
	SW_EN_SM_AEM-01_PID_SM2_DWG_644	EFFECT 4 AIR SEALS
113		
114	SW_EN_SM_AEM-01_PID_SM2_DWG_650	EFFECT 5 TANK AND PUMPS
115	SW_EN_SM_AEM-01_PID_SM2_DWG_651	EFFECT 5 MODULES
116	SW_EN_SM_AEM-01_PID_SM2_DWG_653	EFFECT 5 PUMP SEAL FLUSH
117	SW_EN_SM_AEM-01_PID_SM2_DWG_654	EFFECT 5 AIR SEALS

Saltworks
13800 Steveston Hwy
Richmond, BC, Canada, V6W 1A8
Tel: 604.628.6508 Fax: 604.676.2463
www.saltworkstech.com

DRAWING STATUS: FACTORY AS BUILT

THIS DOCUMENT EMBODIES DESIGNS AND INFORMATION THAT ARE PROPRIETARY TO SALTWORKS. IT IS TO BE USED ONLY FOR THE PURPOSE AND BY THE ENTITY FOR WHICH IT WAS ORIGINALLY SUPPLIED. THE DOCUMENT MAY NOT BE DUPLICATED OR DISCLOSED TO OTHER PERSON OR ENTITY, OR USED FOR MANUFACTURE OF THE ITEM IN PART OR IN WHOLE WITHOUT THE PRIOR WRITTEN PERMISSION OF SALTWORKS.

DO NOT SCALE DRAWING

LTR	DATE	DESCRIPTION	REV. BY:
N	06-JUL-2018	NO CHANGES	–
K	26-FEB-2018	NO CHANGES	–
L	16-MAR-2018	NO CHANGES	–
M	08-MAY-2018	NO CHANGES	–

TITLE: DRAWING LIST 2

PROJECT: SALTMAKER GEN III

CUSTOMER: AGNICO EAGLE MINES

REVISION: N

PREPARED BY: SN DATE: 22-FEB-2018

CHECKED BY: XXIAO DATE: 23-FEB-2018

APPROVED BY: APPROVED BY DATE: APPROVED DATE

DWG. NO: DRAWING LIST 2

JOB/CO NO: (JOB NO.)

SHEET: # OF #

VALVES

- MANUAL BALL (MBV) – NORMALLY CLOSED
- MANUAL BALL (MBV) – NORMALLY OPEN
- CHECK (CV)
- GATE (GV)
- BUTTERFLY (BFV)
- PRESSURE RELIEF VALVE (PRV)
- FLOAT VALVE (FV)
- DIAPHRAGM (DV)
- NEEDLE (NV)
- 3–WAY
- 3–WAY SOLENOID
- 4–WAY SOLENOID
- 4–FUNCTION VALVE
- FOOT VALVE

N.O. – NORMALLY OPEN
N.C. – NORMALLY CLOSED

CONTROL VALVES/ACTUATORS

- PRESSURE CONTROL VALVE (PCV) WITH PRESSURE GAUGE
- DOUBLE ACTING ACTUATED BALL VALVE (ABV) – NORMALLY CLOSED
- DOUBLE ACTING ACTUATED BALL VALVE (ABV) – NORMALLY OPEN
- DOUBLE ACTING ACTUATED BALL VALVE (ABV) – NORMALLY OPEN WITH PINCH VALVES
- SOLENOID VALVE (SV)
- SOLENOID VALVE (SV)
- MOTORIZED ACTUATOR
- MOTORIZED ACTUATOR WITH MANUAL OVERRIDE
- DOUBLE ACTING DIAPHRAGM ACTUATOR WITH LIMIT STOP
- DOUBLE ACTING DIAPHRAGM ACTUATOR WITH SPRING TO CLOSE
- DOUBLE ACTING DIAPHRAGM ACTUATOR WITH SPRING TO OPEN
- AIR OPERATOR W/POSITIONER

EQUIPMENT SYMBOL

- MIXER OR AGITATOR (MX)
- INLINE STATIC MIXER
- HEATER (HE)
- ELECTRIC HEATER (EH)
- INJECTION QUILL
- EDUCTOR/EJECTOR (ED)
- POSITIVE DISPLACEMENT PUMP W/MANUAL STROKE ADJUSTMENT (MP)
- POSITIVE DISPLACEMENT PUMP W/ELECTRIC STROKE ADJUSTMENT (MP)
- ROTARY COMPRESSER OR BLOWER
- AIR FILTER
- BLOWER OR FAN (BW OR FN)
- VACUUM PUMP (VP)
- DIAPHRAGM PUMP (P)
- CENTRIFUGAL PUMP (P)
- HIGH PRESSURE PUMP (P)
- DESICCANT BREATHER
- VENT PIPE
- Y–STRAINER
- RUPTURE DISC
- DIAPHRAGM SEAL
- STANDPIPE (SP)
- CALIBRATION COLUMN (CC)
- AIR COMPRESSOR (AC)
- PNEUMATIC VIBRATOR (VIB)
- RO/UF MODULE
- FILTER – BASKET (BAF)
- FILTER (F) HOUSING
- CLOSED TOP TANK (TK)
- CONE BOTTOM TANK (TK)
- OPEN TOP TANK (TK) WITH COVER
- PLATE HEAT EXCHANGER (HX)
- SHELL AND TUBE HEAT EXCHANGER (HX)
- CONE CONSTRAINER (CSTR)
- PERISTALTIC HOSE PUMP (P)
- FLEXIBLE CONNECTION

MISCELLANEOUS SYMBOLS

- LINE, EQUIPMENT OR PRODUCT REFERENCES INTO OR LEAVING DWG.
- TIE IN TO PIPING BY OTHERS
- 304 | CPVC — PIPING MATERIAL SPEC. BREAK

SOLENOID VALVE OPERATION

3–WAY: FAIL OPEN TO PATH A–C

4–WAY: FAIL OPEN TO PATHS A–C AND D–B

- AIR SUPPLY
- NITROGEN SUPPLY
- CONCENTRIC REDUCING
- ECCENTRIC REDUCING
- ENCLOSURE (CAP)
- FLANGE
- END CLOSURE (BLIND FLANGE)
- END CLOSURE (VIC PLUG)
- QUICK DISCONNECT
- UNION
- SANITARY CONNECTION
- FLOOR DRAIN OR SUMP
- BULKHEAD
- EXPANSION JOINT

FILL SYMBOLS

- SPLASH FILL
- FILM FILL
- NET FILL

INSTRUMENT LINE SYMBOLS

- PNEUMATIC SIGNAL (ANALOG)
- PNEUMATIC SIGNAL (DIGITAL)
- ELECTRICAL SIGNAL (ANALOG – 4–20mA OR 1–10 VDC)
- ELECTRICAL SIGNAL (FREQUENCY OR PULSE)
- CAPILLARY TUBING (FILLED TUBING)
- CONNECTION TO PROCESS, OR INSTRUMENT SUPPLY

FLUID LINE SYMBOLS

- EFFECT 1 BRINE (90°C)
- EFFECT 2 BRINE (75°C)
- EFFECT 3 BRINE (60°C)
- EFFECT 4 BRINE (45°C)
- EFFECT 5 BRINE (30°C)
- CIP
- RAW FEED
- CONDENSED WATER (70°C – 40°C)
- THERMAL LOOP (GYLCOL)
- EVAPORATE
- COMPRESSED AIR LINE
- ACID DOSING
- BASE DOSING
- ANTIFOAM
- BIOFILM TREATMENT SOLUTION

MISCELLANEOUS LINE SYMBOLS

- SYSTEM BOUNDARY

INSTRUMENT SYMBOLS

- LOCALLY MOUNTED
- PANEL MOUNTED (MAIN OR REMOTE)
- SHARED DISPLAY (CRT) AND/OR SHARED CONTROL

CONTROL SYMBOLS

- DI — DISCRETE INPUT TO PLC
- DO — DISCRETE OUTPUT FROM PLC
- AI — ANALOG INPUT TO PLC
- AO — ANALOG OUTPUT FROM PLC

EQUIPMENT IDENTIFICATION

M – MOTOR
AS – AIR SEAL
VFD – VARIABLE FREQUENCY DRIVE
DRY – DRYER

MODULE IDENTIFICATION

EVP – EVAPORATOR MODULE
RAD – RADIATOR MODULE
FAN – FAN MODULE

MATERIAL ABBREVIATIONS

PP – POLYPROPYLENE
PVC – POLYVINYL CHLORIDE
UPVC – POLYVINYL CHLORIDE
P – POLYVINYL CHLORIDE (IN LINE NUMBER)
CPVC – CHLORINATED POLYVINYL CHLORIDE
C – CHLORINATED POLYVINYL CHLORIDE (IN LINE NUMBER)
HDPE – HIGH DENSITY POLYETHYLENE
PVDF – POLYVINYLIDENE FLUORIDE
PVFB – PVDF BEADLESS & CREVICE FREE
PVFL – PVDF LINED
PTFE – TEFLON
304 – 304 STAINLESS STEEL
304L – 304L STAINLESS STEEL
316 – 316 STAINLESS STEEL
316L – 316L STAINLESS STEEL

INSTRUMENT IDENTIFICATION

PARAMETER (1ST LETTER)

P – PRESSURE
F – FLOW
T – TEMPERATURE
C – CONDUCTIVITY
D – DENSITY
Z – POSITION
A – ANALYTICAL (SEE NOTES)

TYPE (2ND AND 3RD LETTER)

I – INDICATING/INDICATOR
T – TRANSMITTER
E – ELEMENT/PROBE
A – ALARM
S – SWITCH

NOTES:

1. THE DESCRIPTION OF AN ANALYTICAL VARIABLE FUNCTION (pH, SiO_2, O, ETC.) SHALL BE SHOWN OUTSIDE THE INSTRUMENT SYMBOL. EXAMPLE: AIT pH
2. ADD THE SUFFIX L (LOW), LL (LOW–LOW), H (HIGH), HH (HIGH–HIGH), HL (HIGH–LOW), AS REQUIRED. EXAMPLE: PSL FAL

LINE NUMBERING

E1BR4–001–P80

FLUID — SIZE — SEQUENTIAL NUMBER — MATERIAL — SCHEDULE

VALVE NUMBERING

681–015–BA17–0001

AREA CODE — VALVE SIZE — VALVE TYPE — SEQUENTIAL NUMBER

VALVE SIZE CONVERSION

MM	INCH
008	1/4
015	1/2
025	1
050	2
100	4
150	6

VALVE TYPE CONVERSION

- BA17 – BALL VALVE
- BA99 – TOUGH BALL VALVE
- BF99 – TOUGH BUTTERFLY VALVE (EXCEPT THOSE NOTED "NON TOUGH")
- CK99 – CHECK VALVE
- GA99 – GATE VALVE

Saltworks
13800 Steveston Hwy
Richmond, BC, Canada, V6W 1A8
Tel: 604.628.6508 Fax: 604.676.2463
www.saltworkstech.com

DRAWING STATUS: FACTORY AS BUILT

THIS DOCUMENT EMBODIES DESIGNS AND INFORMATION THAT ARE PROPRIETARY TO SALTWORKS. IT IS TO BE USED ONLY FOR THE PURPOSE AND BY THE ENTITY FOR WHICH IT WAS ORIGINALLY SUPPLIED. THE DOCUMENT MAY NOT BE DUPLICATED OR DISCLOSED TO OTHER PERSON OR ENTITY, OR USED FOR MANUFACTURE OF THE ITEM IN PART OR IN WHOLE WITHOUT THE PRIOR WRITTEN PERMISSION OF SALTWORKS.

DO NOT SCALE DRAWING

LTR	DATE	DESCRIPTION	REV. BY:
N	06–JUL–2018	PINCH VALVE LEGEND ADDED	JLAU
K	26–FEB–2018	NO CHANGES	–
L	16–MAR–2018	NO CHANGES	–
M	08–MAY–2018	NO CHANGES	–

TITLE: LEGEND

PROJECT: SALTMAKER GEN III		CUSTOMER: AGNICO EAGLE MINES	REVISION N
PREPARED BY: SN	DATE: 22–FEB–2018	DWG. NO: LEGEND	
CHECKED BY: XXIAO	DATE: 23–FEB–2018	JOB/CO NO: (JOB NO.)	
APPROVED BY: APPROVED BY	DATE: APPROVED DATE	SHEET: # OF #	

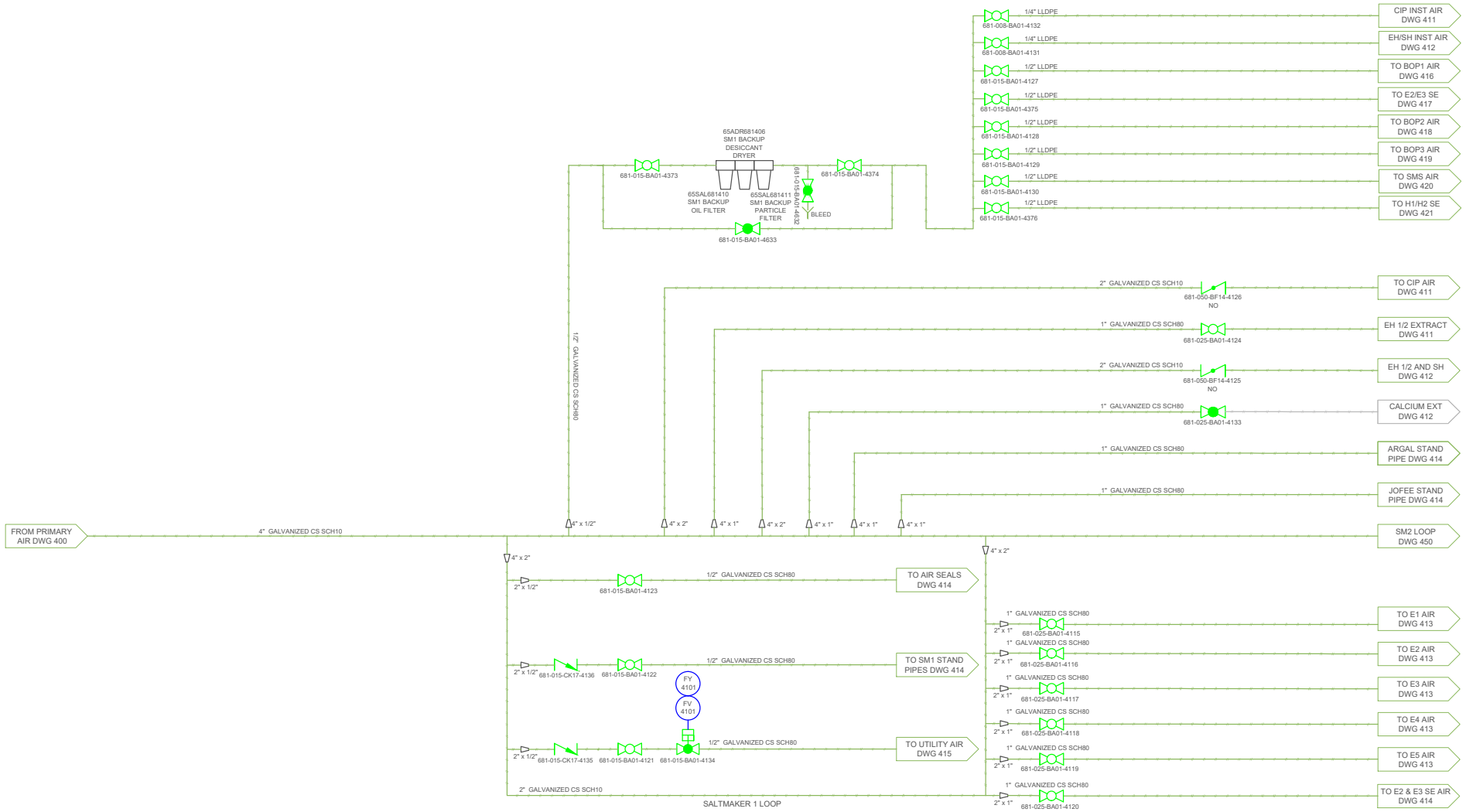

Saltworks
13800 Steveston Hwy
Richmond, BC, Canada, V6W 1A8
Tel: 604.628.6508 Fax: 604.676.2463
www.saltworkstech.com

DRAWING STATUS: FACTORY AS BUILT

THIS DOCUMENT EMBODIES DESIGNS AND INFORMATION THAT ARE PROPRIETARY TO SALTWORKS. IT IS TO BE USED ONLY FOR THE PURPOSE AND BY THE ENTITY FOR WHICH IT WAS ORIGINALLY SUPPLIED. THE DOCUMENT MAY NOT BE DUPLICATED OR DISCLOSED TO OTHER PERSON OR ENTITY, OR USED FOR MANUFACTURE OF THE ITEM IN PART OR IN WHOLE WITHOUT THE PRIOR WRITTEN PERMISSION OF SALTWORKS.

DO NOT SCALE DRAWING

LTR	DATE	DESCRIPTION	REV. BY:
N	06–JUL–2018	NO CHANGES	–
K	26–FEB–2018	NO CHANGES	–
L	16–MAR–2018	INSTRUMENT AIR UPDATED, FILTER PACK ADDED	JLAU
M	08–MAY–2018	REMOVED MANIFOLD	JLAU

TITLE: (SM1) 410: SM1 INSTRUMENT AND PROCESS AIR

PROJECT: SALTMAKER GEN III		CUSTOMER: AGNICO EAGLE MINES	REVISION N
PREPARED BY: SN	DATE: 22–FEB–2018	DWG. NO: SW_EN_SM_GEN III_PID_DWG_410	
CHECKED BY: XXIAO	DATE: 23–FEB–2018	JOB/CO NO: (JOB NO.)	
APPROVED BY: APPROVED BY	DATE: APPROVED DATE	SHEET: 60 OF117	

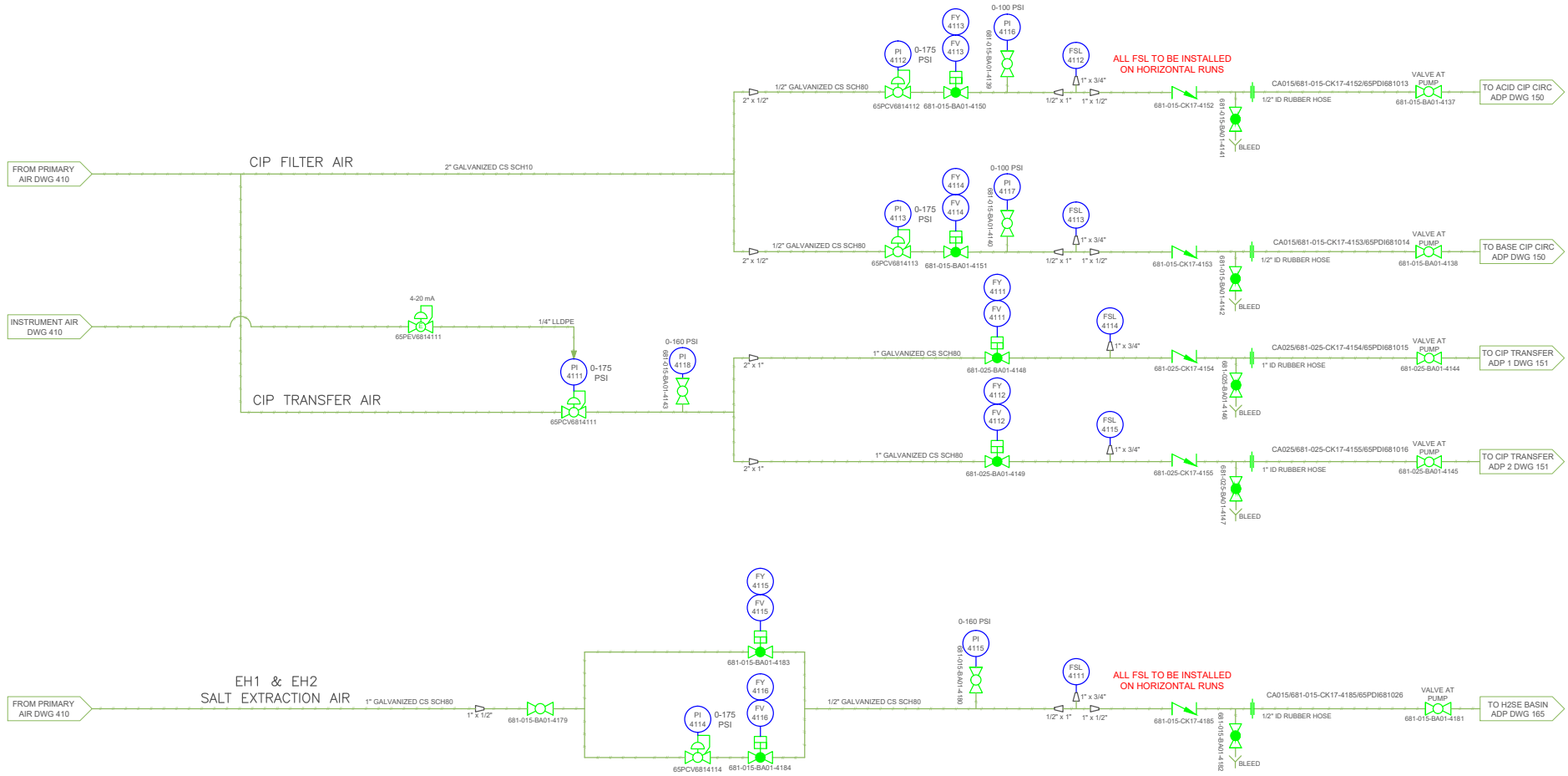

Saltworks
13800 Steveston Hwy
Richmond, BC, Canada, V6W 1A8
Tel: 604.628.6508 Fax: 604.676.2463
www.saltworkstech.com

DRAWING STATUS: FACTORY AS BUILT

THIS DOCUMENT EMBODIES DESIGNS AND INFORMATION THAT ARE PROPRIETARY TO SALTWORKS. IT IS TO BE USED ONLY FOR THE PURPOSE AND BY THE ENTITY FOR WHICH IT WAS ORIGINALLY SUPPLIED. THE DOCUMENT MAY NOT BE DUPLICATED OR DISCLOSED TO OTHER PERSON OR ENTITY, OR USED FOR MANUFACTURE OF THE ITEM IN PART OR IN WHOLE WITHOUT THE PRIOR WRITTEN PERMISSION OF SALTWORKS.

DO NOT SCALE DRAWING

LTR	DATE	DESCRIPTION	REV. BY:
N	06–JUL–2018	NO CHANGES	–
K	26–FEB–2018	UPDATED LINE LABLES	SN
L	16–MAR–2018	NO CHANGES	–
M	08–MAY–2018	NO CHANGES	–

TITLE: (SM1) 411: EH1/EH2 EXTRACT AND CIP AIR

PROJECT: SALTMAKER GEN III		CUSTOMER: AGNICO EAGLE MINES	REVISION N
PREPARED BY: SN	DATE: 22–FEB–2018	DWG. NO: SW_EN_SM_GEN III_PID_DWG_411	
CHECKED BY: XXIAO	DATE: 23–FEB–2018	JOB/CO NO: (JOB NO.)	
APPROVED BY: APPROVED BY	DATE: APPROVED DATE	SHEET: 61 OF117	

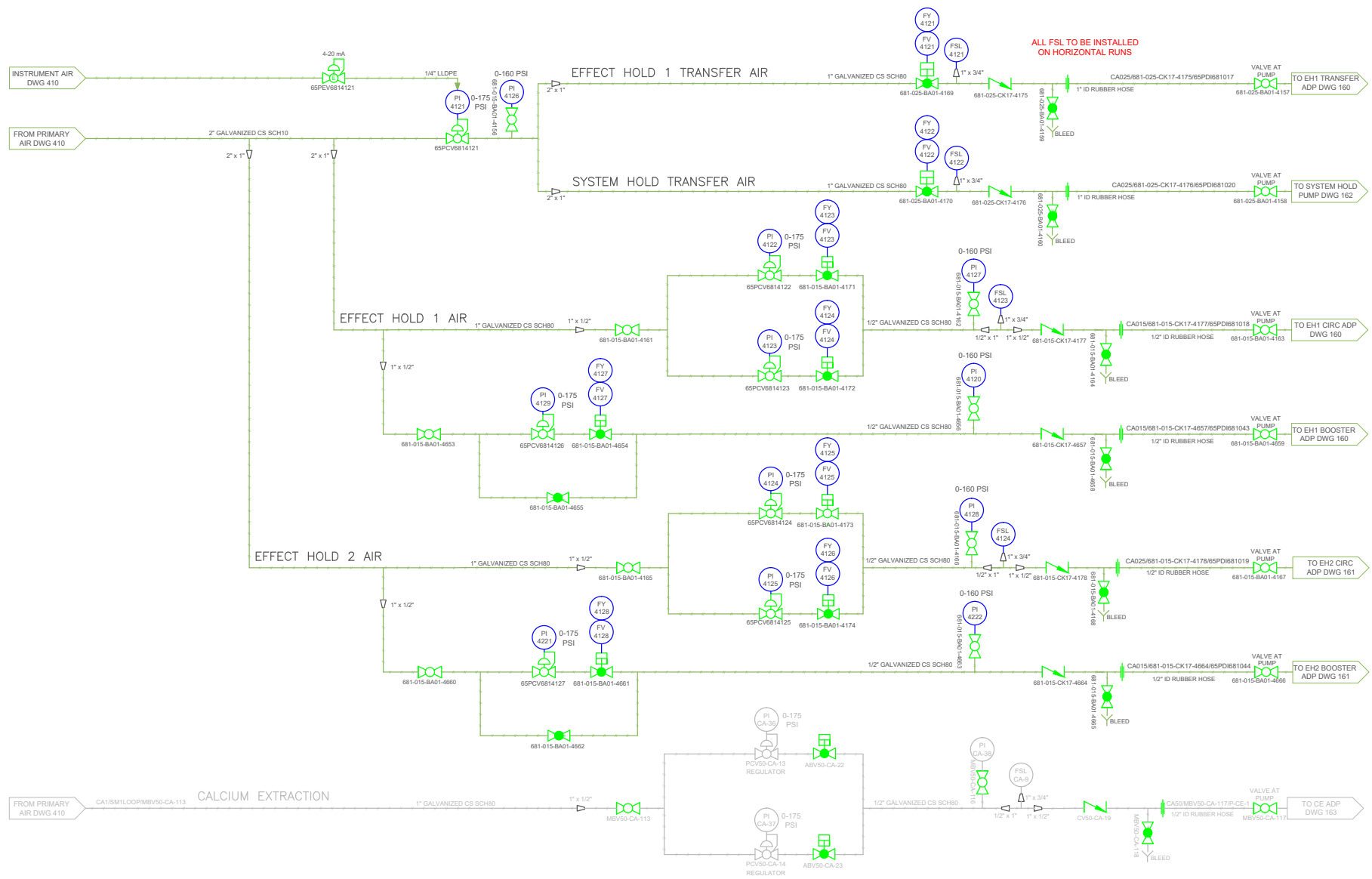

Saltworks
13800 Steveston Hwy
Richmond, BC, Canada, V6W 1A8
Tel: 604.628.6508 Fax: 604.676.2463
www.saltworkstech.com

DRAWING STATUS: FACTORY AS BUILT

THIS DOCUMENT EMBODIES DESIGNS AND INFORMATION THAT ARE PROPRIETARY TO SALTWORKS. IT IS TO BE USED ONLY FOR THE PURPOSE AND BY THE ENTITY FOR WHICH IT WAS ORIGINALLY SUPPLIED. THE DOCUMENT MAY NOT BE DUPLICATED OR DISCLOSED TO OTHER PERSON OR ENTITY, OR USED FOR MANUFACTURE OF THE ITEM IN PART OR IN WHOLE WITHOUT THE PRIOR WRITTEN PERMISSION OF SALTWORKS.

DO NOT SCALE DRAWING

LTR	DATE	DESCRIPTION	REV. BY:
N	06-JUL-2018	NO CHANGES	–
K	26-FEB-2018	UPDATED LINE LABELS	SN
L	16-MAR-2018	NO CHANGES	–
M	08-MAY-2018	ADDED P3 BOOSTER MANIFOLDS	JLAU

TITLE: (SM1) 412: EFFECT HOLD, SYSTEM HOLD, AND CALCIUM EXTRACTION AIR

PROJECT: SALTMAKER GEN III		CUSTOMER: AGNICO EAGLE MINES	REVISION N
PREPARED BY: SN	DATE: 22-FEB-2018	DWG. NO: SW_EN_SM_GEN III_PID_DWG_412	
CHECKED BY: XXIAO	DATE: 23-FEB-2018	JOB/CO NO: (JOB NO.)	
APPROVED BY: APPROVED BY	DATE: APPROVED DATE	SHEET: 62 OF117	

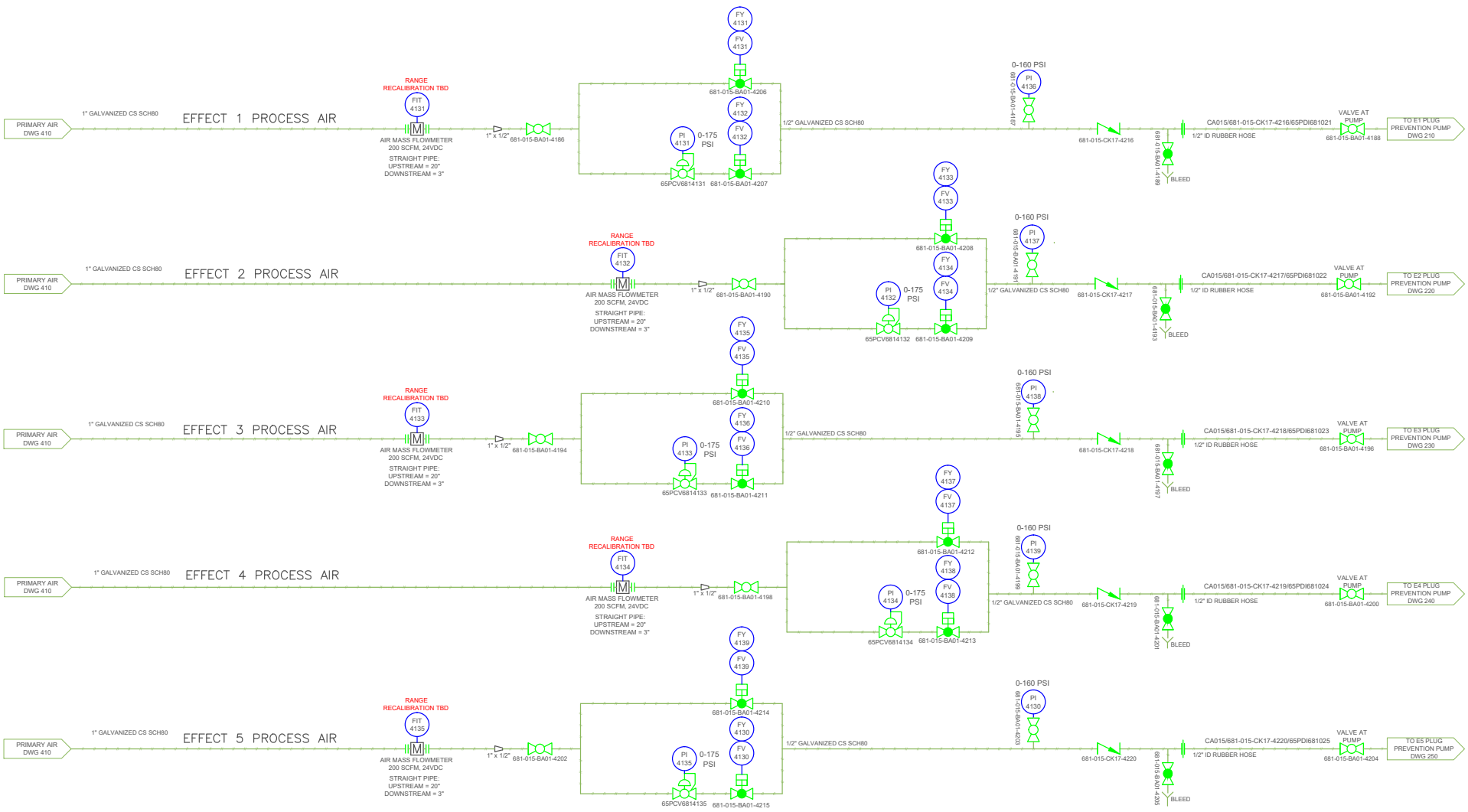

Saltworks
13800 Steveston Hwy
Richmond, BC, Canada, V6W 1A8
Tel: 604.628.6508 Fax: 604.676.2463
www.saltworkstech.com

DRAWING STATUS: FACTORY AS BUILT

THIS DOCUMENT EMBODIES DESIGNS AND INFORMATION THAT ARE PROPRIETARY TO SALTWORKS. IT IS TO BE USED ONLY FOR THE PURPOSE AND BY THE ENTITY FOR WHICH IT WAS ORIGINALLY SUPPLIED. THE DOCUMENT MAY NOT BE DUPLICATED OR DISCLOSED TO OTHER PERSON OR ENTITY, OR USED FOR MANUFACTURE OF THE ITEM IN PART OR IN WHOLE WITHOUT THE PRIOR WRITTEN PERMISSION OF SALTWORKS.

DO NOT SCALE DRAWING

LTR	DATE	DESCRIPTION	REV. BY:
N	06-JUL-2018	NO CHANGES	–
K	26-FEB-2018	UPDATED LINE LABELS	SN
L	16-MAR-2018	NO CHANGES	–
M	08-MAY-2018	NO CHANGES	–

TITLE: (SM1) 413: EFFECT PUMP COMPRESSED AIR

PROJECT: SALTMAKER GEN III		CUSTOMER: AGNICO EAGLE MINES	REVISION N
PREPARED BY: SN	DATE: 22-FEB-2018	DWG. NO: SW_EN_SM_GEN III_PID_DWG_413	
CHECKED BY: XXIAO	DATE: 23-FEB-2018	JOB/CO NO: (JOB NO.)	
APPROVED BY: APPROVED BY	DATE: APPROVED DATE	SHEET: 63 OF117	

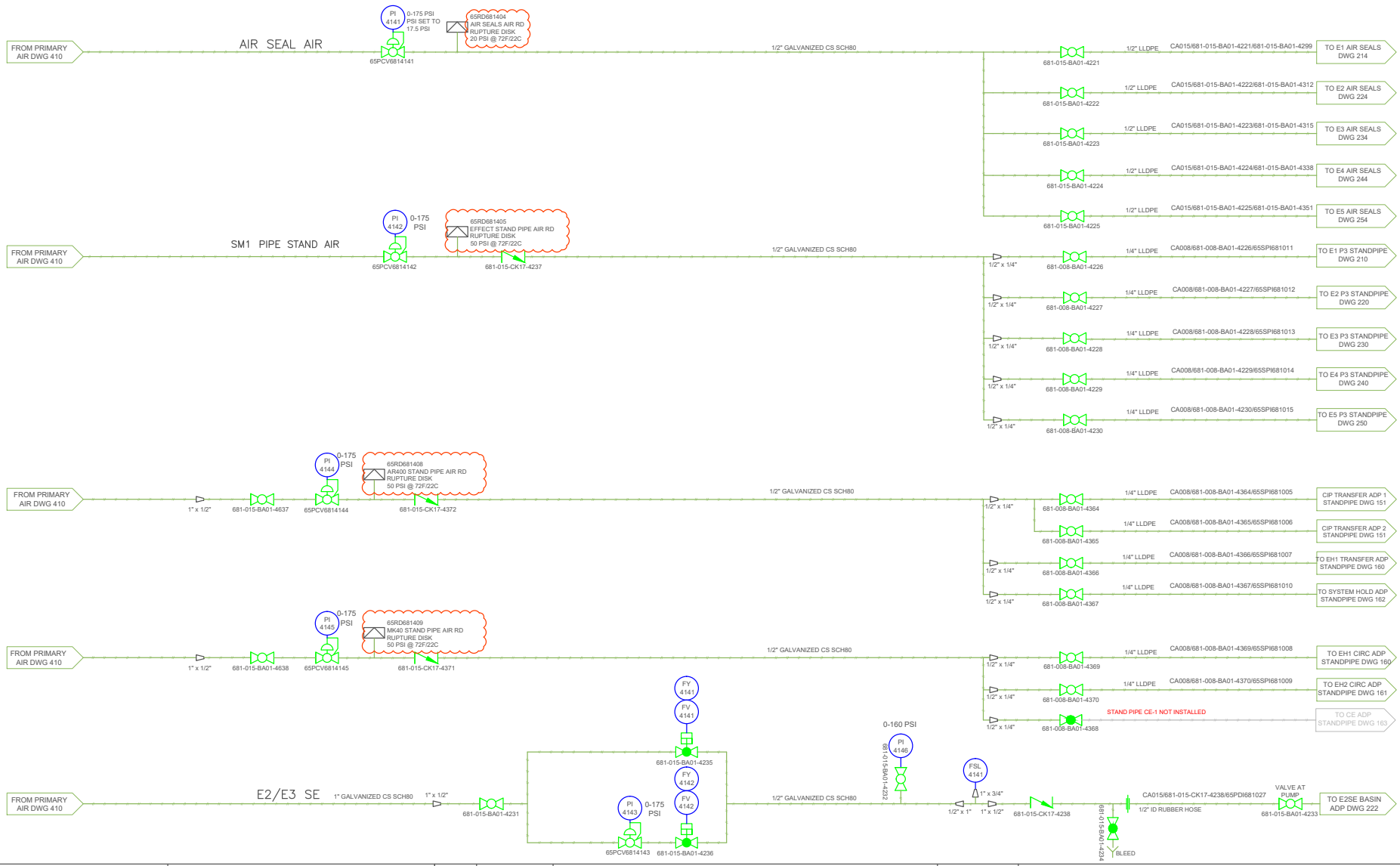

Saltworks
13800 Steveston Hwy
Richmond, BC, Canada, V6W 1A8
Tel: 604.628.6508 Fax: 604.676.2463
www.saltworkstech.com

DRAWING STATUS: FACTORY AS BUILT

THIS DOCUMENT EMBODIES DESIGNS AND INFORMATION THAT ARE PROPRIETARY TO SALTWORKS. IT IS TO BE USED ONLY FOR THE PURPOSE AND BY THE ENTITY FOR WHICH IT WAS ORIGINALLY SUPPLIED. THE DOCUMENT MAY NOT BE DUPLICATED OR DISCLOSED TO OTHER PERSON OR ENTITY, OR USED FOR MANUFACTURE OF THE ITEM IN PART OR IN WHOLE WITHOUT THE PRIOR WRITTEN PERMISSION OF SALTWORKS.

DO NOT SCALE DRAWING

LTR	DATE	DESCRIPTION	REV. BY:
N	06–JUL–2018	RUPTURE DISK CONFIRMED	JLAU
K	26–FEB–2018	UPDATED LINE LABELS	SN
L	16–MAR–2018	ADDED 2 ISOLATION VALVES	JLAU
M	08–MAY–2018	NO CHANGES	–

TITLE: (SM1) 414: SM1 AIR SEAL, PIPE STAND, AND E2/E3 SE AIR

PROJECT: SALTMAKER GEN III		CUSTOMER: AGNICO EAGLE MINES	REVISION: N
PREPARED BY: SN	DATE: 22–FEB–2018	DWG. NO: SW_EN_SM_GEN III_PID_DWG_414	
CHECKED BY: XXIAO	DATE: 23–FEB–2018	JOB/CO NO: (JOB NO.)	
APPROVED BY: APPROVED BY	DATE: APPROVED DATE	SHEET: 64 OF117	

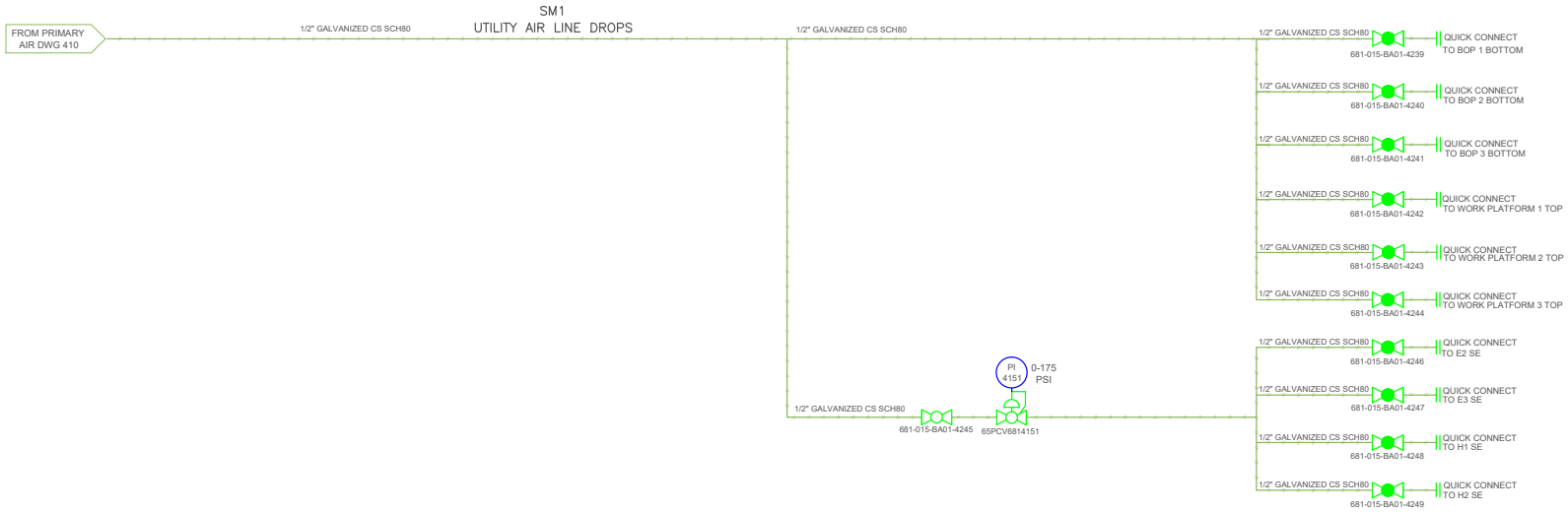

Saltworks
13800 Steveston Hwy
Richmond, BC, Canada, V6W 1A8
Tel: 604.628.6508 Fax: 604.676.2463
www.saltworkstech.com

DRAWING STATUS: FACTORY AS BUILT

THIS DOCUMENT EMBODIES DESIGNS AND INFORMATION THAT ARE PROPRIETARY TO SALTWORKS. IT IS TO BE USED ONLY FOR THE PURPOSE AND BY THE ENTITY FOR WHICH IT WAS ORIGINALLY SUPPLIED. THE DOCUMENT MAY NOT BE DUPLICATED OR DISCLOSED TO OTHER PERSON OR ENTITY, OR USED FOR MANUFACTURE OF THE ITEM IN PART OR IN WHOLE WITHOUT THE PRIOR WRITTEN PERMISSION OF SALTWORKS.

DO NOT SCALE DRAWING

LTR	DATE	DESCRIPTION	REV. BY:
N	06–JUL–2018	NO CHANGES	–
K	26–FEB–2018	NO CHANGES	SN
L	16–MAR–2018	NO CHANGES	–
M	08–MAY–2018	NO CHANGES	–

TITLE: (SM1) 415: SM1 UTILITY AIR

PROJECT: SALTMAKER GEN III		CUSTOMER: AGNICO EAGLE MINES	REVISION N
PREPARED BY: SN	DATE: 22–FEB–2018	DWG. NO: SW_EN_SM_GEN III_PID_DWG_415	
CHECKED BY: XXIAO	DATE: 23–FEB–2018	JOB/CO NO: (JOB NO.)	
APPROVED BY: APPROVED BY	DATE: APPROVED DATE	SHEET: 65 OF117	

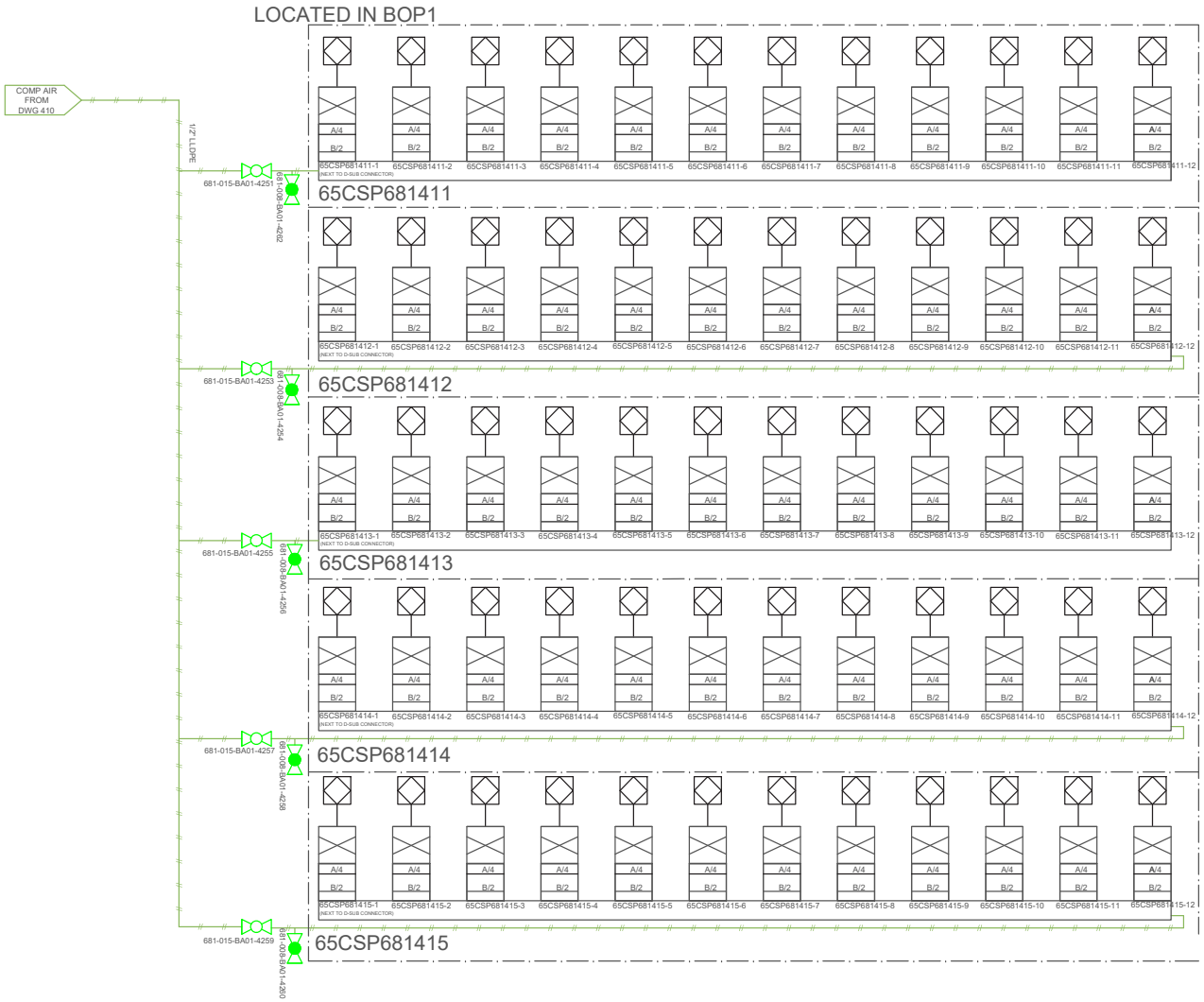

65CSP681411

SOLENOID	ABV	CONTROL LINE A	CONTROL LINE B	SYSTEM/DWG	NO/NC
65CSP681411-1	65FV6812202	65CSP681411-1/65FV6812202/A	65CSP681411-1/65FV6812202/B	E2/220	NC
65CSP681411-2	65FV6812203	65CSP681411-2/65FV6812203/A	65CSP681411-2/65FV6812203/B	E2/220	NC
65CSP681411-3	65FV6812204	65CSP681411-3/65FV6812204/A	65CSP681411-3/65FV6812204/B	E2/220	NC
65CSP681411-4	65FV6812205	65CSP681411-4/65FV6812205/A	65CSP681411-4/65FV6812205/B	E2/220	NC
65CSP681411-5	65FV6812206	65CSP681411-5/65FV6812206/A	65CSP681411-5/65FV6812206/B	E2/220	NO
65CSP681411-6	65FV6812207	65CSP681411-6/65FV6812207/A	65CSP681411-6/65FV6812207/B	E2/220	NC
65CSP681411-7	65FV6812208	65CSP681411-7/65FV6812208/A	65CSP681411-7/65FV6812208/B	E2/220	NC
65CSP681411-8	65FV6812201	65CSP681411-8/65FV6812201/A	65CSP681411-8/65FV6812201/B	E2/220	NC
65CSP681411-9	65FV6812217	65CSP681411-9/65FV6812217/A	65CSP681411-9/65FV6812217/B	E2/220	NC
65CSP681411-10	65FV6812218	65CSP681411-10/65FV6812218/A	65CSP681411-10/65FV6812218/B	E2/220	NC
65CSP681411-11	65FV6812200	65CSP681411-11/65FV6812200/A	65CSP681411-11/65FV6812200/B	E2-ACD/220	NC
65CSP681411-12	65FV6812209	65CSP681411-12/65FV6812209/A	65CSP681411-12/65FV6812209/B	E2-BSE/220	NC

65CSP681412

SOLENOID	ABV	CONTROL LINE A	CONTROL LINE B	SYSTEM/DWG	NO/NC
65CSP681412-1	65FV6812216	65CSP681412-1/65FV6812216/A	65CSP681412-1/65FV6812216/B	E2/223	NC
65CSP681412-2	65FV6812212	65CSP681412-2/65FV6812212/A	65CSP681412-2/65FV6812212/B	E2/220	NC
65CSP681412-3	65FV6812213	65CSP681412-3/65FV6812213/A	65CSP681412-3/65FV6812213/B	E2/220	NC
65CSP681412-4	65FV6812219	65CSP681412-4/65FV6812219/A	65CSP681412-4/65FV6812219/B	E2/220	NC
65CSP681412-5	65FV6814133	65CSP681412-5/65FV6814133/A	65CSP681412-5/65FV6814133/B	CA-E2/413	NC
65CSP681412-6	65FV6814134	65CSP681412-6/65FV6814134/A	65CSP681412-6/65FV6814134/B	CA-E2/413	NC
65CSP681412-7	65FV6812302	65CSP681412-7/65FV6812302/A	65CSP681412-7/65FV6812302/B	E3/230	NC
65CSP681412-8	65FV6812303	65CSP681412-8/65FV6812303/A	65CSP681412-8/65FV6812303/B	E3/230	NC
65CSP681412-9	65FV6812304	65CSP681412-9/65FV6812304/A	65CSP681412-9/65FV6812304/B	E3/230	NC
65CSP681412-10	65FV6812305	65CSP681412-10/65FV6812305/A	65CSP681412-10/65FV6812305/B	E3/230	NC
65CSP681412-11	65FV6812306	65CSP681412-11/65FV6812306/A	65CSP681412-11/65FV6812306/B	E3/230	NO
65CSP681412-12	65FV6812307	65CSP681412-12/65FV6812307/A	65CSP681412-12/65FV6812307/B	E3/230	NC

65CSP681413

SOLENOID	ABV	CONTROL LINE A	CONTROL LINE B	SYSTEM/DWG	NO/NC
65CSP681413-1	65FV6812308	65CSP681413-1/65FV6812308/A	65CSP681413-1/65FV6812308/B	E3/230	NC
65CSP681413-2	65FV6812301	65CSP681413-2/65FV6812301/A	65CSP681413-2/65FV6812301/B	E3/230	NC
65CSP681413-3	65FV6812317	65CSP681413-3/65FV6812317/A	65CSP681413-3/65FV6812317/B	E3/230	NC
65CSP681413-4	65FV6812318	65CSP681413-4/65FV6812318/A	65CSP681413-4/65FV6812318/B	E3/230	NC
65CSP681413-5	65FV6812300	65CSP681413-5/65FV6812300/A	65CSP681413-5/65FV6812300/B	E3-ACD/230	NC
65CSP681413-6	65FV6812309	65CSP681413-6/65FV6812309/A	65CSP681413-6/65FV6812309/B	E3-BSE/230	NC
65CSP681413-7	65FV6812316	65CSP681413-7/65FV6812316/A	65CSP681413-7/65FV6812316/B	E3/233	NC
65CSP681413-8	65FV6812312	65CSP681413-8/65FV6812312/A	65CSP681413-8/65FV6812312/B	E3/230	NC
65CSP681413-9	65FV6812313	65CSP681413-9/65FV6812313/A	65CSP681413-9/65FV6812313/B	E3/230	NC
65CSP681413-10	65FV6812319	65CSP681413-10/65FV6812319/A	65CSP681413-10/65FV6812319/B	E3/230	NC
65CSP681413-11	65FV6814135	65CSP681413-11/65FV6814135/A	65CSP681413-11/65FV6814135/B	CA-E3/413	NC
65CSP681413-12	65FV6814136	65CSP681413-12/65FV6814136/A	65CSP681413-12/65FV6814136/B	CA-E3/413	NC

65CSP681414

SOLENOID	ABV	CONTROL LINE A	CONTROL LINE B	SYSTEM/DWG	NO/NC
65CSP681414-1	65FV6811301	65CSP681414-1/65FV6811301/A	65CSP681414-1/65FV6811301/B	FD/130	NC
65CSP681414-2	65FV6811302	65CSP681414-2/65FV6811302/A	65CSP681414-2/65FV6811302/B	FD/130	NC
65CSP681414-3	65FV6811303	65CSP681414-3/65FV6811303/A	65CSP681414-3/65FV6811303/B	FD/130	NC
65CSP681414-4	65FV6811304	65CSP681414-4/65FV6811304/A	65CSP681414-4/65FV6811304/B	FD/130	NC
65CSP681414-5	65FV6811305	65CSP681414-5/65FV6811305/A	65CSP681414-5/65FV6811305/B	FD/130	NC
65CSP681414-6	65FV6811306	65CSP681414-6/65FV6811306/A	65CSP681414-6/65FV6811306/B	FD/130	NC
65CSP681414-7	65FV6811307	65CSP681414-7/65FV6811307/A	65CSP681414-7/65FV6811307/B	FD/130	NC
65CSP681414-8	65FV6811308	65CSP681414-8/65FV6811308/A	65CSP681414-8/65FV6811308/B	FD/130	NC
65CSP681414-9	65FV6811309	65CSP681414-9/65FV6811309/A	65CSP681414-9/65FV6811309/B	FD/130	NC
65CSP681414-10	65FV6811310	65CSP681414-10/65FV6811310/A	65CSP681414-10/65FV6811310/B	FD/130	NC
65CSP681414-11	65FV6811311	65CSP681414-11/65FV6811311/A	65CSP681414-11/65FV6811311/B	FD/130	NC
65CSP681414-12	SPARE				

65CSP681415

SOLENOID	ABV	CONTROL LINE A	CONTROL LINE B	SYSTEM/DWG	NO/NC
65CSP681415-1	65FV6810623	65CSP681415-1/65FV6810623/A	65CSP681415-1/65FV6810623/B	BIO/062	NC
65CSP681415-2	65FV6810624	65CSP681415-2/65FV6810624/A	65CSP681415-2/65FV6810624/B	BIO/062	NC
65CSP681415-3	65FV6810625	65CSP681415-3/65FV6810625/A	65CSP681415-3/65FV6810625/B	BIO/062	NC
65CSP681415-4	65FV6810626	65CSP681415-4/65FV6810626/A	65CSP681415-4/65FV6810626/B	BIO/062	NC
65CSP681415-5	65FV6810690	65CSP681415-5/65FV6810690/A	65CSP681415-5/65FV6810690/B	BIO/062	NC
65CSP681415-6	TBD - VALVE MAY NOT EXIST				
65CSP681415-7	65FV6810631	65CSP681415-7/65FV6810631/A	65CSP681415-7/65FV6810631/B	ATF/063	NC
65CSP681415-8	65FV6810632	65CSP681415-8/65FV6810632/A	65CSP681415-8/65FV6810632/B	ATF/063	NC
65CSP681415-9	65FV6810633	65CSP681415-9/65FV6810633/A	65CSP681415-9/65FV6810633/B	ATF/063	NC
65CSP681415-10	65FV6810634	65CSP681415-10/65FV6810634/A	65CSP681415-10/65FV6810634/B	ATF/063	NC
65CSP681415-11	65FV6810635	65CSP681415-11/65FV6810635/A	65CSP681415-11/65FV6810635/B	ATF/063	NC
65CSP681415-12	TBD - VALVE MAY NOT EXIST				

1. ALL ABV SUPPLIED IN NC CONFIGURATION
2. CONTROL LINE A ALWAYS START FROM SOLENOID A PORT
3. CONTROL LINE B ALWAYS START FROM SOLENOID B PORT
4. FOR NC ABV
   a. CONTROL LINE A TERMINATES AT ABV LEFT PORT
   b. CONTROL LINE B TERMINATES AT ABV RIGHT PORT
5. FOR NO ABV
   a. CONTROL LINE A TERMINATES AT ABV RIGHT PORT
   b. CONTROL LINE B TERMINATES AT ABV LEFT PORT

NOTE: ORIENTATION OF AIR PANEL AND AIRLINE FEEDING PANEL PENDING MECHANICAL LAYOUT. ALL SOLENOID VALVE POSITION 1 STARTS IMMEDIATELY ADJACENT TO D-SUB CONNECTOR

Saltworks
13800 Steveston Hwy
Richmond, BC, Canada, V6W 1A8
Tel: 604.628.6508 Fax: 604.676.2463
www.saltworkstech.com

DRAWING STATUS: FACTORY AS BUILT

THIS DOCUMENT EMBODIES DESIGNS AND INFORMATION THAT ARE PROPRIETARY TO SALTWORKS. IT IS TO BE USED ONLY FOR THE PURPOSE AND BY THE ENTITY FOR WHICH IT WAS ORIGINALLY SUPPLIED. THE DOCUMENT MAY NOT BE DUPLICATED OR DISCLOSED TO OTHER PERSON OR ENTITY, OR USED FOR MANUFACTURE OF THE ITEM IN PART OR IN WHOLE WITHOUT THE PRIOR WRITTEN PERMISSION OF SALTWORKS.

DO NOT SCALE DRAWING

LTR	DATE	DESCRIPTION	REV. BY:
N	06-JUL-2018	NO CHANGES	–
K	26-FEB-2018	UPDATED SOLENOID BANK, LINES MATCH AS BUILT	SN
L	16-MAR-2018	UPDATED SOLENOID TABLE	JLAU
M	08-MAY-2018	NO CHANGES	–

TITLE: (SM1) 416: BOP1 AIR SOLENOID BANK

PROJECT: SALTMAKER GEN III		CUSTOMER: AGNICO EAGLE MINES	REVISION: N
PREPARED BY: SN	DATE: 22-FEB-2018	DWG. NO: SW_EN_SM_GEN III_PID_DWG_416	
CHECKED BY: XXIAO	DATE: 23-FEB-2018	JOB/CO NO: (JOB NO.)	
APPROVED BY: APPROVED BY	DATE: APPROVED DATE	SHEET: 66 OF117	

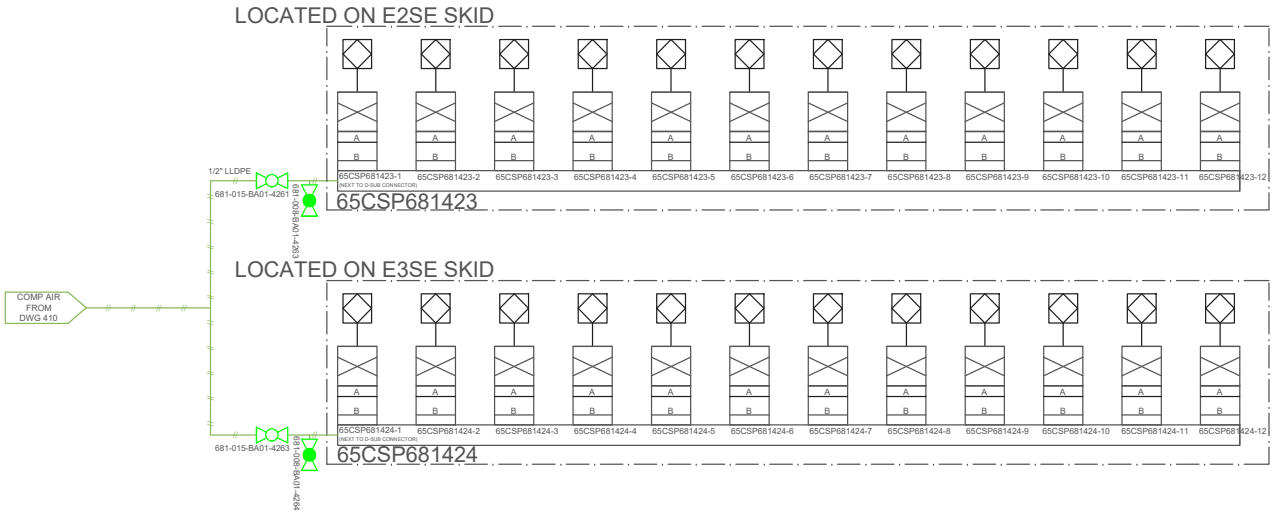

65CSP681423

SOLENOID	ABV	CONTROL LINE A	CONTROL LINE B	SYSTEM/DWG	NO/NC
65CSP681423-1	65FV6812221	65CSP681423-1/65FV6812221/A	65CSP681423-1/65FV6812221/B	E2SE/222	NC
65CSP681423-2	65FV6812222	65CSP681423-2/65FV6812222/A	65CSP681423-2/65FV6812222/B	E2SE/222	NC
65CSP681423-3	65FV6812223	65CSP681423-3/65FV6812223/A	65CSP681423-3/65FV6812223/B	E2SE/222	NC
65CSP681423-4	65FV6812224	65CSP681423-4/65FV6812224/A	65CSP681423-4/65FV6812224/B	E2SE/222	NC
65CSP681423-5	65FV6812225	65CSP681423-5/65FV6812225/A	65CSP681423-5/65FV6812225/B	E2SE/222	NC
65CSP681423-6	65FV6812226	65CSP681423-6/65FV6812226/A	65CSP681423-6/65FV6812226/B	E2SE/222	NO
65CSP681423-7	SPARE				
65CSP681423-8	SPARE				
65CSP681423-9	SPARE				
65CSP681423-10	SPARE				
65CSP681423-11	SPARE				
65CSP681423-12	SPARE				

65CSP681424

SOLENOID	ABV	CONTROL LINE A	CONTROL LINE B	SYSTEM/DWG	NO/NC
65CSP681424-1	65FV6812321	65CSP681424-1/65FV6812321/A	65CSP681424-1/65FV6812321/B	E3SE/232	NC
65CSP681424-2	65FV6812322	65CSP681424-2/65FV6812322/A	65CSP681424-2/65FV6812322/B	E3SE/232	NC
65CSP681424-3	65FV6812323	65CSP681424-3/65FV6812323/A	65CSP681424-3/65FV6812323/B	E3SE/232	NC
65CSP681424-4	65FV6812324	65CSP681424-4/65FV6812324/A	65CSP681424-4/65FV6812324/B	E3SE/232	NC
65CSP681424-5	65FV6812325	65CSP681424-5/65FV6812325/A	65CSP681424-5/65FV6812325/B	E3SE/232	NC
65CSP681424-6	65FV6812326	65CSP681424-6/65FV6812326/A	65CSP681424-6/65FV6812326/B	E3SE/232	NO
65CSP681424-7	65FV6812227	65CSP681424-7/65FV6812227/A	65CSP681424-7/65FV6812227/B	E2SE/222	NO
65CSP681424-8	65FV6812228	65CSP681424-8/65FV6812228/A	65CSP681424-8/65FV6812228/B	E2SE/222	NC
65CSP681424-9	65FV6814141	65CSP681423-7/65FV6814141/A	65CSP681423-7/65FV6814141/B	CA-E2SE/414	NC
65CSP681424-10	65FV6814142	65CSP681423-8/65FV6814142/A	65CSP681423-8/65FV6814142/B	CA-E2SE/414	NC
65CSP681424-11	SPARE				
65CSP681424-12	SPARE				

1. ALL ABV SUPPLIED IN NC CONFIGURATION
2. CONTROL LINE A ALWAYS START FROM SOLENOID A PORT
3. CONTROL LINE B ALWAYS START FROM SOLENOID B PORT
4. FOR NC ABV
   a. CONTROL LINE A TERMINATES AT ABV LEFT PORT
   b. CONTROL LINE B TERMINATES AT ABV RIGHT PORT
5. FOR NO ABV
   a. CONTROL LINE A TERMINATES AT ABV RIGHT PORT
   b. CONTROL LINE B TERMINATES AT ABV LEFT PORT

NOTE: ORIENTATION OF AIR PANEL AND AIRLINE FEEDING PANEL PENDING MECHANICAL LAYOUT. ALL SOLENOID VALVE POSITION 1 STARTS IMMEDIATELY ADJACENT TO D-SUB CONNECTOR

Saltworks
13800 Steveston Hwy
Richmond, BC, Canada, V6W 1A8
Tel: 604.628.6508 Fax: 604.676.2463
www.saltworkstech.com

DRAWING STATUS: FACTORY AS BUILT

THIS DOCUMENT EMBODIES DESIGNS AND INFORMATION THAT ARE PROPRIETARY TO SALTWORKS. IT IS TO BE USED ONLY FOR THE PURPOSE AND BY THE ENTITY FOR WHICH IT WAS ORIGINALLY SUPPLIED. THE DOCUMENT MAY NOT BE DUPLICATED OR DISCLOSED TO OTHER PERSON OR ENTITY, OR USED FOR MANUFACTURE OF THE ITEM IN PART OR IN WHOLE WITHOUT THE PRIOR WRITTEN PERMISSION OF SALTWORKS.

DO NOT SCALE DRAWING

LTR	DATE	DESCRIPTION	REV. BY:
N	06–JUL–2018	NO CHANGES	–
K	26–FEB–2018	UPDATED SOLENOID BANK	SN
L	16–MAR–2018	UPDATED SOLENOID TABLE	JLAU
M	08–MAY–2018	NO CHANGES	–

TITLE: (SM1) 417: E2/E3 SE AIR SOLENOID BANK

PROJECT: SALTMAKER GEN III

CUSTOMER: AGNICO EAGLE MINES

REVISION: N

PREPARED BY: SN DATE: 22–FEB–2018

CHECKED BY: XXIAO DATE: 23–FEB–2018

APPROVED BY: APPROVED BY DATE: APPROVED DATE

DWG. NO: SW_EN_SM_GEN III_PID_DWG_417

JOB/CO NO: (JOB NO.)

SHEET: 67 OF117

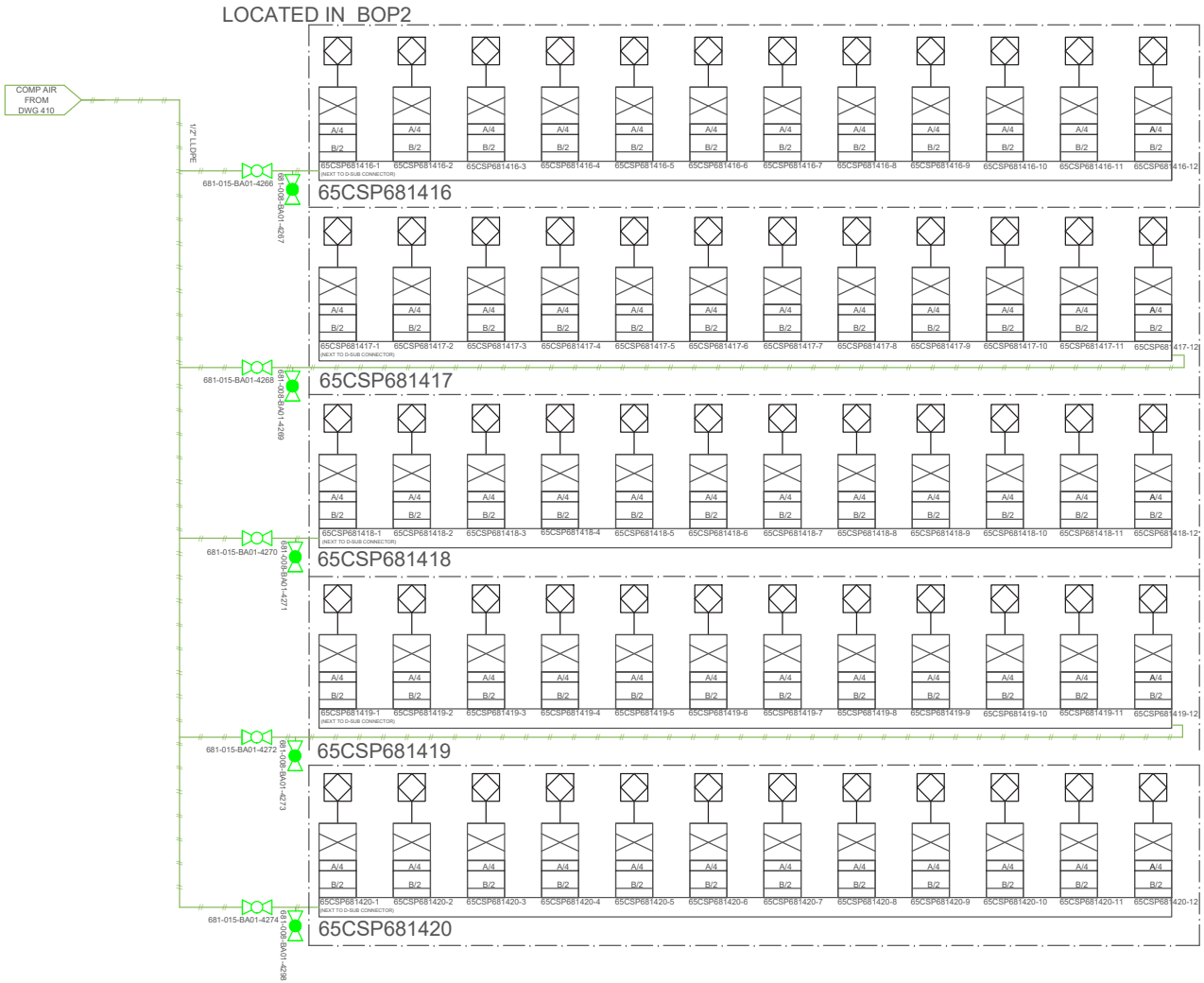

65CSP681416

SOLENOID	ABV	CONTROL LINE A	CONTROL LINE B	SYSTEM/DWG	NO/NC
65CSP681416-1	65FV6811201	65CSP681416-1/65FV6811201/A	65CSP681416-1/65FV6811201/B	CW/120	NO
65CSP681416-2	65FV6811202	65CSP681416-2/65FV6811202/A	65CSP681416-2/65FV6811202/B	CW/120	NO
65CSP681416-3	65FV6811203	65CSP681416-3/65FV6811203/A	65CSP681416-3/65FV6811203/B	CW/120	NC
65CSP681416-4	65FV6811204	65CSP681416-4/65FV6811204/A	65CSP681416-4/65FV6811204/B	CW/120	NC
65CSP681416-5	65FV6811208	65CSP681416-5/65FV6811208/A	65CSP681416-5/65FV6811208/B	CW-ACD/120	NC
65CSP681416-6	65FV6811209	65CSP681416-6/65FV6811209/A	65CSP681416-6/65FV6811209/B	CW-UW/120	NC
65CSP681416-7	65FV6814101	65CSP681416-7/65FV6814101/A	65CSP681416-7/65FV6814101/B	CA/410	NC
65CSP681416-8		TBD - VALVE MAY NOT EXIST			
65CSP681416-9		TBD - VALVE MAY NOT EXIST			
65CSP681416-10	SPARE				
65CSP681416-11	SPARE				
65CSP681416-12	SPARE				

65CSP681417

SOLENOID	ABV	CONTROL LINE A	CONTROL LINE B	SYSTEM/DWG	NO/NC
65CSP681417-1	65FV6812101	65CSP681417-1/65FV6812101/A	65CSP681417-1/65FV6812101/B	E1/210	NC
65CSP681417-2	65FV6812103	65CSP681417-2/65FV6812103/A	65CSP681417-2/65FV6812103/B	E1/210	NC
65CSP681417-3	65FV6812104	65CSP681417-3/65FV6812104/A	65CSP681417-3/65FV6812104/B	E1/210	NC
65CSP681417-4	65FV6812105	65CSP681417-4/65FV6812105/A	65CSP681417-4/65FV6812105/B	E1/210	NC
65CSP681417-5	65FV6812106	65CSP681417-5/65FV6812106/A	65CSP681417-5/65FV6812106/B	E1/210	NO
65CSP681417-6	65FV6812107	65CSP681417-6/65FV6812107/A	65CSP681417-6/65FV6812107/B	E1/210	NC
65CSP681417-7	65FV6812108	65CSP681417-7/65FV6812108/A	65CSP681417-7/65FV6812108/B	E1/210	NC
65CSP681417-8	65FV6812109	65CSP681417-8/65FV6812109/A	65CSP681417-8/65FV6812109/B	E1/210	NC
65CSP681417-9	65FV6812110	65CSP681417-9/65FV6812110/A	65CSP681417-9/65FV6812110/B	E1/210	NC
65CSP681417-10	65FV6812111	65CSP681417-10/65FV6812111/A	65CSP681417-10/65FV6812111/B	E1/210	NO
65CSP681417-11	65FV6812112	65CSP681417-11/65FV6812112/A	65CSP681417-11/65FV6812112/B	E1/210	NC
65CSP681417-12	65FV6812113	65CSP681417-12/65FV6812113/A	65CSP681417-12/65FV6812113/B	E1/210	NC

65CSP681418

SOLENOID	ABV	CONTROL LINE A	CONTROL LINE B	SYSTEM/DWG	NO/NC
65CSP681418-1	65FV6812114	65CSP681418-1/65FV6812114/A	65CSP681418-1/65FV6812114/B	E1/210	NC
65CSP681418-2	65FV6812115	65CSP681418-2/65FV6812115/A	65CSP681418-2/65FV6812115/B	E1/210	NC
65CSP681418-3	65FV6812118	65CSP681418-3/65FV6812118/A	65CSP681418-3/65FV6812118/B	E1-ACD/210	NC
65CSP681418-4	65FV6812119	65CSP681418-4/65FV6812119/A	65CSP681418-4/65FV6812119/B	E1-BSE/210	NC
65CSP681418-5	65FV6814131	65CSP681418-5/65FV6814131/A	65CSP681418-5/65FV6814131/B	CA-E1/413	NC
65CSP681418-6	65FV6814132	65CSP681418-6/65FV6814132/A	65CSP681418-6/65FV6814132/B	CA-E1/413	NC
65CSP681418-7	65FV6812402	65CSP681418-7/65FV6812402/A	65CSP681418-7/65FV6812402/B	E4/240	NC
65CSP681418-8	65FV6812403	65CSP681418-8/65FV6812403/A	65CSP681418-8/65FV6812403/B	E4/240	NC
65CSP681418-9	65FV6812404	65CSP681418-9/65FV6812404/A	65CSP681418-9/65FV6812404/B	E4/240	NC
65CSP681418-10	65FV6812405	65CSP681418-10/65FV6812405/A	65CSP681418-10/65FV6812405/B	E4/240	NC
65CSP681418-11	65FV6812406	65CSP681418-11/65FV6812406/A	65CSP681418-11/65FV6812406/B	E4/240	NO
65CSP681418-12	65FV6812407	65CSP681418-12/65FV6812407/A	65CSP681418-12/65FV6812407/B	E4/240	NC

65CSP681419

SOLENOID	ABV	CONTROL LINE A	CONTROL LINE B	SYSTEM/DWG	NO/NC
65CSP681419-1	65FV6812408	65CSP681419-1/65FV6812408/A	65CSP681419-1/65FV6812408/B	E4/240	NC
65CSP681419-2	65FV6812411	65CSP681419-2/65FV6812411/A	65CSP681419-2/65FV6812411/B	E4/240	NO
65CSP681419-3	65FV6812412	65CSP681419-3/65FV6812412/A	65CSP681419-3/65FV6812412/B	E4/240	NC
65CSP681419-4	65FV6812413	65CSP681419-4/65FV6812413/A	65CSP681419-4/65FV6812413/B	E4/240	NC
65CSP681419-5	65FV6812414	65CSP681419-5/65FV6812414/A	65CSP681419-5/65FV6812414/B	E4/240	NC
65CSP681419-6	65FV6812401	65CSP681419-6/65FV6812401/A	65CSP681419-6/65FV6812401/B	E4/240	NC
65CSP681419-7	65FV6812400	65CSP681419-7/65FV6812400/A	65CSP681419-7/65FV6812400/B	E4-ACD/240	NC
65CSP681419-8	65FV6812409	65CSP681419-8/65FV6812409/A	65CSP681419-8/65FV6812409/B	E4-BSE/240	NC
65CSP681419-9	65FV6814137	65CSP681419-9/65FV6814137/A	65CSP681419-9/65FV6814137/B	CA-E4/413	NC
65CSP681419-10	65FV6814138	65CSP681419-10/65FV6814138/A	65CSP681419-10/65FV6814138/B	CA-E4/413	NC
65CSP681419-11	65FV6812116	65CSP681419-11/65FV6812116/A	65CSP681419-11/65FV6812116/B	E1/213	NC
65CSP681419-12	65FV6812416	65CSP681419-12/65FV6812416/A	65CSP681419-12/65FV6812416/B	E4/243	NC

65CSP681420

SOLENOID	ABV	CONTROL LINE A	CONTROL LINE B	SYSTEM/DWG	NO/NC
65CSP681420-1	65FV6813111	65CSP681420-1/65FV6813111/A	65CSP681420-1/65FV6813111/B	TSW/311	NO
65CSP681420-2	65FV6813112	65CSP681420-2/65FV6813112/A	65CSP681420-2/65FV6813112/B	TSW/311	NC
65CSP681420-3	65FV6813113	65CSP681420-3/65FV6813113/A	65CSP681420-3/65FV6813113/B	TSW/311	NO
65CSP681420-4	65FV6813114	65CSP681420-4/65FV6813114/A	65CSP681420-4/65FV6813114/B	TSW/311	NC
65CSP681420-5	65FV6812500	65CSP681421-9/65FV6812500/A	65CSP681421-9/65FV6812500/B	E5-ACD/250	NC
65CSP681420-6	65FV6812509	65CSP681421-10/65FV6812509/A	65CSP681421-10/65FV6812509/B	E5-BSE/250	NC
65CSP681420-7	65FV6811516	65CSP681426-1/65FV6811516/A	65CSP681426-1/65FV6811516/B	CIP-ACD/150	NC
65CSP681420-8	65FV6811517	65CSP681426-2/65FV6811517/A	65CSP681426-2/65FV6811517/B	CIP-BSE/150	NC
65CSP681420-9	65FV6812230/65FV6812231	65CSP681426-3/65FV6812230/65FV6812231/A	65CSP681426-3/65FV6812230/65FV6812231/B	E2/220	NC/NO
65CSP681420-10	65FV6812330/65FV6812331	65CSP681426-4/65FV6812330/65FV6812331/A	65CSP681426-4/65FV6812330/65FV6812331/B	E3/230	NC/NO
65CSP681420-11	SPARE				
65CSP681420-12	SPARE				

1. ALL ABV SUPPLIED IN NC CONFIGURATION
2. CONTROL LINE A ALWAYS START FROM SOLENOID A PORT
3. CONTROL LINE B ALWAYS START FROM SOLENOID B PORT
4. FOR NC ABV
   a. CONTROL LINE A TERMINATES AT ABV LEFT PORT
   b. CONTROL LINE B TERMINATES AT ABV RIGHT PORT
5. FOR NO ABV
   a. CONTROL LINE A TERMINATES AT ABV RIGHT PORT
   b. CONTROL LINE B TERMINATES AT ABV LEFT PORT

NOTE: ORIENTATION OF AIR PANEL AND AIRLINE FEEDING PANEL PENDING MECHANICAL LAYOUT. ALL SOLENOID VALVE POSITION 1 STARTS IMMEDIATELY ADJACENT TO D-SUB CONNECTOR

Saltworks
13800 Steveston Hwy
Richmond, BC, Canada, V6W 1A8
Tel: 604.628.6508 Fax: 604.676.2463
www.saltworkstech.com

THIS DOCUMENT EMBODIES DESIGNS AND INFORMATION THAT ARE PROPRIETARY TO SALTWORKS. IT IS TO BE USED ONLY FOR THE PURPOSE AND BY THE ENTITY FOR WHICH IT WAS ORIGINALLY SUPPLIED. THE DOCUMENT MAY NOT BE DUPLICATED OR DISCLOSED TO OTHER PERSON OR ENTITY, OR USED FOR MANUFACTURE OF THE ITEM IN PART OR IN WHOLE WITHOUT THE PRIOR WRITTEN PERMISSION OF SALTWORKS.

DO NOT SCALE DRAWING

DRAWING STATUS: FACTORY AS BUILT

LTR	DATE	DESCRIPTION	REV. BY:
N	06–JUL–2018	NO CHANGES	–
K	26–FEB–2018	UPDATED SOLENOID BANK, LINES MATCH AS BUILT	SN
L	16–MAR–2018	UPDATED SOLENOID TABLE	JLAU
M	08–MAY–2018	UPDATED SOLENOID TABLE	JLAU

TITLE: (SM1) 418: BOP2 AIR SOLENOID BANK

PROJECT: SALTMAKER GEN III		CUSTOMER: AGNICO EAGLE MINES	REVISION: N
PREPARED BY: SN	DATE: 22–FEB–2018	DWG. NO: SW_EN_SM_GEN III_PID_DWG_418	
CHECKED BY: XXIAO	DATE: 23–FEB–2018	JOB/CO NO: (JOB NO.)	
APPROVED BY: APPROVED BY	DATE: APPROVED DATE	SHEET: 68 OF117	

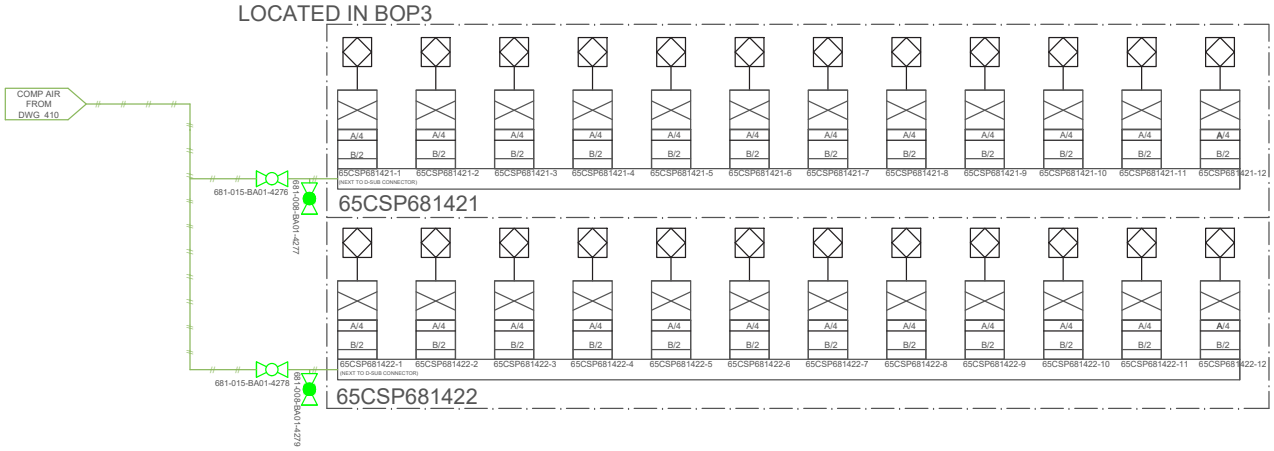

65CSP681421

SOLENOID	ABV	CONTROL LINE A	CONTROL LINE B	SYSTEM/DWG	NO/NC
65CSP681421-1	65FV6812502	65CSP681421-1/65FV6812502/A	65CSP681421-1/65FV6812502/B	E5/250	NC
65CSP681421-2	65FV6812503	65CSP681421-2/65FV6812503/A	65CSP681421-2/65FV6812503/B	E5/250	NC
65CSP681421-3	65FV6812504	65CSP681421-3/65FV6812504/A	65CSP681421-3/65FV6812504/B	E5/250	NC
65CSP681421-4	65FV6812505	65CSP681421-4/65FV6812505/A	65CSP681421-4/65FV6812505/B	E5/250	NC
65CSP681421-5	65FV6812506	65CSP681421-5/65FV6812506/A	65CSP681421-5/65FV6812506/B	E5/250	NO
65CSP681421-6	65FV6812507	65CSP681421-6/65FV6812507/A	65CSP681421-6/65FV6812507/B	E5/250	NC
65CSP681421-7	65FV6812508	65CSP681421-7/65FV6812508/A	65CSP681421-7/65FV6812508/B	E5/250	NC
65CSP681421-8	65FV6812501	65CSP681421-8/65FV6812501/A	65CSP681421-8/65FV6812501/B	E5/250	NC
65CSP681421-9	SPARE				
65CSP681421-10	SPARE				
65CSP681421-11	65FV6812511	65CSP681421-11/65FV6812511/A	65CSP681421-11/65FV6812511/B	E5/250	NO
65CSP681421-12	65FV6812512	65CSP681421-12/65FV6812512/A	65CSP681421-12/65FV6812512/B	E5/250	NC

65CSP681422

SOLENOID	ABV	CONTROL LINE A	CONTROL LINE B	SYSTEM/DWG	NO/NC
65CSP681422-1	65FV6812513	65CSP681422-1/65FV6812513/A	65CSP681422-1/65FV6812513/B	E5/250	NC
65CSP681422-2	65FV6812514	65CSP681422-2/65FV6812514/A	65CSP681422-2/65FV6812514/B	E5/250	NC
65CSP681422-3	65FV6814139	65CSP681422-3/65FV6814139/A	65CSP681422-3/65FV6814139/B	CA-E5/413	NC
65CSP681422-4	65FV6814130	65CSP681422-4/65FV6814130/A	65CSP681422-4/65FV6814130/B	CA-E5/413	NC
65CSP681422-5	65FV6812516	65CSP681422-5/65FV6812516/A	65CSP681422-5/65FV6812516/B	E5/253	NC
65CSP681422-6		TBD - VALVE MAY NOT EXIST			
65CSP681422-7	SPARE				
65CSP681422-8	SPARE				
65CSP681422-9	SPARE				
65CSP681422-10	SPARE				
65CSP681422-11	SPARE				
65CSP681422-12	SPARE				

1. ALL ABV SUPPLIED IN NC CONFIGURATION
2. CONTROL LINE A ALWAYS START FROM SOLENOID A PORT
3. CONTROL LINE B ALWAYS START FROM SOLENOID B PORT
4. FOR NC ABV
   a. CONTROL LINE A TERMINATES AT ABV LEFT PORT
   b. CONTROL LINE B TERMINATES AT ABV RIGHT PORT
5. FOR NO ABV
   a. CONTROL LINE A TERMINATES AT ABV RIGHT PORT
   b. CONTROL LINE B TERMINATES AT ABV LEFT PORT

NOTE: ORIENTATION OF AIR PANEL AND AIRLINE FEEDING PANEL PENDING MECHANICAL LAYOUT. ALL SOLENOID VALVE POSITION 1 STARTS IMMEDIATELY ADJACENT TO D-SUB CONNECTOR

Saltworks
13800 Steveston Hwy
Richmond, BC, Canada, V6W 1A8
Tel: 604.628.6508 Fax: 604.676.2463
www.saltworkstech.com

DRAWING STATUS: FACTORY AS BUILT

THIS DOCUMENT EMBODIES DESIGNS AND INFORMATION THAT ARE PROPRIETARY TO SALTWORKS. IT IS TO BE USED ONLY FOR THE PURPOSE AND BY THE ENTITY FOR WHICH IT WAS ORIGINALLY SUPPLIED. THE DOCUMENT MAY NOT BE DUPLICATED OR DISCLOSED TO OTHER PERSON OR ENTITY, OR USED FOR MANUFACTURE OF THE ITEM IN PART OR IN WHOLE WITHOUT THE PRIOR WRITTEN PERMISSION OF SALTWORKS.

DO NOT SCALE DRAWING

LTR	DATE	DESCRIPTION	REV. BY:
N	06-JUL-2018	NO CHANGES	–
K	26-FEB-2018	UPDATED SOLENOID BANK	SN
L	16-MAR-2018	UPDATED SOLENOID TABLE	JLAU
M	08-MAY-2018	NO CHANGES	–

TITLE: (SM1) 419: BOP3 AIR BANK

PROJECT: SALTMAKER GEN III

CUSTOMER: AGNICO EAGLE MINES

REVISION: N

PREPARED BY:	SN	DATE:	22-FEB-2018
CHECKED BY:	XXIAO	DATE:	23-FEB-2018
APPROVED BY:	APPROVED BY	DATE:	APPROVED DATE

DWG. NO: SW_EN_SM_GEN III_PID_DWG_419

JOB/CO NO: (JOB NO.)

SHEET: 69 OF117

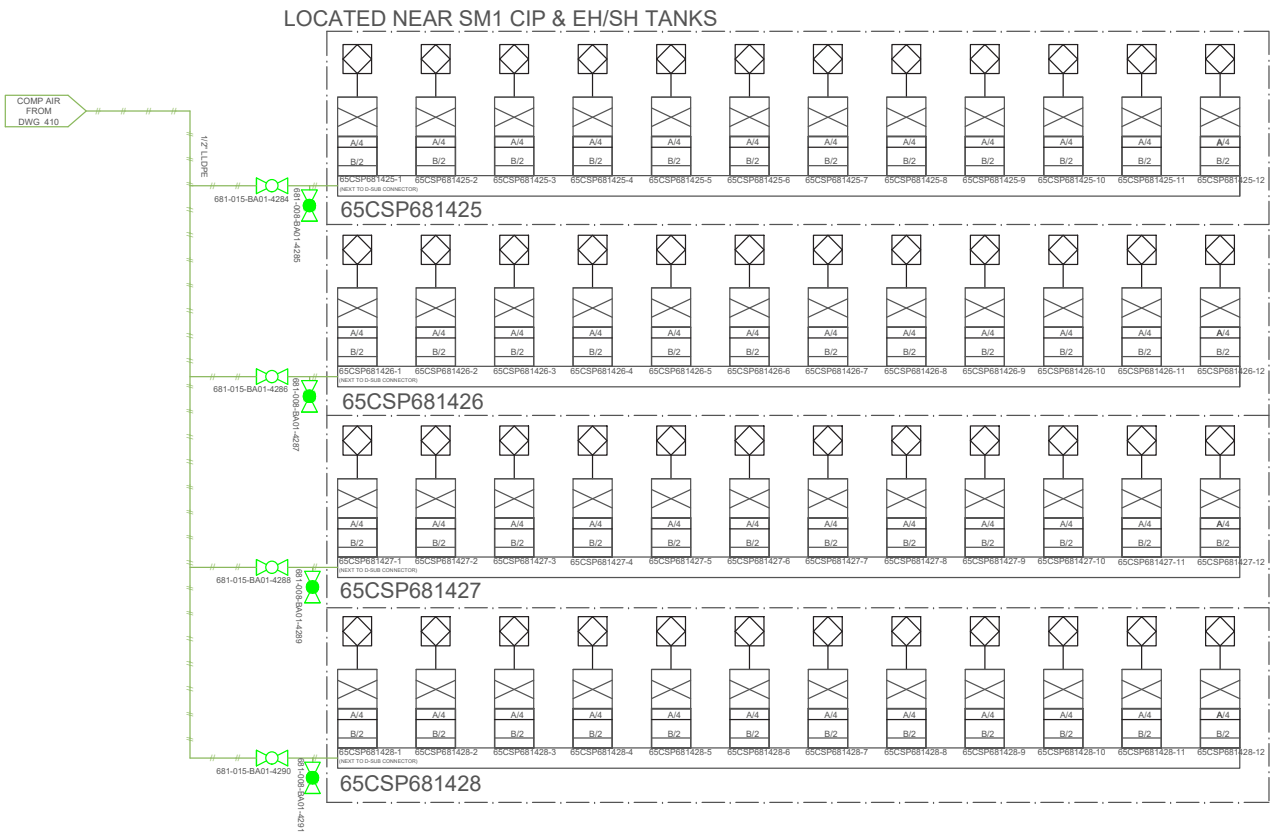

RESERVE PHYSICAL AND ELECTRICAL SPACE FOR 1 ADDITIONAL BANK

65CSP681425

SOLENOID	ABV	CONTROL LINE A	CONTROL LINE B	SYSTEM	NO/NC
65CSP681425-1	65FV6811505	65CSP681425-1/65FV6811505/A	65CSP681425-1/65FV6811505/B	CIP/150	NC
65CSP681425-2	65FV6811511	65CSP681425-2/65FV6811511/A	65CSP681425-2/65FV6811511/B	CIP/150	NC
65CSP681425-3	65FV6811501	65CSP681425-3/65FV6811501/A	65CSP681425-3/65FV6811501/B	CIP/150	NC
65CSP681425-4	65FV6811502	65CSP681425-4/65FV6811502/A	65CSP681425-4/65FV6811502/B	CIP/150	NC
65CSP681425-5	SPARE				
65CSP681425-6	65FV6811504	65CSP681425-6/65FV6811504/A	65CSP681425-6/65FV6811504/B	CIP/150	NO
65CSP681425-7	65FV6811506	65CSP681425-7/65FV6811506/A	65CSP681425-7/65FV6811506/B	CIP/150	NC
65CSP681425-8	65FV6811507	65CSP681425-8/65FV6811507/A	65CSP681425-8/65FV6811507/B	CIP/150	NC
65CSP681425-9	SPARE				
65CSP681425-10	65FV6811508	65CSP681425-10/65FV6811508/A	65CSP681425-10/65FV6811508/B	CIP/150	NC
65CSP681425-11	65FV6811510	65CSP681425-11/65FV6811510/A	65CSP681425-11/65FV6811510/B	CIP/150	NO
65CSP681425-12	65FV6811512	65CSP681425-12/65FV6811512/A	65CSP681425-12/65FV6811512/B	CIP/150	NC

65CSP681426

SOLENOID	ABV	CONTROL LINE A	CONTROL LINE B	SYSTEM	NO/NC
65CSP681426-1	SPARE				
65CSP681426-2	SPARE				
65CSP681426-3	65FV6811518	65CSP681426-3/65FV6811518/A	65CSP681426-3/65FV6811518/B	CIP-UW/150	NC
65CSP681426-4	65FV6811519	65CSP681426-4/65FV6811519/A	65CSP681426-4/65FV6811519/B	CIP-UW/150	NC
65CSP681426-5	65FV6811523	65CSP681426-5/65FV6811523/A	65CSP681426-5/65FV6811523/B	CIP/151	NC
65CSP681426-6	65FV6811525	65CSP681426-6/65FV6811525/A	65CSP681426-6/65FV6811525/B	CIP/151	NC
65CSP681426-7	65FV6811524	65CSP681426-7/65FV6811524/A	65CSP681426-7/65FV6811524/B	CIP/151	NC
65CSP681426-8	65FV6811526	65CSP681426-8/65FV6811526/A	65CSP681426-8/65FV6811526/B	CIP/151	NC
65CSP681426-9	65FV6814111	65CSP681426-9/65FV6814111/A	65CSP681426-9/65FV6814111/B	CA-CIP/411	NC
65CSP681426-10	65FV6814112	65CSP681426-10/65FV6814112/A	65CSP681426-10/65FV6814112/B	CA-CIP/411	NC
65CSP681426-11	65FV6814113	65CSP681426-11/65FV6814113/A	65CSP681426-11/65FV6814113/B	CA-CIP/411	NC
65CSP681426-12	65FV6814114	65CSP681426-12/65FV6814114/A	65CSP681426-12/65FV6814114/B	CA-CIP/411	NC

65CSP681427

SOLENOID	ABV	CONTROL LINE A	CONTROL LINE B	SYSTEM	NO/NC
65CSP681427-1	65FV6811601	65CSP681427-1/65FV6811601/A	65CSP681427-1/65FV6811601/B	H1/160	NC
65CSP681427-2	65FV6811604	65CSP681427-2/65FV6811604/A	65CSP681427-2/65FV6811604/B	H1/160	NC
65CSP681427-3	65FV6811600	65CSP681427-3/65FV6811600/A	65CSP681427-3/65FV6811600/B	H1/160	NC
65CSP681427-4	SPARE				
65CSP681427-5	65FV6811605	65CSP681427-5/65FV6811605/A	65CSP681427-5/65FV6811605/B	H1/160	NC
65CSP681427-6	65FV6814121	65CSP681427-6/65FV6814121/A	65CSP681427-6/65FV6814121/B	CA-H1/412	NC
65CSP681427-7	65FV6814123	65CSP681427-7/65FV6814123/A	65CSP681427-7/65FV6814123/B	CA-H1/412	NC
65CSP681427-8	65FV6814124	65CSP681427-8/65FV6814124/A	65CSP681427-8/65FV6814124/B	CA-H1/412	NC
65CSP681427-9	65FV6811610	65CSP681427-9/65FV6811610/A	65CSP681427-9/65FV6811610/B	H2/161	NC
65CSP681427-10	65FV6811611	65CSP681427-10/65FV6811611/A	65CSP681427-10/65FV6811611/B	H2/161	NC
65CSP681427-11	65FV6811614	65CSP681427-11/65FV6811614/A	65CSP681427-11/65FV6811614/B	H2/161	NC
65CSP681427-12	65FV6814125	65CSP681427-12/65FV6814125/A	65CSP681427-12/65FV6814125/B	CA-H2/412	NC

65CSP681428

SOLENOID	ABV	CONTROL LINE A	CONTROL LINE B	SYSTEM	NO/NC
65CSP681428-1	65FV6814126	65CSP681428-1/65FV6814126/A	65CSP681428-1/65FV6814126/B	CA-H2/412	NC
65CSP681428-2	65FV6811621	65CSP681428-2/65FV6811621/A	65CSP681428-2/65FV6811621/B	SY/162	NC
65CSP681428-3	65FV6811625	65CSP681428-3/65FV6811625/A	65CSP681428-3/65FV6811625/B	SY/162	NC
65CSP681428-4	65FV6811627	65CSP681428-4/65FV6811627/A	65CSP681428-4/65FV6811627/B	SY/162	NC
65CSP681428-5	65FV6811628	65CSP681428-5/65FV6811628/A	65CSP681428-5/65FV6811628/B	SY/162	NC
65CSP681428-6	65FV6811629	65CSP681428-6/65FV6811629/A	65CSP681428-6/65FV6811629/B	SY/162	NC
65CSP681428-7	65FV6814122	65CSP681428-7/65FV6814122/A	65CSP681428-7/65FV6814122/B	CA-SY/412	NC
65CSP681428-8	SPARE				
65CSP681428-9	SPARE				
65CSP681428-10	SPARE				
65CSP681428-11	SPARE				
65CSP681428-12	SPARE				

1. ALL ABV SUPPLIED IN NC CONFIGURATION
2. CONTROL LINE A ALWAYS START FROM SOLENOID A PORT
3. CONTROL LINE B ALWAYS START FROM SOLENOID B PORT
4. FOR NC ABV
   a. CONTROL LINE A TERMINATES AT ABV LEFT PORT
   b. CONTROL LINE B TERMINATES AT ABV RIGHT PORT
5. FOR NO ABV
   a. CONTROL LINE A TERMINATES AT ABV RIGHT PORT
   b. CONTROL LINE B TERMINATES AT ABV LEFT PORT

NOTE: ORIENTATION OF AIR PANEL AND AIRLINE FEEDING PANEL PENDING MECHANICAL LAYOUT. ALL SOLENOID VALVE POSITION 1 STARTS IMMEDIATELY ADJACENT TO D-SUB CONNECTOR

Saltworks
13800 Steveston Hwy
Richmond, BC, Canada, V6W 1A8
Tel: 604.628.6508 Fax: 604.676.2463
www.saltworkstech.com

DRAWING STATUS: FACTORY AS BUILT

THIS DOCUMENT EMBODIES DESIGNS AND INFORMATION THAT ARE PROPRIETARY TO SALTWORKS. IT IS TO BE USED ONLY FOR THE PURPOSE AND BY THE ENTITY FOR WHICH IT WAS ORIGINALLY SUPPLIED. THE DOCUMENT MAY NOT BE DUPLICATED OR DISCLOSED TO OTHER PERSON OR ENTITY, OR USED FOR MANUFACTURE OF THE ITEM IN PART OR IN WHOLE WITHOUT THE PRIOR WRITTEN PERMISSION OF SALTWORKS.

DO NOT SCALE DRAWING

LTR	DATE	DESCRIPTION	REV. BY:
N	06-JUL-2018	NO CHANGES	–
K	26-FEB-2018	UPDATED SOLENOID BANK	SN
L	16-MAR-2018	UPDATED SOLENOID TABLE	JLAU
M	08-MAY-2018	NO CHANGES	–

TITLE: (SM1) 420: CIP & EH/SH AIR BANK

PROJECT: SALTMAKER GEN III

CUSTOMER: AGNICO EAGLE MINES

REVISION: N

PREPARED BY: SN DATE: 22-FEB-2018

CHECKED BY: XXIAO DATE: 23-FEB-2018

APPROVED BY: APPROVED BY DATE: APPROVED DATE

DWG. NO: SW_EN_SM_GEN III_PID_DWG_420

JOB/CO NO: (JOB NO.)

SHEET: 70 OF117

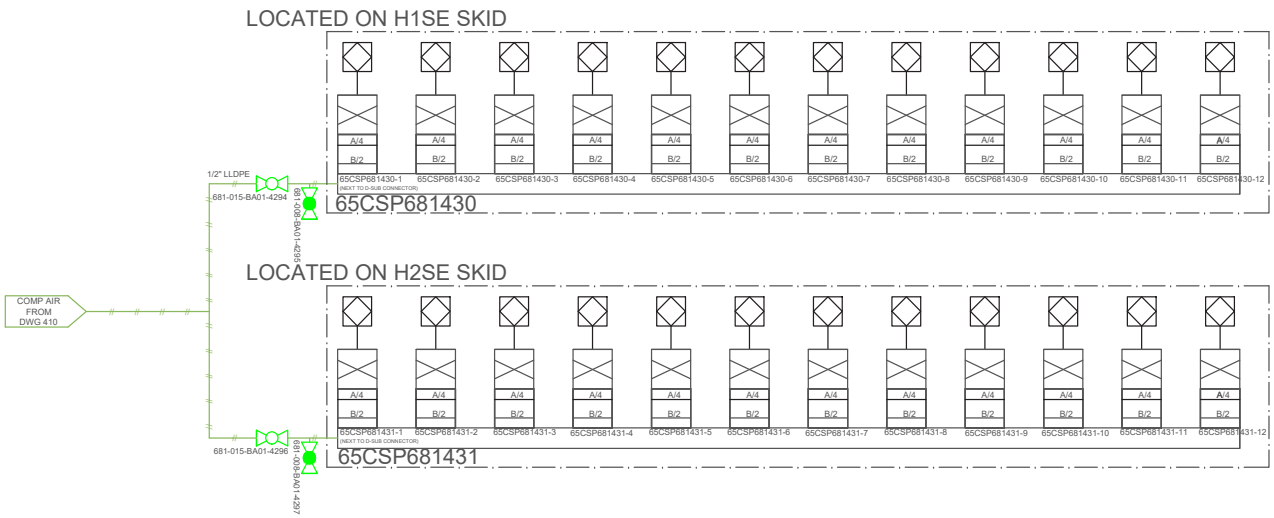

65CSP681430

SOLENOID	ABV	CONTROL LINE A	CONTROL LINE B	SYSTEM	NO/NC
65CSP681430-1	65FV6811641	65CSP681430-1/65FV6811641/A	65CSP681430-1/65FV6811641/B	H1SE/164	NC
65CSP681430-2	65FV6811642	65CSP681430-2/65FV6811642/A	65CSP681430-2/65FV6811642/B	H1SE/164	NC
65CSP681430-3	65FV6811643	65CSP681430-3/65FV6811643/A	65CSP681430-3/65FV6811643/B	H1SE/164	NC
65CSP681430-4	65FV6811644	65CSP681430-4/65FV6811644/A	65CSP681430-4/65FV6811644/B	H1SE/164	NC
65CSP681430-5	65FV6811645	65CSP681430-5/65FV6811645/A	65CSP681430-5/65FV6811645/B	H1SE/164	NC
65CSP681430-6	65FV6811646	65CSP681430-6/65FV6811646/A	65CSP681430-6/65FV6811646/B	H1SE/164	NO
65CSP681430-7	65FV6811647	65CSP681430-7/65FV6811647/A	65CSP681430-7/65FV6811647/B	H1SE/164	NC
65CSP681430-8	65FV6811659	65CSP681430-8/65FV6811659/A	65CSP681430-8/65FV6811659/B	H2SE/165	NO
65CSP681430-9	65FV6811650	65CSP681430-9/65FV6811650/A	65CSP681430-9/65FV6811650/B	H2SE/165	NC
65CSP681430-10	RESERVED				
65CSP681430-11	65FV6814115	65CSP681430-11/65FV6814115/A	65CSP681430-11/65FV6814115/B	CA-H2SE/411	NC
65CSP681430-12	65FV6814116	65CSP681430-12/65FV6814116/A	65CSP681430-12/65FV6814116/B	CA-H2SE/411	NC

65CSP681431

SOLENOID	ABV	CONTROL LINE A	CONTROL LINE B	SYSTEM	NO/NC
65CSP681431-1	65FV6811651	65CSP681431-1/65FV6811651/A	65CSP681431-1/65FV6811651/B	H2SE/165	NC
65CSP681431-2	65FV6811652	65CSP681431-2/65FV6811652/A	65CSP681431-2/65FV6811652/B	H2SE/165	NC
65CSP681431-3	65FV6811653	65CSP681431-3/65FV6811653/A	65CSP681431-3/65FV6811653/B	H2SE/165	NC
65CSP681431-4	65FV6811654	65CSP681431-4/65FV6811654/A	65CSP681431-4/65FV6811654/B	H2SE/165	NC
65CSP681431-5	65FV6811655	65CSP681431-5/65FV6811655/A	65CSP681431-5/65FV6811655/B	H2SE/165	NC
65CSP681431-6	RESERVED				
65CSP681431-7	65FV6811656	65CSP681431-7/65FV6811656/A	65CSP681431-7/65FV6811656/B	H2SE/165	NO
65CSP681431-8	65FV6811657	65CSP681431-8/65FV6811657/A	65CSP681431-8/65FV6811657/B	H2SE/165	NC
65CSP681431-9	65FV6811658	65CSP681431-9/65FV6811658/A	65CSP681431-9/65FV6811658/B	H2SE/165	NC
65CSP681431-10	RESERVED				
65CSP681431-11	RESERVED				
65CSP681431-12	SPARE				

1. ALL ABV SUPPLIED IN NC CONFIGURATION
2. CONTROL LINE A ALWAYS START FROM SOLENOID A PORT
3. CONTROL LINE B ALWAYS START FROM SOLENOID B PORT
4. FOR NC ABV
   a. CONTROL LINE A TERMINATES AT ABV LEFT PORT
   b. CONTROL LINE B TERMINATES AT ABV RIGHT PORT
5. FOR NO ABV
   a. CONTROL LINE A TERMINATES AT ABV RIGHT PORT
   b. CONTROL LINE B TERMINATES AT ABV LEFT PORT

NOTE: ORIENTATION OF AIR PANEL AND AIRLINE FEEDING PANEL PENDING MECHANICAL LAYOUT. ALL SOLENOID VALVE POSITION 1 STARTS IMMEDIATELY ADJACENT TO D-SUB CONNECTOR

Saltworks
13800 Steveston Hwy
Richmond, BC, Canada, V6W 1A8
Tel: 604.628.6508 Fax: 604.676.2463
www.saltworkstech.com

DRAWING STATUS: FACTORY AS BUILT

THIS DOCUMENT EMBODIES DESIGNS AND INFORMATION THAT ARE PROPRIETARY TO SALTWORKS. IT IS TO BE USED ONLY FOR THE PURPOSE AND BY THE ENTITY FOR WHICH IT WAS ORIGINALLY SUPPLIED. THE DOCUMENT MAY NOT BE DUPLICATED OR DISCLOSED TO OTHER PERSON OR ENTITY, OR USED FOR MANUFACTURE OF THE ITEM IN PART OR IN WHOLE WITHOUT THE PRIOR WRITTEN PERMISSION OF SALTWORKS.

DO NOT SCALE DRAWING

LTR	DATE	DESCRIPTION	REV. BY:
N	06-JUL-2018	NO CHANGES	–
K	26-FEB-2018	UPDATED SOLENOID BANK	SN
L	16-MAR-2018	UPDATED SOLENOID TABLE	JLAU
M	08-MAY-2018	NO CHANGES	–

TITLE: (SM1) 421: H1/H2 SE AIR BANK

PROJECT: SALTMAKER GEN III		CUSTOMER: AGNICO EAGLE MINES	REVISION N
PREPARED BY: SN	DATE: 02-FEB-2018	DWG. NO: SW_EN_SM_GEN III_PID_DWG_421	
CHECKED BY: XXIAO	DATE: 23-FEB-2018	JOB/CO NO: (JOB NO.)	
APPROVED BY: APPROVED BY	DATE: APPROVED DATE	SHEET: 71 OF117	

AGNICO EAGLE MINES
P&ID DRAWING PACKAGE

COMPRESSED AIR - SM2
REVISION N

Saltworks
13800 Steveston Hwy
Richmond, BC, Canada, V6W 1A8
Tel: 604.628.6508 Fax: 604.676.2463
www.saltworkstech.com

DRAWING STATUS: FACTORY AS BUILT

THIS DOCUMENT EMBODIES DESIGNS AND INFORMATION THAT ARE PROPRIETARY TO SALTWORKS. IT IS TO BE USED ONLY FOR THE PURPOSE AND BY THE ENTITY FOR WHICH IT WAS ORIGINALLY SUPPLIED. THE DOCUMENT MAY NOT BE DUPLICATED OR DISCLOSED TO OTHER PERSON OR ENTITY, OR USED FOR MANUFACTURE OF THE ITEM IN PART OR IN WHOLE WITHOUT THE PRIOR WRITTEN PERMISSION OF SALTWORKS.

DO NOT SCALE DRAWING

LTR	DATE	DESCRIPTION	REV. BY:
N	06-JUL-2018	AS MARKED BY REVISION CLOUDS	JLAU
K	26-FEB-2018	VALVE TAGS, LINE LABELS	SN
L	16-MAR-2018	AS MARKED BY REVISION CLOUDS	JLAU
M	08-MAY-2018	AS MARKED BY REVISION CLOUDS	JLAU

TITLE: COVER SHEET

PROJECT: SALTMAKER GEN III

CUSTOMER: AGNICO EAGLE MINES

REVISION: N

PREPARED BY:	SN	DATE:	22-FEB-2018
CHECKED BY:	XXIAO	DATE:	23-FEB-2018
APPROVED BY:	APPROVED BY	DATE:	APPROVED DATE

DWG. NO: COVER SHEET

JOB/CO NO: (JOB NO.)

SHEET: # OF #

DRAWING LIST 1

SHEET NO.	DRAWING NO.	DESCRIPTION
		COVER SHEET
		DRAWING LIST 1
		DRAWING LIST 2
		LEGEND
		COMMON
1	SW_EN_SM_AEM-01_PID_COMMON_DWG_000	MASTER PFD
2	SW_EN_SM_AEM-01_PID_COMMON_DWG_010	PROCESS FLOW DIAGRAM
3	SW_EN_SM_AEM-01_PID_COMMON_DWG_020	CONTAINER LAYOUT
4	SW_EN_SM_AEM-01_PID_COMMON_DWG_030	MODULES LAYOUT
5	SW_EN_SM_AEM-01_PID_COMMON_DWG_040	PLANT FEED TANKS
6	SW_EN_SM_AEM-01_PID_COMMON_DWG_041	PLANT FEED PUMP SKIDS
7	SW_EN_SM_AEM-01_PID_COMMON_DWG_050	CLEAN RESERVE AND BLOWDOWN SYSTEMS
8	SW_EN_SM_AEM-01_PID_COMMON_DWG_060	ACID DOSING SYSTEM
9	SW_EN_SM_AEM-01_PID_COMMON_DWG_061	BASE DOSING SYSTEM
10	SW_EN_SM_AEM-01_PID_COMMON_DWG_062	BIOCIDE DOSING SYSTEM
11	SW_EN_SM_AEM-01_PID_COMMON_DWG_063	ANTIFOAM DOSING SYSTEM
12	SW_EN_SM_AEM-01_PID_COMMON_DWG_064	ANTISCALANT DOSING SYSTEM
13	SW_EN_SM_AEM-01_PID_COMMON_DWG_070	UTILITY WATER DISTRIBUTION
		SALTMAKER 1 (SM1)
14	SW_EN_SM_AEM-01_PID_SM1_DWG_110	THERMAL SOURCE PRIMARY HEAT EXCHANGERS
15	SW_EN_SM_AEM-01_PID_SM1_DWG_120	CONDENSED WATER SYSTEM
16	SW_EN_SM_AEM-01_PID_SM1_DWG_130	FEED DISTRIBUTION
17	SW_EN_SM_AEM-01_PID_SM1_DWG_150	CIP TANKS
18	SW_EN_SM_AEM-01_PID_SM1_DWG_151	CIP PUMP SKID
19	SW_EN_SM_AEM-01_PID_SM1_DWG_160	EFFECT HOLD 1
20	SW_EN_SM_AEM-01_PID_SM1_DWG_161	EFFECT HOLD 2
21	SW_EN_SM_AEM-01_PID_SM1_DWG_162	SYSTEM HOLD
22	SW_EN_SM_AEM-01_PID_SM1_DWG_163	CALCIUM EXTRACTION
23	SW_EN_SM_AEM-01_PID_SM1_DWG_164	EH1 SOLIDS EXTRACTION
24	SW_EN_SM_AEM-01_PID_SM1_DWG_165	EH2 SOLIDS EXTRACTION
25	SW_EN_SM_AEM-01_PID_SM1_DWG_180	DRIP TRAYS
26	SW_EN_SM_AEM-01_PID_SM1_DWG_210	EFFECT 1 TANK AND PUMPS
27	SW_EN_SM_AEM-01_PID_SM1_DWG_211	EFFECT 1 MODULES
28	SW_EN_SM_AEM-01_PID_SM1_DWG_213	EFFECT 1 PUMP SEAL FLUSH
29	SW_EN_SM_AEM-01_PID_SM1_DWG_214	EFFECT 1 AIR SEALS
30	SW_EN_SM_AEM-01_PID_SM1_DWG_220	EFFECT 2 TANK AND PUMPS
31	SW_EN_SM_AEM-01_PID_SM1_DWG_221	EFFECT 2 MODULES
32	SW_EN_SM_AEM-01_PID_SM1_DWG_222	EFFECT 2 SOLIDS EXTRACTION
33	SW_EN_SM_AEM-01_PID_SM1_DWG_223	EFFECT 2 PUMP SEAL FLUSH
34	SW_EN_SM_AEM-01_PID_SM1_DWG_224	EFFECT 2 AIR SEALS
35	SW_EN_SM_AEM-01_PID_SM1_DWG_230	EFFECT 3 TANK AND PUMPS
36	SW_EN_SM_AEM-01_PID_SM1_DWG_231	EFFECT 3 MODULES
37	SW_EN_SM_AEM-01_PID_SM1_DWG_232	EFFECT 3 SOLIDS EXTRACTION
38	SW_EN_SM_AEM-01_PID_SM1_DWG_233	EFFECT 3 PUMP SEAL FLUSH
39	SW_EN_SM_AEM-01_PID_SM1_DWG_234	EFFECT 3 AIR SEALS
40	SW_EN_SM_AEM-01_PID_SM1_DWG_240	EFFECT 4 TANK AND PUMPS
41	SW_EN_SM_AEM-01_PID_SM1_DWG_241	EFFECT 4 MODULES
42	SW_EN_SM_AEM-01_PID_SM1_DWG_243	EFFECT 4 PUMP SEAL FLUSH
43	SW_EN_SM_AEM-01_PID_SM1_DWG_244	EFFECT 4 AIR SEALS
44	SW_EN_SM_AEM-01_PID_SM1_DWG_250	EFFECT 5 TANK AND PUMPS
45	SW_EN_SM_AEM-01_PID_SM1_DWG_251	EFFECT 5 MODULES
46	SW_EN_SM_AEM-01_PID_SM1_DWG_253	EFFECT 5 PUMP SEAL FLUSH
47	SW_EN_SM_AEM-01_PID_SM1_DWG_254	EFFECT 5 AIR SEALS
		THERMAL SYSTEM
48	SW_EN_SM_AEM-01_PID_DWG_310	THERMAL SKID: WATER LOOP
49	SW_EN_SM_AEM-01_PID_DWG_311	THERMAL SKID: WATER LOOP
50	SW_EN_SM_AEM-01_PID_DWG_312	THERMAL SKID: GYLCOL LOOP
		POST TREATMENT
51	SW_EN_SM_AEM-01_PID_COMMON_DWG_320	NITRITE DESTRUCTION AND RO PC SYSTEM
52	SW_EN_SM_AEM-01_PID_COMMON_DWG_321	AMMONIA DESTRUCTION SYSTEM
53	SW_EN_SM_AEM-01_PID_COMMON_DWG_322	RO BRINE FLUSH TANK
54	SW_EN_SM_AEM-01_PID_COMMON_DWG_323	RO PERMEATE TANK
		COMPRESSED AIR-COMMON PACKAGE
55	SW_EN_SM_AEM-01_PID_COMPRESSED AIR-COMMON_DWG_400	COMPRESSED AIR SYSTEM
56	SW_EN_SM_AEM-01_PID_COMPRESSED AIR-COMMON_DWG_401	AMMONIA DES, BRINE BLOWDOWN AND PLANT FEED AIR
57	SW_EN_SM_AEM-01_PID_COMPRESSED AIR-COMMON_DWG_402	CHEMICAL DOSING AND ANCILLARY STAND PIPE AIR
58	SW_EN_SM_AEM-01_PID_COMPRESSED AIR-COMMON_DWG_403	COMMON AND POST TREATMENT AIR BANK 1
59	SW_EN_SM_AEM-01_PID_COMPRESSED AIR-COMMON_DWG_404	COMMON AND POST TREATMENT AIR BANK 2
		COMPRESSED AIR-SM1
60	SW_EN_SM_AEM-01_PID_COMPRESSED AIR-SM1_DWG_410	SM INSTRUMENT AND PROCESS AIR
61	SW_EN_SM_AEM-01_PID_COMPRESSED AIR-SM1_DWG_411	EH1/EH2 EXTRACT AND CIP AIR

Saltworks
13800 Steveston Hwy
Richmond, BC, Canada, V6W 1A8
Tel: 604.628.6508 Fax: 604.676.2463
www.saltworkstech.com

DRAWING STATUS: FACTORY AS BUILT

THIS DOCUMENT EMBODIES DESIGNS AND INFORMATION THAT ARE PROPRIETARY TO SALTWORKS. IT IS TO BE USED ONLY FOR THE PURPOSE AND BY THE ENTITY FOR WHICH IT WAS ORIGINALLY SUPPLIED. THE DOCUMENT MAY NOT BE DUPLICATED OR DISCLOSED TO OTHER PERSON OR ENTITY, OR USED FOR MANUFACTURE OF THE ITEM IN PART OR IN WHOLE WITHOUT THE PRIOR WRITTEN PERMISSION OF SALTWORKS.

DO NOT SCALE DRAWING

LTR	DATE	DESCRIPTION	REV. BY:
N	06-JUL-2018	NO CHANGES	–
K	26-FEB-2018	NO CHANGES	–
L	16-MAR-2018	NO CHANGES	–
M	08-MAY-2018	NO CHANGES	–

TITLE: DRAWING LIST 1

PROJECT: SALTMAKER GEN III

CUSTOMER: AGNICO EAGLE MINES

REVISION: N

PREPARED BY:	SN	DATE:	22-FEB-2018
CHECKED BY:	XXIAO	DATE:	23-FEB-2018
APPROVED BY:	APPROVED BY	DATE:	APPROVED DATE

DWG. NO: DRAWING LIST 1

JOB/CO NO: (JOB NO.)

SHEET: # OF #

DRAWING LIST 2

SHEET NO.	DRAWING NO.	DESCRIPTION
62	SW_EN_SM_AEM-01_PID_COMPRESSED AIR-SM1_DWG_412	EH1/EH2 EXTRACT AND CIP AIR
63	SW_EN_SM_AEM-01_PID_COMPRESSED AIR-SM1_DWG_413	PLUG PREVENTION PUMP AIR
64	SW_EN_SM_AEM-01_PID_COMPRESSED AIR-SM1_DWG_414	AIR SEAL, STAND PIPE AND E2/E3 SE AIR
65	SW_EN_SM_AEM-01_PID_COMPRESSED AIR-SM1_DWG_415	UTILITY AIR
66	SW_EN_SM_AEM-01_PID_COMPRESSED AIR-SM1_DWG_416	BOP1 AIR SOLENOID BANK
67	SW_EN_SM_AEM-01_PID_COMPRESSED AIR-SM1_DWG_417	E2/E3 SE AIR SOLENOID BANK
68	SW_EN_SM_AEM-01_PID_COMPRESSED AIR-SM1_DWG_418	BOP2 AIR SOLENOID BANK
69	SW_EN_SM_AEM-01_PID_COMPRESSED AIR-SM1_DWG_419	BOP3 AIR SOLENOID BANK
70	SW_EN_SM_AEM-01_PID_COMPRESSED AIR-SM1_DWG_420	CIP, EH/SY AIR SOLENOID BANK
71	SW_EN_SM_AEM-01_PID_COMPRESSED AIR-SM1_DWG_421	H1/H2 SE AIR SOLENOID BANK
		COMPRESSED AIR-SM2
72	SW_EN_SM_AEM-01_PID_COMPRESSED AIR-SM2_DWG_450	SM INSTRUMENT AND PROCESS AIR
73	SW_EN_SM_AEM-01_PID_COMPRESSED AIR-SM2_DWG_451	EH1/EH2 EXTRACT AND CIP AIR
74	SW_EN_SM_AEM-01_PID_COMPRESSED AIR-SM2_DWG_452	EFFECT/SYSTEM HOLD AND CAL EXTRACTION AIR
75	SW_EN_SM_AEM-01_PID_COMPRESSED AIR-SM2_DWG_453	PLUG PREVENTION PUMP AIR
76	SW_EN_SM_AEM-01_PID_COMPRESSED AIR-SM2_DWG_454	AIR SEAL, STAND PIPE AND E2/E3 SE AIR
77	SW_EN_SM_AEM-01_PID_COMPRESSED AIR-SM2_DWG_455	UTILITY AIR
78	SW_EN_SM_AEM-01_PID_COMPRESSED AIR-SM2_DWG_456	BOP1 AIR SOLENOID BANK
79	SW_EN_SM_AEM-01_PID_COMPRESSED AIR-SM2_DWG_457	E2/E3 SE AIR SOLENOID BANK
80	SW_EN_SM_AEM-01_PID_COMPRESSED AIR-SM2_DWG_458	BOP2 AIR SOLENOID BANK
81	SW_EN_SM_AEM-01_PID_COMPRESSED AIR-SM2_DWG_459	BOP3 AIR SOLENOID BANK
82	SW_EN_SM_AEM-01_PID_COMPRESSED AIR-SM2_DWG_460	CIP, EH/SY AIR SOLENOID BANK
83	SW_EN_SM_AEM-01_PID_COMPRESSED AIR-SM2_DWG_461	H1/H2 SE AIR SOLENOID BANK

SHEET NO.	DRAWING NO.	DESCRIPTION
		SALTMAKER 2 (SM2)
84	SW_EN_SM_AEM-01_PID_SM2_DWG_510	THERMAL SOURCE PRIMARY HEAT EXCHANGERS
85	SW_EN_SM_AEM-01_PID_SM2_DWG_520	CONDENSED WATER SYSTEM
86	SW_EN_SM_AEM-01_PID_SM2_DWG_530	FEED DISTRIBUTION
87	SW_EN_SM_AEM-01_PID_SM2_DWG_550	CIP TANKS
88	SW_EN_SM_AEM-01_PID_SM2_DWG_551	CIP PUMP SKID
89	SW_EN_SM_AEM-01_PID_SM2_DWG_560	EFFECT HOLD 1
90	SW_EN_SM_AEM-01_PID_SM2_DWG_561	EFFECT HOLD 2
91	SW_EN_SM_AEM-01_PID_SM2_DWG_562	SYSTEM HOLD
92	SW_EN_SM_AEM-01_PID_SM2_DWG_563	CALCIUM EXTRACTION
93	SW_EN_SM_AEM-01_PID_SM2_DWG_564	EH1 SOLIDS EXTRACTION
94	SW_EN_SM_AEM-01_PID_SM2_DWG_565	EH2 SOLIDS EXTRACTION
95	SW_EN_SM_AEM-01_PID_SM2_DWG_580	DRIP TRAYS
96	SW_EN_SM_AEM-01_PID_SM2_DWG_610	EFFECT 1 TANK AND PUMPS
97	SW_EN_SM_AEM-01_PID_SM2_DWG_611	EFFECT 1 MODULES
98	SW_EN_SM_AEM-01_PID_SM2_DWG_613	EFFECT 1 PUMP SEAL FLUSH
99	SW_EN_SM_AEM-01_PID_SM2_DWG_614	EFFECT 1 AIR SEALS
100	SW_EN_SM_AEM-01_PID_SM2_DWG_620	EFFECT 2 TANK AND PUMPS
101	SW_EN_SM_AEM-01_PID_SM2_DWG_621	EFFECT 2 MODULES
102	SW_EN_SM_AEM-01_PID_SM2_DWG_622	EFFECT 2 SOLIDS EXTRACTION
103	SW_EN_SM_AEM-01_PID_SM2_DWG_623	EFFECT 2 PUMP SEAL FLUSH
104	SW_EN_SM_AEM-01_PID_SM2_DWG_624	EFFECT 2 AIR SEALS
105	SW_EN_SM_AEM-01_PID_SM2_DWG_630	EFFECT 3 TANK AND PUMPS
106	SW_EN_SM_AEM-01_PID_SM2_DWG_631	EFFECT 3 MODULES
107	SW_EN_SM_AEM-01_PID_SM2_DWG_632	EFFECT 3 SOLIDS EXTRACTION
108	SW_EN_SM_AEM-01_PID_SM2_DWG_633	EFFECT 3 PUMP SEAL FLUSH
109	SW_EN_SM_AEM-01_PID_SM2_DWG_634	EFFECT 3 AIR SEALS
110	SW_EN_SM_AEM-01_PID_SM2_DWG_640	EFFECT 4 TANK AND PUMPS
111	SW_EN_SM_AEM-01_PID_SM2_DWG_641	EFFECT 4 MODULES
112	SW_EN_SM_AEM-01_PID_SM2_DWG_643	EFFECT 4 PUMP SEAL FLUSH
113	SW_EN_SM_AEM-01_PID_SM2_DWG_644	EFFECT 4 AIR SEALS
114	SW_EN_SM_AEM-01_PID_SM2_DWG_650	EFFECT 5 TANK AND PUMPS
115	SW_EN_SM_AEM-01_PID_SM2_DWG_651	EFFECT 5 MODULES
116	SW_EN_SM_AEM-01_PID_SM2_DWG_653	EFFECT 5 PUMP SEAL FLUSH
117	SW_EN_SM_AEM-01_PID_SM2_DWG_654	EFFECT 5 AIR SEALS
		VENDOR DRAWINGS
	USW_17041_100D	POST TREATMENT RO

Saltworks
13800 Steveston Hwy
Richmond, BC, Canada, V6W 1A8
Tel: 604.628.6508 Fax: 604.676.2463
www.saltworkstech.com

DRAWING STATUS: FACTORY AS BUILT

THIS DOCUMENT EMBODIES DESIGNS AND INFORMATION THAT ARE PROPRIETARY TO SALTWORKS. IT IS TO BE USED ONLY FOR THE PURPOSE AND BY THE ENTITY FOR WHICH IT WAS ORIGINALLY SUPPLIED. THE DOCUMENT MAY NOT BE DUPLICATED OR DISCLOSED TO OTHER PERSON OR ENTITY, OR USED FOR MANUFACTURE OF THE ITEM IN PART OR IN WHOLE WITHOUT THE PRIOR WRITTEN PERMISSION OF SALTWORKS.

DO NOT SCALE DRAWING

LTR	DATE	DESCRIPTION	REV. BY:
N	06-JUL-2018	NO CHANGES	–
K	26-FEB-2018	NO CHANGES	–
L	16-MAR-2018	NO CHANGES	–
M	08-MAY-2018	NO CHANGES	–

TITLE:

PROJECT: SALTMAKER GEN III
CUSTOMER: AGNICO EAGLE MINES
REVISION: N
PREPARED BY: SN DATE: 22-FEB-2018
CHECKED BY: XXIAO DATE: 23-FEB-2018
APPROVED BY: APPROVED BY DATE: APPROVED DATE
DWG. NO: DRAWING LIST 2
JOB/CO NO: (JOB NO.)
SHEET: # OF #

VALVES

- MANUAL BALL (MBV) – NORMALLY CLOSED
- MANUAL BALL (MBV) – NORMALLY OPEN
- CHECK (CV)
- GATE (GV)
- BUTTERFLY (BFV)
- PRESSURE RELIEF VALVE (PRV)
- FLOAT VALVE (FV)
- DIAPHRAGM (DV)
- NEEDLE (NV)
- 3–WAY
- 3–WAY SOLENOID
- 4–WAY SOLENOID
- 4–FUNCTION VALVE
- FOOT VALVE

N.O. – NORMALLY OPEN
N.C. – NORMALLY CLOSED

CONTROL VALVES/ACTUATORS

- PRESSURE CONTROL VALVE (PCV) WITH PRESSURE GAUGE
- DOUBLE ACTING ACTUATED BALL VALVE (ABV) – NORMALLY CLOSED
- DOUBLE ACTING ACTUATED BALL VALVE (ABV) – NORMALLY OPEN
- DOUBLE ACTING ACTUATED BALL VALVE (ABV) – NORMALLY OPEN WITH PINCH VALVES
- SOLENOID VALVE (SV)
- SOLENOID VALVE (SV)
- MOTORIZED ACTUATOR
- MOTORIZED ACTUATOR WITH MANUAL OVERRIDE
- DOUBLE ACTING DIAPHRAGM ACTUATOR WITH LIMIT STOP
- DOUBLE ACTING DIAPHRAGM ACTUATOR WITH SPRING TO CLOSE
- DOUBLE ACTING DIAPHRAGM ACTUATOR WITH SPRING TO OPEN
- AIR OPERATOR W/POSITIONER

EQUIPMENT SYMBOL

- MIXER OR AGITATOR (MX)
- INLINE STATIC MIXER
- HEATER (HE)
- ELECTRIC HEATER (EH)
- INJECTION QUILL
- EDUCTOR/EJECTOR (ED)
- POSITIVE DISPLACEMENT PUMP W/MANUAL STROKE ADJUSTMENT (MP)
- POSITIVE DISPLACEMENT PUMP W/ELECTRIC STROKE ADJUSTMENT (MP)
- ROTARY COMPRESSER OR BLOWER
- AIR FILTER
- BLOWER OR FAN (BW OR FN)
- VACUUM PUMP (VP)
- DIAPHRAGM PUMP (P)
- CENTRIFUGAL PUMP (P)
- HIGH PRESSURE PUMP (P)
- DESICCANT BREATHER
- VENT PIPE
- Y–STRAINER
- RUPTURE DISC
- DIAPHRAGM SEAL
- STANDPIPE (SP)
- CALIBRATION COLUMN (CC)
- AIR COMPRESSOR (AC)
- PNEUMATIC VIBRATOR (VIB)

- RO/UF MODULE
- FILTER – BASKET (BAF)
- FILTER (F) HOUSING
- CLOSED TOP TANK (TK)
- CONE BOTTOM TANK (TK)
- OPEN TOP TANK (TK) WITH COVER
- PLATE HEAT EXCHANGER (HX)
- SHELL AND TUBE HEAT EXCHANGER (HX)
- CONE CONSTRAINER (CSTR)
- PERISTALTIC HOSE PUMP (P)
- FLEXIBLE CONNECTION

MISCELLANEOUS SYMBOLS

- LINE, EQUIPMENT OR PRODUCT REFERENCES INTO OR LEAVING DWG.
- TIE IN TO PIPING BY OTHERS
- 304 | CPVC — PIPING MATERIAL SPEC. BREAK

SOLENOID VALVE OPERATION

3–WAY: FAIL OPEN TO PATH A–C

4–WAY: FAIL OPEN TO PATHS A–C AND D–B

- AIR SUPPLY
- NITROGEN SUPPLY
- CONCENTRIC REDUCING
- ECCENTRIC REDUCING
- ENCLOSURE (CAP)
- FLANGE
- END CLOSURE (BLIND FLANGE)
- END CLOSURE (VIC PLUG)
- QUICK DISCONNECT
- UNION
- SANITARY CONNECTION
- FLOOR DRAIN OR SUMP
- BULKHEAD
- EXPANSION JOINT

FILL SYMBOLS

- SPLASH FILL
- FILM FILL
- NET FILL

INSTRUMENT LINE SYMBOLS

- PNEUMATIC SIGNAL (ANALOG)
- PNEUMATIC SIGNAL (DIGITAL)
- ELECTRICAL SIGNAL (ANALOG – 4–20mA OR 1–10 VDC)
- ELECTRICAL SIGNAL (FREQUENCY OR PULSE)
- CAPILLARY TUBING (FILLED TUBING)
- CONNECTION TO PROCESS, OR INSTRUMENT SUPPLY

FLUID LINE SYMBOLS

- EFFECT 1 BRINE (90°C)
- EFFECT 2 BRINE (75°C)
- EFFECT 3 BRINE (60°C)
- EFFECT 4 BRINE (45°C)
- EFFECT 5 BRINE (30°C)
- CIP
- RAW FEED
- CONDENSED WATER (70°C – 40°C)
- THERMAL LOOP (GYLCOL)
- EVAPORATE
- COMPRESSED AIR LINE
- ACID DOSING
- BASE DOSING
- ANTIFOAM
- BIOFILM TREATMENT SOLUTION

MISCELLANEOUS LINE SYMBOLS

- SYSTEM BOUNDARY

INSTRUMENT SYMBOLS

- LOCALLY MOUNTED
- PANEL MOUNTED (MAIN OR REMOTE)
- SHARED DISPLAY (CRT) AND/OR SHARED CONTROL

CONTROL SYMBOLS

- DI — DISCRETE INPUT TO PLC
- DO — DISCRETE OUTPUT FROM PLC
- AI — ANALOG INPUT TO PLC
- AO — ANALOG OUTPUT FROM PLC

EQUIPMENT IDENTIFICATION

M – MOTOR
AS – AIR SEAL
VFD – VARIABLE FREQUENCY DRIVE
DRY – DRYER

MODULE IDENTIFICATION

EVP – EVAPORATOR MODULE
RAD – RADIATOR MODULE
FAN – FAN MODULE

MATERIAL ABBREVIATIONS

PP – POLYPROPYLENE
PVC – POLYVINYL CHLORIDE
UPVC – POLYVINYL CHLORIDE
P – POLYVINYL CHLORIDE (IN LINE NUMBER)
CPVC – CHLORINATED POLYVINYL CHLORIDE
C – CHLORINATED POLYVINYL CHLORIDE (IN LINE NUMBER)
HDPE – HIGH DENSITY POLYETHYLENE
PVDF – POLYVINYLIDENE FLUORIDE
PVFB – PVDF BEADLESS & CREVICE FREE
PVFL – PVDF LINED
PTFE – TEFLON
304 – 304 STAINLESS STEEL
304L – 304L STAINLESS STEEL
316 – 316 STAINLESS STEEL
316L – 316L STAINLESS STEEL

INSTRUMENT IDENTIFICATION

PARAMETER (1ST LETTER)

P – PRESSURE
F – FLOW
T – TEMPERATURE
C – CONDUCTIVITY
D – DENSITY
Z – POSITION
A – ANALYTICAL (SEE NOTES)

TYPE (2ND AND 3RD LETTER)

I – INDICATING/INDICATOR
T – TRANSMITTER
E – ELEMENT/PROBE
A – ALARM
S – SWITCH

NOTES:

1. THE DESCRIPTION OF AN ANALYTICAL VARIABLE FUNCTION (pH, SiO_2, O, ETC.) SHALL BE SHOWN OUTSIDE THE INSTRUMENT SYMBOL. EXAMPLE: AIT pH
2. ADD THE SUFFIX L (LOW), LL (LOW–LOW), H (HIGH), HH (HIGH–HIGH), HL (HIGH–LOW), AS REQUIRED. EXAMPLE: PSL FAL

LINE NUMBERING

E1BR4–001–P80

FLUID — SIZE — SEQUENCE NUMBER — MATERIAL — SCHEDULE

VALVE NUMBERING

681–015–BA17–0001

AREA CODE — VALVE SIZE — VALVE TYPE — SEQUENTIAL NUMBER

VALVE SIZE CONVERSION

MM	INCH
008	1/4
015	1/2
025	1
050	2
100	4
150	6

VALVE TYPE CONVERSION

- BA17 – BALL VALVE
- BA99 – TOUGH BALL VALVE
- BF99 – TOUGH BUTTERFLY VALVE (EXCEPT THOSE NOTED "NON TOUGH")
- CK99 – CHECK VALVE
- GA99 – GATE VALVE

Saltworks
13800 Steveston Hwy
Richmond, BC, Canada, V6W 1A8
Tel: 604.628.6508 Fax: 604.676.2463
www.saltworkstech.com

DRAWING STATUS: FACTORY AS BUILT

THIS DOCUMENT EMBODIES DESIGNS AND INFORMATION THAT ARE PROPRIETARY TO SALTWORKS. IT IS TO BE USED ONLY FOR THE PURPOSE AND BY THE ENTITY FOR WHICH IT WAS ORIGINALLY SUPPLIED. THE DOCUMENT MAY NOT BE DUPLICATED OR DISCLOSED TO OTHER PERSON OR ENTITY, OR USED FOR MANUFACTURE OF THE ITEM IN PART OR IN WHOLE WITHOUT THE PRIOR WRITTEN PERMISSION OF SALTWORKS.

DO NOT SCALE DRAWING

LTR	DATE	DESCRIPTION	REV. BY:
N	06–JUL–2018	NO CHANGES	–
K	26–FEB–2018	NO CHANGES	–
L	16–MAR–2018	NO CHANGES	–
M	08–MAY–2018	NO CHANGES	–

TITLE: LEGEND

PROJECT: SALTMAKER GEN III

CUSTOMER: AGNICO EAGLE MINES

REVISION: N

PREPARED BY:	SN	DATE:	22–FEB–2018
CHECKED BY:	XXIAO	DATE:	23–FEB–2018
APPROVED BY:	APPROVED BY	DATE:	APPROVED DATE

DWG. NO: LEGEND

JOB/CO NO: (JOB NO.)

SHEET: # OF #

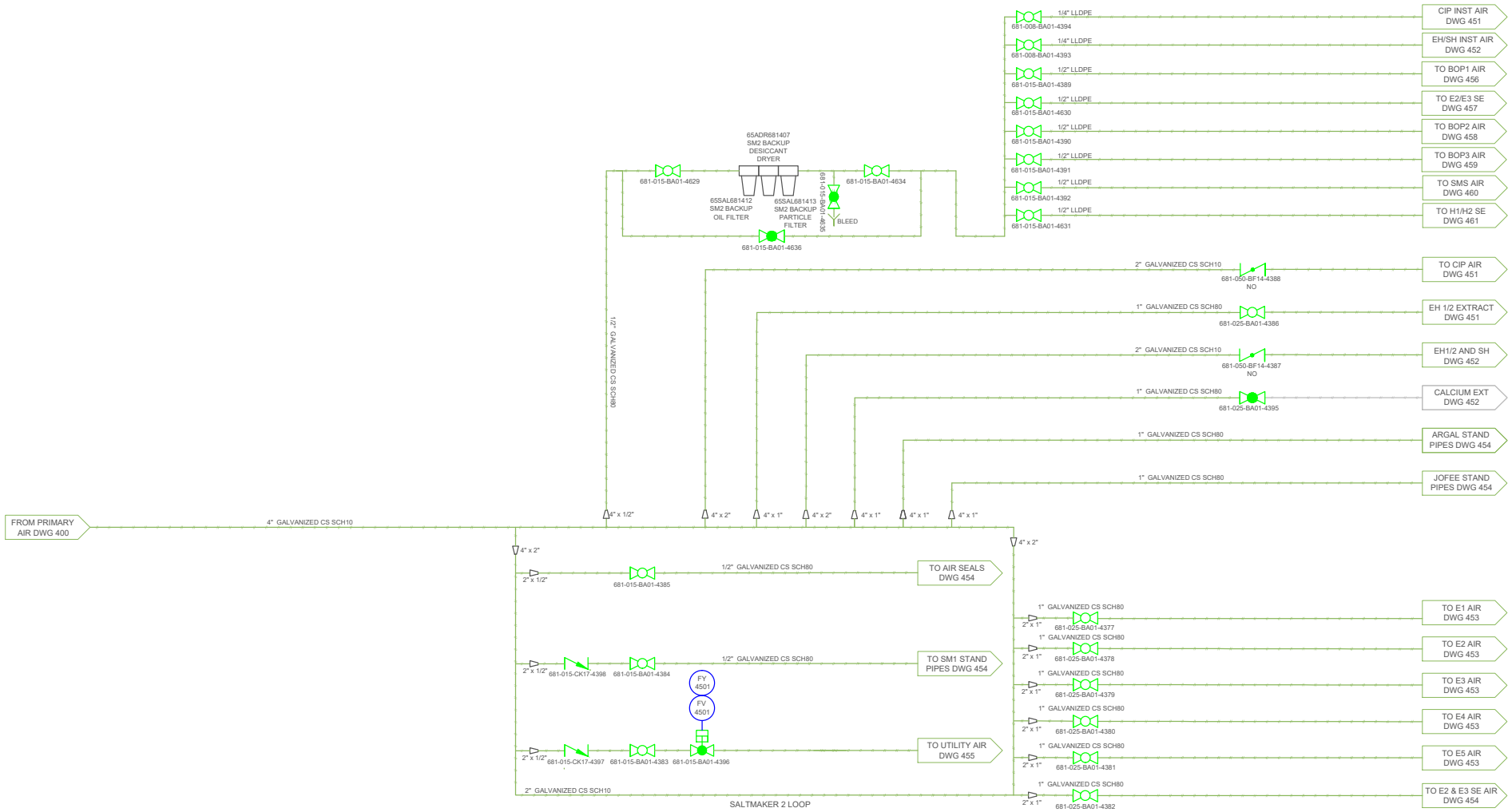

Saltworks
13800 Steveston Hwy
Richmond, BC, Canada, V6W 1A8
Tel: 604.628.6508 Fax: 604.676.2463
www.saltworkstech.com

DRAWING STATUS: FACTORY AS BUILT

THIS DOCUMENT EMBODIES DESIGNS AND INFORMATION THAT ARE PROPRIETARY TO SALTWORKS. IT IS TO BE USED ONLY FOR THE PURPOSE AND BY THE ENTITY FOR WHICH IT WAS ORIGINALLY SUPPLIED. THE DOCUMENT MAY NOT BE DUPLICATED OR DISCLOSED TO OTHER PERSON OR ENTITY, OR USED FOR MANUFACTURE OF THE ITEM IN PART OR IN WHOLE WITHOUT THE PRIOR WRITTEN PERMISSION OF SALTWORKS.

DO NOT SCALE DRAWING

LTR	DATE	DESCRIPTION	REV. BY:
N	06–JUL–2018	NO CHANGES	–
K	26–FEB–2018	NO CHANGES	–
L	16–MAR–2018	INSTRUMENT AIR UPDATED, FILTER PACK ADDED	JLAU
M	08–MAY–2018	MANIFOLD REMOVED	JLAU

TITLE: (SM2) 450: SM2 INSTRUMENT AND PROCESS AIR

PROJECT: SALTMAKER GEN III		CUSTOMER: AGNICO EAGLE MINES	REVISION N
PREPARED BY: SN	DATE: 22–FEB–2018	DWG. NO: SW_EN_SM_GEN III_PID_DWG_450	
CHECKED BY: XXIAO	DATE: 23–FEB–2018	JOB/CO NO: (JOB NO.)	
APPROVED BY: APPROVED BY	DATE: APPROVED DATE	SHEET: 72 OF117	

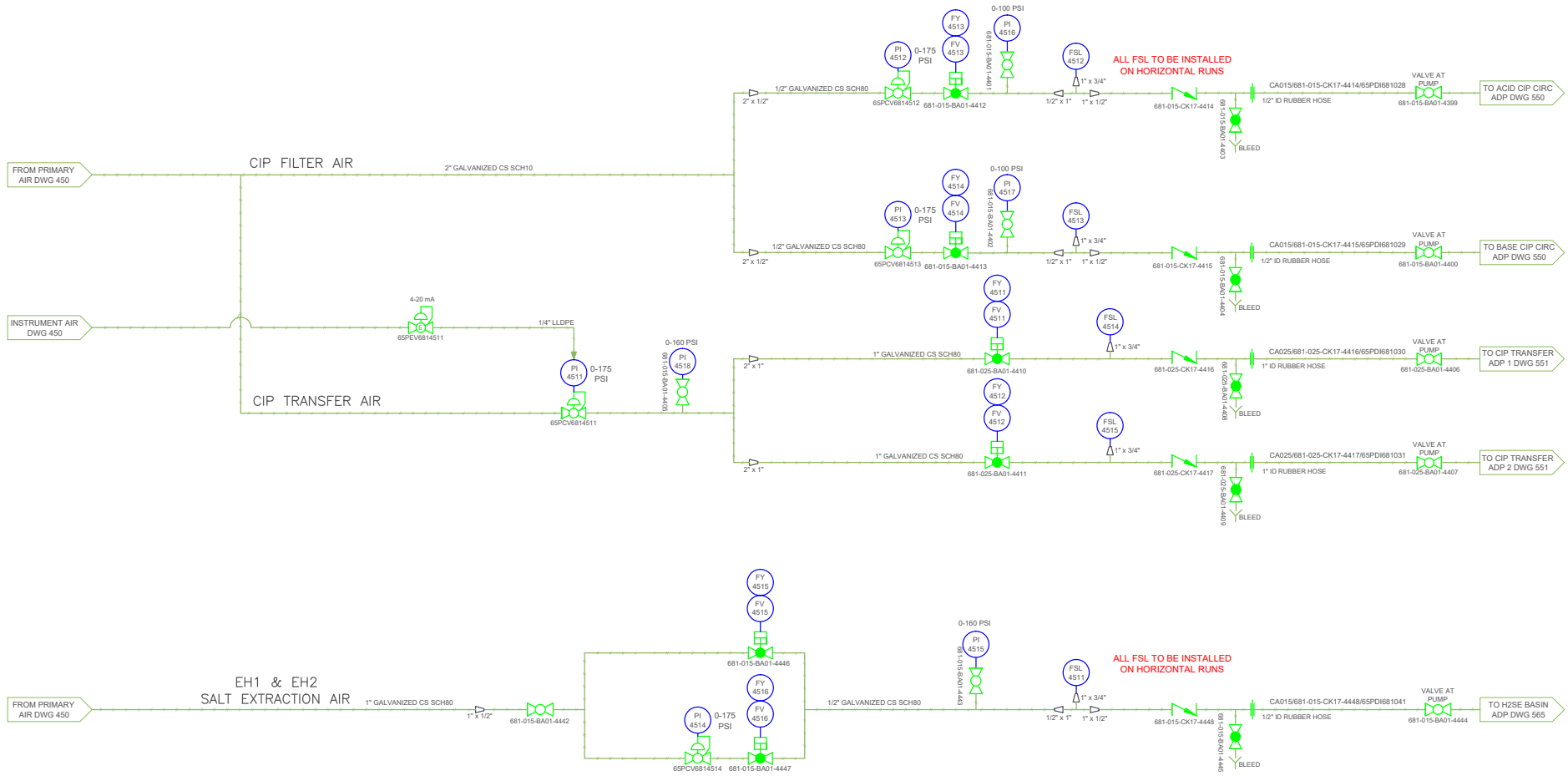

Saltworks
13800 Steveston Hwy
Richmond, BC, Canada, V6W 1A8
Tel: 604.628.6508 Fax: 604.676.2463
www.saltworkstech.com

DRAWING STATUS: FACTORY AS BUILT

THIS DOCUMENT EMBODIES DESIGNS AND INFORMATION THAT ARE PROPRIETARY TO SALTWORKS. IT IS TO BE USED ONLY FOR THE PURPOSE AND BY THE ENTITY FOR WHICH IT WAS ORIGINALLY SUPPLIED. THE DOCUMENT MAY NOT BE DUPLICATED OR DISCLOSED TO OTHER PERSON OR ENTITY, OR USED FOR MANUFACTURE OF THE ITEM IN PART OR IN WHOLE WITHOUT THE PRIOR WRITTEN PERMISSION OF SALTWORKS.

DO NOT SCALE DRAWING

LTR	DATE	DESCRIPTION	REV. BY:
N	06–JUL–2018	NO CHANGES	–
K	26–FEB–2018	NO CHANGES	–
L	16–MAR–2018	ADDED AIR LINE TAG	JLAU
M	08–MAY–2018	NO CHANGES	–

TITLE: (SM2) 451: EH1/EH2 EXTRACT AND CIP AIR

PROJECT: SALTMAKER GEN III		CUSTOMER: AGNICO EAGLE MINES	REVISION N
PREPARED BY: SN	DATE: 22–FEB–2018	DWG. NO: SW_EN_SM_GEN III_PID_DWG_451	
CHECKED BY: XXIAO	DATE: 23–FEB–2018	JOB/CO NO: (JOB NO.)	
APPROVED BY: APPROVED BY	DATE: APPROVED DATE	SHEET: 73 OF117	

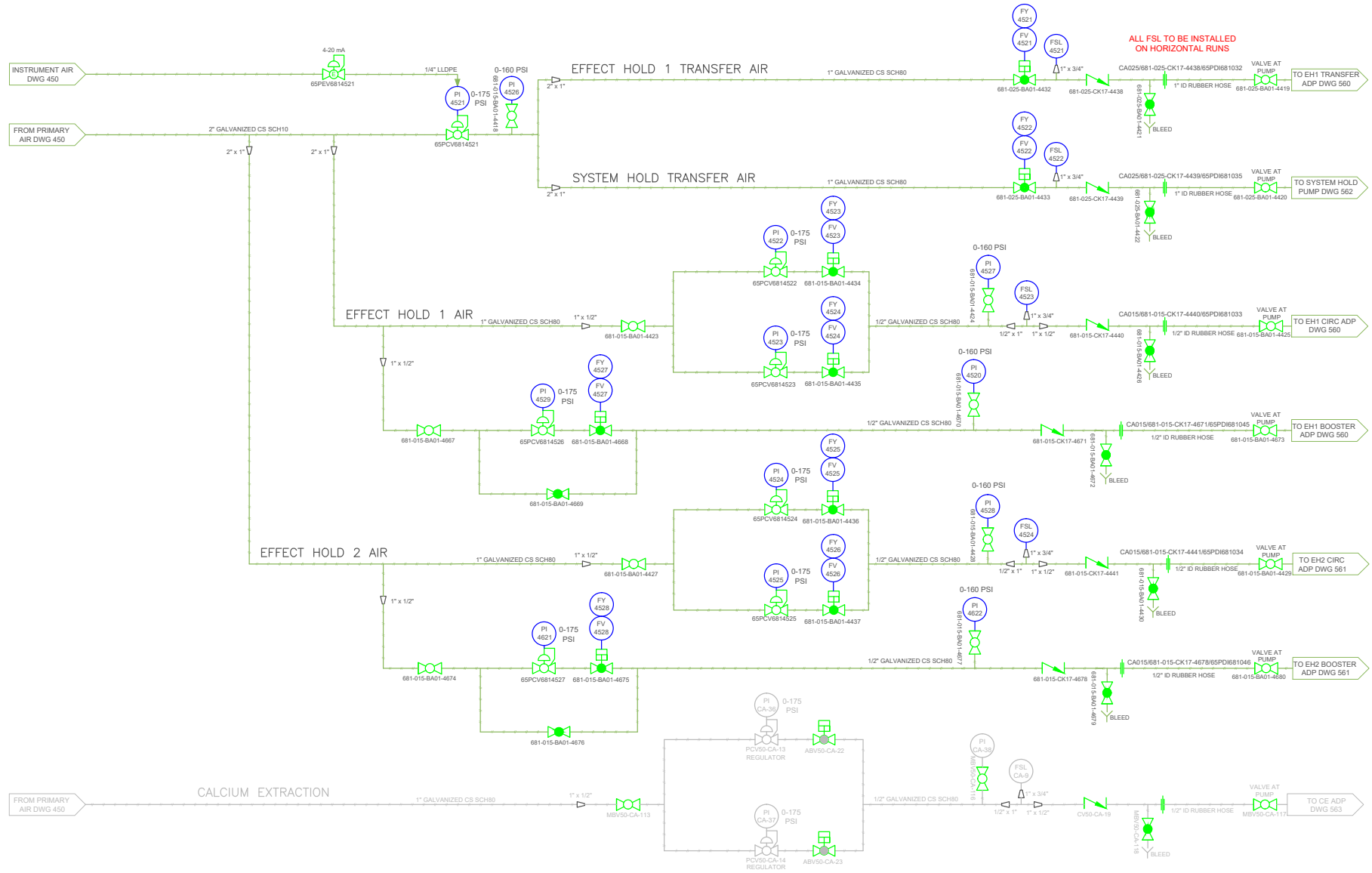

Saltworks
13800 Steveston Hwy
Richmond, BC, Canada, V6W 1A8
Tel: 604.628.6508 Fax: 604.676.2463
www.saltworkstech.com

DRAWING STATUS: FACTORY AS BUILT

THIS DOCUMENT EMBODIES DESIGNS AND INFORMATION THAT ARE PROPRIETARY TO SALTWORKS. IT IS TO BE USED ONLY FOR THE PURPOSE AND BY THE ENTITY FOR WHICH IT WAS ORIGINALLY SUPPLIED. THE DOCUMENT MAY NOT BE DUPLICATED OR DISCLOSED TO OTHER PERSON OR ENTITY, OR USED FOR MANUFACTURE OF THE ITEM IN PART OR IN WHOLE WITHOUT THE PRIOR WRITTEN PERMISSION OF SALTWORKS.

DO NOT SCALE DRAWING

LTR	DATE	DESCRIPTION	REV. BY:
N	06-JUL-2018	NO CHANGES	–
K	26-FEB-2018	INSTRUMENT TAGS	SN
L	16-MAR-2018	ADDED AIR LINE TAGS	JLAU
M	08-MAY-2018	NO CHANGES	–

TITLE: (SM2) 452: EFFECT HOLD, SYSTEM HOLD, AND CALCIUM EXTRACTION AIR

PROJECT: SALTMAKER GEN III		CUSTOMER: AGNICO EAGLE MINES	REVISION N
PREPARED BY: SN	DATE: 22-FEB-2018	DWG. NO: SW_EN_SM_GEN III_PID_DWG_452	
CHECKED BY: XXIAO	DATE: 23-FEB-2018	JOB/CO NO: (JOB NO.)	
APPROVED BY: APPROVED BY	DATE: APPROVED DATE	SHEET: 74 OF117	

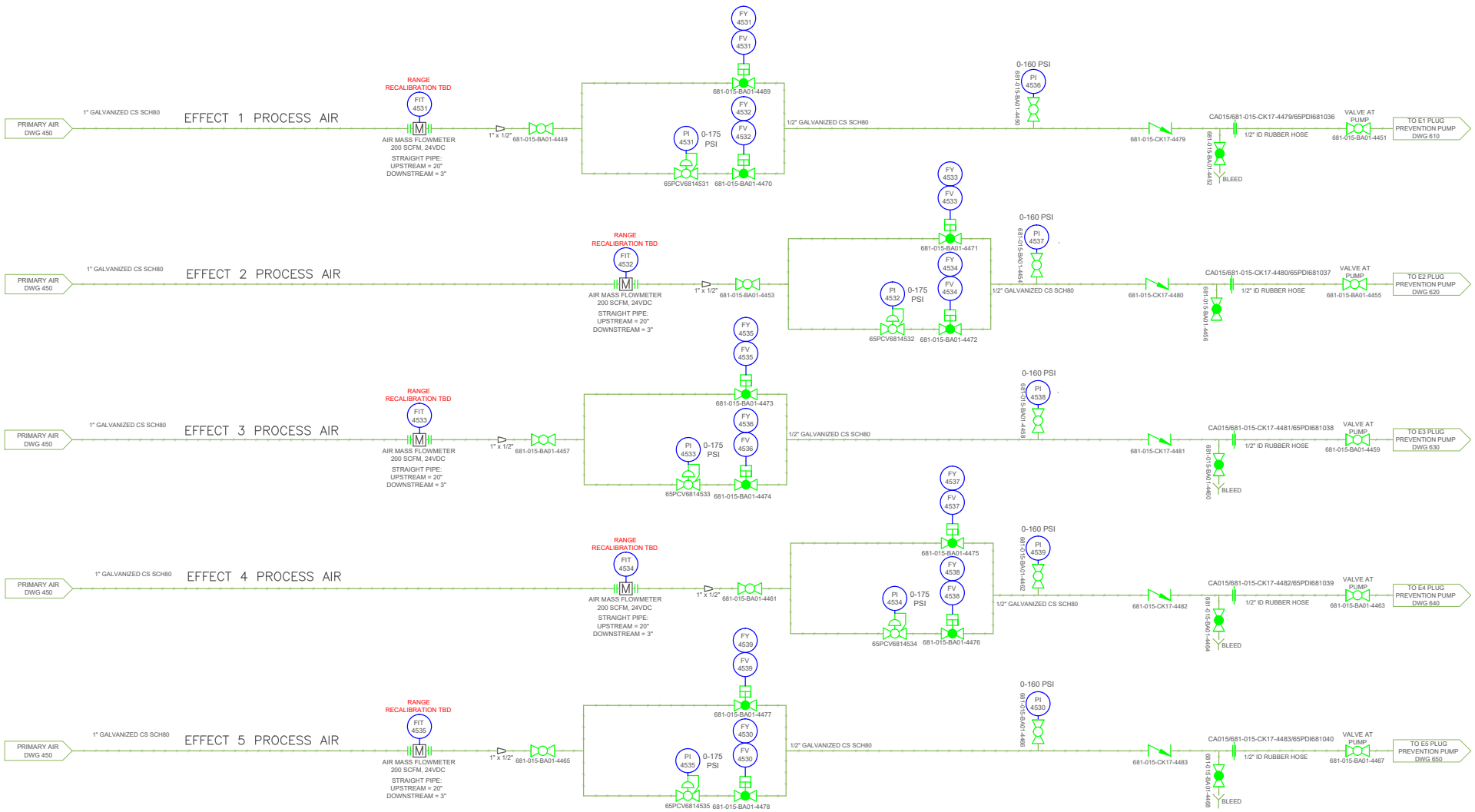

Saltworks
13800 Steveston Hwy
Richmond, BC, Canada, V6W 1A8
Tel: 604.628.6508 Fax: 604.676.2463
www.saltworkstech.com

DRAWING STATUS: FACTORY AS BUILT

THIS DOCUMENT EMBODIES DESIGNS AND INFORMATION THAT ARE PROPRIETARY TO SALTWORKS. IT IS TO BE USED ONLY FOR THE PURPOSE AND BY THE ENTITY FOR WHICH IT WAS ORIGINALLY SUPPLIED. THE DOCUMENT MAY NOT BE DUPLICATED OR DISCLOSED TO OTHER PERSON OR ENTITY, OR USED FOR MANUFACTURE OF THE ITEM IN PART OR IN WHOLE WITHOUT THE PRIOR WRITTEN PERMISSION OF SALTWORKS.

DO NOT SCALE DRAWING

LTR	DATE	DESCRIPTION	REV. BY:
N	06–JUL–2018	NO CHANGES	–
K	26–FEB–2018	NO CHANGES	–
L	16–MAR–2018	ADDED AIR LINE TAGS	JLAU
M	08–MAY–2018	NO CHANGES	–

TITLE: (SM2) 453: EFFECT PUMP COMPRESSED AIR

PROJECT: SALTMAKER GEN III		CUSTOMER: AGNICO EAGLE MINES	REVISION N
PREPARED BY: SN	DATE: 22–FEB–2018	DWG. NO: SW_EN_SM_GEN III_PID_DWG_453	
CHECKED BY: XXIAO	DATE: 23–FEB–2018	JOB/CO NO: (JOB NO.)	
APPROVED BY: APPROVED BY	DATE: APPROVED DATE	SHEET: 75 OF117	

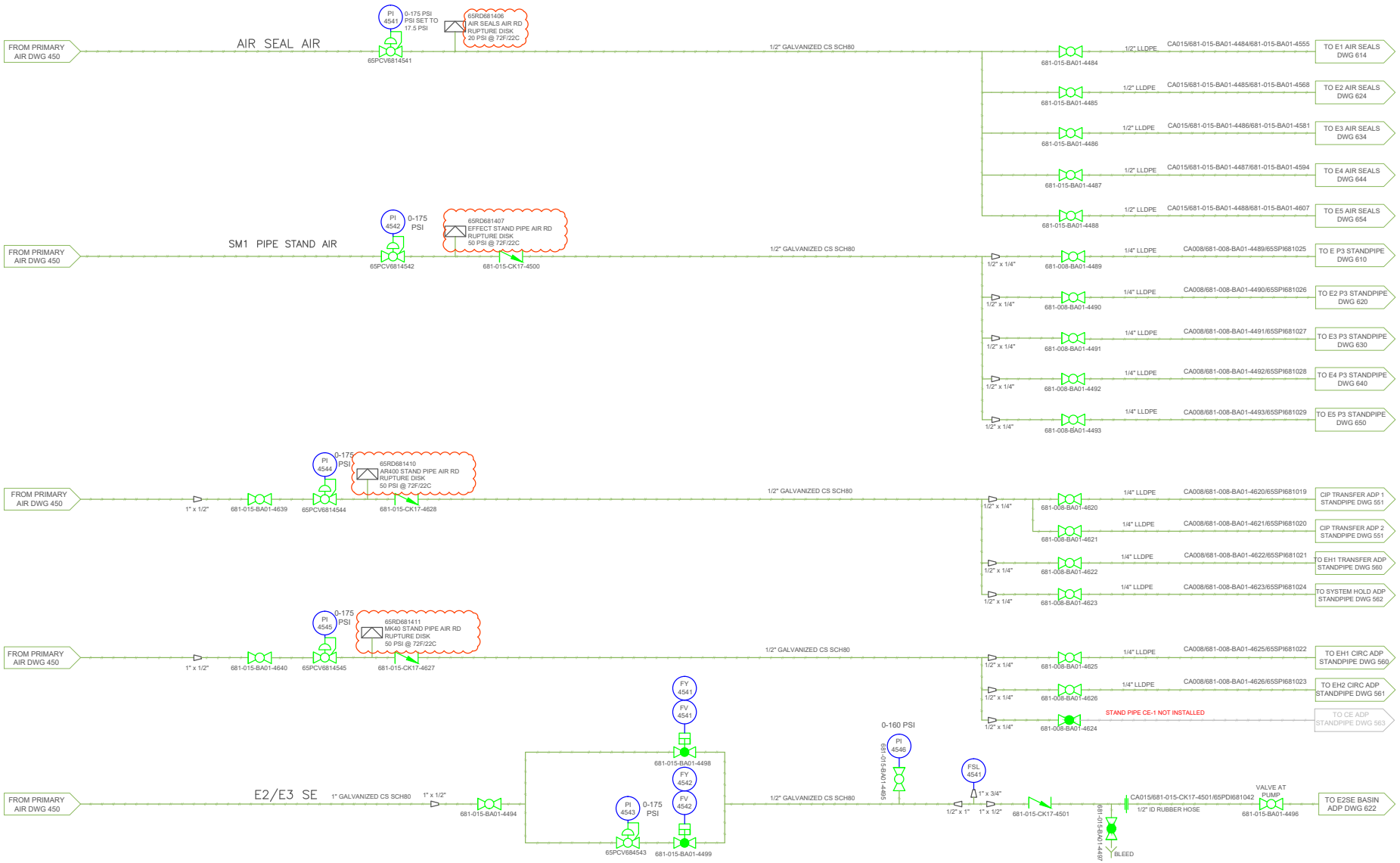

Saltworks
13800 Steveston Hwy
Richmond, BC, Canada, V6W 1A8
Tel: 604.628.6508 Fax: 604.676.2463
www.saltworkstech.com

DRAWING STATUS: FACTORY AS BUILT

THIS DOCUMENT EMBODIES DESIGNS AND INFORMATION THAT ARE PROPRIETARY TO SALTWORKS. IT IS TO BE USED ONLY FOR THE PURPOSE AND BY THE ENTITY FOR WHICH IT WAS ORIGINALLY SUPPLIED. THE DOCUMENT MAY NOT BE DUPLICATED OR DISCLOSED TO OTHER PERSON OR ENTITY, OR USED FOR MANUFACTURE OF THE ITEM IN PART OR IN WHOLE WITHOUT THE PRIOR WRITTEN PERMISSION OF SALTWORKS.

DO NOT SCALE DRAWING

LTR	DATE	DESCRIPTION	REV. BY:
N	06–JUL–2018	RUPTURE DISK CONFIRMED	JLAU
K	26–FEB–2018	NO CHANGES	–
L	16–MAR–2018	ADDED AIR LINE TAGS, ADDED 2 ISOLATION VALVES	JLAU
M	08–MAY–2018	NO CHANGES	–

TITLE: (SM2) 454: SM2 AIR SEAL, PIPE STAND, AND E2/E3 SE AIR

PROJECT: SALTMAKER GEN III		CUSTOMER: AGNICO EAGLE MINES	REVISION N
PREPARED BY: SN	DATE: 22–FEB–2018	DWG. NO: SW_EN_SM_GEN III_PID_DWG_454	
CHECKED BY: XXIAO	DATE: 23–FEB–2018	JOB/CO NO: (JOB NO.)	
APPROVED BY: APPROVED BY	DATE: APPROVED DATE	SHEET: 76 OF117	

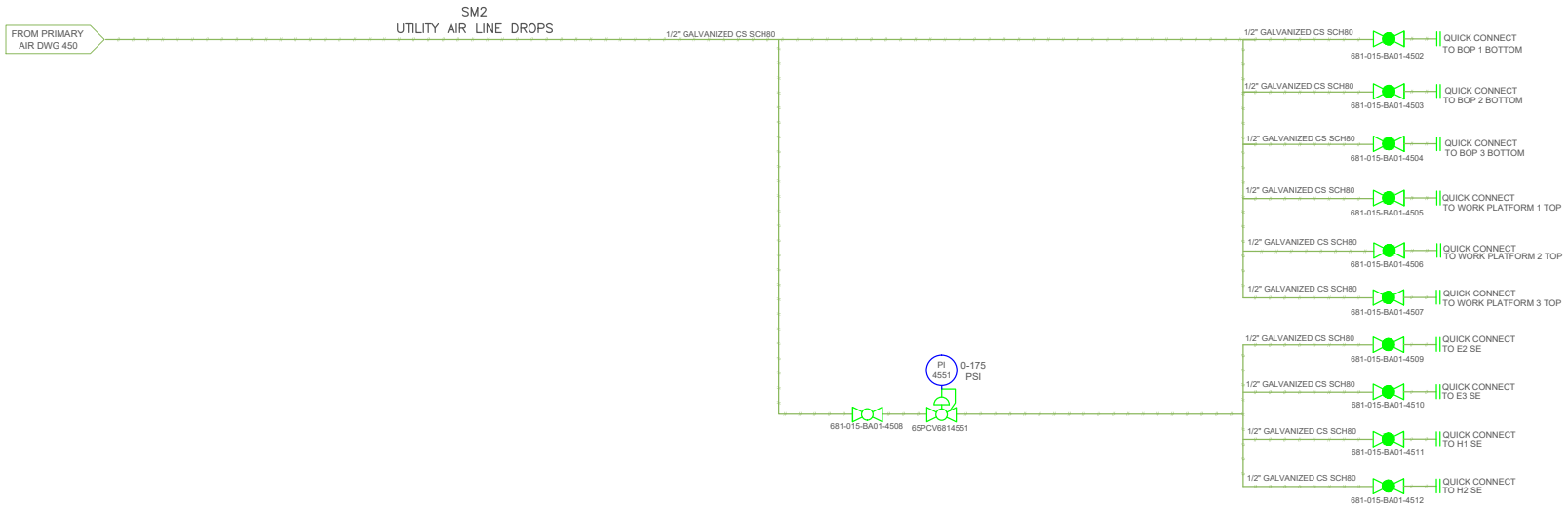

Saltworks
13800 Steveston Hwy
Richmond, BC, Canada, V6W 1A8
Tel: 604.628.6508 Fax: 604.676.2463
www.saltworkstech.com

DRAWING STATUS: FACTORY AS BUILT

THIS DOCUMENT EMBODIES DESIGNS AND INFORMATION THAT ARE PROPRIETARY TO SALTWORKS. IT IS TO BE USED ONLY FOR THE PURPOSE AND BY THE ENTITY FOR WHICH IT WAS ORIGINALLY SUPPLIED. THE DOCUMENT MAY NOT BE DUPLICATED OR DISCLOSED TO OTHER PERSON OR ENTITY, OR USED FOR MANUFACTURE OF THE ITEM IN PART OR IN WHOLE WITHOUT THE PRIOR WRITTEN PERMISSION OF SALTWORKS.

DO NOT SCALE DRAWING

LTR	DATE	DESCRIPTION	REV. BY:
N	06–JUL–2018	NO CHANGES	–
K	26–FEB–2018	NO CHANGES	–
L	16–MAR–2018	NO CHANGES	–
M	08–MAY–2018	NO CHANGES	–

TITLE: (SM2) 455: SM2 UTILITY AIR

PROJECT: SALTMAKER GEN III		CUSTOMER: AGNICO EAGLE MINES	REVISION N
PREPARED BY: SN	DATE: 22–FEB–2018	DWG. NO: SW_EN_SM_GEN III_PID_DWG_455	
CHECKED BY: XXIAO	DATE: 23–FEB–2018	JOB/CO NO: (JOB NO.)	
APPROVED BY: APPROVED BY	DATE: APPROVED DATE	SHEET: 77 OF117	

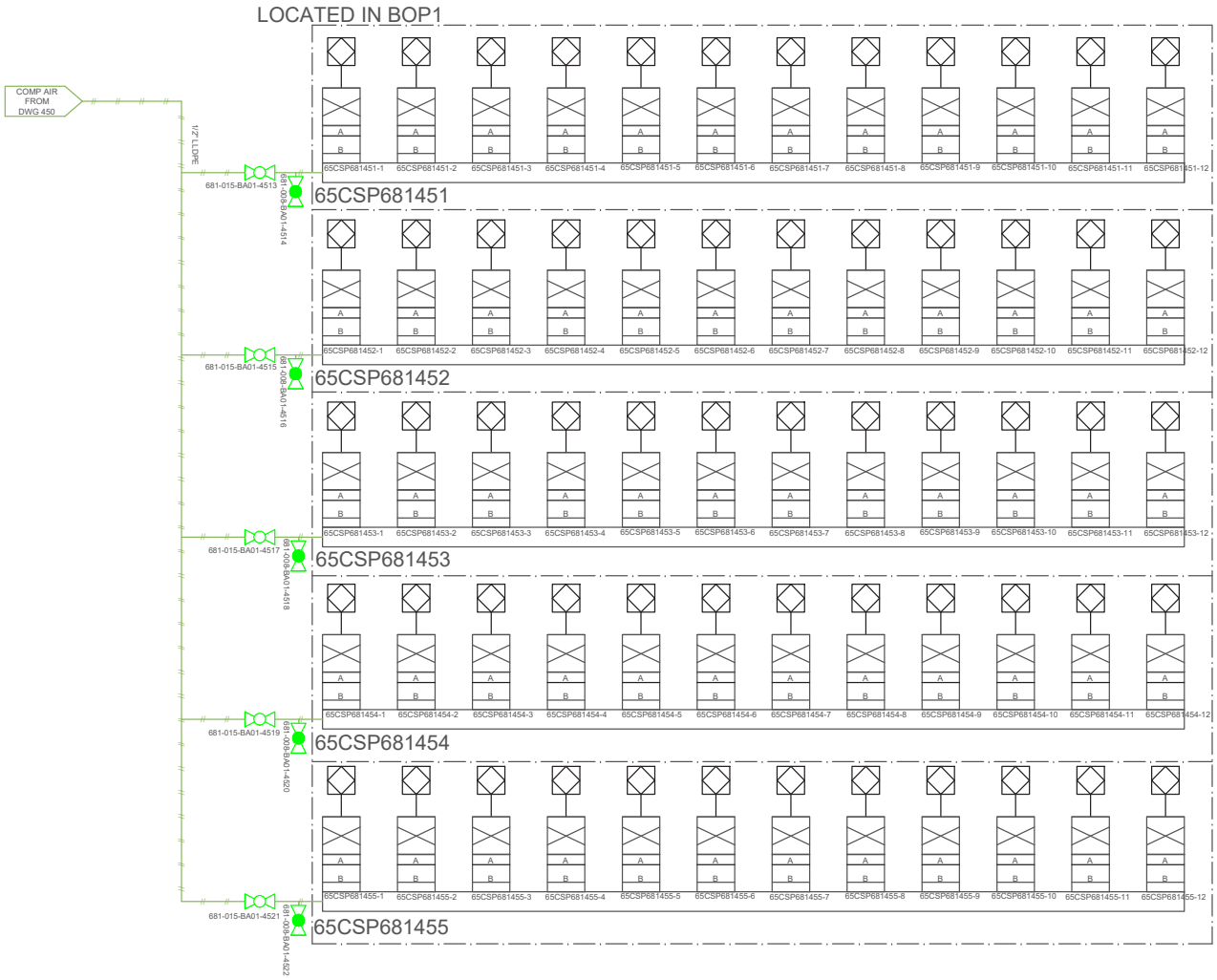

65CSP681451

SOLENOID	ABV	CONTROL LINE A	CONTROL LINE B	SYSTEM/DWG	NO/NC
65CSP681451-1	65FV6816202	65CSP681451-1/65FV6816202/A	65CSP681451-1/65FV6816202/B	E2/620	NC
65CSP681451-2	65FV6816203	65CSP681451-2/65FV6816203/A	65CSP681451-2/65FV6816203/B	E2/620	NC
65CSP681451-3	65FV6816204	65CSP681451-3/65FV6816204/A	65CSP681451-3/65FV6816204/B	E2/620	NC
65CSP681451-4	65FV6816205	65CSP681451-4/65FV6816205/A	65CSP681451-4/65FV6816205/B	E2/620	NC
65CSP681451-5	65FV6816206	65CSP681451-5/65FV6816206/A	65CSP681451-5/65FV6816206/B	E2/620	NO
65CSP681451-6	65FV6816207	65CSP681451-6/65FV6816207/A	65CSP681451-6/65FV6816207/B	E2/620	NC
65CSP681451-7	65FV6816208	65CSP681451-7/65FV6816208/A	65CSP681451-7/65FV6816208/B	E2/620	NC
65CSP681451-8	65FV6816201	65CSP681451-8/65FV6816201/A	65CSP681451-8/65FV6816201/B	E2/620	NC
65CSP681451-9	65FV6816217	65CSP681451-9/65FV6816217/A	65CSP681451-9/65FV6816217/B	E2/620	NC
65CSP681451-10	65FV6816218	65CSP681451-10/65FV6816218/A	65CSP681451-10/65FV6816218/B	E2/620	NC
65CSP681451-11	65FV6816200	65CSP681451-11/65FV6816200/A	65CSP681451-11/65FV6816200/B	E2-ACD/620	NC
65CSP681451-12	65FV6816209	65CSP681451-12/65FV6816209/A	65CSP681451-12/65FV6816209/B	E2-BSE/620	NC

65CSP681452

SOLENOID	ABV	CONTROL LINE A	CONTROL LINE B	SYSTEM/DWG	NO/NC
65CSP681452-1	65FV6816216	65CSP681452-1/65FV6816216/A	65CSP681452-1/65FV6816216/B	E2/623	NC
65CSP681452-2	65FV6816212	65CSP681452-2/65FV6816212/A	65CSP681452-2/65FV6816212/B	E2/620	NC
65CSP681452-3	65FV6816213	65CSP681452-3/65FV6816213/A	65CSP681452-3/65FV6816213/B	E2/620	NC
65CSP681452-4	65FV6816219	65CSP681452-4/65FV6816219/A	65CSP681452-4/65FV6816219/B	E2/620	NC
65CSP681452-5	65FV6814533	65CSP681452-5/65FV6814533/A	65CSP681452-5/65FV6814533/B	CA-E2/453	NC
65CSP681452-6	65FV6814534	65CSP681452-6/65FV6814534/A	65CSP681452-6/65FV6814534/B	CA-E2/453	NC
65CSP681452-7	65FV6816302	65CSP681452-7/65FV6816302/A	65CSP681452-7/65FV6816302/B	E3/630	NC
65CSP681452-8	65FV6816303	65CSP681452-8/65FV6816303/A	65CSP681452-8/65FV6816303/B	E3/630	NC
65CSP681452-9	65FV6816304	65CSP681452-9/65FV6816304/A	65CSP681452-9/65FV6816304/B	E3/630	NC
65CSP681452-10	65FV6816305	65CSP681452-10/65FV6816305/A	65CSP681452-10/65FV6816305/B	E3/630	NC
65CSP681452-11	65FV6816306	65CSP681452-11/65FV6816306/A	65CSP681452-11/65FV6816306/B	E3/630	NO
65CSP681452-12	65FV6816307	65CSP681452-12/65FV6816307/A	65CSP681452-12/65FV6816307/B	E3/630	NC

65CSP681453

SOLENOID	ABV	CONTROL LINE A	CONTROL LINE B	SYSTEM/DWG	NO/NC
65CSP681453-1	65FV6816308	65CSP681453-1/65FV6816308/A	65CSP681453-1/65FV6816308/B	E3/630	NC
65CSP681453-2	65FV6816301	65CSP681453-2/65FV6816301/A	65CSP681453-2/65FV6816301/B	E3/630	NC
65CSP681453-3	65FV6816317	65CSP681453-3/65FV6816317/A	65CSP681453-3/65FV6816317/B	E3/630	NC
65CSP681453-4	65FV6816318	65CSP681453-4/65FV6816318/A	65CSP681453-4/65FV6816318/B	E3/630	NC
65CSP681453-5	65FV6816300	65CSP681453-5/65FV6816300/A	65CSP681453-5/65FV6816300/B	E3-ACD/630	NC
65CSP681453-6	65FV6816309	65CSP681453-6/65FV6816309/A	65CSP681453-6/65FV6816309/B	E3-BSE/630	NC
65CSP681453-7	65FV6816316	65CSP681453-7/65FV6816316/A	65CSP681453-7/65FV6816316/B	E3/633	NC
65CSP681453-8	65FV6816312	65CSP681453-8/65FV6816312/A	65CSP681453-8/65FV6816312/B	E3/630	NC
65CSP681453-9	65FV6816313	65CSP681453-9/65FV6816313/A	65CSP681453-9/65FV6816313/B	E3/630	NC
65CSP681453-10	65FV6816319	65CSP681453-10/65FV6816319/A	65CSP681453-10/65FV6816319/B	E3/630	NC
65CSP681453-11	65FV6814535	65CSP681453-11/65FV6814535/A	65CSP681453-11/65FV6814535/B	CA-E3/453	NC
65CSP681453-12	65FV6814536	65CSP681453-12/65FV6814536/A	65CSP681453-12/65FV6814536/B	CA-E3/453	NC

65CSP681454

SOLENOID	ABV	CONTROL LINE A	CONTROL LINE B	SYSTEM/DWG	NO/NC
65CSP681454-1	65FV6815301	65CSP681454-1/65FV6815301/A	65CSP681454-1/65FV6815301/B	FD/530	NC
65CSP681454-2	65FV6815302	65CSP681454-2/65FV6815302/A	65CSP681454-2/65FV6815302/B	FD/530	NC
65CSP681454-3	65FV6815303	65CSP681454-3/65FV6815303/A	65CSP681454-3/65FV6815303/B	FD/530	NC
65CSP681454-4	65FV6815304	65CSP681454-4/65FV6815304/A	65CSP681454-4/65FV6815304/B	FD/530	NC
65CSP681454-5	65FV6815305	65CSP681454-5/65FV6815305/A	65CSP681454-5/65FV6815305/B	FD/530	NC
65CSP681454-6	65FV6815306	65CSP681454-6/65FV6815306/A	65CSP681454-6/65FV6815306/B	FD/530	NC
65CSP681454-7	65FV6815307	65CSP681454-7/65FV6815307/A	65CSP681454-7/65FV6815307/B	FD/530	NC
65CSP681454-8	65FV6815308	65CSP681454-8/65FV6815308/A	65CSP681454-8/65FV6815308/B	FD/530	NC
65CSP681454-9	65FV6815309	65CSP681454-9/65FV6815309/A	65CSP681454-9/65FV6815309/B	FD/530	NC
65CSP681454-10	65FV6815310	65CSP681454-10/65FV6815310/A	65CSP681454-10/65FV6815310/B	FD/530	NC
65CSP681454-11	65FV6815311	65CSP681454-11/65FV6815311/A	65CSP681454-11/65FV6815311/B	FD/530	NC
65CSP681454-12	SPARE				

65CSP681455

SOLENOID	ABV	CONTROL LINE A	CONTROL LINE B	SYSTEM/DWG	NO/NC
65CSP681455-1	65FV6810627	65CSP681455-1/65FV6810627/A	65CSP681455-1/65FV6810627/B	BIO/062	NC
65CSP681455-2	65FV6810628	65CSP681455-2/65FV6810628/A	65CSP681455-2/65FV6810628/B	BIO/062	NC
65CSP681455-3	65FV6810629	65CSP681455-3/65FV6810629/A	65CSP681455-3/65FV6810629/B	BIO/062	NC
65CSP681455-4	65FV6810620	65CSP681455-4/65FV6810620/A	65CSP681455-4/65FV6810620/B	BIO/062	NC
65CSP681455-5	65FV6810691	65CSP681455-5/65FV6810691/A	65CSP681455-5/65FV6810691/B	BIO/062	NC
65CSP681455-6		TBD - VALVE MAY NOT EXIST			
65CSP681455-7	65FV6810636	65CSP681455-7/65FV6810636/A	65CSP681455-7/65FV6810636/B	ATF/063	NC
65CSP681455-8	65FV6810637	65CSP681455-8/65FV6810637/A	65CSP681455-8/65FV6810637/B	ATF/063	NC
65CSP681455-9	65FV6810638	65CSP681455-9/65FV6810638/A	65CSP681455-9/65FV6810638/B	ATF/063	NC
65CSP681455-10	65FV6810639	65CSP681455-10/65FV6810639/A	65CSP681455-10/65FV6810639/B	ATF/063	NC
65CSP681455-11	65FV6810630	65CSP681455-11/65FV6810630/A	65CSP681455-11/65FV6810630/B	ATF/063	NC
65CSP681455-12		TBD - VALVE MAY NOT EXIST			

1. ALL ABV SUPPLIED IN NC CONFIGURATION
2. CONTROL LINE A ALWAYS START FROM SOLENOID A PORT
3. CONTROL LINE B ALWAYS START FROM SOLENOID B PORT
4. FOR NC ABV
   a. CONTROL LINE A TERMINATES AT ABV LEFT PORT
   b. CONTROL LINE B TERMINATES AT ABV RIGHT PORT
5. FOR NO ABV
   a. CONTROL LINE A TERMINATES AT ABV RIGHT PORT
   b. CONTROL LINE B TERMINATES AT ABV LEFT PORT

NOTE: ORIENTATION OF AIR PANEL AND AIRLINE FEEDING PANEL PENDING MECHANICAL LAYOUT. ALL SOLENOID VALVE POSITION 1 STARTS IMMEDIATELY ADJACENT TO D-SUB CONNECTOR

Saltworks
13800 Steveston Hwy
Richmond, BC, Canada, V6W 1A8
Tel: 604.628.6508 Fax: 604.676.2463
www.saltworkstech.com

DRAWING STATUS: FACTORY AS BUILT

THIS DOCUMENT EMBODIES DESIGNS AND INFORMATION THAT ARE PROPRIETARY TO SALTWORKS. IT IS TO BE USED ONLY FOR THE PURPOSE AND BY THE ENTITY FOR WHICH IT WAS ORIGINALLY SUPPLIED. THE DOCUMENT MAY NOT BE DUPLICATED OR DISCLOSED TO OTHER PERSON OR ENTITY, OR USED FOR MANUFACTURE OF THE ITEM IN PART OR IN WHOLE WITHOUT THE PRIOR WRITTEN PERMISSION OF SALTWORKS.

DO NOT SCALE DRAWING

LTR	DATE	DESCRIPTION	REV. BY:
N	06-JUL-2018	NO CHANGES	–
K	26-FEB-2018	UPDATED SOLENOID BANK	SN
L	16-MAR-2018	UPDATED SOLENOID TABLE	JLAU
M	08-MAY-2018	NO CHANGES	–

TITLE: (SM2) 456: BOP1 AIR SOLENOID BANK

PROJECT: SALTMAKER GEN III		CUSTOMER: AGNICO EAGLE MINES	REVISION: N
PREPARED BY: SN	DATE: 22-FEB-2018	DWG. NO: SW_EN_SM_GEN III_PID_DWG_456	
CHECKED BY: XXIAO	DATE: 23-FEB-2018	JOB/CO NO: (JOB NO.)	
APPROVED BY: APPROVED BY	DATE: APPROVED DATE	SHEET: 78 OF117	

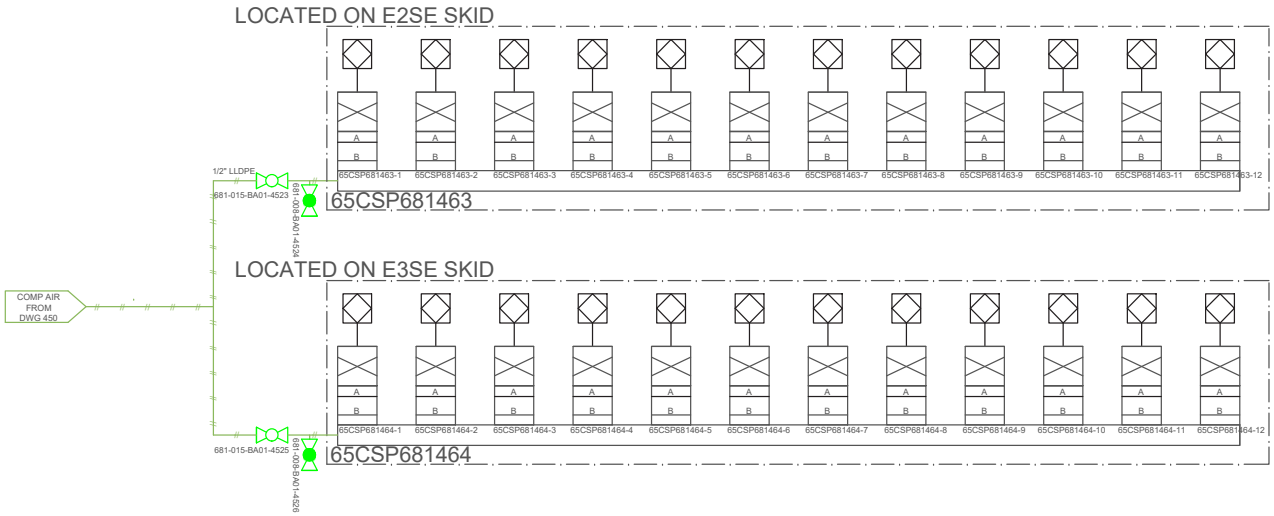

65CSP681463

SOLENOID	ABV	CONTROL LINE A	CONTROL LINE B	SYSTEM/DWG	NO/NC
65CSP681463-1	65FV6816221	65CSP681463-1/65FV6816221/A	65CSP681463-1/65FV6816221/B	E2SE/622	NC
65CSP681463-2	65FV6816222	65CSP681463-2/65FV6816222/A	65CSP681463-2/65FV6816222/B	E2SE/622	NC
65CSP681463-3	65FV6816223	65CSP681463-3/65FV6816223/A	65CSP681463-3/65FV6816223/B	E2SE/622	NC
65CSP681463-4	65FV6816224	65CSP681463-4/65FV6816224/A	65CSP681463-4/65FV6816224/B	E2SE/622	NC
65CSP681463-5	65FV6816225	65CSP681463-5/65FV6816225/A	65CSP681463-5/65FV6816225/B	E2SE/622	NC
65CSP681463-6	65FV6816226	65CSP681463-6/65FV6816226/A	65CSP681463-6/65FV6816226/B	E2SE/622	NO
65CSP681463-7	SPARE				
65CSP681463-8	SPARE				
65CSP681463-9	SPARE				
65CSP681463-10	SPARE				
65CSP681463-11	SPARE				
65CSP681463-12	SPARE				

65CSP681464

SOLENOID	ABV	CONTROL LINE A	CONTROL LINE B	SYSTEM/DWG	NO/NC
65CSP681464-1	65FV6816321	65CSP681464-1/65FV6816321/A	65CSP681464-1/65FV6816321/B	E3SE/632	NC
65CSP681464-2	65FV6816322	65CSP681464-2/65FV6816322/A	65CSP681464-2/65FV6816322/B	E3SE/632	NC
65CSP681464-3	65FV6816323	65CSP681464-3/65FV6816323/A	65CSP681464-3/65FV6816323/B	E3SE/632	NC
65CSP681464-4	65FV6816324	65CSP681464-4/65FV6816324/A	65CSP681464-4/65FV6816324/B	E3SE/632	NC
65CSP681464-5	65FV6816325	65CSP681464-5/65FV6816325/A	65CSP681464-5/65FV6816325/B	E3SE/632	NC
65CSP681464-6	65FV6816326	65CSP681464-6/65FV6816326/A	65CSP681464-6/65FV6816326/B	E3SE/632	NO
65CSP681464-7	65FV6816227	65CSP681463-9/65FV6816227/A	65CSP681463-9/65FV6816227/B	E2SE/622	NO
65CSP681464-8	65FV6816228	65CSP681463-10/65FV6816228/A	65CSP681463-10/65FV6816228/B	E2SE/622	NC
65CSP681464-9	65FV6814541	65CSP681463-7/65FV6814541/A	65CSP681463-7/65FV6814541/B	CA-E2SE/454	NC
65CSP681464-10	65FV6814542	65CSP681463-8/65FV6814542/A	65CSP681463-8/65FV6814542/B	CA-E2SE/454	NC
65CSP681464-11	SPARE				
65CSP681464-12	SPARE				

1. ALL ABV SUPPLIED IN NC CONFIGURATION
2. CONTROL LINE A ALWAYS START FROM SOLENOID A PORT
3. CONTROL LINE B ALWAYS START FROM SOLENOID B PORT
4. FOR NC ABV
   a. CONTROL LINE A TERMINATES AT ABV LEFT PORT
   b. CONTROL LINE B TERMINATES AT ABV RIGHT PORT
5. FOR NO ABV
   a. CONTROL LINE A TERMINATES AT ABV RIGHT PORT
   b. CONTROL LINE B TERMINATES AT ABV LEFT PORT

NOTE: ORIENTATION OF AIR PANEL AND AIRLINE FEEDING PANEL PENDING MECHANICAL LAYOUT. ALL SOLENOID VALVE POSITION 1 STARTS IMMEDIATELY ADJACENT TO D-SUB CONNECTOR

Saltworks
13800 Steveston Hwy
Richmond, BC, Canada, V6W 1A8
Tel: 604.628.6508 Fax: 604.676.2463
www.saltworkstech.com

DRAWING STATUS: FACTORY AS BUILT

THIS DOCUMENT EMBODIES DESIGNS AND INFORMATION THAT ARE PROPRIETARY TO SALTWORKS. IT IS TO BE USED ONLY FOR THE PURPOSE AND BY THE ENTITY FOR WHICH IT WAS ORIGINALLY SUPPLIED. THE DOCUMENT MAY NOT BE DUPLICATED OR DISCLOSED TO OTHER PERSON OR ENTITY, OR USED FOR MANUFACTURE OF THE ITEM IN PART OR IN WHOLE WITHOUT THE PRIOR WRITTEN PERMISSION OF SALTWORKS.

DO NOT SCALE DRAWING

LTR	DATE	DESCRIPTION	REV. BY:
N	06-JUL-2018	NO CHANGES	–
K	26-FEB-2018	UPDATED SOLENOID BANK	SN
L	16-MAR-2018	UPDATED SOLENOID TABLE	JLAU
M	08-MAY-2018	NO CHANGES	–

TITLE: (SM2) 457: E2/E3 SE AIR SOLENOID BANK

PROJECT: SALTMAKER GEN III

CUSTOMER: AGNICO EAGLE MINES

REVISION: N

PREPARED BY: SN DATE: 22-FEB-2018

CHECKED BY: XXIAO DATE: 23-FEB-2018

APPROVED BY: APPROVED BY DATE: APPROVED DATE

DWG. NO: SW_EN_SM_GEN III_PID_DWG_457

JOB/CO NO: (JOB NO.)

SHEET: 79 OF117

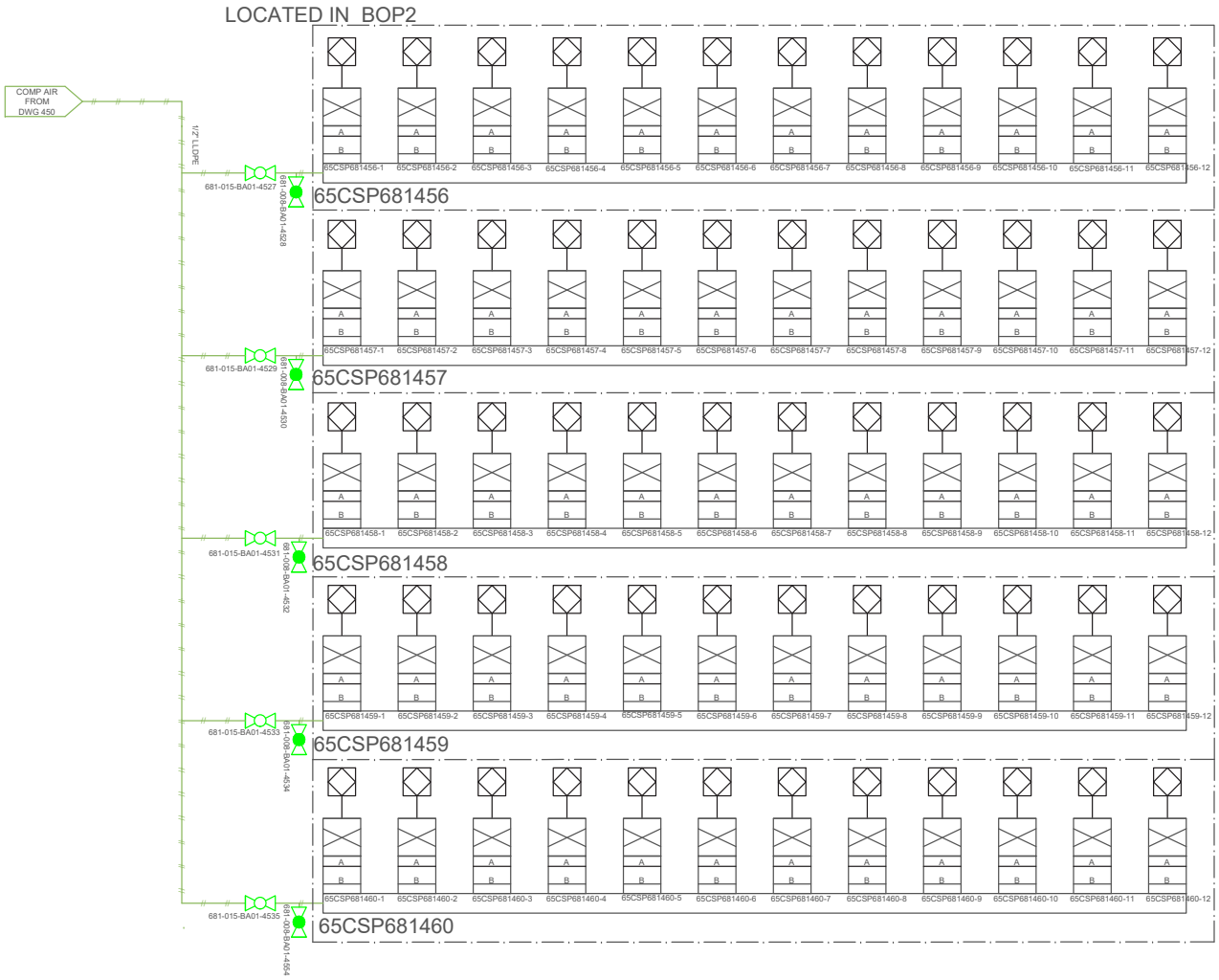

65CSP681456

SOLENOID	ABV	CONTROL LINE A	CONTROL LINE B	SYSTEM/DWG	NO/NC
65CSP681456-1	65FV6815201	65CSP681456-1/65FV6815201/A	65CSP681456-1/65FV6815201/B	CW/520	NO
65CSP681456-2	65FV6815202	65CSP681456-2/65FV6815202/A	65CSP681456-2/65FV6815202/B	CW/520	NO
65CSP681456-3	65FV6815203	65CSP681456-3/65FV6815203/A	65CSP681456-3/65FV6815203/B	CW/520	NC
65CSP681456-4	65FV6815204	65CSP681456-4/65FV6815204/A	65CSP681456-4/65FV6815204/B	CW/520	NC
65CSP681456-5	65FV6815208	65CSP681456-5/65FV6815208/A	65CSP681456-5/65FV6815208/B	CW-ACD/520	NC
65CSP681456-6	65FV6815200	65CSP681456-6/65FV6815200/A	65CSP681456-6/65FV6815200/B	CW-UW/520	NC
65CSP681456-7	65FV6814501	65CSP681456-7/65FV6814501/A	65CSP681456-7/65FV6814501/B	CA/450	NC
65CSP681456-8		TBD - VALVE MAY NOT EXIST			
65CSP681456-9		TBD - VALVE MAY NOT EXIST			
65CSP681456-10	SPARE				
65CSP681456-11	SPARE				
65CSP681456-12	SPARE				

65CSP681457

SOLENOID	ABV	CONTROL LINE A	CONTROL LINE B	SYSTEM/DWG	NO/NC
65CSP681457-1	65FV6816101	65CSP681457-1/65FV6816101/A	65CSP681457-1/65FV6816101/B	E1/610	NC
65CSP681457-2	65FV6816103	65CSP681457-2/65FV6816103/A	65CSP681457-2/65FV6816103/B	E1/610	NC
65CSP681457-3	65FV6816104	65CSP681457-3/65FV6816104/A	65CSP681457-3/65FV6816104/B	E1/610	NC
65CSP681457-4	65FV6816105	65CSP681457-4/65FV6816105/A	65CSP681457-4/65FV6816105/B	E1/610	NC
65CSP681457-5	65FV6816106	65CSP681457-5/65FV6816106/A	65CSP681457-5/65FV6816106/B	E1/610	NO
65CSP681457-6	65FV6816107	65CSP681457-6/65FV6816107/A	65CSP681457-6/65FV6816107/B	E1/610	NC
65CSP681457-7	65FV6816108	65CSP681457-7/65FV6816108/A	65CSP681457-7/65FV6816108/B	E1/610	NC
65CSP681457-8	65FV6816109	65CSP681457-8/65FV6816109/A	65CSP681457-8/65FV6816109/B	E1/610	NC
65CSP681457-9	65FV6816110	65CSP681457-9/65FV6816110/A	65CSP681457-9/65FV6816110/B	E1/610	NC
65CSP681457-10	65FV6816111	65CSP681457-10/65FV6816111/A	65CSP681457-10/65FV6816111/B	E1/610	NO
65CSP681457-11	65FV6816112	65CSP681457-11/65FV6816112/A	65CSP681457-11/65FV6816112/B	E1/610	NC
65CSP681457-12	65FV6816113	65CSP681457-12/65FV6816113/A	65CSP681457-12/65FV6816113/B	E1/610	NC

65CSP681458

SOLENOID	ABV	CONTROL LINE A	CONTROL LINE B	SYSTEM/DWG	NO/NC
65CSP681458-1	65FV6816114	65CSP681458-1/65FV6816114/A	65CSP681458-1/65FV6816114/B	E1/610	NC
65CSP681458-2	65FV6816115	65CSP681458-2/65FV6816115/A	65CSP681458-2/65FV6816115/B	E1/610	NC
65CSP681458-3	65FV6816118	65CSP681458-3/65FV6816118/A	65CSP681458-3/65FV6816118/B	E1-ACD/610	NC
65CSP681458-4	65FV6816119	65CSP681458-4/65FV6816119/A	65CSP681458-4/65FV6816119/B	E1-BSE/610	NC
65CSP681458-5	65FV6814531	65CSP681458-5/65FV6814531/A	65CSP681458-5/65FV6814531/B	CA-E1/453	NC
65CSP681458-6	65FV6814532	65CSP681458-6/65FV6814532/A	65CSP681458-6/65FV6814532/B	CA-E1/453	NC
65CSP681458-7	65FV6816402	65CSP681458-7/65FV6816402/A	65CSP681458-7/65FV6816402/B	E4/640	NC
65CSP681458-8	65FV6816403	65CSP681458-8/65FV6816403/A	65CSP681458-8/65FV6816403/B	E4/640	NC
65CSP681458-9	65FV6816404	65CSP681458-9/65FV6816404/A	65CSP681458-9/65FV6816404/B	E4/640	NC
65CSP681458-10	65FV6816405	65CSP681458-10/65FV6816405/A	65CSP681458-10/65FV6816405/B	E4/640	NC
65CSP681458-11	65FV6816406	65CSP681458-11/65FV6816406/A	65CSP681458-11/65FV6816406/B	E4/640	NO
65CSP681458-12	65FV6816407	65CSP681458-12/65FV6816407/A	65CSP681458-12/65FV6816407/B	E4/640	NC

65CSP681459

SOLENOID	ABV	CONTROL LINE A	CONTROL LINE B	SYSTEM/DWG	NO/NC
65CSP681459-1	65FV6816408	65CSP681459-1/65FV6816408/A	65CSP681459-1/65FV6816408/B	E4/640	NC
65CSP681459-2	65FV6816411	65CSP681459-2/65FV6816411/A	65CSP681459-2/65FV6816411/B	E4/640	NO
65CSP681459-3	65FV6816412	65CSP681459-3/65FV6816412/A	65CSP681459-3/65FV6816412/B	E4/640	NC
65CSP681459-4	65FV6816413	65CSP681459-4/65FV6816413/A	65CSP681459-4/65FV6816413/B	E4/640	NC
65CSP681459-5	65FV6816414	65CSP681459-5/65FV6816414/A	65CSP681459-5/65FV6816414/B	E4/640	NC
65CSP681459-6	65FV6816401	65CSP681459-6/65FV6816401/A	65CSP681459-6/65FV6816401/B	E4/640	NC
65CSP681459-7	65FV6816400	65CSP681459-7/65FV6816400/A	65CSP681459-7/65FV6816400/B	E4-ACD	NC
65CSP681459-8	65FV6816409	65CSP681459-8/65FV6816409/A	65CSP681459-8/65FV6816409/B	E4-BSE	NC
65CSP681459-9	65FV6814537	65CSP681459-9/65FV6814537/A	65CSP681459-9/65FV6814537/B	CA-E4/453	NC
65CSP681459-10	65FV6814538	65CSP681459-10/65FV6814538/A	65CSP681459-10/65FV6814538/B	CA-E4/453	NC
65CSP681459-11	65FV6816116	65CSP681459-11/65FV6816116/A	65CSP681459-11/65FV6816116/B	E1/613	NC
65CSP681459-12	65FV6816416	65CSP681459-12/65FV6816416/A	65CSP681459-12/65FV6816416/B	E4/643	NC

65CSP681460

SOLENOID	ABV	CONTROL LINE A	CONTROL LINE B	SYSTEM/DWG	NO/NC
65CSP681460-1	65FV6813115	65CSP681460-1/65FV6813115/A	65CSP681460-1/65FV6813115/B	TSW/311	NO
65CSP681460-2	65FV6813116	65CSP681460-2/65FV6813116/A	65CSP681460-2/65FV6813116/B	TSW/311	NC
65CSP681460-3	65FV6813117	65CSP681460-3/65FV6813117/A	65CSP681460-3/65FV6813117/B	TSW/311	NO
65CSP681460-4	65FV6813118	65CSP681460-4/65FV6813118/A	65CSP681460-4/65FV6813118/B	TSW/311	NC
65CSP681460-5	65FV6816500	65CSP681460-5/65FV6816500/A	65CSP681460-5/65FV6816500/B	ES-ACD/550	NC
65CSP681460-6	65FV6816509	65CSP681460-6/65FV6816509/A	65CSP681460-6/65FV6816509/B	ES-BSE/550	NC
65CSP681460-7	65FV6815516	65CSP681460-7/65FV6815516/A	65CSP681460-7/65FV6815516/B	CIP-ACD/550	NC
65CSP681460-8	65FV6815517	65CSP681460-8/65FV6815517/A	65CSP681460-8/65FV6815517/B	CIP-BSE/550	NC
65CSP681460-9	65FV6816230/65FV6816231	65CSP681460-9/65FV6816230/65FV6816231/A	65CSP681460-9/65FV6816230/65FV6816231/B	E2/620	NC/NO
65CSP681460-10	65FV6816330/65FV6816331	65CSP681460-10/65FV6816330/65FV6816331/A	65CSP681460-10/65FV6816330/65FV6816331/B	E3/630	NC/NO
65CSP681460-11	SPARE				
65CSP681460-12	SPARE				

1. ALL ABV SUPPLIED IN NC CONFIGURATION
2. CONTROL LINE A ALWAYS START FROM SOLENOID A PORT
3. CONTROL LINE B ALWAYS START FROM SOLENOID B PORT
4. FOR NC ABV
   a. CONTROL LINE A TERMINATES AT ABV LEFT PORT
   b. CONTROL LINE B TERMINATES AT ABV RIGHT PORT
5. FOR NO ABV
   a. CONTROL LINE A TERMINATES AT ABV RIGHT PORT
   b. CONTROL LINE B TERMINATES AT ABV LEFT PORT

NOTE: ORIENTATION OF AIR PANEL AND AIRLINE FEEDING PANEL PENDING MECHANICAL LAYOUT. ALL SOLENOID VALVE POSITION 1 STARTS IMMEDIATELY ADJACENT TO D-SUB CONNECTOR

Saltworks
13800 Steveston Hwy
Richmond, BC, Canada, V6W 1A8
Tel: 604.628.6508 Fax: 604.676.2463
www.saltworkstech.com

DRAWING STATUS: FACTORY AS BUILT

THIS DOCUMENT EMBODIES DESIGNS AND INFORMATION THAT ARE PROPRIETARY TO SALTWORKS. IT IS TO BE USED ONLY FOR THE PURPOSE AND BY THE ENTITY FOR WHICH IT WAS ORIGINALLY SUPPLIED. THE DOCUMENT MAY NOT BE DUPLICATED OR DISCLOSED TO OTHER PERSON OR ENTITY, OR USED FOR MANUFACTURE OF THE ITEM IN PART OR IN WHOLE WITHOUT THE PRIOR WRITTEN PERMISSION OF SALTWORKS.

DO NOT SCALE DRAWING

LTR	DATE	DESCRIPTION	REV. BY:
N	06-JUL-2018	NO CHANGES	–
K	26-FEB-2018	UPDATED SOLENOID BANK	SN
L	16-MAR-2018	UPDATED SOLENOID TABLE	JLAU
M	08-MAY-2018	UPDATED SOLENOID TABLE	JLAU

TITLE: (SM2) 458: BOP2 AIR SOLENOID BANK

PROJECT: SALTMAKER GEN III		CUSTOMER: AGNICO EAGLE MINES	REVISION: N
PREPARED BY: SN	DATE: 22-FEB-2018	DWG. NO: SW_EN_SM_GEN III_PID_DWG_458	
CHECKED BY: XXIAO	DATE: 23-FEB-2018	JOB/CO NO: (JOB NO.)	
APPROVED BY: APPROVED BY	DATE: APPROVED DATE	SHEET: 80 OF117	

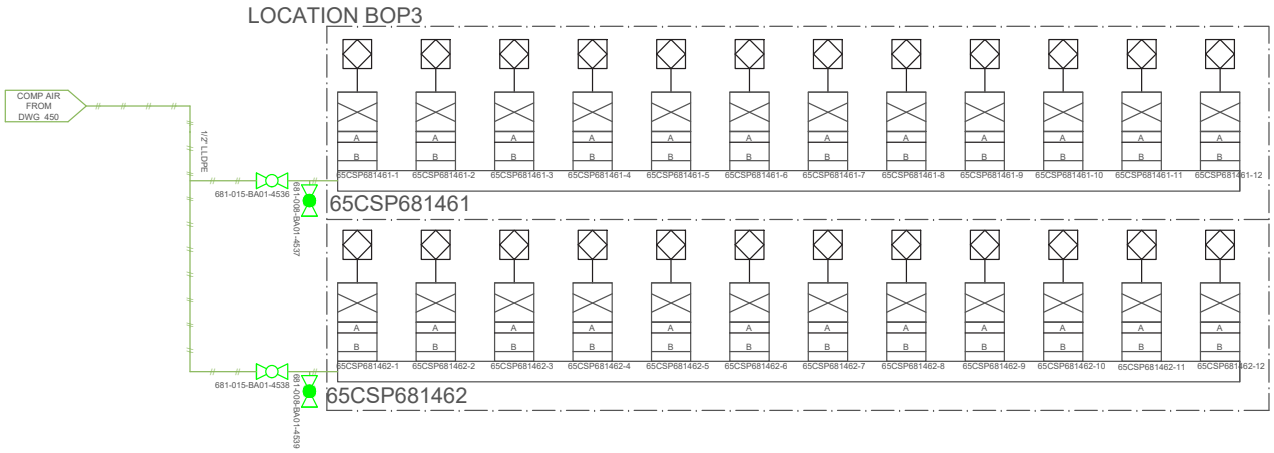

65CSP681461

SOLENOID	ABV	CONTROL LINE A	CONTROL LINE B	SYSTEM/DWG	NO/NC
65CSP681461-1	65FV6816502	65CSP681461-1/65FV6816502/A	65CSP681461-1/65FV6816502/B	E5/650	NC
65CSP681461-2	65FV6816503	65CSP681461-2/65FV6816503/A	65CSP681461-2/65FV6816503/B	E5/650	NC
65CSP681461-3	65FV6816504	65CSP681461-3/65FV6816504/A	65CSP681461-3/65FV6816504/B	E5/650	NC
65CSP681461-4	65FV6816505	65CSP681461-4/65FV6816505/A	65CSP681461-4/65FV6816505/B	E5/650	NC
65CSP681461-5	65FV6816506	65CSP681461-5/65FV6816506/A	65CSP681461-5/65FV6816506/B	E5/650	NO
65CSP681461-6	65FV6816507	65CSP681461-6/65FV6816507/A	65CSP681461-6/65FV6816507/B	E5/650	NC
65CSP681461-7	65FV6816508	65CSP681461-7/65FV6816508/A	65CSP681461-7/65FV6816508/B	E5/650	NC
65CSP681461-8	65FV6816501	65CSP681461-8/65FV6816501/A	65CSP681461-8/65FV6816501/B	E5/650	NC
65CSP681461-9	SPARE				
65CSP681461-10	SPARE				
65CSP681461-11	65FV6816511	65CSP681461-11/65FV6816511/A	65CSP681461-11/65FV6816511/B	E5/650	NO
65CSP681461-12	65FV6816512	65CSP681461-12/65FV6816512/A	65CSP681461-12/65FV6816512/B	E5/650	NC

65CSP681462

SOLENOID	ABV	CONTROL LINE A	CONTROL LINE B	SYSTEM/DWG	NO/NC
65CSP681462-1	65FV6816513	65CSP681462-1/65FV6816513/A	65CSP681462-1/65FV6816513/B	E5/650	NC
65CSP681462-2	65FV6816514	65CSP681462-2/65FV6816514/A	65CSP681462-2/65FV6816514/B	E5/650	NC
65CSP681462-3	65FV6814539	65CSP681462-3/65FV6814539/A	65CSP681462-3/65FV6814539/B	CA-E5/453	NC
65CSP681462-4	65FV6814530	65CSP681462-4/65FV6814530/A	65CSP681462-4/65FV6814530/B	CA-E5/453	NC
65CSP681462-5	65FV6816516	65CSP681462-5/65FV6816516/A	65CSP681462-5/65FV6816516/B	E5/653	NC
65CSP681462-6		TBD - VALVE MAY NOT EXIST			
65CSP681462-7	SPARE				
65CSP681462-8	SPARE				
65CSP681462-9	SPARE				
65CSP681462-10	SPARE				
65CSP681462-11	SPARE				
65CSP681462-12	SPARE				

1. ALL ABV SUPPLIED IN NC CONFIGURATION
2. CONTROL LINE A ALWAYS START FROM SOLENOID A PORT
3. CONTROL LINE B ALWAYS START FROM SOLENOID B PORT
4. FOR NC ABV
   a. CONTROL LINE A TERMINATES AT ABV LEFT PORT
   b. CONTROL LINE B TERMINATES AT ABV RIGHT PORT
5. FOR NO ABV
   a. CONTROL LINE A TERMINATES AT ABV RIGHT PORT
   b. CONTROL LINE B TERMINATES AT ABV LEFT PORT

NOTE: ORIENTATION OF AIR PANEL AND AIRLINE FEEDING PANEL PENDING MECHANICAL LAYOUT. ALL SOLENOID VALVE POSITION 1 STARTS IMMEDIATELY ADJACENT TO D-SUB CONNECTOR

Saltworks
13800 Steveston Hwy
Richmond, BC, Canada, V6W 1A8
Tel: 604.628.6508 Fax: 604.676.2463
www.saltworkstech.com

DRAWING STATUS: FACTORY AS BUILT

THIS DOCUMENT EMBODIES DESIGNS AND INFORMATION THAT ARE PROPRIETARY TO SALTWORKS. IT IS TO BE USED ONLY FOR THE PURPOSE AND BY THE ENTITY FOR WHICH IT WAS ORIGINALLY SUPPLIED. THE DOCUMENT MAY NOT BE DUPLICATED OR DISCLOSED TO OTHER PERSON OR ENTITY, OR USED FOR MANUFACTURE OF THE ITEM IN PART OR IN WHOLE WITHOUT THE PRIOR WRITTEN PERMISSION OF SALTWORKS.

DO NOT SCALE DRAWING

LTR	DATE	DESCRIPTION	REV. BY:
N	06-JUL-2018	NO CHANGES	–
K	26-FEB-2018	UPDATED SOLENOID BANK	SN
L	16-MAR-2018	UPDATED SOLENOID TABLE	JLAU
M	08-MAY-2018	NO CHANGES	–

TITLE: (SM2) 459: BOP3 AIR BANK

PROJECT: SALTMAKER GEN III

CUSTOMER: AGNICO EAGLE MINES

REVISION: N

PREPARED BY:	SN	DATE:	22-FEB-2018
CHECKED BY:	XXIAO	DATE:	23-FEB-2018
APPROVED BY:	APPROVED BY	DATE:	APPROVED DATE

DWG. NO: SW_EN_SM_GEN III_PID_DWG_459

JOB/CO NO: (JOB NO.)

SHEET: 81 OF117

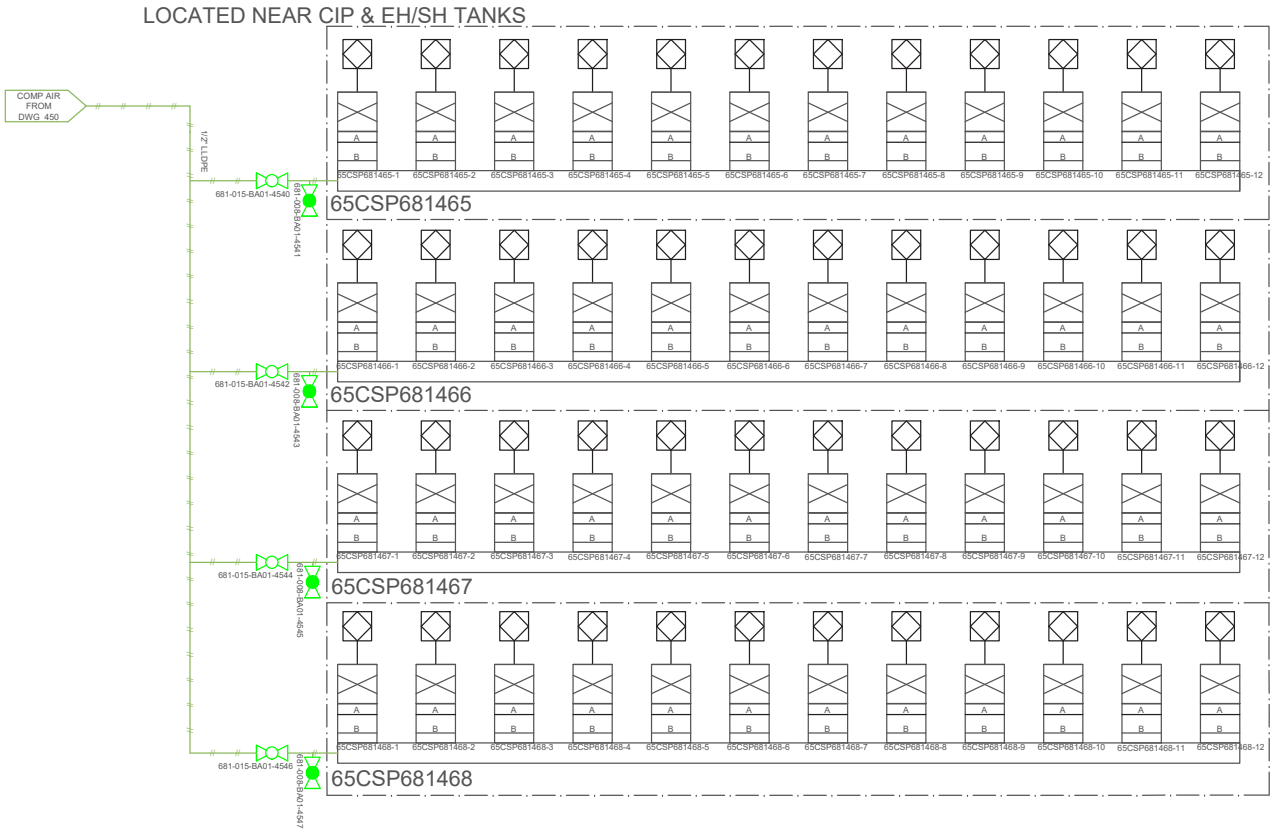

RESERVE PHYSICAL AND ELECTRICAL SPACE FOR 1 ADDITIONAL BANK

65CSP681465

SOLENOID	ABV	CONTROL LINE A	CONTROL LINE B	SYSTEM/DWG	NO/NC
65CSP681465-1	65FV6815505	65CSP681465-1/65FV6815505/A	65CSP681465-1/65FV6815505/B	CIP/550	NC
65CSP681465-2	65FV6815511	65CSP681465-2/65FV6815511/A	65CSP681465-2/65FV6815511/B	CIP/550	NC
65CSP681465-3	65FV6815501	65CSP681465-3/65FV6815501/A	65CSP681465-3/65FV6815501/B	CIP/550	NC
65CSP681465-4	65FV6815502	65CSP681465-4/65FV6815502/A	65CSP681465-4/65FV6815502/B	CIP/550	NC
65CSP681465-5	SPARE				
65CSP681465-6	65FV6815504	65CSP681465-6/65FV6815504/A	65CSP681465-6/65FV6815504/B	CIP/550	NO
65CSP681465-7	65FV6815506	65CSP681465-7/65FV6815506/A	65CSP681465-7/65FV6815506/B	CIP/550	NC
65CSP681465-8	65FV6815507	65CSP681465-8/65FV6815507/A	65CSP681465-8/65FV6815507/B	CIP/550	NC
65CSP681465-9	SPARE				
65CSP681465-10	65FV6815508	65CSP681465-9/65FV6815508/A	65CSP681465-9/65FV6815508/B	CIP/550	NC
65CSP681465-11	65FV6815510	65CSP681465-11/65FV6815510/A	65CSP681465-11/65FV6815510/B	CIP/550	NO
65CSP681465-12	65FV6815512	65CSP681465-12/65FV6815512/A	65CSP681465-12/65FV6815512/B	CIP/550	NC

65CSP681466

SOLENOID	ABV	CONTROL LINE A	CONTROL LINE B	SYSTEM/DWG	NO/NC
65CSP681466-1	SPARE				
65CSP681466-2	SPARE				
65CSP681466-3	65FV6815518	65CSP681466-3/65FV6815524/A	65CSP681466-3/65FV6815524/B	CIP-UW/550	NC
65CSP681466-4	65FV6815519	65CSP681466-4/65FV6815519/A	65CSP681466-4/65FV6815519/B	CIP-UW/550	NC
65CSP681466-5	65FV6815523	65CSP681466-5/65FV6815523/A	65CSP681466-5/65FV6815523/B	CIP/551	NC
65CSP681466-6	65FV6815525	65CSP681466-6/65FV6815525/A	65CSP681466-6/65FV6815525/B	CIP/551	NC
65CSP681466-7	65FV6815524	65CSP681466-7/65FV6815524/A	65CSP681466-7/65FV6815524/B	CIP/551	NC
65CSP681466-8	65FV6815526	65CSP681466-8/65FV6815526/A	65CSP681466-8/65FV6815526/B	CIP/551	NC
65CSP681466-9	65FV6814511	65CSP681466-9/65FV6814511/A	65CSP681466-9/65FV6814511/B	CA-CIP/451	NC
65CSP681466-10	65FV6814512	65CSP681466-10/65FV6814512/A	65CSP681466-10/65FV6814512/B	CA-CIP/451	NC
65CSP681466-11	65FV6814513	65CSP681466-11/65FV6814513/A	65CSP681466-11/65FV6814513/B	CA-CIP/451	NC
65CSP681466-12	65FV6814514	65CSP681466-12/65FV6814514/A	65CSP681466-12/65FV6814514/B	CA-CIP/451	NC

65CSP681467

SOLENOID	ABV	CONTROL LINE A	CONTROL LINE B	SYSTEM/DWG	NO/NC
65CSP681467-1	65FV6815601	65CSP681467-1/65FV6815601/A	65CSP681467-1/65FV6815601/B	H1/560	NC
65CSP681467-2	65FV6815604	65CSP681467-2/65FV6815604/A	65CSP681467-2/65FV6815604/B	H1/560	NC
65CSP681467-3	65FV6815600	65CSP681467-3/65FV6815600/A	65CSP681467-3/65FV6815600/B	H1/560	NC
65CSP681467-4	SPARE				
65CSP681467-5	65FV6815605	65CSP681467-5/65FV6815613/A	65CSP681467-5/65FV6815613/B	H1/560	NC
65CSP681467-6	65FV6814521	65CSP681467-6/65FV6814521/A	65CSP681467-6/65FV6814521/B	CA-H1/452	NC
65CSP681467-7	65FV6814523	65CSP681467-7/65FV6814523/A	65CSP681467-7/65FV6814523/B	CA-H1/452	NC
65CSP681467-8	65FV6814524	65CSP681467-8/65FV6814524/A	65CSP681467-8/65FV6814524/B	CA-H1/452	NC
65CSP681467-9	65FV6815610	65CSP681467-9/65FV6815610/A	65CSP681467-9/65FV6815610/B	H2/561	NC
65CSP681467-10	65FV6815611	65CSP681467-10/65FV6815611/A	65CSP681467-10/65FV6815611/B	H2/561	NC
65CSP681467-11	65FV6815614	65CSP681467-11/65FV6815614/A	65CSP681467-11/65FV6815614/B	H2/561	NC
65CSP681467-12	65FV6814525	65CSP681467-12/65FV6814525/A	65CSP681467-12/65FV6814525/B	CA-H2/452	NC

65CSP681468

SOLENOID	ABV	CONTROL LINE A	CONTROL LINE B	SYSTEM/DWG	NO/NC
65CSP681468-1	65FV6814526	65CSP681468-1/65FV6814526/A	65CSP681468-1/65FV6814526/B	CA-H2/452	NC
65CSP681468-2	65FV6815621	65CSP681468-2/65FV6815621/A	65CSP681468-2/65FV6815621/B	SY/562	NC
65CSP681468-3	65FV6815625	65CSP681468-3/65FV6815625/A	65CSP681468-3/65FV6815625/B	SY/562	NC
65CSP681468-4	65FV6815627	65CSP681468-4/65FV6815627/A	65CSP681468-4/65FV6815627/B	SY/562	NC
65CSP681468-5	65FV6815628	65CSP681468-5/65FV6815628/A	65CSP681468-5/65FV6815628/B	SY/562	NC
65CSP681468-6	65FV6815629	65CSP681468-6/65FV6815629/A	65CSP681468-6/65FV6815629/B	SY/562	NC
65CSP681468-7	65FV6814522	65CSP681468-7/65FV6814522/A	65CSP681468-7/65FV6814522/B	CA-SY/452	NC
65CSP681468-8	SPARE				
65CSP681468-9	SPARE				
65CSP681468-10	SPARE				
65CSP681468-11	SPARE				
65CSP681468-12	SPARE				

1. ALL ABV SUPPLIED IN NC CONFIGURATION
2. CONTROL LINE A ALWAYS START FROM SOLENOID A PORT
3. CONTROL LINE B ALWAYS START FROM SOLENOID B PORT
4. FOR NC ABV
   a. CONTROL LINE A TERMINATES AT ABV LEFT PORT
   b. CONTROL LINE B TERMINATES AT ABV RIGHT PORT
5. FOR NO ABV
   a. CONTROL LINE A TERMINATES AT ABV RIGHT PORT
   b. CONTROL LINE B TERMINATES AT ABV LEFT PORT

NOTE: ORIENTATION OF AIR PANEL AND AIRLINE FEEDING PANEL PENDING MECHANICAL LAYOUT. ALL SOLENOID VALVE POSITION 1 STARTS IMMEDIATELY ADJACENT TO D-SUB CONNECTOR

Saltworks
13800 Steveston Hwy
Richmond, BC, Canada, V6W 1A8
Tel: 604.628.6508 Fax: 604.676.2463
www.saltworkstech.com

DRAWING STATUS: FACTORY AS BUILT

THIS DOCUMENT EMBODIES DESIGNS AND INFORMATION THAT ARE PROPRIETARY TO SALTWORKS. IT IS TO BE USED ONLY FOR THE PURPOSE AND BY THE ENTITY FOR WHICH IT WAS ORIGINALLY SUPPLIED. THE DOCUMENT MAY NOT BE DUPLICATED OR DISCLOSED TO OTHER PERSON OR ENTITY, OR USED FOR MANUFACTURE OF THE ITEM IN PART OR IN WHOLE WITHOUT THE PRIOR WRITTEN PERMISSION OF SALTWORKS.

DO NOT SCALE DRAWING

LTR	DATE	DESCRIPTION	REV. BY:
N	06-JUL-2018	NO CHANGES	–
K	26-FEB-2018	UPDATED SOLENOID BANK	SN
L	16-MAR-2018	UPDATED SOLENOID TABLE	JLAU
M	08-MAY-2018	NO CHANGES	–

TITLE: (SM2) 460: CIP & EH/SH AIR BANK

PROJECT: SALTMAKER GEN III		CUSTOMER: AGNICO EAGLE MINES	REVISION N
PREPARED BY: SN	DATE: 22-FEB-2018	DWG. NO: SW_EN_SM_GEN III_PID_DWG_460	
CHECKED BY: XXIAO	DATE: 23-FEB-2018	JOB/CO NO: (JOB NO.)	
APPROVED BY: APPROVED BY	DATE: APPROVED DATE	SHEET: 82 OF117	

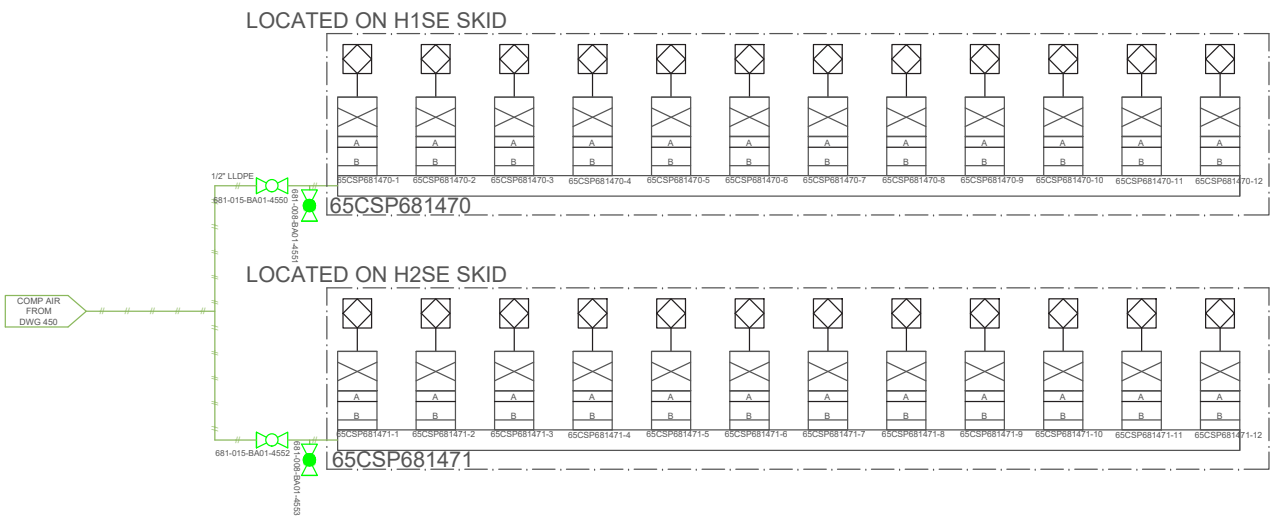

65CSP681470

SOLENOID	ABV	CONTROL LINE A	CONTROL LINE B	SYSTEM/DWG	NO/NC
65CSP681470-1	65FV6815641	65CSP681470-1/65FV6815641/A	65CSP681470-1/65FV6815641/B	H1SE/564	NC
65CSP681470-2	65FV6815642	65CSP681470-2/65FV6815642/A	65CSP681470-2/65FV6815642/B	H1SE/564	NC
65CSP681470-3	65FV6815643	65CSP681470-3/65FV6815643/A	65CSP681470-3/65FV6815643/B	H1SE/564	NC
65CSP681470-4	65FV6815644	65CSP681470-4/65FV6815644/A	65CSP681470-4/65FV6815644/B	H1SE/564	NC
65CSP681470-5	65FV6815645	65CSP681470-5/65FV6815645/A	65CSP681470-5/65FV6815645/B	H1SE/564	NC
65CSP681470-6	65FV6815646	65CSP681470-6/65FV6815646/A	65CSP681470-6/65FV6815646/B	H1SE/564	NO
65CSP681470-7	65FV6815647	65CSP681470-7/65FV6815647/A	65CSP681470-7/65FV6815647/B	H1SE/564	NC
65CSP681470-8	65FV6815659	65CSP681471-10/65FV6815659/A	65CSP681471-10/65FV6815659/B	H2SE/565	NO
65CSP681470-9	65FV6815650	65CSP681471-11/65FV6815650/A	65CSP681471-11/65FV6815650/B	H2SE/565	NC
65CSP681470-10	RESERVED				
65CSP681470-11	65FV6814515	65CSP681470-11/65FV6814515/A	65CSP681470-11/65FV6814515/B	CA-H2SE/451	NC
65CSP681470-12	65FV6814516	65CSP681470-12/65FV6814516/A	65CSP681470-12/65FV6814516/B	CA-H2SE/451	NC

65CSP681471

SOLENOID	ABV	CONTROL LINE A	CONTROL LINE B	SYSTEM/DWG	NO/NC
65CSP681471-1	65FV6815651	65CSP681471-1/65FV6815651/A	65CSP681471-1/65FV6815651/B	H2SE/565	NC
65CSP681471-2	65FV6815652	65CSP681471-2/65FV6815652/A	65CSP681471-2/65FV6815652/B	H2SE/565	NC
65CSP681471-3	65FV6815653	65CSP681471-3/65FV6815653/A	65CSP681471-3/65FV6815653/B	H2SE/565	NC
65CSP681471-4	65FV6815654	65CSP681471-4/65FV6815654/A	65CSP681471-4/65FV6815654/B	H2SE/565	NC
65CSP681471-5	65FV6815655	65CSP681471-5/65FV6815655/A	65CSP681471-5/65FV6815655/B	H2SE/565	NC
65CSP681471-6	RESERVED				
65CSP681471-7	65FV6815656	65CSP681471-7/65FV6815656/A	65CSP681471-7/65FV6815656/B	H2SE/565	NO
65CSP681471-8	65FV6815657	65CSP681471-8/65FV6815657/A	65CSP681471-8/65FV6815657/B	H2SE/565	NC
65CSP681471-9	65FV6815658	65CSP681471-9/65FV6815658/A	65CSP681471-9/65FV6815658/B	H2SE/565	NC
65CSP681471-10	RESERVED				
65CSP681471-11	RESERVED				
65CSP681471-12	SPARE				

1. ALL ABV SUPPLIED IN NC CONFIGURATION
2. CONTROL LINE A ALWAYS START FROM SOLENOID A PORT
3. CONTROL LINE B ALWAYS START FROM SOLENOID B PORT
4. FOR NC ABV
   a. CONTROL LINE A TERMINATES AT ABV LEFT PORT
   b. CONTROL LINE B TERMINATES AT ABV RIGHT PORT
5. FOR NO ABV
   a. CONTROL LINE A TERMINATES AT ABV RIGHT PORT
   b. CONTROL LINE B TERMINATES AT ABV LEFT PORT

NOTE: ORIENTATION OF AIR PANEL AND AIRLINE FEEDING PANEL PENDING MECHANICAL LAYOUT. ALL SOLENOID VALVE POSITION 1 STARTS IMMEDIATELY ADJACENT TO D-SUB CONNECTOR

Saltworks
13800 Steveston Hwy
Richmond, BC, Canada, V6W 1A8
Tel: 604.628.6508 Fax: 604.676.2463
www.saltworkstech.com

DRAWING STATUS: FACTORY AS BUILT

THIS DOCUMENT EMBODIES DESIGNS AND INFORMATION THAT ARE PROPRIETARY TO SALTWORKS. IT IS TO BE USED ONLY FOR THE PURPOSE AND BY THE ENTITY FOR WHICH IT WAS ORIGINALLY SUPPLIED. THE DOCUMENT MAY NOT BE DUPLICATED OR DISCLOSED TO OTHER PERSON OR ENTITY, OR USED FOR MANUFACTURE OF THE ITEM IN PART OR IN WHOLE WITHOUT THE PRIOR WRITTEN PERMISSION OF SALTWORKS.

DO NOT SCALE DRAWING

LTR	DATE	DESCRIPTION	REV. BY:
N	06-JUL-2018	NO CHANGES	–
K	26-FEB-2018	UPDATED SOLENOID BANK	SN
L	16-MAR-2018	NO CHANGES	–
M	08-MAY-2018	NO CHANGES	–

TITLE: (SM2) 461: H1/H2 SE AIR BANK

PROJECT: SALTMAKER GEN III

CUSTOMER: AGNICO EAGLE MINES

REVISION: N

PREPARED BY: SN DATE: 22-FEB-2018

CHECKED BY: XXIAO DATE: 23-FEB-2018

APPROVED BY: APPROVED BY DATE: APPROVED DATE

DWG. NO: SW_EN_SM_GEN III_PID_DWG_461

JOB/CO NO: (JOB NO.)

SHEET: 83 OF117

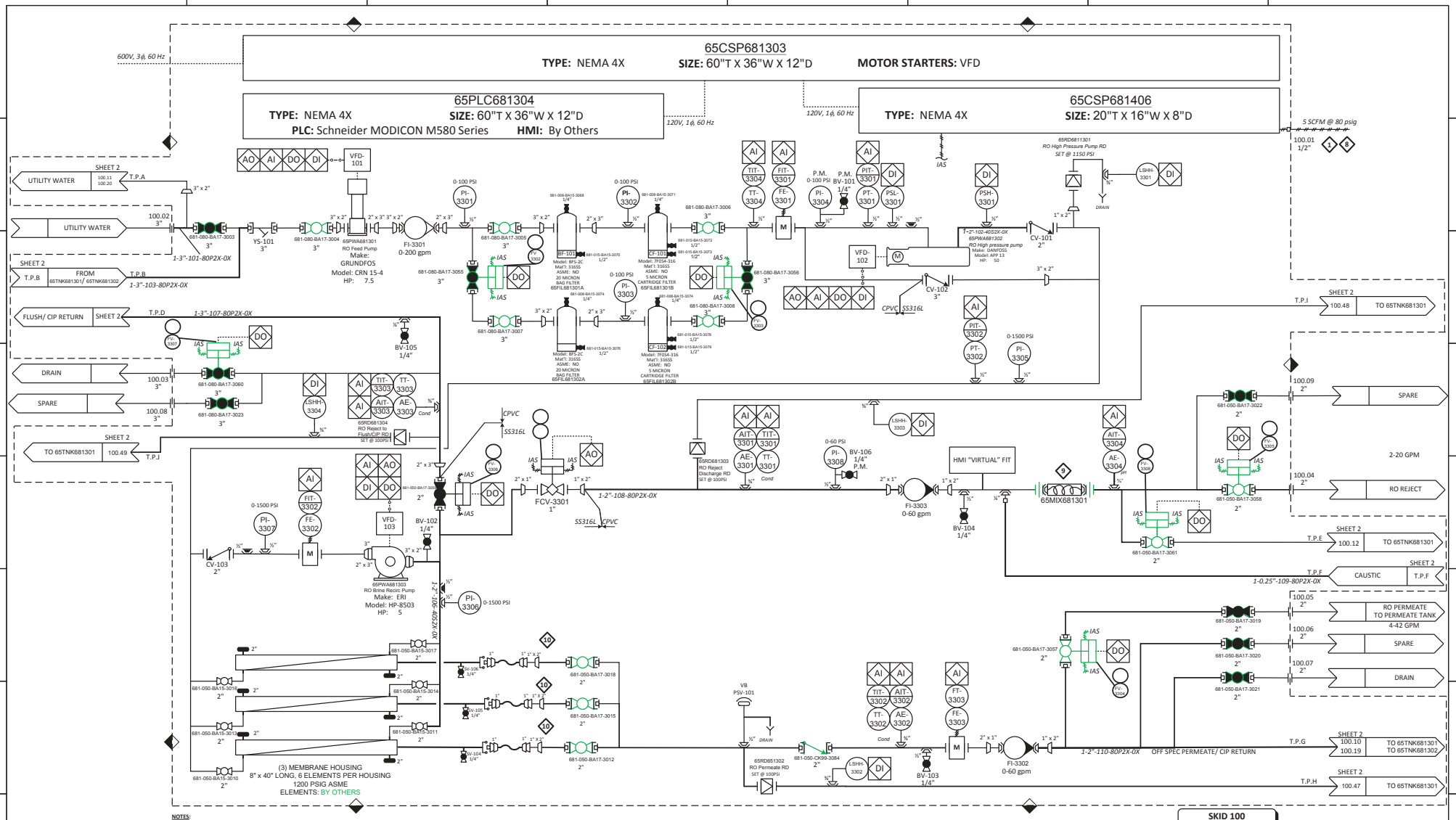

USWS SCOPE ◆ CUSTOMER SCOPE

NOTES:

1) OIL-FREE AIR BY OTHERS.
2) INTERCONNECTING PIPING BY OTHERS.
3) MEMBRANES ELEMENTS BY OTHERS.
4) TANK SHIPPED LOOSE. INSTALL BY OTHERS.
5) COLORED ITEMS WILL BE SUPPLIED BY SALTWORKS.
6) T.P.X (TIE POINT) DENOTES PAGE CONNECTOR. NO PHYSICAL CONNECTION POINT ON SKID.
7) P.M. DENOTES PANEL MOUNTED DEVICE.
8) H-8 AIR REGULATOR. REGULATOR TO BE EQUIPPED WITH DIGITAL PRESSURE INDICATOR AND SWITCH SIGNAL TO PLC
9) STATIC MIXER WITH HAVE 20 PIPE DIAMETERS BEFORE, AND 9 AFTER AS PER GA LAYOUT
10) ALL PERMEATE LINES TO BE CPVC AFTER FLEXIBLE HOSE

CONFIDENTIALITY

This drawing, the design and the patents it may cover are the property of USWEE. They are loaned merely and on the Borrower's express agreement that they will not be reproduced, copied, loaned, exhibited nor used except in the limited way and the private use permitted by written consent given by USWEE to the Borrower.

REV	DESCRIPTION	DATE	DRWN	CHK'D	APP'D
0	INITIAL RELEASE	10/30/17	KAE	KAE	ARS
1	Engineer Comments	11/20/17	KAE	KAE	ARS
2	Engineer Comments/ Design Update	12/6/17	KAE	KAE	ARS
3	See Page 2	1/23/18	KAE	KAE	ARS

U.S. WATER — The future of water

DATE: 10/30/2017

SYSTEM NAME: SYSTEM 100: POST TREATMENT RO

CUSTOMER: SALTWORKS TECHNOLOGIES, INC.

REV: 3 | NAV NUMBER: 49-0462

PAGE: 1 OF 2

PROJECT NUMBER/ SHEET: 17041_100D

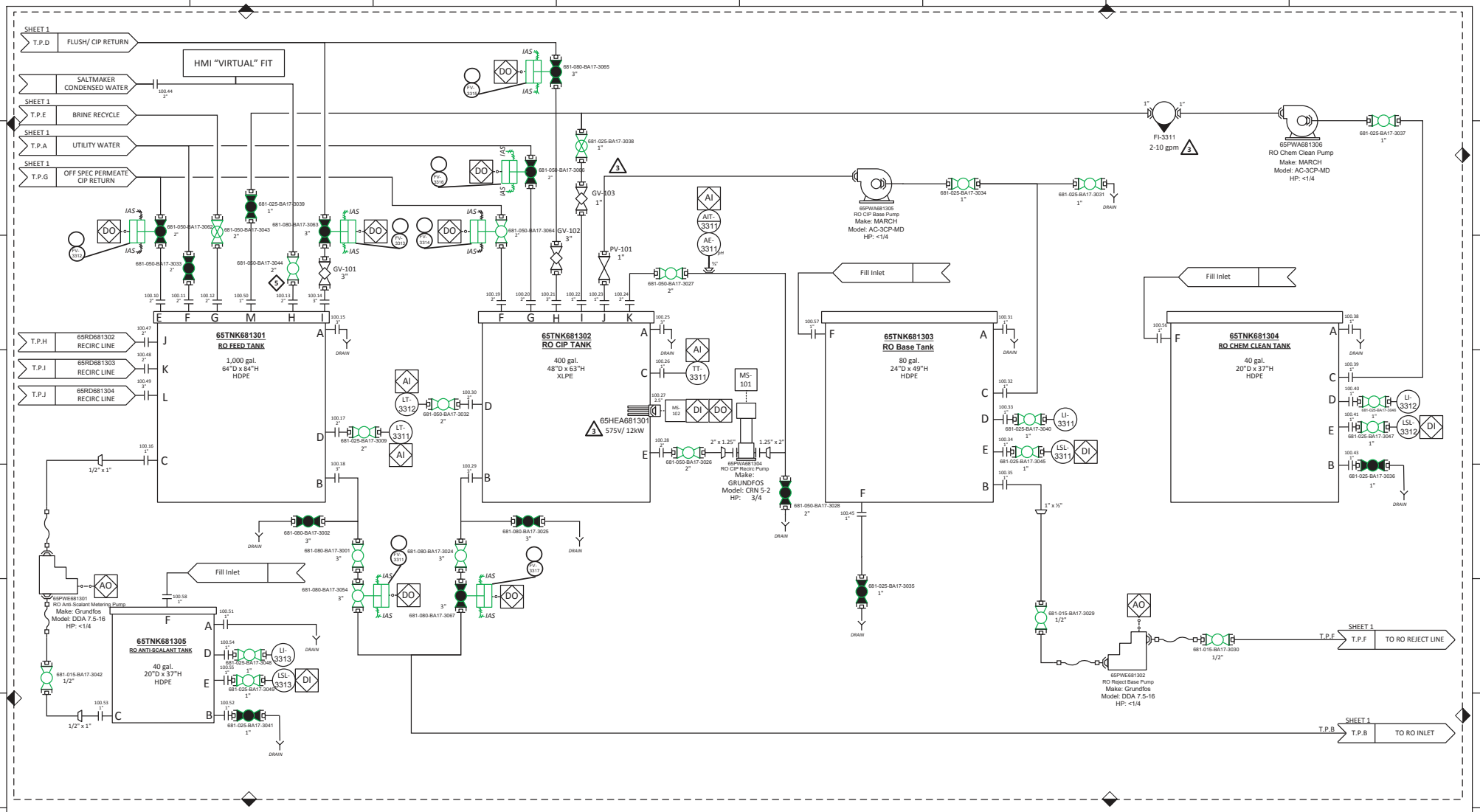

USWS SCOPE ◆ CUSTOMER SCOPE

NOTES:

1) TANKS SIHIP LOOSE, AND ARE INSTALLED BY OTHERS.
2) COLORED ITEMS ARE SUPPLIED BY SALTWORKS.
3) T.P.X (TIE POINT) DENOTES PAGE CONNECTOR. NO PHYSICAL CONNECTION POINT ON SKID.
4) 7) P.M. DENOTES PANEL MOUNTED DEVICE.
5) ITEM(S) SHIPPED LOOSE & INSTALLED BY OTHERS.

CONFIDENTIALITY

This drawing, the design and the patents it may cover are the property of USWEE. They are loaned merely and on the Borrower's express agreement that they will not be reproduced, copied, loaned, exhibited nor used except in the limited way and the private use permitted by written consent given by USWEE to the Borrower.

REV	DESCRIPTION	DATE	DRWN	CHK'D	APP'D
0	INITIAL RELEASE	10/30/17	KAE	KAE	ARS
1	Engineer Comments	11/20/17	KAE	KAE	ARS
2	Engineer Comments/ Design Update	12/6/17	KAE	KAE	ARS
3	Updated Tag, and Electrical on CIP Heater	1/23/18	KAE	KAE	ARS

U.S. WATER
The future of water

DATE: 10/30/17

SYSTEM NAME: SYSTEM 100: POST TREATMENT RO

CUSTOMER: SALTWORKS TECHNOLOGIES, INC.

REV: 3

NAV NUMBER: 49-0462

PAGE: 2 OF 2

PROJECT NUMBER/ SHEET: 17041_100D